| STATE OF | PROJECT | SHEET NO. | TOTAL SHEETS |
|---|---|---|---|
| S.D. | NH 0212(160)306 | E1 | E37 |

# Section E: Structure Plans

INDEX OF SHEETS -


| | |
|---|---|
| Sheet E1 | Layout Map and Index |
| Sheet E2 | Estimate of Structure Quantities |
| Sheet E3 to E37 | 319' - 10 5/8" Prestressed Girder Bridge |


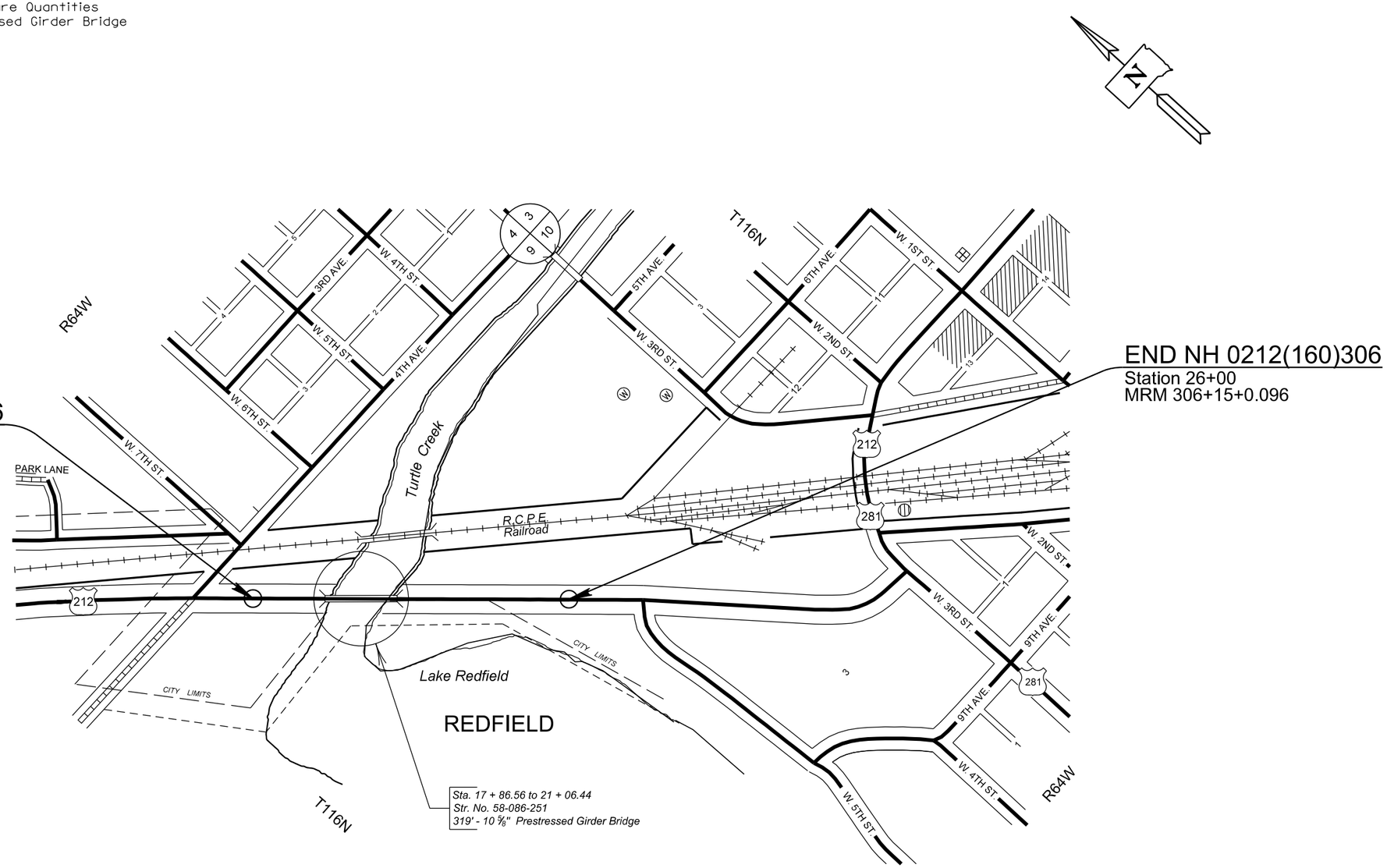

# SECTION E - ESTIMATE OF STRUCTURE QUANTITIES

| BID ITEM NUMBER | ITEM | QUANTITY | UNIT |
|---|---|---|---|
| 009E5000 | Concrete Penetrating Sealer | 1,417.0 | SqYd |
| 250E0030 | Incidental Work, Structure | Lump Sum | LS |
| 410E0030 | Structural Steel, Miscellaneous | Lump Sum | LS |
| 410E2600 | Membrane Sealant Expansion Joint | 83.8 | Ft |
| 420E0100 | Structure Excavation, Bridge | 30 | CuYd |
| 430E0200 | Bridge End Embankment | 2,816 | CuYd |
| 430E0300 | Granular Bridge End Backfill | 140.8 | CuYd |
| 430E0510 | Approach Slab Underdrain Excavation | 6.7 | CuYd |
| 430E0700 | Precast Concrete Headwall for Drain | 4 | Each |
| 460E0030 | Class A45 Concrete, Bridge Deck | 520.3 | CuYd |
| 460E0050 | Class A45 Concrete, Bridge | 254.1 | CuYd |
| 460E0150 | Concrete Approach Slab for Bridge | 291.3 | SqYd |
| 460E0160 | Concrete Approach Sleeper Slab for Bridge | 67.5 | SqYd |
| 464E0100 | Controlled Density Fill | 8.0 | CuYd |
| 465E0100 | Class A45 Concrete, Drilled Shaft | 297.9 | CuYd |
| 465E0200 | Drilled Shaft Excavation | 285.5 | CuYd |
| 465E0400 | Crosshole Sonic Log (CSL) Test | 2 | Each |
| 465E1086 | 86" Permanent Casing | 39.0 | Ft |
| 470E0120 | Steel Pedestrian Railing on Sidewalk | 342.0 | Ft |
| 470E0220 | Steel Pedestrian Railing on Concrete Barrier | 312.0 | Ft |
| 480E0100 | Reinforcing Steel | 171,576 | Lb |
| 480E0200 | Epoxy Coated Reinforcing Steel | 111,916 | Lb |
| 480E0504 | No. 4 Rebar Splice | 10 | Each |
| 480E0507 | No. 7 Rebar Splice | 106 | Each |
| 480E0518 | No. 18 Rebar Splice | 132 | Each |
| 510E0300 | Preboring Pile | 200 | Ft |
| 510E3401 | HP 12x53 Steel Test Pile, Furnish and Drive | 150 | Ft |
| 510E3405 | HP 12x53 Steel Bearing Pile, Furnish and Drive | 1,260 | Ft |
| 560E8063 | 63" Minnesota Shape Prestressed Concrete Beam | 1,895 | Ft |
| 621E0300 | Chain Link Fence for Bridge Sidewalk | 342 | Ft |
| 651E0160 | 6" Reinforced Concrete Sidewalk | 172 | SqFt |
| 680E0040 | 4" Underdrain Pipe | 306 | Ft |
| 680E2500 | Porous Backfill | 33.6 | Ton |
| 700E0310 | Class C Riprap | 4,284.3 | Ton |
| 831E0110 | Type B Drainage Fabric | 3,167 | SqYd |

The elevations shown in these plans are based on the National Geodetic Survey (NGS) North American Vertical Datum of 1988 (NAVD88).

| STATE OF | PROJECT | SHEET NO. | TOTAL SHEETS |
|---|---|---|---|
| S.D. | NH 0212(160)306 | E3 | E37 |

NOTE:
T.S. @ ℄ Elev. = Top of Slab at Centerline Elevation
T.S. @ C. Elev. = Top of Slab at Curb Elevation

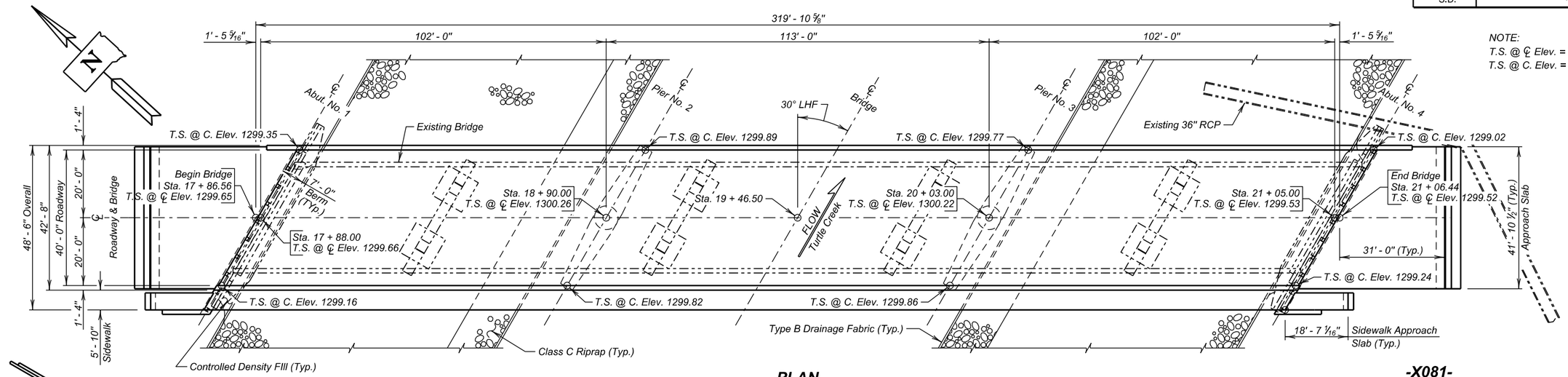


## PLAN

(Sidewalk Railing not shown)

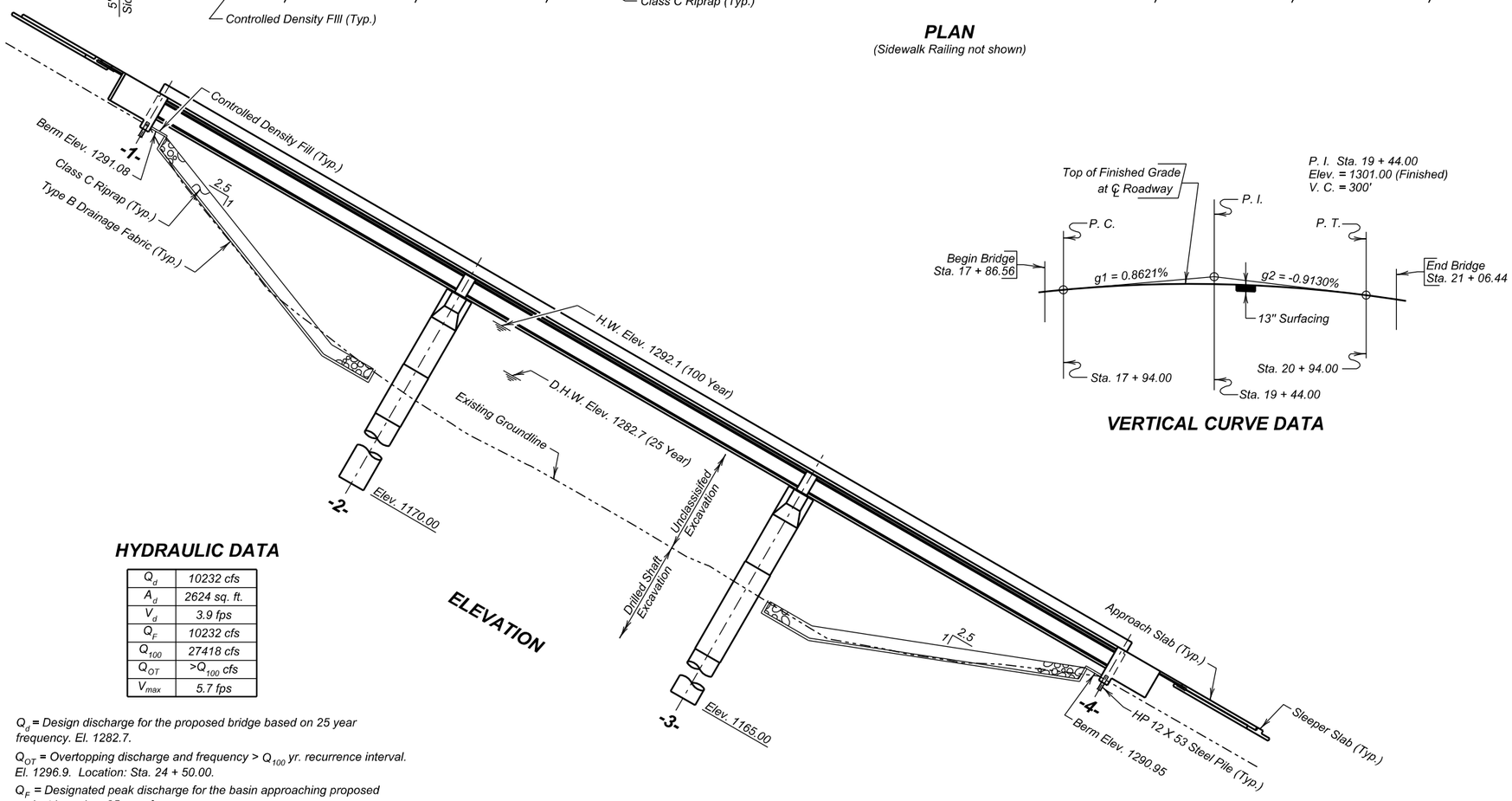


## ELEVATION




## VERTICAL CURVE DATA

## HYDRAULIC DATA

| | |
|---|---|
| $Q_d$ | 10232 cfs |
| $A_d$ | 2624 sq. ft. |
| $V_d$ | 3.9 fps |
| $Q_F$ | 10232 cfs |
| $Q_{100}$ | 27418 cfs |
| $Q_{OT}$ | $>Q_{100}$ cfs |
| $V_{max}$ | 5.7 fps |

$Q_d$ = Design discharge for the proposed bridge based on 25 year frequency. El. 1282.7.

$Q_{OT}$ = Overtopping discharge and frequency > $Q_{100}$ yr. recurrence interval. El. 1296.9. Location: Sta. 24 + 50.00.

$Q_F$ = Designated peak discharge for the basin approaching proposed project based on 25 year frequency.

$Q_{100}$ = Computed discharge for the basin approaching proposed project based on 100 year frequency. El. 1292.1.

$V_{max}$ = Maximum computed outlet velocity for the proposed bridge, based on 100 year frequency.

## -X081-
## INDEX OF BRIDGE SHEETS


Sheet No. 1 - General Drawing
Sheet No. 2 - Estimate of Structure Quantities and Notes
Sheet No. 3 - Notes (Continued)
Sheet No. 4 - Notes (Continued)
Sheet No. 5 - Notes (Continued)
Sheet No. 6 - Subsurface Investigation, Piling & Drilled Shaft Layout
Sheet No. 7 - Abutment No. 1 Details (A)
Sheet No. 8 - Abutment No. 1 Details (B)
Sheet No. 9 - Abutment No. 4 Details (A)
Sheet No. 10 - Abutment No. 4 Details (B)
Sheet No. 11 - Pier Details (A)
Sheet No. 12 - Pier Details (B)
Sheet No. 13 - Superstructure Details (A)
Sheet No. 14 - Superstructure Details (B)
Sheet No. 15 - End Block & Barrier Details - Left Side
Sheet No. 16 - End Block & Barrier Details - Right Side
Sheet No. 17 - Sidewalk Details
Sheet No. 18 - Sidewalk & Barrier Curb Railing Details (A)
Sheet No. 19 - Sidewalk & Barrier Curb Railing Details (B)
Sheet No. 20 - Chain Link Fence Details
Sheet No. 21 - 101' - 9" Girder Details
Sheet No. 22 - 112' - 3" Girder Details
Sheet No. 23 - Erection Data
Sheet No. 24 - Slab Form Elevations
Sheet No. 25 - Diaphragm Details
Sheet No. 26 - Details of Bridge End Backfill (A)
Sheet No. 27 - Details of Bridge End Backfill (B)
Sheet No. 28 - Details of Approach Slab Adjacent to Bridge (A)
Sheet No. 29 - Details of Approach Slab Adjacent to Bridge (B)
Sheet No. 30 - Approach Slab Joint Details
Sheet No. 31 - Sidewalk Approach Slab Details
Sheet No. 32 - Riprap Details
Sheet No. 33 - Details of Standard Plate No.'s 460.02 & 460.05
Sheet No. 34 - Details of Standard Plate No.'s 510.40 & 620.19
Sheet No. 35 - Details of Standard Plate No.'s 630.92 & 680.03


**GENERAL DRAWING**

FOR

# 319' - 10 5/8" PRESTR. GIRDER BRIDGE

40' - 0" ROADWAY & 5' - 0" SIDEWALK — 30° LHF SKEW
OVER TURTLE CREEK — SEC. 9-T116N-R64W
STA. 17 + 86.56 TO 21 + 06.44 — NH 0212(160)306
STR. NO. 58-086-251 — HL-93
PCN 03A6

SPINK COUNTY

S. D. DEPT. OF TRANSPORTATION

MARCH 2015



PLANS BY :
OFFICE OF BRIDGE DESIGN, SOUTH DAKOTA DEPARTMENT OF TRANSPORTATION

| DESIGNED BY | CK. DES. BY | DRAFTED BY | |
|---|---|---|---|
| TD | BB | MG | Kevin N. Boeden |
| SPNK03A6 | 03A6GA01 | | BRIDGE ENGINEER |

# ESTIMATE OF STRUCTURE QUANTITIES

| DESCRIPTION | QUANTITY | UNIT | REMARKS |
|---|---|---|---|
| Concrete Penetrating Sealer | 1,417 | SqYd | See Special Provision |
| Bridge End Embankment | 2,816 | CuYd | |
| Incidental Work, Structure | Lump Sum | LS | |
| Structural Steel, Miscellaneous | Lump Sum | LS | |
| Membrane Sealant Expansion Joint | 83.8 | Ft | |
| Structure Excavation, Bridge | 30 | CuYd | |
| Granular Bridge End Backfill | 140.8 | CuYd | |
| Approach Slab Underdrain Excavation | 6.7 | CuYd | |
| 6" Reinforced Concrete Sidewalk | 172 | SqFt | |
| Class A45 Concrete, Bridge Deck | 520.3 | CuYd | |
| Class A45 Concrete, Bridge | 254.1 | CuYd | |
| Concrete Approach Slab for Bridge | 291.3 | SqYd | |
| Concrete Approach Sleeper Slab for Bridge | 67.5 | SqYd | |
| Controlled Density Fill | 8.0 | CuYd | |
| Class A45 Concrete, Drilled Shaft | 297.9 | CuYd | |
| Drilled Shaft Excavation | 285.5 | CuYd | |
| Crosshole Sonic Log (CSL) Test | 2 | Each | |
| 86" Permanent Casing | 39 | Ft | |
| Steel Pedestrian Railing on Sidewalk | 342.0 | Ft | |
| Steel Pedestrian Railing on Concrete Barrier | 312.0 | Ft | |
| Reinforcing Steel | 171,576 | Lb | |
| Epoxy Coated Reinforcing Steel | 111,916 | Lb | |
| No. 4 Rebar Splice | 10 | Each | |
| No. 7 Rebar Splice | 106 | Each | |
| No. 18 Rebar Splice | 132 | Each | |
| Preboring Pile | 200 | Ft | |
| HP 12x53 Steel Test Pile, Furnish and Drive | 150 | Ft | |
| HP 12x53 Steel Bearing Pile, Furnish and Drive | 1,260 | Ft | |
| 63" Minnesota Shape Prestressed Concrete Beam | 1,895 | Ft | |
| Chain Link Fence for Bridge Sidewalk | 342 | Ft | |
| 4" Underdrain Pipe | 306 | Ft | |
| Precast Concrete Headwall for Drain | 4 | Each | |
| Porous Backfill | 33.6 | Ton | |
| Class C Riprap | 4,284.3 | Ton | |
| Type B Drainage Fabric | 3,167 | SqYd | |

## SPECIFICATIONS FOR BRIDGE

1. Design Specifications: AASHTO LRFD Bridge Design Specifications, 2014 Edition with 2015 interims.

2. Construction Specifications: South Dakota Standard Specifications for Roads and Bridges, 2015 Edition and required provisions, supplemental specifications, and special provisions as included in the proposal.

## BRIDGE DESIGN LOADING

1. AASHTO HL-93.

2. Dead Load includes 22 psf for future wearing surface on the roadway.

## DESIGN MATERIAL STRENGTHS*

| | |
|---|---|
| Concrete | f'c = 4,500 psi |
| Reinforcing Steel | fy = 60,000 psi |
| Piling (ASTM A572 Grade 50) | fy = 50,000 psi |

*For prestressed beams, see notes regarding Prestressed Girders.

## GENERAL CONSTRUCTION

1. All mild reinforcing steel shall conform to ASTM A615, Grade 60.

2. All exposed concrete corners and edges shall be chamfered 3/4" unless noted otherwise.

3. Use 2" clear cover on all reinforcing steel except as shown.

4. Contractor shall imprint on the structure the date of new construction as specified and detailed on Standard Plate No. 460.02.

5. Barrier Curbs and End blocks shall be built normal to the grade.

6. Request for construction joints or resteel splices at points other than those shown, must be submitted to the Engineer for prior approval. If additional splices are approved, no payment will be allowed for the added quantity of resteel.

7. The elevation of the bridge deck is 13" above subgrade elevation.

## INCIDENTAL WORK, STRUCTURE

1. In place centerline Sta. 17+88.49 to centerline Sta. 21+04.41 is a 315'-3 ¾" 5 span I-Beam Viaduct with a 30'-0" clear roadway. The superstructure consists of 9 lines of 33WF141/152 and 24WF91/98 I-Beams with a reinforced concrete slab. The concrete pigeon hole railing is faced with steel W-beam continuous across the bridge. The substructure consists of 2 column reinforced concrete bents and reinforced concrete vertical abutments, all of which are supported on timber piling.

2. Break down and remove the existing bridge, and approach/sleeper slabs if applicable, to 1 foot below finished groundline, or as required to construct the new structure in accordance with Section 110 of the Specifications. All portions of the existing bridge shall be removed and disposed of by the Contractor on a site obtained by the Contractor and approved by the Engineer in accordance with Section A.

3. During demolition of the structure, efforts shall be taken to prevent material from falling into the creek. Under no circumstances is asphalt allowed to fall into the creek.

4. The foregoing is a general description of the in-place bridge and should not be construed to be complete in all details. Before preparing the bid it shall be the responsibility of the Contractor to make a visual inspection of the structure to verify the extent of the work and materials involved. If desired by the Contractor, a copy of the original construction plans may be obtained through the Office of Bridge Design.

## NOTICE - LEAD BASED PAINT

Be advised that the paint on the steel surfaces of the existing structure contains lead. The Contractor should plan his/her operations accordingly, and inform his/her employees of the hazards of lead exposure.

## DESIGN MIX OF CONCRETE

1. All structural concrete shall be Class A45 unless otherwise indicated.

2. Type II cement is required, except Type III may be used for the prestressed beams.

3. Coarse aggregate to be used in concrete shall consist of either crushed quartzite or other crushed ledge rock. If crushed ledge rock other than quartzite is to be used, it shall be from a source approved by the Engineer.

4. Grout design mix shall be as specified in Section 460.2 K of the Specifications. A compressive strength of 2000 psi shall be attained by the grout prior to erection of any beams. Chamfer edges of grout pads ¾". The quantity of grout is included in and shall be paid for at the contract unit price per cubic yard for Class A45 Concrete, Bridge.

**ESTIMATE OF STRUCTURE QUANTITIES AND NOTES**

FOR

319' - 10 ⅝" PRESTR. GIRDER BRIDGE

STR. NO. 58-086-251

MARCH 2015



| DESIGNED BY | CK. DES. BY | DRAFTED BY | |
|---|---|---|---|
| JMH/TD | BB/PW | JMH | Kevin N. Boeden |
| SPNK03A6 | 03A6GA02 | | BRIDGE ENGINEER |

## ABUTMENTS

1. Preboring piling at each abutment is required to whichever is greater, ten feet or to natural ground.

2. The HP 12x53 Piling were designed using a factored bearing resistance of 98 tons per pile. Piling shall develop a field verified nominal bearing resistance of 245 tons per pile.

3. One test pile shall be driven at each abutment and will become part of the pile group.

4. The contractor shall have sufficient pile splice material on hand before pile driving is started. See Standard Plate No. 510.40.

5. Piles shall not be driven out of position by more than two inches in the direction normal to the abutment centerline. A pile-driving template shall be used to insure this accuracy.

6. The contractor shall review the subsurface sheet to determine pile splice sequencing based on anticipated pile contact with the shale. It will be required the shorter section of pile is driven first so false bearing and setup is not obtained during welding operations.

7. Abutment backwalls above the construction joint may be cast separately from the deck slab. The concrete used for the backwalls and wings shall be Class A45 Concrete, Bridge. All abutment and bridge deck concrete shall have attained design strength prior to backfilling. Abutment wing walls shall not be cast until after the deck has been poured.

8. Each finished abutment shall include a Bridge Survey Marker. See Standard Plate No. 460.05.

## ABUTMENT BACKWALL COATING

The material for waterproofing the abutment backwall shall be one of the products from the approved products list. The acceptable abutment backwall coating suppliers are listed on the approved products list at the following Internet address:

http://apps.sd.gov/applications/HC60ApprovedProducts/ProductList.aspx

The cost of furnishing and applying the coating shall be incidental to the contract unit price per cubic yard for Class A45 Concrete, Bridge.

## PRESTRESSED GIRDERS

1. Minimum concrete compressive strength f'c **=7000** psi at 28 days for all girders, f'ci **=6000** psi for all Girders.
2. All mild reinforcing steel shall be deformed bars conforming to ASTM A615, Grade 60.
3. Individual tendons in all pretensioned sections shall consist of seven wire uncoated Type 270K Strands having a nominal diameter of 0.6" and a minimum ultimate strength of 58600 lbs. per cable. An initial tensile force of 43500 lbs. shall be applied to all 0.6" cables in all girders. All prestressing steel shall conform to AASHTO M203. (low lax strands).
4. All prestressed girders within a span shall be cast within an 8 day period. If not, the newest girder shall be at least 6 weeks old before the deck slab is poured. The girders shall be poured in all steel forms.
5. Prestressed concrete girders shall always be lifted by the devices provided in the top flanges near the ends of the girders. Types of lifting devices other than those shown on the plans may be used provided they are approved by the Office of Bridge Design. The design of the lifting devices shall be the responsibility of the Fabricator.
6. Each beam shall be marked showing structure number, casting date, and beam number. Marking shall be on the face of the beam near the end and so located that they will be exposed after the diaphragms have been cast. Facia beams shall be marked on an inside face. All markings shall be stenciled and clearly legible. For beam designations and locations, see superstructure layout plan and Erection Data sheet.
7. The physical properties of the elastomeric bearing pads shall conform to the requirements of Section 18.2 of the AASHTO LFRD Bridge Construction Specification and the AASHTO Materials Specification M251. The elastomeric bearing pads shall conform to Grade 70 (durometer). The cost of the pads shall be incidental to the contract unit price per cubic yard for Class A45 Concrete, Bridge. Certification that pads are 70 durometer and meet the requirements of AASHTO LFRD Bridge Construction Specification Section 18.2 and AASHTO Materials Specification M251 shall be furnished to the Engineer with the shop drawings. No laminated bearing pads will be allowed.
8. All exposed corners shall be chamfered 3/4" or rounded to 3/4" radius.
9. Dead Load of girder taken as effective at transfer. Cut strands, except those extended and bent, flush with end of girder and coat end of strands with mortar.
10. The Contractor shall be responsible for ensuring that transportation stresses, handling and erection do not cause damage to the girders.
11. Furnish and Install Inserts for T8 Rebars as shown in the plans. All costs involved shall be incidental to the contract unit price per foot of girder.
12. The top surface of the beam shall be float finished to seal the surface and depress the coarse aggregate. After finishing and prior to initial set, the top surface shall be given a transverse grooving. The grooves shall be approximately 1/4 inch deep by 1/4 inch wide at 1 inch spaces. The top surface of the outside edges of the top flange shall be finished with a concrete edging tool for the full length of the beam. The edging tool shall be of sufficient size to produce a smooth finish for approximately the outside 3 inches of flange top width. In addition, a smooth spot shall be left at the span tenth points

## SUPERSTRUCTURE

1. Girder lifting hooks shall be cut off before placement of concrete deck slab.
2. The diaphragms at the piers shall be poured integrally with the deck slab. Placement of diaphragms at the piers shall not slow down the rate of deck concrete placement and finishing. The Contractor shall place the concrete for the specified diaphragms ahead of the deck concrete in such a manner that advancement of the deck concrete reaches the diaphragm just as placement of concrete in the diaphragm is complete.
3. The deck-finishing machine shall be adjusted and operated in such a manner that the roller screed or screeds are parallel with the centerline of the bridge and the finish machine is parallel to the skew of the bridge. Concrete placement in front of the finish machine shall be kept parallel to the machine.
4. The bridge deck must be placed and finished continuously at a minimum rate of 57 ft. of deck per hour measured along Centerline Roadway. This rate is exclusive of concrete placed in the diaphragms. (See note 2 above.) If concrete cannot be placed and finished at this rate, the Engineer shall order a header installed and operations stopped. Notify the Bridge Construction Engineer if deck pour operations are stopped. Operations may resume only when the Engineer is satisfied that a rate of 57 ft. of deck per hour can be achieved and the concrete in the previous pour has attained a minimum compressive strength of 2000 psi.
5. Snap ties, if used in the barrier curb formwork, shall be epoxy coated. The epoxy coating shall be inert in concrete and compatible with the coating applied to the new epoxy coated reinforcing steel.

## CLASS A45 CONCRETE, BRIDGE DECK

1. Concrete used in the bridge deck slab, sidewalks, pier diaphragms and barrier curbs shall be in accordance with the requirements for bridge deck concrete as specified in Section 460.3 A of the Specifications. In addition, the concrete used in the bridge deck, sidewalks and barrier curbs shall have Class F Modified Fly Ash substituted for a portion of the cement in accordance with Section 605 of the Specifications. The amount of cement to be replaced shall be 20 percent by weight. The ratio of substitution of fly ash to cement shall be 1:1 by weight.
2. See Special Provision for Concrete Penetrating Sealer.

## BOLT TESTING

The certified mill test reports for all bolts used on the project shall include the test results for all of the testing specified in Section 972.2.D of the Specifications. Some of these tests are supplemental tests that must be requested at the time the bolts are ordered. It is the responsibility of the Contractor to notify the bolt supplier of these requirements.

**NOTES (CONTINUED)**

FOR

319' - 10 5/8" PRESTR. GIRDER BRIDGE

STR. NO. 58-086-251

MARCH 2015



| DESIGNED BY | CK. DES. BY | DRAFTED BY | |
|---|---|---|---|
| JMH | BB | JMH | Kevin N. Goeden |
| SPNK03A6 | 03A6GA03 | | BRIDGE ENGINEER |

## PIERS

1. The design of the drilled shafts is based upon encountering competent bedrock at elevation 1243.00' at Pier 2 and 1238.00' at Pier 3. If competent bedrock is not encountered at or above this elevation, contact the Office of Bridge Design, through proper channels, before proceeding with the drilled shaft construction. Geotechnical Engineering Activity personnel shall be present during the drilling operations to confirm these elevations and to observe placement of the drilled shafts. The Geotechnical Engineering Activity shall be notified a minimum of two weeks prior to the start of excavation for the drilled shafts.

2. The drilled shafts shall be constructed using the permanent casing method in conformance with Section 465 of the Specifications. A construction joint shall be placed at the top of the permanent casing and the permanent casing shall extend a minimum of 1'-0" above the groundline, waterline, or construction platform elevation, whichever is higher.

3. The construction joint locations and quantities provided on the plans are based upon the estimated existing groundline and/or waterline elevations. It is the responsibility of the Contractor to verify the existing elevations and have a drilled shaft installation plan submitted and approved prior to ordering the casing. If the Contractor intends to use construction platforms, etc. that would require any of the construction joints to be at a location other than the location shown in the plans, the Contractor shall include these proposed changes in the drilled shaft installation plan for approval by the Office of Bridge Design.

4. The quantities for Drilled Shaft Excavation; 86" Permanent Casing; Class A45 Concrete, Drilled Shaft; and Class A45 Concrete, Bridge are based upon the construction joint locations as shown in the plans. Payment for these items shall be at the contract unit price for the plans shown quantities regardless of any approved changes in the location of the construction joints as requested by the Contractor due to the construction of work platforms, etc. Measurement and payment will be made at the contract unit prices for any changes due to variations in the competent foundation soil or in the locations of the existing groundline and/or waterline elevations as ordered by the Engineer.

5. The H1 and H2 bars are detailed full length of the Drilled Shaft and Column and are provided in the reinforcing schedule. Once the construction joint elevations have been verified and/or established, mechanical splice details showing location shall be submitted with the drilled shaft installation plan for approval.

## SHOP PLANS

Shop plans shall be required as specified by the Specifications.

## FALSEWORK

The Contractor shall be required to include with the Falsework Plans, details for the construction of an adequate "Walk-Way" including railing.

## FALL PROTECTION

1. The Contractor shall install a Fall Protection System conforming to OSHA Regulations. When working on the girders prior to decking installation, a Horizontal Lifeline – or other OSHA approved system shall be installed. The Contractor shall have one Personal Fall Arrest System (PFAS) available for use by a Department Inspector. The PFAS shall be compatible with the installed Fall Protection System.

2. Modifications to any bridge components used to accommodate the Fall Protection System shall be shown on the Falsework Plans and/or the appropriate Shop Plans. Field welding to bridge components will not be allowed. Field placed concrete inserts or drilled-in anchor bolts will be allowed if approved by the Engineer. All costs associated with providing the Fall Protection System shall be incidental to the other contract items.

## CLASS B COMMERCIAL TEXTURE FINISH

1. A Class B commercial texture finish shall be applied to the following areas:
   a. **Barrier Rail:** all exposed surfaces (**front, **top and *back).
   b. ***Slab:** edge of slab.
   c. ***Girder:** Outside face and bottom of facia girders.
   d. ***Piers:** All exposed surfaces.
   e. ***Abutments:** all exposed surfaces to an elevation 1-foot below finished ground line

   * Color shall be tan
   ** Color shall be Pearl White

2. The Class B commercial texture finish shall be applied in accordance with Section 460.3L.1.c of the Specifications.

3. Where the Class B commercial texture finish is to be applied, concrete curing shall be accomplished with cotton or burlap mats and polyethylene sheeting. Curing shall continue for not less than seven days after placing concrete before the commercial texture finish is applied. The commercial texture finish shall be applied in accordance with the manufacturer's recommendations. The commercial texture finish itself does not require a specific cure except for drying.

4. The cost of the Class B Commercial Texture Finish applied to the fascia girders shall be incidental to the contract unit price per cubic yard for Class A45 Concrete, Bridge Deck.

## ACCESS TUBES

1. Access tubes shall be furnished and installed in each of the drilled shafts in accordance with Section 465 of the Specifications.

2. These access tubes are to be used for crosshole sonic log (CSL) testing of the drilled shaft. After crosshole sonic log test and authorization by the Engineer and prior to any subsequent concrete placement above the construction joint, the Contractor shall remove the water from the access tubes, cut the access tubes off flush with the top of the drilled shaft and completely fill the access tubes with grout.

3. In addition to the CSL requirements, Thermal Integrity Profiler (TIP) testing shall be utilized on this project. TIP will be provided and installed by the department's representative. No additional associated costs or labor are required from the Contractor for TIP testing. The Contractor shall provide access to the reinforcing steel cage the day before construction of the shaft to allow for attachment of the TIP instrumentation. TIP instrumentation will be read after placement of the concrete.

## PILE DRIVING

1. A drivability analysis was performed using the wave equation analysis program (GRLWEAP). The following pile hammers were evaluated and found to produce acceptable driving stresses:

   Delmag D-19-32 Delmag D-19-42 MVE M-19

2. Pile hammers not listed will require evaluation and approval prior to use from the Geotechnical Engineering Activity.

## SDDOT's LRFD PILE DRIVING EQUATIONS

To determine the field verified nominal pile bearing resistance of driven piles the SDDOT uses the formulas below for timber, concrete, steel H-piling and shell type piles.

For single action steam or air hammers and open cylinder top diesel hammers:

$$Q\ (\text{drive}) = \frac{10.5WH}{S + 0.1} \times \frac{W}{W + M}$$

Where:

Q = the field verified nominal pile bearing resistance in tons.
W = the weight of the ram of an energy hammer in tons.
H = the height of free fall of the hammer or ram in feet.
M = the weight in tons of the driven mass and shall include the weight of the pile, the weight of the driving cap and the weight of the anvil, if used.
E = the energy per blow in foot-tons.
S = the average penetration in inches of the pile per blow for the last 10 blows for energy hammers.

**NOTES (CONTINUED)**
FOR
319' - 10 5/8" PRESTR. GIRDER BRIDGE

STR. NO. 58-086-251
MARCH 2015



| DESIGNED BY | CK. DES. BY | DRAFTED BY | |
|---|---|---|---|
| JMH | BB | JMH | Kevin N. Goeden |
| SPNK03A6 | 03A6GA04 | | BRIDGE ENGINEER |

## STEEL RAILING – SIDEWALK

1. All rail and chain link fence posts shall be built vertical.

2. All structural steel parts for railing shall conform to ASTM A500, Grade B. Material less than ¼" thick may be ASTM A1011, Grade 36. Rail post base plates shall conform to ASTM A709, Grade 36.

3. All anchor bolts and nuts for railing shall conform to ASTM A307. Washers shall conform to ASTM F436 and all components shall be galvanized in accordance with ASTM A153 or ASTM F2329, as applicable. The bolts shall be hex head "structural" type with heavy hex nuts and round washers.

4. All anchor bolts shall be tightened to a torque of 120 ft.-lbs. (approximated without the use of a calibrated torque wrench).

5. The non-shrink grout used to fill the recess beneath the rail post base plates shall be a commercially available non-shrink grout containing no metallic particles and capable of attaining a 28 day compressive strength of 3000 psi. The non-shrink grout shall be mixed according to the manufacturer's recommendations. The cost of furnishing and placing the non-shrink grout shall be incidental to the contract unit price per foot for Steel Pedestrian Railing on Sidewalk.

6. All steel railing shall be painted in accordance with Section 411 of the South Dakota Standard Specifications and the color shall be an approved brown (Federal Standard 595B Color 30045).

7. Welding & Weld Inspection shall be done in accordance with the current edition of AWS D1.1 Structural Welding Code-Steel.

8. The costs of structural steel, welding, weld inspection, painting and galvanizing shall be incidental to the contract unit price per foot for Steel Pedestrian Railing on Sidewalk and Steel Pedestrian Railing on Concrete Barrier.

## CHAIN LINK FENCE

1. The chain link fence fabric and supports shall conform to Section 930 of the Specifications as modified by the following notes.

2. The fence fabric shall be Type IV 9 gauge wire woven in a 2 inch diamond mesh. Knuckled selvage shall be used on the top and bottom of the fence fabric.

3. A brown (Federal Standard 595B Color 30045) thermally extruded polyvinyl coating shall be applied to the fence fabric, wire ties and all miscellaneous hardware.

4. The item Chain Link Fence for Bridge Sidewalk shall be paid for by the linear foot. This payment shall be full compensation for furnishing all material, labor, tools and equipment necessary or incidental to the construction of the chain link fence including chain link fence fabric, wire ties, miscellaneous hardware, painting and welding, all to satisfactorily complete this work.

## APPROACH SLABS

1. Sleeper slab riser shall be cast with the approach slab or cast after the approach slab is placed. Care shall be taken to ensure the correct grade is maintained across the joint.

2. The use of an approved finishing machine will be required during placement of Class A45 Concrete for the approach slabs. Concrete placement in front of the machine shall be kept parallel to the screed.

3. The concrete in the approach slab shall be tined normal to centerline roadway.

4. Concrete Approach Sleeper Slab for Bridge will be paid for at the contract unit price per square yard. This payment shall be full compensation for all excavation, furnishing, hauling, and placing all materials including concrete and reinforcing steel; for disposal of all excavated material and surplus materials; and for labor, tools, equipment and any incidentals necessary to complete this item of work.

5. Concrete Approach Slab for Bridge will be paid for at the contract unit price per square yard. This payment shall be full compensation for all excavation, furnishing, hauling and placing all materials including concrete, asphalt paint or 4 mil polyethylene sheeting, elastic joint sealer and reinforcing steel; for disposal of all excavated material and surplus materials and for labor, tools, equipment and any incidentals necessary to complete this item of work.

## SIDEWALK APPROACH SLABS

1. The reinforced concrete sidewalks adjacent to the bridge shall be paid for at the contract unit price per square foot for 6" Reinforced Concrete Sidewalk. This payment will be full compensation for all excavation, furnishing, hauling and placing all materials including concrete, epoxy coated reinforcing steel, asphalt paint or 4 mil polyethylene sheeting, hot poured elastic joint sealer; for disposal of all excavated and surplus materials; and for all labor, tools, equipment and incidentals necessary to complete this item of work.

2. All costs involved in furnishing and placing the sidewalk sleeper slabs shall be included in the contract unit price per square foot for 6" Reinforced Concrete Sidewalk.

**NOTES (CONTINUED)**

FOR

319' - 10 ⅝" PRESTR. GIRDER BRIDGE

STR. NO. 58-086-251

MARCH 2015

| STATE OF | PROJECT | SHEET NO. | TOTAL SHEETS |
|---|---|---|---|
| S.D. | NH 0212(160)306 | E8 | E37 |

| Hole Number | Y1 | |
|---|---|---|
| Station | 17+89 | |
| Depth | 9.8 | ft |
| Soil Color | Brown | |
| Classification | Clay-Silt | |
| Strength ($Q_u$) | 1.620 | psf |
| Dry Density | 97.9 | pcf |
| Wet Density | 119.5 | pcf |
| Moisture | 22.1 | % |
| Pass No. 10 | 96.7 | % |
| Pass No. 40 | 89.1 | % |
| Pass No. 200 | 61.2 | % |
| Sand Content | 35.5 | % |
| Silt Content | 34.1 | % |
| Clay Content | 27.1 | % |

| Hole Number | Y1 | |
|---|---|---|
| Station | 17+89 | |
| Depth | 25.5 | ft |
| Soil Color | Gray | |
| Classification | Clay-Silt | |
| Strength ($Q_u$) | 12.780 | psf |
| Dry Density | 108.2 | pcf |
| Wet Density | 126.1 | pcf |
| Moisture | 16.5 | % |
| Pass No. 10 | 96.4 | % |
| Pass No. 40 | 89.0 | % |
| Pass No. 200 | 66.0 | % |
| Sand Content | 30.4 | % |
| Silt Content | 37.1 | % |
| Clay Content | 28.9 | % |

| Hole Number | Y1 | |
|---|---|---|
| Station | 17+89 | |
| Depth | 55.5 | ft |
| Soil Color | Gray | |
| Classification | Clay | |
| Strength ($Q_u$) | 5.089 | psf |
| Dry Density | 83.8 | pcf |
| Wet Density | 109.6 | pcf |
| Moisture | 30.9 | % |
| Pass No. 10 | 98.9 | % |
| Pass No. 40 | 98.9 | % |
| Pass No. 200 | 98.1 | % |
| Sand Content | 0.9 | % |
| Silt Content | 7.0 | % |
| Clay Content | 91.0 | % |

| Hole Number | Y3 | |
|---|---|---|
| Station | 21+04 | |
| Depth | 20.5 | ft |
| Soil Color | Brown/Gray | |
| Classification | Silt-Clay | |
| Strength ($Q_u$) | 4.875 | psf |
| Dry Density | 104.3 | pcf |
| Wet Density | 126.3 | pcf |
| Moisture | 21.1 | % |
| Pass No. 10 | 98.8 | % |
| Pass No. 40 | 94.8 | % |
| Pass No. 200 | 71.6 | % |
| Sand Content | 27.2 | % |
| Silt Content | 40.0 | % |
| Clay Content | 31.6 | % |

| Hole Number | Y3 | |
|---|---|---|
| Station | 21+04 | |
| Depth | 30.2 | ft |
| Soil Color | Brown | |
| Classification | Silt-Sand | |
| Strength ($Q_u$) | 292 | psf |
| Dry Density | 107.3 | pcf |
| Wet Density | 129.6 | pcf |
| Moisture | 20.8 | % |
| Pass No. 10 | 93.3 | % |
| Pass No. 40 | 53.9 | % |
| Pass No. 200 | 22.8 | % |
| Sand Content | 70.5 | % |
| Silt Content | 13.5 | % |
| Clay Content | 9.3 | % |

| Hole Number | Y3 | |
|---|---|---|
| Station | 21+04 | |
| Depth | 49.8 | ft |
| Soil Color | Gray | |
| Classification | Clay | |
| Strength ($Q_u$) | 1.105 | psf |
| Dry Density | 85.3 | pcf |
| Wet Density | 115.9 | pcf |
| Moisture | 35.8 | % |
| Pass No. 10 | 99.1 | % |
| Pass No. 40 | 99.1 | % |
| Pass No. 200 | 96.5 | % |
| Sand Content | 2.5 | % |
| Silt Content | 11.4 | % |
| Clay Content | 85.2 | % |

| Hole Number | Y10 | |
|---|---|---|
| Station | 19+25 | |
| Depth | 13.2 | ft |
| Soil Color | Gray | |
| Classification | Clay | |
| Strength ($Q_u$) | 2.438 | psf |
| Dry Density | 83.8 | pcf |
| Wet Density | 114.6 | pcf |
| Moisture | 36.8 | % |
| Pass No. 10 | 99.6 | % |
| Pass No. 40 | 99.6 | % |
| Pass No. 200 | 96.8 | % |
| Sand Content | 2.8 | % |
| Silt Content | 2.8 | % |
| Clay Content | 94.0 | % |

| Hole Number | Y11 | |
|---|---|---|
| Station | 20+23 | |
| Depth | 27.2 | ft |
| Soil Color | Gray | |
| Classification | Clay | |
| Strength ($Q_u$) | 5.679 | psf |
| Dry Density | 86.9 | pcf |
| Wet Density | 117.3 | pcf |
| Moisture | 35.0 | % |
| Pass No. 10 | 99.4 | % |
| Pass No. 40 | 99.4 | % |
| Pass No. 200 | 99.0 | % |
| Sand Content | 0.4 | % |
| Silt Content | 1.2 | % |
| Clay Content | 97.8 | % |

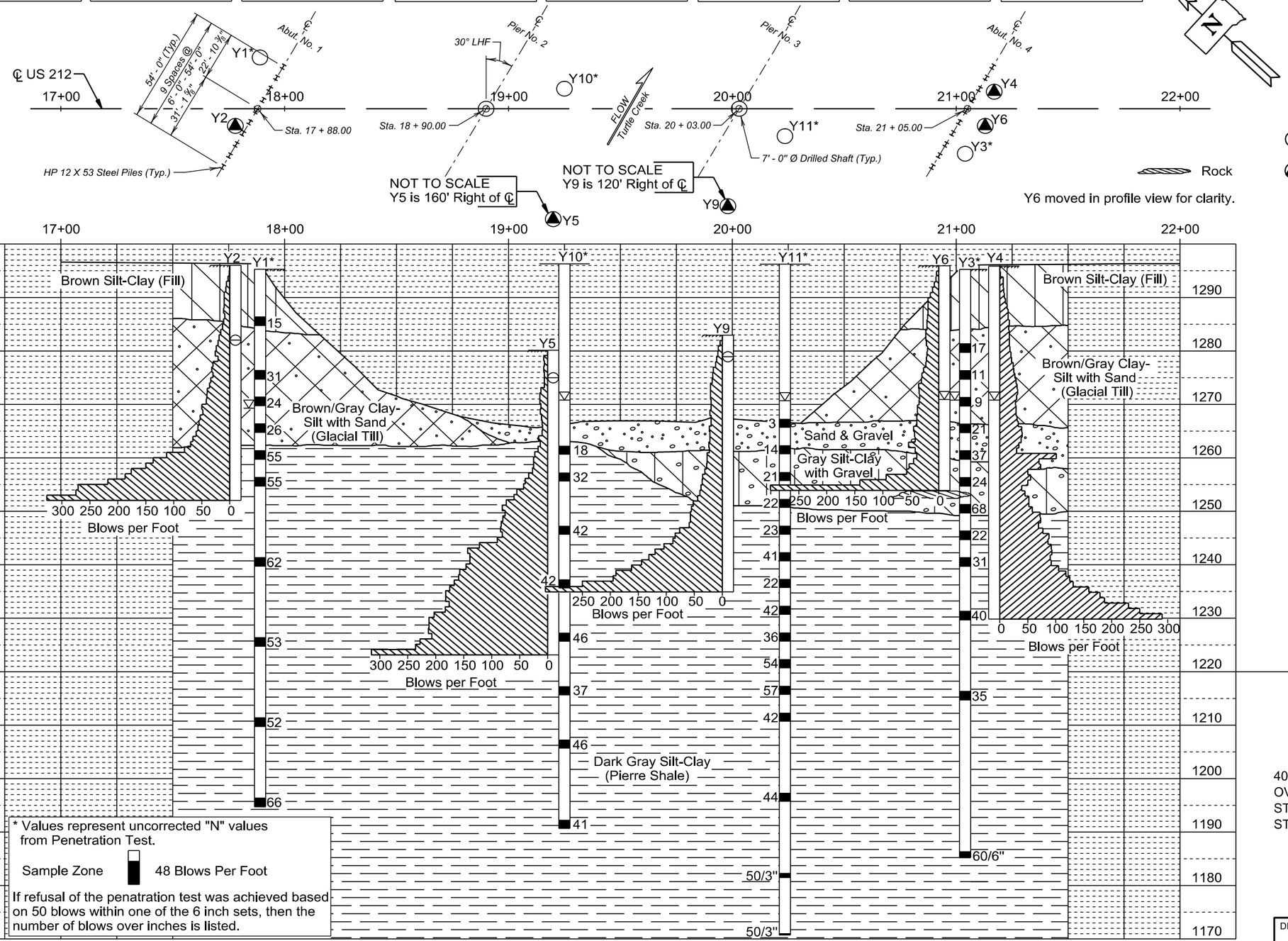


* Values represent uncorrected "N" values from Penetration Test.

Sample Zone  48 Blows Per Foot

If refusal of the penatration test was achieved based on 50 blows within one of the 6 inch sets, then the number of blows over inches is listed.

Pierre Shale is a marine shale with a textural classification that varies from silt-clay to clay-silt. Color varies from buff gray to black. The formation may contain concretion zones that are normally thin but occasionally are massive. These zones may be considered hard and dense. Thin zones may be present that are cemented resulting in claystone or siltstone seams. Bentonite zones may be encountered but are normally less than one half inch thick. Nonweathered Pierre Shale is considered to be "Soft Rock".

The Geotechnical Engineering Activity has on file all of the boring logs for this project. These logs and additional results of laboratory test, if any, are available for review at the Central Office in Pierre.

## LEGEND

- Penetration Test
- Drive Test
- Water
- Caved
- Sample Zone

Drive test are conducted by dropping a 490 pound hammer 30 inches to drive a 2⅞ inch drill stem to measure the resistance to penetration of the soil.

Penetration test holes are drilled with a 6⅝ inch diameter hollow stem auger. Penetration tests are conducted by dropping a 140 pound hammer 30 inches to obtain 2 inch nominal diameter samples and to measure the resistance to penetration of the soil.

### GROUND WATER ELEVATIONS

as of SEPTEMBER 2014

| | | |
|---|---|---|
| Y1 | | 1269.3 |
| Y2 | (DRY) | 1282.0 |
| Y3 | | 1270.8 |
| Y4 | | 1270.8 |
| Y5 | (DRY) | 1275.1 |
| Y6 | | 1270.9 |
| Y9 | (DRY) | 1278.9 |

as of FEBRUARY and MARCH 2015

| | | |
|---|---|---|
| Y10 | (FROZEN) | 1270.8 |
| Y11 | (FROZEN) | 1270.7 |

### MEASURED SKIN FRICTION

| | ELEV. | PSF |
|---|---|---|
| Y2 | 1252.0 | 1085 |
| Y4 | 1229.8 | 831 |
| Y5 | 1223.1 | 952 |
| Y6 | 1253.9 | 1008 |
| Y9 | 1234.9 | 1007 |

**SUBSURFACE INVESTIGATION, PILING, & DRILLED SHAFT LAYOUT**

FOR

# 319' - 10 ⅝" PRESTR. GIRDER BRIDGE

40' - 0" ROADWAY & 5' - 0" SIDEWALK — 30° LHF SKEW
OVER TURTLE CREEK — SEC. 9-T116N-R64W
STA. 17 + 86.56 TO 21 + 06.44 — NH 0212(160)306
STR. NO. 58-086-251 — HL-93

SPINK COUNTY

S. D. DEPT. OF TRANSPORTATION

MARCH 2015



| DESIGNED BY | CK. DES. BY | DRAFTED BY | |
|---|---|---|---|
| TD | BB | MG | Kevin N. Goeden |
| SPNK03A6 | 03A6GA06 | | BRIDGE ENGINEER |

| STATE OF | PROJECT | SHEET NO. | TOTAL SHEETS |
|---|---|---|---|
| S.D. | NH 0212(160)306 | E9 | E37 |

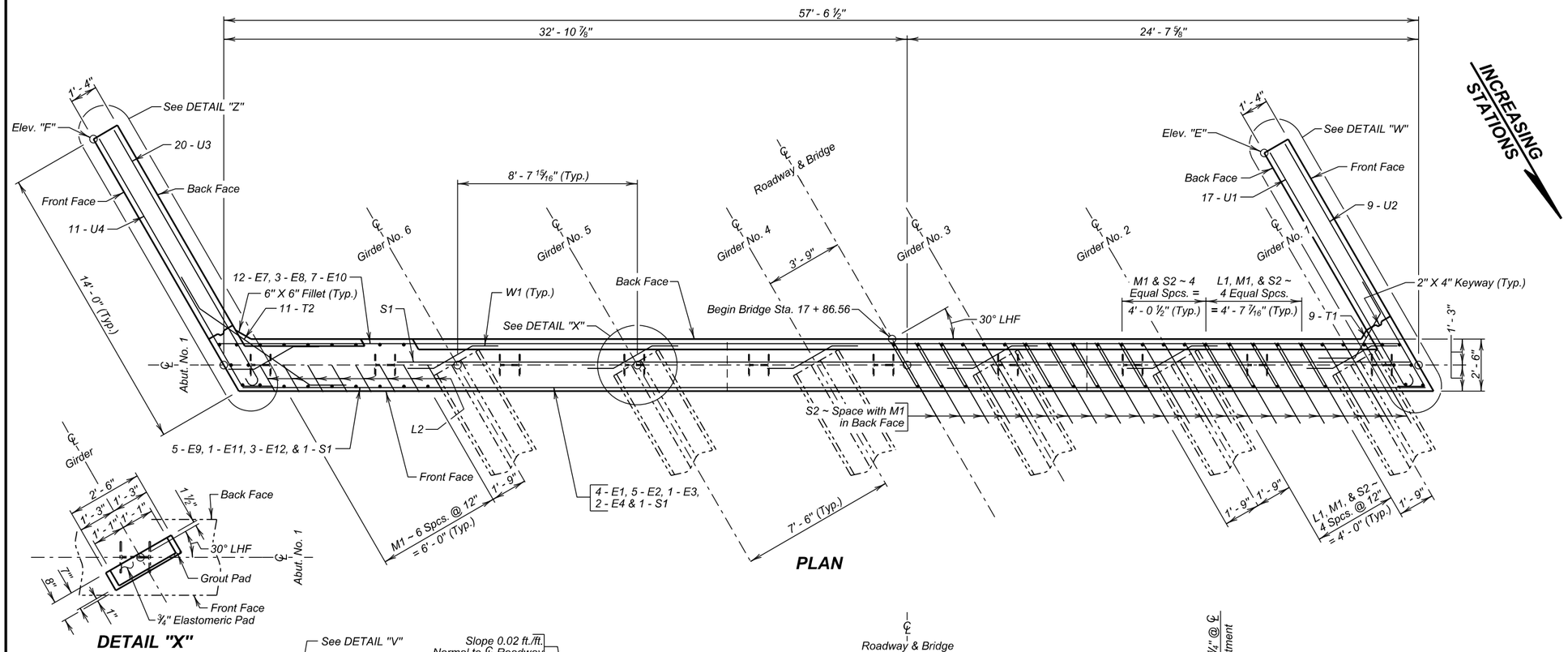


**PLAN**




**DETAIL "X"**

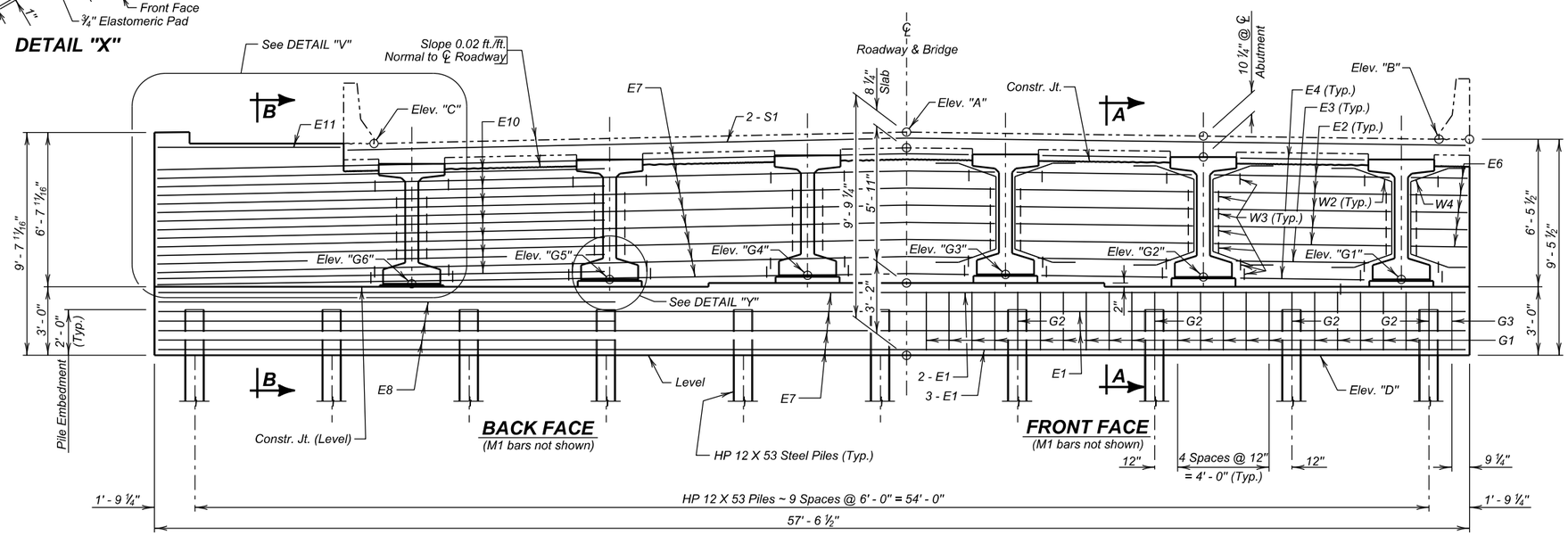


**ELEVATION**
(Along ℄ Abutment)

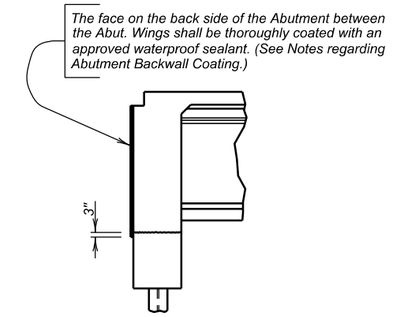


**ABUT. BACKWALL COATING DETAILS**

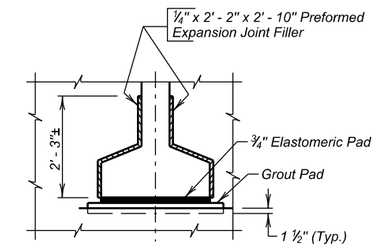


**DETAIL "Y"**
(Typical at Girder Ends; Abutments only)

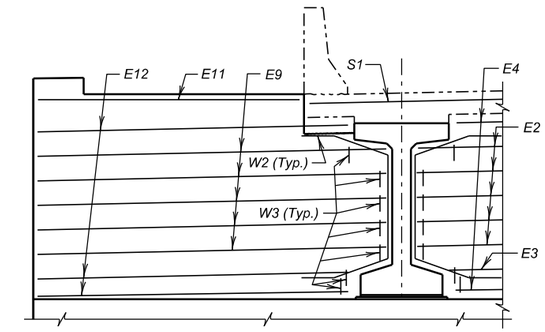


**DETAIL "V"**
**FRONT FACE**
(M bars not shown)

**ABUTMENT NO. 1 DETAILS (A)**

FOR

## 319' - 10 ⅝" PRESTR. GIRDER BRIDGE

40' - 0" ROADWAY & 5' - 0" SIDEWALK — 30° LHF SKEW
OVER TURTLE CREEK — SEC. 9-T116N-R64W
STA. 17 + 86.56 TO 21 + 06.44 — NH 0212(160)306
STR. NO. 58-086-251 — HL-93

SPINK COUNTY
S. D. DEPT. OF TRANSPORTATION
MARCH 2015



### TABLE OF ELEVATIONS

| Abut. No. | Elev. "A" | Elev. "B" | Elev. "C" | Elev. "D" | Elev. "E" | Elev. "F" | Elev. "G1" | Elev. "G2" | Elev. "G3" | Elev. "G4" | Elev. "G5" | Elev. "G6" |
|---|---|---|---|---|---|---|---|---|---|---|---|---|
| 1 | 1299.66 | 1299.35 | 1299.16 | 1289.89 | 1298.07 | 1299.42 | 1293.21 | 1293.32 | 1293.43 | 1293.39 | 1293.21 | 1293.02 |

NOTE - Elev. "A", "B" and "C" are top of slab at ℄ of Abutment. Elev. "E" and "F" are at top of wingwall where "E" is 14 ¼" below top of slab elevation.
Elev. "G1", "G2", "G3", "G4", "G5", and "G6" are top of grout pad elevations at ℄ Abutment.
Top of Grout Pads shall be Level and Smooth.

| DESIGNED BY | CK. DES. BY | DRAFTED BY | |
|---|---|---|---|
| TD | BB | MG | Kevin N. Goeden |
| SPNK03A6 | 03A6GA07 | | BRIDGE ENGINEER |

| STATE OF | PROJECT | SHEET NO. | TOTAL SHEETS |
|---|---|---|---|
| S.D. | NH 0212(160)306 | E10 | E37 |

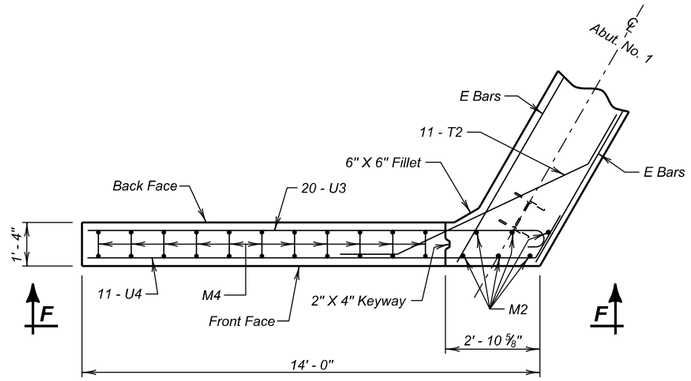


**DETAIL "Z"**

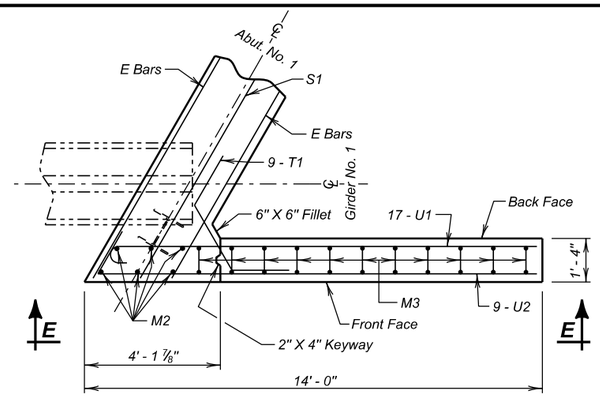


**DETAIL "W"**

## REINFORCING SCHEDULE

| | Mk. | No. | Size | Length | Type |
|---|---|---|---|---|---|
| | E1 | 7 | 6 | 57' - 3" | Str. |
| | E2 | 25 | 5 | 7' - 10" | Str. |
| | E3 | 5 | 5 | 5' - 10" | Str. |
| | E4 | 10 | 5 | 5' - 6" | Str. |
| | E6 | 5 | 5 | 2' - 6" | Str. |
| | E7 | 12 | 9 | 57' - 3" | Str. |
| | E8 | 3 | 10 | 20' - 0" | Str. |
| | E9 | 5 | 5 | 10' - 8" | Str. |
| | E10 | 7 | 9 | 19' - 7" | Str. |
| | E11 | 2 | 5 | 8' - 0" | Str. |
| | E12 | 3 | 5 | 9' - 6" | Str. |
| | G1 | 46 | 5 | 10' - 8" | T2 |
| | G2 | 10 | 5 | 9' - 5" | S6 |
| | G3 | 2 | 5 | 11' - 4" | T2 |
| Δ | L1 | 32 | 4 | 4' - 8" | 17A |
| Δ | L2 | 8 | 4 | 3' - 0" | 17A |
| | M1 | 82 | 5 | 8' - 6" | Str. |
| | M2 | 12 | 5 | 9' - 0" | Str. |
| | M3 | 11 | 5 | 14' - 6" | 17 |
| | M4 | 11 | 5 | 15' - 4" | 17 |
| Δ | S1 | 2 | 9 | 48' - 10" | Str. |
| Δ | S2 | 43 | 5 | 7' - 3" | 14A |
| | T1 | 9 | 6 | 6' - 0" | 19 |
| | T2 | 11 | 6 | 10' - 2" | 19 |
| | U1 | 17 | 9 | 14' - 1" | 1A |
| | U2 | 9 | 5 | 14' - 11" | 19A |
| | U3 | 20 | 9 | 14' - 11" | 1A |
| | U4 | 11 | 5 | 15' - 0" | 19A |
| | W1 | 6 | 5 | 4' - 8" | 19 |
| | W2 | 11 | 4 | 8' - 8" | 14 |
| | W3 | 84 | 5 | 3' - 6" | 17 |
| | W4 | 1 | 4 | 8' - 2" | 14 |

Bending Details

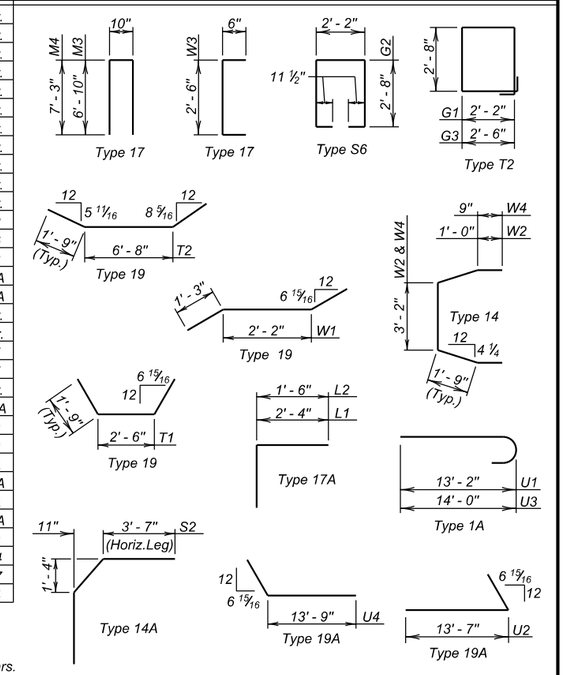


NOTE:
All dimensions are out to out of bars.
Δ Bars to be Epoxy Coated.

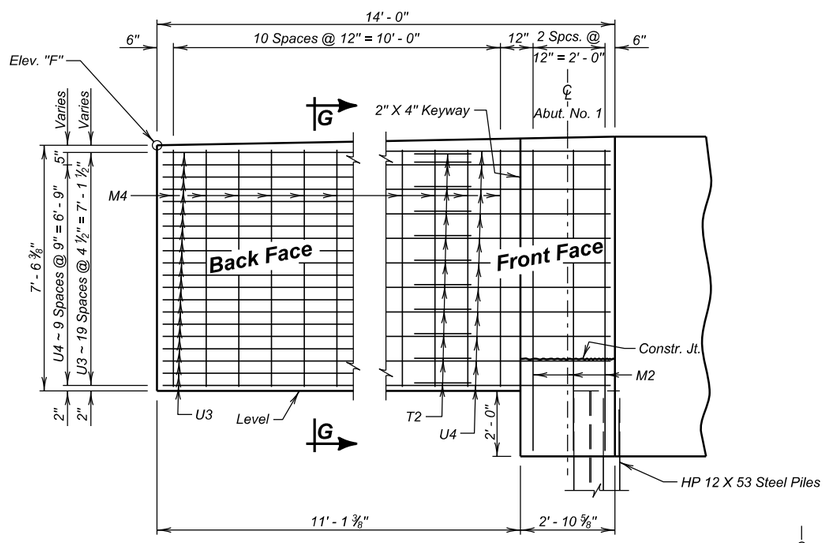


**VIEW F - F**

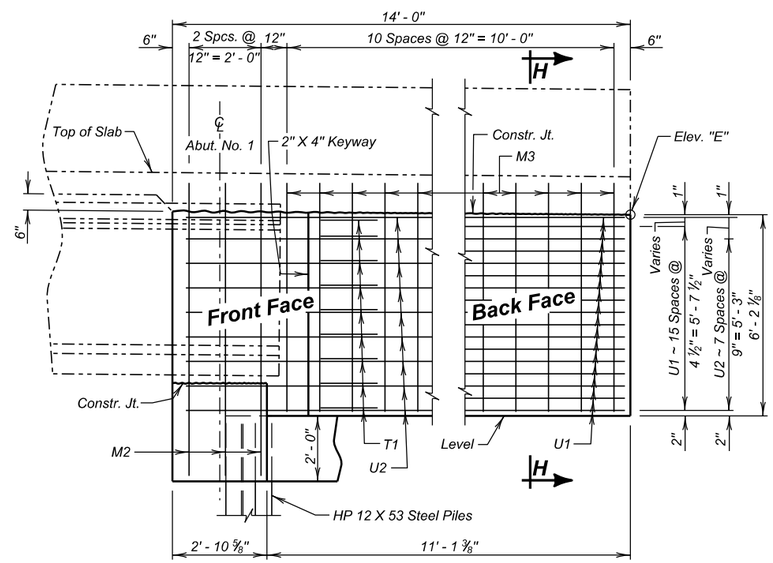


**VIEW E - E**

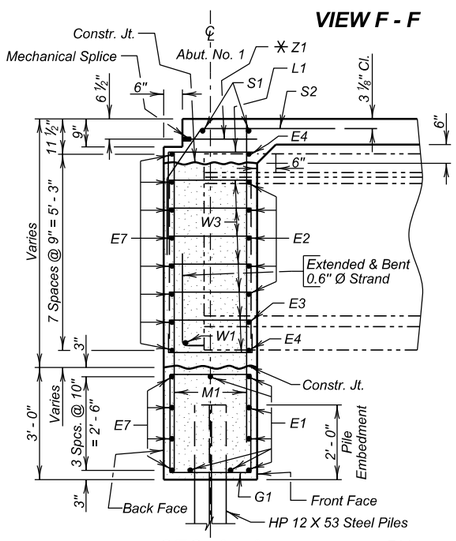


**SEC. A - A**

✳ Z1 bars are listed and included in superstructure. See SUPERSTRUCTURE DETAILS (A) & (B).

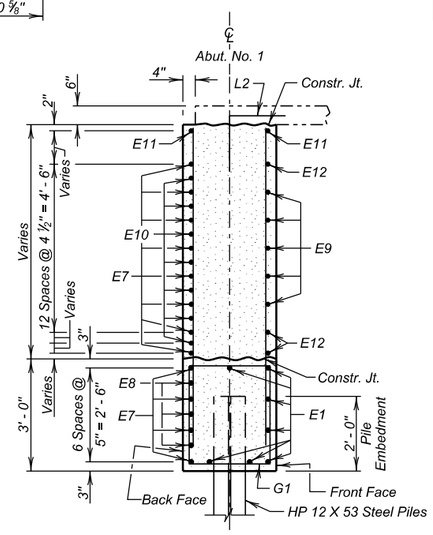


**SEC. B - B**

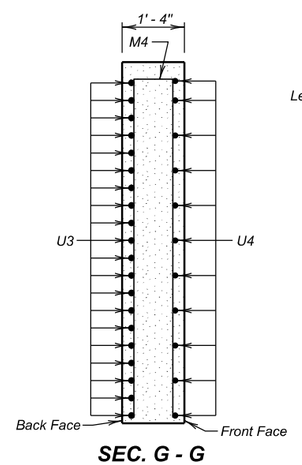


**SEC. G - G**

NOTE -
≠ Listed on SUPERSTRUCTURE DETAILS (B)

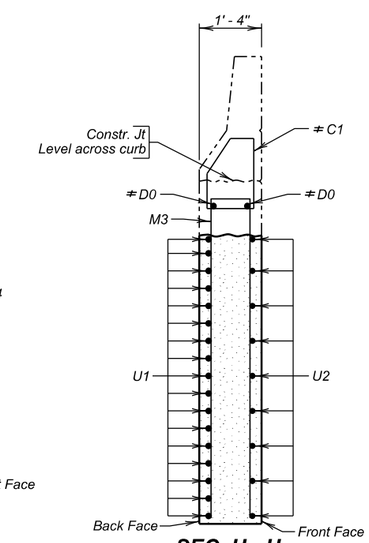


**SEC. H - H**

## ESTIMATED QUANTITIES

| | ITEM | UNIT | QUANTITY |
|---|---|---|---|
| ϕ | Class A45 Concrete, Bridge | Cu. Yd. | 54.1 |
| | Reinforcing Steel | Lb. | 8679 |
| | Epoxy Coated Reinforcing Steel | Lb. | 773 |
| | Structure Excavation, Bridge | Cu. Yd. | 14.8 |
| | HP 12 x 53 Steel Test Pile, Furnish and Drive | Ft. | 1 @ 65' |
| | HP 12 x 53 Steel Bearing Pile, Furnish and Drive | Ft. | 9 @ 60' = 540' |
| | Preboring Pile | Ft. | 10 @ 10' = 100' |

ϕ Includes 0.1 cu. yds. for grout pads.

Note: Concrete shall be placed in the space under the beams (within the backwall width) during the pour. Care shall be taken to get the concrete vibrated into this area. If upon form removal the space is not completely filled and consolidated, the contractor shall grout the remaining voids.

**ABUTMENT NO. 1 DETAILS (B)**

FOR

319' - 10 ⅝" PRESTR. GIRDER BRIDGE

40' - 0" ROADWAY & 5' - 0" SIDEWALK — 30° LHF SKEW
OVER TURTLE CREEK — SEC. 9-T116N-R64W
STA. 17 + 86.56 TO 21 + 06.44 — NH 0212(160)306
STR. NO. 58-086-251 — HL-93

SPINK COUNTY
S. D. DEPT. OF TRANSPORTATION
MARCH 2015



| DESIGNED BY | CK. DES. BY | DRAFTED BY | |
|---|---|---|---|
| TD | BB | MG | Kevin N. Cooden BRIDGE ENGINEER |
| SPNK03A6 | 03A6GA08 | | |

| STATE OF | PROJECT | SHEET NO. | TOTAL SHEETS |
|---|---|---|---|
| S.D. | NH 0212(160)306 | E11 | E37 |

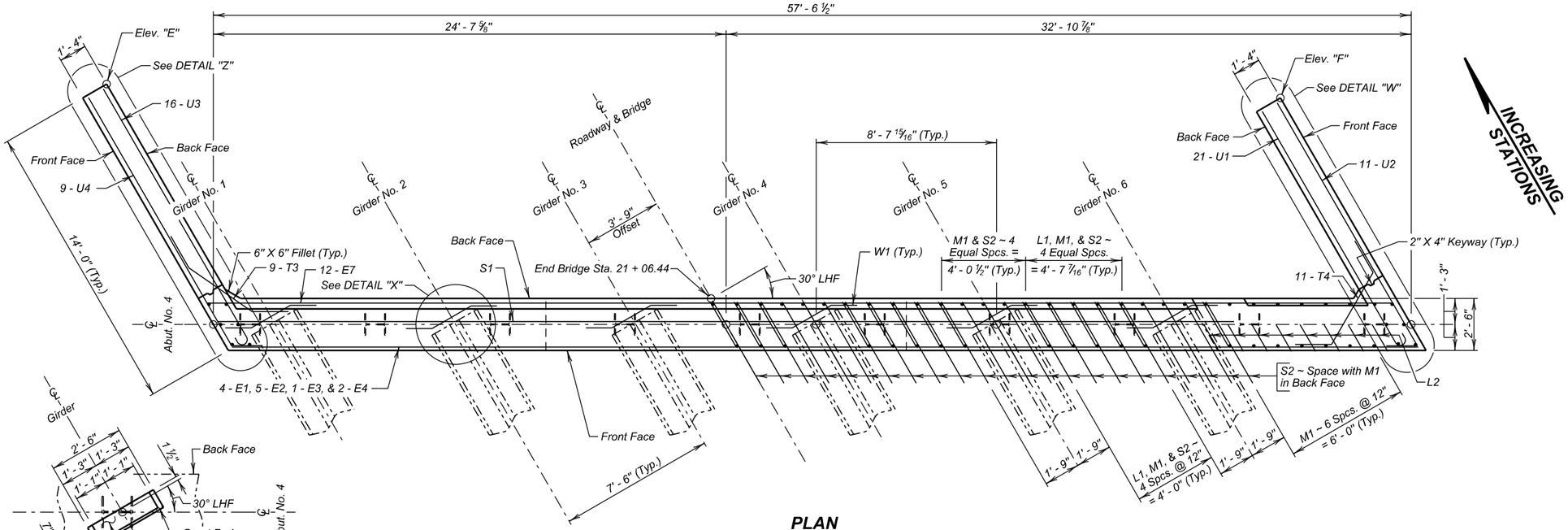


## PLAN

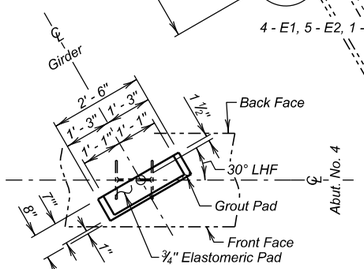


## DETAIL "X"

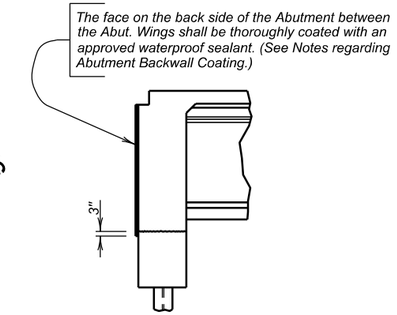


## ABUT. BACKWALL COATING DETAILS

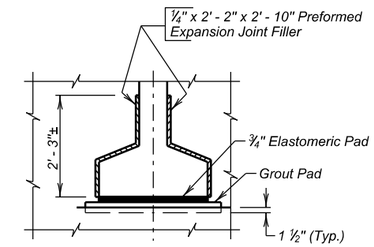


## DETAIL "Y"

(Typical at Girder Ends; Abutments only)

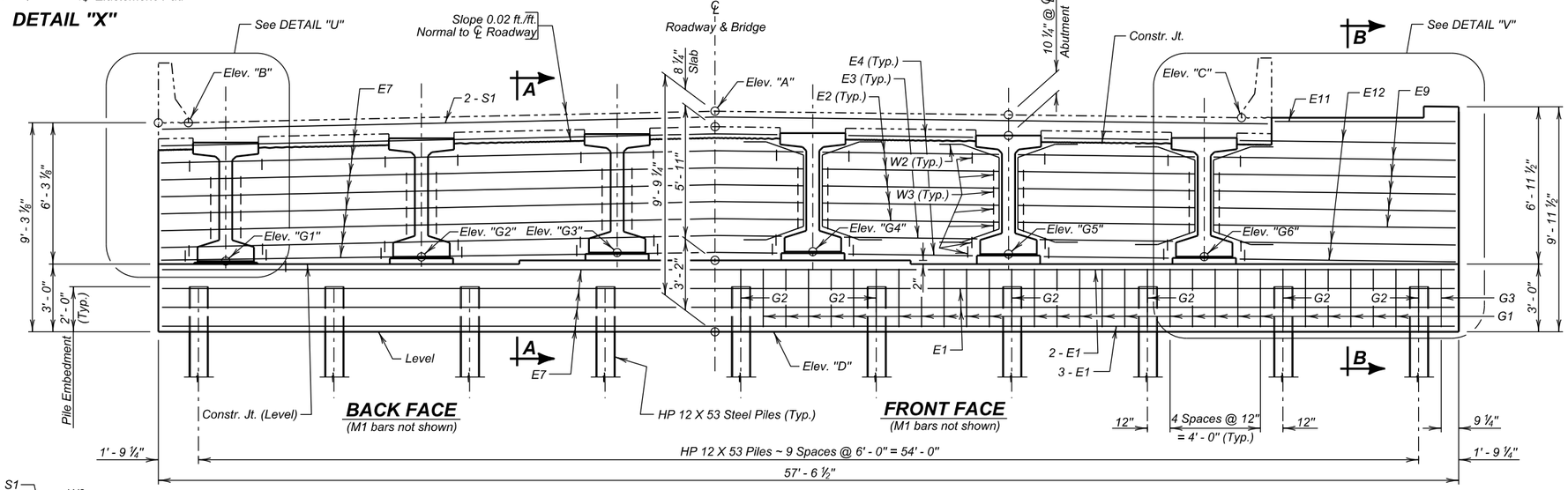


## ELEVATION

(Along ℄ Abutment)

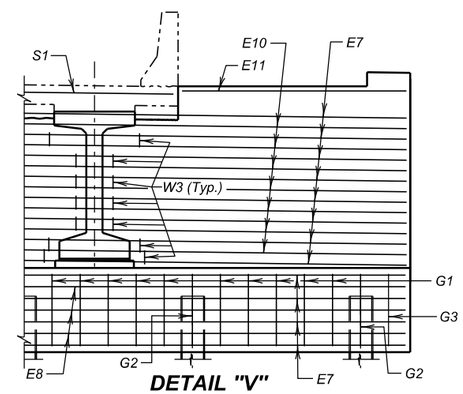


## DETAIL "V"
## BACK FACE

(M Bars not shown)

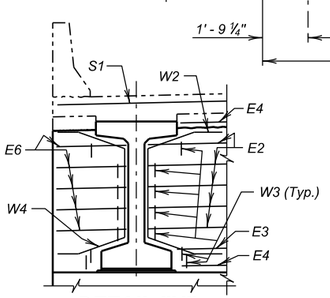


## DETAIL "U"
## FRONT FACE

(M bars not shown)

### TABLE OF ELEVATIONS

| Abut. No. | Elev. "A" | Elev. "B" | Elev. "C" | Elev. "D" | Elev. "E" | Elev. "F" | Elev. "G1" | Elev. "G2" | Elev. "G3" | Elev. "G4" | Elev. "G5" | Elev. "G6" |
|---|---|---|---|---|---|---|---|---|---|---|---|---|
| 4 | 1299.53 | 1299.02 | 1299.24 | 1289.76 | 1297.72 | 1299.60 | 1292.89 | 1293.08 | 1293.27 | 1293.31 | 1293.20 | 1293.09 |

NOTE - Elev. "A", "B" and "C" are top of slab at ℄ of Abutment. Elev. "E" and "F" are at top of wingwall where "E" is 14 ¼" below top of slab elevation.
Elev. "G1", "G2", "G3", "G4", "G5", and "G6" are top of grout pad elevations at ℄ Abutment.
Top of Grout Pads shall be Level and Smooth.

**ABUTMENT NO. 4 DETAILS (A)**

FOR

319' - 10 ⅝" PRESTR. GIRDER BRIDGE

40' - 0" ROADWAY & 5' - 0" SIDEWALK — 30° LHF SKEW
OVER TURTLE CREEK — SEC. 9-T116N-R64W
STA. 17 + 86.56 TO 21 + 06.44 — NH 0212(160)306
STR. NO. 58-086-251 — HL-93

SPINK COUNTY
S. D. DEPT. OF TRANSPORTATION
MARCH 2015



| DESIGNED BY | CK. DES. BY | DRAFTED BY | |
|---|---|---|---|
| TD | BB | MG | Kevin N. Goeden |
| SPNK03A6 | 03A6GA09 | | BRIDGE ENGINEER |

| STATE OF | PROJECT | SHEET NO. | TOTAL SHEETS |
|---|---|---|---|
| S.D. | NH 0212(160)306 | E12 | E37 |

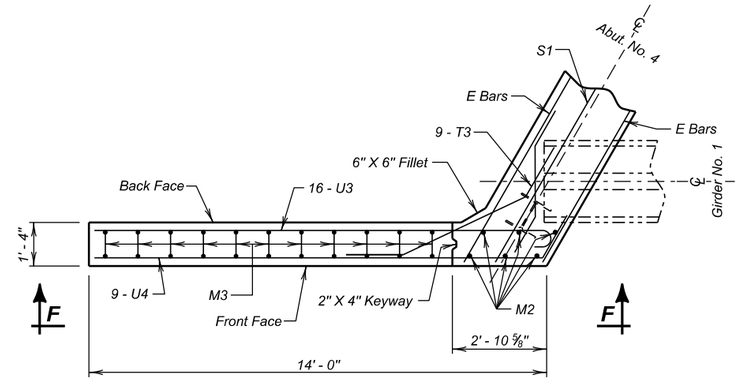


**DETAIL "Z"**

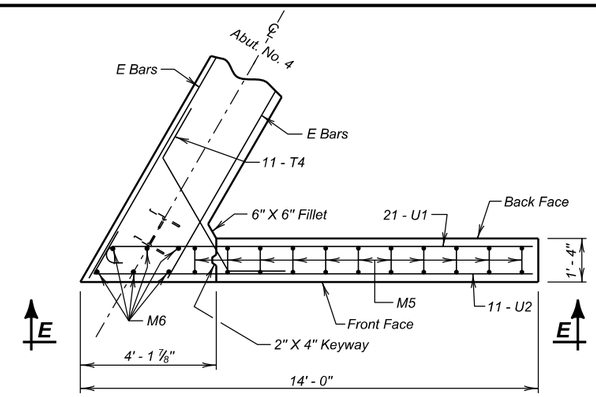


**DETAIL "W"**

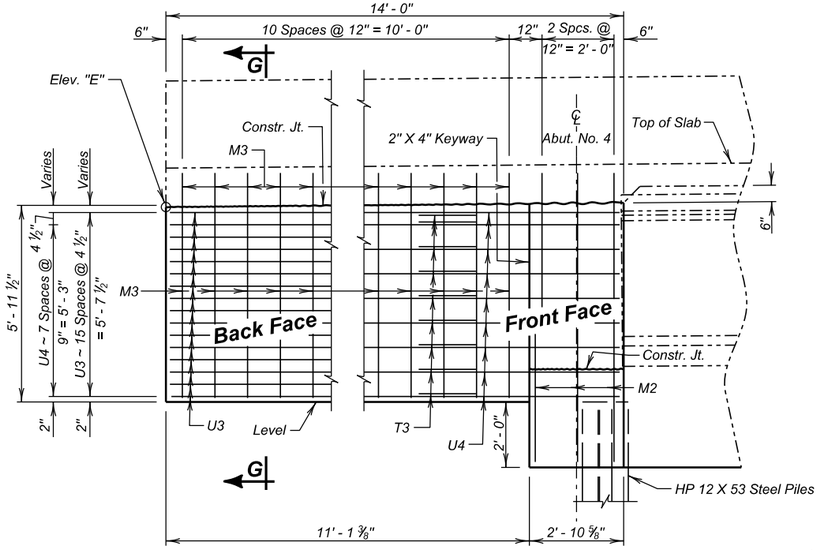


**VIEW F - F**

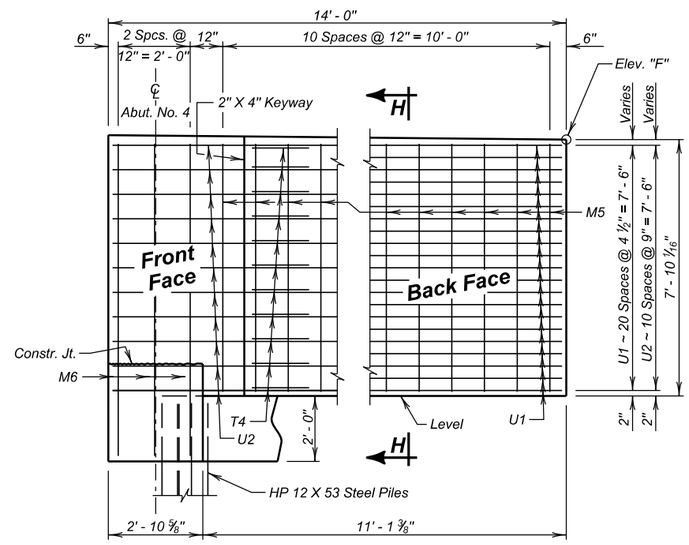


**VIEW E - E**

## REINFORCING SCHEDULE

| | Mk. | No. | Size | Length | Type |
|---|---|---|---|---|---|
| | E1 | 7 | 6 | 57' - 3" | Str. |
| | E2 | 25 | 5 | 7' - 10" | Str. |
| | E3 | 5 | 5 | 5' - 10" | Str. |
| | E4 | 10 | 5 | 5' - 6" | Str. |
| | E6 | 5 | 5 | 2' - 6" | Str. |
| | E7 | 12 | 9 | 57' - 3" | Str. |
| | E8 | 3 | 10 | 20' - 0" | Str. |
| | E9 | 5 | 5 | 10' - 8" | Str. |
| | E10 | 7 | 9 | 19' - 7" | Str. |
| | E11 | 2 | 5 | 8' - 0" | Str. |
| | E12 | 3 | 5 | 9' - 6" | Str. |
| | G1 | 46 | 5 | 10' - 8" | T2 |
| | G2 | 10 | 5 | 9' - 5" | S6 |
| | G3 | 2 | 5 | 11' - 4" | T2 |
| △ | L1 | 32 | 4 | 4' - 8" | 17A |
| △ | L2 | 8 | 4 | 3' - 0" | 17A |
| | M1 | 82 | 5 | 8' - 6" | Str. |
| | M2 | 6 | 5 | 9' - 0" | Str. |
| | M3 | 11 | 5 | 14' - 6" | 17 |
| | M5 | 11 | 5 | 16' - 0" | 17 |
| | M6 | 6 | 5 | 9' - 7" | Str. |
| △ | S1 | 2 | 9 | 48' - 10" | Str. |
| △ | S2 | 43 | 5 | 7' - 3" | 14A |
| | T3 | 9 | 6 | 7' - 2" | 19 |
| | T4 | 11 | 6 | 7' - 7" | 19 |
| | U1 | 21 | 9 | 14' - 1" | 1A |
| | U2 | 11 | 5 | 14' - 11" | 19A |
| | U3 | 16 | 9 | 14' - 11" | 1A |
| | U4 | 9 | 5 | 15' - 0" | 19A |
| | W1 | 6 | 5 | 4' - 8" | 19 |
| | W2 | 11 | 4 | 8' - 8" | 14 |
| | W3 | 84 | 5 | 3' - 6" | 17 |
| | W4 | 1 | 4 | 8' - 2" | 14 |

Bending Details

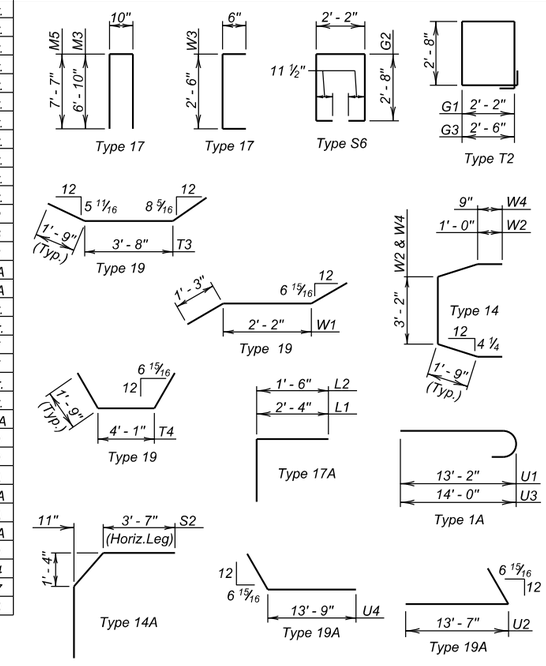


NOTE:
All dimensions are out to out of bars.
△ Bars to be Epoxy Coated.

## ESTIMATED QUANTITIES

| | ITEM | UNIT | QUANTITY |
|---|---|---|---|
| ϕ | Class A45 Concrete, Bridge | Cu. Yd. | 54.2 |
| | Reinforcing Steel | Lb. | 8652 |
| | Epoxy Coated Reinforcing Steel | Lb. | 773 |
| | Structure Excavation, Bridge | Cu. Yd. | 14.8 |
| | HP 12 x 53 Steel Test Pile, Furnish and Drive | Ft. | 1 @ 85' |
| | HP 12 x 53 Steel Bearing Pile, Furnish and Drive | Ft. | 9 @ 80' = 720' |
| | Preboring Pile | Ft. | 10 @ 10' = 100' |

ϕ Includes 0.1 cu. yds. for grout pads.

Note: Concrete shall be placed in the space under the beams (within the backwall width) during the pour. Care shall be taken to get the concrete vibrated into this area. If upon form removal the space is not completely filled and consolidated, the contractor shall grout the remaining voids.

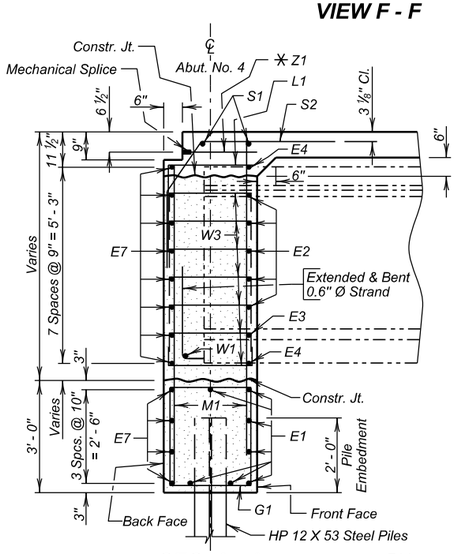


**SEC. A - A**

✳ Z1 bars are listed and included in superstructure. See SUPERSTRUCTURE DETAILS (A) & (B).

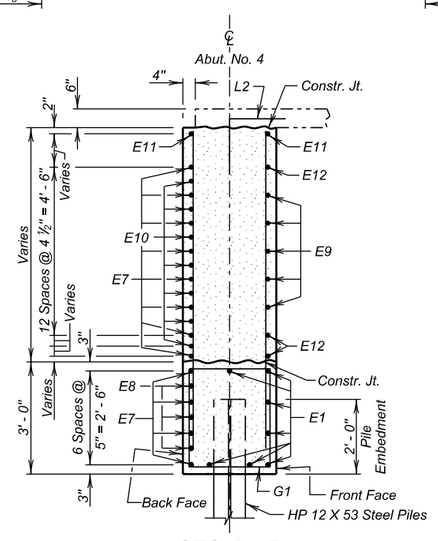


**SEC. B - B**

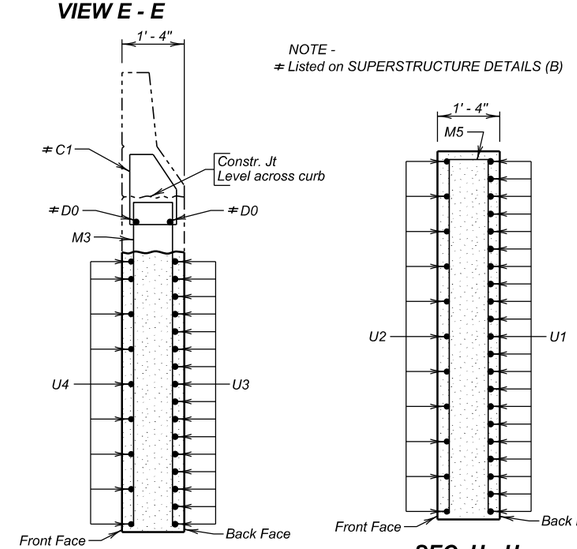


**SEC. G - G**

**SEC. H - H**

**ABUTMENT NO. 4 DETAILS (B)**

FOR

319' - 10 5/8" PRESTR. GIRDER BRIDGE

40' - 0" ROADWAY & 5' - 0" SIDEWALK — 30° LHF SKEW
OVER TURTLE CREEK — SEC. 9-T116N-R64W
STA. 17 + 86.56 TO 21 + 06.44 — NH 0212(160)306
STR. NO. 58-086-251 — HL-93

SPINK COUNTY

S. D. DEPT. OF TRANSPORTATION

MARCH 2015



| DESIGNED BY | CK. DES. BY | DRAFTED BY | |
|---|---|---|---|
| TD | BB | MG | Kevin N. Boeden BRIDGE ENGINEER |
| SPNK03A6 | 03A6GA10 | | |

| STATE OF | PROJECT | SHEET NO. | TOTAL SHEETS |
|---|---|---|---|
| S.D. | NH 0212(160)306 | E13 | E37 |

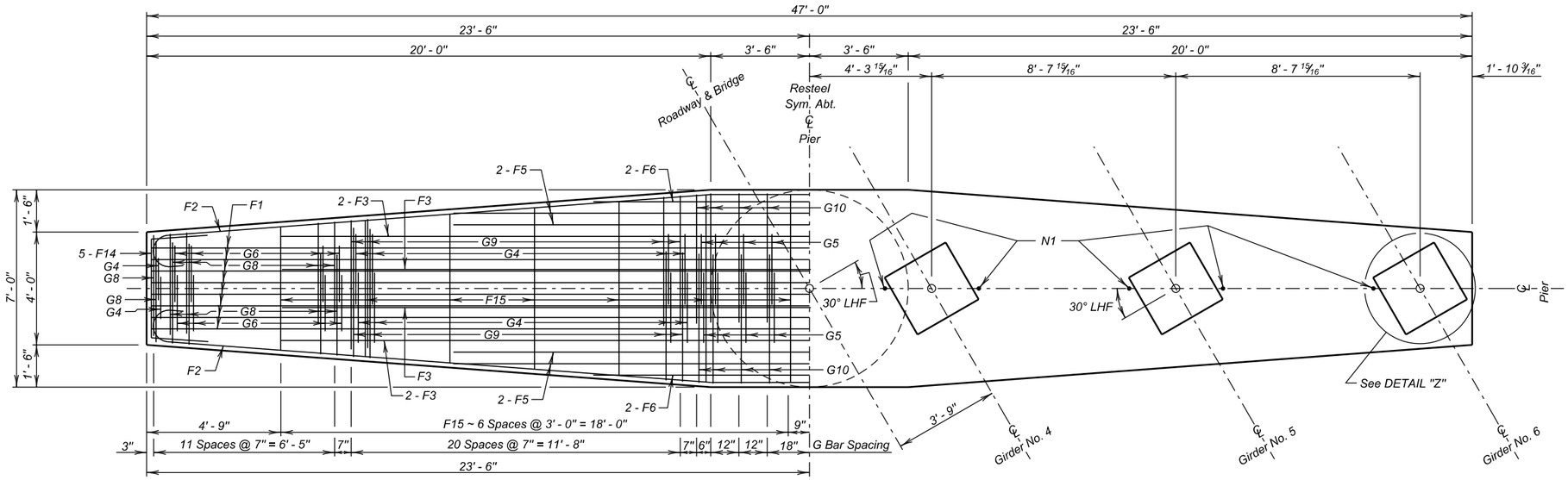


**PLAN**

INCREASING STATIONS

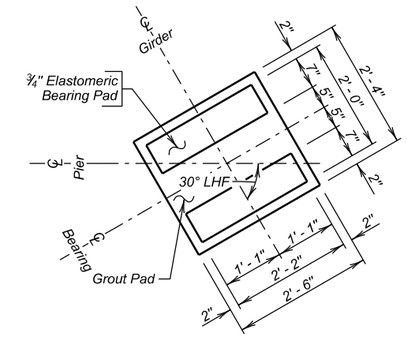


**DETAIL "Z"**

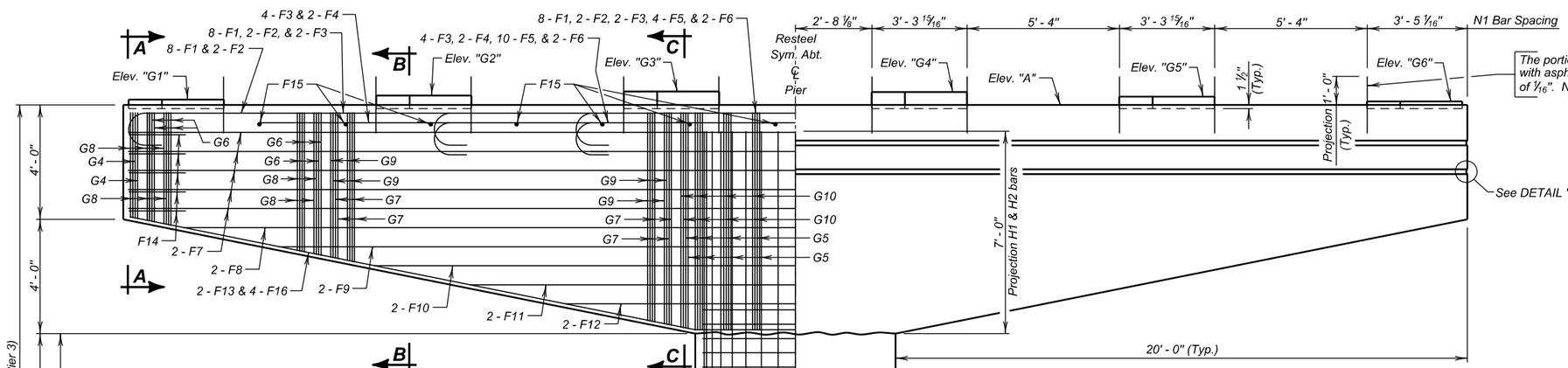


**ELEVATION**

The portion of the N1 bar above the bent cap is to be coated with asphalt paint or wrapped with tar paper to a minimum thickness of 1/16". N1 bar may be shifted slightly off ℄ Pier to avoid top mat of resteel.

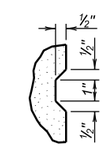


**DETAIL "X"**

**TABLE OF ELEVATIONS**

| Pier No. | ★Elev. "G1" | ★Elev. "G2" | ★Elev. "G3" | ★Elev. "G4" | ★Elev. "G5" | ★Elev. "G6" | Elev. "A" | Elev. "B" | Elev. "C" | Elev. "D" |
|---|---|---|---|---|---|---|---|---|---|---|
| 2 | 1293.75 | 1293.89 | 1294.03 | 1294.01 | 1293.85 | 1293.68 | 1293.56 | 1170.00 | 1272.00 | 1258.00 |
| 3 | 1293.63 | 1293.80 | 1293.97 | 1293.98 | 1293.85 | 1293.71 | 1293.51 | 1165.00 | 1272.00 | 1247.00 |

NOTE: Top of Grout Pad shall be level and smooth .
★Elevations are Top of Grout Pad at centerline of bent.

**PIER DETAILS (A)**

FOR

319' - 10 5/8" PRESTR. GIRDER BRIDGE

40' - 0" ROADWAY & 5' - 0" SIDEWALK — 30° LHF SKEW
OVER TURTLE CREEK — SEC. 9-T116N-R64W
STA. 17 + 86.56 TO 21 + 06.44 — NH 0212(160)306
STR. NO. 58-086-251 — HL-93

SPINK COUNTY
S. D. DEPT. OF TRANSPORTATION
MARCH 2015



| DESIGNED BY | CK. DES. BY | DRAFTED BY | |
|---|---|---|---|
| TD | JMH | MG | Kevin N. Boeden |
| SPNK03A6 | 03A6GA11 | | BRIDGE ENGINEER |

| STATE OF | PROJECT | SHEET NO. | TOTAL SHEETS |
|---|---|---|---|
| S.D. | NH 0212(160)306 | E14 | E37 |

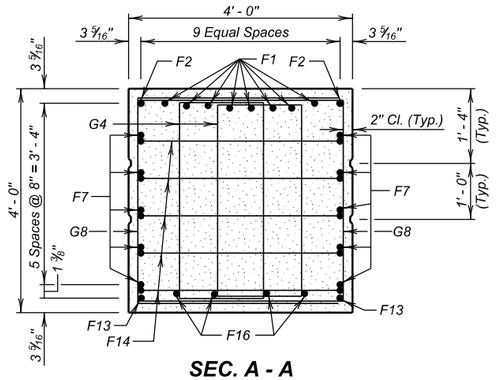


SEC. A - A

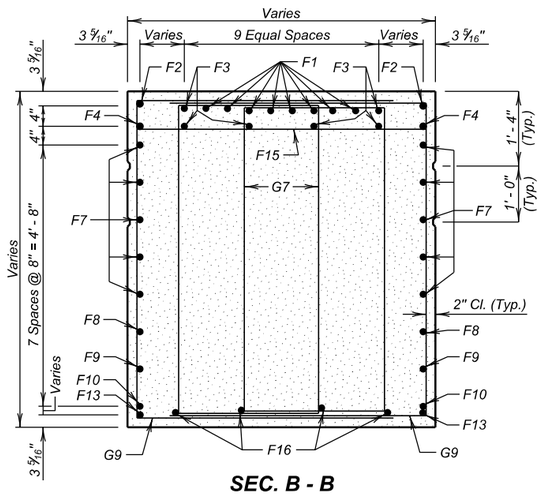


SEC. B - B

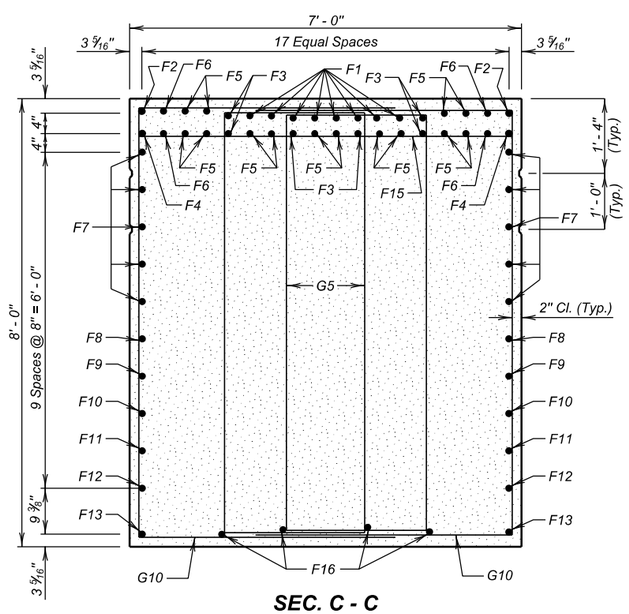


SEC. C - C

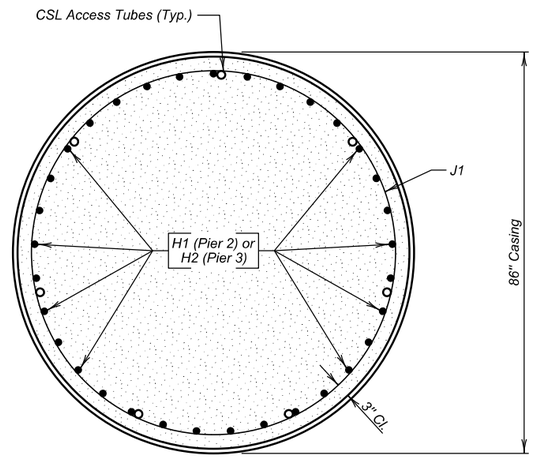


SEC. D - D

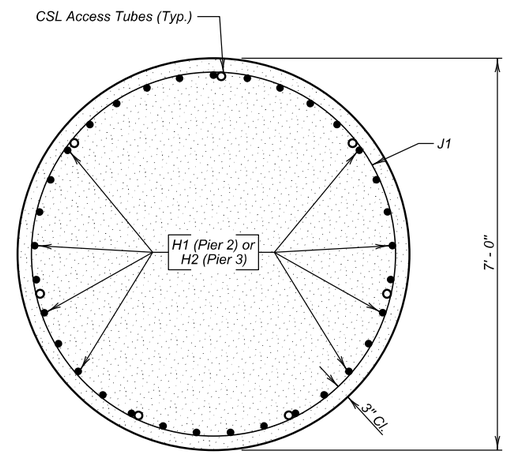


SEC. E - E

## ESTIMATED QUANTITIES

| ITEM | UNIT | QUANTITY Pier No. 2 | QUANTITY Pier No. 3 |
|---|---|---|---|
| ⌀ Class A45 Concrete, Bridge | Cu. Yd. | 72.9 | 72.9 |
| Reinforcing Steel | Lb. | 74722 | 77200 |
| Drilled Shaft Excavation | Cu. Yd. | 138.5 | 147.0 |
| Class A45 Concrete, Drilled Shaft | Cu. Yd. | 145.4 | 152.5 |
| 86" Permanent Casing | Ft. | 14 | 25 |
| No. 18 Rebar Splice | Each | 66 | 66 |

⌀ Includes 0.4 Cu. Yds. for Grout Pads at Piers 2 & 3.

## REINFORCING SCHEDULE

(For One Pier - 2 Required)

| | Mk. | No. | Size | Length | Type |
|---|---|---|---|---|---|
| | F1 | 8 | 11 | 50' - 2" | 1 |
| | F2 | 2 | 11 | 50' - 3" | 7 |
| | F3 | 6 | 11 | 37' - 6" | Str. |
| | F4 | 2 | 11 | 37' - 8" | 19A |
| | F5 | 14 | 11 | 28' - 8" | 1 |
| | F6 | 4 | 11 | 18' - 9" | 1 |
| | F7 | 10 | 7 | 46' - 9" | 19A |
| | F8 | 2 | 7 | 42' - 0" | 19A |
| | F9 | 2 | 7 | 35' - 4" | 19A |
| | F10 | 2 | 7 | 28' - 8" | 19A |
| | F11 | 2 | 7 | 22' - 0" | 19A |
| | F12 | 2 | 7 | 15' - 4" | 19A |
| | F13 | 2 | 7 | 47' - 4" | 19A |
| | F14 | 10 | 7 | 7' - 6" | 19A |
| | F15 | 7 | 7 | 11' - 0" | Str. |
| | F16 | 4 | 7 | 47' - 4" | 19A |
| | G4 | 4 | 5 | 11' - 4" | T2 |
| | G5 | 18 | 5 | 21' - 1" | T2 |
| * | G6 | 44 | 5 | 13' - 9" | T2 |
| * | G7 | 84 | 5 | 18' - 7" | T2 |
| * | G8 | 48 | 5 | 11' - 7" | 17 |
| * | G9 | 88 | 5 | 15' - 6" | 17 |
| | G10 | 18 | 5 | 16' - 8" | 17 |
| Pier 3 ⌀ | H1 | 33 | 18 | 122' - 6" | Str. |
| Pier 3 ⌀ | J1 | 233 | 5 | 22' - 5" | T3 |
| Pier 2 ⌀ | H2 | 33 | 18 | 127' - 6" | Str. |
| Pier 2 ⌀ | J1 | 243 | 5 | 22' - 5" | T3 |
| | N1 | 10 | 8 | 2' - 0" | Str. |

Bending Details

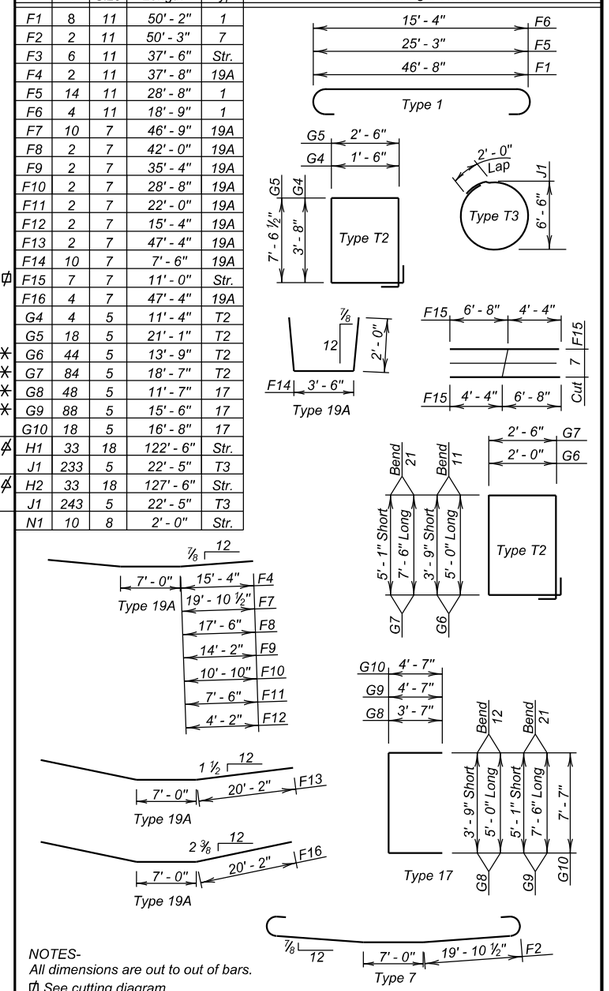


NOTES-
All dimensions are out to out of bars.
⌀ See cutting diagram.
* Length shown is average. Actual lengths vary according to bend diagram.
⌀ Length shown is full length required. The contractor must submit a splice plan for approval. Mechanical splices must be staggered and not placed side by side. Splices shall not be placed within 10 feet of the point of fixity or top and bottom of casing.

**PIER DETAILS (B)**

FOR

319' - 10 5/8" PRESTR. GIRDER BRIDGE

40' - 0" ROADWAY & 5' - 0" SIDEWALK — 30° LHF SKEW
OVER TURTLE CREEK — SEC. 9-T116N-R64W
STA. 17 + 86.56 TO 21 + 06.44 — NH 0212(160)306
STR. NO. 58-086-251 — HL-93

SPINK COUNTY

S. D. DEPT. OF TRANSPORTATION

MARCH 2015



| DESIGNED BY | CK. DES. BY | DRAFTED BY | |
|---|---|---|---|
| TD | JMH | MG | Kevin N. Goeden BRIDGE ENGINEER |
| SPNK03A6 | 03A6GA12 | | |

| STATE OF | PROJECT | SHEET NO. | TOTAL SHEETS |
|---|---|---|---|
| S.D. | NH 0212(160)306 | E15 | E37 |

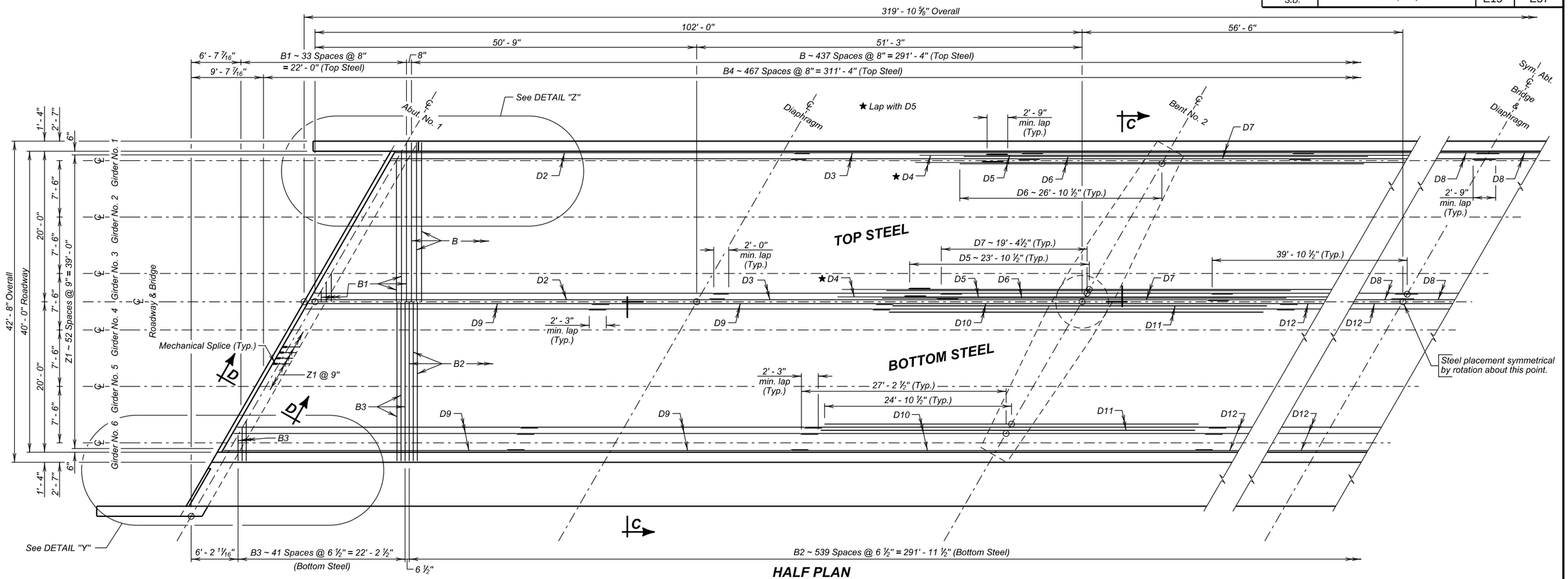


## HALF PLAN

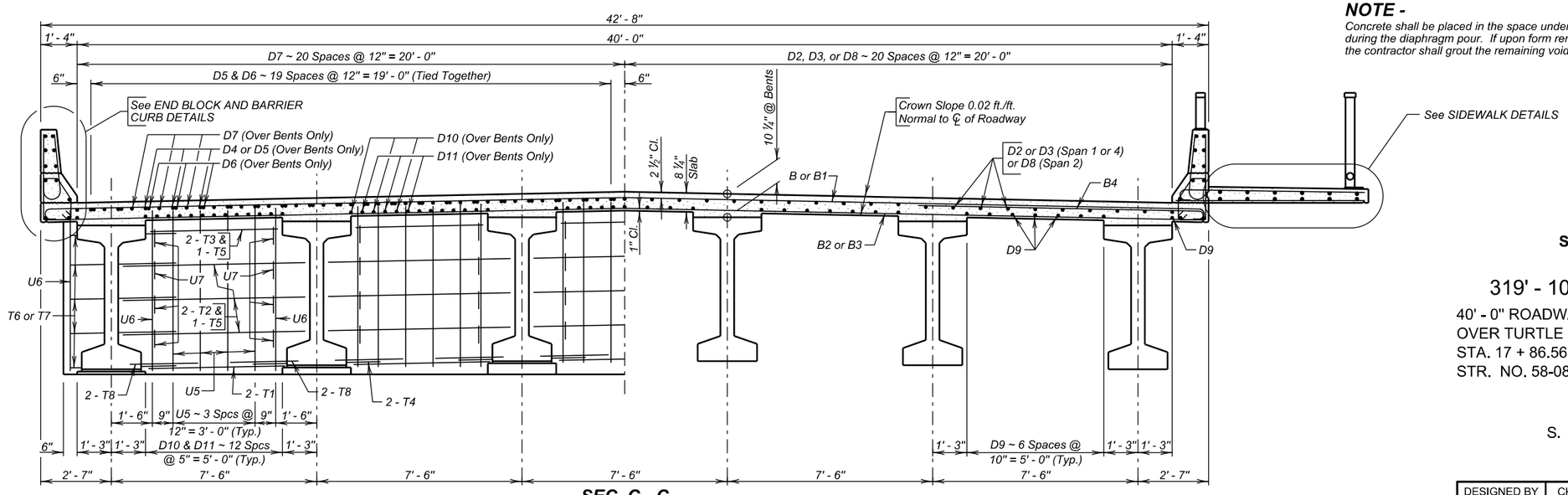


## SEC. C - C

(Midspan diaphragm not shown in this section, see DIAPHRAGM DETAILS sheet.)

### NOTE -

*Concrete shall be placed in the space under the beams at Bents 2 & 3 (within the diaphragm width) during the diaphragm pour. If upon form removal the space is not completly filled and consolidated, the contractor shall grout the remaining voids.*

**SUPERSTRUCTURE DETAILS (A)**

FOR

# 319' - 10 5/8" PRESTR. GIRDER BRIDGE

40' - 0" ROADWAY & 5' - 0" SIDEWALK — 30° LHF SKEW
OVER TURTLE CREEK — SEC. 9-T116N-R64W
STA. 17 + 86.56 TO 21 + 06.44 — NH 0212(160)306
STR. NO. 58-086-251 — HL-93

SPINK COUNTY
S. D. DEPT. OF TRANSPORTATION
MARCH 2015



| DESIGNED BY | CK. DES. BY | DRAFTED BY | |
|---|---|---|---|
| TD | BB | MG | Kevin N. Boeden BRIDGE ENGINEER |
| SPNK03A6 | 03A6GA13 | | |

| STATE OF | PROJECT | SHEET NO. | TOTAL SHEETS |
|---|---|---|---|
| S.D. | NH 0212(160)306 | E16 | E37 |

## REINFORCING SCHEDULE

| | Mk. | No. | Size | Length | Type |
|---|---|---|---|---|---|
| ⌀ | B | 438 | 5 | 43' - 8" | 1 |
| ⌀ ≠ | B1 | 34 | 5 | 47' - 9" | 1 |
| | B2 | 540 | 4 | 42' - 4" | Str. |
| ≠ | B3 | 42 | 4 | 45' - 4" | Str. |
| ⌀ | B4 | 468 | 4 | 11' - 0" | 1A |
| | B15 | 12 | 5 | 14' - 6" | Str. |
| | B16 | 6 | 4 | 57' - 4" | Str. |
| | B17 | 8 | 4 | 8' - 6" | 19B |
| | B18 | 12 | 8 | 4' - 3" | 19B |
| | B19 | 12 | 5 | 2' - 4" | Str. |
| | B20 | 6 | 6 | 3' - 6" | 17A |
| | B21 | 6 | 4 | 53' - 7" | Str. |
| | B22 | 6 | 6 | 3' - 6" | Str. |
| | C1 | 793 | 5 | 5' - 7" | T1A |
| | C2 | 765 | 5 | 5' - 1" | S11 |
| | C3 | 4 | 5 | 5' - 0" | S11 |
| | C4 | 4 | 5 | 5' - 0" | S11 |
| | C5 | 4 | 5 | 5' - 0" | S11 |
| | C6 | 4 | 5 | 6' - 8" | T1 |
| | C7 | 4 | 5 | 6' - 9" | T1 |
| | C8 | 4 | 5 | 6' - 11" | T1 |
| | C9 | 4 | 5 | 7' - 0" | T1 |
| | C10 | 16 | 6 | 5' - 11" | T1A |
| | C11 | 16 | 5 | 7' - 1" | 17 |
| | C12 | 4 | 6 | 5' - 6" | 17 |
| | C13 | 4 | 5 | 5' - 4" | Str. |
| | D | 12 | 4 | 59' - 0" | Str. |
| | D0 | 12 | 5 | 59' - 5" | Str. |
| | D1 | 36 | 4 | 55' - 1" | Str. |
| | D2 | 82 | 4 | 55' - 1" | Str. |
| | D3 | 82 | 6 | 33' - 0" | Str. |
| | D4 | 80 | 6 | 11' - 9" | Str. |
| | D5 | 80 | 6 | 56' - 9" | Str. |
| | D6 | 80 | 5 | 53' - 9" | Str. |
| | D7 | 82 | 6 | 38' - 9" | Str. |
| | D8 | 82 | 6 | 41' - 3" | Str. |
| | D9 | 148 | 5 | 40' - 0" | Str. |
| | D10 | 74 | 5 | 56' - 0" | Str. |
| | D11 | 60 | 5 | 49' - 9" | Str. |
| | D12 | 37 | 5 | 60' - 0" | Str. |
| | D13 | 12 | 5 | 55' - 9" | Str. |
| | D14 | 36 | 4 | 51' - 4" | Str. |
| | D15 | 12 | 4 | 55' - 4" | Str. |
| | M7 | 472 | 4 | 7' - 3" | 1A |
| ≠ | M8 | 4 | 4 | 8' - 4" | Str. |
| | M9 | 315 | 4 | 6' - 11" | Str. |
| ≠ | M10 | 2 | 4 | 8' - 7" | Str. |
| | N1 | 72 | 4 | 54' - 0" | Str. |
| ✳ | T1 | 20 | 6 | 5' - 9" | Str. |
| ✳ | T2 | 60 | 5 | 7' - 8" | Str. |
| ✳ | T3 | 20 | 5 | 5' - 4" | Str. |
| ✳ | T4 | 16 | 5 | 5' - 0" | 19C |
| ✳ | T5 | 8 | 6 | 46' - 2" | Str. |
| ✳ | T6 | 20 | 5 | 6' - 7" | 19C |
| ✳ | T7 | 20 | 5 | 4' - 11" | 19C |
| ✳ | T8 | 40 | 6 | 2' - 6" | Str. |
| | U5 | 40 | 4 | 16' - 5" | S4 |
| | U6 | 24 | 6 | 16' - 11" | S4 |
| ✳ | U7 | 80 | 6 | 4' - 5" | 17 |
| | W4 | 40 | 4 | 7' - 0" | 17B |
| | W5 | 40 | 4 | 5' - 0" | 17 |
| | Z1 | 106 | 7 | 2' - 0" | Str. |
| | Z2 | 10 | 4 | 2' - 0" | Str. |

### Bending Details

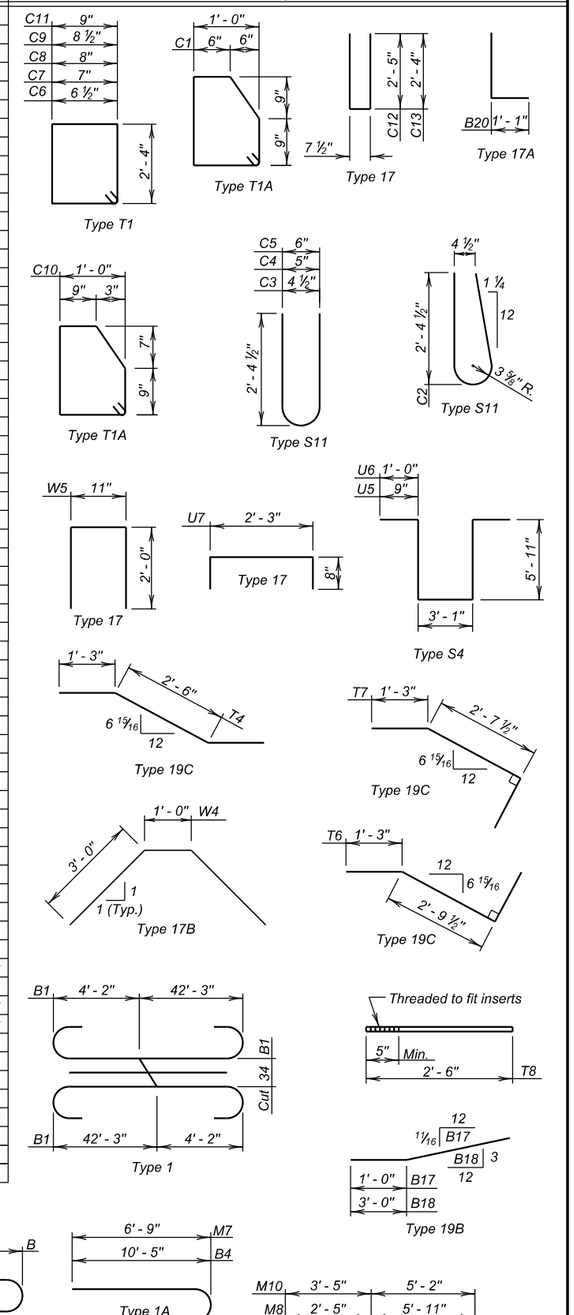


NOTES -

≠ See cutting diagram.

All reinforcing steel shall be epoxy coated except as noted.
See Approach Slab sheet for location of Z1 bars.
All dimensions are out to out of bars.

✳ Bars not to be epoxy coated.

⌀ Tip bars as required to maintain top and bottom clear cover.

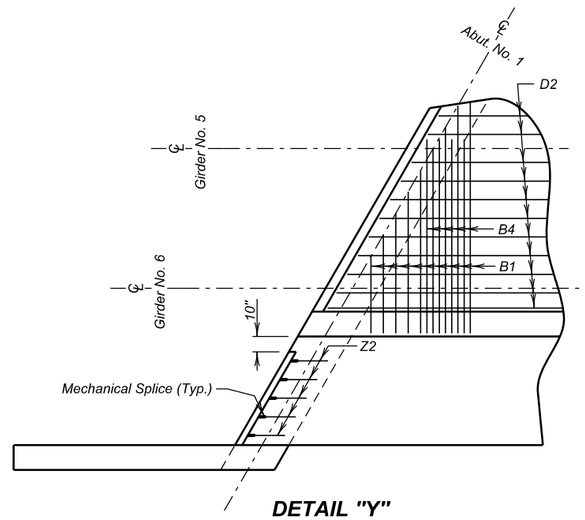


**DETAIL "Y"**
(Top Steel)

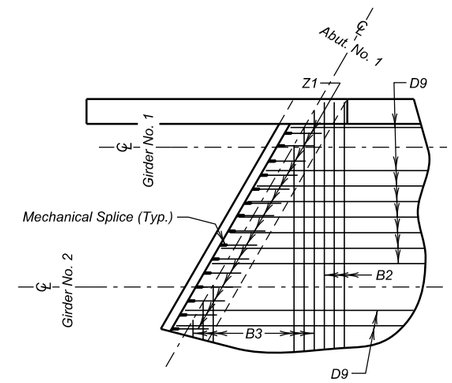


**DETAIL "Z"**
(Bottom Steel)

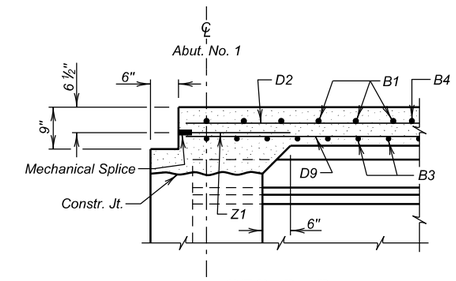


**SEC. D - D**

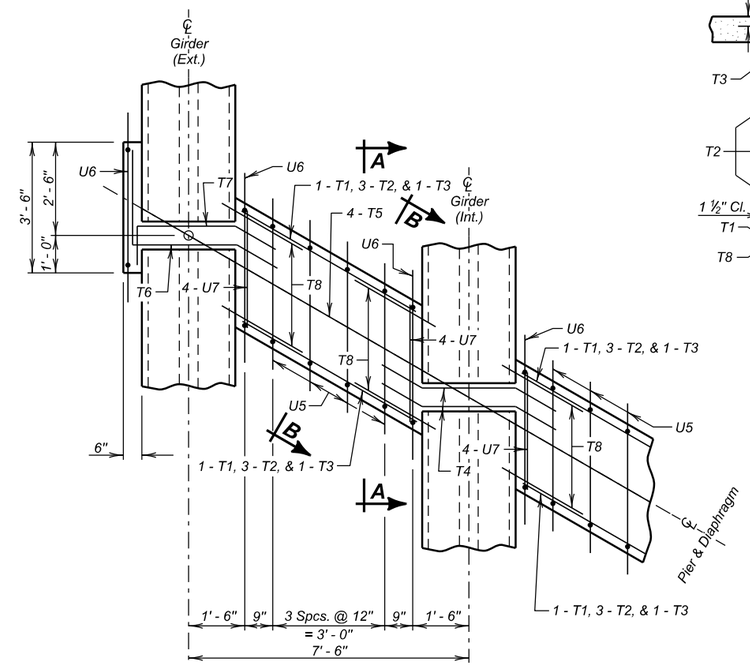


**PIER DIAPHRAGMS**
(Slab Not Shown)

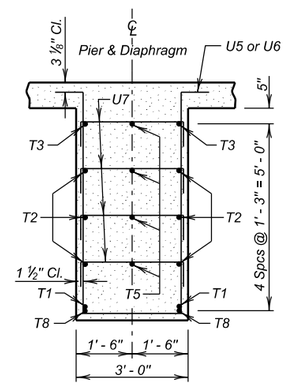


**SEC. B - B**
(Girders Not Shown)

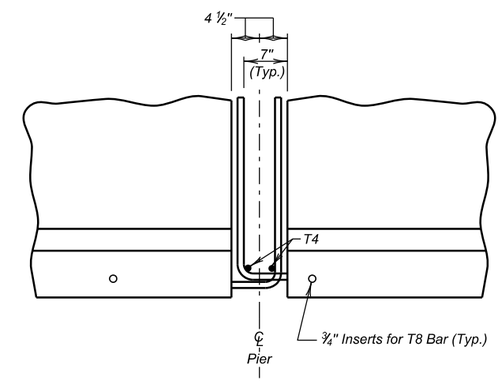


**SEC. A - A**
(Showing extended and bent strand detail and T4 bar placement at Pier. T6 & T7 similar at exterior girder.)

## ESTIMATED QUANTITIES

| | ITEM | UNIT | QUANTITY |
|---|---|---|---|
| ☆ | Class A45 Concrete, Bridge Deck | Cu.Yd. | 520.3 |
| ⌀ | Epoxy Coated Reinforcing Steel | Lb. | 110370 |
| ⌀ | Reinforcing Steel | Lb. | 2323 |
| | 63" Minnesota Shape Prestressed Concrete Beam | Ft. | 1895 |
| | No. 7 Rebar Splice | Each | 106 |
| | No. 4 Rebar Splice | Each | 10 |
| | Concrete Penetrating Sealer | Sq.Yd. | 1417 |

⌀ Includes quantities for Pier Diaphragms, Barrier Curbs, Slab, and Sidewalk.
☆ Includes quantities for Pier Diaphragms, Barrier Curbs, Slab, Haunch, and Sidewalk. (Average depth of 1 3/4" used for Haunch Quantity.) Concrete Quantity for Barrier Curbs is 0.0842 Cu.Yd. / Ft. and for End blocks is 1.1659 Cu.Yd. each.

**SUPERSTRUCTURE DETAILS (B)**
FOR
319' - 10 5/8" PRESTR. GIRDER BRIDGE

40' - 0" ROADWAY & 5' - 0" SIDEWALK — 30° LHF SKEW
OVER TURTLE CREEK — SEC. 9-T116N-R64W
STA. 17 + 86.56 TO 21 + 06.44 — NH 0212(160)306
STR. NO. 58-086-251 — HL-93

SPINK COUNTY
S. D. DEPT. OF TRANSPORTATION
MARCH 2015



| DESIGNED BY | CK. DES. BY | DRAFTED BY | |
|---|---|---|---|
| TD | BB | MG | Kevin N. Goeden |
| SPNK03A6 | 03A6GA14 | | BRIDGE ENGINEER |

| STATE OF | PROJECT | SHEET NO. | TOTAL SHEETS |
|---|---|---|---|
| S.D. | NH 0212(160)306 | E17 | E37 |

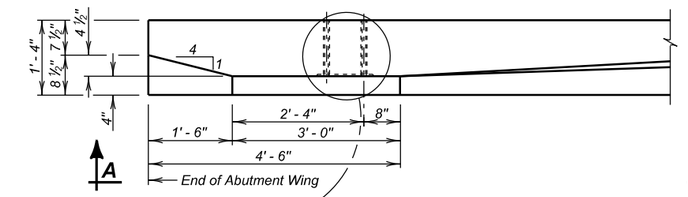


PART PLAN

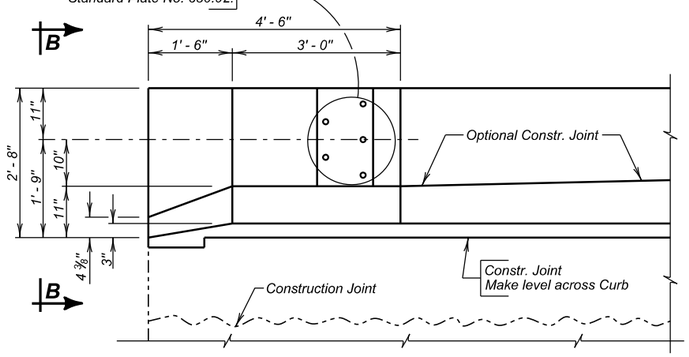


VIEW A - A

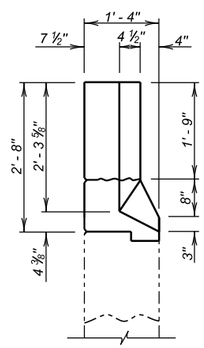


VIEW B - B

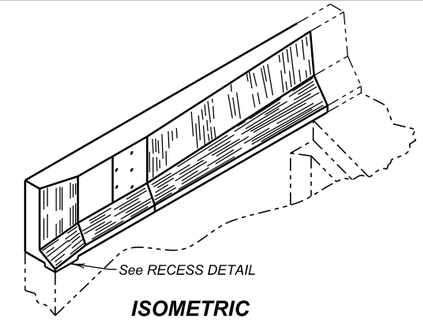


ISOMETRIC VIEW

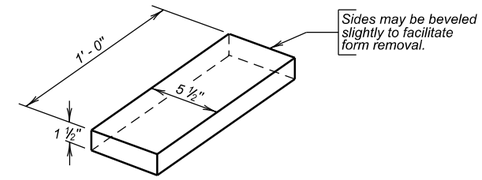


RECESS DETAIL

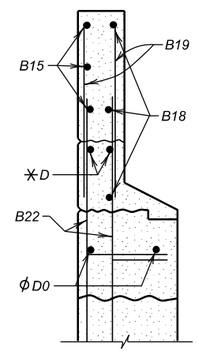


SEC. C - C

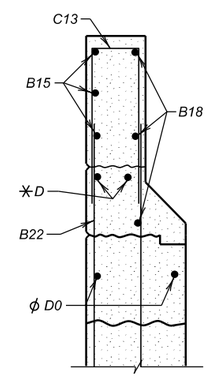


SEC. D - D

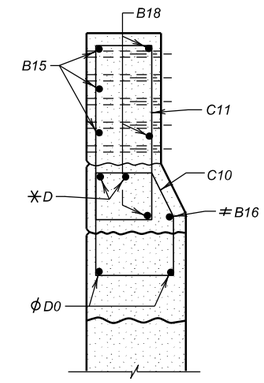


SEC. E - E

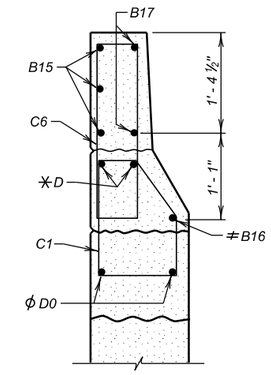


SEC. F - F

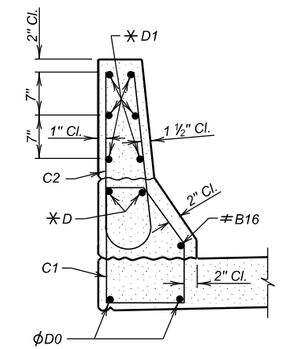


SEC. G - G

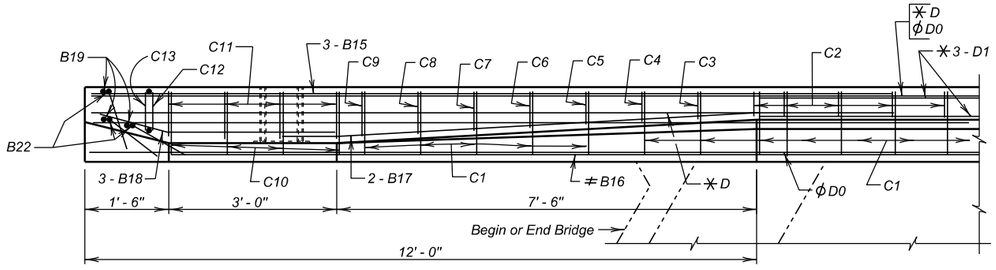


ϕ Min. Lap = 3' - 0"
✳ Min. Lap = 2' - 6"
≠ Min. Lap = 1' - 0"

PLAN

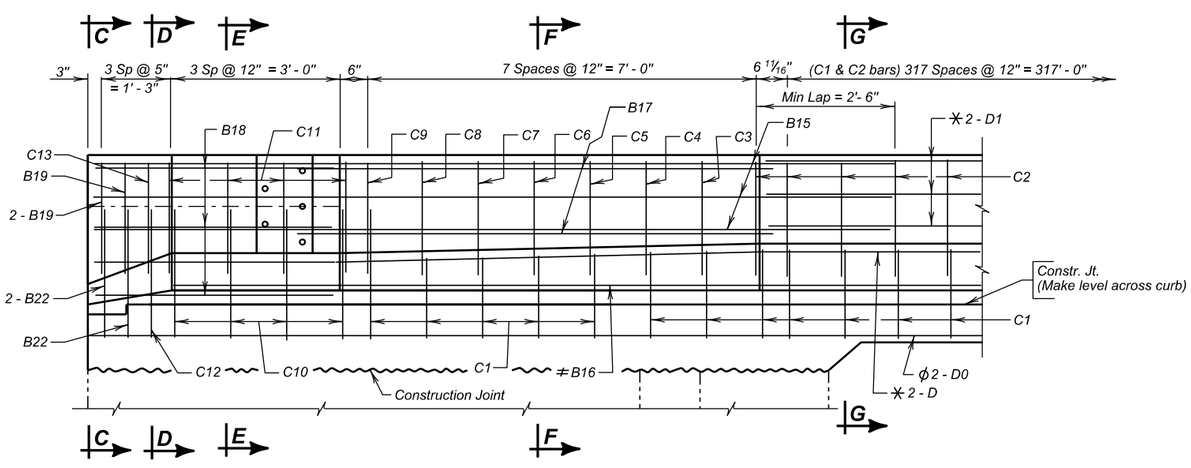


ELEVATION

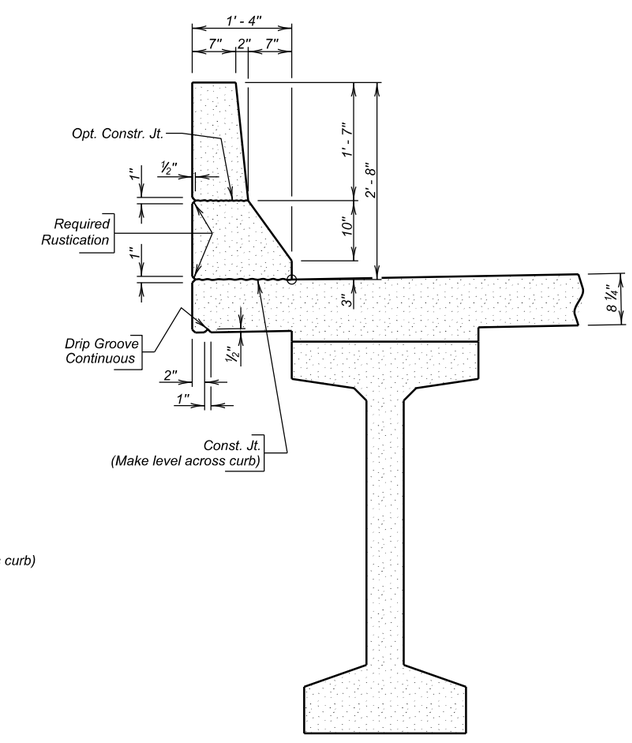


BARRIER DETAILS

NOTE:
For listing of re-bars see Reinforcing Schedule on SUPERSTRUCTURE DETAILS (B).

**ENDBLOCK & BARRIER CURB DETAILS - LEFT SIDE**

FOR

319' - 10 ⅝" PRESTR. GIRDER BRIDGE

40' - 0" ROADWAY & 5' - 0" SIDEWALK — 30° LHF SKEW
OVER TURTLE CREEK — SEC. 9-T116N-R64W
STA. 17 + 86.56 TO 21 + 06.44 — NH 0212(160)306
STR. NO. 58-086-251 — HL-93

SPINK COUNTY
S. D. DEPT. OF TRANSPORTATION
MARCH 2015



| DESIGNED BY | CK. DES. BY | DRAFTED BY | |
|---|---|---|---|
| TD | BB | MG | Kevin N. Goeden |
| SPNK03A6 | 03A6GA15 | | BRIDGE ENGINEER |

| STATE OF | PROJECT | SHEET NO. | TOTAL SHEETS |
|---|---|---|---|
| S.D. | NH 0212(160)306 | E18 | E37 |

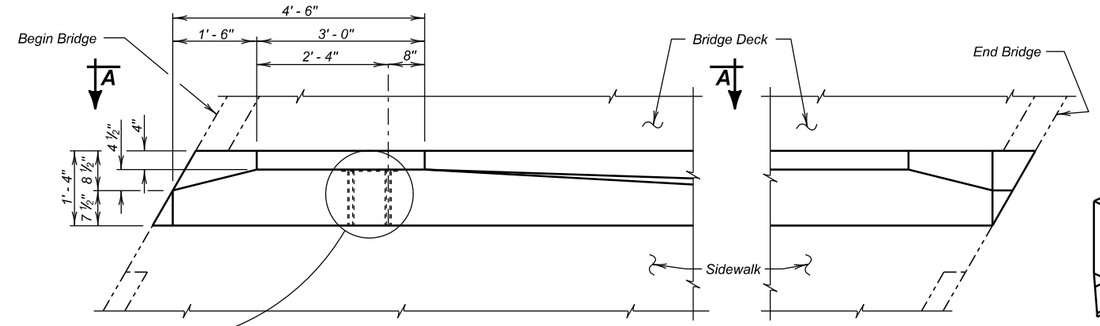


PART PLAN

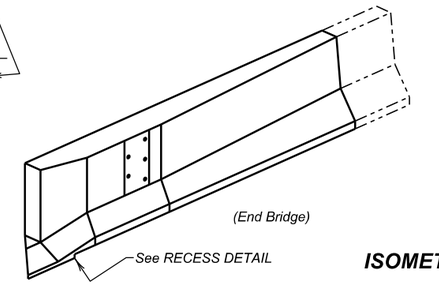


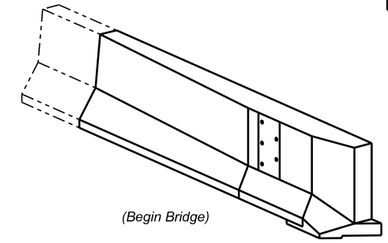


ISOMETRIC VIEWS

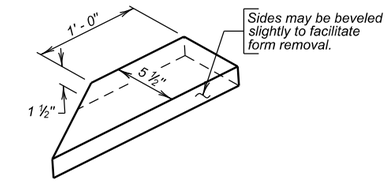


RECESS DETAIL

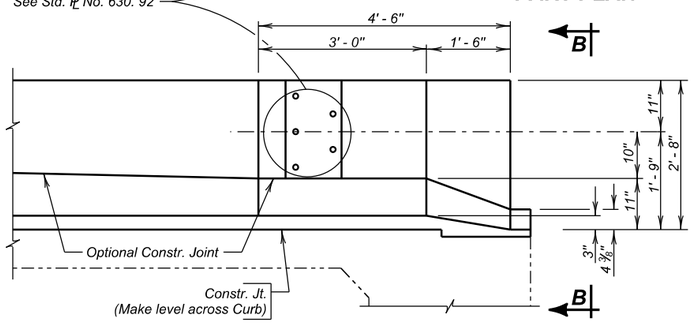


VIEW A - A

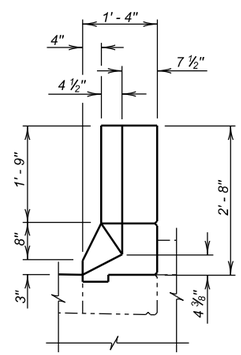


VIEW B - B

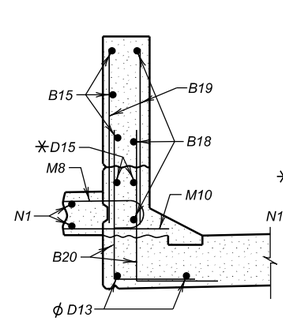


SEC. C - C

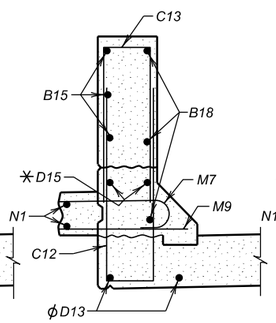


SEC. D - D

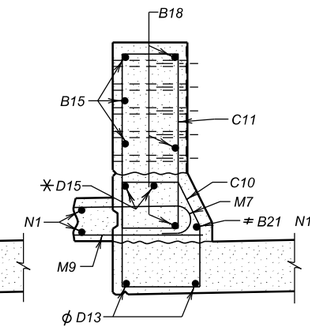


SEC. E - E

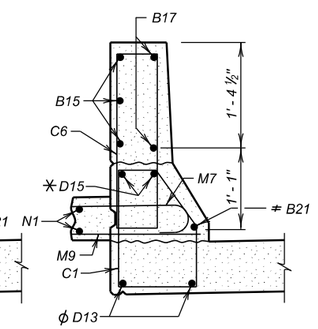


SEC. F - F

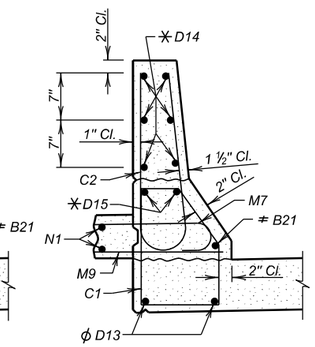


SEC. G - G

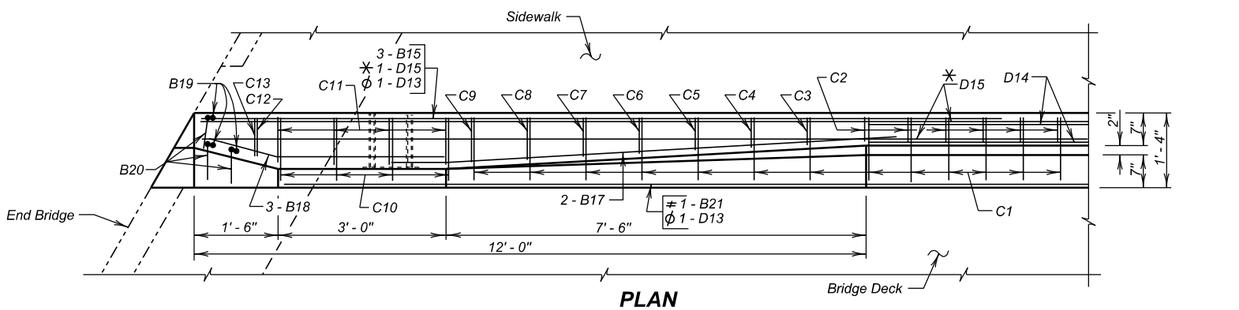


PLAN
(End Bridge)

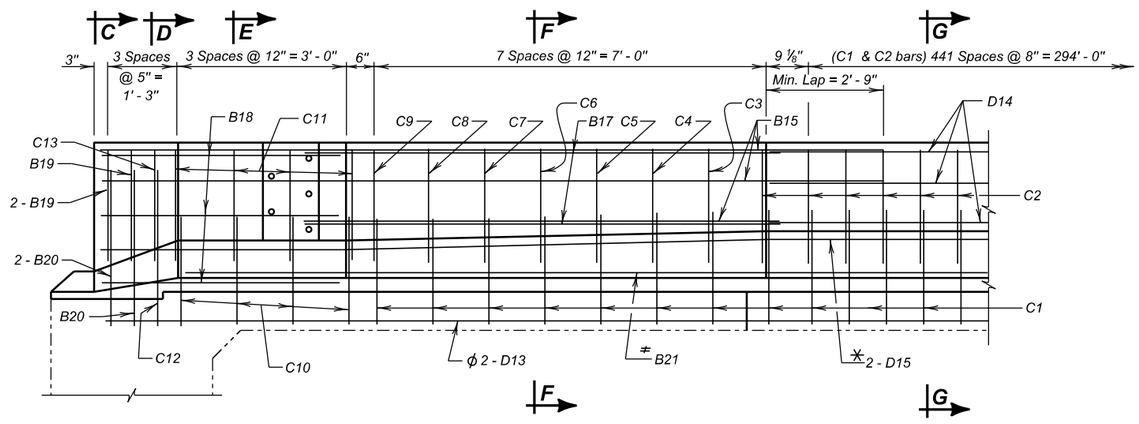


ELEVATION
(End Bridge)

NOTE:
For listing of re-bars see SUPERSTRUCTURE DETAILS (B) sheet.

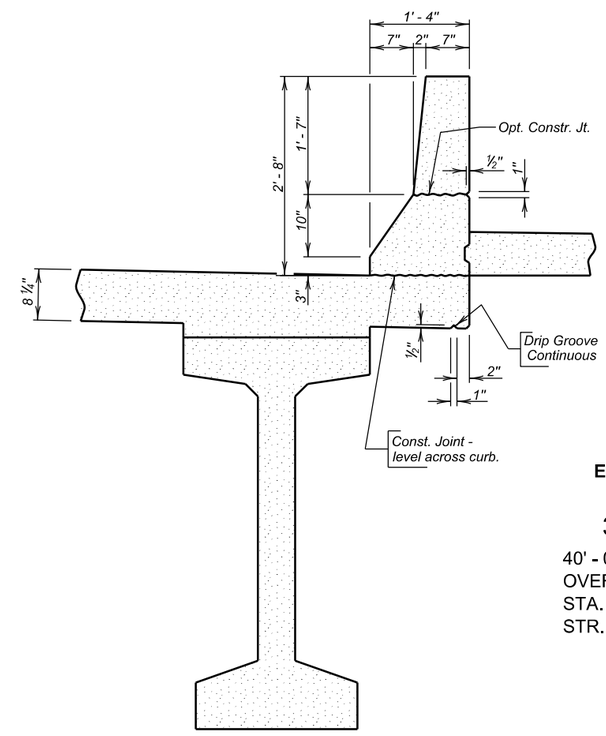


BARRIER DETAILS

ϕ Min. Lap = 3' - 0"
✳ Min. Lap = 2' - 6"
≠ Min. Lap = 1' - 0"

**ENDBLOCK & BARRIER CURB DETAILS - RIGHT SIDE**

FOR

319' - 10 ⅝" PRESTR. GIRDER BRIDGE

40' - 0" ROADWAY & 5' - 0" SIDEWALK — 30° LHF SKEW
OVER TURTLE CREEK — SEC. 9-T116N-R64W
STA. 17 + 86.56 TO 21 + 06.44 — NH 0212(160)306
STR. NO. 58-086-251 — HL-93

SPINK COUNTY
S. D. DEPT. OF TRANSPORTATION
MARCH 2015



| DESIGNED BY | CK. DES. BY | DRAFTED BY | |
|---|---|---|---|
| TD | BB | MG | Kevin N. Goeden |
| SPNK03A6 | 03A6GA16 | | BRIDGE ENGINEER |

| STATE OF | PROJECT | SHEET NO. | TOTAL SHEETS |
|---|---|---|---|
| S.D. | NH 0212(160)306 | E19 | E37 |

☆ Min. Lap 1' - 0"

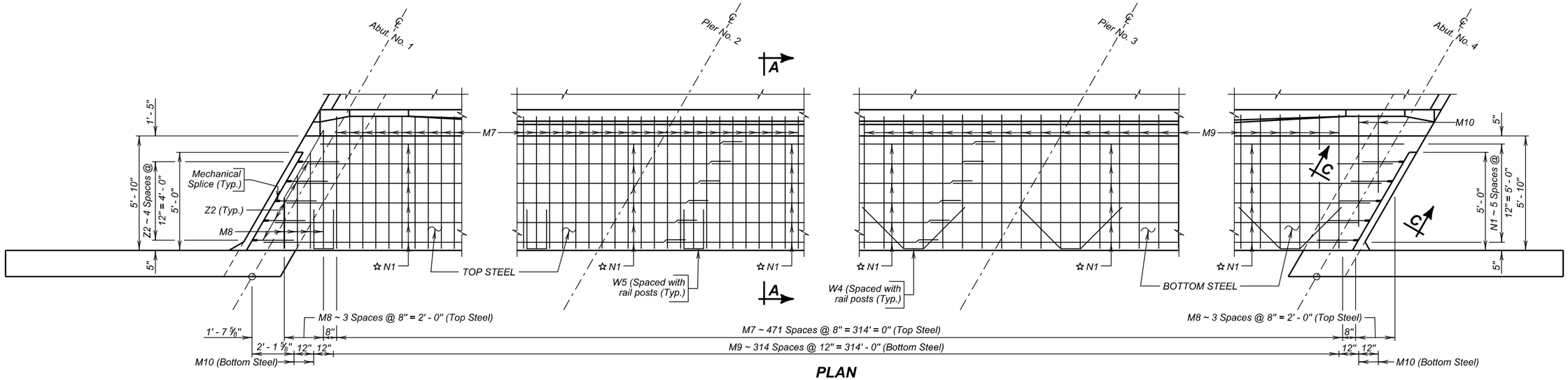


## PLAN
(Sidewalk)

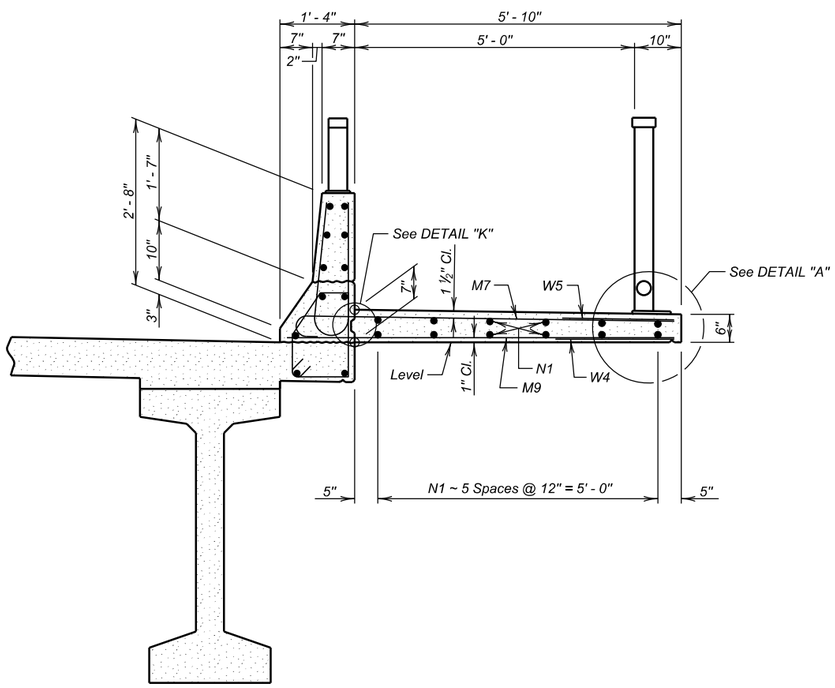


## SEC. A - A

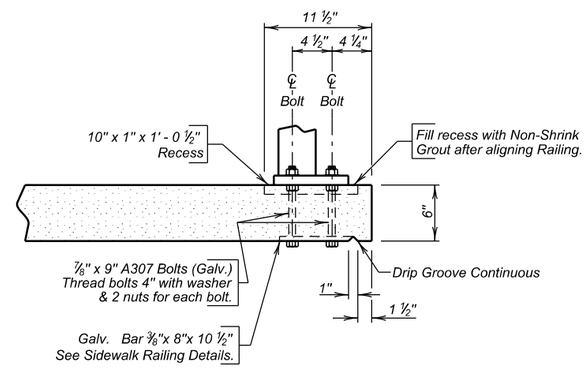


## DETAIL "A"

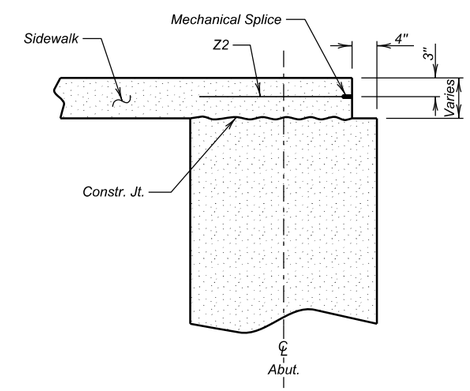


## SEC. C - C
(M & N Bars not shown)

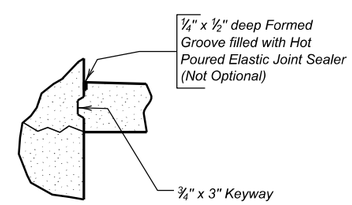


## DETAIL "K"

NOTE:
For listing of re-bars see SUPERSTRUCTURE DETAILS (B) sheet.

**SIDEWALK DETAILS**
FOR
319' - 10 5/8" PRESTR. GIRDER BRIDGE

40' - 0" ROADWAY & 5' - 0" SIDEWALK — 30° LHF SKEW
OVER TURTLE CREEK — SEC. 9-T116N-R64W
STA. 17 + 86.56 TO 21 + 06.44 — NH 0212(160)306
STR. NO. 58-086-251 — HL-93

SPINK COUNTY
S. D. DEPT. OF TRANSPORTATION
MARCH 2015



| DESIGNED BY | CK. DES. BY | DRAFTED BY | |
|---|---|---|---|
| TD | BB | MG | Kevin N. Goeden |
| SPNK03A6 | 03A6GA17 | | BRIDGE ENGINEER |

| STATE OF | PROJECT | SHEET NO. | TOTAL SHEETS |
|---|---|---|---|
| S.D. | NH 0212(160)306 | E20 | E37 |

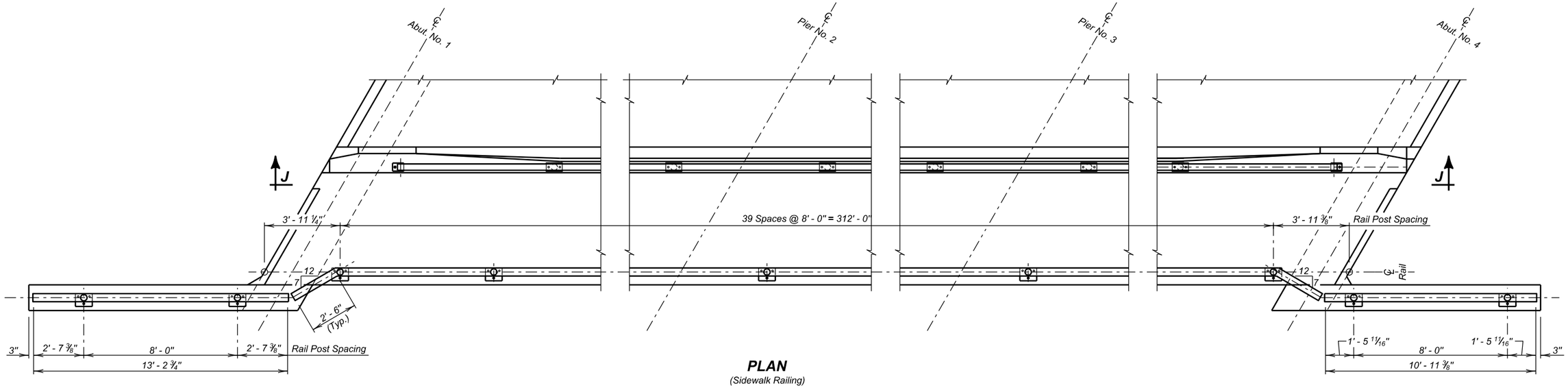


**PLAN**
(Sidewalk Railing)

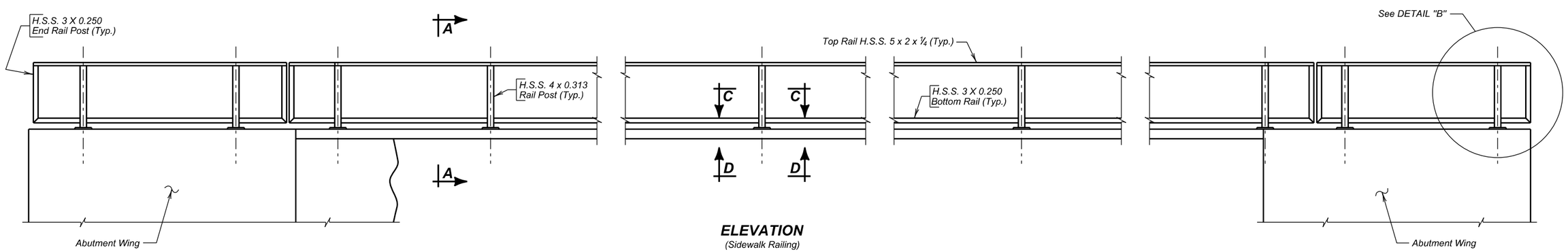


**ELEVATION**
(Sidewalk Railing)

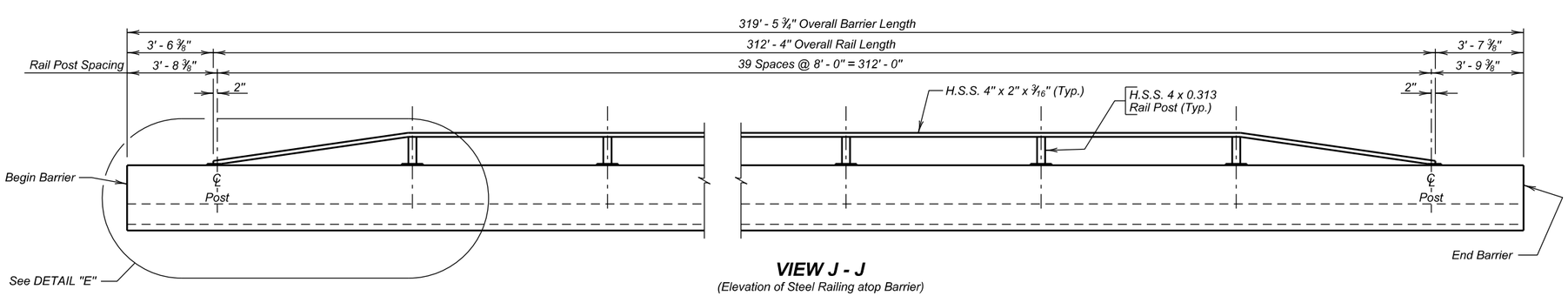


**VIEW J - J**
(Elevation of Steel Railing atop Barrier)

## ESTIMATED QUANTITIES

| ITEM | UNIT | QUANTITY |
|---|---|---|
| Steel Pedestrian Railing on Sidewalk | Ft. | 342.0 |
| Steel Pedestrian Railing on Concrete Barrier | Ft. | 312.0 |

**SIDEWALK & BARRIER CURB RAILING DETAILS (A)**

FOR

319' - 10 ⅝" PRESTR. GIRDER BRIDGE

40' - 0" ROADWAY & 5' - 0" SIDEWALK — 30° LHF SKEW
OVER TURTLE CREEK — SEC. 9-T116N-R64W
STA. 17 + 86.56 TO 21 + 06.44 — NH 0212(160)306
STR. NO. 58-086-251 — HL-93

SPINK COUNTY
S. D. DEPT. OF TRANSPORTATION
MARCH 2015



| DESIGNED BY | CK. DES. BY | DRAFTED BY | |
|---|---|---|---|
| TD | BB | MG | Kevin N. Goeden |
| SPNK03A6 | 03A6GA18 | | BRIDGE ENGINEER |

| STATE OF | PROJECT | SHEET NO. | TOTAL SHEETS |
|---|---|---|---|
| S.D. | NH 0212(160)306 | E21 | E37 |

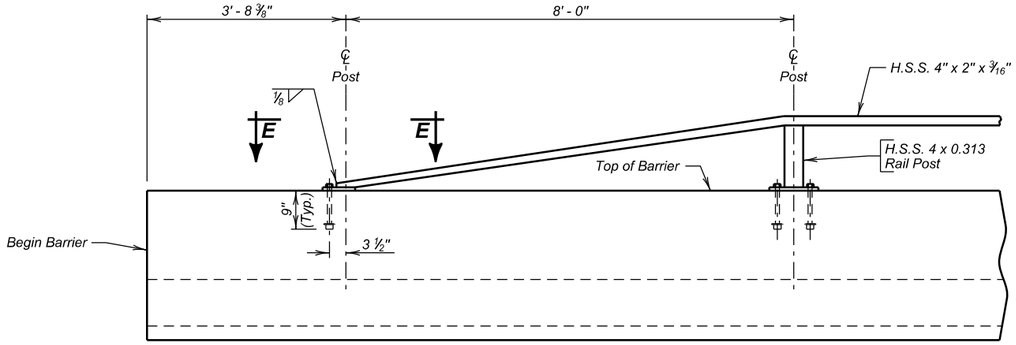


DETAIL "E"

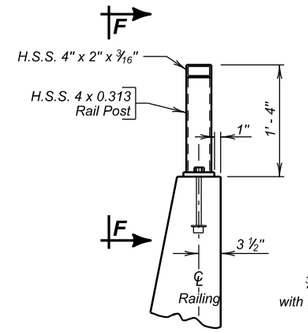


DETAIL "C"

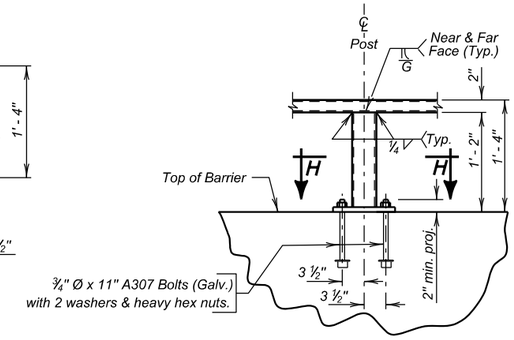


VIEW F - F

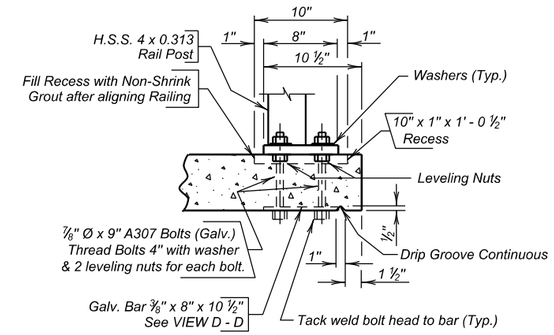


DETAIL "J"

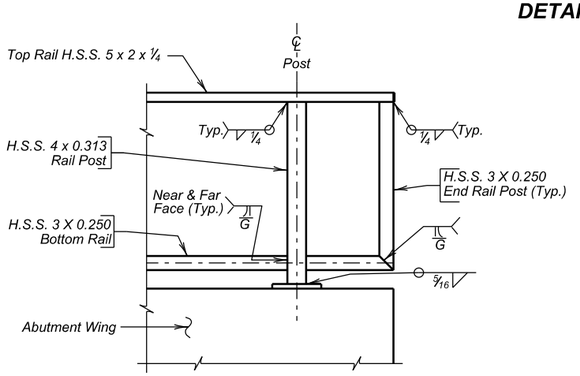


DETAIL "B"

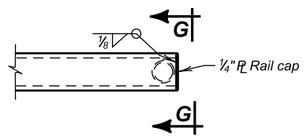


RAIL END CAP DETAIL

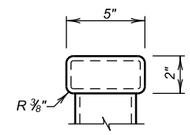


VIEW G - G

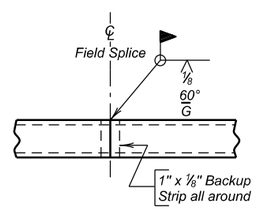


RAIL FIELD SPLICE

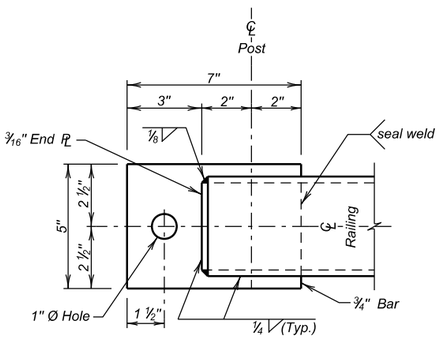


VIEW E - E

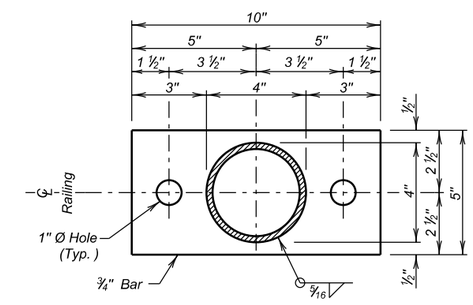


SEC. H - H

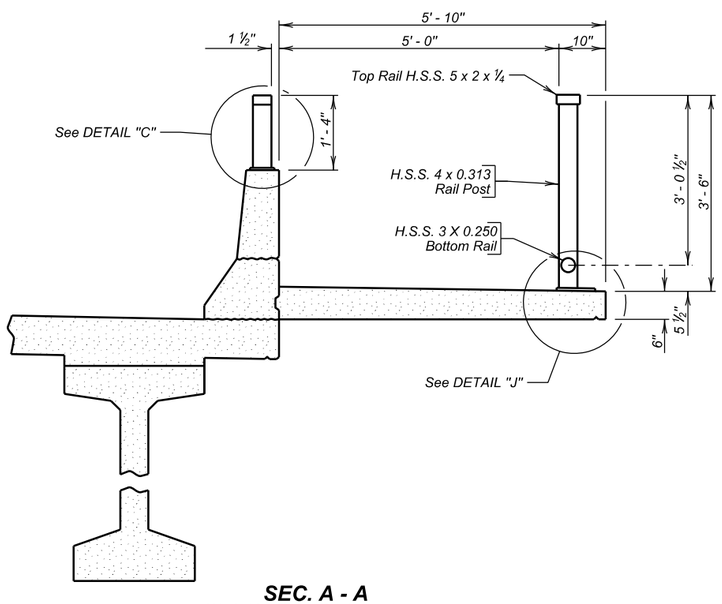


SEC. A - A
(Chain Link Fence Fabric not shown)

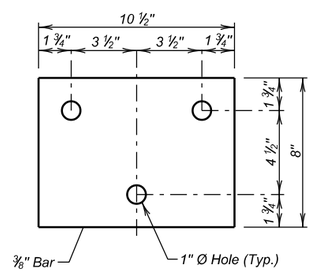


VIEW D - D

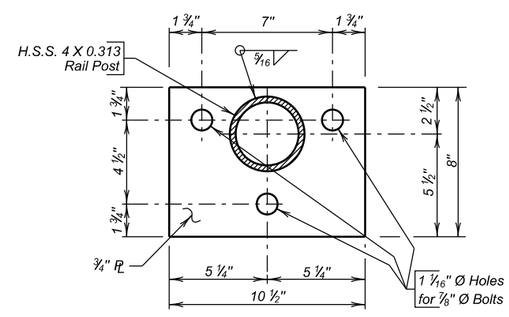


SEC. C - C

**SIDEWALK & BARRIER CURB RAILING DETAILS (B)**

FOR

319' - 10 5/8" PRESTR. GIRDER BRIDGE

40' - 0" ROADWAY & 5' - 0" SIDEWALK — 30° LHF SKEW
OVER TURTLE CREEK — SEC. 9-T116N-R64W
STA. 17 + 86.56 TO 21 + 06.44 — NH 0212(160)306
STR. NO. 58-086-251 — HL-93

SPINK COUNTY
S. D. DEPT. OF TRANSPORTATION
MARCH 2015



| DESIGNED BY | CK. DES. BY | DRAFTED BY | |
|---|---|---|---|
| TD | BB | MG | Kevin N. Goeden |
| SPNK03A6 | 03A6GA19 | | BRIDGE ENGINEER |

| STATE OF | PROJECT | SHEET NO. | TOTAL SHEETS |
|---|---|---|---|
| S.D. | NH 0212(160)306 | E22 | E37 |

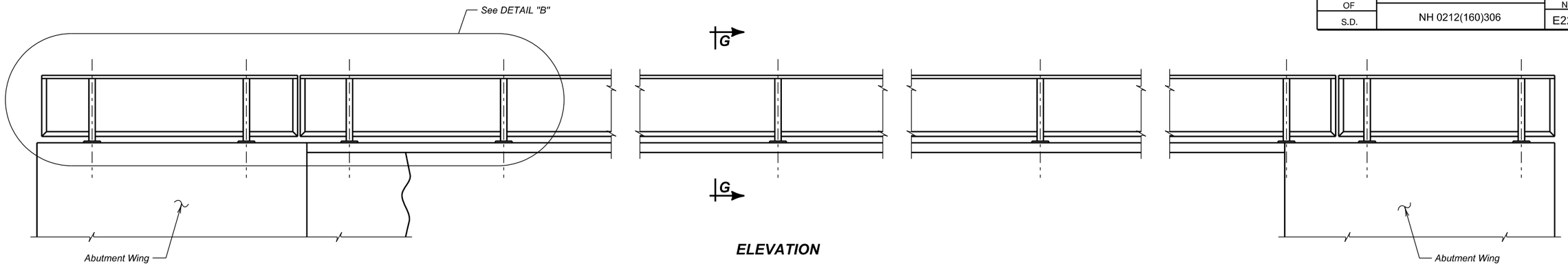


**ELEVATION**

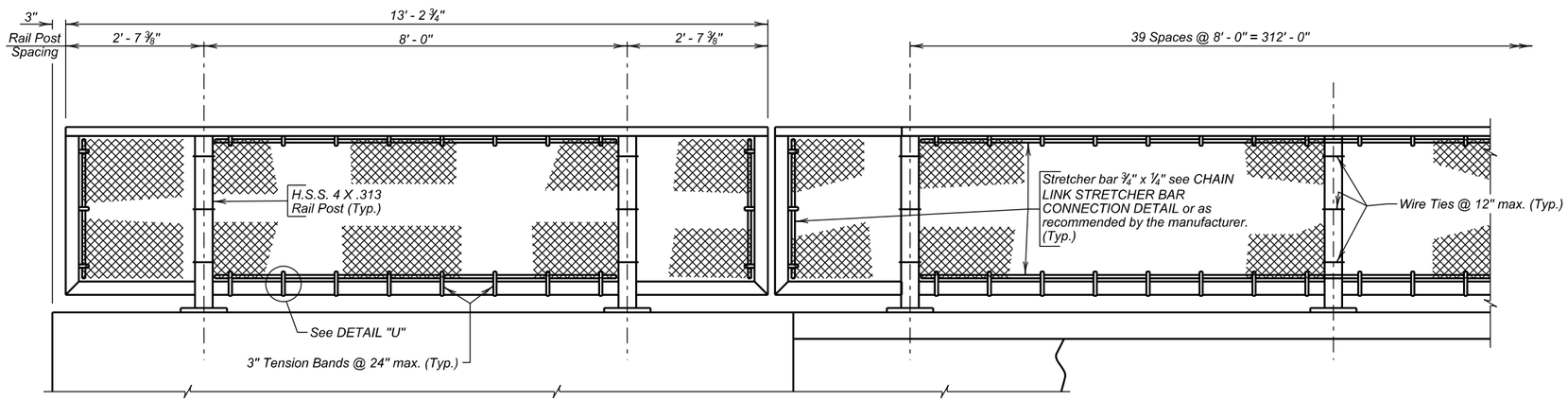


**DETAIL "B"**

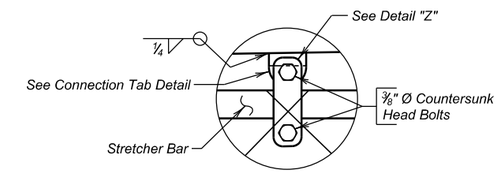


**CHAIN LINK STRETCHER BAR CONNECTION DETAIL**

*NOTE:*
*Specific details for manufacture of component parts of the complete fence construction shall be subject to the approval of the Engineer. Commercially available items produced specifically for the use intended shall be used wherever possible in the construction of the fence.*

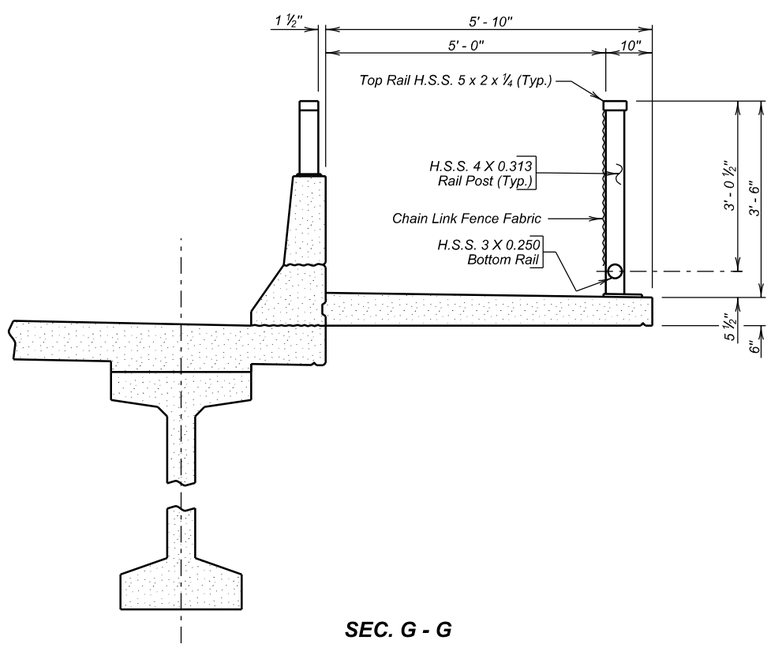


**SEC. G - G**

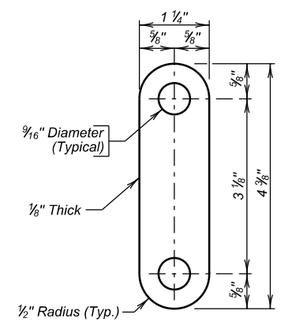


**DETAIL "Z"**

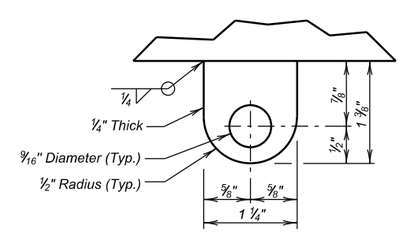


**CONNECTION TAB DETAIL**

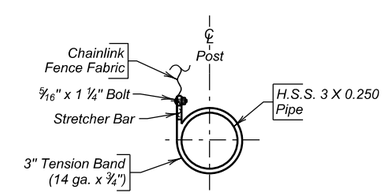


**DETAIL "U"**

**ESTIMATED QUANTITIES**

| ITEM | UNIT | QUANTITY |
|---|---|---|
| Chainlink Fence for Bridge Sidewalk | Ft. | 342.0 |
| | | |

**CHAIN LINK FENCE DETAILS**

FOR

319' - 10 ⅝" PRESTR. GIRDER BRIDGE

40' - 0" ROADWAY & 5' - 0" SIDEWALK — 30° LHF SKEW
OVER TURTLE CREEK — SEC. 9-T116N-R64W
STA. 17 + 86.56 TO 21 + 06.44 — NH 0212(160)306
STR. NO. 58-086-251 — HL-93

SPINK COUNTY
S. D. DEPT. OF TRANSPORTATION
MARCH 2015



| DESIGNED BY | CK. DES. BY | DRAFTED BY | |
|---|---|---|---|
| TD | BB | MG | Kevin N. Goeden |
| SPNK03A6 | 03A6GA20 | | BRIDGE ENGINEER |

| STATE OF | PROJECT | SHEET NO. | TOTAL SHEETS |
|---|---|---|---|
| S.D. | NH 0212(160)306 | E23 | E37 |

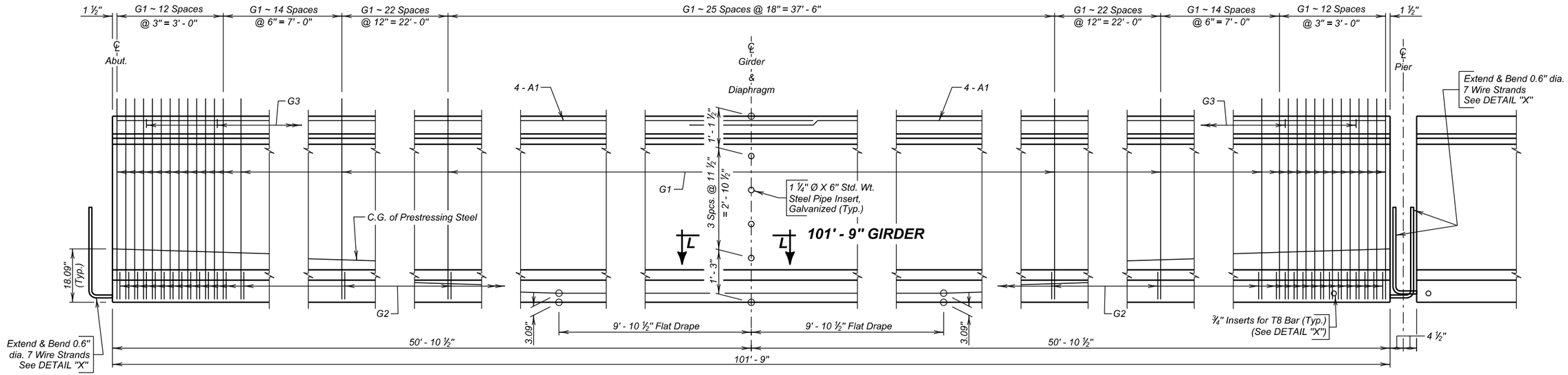


## ELEVATION

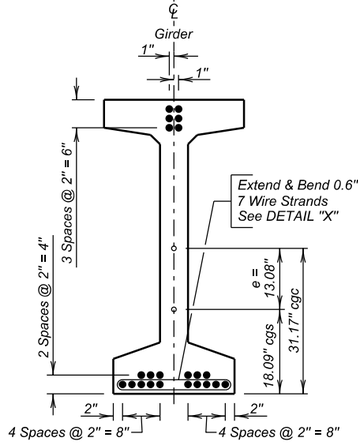


## END VIEW

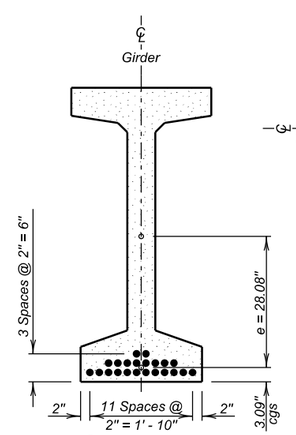


## ℄ SECTION

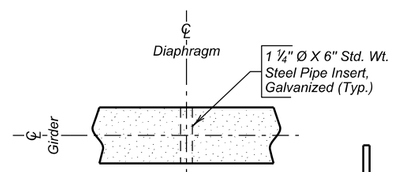


## SEC. L - L

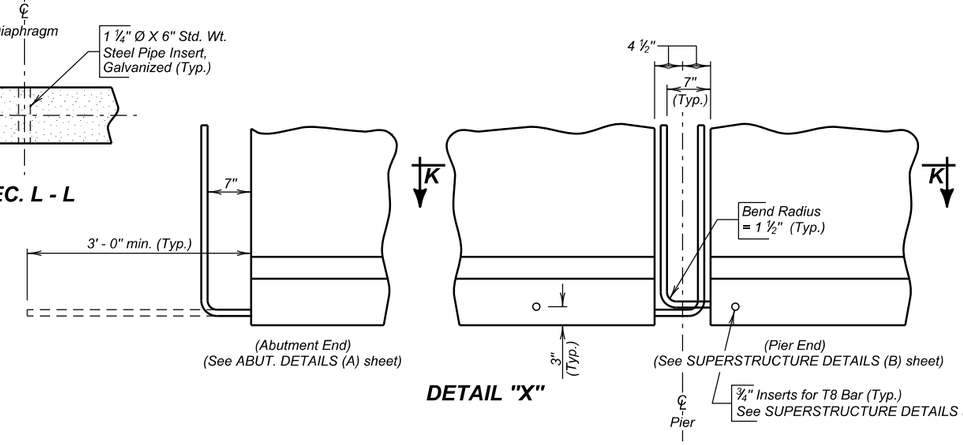


## DETAIL "X"

## REINFORCING SCHEDULE
(For One Girder)

| Mk. | No. | Size | Length | Type | Bending Details |
|---|---|---|---|---|---|
| A1 | 8 | 7 | 52' - 6" | Str. | |
| G1 | 122 | 4 | 11' - 6" | S11 | |
| G2 | 122 | 4 | 4' - 10" | S3A | |
| G3 | 51 | 4 | 2' - 8" | 17 | |

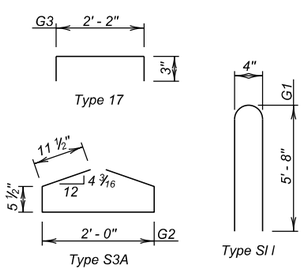


All dimensions are out to out of bars.

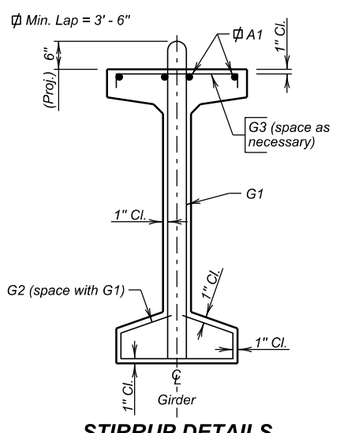


## STIRRUP DETAILS

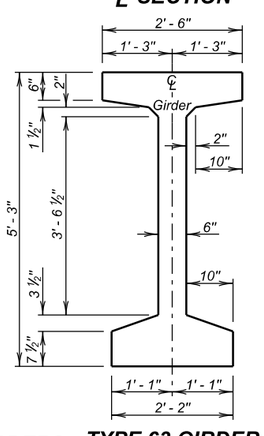


## 101' - 9" GIRDERS TYPE 63 GIRDER
(22 ~ 0.6 Dia. Type 270 Low Lax. Strands)

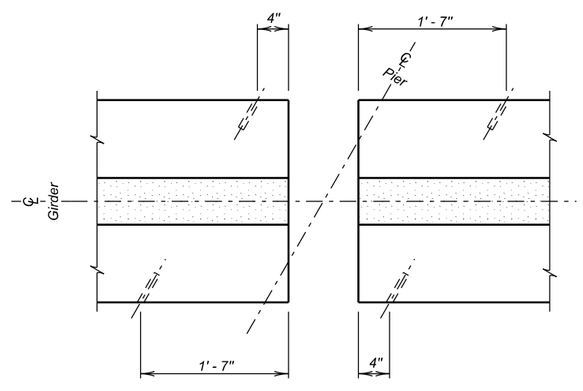


## SEC. K - K
Layout for inserts at beam ends (Pier only)

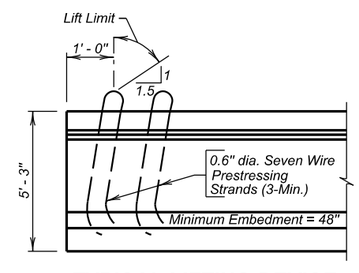


## TYPICAL LIFTING DEVICE

**101' - 9" GIRDER DETAILS**

FOR

# 319' - 10 5/8" PRESTR. GIRDER BRIDGE

40' - 0" ROADWAY & 5' - 0" SIDEWALK — 30° LHF SKEW
OVER TURTLE CREEK — SEC. 9-T116N-R64W
STA. 17 + 86.56 TO 21 + 06.44 — NH 0212(160)306
STR. NO. 58-086-251 — HL-93

SPINK COUNTY
S. D. DEPT. OF TRANSPORTATION
MARCH 2015



| DESIGNED BY | CK. DES. BY | DRAFTED BY | |
|---|---|---|---|
| TD | BB | MG | Kevin N. Goeden |
| SPNK03A6 | 03A6GA21 | | BRIDGE ENGINEER |

| STATE OF | PROJECT | SHEET NO. | TOTAL SHEETS |
|---|---|---|---|
| S.D. | NH 0212(160)306 | E24 | E37 |

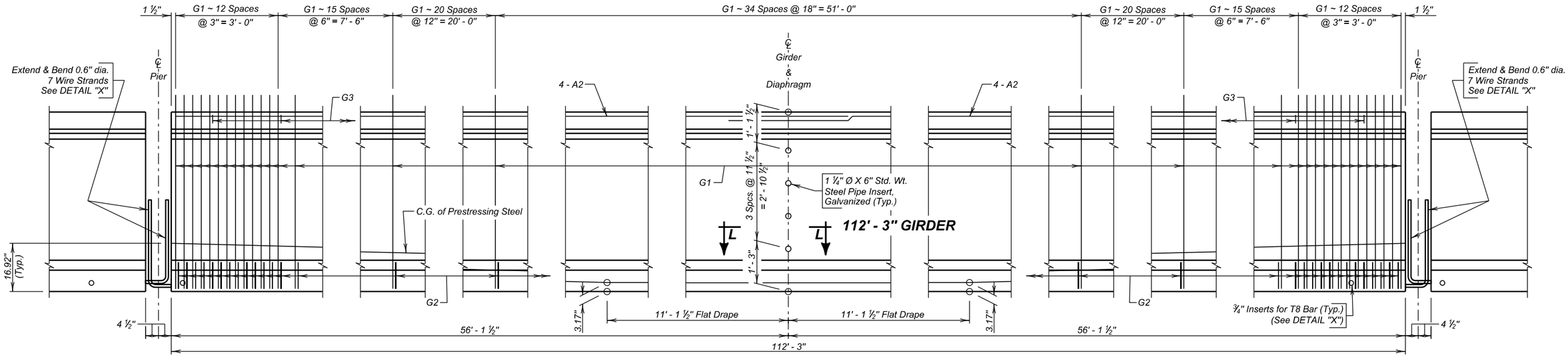


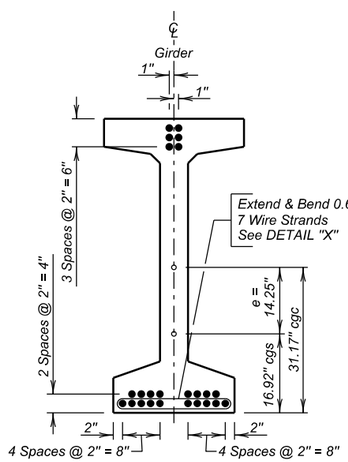


**END VIEW**

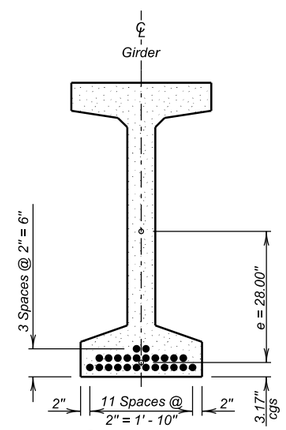


**℄ SECTION**

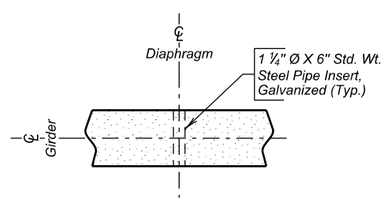


**SEC. L - L**

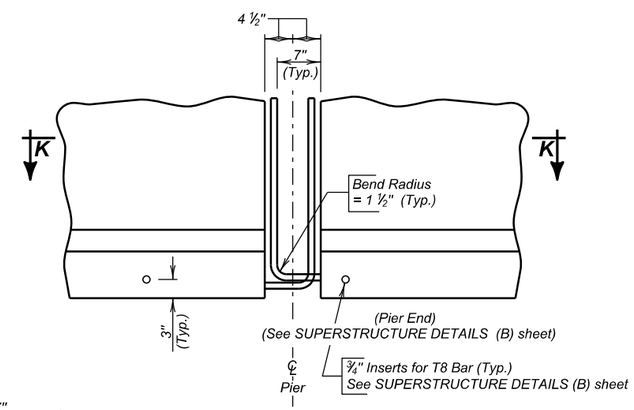


**DETAIL "X"**

## REINFORCING SCHEDULE
(For One Girder)

| Mk. | No. | Size | Length | Type | Bending Details |
|---|---|---|---|---|---|
| A2 | 8 | 7 | 57' - 9" | Str. | |
| G1 | 129 | 4 | 11' - 6" | S11 | |
| G2 | 129 | 4 | 4' - 10" | S3A | |
| G3 | 56 | 4 | 2' - 8" | 17 | |

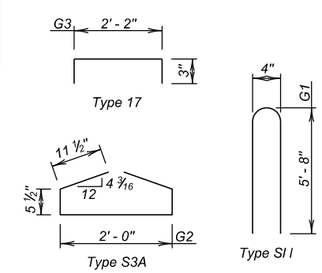


All dimensions are out to out of bars.

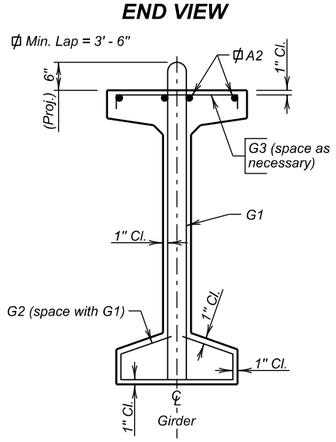


**STIRRUP DETAILS**

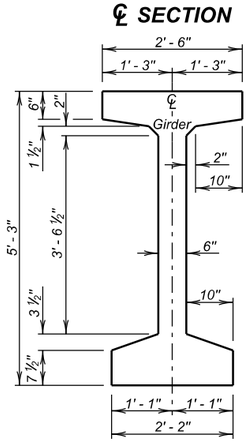


**112' - 3" GIRDERS TYPE 63 GIRDER**
(24 ~ 0.6 Dia. Type 270 Low Lax. Strands)

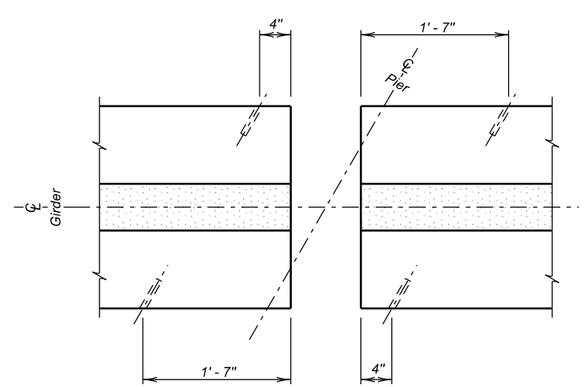


**SEC. K - K**
Layout for inserts at beam ends (Pier only)

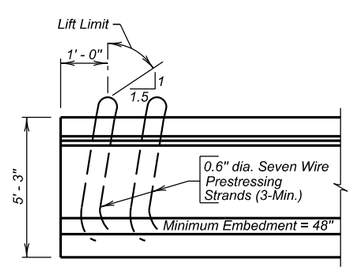


**TYPICAL LIFTING DEVICE**

**112' - 3" GIRDER DETAILS**
FOR
319' - 10 5/8" PRESTR. GIRDER BRIDGE

40' - 0" ROADWAY & 5' - 0" SIDEWALK — 30° LHF SKEW
OVER TURTLE CREEK — SEC. 9-T116N-R64W
STA. 17 + 86.56 TO 21 + 06.44 — NH 0212(160)306
STR. NO. 58-086-251 — HL-93

SPINK COUNTY
S. D. DEPT. OF TRANSPORTATION
MARCH 2015



| DESIGNED BY | CK. DES. BY | DRAFTED BY | |
|---|---|---|---|
| TD | BB | MG | Kevin N. Goeden |
| SPNK03A6 | 03A6GA22 | | BRIDGE ENGINEER |

| STATE OF | PROJECT | SHEET NO. | TOTAL SHEETS |
|---|---|---|---|
| S.D. | NH 0212(160)306 | E25 | E37 |

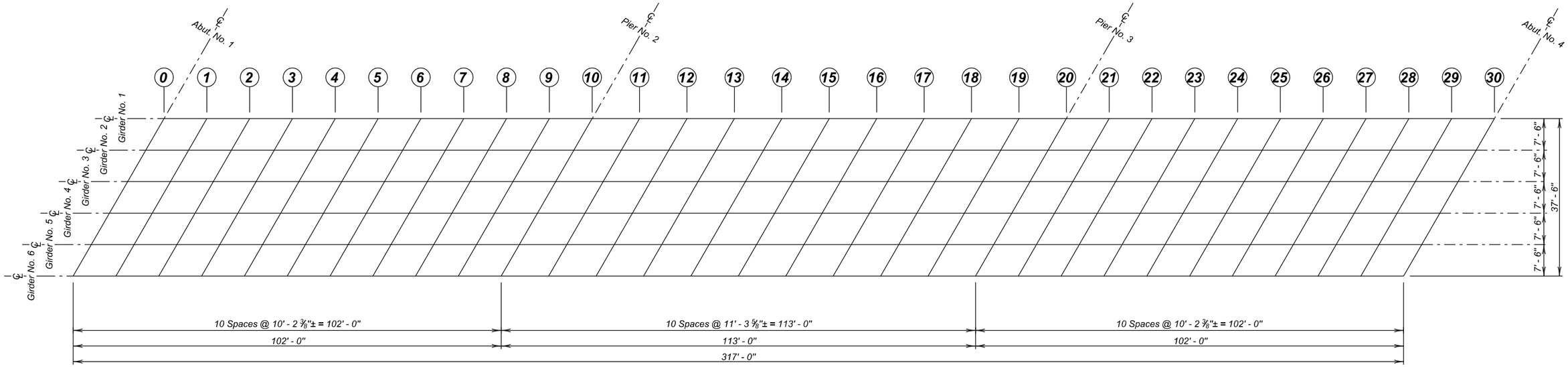


**GIRDER LAYOUT**

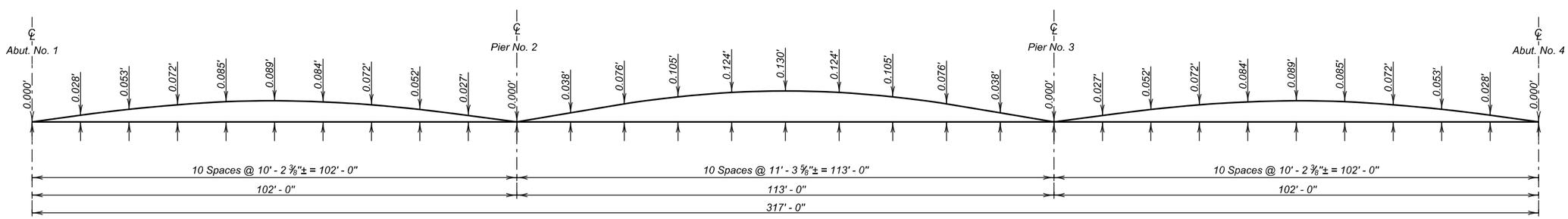


**CAMBER DIAGRAM**

*The Camber shown is the amount which has been added to the theoretical slab elevations to get slab elevations shown in the table of Slab Form Elevations and Calculations on SLAB FORM ELEVATIONS sheet. Camber shown is for D. L. of slab, traffic barrier, sidewalk and haunch, but does not include D. L. of beams.*

**ERECTION DATA**

FOR

319' - 10 5/8" PRESTR. GIRDER BRIDGE

40' - 0" ROADWAY & 5' - 0" SIDEWALK — 30° LHF SKEW
OVER TURTLE CREEK — SEC. 9-T116N-R64W
STA. 17 + 86.56 TO 21 + 06.44 — NH 0212(160)306
STR. NO. 58-086-251 — HL-93

SPINK COUNTY

S. D. DEPT. OF TRANSPORTATION

MARCH 2015



| DESIGNED BY | CK. DES. BY | DRAFTED BY | |
|---|---|---|---|
| TD | BB | MG | Kevin N. Goeden |
| SPNK03A6 | 03A6GA23 | | BRIDGE ENGINEER |

| STATE OF | PROJECT | SHEET NO. | TOTAL SHEETS |
|---|---|---|---|
| S.D. | NH 0212(160)306 | E26 | E37 |

## TABLE OF SLAB FORM ELEVATIONS AND CALCULATIONS

| | | 0 | 1 | 2 | 3 | 4 | 5 | 6 | 7 | 8 | 9 | 10 | 11 | 12 | 13 | 14 | 15 |
|---|---|---|---|---|---|---|---|---|---|---|---|---|---|---|---|---|---|
| Girder No. 1 | Elev. "M" | 1299.373 | 1299.483 | 1299.584 | 1299.672 | 1299.749 | 1299.810 | 1299.856 | 1299.889 | 1299.908 | 1299.916 | 1299.915 | 1299.975 | 1300.028 | 1300.064 | 1300.083 | 1300.081 |
| | (-) Elev."N" | | | | | | | | | | | | | | | | |
| | (=) d | | | | | | | | | | | | | | | | |
| | (-) 0. 688' | | | | | | | | | | | | | | | | |
| | (=) h | | | | | | | | | | | | | | | | |
| Girder No. 2 | Elev. "M" | 1299.486 | 1299.599 | 1299.702 | 1299.793 | 1299.872 | 1299.936 | 1299.985 | 1300.021 | 1300.042 | 1300.053 | 1300.055 | 1300.118 | 1300.173 | 1300.212 | 1300.234 | 1300.235 |
| | (-) Elev."N" | | | | | | | | | | | | | | | | |
| | (=) d | | | | | | | | | | | | | | | | |
| | (-) 0. 688' | | | | | | | | | | | | | | | | |
| | (=) h | | | | | | | | | | | | | | | | |
| Girder No. 3 | Elev. "M" | 1299.599 | 1299.714 | 1299.820 | 1299.913 | 1299.995 | 1300.062 | 1300.113 | 1300.151 | 1300.175 | 1300.188 | 1300.193 | 1300.259 | 1300.317 | 1300.359 | 1300.384 | 1300.388 |
| | (-) Elev."N" | | | | | | | | | | | | | | | | |
| | (=) d | | | | | | | | | | | | | | | | |
| | (-) 0. 688' | | | | | | | | | | | | | | | | |
| | (=) h | | | | | | | | | | | | | | | | |
| Girder No. 4 | Elev. "M" | 1299.561 | 1299.677 | 1299.786 | 1299.882 | 1299.967 | 1300.036 | 1300.090 | 1300.131 | 1300.157 | 1300.173 | 1300.180 | 1300.249 | 1300.311 | 1300.355 | 1300.383 | 1300.389 |
| | (-) Elev."N" | | | | | | | | | | | | | | | | |
| | (=) d | | | | | | | | | | | | | | | | |
| | (-) 0. 688' | | | | | | | | | | | | | | | | |
| | (=) h | | | | | | | | | | | | | | | | |
| Girder No. 5 | Elev. "M" | 1299.374 | 1299.490 | 1299.601 | 1299.700 | 1299.787 | 1299.859 | 1299.916 | 1299.959 | 1299.988 | 1300.006 | 1300.016 | 1300.088 | 1300.153 | 1300.200 | 1300.230 | 1300.240 |
| | (-) Elev."N" | | | | | | | | | | | | | | | | |
| | (=) d | | | | | | | | | | | | | | | | |
| | (-) 0. 688' | | | | | | | | | | | | | | | | |
| | (=) h | | | | | | | | | | | | | | | | |
| Girder No. 6 | Elev. "M" | 1299.187 | 1299.303 | 1299.415 | 1299.517 | 1299.607 | 1299.681 | 1299.740 | 1299.786 | 1299.818 | 1299.839 | 1299.852 | 1299.926 | 1299.993 | 1300.044 | 1300.077 | 1300.089 |
| | (-) Elev."N" | | | | | | | | | | | | | | | | |
| | (=) d | | | | | | | | | | | | | | | | |
| | (-) 0. 688' | | | | | | | | | | | | | | | | |
| | (=) h | | | | | | | | | | | | | | | | |

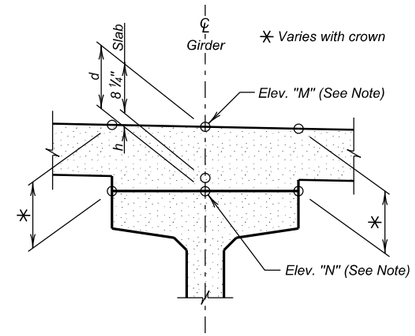


### NOTE —

*The table contains the information necessary to determine the depth of concrete over the girders at points shown. Calculations may be carried in the spaces provided. Elev. "M" is the design elevation of the top of slab before any concrete has been poured. This elevation includes correction for camber and dead load deflection. Elev. "N" is a field measured elevation taken on top of girders at the points shown with the girders in their positions. This elevation must be taken after erection is completed, but prior to placing any of the concrete. Girders shall not be supported between bearings when elevations are taken.*

## TABLE OF SLAB FORM ELEVATIONS AND CALCULATIONS

| | | 16 | 17 | 18 | 19 | 20 | 21 | 22 | 23 | 24 | 25 | 26 | 27 | 28 | 29 | 30 |
|---|---|---|---|---|---|---|---|---|---|---|---|---|---|---|---|---|
| Girder No. 1 | Elev. "M" | 1300.059 | 1300.017 | 1299.957 | 1299.881 | 1299.797 | 1299.776 | 1299.748 | 1299.707 | 1299.653 | 1299.586 | 1299.503 | 1299.405 | 1299.295 | 1299.177 | 1299.056 |
| | (-) Elev."N" | | | | | | | | | | | | | | | |
| | (=) d | | | | | | | | | | | | | | | |
| | (-) 0. 688' | | | | | | | | | | | | | | | |
| | (=) h | | | | | | | | | | | | | | | |
| Girder No. 2 | Elev. "M" | 1300.216 | 1300.177 | 1300.120 | 1300.047 | 1299.966 | 1299.948 | 1299.921 | 1299.884 | 1299.832 | 1299.767 | 1299.687 | 1299.592 | 1299.485 | 1299.367 | 1299.246 |
| | (-) Elev."N" | | | | | | | | | | | | | | | |
| | (=) d | | | | | | | | | | | | | | | |
| | (-) 0. 688' | | | | | | | | | | | | | | | |
| | (=) h | | | | | | | | | | | | | | | |
| Girder No. 3 | Elev. "M" | 1300.372 | 1300.335 | 1300.282 | 1300.211 | 1300.133 | 1300.117 | 1300.094 | 1300.059 | 1300.010 | 1299.948 | 1299.870 | 1299.778 | 1299.673 | 1299.556 | 1299.435 |
| | (-) Elev."N" | | | | | | | | | | | | | | | |
| | (=) d | | | | | | | | | | | | | | | |
| | (-) 0. 688' | | | | | | | | | | | | | | | |
| | (=) h | | | | | | | | | | | | | | | |
| Girder No. 4 | Elev. "M" | 1300.376 | 1300.343 | 1300.292 | 1300.224 | 1300.149 | 1300.136 | 1300.115 | 1300.083 | 1300.036 | 1299.977 | 1299.902 | 1299.812 | 1299.710 | 1299.596 | 1299.475 |
| | (-) Elev."N" | | | | | | | | | | | | | | | |
| | (=) d | | | | | | | | | | | | | | | |
| | (-) 0. 688' | | | | | | | | | | | | | | | |
| | (=) h | | | | | | | | | | | | | | | |
| Girder No. 5 | Elev. "M" | 1300.230 | 1300.199 | 1300.151 | 1300.087 | 1300.014 | 1300.004 | 1299.986 | 1299.956 | 1299.912 | 1299.855 | 1299.783 | 1299.696 | 1299.596 | 1299.485 | 1299.364 |
| | (-) Elev."N" | | | | | | | | | | | | | | | |
| | (=) d | | | | | | | | | | | | | | | |
| | (-) 0. 688' | | | | | | | | | | | | | | | |
| | (=) h | | | | | | | | | | | | | | | |
| Girder No. 6 | Elev. "M" | 1300.082 | 1300.055 | 1300.009 | 1299.948 | 1299.878 | 1299.871 | 1299.855 | 1299.828 | 1299.786 | 1299.732 | 1299.663 | 1299.578 | 1299.481 | 1299.372 | 1299.254 |
| | (-) Elev."N" | | | | | | | | | | | | | | | |
| | (=) d | | | | | | | | | | | | | | | |
| | (-) 0. 688' | | | | | | | | | | | | | | | |
| | (=) h | | | | | | | | | | | | | | | |

### NOTE —

*Based on a "d" of 10 ¼" at the ℄ of each abutment and 10 ¼" at the ℄ of the Bent (see SEC. C - C on SUPERSTRUCTURE DETAILS (A), it is anticipated that the midspan haunch dimension "h" over the ℄ of each girder will be 1 ¼". If when computing the dimensions in the table, it is found that any dimension "h" is less than zero or greater than 4" the Office of Bridge Design of the South Dakota Dept. of Transportation shall be notified immediately. After the "Table of Slab Form Elevations and Calculations" has been completely filled out and approved for deck forming, a copy shall be forwarded to the Office of Bridge Design for review and analysis for the purpose of securing information relative to camber growth in the beams. This information is necessary for preparing plans for future structures of this type.*

**SLAB FORM ELEVATIONS**

FOR

319' - 10 5/8" PRESTR. GIRDER BRIDGE

40' - 0" ROADWAY & 5' - 0" SIDEWALK — 30° LHF SKEW
OVER TURTLE CREEK — SEC. 9-T116N-R64W
STA. 17 + 86.56 TO 21 + 06.44 — NH 0212(160)306
STR. NO. 58-086-251 — HL-93

SPINK COUNTY

S. D. DEPT. OF TRANSPORTATION

MARCH 2015



| DESIGNED BY | CK. DES. BY | DRAFTED BY | |
|---|---|---|---|
| TD | BB | MG | Kevin N. Goeden |
| SPNK03A6 | 03A6GA24 | | BRIDGE ENGINEER |

| STATE OF | PROJECT | SHEET NO. | TOTAL SHEETS |
|---|---|---|---|
| S.D. | NH 0212(160)306 | E27 | E37 |

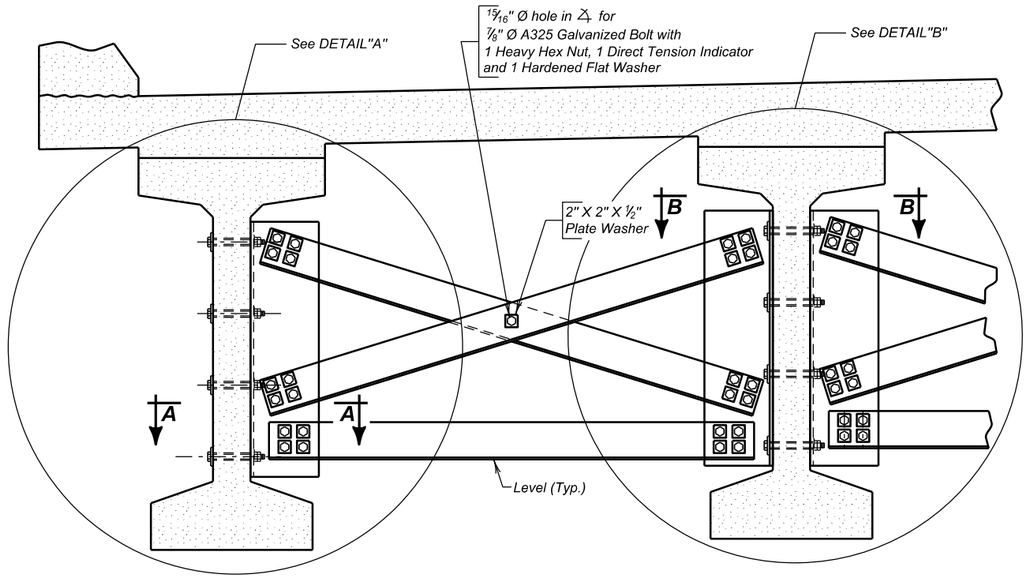


## SECTION AT DIAPHRAGM

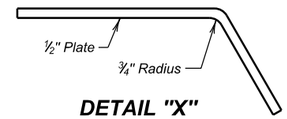


## DETAIL "X"

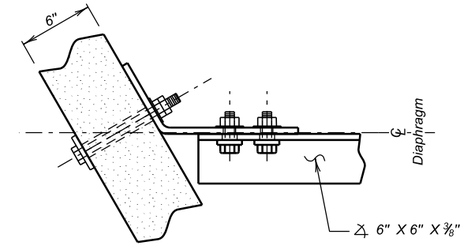


## SEC. A - A

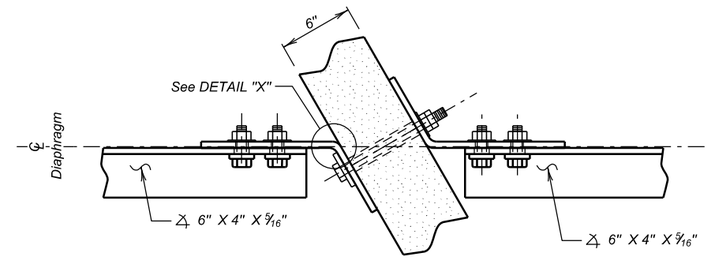


## SEC. B - B

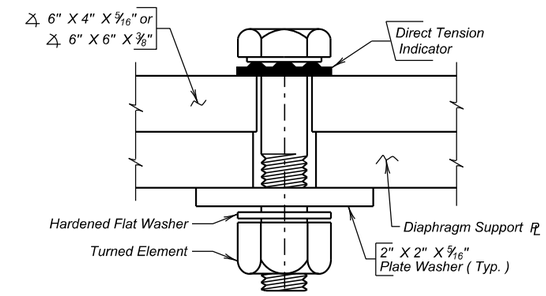


## DIRECT TENSION INDICATOR DETAIL

✳ Bolt head shall be adjacent to the exterior face of the exterior girder.

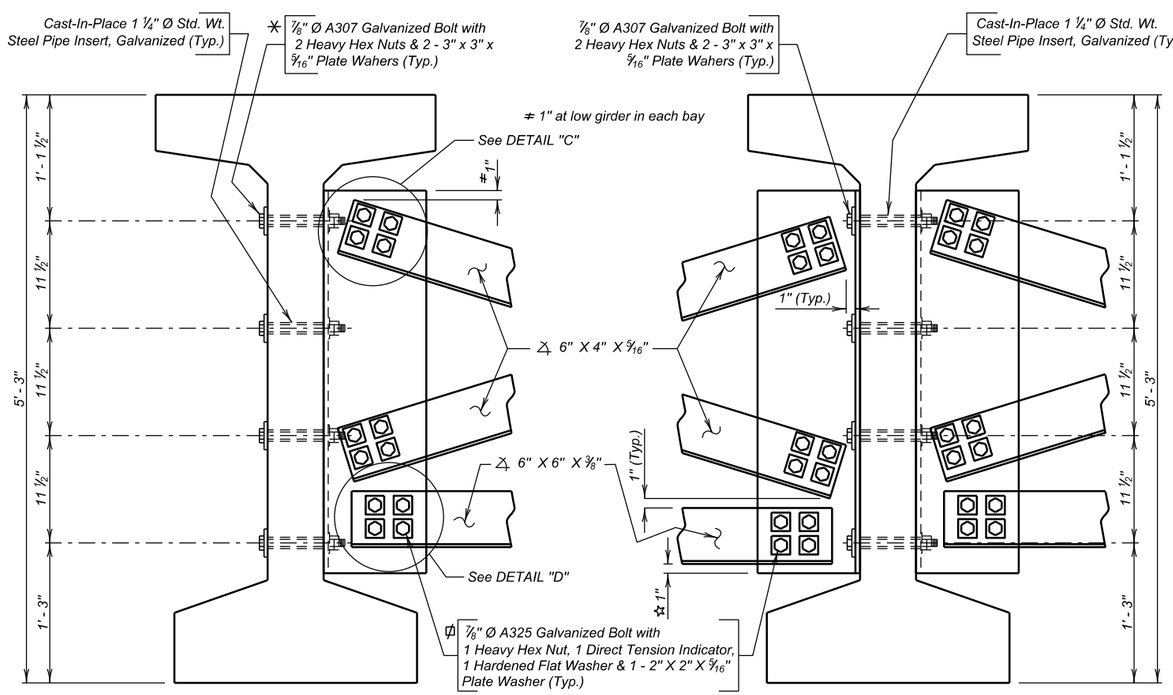


## DETAIL "A"

(Typ. Exterior Girder)

⌀ Bolt Head and Direct Tension Indicator shall be adjacent to 15/16" ⌀ holes in Bent Plate Diaphragm.

## DETAIL "B"

(Typ. Interior Girder)

☆ 1" at high girder in each bay

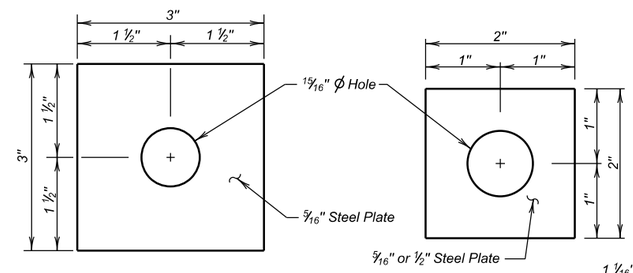


## PLATE WASHER DETAILS

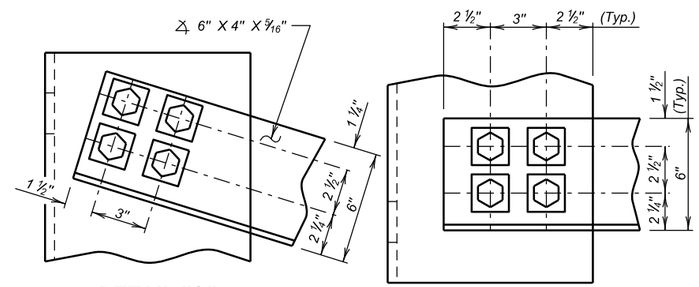


## DETAIL "C"

## DETAIL "D"

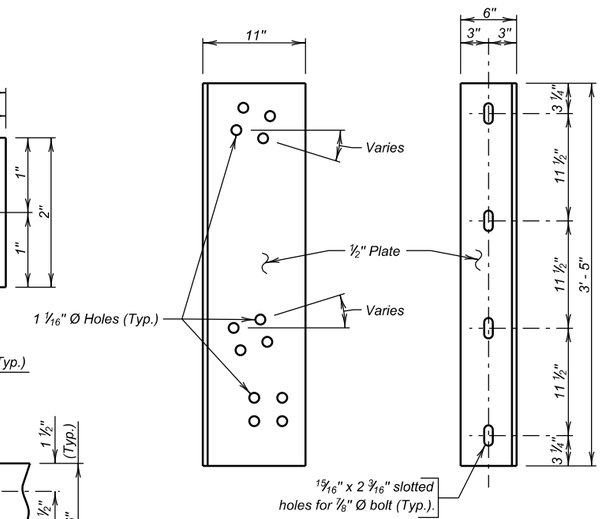


## DIAPHRAGM SUPPORT PLATE

## NOTES:

1. All steel for the diaphragms including plate washers shall conform to ASTM A36 and shall be galvanized in accordance with ASTM A123 or A153. Bolts, nuts, and washers shall be galvanized in accordance with ASTM F2329. Direct Tension Indicators shall conform to Section 410.3.G.5b of the Specifications.
2. The steel diaphragms between adjacent girders shall be installed as soon as possible and in conjunction with girder erection.
3. All costs associated with furnishing, fabricating, assembly and installation of diaphragms shall be included in the lump sum price for Structural Steel, Miscellaneous.

## ESTIMATED QUANTITIES

| ITEM | UNIT | QUANTITY |
|---|---|---|
| △ Structural Steel, Miscellaneous | L.S. | Lump Sum |

△ For informational purposes only, the estimated weight of structural steel is 7156 Lbs. for 15 diaphragms.

**DIAPHRAGM DETAILS**

FOR

319' - 10 5/8" PRESTR. GIRDER BRIDGE

40' - 0" ROADWAY & 5' - 0" SIDEWALK — 30° LHF SKEW
OVER TURTLE CREEK — SEC. 9-T116N-R64W
STA. 17 + 86.56 TO 21 + 06.44 — NH 0212(160)306
STR. NO. 58-086-251 — HL-93

SPINK COUNTY

S. D. DEPT. OF TRANSPORTATION

MARCH 2015



| DESIGNED BY | CK. DES. BY | DRAFTED BY | |
|---|---|---|---|
| TD | BB | MG | Kevin N. Goeden |
| SPNK03A6 | 03A6GA25 | | BRIDGE ENGINEER |

| STATE OF | PROJECT | SHEET NO. | TOTAL SHEETS |
|---|---|---|---|
| S.D. | NH 0212(160)306 | E28 | E37 |

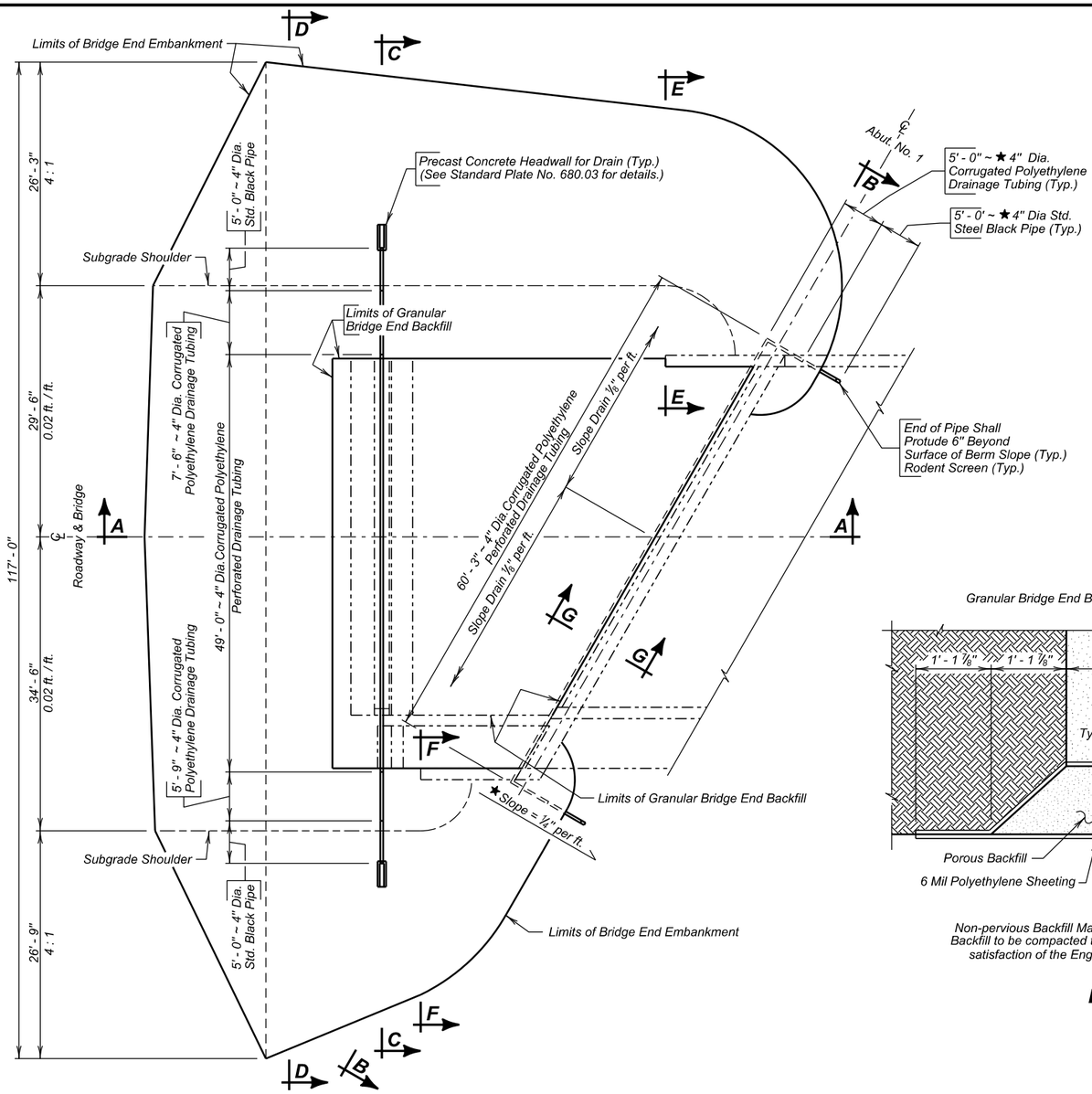


**PLAN**

(Bridge End Backfill shown adjacent to Abut. No. 1, Abut. No. 4 similar opposite hand.)

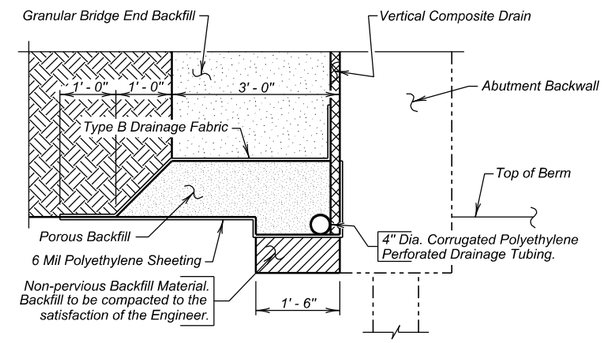


**SEC. G - G**

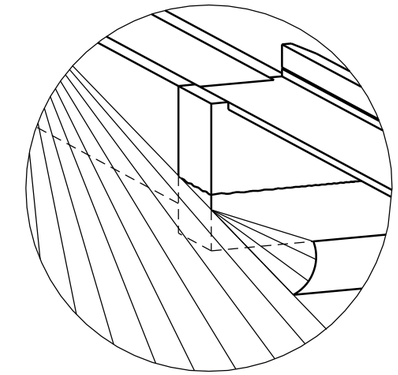

**SPILL CONE DETAIL AT EMBANKMENT**

(Sidewalk Railing not shown)

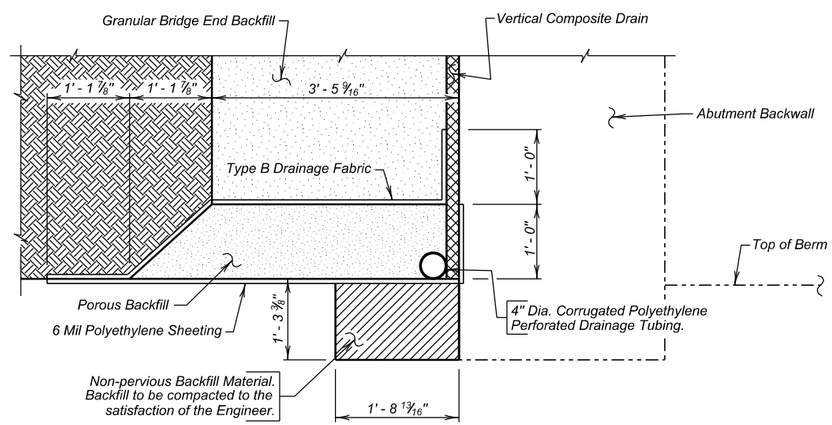


**DETAIL "X"**

## ESTIMATED QUANTITIES

(For Two Abutments)

| | ITEM | UNIT | QUANTITY |
|---|---|---|---|
| | Granular Bridge End Backfill | Cu. Yd. | 140.8 |
| ∡ | Bridge End Embankment | Cu. Yd. | 2816 |
| ⌖ ⌀ | Porous Backfill | Ton | 33.6 |
| | 4" Underdrain Pipe | Ft. | 306 |
| ⌖ | Approach Slab Underdrain Excavation | Cu. Yd. | 6.7 |
| | Precast Concrete Headwall for Drain | Each | 4 |

1. 219 ft. 4" dia. Corrugated Polyethylene Perforated Drainage Tubing.
2. 47 ft. 4" dia. Corrugated Polyethylene Drainage Tubing.
3. 40 ft. 4" dia. Std. Black Steel Pipe with Rodent Screens.
4. 843 sq. ft. Vertical Composite Drain

Items 1 thru 4 are approximate quantities contained in the 4" Underdrain Pipe and are for information only.

5. 5849 sq. ft. 6 mil Polyethylene Sheeting, not including laps.
6. 448 sq. yd. Type B Drainage Fabric.

Items 5 and 6 are approximate quantities contained in the Granular Bridge End Backfill and are for information only.

⌀ For estimating purposes only, a factor of 1.89 tons/cu. yd. was used to convert cu. yds. to tons.

∡ Shrinkage Factor of 1.25 Used.

⌖ Quantity based on a 12" wide trench.

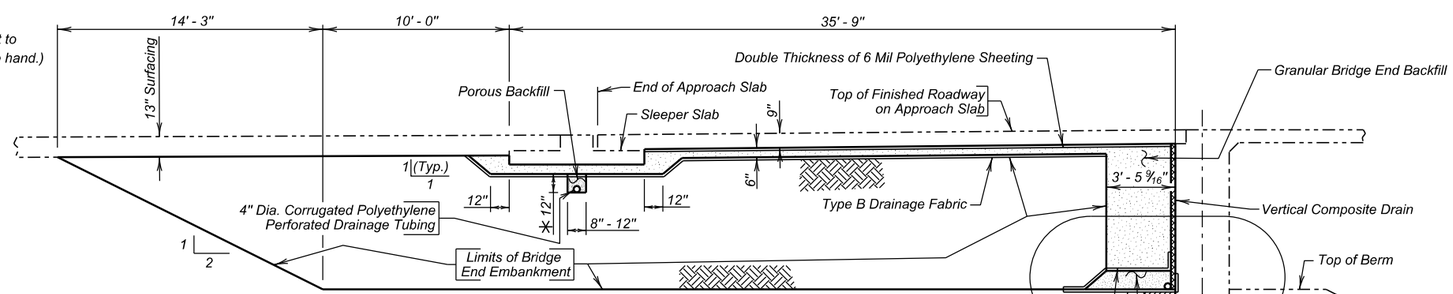


✱ 12" at ℄ of Roadway, Bottom of Trench ⅛" per Foot Pipe Slope.

**SEC. A - A**

(at ℄ Roadway)

**DETAILS OF BRIDGE END BACKFILL (A)**

FOR

319' - 10 5/8" PRESTR. GIRDER BRIDGE

40' - 0" ROADWAY & 5' - 0" SIDEWALK — 30° LHF SKEW
OVER TURTLE CREEK — SEC. 9-T116N-R64W
STA. 17 + 86.56 TO 21 + 06.44 — NH 0212(160)306
STR. NO. 58-086-251 — HL-93

SPINK COUNTY

S. D. DEPT. OF TRANSPORTATION

MARCH 2015



| DESIGNED BY | CK. DES. BY | DRAFTED BY | |
|---|---|---|---|
| JMH | TD | MG | Kevin N. Goeden |
| SPNK03A6 | 03A6GA26 | | BRIDGE ENGINEER |

| STATE OF | PROJECT | SHEET NO. | TOTAL SHEETS |
|---|---|---|---|
| S.D. | NH 0212(160)306 | E29 | E37 |

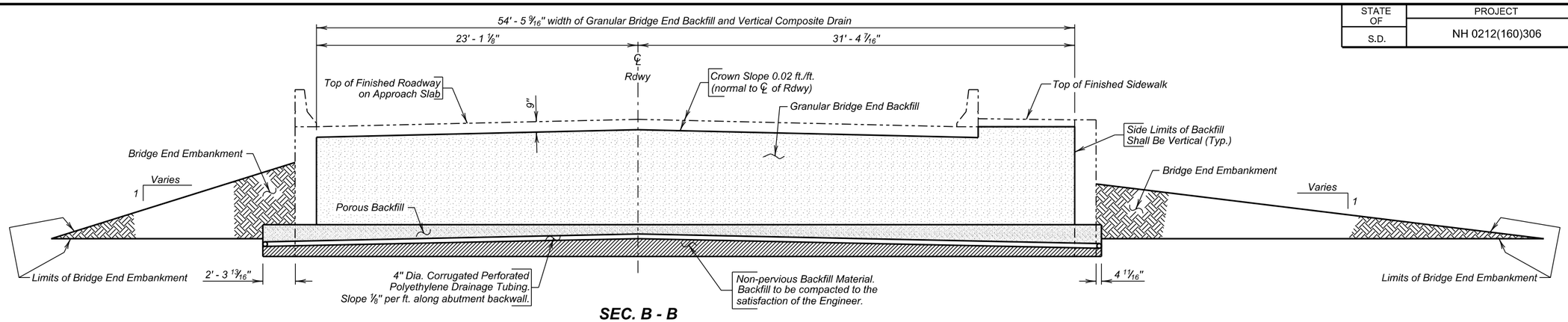


**SEC. B - B**

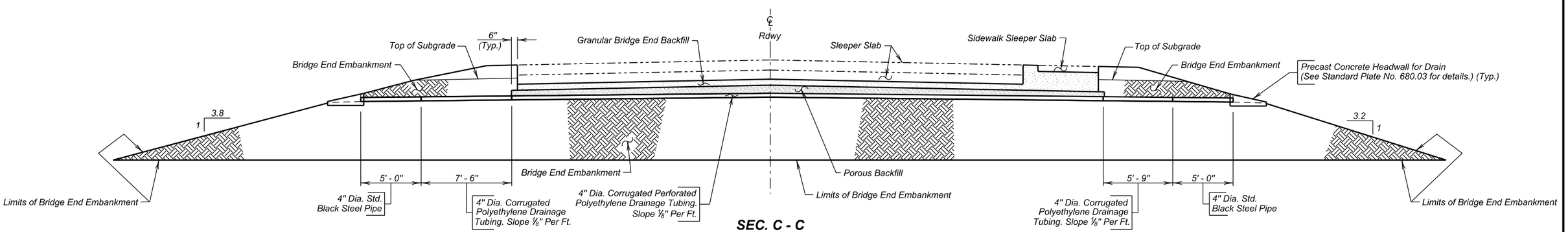


**SEC. C - C**

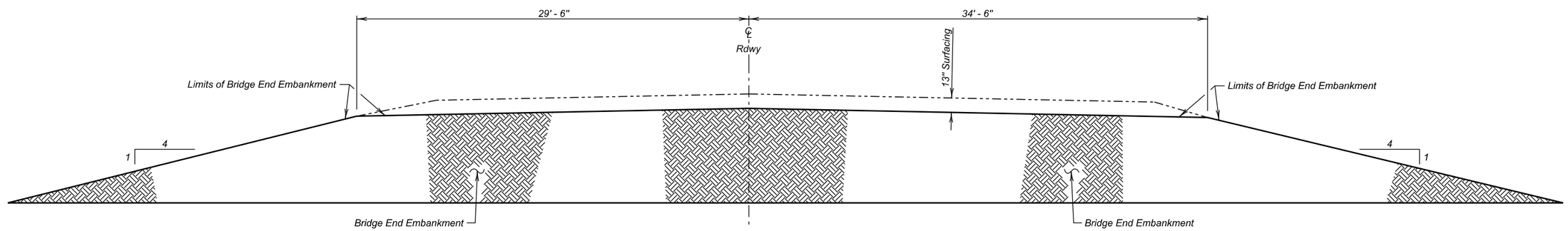


**SEC. D - D**

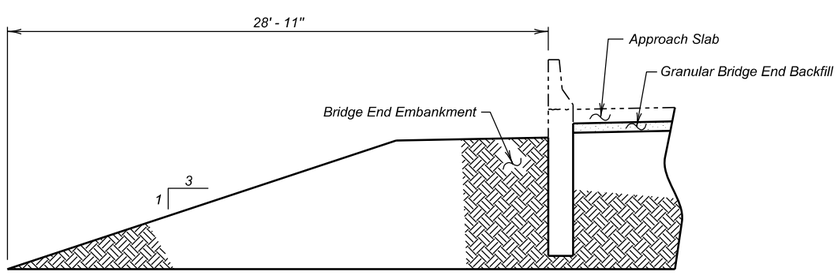


**SEC. E - E**

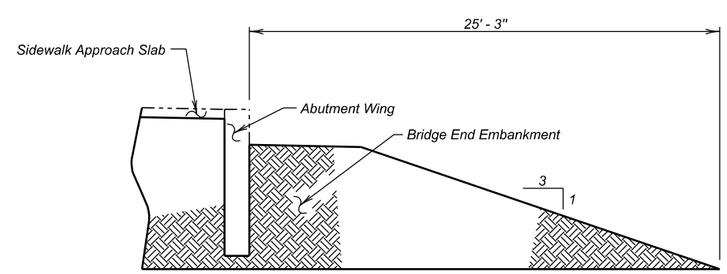


**SEC. F - F**

**DETAILS OF BRIDGE END BACKFILL (B)**

FOR

319' - 10 5/8" PRESTR. GIRDER BRIDGE

40' - 0" ROADWAY & 5' - 0" SIDEWALK — 30° LHF SKEW
OVER TURTLE CREEK — SEC. 9-T116N-R64W
STA. 17 + 86.56 TO 21 + 06.44 — NH 0212(160)306
STR. NO. 58-086-251 — HL-93

SPINK COUNTY
S. D. DEPT. OF TRANSPORTATION
MARCH 2015



| DESIGNED BY | CK. DES. BY | DRAFTED BY | |
|---|---|---|---|
| JMH | TD | MG | Kevin N. Goeden |
| SPNK03A6 | 03A6GA27 | | BRIDGE ENGINEER |

| STATE OF | PROJECT | SHEET NO. | TOTAL SHEETS |
|---|---|---|---|
| S.D. | NH 0212(160)306 | E30 | E37 |

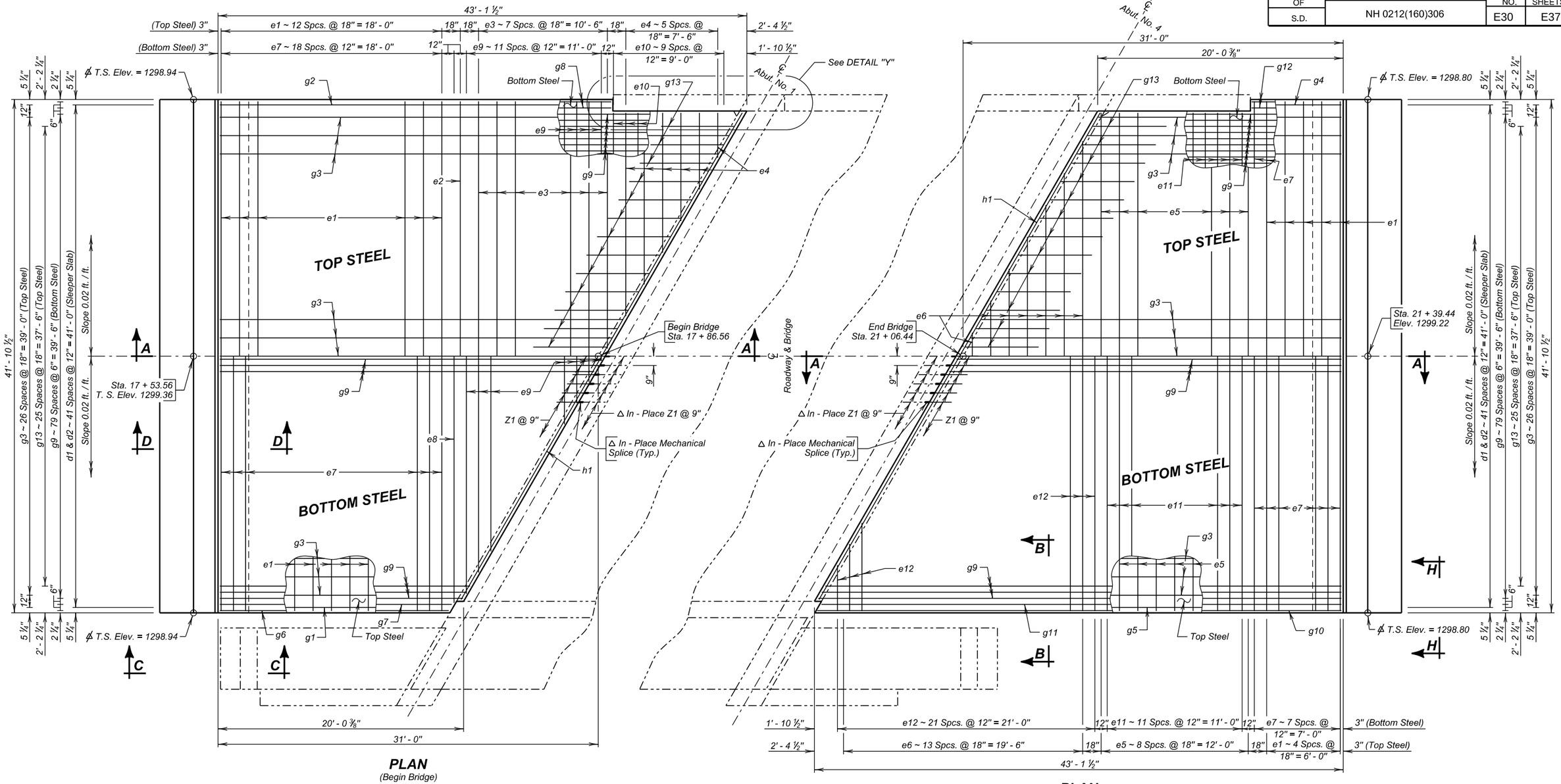


**DETAILS OF APPROACH SLAB ADJACENT TO BRIDGE (A)**

FOR

319' - 10 ⅝" PRESTR. GIRDER BRIDGE

40' - 0" ROADWAY & 5' - 0" SIDEWALK — 30° LHF SKEW
OVER TURTLE CREEK — SEC. 9-T116N-R64W
STA. 17 + 86.56 TO 21 + 06.44 — NH 0212(160)306
STR. NO. 58-086-251 — HL-93

SPINK COUNTY
S. D. DEPT. OF TRANSPORTATION
MARCH 2015



| DESIGNED BY | CK. DES. BY | DRAFTED BY | |
|---|---|---|---|
| TD | BB | MG | Kevin N. Goeden |
| SPNK03A6 | 03A6GA28 | | BRIDGE ENGINEER |

| STATE OF | PROJECT | SHEET NO. | TOTAL SHEETS |
|---|---|---|---|
| S.D. | NH 0212(160)306 | E31 | E37 |

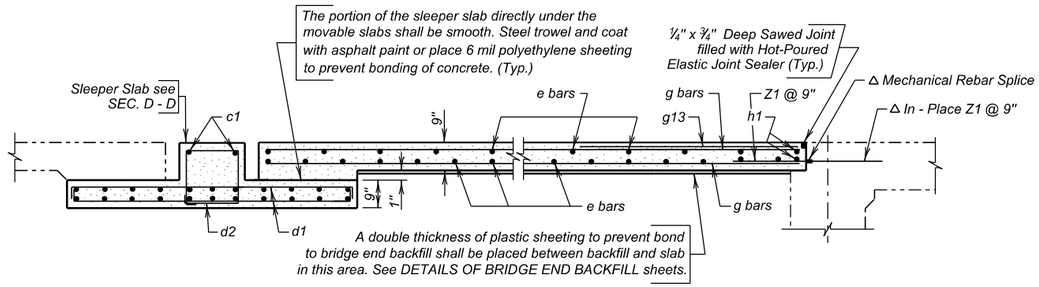


**SEC. A - A**

Δ In-place Z1 bars and Mechanical Splices are listed and included in superstructure quantities. See SUPERSTRUCTURE DETAILS (B)

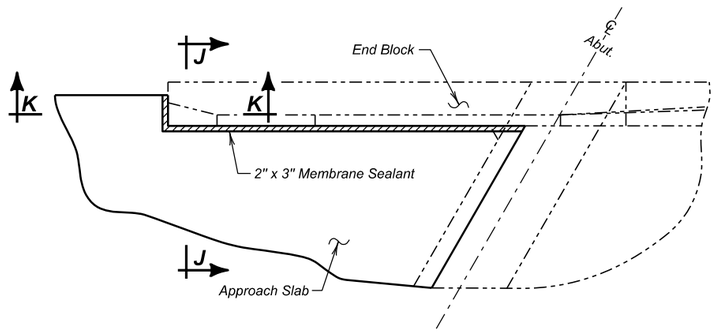


**DETAIL "Y"**

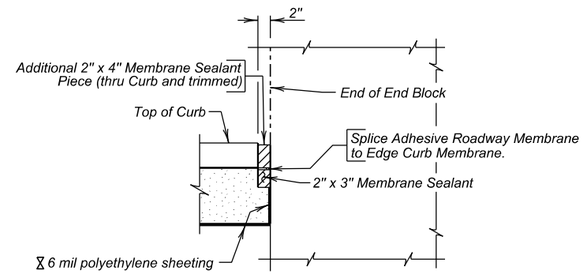


**SEC. K - K**

6 mil polyethylene sheeting shall not interfere with the bond between the Membrane Sealant and the approach slab.

## REINFORCING SCHEDULE

( For Two Approach Slabs and Two Sleeper Slabs )

| | Mk. | No. | Size | Length | Type |
|---|---|---|---|---|---|
| | Approach Slabs | | | | |
| | e1 | 18 | 4 | 41' - 7" | Str. |
| | e2 | 1 | 4 | 40' - 7" | Str. |
| ⌀ | e3 | 4 | 4 | 58' - 6" | Str. |
| ⌀ | e4 | 3 | 4 | 20' - 3" | Str. |
| | e5 | 9 | 4 | 40' - 7" | Str. |
| ⌀ | e6 | 7 | 4 | 42' - 10" | Str. |
| | e7 | 27 | 6 | 41' - 7" | Str. |
| | e8 | 1 | 6 | 40' - 11" | Str. |
| ⌀ | e9 | 6 | 6 | 61' - 4" | Str. |
| ⌀ | e10 | 5 | 6 | 21' - 3" | Str. |
| | e11 | 12 | 6 | 40' - 7" | Str. |
| ⌀ | e12 | 11 | 6 | 43' - 9" | Str. |
| | g1 | 1 | 4 | 18' - 9" | Str. |
| | g2 | 1 | 4 | 31' - 11" | Str. |
| ⌀ | g3 | 27 | 4 | 62' - 3" | Str. |
| | g4 | 1 | 4 | 7' - 1" | Str. |
| | g5 | 1 | 4 | 42' - 4" | Str. |
| | g6 | 1 | 8 | 18' - 8" | Str. |
| | g7 | 1 | 8 | 18' - 11" | Str. |
| | g8 | 2 | 8 | 31' - 11" | Str. |
| ⌀ | g9 | 80 | 8 | 62' - 6" | Str. |
| | g10 | 1 | 8 | 42' - 9" | Str. |
| | g11 | 1 | 8 | 42' - 5" | Str. |
| | g12 | 2 | 8 | 7' - 4" | Str. |
| | g13 | 52 | 4 | 6' - 0" | Str. |
| | h1 | 4 | 6 | 45' - 10" | Str. |
| Δ | Z1 | 106 | 7 | 2' - 0" | Str. |
| | Sleeper Slabs | | | | |
| | c1 | 48 | 5 | 41' - 7" | Str. |
| | d1 | 168 | 4 | 7' - 9" | 2 |
| | d2 | 84 | 4 | 6' - 1" | T2 |

Bending Details

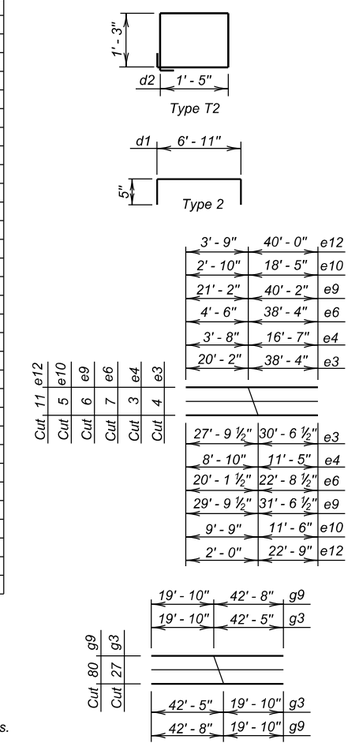


NOTE -
All bars to be Epoxy Coated.
All dimensions are out to out of bars.
⌀ See cutting diagram.

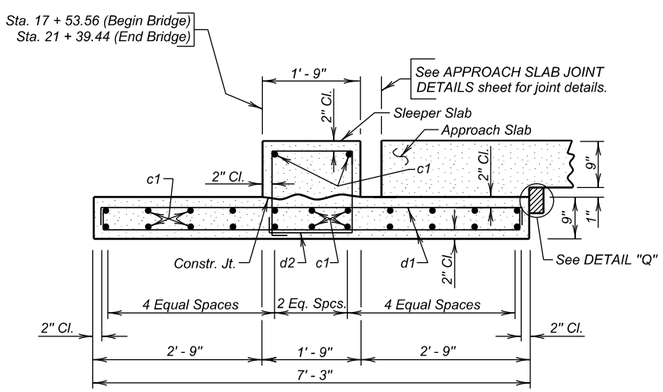


**SEC. D - D**
(Sleeper Slab)

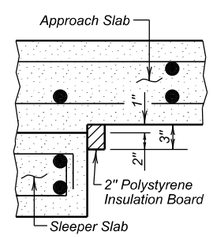


**DETAIL "Q"**

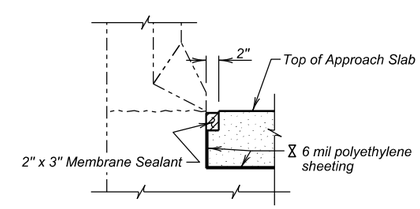


**SEC. J - J**

## ESTIMATED QUANTITIES

(For Two Approach Slabs & Two Sleeper Slabs)

| ITEM | UNIT | QUANTITY |
|---|---|---|
| Concrete Approach Slab for Bridge | Sq. Yd. | 291.3 |
| Concrete Approach Sleeper Slab for Bridge | Sq. Yd. | 67.5 |

1. 72.8 Cu. Yds. Concrete in Approach Slabs.
2. 20644 Lbs. Epoxy coated Re-Steel in Approach Slabs.
3. 21.4 Cu. Yds. Concrete in Sleeper Slabs.
4. 3293 Lbs. Epoxy coated Re-Steel in Sleeper Slab.
5. 14 Sq. Ft. of 2" Polystyrene Insulation Board
6. 26 Ft. of Membrane Sealant adjacent to wings.

Items 1 thru 6 are approximate quantities contained in the above bid items and are for information only.

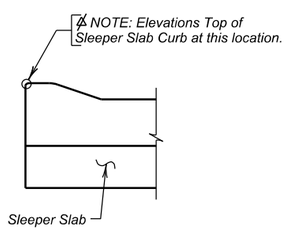


**VIEW H - H**

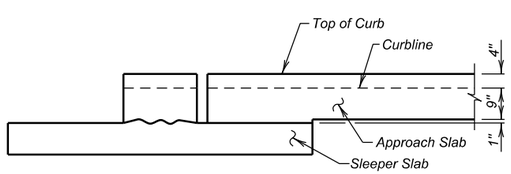


**VIEW C - C**
(Sidewalk not shown)

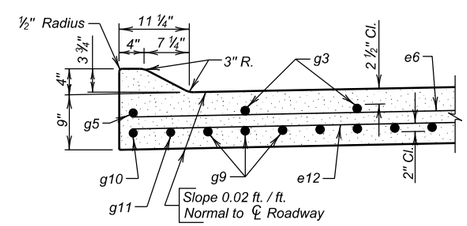


**SEC. B - B**
(Sidewalk not shown)

**DETAILS OF APPROACH SLAB ADJACENT TO BRIDGE (B)**

FOR

319' - 10 5/8" PRESTR. GIRDER BRIDGE

40' - 0" ROADWAY & 5' - 0" SIDEWALK — 30° LHF SKEW
OVER TURTLE CREEK — SEC. 9-T116N-R64W
STA. 17 + 86.56 TO 21 + 06.44 — NH 0212(160)306
STR. NO. 58-086-251 — HL-93

SPINK COUNTY
S. D. DEPT. OF TRANSPORTATION
MARCH 2015



| DESIGNED BY | CK. DES. BY | DRAFTED BY | |
|---|---|---|---|
| TD | BB | MG | Kevin N. Goeden |
| SPNK03A6 | 03A6GA29 | | BRIDGE ENGINEER |

| STATE OF | PROJECT | SHEET NO. | TOTAL SHEETS |
|---|---|---|---|
| S.D. | NH 0212(160)306 | E32 | E37 |

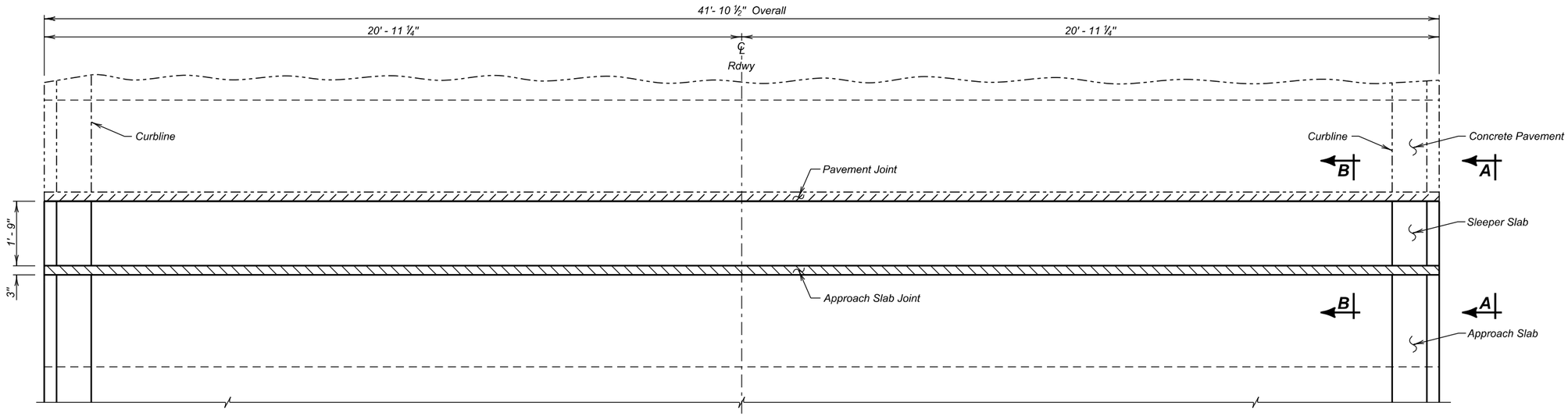


**PLAN**

## GENERAL NOTES

1. The Membrane Sealant shall be on the approved product list for Membrane Sealant Expansion Joints.
2. The manufacturer shall supply the membrane sealant in packaging that precompresses the membrane sealant. The precompressed dimension shall be as recommended by the sealant manufacturer, however, in no case shall the precompressed dimension exceed 75% of the joint opening width. The foam sealant shall be slowly self expanding to permit workers ample time to install the membrane sealant before the membrane sealant exceeds the joint opening width.
3. The membrane sealant shall provide a water tight seal throughout a joint movement range of + 25% (minimum) from the specified joint opening dimension.
4. The membrane sealant shall be supplied in pieces a minimum of 5 feet in length. The foam sealant shall be ultra-violet and ozone resistant.
5. The bonding adhesive used to attach the membrane sealant to the adjacent concrete shall be approved by the membrane sealant manufacturer.
6. Adhesive used to join adjacent pieces of the membrane sealant shall be as recommended by the manufacturer.
7. If Styrofoam filler material is used in the construction, it shall be closed cell and water-tight as approved by the Engineer.
8. The minimum ambient air temperature at the time of joint installation and adhesive curing shall be 40° F.
9. A technical representative of the membrane sealant manufacturer shall be present at the jobsite during installation. The technical representative shall be knowledgeable in the correct procedures for the preparation and installation of the joint material to ensure the Contractor installs the joint to the Manufacturers recommendations.
10. Surfaces that will be in contact with the membrane sealant shall be thoroughly cleaned by abrasive blasting to remove all laitance and contaminants (such as oil, curing compounds, etc.) from the surface. At a minimum, two passes of abrasive blasting with the nozzle held at an angle to within 1 to 2 inches of the surface will be required. Cleaning of the surfaces with solvents, wire brushing, or grinding shall not be permitted.
11. After abrasive blasting, but immediately prior to membrane joint installation, the entire joint contact surface shall be air blasted. The air compressor used for joint cleaning shall be equipped with trap devices capable of providing moisture-free and oil-free air at a recommended pressure of 90 psi. To obtain complete bonding with the adhesive, the adjacent surfaces must be dry and clean. The contact surfaces for the joint shall be visually inspected by the Engineer immediately prior to joint installation to verify the surface is dry and clean.
12. Individual spliced sections shall be installed as per the manufacturers' recommendations. The membrane joint sealant manufacturer shall submit a detailed installation procedure to the Engineer at least 5 days prior to joint installation for his review.
13. Traffic shall not be allowed on the joint until the bonding adhesive has had time to cure, as recommended by the manufacturer.
14. Use plywood or other material to protect concrete adjacent to the joint from spalling before any equipment is moved across the joint. Any spall areas will be repaired at the Contractor's expense by breaking out and replacing adjacent concrete, as approved by the Engineer.
15. The Membrane Sealant Expansion Joint will be measured in feet to the nearest one-tenth foot, complete in place. Measurement will be made of the overall horizontal length. The Membrane Sealant Expansion Joint will be paid for at the contract unit price per foot complete in place. Payment for this item shall be full compensation for furnishing all the required materials in place, including labor, equipment and incidentals necessary to complete the work in accordance with the plans and the foregoing specifications.

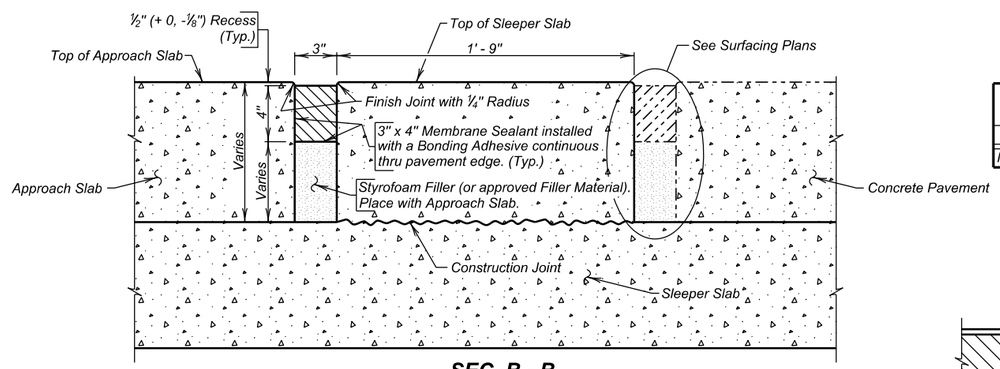


**SEC. B - B**

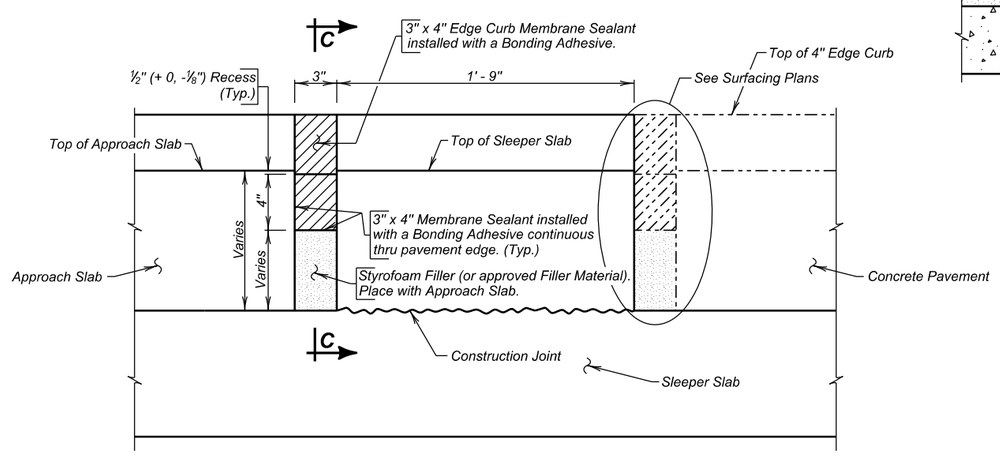


**VIEW A - A**

### ESTIMATED QUANTITIES
( For Two Approach Slabs )

| ITEM | UNIT | QUANTITY |
|---|---|---|
| Membrane Sealant Expansion Joint | Ft. | 83.8 |

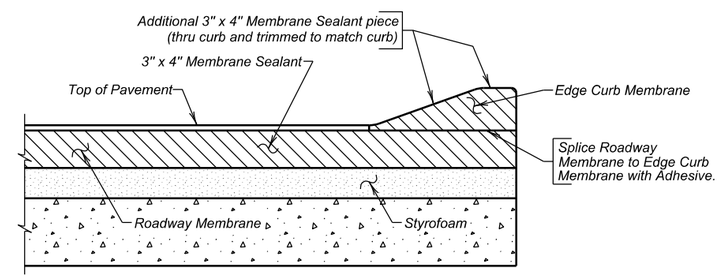


**SEC. C - C**

**APPROACH SLAB JOINT DETAILS**

FOR

319' - 10 ⅝" PRESTR. GIRDER BRIDGE

40' - 0" ROADWAY & 5' - 0" SIDEWALK — 30° LHF SKEW
OVER TURTLE CREEK — SEC. 9-T116N-R64W
STA. 17 + 86.56 TO 21 + 06.44 — NH 0212(160)306
STR. NO. 58-086-251 — HL-93

SPINK COUNTY
S. D. DEPT. OF TRANSPORTATION
MARCH 2015



| DESIGNED BY | CK. DES. BY | DRAFTED BY | |
|---|---|---|---|
| TD | BB | MG | Kevin N. Goeden |
| SPNK03A6 | 03A6GA30 | | BRIDGE ENGINEER |

| STATE OF | PROJECT | SHEET NO. | TOTAL SHEETS |
|---|---|---|---|
| S.D. | NH 0212(160)306 | E33 | E37 |

⌖ In-place Z2 bars and Mechanical Splices are listed and included in superstructure quantities. See SUPERSTRUCTURE DETAILS (B)

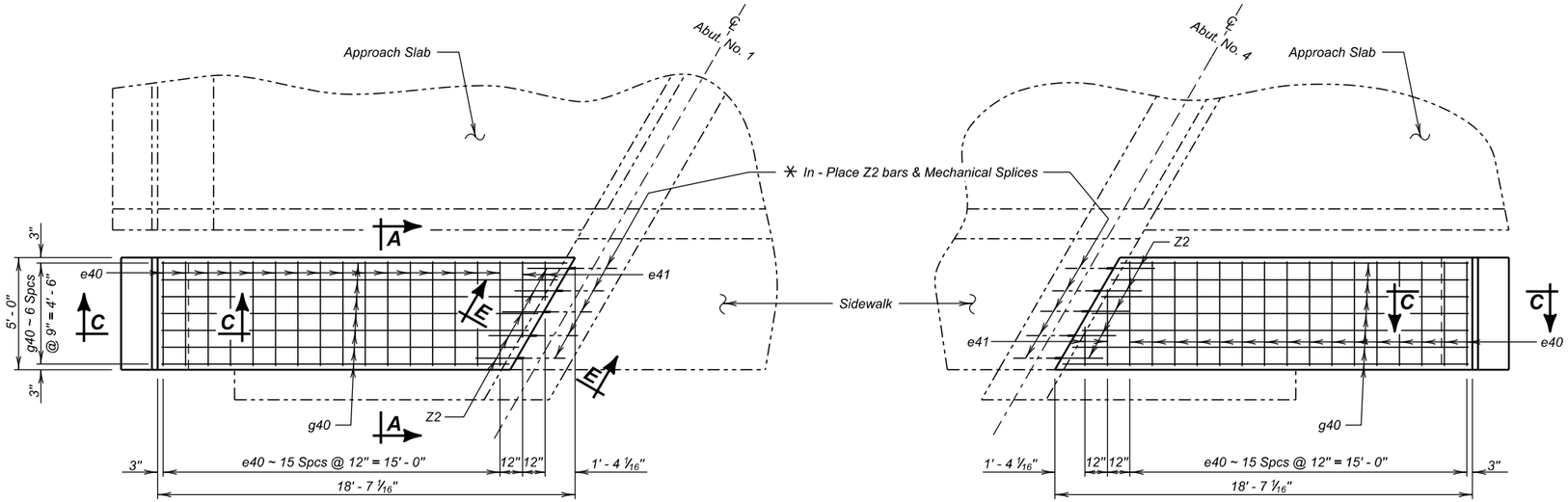


## PLAN
(Sidewalk Approach Slabs)

## REINFORCING SCHEDULE
(For Two Sidewalk Approach Slabs and Two Sidewalk Sleeper Slabs)

| Mk. | No. | Size | Length | Type |
|---|---|---|---|---|
| c40 | 12 | 4 | 4' - 8" | Str. |
| d40 | 10 | 4 | 3' - 0" | 2 |
| d41 | 10 | 4 | 4' - 3" | T2 |
| e40 | 32 | 4 | 4' - 8" | Str. |
| ✂ e41 | 2 | 4 | 5' - 2" | Str. |
| ✂ g40 | 7 | 4 | 33' - 7" | Str. |
| ⌖ Z2 | 10 | 4 | 2' - 0" | Str. |

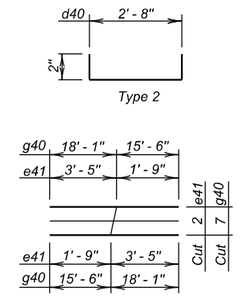


NOTE:
All bars to be Epoxy Coated.
All dimensions are out to out of bars.
✂ See cutting diagram.

## ESTIMATED QUANTITIES
(For Two Sidewalk Approach & Sleeper Slabs)

| ITEM | UNIT | QUANTITY |
|---|---|---|
| 6" Reinforced Concrete Sidewalk | Sq. Ft. | 172 |
| Membrane Sealant Expansion Joint | Ft. | 10 |

1. 3.2 Cu. Yds. Concrete in Sidewalk Approach Slabs.
2. 264 Lbs. Epoxy Coated Re-Steel in Sidewalk Approach Slabs.
3. 0.9 Cu. Yds. Concrete in Sidewalk Sleeper Slabs.
4. 86 Lbs. Epoxy Coated Re-Steel in Sidewalk Sleeper Slabs.
5. 344 Sq. Ft. 6 mil Polyethylene sheeting under reinf. conc. sidewalk.
6. 23 Ft. of Expansion Joint adjacent to wings.

Items 1 thru 6 are approximate quantities contained in the above bid items and are for information only.

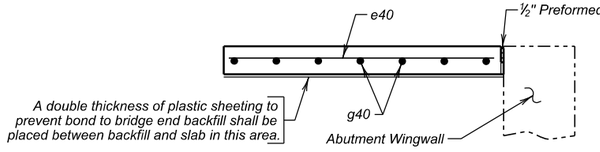


## SEC. A - A

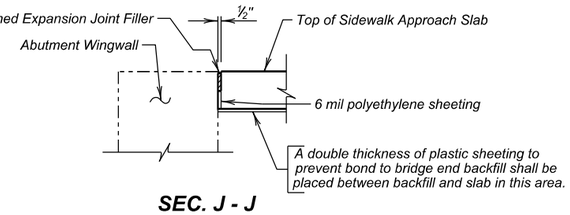


## SEC. J - J

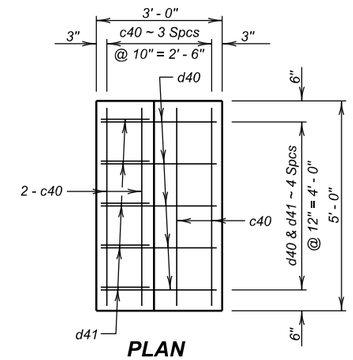


## PLAN
(Sidewalk Sleeper Slab)

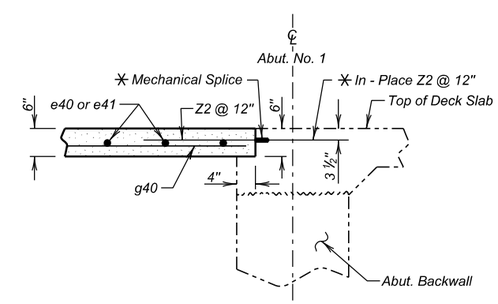


## SEC. E - E

✳ In - Place Z2 bars and Mechanical Rebar Splices are listed and included in superstructure quantities. See SUPERSTRUCTURE DETAILS (B).

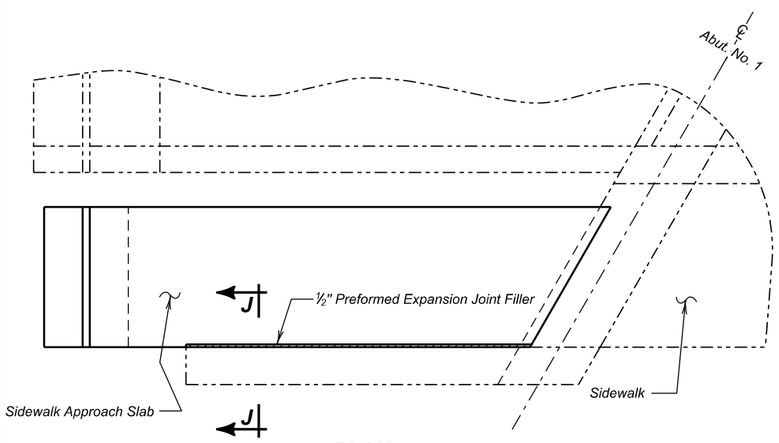


## PLAN
(Approach Slab shown adjacent to Abut. No. 1
Abut. No. 4 similar opposite hand.)

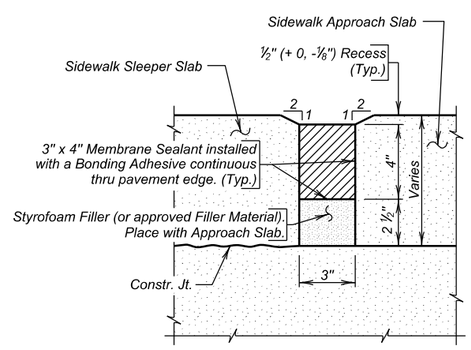


## ★ DETAIL "Z"
(Resteel not shown)

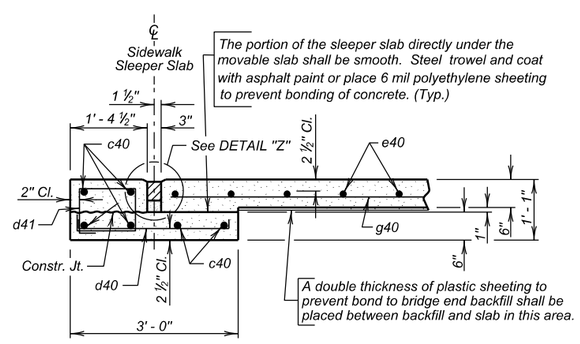


## SEC. C - C

★ See General Notes on APPROACH SLAB JOINT DETAILS sheet.

**SIDEWALK APPROACH SLAB DETAILS**

FOR

319' - 10 5/8" PRESTR. GIRDER BRIDGE

40' - 0" ROADWAY & 5' - 0" SIDEWALK — 30° LHF SKEW
OVER TURTLE CREEK — SEC. 9-T116N-R64W
STA. 17 + 86.56 TO 21 + 06.44 — NH 0212(160)306
STR. NO. 58-086-251 — HL-93

SPINK COUNTY
S. D. DEPT. OF TRANSPORTATION
MARCH 2015



| DESIGNED BY | CK. DES. BY | DRAFTED BY | |
|---|---|---|---|
| TD | BB | MG | Kevin N. Goeden |
| SPNK03A6 | 03A6GA31 | | BRIDGE ENGINEER |

The elevations shown in these plans are based on the National Geodetic Survey (NGS) North American Vertical Datum of 1988 (NAVD88).

| STATE OF | PROJECT | SHEET NO. | TOTAL SHEETS |
|---|---|---|---|
| S.D. | NH 0212(160)306 | E34 | E37 |

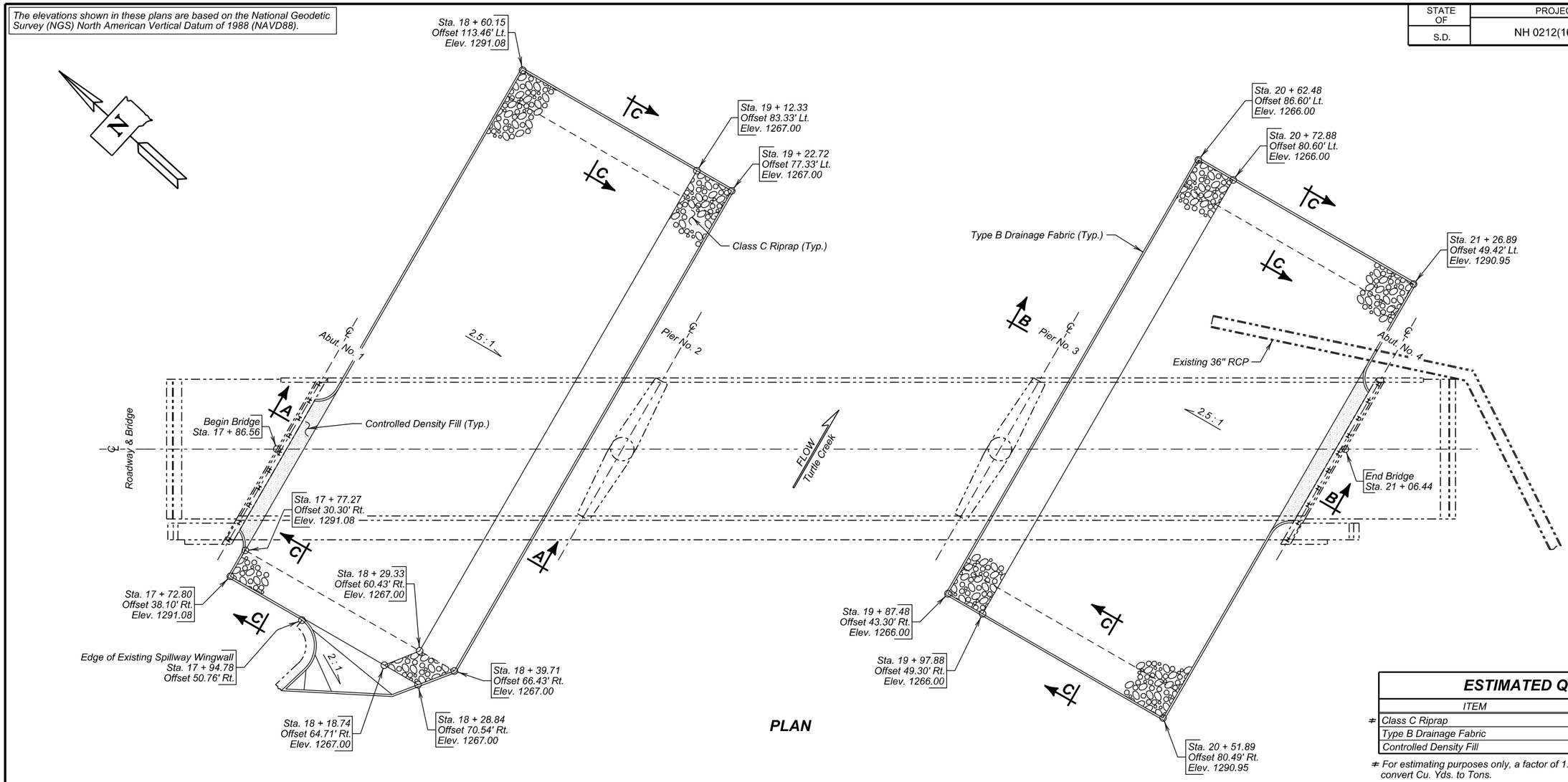


**PLAN**

## ESTIMATED QUANTITIES

| ITEM | UNIT | QUANTITY |
|---|---|---|
| # Class C Riprap | Ton | 4284.3 |
| Type B Drainage Fabric | Sq. Yd. | 3167 |
| Controlled Density Fill | Cu. Yd. | 8.0 |

# For estimating purposes only, a factor of 1.4 tons/cu.yd. was used to convert Cu. Yds. to Tons.

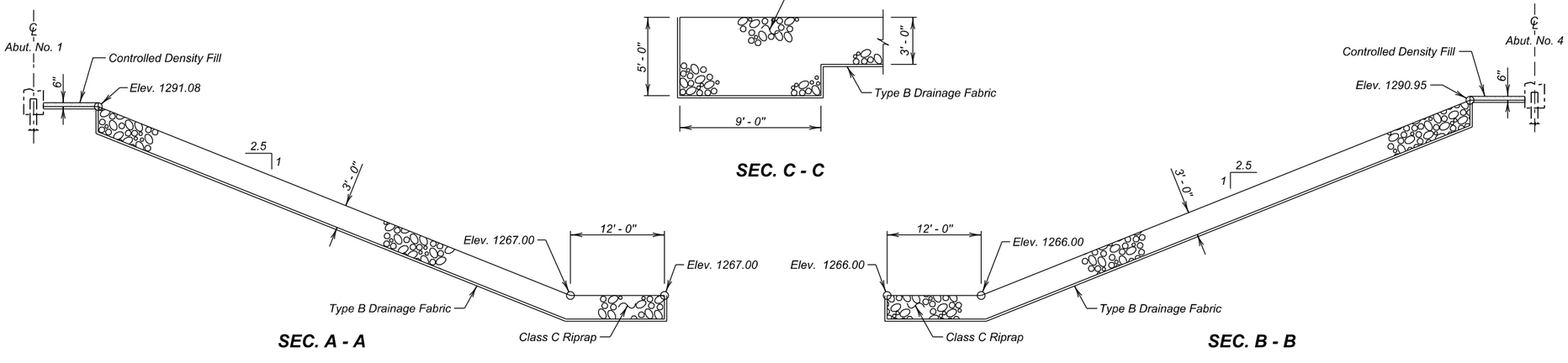


**SEC. A - A**

**SEC. C - C**

**SEC. B - B**

**RIPRAP DETAILS**

FOR

319' - 10 5/8" PRESTR. GIRDER BRIDGE

40' - 0" ROADWAY & 5' - 0" SIDEWALK — 30° LHF SKEW
OVER TURTLE CREEK — SEC. 9-T116N-R64W
STA. 17 + 86.56 TO 21 + 06.44 — NH 0212(160)306
STR. NO. 58-086-251 — HL-93

SPINK COUNTY

S. D. DEPT. OF TRANSPORTATION

MARCH 2015



| DESIGNED BY | CK. DES. BY | DRAFTED BY | |
|---|---|---|---|
| JMH | BB | MG | Kevin N. Coeden |
| SPNK03A6 | 03A6GA32 | | BRIDGE ENGINEER |

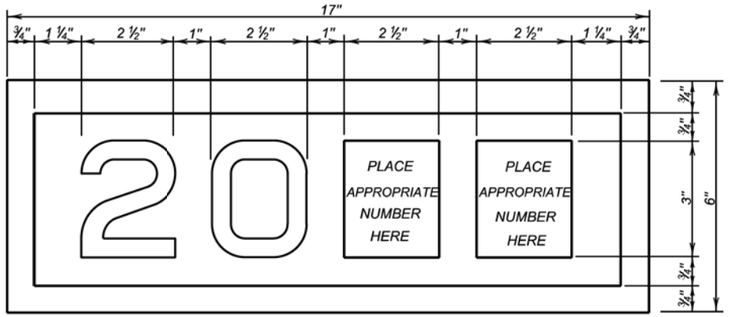


## YEAR PLATE DETAILS

### GENERAL NOTES:

1. Year plates of the general dimensions shown shall be constructed on all box culverts and bridges. The year plates shall be constructed in reverse and attached to the forms in such a manner that the finished imprint in the concrete does not exceed one-half (½) inch in depth.

2. Year plates shall be located on structure (s) as follows:

   a. On cast-in-place box culverts the year plates shall be four and one - half (4 ½) inches below the top of the upstream parapet wall and centered laterally on the upstream face. On precast box culverts the year plate shall be centered laterally on the upstream face of the top slab. Where an extended interior wall interferes with this location, the year plate shall be centered in an adjacent barrel.

   b. On bridges with six (6) inch curbs or "Jersey" shaped barriers with no endblocks, the year plate shall be centered vertically on the curb face approximately six (6) inches from the end of the bridge, or as designated by the Engineer. On bridges with "Jersey" shaped barrier endblocks, the year plate shall be centered on the upper sloped portion of the barrier approximately 5'- 6" from the end of the bridge, or as designated by the Engineer. There shall be one year plate at each end of the bridge on opposite sides.

   c. When the plans specify that both the original date of construction and the date of reconstruction are to be shown, one date shall be placed as listed above and the other located adjacent to it. Both year plates shall be shown at each end of the bridge on opposite sides.

3. There will be no separate measurement or payment made for year plates on box culverts and bridges. All costs for this work shall be incidental to other conitract items.

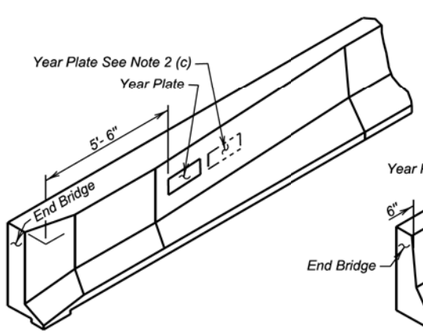


**JERSEY BARRIER**
(With Endblock)

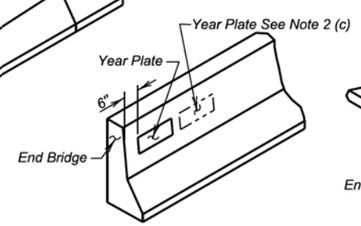


**JERSEY BARRIER**

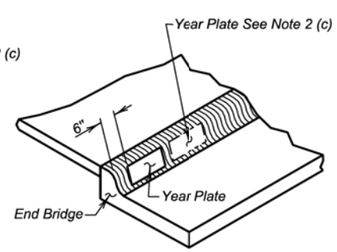


**TYPE B CURB**

June 26, 2012

| Published Date: 4th Qtr. 2016 | SDDOT | YEAR PLATE DETAILS | PLATE NUMBER 460.02 |
|---|---|---|---|
| | | | Sheet 1 Of 1 |

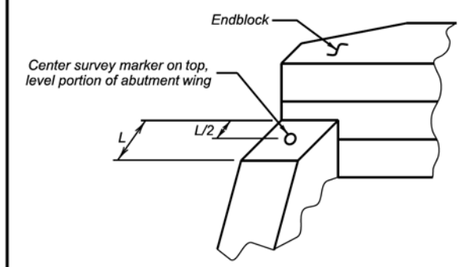


**ABUTMENT WITH "STRAIGHT" WINGS**

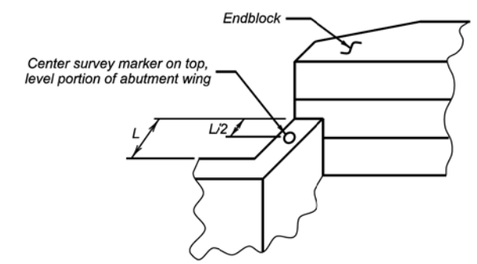


**ABUTMENT WITH "SWEPT BACK" WINGS**

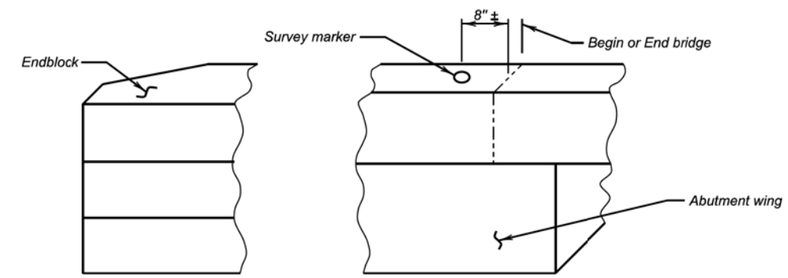


**ABUTMENT WITH "SWEPT BACK" WINGS**
( Endblock on top of wings)

### GENERAL NOTES:

1. Survey markers shall be located at each abutment on the same side of the bridge as the year plate. Place survey markers on abutment wings as shown. Two survey markers will be required at each bridge.

2. Survey markers shall be of a type intended for installation in concrete, be made of solid brass or bronze, have a domed top and be either a 3" top diameter (with a ¾" X 2" long ribbed shank), or a US Army Corps of Engineers Type C Disc with a 3 ½" top diameter.

3. There will be no separate measurement or payment made for survey markers. All costs for this work shall be incidental to the other contract items.

June 26, 2012

| Published Date: 4th Qtr. 2016 | SDDOT | BRIDGE SURVEY MARKER | PLATE NUMBER 460.05 |
|---|---|---|---|
| | | | Sheet 1 of 1 |

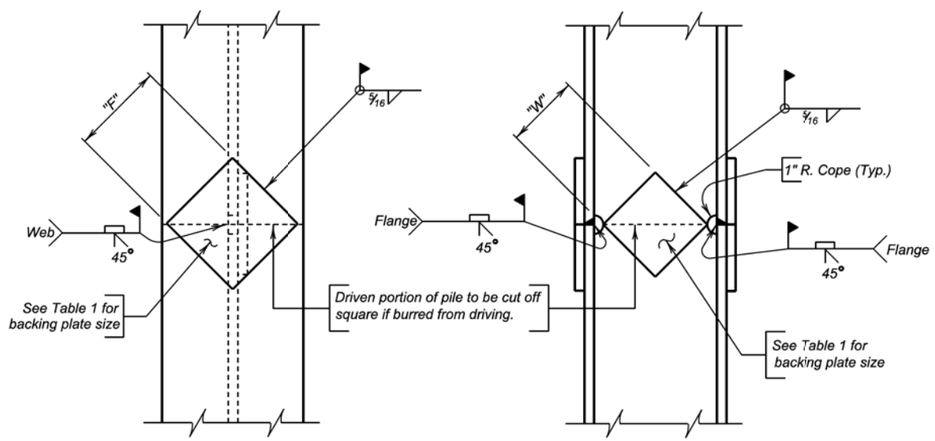


NOTE:

Prepare joint surfaces lower end of upper section on the ground and weld on backing plates; then place upper section on lower section and weld.

## COMPLETE JOINT PENETRATION WELD DETAIL

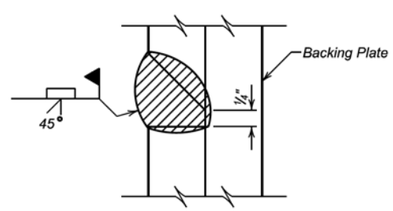


## GENERAL NOTES:

1. Steel for backing plates shall conform to ASTM A709 Grade 50.
2. Welding and weld inspection shall be in conformance with AWS D1.5 (Current Year) Bridge Welding Code - Steel.
3. Welder must be certified and registered with the SDDOT.
4. Backing plate shall at a minimum be as thick as the web of the pile being spliced.
5. Web must be coped with 1 inch radius.
6. Submit Welding Procedure Specification (WPS) to Bridge Construction Engineer for approval prior to pile driving.

**TABLE 1**
( BACKING PLATES )

| PILE | 10" | 12" | 14" |
|---|---|---|---|
| "F" FLANGE | 6 ½" | 8" | 10" |
| "W" WEB | 4 ¾" | 6 ¼" | 7 ½" |

December 23, 2012

Published Date: 4th Qtr. 2016 | SDDOT | STEEL PILE SPLICE DETAILS | PLATE NUMBER 510.40 | Sheet 1 of 1

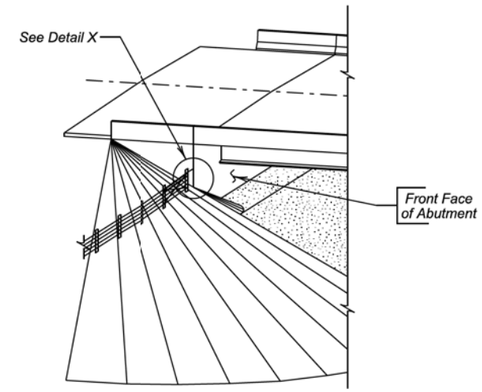


## DETAILS FOR FENCE ANCHORS

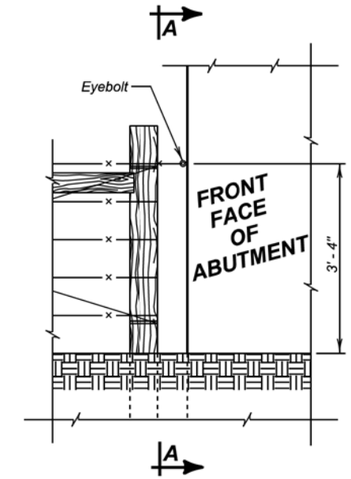


## DETAIL "X"

## GENERAL NOTES:

1. The fence and post details shown are for illustrative purpose only. The fence shall be as specified elsewhere in the plans.
2. Eyebolts shall be placed on all of the bridge abutment wings.
3. Eyebolts shall be ⅝ inch diameter and shall conform to ASTM A307.
4. Eyebolts shall be galvanized in accordance with AASHTO M232 (ASTM A153).
5. Eyebolts shall be installed after abutment wings are backfilled and berm construction is complete. Drill-in and epoxy eyebolts into abutment such that the eye of the bolt is flush with the concrete surface.
6. The epoxy resin mixture shall be of a type for bonding steel to hardened concrete and shall conform to AASHTO M235 Type IV, Grade 3 (Equivalent to ASTM C881, Type IV, Grade 3).
7. The diameter of the drilled holes shall not be less than ⅛ inch greater, nor more than ⅜ inch greater than the diameter of the eyebolts or as per Manufacturer's recommendations. The drilled holes shall be blown out with compressed air using a device that will reach the back of the hole to be sure that all debris or loose material has been removed prior to epoxy injection.
8. Mix epoxy resin as recommended by the Manufacturer and apply by an injection method as approved by the Engineer. Beginning at the back of the drilled holes, fill the holes ⅓ to ½ full of epoxy, or as recommended by the Manufacturer, prior to insertion of the eyebolts. Care shall be taken to prevent epoxy from flowing out of the horizontal holes prior to eyebolt insertion. Rotate the eyebolt during installation to eliminate voids and ensure complete bonding of the bolt. Insertion of the eyebolts by the dipping or painting method will not be allowed.
9. Loads shall not be applied to the epoxy grouted eyebolts until the epoxy resin has had sufficient time to cure as specified by the epoxy resin manufacturer.
10. The cost for furnishing and installing the eyebolts shall be incidental to various contract items.

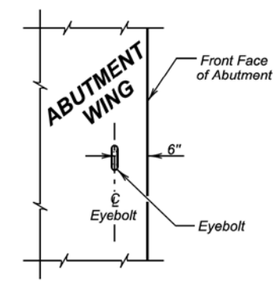


## VIEW A - A

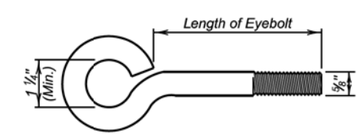


## EYEBOLT DETAILS

December 23, 2012

Published Date: 4th Qtr. 2016 | SDDOT | FENCE ANCHORS FOR BRIDGE ABUTMENTS (SWEPT BACK WINGS) | PLATE NUMBER 620.19 | Sheet 1 of 1

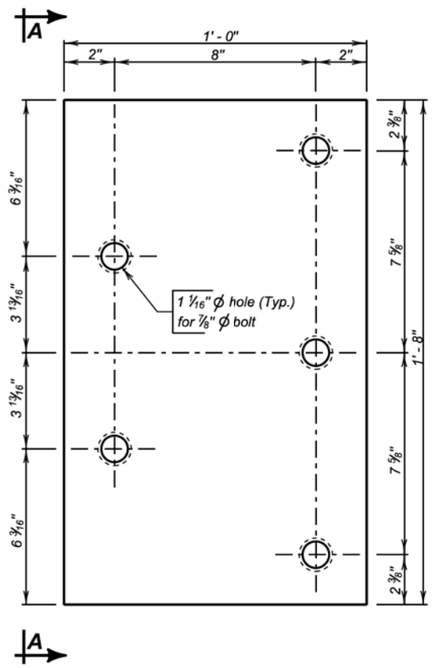


ELEVATION

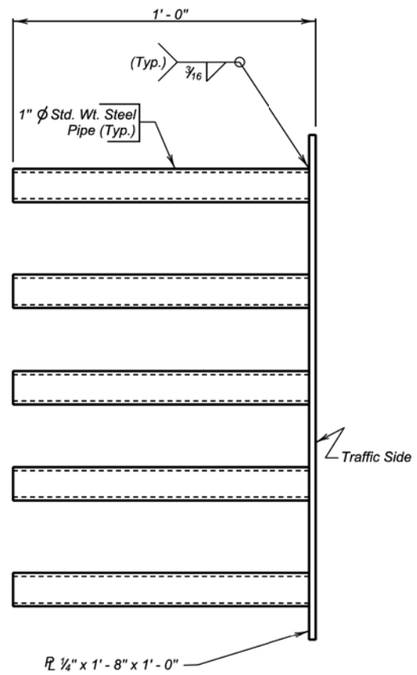


VIEW A - A

## GENERAL NOTES:

1. Steel plate for the insert assembly shall conform to ASTM A709 Grade 36. The steel pipes shall conform to ASTM A53 or ASTM A500 Grade B.
2. Welding and weld inspection shall be in conformance with AWS D1.1 - (Current Year) Structural Welding Code - Steel.
3. After fabrication, galvanize in accordance with AASHTO M111 (ASTM A123).
4. Bolts, nuts, and washers shall be provided with each assembly. Bolts shall be galvanized and conform to the requirements of ASTM A307, A325, or A449. Plain washers shall be galvanized and conform to ASTM F844.
5. Bolt heads shall be placed on the traffic side of the endblock. Bolt projection at the back side of the insert shall not exceed 1 inch beyond the nut.
6. The cost of the 5 bolt insert plate assembly complete in place including welding and galvanizing shall be incidental to the contract unit price per Cubic Yard for " Class A45 Concrete, Miscellaneous ", " Class A45 Concrete, Bridge Deck ", or " Class A45 Concrete, Bridge Repair ", as applicable.

December 23, 2013

| | | | |
|---|---|---|---|
| Published Date: 4th Qtr. 2016 | SDDOT | 5 BOLT INSERT PLATE ASSEMBLY | PLATE NUMBER 630.92<br>Sheet 1 of 1 |

319' - 10 5/8" PRESTR. GIRDER BRIDGE

STR. NO. 58-086-251

MARCH 2015