STATE OF SOUTH DAKOTA	PROJECT	SHEET	TOTAL SHEETS
	P0018(181)12 & P0385(49)36	C1	C12

Plotting Date: 01/11/2016

SECTION C: TRAFFIC CONTROL PLANS

INDEX OF SHEETS

C1: General Layout W/Index
C2: Plan Notes
C3-C4: Fixed Location Signing
C5-C7: Overwidth Signing
C8-C9: Half Road Closure Details
C10-C12: Standard Plates

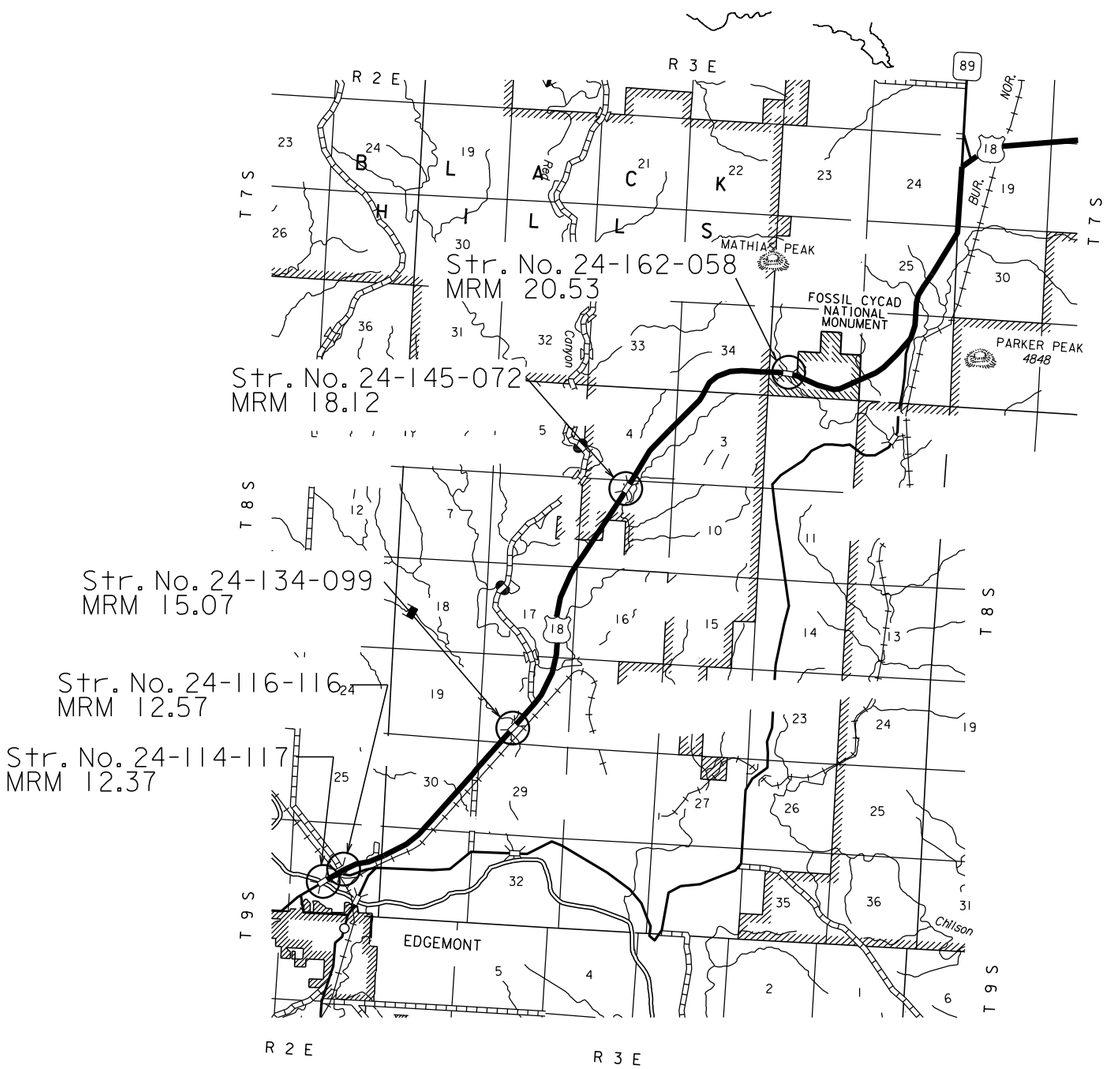

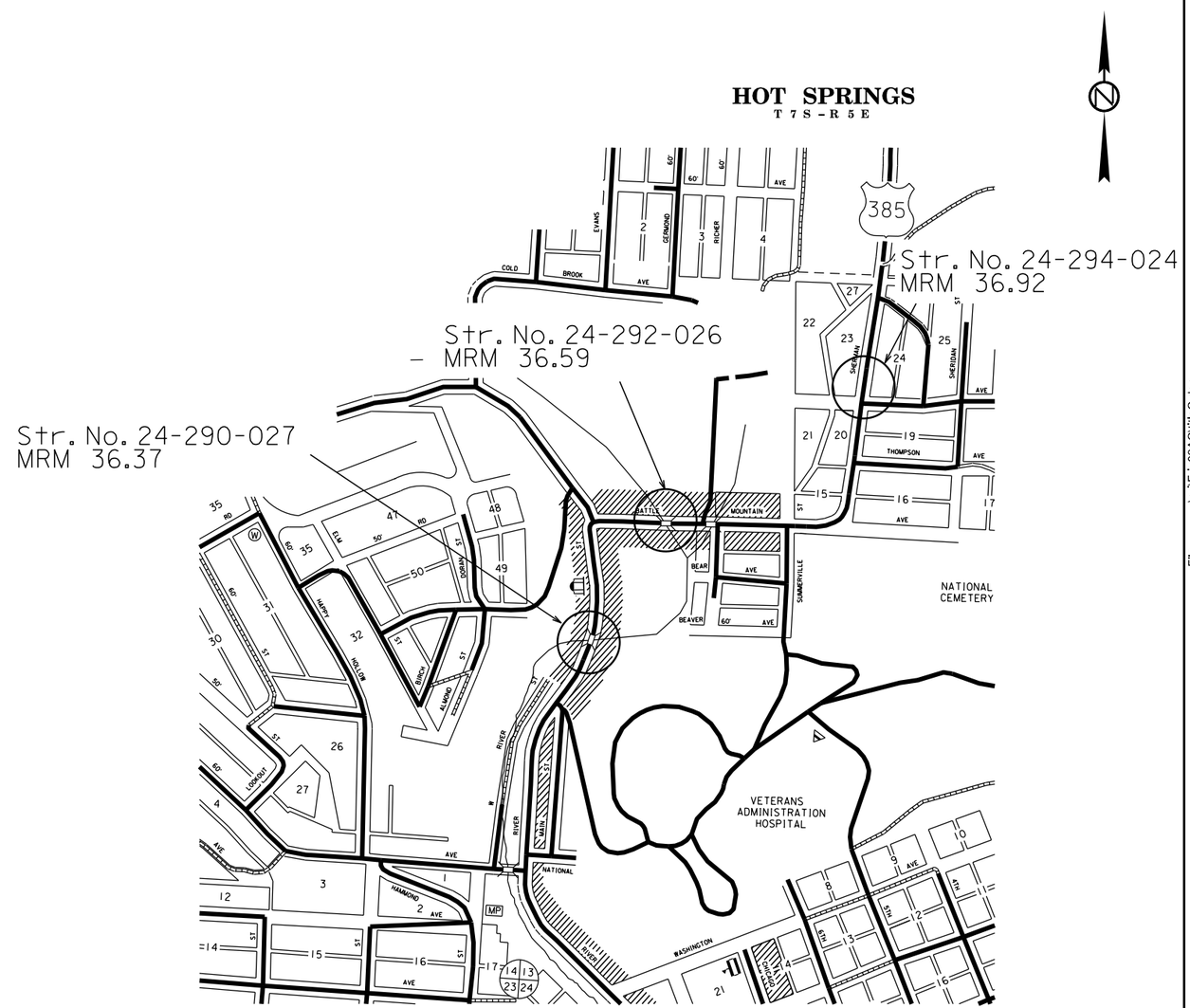

Plot Scale - 1:200

Plotted From - trrc11951

File - ...\prj\Friv03ACtitleC.dgn

SECTION C ESTIMATE OF QUANTITIES (PCN 03AC)

BID ITEM NUMBER	ITEM	QUANTITY	UNIT
009E0010	Mobilization	Lump Sum	LS
633E1400	Pavement Marking Paint, 4" White	4,652	Ft
633E1405	Pavement Marking Paint, 4" Yellow	3,697	Ft
634E0010	Flagging	100.0	Hour
634E0110	Traffic Control Signs	703	SqFt
634E0120	Traffic Control, Miscellaneous	Lump Sum	LS
634E0285	Type 3 Barricade, 8' Double Sided	6	Each
634E0640	Temporary Pavement Marking	6,560	Ft
634E0900	Portable Temporary Traffic Control Signal	4	Unit

SECTION C ESTIMATE OF QUANTITIES (PCN 03AD)

BID ITEM NUMBER	ITEM	QUANTITY	UNIT
009E0010	Mobilization	Lump Sum	LS
633E1400	Pavement Marking Paint, 4" White	572	Ft
633E1405	Pavement Marking Paint, 4" Yellow	572	Ft
634E0010	Flagging	50.0	Hour
634E0110	Traffic Control Signs	718	SqFt
634E0120	Traffic Control, Miscellaneous	Lump Sum	LS
634E0285	Type 3 Barricade, 8' Double Sided	6	Each
634E0640	Temporary Pavement Marking	1,312	Ft

GENERAL MAINTENANCE OF TRAFFIC

Unless otherwise stated in these plans, no work will be allowed during hours of darkness.

All materials and equipment shall be stored a minimum distance 30' from the traveled way during nonworking hours.

Non-applicable signing shall be covered or removed during periods of inactivity. All costs to do this work shall be incidental to the contract lump sum price for Traffic Control, Miscellaneous.

Construction signing mounted on portable supports shall not be used for a duration of more than 3 days, unless approved by the Engineer. Construction signing that remains in the same location for more than 3 days shall be mounted on fixed location, ground mounted, breakaway supports.

Type B flashing warning lights shall be placed on the ONE LANE ROAD AHEAD signs. Cost for furnishing and maintaining the Type B flashing warning lights shall be incidental to the contract lump sum price for "Traffic Control, Miscellaneous".

SEQUENCE OF OPERATIONS

PCN 03AC

Traffic Control is being provided to have 2 traffic signal setups simultaneously according to Standard Plate 634.26. Str. 24-114-117, Str. 24-116-116, Str. 24-145-072, and Str. 24-162-058 will all require traffic signal setups. The work shall be phased so that Str. 24-114-117 and Str. 24-116-116 do not have traffic signals in operation simultaneously. Str. 24-134-099 shall be set up according to Standard Plate 634.25.

PCN 03AD

Traffic Control is being provided to work on all bridge decks simultaneously. Str. 24-290-027 shall be set up according to Standard Plate 634.26. The remaining bridges shall be set up according to the Traffic Control Guidelines provided in the plans.

REFLECTORIZED SHEETING REQUIREMENTS FOR TEMPORARY TRAFFIC CONTROL DEVICES

Delete the first paragraph of Section 984.1 and replace with the following:

Temporary traffic control devices, including signs, drums, cones, tubular markers, barricades, vertical panels, and direction indicator barricades shall be reflectorized with sheeting applied to a satisfactory backing. Flat surfaced temporary traffic control devices including, but not limited to; signs, barricades, vertical panels, and direction indicator barricades shall be reflectorized with super/very high intensity reflectorized sheeting meeting the standards of Type XI as defined by AASHTO M 268 (ASTM D4956). Round surfaced temporary traffic control devices including, but not limited to; drums, cones, and tubular markers shall be reflectorized with high intensity reflectorized sheeting meeting the standards of Type IV as defined by AASHTO M 268 (ASTM D4956). All orange colored material shall be fluorescent.

TEMPORARY PAVEMENT MARKINGS

Project sites shall be delineated with barrels and pavement marking according to Standard Plate 634.25. Raised pavement markers shall be used as pavement marking. Pavement marking tape, Type 1 shall be used for all stop bars. All costs for furnishing, installing, and removal of the pavement markings shall be incidental to the contract unit price for Temporary Pavement Marking.

PCN 03AC

ITEMIZED LIST FOR TRAFFIC CONTROL SIGNS

SIGN CODE	SIGN DESCRIPTION	CONVENTIONAL ROAD NUMBER	SIGN SIZE	SQFT PER SIGN	SQFT
R1-1	STOP	2	30" x 30"	6	12
R10-6	STOP HERE ON RED	4	24" x 36"	6	24
W1-4	REVERSE CURVE (L or R)	3	48" x 48"	16	48
W3-3	SIGNAL AHEAD (symbol)	4	48" x 48"	16	64
W20-1	ROAD WORK AHEAD	6	48" x 48"	16	96
W20-4	ONE LANE ROAD AHEAD	6	48" x 48"	16	96
W20-7	FLAGGER (symbol)	2	48" x 48"	16	32
W21-5	SHOULDER WORK	2	48" x 48"	16	32
G20-1	ROAD WORK NEXT __ MILES	5	36" x 18"	5	25
G20-2	END ROAD WORK	10	36" x 18"	5	50
SPECIAL	WIDTH RESTRICTION __ FT WIDE __ MILES AHEAD	4	96" x 84"	56	224
		CONVENTIONAL ROAD TRAFFIC CONTROL SIGNS SQFT			703

ITEM DESCRIPTION	QUANTITY
Type 3 Barricade, 8' Double Sided	6 Each

PCN 03AD

ITEMIZED LIST FOR TRAFFIC CONTROL SIGNS

SIGN CODE	SIGN DESCRIPTION	CONVENTIONAL ROAD NUMBER	SIGN SIZE	SQFT PER SIGN	SQFT
R10-6	STOP HERE ON RED	2	24" x 36"	6	12
W1-4	REVERSE CURVE (L or R)	2	48" x 48"	16	32
W3-3	SIGNAL AHEAD (symbol)	2	48" x 48"	16	32
W20-1	ROAD WORK AHEAD	10	48" x 48"	16	160
W20-4	ONE LANE ROAD AHEAD	2	48" x 48"	16	32
W20-7	FLAGGER (symbol)	2	48" x 48"	16	32
W21-5	SHOULDER WORK	2	48" x 48"	16	32
G20-2	END ROAD WORK	10	36" x 18"	5	50
SPECIAL	WIDTH RESTRICTION __ FT WIDE __ MILES AHEAD	6	96" x 84"	56	336
		CONVENTIONAL ROAD TRAFFIC CONTROL SIGNS SQFT			718

ITEM DESCRIPTION	QUANTITY
Type 3 Barricade, 8' Double Sided	6 Each

PRESS RELEASE ANNOUNCEMENTS

The DOT will prepare a Press Release to be released 48 hours prior to any phase change or any other major change that affects traffic flow. The DOT will be responsible to keep law enforcement, emergency services, and the traveling public notified of changes in project access. The Contractor shall provide the Engineer with pertinent information 4 days prior to any major change that affects traffic flow.

PAVEMENT MARKING PAINT

Pavement marking paint shall be installed prior to removing the traffic control on the project.

	Length	Pavement Marking Paint, 4" White	Pavement Marking Paint, 4" Yellow
Str. #	(Ft)	(Ft)	(Ft)
24-114-117	716.0	1432	1432
24-116-116	260.0	520	520
24-134-099	182.0	364	46
24-145-072	364.0	728	91
24-162-058	804.0	1608	1608
Str. #	**Total**	**4652**	**3697**
24-290-027	144.0	288	288
24-292-026	111.0	222	222
24-294-024	31.0	62	62
	Total	**572**	**572**

STATE OF SOUTH DAKOTA	PROJECT	SHEET NO.	TOTAL SHEETS
	P0018(181)12 & P0385(49)36	C3	C12

Plotting Date: 01/06/2016

PCN 03AD, Hot Springs Fixed Location Signing

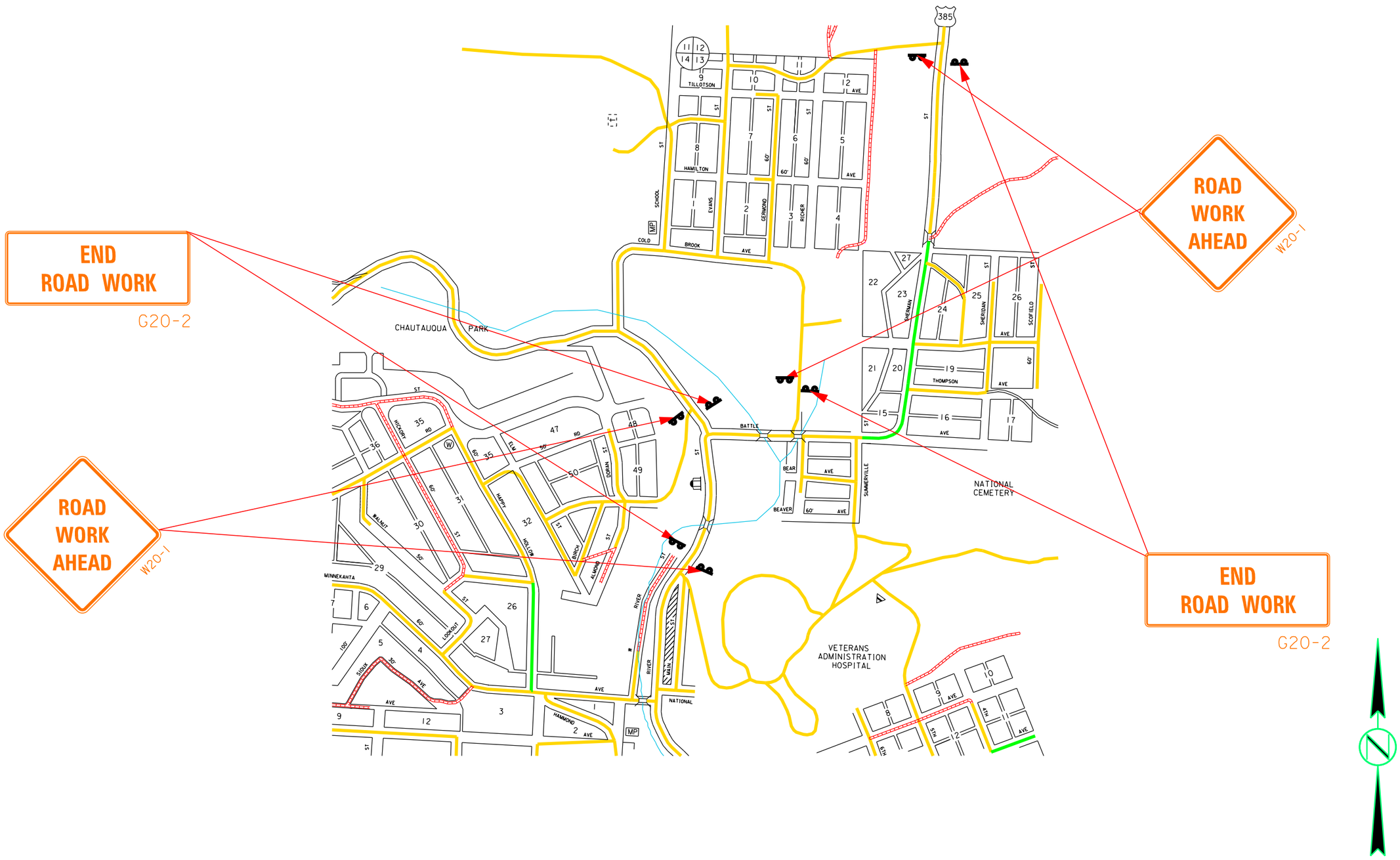

PLOT SCALE - 1:164.563

PLOTTED FROM - TRCU10206

PLOT NAME - 1

FILE - ...\01RM TRAFFIC.DGN

STATE OF SOUTH DAKOTA	PROJECT	SHEET NO.	TOTAL SHEETS
	P0018(181)12 & P0385(49)36	C4	C12

Plotting Date: 01/06/2016

PCN 03AC, Edgemont Fixed Location Signing

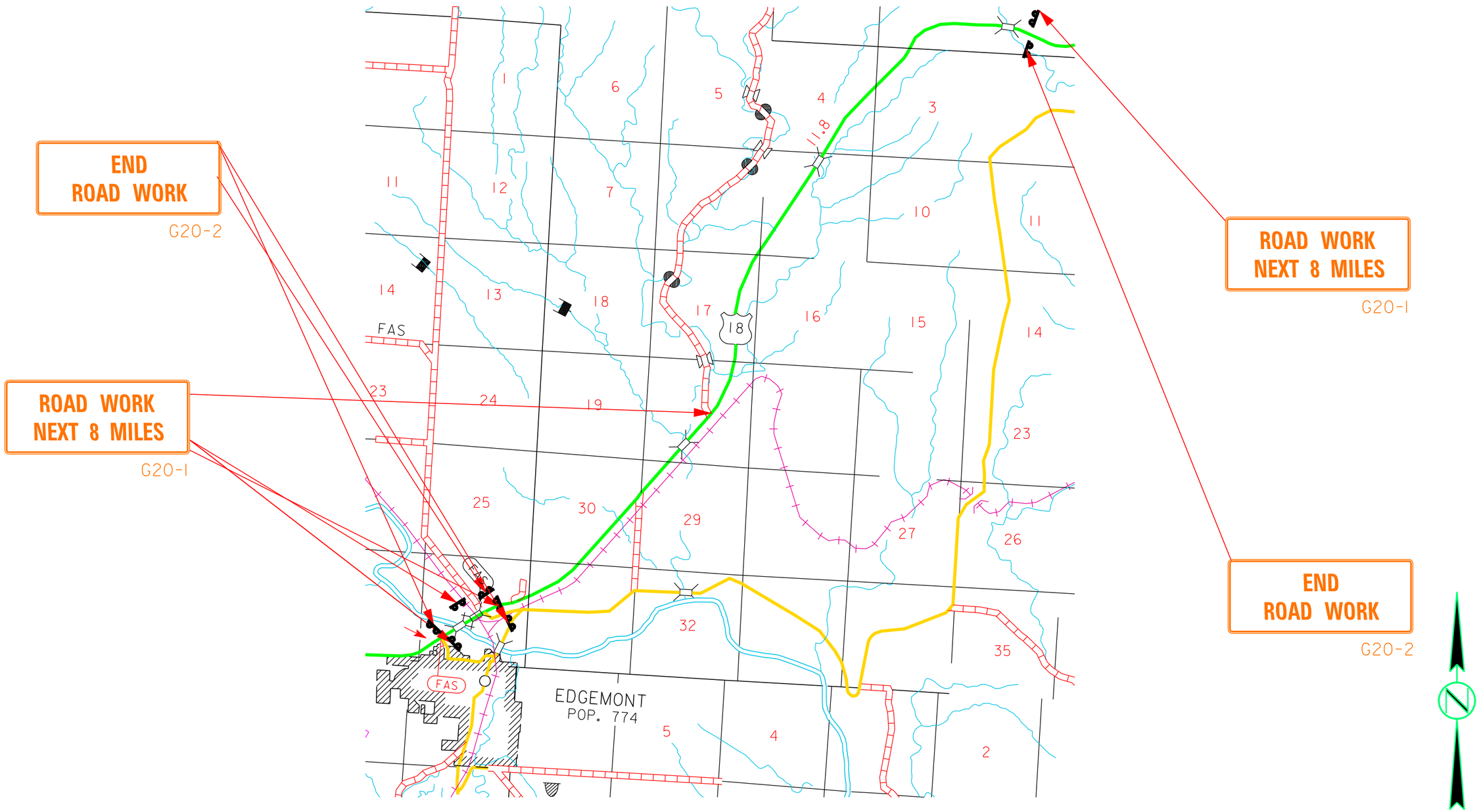

PLOT SCALE - 1:164.563
PLOTTED FROM - TRCU10206
PLOT NAME - 2
FILE - ...\01RM TRAFFIC.DGN

STATE OF SOUTH DAKOTA	PROJECT	SHEET NO.	TOTAL SHEETS
	P0018(181)12 & P0385(49)36	C5	C12

Plotting Date: 01/19/2016

OVERWIDTH SIGNING

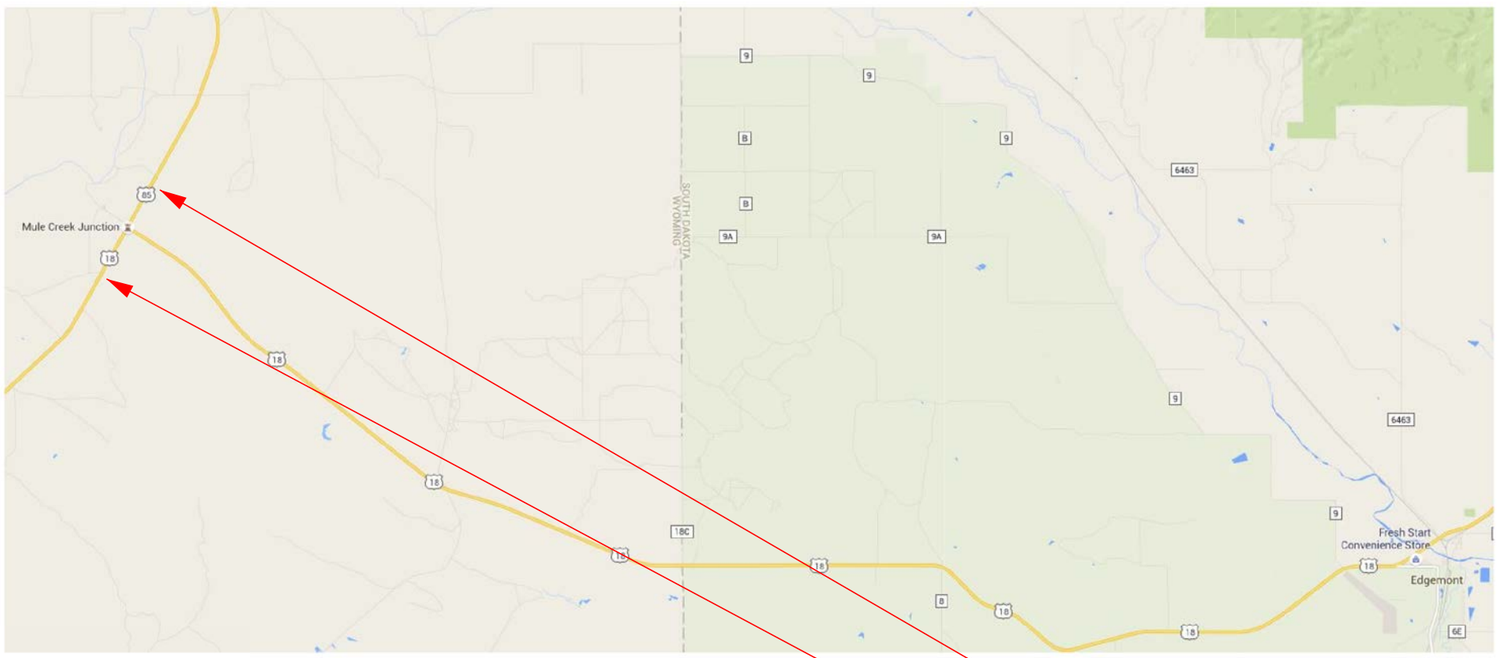

WIDTH RESTRICTION

18 EAST

OVER 16 FT WIDE
22 MILES AHEAD
USE ALT. ROUTE

PLOT SCALE - 1:164.563
PLOTTED FROM - TRCU10206
PLOT NAME - 3
FILE - ...\01RM TRAFFIC.DGN

STATE OF SOUTH DAKOTA	PROJECT	SHEET NO.	TOTAL SHEETS
	P0018(181)12 & P0385(49)36	C6	C12

Plotting Date: 01/19/2016

OVERWIDTH SIGNING

WIDTH RESTRICTION

385 18 EAST

OVER 12 FT WIDE
19 MILES AHEAD
USE ALT. ROUTE

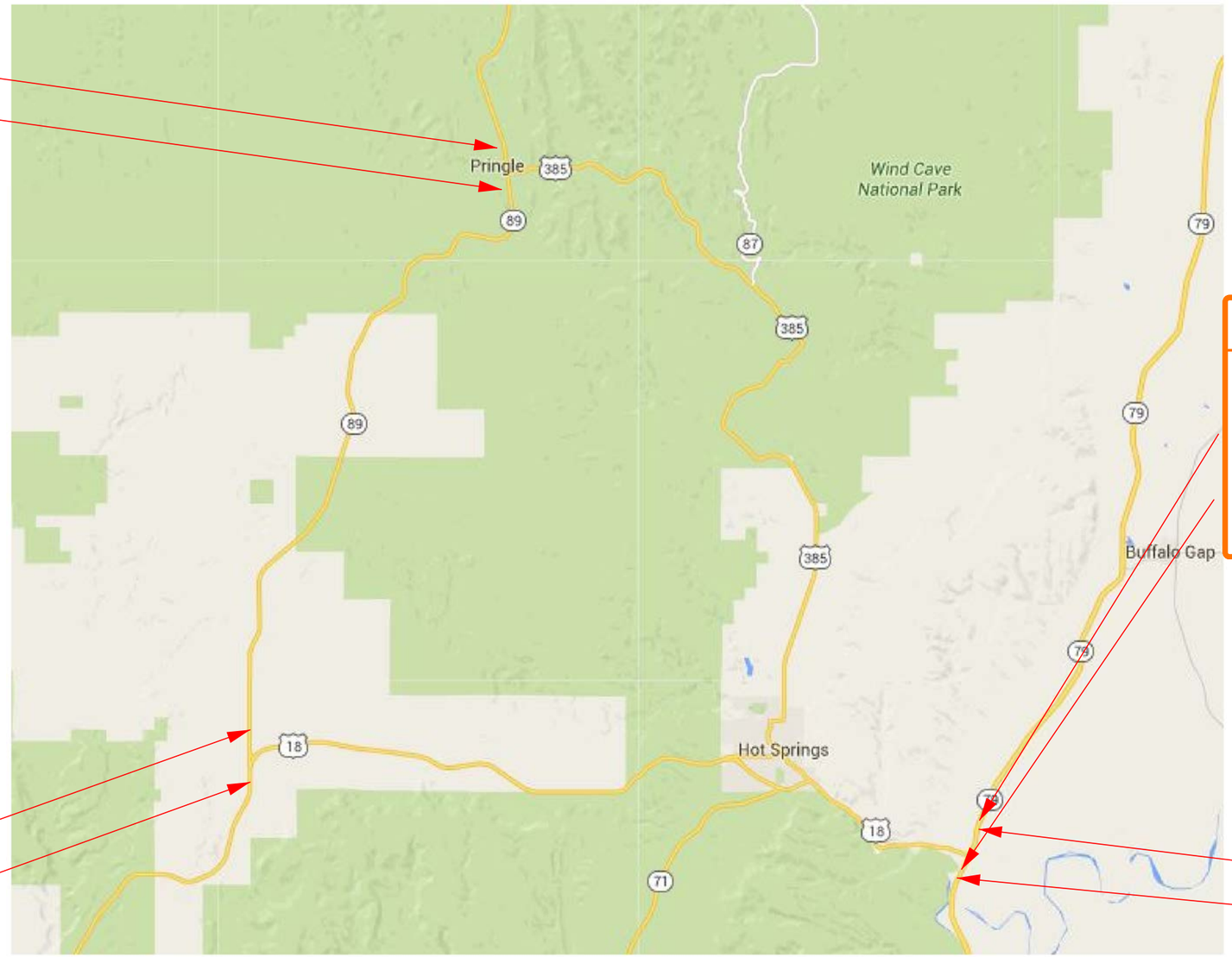

WIDTH RESTRICTION

385

OVER 12 FT WIDE
5 MILES AHEAD
USE ALT. ROUTE

WIDTH RESTRICTION

18 WEST

OVER 16 FT WIDE
30 MILES AHEAD
USE ALT. ROUTE

WIDTH RESTRICTION

385 18 EAST

OVER 12 FT WIDE
12 MILES AHEAD
USE ALT. ROUTE

PLOT SCALE - 1:164.563
PLOTTED FROM - TRCU10206
PLOT NAME - 4
FILE - ...\01RM TRAFFIC.DGN

TYPICAL OVERWIDTH SIGNING

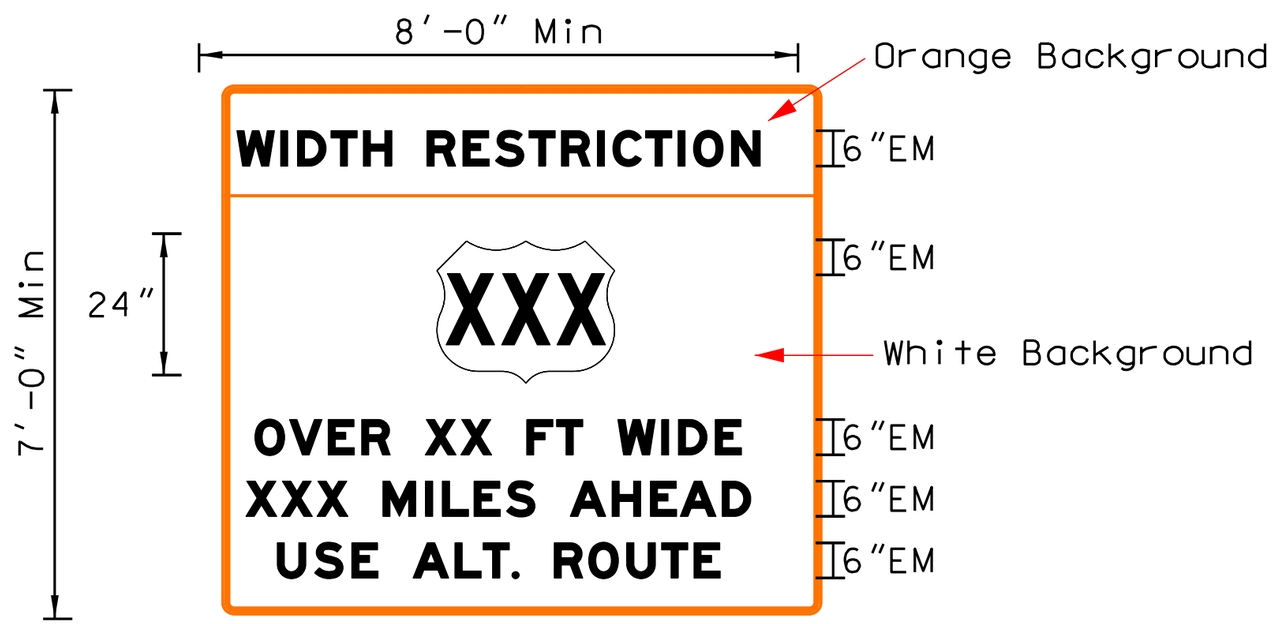

PLOT SCALE - 1:164.563
PLOTTED FROM - TRCU10206
PLOT NAME - 5
FILE - ...\01RM TRAFFIC.DGN

STATE OF SOUTH DAKOTA	PROJECT	SHEET NO.	TOTAL SHEETS
	P0018(181)12 & P0385(49)36	C8	C12

Plotting Date: 01/06/2016

GUIDES FOR TRAFFIC CONTROL DEVICES HALF ROAD CLOSURE PHASE 1 AT STR. 24-294-024 & STR. 24-292-026

Posted Speed Prior to Work (M.P.H.)	Spacing of Advance Warning Signs (Feet) (A)	Taper Length (Feet) (L)
0 - 30	200	180
35 - 40	350	320
45 - 50	500	600
55	750	660
60 - 65	1000	780

Posted Speed Prior to Work (M.P.H.)	Spacing of Channelizing Devices (Feet) (G)
0 - 30	25
35 - 40	25
45 - 50	50
55	50
60 - 65	50

◎ Reflectorized Drum

○ Channelizing Device

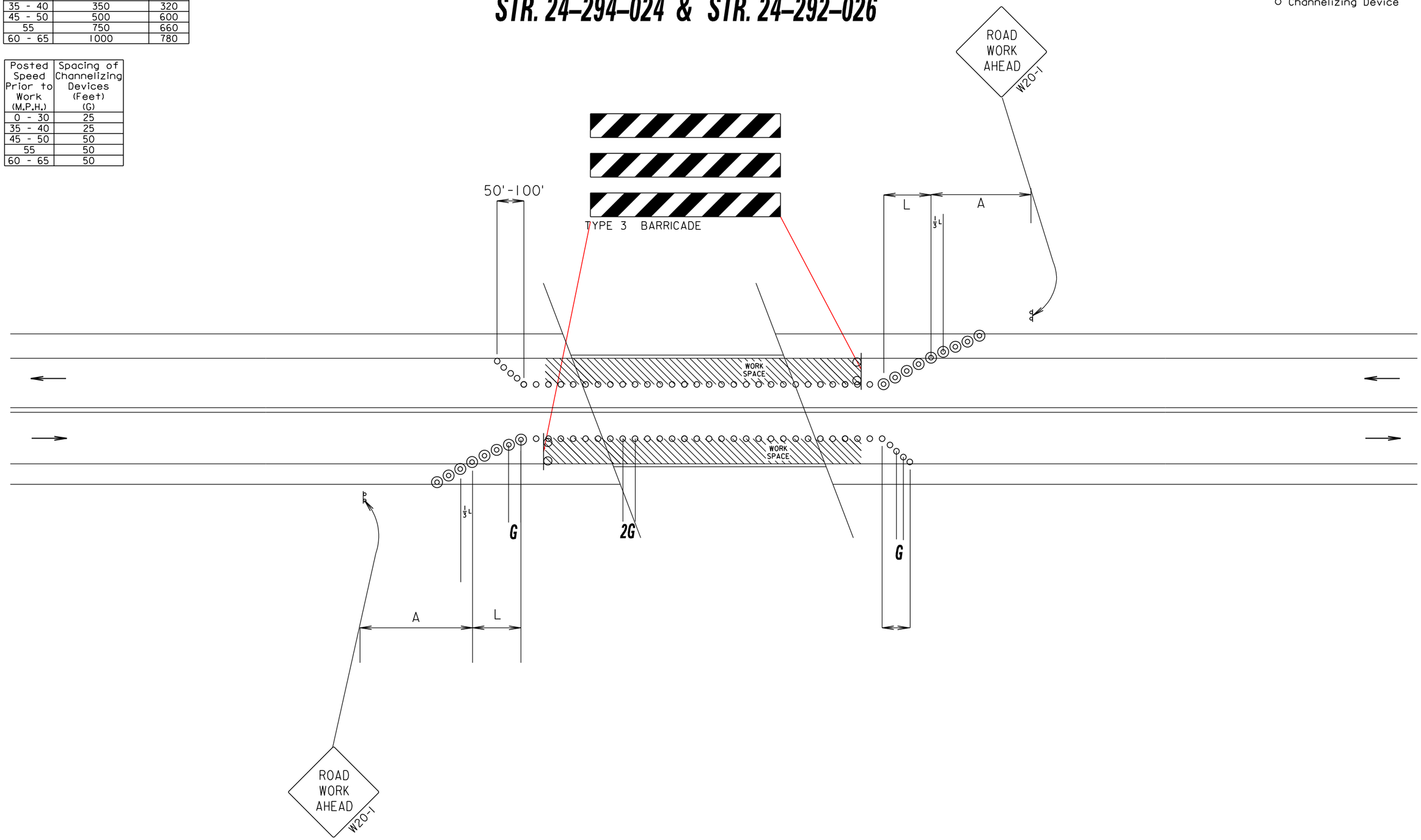

PLOT SCALE - 1:164.563
PLOTTED FROM - TRCU10206
PLOT NAME - 8
FILE - ...\01RM TRAFFIC.DGN

STATE OF SOUTH DAKOTA	PROJECT	SHEET NO.	TOTAL SHEETS
	P0018(181)12 & P0385(49)36	C9	C12

Plotting Date: 01/06/2016

GUIDES FOR TRAFFIC CONTROL DEVICES HALF ROAD CLOSURE PHASE 2 AT STR. 24-294-024 & STR. 24-292-026

◎ Reflectorized Drum

○ Channelizing Device

Posted Speed Prior to Work (M.P.H.)	Spacing of Advance Warning Signs (Feet) (A)	Taper Length (Feet) (L)
0 - 30	200	180
35 - 40	350	320
45 - 50	500	600
55	750	660
60 - 65	1000	780

Posted Speed Prior to Work (M.P.H.)	Spacing of Channelizing Devices (Feet) (G)
0 - 30	25
35 - 40	25
45 - 50	50
55	50
60 - 65	50

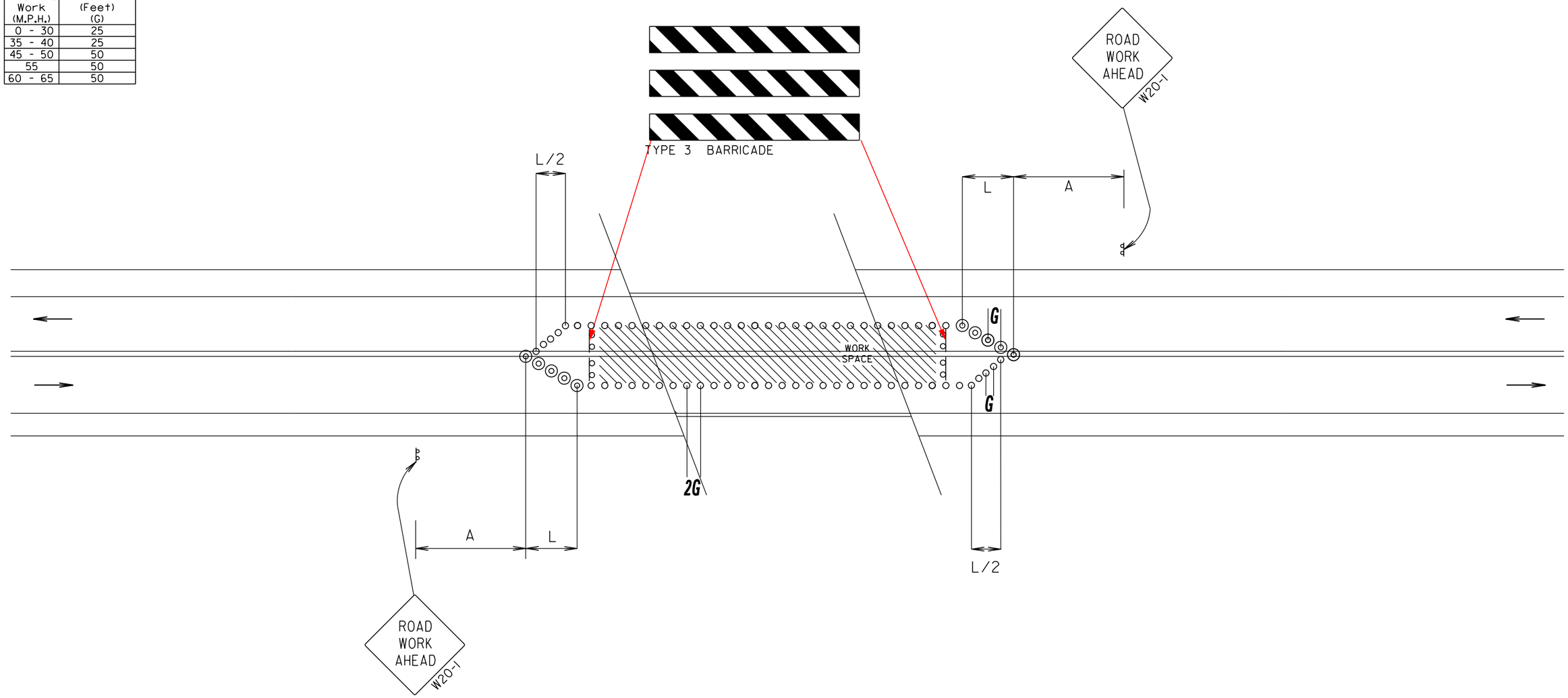

PLOT SCALE - 1:164.563

PLOTTED FROM - TRCU10206

PLOT NAME - 9

FILE - ...\01RM TRAFFIC.DGN

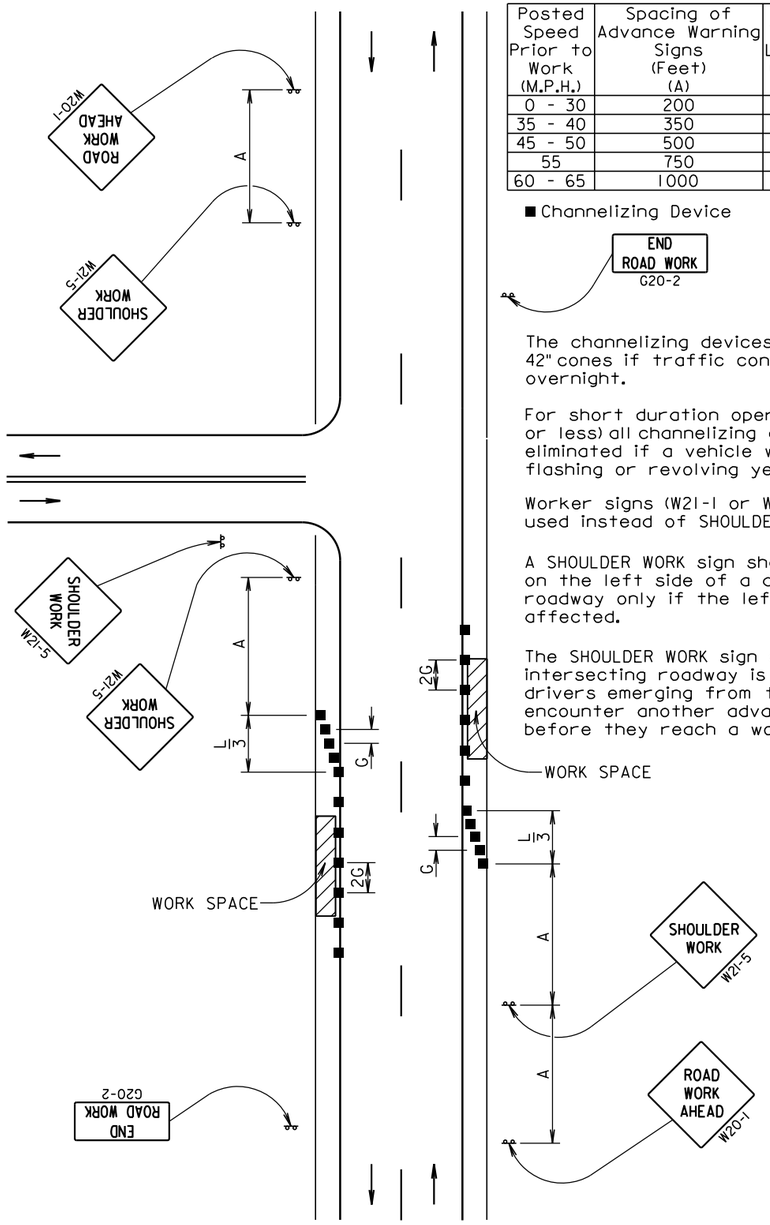

Posted Speed Prior to Work (M.P.H.)	Spacing of Advance Warning Signs (Feet) (A)	Taper Length (Feet) (L)	Spacing of Channelizing Devices (Feet) (G)
0 - 30	200	180	25
35 - 40	350	320	25
45 - 50	500	600	50
55	750	660	50
60 - 65	1000	780	50

■ Channelizing Device

END ROAD WORK G20-2

The channelizing devices shall be drums or 42" cones if traffic control must remain overnight.

For short duration operations (1 hour or less) all channelizing devices may be eliminated if a vehicle with an activated flashing or revolving yellow light is used.

Worker signs (W21-1 or W21-1a) may be used instead of SHOULDER WORK signs.

A SHOULDER WORK sign should be placed on the left side of a divided or one-way roadway only if the left shoulder is affected.

The SHOULDER WORK sign on an intersecting roadway is not required if drivers emerging from that roadway will encounter another advance warning sign before they reach a work activity area.

September 22, 2014

Published Date: 4th Qtr. 2015

SDDOT

GUIDES FOR TRAFFIC CONTROL DEVICES WORK ON SHOULDERS

PLATE NUMBER 634.03

Sheet 1 of 1

Posted Speed Prior to Work (M.P.H.)	Spacing of Advance Warning Signs (Feet) (A)	Spacing of Channelizing Devices (Feet) (G)
0 - 30	200	25
35 - 40	350	25
45 - 50	500	50
55	750	50
60 - 65	1000	50

Flagger

■ Channelizing Device

For low-volume traffic situations with short work zones on straight roadways where the flagger is visible to road users approaching from both directions, a single flagger may be used.

The ROAD WORK AHEAD and the END ROAD WORK signs may be omitted for short duration operations (1 hour or less).

For tack and/or flush seal operations, when flaggers are not being used, the FRESH OIL sign (W21-2) shall be displayed in advance of the liquid asphalt areas.

Flashing warning lights and/or flags may be used to call attention to the advance warning signs.

The channelizing devices shall be drums or 42" cones.

Channelizing devices are not required along the centerline adjacent to work area when pilot cars are utilized for escorting traffic through the work area.

END ROAD WORK G20-2

Channelizing devices and flaggers shall be used at intersecting roads to control intersecting road traffic as required.

The buffer space should be extended so that the two-way traffic taper is placed before a horizontal or vertical curve to provide adequate sight distance for the flagger and queue of stopped vehicles.

The length of A may be adjusted to fit field conditions.

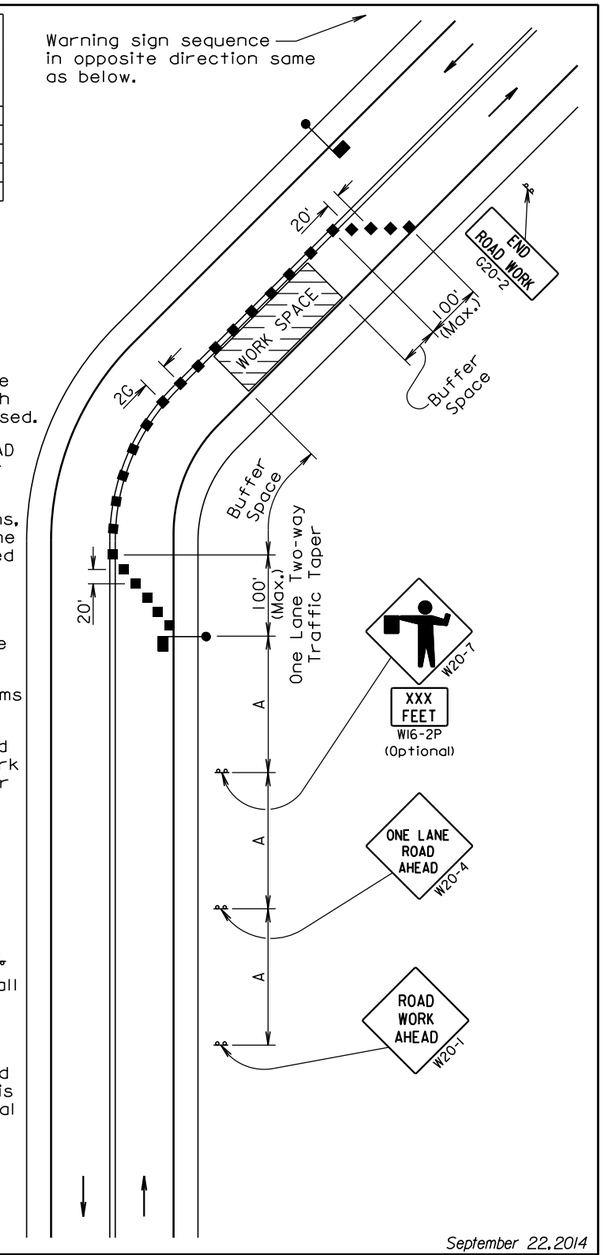

September 22, 2014

Published Date: 4th Qtr. 2015

SDDOT

GUIDES FOR TRAFFIC CONTROL DEVICES LANE CLOSURE WITH FLAGGER PROVIDED

PLATE NUMBER 634.23

Sheet 1 of 1

Posted Speed Prior to Work (M.P.H.)	Spacing of Advance Warning Signs (Feet) (A)	Taper Length (Feet) (L)	Spacing of Channelizing Devices (Feet) (G)
0 - 30	200	180	25
35 - 40	350	320	25
45 - 50	500	600	50
55	750	660	50
60 - 65	1000	780	50

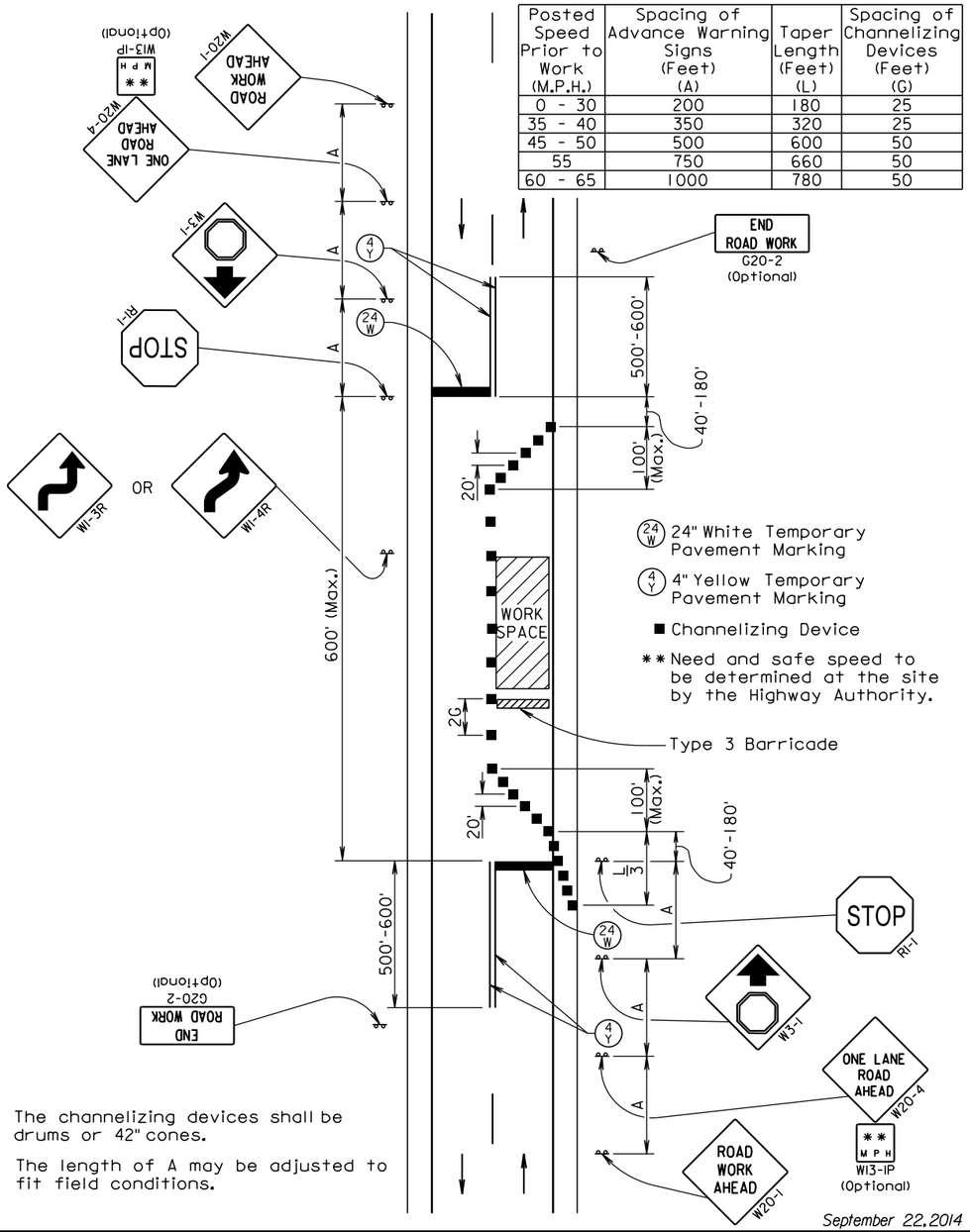

The channelizing devices shall be drums or 42" cones.

The length of A may be adjusted to fit field conditions.

September 22, 2014

Published Date: 4th Qtr. 2015

SDDOT

GUIDES FOR TRAFFIC CONTROL DEVICES LANE CLOSURE USING STOP SIGNS

PLATE NUMBER 634.25

Sheet 1 of 1

Posted Speed Prior to Work (M.P.H.)	Spacing of Advance Warning Signs (Feet) (A)	Spacing of Channelizing Devices (Feet) (G)
0 - 30	200	25
35 - 40	350	25
45 - 50	500	50
55	750	50
60 - 65	1000	50

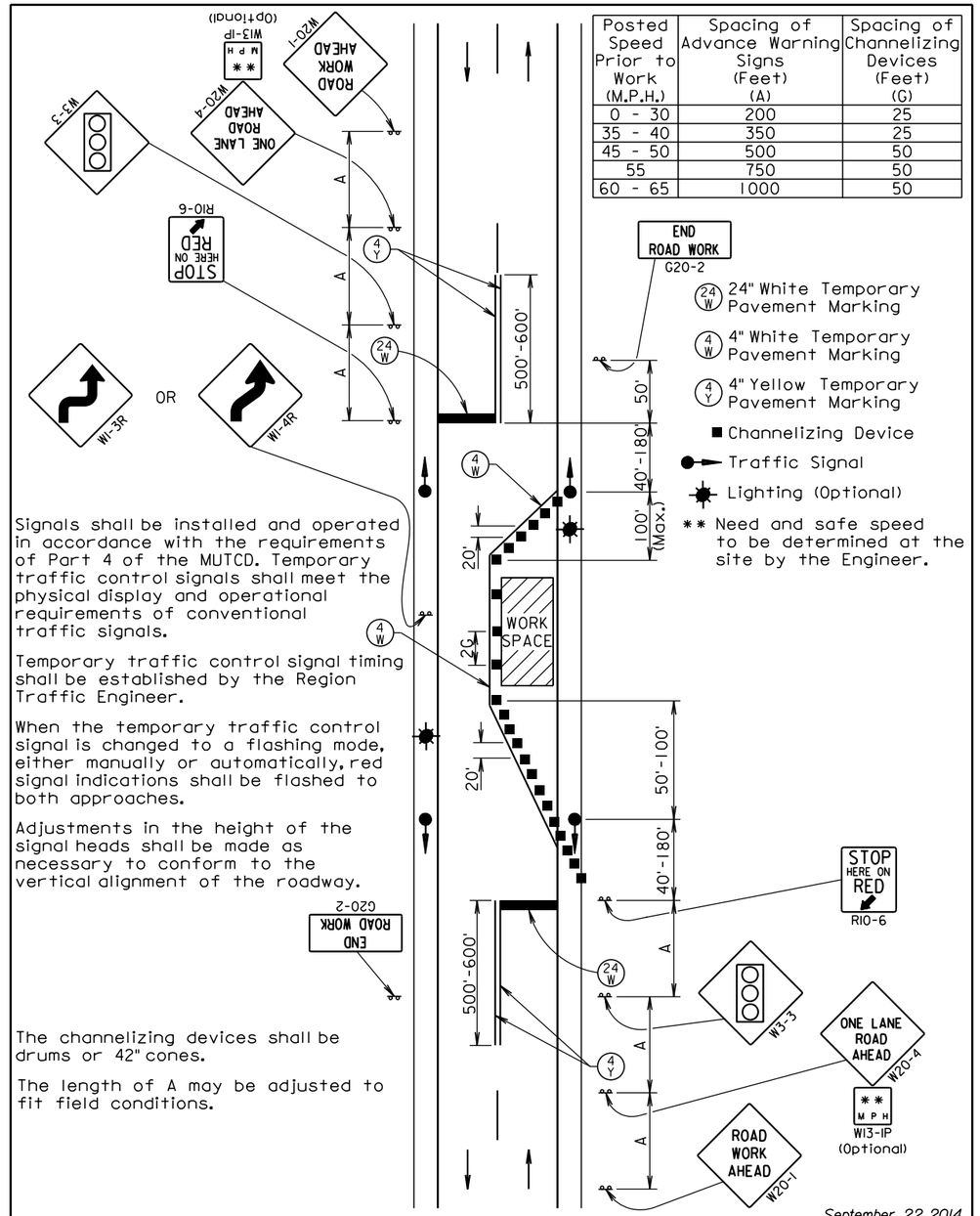

Signals shall be installed and operated in accordance with the requirements of Part 4 of the MUTCD. Temporary traffic control signals shall meet the physical display and operational requirements of conventional traffic signals.

Temporary traffic control signal timing shall be established by the Region Traffic Engineer.

When the temporary traffic control signal is changed to a flashing mode, either manually or automatically, red signal indications shall be flashed to both approaches.

Adjustments in the height of the signal heads shall be made as necessary to conform to the vertical alignment of the roadway.

The channelizing devices shall be drums or 42" cones.

The length of A may be adjusted to fit field conditions.

September 22, 2014

Published Date: 4th Qtr. 2015

SDDOT

GUIDES FOR TRAFFIC CONTROL DEVICES LANE CLOSURE USING TRAFFIC SIGNALS

PLATE NUMBER 634.26

Sheet 1 of 1

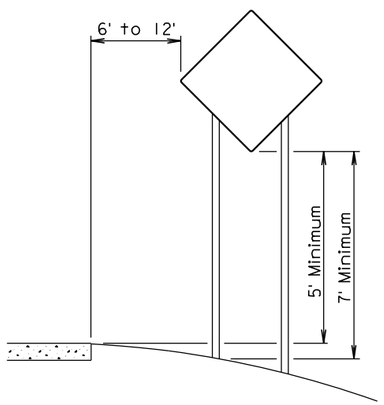

RURAL DISTRICT

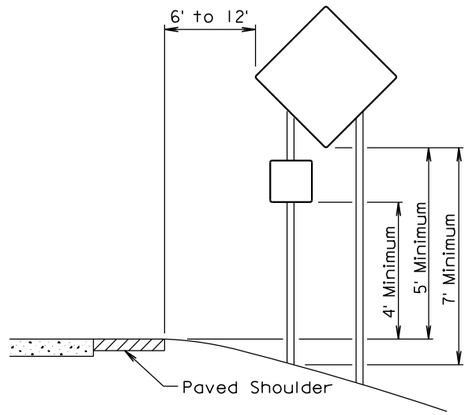

RURAL DISTRICT WITH SUPPLEMENTAL PLATE

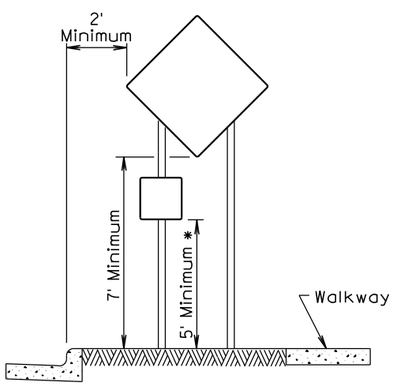

URBAN DISTRICT

* If the bottom of supplemental plate is mounted lower than 7 feet above a pedestrian walkway, the supplemental plate should not project more than 4" into the pedestrian facility.

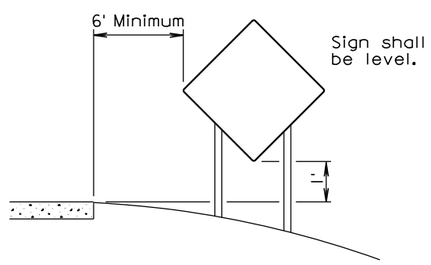

RURAL DISTRICT
3 DAY MAXIMUM
(Not applicable to regulatory signs)

September 22, 2014

Published Date: 4th Qtr. 2015	SDDOT	CRASHWORTHY SIGN SUPPORTS (Typical Construction Signing)	PLATE NUMBER 634.85 Sheet 1 of 1

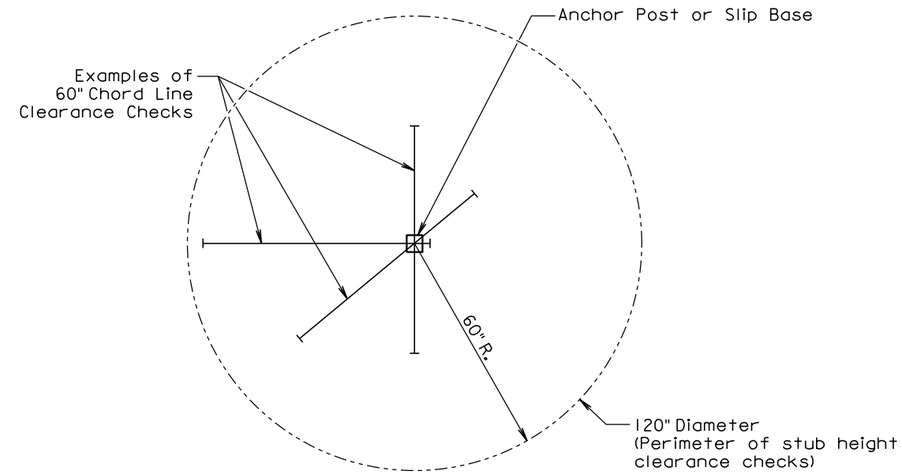

PLAN VIEW
(Examples of stub height clearance checks)

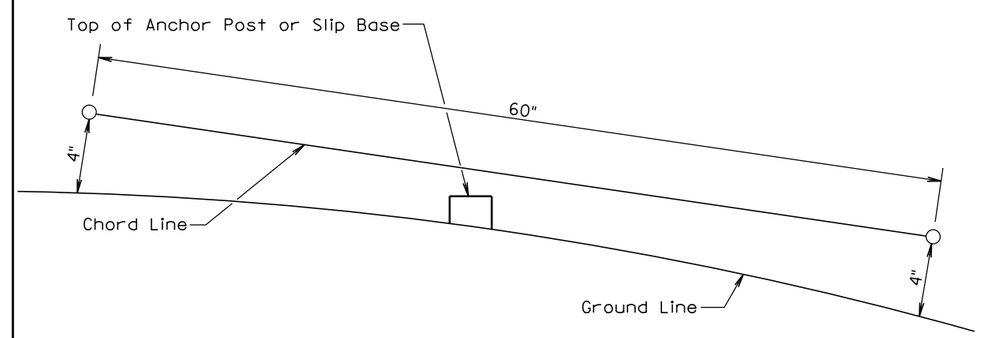

ELEVATION VIEW

GENERAL NOTES:

The top of anchor posts and slip bases SHALL NOT extend above a 60" chord line within a 120" diameter circle around the post with ends 4" above the ground.

At locations where there is curb and gutter adjacent to the breakaway sign support, the stub height shall be a maximum of 4" above the ground line at the localized area adjacent to the breakaway support stub.

The 4" stub height clearance is not necessary for U-channel lap splices where the support is designed to yield (bend) at the base.

July 1, 2005

Published Date: 4th Qtr. 2015	SDDOT	BREAKAWAY SUPPORT STUB CLEARANCE	PLATE NUMBER 634.99 Sheet 1 of 1