STATE OF SOUTH DAKOTA	PROJECT	SHEET NO.	TOTAL SHEETS
	P 3313(11)	1	22

FILE: C:\PWWORKING\OMA\D0903428\X_TITLE_SDDOT.DWG
DATE: 2/13/2014 REV. DATE: INITIALS

FOR BIDDING PURPOSES ONLY

STATE OF SOUTH DAKOTA
DEPARTMENT OF TRANSPORTATION

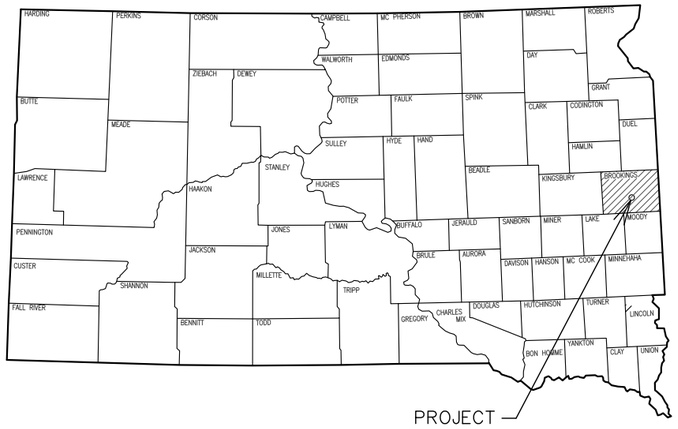

PROJECT P 3313(11)

20TH STREET SOUTH AND MAIN AVENUE SOUTH

BROOKINGS COUNTY

SIGNALS AND PERMANENT SIGNING
PCN 03CC
CITY OF BROOKINGS

INDEX OF SHEETS

SHEET 1	TITLE SHEET
SHEETS 2–7	ESTIMATE OF QUANTITIES, ENVIRONMENTAL COMMITMENTS, GENERAL NOTES AND TABLES
SHEET 8	HORIZONTAL ALIGNMENT/CONTROL DATA
SHEET 9	SIGNAL LAYOUT
SHEET 10	CONDUIT LAYOUT
SHEET 11	PERMANENT SIGNING LAYOUT
SHEET 12	PERMANENT SIGN DETAILS
SHEET 13	WIRING DIAGRAM
SHEET 14	SIGNAL TIMING
SHEETS 15–22	STANDARD PLATES

DESIGN DESIGNATION	MAIN AVENUE SOUTH	20TH STREET SOUTH
ADT (2013)	3,925	2,525
ADT (2033)	4,660	3,000
DHV	525	336
d	50%	50%
T DHV	1.7%	1.7%
T ADT	3.7%	3.7%
DESIGN SPEED	35 M.P.H.	35 M.P.H.

SCALES

PLAN	1" = 40'
PROFILE	HORIZONTAL 1" = 40' VERTICAL 1" = 10'
CROSS SECTIONS	HORIZONTAL 1" = 20' VERTICAL 1" = 10'

STORM WATER PERMIT DATA

NONE REQUIRED

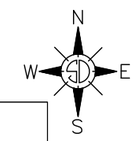

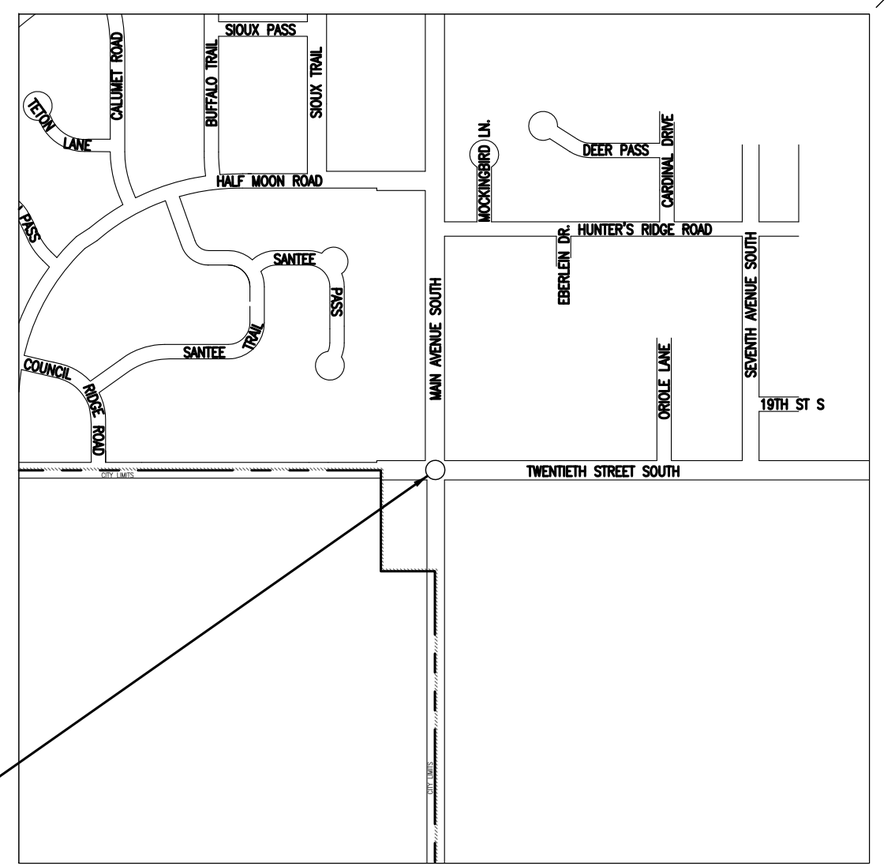

PROJECT P 3313(11)
INTERSECTION OF
20TH STREET AND MAIN AVENUE

REGISTERED PROFESSIONAL ENGINEER
REG. NO. 8324
LANCE R. MCQUEEN
SOUTH DAKOTA
2-14-14

HDR

FOR BIDDING PURPOSES ONLY

Revised: 02-26-2014 - LRM

ESTIMATE OF QUANTITIES

Std. Bid Item	Item Description	Quantity	Unit
009E0010	Mobilization	Lump Sum	LS
009E3200	Construction Staking	Lump Sum	LS
250E0010	Incidental Work	Lump Sum	LS
451E7520	Exploratory Excavation	8	Hour
632E3203	Flat Aluminum Sign, Nonremovable Copy High Intensity	68	SqFt
634E0010	Flagging	20	Hour
634E0100	Traffic Control	950	Unit
634E0120	Traffic Control, Miscellaneous	Lump Sum	LS
634E0420	Type C Advance Warning Arrow Panel	1	Each
634E2010	Temporary Pedestrian Facility(s)	Lump Sum	LS
635E2030	Signal Pole with 30' Mast Arm	1	Each
635E2035	Signal Pole with 35' Mast Arm	1	Each
635E2130	Signal Pole with 30' Mast Arm and Luminaire Arm	1	Each
635E2145	Signal Pole with 45' Mast Arm and Luminaire Arm	1	Each
635E3210	Roadway Luminaire, 250 Watt	2	Each
635E4030	3 Section Vehicle Signal Head	14	Each
635E4040	4 Section Vehicle Signal Head	4	Each
635E5030	3' Diameter Footing	56.0	Ft
635E5100	Controller Cabinet Footing	1	Each
635E5400	Electrical Service Cabinet	1	Each
635E5430	Traffic Signal Controller	1	Each
635E5515	Signal Head Battery Backup and Flash System	1	Each
635E5550	Detector Unit	6	Each
635E5560	Emergency Vehicle Preemption Unit	2	Each
635E5570	Optical Detector	4	Each
635E5900	Pedestrian Push Button	8	Each
635E5922	Pedestrian Signal Head with Countdown Timer	8	Each
635E5930	Pedestrian Crossing Sign	8	Each
635E8030	3" Rigid Galvanized Steel Conduit	20	Ft
635E8130	3" Rigid Conduit, Schedule 40	40	Ft
635E9014	1/C #4 AWG Copper Wire	130	Ft
635E9016	1/C #6 AWG Copper Wire	1,100	Ft
635E9504	4/C #14 AWG Copper Tray Cable, K2	1,633	Ft
635E9505	5/C #14 AWG Copper Tray Cable, K2	305	Ft
635E9512	12/C #14 AWG Copper Tray Cable, K2	522	Ft
635E9524	24/C #14 AWG Copper Tray Cable, K2	522	Ft
635E9600	#16 AWG Copper Twisted Shielded Pair	885	Ft
635E9710	2/C #10 AWG Copper Pole and Bracket Cable	86	Ft

ENVIRONMENTAL COMMITMENTS

An Environmental Commitment is a measure that SDDOT commits to implement in order to avoid, minimize, and/or mitigate a real or potential environmental impact. Environmental commitments to various agencies and the public have been made to secure approval of this project. An agency mentioned below with permitting authority can influence a project if perceived environmental impacts have not been adequately addressed. Unless otherwise designated, the Contractor's primary contact regarding matters associated with these commitments will be the Project Engineer. These environmental commitments are not subject to change without prior written approval from the SDDOT Environmental Office. The environmental commitments associated with this project are as follows:

COMMITMENT C: WATER SOURCE

The Contractor shall not withdraw water with equipment previously used outside the State of South Dakota without prior approval from the SDDOT Environmental Office. Thoroughly wash all construction equipment before entering South Dakota to reduce the risk of invasive species introduction into the project vicinity.

The Contractor shall not withdraw water directly from streams of the James, Big Sioux, and Vermillion watersheds without prior approval from the SDDOT Environmental Office.

Action Taken/Required:
The Contractor shall obtain the necessary permits from the regulatory agencies such as the Department of Environment and Natural Resources (DENR) and the United States Army Corps of Engineers (COE) prior to executing water extraction activities.

COMMITMENT D: WATER QUALITY STANDARDS

COMMITMENT D2: SURFACE WATER DISCHARGE

If construction dewatering is required, the Contractor shall obtain a Temporary Discharge Permit from the DENR and provide a copy to the Project Engineer. Contact the DENR Surface Water Program at 605-773-3351 to apply for a permit.

COMMITMENT E: STORM WATER

Construction activities constitute less than 1 acre of disturbance.

Action Taken/Required:
At a minimum and regardless of project size, appropriate erosion and sediment control measures must be installed to control the discharge of pollutants from the construction site.

COMMITMENT H: WASTE DISPOSAL SITE

The Contractor shall furnish a site(s) for the disposal of construction and/or demolition debris generated by this project.

Action Taken/Required:
Construction and/or demolition debris may not be disposed of within the State or City ROW.

The waste disposal site(s) shall be managed and reclaimed in accordance with the following from the General Permit for Highway, Road, and Railway Construction/Demolition Debris Disposal Under the South Dakota Waste Management Program issued by the Department of Environment and Natural Resources.

The waste disposal site(s) shall not be located in a wetland, within 200 feet of surface water, or in an area that adversely affects wildlife, recreation, aesthetic value of an area, or any threatened or endangered species, as approved by the Project Engineer.

If the waste disposal site(s) is located such that it is within view of any ROW, the following additional requirements shall apply:

COMMITMENT H: WASTE DISPOSAL SITE

1. Construction and/or demolition debris consisting of concrete, asphalt concrete, or other similar materials shall be buried in a trench completely separate from wood debris. The final cover over the construction and/or demolition debris shall consist of a minimum of 1 foot of soil capable of supporting vegetation. Waste disposal sites provided outside of the City ROW shall be seeded in accordance with Natural Resources Conservation Service recommendations. The seeding recommendations may be obtained through the appropriate County NRCS Office. The Contractor shall control the access to waste disposal sites not within the City ROW through the use of fences, gates, and placement of a sign or signs at the entrance to the site stating "No Dumping Allowed".

2. Concrete and asphalt concrete debris may be stockpiled within view of the ROW for a period of time not to exceed the duration of the project. Prior to project completion, the waste shall be removed from view of the ROW or buried and the waste disposal site reclaimed as noted above.

The above requirements will not apply to waste disposal sites that are covered by an individual solid waste permit as specified in SDCL 34A-6-58, SDCL 34A-6-1.13, and ARSD 74:27:10:06.

Failure to comply with the requirements stated above may result in civil penalties in accordance with South Dakota Solid Waste Law, SDCL 34A-6-1.31.

All costs associated with furnishing waste disposal site(s), disposing of waste, maintaining control of access (fence, gates, and signs), and reclamation of the waste disposal site(s) shall be incidental to the various contract items.

COMMITMENT I: HISTORICAL PRESERVATION OFFICE CLEARANCES

The SDDOT has obtained concurrence with the State Historical Preservation Office (SHPO or THPO) for all work included within the project limits.

Action Taken/Required:
All earth disturbing activities not designated within the plans require review of cultural resources impacts. This work includes, but is not limited to: staging areas, borrow sites, waste disposal sites, and all material processing sites.

The Contractor shall arrange and pay for a cultural resource survey and/or records search. The Contractor has the option to contact the state Archaeological Research Center (ARC) at 605-394-1936 or another qualified archaeologist, to obtain either a records search or a cultural resources survey. A record search might be sufficient for review; however, a cultural resources survey may need to be conducted by a qualified archaeologist.

The Contractor shall provide ARC with the following: a topographical map or aerial view on which the site is clearly outlined, site dimensions, project number, and PCN. If applicable, provide evidence that the site has been previously disturbed by farming, mining, or construction activities with a landowner statement that artifacts have not been found on the site.

The Contractor shall submit the records search or cultural resources survey report and if the location of the site is within the current geographical or historic boundaries of any South Dakota reservation to SDDOT Environmental Engineer, 700 East Broadway Avenue, Pierre, SD 57501-2586 (605-773-3180). SDDOT will submit the information to the appropriate SHPO/THPO. Allow **30 Days** from the date this information is submitted to the Environmental Engineer for SHPO/THPO review.

If evidence for cultural resources is uncovered during project construction activities, then such activities shall cease and the Project Engineer shall be immediately notified. The Project Engineer will contact the SDDOT Environmental Engineer in order to determine an appropriate course of action.

SHPO/THPO review does not relieve the Contractor of the responsibility for obtaining any additional permits and clearances for staging areas, borrow sites, waste disposal sites, or material processing sites that affect wetlands, threatened and endangered species, or waterways. The Contractor shall provide the required permits and clearances to the Project Engineer at the preconstruction meeting.

HDR

FOR BIDDING PURPOSES ONLY

SDDOT SPECIFICATIONS
Standard Specifications for Roads & Bridges, 2004 Edition and Required Provisions, Supplemental Specifications and/or Special Provisions as included in the Proposal.

SUPPLYING AS BUILT PLANS
If the traffic signal systems or roadway lighting systems are constructed differently than what is stated in the plans, the Contractor shall supply as built plans to the Engineer and a copy shall be sent to the Traffic Design Engineer. The as built plans may include conduit layouts, wiring diagrams, or other drawings depicting the changes from the original plans.

TRAFFIC SIGNAL CONTROL CABLE LABELS
Traffic signal cable shall be identified in hand holes, junction boxes, pedestal bases, electrical service cabinets, and controller cabinets as indicated on the Wiring Diagram. Labels shall be wrapped around traffic signal cable to indicate the signal pole and signal head that it is connected to. Labels shall be self-adhesive vinyl cloth with a preprinted legend. Traffic signal control cables to the poles shall be marked with a legend and shall be color coded as follows; northwest (blue), northeast (red), southeast (green), and southwest (orange).

ON-SITE INSPECTION
An on-site inspection of the traffic signals and lights shall be conducted before acceptance of the project, once the traffic signals and lights are completed and operational. The on-site inspection shall be conducted by the Contractor, the Design Engineer, the City Engineer and the Region Traffic Engineer.

SHOP DRAWING AND CATALOG CUTS SUBMITTAL
The Contractor shall submit shop drawings and catalog cuts in accordance with Section 985 of the Standard Specifications or in Adobe PDF format. PDF submittals shall be sent to the following email address:

Lance.McQueen@hdrinc.com

Upon review of the submittals, they will be sent by the Engineer to the following email addresses for concurrence of approvals or remarks:

jlanning@cityofbrookings.org
pete.longman@state.sd.us
john.less@state.sd.us

LIGHTNING PROTECTION
All signal poles, luminaire extensions and service cabinets shall be equipped with industrial lightning arrestors compliant with current NEMA and UL Standards for lightning arrestors. Cost for ground rods and lightning arrestors shall be incidental to bid items for these items.

SIGNAL AIMING AND TREE TRIMMING
Signals shall be aimed and trees shall be trimmed such that all the signals for each approach shall be continuously visible for the minimum distance listed in the table in Section 4D.12 of the MUTCD.

INCIDENTAL WORK
Incidental work includes, but is not limited to:
- Signal aiming
- Tree trimming (as needed)
- Lightning protection
- Coordination with adjacent and nearby projects
- Wiring of the traffic signals
- Removal of existing junction boxes
- Connecting to existing conduits and junction boxes

PROJECT COORDINATION
The Contractor shall be aware of other construction projects occurring during this project and adjacent to the project area. These include, but are not limited to, the following:

- **City project: Main Ave Reconstruction, 20th Street to 32nd Street**
  - This Main Ave Reconstruction project includes the intersection of 20th Street south and Main Avenue south.
  - This Main Ave Reconstruction project will occur during the 2014 construction season.
  - This Main Ave Reconstruction project involves removal of the existing roadway, water, sewer and urban roadway installation. This includes installation of the sidewalk, ADA curb ramps, and a majority of the electrical conduit and electrical junction boxes at the intersection of 20th Street and Main Avenue.
  - City Main Ave Reconstruction Project No. 2014-02STA
  - Contact: Andrew Kangas of Civil Design Inc.
    Office # 605-696-3204

- **City/DOT project: Main Ave Overlay, 8th Street to 20th Street**
  - This Main Ave Overlay project ends at the north side of 20th Street south and Main Avenue south.
  - This Main Ave Overlay project will occur during the 2015 construction season.
  - This Main Ave Overlay project involves milling of the existing asphalt surfacing and overlay of new asphalt.
  - DOT Main Ave Overlay Project No. P 3313(13) PCN 03WP
  - Contact: Andrew Kangas of Civil Design Inc.
    Office # 605-696-3204

EROSION/SEDIMENT CONTROL. TOPSOIL, SEEDING/SODDING RESTORATION
The total surface area to be disturbed is 0.02 acres. This is less than 1 acre and a SD DENR Storm Water Discharge permit will not be required.

All erosion and sediment control efforts and site restoration for topsoil, seeding, sodding, etc. shall be completed under the **City project: Main Ave Reconstruction, 20th Street to 32nd Street**, also being completed at the same time as this project.

The Contractor shall coordinate this project's work with the **Main Ave Reconstruction, 20th Street to 32nd Street** for erosion and sediment control and site restoration.

EXPLORATORY EXCAVATION
This work consists of the Contractor excavating material to locate and verify depth of an existing utility line (private or public) when directed by the Engineer to avoid possible conflicts. Payment will be at the contract unit price per hour for all labor, equipment, and materials needed. A quantity of **8 hours** has been estimated for this project.

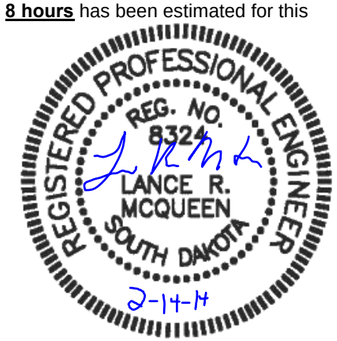

UTILITIES
The Contractor shall be aware that the existing utilities shown in the plans were surveyed prior to the design of this project and might have been relocated or replaced by a new utility facility prior to construction of this project, might be relocated or replaced by a new utility facility during the construction of this project, or might not require adjustment and may remain in its current location. The Contractor shall contact each utility owner and confirm the status of all existing and new utility facilities.

The Contractor shall be responsible for notifying South Dakota One Call 1-800-781-7474 to have utilities field located.

Brookings Municipal Utilities Electric 525 Western Ave Brookings SD 57006 Contact: Dale Henderschiedt Cell: (605) 691-3239	Brookings Municipal Utilities Water and Sewer 525 Western Ave Brookings SD 57006 Contact: Dave Felton Office: (605) 692-6325 Contact: Kelly Meyer Cell: (605) 691-3236
City of Brookings Streets 520 3rd Street Brookings, SD Contact: Koss Delfiniz Cell: (605) 691-4081 Office: (605) 692-2016	Northwestern Energy (gas) 311 5th Street Brookings, SD Contact: Mike Cameron Cell: (605) 695-3349
Swiftel (telecom) 415 4th Street Brookings, SD 57006 Contact: Rick Swoboda Office: (605) 692-6211	Mediacom (telecom) 750 22nd Avenue south Brookings, SD Contact: Paul Schmidt Cell: (605) 695-0632
ITC (telecom) Clear Lake, SD Contact:Terry Pederson Cell: (605) 695-7365	

The Contractor shall cooperate with and coordinate his efforts to work with the utility companies and their contractors. Each bidder shall be responsible prior to bid letting, for determining the effects of utility work on the project work scope and schedule, and shall account for all such effects in his bid. No consideration will be given to the Contractor after the bid letting on account of utility work done by others.

A summary of known utilities and anticipated work by utility companies is as follows:

BMU Electric has buried electric along the north, south and east sides of the project.

Northwestern Energy has buried gas main along the southwest quadrant of the project.

Swiftel has buried fiber & copper cables at the south side of the intersection, running east-west thru the project. They also have a buried fiber & copper cables at the west side of the intersection, running north-south thru the project. They also have buried copper lines in the northwest quadrant behind the proposed sidewalk limits.

ITC has buried fiber cables at the west side of the intersection, running north-south thru the project. They also have buried fiber cables in the SW quadrant of the intersection.

Mediacom has buried cable TV line at the southwest corner of the intersection. They also have buried telephone cables at the east side of the intersection, running north-south and heading east thru the project.

City of Brookings has buried 8" sanitary sewer main running east-west thru the project down the center of 20th Street. They also have buried 12" water main running east-west and north south within the roadway of both 20th Street and Main Avenue

HDR

TABLE OF SIGNAL FOOTING DATA

Signal Pole	Footing Diameter	Footing Depth	**Spiral Diameter	**Spiral Length	Vertical Reinforcement
S1	3' - 0"	14' - 0"	2' - 8"	256' - 2"	14-#8 x 13' - 6"
S2	3' - 0"	14' - 0"	2' - 8"	256' - 2"	14-#8 x 13' - 6"
S3	3' - 0"	14' - 0"	2' - 8"	256' - 2"	14-#8 x 13' - 6"
S4	3' - 0"	14' - 0"	2' - 8"	256' - 2"	14-#8 x 13' - 6"

* Footing depth allows for 4" to be installed above the sidewalk.
** The size of all spirals shall be #3.

The subsurface conditions at the intersection of Main Ave. S and 20th Street S consist of approximately 7' of brown clay-silt with sand overlying brown to gray silt-clay to 25' below the surface. Groundwater was noted immediately after drilling during the subsurface investigation on one boring at approximately 22.9' below the surface while the other borings remained dry. The boring with groundwater in it was left open for approximately 2.5 hours at which time the water level was recorded at 10.5' below the surface. The borings done at the intersection caved between 6.6' and 23.8' below the surface.

Concrete placement operations should closely follow excavation procedures. The longer the excavations are left open the more likely caving may occur. If caving soils are encountered casing may be required to construct the footings.

Concrete shall not be dropped through standing water. If water is present in the excavation it shall be removed prior to concrete placement or the concrete shall be tremied. If caving occurs during dewatering the concrete shall be placed through a tremie or by means of a casing.

The boring logs and laboratory tests are available for review at the Central Office in Pierre. If questions arise or additional information is needed concerning the cylindrical footings contact John Weeldreyer with the Geotechnical Engineering Activity in Pierre at 605.773.3401.

POLES

New poles shall be galvanized steel. Galvanizing shall be in accordance with AASHTO Specification M111 (ASTM A123). Steel pole material shall be in accordance with ASTM A36, A242, A570, A572, A607 or A595 Grade A or B. A595 material shall be limited to a 3/8 inch maximum thickness. Steel pole material with a thickness of 1/2 inch to 2 inches, shall satisfy Charpy V-Notch toughness test requirements of 15 ft. lb. at 40 degrees F. The SDDOT Office of Bridge Design shall be contacted for Charpy impact requirements for steel pole material thickness greater than 2 inches.

The steel pole-to-base-plate connection shall be a full-penetration groove-welded connection with a backing ring as described in Table 11.9.3.1-1, Section 4.5 of the current edition of the AASHTO Standard Specifications for Structural Supports for Highway Signs, Luminaires, and Traffic Signals.

Cantilever traffic signal supports, including anchor bolts, shall be designed for fatigue in accordance with Fatigue Importance Category III without galloping and truck induced gusts.

Signal poles shall have rotatable mast arms.

Luminaire extension(s) shall have a 30 Ft. mounting height with 8 Ft. arm.

ELECTRICAL SERVICE CABINET

The electrical service cabinet shall be installed at the northeast corner of the intersection of 20th Street and Main Avenue.

For the proposed electrical service cabinet:

- The service cabinet **shall be mounted on the side of the signal controller cabinet** as shown on the plan sheets.
  - The service cabinet shall be plumb and level to controller cabinet. The Contractor shall take precautions when positioning the service cabinet to avoid damaging wire or equipment within the controller cabinet while drilling the mounting holes and the access hole. The access hole shall be two inch diameter and shall be drilled through the service cabinet into the controller cabinet. A grommet or bushing shall be installed in the two inch diameter hole to prevent damage during pull through of the cable.
  - The service cabinet shall be mounted and tightened securely to the controller cabinet using a minimum of four bolts. A bead of clear silicon caulking shall be placed in all gaps between the service cabinet and controller cabinet to prevent water intrusion into either cabinet.
- **No meter** shall be installed within the cabinet.
- DOT standard plate No. 635.41 shall be followed for the cabinet, however, the cabinet is to be installed on the side of the signal controller cabinet, **so no post or meter socket will be installed.**
- The breakers installed within the electrical service cabinet shall act as disconnects for the power to the signals and the luminaires.
  - the electrical cable for the signal power shall be on a separate breaker from the electrical cable for the luminaires mounted on the signal poles
- When installing the PVC conduit from the BMU transformer to the electrical service cabinet and from the electrical service cabinet to TJB#1, the Contractor **shall install the conduit within RGSC from the 90 degree bend in the ground to the electrical service cabinet**. The conduit runs shall be installed within separate RGSC. The RGSC shall be fully sealed at the electrical service cabinet. Quantity has been included in the plans for this RGSC.
- the existing transformer to be connected to is a 120/240V, 60Hz., Single Phase, Three Wire Service
  - Brookings Municipal Utilities (BMU) shall be contacted prior to connecting to their transformer south of the intersection. Contact Dale Henderschiedt (#605-692-6325) of BMU prior to this work.
- All costs, labor and materials for the furnishing and installing the electrical service cabinet, connecting to the transformer and related items as noted on the standard plate and as discussed above shall be included in the bid item "Electrical Service Cabinet". All conduits required within this cabinet and to connect to the existing conduit shall be incidental to this bid item.

LUMINAIRES

Luminaires shall be High Pressure Sodium, medium, semi-cutoff, type III. The luminaire bulbs shall be 250W HPS.

The following luminaires meet the requirements for this design:

1. General Electric M2RR Series
2. Lumark RY Series
3. Hubbell RL Series

Three copies of the isofootcandle charts and utilization curves shall be furnished to the Engineer for approval. The Contractor must get approval from the Engineer prior to installation of the luminaires.

The approved isofootcandle data for each case shall be used to determine the correct socket position at each site. Each luminaire shall be installed with its lamp socket in the proper position and in a level attitude.

MULTICONDUCTOR CONTROL CABLE FOR SIGNAL CIRCUITS

The cable furnished for signal circuits shall be furnished with the number and size of the conductors shown in the plans and shall meet the specifications for either of the two types specified below.

1. General Purpose Control Cable with stranded copper conductors, ICEA S-61-402, PE-PV Insulated (20-10), 600 volts.

2. General Purpose Control Cable, with standard copper conductors, Aerial and Duct., IMSA 20-1, 600 volts.

The Conductor Jackets for the above cables shall be color coded in accordance with ICEA S-61-402 Appendix K, Table K-1 or IMSA 19-1 Table II.

SIGNAL BACKPLATES

Signal backplates shall extend not less than 5 inches from the edge of the signal head at the top, bottom, and sides. The bottom of the backplate on vehicle signal faces mounted directly above pedestrian signal indications shall be sized to permit the separate adjustment of the vehicle and pedestrian signal indication and may be less than 4 inches. All backplates shall have a dull black finish.

Signal backplates for shall be polycarbonate.

CONTROLLER PROGRAMMING

The Contractor shall furnish the City of Brookings with a copy of the data programmed into the Controller prior to the full operation of the Controller for approval. The address is as follows:

Jackie Lanning
City Engineer
JLanning@cityofbrookings.org
City Hall
520 3rd Street, Suite 140
P.O. Box 270
Brookings, SD 57006

REGISTERED PROFESSIONAL ENGINEER
REG. NO. 8324
LANCE R. MCQUEEN
SOUTH DAKOTA
2-14-14

HDR

FOR BIDDING PURPOSES ONLY

TRAFFIC SIGNAL CONTROLLER

The controller shall be a solid state, digital, NEMA TS2 Type 1 from the approved product list and as approved by the South Dakota Department of Transportation Traffic Design Engineer in the Office of Road Design. The controller shall be compatible with the controllers installed along US Highway 14 along Brookings, SD.

1. The controller cabinet shall be a Type P cabinet with minimum dimensions of 55" H x 44" W x 26" D. The controller cabinet doors shall be hinged on the right side. **No meter** shall be installed within the cabinet.
2. The controller shall be two through twelve phase controllers.
3. Vehicle detectors **B1, B2, D1 and D2** shall operate in the presence (non-locking) mode and shall have call delay timing capability. The call delay feature shall be inhibited by the controller. Set these detectors to 3 seconds delay.
4. Vehicle detectors **A1 and C1** shall operate in the passage (locking) mode.
5. Digital timing shall be provided with a battery backup.
6. The controller shall alternate the red and yellow indication when flashing.
7. The interface panels shall be capable of inserting up to sixteen load switches.
8. The controller cabinet shall be mounted on a concrete footing as shown in the details.
9. The controller shall be capable of programming by manual entry via the front panel keyboard, data downloading from a portable PC computer via null-modem cable, and data downloading from one controller to another using a serial port on each controller.
10. The controller shall be capable of operating coordinated by time-based, hardwire, and telemetry.
11. The controller cabinet shall be capable of placing vehicle and pedestrian calls into the controller. Placed calls shall provide for eight vehicle phases and four pedestrian phases. The placed calls for vehicle phases shall be capable of extending the associated vehicle phase by continuous or intermittent contact.
12. The controller shall have a copy function to copy all timing data from one phase to another. The controllers shall also permit copying all coordination pattern data from one pattern to another.
13. A Malfunction Management Unit shall be installed in each cabinet and shall conform to the requirements of NEMA Standard TS-2 Section 4.
14. A sufficient quantity of BUS Interface Units shall be installed in the cabinet to provide communication between detectors, load switches, controller unit, etc. Each BUS Interface Unit shall conform to NEMA Standard TS-2, Section 8.
15. The controller shall have internal signal dimming.
16. The controller Solid State Flasher shall have dimming capability.
17. The Contractor is responsible for programming controllers with the signal timings provided in these plans.
18. All costs for materials, labor, and furnishing and installing the controller cabinet and the controller as specified above shall be included in the bid item "Traffic Signal Controller".
19. All costs, labor and materials for furnishing and installing the controller cabinet footing shall be included in the bid item "Controller Cabinet Footing". This bid item shall include the 4' long x 2' wide concrete pad installed along-side the cabinet footing. All conduits required within this footing and to connect to the existing conduit shall be incidental to this bid item.

BATTERY BACKUP AND FLASH SYSTEM

The proposed Battery Backup and Flash System shall be installed within the proposed traffic signal controller cabinet at the intersection of 20th Street and Main Avenue.

The proposed Battery Backup and Flash System shall be furnished, installed and paid for as discussed in the **Special Provision for Signal Head Battery Backup and Flash System.**

RISER UNIT

The Contractor shall supply 18" riser units for the controller cabinet for housing the battery backup.

All work involved in supplying and installing the riser units shall be incidental to the contract unit price per each for "Signal Head Battery Backup and Flash System".

OPTICAL ACTIVATED EMERGENCY VEHICLE PRE-EMPTION SYSTEM

The proposed Optical Detectors and Emergency Vehicle Pre-Emption Units shall be furnished, installed and paid for as discussed in the **Special Provision for Optical Activated Emergency Vehicle Pre-Emption System** for the intersection of 20th Street and Main Avenue.

PEDESTRIAN PUSH BUTTON

The Contractor shall mount the proposed pedestrian push buttons and pedestrian crossing signs to the existing poles per the details and at the location shown on the plans.

The pedestrian push button poles are to be installed under the project of **Main Ave Reconstruction, 20th Street to 32nd Street**, which is to be completed concurrently with this project.

The Contractor shall coordinate this work with the **Main Ave Reconstruction, 20th Street to 32nd Street project**.

The pedestrian push button shall meet the following requirements:

General Requirements:

1. Shall be pressure activated with essentially no moving parts.
2. Shall be vandal resistant.
3. Shall activate with 3 lbs. force or less.
4. Shall have an LED that illuminates when the button is being pushed.
5. Shall give a toned beep verification of button being pushed.
6. Shall have an operating life of 1 million actuations.
7. Shall be compatible with NEMA TS1 and TS2 controllers.

Housing:

1. Button housing shall be high impact cast or machined aluminum.
2. All switch electronics shall be sealed within the high impact cast or machined aluminum housing.
3. Shall have a gasket between the button housing and the mounting cup.

Electrical:

1. Operating Voltage: 15 to 24V DC or 12 to 24V AC.
2. On Resistance 10 Ohms (When the button is activated and placing a call).
3. Standby Current 10 micro amps typical.
4. Shall have built in surge protection.
5. Shall have a solid state electronic piezo switch rated for 1 million cycles with no moving plunger or moving electrical contacts.
6. Shall hold the call for a minimum of 5 seconds.
7. Requires only two conductors be run from the traffic signal cabinet to the push button to operate.
8. Six units wired in parallel on a single pedestrian isolator input shall not pull the input voltage of the pedestrian isolator down such that a false pedestrian call is placed in the controller.

Mounting Requirements:

1. The pedestrian buttons shall be mounted on the poles as shown on the plans. The pole/button shall be installed adjacent to, and within 10 inches of a clear ground space or a landing on the pedestrian access route leading to the crosswalk.

PERMANENT SIGNING

All sign materials and installation procedures shall be as shown on the plans sheets and shall comply with Sections 632 and 982 of the SD DOT Standard Specifications for Roads and Bridges.

All sign legend, border, and background sheeting material shall meet or exceed standards for ASTM D 4956 classified Type III high intensity sheeting.

The Contractor shall affix a date decal to each sign installed. Each decal is a self-adhesive sticker approximately 2" X 2" with removable paper backing and black numerals on a white background. The date decal displays the last two digits of the year the sign was manufactured (as illustrated).

14

One decal shall be placed in the extreme lower left corner of the back of flat aluminum signs. Sign supports or other obstructions shall not block the view of the date decal upon completion of the sign installation.

All costs, labor and materials for furnishing and installing of date decals on new signs shall be incidental to the various signing bid items.

All costs, labor and materials for furnishing and installing the signs as shown on the plans shall be included in the bid item "Flat Aluminum Sign, Nonremovable Copy High Intensity".

- Signs to be installed on the mast arms shall be attached to the mast arm with Astro Sign-Brack Stellar Series Band Mount for Overhead Street Name Sign or approved equal. All materials for these brackets/mounts shall be stainless steel. All costs for these brackets/mounts shall be incidental to sign bid items.

REGISTERED PROFESSIONAL ENGINEER
REG. NO. 8324
LANCE R. MCQUEEN
SOUTH DAKOTA
2-14-14

HDR

FOR BIDDING PURPOSES ONLY

Revised: 02-26-2014 - LRM

TRAFFIC CONTROL

1. The Contractor shall follow the sequence of operations discussed below, unless an alternate plan is submitted by the Contractor and approved by the Engineer prior to any work. The submitted plan shall comply with MUTCD standards.
2. The Contractor shall only be paid for the signs installed for one traffic control setup for the lane closures, shoulder work, etc. as discussed below. All costs, labor and materials to remove, relocate and reset the signs for work at another location shall be included in the bid item "Traffic Control, Miscellaneous".
3. Any flagging that may be required by the Contractor shall be included in the bid item "Flagging". **20 hours** has been included in the quantities.
4. The Contractor shall not be allowed to completely close any of the streets to traffic and shall accommodate all existing traffic patterns.
   - **At all times, two 11' wide lanes shall be maintained on 20th Street; and one 11' wide northbound lane and one 11' wide southbound lane shall be maintained on Main Avenue, with the center turn lane on Main Avenue remaining open to left turning traffic.**
5. The Contractor shall follow the traffic control layouts shown in the plans labeled:
   - Standard Plate #634.03 for shoulder work
   - Standard Plate #634.60 for closing of the right lanes

MAINTENANCE OF TRAFFIC

All costs, labor and materials for all work associated with the items discussed below shall be included in the bid item "Traffic Control, Miscellaneous".

- Traffic shall be maintained in accordance with Section 4.4 of the Standard Specifications. Traffic control shall be installed in accordance with the Federal Manual on Uniform Traffic Control Devices (MUTCD) and standard plates located herein.
- Removing, relocating, covering, salvaging and resetting permanent traffic control devices, including delineation, shall be the responsibility of the Contractor. Any delineators and signs damaged or lost shall be replaced by the Contractor at no cost to the State.
- The Contractor shall cover/bag existing traffic signs that conflict with the proposed traffic control. The bags used to cover the signs shall fully conceal the sign.
- Storage of vehicles and equipment shall be outside the clear zone and as near as possible to the right-of-way line. Contractor's employees should mobilize at a location off the right-of-way and arrive at the work sites in a minimum number of vehicles necessary to perform the work.
- Indiscriminate driving and parking of vehicles within the right-of-way will not be permitted. Any damage to the vegetation, surfacing, embankment, delineators and existing signs resulting from such indiscriminate use shall be repaired and/or restored by the Contractor, at no expense to the State, and to the satisfaction of the Engineer.
- The Contractor shall provide documentation that all breakaway sign supports comply with FHWA NCHRP 350 or MASH crash-worthy requirements. The Contractor shall provide installation details at the preconstruction meeting for all breakaway sign support assemblies.
- If traffic is routed to a completed section and the permanent signing is not complete, the Contractor shall use temporary signing consisting of salvaged permanent signs or temporary traffic control signs for traffic direction and safety.
- The Contractor will be required to maintain access to each residence and business throughout the project.
- Traffic control drums as shown on the traffic control plan sheets

PEDESTRIAN TRAFFIC CONTROL

The existing sidewalks shall not be closed without supplying an alternate route. When crosswalks, sidewalks, or other pedestrian facilities are blocked, closed, or relocated, the Contractor shall use temporary pedestrian facilities which shall include accessibility features.

The Contractor shall adhere to the requirements of the Americans with Disabilities Act (ADA) during construction. Tape, rope, or plastic chains strung between devices are not detectable, do not comply with the design standards in the Americans with Disabilities Act Accessibility Guidelines for Buildings and Facilities (ADAAG), and should not be used as a control for pedestrian movements.

A smooth, continuous hard surface shall be provided throughout the entire length of the temporary pedestrian facility. There should be no curbs or abrupt changes in grade or terrain that could cause tripping or be a barrier to wheelchair use.

A temporary pedestrian ramp shall be provided by the Contractor in all cases where an alternate route cannot be found, and the intersection will carry pedestrian traffic. A suitable ramp would be one made out of wood that is at least 3' wide and no greater than a 12:1 slope. The ramp shall be sufficiently sturdy and unyielding with hand rails.

The Contractor shall adequately sign and barricade the sidewalk for pedestrian traffic. The Contractor shall not leave un-barricaded holes open either overnight or over the weekend. Safety fence shall be installed around all work areas that are adjacent to pedestrian walkways and at other locations as designated by the Engineer.

The Contractor shall submit a detailed plan to the Engineer on how pedestrian traffic shall be accommodated during the various phases of the work at the affected locations. This plan shall be in conformance with the details mentioned above or shown on the plans. The plan shall be submitted no later than two weeks prior to the start of work. The plan may be submitted at the Preconstruction Meeting. Items to be detailed in this plans shall included the following:

1. The use of various approved traffic control devices to maintain the pedestrians through or past the immediate work area.
2. The detour of pedestrians to the opposite side of the street, alternate route(s) or around a City block.
3. Manned crossing assistance (crossing guards) combined with an accessible path.

All costs for the temporary pedestrian facilities as described above shall be included in the lump sum contract price for the bid item "Temporary Pedestrian Facility(s)". This bid item shall include all temporary facilities, safety fence and all other items mentioned above for the temporary pedestrian facilities.

- Standard Plate #634.33 has been included in the plans to assist the Contractor with the traffic signing along a pedestrian detour route. Necessary signing, as shown on the standard plate, is included in the traffic control signing and shall be paid for at the contact unit price per unit for the bid item "Traffic Control".

TABULATED QUANTITIES

TABLE FOR FLAT ALUMINUM SIGN, NONREMOVABLE COPY HIGH INTENSITY

Location	Quantity (SqFt)
NE corner of 20th St & Main Ave	16.0
SE corner of 20th St & Main Ave	18.0
SW corner of 20th St & Main Ave	16.0
NW corner of 20th St & Main Ave	18.0
Total	68.0

TABLE FOR TRAFFIC SIGNAL POLES

Pole	Signal Pole with 30' Mast Arm (Each)	Signal Pole with 35' Mast Arm (Each)	Signal Pole with 30' Mast Arm and Luminaire Arm (Each)	Signal Pole with 45' Mast Arm and Luminaire Arm (Each)
S1		1		
S2			1	
S3				1
S4	1			
TOTAL	1	1	1	1

TABLE FOR ROADWAY LUMINAIRE, 250 WATT WITH PHOTOELECTRIC CELL

Location	Quantity (Each)
S2	1
S3	1
TOTAL	2

TABLE FOR 3 SECTION VEHICLE SIGNAL HEAD

Location	Quantity (Each)
S1	4
S2	3
S3	4
S4	3
TOTAL	14

TABLE FOR 4 SECTION VEHICLE SIGNAL HEAD

Location	Quantity (Each)
S1	1
S2	1
S3	1
S4	1
TOTAL	4

TABLE FOR TRAFFIC CONTROL (Units)

Sign Description	Sign Code	Width (in)	Height (in)	Units Per Sign	Shoulder Work Setup No. of Signs	Shoulder Work Setup Total Units	Right Lane Closure Setup No. of Signs	Right Lane Closure Setup Total Units	Pedestrian Detour Setup No. of Signs	Pedestrian Detour Setup Total Units	Payment Units* No. of Signs	Payment Units* Total Units
ROAD WORK AHEAD	W20-1	48	48	34	2	68	3	102	1	34	3	102
SHOULDER WORK	W21-5	48	48	34	4	136					4	136
END ROAD WORK	G20-2	36	18	17	2	34	2	34			2	34
RIGHT LANE CLOSED AHEAD	W20-5R	48	48	34			2	68			2	68
MERGE LEFT	W4-2R	48	48	34			2	68			2	68
ARROW LEFT	W1-6	48	24	24			2	48			2	48
STOP	R1-1	36	36	27			2	54			2	54
SIDEWALK CLOSED AHEAD...CROSS HERE	R9-11	24	18	7					2	14	2	14
SIDEWALK CLOSED AHEAD...USE OTHER SIDE	R9-10	24	12	4					2	8	2	8
SIDEWALK CLOSED	R9-9	24	12	4					2	8	2	8
PEDESTRIAN SIGN	W11-2	48	48	34					4	136	4	136
ARROW LEFT-DOWN	W16-7P	24	12	4					2	8	2	8
AHEAD PLAQUE	W16-9P	24	12	4					2	8	2	8
PEDESTRIAN CROSSWALK	R9-8	36	18	17					2	34	2	34
TYPE 3 BARRICADE	N/A	8'	N/A	56			2	112	4	224	4	224
				Total		**238**		**486**		**474**		**950**

*Only the maximum quantity intalled during the setps shall be used for the payment quantity.

REGISTERED PROFESSIONAL ENGINEER
REG. NO. 8324
LANCE R. MCQUEEN
SOUTH DAKOTA
2-26-14

HDR

TABULATED QUANTITIES CONT'D

TABLE FOR ELECTRICAL SERVICE CABINET	
Location	Quantity (Each)
NE corner of 20th St & Main Ave	1
TOTAL	1

TABLE FOR TRAFFIC SIGNAL CONTROLLER	
Location	Quantity (Each)
NE corner of 20th St & Main Ave	1
TOTAL	1

TABLE FOR BATTERY BACKUP SYSTEM AND FLASH SYSTEM	
Location	Quantity (Each)
NE corner of 20th St & Main Ave	1
Total	1

TABLE FOR DETECTOR UNIT	
Location	Detector Unit @ Controller (Each)
for loops @ north side of 20th St & Main Ave	1
for loops @ east side of 20th St & Main Ave	2
for loops @ south side of 20th St & Main Ave	1
for loops @ west side of 20th St & Main Ave	2
TOTAL	6

TABLE FOR OPTICAL DETECTOR		
Location	Quantity (Each)	EVP Unit @ Controller (2 channel cards) (Each)
S1	1	
S2	1	2
S3	1	
S4	1	
TOTAL	4	2

TABLE FOR PEDESTRIAN PUSH BUTTON AND SIGN*		
Location	Push Button (Each)	Pedestrian Crossing Sign (Each)
NE corner of 20th St & Main Ave	2	2
SE corner of 20th St & Main Ave	2	2
SW corner of 20th St & Main Ave	2	2
NW corner of 20th St & Main Ave	2	2
TOTAL	8	8

* Pedestrian Push Button Poles are to be installed under the City project of **Main Ave Reconstruction, 20th Street to 32nd Street.**

TABLE FOR PEDESTRIAN SIGNAL HEAD WTH COUNTDOWN TIMER	
Location	Quantity (Each)
S1	2
S2	2
S3	2
S4	2
TOTAL	8

TABLE FOR TRAFFIC CONDUIT AND CABLE QUANTITIES*

Location to Location		3" RGSC (Ft)	3" Sch 40 PVC (Ft)	1/C #4 AWG (Ft)	1/C #6 AWG (Ft)	4/C #14 AWG (Ft)	5/C #14 AWG (Ft)	12/C #14 AWG (Ft)	24/C #14 AWG (Ft)	TSP #16 AWG (Ft)	Pole & Bracket 2/C #10 AWG (Ft)	PC** (Ft)
TJB1	S1		10									
TJB3	S2		10									
TJB5	S4		10									
TJB7	S3		10									
Transformer	Service Cabinet			100								
Service Cabinet	Controller Cabinet			30								
Service Cabinet	TJB1	20			100							
TJB1	S2				400						43	
TJB1	S3				600						43	
Controller Cabinet	TJB2									132		
Controller Cabinet	TJB4									167		
Controller Cabinet	TJB6									406		
Controller Cabinet	TJB8									180		
Controller Cabinet	PB1					54						
Controller Cabinet	PB2					63						
Controller Cabinet	PB3					143						
Controller Cabinet	PB4					154						
Controller Cabinet	PB5					220						
Controller Cabinet	PB6					208						
Controller Cabinet	PB7					153						
Controller Cabinet	PB8					164						
Controller Cabinet	S1							36	36			95
Controller Cabinet	S2							140	140			195
Controller Cabinet	S3							205	205			275
Controller Cabinet	S4							141	141			195
	S1					136	75					
	S2					90	72					
	S3					159	87					
	S4					89	71					
	TOTAL	20	40	130	1100	1633	305	522	522	885	86	760

*All cable quantities show n above include 6' of slack/coil installed in each junction box.

**Incidental to the bid item "Optical Detector".

REGISTERED PROFESSIONAL ENGINEER
REG. NO. 8324
LANCE R. MCQUEEN
SOUTH DAKOTA
2-14-14

HDR

HORIZONTAL ALIGNMENT/CONTROL DATA

FOR BIDDING PURPOSES ONLY

STATE OF SOUTH DAKOTA	PROJECT	SHEET NO.	TOTAL SHEETS
	P 3313(11)	8	22

FILE: C:\PWWORKING\OMA\D0903428\X_CONTROL DATA.DWG
DATE: 2/11/2014 REV. DATE: INITIALS

HORIZONTAL ALIGNMENT: MAIN AVENUE SOUTH CENTERLINE

DESCRIPTION	STATION	LENGTH	TANGENT DIR.	NORTHING	EASTING
POB	0+00.00			180424.07	2806699.63
		TL= 200.00'	S02°41'20.11"E		
POE	2+00.00			180224.29	2806709.01

HORIZONTAL AND VERTICAL CONTROL POINTS

SYMBOL	POINT	ALIGNMENT	STATION	OFFSET	DESCRIPTION	NORTHING	EASTING	ELEVATION
	601	Main Ave. south	1+97.04	92.03' L	Rebar w/ Cap – SE Corner of Main Avenue south & 20th Street south	180,231.57	2,806,800.80	1623.99
	602	Main Ave. south	22+93.82	30.65' L	Rebar w/ Cap	178,134.21	2,806,837.86	1630.90
	34286	Main Ave. south	52+79.40	40.26' L	Pipe w/ Cap – NE Corner of Main Avenue south & 32nd Street south	175,153.09	2,806,998.62	1602.15

HORIZONTAL DATUM: SOUTH DAKOTA STATE PLANE NORTH
VERTICAL DATUM: NAVD88

REGISTERED PROFESSIONAL ENGINEER
REG. NO. 8324
LANCE R. MCQUEEN
SOUTH DAKOTA
2-14-14

HDR

SIGNAL LAYOUT

FOR BIDDING PURPOSES ONLY

STATE OF SOUTH DAKOTA	PROJECT	SHEET NO.	TOTAL SHEETS
	P 3313(11)	9	22

FILE: C:\PWWORKING\OMA\D0903428\X_SIGNAL SHEETS.DWG
DATE: 2/13/2014 REV. DATE: INITIALS

LEGEND	
KEY	ITEM
	PROPOSED 4–SECTION VEHICLE SIGNAL HEAD (1, 8, 10, 17)
	PROPOSED 3–SECTION VEHICLE SIGNAL HEAD (2, 3, 4, 5, 6, 7, 9, 11, 12, 13, 14, 15, 16, 18)
XX	PEDESTRIAN SIGNAL HEAD W/COUNTDOWN TIMER (19–26)
o PB#	PEDESTRIAN PUSH BUTTON (TO BE INSTALLED ON EXISTING PUSH BUTTON POLES (PB#1–PB#8))
4C	4c #14 AWG IMSA COPPER CABLE, K2
5C	5c #14 AWG IMSA COPPER CABLE, K2
PC	PREEMPTION CABLE (INCIDENTAL)
	OPTICAL DETECTOR
	SIGNAL POLE W/30' MAST ARM (S4)
	SIGNAL POLE W/35' MAST ARM (S1)
	SIGNAL POLE W/30' MAST ARM AND LUMINAIRE ARM (30' TALL LUMINAIRES, 8' ARM EXTENSION, 250W HPS) (S2)
	SIGNAL POLE W/45' MAST ARM AND LUMINAIRE ARM (30' TALL LUMINAIRES, 8' ARM EXTENSION, 250W HPS) (S3)

30" 60" LOCATIONS WHERE THE SURFACE OF THE CONCRETE SIDEWALK/CURB RAMPS SHALL HAVE 2% CROSS SLOPE IN ALL DIRECTIONS TO MEET ADA REQUIREMENTS AT LOCATIONS FOR PEDESTRIAN PUSH BUTTON POLES

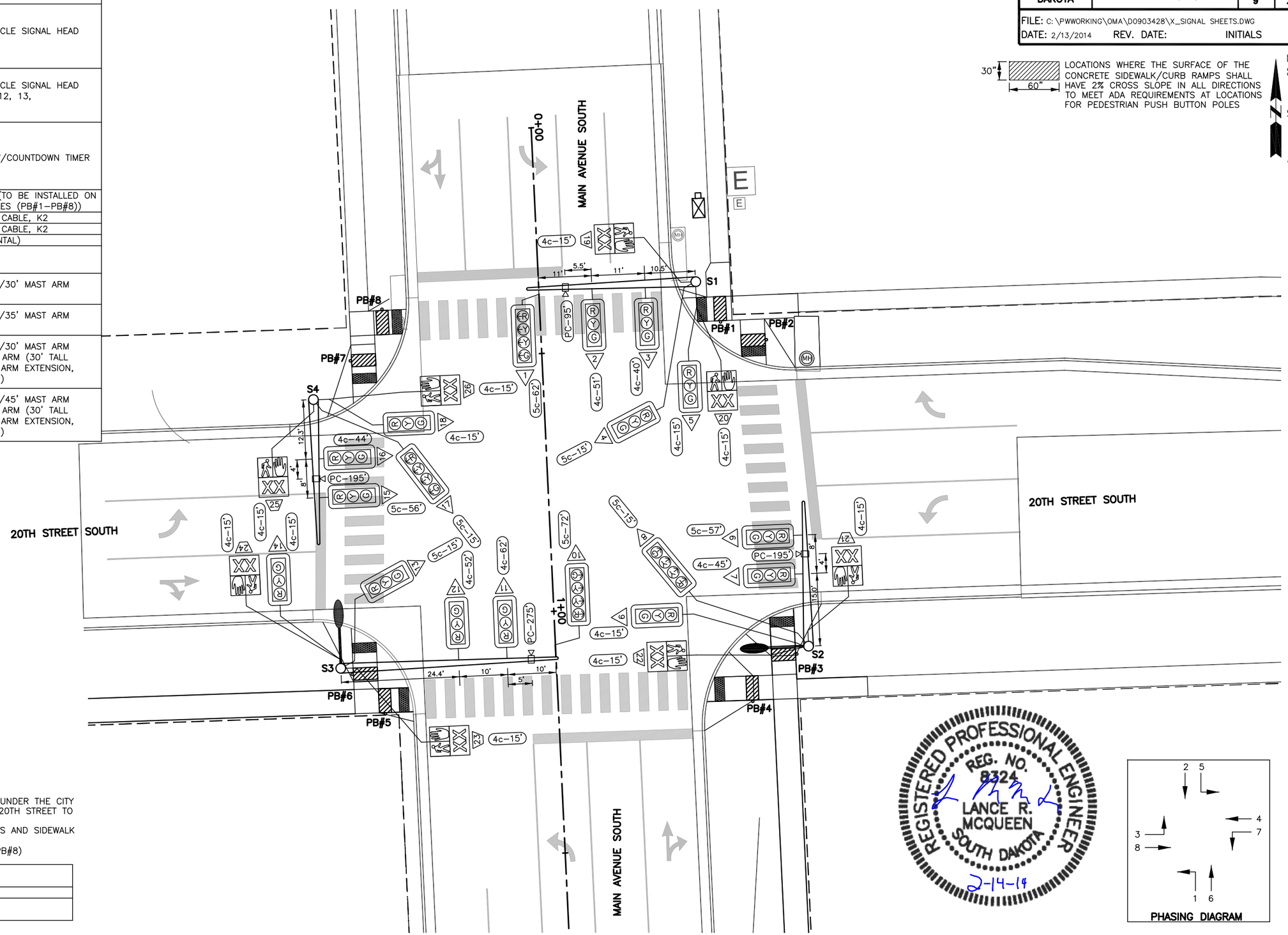

REGISTERED PROFESSIONAL ENGINEER
REG. NO. 8324
LANCE R. MCQUEEN
SOUTH DAKOTA
2-14-14

PHASING DIAGRAM

EXISTING ITEMS NOTE:
THE FOLLOWING ITEMS ARE TO BE INSTALLED UNDER THE CITY PROJECT OF MAIN AVENUE RECONSTRUCTION, 20TH STREET TO 32ND STREET, PROJECT NO. 2014–02STA:
- PAVEMENT, CURB AND GUTTER, CURB RAMPS AND SIDEWALK
- PAVEMENT MARKINGS
- PEDESTRIAN PUSH BUTTON POLES (PB#1–PB#8)

LEGEND	
KEY	ITEM
o PB#	EXISTING PUSH BUTTON POLE

HDR

CONDUIT LAYOUT

FOR BIDDING PURPOSES ONLY

STATE OF SOUTH DAKOTA	PROJECT	SHEET NO.	TOTAL SHEETS
	P 3313(11)	10	22

FILE: C:\PWWORKING\OMA\D0903428\X_SIGNAL SHEETS.DWG
DATE: 2/25/2014 REV. DATE: **2/26/2014** INITIALS **LRM**

LEGEND	
KEY	ITEM
4C	4c #14 AWG COPPER TRAY CABLE, K2
12C	12c #14 AWG IMSA COPPER CABLE, K2
24C	24c #14 AWG COPPER TRAY CABLE, K2
TSP	#16 AWG COPPER TWISTED SHIELDED PAIR
PC	PREEMPTION CABLE (INCIDENTAL)
#4	#4 AWG COPPER CABLE
#6	#6 AWG COPPER CABLE
3" SCH 40	3" RIGID CONDUIT, SCHEDULE 40

30" × 60" — LOCATIONS WHERE THE SURFACE OF THE CONCRETE SIDEWALK/CURB RAMPS SHALL HAVE 2% CROSS SLOPE IN ALL DIRECTIONS TO MEET ADA REQUIREMENTS AT LOCATIONS FOR PEDESTRIAN PUSH BUTTON POLES

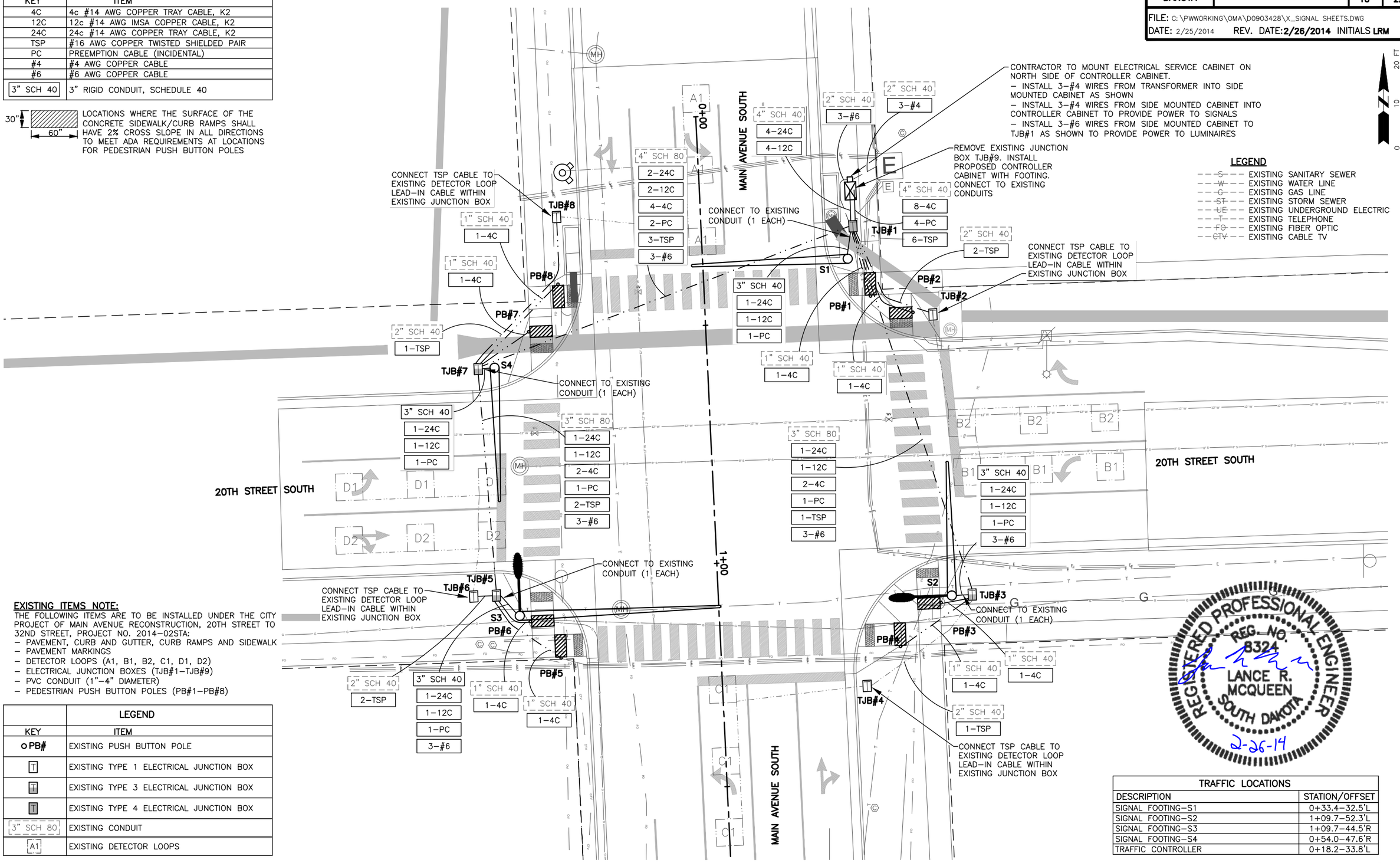

EXISTING ITEMS NOTE:
THE FOLLOWING ITEMS ARE TO BE INSTALLED UNDER THE CITY PROJECT OF MAIN AVENUE RECONSTRUCTION, 20TH STREET TO 32ND STREET, PROJECT NO. 2014–02STA:
- PAVEMENT, CURB AND GUTTER, CURB RAMPS AND SIDEWALK
- PAVEMENT MARKINGS
- DETECTOR LOOPS (A1, B1, B2, C1, D1, D2)
- ELECTRICAL JUNCTION BOXES (TJB#1–TJB#9)
- PVC CONDUIT (1"–4" DIAMETER)
- PEDESTRIAN PUSH BUTTON POLES (PB#1–PB#8)

LEGEND	
KEY	ITEM
o PB#	EXISTING PUSH BUTTON POLE
T	EXISTING TYPE 1 ELECTRICAL JUNCTION BOX
T	EXISTING TYPE 3 ELECTRICAL JUNCTION BOX
T	EXISTING TYPE 4 ELECTRICAL JUNCTION BOX
3" SCH 80	EXISTING CONDUIT
A1	EXISTING DETECTOR LOOPS

TRAFFIC LOCATIONS	
DESCRIPTION	STATION/OFFSET
SIGNAL FOOTING–S1	0+33.4–32.5'L
SIGNAL FOOTING–S2	1+09.7–52.3'L
SIGNAL FOOTING–S3	1+09.7–44.5'R
SIGNAL FOOTING–S4	0+54.0–47.6'R
TRAFFIC CONTROLLER	0+18.2–33.8'L

REGISTERED PROFESSIONAL ENGINEER
REG. NO. 8324
LANCE R. MCQUEEN
SOUTH DAKOTA
2-26-14

HDR

PERMANENT SIGN LAYOUT

FOR BIDDING PURPOSES ONLY

STATE OF SOUTH DAKOTA	PROJECT	SHEET NO.	TOTAL SHEETS
	P 3313(11)	11	22

FILE: C:\PWWORKING\OMA\D0903428\X_PERM SIGN.DWG
DATE: 2/13/2014 REV. DATE: INITIALS

LEGEND	
KEY	ITEM
	PEDESTRIAN CROSSING SIGN (R10-3e) (HIGH INTENSITY) (TO BE INSTALLED ON EXISTING PUSH BUTTON POLES) SIGNS W/LEFT ARROWS (3 EACH) SIGNS W/RIGHT ARROWS (5 EACH)
Main Ave s 20th St s (SEE DETAILS ON NEXT SHEET)	FLAT ALUMINUM SIGN, NONREMOVABLE COPY HIGH INTENSITY

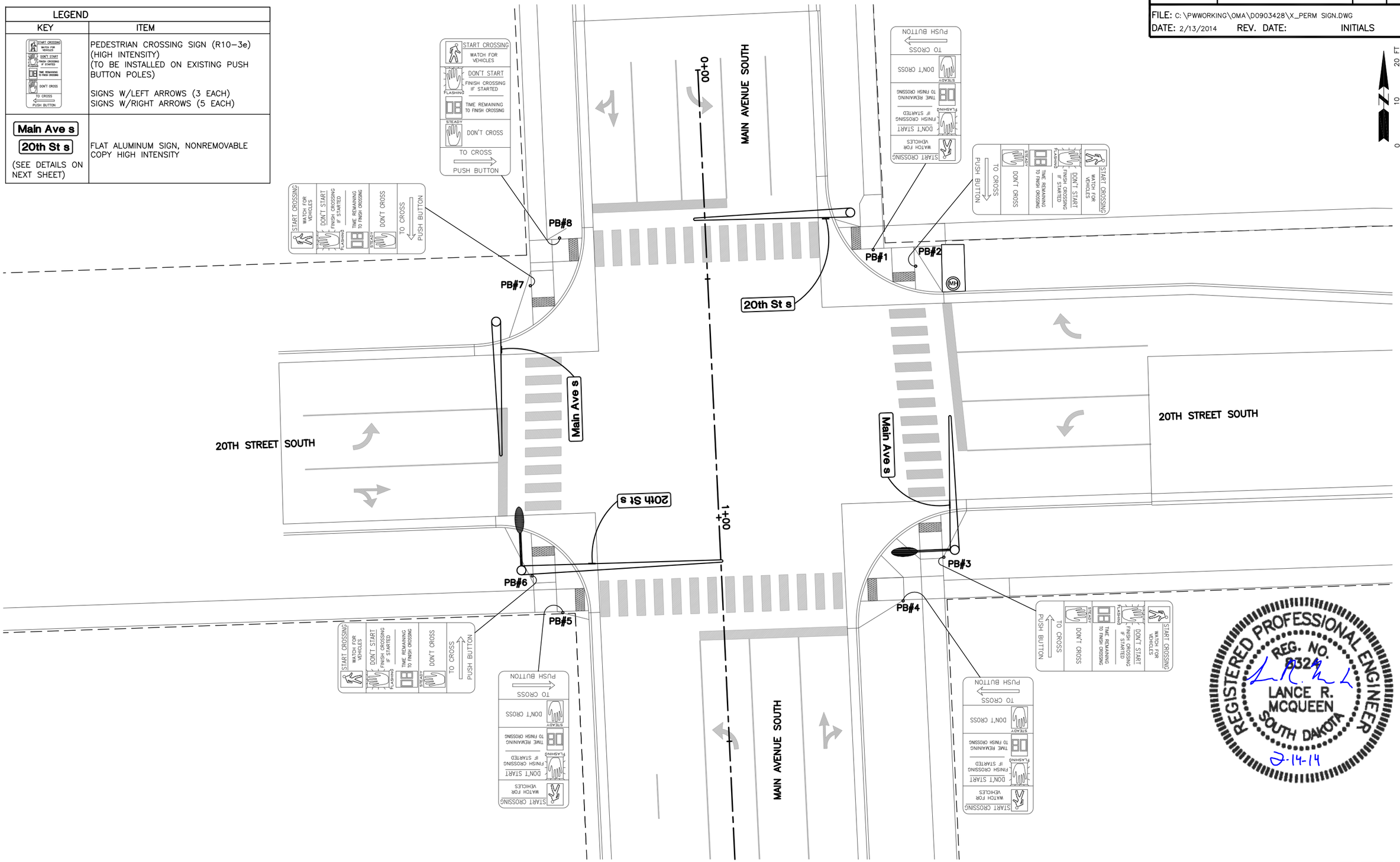

REGISTERED PROFESSIONAL ENGINEER
REG. NO. 8324
LANCE R. MCQUEEN
SOUTH DAKOTA
2-14-14

HDR

PERMANENT SIGN DETAILS

FOR BIDDING PURPOSES ONLY

STATE OF SOUTH DAKOTA	PROJECT	SHEET NO.	TOTAL SHEETS
	P 3313(11)	12	22

FILE: C:\PWWORKING\OMA\D0903428\X_PERM SIGN.DWG
DATE: 2/11/2014 REV. DATE: INITIALS

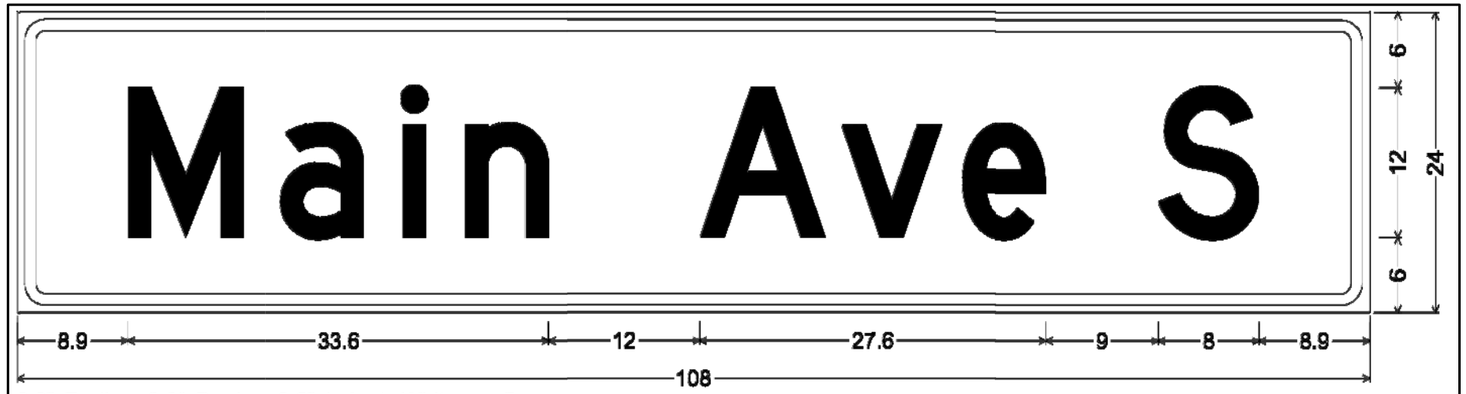

2.3" Radius, 0.9" Border, 0.6" Indent, White on Green;
"Main Ave" D; "S" D;
Table of letter and object lefts.

M	a	i	n	A	v	e	S
8.9	20.9	30.8	35.8	54.5	65.8	75.4	91.1

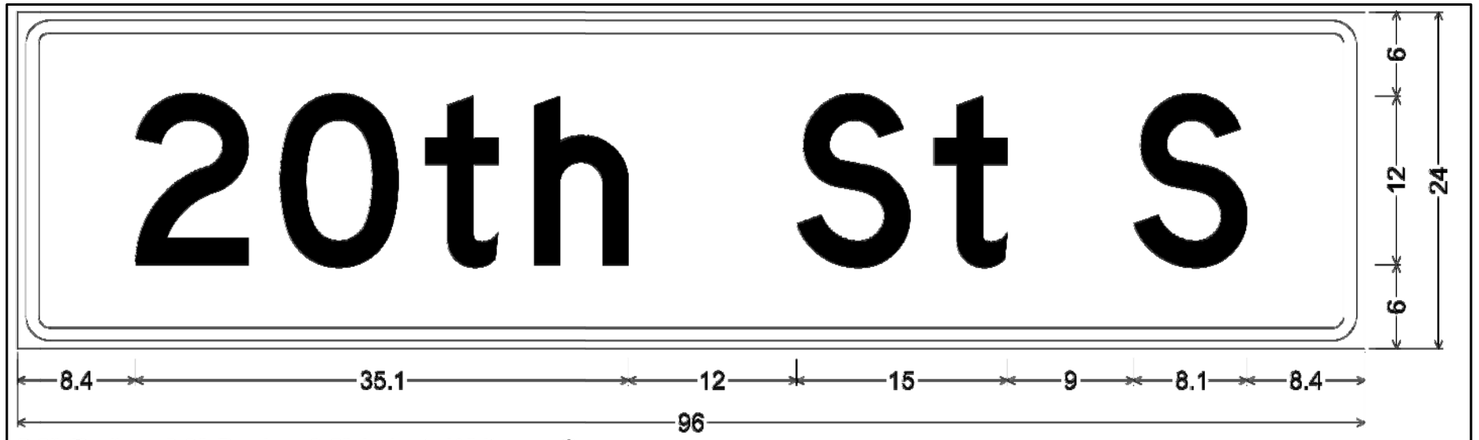

2.3" Radius, 0.9" Border, 0.6" Indent, White on Green;
"20th St" D; "S" D;
Table of letter and object lefts.

2	0	t	h	S	t	S
8.4	18.7	29.1	36.8	55.5	65.3	79.5

MAST ARM SIGN NOTE:
ONLY ONE MAST ARM SIGN SHALL BE INSTALLED PER MAST ARM AS SHOWN ON THE PLANS. THE MAST ARM SIGNS SHALL BE SINGLE SIDED.

HDR

WIRING DIAGRAM

FOR BIDDING PURPOSES ONLY

STATE OF SOUTH DAKOTA	PROJECT	SHEET NO.	TOTAL SHEETS
	P 3313(11)	13	22

FILE: C:\PWWORKING\OMA\D0903428\X_WIRING-TIMING.DWG
DATE: 2/14/2014 REV. DATE: INITIALS

LEGEND:
- FUSE: 6 amp. Non-Time Delay or 2 8/10 amp. Dual Element
- LUMINAIRE: 250 watt High Pressure Sodium Lamp

NOTE:
All circuits shall be bonded in accordance with the NATIONAL ELECTRICAL CODE. Quantities for bonding conductors are not included in these plans.

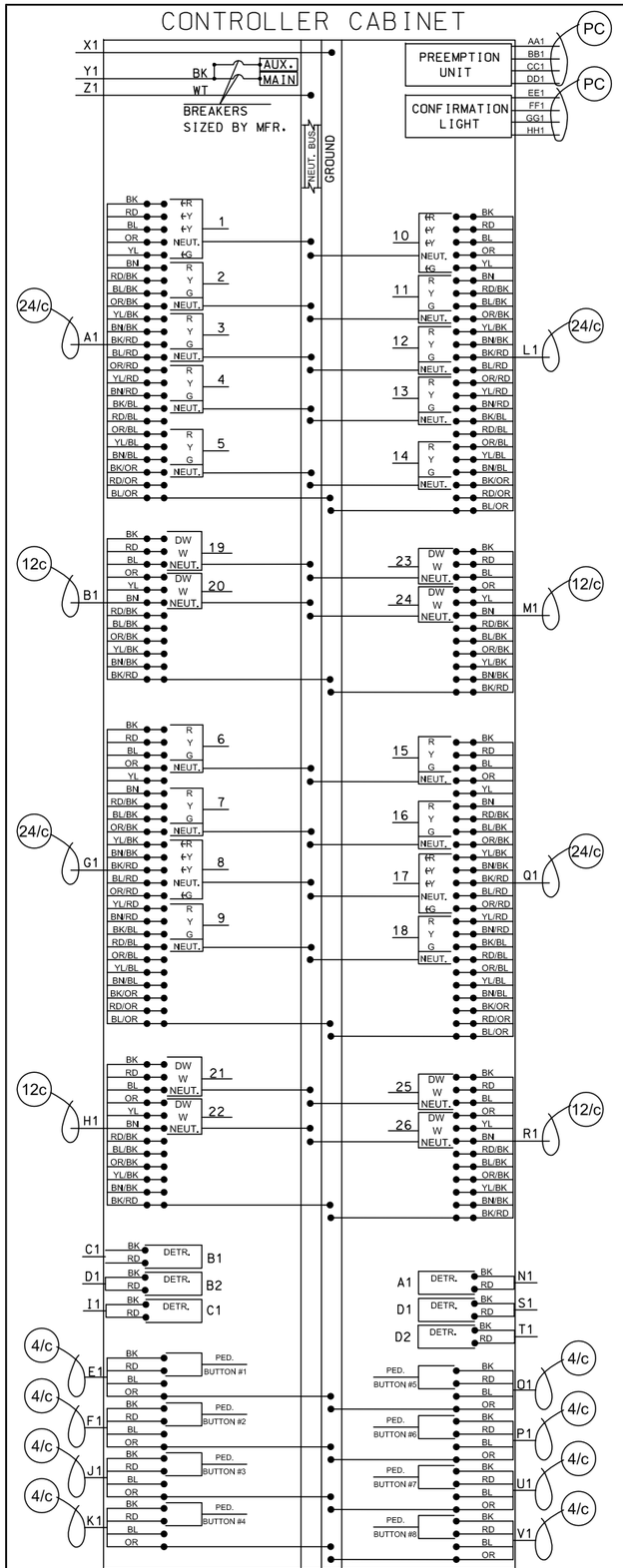

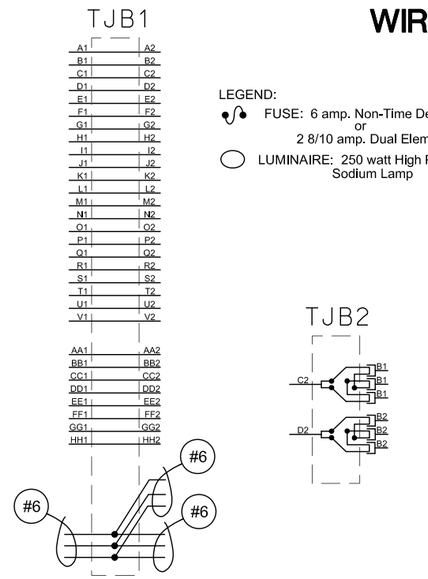

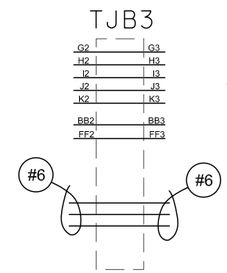

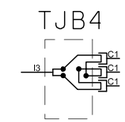

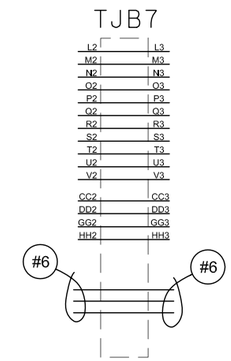

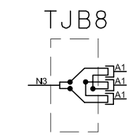

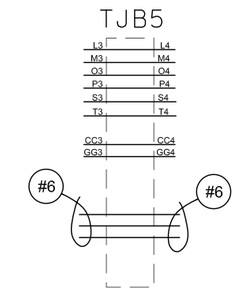

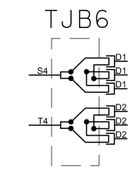

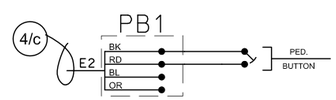

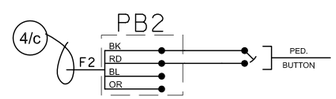

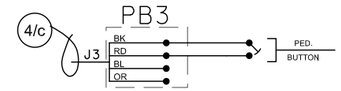

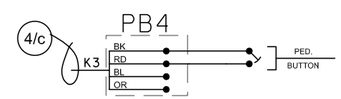

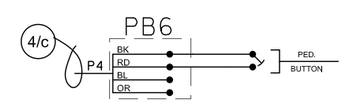

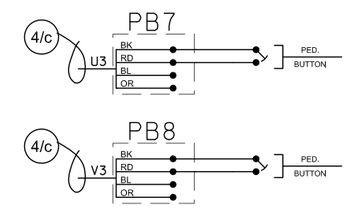

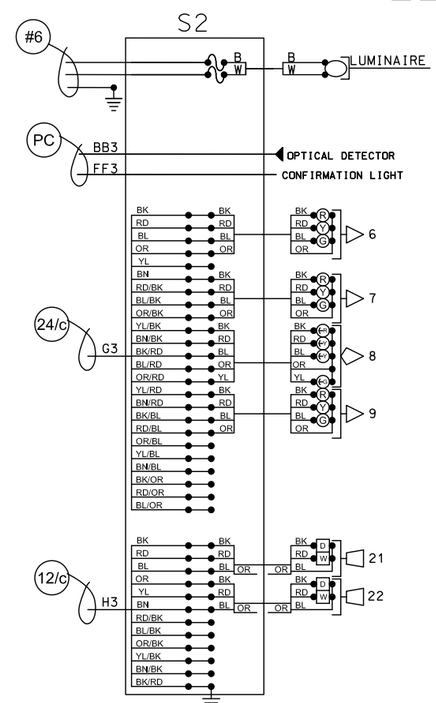

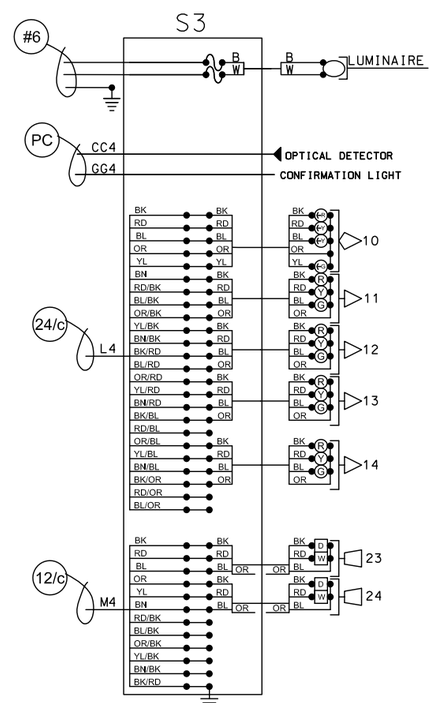

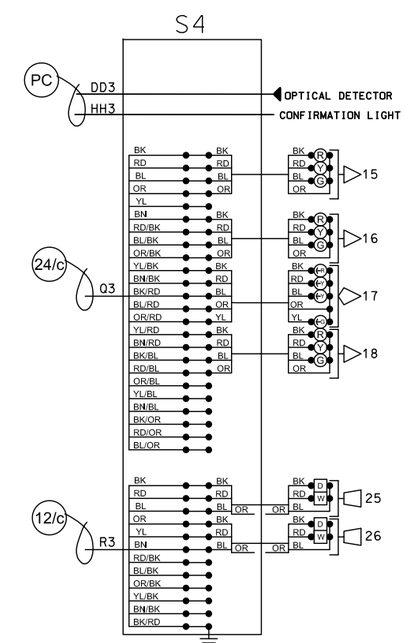

REGISTERED PROFESSIONAL ENGINEER
REG. NO. 8324
LANCE R. MCQUEEN
SOUTH DAKOTA
2-14-14

HDR

TIMING PLAN

FOR BIDDING PURPOSES ONLY

STATE OF SOUTH DAKOTA	PROJECT	SHEET NO.	TOTAL SHEETS
	P 3313(11)	14	22

FILE: C:\PWWORKING\OMA\D0903428\X_WIRING-TIMING.DWG
DATE: 2/13/2014 REV. DATE: INITIALS

PHASING, SEQUENCING & TIMING

INTERVALS / SIGNALS	1	2	3	4	5	6	7	8	9	10	11	12	13	14	15	16	17	18	19	20	FLASH DISPLAY
WESTBOUND - HEADS 13,15,16,18	R	R	R	R	R	R	R	R	R	R	R	R	R	G	Y	R	G	G	Y	R	R
EASTBOUND - HEADS 4,6,7,9	R	R	R	R	R	R	R	R	R	R	R	R	R	G	Y	R	G	G	Y	R	R
E.B. & W.B. PEDS - HEADS 19,22,23,26	DW	DW	DW	DW	DW	DW	DW	DW	DW	DW	DW	DW	DW	DW	DW	DW	W	FDW	DW	DW	NO DISPLAY
NORTHBOUND LEFT - HEADS 1,17	<G	<Y	<G	<Y	<R	<R	<FY	<Y	<R	<FY	<FY	<Y	<R	<R	<R	<R	<R	<R	<R	<R	<Y
NORTHBOUND THRU - HEADS 2,3,5	R	R	G	R	R	R	G	Y	R	G	G	Y	R	R	R	R	R	R	R	R	Y
SOUTHBOUND LEFT - HEADS 8,10	<G	<Y	<R	<R	<G	<Y	<FY	<Y	<R	<FY	<FY	<Y	<R	<R	<R	<R	<R	<R	<R	<R	<Y
SOUTHBOUND THRU - HEADS 11,12,14	R	R	R	R	G	G	G	Y	R	G	G	Y	R	R	R	R	R	R	R	R	Y
N.B. & S.B. PEDS - HEADS 20,21,24,25	DW	DW	DW	DW	DW	DW	DW	DW	DW	W	FDW	DW	DW	DW	DW	DW	DW	DW	DW	DW	NO DISPLAY
SEQUENCE	A -OR- -OR-						B -OR-							D -OR-							FLASH TIME
PHASES	1&5		6		2		2&6			2&6 W/PED				4&8			4&8 W/PED				
MOVEMENTS	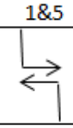						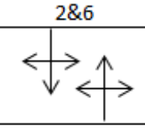			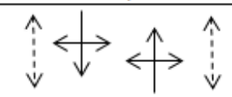				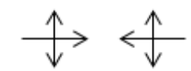			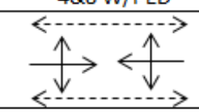				MIDNIGHT TO 6 A.M.
CYCLE 1: 6 A.M. TO MIDNIGHT CYCLE LENGTH = 64 SEC.																					
MINIMUM INITIAL	4		4		4		21			4	15			12			4	17			
PASSAGE	3		3		3									3							
MAX	7		7		7		21				21			21				21			
VEHICLE CLEARANCES		3		3		3		4	2			4	2		4	2			4	2	

PEAK HOUR TURNING MOVEMENTS AM (PM) (2013)

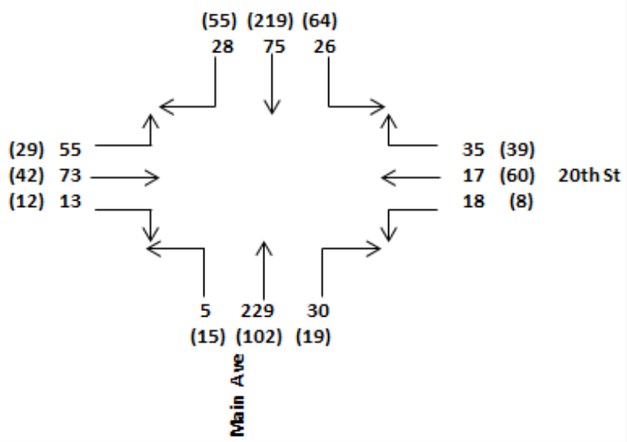

N

PHASING DIAGRAM

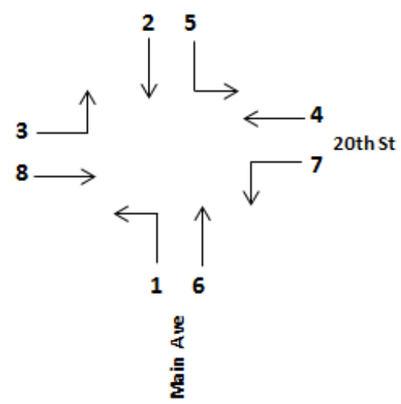

REGISTERED PROFESSIONAL ENGINEER
REG. NO. 8324
LANCE R. MCQUEEN
SOUTH DAKOTA
2-14-14

HDR

STANDARD DETAILS

FOR BIDDING PURPOSES ONLY

STATE OF SOUTH DAKOTA	PROJECT	SHEET NO.	TOTAL SHEETS
	P 3313(11)	15	22

FILE: C:\PWWORKING\OMA\D0903428\X_DETAILS.DWG
DATE: 2/11/2014 REV. DATE: INITIALS

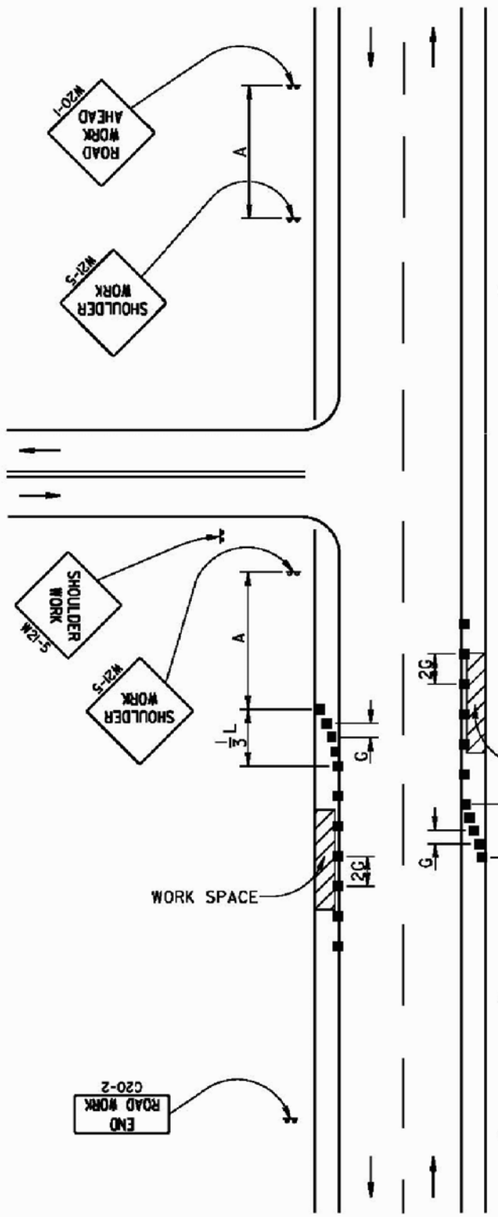

Posted Speed Prior to Work (M.P.H.)	Spacing of Advance Warning Signs (Feet) (A)	Taper Length (Feet) (L)	Spacing of Channelizing Devices (Feet) (G)
0 - 30	100 - 200	180	25
35 - 40	350	320	25
45 - 50	500	600	50
55	750	660	50
60 - 65	1000	780	50

■ Channelizing Device

END ROAD WORK
G20-2

The channelizing devices shall be drums or 42" cones if traffic control must remain overnight or longer.

For short duration operations (1 hour or less) all signs and channelizing devices may be eliminated if a vehicle with an activated flashing or revolving yellow light is used.

Worker signs (W21-1 or W21-1a) may be used instead of SHOULDER WORK signs.

A SHOULDER WORK sign should be placed on the left side of a divided or one-way roadway only if the left shoulder is affected.

The SHOULDER WORK sign on an intersecting roadway is not required if drivers emerging from that roadway will encounter another advance warning sign before they reach a work activity area.

WORK SPACE

L/3
G
2G
A
A
SHOULDER WORK
W21-5
ROAD WORK AHEAD
W20-1

February 14, 2011

Published Date: 4th Qtr. 2013	SDDOT	GUIDES FOR TRAFFIC CONTROL DEVICES WORK ON SHOULDERS	PLATE NUMBER 634.03 Sheet 1 of 1

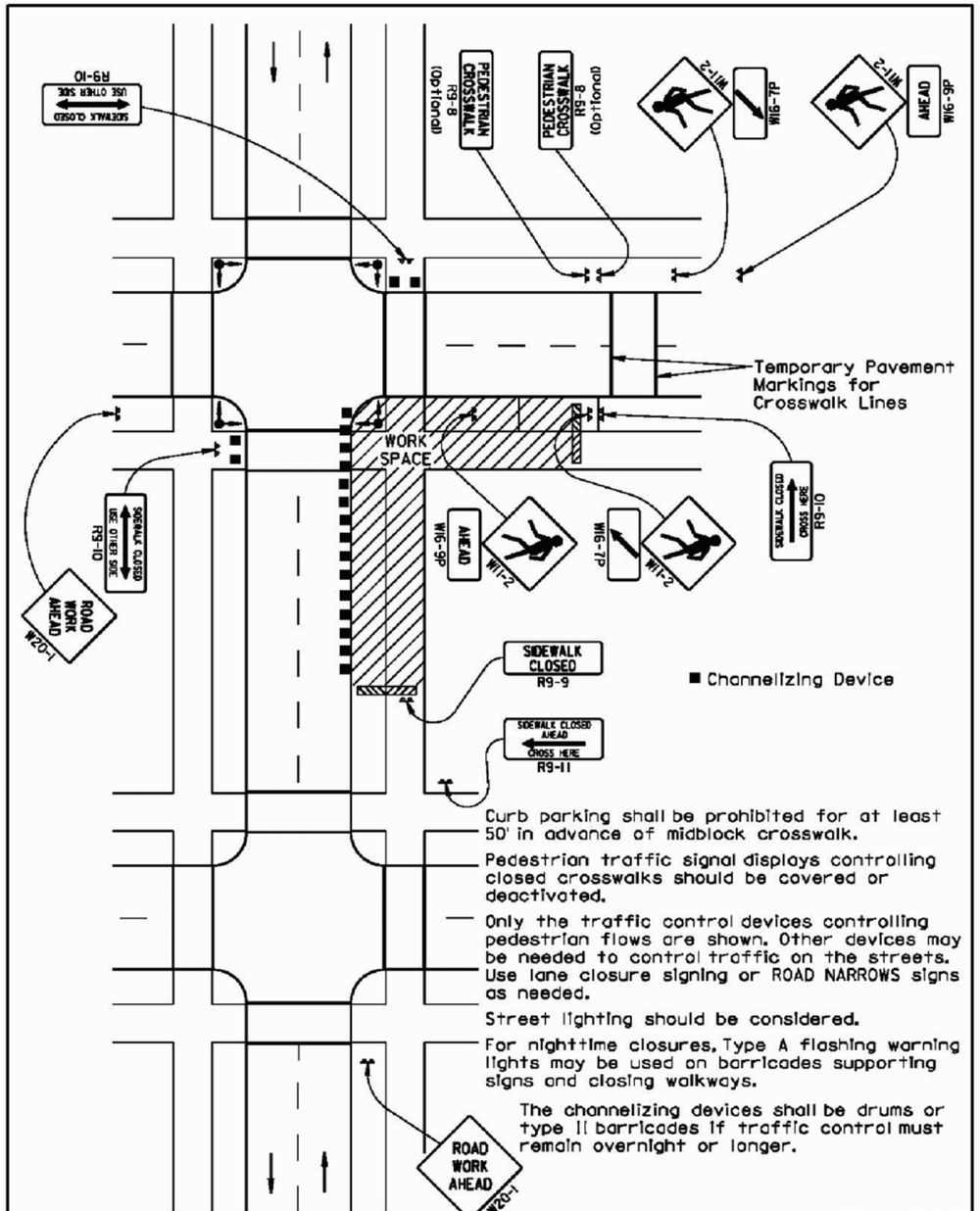

■ Channelizing Device

Curb parking shall be prohibited for at least 50' in advance of midblock crosswalk.

Pedestrian traffic signal displays controlling closed crosswalks should be covered or deactivated.

Only the traffic control devices controlling pedestrian flows are shown. Other devices may be needed to control traffic on the streets. Use lane closure signing or ROAD NARROWS signs as needed.

Street lighting should be considered.

For nighttime closures, Type A flashing warning lights may be used on barricades supporting signs and closing walkways.

The channelizing devices shall be drums or type II barricades if traffic control must remain overnight or longer.

February 14, 2011

Published Date: 1st Qtr. 2014	SDDOT	GUIDES FOR TRAFFIC CONTROL DEVICES SIDEWALK CLOSURES AND PEDESTRIAN DETOURS	PLATE NUMBER 634.33 Sheet 1 of 1

HDR

STANDARD DETAILS

FOR BIDDING PURPOSES ONLY

STATE OF SOUTH DAKOTA	PROJECT	SHEET NO.	TOTAL SHEETS
	P 3313(11)	16	22

FILE: C:\PWWORKING\OMA\D0903428\X_DETAILS.DWG
DATE: 2/11/2014 REV. DATE: INITIALS

Posted Speed Prior to Work (M.P.H.)	Spacing of Advance Warning Signs (Feet) (A)	Taper Length (Feet) (L)	Spacing of Channelizing Devices (Feet) (G)
0 - 30	200	180	25
35 - 40	350	320	25
45 - 50	500	600	50 *
55	750	660	50 *
60 - 65	1000	780	50 *

* Spacing to be every 40' for 42" cones.

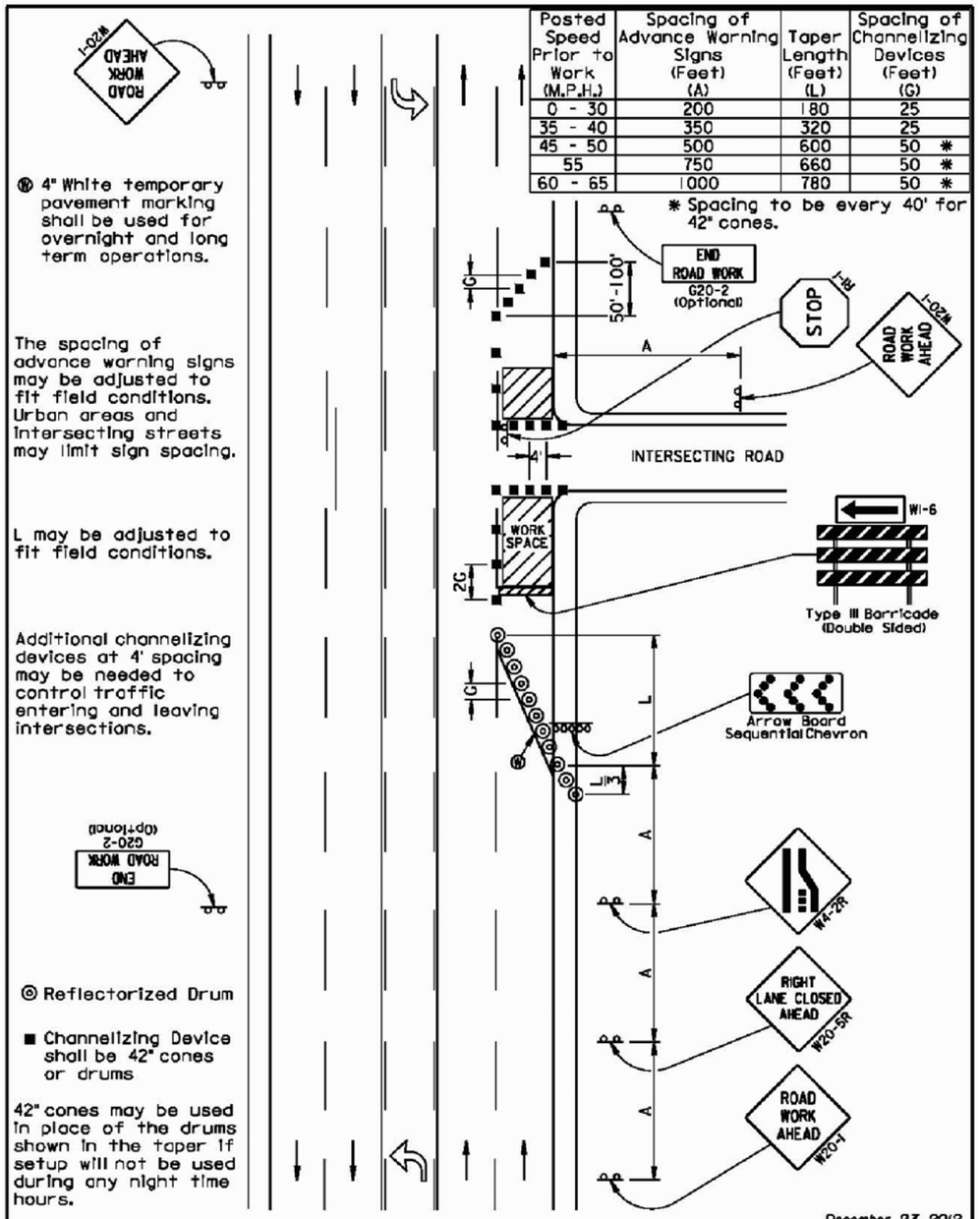

(W) 4" White temporary pavement marking shall be used for overnight and long term operations.

The spacing of advance warning signs may be adjusted to fit field conditions. Urban areas and intersecting streets may limit sign spacing.

L may be adjusted to fit field conditions.

Additional channelizing devices at 4' spacing may be needed to control traffic entering and leaving intersections.

◎ Reflectorized Drum

■ Channelizing Device shall be 42" cones or drums

42" cones may be used in place of the drums shown in the taper if setup will not be used during any night time hours.

December 23, 2012

Published Date: 4th Qtr. 2013	SDDOT	GUIDES FOR TRAFFIC CONTROL DEVICES 5-LANE, OUTSIDE LANE CLOSED	PLATE NUMBER 634.60 Sheet 1 of 1

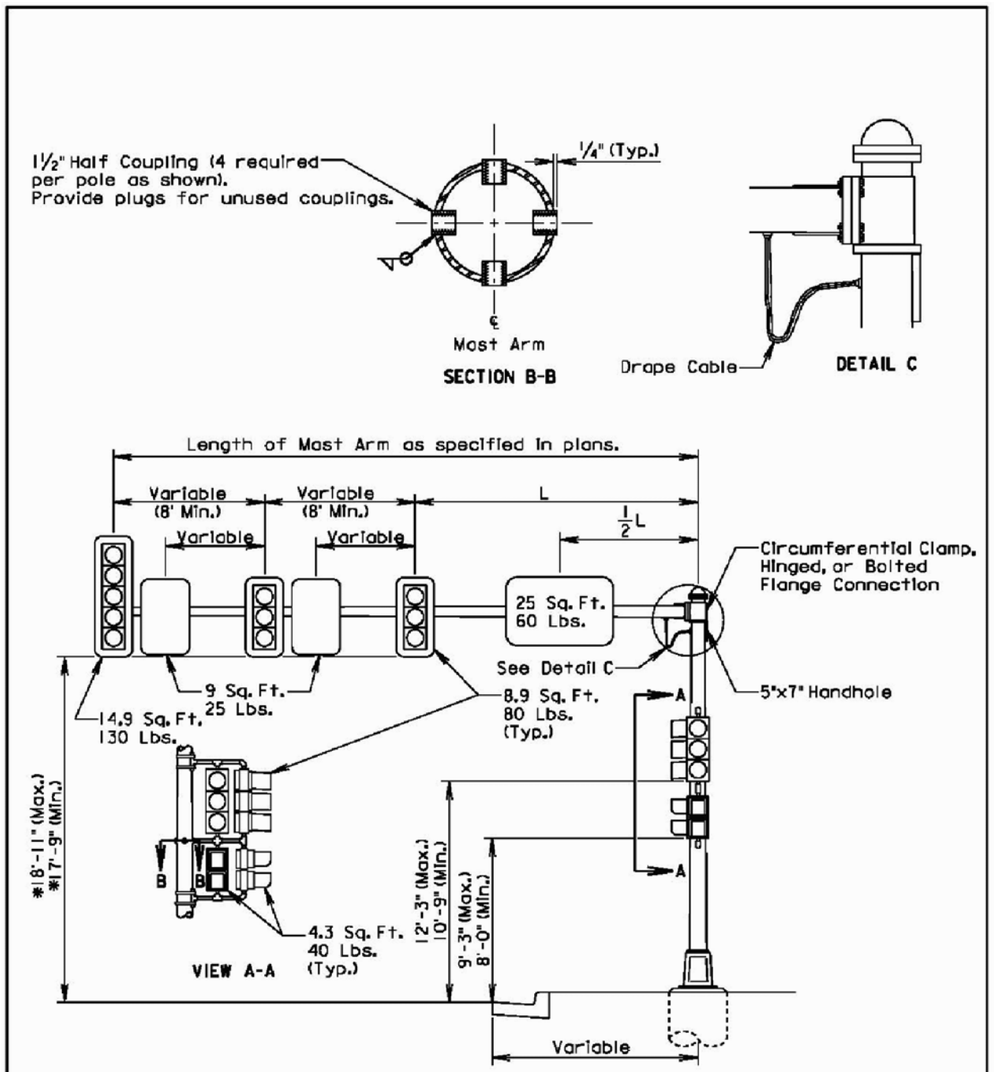

GENERAL NOTES:

Some of the signal heads are shown with backplates removed so that the mounting hardware is visible.

* The signal height allowances shown above are based on a horizontal distance greater than 53' between the signals and stop line. For horizontal distance of 53' and less between the signals and the stop line, the height allowances shall be as specified in Section 4D.15 of the MUTCD.

December 23, 2008

Published Date: 4th Qtr. 2013	SDDOT	SIGNAL POLE (WITH MAST ARM)	PLATE NUMBER 635.31 Sheet 1 of 1

HDR

STANDARD DETAILS

FOR BIDDING PURPOSES ONLY

STATE OF SOUTH DAKOTA	PROJECT	SHEET NO.	TOTAL SHEETS
	P 3313(11)	17	22

FILE: C:\PWWORKING\OMA\D0903428\X_DETAILS.DWG
DATE: 2/11/2014 REV. DATE: INITIALS

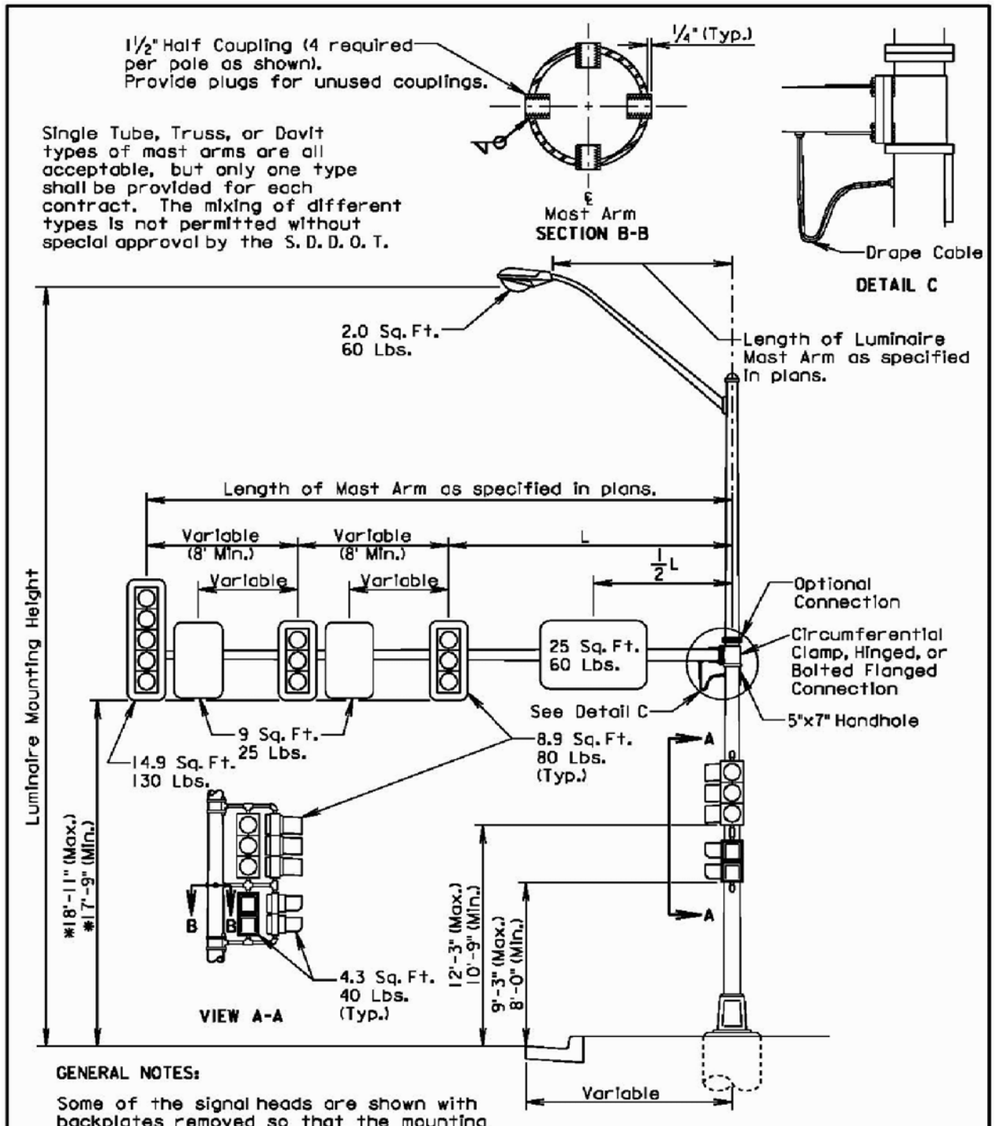

GENERAL NOTES:

Some of the signal heads are shown with backplates removed so that the mounting hardware is visible.

* The signal height allowances shown above are based on a horizontal distance greater than 53' between the signals and stop line. For horizontal distance of 53' and less between the signals and the stop line, the height allowances shall be as specified in Section 4D.15 of the MUTCD.

December 23, 2008

Published Date: 4th Qtr. 2013	SDDOT	SIGNAL POLE (WITH MAST ARM AND LUMINAIRE EXTENSION)	PLATE NUMBER 635.32 Sheet 1 of 1

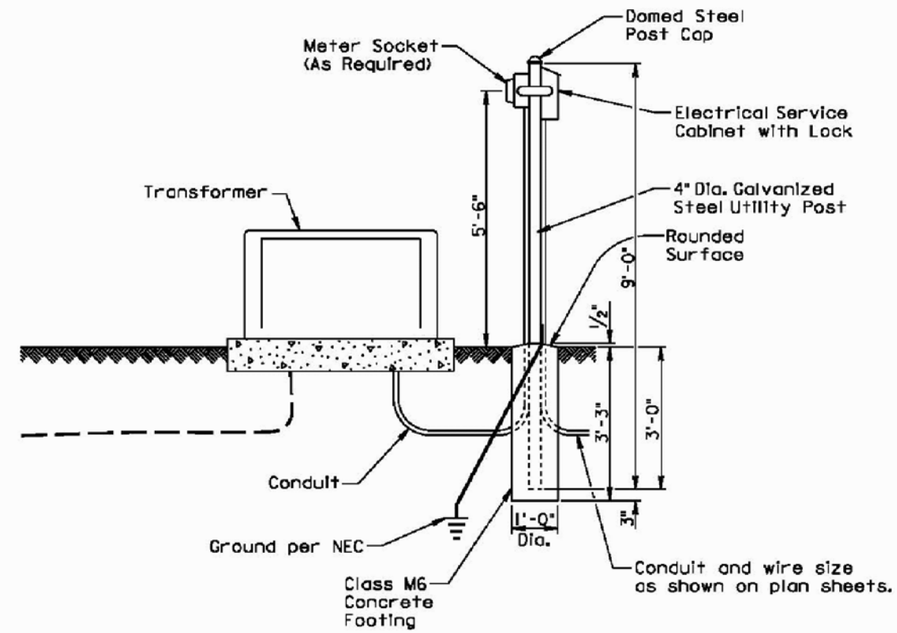

ELEVATION

GENERAL NOTES:

The concrete for the post footing shall be class M6 concrete.

The 4" diameter galvanized steel utility post shall be 9' long and shall be in conformance with AASHTO Standard Specifications M181. The post shall be Type 1 and either Grade 1 or Grade 2. The domed steel post cap shall be in conformance with AASHTO Standard Specifications M181 and shall be Type 1.

The Contractor shall contact and coordinate his/her work with the Utility Companies regarding hookup requirements, fees, materials, and equipment necessary.

All costs for furnishing and installing all materials from the electrical service cabinet to the transformer including labor, equipment, hookup fees, all items within the cabinet, post, concrete footing, post cap, meter socket if required, conduit, and incidentals shall be incidental to the contract unit price per each for "Electrical Service Cabinet".

June 26, 2006

Published Date: 4th Qtr. 2013	SDDOT	SERVICE FROM PAD MOUNTED TRANSFORMER WITH METER ON A GALVANIZED STEEL UTILITY POST	PLATE NUMBER 635.41 Sheet 1 of 1

HDR

STANDARD DETAILS

FOR BIDDING PURPOSES ONLY

STATE OF SOUTH DAKOTA	PROJECT	SHEET NO.	TOTAL SHEETS
	P 3313(11)	18	22

FILE: C:\PWWORKING\OMA\D0903428\X_DETAILS.DWG
DATE: 2/11/2014 REV. DATE: INITIALS

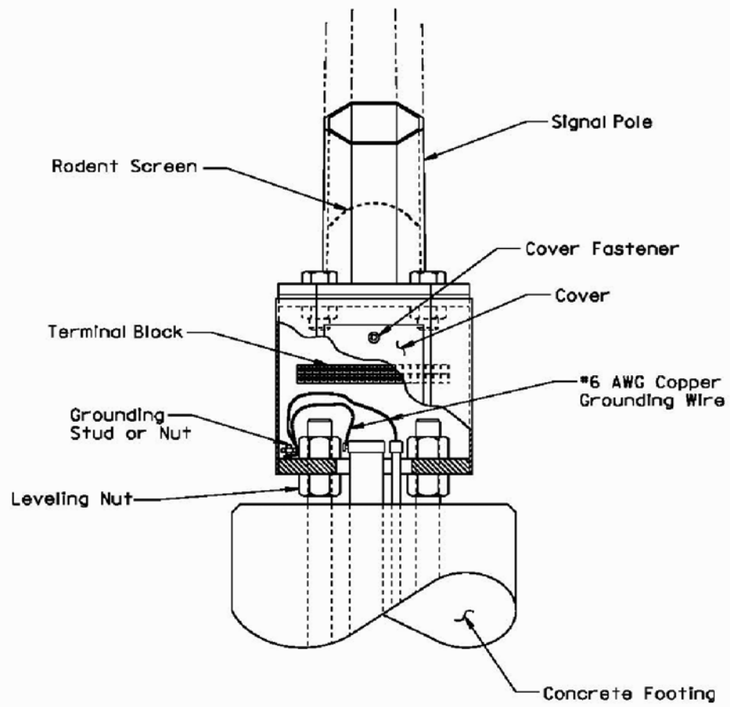

GENERAL NOTES:

Base details are provided for example only and are not intended to be a complete design.

The Contractor shall furnish and install a rodent screen in the signal pole above the tranformer base. The rodent screen shall be a galvanized steel mesh with a maximum opening size of ¼ inch. The rodent screen shall be friction fitted or installed by other methods approved by the Engineer.

All costs for furnishing and installing the rodent screen including labor, equipment, and materials shall be incidental to the contract unit price per each for the corresponding signal pole bid item.

December 23, 2008

Published Date: 4th Qtr. 2013	SDDOT	TRANSFORMER SIGNAL POLE BASE	PLATE NUMBER 635.50
			Sheet 1 of 1

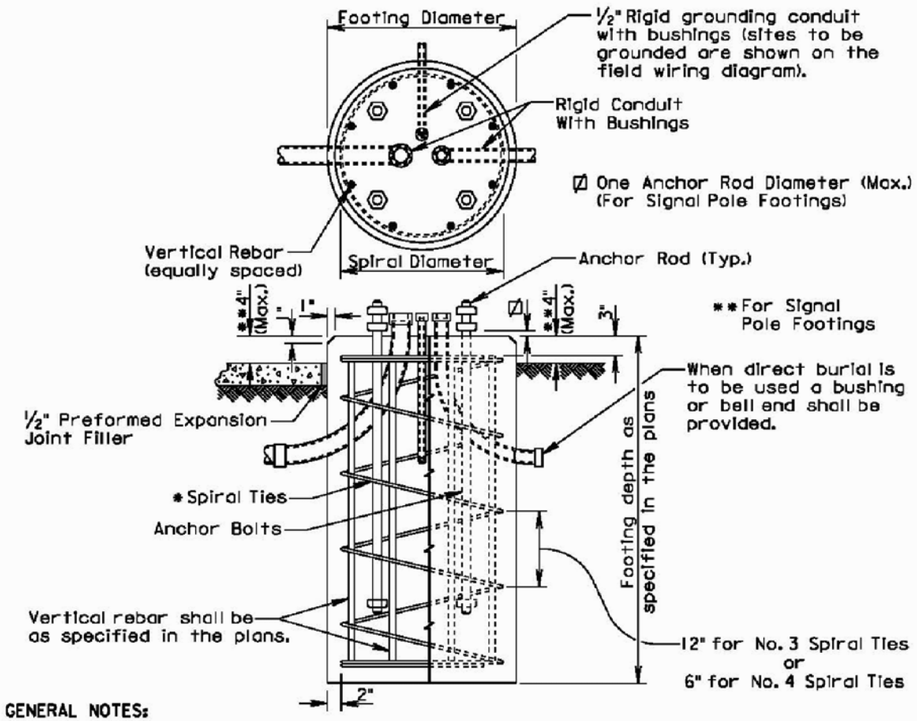

GENERAL NOTES:

* The tie sizes are specified in the plans. Circular ties may be used in lieu of the spiral ties. The No. 3 ties shall be spaced 12 inches apart except for the top two which shall be spaced 6 inches apart. The No. 4 ties shall be spaced 6 inches apart except for the top two which shall be spaced 3 inches apart. The ties shall be lapped 18 inches and the laps shall be staggered around the cage.

Spiral ties shall have 1-1/2 extra turns at each end.

See section 985 of the Standard Specifications for footing materials.

Conduits and bushings may project 2½ inches to 6 inches above footing for fixed base poles but shall not project above the slip plane or fracture plane for breakaway poles.

Conduits shall be sealed water-tight during all phases of construction until poles are in place.

The anchor rods shall fit inside the reinforcing steel cage. If the anchor rods designed by the Pole Manufacturer do not fit, contact the Office of Bridge Design for footing redesign. No additional payment will be made for the redesigned footing.

Costs of conduit and conduit bushings shown on footing detail shall be incidental to the footing bid item(s).

The pole shall not be installed until the concrete has attained design strength (4000 psi).

The contour of the area surrounding the breakaway pole shall be flat, though not necessarily level for a distance of 5 feet in all directions. The Contractor may be required to provide finish grading at some breakaway pole locations.

September 6, 2013

Published Date: 4th Qtr. 2013	SDDOT	POLE FOOTING	PLATE NUMBER 635.55
			Sheet 1 of 1

HDR

STANDARD DETAILS

FOR BIDDING PURPOSES ONLY

STATE OF SOUTH DAKOTA	PROJECT	SHEET NO.	TOTAL SHEETS
	P 3313(11)	19	22

FILE: C:\PWWORKING\OMA\D0903428\X_DETAILS.DWG
DATE: 2/11/2014 REV. DATE: INITIALS

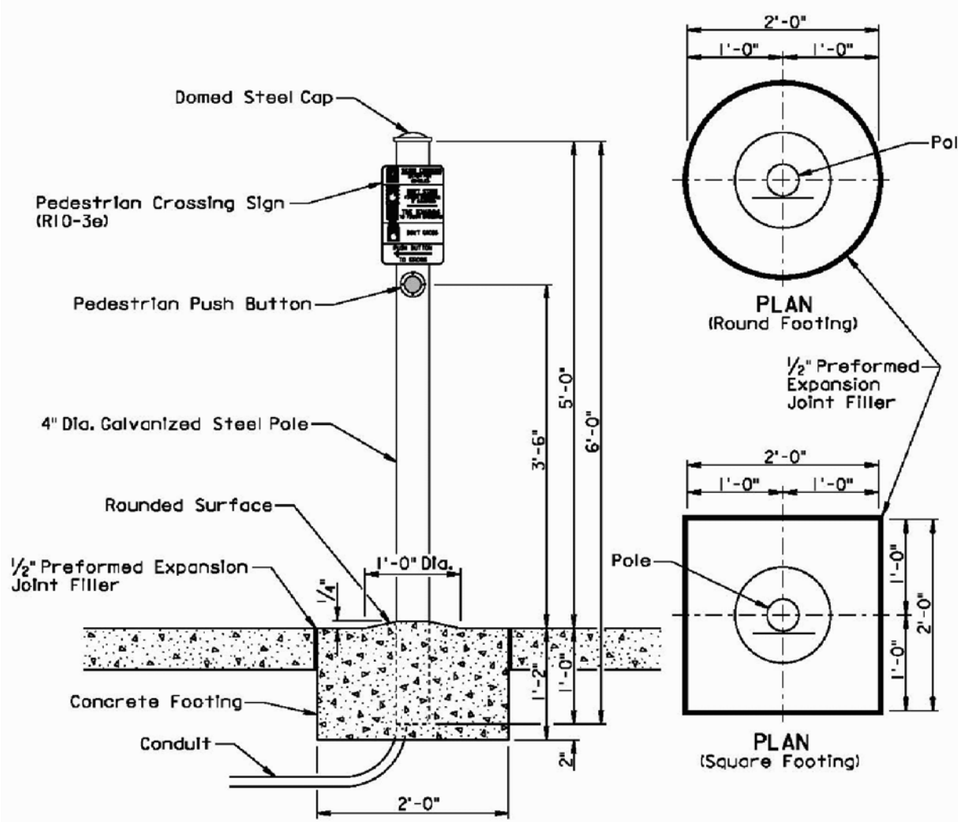

GENERAL NOTES:

The Contractor shall install either the round or the square concrete footing. For informational purpose, the quantity of concrete for one footing is 0.14 cubic yards for the round footing and 0.17 cubic yards for the square footing.

The concrete for the footing shall be class M6 concrete.

The 4" diameter galvanized steel pole shall be 6' long and shall be in conformance with AASHTO Standard Specifications M181. The pole shall be Type I and either Grade I or Grade 2. The domed steel pole cap shall be in conformance with AASHTO Standard Specifications M181 and shall be Type I.

All costs for furnishing and installing the pedestrian push button pole including labor, equipment, and materials including the pole, concrete footing, steel cap, and the conduit in the footing shall be incidental to the contract unit price per each for "Pedestrian Push Button Pole".

February 14, 2010

Published Date: 4th Qtr. 2013 | SDDOT | **PEDESTRIAN PUSH BUTTON POLE** | PLATE NUMBER 635.57 | Sheet 1 of 1

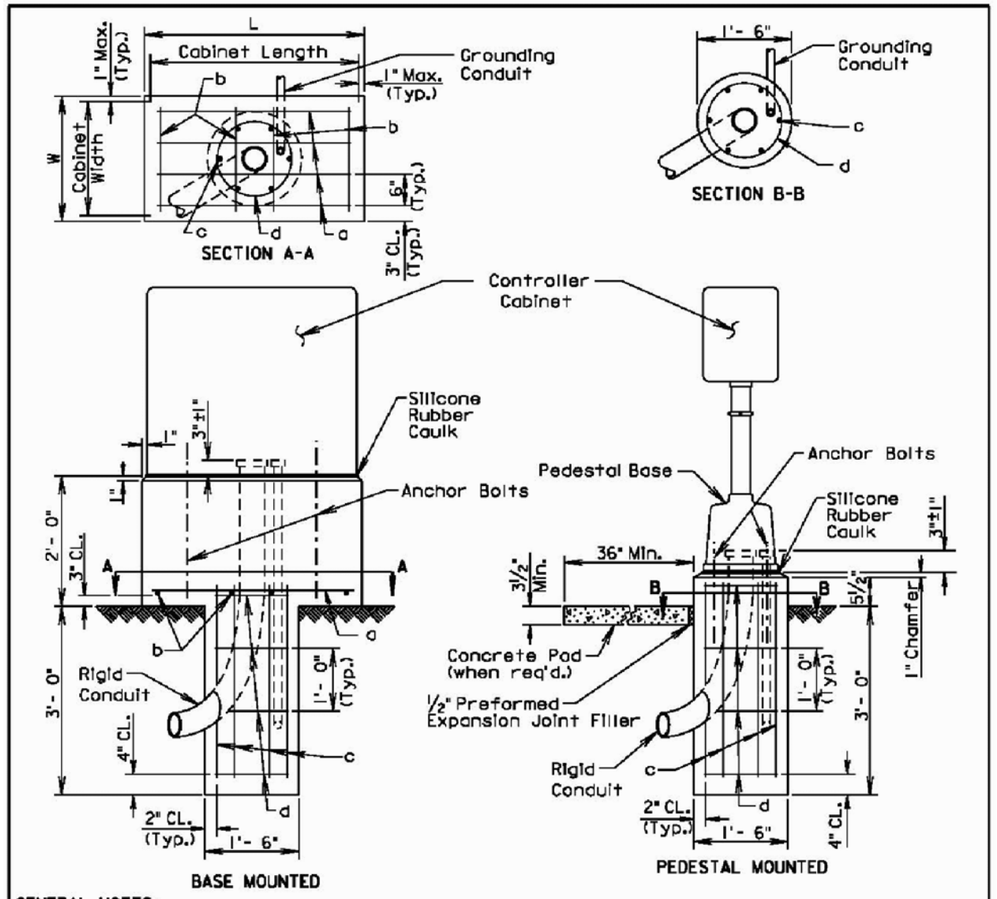

GENERAL NOTES:

The above ground portion of the footing shall conform to the base of the controller to the satisfaction of the Engineer.

Conduits shall be sealed and water-tight until the conductor cables are installed.

If the controller is not located within or adjacent to an existing sidewalk, the Contractor shall provide a concrete pad as directed by the Engineer.

Anchor bolts and related hardware shall conform to the controller manufacturer's requirements and recommendations.

A continuous bead of silicone rubber caulk shall provide a weather-tight seal between the base and the concrete.

Reinforcing Schedule (for one footing)

Mk.	No.	Size	Length	Type	Bending Detail
a	*	3	L - 4"	Str.	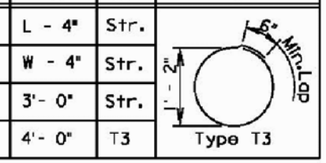
b	*	3	W - 4"	Str.	
c	6	6	3'- 0"	Str.	
d	4	3	4'- 0"	T3	Type T3

Note: Dimensions are out to out of bar

* Vary number of bars as required by footing size.

March 31, 2000

Published Date: 4th Qtr. 2013 | SDDOT | **CONTROLLER CABINET AND FOOTING** | PLATE NUMBER 635.60 | Sheet 1 of 1

HDR

STANDARD DETAILS

FOR BIDDING PURPOSES ONLY

STATE OF SOUTH DAKOTA	PROJECT	SHEET NO.	TOTAL SHEETS
	P 3313(11)	20	22

FILE: C:\PWWORKING\OMA\D0903428\X_DETAILS.DWG
DATE: 2/11/2014 REV. DATE: INITIALS

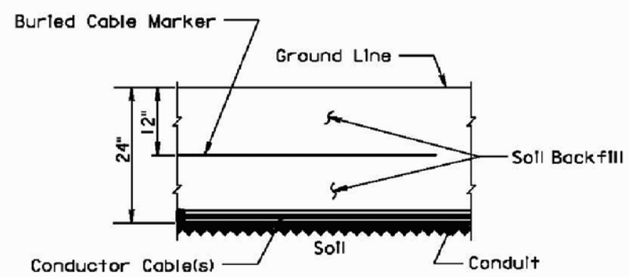

SECTION VIEW

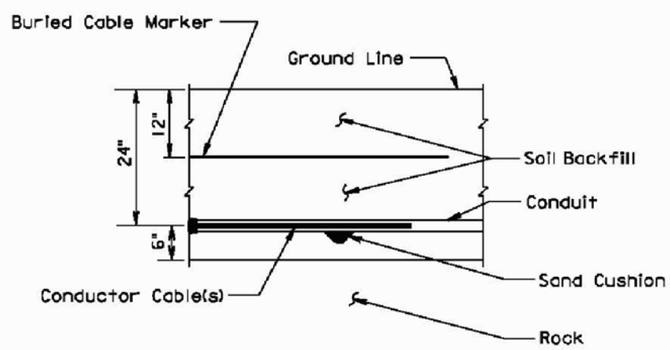

SECTION VIEW

GENERAL NOTE:

The Buried Cable Marker shall be plastic, approximately 6" wide, and shall be capable of sustaining a minimum of a 350% tolerance of elongation without tearing. The Buried Cable Marker shall have a life expectancy approximately equal to that of the conductor(s) beneath it. A phrase indicating the presence of a buried electric circuit below shall be printed in a contrasting color on the cable marker. The Buried Cable Marker shall be subject to approval by the Engineer. All costs associated with furnishing and installing the Buried Cable Marker shall be incidental to the contract unit price per Foot for the bid item used for the electrical conductor.

March 31, 2000

Published Date: 4th Qtr. 2013	SDDOT	CONDUIT INSTALLATION	PLATE NUMBER 635.76 Sheet 1 of 1

Step 1. Strip loop wires and lead-in cable.

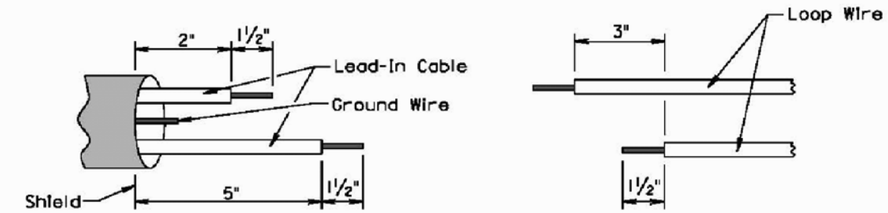

Step 2. Connect and solder.

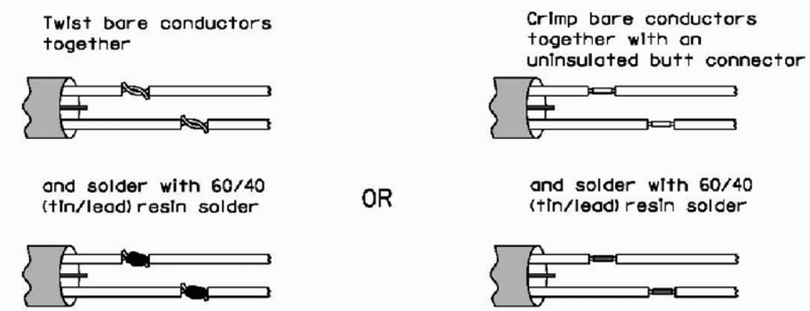

Step 3. Insulate each solder joint seperately.

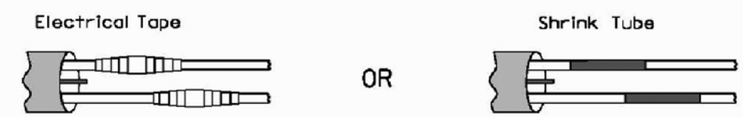

Step 4. Environmentally seal total splice against weather, moisture and abrasion. Methods for environmentally sealing the splice include heat-shrinkable tubing, special sealing kits, special forms to be filled by sealant, and tape and coating.

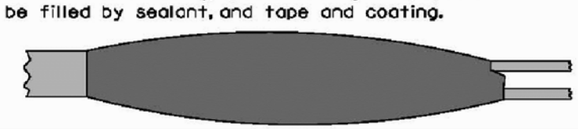

June 20, 2000

Published Date: 4th Qtr. 2013	SDDOT	DETECTOR LOOP WIRE SPLICING	PLATE NUMBER 635.77 Sheet 1 of 1

HDR

STANDARD DETAILS

FOR BIDDING PURPOSES ONLY

STATE OF SOUTH DAKOTA	PROJECT	SHEET NO.	TOTAL SHEETS
	P 3313(11)	21	22

FILE: C:\PWWORKING\OMA\D0903428\X_DETAILS.DWG
DATE: 2/11/2014 REV. DATE: INITIALS

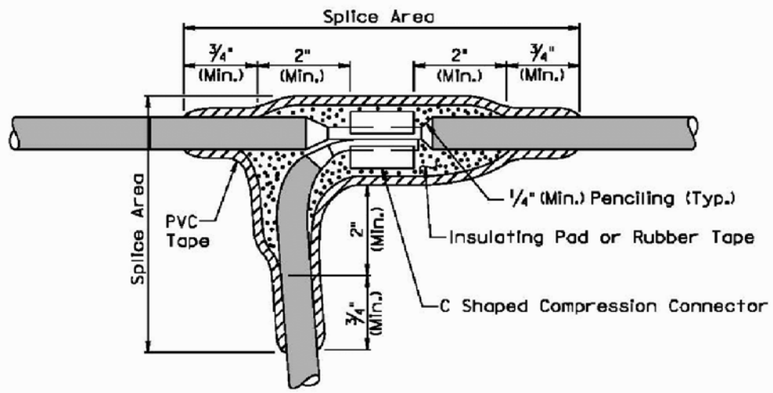

TYPE C SPLICE
(Between 1 free end and 1 through conductor)

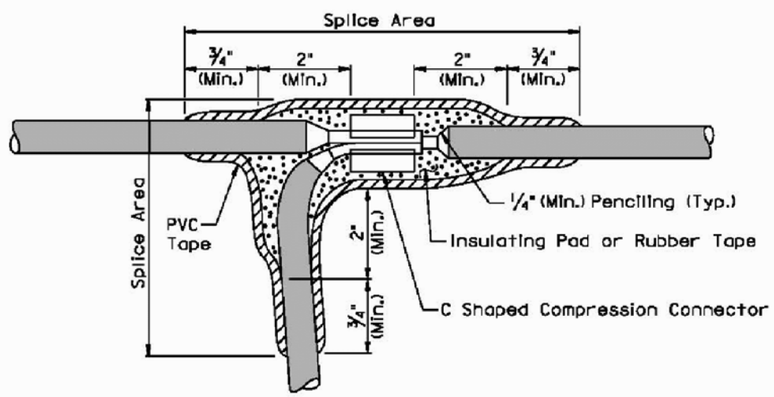

TYPE T SPLICE
(For 3 free ends)

February 14, 2010

Published Date: 4th Qtr. 2013	SDDOT	WIRE SPLICING FOR LIGHTING (LOW VOLTAGE CIRCUITS (0 to 600 V))	PLATE NUMBER 635.80 Sheet 1 of 2

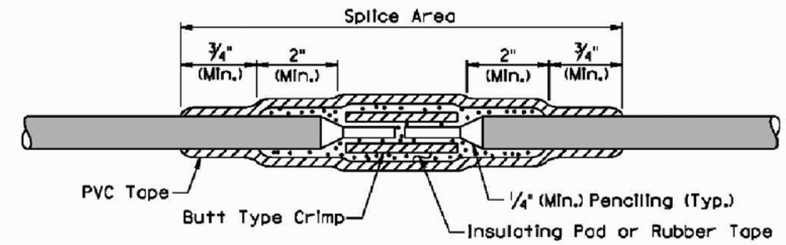

TYPE S SPLICE
(Between 2 free ends)

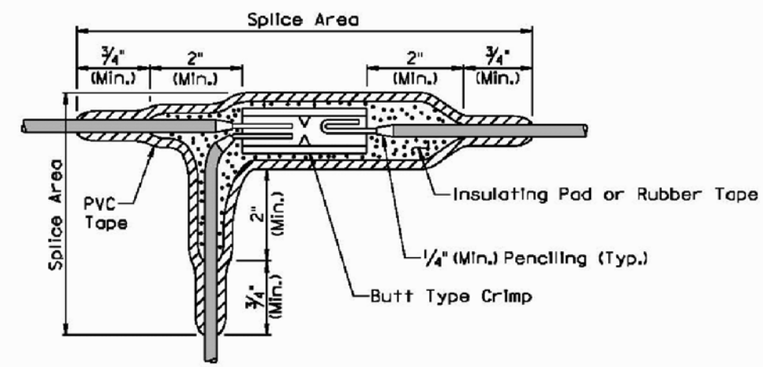

TYPE ST SPLICE
(For 3 free ends)

GENERAL NOTES:

The splice shall be environmentally sealed for protection from weather, moisture, and abrasion in accordance with the method stated below.

The rubber tapes shall be rolled after application.

Method for insulating splice area:

1. The splice area shall be completely covered with electrical insulating coating and dried.
2. Apply two layers of ⅛" minimum thickness electrical insulating pad or two layers of half lapped synthetic oil resistant self fusing rubber tape.
3. Three layers of half lapped polyvinyl chloride tape shall be applied.
4. The entire splice area shall be covered with electrical insulating coating and dried.

February 14, 2010

Published Date: 4th Qtr. 2013	SDDOT	WIRE SPLICING FOR LIGHTING (LOW VOLTAGE CIRCUITS (0 to 600 V))	PLATE NUMBER 635.80 Sheet 2 of 2

HDR

STANDARD DETAILS

FOR BIDDING PURPOSES ONLY

STATE OF SOUTH DAKOTA	PROJECT	SHEET NO.	TOTAL SHEETS
	P 3313(11)	22	22

FILE: C:\PWWORKING\OMA\D0903428\X_DETAILS.DWG
DATE: 2/11/2014 REV. DATE: INITIALS

GENERAL NOTES:

Tree Trimming shall be done in accordance with proper tree trimming practices. The underside of each branch to be removed shall have a groove sawed through the bark (1/2" Min. depth) before any sawing is started on the top side of the branch.

Tree trimming shall be applied around each light source installed within the limits of the project.

The tree trimming limits as shown on this sheet represents the minimum amount of trimming required. Additional tree trimming required shall be as directed by the Engineer. The City shall maintain the limits of tree trimming once a year.

All foliage and branches shall be removed from the limits defined below by the Completion Date of the project.

Costs for Tree Trimming for Roadway Lighting shall be incidental to the various contract bid items.

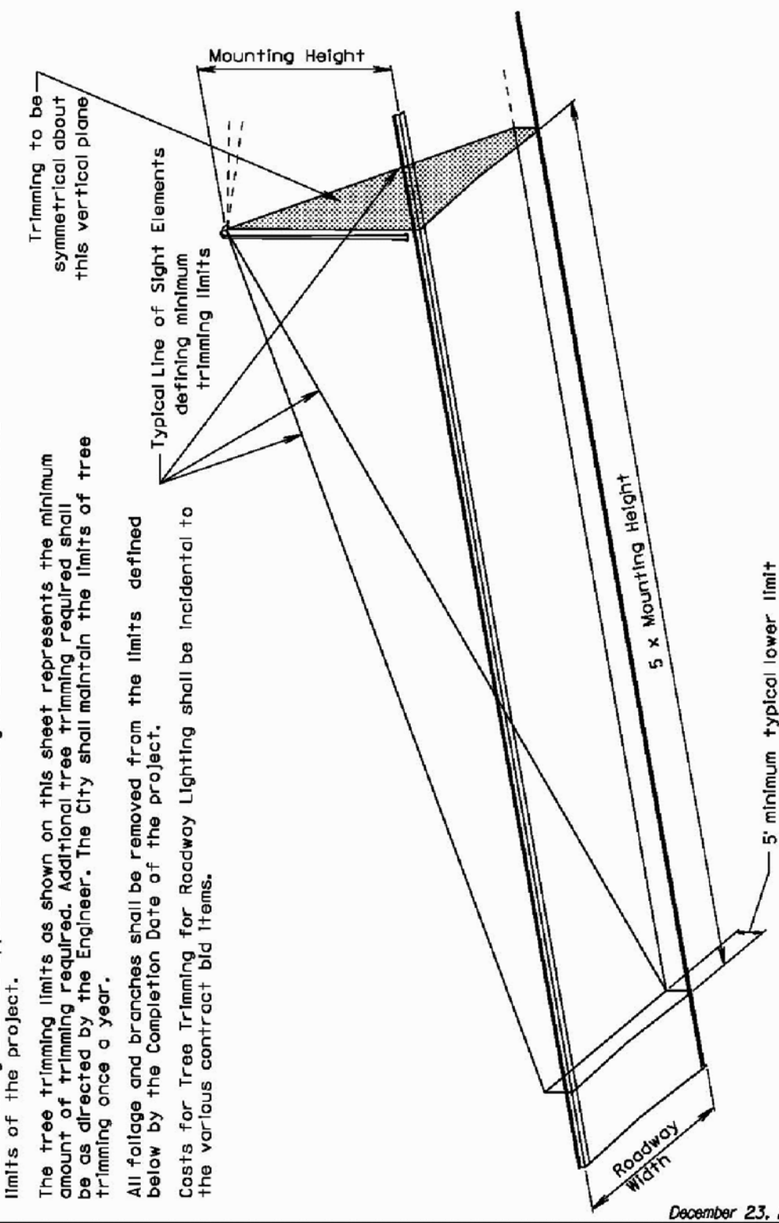

December 23, 2009

Published Date: 4th Qtr. 2013

SDDOT

TREE TRIMMING FOR ROADWAY LIGHTING

PLATE NUMBER 635.99

Sheet 1 of 1

HDR