Section B: Grading Plans

FOR BIDDING PURPOSES ONLY

STATE OF SOUTH DAKOTA	PROJECT	SHEET NO.	TOTAL SHEETS
	P 6312(18)	B1	B63

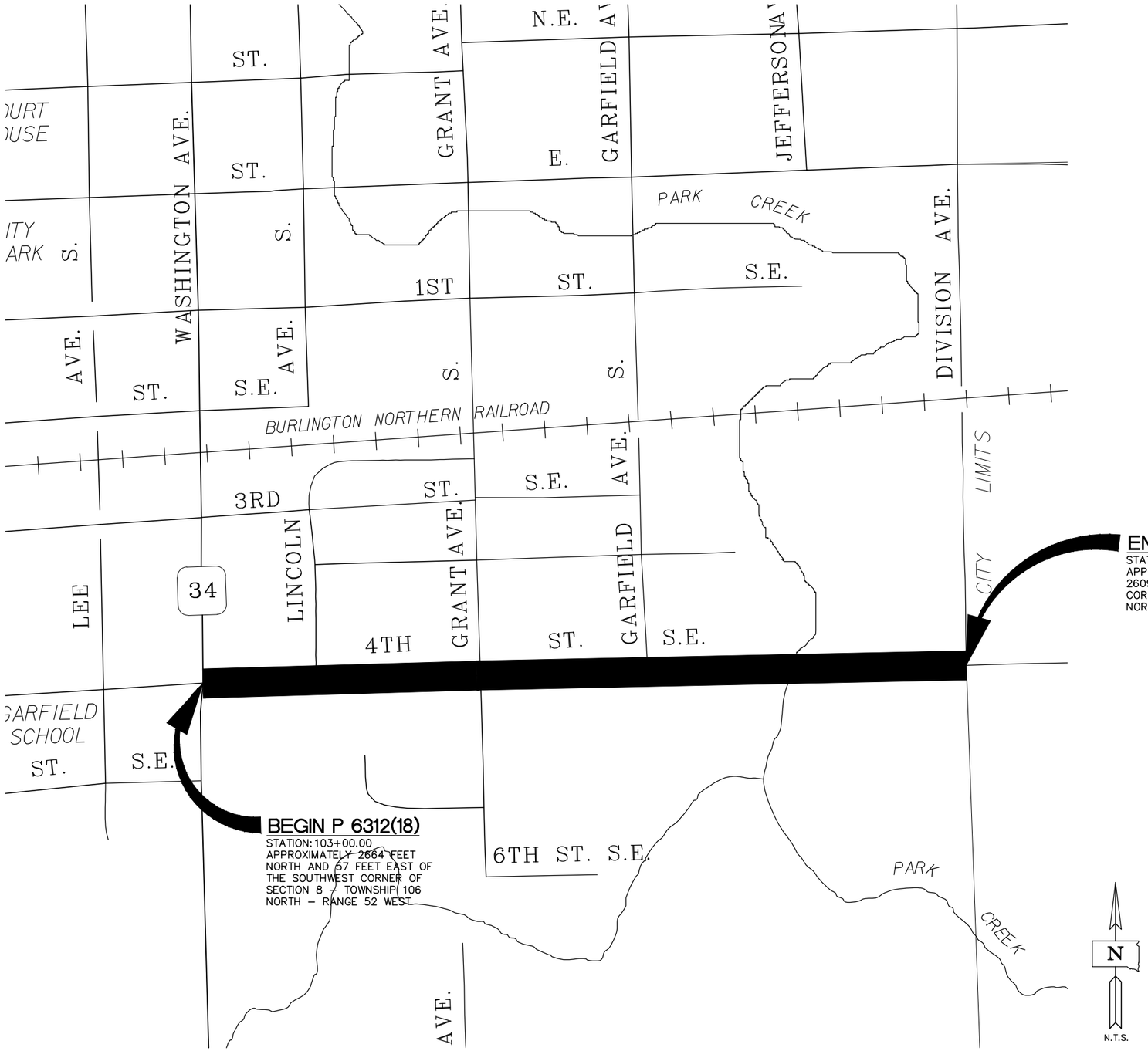

END P 6312(18)
STATION: 128+68.00
APPROXIMATELY 2664 FEET NORTH AND 2609 FEET EAST OF THE SOUTHWEST CORNER OF SECTION 8 – TOWNSHIP 106 NORTH – RANGE 52 WEST

BEGIN P 6312(18)
STATION: 103+00.00
APPROXIMATELY 2664 FEET NORTH AND 57 FEET EAST OF THE SOUTHWEST CORNER OF SECTION 8 – TOWNSHIP 106 NORTH – RANGE 52 WEST

Index of Sheets

B1	GENERAL LAYOUT WITH INDEX OF SHEETS
B2–B10	ESTIMATE OF QUANTITIES, GRADING NOTES AND TABLES
B11	TYPICAL GRADING SECTION
B12	HORIZONTAL ALIGNMENT AND CONTROL DATA
B13	TOPOGRAPHY SYMBOLOGY AND LEGEND
B14–B19	TEMPORARY / PERMANENT EASEMENTS
B20–B22	EXISTING CONDITIONS AND REMOVALS
B23–B32	ROADWAY AND STORM SEWER PLAN AND PROFILE SHEETS
B33–B37	CURB AND GUTTER LAYOUT PLAN
B38–B41	CURB RAMP DETAILS
B42–B63	CONSTRUCTION DETAILS AND STANDARD PLATES

REGISTERED PROFESSIONAL ENGINEER
REG. NO. 9089
MICHAEL R. KUNO
SOUTH DAKOTA
10/7/14

PLANS PREPARED BY:
SEH
PHONE: 605.330.7000
401 EAST 8TH STREET
SUITE 309
SIOUX FALLS, SD 57103–7032
www.sehinc.com

P:\PT\S\Sddot\124655\5-final-dsgn\51-drawings\10-Civil\CAD\PLANSHEETS\SD124655_B_TL1.dwg 10/8/2014 8:52 AM kpederson

SECTION B ESTIMATE OF QUANTITIES

Bid Item Number	Item	Quantity	Unit
009E0010	Mobilization	Lump Sum	LS
009E3200	Construction Staking	Lump Sum	LS
100E0020	Clear and Grub Tree	19	Each
110E0300	Remove Concrete Curb and Gutter	2,240	Ft
110E0320	Remove Concrete Gutter	139	Ft
110E0400	Remove Drop Inlet	2	Each
110E0530	Remove Storm Sewer Pipe	65	Ft
110E1010	Remove Asphalt Concrete Pavement	9,657.6	SqYd
110E1110	Remove Concrete Approach Pavement	325.5	SqYd
110E1140	Remove Concrete Sidewalk	791.9	SqYd
110E7040	Remove Gate for Reset	1	Each
110E7802	Remove Fence for Reset	107	Ft
120E0010	Unclassified Excavation	10,917	CuYd
120E2000	Undercutting	3,466	CuYd
120E6000	Water for Dust Control	25	Mgal
260E0010	Subbase	1,638.0	Ton
380E3520	6" PCC Approach Pavement	336.9	SqYd
380E3540	8" PCC Approach Pavement	24.2	SqYd
380E4010	6" PCC Fillet Section	120.3	SqYd
450E0113	15" RCP Class 3, Furnish	228	Ft
450E0120	15" RCP, Install	228	Ft
450E0133	21" RCP Class 3, Furnish	342	Ft
450E0140	21" RCP, Install	342	Ft
450E0143	24" RCP Class 3, Furnish	194	Ft
450E0150	24" RCP, Install	194	Ft
450E0163	30" RCP Class 3, Furnish	1332	Ft
450E0170	30" RCP, Install	1332	Ft
450E2024	30" RCP Flared End, Furnish	1	Each
450E2025	30" RCP Flared End, Install	1	Each
450E3022	30" RCP Arch Class 2, Furnish	66	Ft
450E3030	30" RCP Arch, Install	66	Ft
450E4508	30" RCP Arch Flared End, Furnish	1	Each
450E4509	30" RCP Arch Flared End, Install	1	Each
451E4400	Pipe Insulation	64	SqFt
462E0100	Class M6 Concrete	72.9	CuYd
480E0100	Reinforcing Steel	12,505	Lb
600E0200	Type II Field Laboratory	1	Each
620E2100	Reset Gate	1	Each
620E4100	Reset Fence	107	Each
650E0059	Modified Type B66 Concrete Curb and Gutter	1,788	Ft
650E4659	Modified Type P6 Concrete Gutter	431	Ft
650E6060	6" Concrete Valley Gutter	128	Ft
651E0040	4" Concrete Sidewa k	17,294	SqFt
651E0060	6" Concrete Sidewa k	5,628	SqFt
651E0160	6" Reinforced Concrete Sidewa k	68	SqFt
651E7000	Type 1 Detectable Warnings	200	SqFt
670E1200	Type B Frame and Grate Assembly	13	Each
670E5340	4' x 11' Precast Concrete Type S Drop Inlet Lid	3	Each
670E5342	4' x 6' Precast Concrete Type S Drop Inlet Lid	2	Each
671E6007	Type A7 Manhole Frame and Lid	22	Each

Bid Item Number	Item	Quantity	Unit
671E7010	Adjust Manhole	14	Each
831E0300	MSE Geotextile Fabric	1,495	SqYd
900E0010	Refurbish Single Mailbox	6	Each
900E0012	Refurbish Double Mailbox	3	Each
900E5147	Articulated Concrete Mattress	232	SqYd

GRADING OPERATIONS

Water for Embankment is estimated at the rate of 10 gallons of water per cubic yard of Embankment minus Waste. The estimated quantity of Water for Embankment is 35 MGal. No separate payment will be made for the Water for Embankment and all costs associated shall be incidental to the contract unit price per cubic yard of “Unclassified Excavation”.

The estimated cubic yards of excavation and/or embankment required to construct outlet ditches, ditch blocks, and approaches are included in the earthwork balance notes on the profile sheets.

Special ditch grades and other sections of the roadway different than the typical section(s) shall be constructed to the limits shown on the cross sections. If significant changes to the cross sections are necessary during construction, the Engineer shall contact the Designer for the proposed change.

Generally, all shallow inlet and outlet ditches as noted on the plan sheets shall be cut with a 10-foot wide bottom with 5:1 backslopes. However, the Engineer may direct the Contractor to adjust the ditch width for proper alignment with the drainage structure.

Temporary fence and/or permanent fence shall be placed ahead of the grading operation unless otherwise directed by the Engineer.

A copy of the soils profile is available for review at the Mitchell Region office and Sioux Falls Area office.

TYPE II FIELD LABORATORY

The lab shall be equipped with an internet connection such as DSL, cable modem, or other approved service. The internet connection shall be provided with a multi-port wireless router. The internet connection shall be a minimum speed of 512 Kb unless limited by job location and approved by the DOT. Prior to installing the wireless router the Contractor shall submit the wireless router’s technical data to the Area Office to check for compatibility with the state’s computer equipment. The internet connection is intended for state personnel usage only. The Contractor’s personnel are prohibited from using the internet connection unless pre-approved by the Project Engineer.

The Contractor shall submit a copy of each monthly bill for calls charged to this phone at the end of each month. The Project Engineer will then audit the bills to ensure all calls are legitimate and then initiate a Construction Change Order (CCO) to reimburse the Contractor for the actual phone calls made, including local and long distance calls. Reimbursement will not be made for fees associated with the purchase, installation, disconnection, monthly line charges, and incidentals involved in the installation, maintenance, and disconnection of the phone (including attachments). These items shall be incidental to the contract unit price per each for “Type II Field Laboratory”.

UTILITIES

The Contractor shall be aware that the existing utilities shown in the plans were surveyed prior to the design of this project and might have been relocated or replaced by a new utility facility prior to construction of this project, might be relocated or replaced by a new utility facility during the construction of this project, or might not require adjustment and may remain in its current location. The Contractor shall contact each utility owner and confirm the status of all existing and new utility facilities. The utility contact information is provided elsewhere in the plans or bidding documents.

Contractor shall verify the location of all existing water service curb stops and adjust curb stop boxes as needed to make them flush with proposed grading. All materials and labor necessary to adjust the curb box will be incidental to grading activities.

CLEARING AND GRUBBING

Before clearing activities begin, the Contractor shall contact the Engineer to determine the limits of clearing for the project. If the trees or shrubs that are supposed to remain within the limits of work are damaged or destroyed by the Contractor, the Contractor shall replace them with the same size and type at the Contractor’s expense. Removal of existing stumps will be incidental to grading operations.

CONSTRUCTION STAKING

Construction Staking activities shall be provided by the Contractor to construct the proposed improvements. Construction Staking will include providing horizontal and vertical control as needed to install erosion control measures, conduct removal activities, install storm sewer utilities, and construct all roadway features including, but not limited to, curb and gutter, pavement, sidewalk, driveway and boulevard improvements as identified in the plans. All stakes, stones, monuments, and benchmarks disturbed by construction activities shall be reset by the Contractor. All labor and materials required for construction staking will be incidental to the lump sum price for “Construction Staking”.

REGISTERED PROFESSIONAL ENGINEER
REG. NO. 9089
MICHAEL R. KUNO
SOUTH DAKOTA
12/3/14

PLANS PREPARED BY:
SEH
PHONE: 605.330.7000
401 EAST 8TH STREET
SUITE 309
SIOUX FALLS, SD 57103-7032
www.sehinc.com

TABLE OF CLEAR AND GRUB TREE

Station	L/R	Description/Size	Quantity
104+57.93	33' R	20' Bush	1
105+09.93	32' R	24" Dia	1
105+71.17	22' R	16" Dia.	1
106+04.98	22' R	8" Dia.	1
106+21.05	22' R	8" Dia.	1
114+00.00	25' R	18" Dia.	1
114+28.00	24' R	18" Dia.	1
114+55.00	27' R	18" Dia.	1
114+71.00	30' R	18" Dia.	1
115+02.00	23' R	24" Dia.	1
115+71.00	32' R	2" Dia.	1
115+97.00	33' R	15' Bush	1
119+42.95	37' L	24" Dia.	1
119+64.00	37' L	24" Dia.	1
119+83.00	37' L	24" Dia.	1
119+93.00	26' R	8" Dia.	1
120+26.00	25' R	8" Dia.	1
124+72.00	34' R	18" Dia.	1
125+15.00	33' R	18" Dia.	1
		Totals:	19

SHRINKAGE FACTOR: Embankment +20%

TABLE OF EXCAVATION QUANTITIES BY BALANCES

Station to	Station	Excavation (CuYd)	*Undercut (CuYd)	Unstable Material Excavation (CuYd)	Total Excavation (CuYd)
103+00	128+68	6,037	3,466	867	10,370
	Totals:	6,037	3,466	867	10,370

*The quantities for these items are in the Estimate of Quantities under their respective bid items.

TABLE OF UNCLASSIFIED EXCAVATION

Excavation	6,037
Unstable Material Excavation	867
Undercut	3,466
Topsoil	547
Total	10,917

PROCEDURES FOR DETERMINING UNCLASSIFIED EXCAVATION QUANTITY

When plan quantities are used for payment, the Unclassified Excavation quantity shall be used for final payment. If final cross sections are taken in the field, add all of the items in the Table of Unclassified Excavation using the following procedures:

The Unstable Material Excavation quantity is included in the Excavation quantity listed in the Table of Unclassified Excavation. When finaling a project, the Unstable Material Excavation quantity shall be added to the Excavation quantity to compute the Unclassified Excavation quantity.

The Topsoil quantity in the Table of Unclassified Excavation is an estimate. When finaling a project, the total quantity of field measured Topsoil shall be used in place of the estimated Topsoil quantity. The quantity of Topsoil from the cuts will be paid for twice as Unclassified Excavation, as it will be in both the Excavation and Topsoil quantities. This will be full compensation for Excavation, which includes necessary undercutting to provide space for placement of topsoil.

The Excavation quantities from individual balances and the Table of Unclassified Excavation have been reduced by the volume of in place surfacing that will be removed.

UNDERCUTTING

In all cut sections the earthen subgrade shall be undercut 1 foot below the earthen subgrade surface. The undercut material or other suitable material, as directed by the Engineer, shall then be replaced and compacted to the density specified for the section being constructed.

Shallow embankment sections, fills less than 1 feet in height measured at the finished subgrade shoulders, shall be undercut to ensure a minimum 1 foot height of earth embankment for the entire width of roadbed. Undercut material that consists of topsoil with a high humus content shall be used as topsoil, placed in the fill slopes outside the shoulders of the earthen subgrade, or placed in the lower portion (below 4 foot depth) in fills which are greater than 4 feet in height. The remaining undercut soil and soil obtained from adjacent shall then be replaced and compacted to the density specified for the section being constructed.

The plan shown quantity will be the basis of payment. However, if there are additional areas of undercut other than what is shown in the plans, the Engineer shall direct removal of these areas and the additional areas will be measured according to the Engineer.

TABLE OF UNDERCUTTING

Station	to	Station	Quantity (CuYd)
103+00		128+68	3,466
		Total:	3,466

UNSTABLE MATERIAL EXCAVATION

Areas of unstable subgrade may be exposed after the removal of the existing pavement. These areas should be excavated and recompacted using the existing soil or replacement material. If, in the opinion of the Engineer, the area will not stabilize by this method, MSE Geotextile Fabric and granular material may be used. Stabilization will be accomplished by undercutting the subgrade and placing a layer of MSE Geotextile Fabric at the bottom of the undercut. The undercut will then be backfilled with granular material and compacted. Contact the Geotechnical Engineering Activity (605-773-3725) for assistance should the use of geotextile become necessary.

1,495 sq. yds. of MSE Geotextile Fabric has been included in the materials quantities for the project. This quantity assumes coverage of 1,300 sq. yds. of subgrade (39 feet width by 300 feet length). The quantity has been increased by 15% to account for overlaps. 1.638 tons of granular material has been included in the Subbase bid item for use as backfill (2 feet of coverage for 1,300 sq. yds. of subgrade). These quantities can be adjusted or eliminated by CCO, depending on actual field conditions.

The top of the subgrade shall be prepared by smoothing the surface of the subgrade to minimize any ruts, ridges, and depressions. Any rocks or other protrusions that might damage the geotextile will be removed. The geotextile shall be unrolled perpendicular to the centerline and overlapped a minimum of 2 feet. The geotextile shall be placed as taut as possible with minimal wrinkles. Placement will be done so that subsequent granular cover material does not shove, wrinkle, or distort the in place geotextile. The overlaps will be shingled in a manner that assures granular material will not be forced under the geotextile during backfilling operations. The geotextile may be held in place with small piles of granular material or staples. No traffic will be allowed on the uncovered geotextile. Granular material will be dumped at least 20 feet behind the leading edge of the backfill and pushed into place with a loader or dozer from the covered areas to the uncovered areas. The granular material will be placed in 8 inch lifts or as directed by the Engineer. The granular material will be compacted to 95% maximum dry density as determined by the Specified Density Method.

The geotextile will conform to the specification for Geotextiles and Impermeable Plastic Membrane, MSE Geotextile Fabric (Section 831.1 of the Specifications). The geotextile will be on the SDDOT Approved Products list for this material or will be certified by the supplier to meet this specification prior to installation.

Geotextile will be paid for at the contract unit price per square yard for "MSE Geotextile Fabric". Payment quantities will be based on the area covered plus 15% to account for overlaps. Payment will be full compensation for furnishing and installing the geotextile fabric.

Granular Material will conform to the specification for Aggregates for Granular Bases and Surfacing, Subbase (Section 882 of the Specifications). Granular Material will be paid for at the contract unit price per ton for "Subbase". Payment will be full compensation for furnishing and placing this material. Salvaged base course will be allowed for use as subbase. Salvaged asphalt will not be allowed for use as subbase.

REGISTERED PROFESSIONAL ENGINEER
REG. NO. 9089
MICHAEL R. KUNO
SOUTH DAKOTA
10/7/14

PLANS PREPARED BY:
SEH
PHONE: 605.330.7000
401 EAST 8TH STREET
SUITE 309
SIOUX FALLS, SD 57103-7032
www.sehinc.com

TABLE OF ASPHALT CONCRETE PAVEMENT REMOVAL

Station	to	Station	L/R	Quantity (SqYd)
102+96.93		103+38.25	R	63.0
103+00.00		128+73.09	L/R	9299.6
106+10.47		106+54.07	L	71.5
111+71.88		112+17.42	R	70.6
111+73.61		111+87.16	L	86.8
125+54.87		125+93.31	R	66.1
			Total:	9657.6

TABLE OF CONCRETE CURB AND GUTTER REMOVAL

Station	to	Station	L/R	Quantity (Ft)
103+00.00		106+13.98	L	328
103+00.00		103+24.55	R	25
105+03.26		107+04.90	R	202
106+50.02		106+68.44	L	33
107+87.51		107+97.51	L	10
108+65.90		108+98.65	L	33
108+85.34		108+98.45	R	13
109+26.90		109+36.95	L	10
109+90.20		110+00.20	L	10
109+96.10		110+32.51	R	36
110+95.49		111+20.08	L	26
111+45.25		111+78.90	L	38
111+45.34		111+76.30	R	45
112+09.89		112+45.37	L	41
112+12.17		112+54.19	R	55
114+27.29		114+42.28	L	15
114+27.31		114+42.31	R	15
115+13.78		115+58.09	L	44
115+36.66		115+81.58	R	36
116+08.23		116+18.23	L	10
116+40.71		117+37.97	R	96
116+81.15		116+91.15	L	10
117+08.60		117+43.52	L	41
117+73.22		118+03.19	L	35
117+79.67		118+10.16	R	31
118+15.96		118+25.96	L	10
119+16.41		119+26.41	L	10
119+01.54		119+61.34	R	60
122+04.43		122+37.78	R	33
122+22.79		122+40.95	L	18
123+00.01		128+47.13	L	546
123+33.11		126+07.01	R	274
127+94.00		128+44.83	R	51
			Total:	2240

TABLE OF CONCRETE GUTTER (VALLEY) REMOVAL

Station	to	Station	L/R	Quantity (Ft)
106+08.50		106+55.16	L	47
111+71.44		112+17.42	R	46
111+72.08		112+17.91	L	46
			Total:	139

TABLE OF CONCRETE APPROACH PAVEMENT REMOVAL

Station	to	Station	L/R	Quantity (SqYd)
108+66		108+84	L	16.9
109+14		109+28	L	13.2
110+00		110+26	R	24.2
110+98		111+14	L	12.6
115+18.29		115+58.09	L	37.7
115+41.66		115+63.73	R	35.7
116+50.75		117+20.15	R	71.0
118+11.13		118+53.30	R	41.8
119+26.68		119+44.78	R	10.9
125+32.20		125+54.83	R	15.7
125+43.42		125+41.56	L	13.8
128+06.83		128+37.02	R	32.0
			Total:	325.5

TABLE OF SIDEWALK REMOVAL

Removal of Concrete Sidewalk includes concrete steps.

Station	to	Station	L/R	Quantity (SqYd)
103+32.71		104+25.23	L	46.5
103+62.86		103+71.49	R	2.0
104+30.66		104+34.65	R	4.9
104+77.86		105+03.94	L	12.8
105+84.89		105+87.89	R	6.4
105+93.63		106+13.34	L	13.8
106+50.70		106+72.46	L	19.6
106+86.38		107+23.59	R	16.4
107+58.88		108+84.18	L	68.3
109+14.26		109+72.82	L	27.1
109+36.45		110+68.01	R	70.9
109+85.40		111+20.24	L	64.4
110+96.77		111+00.00	R	5.3
111+54.09		111+75.82	L	14.3
111+62.19		111+75.56	R	10.0
112+13.25		113+27.01	R	75.6
112+13.56		112+36.35	L	10.9
112+93.47		113+99.82	L	54.0
115+08.66		115+63.36	L	28.7
116+54.21		118+50.53	R	102.2
117+16.54		117+40.11	L	16.1
117+76.70		117+92.07	L	11.1
119+25.36		119+80.47	R	29.9
124+78.57		125+53.62	L	36.1
127+53.48		128+36.69	L	44.6
			Total:	791.9

TABLE OF DROP INLET REMOVAL

All costs for removal of the frame and grate assembly shall be incidental to the contract unit price per each for “Remove Drop Inlet”.

Station	L/R	Quantity (Each)
123+03.70	L	1
123+51.73	R	1
	Total:	2

TABLE OF STORM SEWER REMOVAL

All costs for removal of existing storm sewer pipe, including labor and materials to install a watertight seal of outlets in box culvert wall, shall be incidental to the contract unit price per foot of “Remove Storm Sewer Pipe”.

Station	Station	L/R	Quantity (Ft)
122+93.85	123+03.58	L	8
122+93.74	123+51.76	R	57
		Total:	65

TABLE OF REMOVE AND RESET FENCE AND GATE

Station	Station	L/R	Fence Quantity (Ft)	Gate Quantity (Each)
105+42.32	106+47.84	R	100	1
118+90.71		L	7	
		Total:	107	1

REGISTERED PROFESSIONAL ENGINEER
REG. NO. 9089
MICHAEL R. KUNO
SOUTH DAKOTA

10/7/14

PLANS PREPARED BY:
SEH
PHONE: 605.330.7000
401 EAST 8TH STREET
SUITE 309
SIOUX FALLS, SD 57103-7032
www.sehinc.com

STORM SEWER

Standard bedding material (Class B) for reinforced concrete storm sewer pipe shall be considered incidental to the installation of the storm sewer pipe. No separate measurement or payment shall be made for standard bedding material.

Reinforced concrete pipe may be either bell and spigot or tongue and groove. The pipe sections shall be adjoined such that the ends are fully entered and the inner surfaces are reasonably flush and even.

Lift holes in the reinforced concrete pipe shall be plugged with grout.

Watertight joints are required for reinforced concrete pipe, drop inlets, manholes, and junction boxes where storm sewers run parallel to and within 10 feet horizontally from existing or proposed water mains.

Watertight joints are required where reinforced concrete pipes, drop inlets, manholes, or junction boxes cross water mains and are separated a distance of 18 inches or less, above or below, the water main.

If watertight joints are required then the watertight joints shall extend for a distance of 10 feet beyond the water main. This measurement shall be from the sealed concrete joint to the outer most surface of the water main.

Watertight joint seals shall conform to the following requirements:

1. Reinforced Concrete Pipe (Circular): Gasketed pipe shall conform to the requirements of ASTM C443. Non-gasketed concrete pipe shall be sealed with a mastic joint seal conforming to the requirements of ASTM C990 and encased with a minimum 2' wide by 6" thick M6 concrete collar reinforced with 6x6 W2.9 x W2.9 wire mesh.

2. Reinforced Concrete Pipe (Arch): Joints shall be sealed with a waterstop seal meeting the requirements of ASTM C990. Waterstop seals shall consist of hydrophilic compounds such as Waterstop-RX or ConSeal CS-231.

3. Drop Inlets, Manholes, and Junction Boxes: Joints shall be sealed with a waterstop seal or seal wrap meeting the requirements of ASTM C990 or encased with a minimum 2' wide by 6" thick M6 concrete collar reinforced with 6x6 W2.9 x W2.9 wire mesh. Waterstop seal shall contain hydrophilic compounds such as Waterstop-RX or ConSeal CS-231. Seal wrap shall be a self adhesive external joint wrap such as ConWrap CS-217 or Mar Mac Seal Wrap.

Gaskets and seals (mastic, waterstop, and seal wraps) shall be installed in accordance with the manufacturer's recommendations.

The cost for furnishing and installing all gaskets, mastic joint seal, waterstop seal, seal wrap, concrete collars, and for plugging the lift holes shall be incidental to the contract unit price per foot for the corresponding pipe bid item.

DROP INLETS

Where drop inlets are constructed within areas of curb and gutter, the Contractor shall construct weep holes of at least 3 inches in diameter in the drop inlet walls. The weep holes shall be constructed at the same elevation as the adjacent top of the earthen subgrade and shall be maintained clean and open at all times until the permanent surfacing is placed. The drop inlets shall be covered throughout construction operations as necessary with an Engineer approved cover to prevent materials from entering the storm sewer system. After the permanent surfacing has been placed, the Contractor shall seal the weep holes with grout and remove all debris from the drop inlet. All costs involved with the coverings, weep holes, and removing debris from the drop inlets shall be incidental to the contract unit prices for the components of the drop inlets.

The plan shown quantities of the drop inlet components such as Class M6 Concrete, Reinforcing Steel, Type B Frame and Grate Assembly, and Precast Concrete Type S Drop Inlet Lid will be the basis of payment for these items.

If additions or reductions to the number of drop inlets are ordered by the Engineer, payment for the components required to construct the drop inlets will be made at the contract unit prices for the components of the drop inlets.

Where adjacent to concrete sidewalk, drop inlet lids shall have dowels to tie to the adjacent sidewalk per standard plate 651.70

ADJUSTMENT OF MANHOLES AND VALVE BOXES

The Contractor shall adjust existing manholes to the extent necessary on this project. Adjusting the manholes may consist of removing the upper course of brick or removing the concrete walls, replacing the removed materials with brick or Class M6 concrete, placing adjusting rings if necessary, and resetting the manhole frame and lid. The elevation of the lid shall be set at the same elevation of the adjacent new pavement or surrounding ground. All manhole frames, lids, and rings that are cracked or broken due to carelessness of the Contractor shall be replaced with new manhole frames, lids, and rings that conform with the Specifications at the Contractor's expense. Manholes shall be adjusted to the satisfaction of the Engineer. All costs involved in adjusting the manholes shall be incidental to the contract unit price per each for "Adjust Manhole".

The Engineer may direct adjustment of manholes that were not included in these plans. Payment for adjusting manholes that were not included in the plans will be at the contract unit price per each for "Adjust Manhole".

Adjustment of new junction box frames shall be incidental to the installation of the junction box.

Adjustment of new water main valve boxes shall be incidental to the installation of the cost of the gate valve and box in the utilities contract.

TABLE OF ADJUST MANHOLES

Station	L/R	Type of Adjustment
104+32.43	24.07' R	Raise 0.24' (Water Meter Pit)
106+25.30	6.51' L	*Lower 0.20'
109+03.71	6.23' L	*Lower 0.18'
111+84.89	5.34' L	*Lower 0.59'
115+16.86	4.13' L	*Lower 0.25'
117+49.31	2.90' L	*Lower 0.34'
120+34.26	5.34' L	*Lower 0.38'
120+59.12	25.82' R	*Lower 0.43'
123+25.47	24.79' R	*Lower 0.05'
123+25.89	1.27' R	*Lower 0.38'
125+68.20	23.32' R	*Raise 0.56'
125+91.95	0.11' R	*Lower 0.38'
128+61.29	1.71' R	*Lower 0.27'
128+66.73	24.07' R	*Raise 0.18'

*Requires new Type A7 Manhole Frame and Lid

MISCELLANEOUS CONCRETE

Concrete for inlets, curb and gutter, valley gutters, sidewalk, driveway approaches, and outlet structures shall be Class M-6 as detailed in Section 462.

A ½" preformed expansion material shall be placed between the sidewalk and other concrete items (back of curb, driveways, existing sidewalks, etc.). Payment for this item shall be incidental and included in the unit price for the respective bid item.

REGISTERED PROFESSIONAL ENGINEER
REG. NO. 9089
MICHAEL R. KUNO
SOUTH DAKOTA
10/7/14

PLANS PREPARED BY:
SEH
PHONE: 605.330.7000
401 EAST 8TH STREET
SUITE 309
SIOUX FALLS, SD 57103-7032
www.sehinc.com

CONCRETE CURING

All concrete shall be cured in accordance with section 380.3.P.2 except as modified in this note. All concrete shall be cured with a white pigmented linseed oil base emulsion compound when cured using the Impervious Membrane Method. Curing compound material shall be in accordance with section 821.1.D.

Apply liquid curing compound in a fine spray to form a continuous, uniform solid white opaque coverage (equal to a white sheet of typing paper) on the horizontal surface and vertical edges of pavement, curbs and back of curbs immediately after surface moisture has disappeared, but no later than 30 minutes after finishing. Concrete edges exposed by the removal of forms shall also be cured. Apply the curing compound in 2 equal applications, in opposing directions, to ensure a uniform coverage. With the approval of the Engineer, the timing of cure application may be adjusted due to varying weather conditions and concrete mix properties to ensure acceptable macrotexture is achieved.

Failure to comply with the provisions may result in a price adjustment or rejection of the concrete.

PROTECT EXISTING CONCRETE

Contractor shall remove asphalt from the existing curb and gutter to expose the concrete gutter surface. Contractor shall conduct removal operations in a manner to prevent damage to the existing curb and gutter that shall remain in place. Removal of asphalt from curb and gutter is incidental to the contract unit price per square yard for “Remove Asphalt Concrete Pavement”.

Contractor shall protect all concrete facilities not identified for removal. All concrete damaged by Contractor operations shall be removed and replaced at no additional cost to the Owner.

MODIFIED TYPE B66 CONCRETE CURB AND GUTTER

Contractor shall tie new curb and gutter to the existing adjacent curb and gutter by constructing dowelled joints at all connection locations. Contractor shall drill two dowel holes into the existing gutter section. Dowel holes shall be at the midpoint of the depth of the existing gutter and 8 inches from both the front and the back of the existing curb and gutter (2 bars per joint). Dowel bars shall be 1.25 in x 18 in epoxy coated smooth bars, centered on the connection joint (9 inches into the existing curb and gutter and 9 inches into the new curb and gutter). Contractor shall use an epoxy resin adhesive to secure dowel into the existing curb and gutter. Contractor shall grease the remaining 9 inches of dowel bar. Contractor shall transition gutter to 5% maximum slope at all pedestrian ramp locations (see detail on sheet B43). All labor and materials associated with installing tie bars into the curb and gutter are incidental to contract unit price per foot of “Modified Type B66 Concrete Curb and Gutter”.

TABLE OF MODIFIED TYPE B66 CONCRETE CURB AND GUTTER

Station	to	Station	L/R	Quantity (Ft)
103+00.00		104+05.97	15.83’ L	106
103+00.00		103+04.73	15.83’ R	5
103+24.46		104+02.52	15.83’ R	78
104+22.52		104+42.52	15.83’ R	20
104+25.29		104+90.30	15.83’ L	65
104+62.52		104+90.09	15.83’ R	28
105+00.15		106+51.01	15.83’ R	151
105+04.01		105+98.62	15.83’ L	95
106+16.29		106+16.29	33.50’ L to 38.06’ L	5
106+47.93		106+49.93	33.49’ L to 38.10’ L	5
106+65.60		106+68.46	15.83’ L	3
106+80.03		107+04.81	15.83’ R	25
107+87.50		107+97.50	15.83’ L	10
108+85.33		108+98.44	15.83’ R	13
108+84.19		108+98.63	15.83’ L	14
109+26.94		109+36.94	15.83’ L	10
109+90.18		110+00.18	15.83’ L	10
109+96.10		110+02.10	15.83’ R	6
110+23.42		110+32.51	15.83’ R	9
110+94.49		111+00.49	15.83’ L	6
111+45.34		111+60.36	15.83’ R	15
111+78.53		111+78.54	33.94’ R to 37.90’ R	4
111+79.30		111+79.30	33.55’ L to 37.97’ L	4
112+10.19		112+10.20	34.05’ R to 37.81’ R	4
112+10.97		112+10.98	33.45’ L to 38.06’ L	5
112+28.36		112+54.05	15.83’ R	26
112+28.65		112+45.36	15.83’ L	17
114+27.30		114+42.30	15.83’ L	15
114+27.31		114+42.31	15.83’ R	15
115+13.66		115+18.66	15.83’ L	5
115+35.66		115+41.66	15.83’ R	6
115+52.98		115+58.07	15.83’ L	5
115+62.27		115+71.58	15.83’ R	9
116+08.23		116+18.23	15.83’ L	10
116+40.71		116+54.48	15.83’ R	14
116+81.15		116+91.15	15.83’ L	10
117+08.75		117+25.03	15.83’ L	16
117+14.89		117+37.13	15.83’ R	22
117+42.68		117+42.69	33.56’ L to 38.38’ L	5
117+73.99		117+74.06	33.28’ L to 38.62’ L	5
117+79.67		118+10.16	15.83’ R	31
117+91.72		118+03.20	15.83’ L	12
118+15.97		118+25.97	15.83’ L	10
119+16.42		119+26.42	15.83’ L	10
119+01.54		119+30.46	15.83’ R	29
119+40.30		119+61.34	15.83’ R	21
122+04.44		122+37.79	15.83’ R	33
122+22.79		122+40.95	15.83’ L	18
123+00.00		124+44.89	15.83’ L	145
123+33.17		125+35.51	15.83’ R	202
124+63.11		125+26.65	15.83’ L	64
125+38.54		125+60.48	15.83’ L	22
125+54.85		125+54.90	29.50’ R to 38.29’ R	9
125+73.61		126+39.75	15.83’ L	66
125+78.39		126+07.06	15.83’ R	29
126+51.85		127+21.29	15.83’ L	70
127+35.51		128+47.87	15.83’ L	113
127+93.99		128+05.57	15.83’ R	12
128+29.02		128+44.83	15.83’ R	16
			Total:	1788

TABLE OF MOFIFIED TYPE P6 CONCRETE GUTTER

Station	to	Station	L/R	Quantity (Ft)
103+04.73		103+24.46	15.83’ R	20
104+02.52		104+22.52	15.83’ R	20
104+05.97		104+25.29	15.83’ L	20
104+42.52		104+62.52	15.83’ R	20
104+90.09		105+00.15	15.83’ R	10
104+90.30		105+04.01	15.83’ L	14
106+51.01		106+80.03	15.83’ R	29
108+65.90		108+84.19	15.83’ L	18
110+02.10		110+23.42	15.83’ R	21
111+00.49		111+12.55	15.83’ L	12
115+18.66		115+52.98	115.83’ L	34
115+41.66		115+62.27	15.83’ R	21
116+54.48		117+14.89	15.83’ R	60
119+30.46		119+40.30	15.83’ R	10
124+44.89		124+63.11	15.83’ L	18
125+26.65		125+35.54	15.83’ L	9
125+47.11		125+78.39	15.83’ R	31
125+60.48		125+73.61	15.83’ L	14
126+39.75		126+51.85	15.83’ L	12
127+21.29		127+35.51	15.83’ L	14
128+05.57		128+29.02	15.83’ R	24
			Total:	431

6” PCC FILLET SECTIONS

Payment for “6” PCC Fillet Section” shall be based on plans quantity. If additions or reductions to the area of PCC fillet sections are ordered by the Engineer, payment will be made in accordance with the contract unit price per square yard for “6” PCC Fillet Section”.

REGISTERED PROFESSIONAL ENGINEER
REG. NO. 9089
MICHAEL R. KUNO
SOUTH DAKOTA
12/3/14

PLANS PREPARED BY:
SEH
PHONE: 605.330.7000
401 EAST 8TH STREET
SUITE 309
SIOUX FALLS, SD 57103-7032
www.sehinc.com

TABLE OF 6" PCC FILLET SECTION

Station	to Station	L/R	Radius (Ft)	Quantity (SqYd)
105+98.62	106+16.29	L	15	15.04
106+47.93	106+65.60	L	15	15.04
111+60.36	111+78.53	R	15	15.04
111+61.65	111+79.30	L	15	15.04
112+10.19	112+28.36	R	15	15.04
112+10.98	112+28.65	L	15	15.04
117+25.03	117+42.69	L	15	15.04
117+74.06	117+91.72	R	15	15.04
			Total:	120.3

TYPE 1 DETECTABLE WARNINGS

Detectable warnings shall be in compliance with the Americans with Disability Act regulations.

The detectable warnings shall be installed according to the manufacturer's installation instructions.

A concrete thickness equal to the adjacent concrete sidewalk thickness and 2 inches of granular cushion material shall be placed below the Type 1 Detectable Warnings. When concrete is placed below the detectable warnings then the concrete thickness shall be transitioned at the rate of 1" per foot to match the adjacent concrete sidewalk thickness.

The detectable warnings shall be a brick red color for application in concrete curb ramps. Cast iron plates may be a natural patina (weathered steel).

When Type 1 Detectable Warnings are specified, the Contractor shall furnish and install only one of the products listed in the Type 1 Detectable Warnings table.

Type 1 Detectable Warnings

Product	Manufacturer
Detectable Warning Plate Cast Iron Plate	Neenah Foundry Company Neenah, WI 800-558-5075 http://www.neenahfoundry.com/
Detectable Warning Plate Cast Iron Plate	Deeter Foundry Lincoln, NE 800-234-7466 http://www.deeter.com/
Detectable Warning Plate Cast Iron Plate(No Coating)	East Jordan Iron Works, Inc. 301 Spring Street East Jordan, MI 49727 800-626-4653 http://www.ejiw.com
CAST-DWD Cast Iron Plate	Key 3 Casting (Northern Foundry) 555 West 25th Street Hibbing, MN 55746 218-263-8871 http://key3casting.com

TABLE OF TYPE 1 DETECTABLE WARNINGS

Station	L/R	Quantity (SqFt)
106+01.12	19.85' L	10
106+01.12	19.01' R	10
106+11.66	29.56' L	10
106+52.52	29.62' L	10
111+65.29	20.70' R	10
111+66.64	21.00'R	10
111+72.11	27.00' R	10
111+74.64	29.46' L	10
112+15.57	29.62' L	10
112+16.16	27.00' R	10
112+28.85	19.14' R	10
112+28.86	19.18' R	10
117+26.11	19.43' L	10
117+29.19	19.01' R	10
117+38.51	30.58' L	10
117+78.31	30.50' L	10
117+87.51	20.59' L	10
117+88.22	19.01' R	10
128+44.52	20.08' L	10
128+44.52	19.00' R	10
	Total:	200

TABLE OF 6" PCC APPROACH PAVEMENT

Station	L/R	Opening (Ft)	Type	Quantity (SqYd)
103+14.59	R	20	Special	16.5
108+75.05	L	18	Special	19.9
109+20.69	L	13	Special	17.2
110+12.76	R	21	Special	23.9
111+06.52	L	12	Special	16.1
113+05.58	L	24	Special	29.7
115+35.87	L	34	Special	37.7
115+51.97	R	21	Special	27.3
116+84.67	R	60	Special	58.8
118+32.29	R	36	Special	38.1
119+35.38	R	10	Special	14.8
125+32.60	L	12	Special	17.8
128+17.29	R	24	Special	19.1
			Total:	336.9

TABLE OF 8" PCC APPROACH PAVEMENT

Station	L/R	Opening (Ft)	Type	Quantity (SqYd)
125+62.74	R	31.3	Special	24.2
			Total:	24.2

TABLE OF 6" CONCRETE VALLEY GUTTER

Station	to Station	L/R	Width (Ft)	Quantity (Ft)
106+16.28	106+47.94	L	8	32
111+78.47	112+10.14	R	8	32
111+79.30	112+10.97	L	8	32
117+42.68	117+73.99	L	8	32
			Totals:	128

REGISTERED PROFESSIONAL ENGINEER
REG. NO. 9089
MICHAEL R. KUNO
SOUTH DAKOTA
12/3/14

PLANS PREPARED BY:
SEH
PHONE: 605.330.7000
401 EAST 8TH STREET
SUITE 309
SIOUX FALLS, SD 57103-7032
www.sehinc.com

TABLE OF 4" CONCRETE SIDEWALK

Station	to Station	L/R	Quantity (SqFt)	Gravel Cushion (Ton)
102+97.02	103+04.73	R	33	0.4
103+24.46	104+02.52	R	390	4.4
103+32.70	104+05.99	L	366	4.1
104+22.52	104+42.52	R	100	1.1
104+62.52	106+53.13	R	980	11
104+77.86	104+88.95	L	56	0.6
105+93.62	105+98.62	L	24	0.3
106+57.46	106+72.46	L	122	1.4
106+81.81	107+39.93	R	291	3.3
107+58.88	108+65.90	L	535	6
107+68.77	108+06.90	R	191	2.1
108+17.07	109+17.33	R	501	5.6
109+27.28	111+00.46	L	866	9.7
109+31.51	109+45.96	R	72	0.8
109+55.85	110+02.11	R	244	2.7
110+23.44	111+62.79	R	708	8
111+12.56	111+20.25	L	39	0.4
111+54.10	111+64.10	L	48	0.5
112+15.19	112+21.59	R	66	0.7
112+31.35	113+74.89	R	718	8.1
112+31.35	112+36.35	L	25	0.3
113+17.80	113+31.43	L	68	0.8
113+41.51	113+99.82	L	292	3.3
113+87.80	115+41.64	R	769	8.6
115+08.66	115+18.64	L	50	0.6
115+52.97	115+63.25	L	52	0.6
115+62.29	116+54.44	R	461	5.2
117+14.89	118+14.13	R	495	5.6
117+16.54	117+23.61	L	33	0.4
117+90.01	119+92.57	L	1015	11.4
118+72.96	119+30.22	R	287	3.2
119+40.16	123+08.55	R	1843	20.7
120+07.15	125+26.65	L	2605	29.3
124+42.65	125+47.15	R	522	5.9
125+38.54	125+60.48	L	109	1.2
125+73.96	126+39.75	L	329	3.7
125+78.39	127+35.00	R	783	8.8
126+51.85	127+22.27	L	352	4
127+35.55	128+47.02	L	557	6.3
127+50.64	128+05.57	R	275	3.1
128+29.02	128+47.02	R	90	1
		Total:	17362	195.2

TABLE OF 6" CONCRETE SIDEWALK

Station	to Station	L/R	Quantity (SqFt)	Gravel Cushion (Ton)
103+04.73	103+24.46	R	99	1.1
104+02.52	104+22.52	R	100	1.1
104+05.99	104+25.29	L	96	1.1
104+42.52	104+62.62	R	100	1.1
104+88.95	105+03.95	L	75	0.8
105+92.62	106+13.62	L	211	2.4
105+92.62	106+09.62	R	66	0.7
106+50.60	106+57.46	L	60	0.7
106+53.13	106+81.81	R	143	1.6
107+39.93	107+68.77	R	145	1.6
108+06.90	108+17.07	R	51	0.6
108+65.90	108+84.19	L	91	1
109+14.23	109+27.28	L	65	0.7
109+17.33	109+31.51	R	71	0.8
109+31.51	109+55.85	R	50	0.6
110+02.11	110+23.44	R	107	1.2
111+00.46	111+12.56	L	61	0.7
111+58.14	111+76.63	L	168	1.9
111+62.79	111+758.87	R	135	1.5
112+12.87	112.37.35	R	236	2.7
112+13.34	112+37.36	L	251	2.8
112+93.47	113+17.80	L	122	1.4
113+31.43	113+41.51	L	51	0.6
113+74.89	113+87.80	R	65	0.7
115+18.64	115+52.97	L	172	1.9
115+41.64	115+62.29	R	103	1.2
116+54.44	117+14.98	R	302	3.4
117+17.61	117+40.01	L	254	2.9
117+20.73	117+37.13	R	64	0.7
117+76.66	117+96.01	L	195	2.2
117+79.67	117+96.14	R	64	0.7
118+14.13	118+72.96	R	294	3.3
119+30.22	119+40.16	R	50	0.6
119+92.57	120+07.15	L	73	0.8
123+08.55	124+42.65	R	670	7.5
125+47.15	125+78.39	R	157	1.8
125+26.65	125+38.54	L	60	0.7
125+60.48	125+73.96	L	68	0.8
126+39.75	126+51.85	L	61	0.7
127+22.27	127+35.55	L	66	0.7
127+35.00	127+50.64	R	78	0.9
128+05.57	128+29.02	R	117	1.3
128+36.02	128+53.02	R	66	0.7
128+36.02	128+51.79	L	95	1.1
		Total:	5628	63.3

GRAVEL CUSHION

Gravel Cushion shall be used under all sidewalk.

Gravel Cushion shall be in accordance with Section 260.3 A.

Gravel Cushion is incidental to "4" Concrete Sidewalk".

CONCRETE STAIRWAY

The Contractor shall construct concrete stairway per detail below. Stairway width shall be consistent and match width of existing sidewalk at the top of the stairway.

Stairway tread shall be 13" deep.

Stairway riser shall be 7" maximum and all risers shall be equal height.

All concrete shall be Class M6 in accordance with Section 462.

All concrete shall be thoroughly tamped and spaded against forms to leave smooth surface without honey comb. Finish of the step tread to be steel troweled and brushed at right angles to width.

Place concrete on undisturbed soil if back filling is necessary, compact with mechanical tampers to the satisfaction of the Engineer.

Concrete sidewalk shall be constructed in accordance with section 651.

Install double thickness of ½" preformed expansion joint filler between bottom landing of stairway and the sidewalk. Cost of filler shall be incidental to contract unit price per cubic yard of "Class M6 Concrete".

REGISTERED PROFESSIONAL ENGINEER
REG. NO. 9089
MICHAEL R. KUNO
SOUTH DAKOTA
10/7/14

PLANS PREPARED BY:
SEH
PHONE: 605.330.7000
401 EAST 8TH STREET
SUITE 309
SIOUX FALLS, SD 57103-7032
www.sehinc.com

CONCRETE STAIRWAY DETAIL

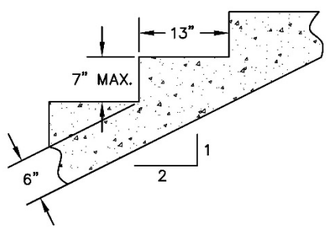

TABLE OF CONCRETE STAIRWAY

Station	L/R	Top Landing Elev.	Bottom Landing Elev.	No. of Steps (w)	Class M6 Concrete (CuYd)
105+86.41	R	1671.87	1669.63	4	0.4
113+49.80	L	1662.09	1661.32	2	0.2
				Totals:	0.6

ARTICULATED CONCRETE MATTRESS AND DRAINAGE FABRIC

This work consists of providing and placing precast concrete block mat (cabled blocks) revetment systems as a protective covering for earth slopes, channel banks, and susceptible soil erosion areas.

Contractor shall provide articulated block mat meeting the requirements of ASTM D 6684-04. Blocks shall be closed cell and be cabled together into a prefabricated mat. Mats shall be placed side-by-side and connected with a clamp and anchor to provide one homogeneous erosion protection system.

Concrete:

1. Manufactured in a plant with an approved quality control plan,
2. Design air content of 6.5% for wet cast blocks,
3. Less than 1.0 percent loss in 100 freeze/thaw cycles when tested in accordance with ASTM C 1262 using a distilled water solution or less than 1.0% loss in 50 freeze/thaw cycles when tested in accordance with ASTM C 67, and
4. Absorption no greater than 7.0% when tested in accordance with ASTM C 140.

Provide wet cast concrete blocks with a design strength of at least 4,000 psi or dry cast concrete block with a design strength of 5,800 psi when tested at 28 days in accordance with ASTM C 140.

Blocks shall be minimum of 22 inches x 22 inches square at the base, minimum 7 inches tall, and weigh at least 250 lbs per block. Individual mats shall be minimum 6 feet wide by 12 feet long.

Cable: Provide stainless steel cable or coated high-strength polyester cables compatible with the system and designed to meet a safety factor of 5:1 in accordance with ASTM D 6684. Cable shall be at least 0.25 inch diameter.

Geotextile Fabric: Provide MSE Geotextile Fabric in accordance with 831.

Clamps: Use stainless steel wire rope clamps and sleeves to secure loops of adjoining mats.

Anchors: Use anchors with a pull resistance of 4,000 lb to secure the top and exposed sides of the mattress.

Bedding Material: Provide sand in accordance with 840. Place sand 1" thick, spread evenly over the geotextile fabric.

Excavate for the foundation for the articulated concrete mat, with geotextile fabric, using toe, terminal, and upper bank trenches. Shape the foundation excavation to the cross-sections as shown on the plans or otherwise directed by the Engineer. Grade and compact termination trenches and toes to prevent water from migrating under the block and geotextile fabric. Grade final subgrade smooth before placing the sand material to allow uniform contact with the geotextile and articulated concrete. Provide subgrade material that is free of stones, sticks and other debris or irregularities that might puncture the geotextile fabric or create other system failures.

Compact subgrade and place geotextile fabric on the entire area supporting the articulated mat without tearing, puncturing or damaging the fabric. Place the fabric with the longest dimension parallel to the direction of the water flow. Place unseamed fabric with splices and joints overlapped at least 36 inches. Bury upgrade edges of fabric area a minimum of 12 inches to direct water flow over the fabric without undermining. Do not operate equipment on top of the geotextile fabric. Secure the geotextile fabric with 6 inch steel pins or staples. Cut fabric as needed to install the anchors. Place the sand layer over the fabric before placing the block.

Place the mats in accordance with the appropriate manufacturer recommendations. Place mats no greater than 3 inches apart. Entrench and bury the outside edges of the mat system at least one block into the ground and fill with compacted fill. Do not allow mats to overlap or blocks to protrude vertically more than 1 inch beyond the adjacent block. Use wire rope clamps to fasten cable loops on longitudinal and transverse adjacent sides of the mats. Provide helical or duckbill type anchors at 8 foot intervals at lead edge and around perimeter of the revetment system. Embed anchors at least 42 inches deep and fasten the exposed cables of the concrete mats to the anchors.

Fill voids with topsoil and seed in accordance with the plans.

The Engineer will measure Articulated Concrete Mattress on the basis of actual surface dimensions installed. The contract unit price for Articulated Concrete Mattress includes all costs associated with excavating, preparing the surface, geotextile fabric, sand, and installing the concrete mattress as outlined in the notes above.

TABLE OF ARTICULATED CONCRETE MATTRESSAND DRAINAGE FABRIC

Station	L/R	Articulated Concrete Mattress (SqYd)
122+46.59 – 123+08.39	R	232.0
	Totals:	232.0

MAILBOXES

The Contractor shall reset the existing mailboxes on new posts with the necessary support hardware for single or double mailbox assemblies. The local Postmaster will determine the recommended mounting height of the mailboxes throughout the project. The Contractor shall coordinate with the Engineer on the proper postal representative to contact.

If large mailboxes are located at double mailbox installations, a single post may need to be used for the large mailbox.

All costs for removing existing mailboxes, providing temporary mailboxes, and resetting mailboxes with new posts and necessary support hardware shall be incidental to the contract unit price per each for "Refurbish Single Mailbox" or "Refurbish Double Mailbox".

No compensation will be provided for existing mailboxes that are removed and reset to accommodate contractor operations.

TABLE OF REFURBISH MAILBOX

Station	L/R	Single (Each)	Double (Each)
112+85.88	L	1	
115+14.91	L	1	
118+22.02	L		1
120+20.67	L	1	
120+41.57	L	1	
120+59.94	L		1
125+07.39	L	1	
127+91.71	L	1	
127+91.71	L		1
	Totals:	6	3

REGISTERED PROFESSIONAL ENGINEER
REG. NO. 9089
MICHAEL R. KUNO
SOUTH DAKOTA
10/7/14

PLANS PREPARED BY:
SEH
PHONE: 605.330.7000
401 EAST 8TH STREET
SUITE 309
SIOUX FALLS, SD 57103-7032
www.sehinc.com

TABLE OF REINFORCED CONCRETE PIPE QUANTITIES

LOCATION	CIRCULAR (CLASS III)				ARCH (CLASS II)	FLARED END
(UPSTREAM STRUCTURE to DOWNSTREAM STRUCTURE)	15" RCP (FT)	21" RCP (FT)	24" RCP (FT)	30" RCP (FT)	30" RCP (FT)	30" RCP (EACH)
JB #17 to JB #14		342				
DI #19 to JB #17	6					
DI #18 to JB #17	26					
JB #14 to JB #11			194			
DI #16 to JB #14	6					
DI #15 to JB #14	26					
JB #11 to JB #8				274		
DI #13 to JB #11	6					
DI #12 to JB #11	26					
JB #8 to JB#5				78		
DI #10 to JB #8	6					
DI #9 to JB #8	26					
JB #5 to JB #3				426		
DI #7 to JB #5	6					
DI #6 to JB #5	26					
JB #3 to DI #2				26		
Di #4 to JB #3	6					
DI #2 to FES #1				28		
FES #1 to outlet						1
FES #20 to outlet						1 (ARCH)
JB #22 to DI #21					24	
DI #23 to JB #22	10					
DI #21 to FES #20					42	
JB #24 to JB #22				254		
DI #26 to JB #24	8					
DI #25 to JB #24	22					
JB #27 to JB #24				236		
DI #29 to JB #27				10		
DI #28 to JB #27	22					
Totals:	228	342	194	1,332	66	2

Note: Pipe lengths given are measured from inside edge of structure to inside edge of structure. For pipe runs that include a flared end section, pipe lengths given are measured from inside edge of structure to the start of flared end section. Pipe lengths have been rounded up to the nearest even foot.

TABLE OF JUNCTION BOXES

ID	STATION	OFFSET	INLET TYPE	FRAME HEIGHT (FT)	ADJUSTING RINGS (IN.)	WALL HEIGHT (H)	CLASS M6 CONCRETE	REINFORCING STEEL	TYPE A7 FRAME AND LID
JB #3	122+27.80	10.00' LT	5' x 5' Junction Box	0.58	0.00	6.00	5.0	958	1
JB #5	117+98.23	10.00' LT	5' x 5' Junction Box	0.58	2.00	5.00	4.5	908	1
JB #8	117+15.61	10.00' LT	5' x 5' Junction Box	0.58	0.00	5.00	4.5	908	1
JB #11	114+37.32	10.00' LT	5' x 5' Junction Box	0.58	5.00	4.00	4.0	821	1
JB #14	112+39.38	10.00' LT	5' x 5' Junction Box	0.58	1.00	4.50	4.3	846	1
JB #17	108+93.67	10.00' LT	5' x 5' Junction Box	0.58	1.00	4.50	4.5	846	1
JB #22	123+42.52	7.00' LT	5' x 5' Junction Box	0.58	3.00	3.00	3.5	739	1
JB #24	125+99.90	7.00' LT	5' x 5' Junction Box	0.58	5.00	5.00	4.5	908	1
JB #27	128+39.85	7.00' LT	5' x 5' Junction Box	0.58	2.00	7.50	5.8	1,071	1
Totals:							40.6	8,005	9*

*SEE TABLE ON SHEET B5 FOR ADDITIONAL TYPE A7 FRAME AND LIDS.

TABLE OF DROP INLETS

ID	STATION	OFFSET	INLET TYPE	CLASS M6 CONCRETE (CUYD)	REINFORCING STEEL (LB)	FRAME AND GRATE		
						TYPE B	4'X6' TYPE S PRECAST LID	4'X11' TYPE S PRECAST LID
DI #2	122+27.80	19.96' RT	4' x 11' TYPE S	5.0	810			1
DI #4	122+27.80	19.96' LT	4' X 6' TYPE S	2.3	409		1	
DI #6	117+98.23	17.50' RT	2' X 3' TYPE B	1.2	124	1		
DI #7	117+98.23	17.50' LT	2' X 3' TYPE B	1.2	129	1		
DI #9	117+19.31	17.50' RT	2' X 3' TYPE B	1.0	111	1		
DI #10	117+15.61	17.50' LT	2' X 3' TYPE B	1.1	115	1		
DI #12	114+37.32	17.50' RT	2' X 3' TYPE B	1.0	110	1		
DI #13	114+37.32	17.50' LT	2' X 3' TYPE B	1.0	113	1		
DI #15	112+39.36	17.50' RT	2' X 3' TYPE B	1.0	110	1		
DI #16	112+39.36	17.50' LT	2' X 3' TYPE B	1.1	114	1		
DI #18	108+93.67	17.50' RT	2' X 3' TYPE B	1.2	124	1		
DI #19	108+93.67	17.50' LT	2' X 3' TYPE B	1.2	129	1		
DI #21	123+42.52	19.96' RT	4' x 11' TYPE S	3.2	609			1
DI #23	123+42.52	19.96' LT	4' X 6' TYPE S	2.5	437		1	
DI #25	125+99.90	17.50' RT	2' X 3' TYPE B	1.1	120	1		
DI #26	125+99.90	17.50' LT	2' X 3' TYPE B	1.2	126	1		
DI #28	128+39.85	17.50' RT	2' X 3' TYPE B	1.2	122	1		
DI #29	128+39.85	17.50' LT	4' x 11' TYPE S	4.2	689			1
Totals:				31.7	4,500	13	2	3

REGISTERED PROFESSIONAL ENGINEER
REG. NO. 9089
MICHAEL R. KUNO
SOUTH DAKOTA
10/7/14

PLANS PREPARED BY:
SEH
PHONE: 605.330.7000
401 EAST 8TH STREET
SUITE 309
SIOUX FALLS, SD 57103-7032
www.sehinc.com

P:\PT\S\Sddot\124655\5-final-dsgn\51-drawings\10-Civil\CAD\PLANSHEETS\SD124655_B_TB1.dwg 10/8/2014 1:53 PM kpederson

STATE OF SOUTH DAKOTA	PROJECT	SHEET NO.	TOTAL SHEETS
	P 6312(18)	B11	B63

FOR BIDDING PURPOSES ONLY

Typical Grading Sections

TYPICAL SECTION

STATION 103+00.00 TO STATION 128+68.00

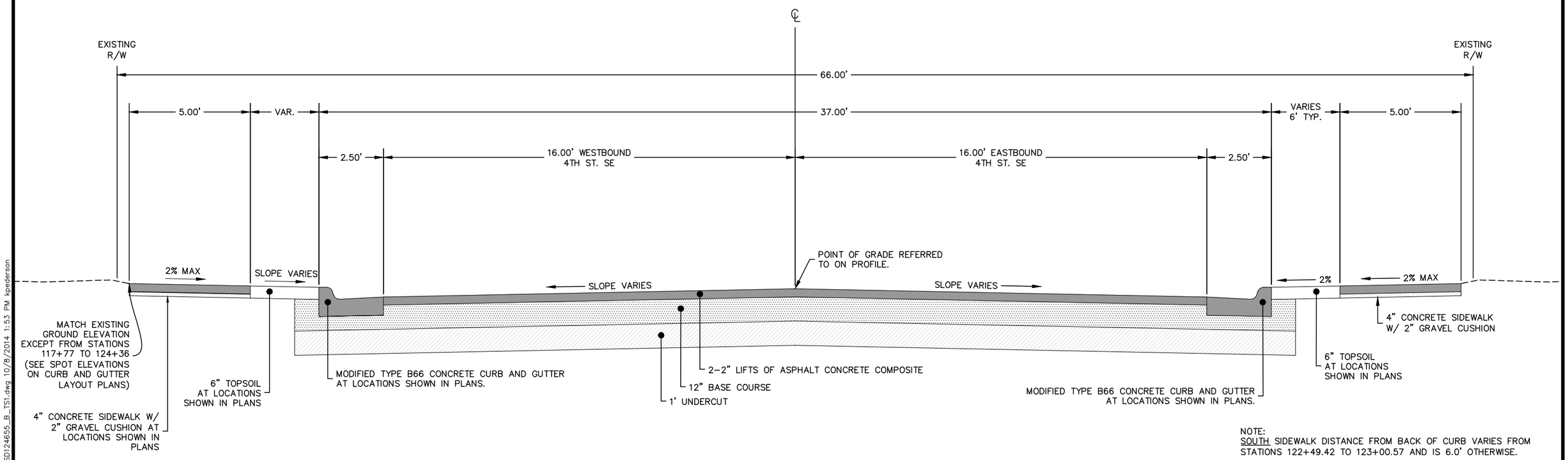

NOTE:
SOUTH SIDEWALK DISTANCE FROM BACK OF CURB VARIES FROM STATIONS 122+49.42 TO 123+00.57 AND IS 6.0' OTHERWISE.

REGISTERED PROFESSIONAL ENGINEER
REG. NO. 9089
MICHAEL R. KUNO
SOUTH DAKOTA
10/7/14

PLANS PREPARED BY:
SEH
PHONE: 605.330.7000
401 EAST 8TH STREET
SUITE 309
SIOUX FALLS, SD 57103-7032
www.sehinc.com

P:\PTS\Sddot\124655\5-final-dsgn\51-drawings\10-Civil\CAD\PLANSHEETS\SD124655_B_TS1.dwg 10/8/2014 1:53 PM kpederson

STATE OF SOUTH DAKOTA	PROJECT	SHEET NO.	TOTAL SHEETS
	P 6312(18)	B12	B63

Horizontal Alignment and Control Data

FOR BIDDING PURPOSES ONLY

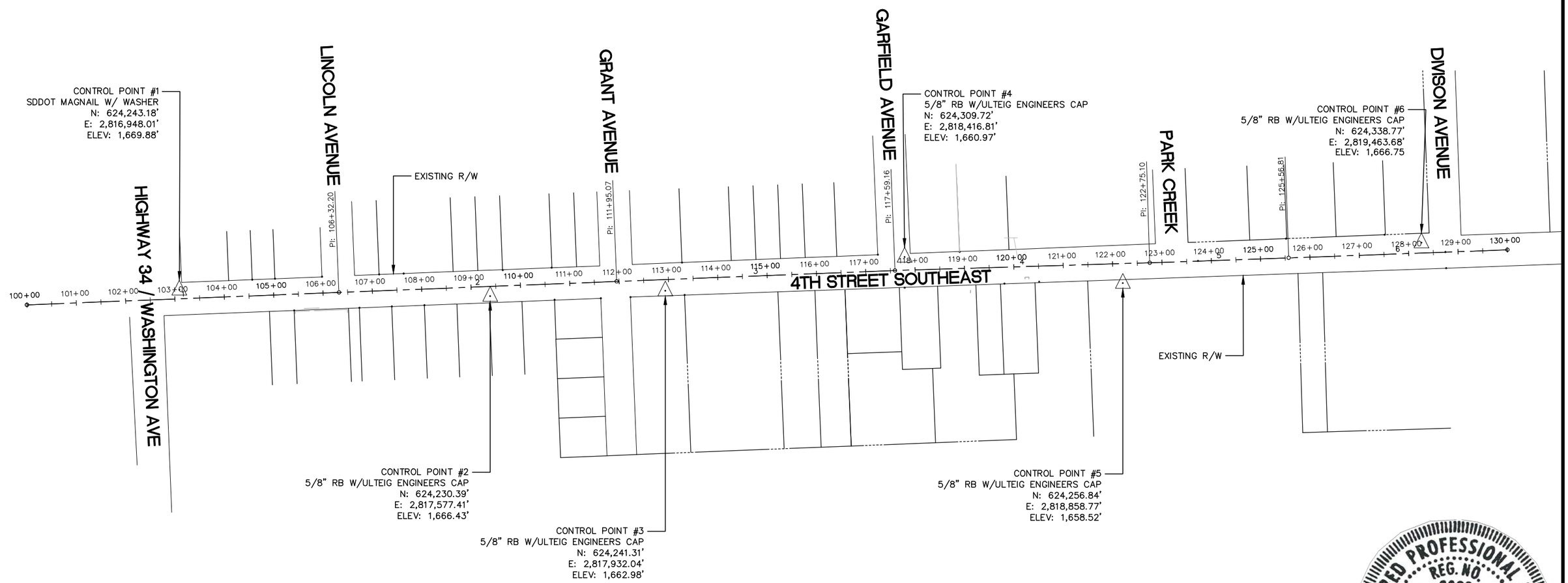

ALIGNMENT TABULATION - PROPOSED CENTERLINE

ID	POINT	STATION	LENGTH	NORTHING	EASTING	BEARING
1	POB	100+00.00	632.20	624212.7060	2816639.3235	N 87° 42' 54" E
2	PI	106+32.20	562.87	624237.9111	2817271.0243	N 87° 44' 41" E
3	PI	111+95.07	564.09	624260.0603	2817833.4548	N 87° 44' 21" E
4	PI	117+59.16	515.94	624282.3119	2818397.1092	N 88° 15' 56" E
5	PI	122+75.10	281.71	624297.9269	2818912.8089	N 88° 00' 44" E
6	PI	125+56.81	443.19	624307.6983	2819194.3452	N 87° 52' 39" E

LEGEND

CONTROL POINT

N

100 0 100 200
scale 50 feet

REGISTERED PROFESSIONAL ENGINEER
REG. NO. 9089
MICHAEL R. KUNO
SOUTH DAKOTA
10/7/14

PLANS PREPARED BY:
SEH
PHONE: 605.330.7000
401 EAST 8TH STREET
SUITE 309
SIOUX FALLS, SD 57103-7032
www.sehinc.com

P:\PT\S\Sddot\124655\5-final-dsgn\51-drawings\10-Civil\CAD\PLANSHEETS\SD124655_B_AL1.dwg 10/8/2014 1:54 PM kpederson

STATE OF SOUTH DAKOTA	PROJECT	SHEET NO.	TOTAL SHEETS
	P 6312(18)	B13	B63

Existing Topography Symbology and Legend

FOR BIDDING PURPOSES ONLY

Anchor
Antenna
Approach
Assumed Corner
Az muth Marker
BBQ Gr / F rep ace
Bearing Tree
Bench Mark
Box Culvert
Br dge
Brush
Bu d ngs
Bu k Tank
Catt e Guard
Cemetery
Center ne
C atern
C ethoe L ne
Commerc a S gn Doub e Face
Commerc a S gn One Post
Commerc a S gn Overhead
Commerc a S gn Two Post
Concrete Symbo
Creek Edge
Curb/Gutter
Curb
Dam Grade/D ke/Levee
Deck Edge
D tch B ock
Doorway Threshold
Dra nage Prof e
Drop n et
Edge Of Asphalt
Edge Of Concrete
Edge Of Grave
Edge Of Other
Edge Of Shou der
E ec Trans /Power Jct Box
Fence Barbw re
Fence Cha n nk
Fence E ectr c
Fence M sc
Fence Rock
Fence Snow
Fence Wood
Fence Woven
F re Hydrant
F ag Po e
F ower Bed
Gas Va ve Or Meter
Gas Pump s and
Gra n B n
Guard ra
Gu de S gn One Post
Gu de S gn Two Post
Gutter
Guy Po e
Haystack

Hedge
H ghway R O W Marker
nterstate C ose Gate
ron P n
rr gat on D tch
Lake Edge
Lawn Spr nk er
Ma box
Manho e E ectr c
Manho e Gas
Manho e M sc
Manho e San tary Sewer
Manho e Storm Sewer
Manho e Te ephone
Manho e Water
Mary Go Round
M crowave Rad o Tower
M sc L ne
M sc Property Corner
M sc Post
Overhang Or Encroachment
Overhead Ut ty L ne
Park ng Meter
P pe W th End Sect on
P pe W th Headwa
P pe W thout End Sect on
P ayground S de
P ayground Sw ng
Power And L ght Po e
Power And Te ephone Po e
Power Meter
Power Po e
Power Po e And Transformer
Power Tower Structure
Propane Tank
Property P pe
Property P pe W th Cap
Property Stone
Pub c Te ephone
Ra road Cross ng S gns
Ra road M epost Marker
Ra road Prof e
Ra road R O W Marker
Ra road S gns
Ra road Sw tch
Ra road Track
Ra road Trest e
Rebar
Rebar W th Cap
Reference Mark
Regu atory S gn One Post
Regu atory S gn Two Post
Rete n ng Wa
R prap
R ver Edge
Rock And W re Baskets
Rockp es
Sate te D sh
Sept c Tank

Shrub Tree
S dewa k
S gn Face
S gn Post
S ough Or Marsh
Sp ring
Stream Gauge
Street Marker
Subsurface Ut ty Exp orat on Test Ho e
Te ephone F ber Opt ce
Te ephone Junct on Box
Te ephone Po e
Te ev s on Cab e Jct Box
Te ev s on Tower
Test We s/Bore Ho es
Traff c S gna
Trash Barre
Tree Bel
Tree Con ferous
Tree Dec duous
Tree Stumps
Trangu at on Stat on
Underground E ectr c L ne
Underground Gas L ne
Underground H gh Pressure Gas L ne
Underground San tary Sewer
Underground Storm Sewer
Underground Tank
Underground Te ephone L ne
Underground Te ev s on Cab e
Underground Water L ne
Warn ng S gn One Post
Warn ng S gn Two Post
Water Fountain
Water Hydrant
Water Meter
Water Tower
Water Va ve
Water We
We r Rock
W ndm
W ngwa
W ness Corner

State and Nat ona L ne
County L ne
Sect on L ne
Quarter L ne
S xteenth L ne
Property L ne
Construct on L ne
R O W L ne
New R O W L ne
Cut and F L m ts
Contro of Access
New Contro of Access
Proposed ROW
(After Property D apose)

PREPARED BY:

SEH
605.330.7000
401 EAST 8TH STREET
SUITE 309
SIOUX FALLS, SD 57103-7032
www.sehinc.com

P:\PT\S\Sddot\124655\5-final-dsgn\51-drawings\10-Civil\CAD\PLANSHEETS\SD124655_B_L01.dwg 10/8/2014 1:54 PM kpederson

Temporary / Permanent Easements Table

FOR BIDDING PURPOSES ONLY

PARCEL	STATION TO STATION	SIDE	TYPE	PURPOSE	AREA (FT²)	OWNER	LEGAL DESCRIPTION
1	105+34.82 TO 105+40.32	RT	TEMPORARY	GRADING	30.25	INSURANCE AND REAL ESTATE MARKET, INC	THE NORTH ONE HUNDRED FEET (N100') OF THE EAST FIFTY FEET (E50') OF LOT ONE (1) IN COUNTY AUDITOR'S SECOND ADDITION TO THE CITY OF MADISON, LAKE COUNTY, SOUTH DAKOTA
2	105+40.32 TO 106+47.84	RT	TEMPORARY	GRADING	591.25	CHERYL DEELSTRA	THE NORTH 99 FEET OF THE WEST 110 FEET OF LOT 2 AND THE SOUTH 2 FEET OF THE NORTH 101 FEET OF THE WEST 110 FEET OF LOT 2 IN COUNTY AUDITOR'S SECOND ADDITION TO MADISON, LAKE COUNTY, SOUTH DAKOTA
3	106+84.29 TO 107+26.29	RT	TEMPORARY	GRADING	52.5	THOMAS C. SPIERING AND LOIS D. SPIERING	THE WEST SIXTY SIX FEET (W 66') OF THE NORTH ONE HUNDRED FIFTY FEET (N 150') OF LOT TWENTY (20), ABUTTING ON SOUTHEAST FOURTH STREET, IN COUNTY AUDITOR'S SECOND ADDITION TO MADISON, SOUTH DAKOTA
4	107+73.18 TO 108+04.18	RT	TEMPORARY	GRADING	93	JACOB L. BUSSER, LEON N. BUSSER AND LISA K. BUSSER	THE EAST 66 FEET OF THE NORTH 150 FEET OF LOT TWENTY (20) IN COUNTY AUDITOR'S SECOND ADDITION TO THE CITY OF MADISON, LAKE COUNTY, SD
5	108+04.18 TO 108+56.18	RT	TEMPORARY	GRADING	156	CALLAHAN RENTALS, LLC	THE NORTH 150 FEET OF THE WEST HALF (W1/2) OF LOT THREE (3) IN COUNTY AUDITOR'S SECOND ADDITION TO MADISON, SOUTH DAKOTA HAVING A STREET ADDRESS OF 513 SE 4TH ST.
6	112+21.61 TO 112+30.59	RT	TEMPORARY	GRADING	54	C. DELPHUS KOEL AND LORNA A. KOEL	NORTH 96 FEET OF LOT SIX (6) OF COUNTY AUDITOR'S SECOND ADDITION TO MADISON, SOUTH DAKOTA
7	117+91.14 TO 118+91.14	LT	TEMPORARY	GRADING	700	NICK VOELTZ	LOT ELEVEN (11) AND LOT TWELVE (12) IN BLOCK TWENTY SIX (26) OF TOWN PROPRIETOR'S SECOND ADDITION TO MADISON, LAKE COUNTY, SD
8	118+55.05 TO 119+22.03	RT	TEMPORARY	GRADING	737	MARTIN B. VOELTZ AND JUDITH K. VOELTZ	LOT 8 EXC. E20' N183' AND W171' E335' N130' AND LOT 1, VOELTZ FIRST ADDITION, COUNTY AUDITOR'S SECOND ADDITION TO MADISON, SOUTH DAKOTA
9	118+91.14 TO 119+69.71	LT	TEMPORARY	GRADING	553	TERRY D. SCHWENK AND ELLEN M. SCHWENK	LOTS THIRTEEN (13 AND FOURTEEN (14), EXCEPT THE RAILROAD RIGHT-OF-WAY, BLOCK TWENTY-SIX (26) TOWN PROPRIETOR'S SECOND ADDITION TO CITY OF MADISON, ACCORDING TO THE RECORDED PLAT THEREOF
10	119+22.03 TO 119+60.00	RT	TEMPORARY	GRADING	304	MARTIN B. VOELTZ AND JUDITH K. VOELTZ	W50' E70' N183' LOT 8, COUNTY AUDITOR'S SECOND ADDITION TO MADISON, SOUTH DAKOTA
11	119+75.00 TO 120+42.00	RT	TEMPORARY	GRADING	536	MARSHA K. MCVEY	THE EAST 20 FEET OF THE NORTH 183 FEET OF LOT EIGHT (8) OF COUNTY AUDITOR'S SECOND ADDITION TO MADISON, SOUTH DAKOTA AND THE WEST 50 FEET OF THE NORTH 183 FEET OF LOT NINE (9) OF COUNTY AUDITOR'S SECOND ADDITION TO MADISON, SOUTH DAKOTA

REGISTERED PROFESSIONAL ENGINEER
REG. NO. 9089
MICHAEL R. KUNO
SOUTH DAKOTA
10/7/14

PLANS PREPARED BY:
SEH
PHONE: 605.330.7000
401 EAST 8TH STREET
SUITE 309
SIOUX FALLS, SD 57103-7032
www.sehinc.com

P:\PT\S\Sddot\124655\5-final-dsgn\51-drawings\10-Civil\CAD\PLANSHEETS\SD124655_B_RW1.dwg 10/24/2014 10:17 AM kschelhaas

STATE OF SOUTH DAKOTA	PROJECT	SHEET NO.	TOTAL SHEETS
	P 6312(18)	B15	B63

Temporary / Permanent Easements

FOR BIDDING PURPOSES ONLY

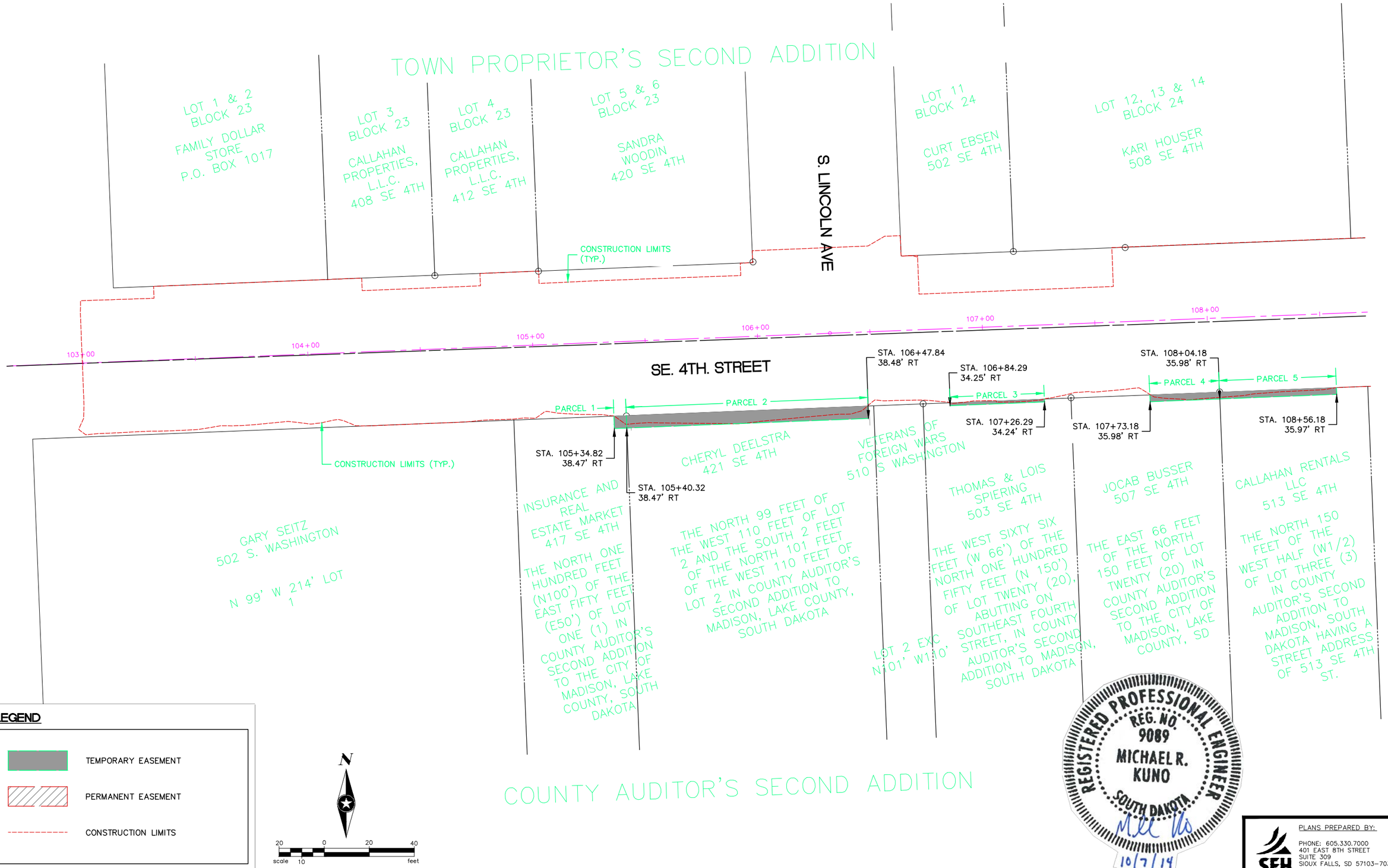

REGISTERED PROFESSIONAL ENGINEER
REG. NO. 9089
MICHAEL R. KUNO
SOUTH DAKOTA
10/7/14

PLANS PREPARED BY:
SEH
PHONE: 605.330.7000
401 EAST 8TH STREET
SUITE 309
SIOUX FALLS, SD 57103-7032
www.sehinc.com

P:\PT\S\Sddot\124655\5-final-dsgn\51-drawings\10-Civil\CAD\PLANSHEETS\SD124655_B_RW2.dwg 10/24/2014 10:16 AM kschelhaas

STATE OF SOUTH DAKOTA	PROJECT	SHEET NO.	TOTAL SHEETS
	P 6312(18)	B16	B63

Temporary / Permanent Easements

FOR BIDDING PURPOSES ONLY

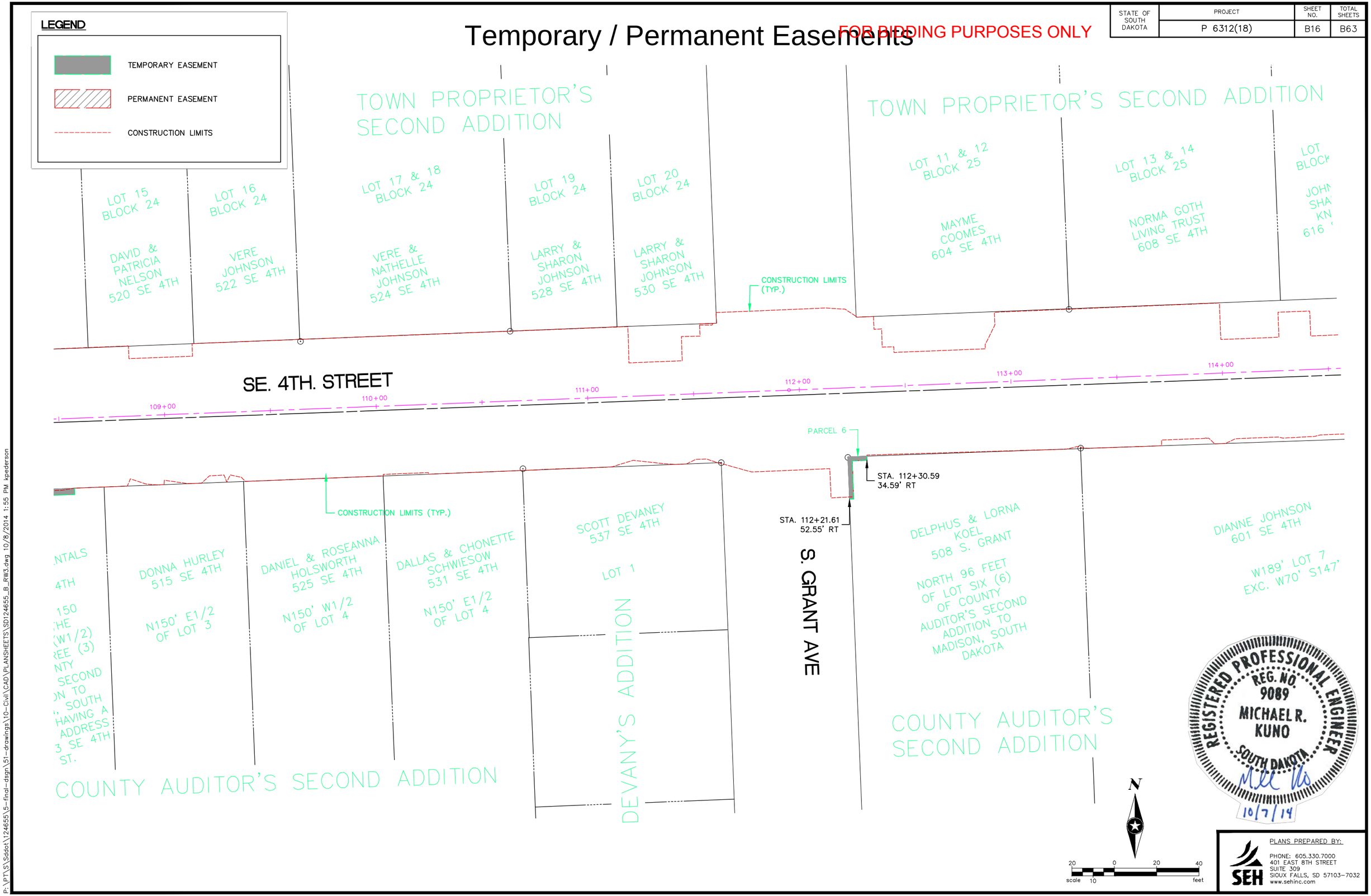

REGISTERED PROFESSIONAL ENGINEER
REG. NO. 9089
MICHAEL R. KUNO
SOUTH DAKOTA
10/7/14

PLANS PREPARED BY:
SEH
PHONE: 605.330.7000
401 EAST 8TH STREET
SUITE 309
SIOUX FALLS, SD 57103-7032
www.sehinc.com

P:\PT\S\Sddot\124655\5-final-dsgn\51-drawings\10-Civil\CAD\PLANSHEETS\SD124655_B_RW3.dwg 10/8/2014 1:55 PM kpederson

STATE OF SOUTH DAKOTA	PROJECT	SHEET NO.	TOTAL SHEETS
	P 6312(18)	B17	B63

Temporary / Permanent Easements

FOR BIDDING PURPOSES ONLY

REGISTERED PROFESSIONAL ENGINEER
REG. NO. 9089
MICHAEL R. KUNO
SOUTH DAKOTA
10/7/14

LEGEND

- TEMPORARY EASEMENT
- PERMANENT EASEMENT
- CONSTRUCTION LIMITS

*SEE TEMPORARY / PERMANENT EASEMENT TABLE FOR PARCEL INFORMATION

PLANS PREPARED BY:
SEH
PHONE: 605.330.7000
401 EAST 8TH STREET
SUITE 309
SIOUX FALLS, SD 57103-7032
www.sehinc.com

P:\PT\S\Sddot\124655\5-final-dsgn\51-drawings\10-Civil\CAD\PLANSHEETS\SD124655_B_RW4.dwg 10/8/2014 1:55 PM kpederson

STATE OF SOUTH DAKOTA	PROJECT	SHEET NO.	TOTAL SHEETS
	P 6312(18)	B18	B63

Temporary / Permanent Easements

FOR BIDDING PURPOSES ONLY

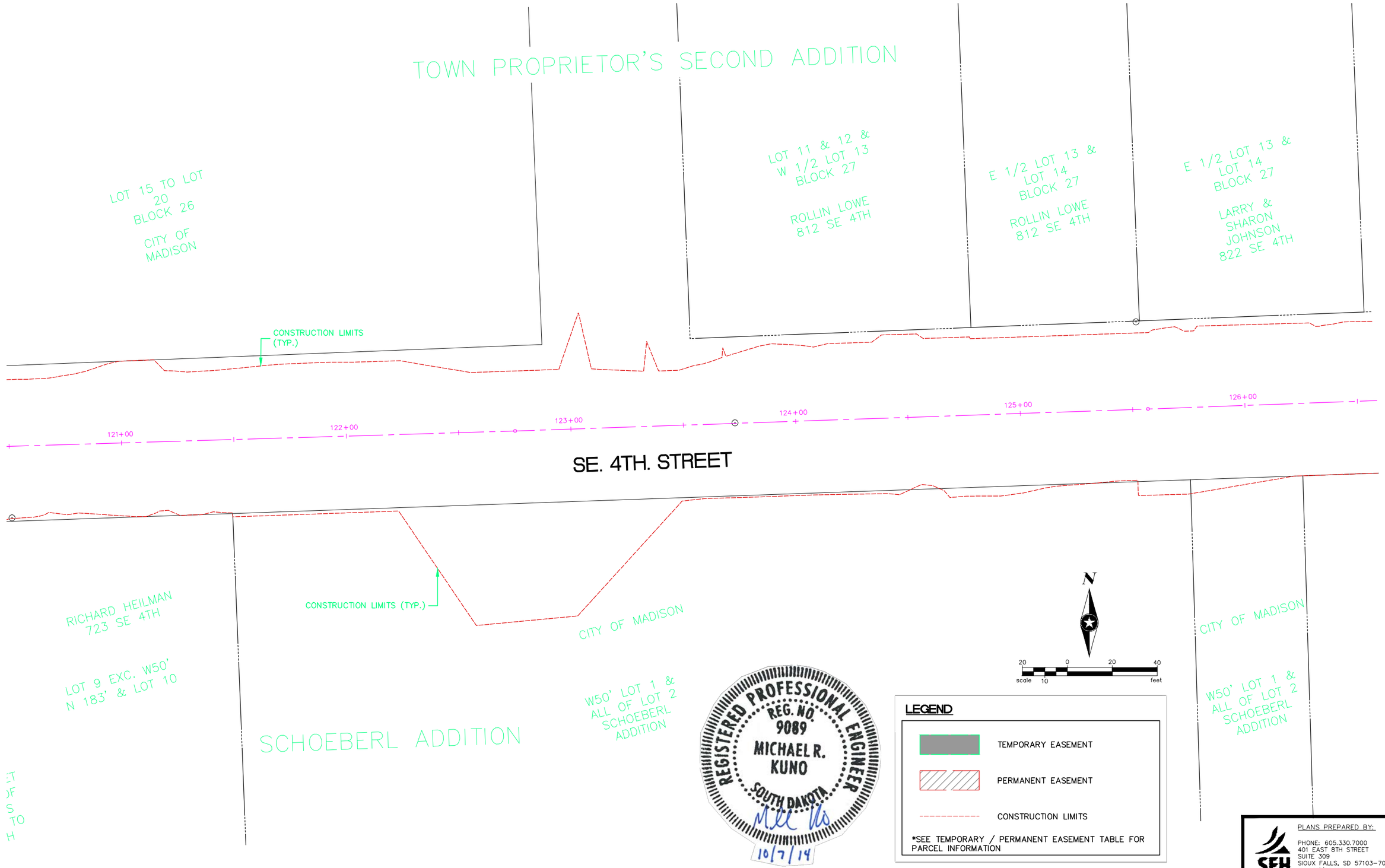

PLANS PREPARED BY:
SEH
PHONE: 605.330.7000
401 EAST 8TH STREET
SUITE 309
SIOUX FALLS, SD 57103-7032
www.sehinc.com

P:\PT\S\Sddot\124655\5-final-dsgn\51-drawings\10-Civil\CAD\PLANSHEETS\SD124655_B_RW5.dwg 10/8/2014 1:55 PM kpederson

STATE OF SOUTH DAKOTA	PROJECT	SHEET NO.	TOTAL SHEETS
	P 6312(18)	B19	B63

Temporary / Permanent Easements

FOR BIDDING PURPOSES ONLY

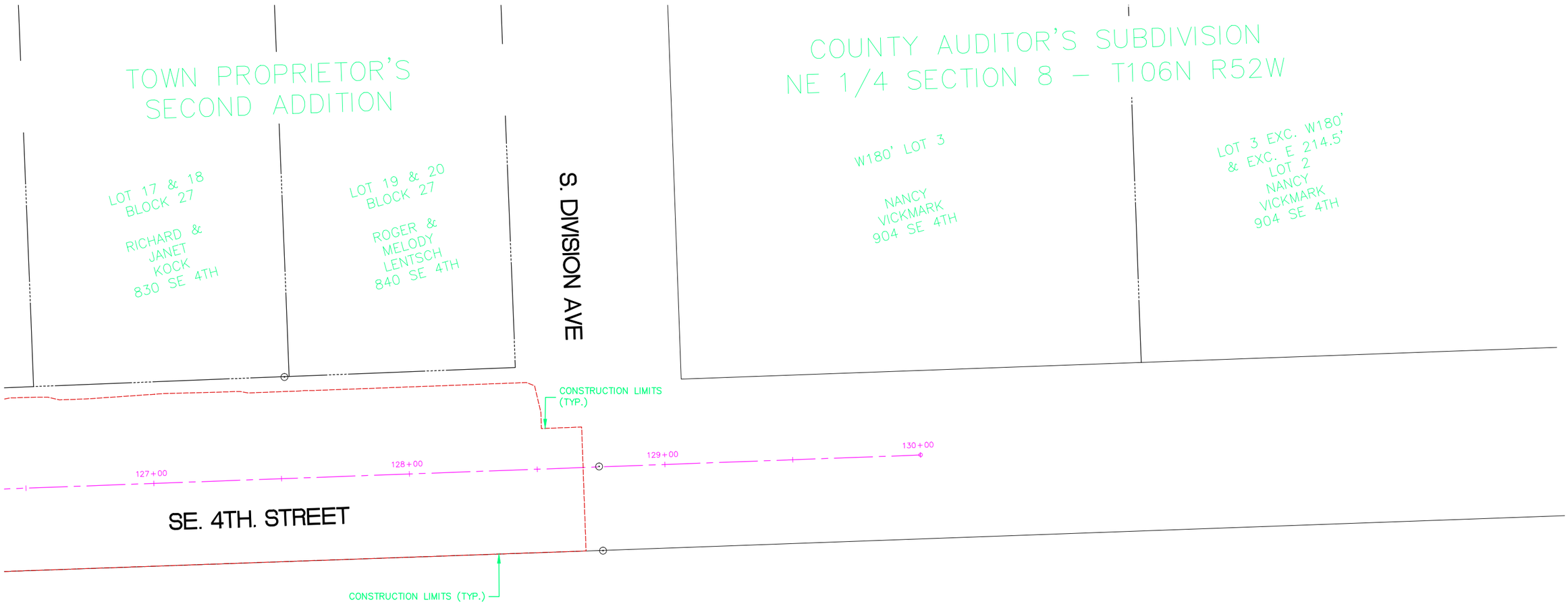

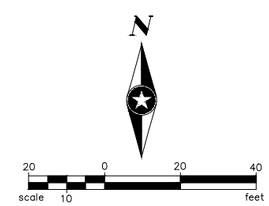

LEGEND

- TEMPORARY EASEMENT
- PERMANENT EASEMENT
- CONSTRUCTION LIMITS

*SEE TEMPORARY / PERMANENT EASEMENT TABLE FOR PARCEL INFORMATION

REGISTERED PROFESSIONAL ENGINEER
REG. NO. 9089
MICHAEL R. KUNO
SOUTH DAKOTA
10/7/14

PLANS PREPARED BY:
SEH
PHONE: 605.330.7000
401 EAST 8TH STREET
SUITE 309
SIOUX FALLS, SD 57103-7032
www.sehinc.com

P:\PT\S\Sddot\124655\5-final-dsgn\51-drawings\10-Civil\CAD\PLANSHEETS\SD124655_B_RW6.dwg 10/8/2014 1:55 PM kpederson

STATE OF SOUTH DAKOTA	PROJECT	SHEET NO.	TOTAL SHEETS
	P 6312(18)	B20	B63

FOR BIDDING PURPOSES ONLY

Existing Conditions, Removals, and Inplace Utilities

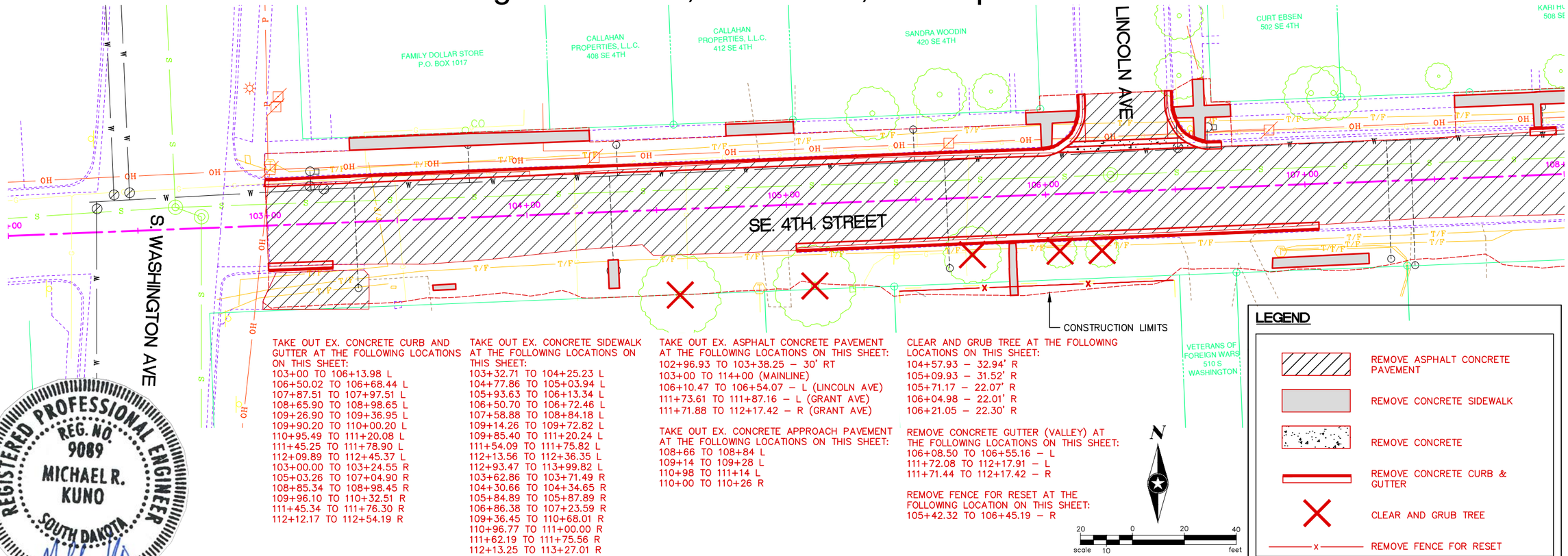

TAKE OUT EX. CONCRETE CURB AND GUTTER AT THE FOLLOWING LOCATIONS ON THIS SHEET:
103+00 TO 106+13.98 L
106+50.02 TO 106+68.44 L
107+87.51 TO 107+97.51 L
108+65.90 TO 108+98.65 L
109+26.90 TO 109+36.95 L
109+90.20 TO 110+00.20 L
110+95.49 TO 111+20.08 L
111+45.25 TO 111+78.90 L
112+09.89 TO 112+45.37 L
103+00.00 TO 103+24.55 R
105+03.26 TO 107+04.90 R
108+85.34 TO 108+98.45 R
109+96.10 TO 110+32.51 R
111+45.34 TO 111+76.30 R
112+12.17 TO 112+54.19 R

TAKE OUT EX. CONCRETE SIDEWALK AT THE FOLLOWING LOCATIONS ON THIS SHEET:
103+32.71 TO 104+25.23 L
104+77.86 TO 105+03.94 L
105+93.63 TO 106+13.34 L
106+50.70 TO 106+72.46 L
107+58.88 TO 108+84.18 L
109+14.26 TO 109+72.82 L
109+85.40 TO 111+20.24 L
111+54.09 TO 111+75.82 L
112+13.56 TO 112+36.35 L
112+93.47 TO 113+99.82 L
103+62.86 TO 103+71.49 R
104+30.66 TO 104+34.65 R
105+84.89 TO 105+87.89 R
106+86.38 TO 107+23.59 R
109+36.45 TO 110+68.01 R
110+96.77 TO 111+00.00 R
111+62.19 TO 111+75.56 R
112+13.25 TO 113+27.01 R

TAKE OUT EX. ASPHALT CONCRETE PAVEMENT AT THE FOLLOWING LOCATIONS ON THIS SHEET:
102+96.93 TO 103+38.25 – 30' RT
103+00 TO 114+00 (MAINLINE)
106+10.47 TO 106+54.07 – L (LINCOLN AVE)
111+73.61 TO 111+87.16 – L (GRANT AVE)
111+71.88 TO 112+17.42 – R (GRANT AVE)

TAKE OUT EX. CONCRETE APPROACH PAVEMENT AT THE FOLLOWING LOCATIONS ON THIS SHEET:
108+66 TO 108+84 L
109+14 TO 109+28 L
110+98 TO 111+14 L
110+00 TO 110+26 R

CLEAR AND GRUB TREE AT THE FOLLOWING LOCATIONS ON THIS SHEET:
104+57.93 – 32.94' R
105+09.93 – 31.52' R
105+71.17 – 22.07' R
106+04.98 – 22.01' R
106+21.05 – 22.30' R

REMOVE CONCRETE GUTTER (VALLEY) AT THE FOLLOWING LOCATIONS ON THIS SHEET:
106+08.50 TO 106+55.16 – L
111+72.08 TO 112+17.91 – L
111+71.44 TO 112+17.42 – R

REMOVE FENCE FOR RESET AT THE FOLLOWING LOCATION ON THIS SHEET:
105+42.32 TO 106+45.19 – R

LEGEND

- REMOVE ASPHALT CONCRETE PAVEMENT
- REMOVE CONCRETE SIDEWALK
- REMOVE CONCRETE
- REMOVE CONCRETE CURB & GUTTER
- CLEAR AND GRUB TREE
- REMOVE FENCE FOR RESET

REGISTERED PROFESSIONAL ENGINEER
REG. NO. 9089
MICHAEL R. KUNO
SOUTH DAKOTA
10/7/14

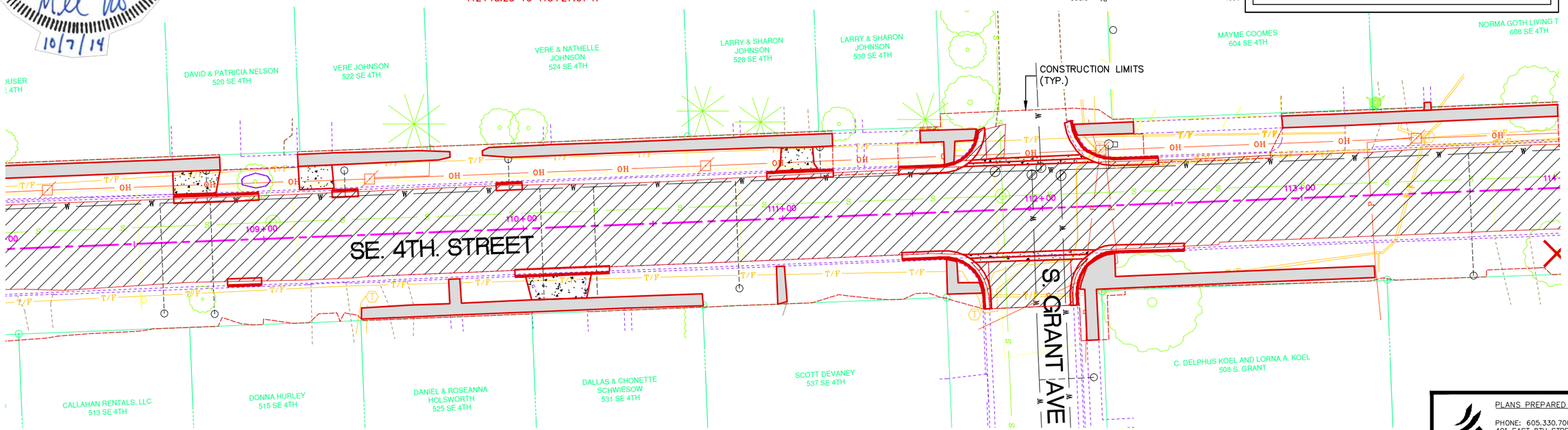

PLANS PREPARED BY:
SEH
PHONE: 605.330.7000
401 EAST 8TH STREET
SUITE 309
SIOUX FALLS, SD 57103-7032
www.sehinc.com

P:\PT\S\Sddot\124655\5-final-dsgn\51-drawings\10-Civil\CAD\PLANSHEETS\SD124655_B_REM1.dwg 10/8/2014 1:56 PM kpederson

STATE OF SOUTH DAKOTA	PROJECT	SHEET NO.	TOTAL SHEETS
	P 6312(18)	B21	B63

FOR BIDDING PURPOSES ONLY

Existing Conditions, Removals, and Inplace Utilities

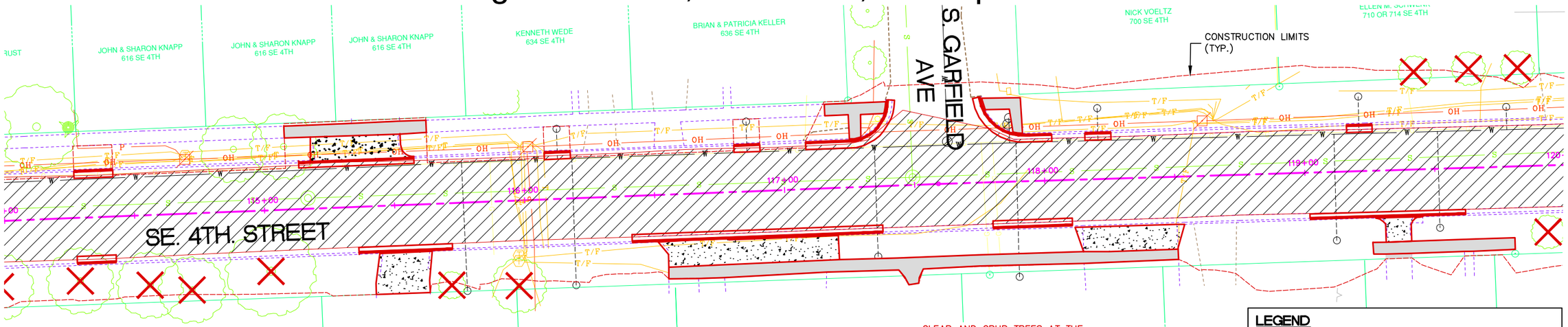

TAKE OUT EX. CONCRETE CURB AND GUTTER AT THE FOLLOWING LOCATIONS ON THIS SHEET:
114+27.29 TO 114+42.28 L
115+13.78 TO 115+58.09 L
116+08.23 TO 116+18.23 L
116+81.15 TO 116+91.15 L
117+08.60 TO 117+43.52 L
117+73.22 TO 118+03.19 L
118+15.96 TO 118+25.96 L
119+16.41 TO 119+26.41 L
122+22.79 TO 122+40.95 L
123+00.01 TO 126+00.00 L
114+27.31 TO 114+42.31 R
115+36.66 TO 115+71.57 R
116+40.71 TO 117+37.13 R
117+79.67 TO 118+10.16 R
119+01.54 TO 119+61.34 R
122+04.43 TO 122+37.78 R
123+33.11 TO 126+00.00 R

TAKE OUT EX. CONCRETE SIDEWALK AT THE FOLLOWING LOCATIONS ON THIS SHEET:
115+08.66 TO 115+63.36 L
117+16.54 TO 117+40.11 L
117+76.70 TO 117+92.07 L
124+78.57 TO 125+53.62 L
127+53.48 TO 128+36.96 L
116+54.21 TO 118+50.53 R
119+25.36 TO 119+80.47 R

TAKE OUT EX. ASPHALT CONCRETE PAVEMENT AT THE FOLLOWING LOCATIONS ON THIS SHEET:
114+00 TO 126+00 (MAINLINE INC. GARFIELD INTERSECTION)
125+54.87 TO 125+93.31 – R

TAKE OUT EX. CONCRETE APPROACH PAVEMENT AT THE FOLLOWING LOCATIONS ON THIS SHEET:
115+18.29 TO 115+58.09 L
125+43.42 TO 125+41.56 L
115+41.66 TO 115+63.73 R
116+50.75 TO 117+20.15 R
119+26.68 TO 119+44.78 R
118+11.13 TO 118+53.30 R
125+32.20 TO 125+54.83 R

TAKE OUT DROP INLETS AT THE FOLLOWING LOCATIONS:
123+03.70 – 16.5' L
123+51.73 – 16.5' R

TAKE OUT STORM SEWER PIPE AT THE FOLLOWING LOCTIONS ON THIS SHEET:
122+93.85–16.97' L TO 123+03.70–16.42' L
122+93.73–17.59' R TO 123+51.73–16.32' L

CLEAR AND GRUB TREES AT THE FOLLOWING LOCATIONS ON THIS SHEET:
114+00 – 25' R
114+28 – 24' R
114+55 – 27' R
114+71 – 30' R
115+02 – 23' R
115+71 – 32' R
115+97 – 33' R
119+43 – 37' L
119+64 – 37' L
119+83 – 37' L
119+93 – 26' R
120+26 – 25' R
124+72 – 34' R
125+15 – 33' R

REMOVE FENCE FOR RESET AT THE FOLLOWING LOCATIONS ON THIS SHEET:
118+90.71 – 34.42' L

LEGEND

- REMOVE ASPHALT CONCRETE PAVEMENT
- REMOVE CONCRETE SIDEWALK
- REMOVE CONCRETE
- REMOVE CONCRETE CURB & GUTTER
- CLEAR AND GRUB TREE

REGISTERED PROFESSIONAL ENGINEER
REG. NO. 9089
MICHAEL R. KUNO
SOUTH DAKOTA
10/7/14

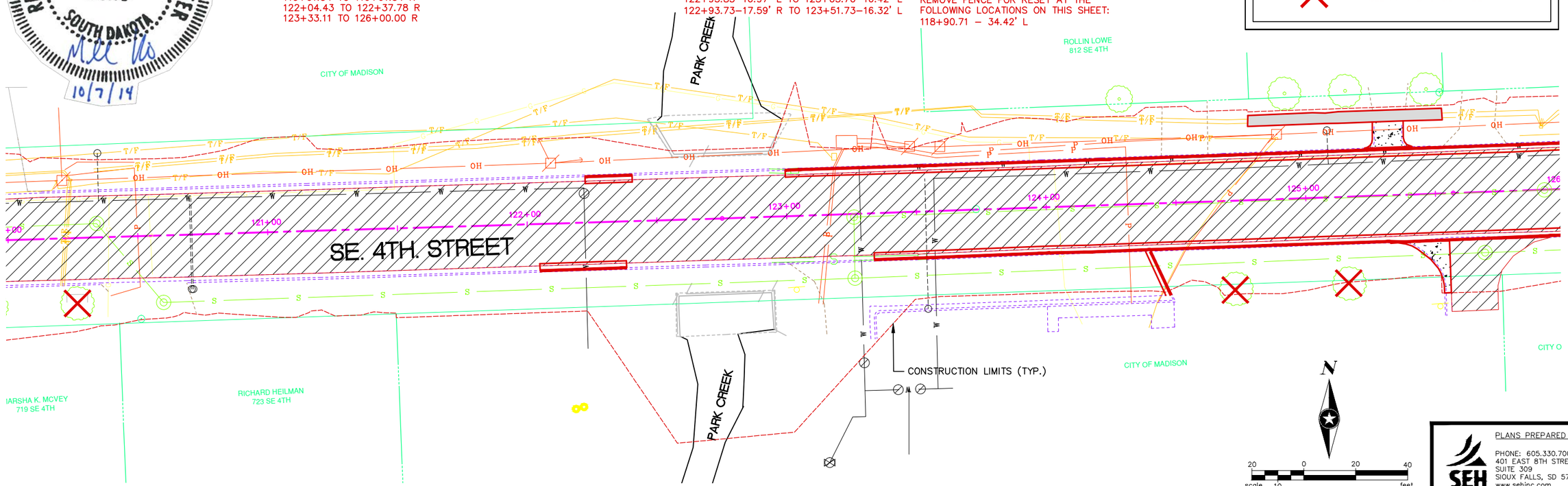

PLANS PREPARED BY:
SEH
PHONE: 605.330.7000
401 EAST 8TH STREET
SUITE 309
SIOUX FALLS, SD 57103–7032
www.sehinc.com

P:\PT\S\Sddot\124655\5-final-dsgn\51-drawings\10-Civil\CAD\PLANSHEETS\SD124655_B_REM2.dwg 10/8/2014 1:56 PM kpederson

STATE OF SOUTH DAKOTA	PROJECT	SHEET NO.	TOTAL SHEETS
	P 6312(18)	B22	B63

FOR BIDDING PURPOSES ONLY

Existing Conditions, Removals, and Inplace Utilities

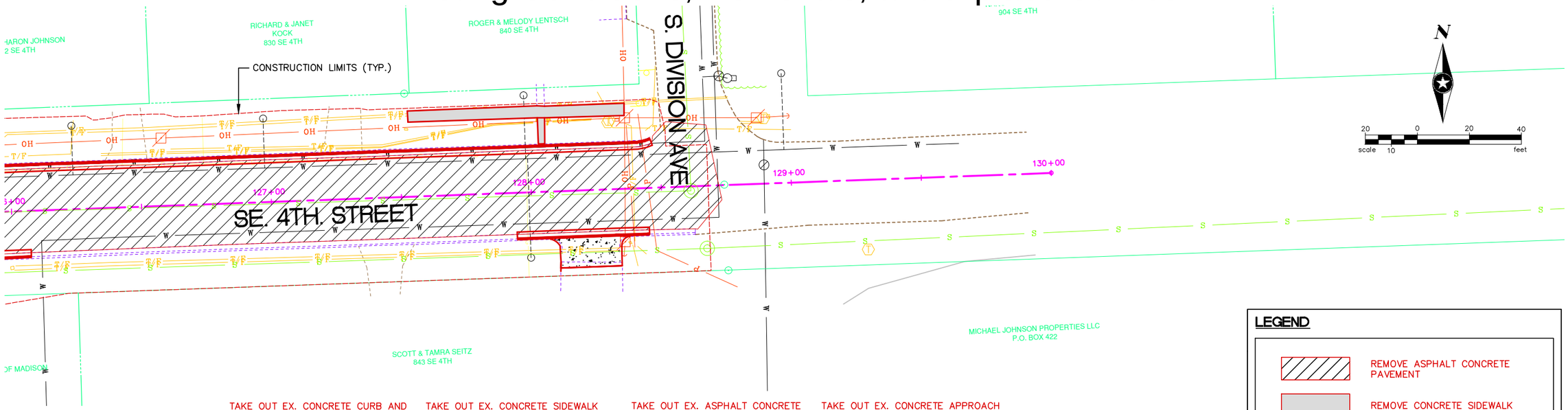

TAKE OUT EX. CONCRETE CURB AND GUTTER AT THE FOLLOWING LOCATIONS ON THIS SHEET:
126+00 TO 128+47.13 L
126+00 TO 126+07.01 R
127+94.00 TO 128+44.83 R

TAKE OUT EX. CONCRETE SIDEWALK AT THE FOLLOWING LOCATIONS ON THIS SHEET:
127+53.48 TO 128+36.69 L

TAKE OUT EX. ASPHALT CONCRETE PAVEMENT AT THE FOLLOWING LOCATIONS ON THIS SHEET:
126+00 TO 128+73.09 (MAINLINE)

TAKE OUT EX. CONCRETE APPROACH PAVEMENT AT THE FOLLOWING LOCATIONS ON THIS SHEET:
128+06.83 TO 128+37.02 R

LEGEND

- REMOVE ASPHALT CONCRETE PAVEMENT
- REMOVE CONCRETE SIDEWALK
- REMOVE CONCRETE
- REMOVE CONCRETE CURB & GUTTER
- CLEAR AND GRUB TREE

REGISTERED PROFESSIONAL ENGINEER
REG. NO. 9089
MICHAEL R. KUNO
SOUTH DAKOTA
10/7/14

PLANS PREPARED BY:
SEH
PHONE: 605.330.7000
401 EAST 8TH STREET
SUITE 309
SIOUX FALLS, SD 57103-7032
www.sehinc.com

P:\PT\S\Sddot\124655\5-final-dsgn\51-drawings\10-Civil\CAD\PLANSHEETS\SD124655_B_REM3.dwg 10/8/2014 1:56 PM kpederson

STATE OF SOUTH DAKOTA	PROJECT	SHEET NO.	TOTAL SHEETS
	P 6312(18)	B23	B63

FOR BIDDING PURPOSES ONLY

Roadway and Storm Sewer Plan

Sec. 8-T106N-R52W

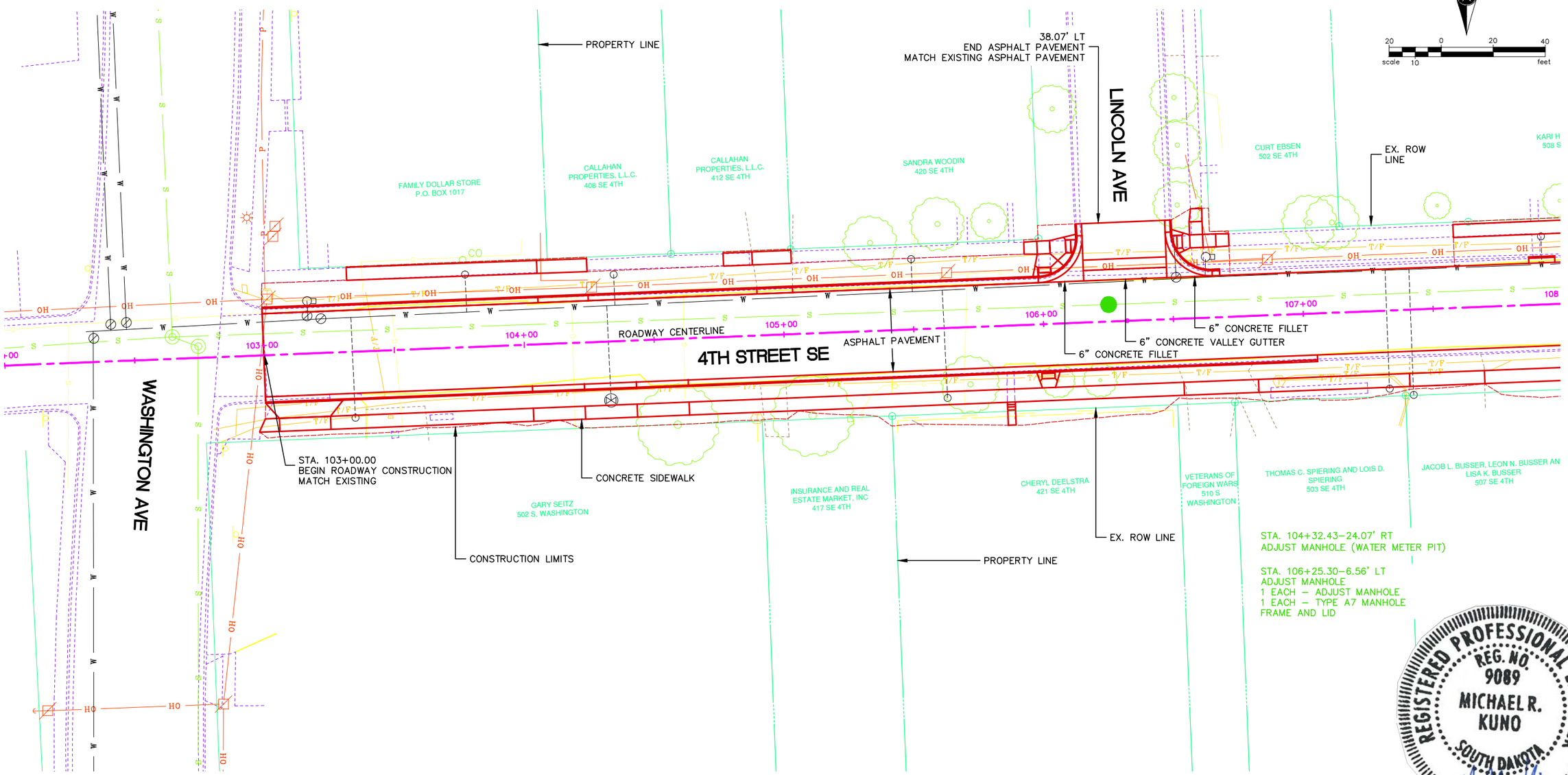

LEGEND

●	ADJUST MANHOLE

REGISTERED PROFESSIONAL ENGINEER
REG. NO. 9089
MICHAEL R. KUNO
SOUTH DAKOTA
10/7/14

BENCHMARK EL. 1669.88
SDDOT MAGNAIL W/ WASHER
STA. = 103+09.66
OFFSET = 18.14 LT

BENCHMARK EL. 1666.43
5/8" RB W/ ULTEIG ENGINEERS CAP
STA. = 109+38.06
OFFSET = 19.57' RT

PLANS PREPARED BY:
SEH
PHONE: 605.330.7000
401 EAST 8TH STREET
SUITE 309
SIOUX FALLS, SD 57103-7032
www.sehinc.com

P:\PT\S\Sddot\124655\5-final-dsgn\51-drawings\10-Civil\CAD\PLANSHEETS\SD124655_B_PL1.dwg 10/8/2014 1:56 PM kpederson

STATE OF SOUTH DAKOTA	PROJECT	SHEET NO.	TOTAL SHEETS
	P 6312(18)	B24	B63

Roadway and Storm Sewer Profile

FOR BIDDING PURPOSES ONLY

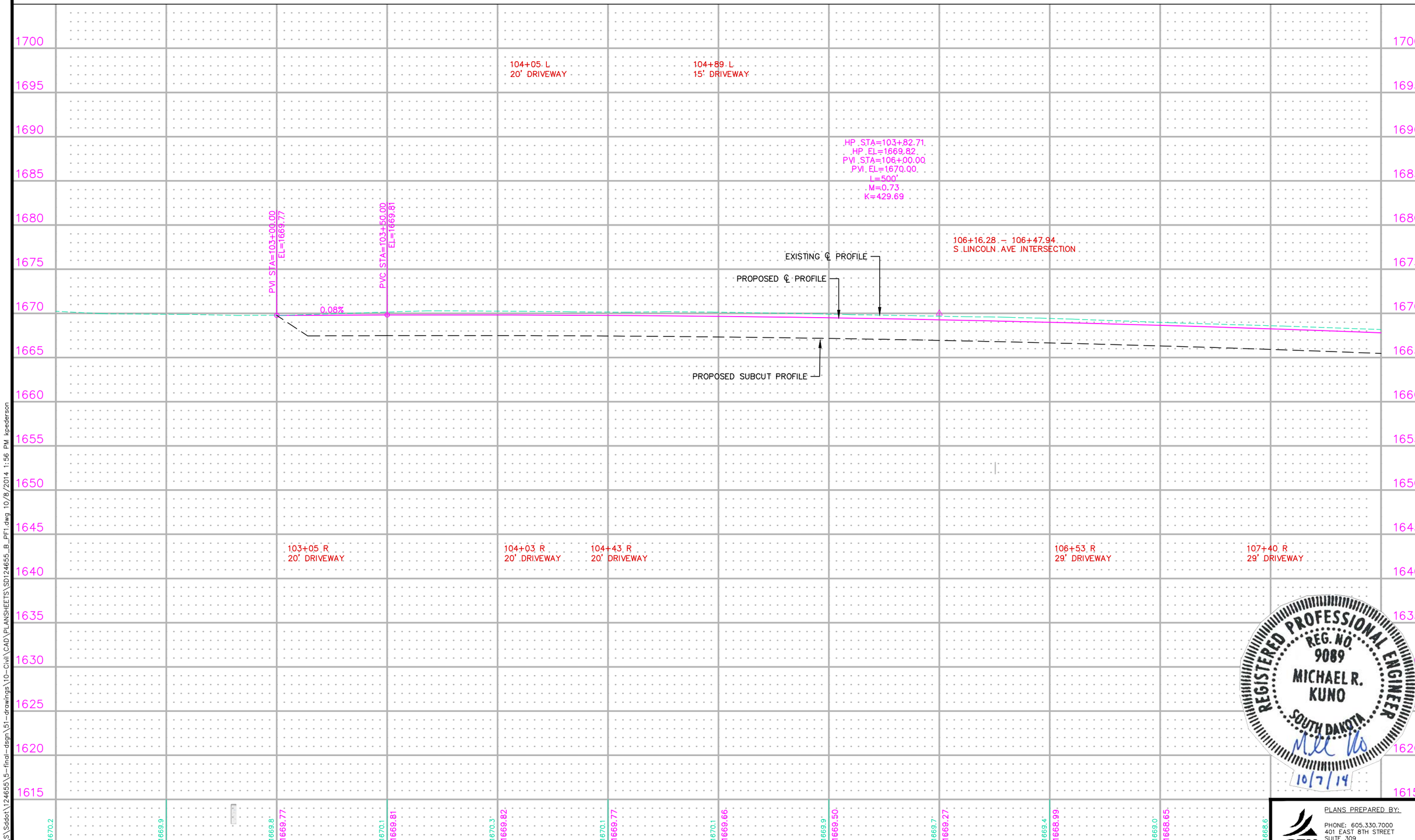

REGISTERED PROFESSIONAL ENGINEER
REG. NO. 9089
MICHAEL R. KUNO
SOUTH DAKOTA
10/7/14

PLANS PREPARED BY:
SEH
PHONE: 605.330.7000
401 EAST 8TH STREET
SUITE 309
SIOUX FALLS, SD 57103-7032
www.sehinc.com

P:\PT\S\Sddot\124655\5-final-dsgn\51--drawings\10-Civil\CAD\PLANSHEETS\SD124655_B_PF1.dwg 10/8/2014 1:56 PM kpederson

STATE OF SOUTH DAKOTA	PROJECT	SHEET NO.	TOTAL SHEETS
	P 6312(18)	B25	B63

FOR BIDDING PURPOSES ONLY

Roadway and Storm Sewer Plan

Sec. 8-T106N-R52W

108+93.67–17.67' LT (DI#19)
F&I 2' X 3' TYPE B
DROP INLET W/
TYPE B FRAME &
GRATE ASSEMBLY
WITH CURB BOX
TOP OF CURB EL. 1666.80
TOP OF WALL EL. 1665.84
FLOOR EL. 1661.26

F&I 15" – 5' RC PIP
(BETWEEN JB#17 & DI#19)

108+93.67–10.00' LT (JB#17)
F&I 5' X 5' JUNCTION BOX W/
TYPE A7 MANHOLE FRAME AND LID
RIM EL. 1666.55
TOP OF WALL EL. 1665.86
FLOOR EL. 1660.78

F&I 15" – 25' RC PIP
(BETWEEN JB#17 & DI#18)

108+93.67–17.67' RT (DI#18)
F&I 2' X 3' TYPE B
DROP INLET W/
TYPE B FRAME &
GRATE ASSEMBLY
WITH CURB BOX
TOP OF CURB EL. 1666.78
TOP OF WALL EL. 1665.82
FLOOR EL. 1661.46

F&I 21" – 341' RC PIP
(BETWEEN JB#14 & JB#17)

112+39.37–17.67' LT (DI#16)
F&I 2' X 3' TYPE B
DROP INLET W/
TYPE B FRAME &
GRATE ASSEMBLY
WITH CURB BOX
TOP OF CURB EL. 1663.22
TOP OF WALL EL. 1662.26
FLOOR EL. 1658.40

F&I 15" – 5' RC PIP
(BETWEEN JB#14 & DI#16)

112+39.36–10.00' LT (JB#14)
F&I 5' X 5' JUNCTION BOX W/
TYPE A7 MANHOLE FRAME AND LID
RIM EL. 1662.93
TOP OF WALL EL. 1662.29
FLOOR EL. 1657.21

F&I 15" – 25' RC PIP
(BETWEEN JB#14 & DI#15)

112+39.36–17.67' RT (DI#15)
F&I 2' X 3' TYPE B
DROP INLET W/
TYPE B FRAME &
GRATE ASSEMBLY
WITH CURB BOX
TOP OF CURB EL. 1663.21
TOP OF WALL EL. 1662.25
FLOOR EL. 1658.60

STA. 109+03.71–6.23' LT
1 EACH – ADJUST MANHOLE
1 EACH – TYPE A7 MANHOLE
FRAME AND LID

STA. 111+84.89–5.34' LT
1 EACH – ADJUST MANHOLE
1 EACH – TYPE A7 MANHOLE
FRAME AND LID

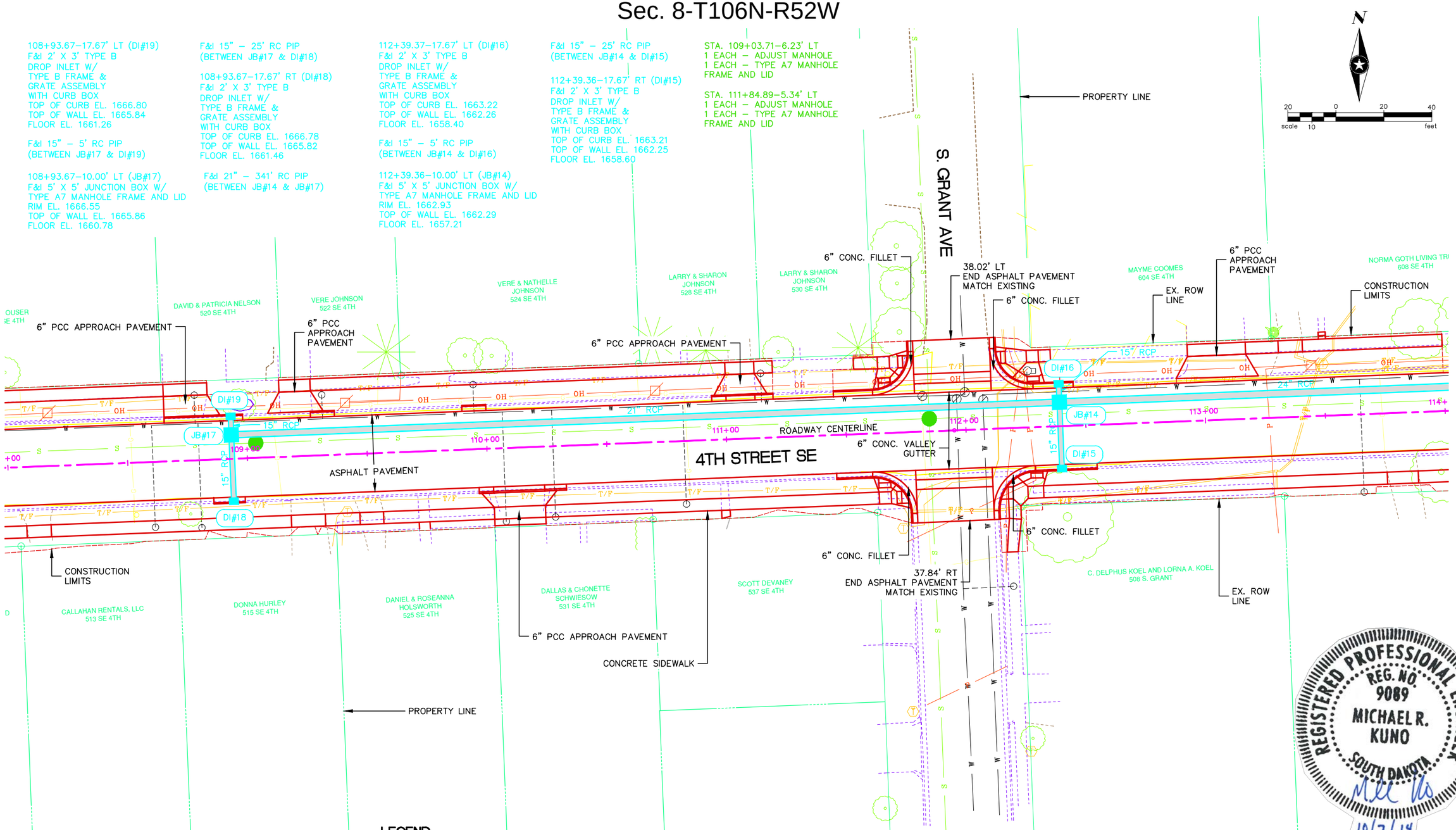

REGISTERED PROFESSIONAL ENGINEER
REG. NO. 9089
MICHAEL R. KUNO
SOUTH DAKOTA
10/7/14

LEGEND

ADJUST MANHOLE

BENCHMARK EL. 1666.43
5/8" RB W/ ULTEIG ENGINEERS CAP
STA. = 109+38.06
OFFSET = 19.57' RT

BENCHMARK EL. 1662.98
5/8" RB W/ ULTEIG ENGINEERS CAP
STA. = 112+92.84
OFFSET = 22.67' RT

PLANS PREPARED BY:
SEH
PHONE: 605.330.7000
401 EAST 8TH STREET
SUITE 309
SIOUX FALLS, SD 57103-7032
www.sehinc.com

P:\PT\S\Sddot\124655\5-final-dsgn\51-drawings\10-Civil\CAD\PLANSHEETS\SD124655_B_PL2.dwg 10/8/2014 1:56 PM kpederson

STATE OF SOUTH DAKOTA	PROJECT	SHEET NO.	TOTAL SHEETS
	P 6312(18)	B26	B63

Roadway and Storm Sewer Profile

FOR BIDDING PURPOSES ONLY

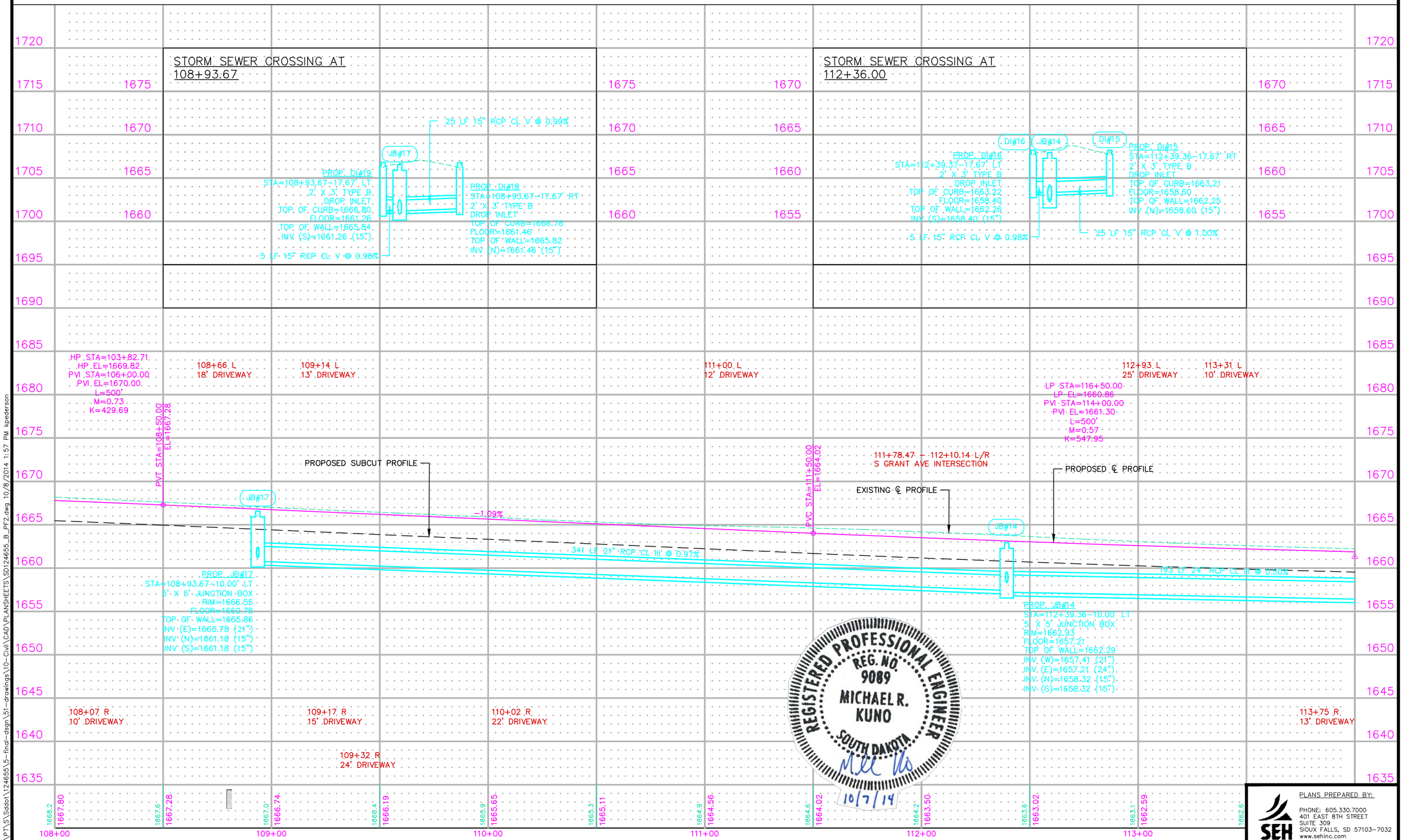

REGISTERED PROFESSIONAL ENGINEER
REG. NO. 9089
MICHAEL R. KUNO
SOUTH DAKOTA
10/7/14

PLANS PREPARED BY:
SEH
PHONE: 605.330.7000
401 EAST 8TH STREET
SUITE 309
SIOUX FALLS, SD 57103-7032
www.sehinc.com

P:\PT\S\Sddot\124655\5-final-dsgn\51-drawings\10-Civil\CAD\PLANSHEETS\SD124655_B_PF2.dwg 10/8/2014 1:57 PM kpederson

STATE OF SOUTH DAKOTA	PROJECT	SHEET NO.	TOTAL SHEETS
	P 6312(18)	B27	B63

FOR BIDDING PURPOSES ONLY

Roadway and Storm Sewer Plan

Sec. 8-T106N-R52W

114+37.33–17.67' LT (DI#13)
F&I 2' X 3' TYPE B
DROP INLET W/
TYPE B FRAME &
GRATE ASSEMBLY
WITH CURB BOX
TOP OF CURB EL. 1661.62
TOP OF WALL EL. 1660.66
FLOOR EL. 1656.90

F&I 15" – 5' RC PIPE
(BETWEEN JB#11 & DI#13)

114+37.32–10.00' LT (JB#11)
F&I 5' X 5' JUNCTION BOX W/
TYPE A7 MANHOLE FRAME AND LID
RIM EL. 1661.38
TOP OF WALL EL. 1660.40
FLOOR EL. 1655.82

F&I 15" – 25' RC PIPE
(BETWEEN JB#11 & DI#12)

114+37.32–17.67' RT (DI#12)
F&I 2' X 3' TYPE B
DROP INLET W/
TYPE B FRAME &
GRATE ASSEMBLY
WITH CURB BOX
TOP OF CURB EL. 1661.69
TOP OF WALL EL. 1660.73
FLOOR EL. 1657.09

F&I 30" – 274' RC PIPE
(BETWEEN JB#8 & JB#11)

117+15.61–17.67' LT (DI#10)
F&I 2' X 3' TYPE B
DROP INLET W/
TYPE B FRAME &
GRATE ASSEMBLY
WITH CURB BOX
TOP OF CURB EL. 1660.94
TOP OF WALL EL. 1659.98
FLOOR EL. 1656.10

F&I 15" – 5' RC PIPE
(BETWEEN JB#8 & DI#10)

117+15.61–10.00' LT (JB#8)
F&I 5' X 5' JUNCTION BOX W/
TYPE A7 MANHOLE FRAME AND LID
RIM EL. 1660.62
TOP OF WALL EL. 1660.01
FLOOR EL. 1654.43

F&I 15" – 25' RC PIPE
(BETWEEN JB#8 & DI#9)

117+19.31–17.67' RT (DI#9)
F&I 2' X 3' TYPE B
DROP INLET W/
TYPE B FRAME &
GRATE ASSEMBLY
WITH CURB BOX
TOP OF CURB EL. 1660.97
TOP OF WALL EL. 1660.01
FLOOR EL. 1656.30

F&I 30" – 78' RC PIPE
(BETWEEN JB#5 & JB#8)

117+98.23–17.67' LT (DI#7)
F&I 2' X 3' TYPE B
DROP INLET W/
TYPE B FRAME &
GRATE ASSEMBLY
WITH CURB BOX
TOP OF CURB EL. 1660.64
TOP OF WALL EL. 1659.68
FLOOR EL. 1655.10

F&I 15" – 5' RC PIPE
(BETWEEN JB#5 & DI#7)

117+98.23–10.00' LT (JB#5)
F&I 5' X 5' JUNCTION BOX W/
TYPE A7 MANHOLE FRAME AND LID
RIM EL. 1660.38
TOP OF WALL EL. 1659.60
FLOOR EL. 1654.02

F&I 15" – 25' RC PIPE
(BETWEEN JB#5 & DI#6)

117+98.23–17.67' RT (DI#6)
F&I 2' X 3' TYPE B
DROP INLET W/
TYPE B FRAME &
GRATE ASSEMBLY
WITH CURB BOX
TOP OF CURB EL. 1660.60
TOP OF WALL EL. 1659.64
FLOOR EL. 1655.29

STA. 115+16.86–4.13" LT
1 EACH – ADJUST MANHOLE
1 EACH – TYPE A7 MANHOLE
FRAME AND LID

STA. 117+49.31–2.90' LT
1 EACH – ADJUST MANHOLE
1 EACH – TYPE A7 MANHOLE
FRAME AND LID

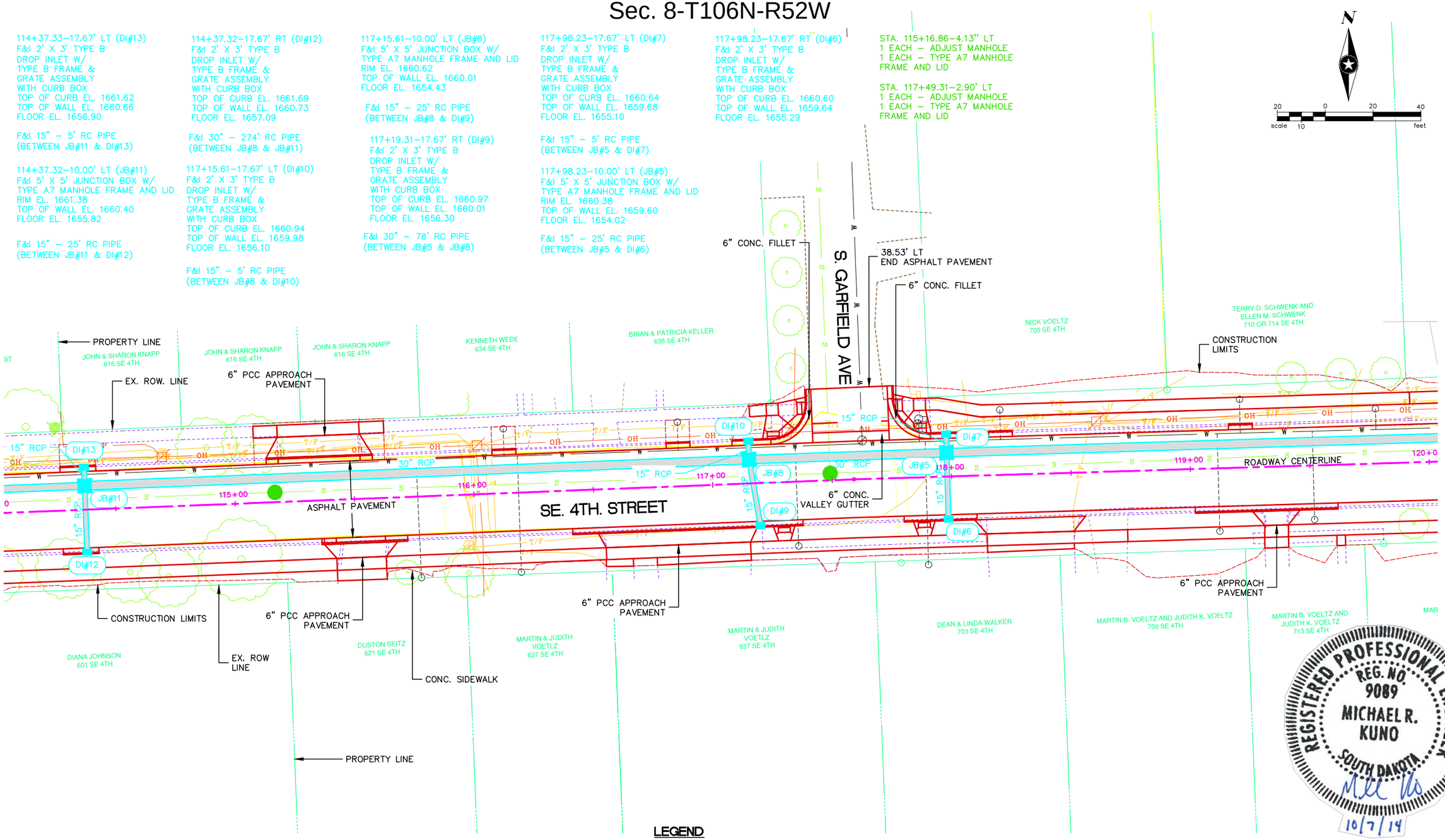

REGISTERED PROFESSIONAL ENGINEER
REG. NO. 9089
MICHAEL R. KUNO
SOUTH DAKOTA
10/7/14

LEGEND

ADJUST MANHOLE

BENCHMARK EL. 1662.98
5/8" RB W/ ULTEIG ENGINEERS CAP
STA. = 112+92.84
OFFSET = 22.67' RT

BENCHMARK EL. 1660.97
5/8" RB W/ ULTEIG ENGINEERS CAP
STA. = 117+97.69
OFFSET = 26.79' LT

PLANS PREPARED BY:
SEH
PHONE: 605.330.7000
401 EAST 8TH STREET
SUITE 309
SIOUX FALLS, SD 57103–7032
www.sehinc.com

P:\PT\S\Sddot\124655\5-final-dsgn\51-drawings\10-Civil\CAD\PLANSHEETS\SD124655_B_PL3.dwg 10/8/2014 1:57 PM kpederson

Roadway and Storm Sewer Profile

FOR BIDDING PURPOSES ONLY

STATE OF SOUTH DAKOTA	PROJECT	SHEET NO.	TOTAL SHEETS
	P 6312(18)	B28	B63

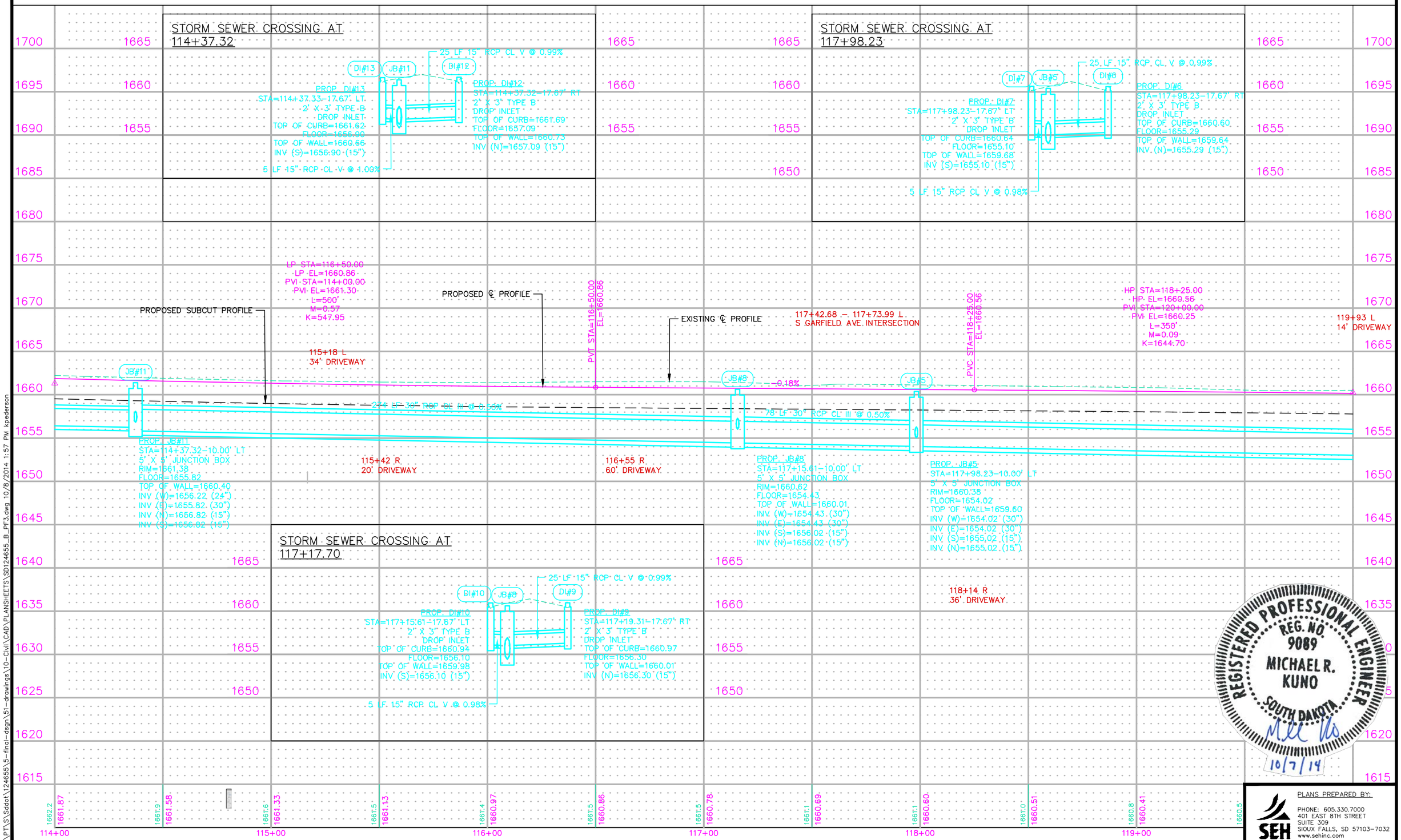

REGISTERED PROFESSIONAL ENGINEER
REG. NO. 9089
MICHAEL R. KUNO
SOUTH DAKOTA
10/7/14

PLANS PREPARED BY:
SEH
PHONE: 605.330.7000
401 EAST 8TH STREET
SUITE 309
SIOUX FALLS, SD 57103-7032
www.sehinc.com

P:\PT\S\Sddot\124655\5-final-dsgn\51-drawings\10-Civil\CAD\PLANSHEETS\SD124655_B_PF3.dwg 10/8/2014 1:57 PM kpederson

STATE OF SOUTH DAKOTA	PROJECT	SHEET NO.	TOTAL SHEETS
	P 6312(18)	B29	B63

FOR BIDDING PURPOSES ONLY

Roadway and Storm Sewer Plan

Sec. 8-T106N-R52W

F&I 30" – 425' RC PIPE
(BETWEEN JB#3 & JB#5)

122+27.80–19.96' LT (DI#4)
F&I 4' X 6' TYPE S DROP INLET W/
TYPE S MANHOLE
FRAME AND LID
TOP OF CURB EL. 1659.28
TOP OF WALL EL. 1657.78
FLOOR EL. 1654.46

F&I 15" – 6' RC PIPE
(BETWEEN JB#3 & DI#4)

122+27.80–10.00' LT (JB#3)
F&I 5' X 5' JUNCTION BOX W/
TYPE A7 MANHOLE FRAME AND LID
RIM EL. 1659.07
TOP OF WALL EL. 1658.45
FLOOR EL. 1651.87

F&I 30" – 26' RC PIPE
(BETWEEN DI#2 & JB#3)

122+27.80–19.96' RT (DI#2)
F&I 4' X 11' TYPE S DROP INLET W/
TYPE S MANHOLE FRAME AND LID
TOP OF CURB EL. 1659.28
TOP OF WALL EL. 1657.78
FLOOR EL. 1651.69

F&I 30" – 34' RC PIPE
(BETWEEN FES#1 & DI#2)
122+53.43–47.56' RT (FES#1)
F&I 30" RCP FLARED END W/
TRASH GUARD

123+42.52–19.96' LT (DI#23)
F&I 4' X 6' TYPE S DROP INLET W/
TYPE S MANHOLE
FRAME AND LID
TOP OF CURB EL. 1659.04
TOP OF WALL EL. 1657.54
FLOOR EL. 1655.46

F&I 15" – 9' RC PIPE
(BETWEEN JB#22 & DI#23)

123+42.52–7.00' LT (JB#22)
F&I 5' X 5' JUNCTION BOX W/
TYPE A7 MANHOLE FRAME AND LID
RIM EL. 1658.84
TOP OF WALL EL. 1657.99
FLOOR EL. 1654.41

F&I 30" – 27' RC ARCH PIPE
(BETWEEN DI#21 & JB#22)

123+42.52–19.96' RT (DI#21)
F&I 4' X 11' TYPE S DROP INLET W/
TYPE S MANHOLE FRAME AND LID
TOP OF CURB EL. 1658.86
TOP OF WALL EL. 1657.36
FLOOR EL. 1654.27

F&I 30" – 53' RC ARCH PIPE
(BETWEEN FES#20 & DI#21)

122+96.17–46.63' RT (FES#20)
F&I 30" RCP ARCH FLARED END W/
TRASH GUARD

F&I 30" – 253' RC PIPE
(BETWEEN JB#22 & JB#24)

STA. 120+34.26–5.34' LT
1 EACH – ADJUST MANHOLE
1 EACH – TYPE A7 MANHOLE
FRAME AND LID

STA. 120+59.12–25.82' RT
1 EACH – ADJUST MANHOLE
1 EACH – TYPE A7 MANHOLE
FRAME AND LID

STA. 123+25.47–24.79' RT
1 EACH – ADJUST MANHOLE
1 EACH – TYPE A7 MANHOLE
FRAME AND LID

STA. 123+25.89–1.27' RT
1 EACH – ADJUST MANHOLE
1 EACH – TYPE A7 MANHOLE
FRAME AND LID

STA. 125+68.20–23.32' LT
1 EACH – ADJUST MANHOLE
1 EACH – TYPE A7 MANHOLE
FRAME AND LID

STA. 125+91.95–0.11' RT
1 EACH – ADJUST MANHOLE
1 EACH – TYPE A7 MANHOLE
FRAME AND LID

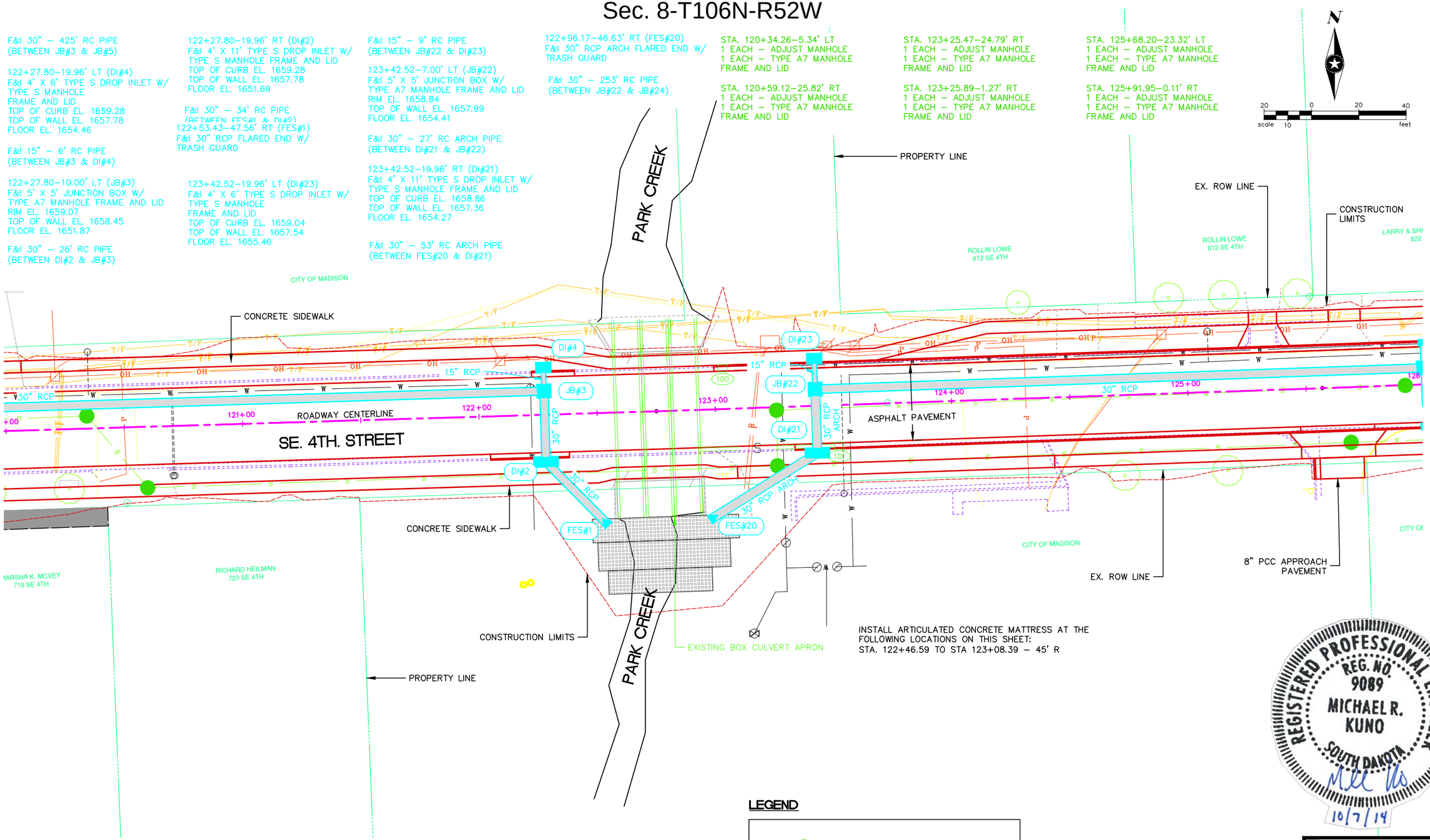

INSTALL ARTICULATED CONCRETE MATTRESS AT THE FOLLOWING LOCATIONS ON THIS SHEET:
STA. 122+46.59 TO STA 123+08.39 – 45' R

LEGEND

ADJUST MANHOLE

REGISTERED PROFESSIONAL ENGINEER
REG. NO. 9089
MICHAEL R. KUNO
SOUTH DAKOTA
10/7/14

BENCHMARK EL. 1660.97
5/8" RB W/ ULTEIG ENGINEERS CAP
STA. = 117+97.69
OFFSET = 26.79' LT

BENCHMARK EL. 1658.52
5/8" RB W/ ULTEIG ENGINEERS CAP
STA. = 122+19.81
OFFSET = 39.46' RT

PLANS PREPARED BY:
SEH
PHONE: 605.330.7000
401 EAST 8TH STREET
SUITE 309
SIOUX FALLS, SD 57103–7032
www.sehinc.com

P:\PT\S\Sddot\124656\5-final-dsgn\51-drawings\10-Civil\CAD\PLANSHEETS\SD124656_B_PL4.dwg 10/8/2014 1:57 PM kpederson

STATE OF SOUTH DAKOTA	PROJECT	SHEET NO.	TOTAL SHEETS
	P 6312(18)	B30	B63

Roadway and Storm Sewer Profile

FOR BIDDING PURPOSES ONLY

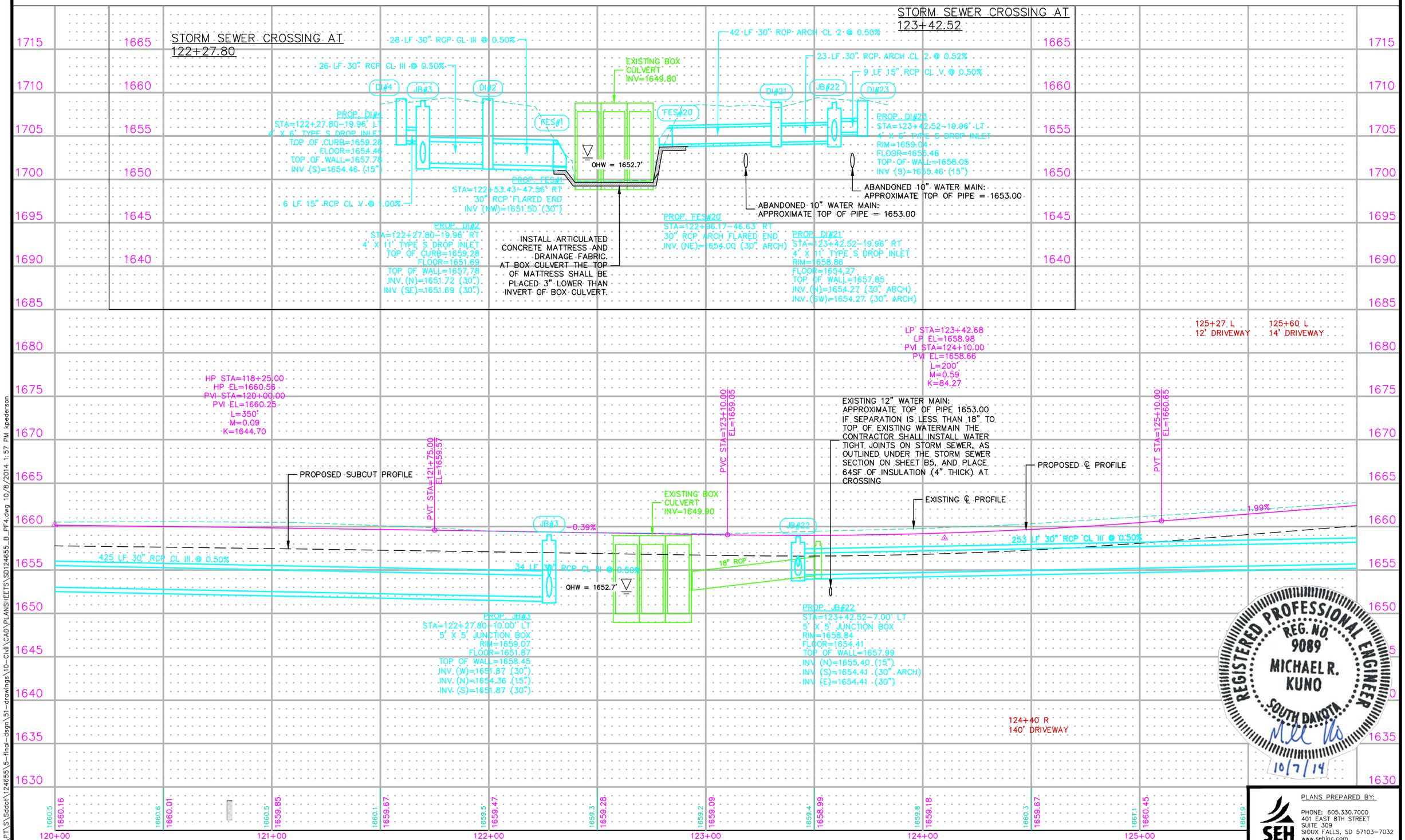

REGISTERED PROFESSIONAL ENGINEER
REG. NO. 9089
MICHAEL R. KUNO
SOUTH DAKOTA
10/7/14

PLANS PREPARED BY:
SEH
PHONE: 605.330.7000
401 EAST 8TH STREET
SUITE 309
SIOUX FALLS, SD 57103-7032
www.sehinc.com

P:\PT\S\Sddot\124655\5-final-dsgn\51-drawings\10-Civil\CAD\PLANSHEETS\SD124655_B_PF4.dwg 10/8/2014 1:57 PM kpederson

STATE OF SOUTH DAKOTA	PROJECT	SHEET NO.	TOTAL SHEETS
	P 6312(18)	B31	B63

FOR BIDDING PURPOSES ONLY

Roadway and Storm Sewer Plan

Sec. 8-T106N-R52W

125+99.91–17.67' LT (DI#26)
F&I 2' X 3' TYPE B
DROP INLET W/
TYPE B FRAME &
GRATE ASSEMBLY
WITH CURB BOX
TOP OF CURB EL. 1662.51
TOP OF WALL EL. 1661.55
FLOOR EL. 1657.11

F&I 15" – 8' RC PIPE
(BETWEEN JB#24 & DI#26)

125+99.90–7.00' LT (JB#24)
F&I 5' X 5' JUNCTION BOX W/
TYPE A7 MANHOLE FRAME AND LID
RIM EL. 1662.29
TOP OF WALL EL. 1661.28
FLOOR EL. 1655.70

F&I 15" – 22' RC PIPE
(BETWEEN JB#24 & DI#25)

125+99.91–17.68' RT (DI#25)
F&I 2' X 3' TYPE B
DROP INLET W/
TYPE B FRAME &
GRATE ASSEMBLY
WITH CURB BOX
TOP OF CURB EL. 1662.37
TOP OF WALL EL. 1661.41
FLOOR EL. 1657.25

F&I 30" – 235' RC PIPE
(BETWEEN JB#24 & JB#27)

128+39.85–19.95' LT (DI#29)
F&I 4' X 11' TYPE S DROP INLET W/
TYPE S MANHOLE FRAME AND LID
TOP OF CURB EL. 1666.42
TOP OF WALL EL. 1665.46
FLOOR EL. 1660.61

F&I 30" – 9' RC PIPE
(BETWEEN JB#27 & DI#29)

128+39.85–7.00' LT (JB#27)
F&I 5' X 5' JUNCTION BOX W/
TYPE A7 MANHOLE FRAME AND LID
RIM EL. 1666.17
TOP OF WALL EL. 1665.38
FLOOR EL. 1657.30

F&I 15" – 22' RC PIPE
(BETWEEN JB#27 & DI#28)

128+39.85–17.67' RT (DI#28)
F&I 2' X 3' TYPE B
DROP INLET W/
TYPE B FRAME &
GRATE ASSEMBLY
WITH CURB BOX
TOP OF CURB EL. 1665.95
TOP OF WALL EL. 1664.99
FLOOR EL. 1660.75

STA. 128+91.95–1.71' RT
1 EACH – ADJUST MANHOLE
1 EACH – TYPE A7 MANHOLE
FRAME AND LID

STA. 128+66.73–24.07' RT
1 EACH – ADJUST MANHOLE
1 EACH – TYPE A7 MANHOLE
FRAME AND LID

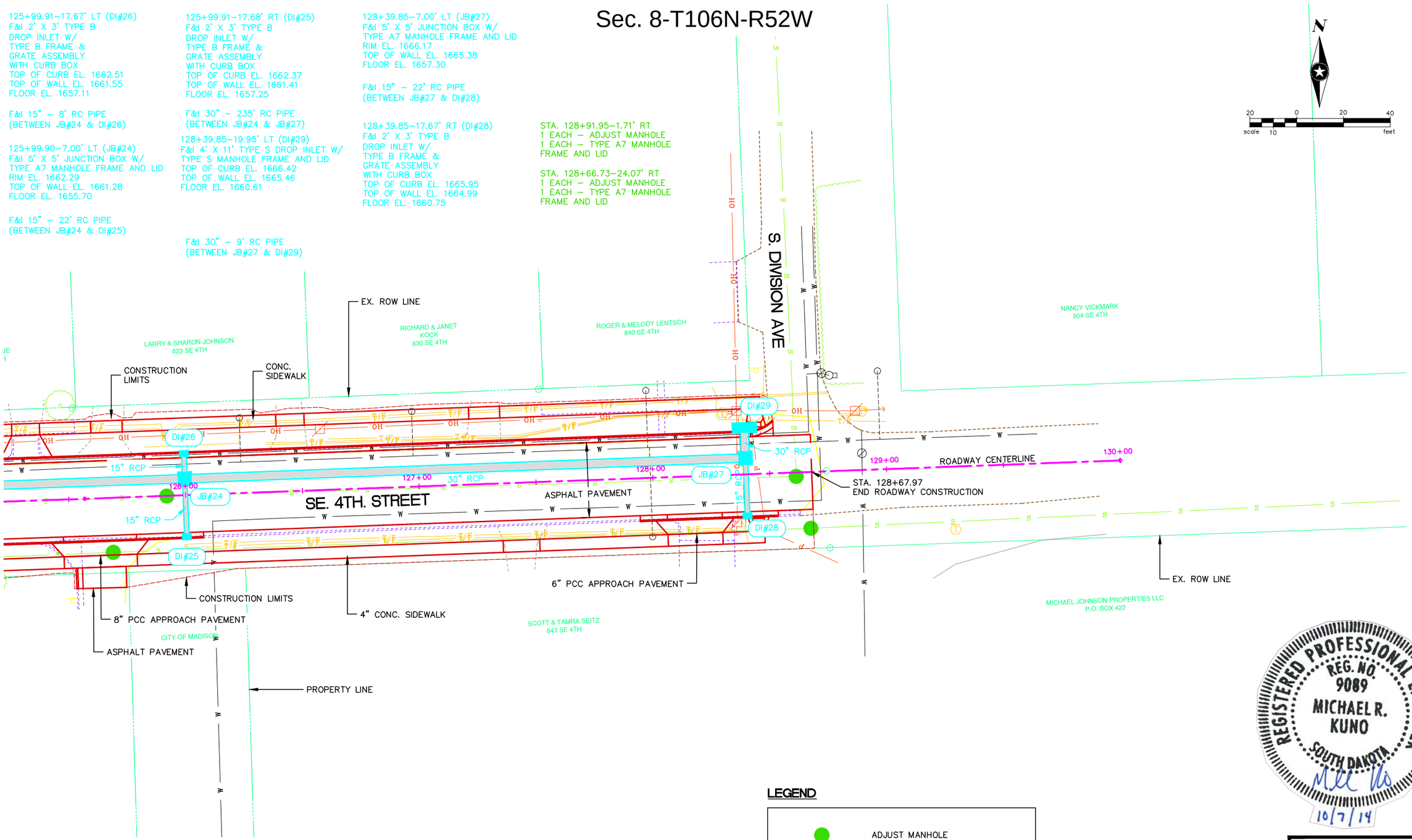

LEGEND

ADJUST MANHOLE

BENCHMARK EL. 1658.52
5/8" RB W/ ULTEIG ENGINEERS CAP
STA. = 122+19.81
OFFSET = 39.46' RT

BENCHMARK EL. 1666.75
5/8" RB W/ ULTEIG ENGINEERS CAP
STA. = 128+27.22
OFFSET = 21.07' LT

REGISTERED PROFESSIONAL ENGINEER
REG. NO. 9089
MICHAEL R. KUNO
SOUTH DAKOTA
10/7/14

PLANS PREPARED BY:
SEH
PHONE: 605.330.7000
401 EAST 8TH STREET
SUITE 309
SIOUX FALLS, SD 57103–7032
www.sehinc.com

P:\PT\S\Sddot\124655\5-final-dsgn\51-drawings\10-Civil\CAD\PLANSHEETS\SD124655_B_PL5.dwg 10/8/2014 1:58 PM kpederson

STATE OF SOUTH DAKOTA	PROJECT	SHEET NO.	TOTAL SHEETS
	P 6312(18)	B32	B63

Roadway and Storm Sewer Profile

FOR BIDDING PURPOSES ONLY

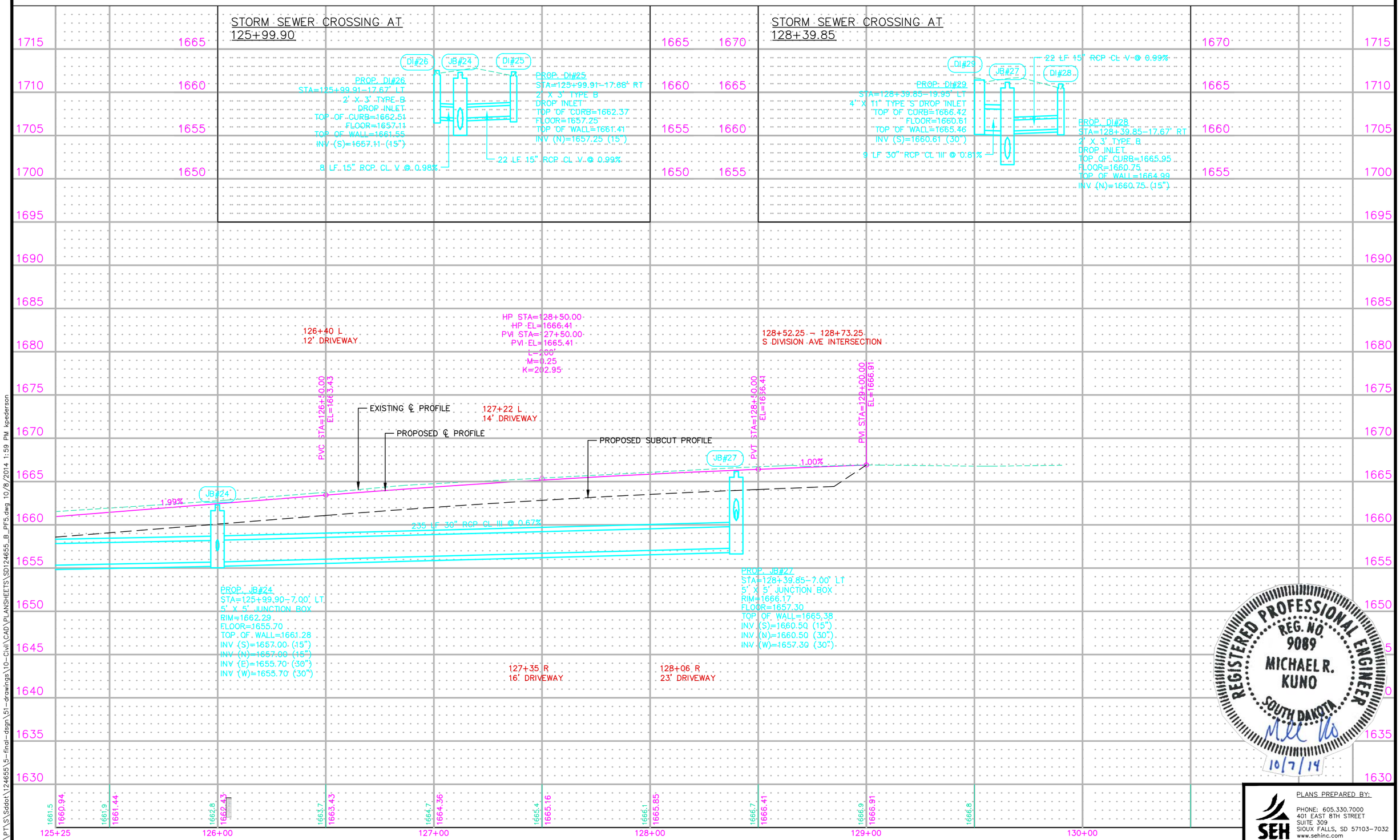

REGISTERED PROFESSIONAL ENGINEER
REG. NO. 9089
MICHAEL R. KUNO
SOUTH DAKOTA
10/7/14

PLANS PREPARED BY:
SEH
PHONE: 605.330.7000
401 EAST 8TH STREET
SUITE 309
SIOUX FALLS, SD 57103-7032
www.sehinc.com

P:\PT\S\Sddot\124655\5-final-dsgn\51-drawings\10-Civil\CAD\PLANSHEETS\SD124655_B_PF5.dwg 10/8/2014 1:59 PM kpederson

STATE OF SOUTH DAKOTA	PROJECT	SHEET NO.	TOTAL SHEETS
	P 6312(18)	B33	B63

FOR BIDDING PURPOSES ONLY

Revised 12/3/2014

Curb & Gutter Layout Plan

(1) 103+00.00–16.00' LT
BEGIN MOD. TYPE B66 C&G
T.C. EL. 1669.85

(2) 103+00.00–16.00' RT
BEGIN MOD. TYPE B66 C&G
T.C. EL. 1669.85

(3) 103+04.73–16.00' RT
END MOD. TYPE B66 C&G
BEGIN MOD. TYPE P6 GUTTER
T.C. EL. 1669.86

(4) 103+24.46–16.00' RT
END MOD. TYPE P6 GUTTER
BEGIN MOD. TYPE B66 C&G
T.C. EL. 1669.87

(5) 104+02.52–16.00' RT
END MOD. TYPE B66 C&G
BEGIN MOD. TYPE P6 GUTTER
T.C. EL. 1669.90

(6) 104+22.52–16.00' RT
END MOD. TYPE P6 GUTTER
BEGIN MOD. TYPE B66 C&G
T.C. EL. 1669.85

(7) 104+05.97–16.00' LT
END MOD. TYPE B66 C&G
BEGIN MOD. TYPE P6 GUTTER
T.C. EL. 1669.90

(8) 104+25.28–16.00' LT
END MOD. TYPE P6 GUTTER
BEGIN MOD. TYPE B66 C&G
T.C. EL. 1669.88

(9) 104+42.52–16.00' RT
END MOD. TYPE B66 C&G
BEGIN MOD. TYPE P6 GUTTER
T.C. EL. 1669.79

(10) 104+62.52–16.00' RT
END MOD. TYPE P6 GUTTER
BEGIN MOD. TYPE B66 C&G
T.C. EL. 1669.74

(11) 104+90.09–16.00' RT
END MOD. TYPE B66 C&G
BEGIN MOD. TYPE P6 GUTTER
T.C. EL. 1669.69

(12) 105+00.15–16.00' RT
END MOD. TYPE P6 GUTTER
BEGIN MOD. TYPE B66 C&G
T.C. EL. 1669.67

(13) 104+90.30–16.00' LT
END MOD. TYPE B66 C&G
BEGIN MOD. TYPE P6 GUTTER
T.C. EL. 1669.77

(14) 105+04.01–16.00' LT
END MOD. TYPE P6 GUTTER
BEGIN MOD. TYPE B66 C&G
T.C. EL. 1669.73

(15) 105+92.81–16.00' LT
END MOD. TYPE B66 C&G
BEGIN 15' RAD FILLET
T.C. EL. 1669.39

(16) 106+10.99–21.13' LT
MID 15' RAD FILLET
T.C. EL. 1669.15

(17) 106+16.12–33.50' LT
END 15' RAD FILLET
BEGIN MOD. TYPE B66 C&G
T.C. EL. 1668.99

(18) 106+16.12–38.06' LT
END MOD. TYPE B66 C&G
T.C. EL. 1668.93

(19) 106+48.10–38.11' LT
BEGIN MOD. TYPE B66 C&G
T.C. EL. 1669.20

(20) 106+48.10–33.49' LT
END MOD. TYPE B66 C&G
BEGIN 15' RAD FILLET
T.C. EL. 1669.17

(21) 106+53.23–21.13' LT
MID 15' RAD. FILLET
T.C. EL. 1669.00

(22) 106+65.60–16.00' LT
END 15' RAD FILLET
BEGIN MOD. TYPE B66 C&G
T.C. EL. 1669.01

(23) 106+68.46–16.00' LT
END MOD. TYPE B66 C&G
T.C. EL. 1668.97

(24) 106+51.01–16.00' RT
END MOD. TYPE B66 C&G
BEGIN MOD. TYPE P6 GUTTER
T.C. EL. 1668.97

(25) 106+80.03–16.00' RT
END MOD. TYPE P6 GUTTER
BEGIN MOD. TYPE B66 C&G
T.C. EL. 1668.74

(26) 107+04.81–16.00' RT
END MOD. TYPE B66 C&G
T.C. EL. 1668.55

N

scale 20 10 0 20 40 feet

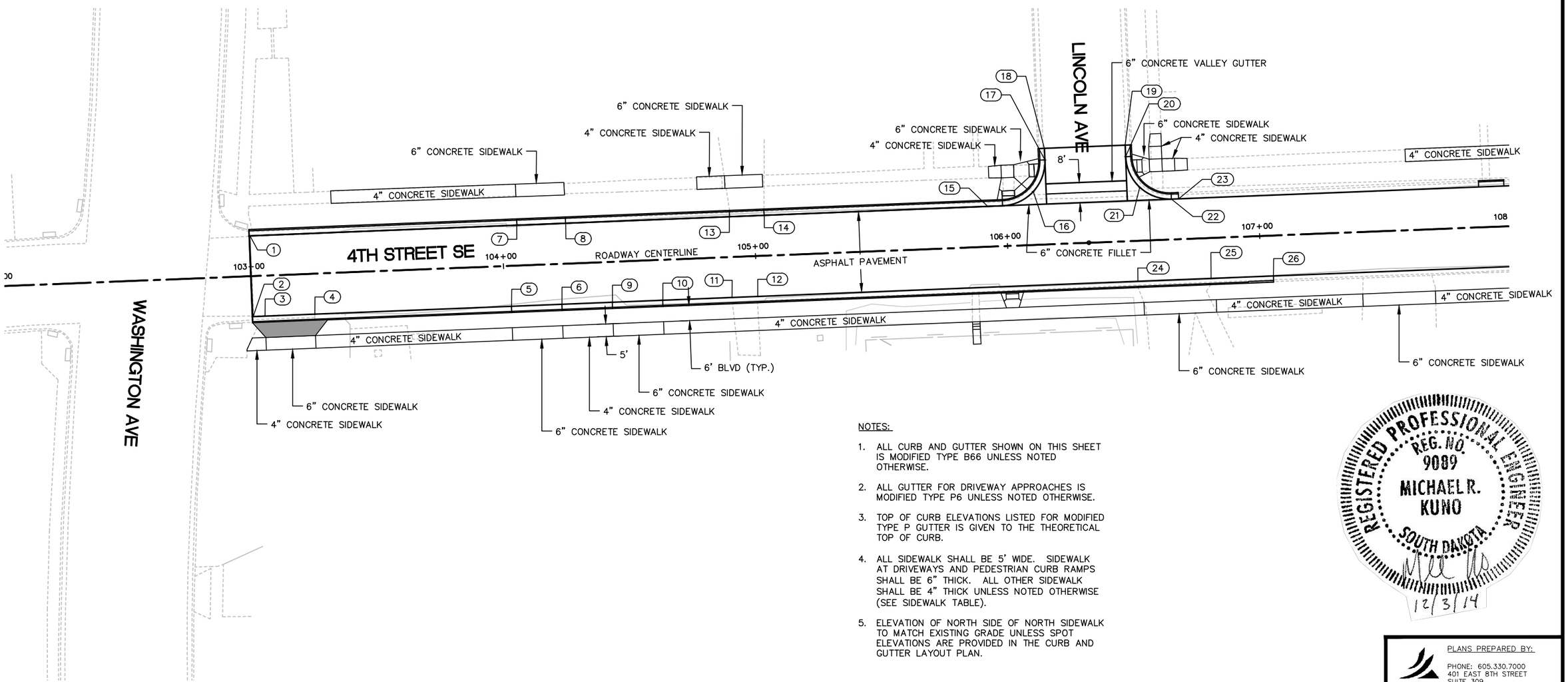

NOTES:

1. ALL CURB AND GUTTER SHOWN ON THIS SHEET IS MODIFIED TYPE B66 UNLESS NOTED OTHERWISE.
2. ALL GUTTER FOR DRIVEWAY APPROACHES IS MODIFIED TYPE P6 UNLESS NOTED OTHERWISE.
3. TOP OF CURB ELEVATIONS LISTED FOR MODIFIED TYPE P GUTTER IS GIVEN TO THE THEORETICAL TOP OF CURB.
4. ALL SIDEWALK SHALL BE 5' WIDE. SIDEWALK AT DRIVEWAYS AND PEDESTRIAN CURB RAMPS SHALL BE 6" THICK. ALL OTHER SIDEWALK SHALL BE 4" THICK UNLESS NOTED OTHERWISE (SEE SIDEWALK TABLE).
5. ELEVATION OF NORTH SIDE OF NORTH SIDEWALK TO MATCH EXISTING GRADE UNLESS SPOT ELEVATIONS ARE PROVIDED IN THE CURB AND GUTTER LAYOUT PLAN.

REGISTERED PROFESSIONAL ENGINEER
REG. NO. 9089
MICHAEL R. KUNO
SOUTH DAKOTA
12/3/14

PLANS PREPARED BY:
SEH
PHONE: 605.330.7000
401 EAST 8TH STREET
SUITE 309
SIOUX FALLS, SD 57103–7032
www.sehinc.com

P:\PT\S\Sddot\124655\5-final-dsgn\51-drawings\10-Civil\CAD\PLANSHEETS\SD124655_B_CG1.dwg 12/3/2014 12:47 PM kpederson

FOR BIDDING PURPOSES ONLY

Revised 12/3/2014

Curb & Gutter Layout Plan

1	107+87.50–16.00' LT BEGIN MOD. TYPE B66 C&G T.C. EL. 1667.80
2	107+97.50–16.00' LT END MOD. TYPE B66 C&G T.C. EL. 1667.67
3	108+65.90–16.00' LT BEGIN MOD. TYPE P6 GUTTER T.C. EL. 1667.10
4	108+84.19–16.00' LT END MOD. TYPE P6 GUTTER BEGIN MOD. TYPE B66 C&G T.C. EL. 1666.91
5	108+98.63–16.00' LT END MOD. TYPE B66 C&G T.C. EL. 1666.74
6	109+26.94–16.00' LT BEGIN MOD. TYPE B66 C&G T.C. EL. 1666.39
7	109+36.94–16.00' LT END MOD. TYPE B66 C&G T.C. EL. 1666.28
8	109+90.18–16.00' LT BEGIN MOD. TYPE B66 C&G T.C. EL. 1665.72
9	110+00.18–16.00' LT END MOD. TYPE B66 C&G T.C. EL. 1665.63
10	110+94.49–16.00' LT BEGIN MOD. TYPE B66 C&G T.C. EL. 1664.70
11	111+00.49–16.00' LT END MOD. TYPE B66 C&G BEGIN MOD. TYPE P6 GUTTER T.C. EL. 1664.64
12	111+12.55–16.00' LT END MOD. TYPE P6 GUTTER BEGIN MOD. TYPE B66 C&G T.C. EL. 1664.51
13	111+20.08–16.00' LT END MOD. TYPE B66 C&G T.C. EL. 1664.43
14	111+45.28–16.00' LT BEGIN MOD. TYPE B66 C&G T.C. EL. 1664.17
15	111+61.65–16.00' LT END MOD. TYPE B66 C&G BEGIN 15' RAD FILLET T.C. EL. 1664.00
16	111+74.04–21.15' LT MID 15' RAD FILLET T.C. EL. 1663.70
17	111+79.13–33.55' LT END 15' RAD FILLET BEGIN MOD. TYPE B66 C&G T.C. EL. 1663.44
18	111+79.13–37.97' LT END MOD. TYPE B66 C&G T.C. EL. 1663.36
19	112+11.14–38.06' LT BEGIN MOD. TYPE B66 C&G T.C. EL. 1663.37
20	112+11.14–33.45' LT END MOD. TYPE B66 C&G BEGIN 15' RAD FILLET T.C. EL. 1663.38
21	112+16.30–21.11' LT MID 15' RAD FILLET T.C. EL. 1663.40
22	112+28.65–16.00' LT END 15' RAD FILLET BEGIN MOD. TYPE B6(T.C. EL. 1663.30
23	112+45.36–16.00' LT END MOD. TYPE B66 T.C. EL. 1663.16
24	108+85.33–15.89' RT BEGIN MOD. TYPE B6(T.C. EL. 1666.88
25	108+98.44–16.00' RT END MOD. TYPE B66 T.C. EL. 1666.72

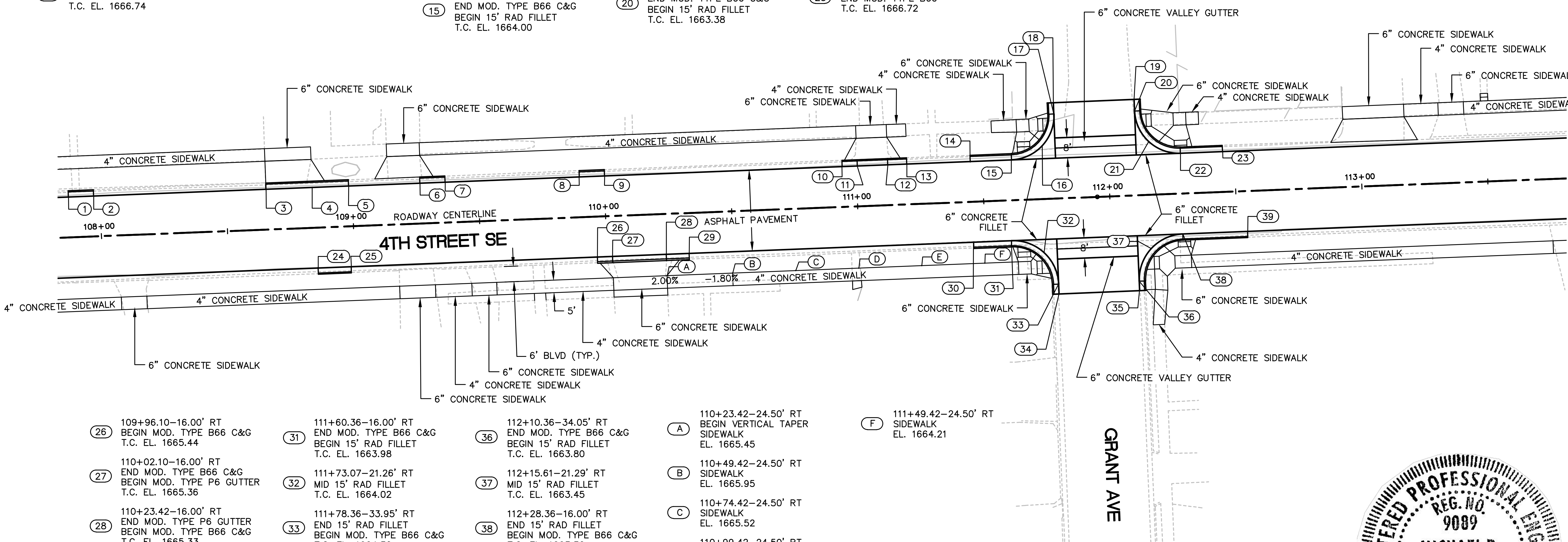

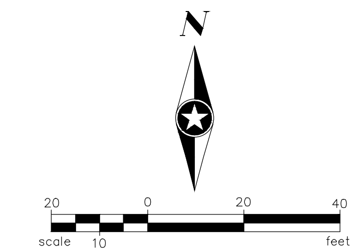

26	109+96.10–16.00' RT BEGIN MOD. TYPE B66 C&G T.C. EL. 1665.44
27	110+02.10–16.00' RT END MOD. TYPE B66 C&G BEGIN MOD. TYPE P6 GUTTER T.C. EL. 1665.36
28	110+23.42–16.00' RT END MOD. TYPE P6 GUTTER BEGIN MOD. TYPE B66 C&G T.C. EL. 1665.33
29	110+32.51–16.00' RT END MOD. TYPE B66 C&G T.C. EL. 1665.25
30	111+45.34–16.00' RT BEGIN MOD. TYPE B66 C&G T.C. EL. 1664.12
31	111+60.36–16.00' RT END MOD. TYPE B66 C&G BEGIN 15' RAD FILLET T.C. EL. 1663.98
32	111+73.07–21.26' RT MID 15' RAD FILLET T.C. EL. 1664.02
33	111+78.36–33.95' RT END 15' RAD FILLET BEGIN MOD. TYPE B66 C&G T.C. EL. 1664.30
34	111+78.37–37.90' RT END MOD. TYPE B66 C&G T.C. EL. 1664.40
35	112+10.37–37.80' RT BEGIN MOD. TYPE B66 C&G T.C. EL. 1663.86
36	112+10.36–34.05' RT END MOD. TYPE B66 C&G BEGIN 15' RAD FILLET T.C. EL. 1663.80
37	112+15.61–21.29' RT MID 15' RAD FILLET T.C. EL. 1663.45
38	112+28.36–16.00' RT END 15' RAD FILLET BEGIN MOD. TYPE B66 C&G T.C. EL. 1663.30
39	112+54.05–16.00' RT END MOD. TYPE B66 C&G T.C. EL. 1663.10
A	110+23.42–24.50' RT BEGIN VERTICAL TAPER SIDEWALK EL. 1665.45
B	110+49.42–24.50' RT SIDEWALK EL. 1665.95
C	110+74.42–24.50' RT SIDEWALK EL. 1665.52
D	110+99.42–24.50' RT SIDEWALK EL. 1665.07
E	111+24.42–24.50' RT SIDEWALK EL. 1664.62
F	111+49.42–24.50' RT SIDEWALK EL. 1664.21

NOTES:

1. ALL CURB AND GUTTER SHOWN ON THIS SHEET IS MODIFIED TYPE B66 UNLESS NOTED OTHERWISE.
2. ALL GUTTER FOR DRIVEWAY APPROACHES IS MODIFIED TYPE P6 UNLESS NOTED OTHERWISE.
3. TOP OF CURB ELEVATIONS LISTED FOR MODIFIED TYPE P GUTTER IS GIVEN TO THE THEORETICAL TOP OF CURB.
4. ALL SIDEWALK SHALL BE 5' WIDE. SIDEWALK AT DRIVEWAYS AND PEDESTRIAN CURB RAMPS SHALL BE 6" THICK. ALL OTHER SIDEWALK SHALL BE 4" THICK UNLESS NOTED OTHERWISE (SEE SIDEWALK TABLE).
5. ELEVATION OF NORTH SIDE OF NORTH SIDEWALK TO MATCH EXISTING GRADE UNLESS SPOT ELEVATIONS ARE PROVIDED IN THE CURB AND GUTTER LAYOUT PLAN.

REGISTERED PROFESSIONAL ENGINEER REG. NO. 9089 MICHAEL R. KUNO SOUTH DAKOTA
12/3/14

PLANS PREPARED BY:
SEH
PHONE: 605.330.7000
401 EAST 8TH STREET
SUITE 309
SIOUX FALLS, SD 57103–7032
www.sehinc.com

P:\PT\S\Sddot\124655\5–final–dsgn\51–drawings\10–Civil\CAD\PLANSHEETS\SD124655_B_CG2.dwg 12/3/2014 12:47 PM kpederson

STATE OF SOUTH DAKOTA	PROJECT	SHEET NO.	TOTAL SHEETS
	P 6312(18)	B35	B63

FOR BIDDING PURPOSES ONLY

Revised 12/3/2014

Curb & Gutter Layout Plan

1. 114+27.30–16.00' LT BEG MOD. TYPE B66 C&G T.C. EL. 1661.68
2. 114+42.30–16.00' LT END MOD. TYPE B66 C&G T.C. EL. 1661.60
3. 115+13.66–16.00' LT BEG MOD. TYPE B66 C&G T.C. EL. 1661.40
4. 115+18.66–16.00' LT BEG MOD. TYPE P6 GUTTER END MOD. TYPE B66 C&G T.C. EL. 1661.40
5. 115+52.98–16.00' LT END MOD. TYPE P6 GUTTER BEG MOD. TYPE B66 C&G T.C. EL. 1661.33
6. 115+58.08–16.00' LT END MOD. TYPE B66 C&G T.C. EL. 1661.32
7. 116+08.23–16.00' LT BEG MOD. TYPE B66 C&G T.C. EL. 1661.15
8. 116+18.23–16.00' LT END MOD. TYPE B66 C&G T.C. EL. 1661.15
9. 116+81.15–16.00' LT BEG MOD. TYPE B66 C&G T.C. EL. 1660.99
10. 116+91.15–16.00' LT END MOD. TYPE B66 C&G T.C. EL. 1660.95
11. 117+08.75–16.00' LT BEG MOD. TYPE B66 C&G T.C. EL. 1660.94
12. 117+25.03–16.00' LT END MOD. TYPE B66 C&G BEG 15' RAD FILLET T.C. EL. 1660.95
13. 117+37.42–21.15' LT MID 15' RAD FILLET T.C. EL. 1661.10
14. 117+42.52–33.56' LT END 15' RAD FILLET BEG MOD. TYPE B66 C&G T.C. EL. 1661.42
15. 117+42.51–38.38' LT END MOD. TYPE B66 C&G T.C. EL. 1661.57
16. 117+74.16–38.62' LT BEG MOD. TYPE B66 C&G T.C. EL. 1661.54
17. 117+74.23–33.28' LT END MOD. TYPE B66 C&G BEG 15' RAD FILLET T.C. EL. 1661.34
18. 117+79.43–21.05' LT MID 15' RAD FILLET T.C. EL. 1660.90
19. 117+91.72–16.00' LT END 15' RAD FILLET BEG MOD. TYPE B66 C&G T.C. EL. 1660.67
20. 118+03.20–16.00' LT END MOD. TYPE B66 C&G T.C. EL. 1660.62
21. 118+15.97–16.00' LT BEG MOD. TYPE B66 C&G T.C. EL. 1660.57
22. 118+25.97–16.00' LT END MOD. TYPE B66 C&G T.C. EL. 1660.52
23. 119+16.42–16.00' LT BEG MOD. TYPE B66 C&G T.C. EL. 1660.25
24. 119+26.42–16.00' LT END MOD. TYPE B66 C&G T.C. EL. 1660.21
25. 114+27.31–16.00' RT BEG MOD. TYPE B66 C&G T.C. EL. 1661.74

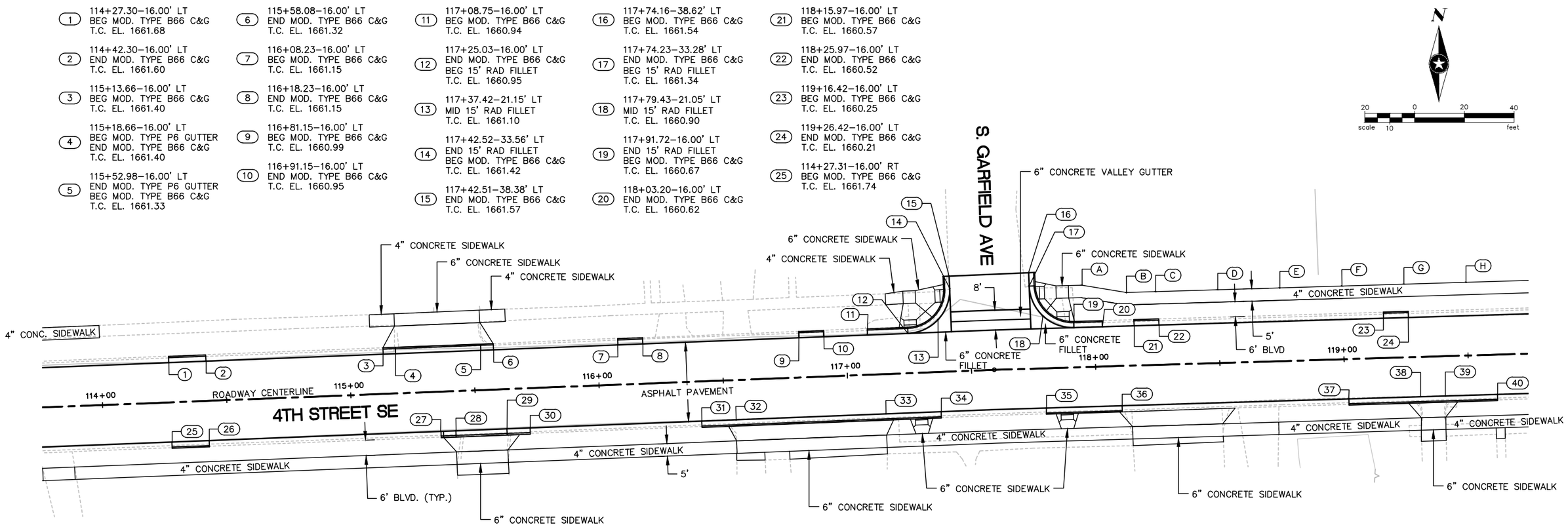

26. 114+42.31–16.00' RT END MOD. TYPE B66 C&G T.C. EL. 1661.66
27. 115+35.66–16.00' RT BEG MOD. TYPE B66 C&G T.C. EL. 1661.19
28. 115+41.66–16.00' RT BEG MOD. TYPE P6 GUTTER END MOD. TYPE B66 C&G T.C. EL. 1661.17
29. 115+62.27–16.00' RT END MOD. TYPE P6 GUTTER BEG MOD. TYPE B66 C&G T.C. EL. 1661.09
30. 115+71.58–16.00' RT END MOD. TYPE B66 C&G T.C. EL. 1661.07
31. 116+40.71–16.00' RT BEG MOD. TYPE B66 C&G T.C. EL. 1660.89
32. 116+54.48–16.00' RT END MOD. TYPE B66 C&G BEGIN MOD. TYPE P6 GUTTER T.C. EL. 1660.89
33. 117+14.89–16.00' RT END MOD. TYPE P6 GUTTER BEG MOD. TYPE B66 C&G T.C. EL. 1660.96
34. 117+37.13–16.00' RT END MOD. TYPE B66 C&G T.C. EL. 1660.88
35. 117+79.67–16.00' RT BEG MOD. TYPE B66 C&G T.C. EL. 1660.67
36. 118+10.16–16.00' RT END MOD. TYPE B66 C&G T.C. EL. 1660.55
37. 119+01.54–16.00' RT BEGIN MOD. TYPE B66 C&G T.C. EL. 1660.39
38. 119+30.46–16.00' RT END MOD. TYPE B66 C&G BEGIN MOD. TYPE P6 GUTTER T.C. EL. 1660.27
39. 119+40.30–16.00' RT END MOD. TYPE P6 GUTTER BEGIN MOD. TYPE B66 C&G T.C. EL. 1660.24
40. 119+61.34–16.00' RT END MOD. TYPE B66 C&G T.C. EL. 1660.17

A. 117+95.50–33.00' LT BEGIN 5:1 TAPER SIDEWALK EL. 1661.36
B. 118+13.24–29.50' LT END 5:1 TAPER SIDEWALK EL. 1661.39
C. 118+25.00–29.50' LT SIDEWALK EL. 1661.42
D. 118+50.00–29.50' LT SIDEWALK EL. 1661.50
E. 118+75.00–29.50' LT SIDEWALK EL. 1661.58
F. 119+00.00–29.50' LT SIDEWALK EL. 1661.65
G. 119+25.00–29.50' LT SIDEWALK EL. 1661.73
H. 119+50.00–29.50' LT SIDEWALK EL. 1661.70

NOTES:

1. ALL CURB AND GUTTER SHOWN ON THIS SHEET IS MODIFIED TYPE B66 UNLESS NOTED OTHERWISE.
2. ALL GUTTER FOR DRIVEWAY APPROACHES IS MODIFIED TYPE P6 UNLESS NOTED OTHERWISE.
3. TOP OF CURB ELEVATIONS LISTED FOR MODIFIED TYPE P6 GUTTER IS GIVEN TO THE THEORETICAL TOP OF CURB.
4. ALL SIDEWALK SHALL BE 5' WIDE. SIDEWALK AT DRIVEWAYS AND PEDESTRIAN CURB RAMPS SHALL BE 6" THICK. ALL OTHER SIDEWALK SHALL BE 4" THICK UNLESS NOTED OTHERWISE (SEE SIDEWALK TABLE).
5. ELEVATION OF NORTH SIDE OF NORTH SIDEWALK TO MATCH EXISTING GRADE UNLESS SPOT ELEVATIONS ARE PROVIDED IN THE CURB AND GUTTER LAYOUT PLAN.

REGISTERED PROFESSIONAL ENGINEER
REG. NO. 9089
MICHAEL R. KUNO
SOUTH DAKOTA
12/3/14

PLANS PREPARED BY:
SEH
PHONE: 605.330.7000
401 EAST 8TH STREET
SUITE 309
SIOUX FALLS, SD 57103–7032
www.sehinc.com

P:\PT\S\Sdot\124655\5-final-dsgn\51-drawings\10-Civil\CAD\PLANSHEETS\SD124655_B_CG3.dwg 12/3/2014 12:47 PM kpederson

STATE OF SOUTH DAKOTA	PROJECT	SHEET NO.	TOTAL SHEETS
	P 6312(18)	B36	B63

FOR BIDDING PURPOSES ONLY

Curb & Gutter Layout Plan

(1) 122+22.79–16.00' LT
BEG MOD. TYPE B66 C&G
T.C. EL. 1659.30

(2) 122+40.95–16.00' LT
END MOD. TYPE B66 C&G
T.C. EL. 1659.25

(3) 123+00.00–16.00' LT
BEG MOD. TYPE B66 C&G
T.C. EL. 1659.14

(4) 124+44.89–16.00' LT
END MOD. TYPE B66 C&G
BEGIN MOD. TYPE P6 GUTTER
T.C. EL. 1659.68

(5) 124+63.11–16.00' LT
END MOD. TYPE P6 GUTTER
BEGIN MOD. TYPE B66 C&G
T.C. EL. 1659.93

(6) 125+26.65–16.00' LT
END MOD. TYPE B66 C&G
BEGIN MOD. TYPE P6 GUTTER
T.C. EL. 1661.06

(7) 125+38.54–15.95' LT
END MOD. TYPE P6 GUTTER
BEG MOD. TYPE B66 C&G
T.C. EL. 1661.29

(8) 122+04.44–16.00' RT
BEG MOD. TYPE B66 C&G
T.C. EL. 1659.36

(9) 122+37.79–16.00' RT
END MOD. TYPE B66 C&G
T.C. EL. 1659.21

(10) 123+33.17–16.00' RT
BEG MOD. TYPE B66 C&G
T.C. EL. 1658.84

(11) 124+37.69–16.00' RT
BEGIN CURB CUT
T.C. EL. 1659.41

(12) 124+39.55–16.00' RT
END CURB CUT
T.C. EL. 1659.42

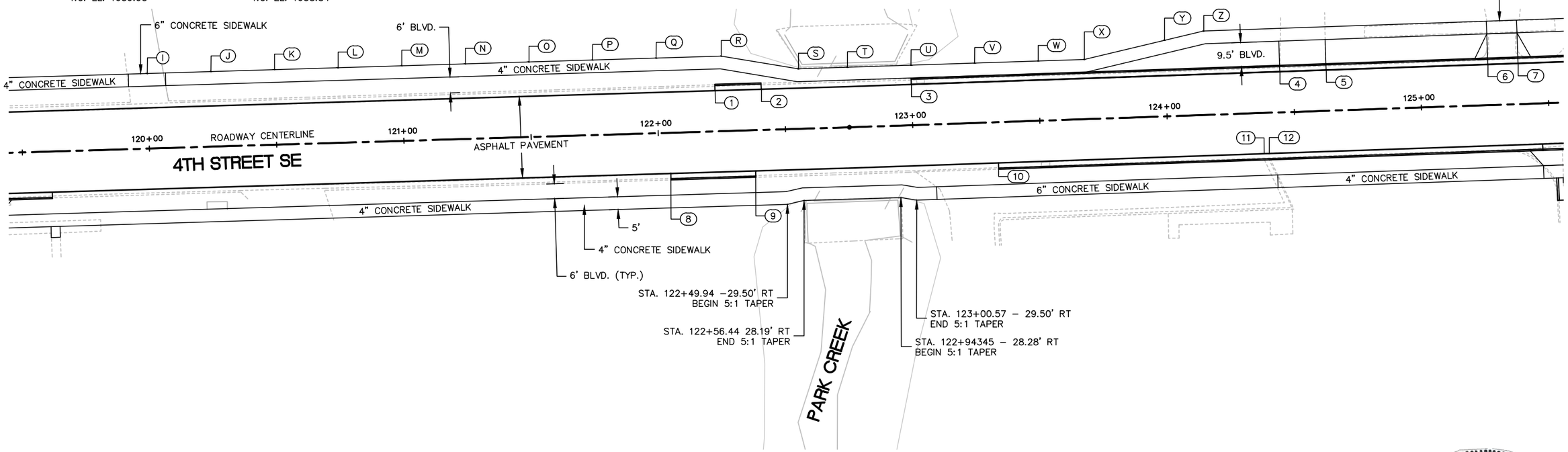

(I) 120+00.00–29.50' LT
SIDEWALK
EL. 1661.42

(J) 120+25.00–29.50' LT
SIDEWALK
EL. 1661.24

(K) 120+50.00–29.50' LT
SIDEWALK
EL. 1661.03

(L) 120+75.00–29.50' LT
SIDEWALK
EL. 1660.79

(M) 121+00.00–29.50' LT
SIDEWALK
EL. 1660.56

(N) 121+25.00–29.50' LT
SIDEWALK
EL. 1660.32

(O) 121+50.00–29.50' LT
SIDEWALK
EL. 1660.08

(P) 121+75.00–29.50' LT
SIDEWALK
EL. 1659.84

(Q) 122+00.00–29.50' LT
SIDEWALK
EL. 1659.60

(R) 122+25.60–29.50' LT
BEGIN 5:1 TAPER
SIDEWALK
EL. 1659.34

(S) 122+55.72–23.56' LT
END 5:1 TAPER
SIDEWALK
EL. 1659.27

(T) 122+75.00–23.61' LT
SIDEWALK
EL. 1659.25

(U) 123+00.10–23.56' LT
SIDEWALK
EL. 1659.21

(V) 123+25.10–23.52' LT
SIDEWALK
EL. 1659.14

(W) 123+50.10–23.47' LT
SIDEWALK
EL. 1659.11

(X) 123+68.24–23.44' LT
BEGIN 5:1 TAPER
SIDEWALK
EL. 1659.13

(Y) 124+00.00–29.86' LT
SIDEWALK
EL. 1659.39

(Z) 124+15.50–33.00' LT
END 5:1 TAPER
SIDEWALK
EL. 1659.57

NOTES:

1. ALL CURB AND GUTTER SHOWN ON THIS SHEET IS MODIFIED TYPE B66 UNLESS NOTED OTHERWISE.
2. ALL GUTTER FOR DRIVEWAY APPROACHES IS MODIFIED TYPE P6 UNLESS NOTED OTHERWISE.
3. TOP OF CURB ELEVATIONS LISTED FOR MODIFIED TYPE P GUTTER IS GIVEN TO THE THEORETICAL TOP OF CURB.
4. ALL SIDEWALK SHALL BE 5' WIDE. SIDEWALK AT DRIVEWAYS AND PEDESTRIAN CURB RAMPS SHALL BE 6" THICK. ALL OTHER SIDEWALK SHALL BE 4" THICK UNLESS NOTED OTHERWISE (SEE SIDEWALK TABLE).
5. ELEVATION OF NORTH SIDE OF NORTH SIDEWALK TO MATCH EXISTING GRADE UNLESS SPOT ELEVATIONS ARE PROVIDED IN THE CURB AND GUTTER LAYOUT PLAN.

REGISTERED PROFESSIONAL ENGINEER
REG. NO. 9089
MICHAEL R. KUNO
SOUTH DAKOTA
10/7/14

PLANS PREPARED BY:
SEH
PHONE: 605.330.7000
401 EAST 8TH STREET
SUITE 309
SIOUX FALLS, SD 57103–7032
www.sehinc.com

P:\PT\S\Sddot\124655\5-final-dsgn\51-drawings\10-Civil\CAD\PLANSHEETS\SD124655_B_CG4.dwg 10/8/2014 2:00 PM kpederson

STATE OF SOUTH DAKOTA	PROJECT	SHEET NO.	TOTAL SHEETS
	P 6312(18)	B37	B63

FOR BIDDING PURPOSES ONLY

Curb & Gutter Layout Plan

1. 125+60.48–16.00' LT
END MOD. TYPE B66 C&G
BEGIN MOD. TYPE P6 GUTTER
T.C. EL. 1661.73

2. 125+73.61–16.00' LT
END MOD. TYPE P6 GUTTER
BEGIN MOD. TYPE B66 C&G
T.C. EL. 1661.99

3. 126+39.75–16.00' LT
END MOD. TYPE B66 C&G
BEGIN MOD. TYPE P6 GUTTER
T.C. EL. 1663.30

4. 126+51.85–16.00' LT
END MOD. TYPE P6 GUTTER
BEGIN MOD. TYPE B66 C&G
T.C. EL. 1663.54

5. 127+21.29–16.00' LT
END MOD. TYPE B66 C&G
BEGIN MOD. TYPE P6 GUTTER
T.C. EL. 1664.80

6. 127+35.51–16.00' LT
END MOD. TYPE P6 GUTTER
BEGIN MOD. TYPE B66 C&G
T.C. EL. 1665.02

7. 128+41.47–16.00' LT
END MOD. TYPE B66 C&G
BEGIN 15' RADIUS
T.C. EL. 1666.40

8. 125+47.11–16.00' RT
END MOD. TYPE B66 C&G
BEGIN MOD. TYPE P6 GUTTER
T.C. EL. 1661.45

9. 125+78.39–16.00' RT
END MOD. TYPE P6 GUTTER
BEGIN MOD. TYPE B66 C&G
T.C. EL. 1661.97

10. 126+07.06–16.00' RT
END MOD. TYPE B66 C&G
T.C. EL. 1662.51

11. 127+93.99–16.00' RT
BEG MOD. TYPE B66 C&G
T.C. EL. 1665.55

12. 128+05.57–16.00' RT
END MOD. TYPE B66 C&G
BEG MOD. TYPE P6 GUTTER
T.C. EL. 1665.65

13. 128+29.02–16.00' RT
END MOD. TYPE P6 GUTTER
BEG MOD. TYPE B66 C&G
T.C. EL. 1665.86

14. 128+53.02–16.00' RT
END MOD. TYPE B66 C&G
T.C. EL. 1666.06

15. 125+54.90–38.29' RT
BEGIN STR C&G
T.C. EL. 1662.55

16. 125+54.85–29.50' RT
END STR C&G
T.C. EL. 1662.17

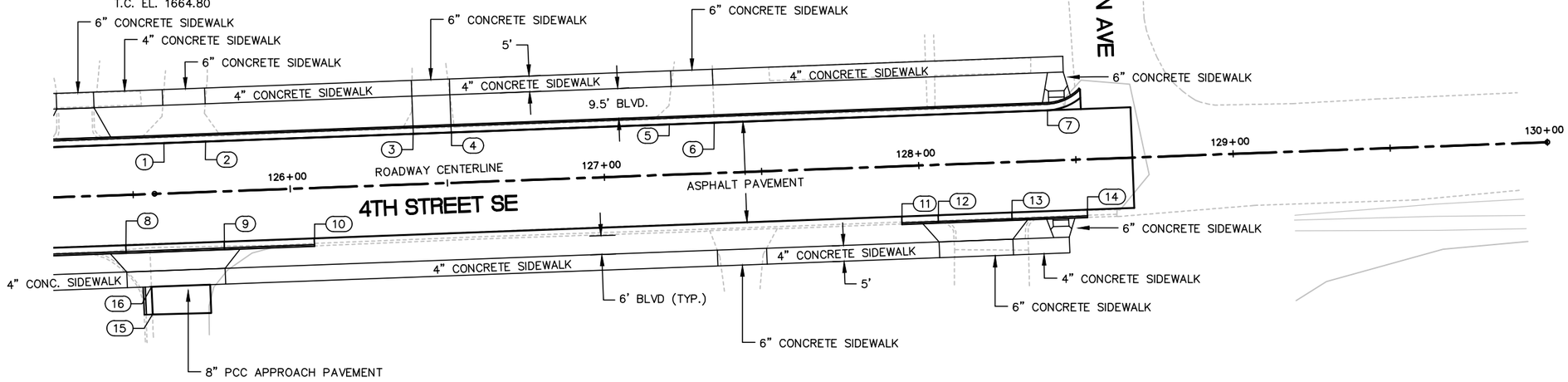

NOTES:

1. ALL CURB AND GUTTER SHOWN ON THIS SHEET IS TYPE B66 UNLESS NOTED OTHERWISE.
2. ALL GUTTER FOR DRIVEWAY APPROACHES IS TYPE P6 UNLESS NOTED OTHERWISE.
3. TOP OF CURB ELEVATIONS LISTED FOR TYPE P GUTTER IS GIVEN TO THE THEORETICAL TOP OF CURB.
4. ALL SIDEWALK SHALL BE 5' WIDE. SIDEWALK AT DRIVEWAYS AND PEDESTRIAN CURB RAMPS SHALL BE 6" THICK. ALL OTHER SIDEWALK SHALL BE 4" THICK UNLESS NOTED OTHERWISE (SEE SIDEWALK TABLE).
5. ELEVATION OF NORTH SIDE OF NORTH SIDEWALK TO MATCH EXISTING GRADE UNLESS SPOT ELEVATIONS ARE PROVIDED IN THE CURB AND GUTTER LAYOUT PLAN.

REGISTERED PROFESSIONAL ENGINEER
REG. NO. 9089
MICHAEL R. KUNO
SOUTH DAKOTA
10/7/14

PLANS PREPARED BY:
SEH
PHONE: 605.330.7000
401 EAST 8TH STREET
SUITE 309
SIOUX FALLS, SD 57103–7032
www.sehinc.com

P:\PT\S\Sddot\124655\5-final-dsgn\51-drawings\10-Civil\CAD\PLANSHEETS\SD124655_B_CG5.dwg 10/8/2014 2:00 PM kpederson

STATE OF SOUTH DAKOTA	PROJECT	SHEET NO.	TOTAL SHEETS
	P 6312(18)	B38	B63

FOR BIDDING PURPOSES ONLY

Curb Ramp Details - 4th St. SE & S Lincoln Ave.

REGISTERED PROFESSIONAL ENGINEER
REG. NO. 9089
MICHAEL R. KUNO
SOUTH DAKOTA
10/7/14

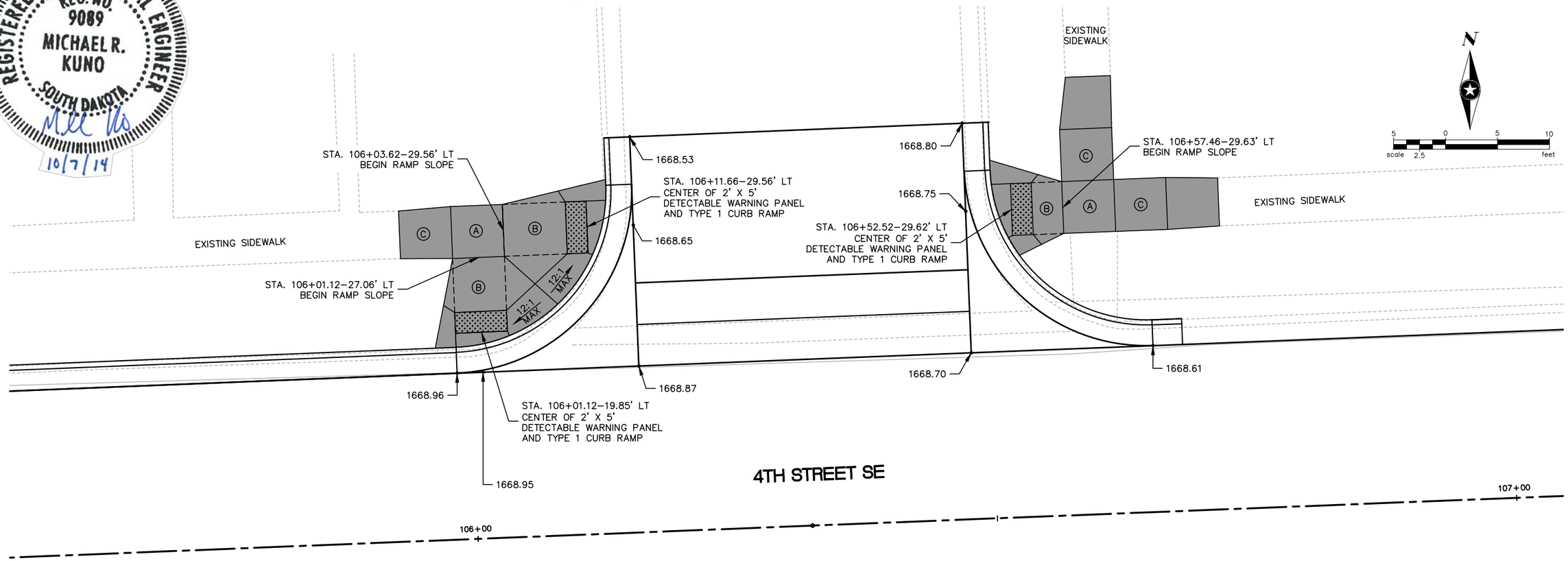

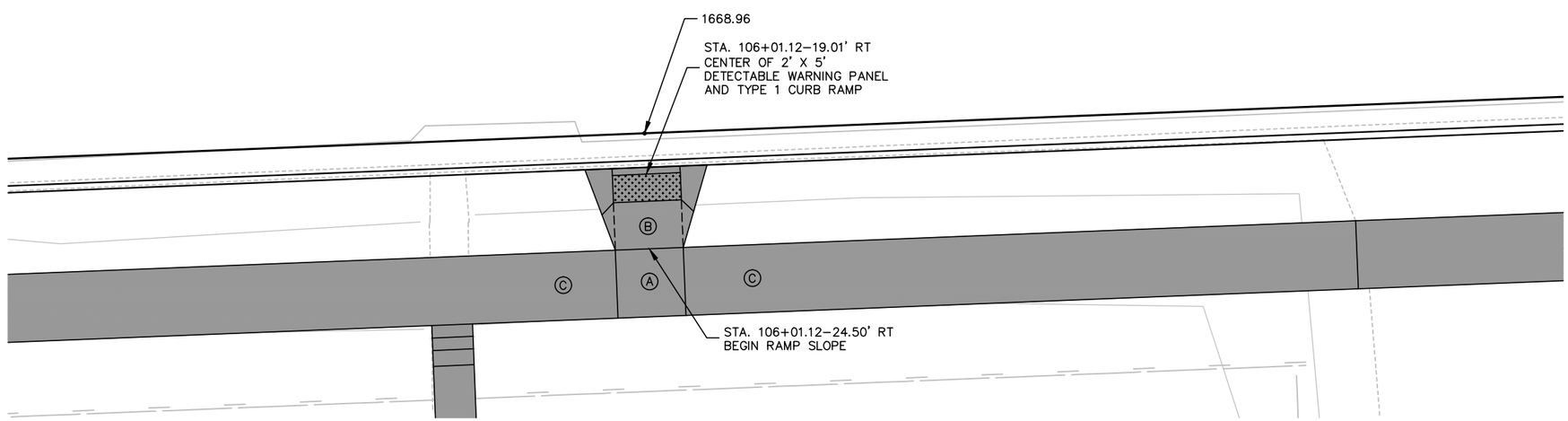

NOTES:

1. ALL CURB AND GUTTER SHOWN ON THIS SHEET IS TYPE B66 UNLESS NOTED OTHERWISE.
2. ALL GUTTER SHOWN ON THIS SHEET IS P6 UNLESS NOTED OTHERWISE.
3. ALL SIDEWALK IS 5' WIDE UNLESS NOTED OTHERWISE.

LEGEND:

- (A) LANDING AREA (2% MAX SLOPE IN ANY DIRECTION)
- (B) RAMP SLOPES WITH 8.3% MAXIMUM LONGITUDINAL SLOPE
- (C) SIDEWALK WITH 5% MAXIMUM LONGITUDINAL SLOPE.
- DETECTABLE WARNING SURFACE
- NEW SIDEWALK AREA
- SAWED OR TOOLED JOINT
- GRADE BREAK WITH NO JOINT

PLANS PREPARED BY:
SEH
PHONE: 605.330.7000
401 EAST 8TH STREET
SUITE 309
SIOUX FALLS, SD 57103–7032
www.sehinc.com

P:\PT\S\Sddot\124655\5-final-dsgn\51-drawings\10-Civil\CAD\PLANSHEETS\SD124655_B_CR1.dwg 10/8/2014 6:07 PM kpederson

STATE OF SOUTH DAKOTA	PROJECT	SHEET NO.	TOTAL SHEETS
	P 6312(18)	B39	B63

FOR BIDDING PURPOSES ONLY

Curb Ramp Details - 4th St. SE & S Grant Ave.

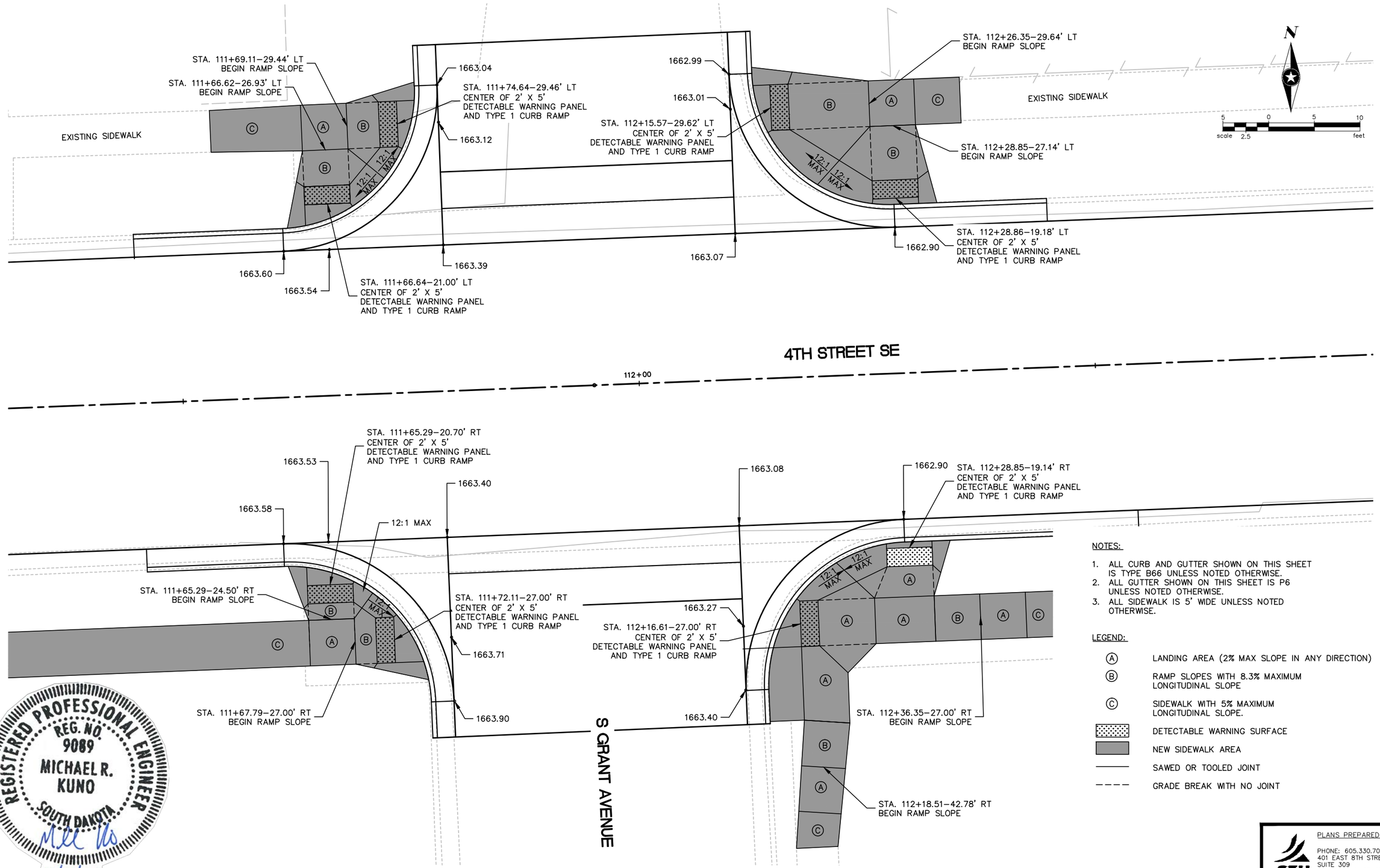

NOTES:

1. ALL CURB AND GUTTER SHOWN ON THIS SHEET IS TYPE B66 UNLESS NOTED OTHERWISE.
2. ALL GUTTER SHOWN ON THIS SHEET IS P6 UNLESS NOTED OTHERWISE.
3. ALL SIDEWALK IS 5' WIDE UNLESS NOTED OTHERWISE.

LEGEND:

- (A) LANDING AREA (2% MAX SLOPE IN ANY DIRECTION)
- (B) RAMP SLOPES WITH 8.3% MAXIMUM LONGITUDINAL SLOPE
- (C) SIDEWALK WITH 5% MAXIMUM LONGITUDINAL SLOPE.
- DETECTABLE WARNING SURFACE
- NEW SIDEWALK AREA
- SAWED OR TOOLED JOINT
- GRADE BREAK WITH NO JOINT

REGISTERED PROFESSIONAL ENGINEER
REG. NO. 9089
MICHAEL R. KUNO
SOUTH DAKOTA
10/7/14

PLANS PREPARED BY:
SEH
PHONE: 605.330.7000
401 EAST 8TH STREET
SUITE 309
SIOUX FALLS, SD 57103-7032
www.sehinc.com

P:\PT\S\Sddot\124655\5-final-dsgn\51-drawings\10-Civil\CAD\PLANSHEETS\SD124655_B_CR2.dwg 10/8/2014 6:07 PM kpederson

STATE OF SOUTH DAKOTA	PROJECT	SHEET NO.	TOTAL SHEETS
	P 6312(18)	B40	B63

FOR BIDDING PURPOSES ONLY

Curb Ramp Details - 4th St. SE & S Garfield Ave.

REGISTERED PROFESSIONAL ENGINEER
REG. NO. 9089
MICHAEL R. KUNO
SOUTH DAKOTA
10/7/14

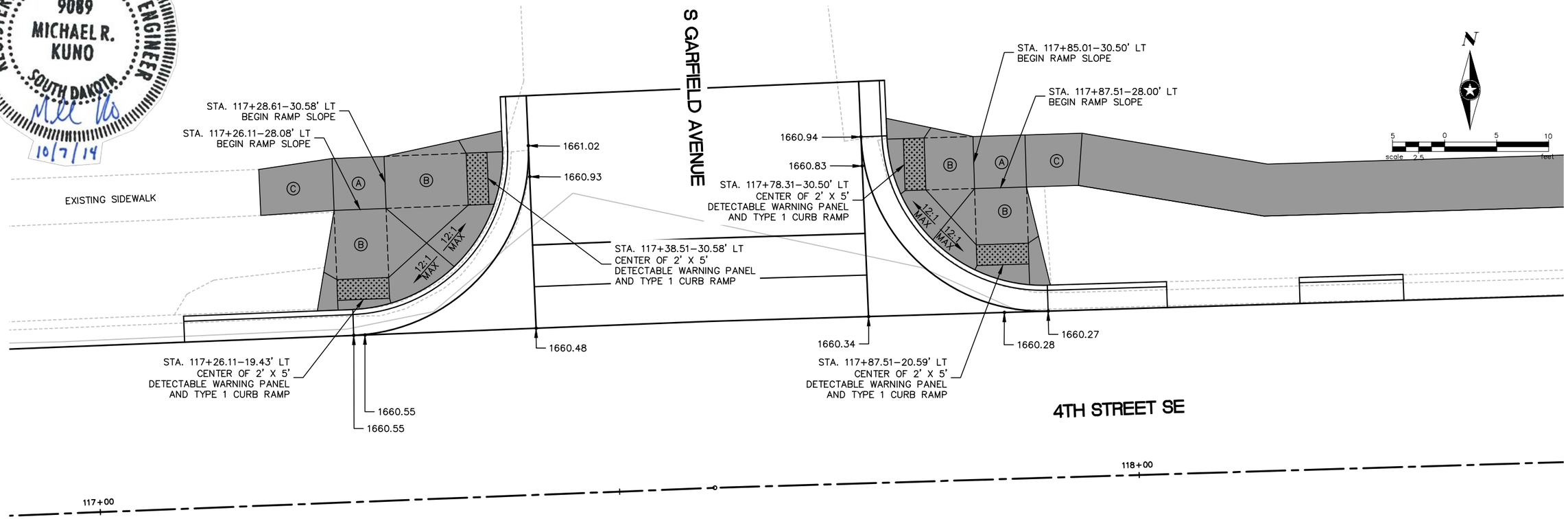

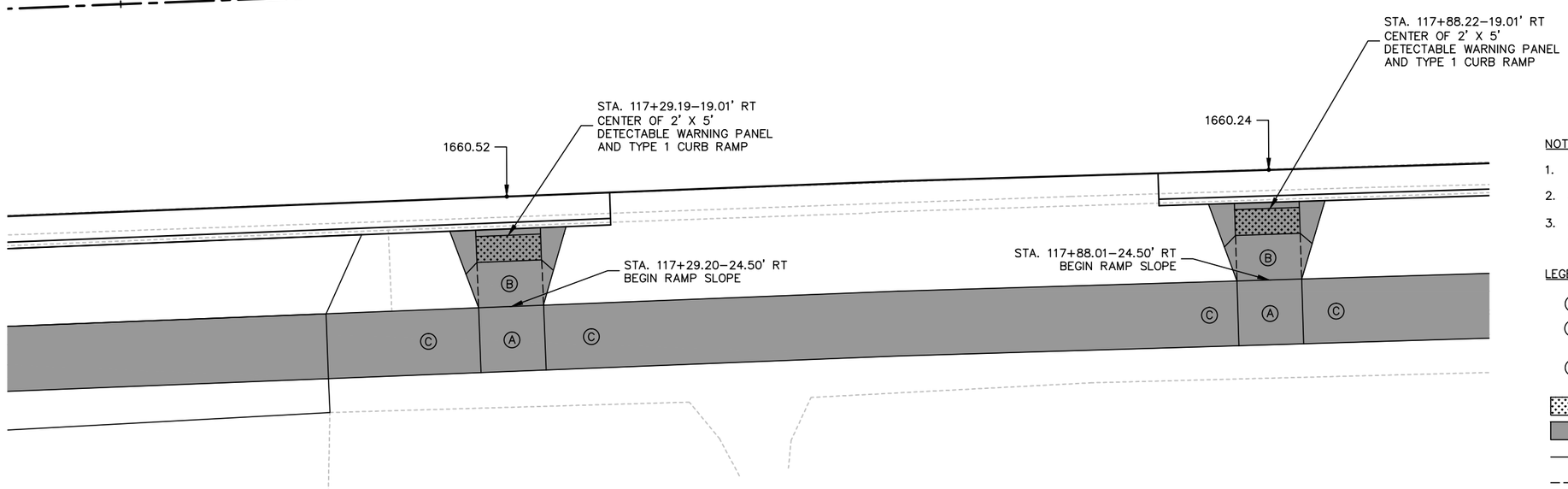

NOTES:

1. ALL CURB AND GUTTER SHOWN ON THIS SHEET IS TYPE B66 UNLESS NOTED OTHERWISE.
2. ALL GUTTER SHOWN ON THIS SHEET IS P6 UNLESS NOTED OTHERWISE.
3. ALL SIDEWALK IS 5' WIDE UNLESS NOTED OTHERWISE.

LEGEND:

- (A) LANDING AREA (2% MAX SLOPE IN ANY DIRECTION)
- (B) RAMP SLOPES WITH 8.3% MAXIMUM LONGITUDINAL SLOPE
- (C) SIDEWALK WITH 5% MAXIMUM LONGITUDINAL SLOPE.
- DETECTABLE WARNING SURFACE
- NEW SIDEWALK AREA
- SAWED OR TOOLED JOINT
- GRADE BREAK WITH NO JOINT

PLANS PREPARED BY:
SEH
PHONE: 605.330.7000
401 EAST 8TH STREET
SUITE 309
SIOUX FALLS, SD 57103-7032
www.sehinc.com

P:\PT\S\Sddot\124655\5-final-dsgn\51-drawings\10-Civil\CAD\PLANSHEETS\SD124655_B_CR3.dwg 10/8/2014 6:07 PM kpederson

STATE OF SOUTH DAKOTA	PROJECT	SHEET NO.	TOTAL SHEETS
	P 6312(18)	B41	B63

FOR BIDDING PURPOSES ONLY

Curb Ramp Details - 4th St. SE & S Division Ave.

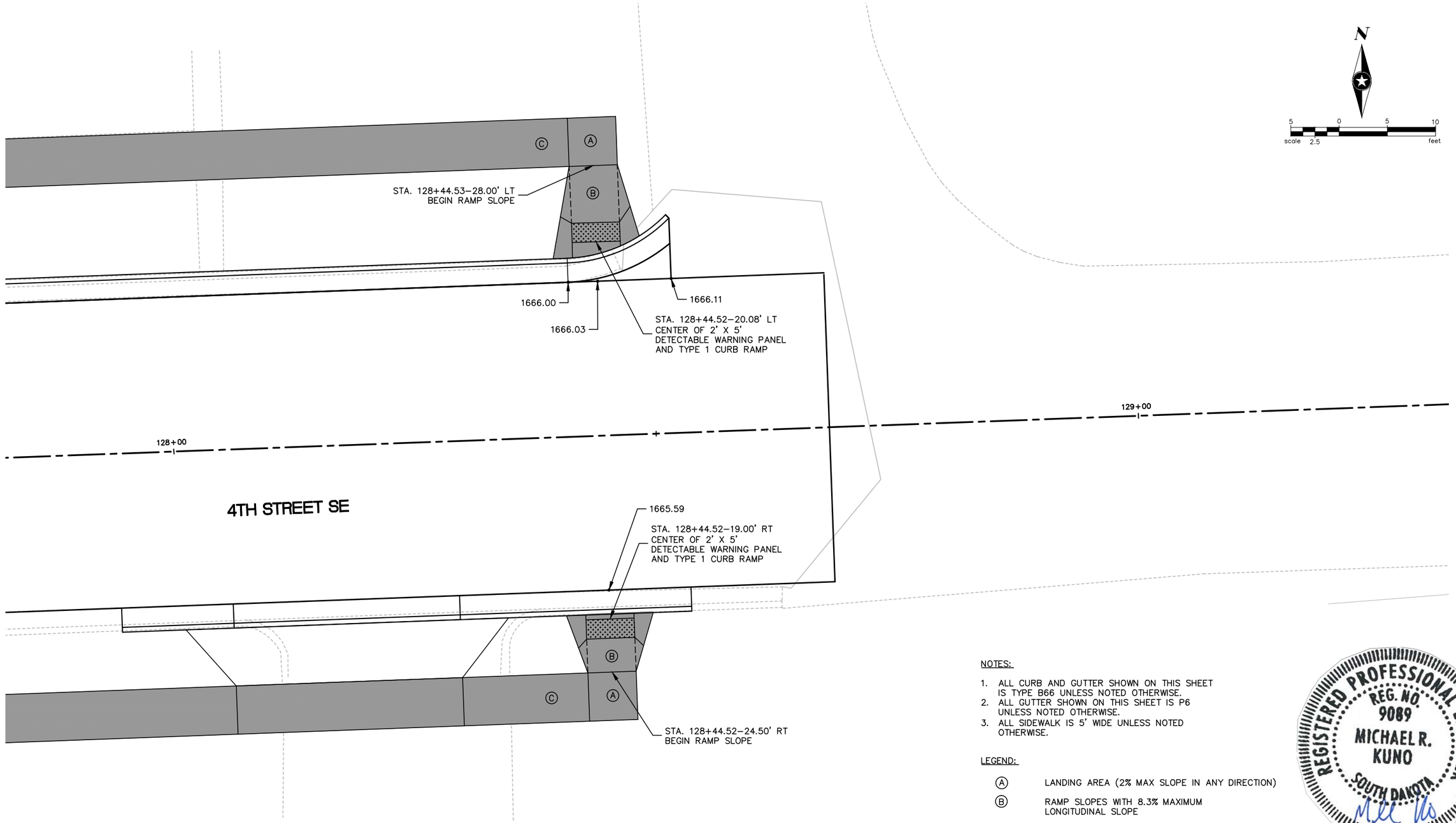

NOTES:

1. ALL CURB AND GUTTER SHOWN ON THIS SHEET IS TYPE B66 UNLESS NOTED OTHERWISE.
2. ALL GUTTER SHOWN ON THIS SHEET IS P6 UNLESS NOTED OTHERWISE.
3. ALL SIDEWALK IS 5' WIDE UNLESS NOTED OTHERWISE.

LEGEND:

- (A) LANDING AREA (2% MAX SLOPE IN ANY DIRECTION)
- (B) RAMP SLOPES WITH 8.3% MAXIMUM LONGITUDINAL SLOPE
- (C) SIDEWALK WITH 5% MAXIMUM LONGITUDINAL SLOPE.
- DETECTABLE WARNING SURFACE
- NEW SIDEWALK AREA
- SAWED OR TOOLED JOINT
- GRADE BREAK WITH NO JOINT

REGISTERED PROFESSIONAL ENGINEER
REG. NO. 9089
MICHAEL R. KUNO
SOUTH DAKOTA
10/7/14

PLANS PREPARED BY:
SEH
PHONE: 605.330.7000
401 EAST 8TH STREET
SUITE 309
SIOUX FALLS, SD 57103–7032
www.sehinc.com

P:\PT\S\Sddot\124655\5-final-dsgn\51-drawings\10-Civil\CAD\PLANSHEETS\SD124655_B_CR4.dwg 10/8/2014 6:07 PM kpederson

STATE OF SOUTH DAKOTA	PROJECT	SHEET NO.	TOTAL SHEETS
	P 6312(18)	B42	B63

FOR BIDDING PURPOSES ONLY

DROP CURB TYPE APPROACH

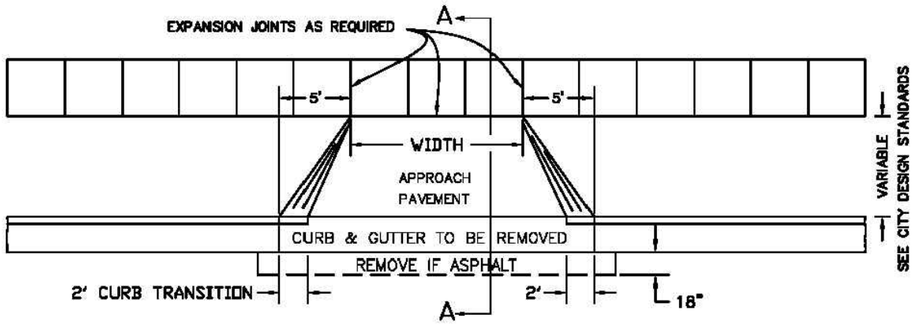

PLAN VIEW

RADIUS TYPE APPROACH

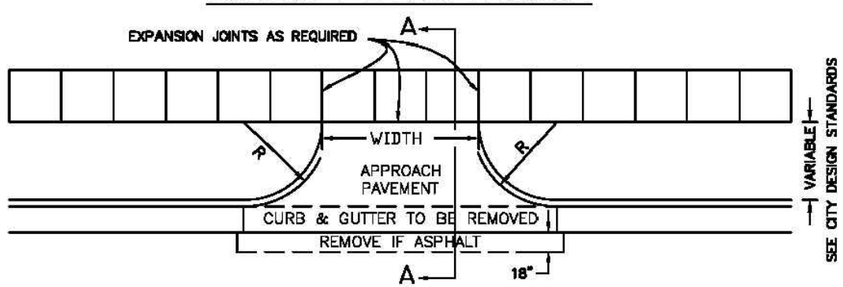

PLAN VIEW

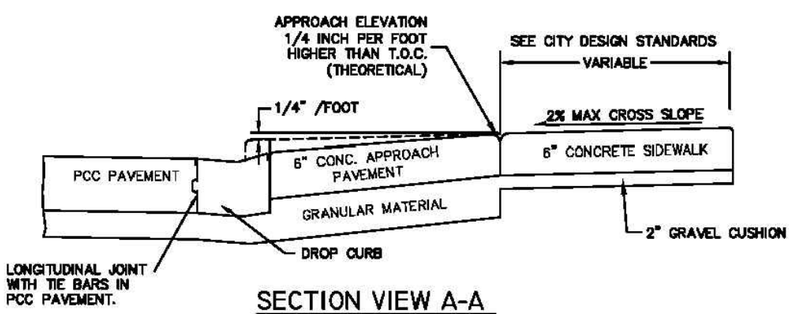

SECTION VIEW A-A

(APPLIES TO BOTH DROP CURB & RADIUS TYPE)

Revised: April 2008

City of Madison
Engineering Department
Drop Curb and Radius
Type Approaches

MADISON Engineering Department

PO Box 308
116 W. Center Street
Madison, SD 57042
Phone: (605)256-7514
Fax: (605)256-7511

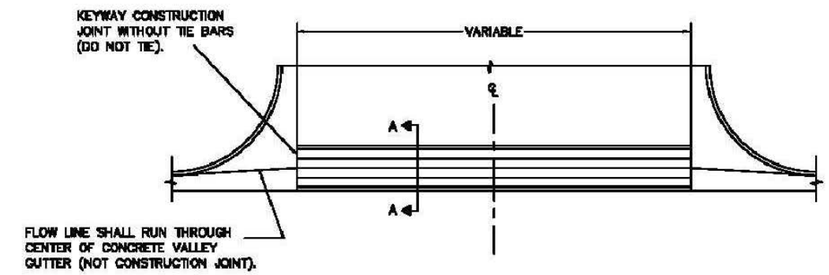

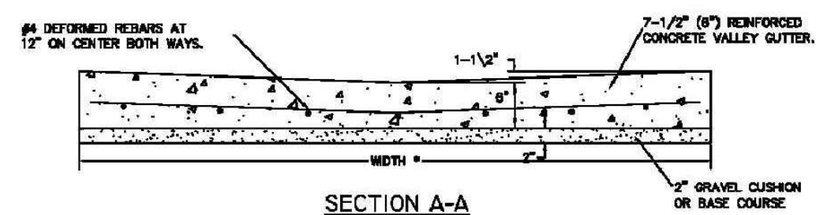

SECTION A-A

NOTES:

ALL REBAR SHALL BE EPOXY COATED

REFER TO PLANS FOR LENGTH OF VALLEY GUTTER

ALL REBAR WILL BE TIED AND IN PLACE. (NOT A PAY ITEM)

* WIDTH SHALL BE 6'0" MINIMUM ON RESIDENTIAL STREETS. 8'0" MINIMUM WHERE USED ADJACENT TO OR ON COLLECTOR STREETS.

City of Madison
Engineering Department
CONCRETE_VALLEY
GUTTER_DETAIL

April 2008

MADISON Engineering Department

PO Box 308
116 W. Center Street
Madison, SD 57042
Phone: (605)256-7514
Fax: (605)256-7511

PLANS PREPARED BY:

SEH

PHONE: 605.330.7000
401 EAST 8TH STREET
SUITE 309
SIOUX FALLS, SD 57103-7032
www.sehinc.com

P:\PT\S\Sddot\124655\5-final-dsgn\10-Civil\CAD\PLANSHEETS\SD124655_B_DT1.dwg 10/8/2014 2:01 PM kpederson

STATE OF SOUTH DAKOTA	PROJECT	SHEET NO.	TOTAL SHEETS
	P 6312(18)	B43	B63

FOR BIDDING PURPOSES ONLY

Revised 12/3/2014

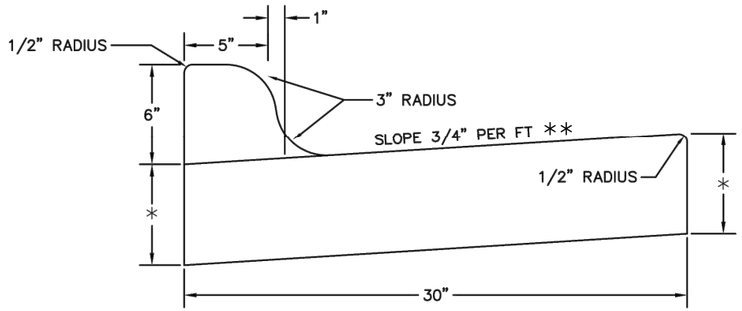

MODIFIED TYPE B66 CURB AND GUTTER

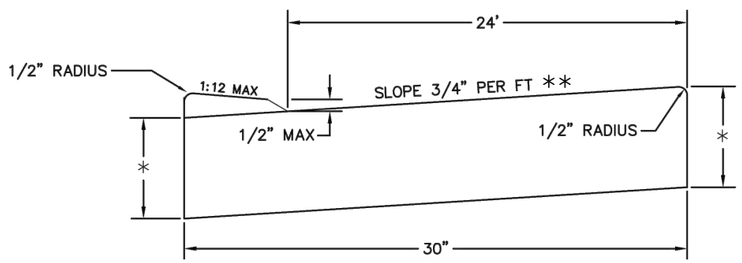

MODIFIED TYPE P6 GUTTER

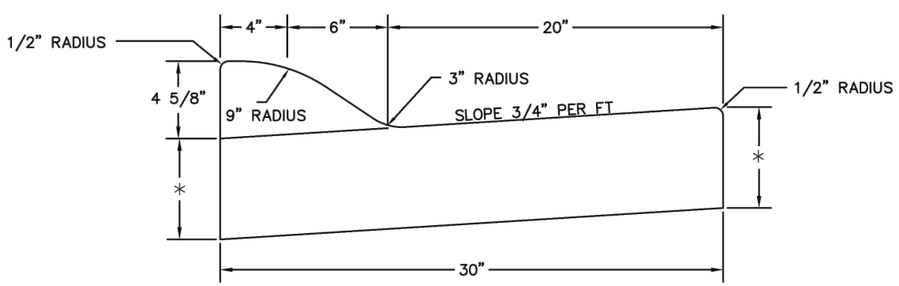

TYPE BL CURB AND GUTTER

(OPTIONAL IN CUL-DE-SACS ONLY)

* THICKNESS SHALL BE EQUAL TO THE DEPTH OF THE ADJOINING PAVEMENT BUT NOT LESS THAN 6".

** TRANSITION GUTTER SLOPE TO 5% GRADE AT PEDESTRIAN RAMP LOCATIONS.

GENERAL

ON PCC PAVEMENT A LONGITUDINAL CONSTRUCTION JOINT WITH TIE BARS SHALL BE USED WHEN CURB AND GUTTER IS POURED SEPARATELY.

M-6 CONCRETE SHALL BE USED IN THE CONSTRUCTION OF THE CURB AND GUTTER.

Revised: April 2008

City of Madison
Engineering Department
Typical Curb and Gutter
Cross Sections

MADISON Engineering Department

PO Box 308
116 W. Center Street
Madison, SD 57042
Phone: (605)256-7514
Fax: (605)256-7511

REMOVE STORM SEWER PIPE BOX CULVERT PLUG

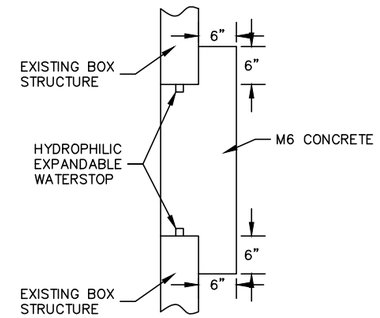

NTS

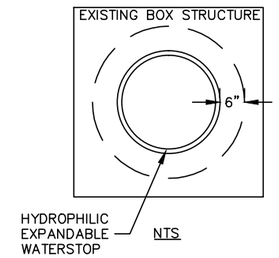

NTS

NTS

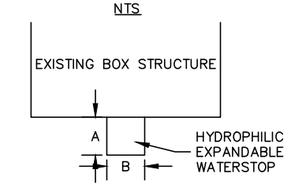

HYDROPHILIC WATERSTOP DIMENSIONS:
A: 0.25" OR GREATER
B: 1.0" OR GREATER

CONTRACTOR SHALL REMOVE EXISTING CONCRETE PIPE FROM BOX STRUCTURE WALL AND CLEAN EXPOSED SURFACES (FREE OF DEBRIS). ALLOW SURFACE TO DRY, AND INSTALL HYDROPHILIC EXPANDABLE WATERSTOP AROUND ENTIRE DIAMETER OF HOLE PER DETAIL ABOVE AND MANUFACTURERS INSTRUCTIONS. CONSTRUCT PLUG AND COLLAR WITH M6 CONCRETE. ALL LABOR AND MATERIALS REQUIRED TO CONSTRUCT THE BOX CULVERT PLUGS SHALL BE INCIDENTAL TO THE CONTRACT UNIT PRICE PER FOOT OF "REMOVE STORM SEWER PIPE".

REGISTERED PROFESSIONAL ENGINEER
REG. NO. 9089
MICHAEL R. KUNO
SOUTH DAKOTA
12/3/14

ARTICULATED CONCRETE MATTRESS

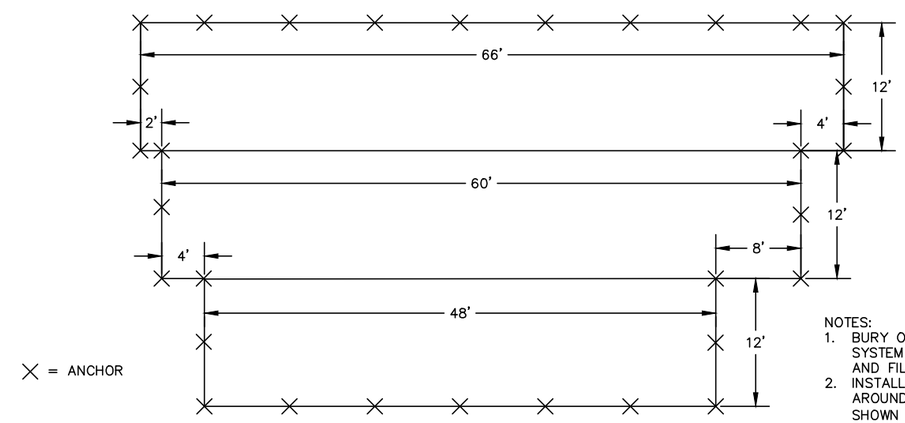

X = ANCHOR

NOTES:
1. BURY OUTSIDE EDGES OF MAT SYSTEM ONE BLOCK INTO GROUND AND FILL WITH COMPACTED FILL.
2. INSTALL ANCHORS AT INTERVALS AROUND PERIMETER OF SYSTEM AS SHOWN (48" BURY).

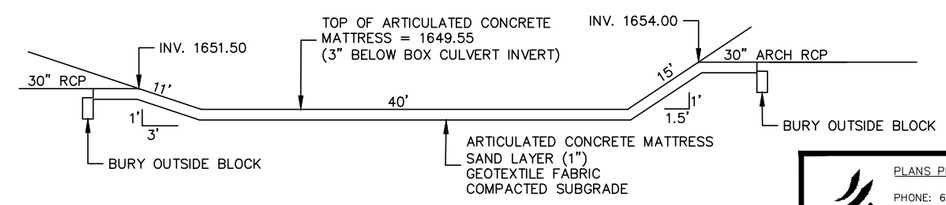

PLANS PREPARED BY:
SEH
PHONE: 605.330.7000
401 EAST 8TH STREET
SUITE 309
SIOUX FALLS, SD 57103-7032
www.sehinc.com

P:\PT\S\Sddot\124655\5-final-dsgn\51-drawings\10-Civil\CAD\PLANSHEETS\SD124655_B_DT5.dwg 12/3/2014 12:45 PM kpederson

FOR BIDDING PURPOSES ONLY

STATE OF SOUTH DAKOTA	PROJECT	SHEET NO.	TOTAL SHEETS
	P 6312(18)	B44	B63

REGISTERED PROFESSIONAL ENGINEER
REG. NO. 9089
MICHAEL R. KUNO
SOUTH DAKOTA
10/7/14

FOR 12" THRU 84" DIAMETER PIPE TYPE B INSTALLATION

MATERIAL

CLASS I: CRUSHED ROCK OR GRAVEL
100% PASSING 1 1/2" SIEVE
<5% PASSING #200 SIEVE

CLASS II: COARSE GRAINED SOILS INCLUDES SAND
100% PASSING 1 1/2" SIEVE
<5% PASSING #200 SIEVE

NATIVE SOIL BACKFILL

NATIVE SOIL, COMPACTED TO MINIMUM PROJECT REQUIREMENTS

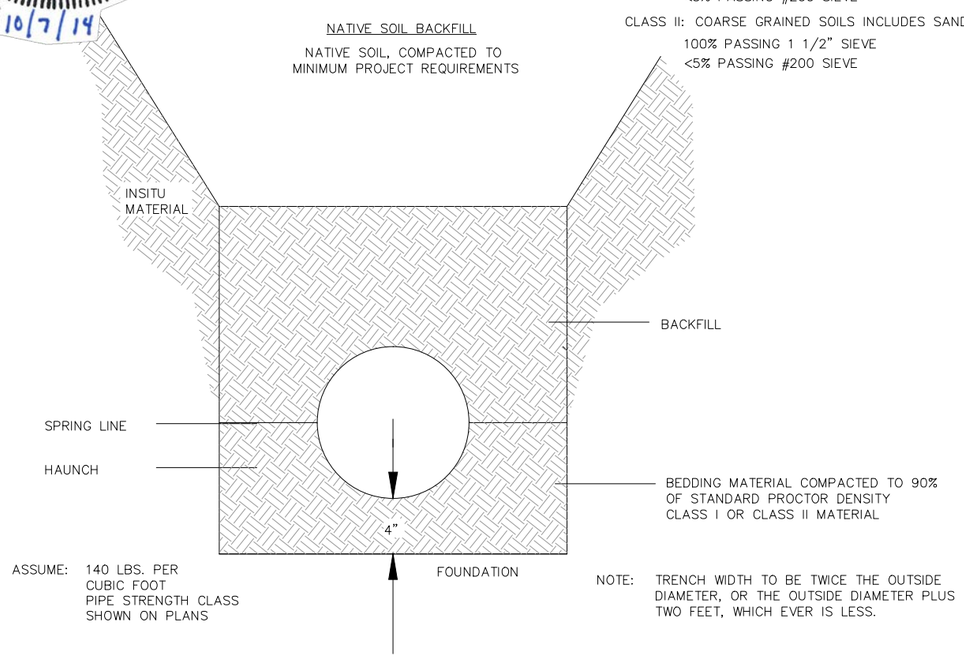

ASSUME: 140 LBS. PER CUBIC FOOT
PIPE STRENGTH CLASS SHOWN ON PLANS

NOTE: TRENCH WIDTH TO BE TWICE THE OUTSIDE DIAMETER, OR THE OUTSIDE DIAMETER PLUS TWO FEET, WHICH EVER IS LESS.

QUANTITY ESTIMATE TABLE
FOR BEDDING MATERIAL

12"	0.14 TON/L.F.
15"	0.19 TON/L.F.
18"	0.25 TON/L.F.
21"	0.29 TON/L.F.
24"	0.33 TON/L.F.
27"	0.36 TON/L.F.
30"	0.40 TON/L.F.
33"	0.44 TON/L.F.
36"	0.48 TON/L.F.
42"	0.57 TON/L.F.
48"	0.67 TON/L.F.
54"	0.77 TON/L.F.
60"	0.88 TON/L.F.
66"	0.98 TON/L.F.
72"	1.10 TON/L.F.
78"	1.24 TON/L.F.
84"	1.35 TON/L.F.

REVISED: JANUARY 2008

Bedding and Backfill for RCP - Type B Installation

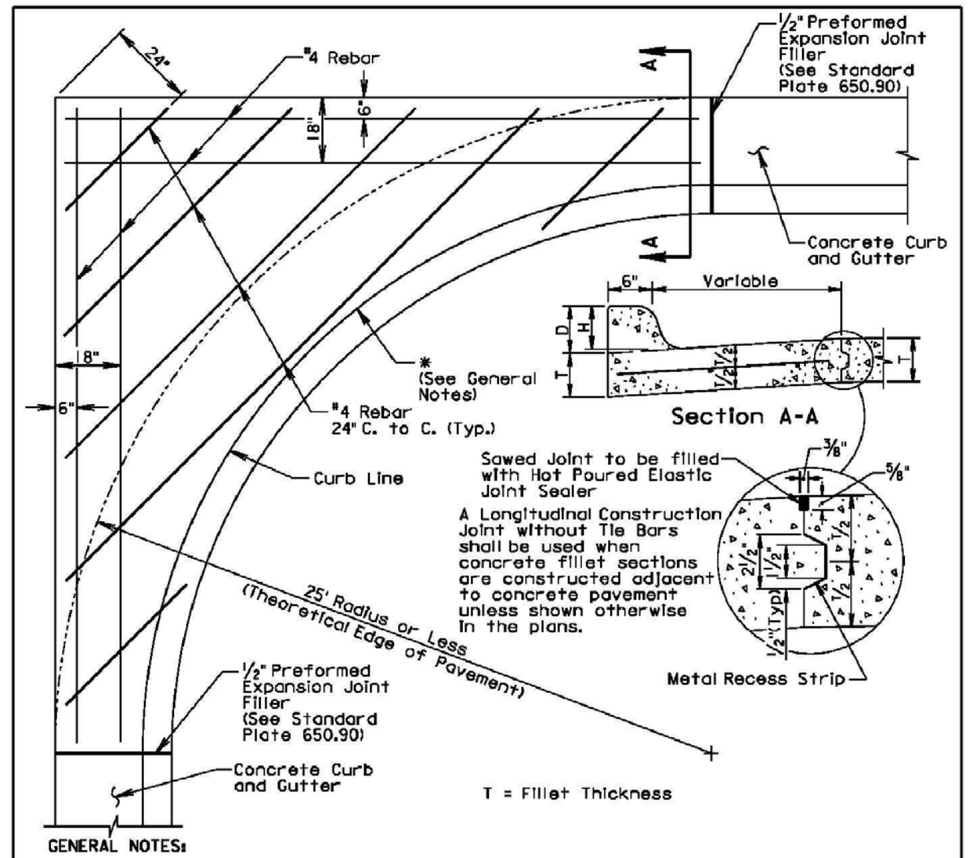

GENERAL NOTES:

* If a curb ramp is constructed adjacent to a PCC fillet section, the curb will need to be modified. Refer to the corresponding curb ramp standard plate or other special details in the plans for modification of the PCC fillet section.

Dimensions D, H, and T shall conform to those shown on the appropriate curb and gutter standard plate.

All rebar shall conform to A.S.T.M. A615 Grade 60 and the Standard Specifications Sections 480 and 1010. All rebar shall have a minimum of 3" clear cover.

Class M6 Concrete shall be used in construction of the fillets.

The concrete curb shall be monolithic with the concrete fillet. No separate payment for this curb will be made as the curb is considered a part of the fillet.

Joints shall be constructed at 10' intervals except when fillets are constructed adjacent to PCC Pavement. If there is adjacent PCC Pavement the joints shall be extended from edge of pavement through the fillet section as directed by the Engineer.

The cost for all materials, labor, and incidentals necessary to construct the PCC fillet section with curb and gutter shall be incidental to the contract unit price per square yard for the corresponding PCC fillet section bid item.

September 6, 2013

Published Date: 3rd Qtr. 2014	SDDOT	PCC FILLET SECTION WITH TYPE B CURB AND GUTTER	PLATE NUMBER 380.16
			Sheet 1 of 1

PLANS PREPARED BY:
SEH
PHONE: 605.330.7000
401 EAST 8TH STREET
SUITE 309
SIOUX FALLS, SD 57103-7032
www.sehinc.com

\P:\S\Sddot\124655\5-final-dsgn\51-drawings\10-Civil\CAD\PLANSHEETS\SD124655_B_DT2.dwg 10/8/2014 2:02 PM kpederson

TOLERANCES IN DIMENSIONS

Diameter: ±1.5% for 24" Dia. or less and ±1% or 3/8" whichever is more for 27" Dia. or greater.
Diameters at Joints: ±3/16" for 30" Dia. or less and ±1/4" for 36" or greater.
Length of Joint (J): ±1/4".
Wall thickness (T): not less than design T by more than 5% or 3/16", whichever is greater.
Laying length: shall not underrun by more than 1/2".

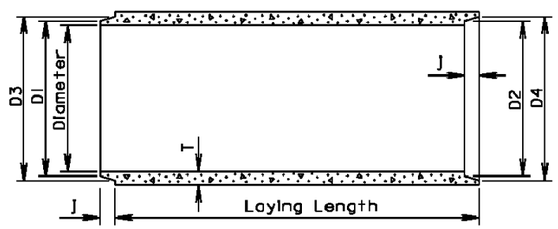

LONGITUDINAL SECTION

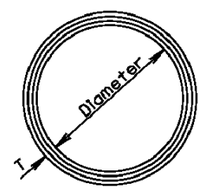

END VIEW

GENERAL NOTES:

Construction of R. C. P. shall conform to the requirements of Section 990 of the Standard Specifications for Roads and Bridges.

Not more than 2 four foot sections shall be permitted near the ends of any culvert. Four foot lengths shall be used only to secure the required length of culvert.

Diam. (In.)	Approx. Wt. /Ft. (lb.)	T (In.)	J (In.)	D1 (In.)	D2 (In.)	D3 (In.)	D4 (In.)
12	92	2	1 3/4	13 1/4	13 5/8	13 7/8	14 1/4
15	127	2 1/4	2	16 1/2	16 7/8	17 1/4	17 5/8
18	168	2 1/2	2 1/4	19 5/8	20	20 3/8	20 3/4
21	214	2 3/4	2 1/2	22 7/8	23 1/4	23 3/4	24 1/8
24	265	3	2 3/4	26	26 3/8	27	27 3/8
27	322	3 1/4	3	29 1/4	29 5/8	30 1/4	30 5/8
30	384	3 1/2	3 1/4	32 3/8	32 3/4	33 1/2	33 7/8
36	524	4	3 3/4	38 3/4	39 1/4	40	40 1/2
42	685	4 1/2	4	45 1/8	45 5/8	46 1/2	47
48	867	5	4 1/2	51 1/2	52	53	53 1/2
54	1070	5 1/2	4 1/2	57 7/8	58 3/8	59 3/8	59 7/8
60	1296	6	5	64 1/4	64 3/4	66	66 1/2
66	1542	6 1/2	5 1/2	70 5/8	71 1/8	72 1/2	73
72	1810	7	6	77	77 1/2	79	79 1/2
78	2098	7 1/2	6 1/2	83 3/8	83 7/8	85 5/8	86 1/8
84	2410	8	7	89 3/4	90 1/4	92 1/8	92 5/8
90	2740	8 1/2	7	95 3/4	96 1/4	98 1/8	98 5/8
96	2950	9	7	102 1/8	102 5/8	104 1/2	105
102	3075	9 1/2	7 1/2	109	109 1/2	111 1/2	112
108	3870	10	7 1/2	115 1/2	116	118	118 1/2

March 31, 2000

Published Date: 3rd Qtr. 2014 | SDDOT | **REINFORCED CONCRETE PIPE** | PLATE NUMBER 450.01 | Sheet 1 of 1

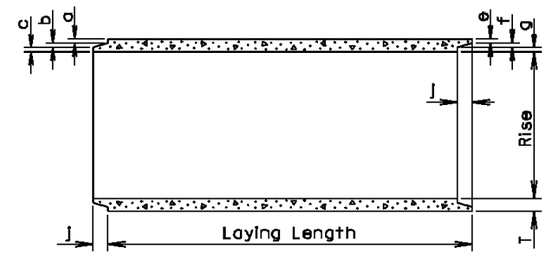

LONGITUDINAL SECTION

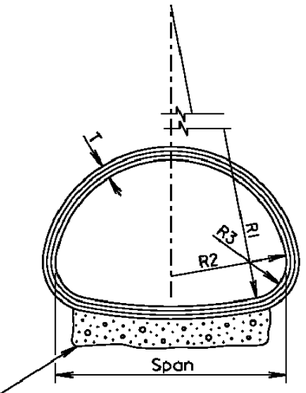

END VIEW

TOLERANCES IN DIMENSIONS

Radial dimensions at joints: ±1/8" for 65" span or less and ±1/4" for longer spans.
Rise and Span: ±2% of tabular values.
Length of Joint (J): ±1/4".
Wall thickness (T): not less than design T by more than 5% or 3/16", whichever is greater.
Laying length: shall not underrun by more than 1/2".

Gravel Bedding Material shall be supplied for 102" to 169" spans. It shall be placed to a thickness of 6" (min.) x 85% of the Span x Length of culvert and shall conform to the gradation requirements for gravel surfacing except material may be screened or may be plan provided material.

* Size (In.)	Approx. Wt./Ft. (lb.)	Rise (In.)	Span (In.)	T (In.)	a (In.)	b (In.)	c (In.)	J (In.)	e (In.)	f (In.)	g (In.)	R1 (In.)	R2 (In.)	R3 (In.)
18	170	13 1/2	22	2 1/2	1 3/8	3/8	3/4	2	1 1/8	3/8	1	27 1/2	13 3/4	5 1/4
24	320	18	28 1/2	3 1/2	1 5/8	1/2	1 3/8	3	1 3/8	1/2	1 5/8	40 11/16	14 3/4	4 5/8
30	450	22 1/2	36 1/4	4	1 15/16	5/8	1 9/16	3 1/2	1 9/16	5/8	1 13/16	51	18 3/4	6 1/8
36	600	26 5/8	43 3/4	4 1/2	2	3/4	1 3/4	4	1 3/4	3/4	2	62	22 1/2	6 1/2
42	740	31 5/16	51 1/8	4 1/2	2	3/4	1 3/4	4	1 3/4	3/4	2	73	26 1/4	7 3/4
48	890	36	58 1/2	5	2 1/4	3/4	2	5	2	3/4	2 1/4	84	30	8 7/8
54	1100	40	65	5 1/2	2 1/2	3/4	2 1/4	5	2 1/4	3/4	2 1/2	92 1/2	33 3/8	10
60	1400	45	73 1/2	6	3 5/16	3/4	1 15/16	5	2 3/4	3/4	2 1/2	105	37 1/2	11
72	1900	54	88	7	3 13/16	1	2 3/16	6	3 1/4	1	2 3/4	126	45	13 5/16
84	2500	62	102	8	4 1/8	1	2 7/8	6	3 1/2	1	3 1/2	162 1/2	52	14 1/2
96	3300	78	122 3/8	9	4 1/2	1	3 1/2	7	4	1	4	218	62	20
108	4200	88	138 1/2	10	5	1	4	7	4 1/2	1	4 1/2	269	70	22
120	5100	96 7/8	154	11	5 1/2	1	4 1/2	7	5	1	5	301 3/8	78	24
132	5100	106 1/2	168 3/4	10		1	4	7	4 1/2	1	4 1/2	329	85 5/8	26 7/8

* Equivalent Diameter of Circular R. C. P.

GENERAL NOTES:

Construction of R.C.P. Arch shall conform to the requirements of Section 990 of the Standard Specifications for Roads and Bridges. Not more than 2 four foot sections shall be permitted near the ends of any culvert. Four foot lengths shall be used only to secure the required length of culvert.

March 31, 2000

Published Date: 3rd Qtr. 2014 | SDDOT | **REINFORCED CONCRETE PIPE ARCH** | PLATE NUMBER 450.02 | Sheet 1 of 1

PLANS PREPARED BY:
SEH
PHONE: 605.330.7000
401 EAST 8TH STREET
SUITE 309
SIOUX FALLS, SD 57103-7032
www.sehinc.com

P:\PT\S\Sdot\124655\5-final-dsgn\51-drawings\10-Civil\CAD\PLANSHEETS\SD124655_B_D13.dwg 10/8/2014 2:02 PM kpederson

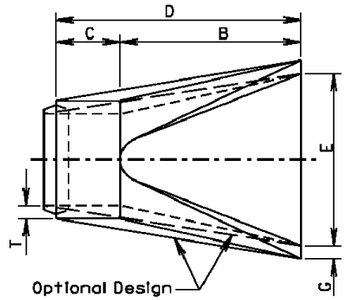

TOP VIEW

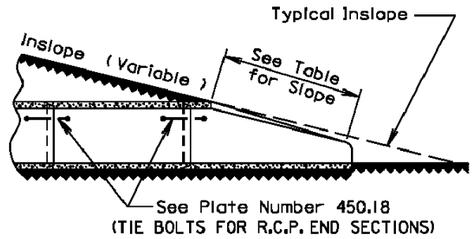

SLOPE DETAIL

GENERAL NOTES:

Lengths of concrete pipe shown on Plan Sheets are between flared Ends only.

Construction of R.C.P. Flared End shall conform to the requirements of Section 990 of the Standard Specifications for Roads and Bridges.

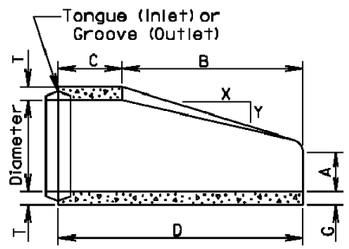

LONGITUDINAL SECTION

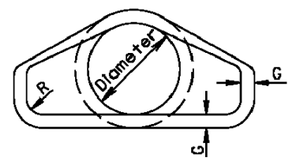

END VIEW

Dia. (In.)	Approx. Wt. of Section (lbs.)	Approx. Slope (X to Y)	T (In.)	A (In.)	B (In.)	C (In.)	D (In.)	E (In.)	G (In.)	R (In.)
12	530	2.4:1	2	4	24	48 7/8	72 7/8	24	2	1 1/2
15	740	2.4:1	2 1/4	6	27	46	73	30	2 1/4	1 1/2
18	990	2.3:1	2 1/2	9	27	46	73	36	2 1/2	1 1/2
21	1280	2.4:1	2 3/4	9	36	37 1/2	73 1/2	42	2 3/4	1 1/2
24	1520	2.5:1	3	9 1/2	43 1/2	30	73 1/2	48	3	1 1/2
27	1930	2.5:1	3 1/4	10 1/2	49 1/2	24	73 1/2	54	3 1/4	1 1/2
30	2190	2.5:1	3 1/2	12	54	19 3/4	73 3/4	60	3 1/2	1 1/2
36	4100	2.5:1	4	15	63	34 3/4	97 3/4	72	4	1 1/2
42	5380	2.5:1	4 1/2	21	63	35	98	78	4 1/2	1 1/2
48	6550	2.5:1	5	24	72	26	98	84	5	1 1/2
54	8240	2:1	5 1/2	27	65	33 1/4	98 1/4	90	5 1/2	1 1/2
60	8730	1.9:1	6	35	60	39	99	96	5	1 1/2
66	10710	1.7:1	6 1/2	30	72	27	99	102	5 1/2	1 1/2
72	12520	1.8:1	7	36	78	21	99	108	6	1 1/2
78	14770	1.8:1	7 1/2	36	90	21	111	114	6 1/2	1 1/2
84	18160	1.6:1	8	36	90 1/2	21	111 1/2	120	6 1/2	1 1/2
90	20900	1.5:1	8 1/2	41	87 1/2	24	111 1/2	132	6 1/2	6

March 31, 2000

Published Date: 2nd Qtr. 2014

SDDOT

R. C. P. FLARED ENDS

PLATE NUMBER 450.10

Sheet 1 of 1

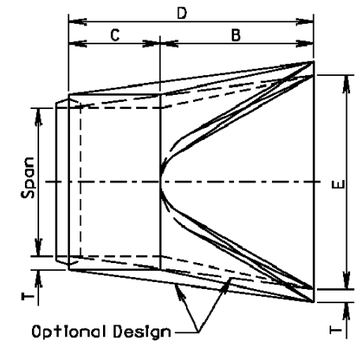

TOP VIEW

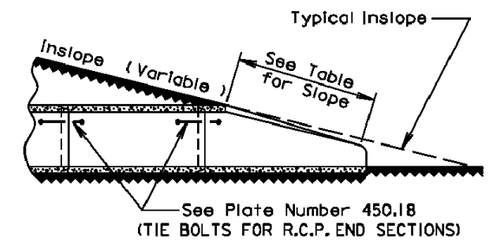

SLOPE DETAIL

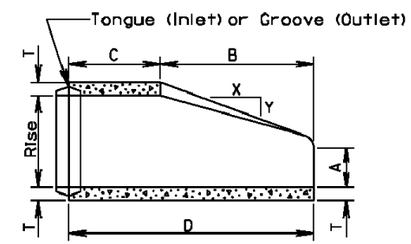

LONGITUDINAL SECTION

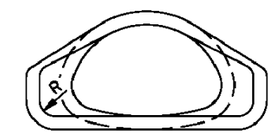

END VIEW

GENERAL NOTES:

Lengths of concrete pipe shown on Plan Sheets are between Flared Ends only.

Construction of R.C.P. Arch Flared End shall conform to the requirements of Section 990 of the Standard Specifications for Roads and Bridges.

* Size (In.)	Approximate Weight of Section (lbs.)	Rise (In.)	Span (In.)	Slope (X:Y)	T (In.)	A (In.)	B (In.)	C (In.)	D (In.)	E (In.)	R (In.)
18	1100	13 1/2	22	3:1	2 1/2	7	27	45	72	36	2
24	1750	18	28 1/2	3:1	3 1/2	8 1/2	39	33	72	48	3
30	3300	22 1/2	36 1/4	3:1	4	9 1/2	50	46	96	60	3
36	4350	26 5/8	43 3/4	3:1	4 1/2	11 1/8	60	36	96	72	6
42	5250	31 5/16	51 1/8	3:1	4 1/2	15 13/16	60	36	96	78	6
48	6400	36	58 1/2	3:1	5	21	60	36	96	84	6
54	7850	40	65	3:1	5 1/2	25 1/2	60	36	96	90	6
60	9500	45	73 1/2	3:1	6	31	60	36	96	96	6
72	13550	54	88	2:1	7	31	60	39	99	120	6
84	17950	62	102	2:1	8	28 1/2	83	19	102	144	6

*Equivalent Diameter of Circular R. C. P.

March 31, 2000

Published Date: 3rd Qtr. 2014

SDDOT

R. C. P. ARCH FLARED ENDS

PLATE NUMBER 450.11

Sheet 1 of 1

PLANS PREPARED BY:

SEH

PHONE: 605.330.7000
401 EAST 8TH STREET
SUITE 309
SIOUX FALLS, SD 57103-7032
www.sehinc.com

P:\PT\S\Sddot\124655\5-final-dsgn\10-Civil\CAD\PLANSHEETS\SD124655_B_DT21.dwg 10/8/2014 2:02 PM kpederson

Wall "t" (In.)	Rod Dia. (In.)	Pipe Sleeve Dia. (nominal)
≤ 3¼	⅝	¾
3½-6½	¾	1
≥ 7	1	1¼

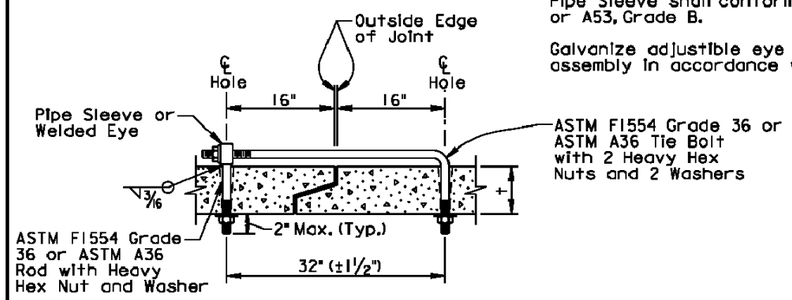

ADJUSTABLE EYE BOLT TIE

GENERAL NOTES:

Tie bolts shall conform to ASTM F1554 Grade 36 or ASTM A36. Nuts shall be heavy hex conforming to ASTM A563. Washers shall conform to ASTM F436.

Pipe Sleeve shall conform to ASTM A500 or A53, Grade B.

Galvanize adjustible eye bolt tie assembly in accordance with ASTM A153.

Pipe Dia. (In.)	"L" (In.)	Bolt Dia. (In.)
≤ 48	4	¾
> 48	6	1

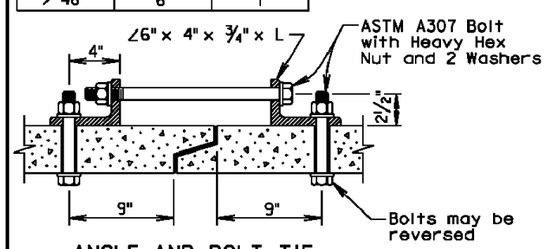

ANGLE AND BOLT TIE

GENERAL NOTES:

Angles shall conform to ASTM A36.

Bolts shall conform to ASTM A307. Nuts shall be heavy hex conforming to ASTM A563. Washers shall conform to ASTM F436.

Galvanize angles, bolts, nuts, and washers in accordance with ASTM A153.

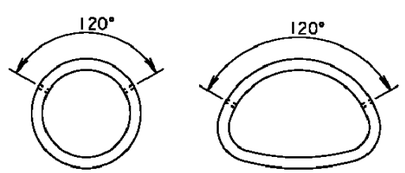

END VIEW "CIRCULAR"

END VIEW "ARCH"

GENERAL NOTES:

In lieu of the tie bolts detailed above other types of tie bolt connections may be installed as approved by the Office of Bridge Design.

All pipe sections of R.C.P. and R.C.P. Arch shall be tied with tie bolts except for pipe located between drop inlets, manholes, and junction boxes. All pipe sections of pipes that only enter or exit drop inlets, manhole, and junction boxes shall be tied with tie bolts.

There will be no separate measurement or payment for the tie bolts. The cost for furnishing and installing the tie bolts shall be incidental to the contract unit price per foot for the corresponding bid item for R.C.P. or R.C.P. Arch.

February 28, 2013

Published Date: 3rd Qtr. 2014	SDDOT	TIE BOLTS FOR R.C.P. AND R.C.P. ARCH	PLATE NUMBER 450.18
			Sheet 1 of 1

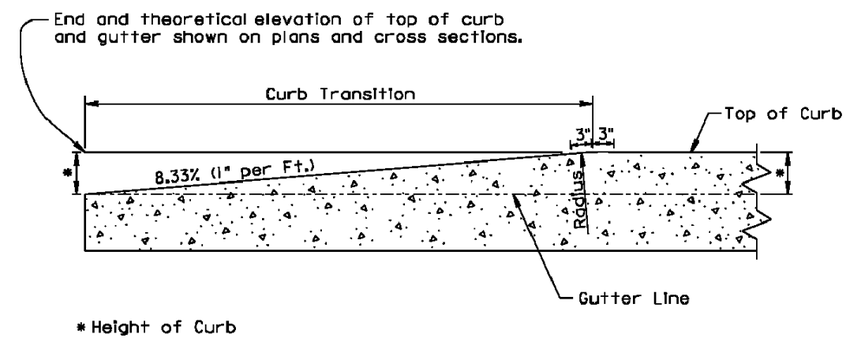

LONGITUDINAL SECTION OF CONCRETE CURB TAPER

September 14, 2005

Published Date: 3rd Qtr. 2014	SDDOT	CONCRETE CURB TAPER	PLATE NUMBER 650.35
			Sheet 1 of 1

PLANS PREPARED BY:
SEH
PHONE: 605.330.7000
401 EAST 8TH STREET
SUITE 309
SIOUX FALLS, SD 57103-7032
www.sehinc.com

P:\PT\S\Sddot\124655\5-final-dsgn\51-drawings\10-Civil\CAD\PLANSHEETS\SD124655_B_DT4.dwg 10/8/2014 2:02 PM kpederson

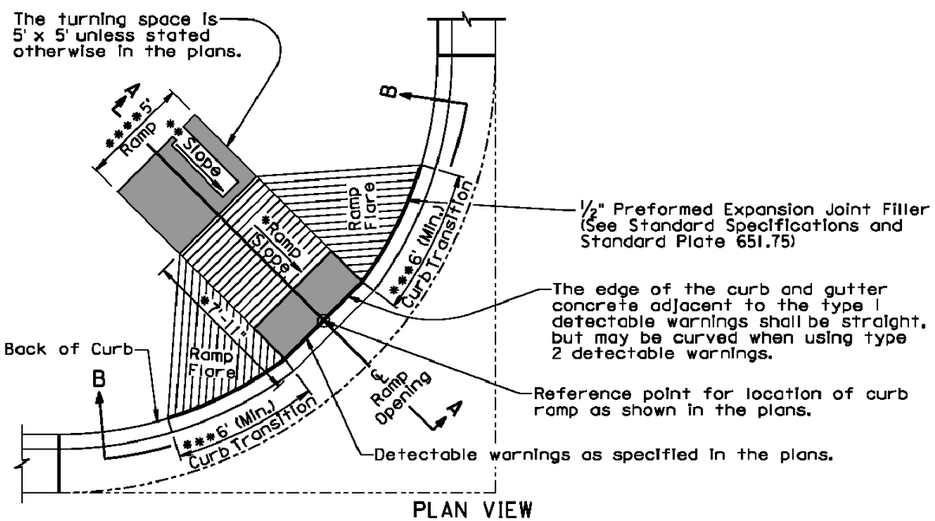

PLAN VIEW
(With 6'+ Curb Transition)

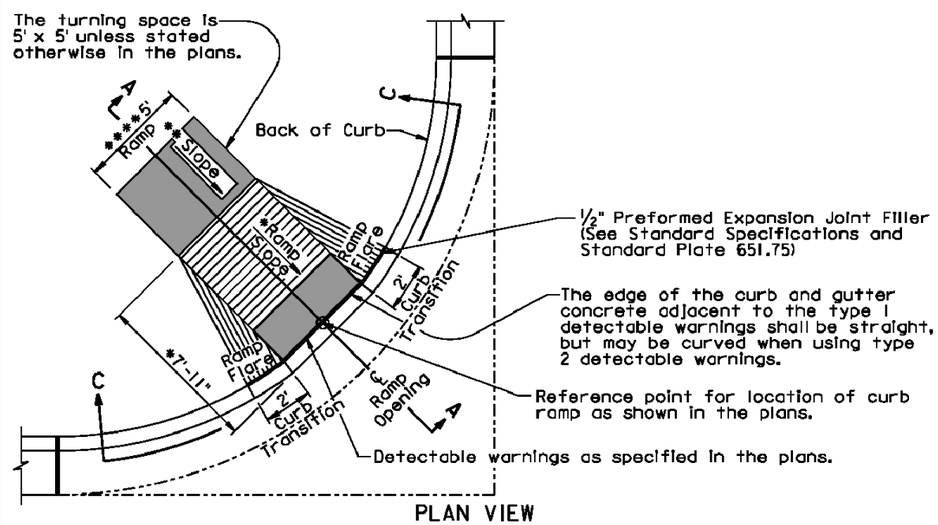

PLAN VIEW
(With 2' Curb Transition)

September 6, 2013

Published Date: 3rd Qtr. 2014	SDDOT	TYPE 1 CURB RAMP (PERPENDICULAR CURB RAMP)	PLATE NUMBER 651.01
			Sheet 1 of 3

The ramp slope shall be 12:1 (8.3%) maximum. The ramp length shall not exceed 15' unless stated otherwise in the plans. Ramp slopes are designed at 12:1 (8.3%) unless stated otherwise in the plans.

* The cross slope of the ramp shall not be steeper than 50:1 (2%).

The 7'-11" dimension was computed based on a flat roadway profile, a continuous 2% theoretical slope from top of theoretical curb to the top of ramp, and a 6" high curb. The dimension shall be adjusted based on the curb type shown in the plans, the roadway geometrics, and the sidewalk geometrics.

** The slope in the turning space shall not be steeper than 50:1 (2%) in any direction of pedestrian travel.

*** The curb transition shall be a minimum of 6' long, a maximum of 10' long, and the curb transition slope shall not be steeper than 10:1 (10%) unless stated otherwise in the plans.

**** The ramp width is 5' unless stated otherwise in the plans.

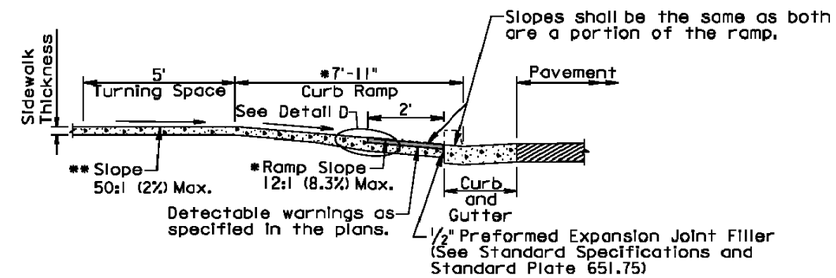

SECTION A-A

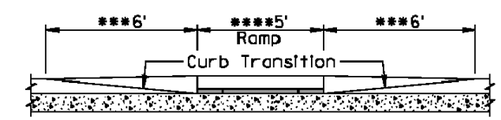

SECTIONAL VIEW B-B

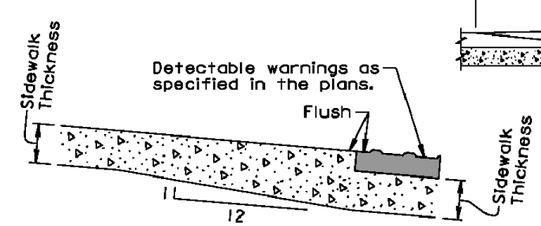

DETAIL D

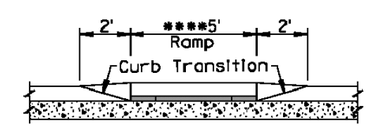

SECTIONAL VIEW C-C

September 6, 2013

Published Date: 3rd Qtr. 2014	SDDOT	TYPE 1 CURB RAMP (PERPENDICULAR CURB RAMP)	PLATE NUMBER 651.01
			Sheet 2 of 3

PLANS PREPARED BY:
SEH
PHONE: 605.330.7000
401 EAST 8TH STREET
SUITE 309
SIOUX FALLS, SD 57103-7032
www.sehinc.com

P:\PT\S\Sddot\124655\5-final-dsgn\51-drawings\10-Civil\CAD\PLANSHEETS\SD124655_B_D16.dwg 10/8/2014 1:03 PM kpederson

GENERAL NOTES:

For illustrative purpose only, type I detectable warnings are shown in the drawings.

For illustrative purpose only, PCC fillet sections are shown in the drawings. The curb ramp depicted on this standard plate may be used with a PCC fillet section, with curved curb and gutter, or with straight curb and gutter.

For illustrative purpose only, the curb ramp location is shown at the center of a PCC fillet section. The curb ramp shall be placed at the location stated in the plans.

Sidewalk shall not be placed adjacent to the ramp flares when a 2' curb transition is used unless shown otherwise in the plans.

* Care shall be taken to ensure a uniform grade on the ramp, free of sags and short grade changes.

Surface texture of the ramp shall be obtained by coarse brooming transverse to the slope of the ramp.

The normal gutter line profile shall be maintained through the area of the ramp.

Joints shall be sawed or tooled into the concrete adjacent to the detectable warnings to alleviate possible corner cracking.

Care shall be taken to ensure that the surface of the detectable warnings are clean and maintains a uniform color.

The detectectable warnings shall be cut as necessary to fit the plan specified limits of the detectable warnings. Cost for cutting the detectable warnings shall be incidental to the corresponding detectable warning bid item.

There will be no separate payment for curb ramps. The curb ramp shall be measured and paid for at the contract unit price per square foot for the corresponding concrete sidewalk bid item. The square foot area of the detectable warnings shall be included in the measured and paid for quantity of sidewalk.

The curb transitions and ramp opening shall be measured and paid for at the contract unit price per foot for the corresponding curb and gutter bid item when curb and gutter is used. The curb transitions and ramp opening shall be measured and paid for at the contract unit price per square yard for the corresponding PCC fillet section bid item when a PCC fillet section is used.

The type I detectable warnings shall be measured to the nearest square foot. All costs for furnishing and installing the type I detectable warnings including labor, equipment, materials, and incidentals shall be paid for at the contract unit price per square foot for "Type I Detectable Warnings".

The type 2 detectable warnings shall be measured to the nearest square foot. All costs for furnishing and installing the type 2 detectable warnings including labor, equipment, and materials, including adhesive, necessary sealant or grout, and necessary grinding shall be paid for at the contract unit price per square foot for "Type 2 Detectable Warnings".

September 6, 2013

Published Date: 3rd Qtr. 2014	SDDOT	TYPE 1 CURB RAMP (PERPENDICULAR CURB RAMP)	PLATE NUMBER 651.01
			Sheet 3 of 3

PLANS PREPARED BY:
SEH
PHONE: 605.330.7000
401 EAST 8TH STREET
SUITE 309
SIOUX FALLS, SD 57103-7032
www.sehinc.com

P:\PT\S\Sddot\124655\5-final-dsgn\51-drawings\10-Civil\CAD\PLANSHEETS\SD124655_B_D122.dwg 10/8/2014 1:03 PM kpederson

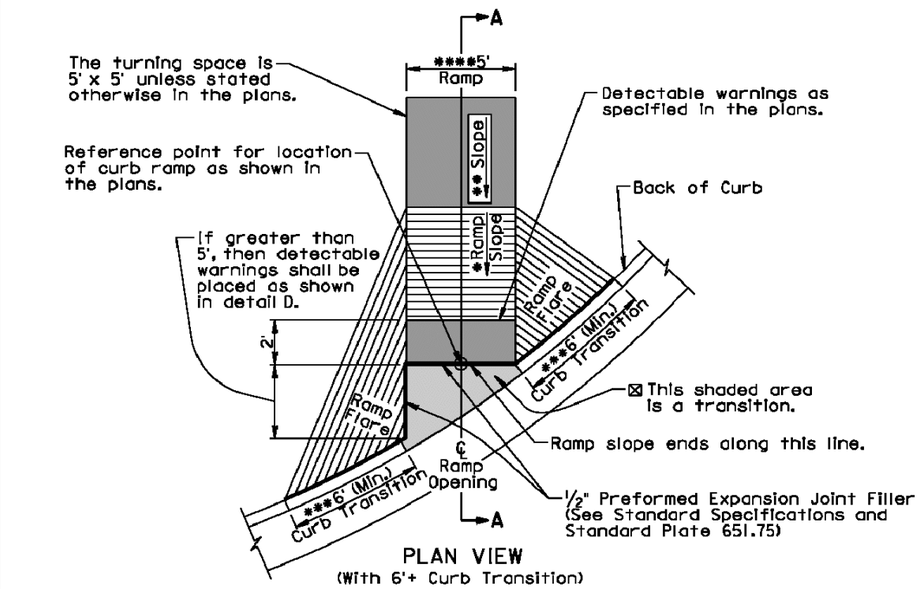

PLAN VIEW
(With 6'+ Curb Transition)

⊠ The slope within the transition area shall not be steeper than a 20:1 (5%). The concrete within the transition shall be placed monolithic with the curb and gutter or fillet section concrete. The concrete thickness within the transition shall be the same as the curb and gutter or fillet section concrete thickness.

*** The curb transition shall be a minimum of 6' long, a maximum of 10' long, and the curb transition slope shall not be steeper than a 10:1 (10%) unless stated otherwise in the plans.

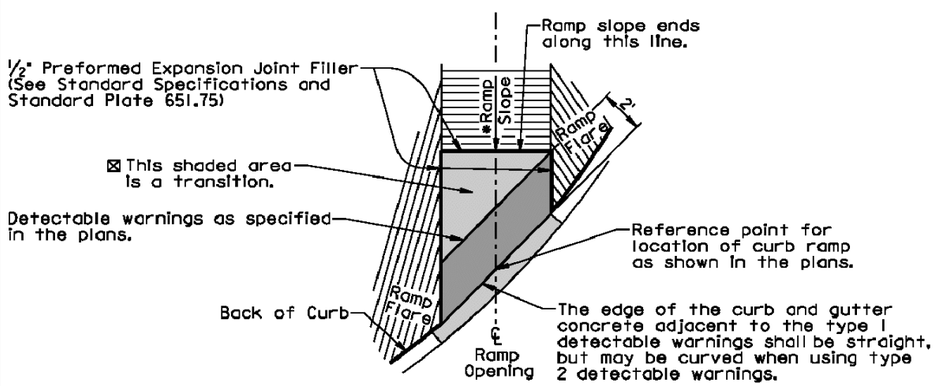

DETAIL D

September 6, 2013

Published Date: 3rd Qtr. 2014	SDDOT	TYPE 2 CURB RAMP (DIRECTIONAL CURB RAMP)	PLATE NUMBER 651.02
			Sheet 1 of 3

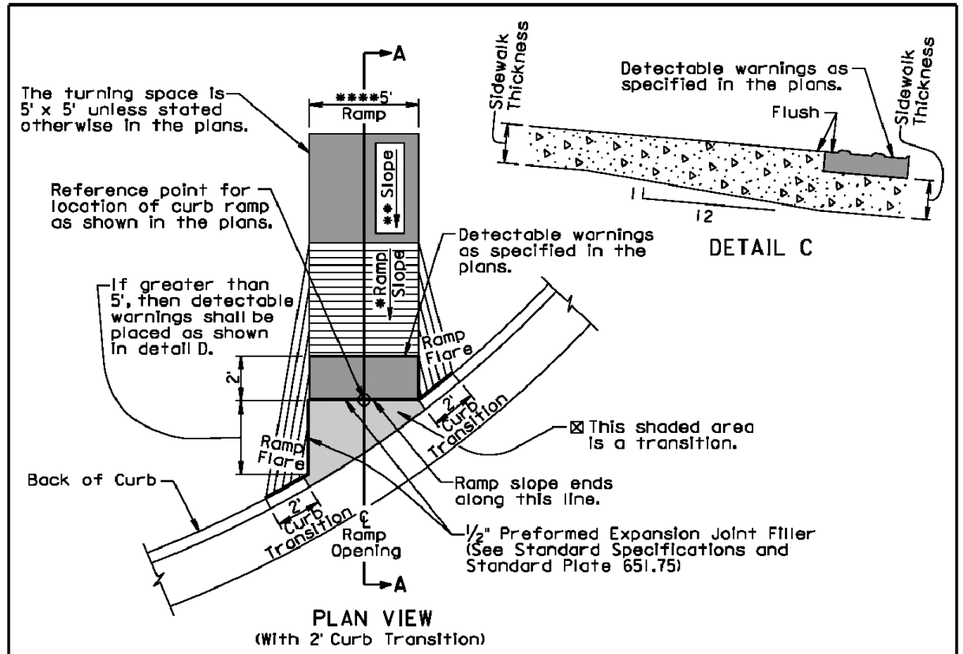

PLAN VIEW
(With 2' Curb Transition)

* The ramp slope shall be 12:1 (8.3%) maximum. The ramp length shall not exceed 15' unless stated otherwise in the plans. Ramp slopes are designed at 12:1 (8.3%) unless stated otherwise in the plans.

The cross slope of the ramp shall not be steeper than 50:1 (2%).

** The slope in the turning space shall not be steeper than a 50:1 (2%) in any direction of pedestrian travel.

**** The ramp width is 5' unless stated otherwise in the plans.

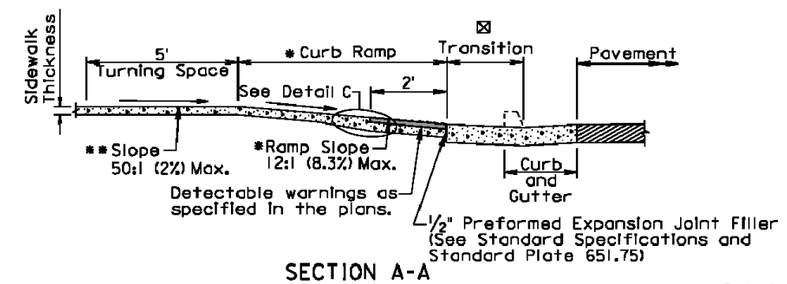

SECTION A-A

September 6, 2013

Published Date: 3rd Qtr. 2014	SDDOT	TYPE 2 CURB RAMP (DIRECTIONAL CURB RAMP)	PLATE NUMBER 651.02
			Sheet 2 of 3

PLANS PREPARED BY:
SEH
PHONE: 605.330.7000
401 EAST 8TH STREET
SUITE 309
SIOUX FALLS, SD 57103-7032
www.sehinc.com

P:\PT\S\Sddot\124655\5-final-dsgn\51-drawings\10-Civil\CAD\PLANSHEETS\SD124655_B_D17.dwg 10/8/2014 1:03 PM kpederson

GENERAL NOTES:

For illustrative purpose only, type I detectable warnings are shown in the drawings.

The curb ramp depicted on this standard plate may be used with a PCC fillet section, with curved curb and gutter, or with straight curb and gutter. The curb ramp shall be placed at the location stated in the plans.

Sidewalk shall not be placed adjacent to the ramp flares when a 2' curb transition is used unless shown otherwise in the plans.

* Care shall be taken to ensure a uniform grade on the ramp, free of sags and short grade changes.

Surface texture of the ramp shall be obtained by coarse brooming transverse to the slope of the ramp.

The normal gutter line profile shall be maintained through the area of the ramp.

Joints shall be sawed or tooled into the concrete adjacent to the detectable warnings to alleviate possible corner cracking.

Care shall be taken to ensure that the surface of the detectable warnings are clean and maintains a uniform color.

The detectectable warnings shall be cut as necessary to fit the plan specified limits of the detectable warnings. Cost for cutting the detectable warnings shall be incidental to the corresponding detectable warning bid item.

There will be no separate payment for curb ramps. The curb ramp shall be measured and paid for at the contract unit price per square foot for the corresponding concrete sidewalk bid item. The square foot area of the detectable warnings shall be included in the measured and paid for quantity of sidewalk.

The curb transitions and ramp opening shall be measured and paid for at the contract unit price per foot for the corresponding curb and gutter bid item when curb and gutter is used. The curb transitions and ramp opening shall be measured and paid for at the contract unit price per square yard for the corresponding PCC fillet section bid item when a PCC fillet section is used.

All costs for furnishing and installing the transition area at the base of the ramp shall be incidental to the contract unit price per foot for the corresponding curb and gutter bid item when curb and gutter is used and shall be incidental to the contract unit price per square yard for the corresponding PCC fillet section bid item when a PCC fillet section is used.

The type I detectable warnings shall be measured to the nearest square foot. All costs for furnishing and installing the type I detectable warnings including labor, equipment, materials, and incidentals shall be paid for at the contract unit price per square foot for "Type I Detectable Warnings".

The type 2 detectable warnings shall be measured to the nearest square foot. All costs for furnishing and installing the type 2 detectable warnings including labor, equipment, and materials, including adhesive, necessary sealant or grout, and necessary grinding shall be paid for at the contract unit price per square foot for "Type 2 Detectable Warnings".

September 6, 2013

Published Date: 3rd Qtr. 2014	SDDOT	**TYPE 2 CURB RAMP (DIRECTIONAL CURB RAMP)**	PLATE NUMBER 651.02 Sheet 3 of 3

PLANS PREPARED BY:
SEH
PHONE: 605.330.7000
401 EAST 8TH STREET
SUITE 309
SIOUX FALLS, SD 57103-7032
www.sehinc.com

P:\PT\S\Sddot\124655\5-final-dsgn\51-drawings\10-Civil\CAD\PLANSHEETS\SD124655_B_DT8.dwg 10/8/2014 1:03 PM kpederson

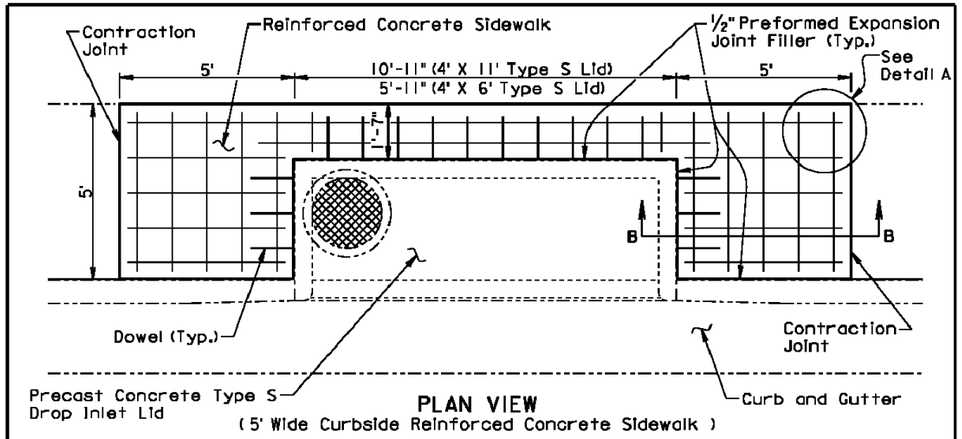

PLAN VIEW
(5' Wide Curbside Reinforced Concrete Sidewalk)

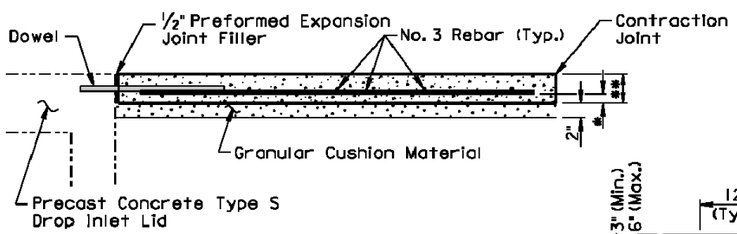

SECTION B-B

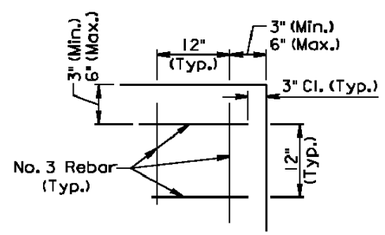

DETAIL A

** 4", 5", or 6" as specified elsewhere in the plans.

* 1⅝" for 4" sidewalk, 2⅛" for 5" sidewalk, and 2⅝" for 6" sidewalk.

GENERAL NOTES:

The precast concrete Type S lids shown are 4' X 11' for illustrative purpose.

The cross slope of the sidewalk and precast concrete type S drop inlet lid shall be as specified elsewhere in the plans.

The reinforcing steel shall conform to Section 1010 of the Standard Specifications. The Contractor shall be in conformance with the construction requirements of Section 480.3 of the Standard Specifications.

When lapping of reinforcing steel is necessary, the No. 3 rebar shall be lapped 12".

The reinforced concrete sidewalk shall conform to the requirements of Section 651 of the Standard Specifications.

All costs for constructing the reinforced concrete sidewalk including labor, equipment, tools, backfilling, furnishing and placing materials, including granular cushion, reinforcing steel, preformed expansion joint filler, and incidentals shall be included in the contract unit price per square foot for the corresponding reinforced concrete sidewalk bid item.

September 6, 2013

Published Date: 3rd Qtr. 2014	SDDOT	**REINFORCED CONCRETE SIDEWALK ADJACENT TO PRECAST CONCRETE TYPE S DROP INLET LID**	PLATE NUMBER 651.70
			Sheet 1 of 2

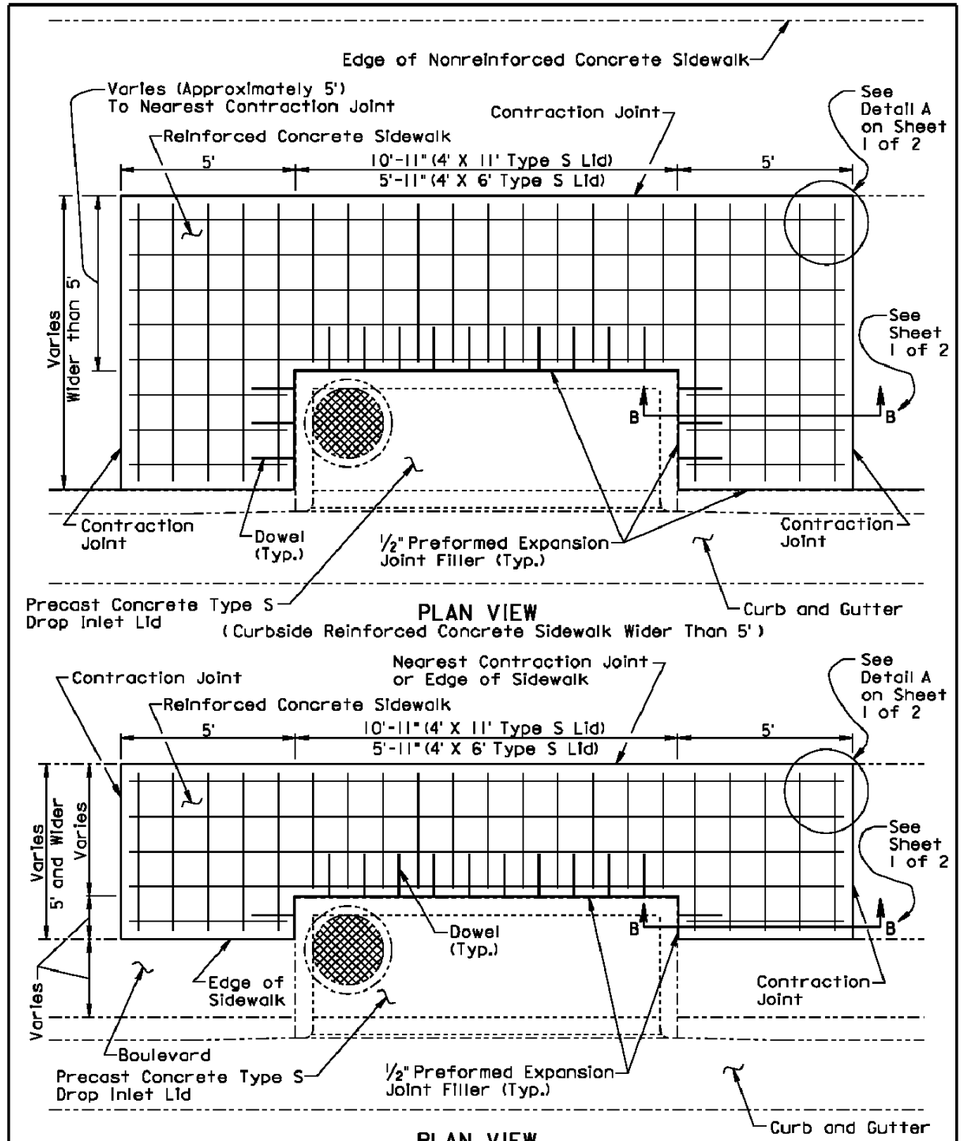

PLAN VIEW
(Curbside Reinforced Concrete Sidewalk Wider Than 5')

PLAN VIEW
(Reinforced Concrete Sidewalk With Boulevard)

September 6, 2013

Published Date: 3rd Qtr. 2014	SDDOT	**REINFORCED CONCRETE SIDEWALK ADJACENT TO PRECAST CONCRETE TYPE S DROP INLET LID**	PLATE NUMBER 651.70
			Sheet 2 of 2

PLANS PREPARED BY:
SEH
PHONE: 605.330.7000
401 EAST 8TH STREET
SUITE 309
SIOUX FALLS, SD 57103-7032
www.sehinc.com

P:\PT\S\Sddot\124655\5-final-dsgn\51-drawings\10-Civil\CAD\PLANSHEETS\SD124655_B_DT9.dwg 10/8/2014 2:03 PM kpederson

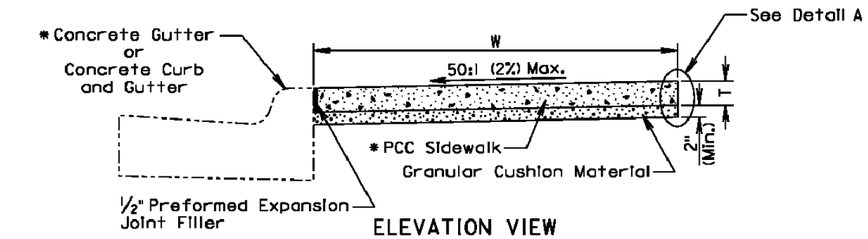

ELEVATION VIEW
(PCC Sidewalk without Boulevard)

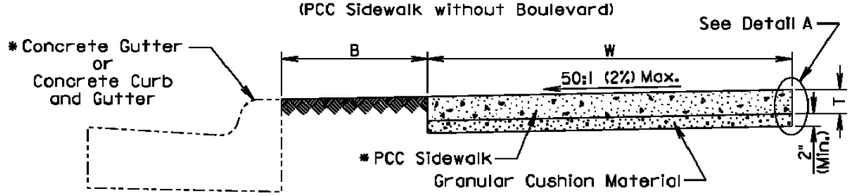

ELEVATION VIEW
(PCC Sidewalk with Boulevard)

B Width of boulevard as specified in the plans.
T Thickness of PCC sidewalk as specified in the plans.
W Width of PCC sidewalk as specified in the plans.
* Type as specified in the plans.

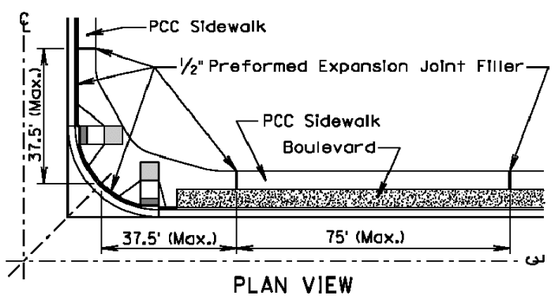

PLAN VIEW

GENERAL NOTES:

The PCC sidewalk shall be constructed in accordance with Section 651 of the Standard Specifications.

The maximum length between expansion joints in PCC sidewalk is 75 feet.

PCC sidewalk placed adjacent to intersection of roadways shall have an expansion joint placed transversely a maximum of 37.5 feet from the intersection. See PLAN VIEW.

An expansion joint in PCC sidewalk shall consist of a ½ inch thick preformed expansion joint filler material placed full depth and width of the PCC sidewalk.

** Large areas of PCC pavement adjacent to PCC sidewalk may require a different joint treatment than shown in the detail. If a different joint detail is necessary, plans will contain the joint detail and the Contractor shall construct the joint treatment in accordance with the plans.

August 31, 2013

Published Date: 3rd Qtr. 2014	SDDOT	PCC SIDEWALK	PLATE NUMBER 651.75
			Sheet 1 of 2

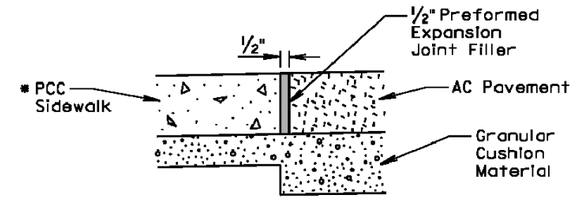

ELEVATION VIEW
(PCC sidewalk adjacent to asphalt concrete pavement)

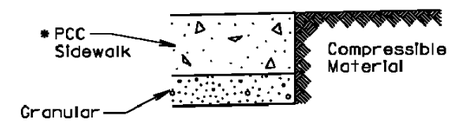

ELEVATION VIEW
(PCC sidewalk adjacent to earthen material, landscape rock, or other compressible materials)

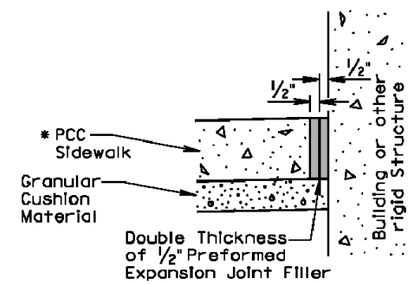

ELEVATION VIEW
(PCC sidewalk adjacent to building or other rigid structure)

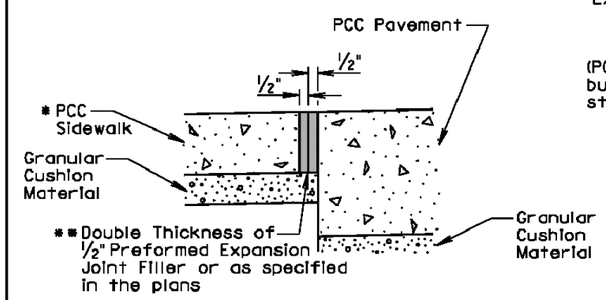

ELEVATION VIEW
(PCC sidewalk adjacent to PCC pavement)

Detail A
(Use Appropriate Detail(s))

August 31, 2013

Published Date: 3rd Qtr. 2014	SDDOT	PCC SIDEWALK	PLATE NUMBER 651.75
			Sheet 2 of 2

PLANS PREPARED BY:
SEH
PHONE: 605.330.7000
401 EAST 8TH STREET
SUITE 309
SIOUX FALLS, SD 57103-7032
www.sehinc.com

P:\PT\S\Sddot\124655\5-final-dsgn\51-drawings\10-Civil\CAD\PLANSHEETS\SD124655_B_DT10.dwg 10/8/2014 2:03 PM kpederson

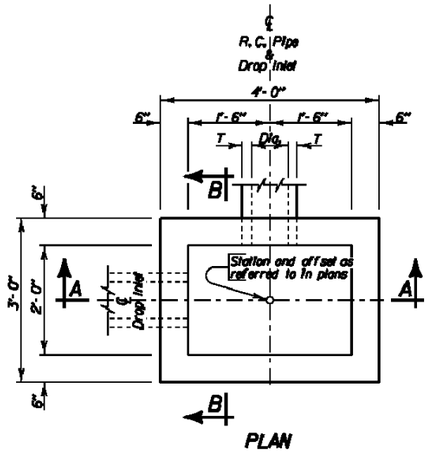

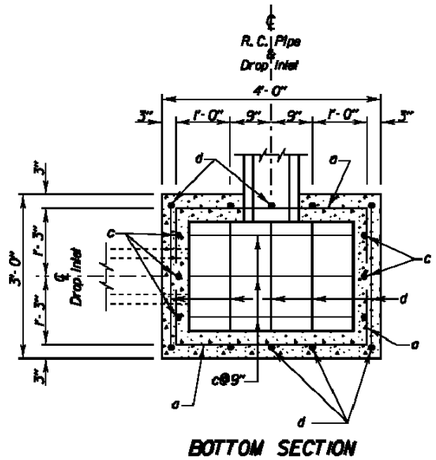

ESTIMATED QUANTITIES

ITEM	UNIT	CONSTANT QUANTITY	VARIABLE QUANTITY
* Class M6 Concrete	Cu'd	0.26	0.22H
Reinforcing Steel	Lb	37	20.04H
Frame and Grate Assembly	Each	1	———

PIPE DISPLACEMENT REDUCTIONS

R.C. Pipe Diameter Inches	T Inches	Class M6 Concrete Cu'd
12	2	0.03
15	2 1/4	0.04
18	2 1/2	0.05
24	3	0.09
27	3 1/4	0.11

DROP INLETS FOR 12" TO 27" DIAMETER PIPE

GENERAL NOTES:

* Reduce total quantities of concrete by the amount of concrete displaced by the pipe. The total quantity of concrete shall be computed to the nearest hundredth of a cubic yard. The total quantity of reinforcing steel shall be computed to the nearest pound.

Drop inlets shown may be modified by the addition or omission of connecting pipes as shown on the layouts.

Reinforcing steel shall conform to ASTM A615 Grade 60. The b bars shall be lapped 12 inches. Cut and bend reinforcing steel as required to place pipe(s) through the drop inlet wall.

Pipe shall not enter through a corner of the drop inlet.

Use 2" clear cover on all reinforcing steel unless otherwise noted.

Precasting of reinforced drop inlets will be permissible. Prior to precasting, the Contractor shall submit details to the Engineer for approval.

Maximum pipe diameter shall not exceed 18 inches on the 3 foot wide side and shall not exceed 27 inches on the 4 foot wide side of the drop inlet.

The dimension of H is in feet.

December 23, 2009

Published Date: 3rd Qtr. 2014

SDDOT

2'X 3' TYPE B
REINFORCED CONCRETE DROP INLET

PLATE NUMBER
670.01

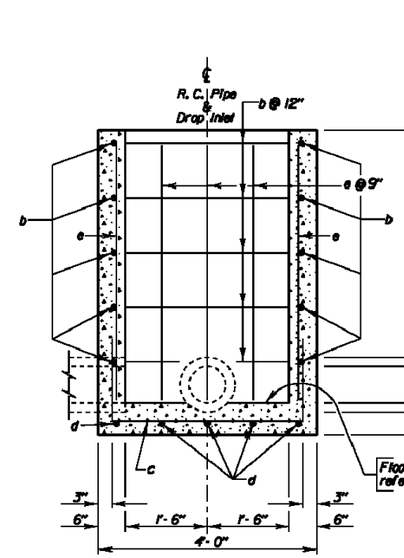

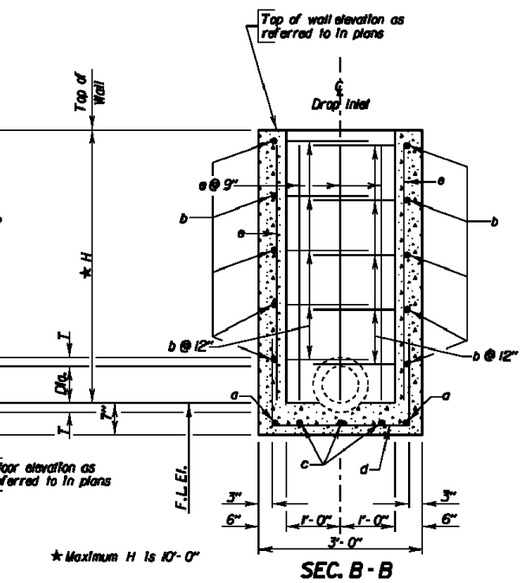

DROP INLETS FOR 12" TO 27" DIAMETER PIPE

REINFORCING SCHEDULE

MK.	No.	Size	Length	Type	Bending Details
a	2	4	5'-6"	17	
b	2H	4	7'-0"	17	
c	3	4	6'-6"	17	
d	5	4	5'-6"	17	
e	16	4	H - 2"	Str.	

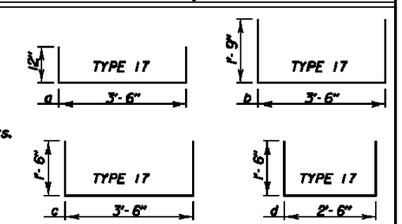

NOTE:
All dimensions are out to out of bars.

December 23, 2009

Published Date: 3rd Qtr. 2014

SDDOT

2'X 3' TYPE B
REINFORCED CONCRETE DROP INLET

PLATE NUMBER
670.01

PLANS PREPARED BY:
SEH
PHONE: 605.330.7000
401 EAST 8TH STREET
SUITE 309
SIOUX FALLS, SD 57103-7032
www.sehinc.com

P:\PT\S\Sddot\124655\5-final-dsgn\51-drawings\10-Civil\CAD\PLANSHEETS\SD124655_B_DT11.dwg 10/8/2014 2:04 PM kpederson

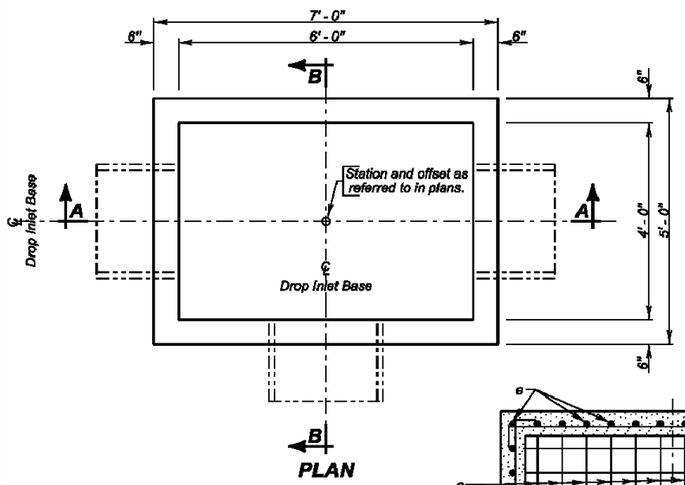

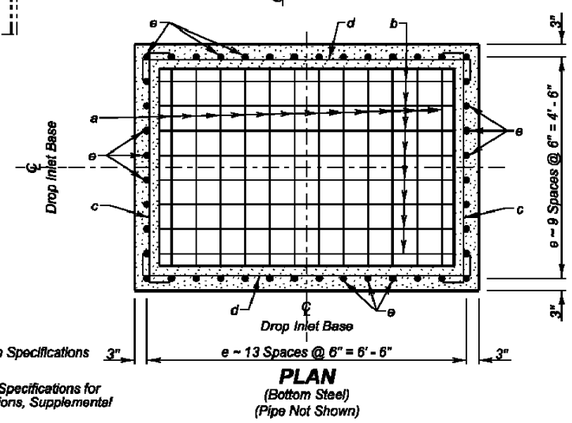

SPECIFICATIONS:

1. Design Specifications: AASHTO LRFD Bridge Design Specifications 2012 Edition.
2. Construction Specifications: South Dakota Standard Specifications for Roads and Bridges, 2004 Edition and required Provisions, Supplemental Specifications and/or Special Provisions.

GENERAL NOTES:

1. Design Live Load: HL-93 loading. No construction loading in excess of legal load was considered.
2. Base is intended for use with a Precast Concrete Type S Drop Inlet Lid, Standard Plate 670.38. Base may be precast. If precast base used, and details differ from that shown, the precast base must be on the current approved list. The current approved list is available through proper channels from the SDDOT Office of Bridge Design.
3. To qualify for addition to the approved list, submit a checked design, by South Dakota Registered Professional Engineers and shop plans to the Office of Bridge Design for approval. Design shall be in accordance with the current edition of the AASHTO LRFD Bridge Design Specifications.
4. ✱ Reduce total quantities of concrete by the amount of concrete displaced by the pipe. The total quantity of concrete shall be computed to the nearest hundredth of a cubic yard. The total quantity of reinforcing steel shall be computed to the nearest pound.
5. Inlets shown may be modified by the addition or omission of connecting pipes as shown on the layouts. Connecting pipes shall not enter the inlet through the corners.
6. Maximum R.C.P. diameter shall not exceed 36 inches (30 inches for R.C. Arch) on the 4-foot wide side and shall not exceed 54 inches (48 inches for R.C. Arch) on the 6-foot wide side of the Drop Inlet.
7. Reinforcing steel shall conform to ASTM A615 Grade 60. Cut and bend reinforcing steel as required to place pipe(s) through the inlet wall.
8. Use 1 inch clear cover on all reinforcing steel unless otherwise noted.
9. The dimension of H is in feet. Maximum H is 8 feet.

December 23, 2012

Published Date: 3rd Qtr. 2014	SDDOT	4'X 6' TYPE S DROP INLET BASE	PLATE NUMBER 670.30
			Sheet 1 of 2

PIPE DISPLACEMENT REDUCTIONS

	Diameter (Inches)	Wall T (Inches)	Class M6 Concrete (Cu. Yd.)
R.C.P.	12	2	0.03
	15	2 ¼	0.04
	18	2 ½	0.05
	24	3	0.09
	30	3 ½	0.14
	36	4	0.20
	42	4 ½	0.26
	48	5	0.34
	54	5 ½	0.43
R.C. ARCH	18	2 ½	0.05
	24	3 ½	0.09
	30	4	0.14
	36	4 ½	0.19
	42	4 ½	0.24
	48	5	0.32

REINFORCING SCHEDULE

Mk.	No.	Size	Length	Type
a	14	5	9' - 6"	17
b	10	5	11' - 6"	17
c	2H	4	5' - 6"	17
d	2H	4	7' - 6"	17
e	44	4	H - 2"	Str.

Bending Details

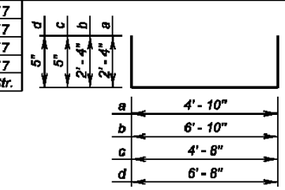

NOTE:
All dimensions are out to out of bars

ESTIMATED QUANTITIES

ITEM	UNIT	CONSTANT QUANTITY	VARIABLE QUANTITY
✱ Class M6 Concrete	Cu.Yd.	0.97	0.41H
Reinforcing Steel	Lb.	253.77	46.76H

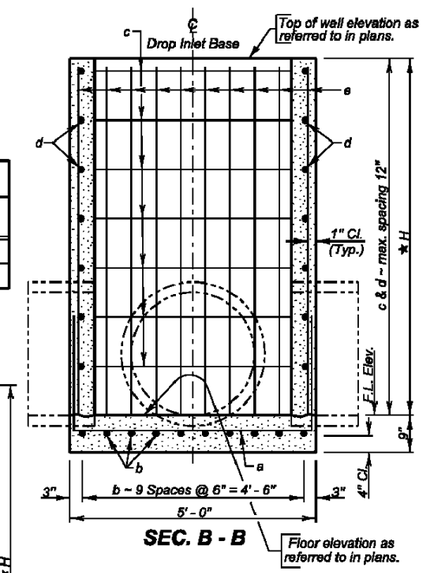

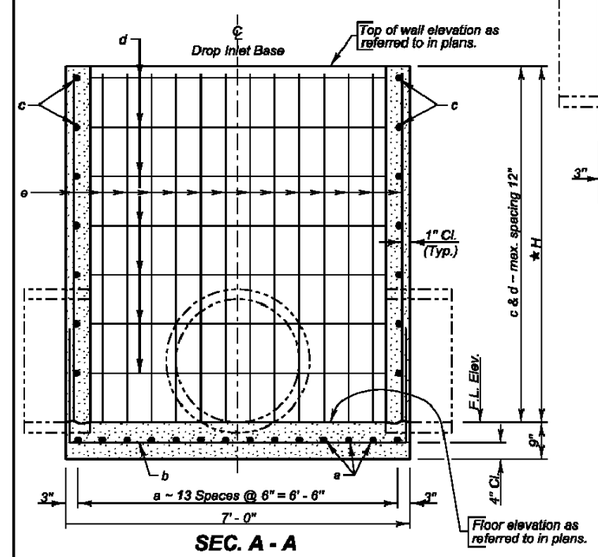

✱ Maximum H is 8' - 0"

December 23, 2012

Published Date: 3rd Qtr. 2014	SDDOT	4'X 6' TYPE S DROP INLET BASE	PLATE NUMBER 670.30
			Sheet 2 of 2

PLANS PREPARED BY:
SEH
PHONE: 605.330.7000
401 EAST 8TH STREET
SUITE 309
SIOUX FALLS, SD 57103-7032
www.sehinc.com

P:\PT\S\Sddot\124655\5-final-dsgn\51-drawings\10-Civil\CAD\PLANSHEETS\SD124655_B_DT12.dwg 10/8/2014 2:04 PM kpederson

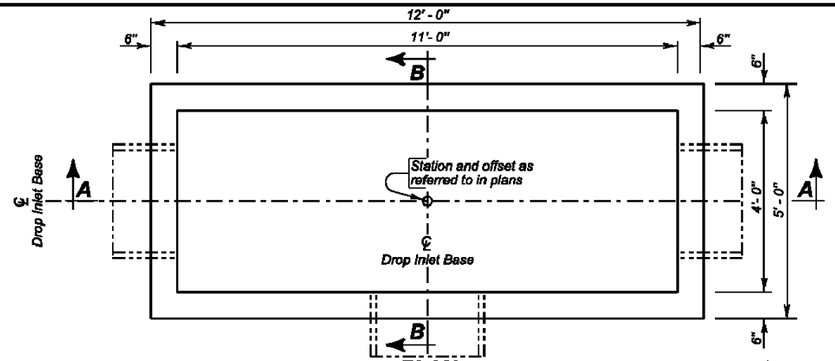

PLAN

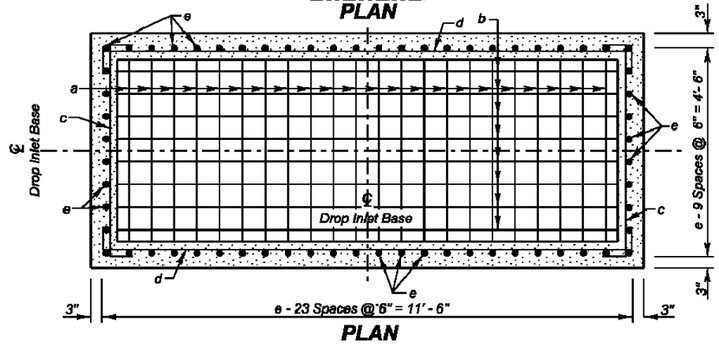

PLAN
(Bottom Steel)
(Pipe Not Shown)

SPECIFICATIONS:

1. Design Specifications: AASHTO LRFD Bridge Design Specifications 2012 Edition.
2. Construction Specifications: South Dakota Standard Specifications for Roads and Bridges, 2004 Edition and required Provisions, Supplemental Specifications and/or Special Provisions.

GENERAL NOTES:

1. Design Live Load: HL-93 loading. No construction loading in excess of legal load was considered.
2. Base is intended for use with a Precast Concrete Type S Drop Inlet Lid, Standard Plate 670.40. Base may be precast. If precast base used, and details differ from that shown, the precast base must be on the current approved list. The current approved list is available through proper channels from the SDDOT Office of Bridge Design.
3. To qualify for addition to the approved list, submit a checked design, by South Dakota Registered Professional Engineers and shop plans to the Office of Bridge Design for approval. Design shall be in accordance with the current edition of the AASHTO LRFD Bridge Design Specifications.
4. ✱ Reduce total quantities of concrete by the amount of concrete displaced by the pipe. The total quantity of concrete shall be computed to the nearest hundredth of a cubic yard. The total quantity of reinforcing steel shall be computed to the nearest pound.
5. Inlets shown may be modified by the addition or omission of connecting pipes as shown on the layouts. Connecting pipes shall not enter the inlet through the corners.
6. Maximum R.C.P. diameter shall not exceed 36 inches (30 inches for R.C. Arch) on the 4-foot wide side of the Drop Inlet.
7. Reinforcing steel shall conform to ASTM A615 Grade 60. Cut and bend reinforcing steel as required to place pipe(s) through the inlet wall.
8. Use 1 inch clear cover on all reinforcing steel unless otherwise noted.
9. The dimension of H is in feet. Maximum H is 8 feet.

December 23, 2012

Published Date: 3rd Qtr. 2014	SDDOT	4' X 11' TYPE S DROP INLET BASE	PLATE NUMBER 670.32
			Sheet 1 of 2

PIPE DISPLACEMENT REDUCTIONS

	Diameter (Inches)	Wall T (Inches)	Class M6 Concrete (Cu. Yd.)
R.C.P.	12	2	0.03
	15	2 ¾	0.04
	18	2 ½	0.05
	24	3	0.09
	30	3 ½	0.14
	36	4	0.20
	42	4 ½	0.26
	48	5	0.34
	54	5 ½	0.43
	60	6	0.52
R.C. ARCH	18	2 ½	0.05
	24	3 ½	0.09
	30	4	0.14
	36	4 ½	0.19
	42	4 ½	0.24
	48	5	0.32
	54	5 ½	0.39
	60	6	0.49
	72	7	0.70
	84	8	0.93

REINFORCING SCHEDULE

Mk.	No.	Size	Length	Type	Bending Details
a	24	5	9' - 6"	17	
b	10	5	16' - 6"	17	
c	2H	4	5' - 6"	17	
d	2H	4	12' - 6"	17	
e	64	4	H - 2"	Str.	

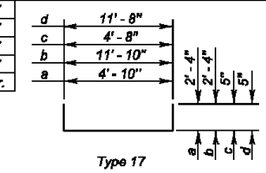

Type 17

NOTE:
All dimensions are out to out of bars.

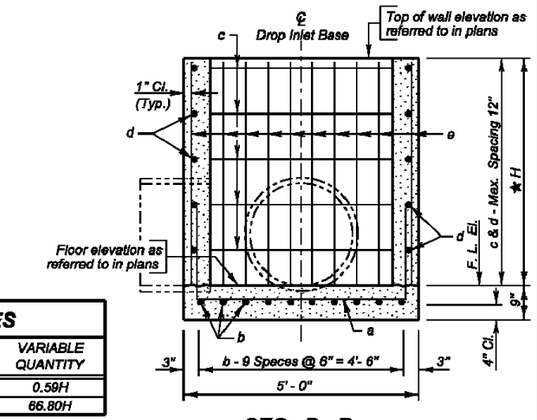

SEC. B - B

ESTIMATED QUANTITIES

ITEM	UNIT	CONSTANT QUANTITY	VARIABLE QUANTITY
✱ Class M6 Concrete	Cu. Yd.	1.67	0.59H
Reinforcing Steel	Lb.	402.77	66.80H

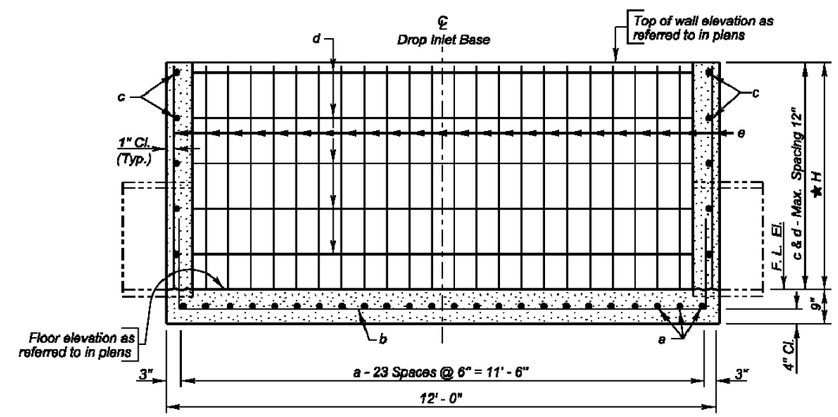

SEC. A - A

✱ Maximum H is 8' - 0"

December 23, 2012

Published Date: 3rd Qtr. 2014	SDDOT	4' X 11' TYPE S DROP INLET BASE	PLATE NUMBER 670.32
			Sheet 2 of 2

PLANS PREPARED BY:
SEH
PHONE: 605.330.7000
401 EAST 8TH STREET
SUITE 309
SIOUX FALLS, SD 57103-7032
www.sehinc.com

P:\PT\S\Sddot\124655\5-final-dsgn\51-drawings\10-Civil\CAD\PLANSHEETS\SD124655_B_DT13.dwg 10/8/2014 2:04 PM kpederson

FOR BIDDING PURPOSES ONLY

STATE OF SOUTH DAKOTA	PROJECT	SHEET NO.	TOTAL SHEETS
	P 6312(18)	B57	B63

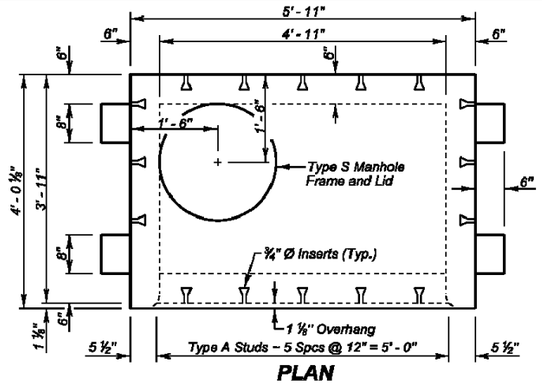

PLAN

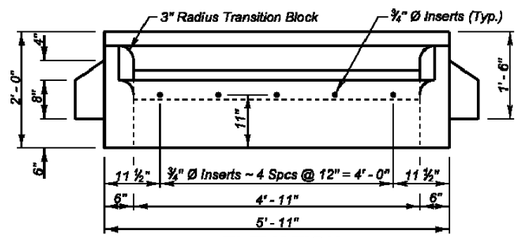

ELEVATION

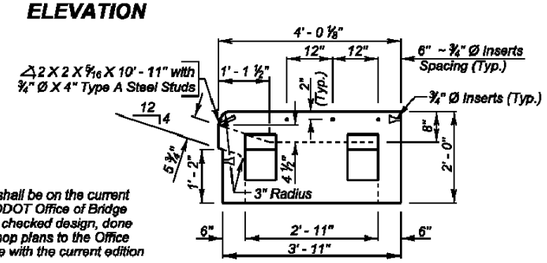

SIDE VIEW
(With Sidewalk Inserts)

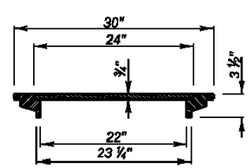

TYPICAL SECTION THROUGH TYPE S MANHOLE FRAME AND LID
(Weight 140 Lbs.)

GENERAL NOTES:

1. The Precast Concrete Type S Drop Inlet Lid and the shims shall be on the current approved list available through proper channels from the SDDOT Office of Bridge Design. To qualify for addition to the approved list, submit a checked design, done by South Dakota Registered Professional Engineers, and shop plans to the Office of Bridge Design for approval. Design shall be in accordance with the current edition of the AASHTO LRFD Bridge Design Specifications.
2. Design Live Load shall be HL - 93.
3. Concrete mix shall be as per fabricators design, however, minimum compressive strength shall not be less than 4500 psi. Type II Cement is required.
4. The Type S Manhole Frame and Lid shall conform to AASHTO M105, Class 30.
5. Structural Steel shall conform to ASTM A36. The ¾ inch diameter Headed Type A Steel Studs shall comform to Section 7 of the current edition of AWS DI. I Structural Steel Welding Code.
6. The ¾ inch diameter Concrete Inserts shall be galvanized or made of a corrosion resistant material. Provide ¾ inch diameter x 1' - 6" long dowels conforming to ASTM A615, Gr. 60 threaded to fit inserts with each lid.
7. All costs associated with furnishing and installing the Precast Concrete Type S Drop Inlet Lid including the type S manhole frame and lid, shims, inserts, and dowels shall be included in the contract unit price per each for " 4' x 6' Precast Concrete Type S Drop Inlet Lid ".

December 23, 2012

Published Date: 3rd Qtr. 2014	SDDOT	4' X 6' PRECAST CONCRETE TYPE S DROP INLET LID	PLATE NUMBER 670.38
			Sheet 1 of 1

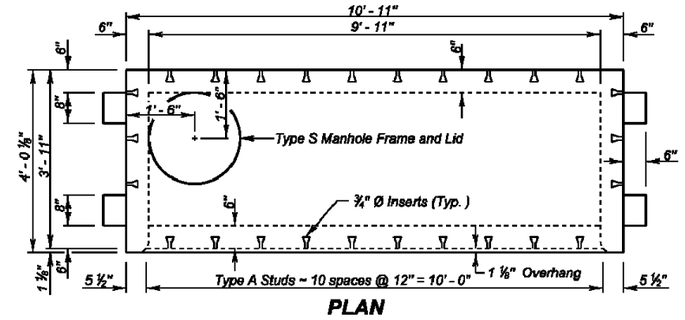

PLAN

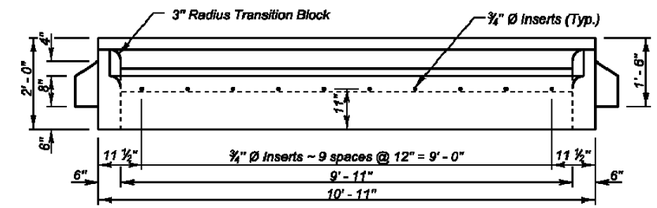

ELEVATION

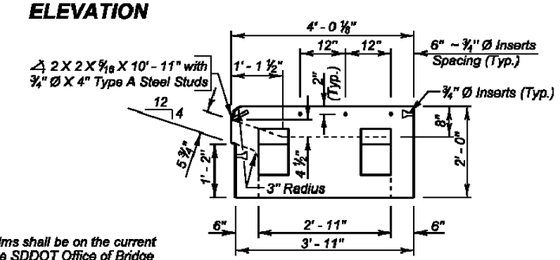

SIDE VIEW
(With Sidewalk Inserts)

GENERAL NOTES:

1. The Precast Concrete Type S Drop Inlet Lid and the shims shall be on the current approved list available through proper channels from the SDDOT Office of Bridge Design. To qualify for addition to the approved list, submit a checked design, done by South Dakota Registered Professional Engineers, and shop plans to the Office of Bridge Design for approval. Design shall be in accordance with the current edition of the AASHTO LRFD Bridge Design Specifications.
2. Design Live Load shall be HL - 93.
3. Concrete mix shall be as per fabricators design, however, minimum compressive strength shall not be less than 4500 psi. Type II Cement is required.
4. The Type S Manhole Frame and Lid shall conform to AASHTO M105, Class 30.
5. Structural Steel shall conform to ASTM A36. The ¾ inch diameter Headed Type A Steel Studs shall conform to Section 7 of the current edition of AWS D1. 1 Structural Steel Welding Code.
6. The ¾ inch diameter Concrete Inserts shall be galvanized or made of a corrosion resistant material. Provide ¾ inch diameter x 1' - 6" long dowels conforming to ASTM A615, Gr. 60 threaded to fit inserts with each lid.
7. All costs associated with furnishing and installing the Precast Concrete Type S Drop Inlet Lid including the type S manhole frame and lid, shims, inserts, and dowels shall be included in the contract unit price per each for " 4' x 11' Precast Concrete Type S Drop Inlet Lid ".

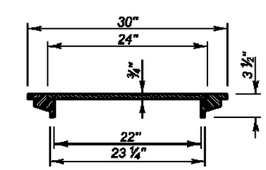

TYPICAL SECTION THROUGH TYPE S MANHOLE FRAME AND LID
(Weight 140 Lbs.)

December 23, 2012

Published Date: 3rd Qtr. 2014	SDDOT	4' X 11' PRECAST CONCRETE TYPE S DROP INLET LID	PLATE NUMBER 670.40
			Sheet 1 of 1

PLANS PREPARED BY:
SEH
PHONE: 605.330.7000
401 EAST 8TH STREET
SUITE 309
SIOUX FALLS, SD 57103-7032
www.sehinc.com

P:\PT\S\Sddot\124655\5-final-dsgn\51-drawings\10-Civil\CAD\PLANSHEETS\SD124655_B_DT14.dwg 10/8/2014 2:04 PM kpederson

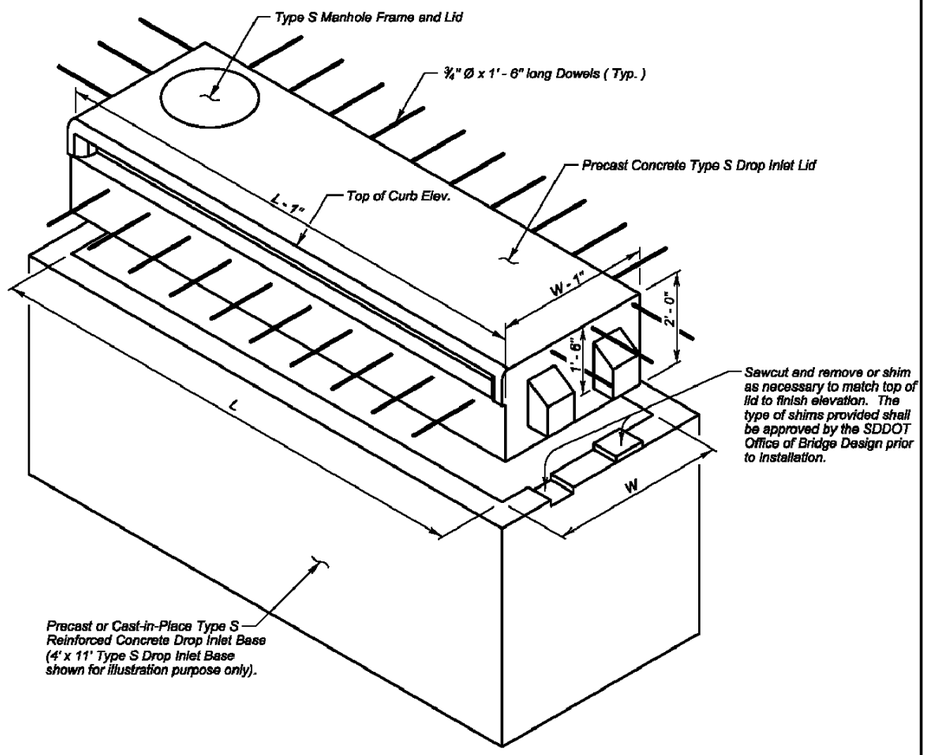

TYPE S DROP INLET

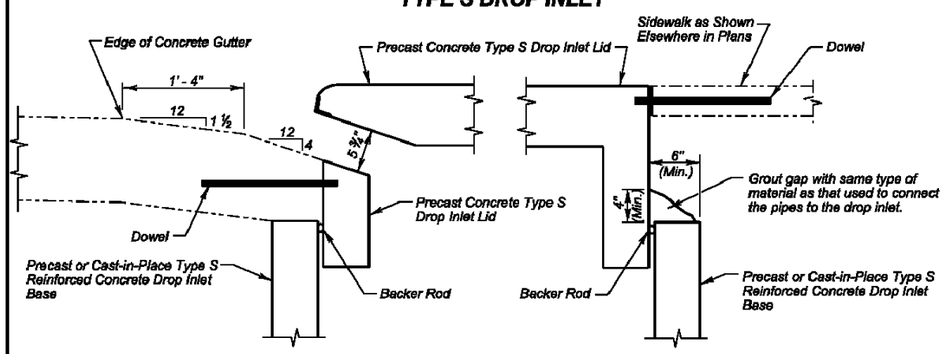

CONCRETE GUTTER DETAIL

GROUTING DETAIL
(Sides and Back, Adjacent to Sidewalk)

December 23, 2012

Published Date: 3rd Qtr. 2014	SDDOT	INSTALLATION DETAILS FOR PRECAST CONCRETE TYPE S DROP INLET LID	PLATE NUMBER 670.45
			Sheet 1 of 2

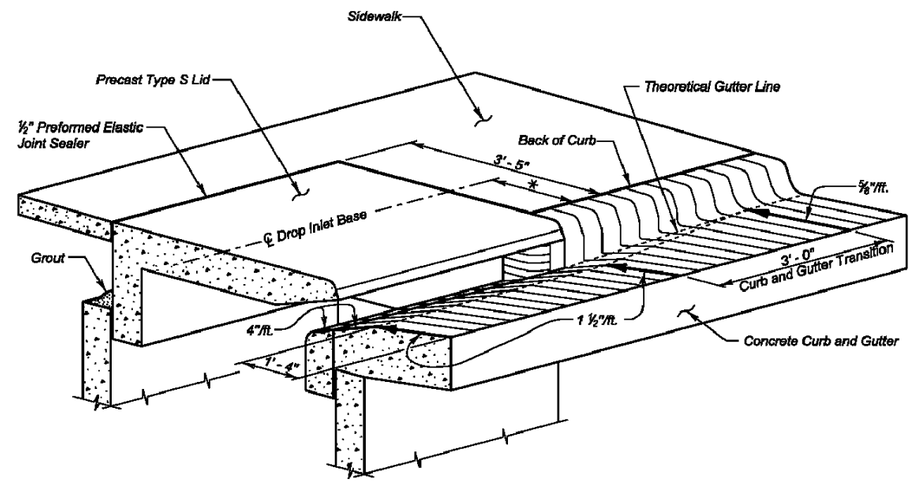

CURB AND GUTTER TRANSITION DETAILS

Drop Inlet Base Unit Size	* Distance
4' x 6'	1' - 5 ½"
4' x 11'	1' - 5 ½"
7' x 11'	2' - 11 ½"

GENERAL NOTES:

1. Dowels shall be used to anchor the precast concrete Type S drop inlet lid to the concrete gutter. See Standard Plate 670.38 or 670.40 as applicable. If there is sidewalk adjacent dowels shall be used to anchor the precast concrete Type S drop inlet lid to the sidewalk. If there is sidewalk adjacent to the drop inlet, the precast lid shall match the finish elevations and cross slopes of the sidewalk.
2. The sidewalk shall be steel reinforced when the sidewalk adjoins the precast lid. Refer to Standard Plate 651.70 for reinforced concrete sidewalk details.

December 23, 2012

Published Date: 3rd Qtr. 2014	SDDOT	INSTALLATION DETAILS FOR PRECAST CONCRETE TYPE S DROP INLET LID	PLATE NUMBER 670.45
			Sheet 2 of 2

PLANS PREPARED BY:
SEH
PHONE: 605.330.7000
401 EAST 8TH STREET
SUITE 309
SIOUX FALLS, SD 57103-7032
www.sehinc.com

P:\PT\S\Sddot\124656\5-final-dsgn\51-drawings\10-Civil\CAD\PLANSHEETS\SD124656_B_DT15.dwg 10/8/2014 2:04 PM kpederson

GENERAL NOTE:

Top of grate elevation shall be 0.04' below theoretical elevation of gutter.

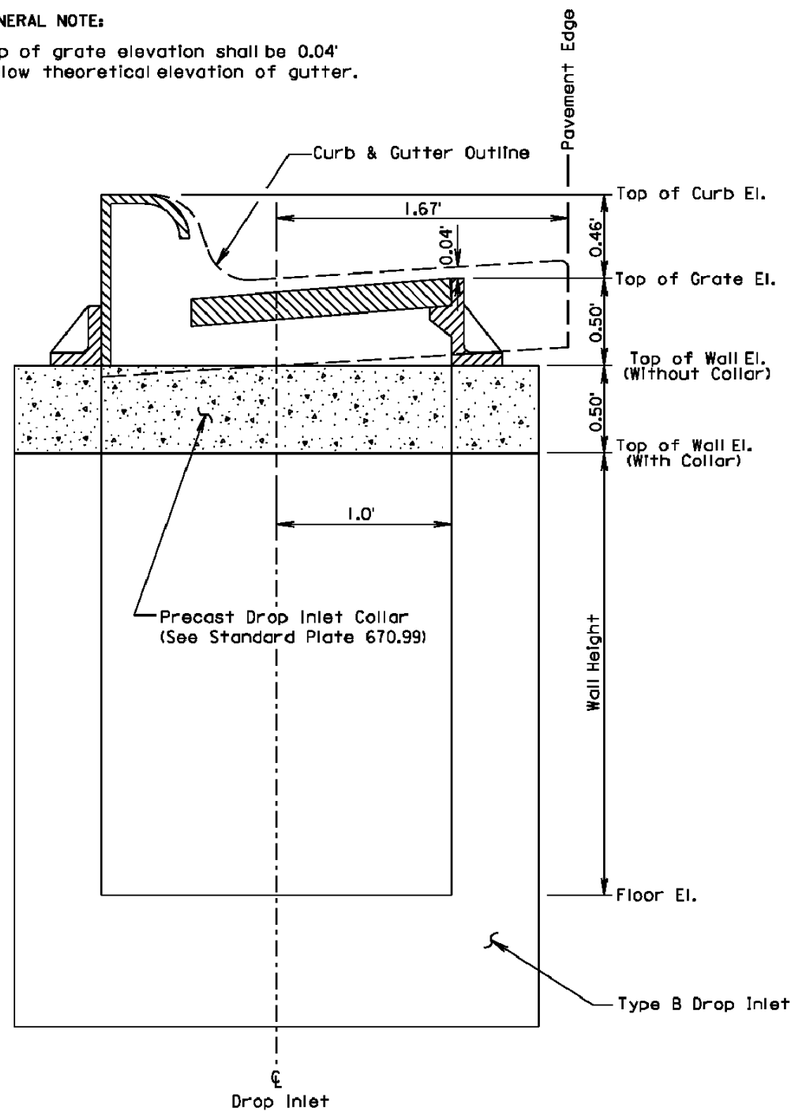

June 26, 2011

Published Date: 3rd Qtr. 2014	SDDOT	INSTALLATION OF TYPE B DROP INLET	PLATE NUMBER 670.75
			Sheet 1 of 1

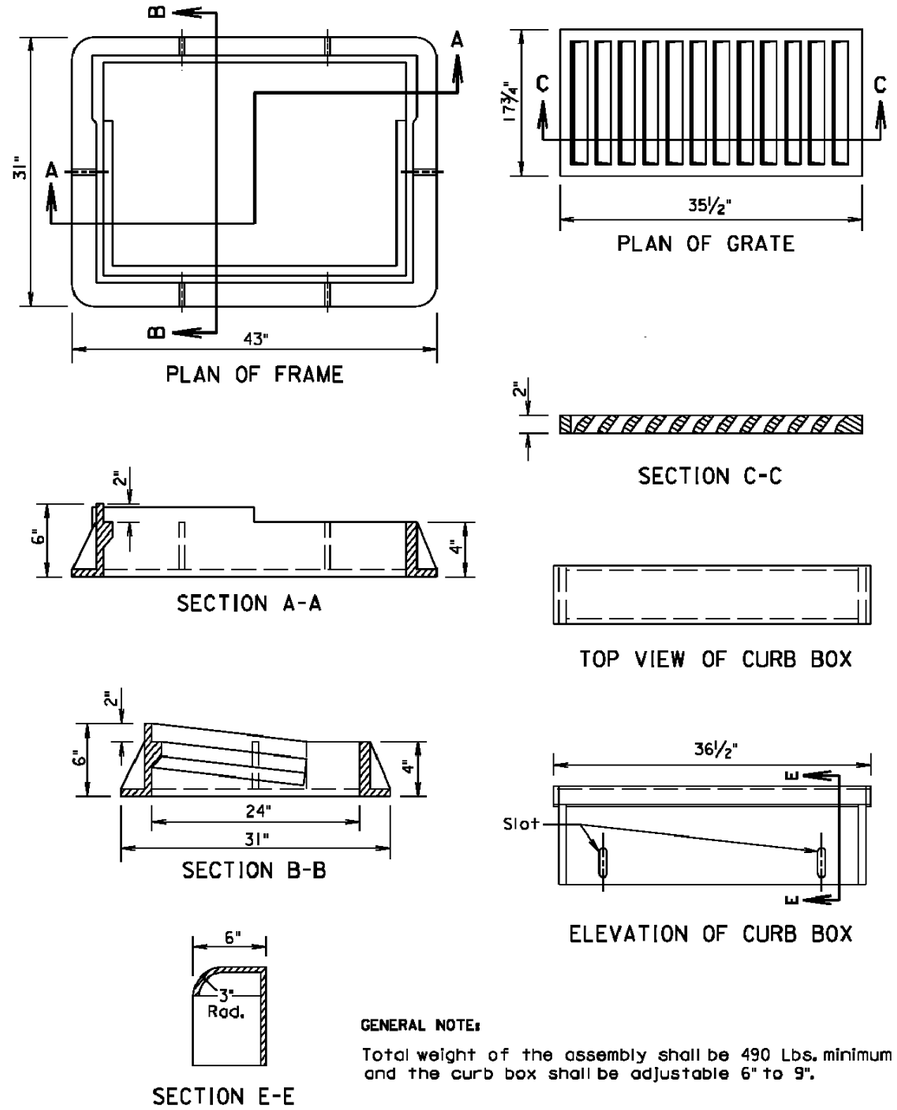

GENERAL NOTE:

Total weight of the assembly shall be 490 Lbs. minimum and the curb box shall be adjustable 6" to 9".

March 31, 2000

Published Date: 3rd Qtr. 2014	SDDOT	TYPE B FRAME AND GRATE ASSEMBLY	PLATE NUMBER 670.80
			Sheet 1 of 1

PLANS PREPARED BY:
SEH
PHONE: 605.330.7000
401 EAST 8TH STREET
SUITE 309
SIOUX FALLS, SD 57103-7032
www.sehinc.com

P:\PT\S\Sddot\124655\5-final-dsgn\51-drawings\10-Civil\CAD\PLANSHEETS\SD124655_B_DT16.dwg 10/8/2014 2:04 PM kpederson

FOR BIDDING PURPOSES ONLY

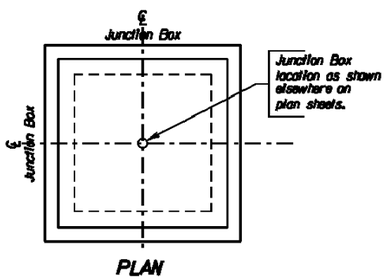

PLAN

SPECIFICATIONS

1. Design Specifications: AASHTO Specifications for Highway Bridges, 1996 Edition (Service Load).
2. Construction Specifications: South Dakota Standard Specifications for Roads and Bridges, Current Edition and required Provisions, Supplemental Specifications and/or Special Provisions as included in the Proposal.

DESIGN MIX OF CONCRETE

1. Mix shall be designed to produce a concrete having a minimum compressive strength of 4000 p.s.i. at 28 days.
2. Type II Cement is required.

GENERAL NOTES

1. Design Live Load: HS 20-44 and Alternate Loading. No construction loading in excess of legal Load was considered.
2. The design of the junction box is based on a maximum fill over the junction box of 5 feet.
3. Unit Stresses: Concrete fc = 1600 p.s.i.
   Reinforcing Steel fs = 24000 p.s.i.
4. All reinforcing steel shall conform to ASTM A615 Grade 60.
5. All exposed edges shall be chamfered ¾".
6. Use 1" clear cover on all reinforcing steel except as shown.
7. The cost of furnishing and installing the manhole steps shall be incidental to the contract unit price per Lb. for "Reinforcing steel".
8. Reinforcing steel shall be cut and bent in field as necessary to fit pipe and manhole openings. (Pipe openings are not shown in these details.) Number, size and location of pipes entering junction box are shown elsewhere on plan sheets.
9. All pipes entering the junction box must fit between the inside faces of the walls.

△ Location, quantities, and method of payment for precast eccentric manhole cone sections are shown elsewhere on plan sheets.

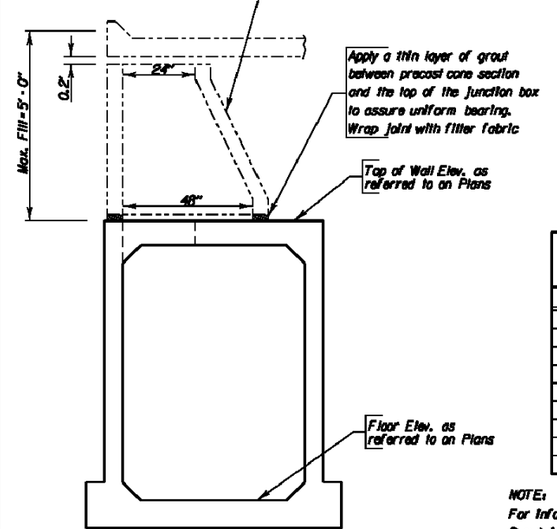

△ DETAIL OF CONNECTION BETWEEN PRECAST ECCENTRIC MANHOLE CONE SECTION AND JUNCTION BOX

ITEM	Class M6 Concrete	Reinforcing Steel
UNIT	Cu. Yd.	Lb.
H = 4'-0"	4.37	821
H = 4'-6"	4.61	846
H = 5'-0"	4.85	908
H = 5'-6"	5.10	933
H = 6'-0"	5.34	958
H = 6'-6"	5.58	1020
H = 7'-0"	5.82	1045
H = 7'-6"	6.06	1071
H = 8'-0"	6.30	1132

NOTE:
For informational purposes only, the estimated quantities for Junction Box height H are shown above. These quantities do not include quantity reduction for pipe openings, but do include the reduction for the 24" diameter manhole opening.

March 31, 2000

Published Date: 3rd Qtr. 2014 | SDDOT | 5'X 5' JUNCTION BOX | PLATE NUMBER 671.01 | Sheet 1 of 3

REINFORCING SCHEDULE

	Mk.	No.	Size	Length	Type
H = 4'-0"	Φ a1	1	6	9'-0"	T3
	Φ a2	4	-	——	-
	h3	28	4	5'-9"	17A
	k3	48	4	8'-6"	17
	m1	18	5	6'-9"	Str.
	n1	18	5	5'-9"	Str.
	p1	52	4	5'-0"	Str.
	q1	8	4	3'-6"	17A
H = 4'-6"	Φ a1	1	6	9'-0"	T3
	Φ a2	4	-	——	-
	h4	28	4	6'-3"	17A
	k4	48	4	9'-0"	17
	m1	18	5	6'-9"	Str.
	n1	18	5	5'-9"	Str.
	p1	52	4	5'-0"	Str.
	q1	8	4	3'-6"	17A
H = 5'-0"	Φ a1	1	6	9'-0"	T3
	Φ a2	5	-	——	-
	h5	28	4	6'-9"	17A
	k5	48	4	9'-6"	17
	m1	18	5	6'-9"	Str.
	n1	18	5	5'-9"	Str.
	p1	60	4	5'-0"	Str.
	q1	12	4	3'-6"	17A
H = 5'-6"	Φ a1	1	6	9'-0"	T3
	Φ a2	5	-	——	-
	h6	28	4	7'-3"	17A
	k6	48	4	10'-0"	17
	m1	18	5	6'-9"	Str.
	n1	18	5	5'-9"	Str.
	p1	60	4	5'-0"	Str.
	q1	12	4	3'-6"	17A
H = 6'-0"	Φ a1	1	6	9'-0"	T3
	Φ a2	6	-	——	-
	h7	28	4	7'-9"	17A
	k7	48	4	10'-6"	17
	m1	18	5	6'-9"	Str.
	n1	18	5	5'-9"	Str.
	p1	60	4	5'-0"	Str.
	q1	12	4	3'-6"	17A
H = 6'-6"	Φ a1	1	6	9'-0"	T3
	Φ a2	6	-	——	-
	h8	28	4	8'-3"	17A
	k8	48	4	11'-0"	17
	m1	18	5	6'-9"	Str.
	n1	18	5	5'-9"	Str.
	p1	68	4	5'-0"	Str.
	q1	16	4	3'-6"	17A
H = 7'-0"	Φ a1	1	6	9'-0"	T3
	Φ a2	7	-	——	-
	h9	28	4	8'-9"	17A
	k9	48	4	11'-6"	17
	m1	18	5	6'-9"	Str.
	n1	18	5	5'-9"	Str.
	p1	68	4	5'-0"	Str.
	q1	16	4	3'-6"	17A
H = 7'-6"	Φ a1	1	6	9'-0"	T3
	Φ a2	7	-	——	-
	h10	28	4	9'-3"	17A
	k10	48	4	12'-0"	17
	m1	18	5	6'-9"	Str.
	n1	18	5	5'-9"	Str.
	p1	68	4	5'-0"	Str.
	q1	16	4	3'-6"	17A
H = 8'-0"	Φ a1	1	6	9'-0"	T3
	Φ a2	8	-	——	-
	h11	28	4	9'-9"	17A
	k11	48	4	12'-6"	17
	m1	18	5	6'-9"	Str.
	n1	18	5	5'-9"	Str.
	p1	76	4	5'-0"	Str.
	q1	20	4	3'-6"	17A

Bending Details

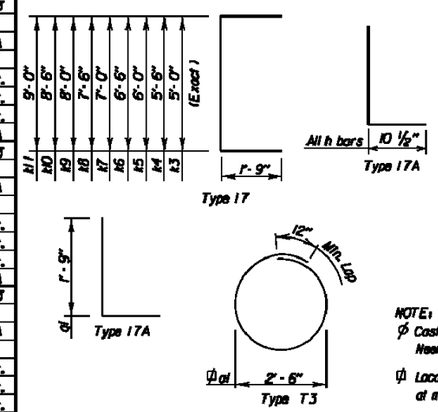

NOTE:
Φ Cast Iron Manhole Steps (R - 1980 - C) from Neenah Foundry or equivalent.

Φ Locate in center of top slab with 3" clearance at manhole opening.

All dimensions are out to out of bars.

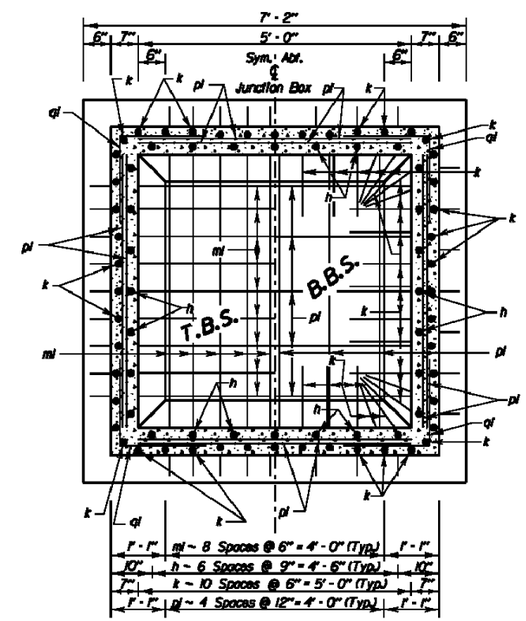

SEC. A-A

March 31, 2000

Published Date: 3rd Qtr. 2014 | SDDOT | 5'X 5' JUNCTION BOX | PLATE NUMBER 671.01 | Sheet 2 of 3

PLANS PREPARED BY:
SEH
PHONE: 605.330.7000
401 EAST 8TH STREET
SUITE 309
SIOUX FALLS, SD 57103-7032
www.sehinc.com

P:\PT\S\Sddot\124655\5-final-dsgn\51-drawings\10-Civil\CAD\PLANSHEETS\SD124655_B_D117.dwg 10/8/2014 2:05 PM kpederson

FOR BIDDING PURPOSES ONLY

STATE OF SOUTH DAKOTA	PROJECT	SHEET NO.	TOTAL SHEETS
	P 6312(18)	B61	B63

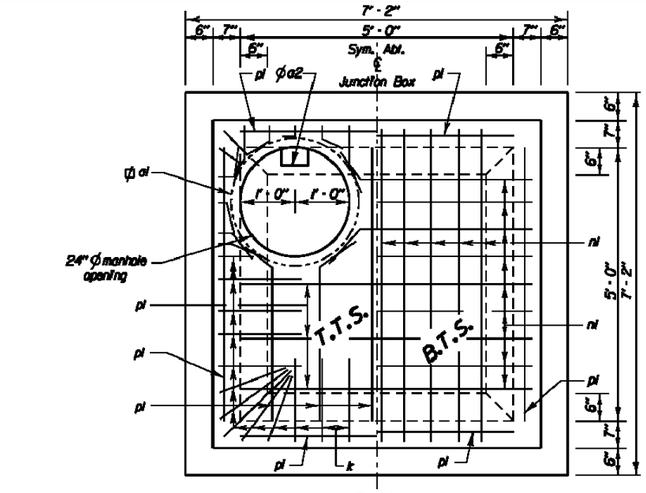

PLAN

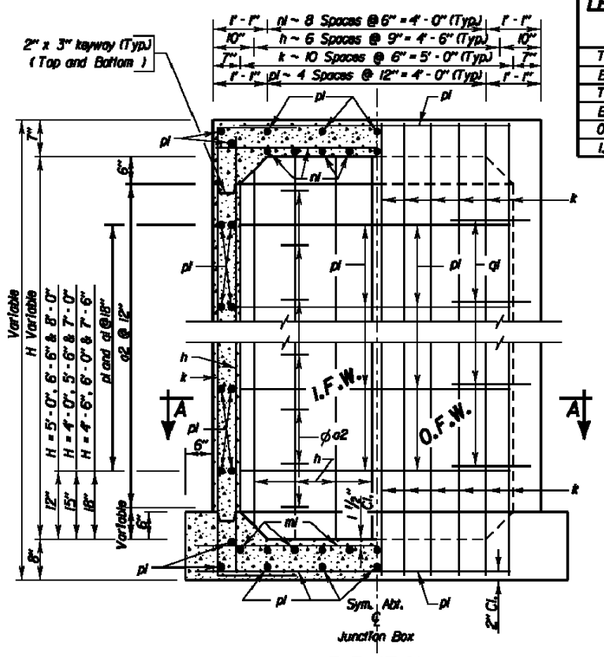

ELEVATION

LEGEND FOR PLACING RE-STEEL

T. T. S. - Top of Top Slab
B. T. S. - Bottom of Top Slab
T. B. S. - Top of Bottom Slab
B. B. S. - Bottom of Bottom Slab
O. F. W. - Outside Face of Wall
I. F. W. - Inside Face of Wall

March 31, 2000

Published Date: 3rd Qtr. 2014

SDDOT

5'X 5' JUNCTION BOX

PLATE NUMBER 671.01

Sheet 3 of 3

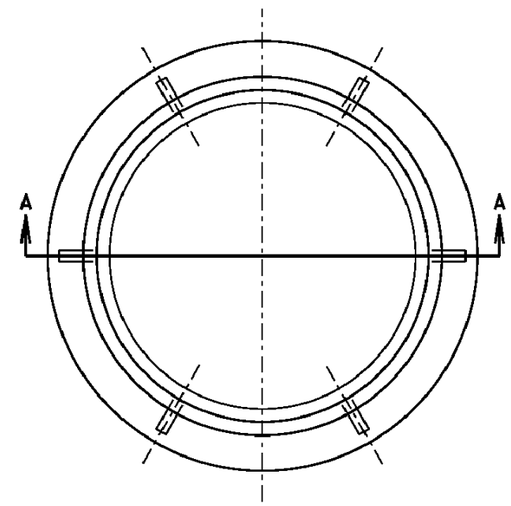

PLAN OF FRAME

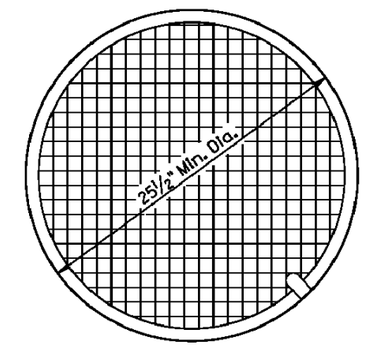

PLAN OF LID

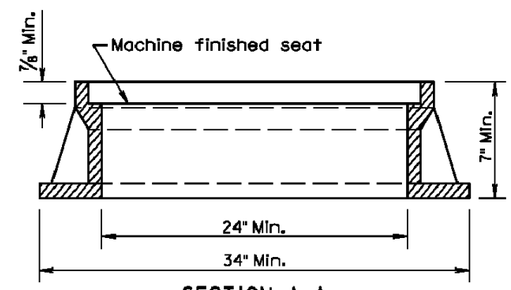

SECTION A-A

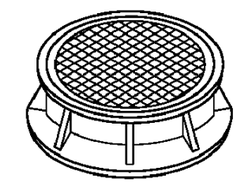

ASSEMBLED VIEW

TYPE	HEIGHT	MIN. WEIGHT
A7	7"	400Lbs.
A8	8"	440Lbs.
A9	9"	470Lbs.
A10	10"	480Lbs.

GENERAL NOTE:

Geometric pattern on top of lid other than that shown shall be approved by the Engineer.

March 31, 2000

Published Date: 1st Qtr. 2014

SDDOT

TYPE A MANHOLE FRAME AND LID

PLATE NUMBER 671.10

Sheet 1 of 1

PLANS PREPARED BY:

SEH

PHONE: 605.330.7000
401 EAST 8TH STREET
SUITE 309
SIOUX FALLS, SD 57103-7032
www.sehinc.com

P:\PTS\Saddot\124655\5-final-dsgn\51-drawings\10-Civil\CAD\PLANSHEETS\SD124655_B_DT18.dwg 10/8/2014 2:05 PM kpederson

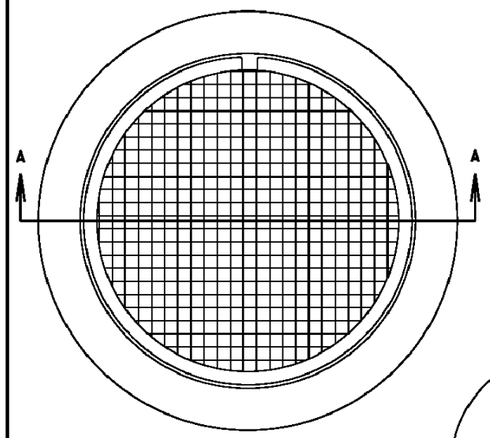

PLAN VIEW

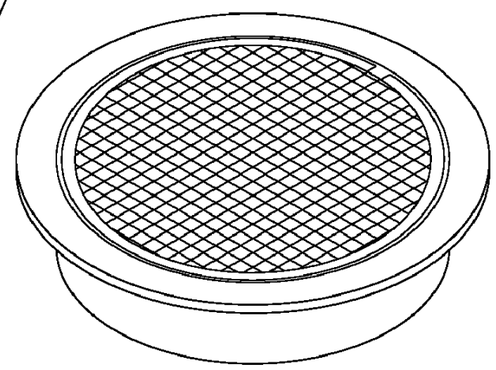

ASSEMBLED VIEW

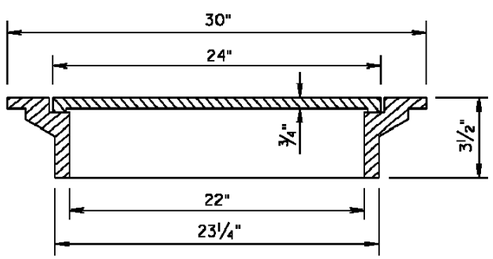

SECTION A-A

GENERAL NOTE:

Total weight of the frame and lid shall be 140 Lbs. minimum.

March 31, 2000

Published Date: 3rd Qtr. 2014	SDDOT	TYPE S MANHOLE FRAME AND LID	PLATE NUMBER 671.30
			Sheet 1 of 1

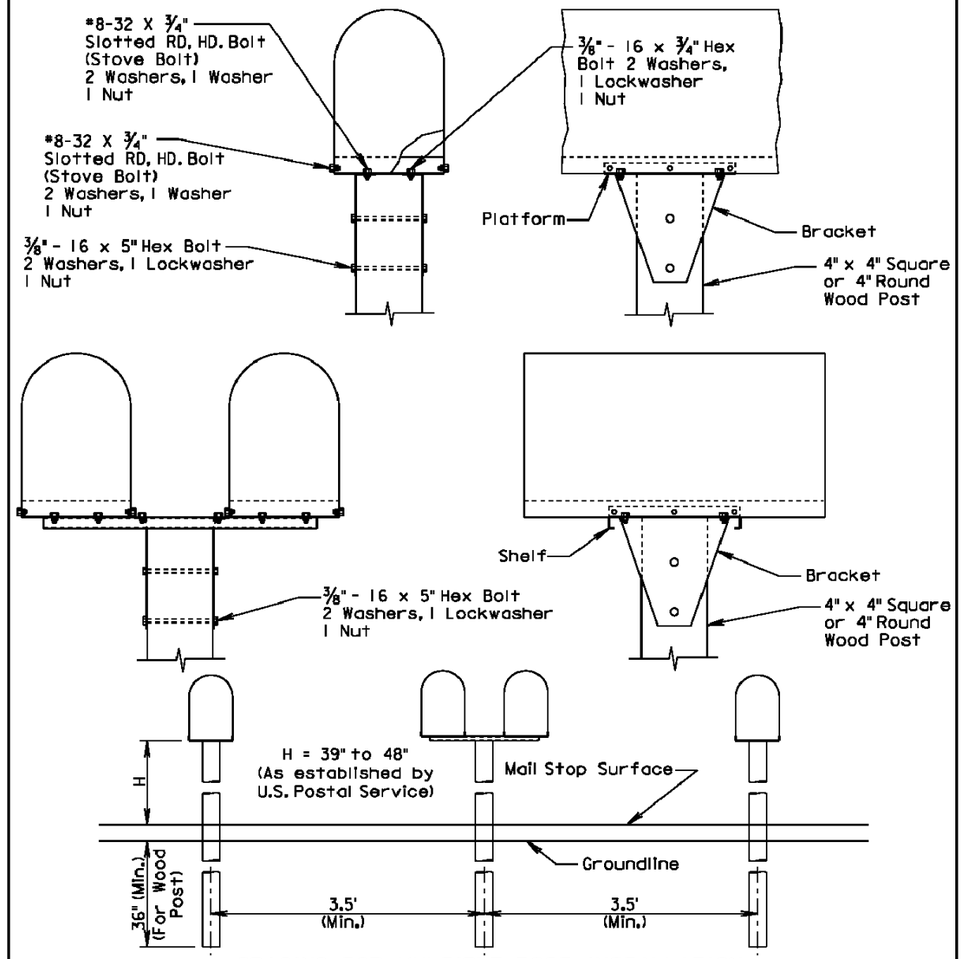

SPACING FOR MULTIPLE POST INSTALLATION

GENERAL NOTES:

The post support assemblies provided should be consistant throughout the project.

Single and double mailboxes may be in any sequence.

Post support assemblies shall be one from the approved products list, a 4"x4" or 4" round wood post, or an alternate post support assembly that meets the test level 3 crash testing requirements of NCHRP 350 or MASH.

Alternate mailbox support assemblies shall be approved by the Engineer prior to installation. The Contractor shall provide the Engineer written certification that the mailbox support assembly has met the crash testing requirements and will be installed in accordance with the manufacturer's installation instructions.

September 6, 2013

Published Date: 3rd Qtr. 2014	SDDOT	SINGLE AND DOUBLE MAILBOX ASSEMBLIES	PLATE NUMBER 900.02
			Sheet 1 of 1

PLANS PREPARED BY:
SEH
PHONE: 605.330.7000
401 EAST 8TH STREET
SUITE 309
SIOUX FALLS, SD 57103-7032
www.sehinc.com

P:\PT\S\Sddot\124655\5-final-dsgn\51-drawings\10-Civil\CAD\PLANSHEETS\SD124655_B_DT19.dwg 10/8/2014 2:05 PM kpederson

FOR BIDDING PURPOSES ONLY

STATE OF SOUTH DAKOTA	PROJECT	SHEET NO.	TOTAL SHEETS
	P 6312(18)	B63	B63

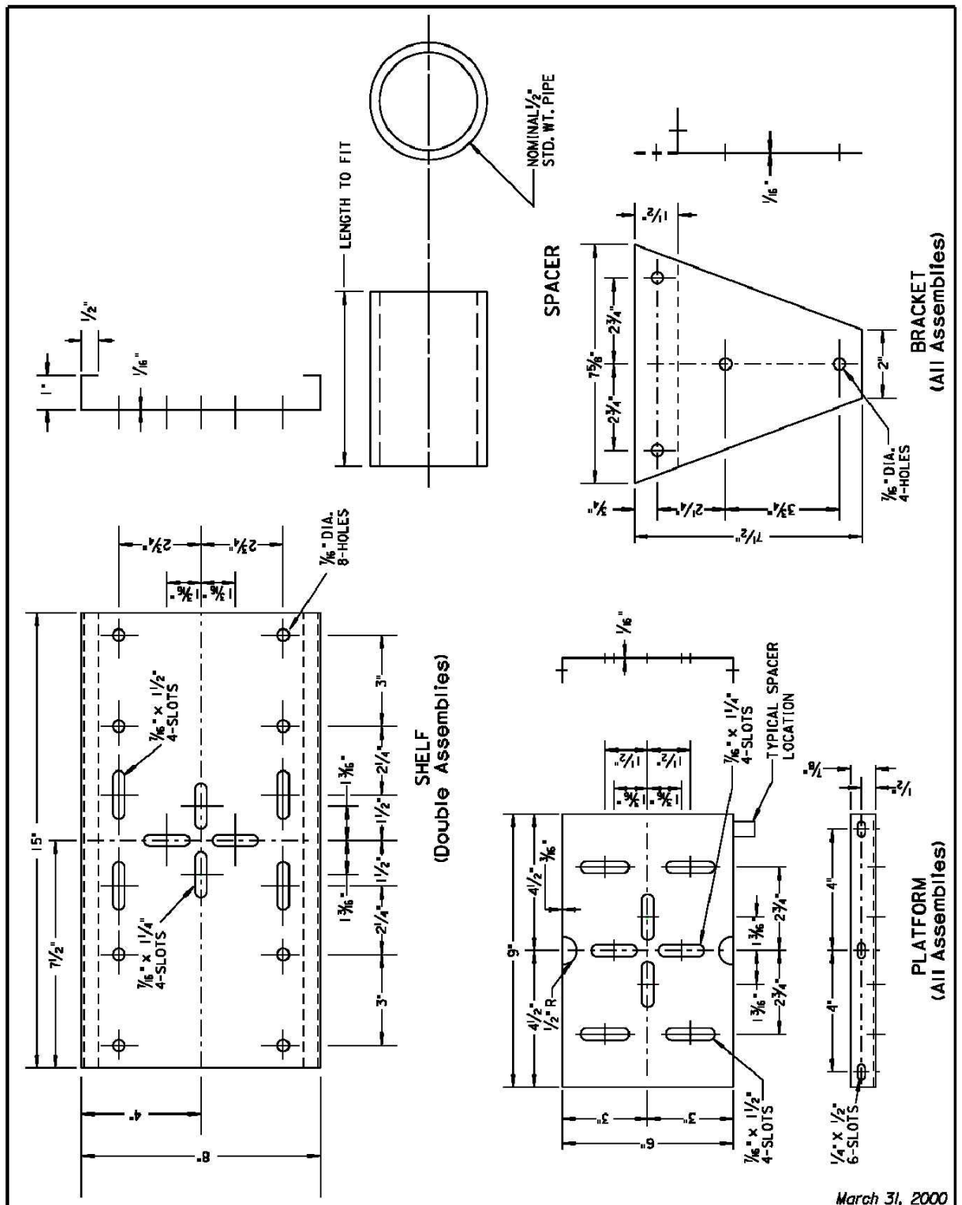

March 31, 2000

Published Date: 3rd Qtr. 2014

SDDOT

MAILBOX SUPPORT HARDWARE

PLATE NUMBER 900.03

Sheet 1 of 1

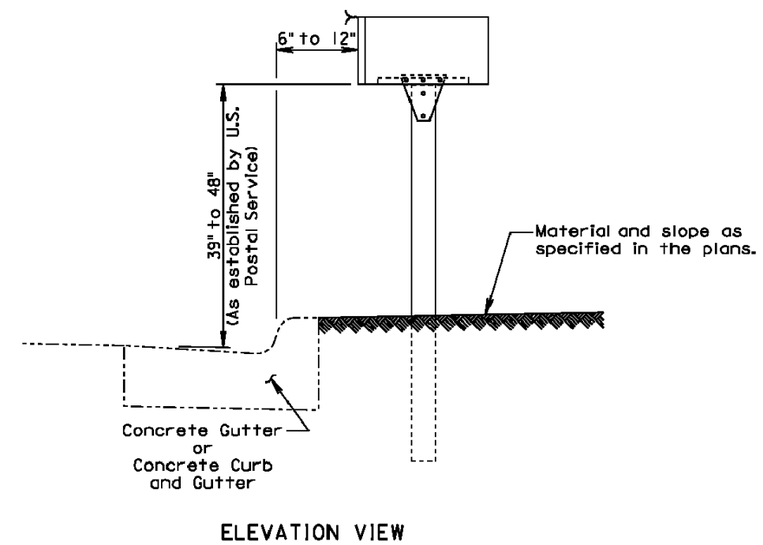

GENERAL NOTES:

The post support assemblies provided should be consistant throughout the project.

Post support assemblies shall be one from the approved products list, a 4"x4" or 4" round wood post, or an alternate post support assembly that meets the test level 3 crash testing requirements of NCHRP 350 or MASH.

Alternate mailbox support assemblies shall be approved by the Engineer prior to installation. The Contractor shall provide the Engineer written certification that the mailbox support assembly has met the crash testing requirements and will be installed in accordance with the manufacturer's installation instructions.

February 10, 2014

Published Date: 3rd Qtr. 2014

SDDOT

MAILBOX ADJACENT TO CONCRETE GUTTER OR CONCRETE CURB AND GUTTER

PLATE NUMBER 900.05

Sheet 1 of 1

PLANS PREPARED BY:
SEH
PHONE: 605.330.7000
401 EAST 8TH STREET
SUITE 309
SIOUX FALLS, SD 57103-7032
www.sehinc.com

P:\PT\S\Sddot\124655\5-final-dsgn\51-drawings\10-Civil\CAD\PLANSHEETS\SD124655_B_DT20.dwg 10/8/2014 2:05 PM kpederson