FOR BIDDING PURPOSES ONLY

| STATE OF SOUTH DAKOTA | PROJECT | SHEET | TOTAL SHEETS |
|---|---|---|---|
| | P 4243(03) | B1 | B99 |

# SECTION B: GRADING PLANS

## INDEX OF SHEETS


| | |
|---|---|
| B1 | GENERAL LAYOUT W/INDEX |
| B2 | ESTIMATE OF QUANTITIES & GENERAL NOTES |
| B3-B8 | GENERAL NOTES |
| B9 | TABLE OF CONSTRUCTION STAKING |
| B10 | TABLE OF PIPE QUANTITIES |
| B11-B12 | TYPICAL SECTIONS |
| B13 | HORIZONTAL ALIGNMENT DATA |
| B14 | CONTROL DATA |
| B15-B16 | EXISTING TOPOGRAPHY SYMBOLOGY AND LEGEND |
| B17-B19 | TABLE OF R-O-W & EASEMENTS |
| B20-B34 | R-O-W LAYOUT |
| B35-B49 | REMOVAL SHEETS |
| B50-B64 | CURB & GUTTER LAYOUT |
| B65-B74 | STORM SEWER SHEETS |
| B75 | DETAILS |
| B76-B99 | STANDARD PLATES |


BEGIN P 4243(03)
STA 0+16.63
LATITUDE: 44° 55' 08.74"
LONGITUDE: 97° 05' 10.59"

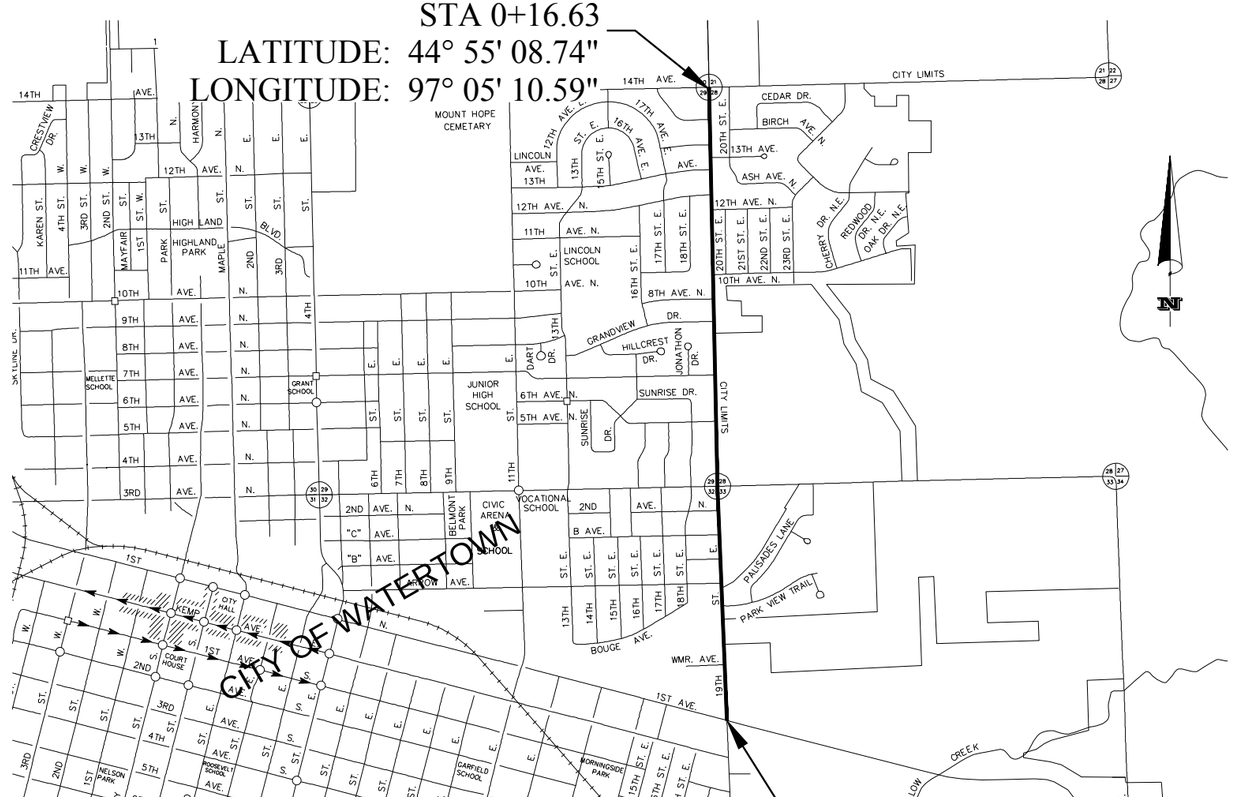


LOCATION MAP

END P4243(03)
STA 83+83.90
LATITUDE: 44° 53' 46.12"
LONGITUDE: 97° 05' 10.59"

REGISTERED PROFESSIONAL ENGINEER
REG. NO.
9721
JOHN W. DESENS
SOUTH DAKOTA
12-31-14

PLANS BY: CLARK ENGINEERING, WATERTOWN, SD

1/21/2015 10:33 AM Z:\2013 PROJECTS\X13038 WATERTOWN 19TH STREET\DESIGN\SEC B\SECTION TITLE SHEET.DWG

## SECTION B ESTIMATE OF QUANTITIES

| BID ITEM NUMBER | ITEM | QUANTITY | UNIT |
|---|---|---|---|
| 009E0010 | Mobilization | Lump Sum | LS |
| 009E3230 | Grade Staking | 0.694 | Mile |
| 009E3250 | Miscellaneous Staking | 0.463 | Mile |
| 009E3280 | Slope Staking | 0.463 | Mile |
| 009E3300 | Three Man Survey Crew | 20 | Hour |
| 100E0100 | Clearing | Lump Sum | LS |
| 110E0300 | Remove Concrete Curb and Gutter | 699 | Ft |
| 110E1110 | Remove Concrete Approach Pavement | 39.7 | SqYd |
| 110E1140 | Remove Concrete Sidewalk | 533.4 | SqYd |
| 110E7150 | Remove Sign for Reset | 9 | Each |
| 120E0010 | Unclassified Excavation | 12,748 | CuYd |
| 120E0600 | Contractor Furnished Borrow | 7489 | CuYd |
| 120E2000 | Undercutting | 4246 | CuYd |
| 120E6100 | Water for Embankment | 177.5 | MGal |
| 250E0020 | Incidental Work, Grading | Lump Sum | LS |
| 270E0040 | Salvage and Stockpile Asphalt Mix and Granular Base Material | 7124.6 | Ton |
| 380E3520 | 6” PCC Approach Pavement | 207.8 | SqYd |
| 450E0102 | 12” RCP Class 2, Furnish | 10 | Ft |
| 450E0110 | 12” RCP, Install | 10 | Ft |
| 450E0112 | 15” RCP Class 2, Furnish | 302 | Ft |
| 450E0120 | 15” RCP, Install | 302 | Ft |
| 450E0122 | 18” RCP Class 2, Furnish | 1133 | Ft |
| 450E0130 | 18” RCP, Install | 1133 | Ft |
| 450E0142 | 24” RCP Class 2, Furnish | 218 | Ft |
| 450E0150 | 24” RCP, Install | 218 | Ft |
| 450E0162 | 30” RCP Class 2, Furnish | 204 | Ft |
| 450E0170 | 30” RCP, Install | 204 | Ft |
| 450E0182 | 36” RCP Class 2, Furnish | 32 | Ft |
| 450E0190 | 36” RCP, Install | 32 | Ft |
| 450E0202 | 48” RCP Class 2, Furnish | 67 | Ft |
| 450E0210 | 48” RCP, Install | 67 | Ft |
| 450E2000 | 12” RCP Flared End, Furnish | 1 | Each |
| 450E2001 | 12” RCP Flared End, Install | 1 | Each |
| 450E2004 | 15” RCP Flared End, Furnish | 3 | Each |
| 450E2005 | 15” RCP Flared End, Install | 3 | Each |
| 450E2008 | 18” RCP Flared End, Furnish | 5 | Each |
| 450E2009 | 18” RCP Flared End, Install | 5 | Each |
| 450E2028 | 36” RCP Flared End, Furnish | 1 | Each |
| 450E2029 | 36” RCP Flared End, Install | 1 | Each |
| 450E2036 | 48” RCP Flared End, Furnish | 1 | Each |
| 450E2037 | 48” RCP Flared End, Install | 1 | Each |
| 450E3052 | 48” RCP Arch Class 2, Furnish | 356 | Ft |
| 450E3060 | 48” RCP Arch, Install | 356 | Ft |
| 451E6080 | Adjust Water Valve Box | 1 | Each |
| 462E0100 | Class M6 Concrete | 43.4 | CuYd |
| 480E0100 | Reinforcing Steel | 8321 | Lb |
| 600E0200 | Type II Field Laboratory | 1 | Each |
| 635E5535 | Sawed-In, Preformed Detector Loop | 4 | Each |
| 650E0060 | Type B66 Concrete Curb and Gutter | 5043 | Ft |
| 650E4660 | Type P6 Concrete Gutter | 453 | Ft |
| 651E0040 | 4” Concrete Sidewalk | 40,065 | Sq.Ft. |
| 651E0040 | 6” Concrete Sidewalk | 2232 | Sq Ft |
| 651E7000 | Type I Detectable Warnings | 650 | Sq.Ft. |
| 670E1200 | Type B Frame and Grate Assembly | 17 | Each |
| 670E2200 | Type C Frame and Grate | 1 | Each |
| 671E6007 | Type A7 Manhole Frame and Lid | 3 | Each |
| 671E7010 | Adjust Manhole | 2 | Each |
| 720E1015 | Bank and Channel Protection Gabion | 12.0 | CuYd |
| 900E0010 | Refurbish Single Mailbox | 7 | Each |

## GRADING OPERATIONS

Water for Embankment is estimated at the rate of 10 gallons of water per cubic yard of Embankment minus Waste.

The estimated cubic yards of excavation and/or embankment required to construct outlet ditches, ditch blocks, and approaches are included in the earthwork balance notes on the profile sheets.

Special ditch grades and other sections of the roadway different than the typical section shall be constructed to the limits shown on the cross sections. If significant changes to the cross sections are necessary during construction, the Engineer shall contact the Designer for the proposed change.

Generally, all shallow inlet and outlet ditches as noted on the plan sheets shall be cut with a 10-foot wide bottom with 5:1 backslopes. However, the Engineer may direct the Contractor to adjust the ditch width for proper alignment with the drainage structure.

Temporary fence and/or permanent fence shall be placed ahead of the grading operation unless otherwise directed by the Engineer.

## TYPE II FIELD LABORATORY

The lab shall be equipped with an internet connection such as DSL, cable modem, or other approved service. The internet connection shall be provided with a multi-port wireless router. The internet connection shall be a minimum speed of 512 Kb unless limited by job location and approved by the DOT. Prior to installing the wireless router the Contractor shall submit the wireless router’s technical data to the Area Office to check for compatibility with the state’s computer equipment. The internet connection is intended for state personnel usage only. The Contractor’s personnel are prohibited from using the internet connection unless pre-approved by the Project Engineer.
All costs associated with the internet connection shall be incidental to the contract unit price per each for “Type II Field Laboratory”.

## UTILITIES

The Contractor shall be aware that the existing utilities shown in the plans were surveyed prior to the design of this project and might have been relocated or replaced by a new utility facility prior to construction of this project, might be relocated or replaced by a new utility facility during the construction of this project, or might not require adjustment and may remain in its current location. The Contractor shall contact each utility owner and confirm the status of all existing and new utility facilities.

## DETECTOR LOOP REPAIR

Detector loops shall be installed at locations damaged during the milling operations. They shall be installed according to section 635 of the Specifications. The Preformed Detector Loops shall be gel filled. The unit bid item for “Sawed-In, Preformed Detector Loop” shall include all material, labor, and equipment for the installation of the loops and the proper connection from the loops to the junction box.

Detector loops are located near station 83+30.

**SHRINKAGE FACTOR:** Embankment +35%

**TABLE OF EXCAVATION QUANTITIES BY BALANCES**

| Station to | Station | Excavation (CuYd) | Salvaged Material (CuYd) | Topsoil (CuYd) | *Undercut (CuYd) | *Contractor Furnished Borrow (CuYd) | Total Excavation (CuYd) | ** Haul (CuYdSta) |
|---|---|---|---|---|---|---|---|---|
| 0+17 | 24+62 | 0 | 6213 | 1145 | 4246 | 7489 | 19093 | 6800 |
| 24+62 | 83+70 | 738 | 0 | 406 | 0 | 0 | 1144 | 20200 |
| | Totals: | 738 | 6213 | 1551 | 4246 | 7489 | 20237 | 27000 |

* The quantities for these items are in the Estimate of Quantities under their respective bid items.
** The quantities for these items are for information only.

**TABLE OF UNCLASSIFIED EXCAVATION**

| | |
|---|---|
| Excavation | 738 CY |
| Undercut | 4246 CY |
| Topsoil | 1551 CY |
| Salvaged Asphalt Mix and Granular Base Material (from cut sections) | 5393 CY |
| Salvaged Asphalt Mix and Granular Base Material (from fill sections) | 820 CY |
| Total | 12,748 CY |

**TABLE OF EARTHWORK**

| Item | Cut (CuYd) | Fill (CuYd) |
|---|---|---|
| Excavation | 738 | 6323 |
| Topsoil | 1551 | 1551 |
| Undercutting | 4246 | 4246 |
| Muck Excavation | 0 | 0 |
| Salvaged Base Course | 3544 | 893 |
| **Shrinkage** | | **4555** |
| Salvaged Asphalt Mix | 2669 | 2669 |
| Sub-total | 12748 | 20237 |
| | | |
| **Borrow** | **7489** | |
| Excavation | 20237 | 20237 |

Notes:

- The volume of existing base course is estimated to be 3544 CuYd, of which approximately 893 CuYd plus 313 CuYd for shrinkage will be mixed with Salvaged Asphalt Mix and placed as Base Couse, Salvaged. The remaining is approximately 2338 CuYd which will be placed as general embankment material. All of the existing Asphalt Mix removed from 0+17 to 24+62 will be re-used for use in Base Course, Salvaged. No shrinkage was used on salvaged asphalt mix.
- Topsoil is located in boulevards and ditches, which are fill areas. The quantity of topsoil is listed as cut material since it will be stripped, and also listed as fill material, since it will be re-spread (this is done to account for shrinkage). Topsoil volume is listed for earthwork balance purposes only, actual quantity may vary.
- All earthwork bid items will be paid for at plan quantity. No measurement will be made unless changes in quantities are ordered by the Engineer in the field.

**PROCEDURES FOR DETERMINING UNCLASSIFIED EXCAVATION QUANTITY**

When plan quantities are used for payment, the Unclassified Excavation quantity shall be used for final payment. If final cross sections are taken in the field, add all of the items in the Table of Unclassified Excavation using the following procedures:

The Unstable Material Excavation quantity is included in the Excavation quantity listed in the Table of Unclassified Excavation. When finaling a project, the Unstable Material Excavation quantity shall be added to the Excavation quantity to compute the Unclassified Excavation quantity.

The Topsoil quantity in the Table of Unclassified Excavation is an estimate. When finaling a project, the total quantity of field measured Topsoil shall be used in place of the estimated Topsoil quantity. The quantity of Topsoil from the cuts will be paid for twice as Unclassified Excavation, as it will be in both the Excavation and Topsoil quantities. This will be full compensation for Excavation, which includes necessary undercutting to provide space for placement of topsoil.

The Excavation quantities from individual balances and the Table of Unclassified Excavation have been reduced by the volume of in place surfacing that will be removed.

**HAUL**

Included in the Table of Excavation Quantities by Balances are Haul. They are not pay items and are for informational purposes only.

Haul: Estimated quantity (CuYdSta) for moving unclassified excavation material to the locations where it is needed throughout the earthwork balance.

**UNDERCUTTING**

In all cut sections the earthen subgrade shall be undercut one foot below the earthen subgrade surface. The undercut material or other suitable material, as directed by the Engineer, shall then be replaced and compacted to the density specified for the section being constructed. Compaction shall be per Section 120, Specified Density Method.

Shallow embankment sections, fills less than one foot in height measured at the finished subgrade shoulders, shall be undercut to ensure a minimum one foot height of earth embankment for the entire width of roadbed. The undercut soil and soil obtained from adjacent excavation shall then be replaced and compacted to the density specified for the section being constructed. Compaction shall be per Section 120, Specified Density Method.

The plan shown quantity will be the basis of payment. However, if there are additional areas of undercut other than what is shown in the plans, the Engineer shall direct removal of these areas and the additional areas will be measured according to the Engineer.

## TABLE OF UNDERCUTTING

| Station | to | Station | Quantity (CuYd) |
|---|---|---|---|
| 0+17 | | 24+62 | 4246 |
| | | Total: | 4246 |

## CONTRACTOR FURNISHED BORROW

The Contractor shall provide a suitable site for Contractor furnished borrow material. The Contractor is responsible for obtaining all required permits and clearances for the borrow site. The borrow material shall be approved by the Engineer. The plans quantity for "Contractor Furnished Borrow" as shown in the Estimate of Quantities will be the basis of payment for this item.

Restoration of the Contractor furnished borrow site shall be the responsibility of the Contractor.

## REMOVAL OF EXISTING ASPHALT CONCRETE PAVEMENT STA. 0+16.63 to STA. 24+61.66

Asphalt removed from Station 0+16.63 to Station 24+61.66 shall be blended with the in-place base course in the same location, which will then be placed as Base Course, Salvaged. Payment for removal of existing asphalt in this location shall be incidental to the bid item "Unclassified Excavation".

The existing Asphalt Concrete Pavement is an average of approximately 8.3 inches thick and is typically 36 feet wide.

## TABLE OF IN-PLACE SURFACING

The following table of drilled test holes is for information only:

Reconstruction section

| Sta. | Centerline Feet Lt. | Feet Rt. | Depth Asphalt (inches) | Depth Granular Base (inches) |
|---|---|---|---|---|
| 4+70 | 6.2 | | 6 | 9 |
| 9+20 | 6.7 | | 8 | 17 |
| 13+15 | 6.1 | | 8 | 12 |
| 22+30 | 5.3 | | 11 | 6 |
| | | Average | 8.3 | 11.0 |

Mill and overlay section

| Sta. | Curb Feet Lt. | Feet Rt. | Depth Asphalt (inches) | Depth Granular Base (inches) |
|---|---|---|---|---|
| 33+75 | 6.6 | | 8 | 6 |
| 40+00 | 5.8 | | 8 | 8 |
| 46+50 | 5.3 | | 8 | 8 |
| 53+50 | 6.9 | | 8 | 10 |
| 59+60 | 5.8 | | 8 | 10 |
| 66+10 | 6.3 | | 10 | 7 |
| 76+80 | 6.2 | | 8 | 8 |
| | | Average | 8.3 | 8.1 |

## TABLE OF ASPHALT CONCRETE PAVEMENT REMOVAL

| Station | to | Station | L/R | Quantity (SqYd) |
|---|---|---|---|---|
| 0+17 | | 24+62 | L & R | 11,496.4 |
| | | | Total: | 11,496.4 |

## TABLE OF CONCRETE CURB AND GUTTER REMOVAL

| Station | to | Station | L/R | Quantity (Ft) |
|---|---|---|---|---|
| 4+51 | | 4+51 | R | 22.5 |
| 7+42 | | 7+43 | R | 6.5 |
| 7+82 | | 7+82 | R | 14.2 |
| 9+20 | | 9+20 | L | 17.7 |
| 9+59 | | 9+60 | L | 16.1 |
| 14+14 | | 14+15 | R | 13.7 |
| 14+54 | | 14+54 | R | 13.4 |
| 14+60 | | 14+70 | L | 9.8 |
| 14+60 | | 14+71 | R | 10.3 |
| 15+01 | | 15+29 | L | 28.3 |
| 15+55 | | 16+04 | L | 48.8 |
| 24+59 | | 24+59 | L | 15.4 |
| 24+98 | | 24+98 | L | 16.3 |
| 25+15 | | 25+34 | R | 19.0 |
| 25+20 | | 25+34 | L | 14.0 |
| 27+66 | | 27+87 | R | 34.4 |
| 27+71 | | 27+90 | L | 19.2 |
| 28+23 | | 28+42 | L | 19.0 |
| 28+26 | | 28+43 | R | 28.9 |
| 30+47 | | 30+66 | L | 19.0 |
| 30+47 | | 30+81 | R | 51.5 |
| 31+22 | | 31+45 | R | 39.9 |
| 37+77 | | 37+94 | R | 28.0 |
| 38+35 | | 38+52 | R | 28.8 |
| 52+43 | | 52+69 | R | 45.1 |
| 53+09 | | 53+43 | R | 54.1 |
| 65+98 | | 66+13 | R | 27.4 |
| 76+18 | | 76+37 | L | 19.0 |
| 76+18 | | 76+37 | R | 19.1 |
| | | | Total: | 699.4 |

## TABLE OF CONCRETE APPROACH PAVEMENT REMOVAL

| Station | to | Station | L/R | Quantity (SqYd) |
|---|---|---|---|---|
| 15+27 | | 15+55 | R | 39.7 |
| | | | Total: | 39.7 |

## TABLE OF SIDEWALK REMOVAL

| Station | to | Station | L/R | Quantity (SqYd) |
|---|---|---|---|---|
| 9+07 | | 9+20 | L | 6.1 |
| 9+59 | | 9+72 | L | 11.6 |
| 14+02 | | 14+14 | R | 7.4 |
| 14+54 | | 14+64 | R | 10.3 |
| 14+62 | | 14+70 | R | 4.7 |
| 14+61 | | 15+27 | L | 35.0 |
| 21+42 | | 24+61 | R | 174.6 |
| 24+43 | | 24+52 | L | 5.5 |
| 24+49 | | 24+59 | L | 5.6 |
| 24+98 | | 25+06 | L | 4.9 |
| 27+76 | | 27+86 | R | 10.5 |
| 28+28 | | 28+43 | R | 10.6 |
| 30+36 | | 30+78 | R | 31.4 |
| 31+25 | | 31+72 | R | 29.0 |
| 37+64 | | 37+90 | R | 8.6 |
| 38+38 | | 38+54 | R | 8.7 |
| 43+92 | | 43+99 | R | 2.9 |
| 43+99 | | 44+03 | R | 3.2 |
| 44+52 | | 44+64 | R | 6.4 |
| 52+38 | | 52+61 | R | 14.9 |
| 53+18 | | 53+47 | R | 20.5 |
| 55+80 | | 55+85 | R | 2.1 |
| 55+84 | | 55+89 | R | 2.2 |
| 56+40 | | 56+44 | R | 2.2 |
| 56+44 | | 56+49 | R | 2.1 |
| 59+00 | | 59+06 | R | 2.7 |
| 59+60 | | 59+64 | R | 2.8 |
| 59+64 | | 59+70 | R | 2.8 |
| 62+22 | | 62+28 | R | 2.7 |
| 62+28 | | 62+32 | R | 2.2 |
| 62+83 | | 62+92 | R | 6.7 |
| 65+42 | | 65+56 | R | 8.8 |
| 65+98 | | 66+12 | R | 7.8 |
| 68+36 | | 68+57 | L | 15.8 |
| 69+02 | | 69+22 | L | 15.5 |
| 76+31 | | 76+45 | R | 8.9 |
| 76+76 | | 76+90 | R | 9.1 |
| 83+61 | | 83+83 | L | 26.6 |
| | | | Total: | 533.4 |

## STORM SEWER

Reinforced concrete pipe may be either bell and spigot or tongue and groove. The pipe sections shall be adjoined such that the ends are fully entered and the inner surfaces are reasonably flush and even.

Lift holes in the reinforced concrete pipe shall be plugged with grout.

Watertight joints are required for reinforced concrete pipe, drop inlets, manholes, and junction boxes where storm sewers run parallel to and within 10 feet horizontally from existing or proposed water mains.

Watertight joints are required where reinforced concrete pipes, drop inlets, manholes, or junction boxes cross water mains and are separated a distance of 18 inches or less, above or below, the water main.

If watertight joints are required, then the watertight joints shall extend for a distance of 10 feet beyond the water main. This measurement shall be from the sealed concrete joint to the outer most surface of the water main.

Watertight joint seals shall conform to the following requirements:

1. Reinforced Concrete Pipe (Circular): Gasketed pipe shall conform to the requirements of ASTM C443. Non-gasketed concrete pipe shall be sealed with a mastic joint seal conforming to the requirements of ASTM C990 and encased with a minimum 2' wide by 6" thick M6 concrete collar reinforced with 6x6 W2.9 x W2.9 wire mesh.

2. Reinforced Concrete Pipe (Arch): Joints shall be sealed with a waterstop seal meeting the requirements of ASTM C990. Waterstop seals shall consist of hydrophilic compounds such as Waterstop-RX or ConSeal CS-231.

3. Drop Inlets, Manholes, and Junction Boxes: Joints shall be sealed with a waterstop seal or seal wrap meeting the requirements of ASTM C990 or encased with a minimum 2' wide by 6" thick M6 concrete collar reinforced with 6x6 W2.9 x W2.9 wire mesh. Waterstop seal shall contain hydrophilic compounds such as Waterstop-RX or ConSeal CS-231. Seal wrap shall be a self-adhesive external joint wrap such as ConWrap CS-217 or Mar Mac Seal Wrap.

Gaskets and seals (mastic, waterstop, and seal wraps) shall be installed in accordance with the manufacturer's recommendations.

The cost for furnishing and installing all gaskets, mastic joint seal, waterstop seal, seal wrap, concrete collars, and for plugging the lift holes shall be incidental to the contract unit price per foot for the corresponding pipe bid item.

## DROP INLETS

The plan shown quantities of the drop inlet components such as Class M6 Concrete, Reinforcing Steel, Type C Frame and Grate, and Type B Frame and Grate Assembly will be the basis of payment for these items.

If additions or reductions to the number of drop inlets are ordered by the Engineer, payment for the components required to construct the drop inlets will be made at the contract unit prices for the components of the drop inlets.

## TABLE OF DROP INLETS AND QUANTITIES

| Station | L/R | Drop Inlet Size | Drop Inlet Type | Class M6 Concrete (CuYd) | Reinf. Steel (Lb) | Frame and Grate/Lid Type |
|---|---|---|---|---|---|---|
| 0+43 | L | 2'x3' | B | 1.17 | 123 | B |
| 2+68 | R | 5.5'x5.5' | B | 4.22 | 1424 | B |
| 2+68 | L | 5.5'x5.5' | B | 4.48 | 1419 | B |
| 3+91 | L | 4'x3' | B | 1.99 | 250 | B |
| 3+91 | R | 4'x3' | B | 2.09 | 259 | B |
| 6+01 | L | 4'x4' | B | 1.78 | 414 | B |
| 7+64 | L | 4'x3' | B | 1.52 | 200 | B |
| 9+81 | L | 4'x3' | B | 1.51 | 199 | B |
| 10+65 | L | 2'x3' | B | 0.89 | 107 | B |
| 10+80 | R | 2'x3' | B | 0.79 | 93 | B |
| 11+17 | R | 2'x3' | B | 0.79 | 93 | B |
| 11+25 | L | 2'x3' | B | 0.95 | 112 | B |
| 14+15 | L | 2'x3' | B | 0.86 | 105 | B |
| 15+82 | L | 2'x3' | B | 0.88 | 102 | B |
| 16+62 | L | 2'x3' | B | 0.83 | 100 | B |
| 23+40 | L | 3'x4' | C | 1.44 | 187 | C |
| 24+37 | L | 2'x3' | B | 0.94 | 107 | B |
| 24+37 | R | 2'x3' | B | 1.12 | 123 | B |
| | | | Total | 28.27 | 5418 | |

Total Type B Frame and Grate Assembly 17

Total Type C Frame and Grate Assembly 1

## TABLE OF JUNCTION BOXES AND QUANTITIES

| Station | L/R | Size L'xW'xH' | Frame and Lid (Type) | Class M6 Concrete (CuYd) | Reinforcing Steel (Lb) |
|---|---|---|---|---|---|
| 4+79 | CL | 5'x5'x5.72' | A7 | 4.91 | 943 |
| 6+01 | CL | 5'x5'x5.06' | A7 | 4.64 | 915 |
| 24+37 | R | 5'x5'x7.03' | A7 | 5.55 | 1045 |
| | | | Totals: | 15.10 | 2903 |

Total Type A7 Manhole Frame and Lid 3

## CONCRETE PIPE CONNECTIONS

Pipe connections to existing pipes, manholes, junction boxes, and drop inlets shall be done by breaking a hole into the existing structure and inserting the pipe. A concrete collar shall then be poured around the pipe in the area of the connection.

When it is not possible to use a normal pipe joint (male-female ends), connections to existing pipe shall be made by placing a 2' wide by 6" thick M6 concrete collar around the outside of the connection. The concrete collar shall be reinforced with 6x6 W2.9 x W2.9 wire mesh.

All costs for constructing the concrete collars including materials and labor shall be incidental to the contract unit price per foot for the corresponding pipe bid item.

## ADJUSTMENT OF MANHOLES

The Contractor shall adjust manholes to the extent necessary on this project. Adjusting the manholes may consist of removing the upper course of brick or removing the concrete walls, replacing the removed materials with brick or Class M6 concrete, placing adjusting rings if necessary, and resetting the manhole frame and lid. The elevation of the lid shall be set at the same elevation of the adjacent new pavement or surrounding ground. All manhole frames, lids, and rings that are cracked or broken due to carelessness of the Contractor shall be replaced with new manhole frames, lids, and rings that conform with the Specifications at the Contractor's expense. Manholes shall be adjusted to the satisfaction of the Engineer. All costs involved in adjusting the manholes shall be incidental to the contract unit price per each for "ADJUST MANHOLE".

The Engineer may direct adjustment of manholes that were not included in these plans. Payment for adjusting manholes that were not included in the plans will be at the contract unit price per each for "Adjust Manhole".

## TABLE OF ADJUST MANHOLES

| Station | L/R | Type of Adjustment |
|---|---|---|
| 21+54 | R | Raise 0.7' |
| 23+41 | R | Raise 1.0' |

## TABLE FOR ADJUSTMENT OF WATER VALVES

| Station | Adjustment |
|---|---|
| 20+04 | Raise 0.1' |

## TABLE OF BANK CHANNEL PROTECTION GABIONS

| Stations and Offsets of corners of Gabions | Quantity (CuYd) |
|---|---|
| 2+62.88, 102.22' R to 2+62.69, 84.22' R to 2+74.69, 84.10' R to 2+74.88, 102.10' R | 12.0 |
| Totals: | 12.0 |

*PLANS BY: CLARK ENGINEERING, WATERTOWN, SD*

## TABLE OF TYPE B66 CONCRETE CURB AND GUTTER

| Station | to | Station | L/R | Quantity (Ft) |
|---|---|---|---|---|
| 0+20.38 | | 0+29.99 | L | 24.58 |
| 0+28.70 | | 0+30.02 | R | 2.00 |
| 0+34.99 | | 3+81.93 | L | 350.78 |
| 0+34.99 | | 3+81.93 | R | 351.95 |
| 3+86.93 | | 3+99.46 | L | 12.53 |
| 3+86.93 | | 4+02.26 | R | 17.18 |
| 4+07.70 | | 4+11.80 | R | 15.27 |
| 4+32.47 | | 4+74.37 | L | 41.90 |
| 4+51.03 | | 4+54.92 | R | 15.58 |
| 4+60.36 | | 4+74.37 | R | 31.42 |
| 4+79.37 | | 7+08.41 | L | 229.04 |
| 4+79.37 | | 7+08.41 | R | 229.04 |
| 7+13.41 | | 7+33.15 | R | 21.75 |
| 7+13.41 | | 7+22.48 | L | 9.07 |
| 7+38.61 | | 7+42.58 | R | 21.40 |
| 7+55.49 | | 8+04.00 | L | 48.51 |
| 7+82.05 | | 7+85.99 | R | 21.18 |
| 7+91.46 | | 8+04.00 | R | 14.56 |
| 8+09.00 | | 8+94.53 | L | 85.53 |
| 8+09.00 | | 8+94.53 | R | 85.53 |
| 8+99.53 | | 9+15.13 | L | 19.83 |
| 8+99.53 | | 10+52.60 | R | 153.07 |
| 9+18.31 | | 9+19.92 | L | 18.29 |
| 9+59.35 | | 9+61.22 | L | 18.23 |
| 9+64.42 | | 10+52.60 | L | 92.44 |
| 10+57.60 | | 10+76.57 | L | 18.97 |
| 10+57.60 | | 10+69.29 | R | 13.75 |
| 10+74.75 | | 10+78.93 | R | 31.75 |
| 11+12.92 | | 11+40.19 | L | 27.27 |
| 11+18.39 | | 11+22.16 | R | 36.04 |
| 11+27.65 | | 11+40.18 | R | 14.58 |
| 11+45.19 | | 13+99.52 | L | 254.33 |
| 11+45.19 | | 13+99.52 | R | 254.33 |
| 14+04.52 | | 14+08.52 | R | 5.28 |
| 14+04.52 | | 14+70.59 | L | 66.07 |
| 14+12.78 | | 14+14.66 | R | 16.12 |
| 14+53.75 | | 14+55.33 | R | 15.75 |
| 14+59.59 | | 14+70.58 | R | 13.34 |
| 14+75.59 | | 15+27.25 | L | 51.66 |
| 14+75.59 | | 15+87.18 | R | 111.59 |
| 15+55.22 | | 15+87.21 | L | 31.99 |
| 15+92.33 | | 16+01.52 | L | 16.58 |
| 15+92.21 | | 24+44.57 | R | 852.36 |
| 16+40.90 | | 24+44.58 | L | 803.68 |
| 24+49.57 | | 24+53.86 | L | 6.46 |
| 24+49.57 | | 24+60.95 | R | 11.38 |
| 24+57.09 | | 24+58.60 | L | 25.43 |
| 24+97.97 | | 24+99.96 | L | 26.06 |
| 25+03.11 | | 25+04.53 | L | 2.19 |
| 25+14.57 | | 25+21.57 | R | 7.00 |
| 25+19.58 | | 25+21.58 | L | 2.00 |
| 25+26.58 | | 25+33.58 | L | 7.00 |
| 25+26.57 | | 25+33.57 | L | 7.00 |
| 27+65.67 | | 27+76.90 | R | 11.54 |
| 27+70.70 | | 27+77.78 | L | 7.08 |
| 27+82.29 | | 27+87.31 | R | 15.93 |
| 27+82.78 | | 27+89.89 | L | 7.11 |
| 28+22.63 | | 28+29.63 | L | 7.00 |
| 28+26.41 | | 28+30.01 | R | 11.58 |
| 28+34.63 | | 28+41.63 | L | 7.00 |
| 28+34.73 | | 28+44.79 | R | 10.72 |
| 30+47.40 | | 30+54.41 | L | 7.01 |
| 30+47.11 | | 30+54.22 | R | 7.11 |
| 30+59.22 | | 30+80.06 | R | 30.78 |
| 30+59.41 | | 30+66.42 | L | 7.01 |
| 30+80.88 | | 30+80.84 | R | 7.26 |
| 31+22.33 | | 31+22.47 | R | 6.98 |
| 31+23.25 | | 31+44.59 | R | 31.45 |
| 37+77.09 | | 37+86.09 | R | 11.37 |
| 37+90.59 | | 37+93.57 | R | 13.03 |
| 38+34.56 | | 38+37.40 | R | 12.23 |
| 38+41.26 | | 38+51.76 | R | 13.30 |
| 52+36.09 | | 52+62.21 | R | 33.20 |
| 52+65.15 | | 52+68.73 | R | 16.69 |
| 53+09.34 | | 53+12.72 | R | 16.54 |
| 53+15.55 | | 53+43.30 | R | 35.33 |
| 59+06.44 | | 59+08.48 | R | 2.57 |
| 59+12.11 | | 59+12.85 | R | 2.26 |
| 65+97.51 | | 65+97.94 | R | 7.08 |
| 66+00.03 | | 66+12.53 | R | 14.90 |
| 76+17.82 | | 76+24.83 | L | 7.01 |
| 76+17.79 | | 76+24.78 | R | 6.99 |
| 76+29.83 | | 76+36.87 | L | 7.04 |
| 76+29.78 | | 76+36.60 | R | 6.82 |
| | | | Total: | 5042.54 |

## TABLE OF TYPE P6 CONCRETE GUTTER

| Station | to | Station | L/R | Quantity (Ft) |
|---|---|---|---|---|
| 0+29.99 | | 0+34.99 | L | 6.35 |
| 0+30.02 | | 0+34.99 | R | 8.90 |
| 3+81.93 | | 3+86.93 | L | 5.00 |
| 3+81.93 | | 3+86.93 | R | 5.00 |
| 3+99.46 | | 4+32.47 | L | 33.01 |
| 4+02.26 | | 4+07.70 | R | 8.90 |
| 4+54.92 | | 4+60.36 | R | 8.41 |
| 4+74.37 | | 4+79.37 | L | 5.00 |
| 4+74.37 | | 4+79.37 | R | 5.00 |
| 7+08.41 | | 7+13.41 | R | 5.00 |
| 7+08.41 | | 7+13.41 | L | 5.00 |
| 7+22.48 | | 7+55.49 | L | 33.01 |
| 7+33.15 | | 7+38.61 | R | 8.39 |
| 7+85.99 | | 7+91.46 | R | 8.39 |
| 8+04.00 | | 8+09.00 | L | 5.00 |
| 8+04.00 | | 8+09.00 | R | 5.00 |
| 8+94.53 | | 8+99.53 | L | 5.00 |
| 8+94.53 | | 8+99.53 | R | 5.00 |
| 9+15.13 | | 9+18.31 | L | 6.73 |
| 9+61.22 | | 9+64.42 | L | 6.72 |
| 10+52.60 | | 10+57.60 | L | 5.00 |
| 10+52.60 | | 10+57.60 | R | 5.00 |
| 10+69.29 | | 10+74.75 | R | 8.43 |
| 10+76.57 | | 11+12.92 | L | 36.35 |
| 11+22.16 | | 11+27.65 | R | 8.38 |
| 11+40.19 | | 11+45.19 | L | 5.00 |
| 11+40.18 | | 11+45.19 | R | 5.00 |
| 13+99.52 | | 14+04.54 | R | 5.00 |
| 13+99.52 | | 14+04.52 | L | 5.00 |
| 14+08.52 | | 14+12.78 | R | 7.60 |
| 14+55.33 | | 14+59.59 | R | 7.74 |
| 14+70.58 | | 14+75.59 | R | 5.00 |
| 14+70.59 | | 14+75.59 | L | 5.00 |
| 15+27.25 | | 15+55.22 | L | 27.97 |
| 15+87.21 | | 15+92.33 | L | 5.00 |
| 15+87.18 | | 15+92.21 | R | 5.00 |
| 24+44.58 | | 24+49.57 | L | 6.22 |
| 24+44.57 | | 24+49.57 | R | 5.00 |
| 24+53.86 | | 24+57.09 | L | 6.75 |
| 24+99.96 | | 25+03.11 | L | 6.99 |
| 25+21.58 | | 25+26.58 | L | 5.00 |
| 25+21.57 | | 25+26.57 | R | 5.00 |
| 27+76.90 | | 27+82.29 | R | 6.78 |
| 27+77.78 | | 27+82.78 | L | 5.00 |
| 28+29.63 | | 28+34.63 | L | 5.00 |
| 28+30.01 | | 28+34.73 | R | 6.61 |
| 30+54.41 | | 30+59.41 | L | 5.00 |
| 30+54.22 | | 30+59.22 | R | 5.00 |
| 30+80.06 | | 30+80.88 | R | 5.47 |
| 31+22.47 | | 31+23.25 | R | 5.61 |
| 37+86.09 | | 37+90.59 | R | 7.50 |
| 38+37.40 | | 38+41.26 | R | 7.14 |
| 52+62.21 | | 52+65.15 | R | 6.38 |
| 53+12.72 | | 53+15.55 | R | 6.24 |
| 59+08.48 | | 59+12.11 | R | 6.29 |
| 65+97.94 | | 66+00.03 | R | 5.00 |
| 76+24.83 | | 76+29.83 | L | 5.00 |
| 76+24.78 | | 76+29.78 | R | 5.00 |
| | | | Total: | 453.26 |

REGISTERED PROFESSIONAL ENGINEER
REG. NO. 9721
JOHN W. DESENS
SOUTH DAKOTA
12-31-14

*PLANS BY: CLARK ENGINEERING, WATERTOWN, SD*

## TYPE 1 DETECTABLE WARNINGS

Detectable warnings shall be in compliance with the Americans with Disability Act regulations.

The detectable warnings shall be installed according to the manufacturer's installation instructions.

A concrete thickness equal to the adjacent concrete sidewalk thickness and 2 inches of granular cushion material shall be placed below the Type 1 Detectable Warnings. When concrete is placed below the detectable warnings then the concrete thickness shall be transitioned at the rate of 1" per foot to match the adjacent concrete sidewalk thickness.

The detectable warnings shall be a brick red color for application in concrete curb ramps.

When Type 1 Detectable Warnings are specified, the Contractor shall furnish and install only one of the products listed in the Type 1 Detectable Warnings table.

Type 1 Detectable Warnings

| Product | Manufacturer |
|---|---|
| Detectable Warning Plate<br>Cast Iron Plate | Neenah Foundry Company<br>Neenah, WI<br>800-558-5075<br>http://www.neenahfoundry.com/ |
| Detectable Warning Plate<br>Cast Iron Plate | Deeter Foundry<br>Lincoln, NE<br>800-234-7466<br>http://www.deeter.com/ |
| Detectable Warning Plate<br>Cast Iron Plate | East Jordan Iron Works, Inc.<br>301 Spring Street<br>East Jordan, MI 49727<br>800-626-4653<br>http://www.ejiw.com |
| CAST-DWD<br>Cast Iron Plate | Key 3 Casting (Northern Foundry)<br>555 West 25th Street<br>Hibbing, MN 55746<br>218-263-8871<br>http://key3casting.com |

## TABLE OF TYPE 1 DETECTABLE WARNINGS

| Station | L/R | Quantity (SqFt) |
|---|---|---|
| 0+32.49 | 24.98' L | 10 |
| 0+31.79 | 36.52' R | 10 |
| 3+84.43 | 20.67' L | 10 |
| 3+84.43 | 20.67' R | 10 |
| 4+03.46 | 25.28' R | 10 |
| 4+58.32 | 25.38' R | 10 |
| 4+76.87 | 20.67' L | 10 |
| 4+76.87 | 20.67' R | 10 |
| 7+10.91 | 20.67' L | 10 |
| 7+10.91 | 20.67' R | 10 |
| 7+35.21 | 25.28' R | 10 |
| 7+89.42 | 25.30' R | 10 |
| 8+06.50 | 20.67' L | 10 |
| 8+06.50 | 20.67' R | 10 |
| 8+97.03 | 20.67' L | 10 |
| 8+97.03 | 20.67' R | 10 |
| 9+20.00 | 45.44' L | 10 |
| 9+59.41 | 45.44' L | 10 |
| 10+55.10 | 20.67' L | 10 |
| 10+55.10 | 20.67' R | 10 |
| 10+71.33 | 25.28' R | 10 |
| 11+25.62 | 25.30' R | 10 |
| 11+42.69 | 20.67' L | 10 |
| 11+42.69 | 20.67' R | 10 |
| 14+02.02 | 20.67' L | 10 |
| 14+02.02 | 20.67' R | 10 |
| 14+08.52 | 26.17' R | 10 |
| 14+59.61 | 26.17' R | 10 |
| 14+73.09 | 20.67' L | 10 |
| 14+73.09 | 20.67' R | 10 |
| 15+89.71 | 21.76' L | 10 |
| 15+89.71 | 20.67' R | 10 |
| 24+47.07 | 20.67' R | 10 |
| 24+47.07 | 22.47' L | 10 |
| 24+58.82 | 45.44' L | 10 |
| 24+97.98 | 45.44' L | 10 |
| 25+24.08 | 21.10' L | 10 |
| 25+24.07 | 20.15' R | 10 |
| 27+80.28 | 20.88' L | 10 |
| 27+79.95 | 24.37' R | 10 |
| 28+32.13 | 21.03' L | 10 |
| 28+32.14 | 26.09' R | 10 |
| 30+56.91 | 20.79' L | 10 |
| 30+56.72 | 20.53' R | 10 |
| 30+80.04 | 37.33' R | 10 |
| 31+23.24 | 37.58' R | 10 |
| 37+86.10 | 27.56' R | 10 |
| 38+41.42 | 28.61' R | 10 |
| 44+56.88 | 28.34' R | 10 |
| 52+62.19 | 39.13' R | 10 |
| 53+15.48 | 39.72'R | 10 |
| 55+89.46 | 28.64' R | 10 |
| 56+39.08 | 28.44' R | 10 |
| 59+08.39 | 28.27' R | 10 |
| 59+58.93 | 28.33' R | 10 |
| 62+32.14 | 28.87' R | 10 |
| 62+82.83 | 27.91' R | 10 |
| 65+54.32 | 31.24' R | 10 |
| 66+00.03 | 30.92' R | 10 |
| 68+52.34 | 24.80' L | 10 |
| 69+06.68 | 25.75' L | 10 |
| 76+27.28 | 21.00' R | 10 |
| 76+27.33 | 19.87' L | 10 |
| 76+42.93 | 31.16' R | 10 |
| 76+77.97 | 30.98' R | 10 |
| | Total: | 650 |

## TABLE OF 6" REINFORCED PCC APPROACH PAVEMENT

| Station | L/R | Type | Quantity (SqYd) |
|---|---|---|---|
| 3+93.46 to 4+38.47 | L | A | 52.56 |
| 7+16.48 to 7+61.46 | L | A | 52.50 |
| 10+70.48 to 11+18.92 | L | A | 56.88 |
| 15+21.25 to 15+61.22 | L | A | 45.88 |
| | | Total: | 207.8 |

REGISTERED PROFESSIONAL ENGINEER
9721
JOHN W. DESENS
SOUTH DAKOTA

12-31-14

**TABLE OF 4" CONCRETE SIDEWALK**

| Station | to | Station | L/R | Quantity (SqFt) |
|---|---|---|---|---|
| 0+28.40 | | 3+99.46 | L | 2055.3 |
| 0+28.70 | | 4+08.82 | R | 1989.4 |
| 4+32.47 | | 7+22.48 | L | 1547.8 |
| 4+53.82 | | 7+39.73 | R | 1472.4 |
| 7+55.49 | | 9+19.04 | L | 989.5 |
| 7+84.88 | | 10+75.87 | R | 1771.9 |
| 9+60.05 | | 10+76.57 | L | 704.0 |
| 11+12.92 | | 12+54.00 | L | 756.6 |
| 11+21.07 | | 14+13.06 | R | 1733.2 |
| 14+54.51 | | 26+54.68 | R | 6091.3 |
| 16+49.11 | | 24+57.80 | L | 4122.3 |
| 24+99.42 | | 27+01.14 | L | 1140.3 |
| 26+77.99 | | 27+86.44 | R | 583.0 |
| 27+30.25 | | 28+49.40 | L | 685.8 |
| 28+27.42 | | 28+43.36 | R | 117.3 |
| 30+52.41 | | 30+61.41 | L | 57.2 |
| 30+35.65 | | 30+80.88 | R | 419.3 |
| 31+22.43 | | 31+72.24 | R | 297.9 |
| 32+47.64 | | 35+81.54 | R | 1317.8 |
| 37+64.11 | | 37+91.58 | R | 141.2 |
| 38+36.51 | | 38+54.43 | R | 81.9 |
| 42+63.82 | | 43+99.38 | R | 544.1 |
| 44+52.47 | | 45+53.78 | R | 417.5 |
| 47+07.00 | | 47+83.53 | R | 284.2 |
| 48+68.22 | | 49+56.95 | R | 346.9 |
| 52+38.03 | | 52+66.01 | R | 192.3 |
| 53+11.92 | | 53+46.75 | R | 234.3 |
| 55+79.46 | | 55+93.51 | R | 92.1 |
| 56+34.70 | | 56+48.67 | R | 92.0 |
| 59+00.20 | | 59+12.85 | R | 67.5 |
| 59+55.06 | | 60+17.58 | R | 279.7 |
| 60+29.10 | | 61+07.86 | R | 311.7 |
| 61+54.71 | | 62+35.82 | R | 342.8 |
| 62+78.47 | | 63+75.32 | R | 509.1 |
| 63+96.78 | | 64+59.77 | R | 301.6 |
| 64+91.69 | | 65+56.35 | R | 332.9 |
| 65+97.78 | | 66+11.77 | R | 80.5 |
| 68+36.17 | | 68+55.81 | L | 150.3 |
| 69+03.41 | | 73+19.93 | L | 2119.6 |
| 73+60.68 | | 77+04.83 | L | 1768.3 |
| 76+22.78 | | 76+31.78 | R | 54.5 |
| 76+31.22 | | 76+44.96 | R | 99.8 |
| 76+76.33 | | 76+90.18 | R | 103.7 |
| 77+45.75 | | 78+67.33 | L | 607.7 |
| 78+92.89 | | 83+82.92 | L | 2656.6 |
| | | | Total: | 40065.1 |

**TABLE OF 6" CONCRETE SIDEWALK**

| Station | to | Station | L/R | Quantity (SqFt) |
|---|---|---|---|---|
| 12+54.00 | | 15+93.99 | L | 1566.7 |
| 63+75.32 | | 63+96.78 | R | 46.5 |
| 73+19.93 | | 73+60.68 | L | 251.3 |
| 77+04.83 | | 77+45.75 | L | 267.4 |
| 78+67.33 | | 78+92.89 | L | 100.5 |
| | | | Total: | 2232.4 |

**MAILBOXES**

The Contractor shall reset the existing mailboxes on new posts with the necessary support hardware for single mailbox assemblies. The local Postmaster will determine the recommended mounting height of the mailboxes throughout the project. The Contractor shall coordinate with the Engineer on the proper postal representative to contact.

All costs for removing existing mailboxes, providing temporary mailboxes, and resetting mailboxes with new posts and necessary support hardware shall be incidental to the contract unit price per each for "Refurbish Single Mailbox".

Mailboxes shall be refurbished at the following locations: 11+53 L, 36+27 R, 42+20 L, 46+68 R, 48+40 R, 50+10 R, and 51+06 R.

**INCIDENTAL WORK, GRADING**

Pipe removed, as incidental work shall be cleaned of dirt and salvaged for the City. It will be delivered to the City unless not wanted by the City, and then it shall be disposed of by the Contractor. Pipes to be filled with sand are to be abandoned and filled over.

**TABLE OF INCIDENTAL WORK, GRADING**

| Station | Task |
|---|---|
| 0+32-35'LT | Remove riprap for sidewalk construction. |
| 4+17-39'LT | Fill 18" x 48' RCP & 2-36" RC Flared Ends with sand. |
| 4+32-18'RT | Remove 36" x 91' RCP & 2-36" RC Flared Ends. |
| 6+01-CL | Remove 36" Arch x 57' RCP & 2-36" Arch Flared Ends. |
| 7+36-47'RT | Remove 12" x 11' RCP, 1-12" RC Flared End, & Plug Drop Inlet. |
| 7+40-38'RT | Remove 18" x 49' CMP & 2-18" CM Flared Ends. |
| 7+44-47'RT | Connect new 18" RCP into existing Drop Inlet. |
| 9+40-35'LT | Remove 18" x 63' CMP & 2-18" CM Flared Ends. |
| 10+96-36'LT | Remove 18" x 52' CMP & 2-18" CM Flared Ends. |
| 11+00-30'RT | Remove 18" x 64' RCP & 2-18" RC Flared Ends. |
| 14+06-33'RT | Remove 18" x 14' CMP & 1-18" CM Flared End. |
| 14+15-32'RT | Connect new 18" RCP into existing Drop Inlet. |
| 16+50-28'LT | Remove 12" x 18' RCP, 1-12" RC Flared End. |
| 24+75-33'LT | Fill 18" x 66' RCP & 1-18" RC Flared End with sand. |

**SALVAGE AND STOCKPILE ASPHALT MIX AND GRANULAR BASE MATERIAL**

An estimated 7124.6 tons (3562.3 Cubic Yards) of asphalt mix and granular base material shall be salvaged from the length of the existing street from Station 0+17 to Station 24+62 and stockpiled at a site furnished by the Contractor and satisfactory to the Engineer.

The quantity of salvage asphalt mix and granular base material may vary from the plans. No adjustment will be made to the contract unit price for variations of the quantity of "Salvage and Stockpile Asphalt Mix and Granular Base Material."

It is estimated that there are 254 cubic yards of salvageable material available per station. This rate was used to compute the unclassified excavation quantities. The rate of salvageable material is based on a 38 foot width.

REGISTERED PROFESSIONAL ENGINEER
REG. NO. 9721
JOHN W. DESENS
SOUTH DAKOTA
1-27-15

**TABLE OF CONSTRUCTION STAKING**
(See Special Provision for Contractor Staking)

| | | | | | Grade Staking | | | | | | |
|---|---|---|---|---|---|---|---|---|---|---|---|
| Roadway and Description | Begin Station | End Station | Number of Lanes | Length (Ft) | Length (Mile) | Lane Factor | *Sets of Stakes | **Grade Staking Quantity (Mile) | Miscellaneous Staking Quantity (Mile) | Slope Staking Quantity (Mile) | Structure Staking Quantity (Each) |
| 19th Street (3 Lanes AC Pavement) | 0+18 | 24+62 | 3 | 2444 | 0.463 | 1.5 | 1 | 0.694 | 0.463 | 0.463 | 0 |
| | | | | | | | Totals: | 0.694 | 0.463 | 0.463 | 0 |

* 1 = Blue Top Stakes Only (Asphalt Concrete Pavement)

** Grade Staking Quantity = (Length) x (Lane Factor) x (Sets of Stakes)

# TABLE OF PIPE QUANTITIES

FOR BIDDING PURPOSES ONLY

| STATE OF SOUTH DAKOTA | PROJECT | SHEET | TOTAL SHEETS |
|---|---|---|---|
| | P 4243(03) | B10 | B99 |

| | Reinforced Concrete | | | | | | | | | | | | |
|---|---|---|---|---|---|---|---|---|---|---|---|---|---|
| | Circular | | | | | | | Arch | Circular Flared End | | | | |
| | 12" | 15" | 18" | 24" | 30" | 36" | 48" | 48" | 12" | 15" | 18" | 36" | 48" |
| | Cl. 2 | Cl. 2 | Cl. 2 | Cl. 2 | Cl. 2 | Cl. 2 | Cl. 2 | | | | | | |
| Station Offset (L/R) | Ft | Ft | Ft | Ft | Ft | Ft | Ft | Ft | Each | Each | Each | Each | Each |
| 0+43-19'L to 2+68-19'L | | | 226 | | | | | | | | | | |
| 2+68-43'L to 2+68-19'L | | | 24 | | | | | | | | | | |
| 2+68-19'L to 2+68-19'R | | | | | 40 | | | | | | | | |
| 2+68-19'R to 2+69-86'R | | | | | | | 67 | | | | | | |
| 2+68-19'R to 3+92-19'R | | | | | | | | 124 | | | | | |
| 2+68-43'L | | | | | | | | | | | 1 | | |
| 2+69-86'R | | | | | | | | | | | | | 1 |
| 3+92-19'R to 3+91-19'L | | | 39 | | | | | | | | | | |
| 3+92-19'R to 4+79-CL | | | | | | | | 90 | | | | | |
| 4+79-CL to 6+01-CL | | | | | | | | 122 | | | | | |
| 4+79-CL to 4+79-43'R | | | 44 | | | | | | | | | | |
| 4+79-43'R | | | | | | | | | | | 1 | | |
| 6+01-CL to 6+01-19'L | | | | | | | | 20 | | | | | |
| 6+01-19'L to 6+01-51'L | | | | | | 32 | | | | | | | |
| 6+01-19'L to 7+64-19'L | | | | | 164 | | | | | | | | |
| 6+01-51'L | | | | | | | | | | | | 1 | |
| 7+44-49'R to 7+64-19'L | | | 72 | | | | | | | | | | |
| 7+64-19'L to 7+72-44'L | | | 26 | | | | | | | | | | |
| 7+64-19'L to 9+81-19'L | | | | 218 | | | | | | | | | |
| 7+72-44'L | | | | | | | | | | | 1 | | |
| 7+93-45'R to 8+02-42'R | 10 | | | | | | | | | | | | |
| 8+02-42'R | | | | | | | | | 1 | | | | |
| 9+81-19'L to 10+65-19'L | | | 84 | | | | | | | | | | |
| 9+83-44'L to 9+81-19'L | | | 24 | | | | | | | | | | |
| 9+83-44'R | | | | | | | | | | | 1 | | |
| 10+65-19'L to 11+25-19'L | | | 60 | | | | | | | | | | |
| 10+80-42'R to 10+65-19'L | | 64 | | | | | | | | | | | |
| 10+80-42'R to 11+17-43'R | | 38 | | | | | | | | | | | |
| 11+25-19'L to 11+31-44'L | | 26 | | | | | | | | | | | |
| 11+25-19'L to 14+15-19'L | | | 290 | | | | | | | | | | |
| 11+31-44'L | | | | | | | | | | 1 | | | |
| 11+42-42'R to 11+17-43'R | | 26 | | | | | | | | | | | |
| 11+42-42'R | | | | | | | | | | 1 | | | |
| 14+15-19'L to 15+82-19'L | | | 168 | | | | | | | | | | |
| 14+15-33'R to 14+15-19'L | | | 54 | | | | | | | | | | |
| 15+82-19'L to 16+62-19'L | | 80 | | | | | | | | | | | |
| 16+62-19'L to 16+63-41'L | | | 22 | | | | | | | | | | |
| 16+63-41'L | | | | | | | | | | | 1 | | |
| 24+37-19'L to 24+38-37'L | | 22 | | | | | | | | | | | |
| 24+37-19'L to 24+37-19'R | | 40 | | | | | | | | | | | |
| 24+37-19'R to 24+37-25'R | | 6 | | | | | | | | | | | |
| 24+37-37'L | | | | | | | | | | 1 | | | |
| **Total** | 10 | 302 | 1133 | 218 | 204 | 32 | 67 | 356 | 1 | 3 | 5 | 1 | 1 |

REGISTERED PROFESSIONAL ENGINEER
9721
JOHN W. DESENS
SOUTH DAKOTA
12-31-14

*PLANS BY: CLARK ENGINEERING,, WATERTOWN, SD*

# TYPICAL SECTIONS

FOR BIDDING PURPOSES ONLY

| STATE OF SOUTH DAKOTA | PROJECT | SHEET | TOTAL SHEETS |
|---|---|---|---|
| | P 4243(03) | B11 | B99 |

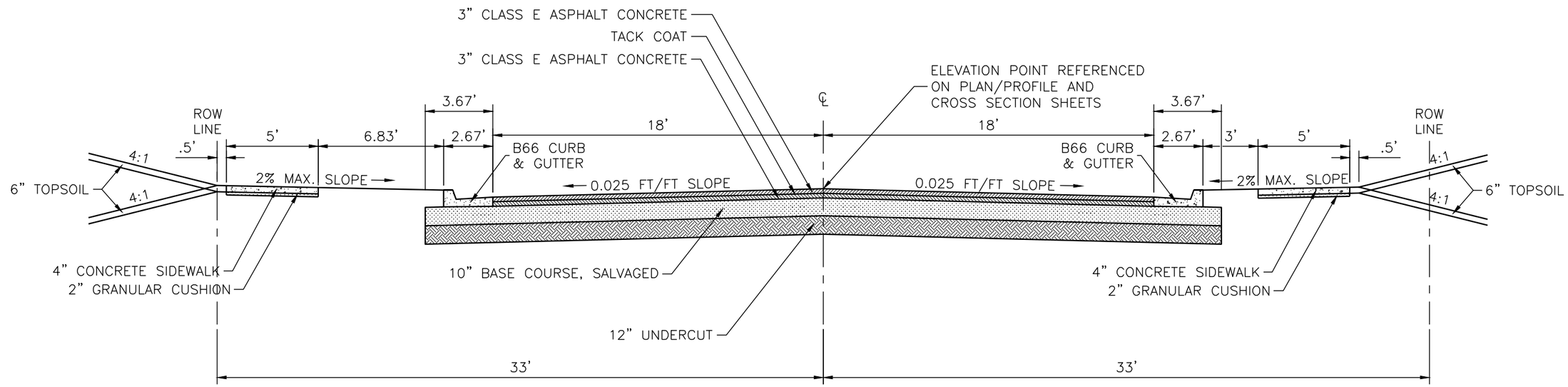


STA 0+16.63 to STA 12+54.00 and STA 16+00.00 to 24+61.18

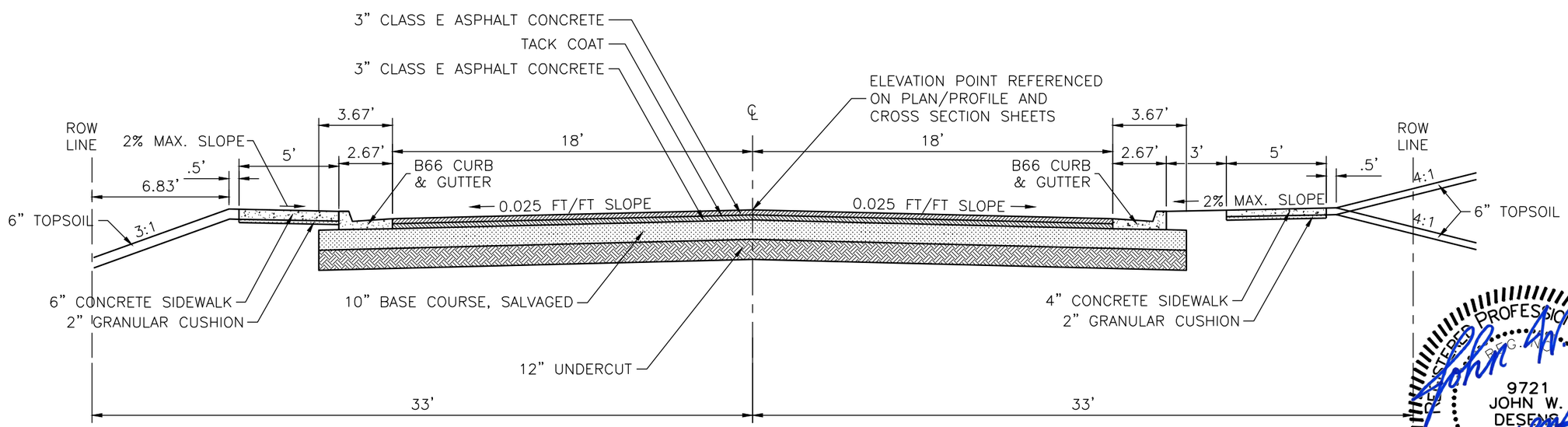


STA 12+54.00 to STA 16+00.00

REGISTERED PROFESSIONAL ENGINEER
9721
JOHN W. DESENS
SOUTH DAKOTA
12-31-14

PLANS BY: CLARK ENGINEERING, WATERTOWN, SD

1/21/2015 9:06 AM Z:\2013 PROJECTS\X13038 WATERTOWN 19TH STREET\DESIGN\SEC B\TYPICAL SECTION.DWG

# TYPICAL SECTIONS

FOR BIDDING PURPOSES ONLY

| STATE OF SOUTH DAKOTA | PROJECT | SHEET | TOTAL SHEETS |
|---|---|---|---|
| | P 4243(03) | B12 | B99 |

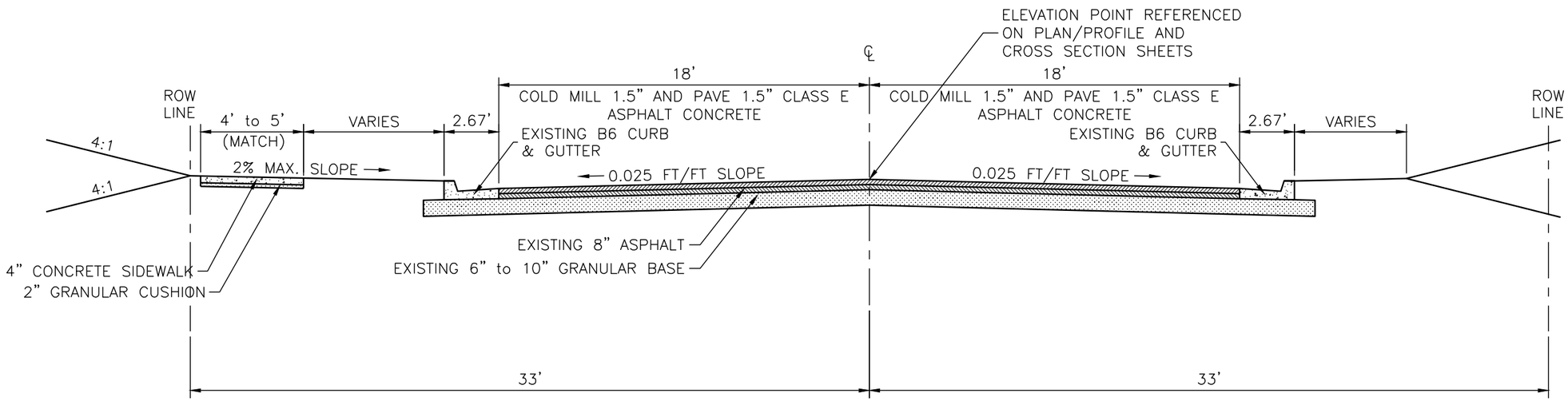


NOTE: F&I 4" CONCRETE SIDEWALK IN LOCATIONS SHOWN ON PLANS

STA 24+61.18 to STA 83+83.90

REGISTERED PROFESSIONAL ENGINEER
REG. NO.
9721
JOHN W. DESENS
SOUTH DAKOTA
John W. Desens
12-31-14

PLANS BY: CLARK ENGINEERING, WATERTOWN, SD

1/21/2015 9:06 AM Z:\2013 PROJECTS\X13038 WATERTOWN 19TH STREET\DESIGN\SEC B\TYPICAL SECTION.DWG

# HORIZONTAL ALIGNMENT DATA

FOR BIDDING PURPOSES ONLY

| 19th STREET | | | | | |
|---|---|---|---|---|---|
| **TYPE** | **STATION** | | | **NORTHING** | **EASTING** |
| POB | 0+00.00 | | | 409435.511 | 2723043.159 |
| | | TL=2637.14 | S 01°26'26" E | | |
| PI | 26+37.14 | | | 406799.202 | 2723109.459 |
| | | TL=2653.41 | S 02°26'27" E | | |
| PI | 52+90.55 | | | 404148.204 | 2723222.460 |
| | | TL=3156.01 | S 03°01'31" E | | |
| POE | 84+46.56 | | | 400996.592 | 2723389.025 |

# CONTROL DATA

FOR BIDDING PURPOSES ONLY

**HORIZONTAL AND VERTICAL CONTROL POINTS**

| POINT | STATION | OFFSET | DESCRIPTION | NORTHING | EASTING | ELEVATION |
|---|---|---|---|---|---|---|
| 10 | 21+38 | 23'R | CP /10 - Rebar | 16322465.550 | 2135926.494 | 1789.852 |
| 12 | 35+82 | 31'L | CP /12 - Rebar | 16321023.660 | 2136014.850 | 1789.94 |
| 10001 | 30+36 | 24'L | CP /1Z - Nail w/ Chaser | 16321569.126 | 2135991.958 | 1785.208 |
| 10002 | 35+82 | 31'L | CP /2Z - Pin w/ Control Point Cap | 16321023.700 | 2136014.847 | 1787.032 |
| 10003 | 43+03 | 25'L | CP /3Z - Nail w/ Chaser | 16320303.229 | 2136030.433 | 1769.989 |
| 10004 | 52+37 | 82'L | CP /4Z - Pin w/ Control Point Cap | 16319370.975 | 2136116.309 | 1762.499 |
| 10005 | 57+19 | 22'L | CP /5Z - Nail w/ Chaser | 16318887.938 | 2136074.866 | 1759.887 |
| 10006 | 66+19 | 42'L | CP /6Z - Pin w/ Control Point Cap | 16317989.225 | 2136130.994 | 1738.717 |
| 10007 | 74+06 | 27'L | CP /7Z - Nail w/ Chaser | 16317202.961 | 2136147.575 | 1731.683 |
| 10008 | 82+02 | 36'R | CP /8Z - Pin w/ Control Point Cap | 16316404.925 | 2136117.423 | 1726.754 |
| 10009 | 73+28 | 35'R | CP /9Z - Nail w/ Chaser | 16317277.682 | 2136082.682 | 1732.63 |
| 10010 | 68+32 | 35'R | CP /10Z - Nail w/ Chaser | 16317773.086 | 2136062.828 | 1735.111 |
| 10011 | 62+93 | 24'R | CP /11Z - Nail w/ Chaser | 16318312.581 | 2136051.766 | 1743.605 |
| 10012 | 56+50 | 24'R | CP /12Z - Nail w/ Chaser | 16318954.814 | 2136025.927 | 1760.33 |
| 10013 | 48+46 | 24'R | CP /13Z - Nail w/ Chaser | 16319758.703 | 2135997.712 | 1761.083 |
| 10014 | 38+56 | 24'R | CP /14Z - Nail w/ Chaser | 16320748.651 | 2135968.441 | 1779.642 |
| 10015 | 30+62 | 23'R | CP /15Z - Nail w/ Chaser | 16321541.609 | 2135945.408 | 1785.384 |
| 10017 | 25+65 | 25'R | TCP /17 - Nail w/ Chaser | 16322038.491 | 2135929.760 | 1785.768 |
| 10018 | 45+75 | 33'L | TCP /18 - Nail w/ Chaser | 16320031.408 | 2136046.798 | 1763.057 |
| 10019 | 58+57 | 27'L | TCP /19 - Nail w/ Chaser | 16318750.657 | 2136085.665 | 1757.907 |
| 10020 | 77+31 | 26'R | TCP /20 - Nail w/ Chaser | 16316876.079 | 2136108.501 | 1729.702 |
| 10201 | 27+82 | 41'R | BM /1 - T.T.N. on Fire Hydrant @ NW Cor. of Inter. of 8th Ave NE & 19th St | 16321820.216 | 2135918.915 | 1787.214 |
| 10202 | 37+90 | 37'R | BM /2 - T.T.N. on Fire Hydrant @ NW Cor. of Inter. of 7th Ave NE & 19th St | 16320814.066 | 2135953.745 | 1784.322 |
| 10203 | 39+64 | 26'R | BM /3 - T.T.N. on Fire Hydrant on West Side of 19th St, South of 7th Ave NE | 16320640.430 | 2135969.739 | 1780.082 |
| 10204 | 44+06 | 37'R | BM /4 - T.T.N. on Fire Hydrant @ NW Cor. of Inter. of 6th Ave NE & 19th St | 16320198.070 | 2135971.846 | 1770.411 |
| 10205 | 48+73 | 28'R | BM /5 - T.T.N. on Fire Hydrant on West Side of 19th St, Midway between 6th Ave NE & 3rd Ave NE | 16319732.013 | 2135994.600 | 1763.437 |
| 10206 | 48+73 | 28'R | BM /6 - T.T.N. on Fire Hydrant on West Side of 19th St, Midway between 6th Ave NE & 3rd Ave NE | 16319731.973 | 2135994.648 | 1763.449 |
| 10207 | 52+63 | 44'R | BM /7 - T.T.N. on Fire Hydrant @ NW Cor. of Inter. of 3rd Ave NE & 19th St | 16319341.192 | 2135991.097 | 1760.687 |
| 10208 | 55+91 | 38'R | BM /8 - T.T.N. on Fire Hydrant @ NW Cor. of Inter. of 2nd Ave NE & 19th St | 16319013.524 | 2136010.089 | 1762.809 |
| 10209 | 59+12 | 37'R | BM /9 - T.T.N. on Fire Hydrant @ NW Cor. of Inter. of Bruhn Ave & 19th St | 16318692.966 | 2136023.475 | 1757.799 |
| 10210 | 62+35 | 37'R | BM /10 - T.T.N. on Fire Hydrant @ NW Cor. of Inter. of Country Ave NE & 19th St | 16318370.259 | 2136036.522 | 1746.911 |
| 10211 | 65+55 | 38'R | BM /11 - T.T.N. on Fire Hydrant @ NW Cor. of Inter. of Arrow Ave NE & 19th St | 16318050.486 | 2136048.763 | 1740.673 |
| 10212 | 70+03 | 26'R | BM /12 - T.T.N. on Fire Hydrant on West Side of 19th St South Side of North Entrance to | 16317603.328 | 2136079.258 | 1736.165 |
| 10213 | 74+48 | 23'R | BM /13 - T.T.N. on Fire Hydrant on West Side of 19th St North of Westminster Ave N | 16317158.771 | 2136100.160 | 1734.172 |
| 10214 | 78+14 | 45'L | BM /14 - T.T.N. on Fire Hydrant on East Side of 19th St South of Westminster Ave N | 16316795.743 | 2136181.952 | 1731.971 |

REGISTERED PROFESSIONAL ENGINEER
REG. NO.
9721
JOHN W. DESENS
SOUTH DAKOTA
John W. Desens
12-31-14

| STATE OF SOUTH DAKOTA | PROJECT | SHEET | TOTAL SHEETS |
|---|---|---|---|
| | P 4243(03) | B15 | B99 |

FOR BIDDING PURPOSES ONLY

REGISTERED PROFESSIONAL ENGINEER
REG. NO.
9721
JOHN W. DESENS
SOUTH DAKOTA
12-31-14

# EXISTING TOPOGRAPHY SYMBOLOGY AND LEGEND

- Siren
- Sixteenth Corner
- Speed Limit Sign
- Spike
- Sprinkler Head
- Stake
- Steel Post
- Street Light
- Street Sign
- Stone Monument
- Stop Sign
- Stormsewer Manhole
- Taxiway Light
- T Bar
- Telephone Manhole
- Telephone Pedestal
- Telegraph Pole
- Television/cable Pedestal
- Temporary Benchmark
- Temporary Control Point
- Traffic Signal
- Trash Barrel
- Triple Post Sign
- Tree-coniferous
- Tree-dead
- Tree-deciduous
- Tree-stump
- Water Curb Stop
- Water Fountain
- Water Hydrant
- Water Manhole
- Water Meter
- Water Valve
- Water Cistern
- Water Well
- Water Post Indicator Valve
- Water Stand Pipe
- Wetland Delineator Flag
- Witness Corner
- Windsock
- Wood Post
- Yield Sign
- Lift Station
- Light Pole
- Location Of Photo
- Magnetic Nail
- Mail Box
- Meander Corner
- Merry Go Round
- Mile Reference Marker
- Monitoring Well
- Nail
- Parking Block
- Parking Meter
- Pinch Top Pipe
- PK Nail
- Power Box
- Power Manhole
- Power Pedestal
- Power Pole
- Power Pole With Light
- Power/electric Meter
- Public Telephone
- Photo Control Target
- Quarter Corner
- Rail Road Crossing Sign
- Rail Road Mile Marker
- Rail Road Right Of Way
- Rail Road Spike
- Rail Road Right Of Way Marker
- Rail Road Signal
- Rebar
- Rebar With Aluminum Cap
- Rebar With Plastic Cap
- Reference Corner
- Right Of Way Monument
- Sanitary Manhole
- Satellite Dish
- Septic Tank Lid
- Section Corner
- Sewer Cleanout
- Single Post Sign
- Antenna
- Azimuth Marker
- BBQ Grill
- Beacon
- Bearing Tree
- Benchmark
- Bore Hole
- Brass Disk
- Bush
- Cast Iron Monument
- Chiseled X
- Concrete Monument
- Control Point
- Cooling Unit
- Decorative Yard Lamp
- Delineator
- Ditch Block
- Double Post Sign
- Drill Hole
- Electric Outlet
- Fiber Optic Marker
- Fiber Optic Pedestal
- Fire Hydrant 2
- Fire Hydrant 3
- Flag Pole
- Fuse Box
- Gas Manhole
- Gas Meter
- Gas Pump
- Gas Valve
- Gas Vent
- Generic Manhole
- Gps Base Point
- Guard Post/bollard
- Guy Pole
- Guy Wire
- Hub
- Iron Pin
- Iron Pipe
- Judicial Land Corner
- Lawn Sprinkler

PLANS BY: CLARK ENGINEERING, WATERTOWN, SD

1/21/2015 9:12 AM Z:\2013 PROJECTS\X13038 WATERTOWN 19TH STREET\DESIGN\SEC B\SYMBOL TABLE.DWG

# EXISTING TOPOGRAPHY SYMBOLOGY AND LEGEND

FOR BIDDING PURPOSES ONLY

| STATE OF SOUTH DAKOTA | PROJECT | SHEET | TOTAL SHEETS |
|---|---|---|---|
| | P 4243(03) | B16 | B99 |

By Layer
Acad_iso02w100, Iso Dash
Acad_iso03w100, Iso Dash Space
Acad_iso04w100, Iso Long Dash Dot
Acad_iso05w100, Iso Long Dash Double-Dot
Acad_iso06w100, Iso Long Dash Triple-Dot
Acad_iso07w100, Iso Dot
Acad_iso08w100, Iso Long-Dash Short-Dash
Acad_iso09w100, Iso Long-Dash Double-Short-Dash
Acad_iso010w100, Iso Dash Dot
Acad_iso011w100, Iso Double-Dash Dot
Acad_iso012w100, Iso Dash Double-Dot
Acad_iso013w100, Iso Double-Dash Double-Dot
Acad_iso014w100, Iso Dash Triple-Dot
Acad_iso015w100, Iso Double-Dash Triple-Dot
Border
Border2
BorderX2
Cast Or Ductile Pipe-Existing
Cast Or Ductile Pipe-Pro
Center
Center2
CenterX2
Continuous
Corrugated Metal Pipe Arch-Existing
Corrugated Metal Pipe Arch-Pro
Corrugated Metal Pipe-Existing
Corrugated Metal Pipe-Pro
Cut Limits
Cut Line
Dash Dot
Dash Dot2
Dash DotX2
Dashed
Dashed2
DashedX2
Divide
Divide2
DivideX2
Dot
Dot2
Dot4
DotX2
Drain Tile-Existing

Drain Tile-Pro
Fence Barbed Wire-Existing
Fence Chain Link-Existing
Fence Electric-Existing
Fence Generic-Existing
Fence Wooden-Existing
Fence Woven Wire-Existing
Fence Vinyl-Existing
Fill Limits
Fill Line
Flow
Flow Sanitary Sewer-Existing
Flow Sanitary Sewer-Pro
Flow Storm Sewer-Existing
Flow Storm Sewer-Pro
Forcemain-Existing
Forcemain-Pro
Gas-Existing
Gas-Pro
Hidden2
Hidden
HiddenX2
Original Ground
Overhead Power-Existing
Overhead Power-Pro
Overhead Telegraph-Existing
Overhead Telegraph-Pro
Overhead Telephone-Existing
Overhead Telephone-Pro
Overhead Television-Existing
Overhead Television-Pro
Phantom
Phantom2
PhantomX2
Polyvinyl Chloride Pipe-Existing
Polyvinyl Chloride Pipe-Pro
Reinforced Concrete Pipe Arch-Existing
Reinforced Concrete Pipe Arch-Pro
Reinforced Concrete Pipe-Existing
Reinforced Concrete Pipe-Pro
Ribbed High Density Polyethylene Pipe-Existing
Ribbed High Density Polyethylene Pipe-Pro
Sanitary Sewer-Existing
Sanitary Sewer-Pro

Seeding Limits
Silt Fencing
Slough Grass-Existing
Storm Sewer-Existing
Storm Sewer-Pro
Telephone Fiber Optic
Television Fiber Optic
Tracks
Underground Cable Television-Existing
Underground Cable Television-Pro
Underground Telephone-Existing
Underground Telephone-Pro
Underground Power-Existing
Underground Power-Pro
Water-Existing
Water-Pro
Wetlands-Existing
Wetlands-Pro
Work Limits Word
Work Limits

REGISTERED PROFESSIONAL ENGINEER
9721
JOHN W. DESENS
SOUTH DAKOTA
12-31-14

PLANS BY: CLARK ENGINEERING, WATERTOWN, SD

1/21/2015 9:13 AM Z:\2013 PROJECTS\X13038 WATERTOWN 19TH STREET\DESIGN\SEC B\SYMBOL TABLE.DWG

# R-O-W LAYOUT

FOR BIDDING PURPOSES ONLY

| STATE OF SOUTH DAKOTA | PROJECT | SHEET | TOTAL SHEETS |
|---|---|---|---|
| | P 4243(03) | B17 | B99 |

**RIGHT OF WAY AND EASEMENT OWNERSHIP TABLE**

| Parcel | Station to Station | Side | Type | Purpose | Area | Owner | Description |
|---|---|---|---|---|---|---|---|
| 1A | 0+32.51 to 0+36.99 | L | Perm | Sidewalk | 116 Sq Ft | Klas Properties | Lot 1, Block 1, Eastwoods Second Addition |
| A1 | 0+36.99 to 1+90.93 | L | Temp | Work | 2346 Sq Ft | Klas Properties | Lot 1, Block 1, Eastwoods Second Addition |
| A2 | 0+50.19 to 2+53.36 | R | Temp | Work | 3756 Sq Ft | Roger Konrady, Trustee | Lot 4, Block 18, Konrady Addition |
| A3 | 1+90.82 to 3+40.94 | L | Temp | Work | 2397 Sq Ft | ATI Properties, LLC | Lot 2, Block 1, Eastwoods Second Addition |
| 2A | 2+62.87 to 2+72.93 | L | Perm | Storm Sewer | 153 Sq Ft | ATI Properties, LLC | Lot 2, Block 1, Eastwoods Second Addition |
| A4 | 3+40.82 to 3+99.82 | L | Temp | Work | 844 Sq Ft | Scott R. & Karla J. Dagel | Lot 3, Block 1, Eastwoods Second Addition |
| A5 | 4+32.48 to 4+90.94 | L | Temp | Work | 773 Sq Ft | Scott R. & Karla J. Dagel | Lot 3, Block 1, Eastwoods Second Addition |
| A6 | 4+90.82 to 5+96.12 | L | Temp | Work | 2525 Sq Ft | City of Watertown | Lot 4, Block 1, Eastwoods Second Addition |
| 3A | 5+96.11 to 6+06.12 | L | Perm | Storm Sewer | 240 Sq Ft | City of Watertown | Lot 4, Block 1, Eastwoods Second Addition |
| A7 | 6+06.11 to 6+90.99 | L | Temp | Work | 2035 Sq Ft | City of Watertown | Lot 4, Block 1, Eastwoods Second Addition |
| A8 | 6+90.83 to 7+22.48 | L | Temp | Work | 435 Sq Ft | Gary & Mary Beth Konstant | Lot 5, Block 1, Eastwoods Second Addition |
| A9 | 7+55.49 to 7+68.87 | L | Temp | Work | 178 Sq Ft | Gary & Mary Beth Konstant | Lot 5, Block 1, Eastwoods Second Addition |
| 4A | 7+63.14 to 7+78.36 | L | Perm | Storm Sewer | 164 Sq Ft | Gary & Mary Beth Konstant | Lot 5, Block 1, Eastwoods Second Addition |
| A10 | 7+73.68 to 7+90.95 | L | Temp | Work | 258 Sq Ft | Gary & Mary Beth Konstant | Lot 5, Block 1, Eastwoods Second Addition |
| A11 | 7+90.83 to 9+06.83 | L | Temp | Work | 1970 Sq Ft | Paul & Melanie Weiss | Lot 6, Block 1, Eastwoods Second Addition |
| 5A | 7+95.55 to 8+05.75 | R | Perm | Storm Sewer | 170 Sq Ft | Robert Rasmussen | Lot 6, Block 16, Konrady Addition |
| A12 | Not Used | | | | | Elgie W. Jr. & Deeta K. Noteboom | Lot 7, Block 16, Konrady Addition |
| 6A | 9+72.73 to 9+88.04 | L | Perm | Storm Sewer | 214 Sq Ft | Prairie Lakes Baptist Church | Lot 1, Block 2, Eastwoods Second Addition |
| A13 | 9+88.04 to 10+76.57 | L | Temp | Work | 1200 Sq Ft | Prairie Lakes Baptist Church | Lot 1, Block 2, Eastwoods Second Addition |
| A14 | 11+12.67 to 11+13.83 | L | Temp | Work | 11 Sq Ft | Prairie Lakes Baptist Church | Lot 1, Block 2, Eastwoods Second Addition |
| A15 | 11+13.72 to 11+22.91 | L | Temp | Work | 137 Sq Ft | Prairie Lakes Baptist Church | Lot 2, Block 2, Eastwoods Second Addition |
| 7A | 11+22.91 to 11+36.54 | L | Perm | Storm Sewer | 218 Sq Ft | Prairie Lakes Baptist Church | Lot 2, Block 2, Eastwoods Second Addition |
| 8A | 11+31.47 to 11+47.08 | R | Perm | Storm Sewer | 220 Sq Ft | Byron & Dawn Dahle | Lot 5, Block 9, Konrady Addition |
| A16 | 11+36.54 to 12+54.83 | L | Temp | Work | 1774 Sq Ft | Prairie Lakes Baptist Church | Lot 2, Block 2, Eastwoods Second Addition |
| A17 | 11+46.97 to 12+66.66 | R | Temp | Work | 1494 Sq Ft | Bryon & Dawn Dahle | Lot 5, Block 9, Konrady Addition |
| A18 | Not Used | | | | | Church of Jesus Christ of Latter Day Saints | Eastwoods First Addition |
| A19 | 12+66.48 to 14+01.57 | R | Temp | Work | 1688 Sq Ft | John O. & Wendy J. Selmo | Lot 6, Block 9, Konrady Addition |
| A20 | 14+67.50 to 16+19.82 | R | Temp | Work | 2056 Sq Ft | Michael L. & Sarah Hansen | E100' of Lot 1, Block 6, Konrady Addition |
| A21 | Not Used | | | | | Hilarie Hutt | N80' of Lot 2, Block 6, Konrady Addition |
| 9A | 16+53.74 to 16+67.83 | L | Perm | Storm Sewer | 182 Sq Ft | Robert L. Klages | Lot 1, Block 1, Haan's First Addition |
| A22 | 16+67.74 to 17+59.54 | L | Temp | Work | 1193 Sq Ft | Robert L. Klages | Lot 1, Block 1, Haan's First Addition |
| A23 | 16+99.82 to 17+39.88 | R | Temp | Work | 600 Sq Ft | James & Kristin Tortenson | Lot 2, Less N80, Block 6, Konrady Addition |
| A24 | 17+39.82 to 17+79.82 | R | Temp | Work | 600 Sq Ft | James & Kristin Tortenson | N40' of Lot 3, Block 6, Konrady Addition |

REGISTERED PROFESSIONAL ENGINEER
REG. NO.
9721
JOHN W. DESENS
SOUTH DAKOTA
12-31-14

PLANS BY: CLARK ENGINEERING, WATERTOWN, SD

12/30/2014 11:08 AM Z:\2013 PROJECTS\X13038 WATERTOWN 19TH STREET\DESIGN\SEC B\R-O-W SHEETS.DWG

# R-O-W LAYOUT

FOR BIDDING PURPOSES ONLY

| STATE OF SOUTH DAKOTA | PROJECT | SHEET | TOTAL SHEETS |
|---|---|---|---|
| | P 4243(03) | B18 | B99 |

**RIGHT OF WAY AND EASEMENT OWNERSHIP TABLE**

| Parcel | Station to Station | Side | Type | Purpose | Area | Owner | Description |
|---|---|---|---|---|---|---|---|
| A25 | 17+59.50 to 18+42.53 | L | Temp | Work | 1132 Sq Ft | Lori L. Ogren | Lot 2, Block 1, Haan's First Addition |
| A26 | 17+79.82 to 18+59.82 | R | Temp | Work | 1200 Sq Ft | Larry R. Watkins & Mary M. Wika | S80' of Lot 3, Block 6, Konrady Addition |
| A27 | 18+42.50 to 19+23.53 | L | Temp | Work | 972 Sq Ft | Steven E. & Kristine Wietzema | Lot 3, Less S1', Block 1, Haan's First Addition |
| A28 | 18+59.82 to 19+19.17 | R | Temp | Work | 444 Sq Ft | Jeanette B. Endres | N59.25' of Lot 4, Block 6, Konrady Addition |
| A29 | 19+19.07 to 19+77.53 | R | Temp | Work | 409 Sq Ft | Jeffrey R. Jenson | Lot 4, Less N59.25', Block 6, Konrady Addition |
| A30 | 19+23.50 to 19+24.53 | L | Temp | Work | 12 Sq Ft | Mark & Kim Marotz | S1' of Lot 3, Block 1, Haan's First Addition |
| A31 | 19+24.50 to 20+07.53 | L | Temp | Work | 996 Sq Ft | Mark & Kim Marotz | Lot 4, Block 1, Haan's First Addition |
| A32 | 19+77.53 to 21+77.54 | R | Temp | Work | 1779 Sq Ft | City of Watertown | Nineteenth Street Tower Addition |
| A33 | 20+07.50 to 20+89.53 | L | Temp | Work | 984 Sq Ft | Kathryn K. (Kranz) Feltch | Lot 5, Block 1, Haan's First Addition |
| A34 | 20+89.50 to 21+70.53 | L | Temp | Work | 972 Sq Ft | Robert L. & Ruth A. Olson | Lot 6, Less S2', Block 1, Haan's First Addition |
| A35 | 21+70.50 to 21+72.53 | L | Temp | Work | 23 Sq Ft | Ricky D. & Deborah A. Skogstad | S2' of Lot 6, Block 1, Haan's First Addition |
| A36 | 21+72.50 to 22+52.53 | L | Temp | Work | 920 Sq Ft | Ricky D. & Deborah A. Skogstad | Lot 7, Less S2', Block 1, Haan's First Addition |
| A37 | 21+77.54 to 22+39.83 | R | Temp | Work | 708 Sq Ft | Gregory J. & Trisha K. Rieffenberger | Lot 5, Less S60', Block 6, Konrady Addition |
| A38 | 22+39.83 to 22+99.83 | R | Temp | Work | 330 Sq Ft | Harold H. & Darlene J. Meester | S60', of Lot 5, Block 6, Konrady Addition |
| A39 | 22+52.50 to 22+54.53 | L | Temp | Work | 23 Sq Ft | Carl & Janice E. Vanvoorst | S2', Lot 7, Block 1, Haan's First Addition |
| A40 | 22+54.50 to 23+37.53 | L | Temp | Work | 1100 Sq Ft | Carl & Janice E. Vanvoorst | Lot 8, Block 1, Haan's First Addition |
| A41 | 22+99.83 to 24+19.65 | R | Temp | Work | 868 Sq Ft | Scott B. Christians, Vicky L. Aschow & Tammy Swanson | Lot 6, Block 6, Konrady Addition |
| A42 | 23+37.50 to 24+32.65 | L | Temp | Work | 1383 Sq Ft | Dennis R. Anderson | Lot 9, Block 1, Haan's First Addition |
| 10A | 24+32.42 to 24+43.82 | L | Perm | Storm Sewer | 103 Sq Ft | Dennis R. Anderson | Lot 9, Block 1, Haan's First Addition |
| A43 | 24+19.65 to 26+37.14 | R | Temp | Work | 2964 Sq Ft | Ronnie & Rosemary Van Laeken | Lot 7, Block 6, Konrady Addition |
| A44 | 25+09.71 to 26+36.78 | L | Temp | Work | 2755 Sq Ft | Jodi Hammrich | Lot 1, Less E2', Block 6, Haan's First Addition |
| A45 | 26+36.62 to 26+99.64 | L | Temp | Work | 846 Sq Ft | Jerry W. Schmeling | W150' of N150' of Lot 1, Kin-Bro Addition |
| A46 | 27+27.48 to 27+87.18 | L | Temp | Work | 670 Sq Ft | Jerry W. Schmeling | W150' of N150' of Lot 1, Kin-Bro Addition |
| A47 | 27+70.51 to 27+75.66 | R | Temp | Work | 55 Sq Ft | Barry L. & Shelly L. Poppen | Lot 10, Block 13, Grand View Addition |
| A48 | 27+87.14 to 28+37.18 | L | Temp | Work | 550 Sq Ft | Jerry W. Schmeling | S50' of W200' of Lot 1, Kin-Bro Addition |
| 11A | 30+66.36 to 30+71.60 | R | Perm | Sidewalk | 111 Sq Ft | Randall R. & Charmaine B. Olson | Lot 11, Block 12, Grand View Addition |
| 12A | 31+31.18 to 31+36.83 | R | Perm | Sidewalk | 131 Sq Ft | Adeline Egersett, Revocable Trust | Lot 35, Block 11, Grand View Addition |
| A49 | 34+30.59 to 34+99.01 | R | Temp | Work | 342 Sq Ft | James F. & Elaine A. Hardee | Lot 38, Block 11, Grand View Addition |
| A50 | 34+98.94 to 35+81.60 | R | Temp | Work | 413 Sq Ft | Ryan N. & Jennifer L. Van Laecken | Lot 39, Block 11, Grand View Addition |
| A51 | 42+63.86 to 43+03.66 | R | Temp | Work | 238 Sq Ft | Marco DiCarlo | Lot 14, Block 11, Sunrise Estates Addition |
| A52 | 43+03.59 to 43+92.02 | R | Temp | Work | 530 Sq Ft | Robert H. & Donna Lantgen | Lot 13, Block 11, Sunrise Estates Addition |
| A53 | Not Used | | | | | Richard W. & Cindy A. Goette | Lot 7, Block 10, Sunrise Estates Addition |
| A54 | 47+06.53 to 47+13.78 | R | Temp | Work | 36 Sq Ft | Kay A. Folkerts | S7' of Lot 9, Block 10, Sunrise Estates Addition |

REGISTERED PROFESSIONAL ENGINEER
L.S. NO.
9721
JOHN W. DESENS
SOUTH DAKOTA
12-31-14

PLANS BY: CLARK ENGINEERING, WATERTOWN, SD

1/21/2015 8:21 AM Z:\2013 PROJECTS\X13038 WATERTOWN 19TH STREET\DESIGN\SEC B\R-O-W SHEETS.DWG

# R-O-W LAYOUT

FOR BIDDING PURPOSES ONLY

| STATE OF SOUTH DAKOTA | PROJECT | SHEET | TOTAL SHEETS |
|---|---|---|---|
| | P 4243(03) | B19 | B99 |

**RIGHT OF WAY AND EASEMENT OWNERSHIP TABLE**

| Parcel | Station to Station | Side | Type | Purpose | Area | Owner | Description |
|---|---|---|---|---|---|---|---|
| A55 | 47+13.71 to 47+81.85 | R | Temp | Work | 340 Sq Ft | Kay A. Folkerts | N68' of Lot 10, Block 10, Sunrise Estates Addition |
| A56 | 47+81.78 to 47+83.53 | R | Temp | Work | 9 Sq Ft | Kay A. & William J. Folkerts | S12' of Lot 10, Block 10, Sunrise Estates Addition |
| A57 | 48+68.22 to 48+73.93 | R | Temp | Work | 34 Sq Ft | Kay A. & William J. Folkerts | Lot 11, Block 10, Sunrise Estates Addition |
| A58 | 48+73.83 to 49+57.01 | R | Temp | Work | 764 Sq Ft | Kay A. Folkerts | Lot 12, Block 10, Sunrise Estates Addition |
| 13A | 52+48.37 to 52+57.65 | R | Perm | Sidewalk | 64 Sq Ft | David & Kathleen Dargatz | Lot 6, Rennich's Subdivision of Boone's Outlot 4 |
| 14A | 53+23.18 to 53+29.54 | R | Perm | Sidewalk | 17 Sq Ft | Denise K. Lightfield | Lot 1, Block 15, Country Side Estates Addition |
| A59 | 59+69.81 to 60+17.40 | R | Temp | Work | 143 Sq Ft | Shirley M. Duke | Lot 1, Block 13, Country Side Estates Addition |
| A60 | 60+29.02 to 60+97.31 | R | Temp | Work | 205 Sq Ft | Shirley M. Duke | Lot 1, Block 13, Country Side Estates Addition |
| A61 | 60+97.21 to 61.07.70 | R | Temp | Work | 42 Sq Ft | Robert & Michelle Jensen | Lot 10, Block 13, Country Side Estates Addition |
| A62 | 61+54.54 to 62+27.16 | R | Temp | Work | 218 Sq Ft | Robert & Michelle Jensen | Lot 10, Block 13, Country Side Estates Addition |
| A63 | 64+91.55 to 65+42.10 | R | Temp | Work | 253 Sq Ft | Kerry D. & Donna L. Birgholtz | Lot 10, Block 12, Country Side Estates Addition |
| 15A | 68+38.36 to 68+48.09 | L | Perm | Sidewalk | 46 Sq Ft | Dakota Commons, LLC | Lot A, Block 1, Dakota Commons Addition |
| 16A | 69+14.09 to 69+21.16 | L | Perm | Sidewalk | 23 Sq Ft | Dakota Commons, LLC | Stelmar First Addition, Less Dakota Commons Addition |
| A64 | 69+14.09 to 70+08.04 | L | Temp | Work | 639 Sq Ft | Dakota Commons, LLC | Stelmars First Addition, Less Dakota Commons Addition |
| A65 | 70+08.04 to 73+99.51 | L | Temp | Work | 3915 Sq Ft | Patricia Neuendorf | W1/2 of NW1/4 Less 20.85' Lying N&W of M&STL RR |
| A66 | 73+99.50 to 75+18.11 | L | Temp | Work | 1067 Sq Ft | Thomas Aljoe | W288' of N407.5' of Lot 1, Edtom Addition |
| A67 | 75+18.10 to 76+18.11 | L | Temp | Work | 800 Sq Ft | Thomas Aljoe | Lot 2, Edtom Addition |
| A68 | 76+18.10 to 77+16.10 | L | Temp | Work | 676 Sq Ft | Thomas Aljoe | W288' of N407.5' of Lot 1, Edtom Addition |
| A69 | 77+31.84 to 78+06.91 | L | Temp | Work | 512 Sq Ft | Thomas Aljoe | W288' of N407.5' of Lot 1, Edtom Addition |
| A70 | 78+66.13 to 80.06.95 | L | Temp | Work | 1127 Sq Ft | Patgar, LLC | Lot 2, Block 1, Prairie's Edge Estates Addition |
| A71 | 80+06.94 to 81+60.93 | L | Temp | Work | 1234 Sq Ft | Patgar, LLC | Lot 1, Block 1, Prairie's Edge Estates Addition |
| A72 | 81+58.82 to 81+92.27 | L | Temp | Work | 219 Sq Ft | Prime Site Center, LLC | S30' of Lot 2, Willow Creek Plaza Third Addition |
| A73 | 81+90.16 to 81+99.73 | L | Temp | Work | 52 Sq Ft | Prime Site Center, LLC | Lot 1, Marvined Second Addition |
| A74 | 82+23.61 to 83+39.94 | L | Temp | Work | 675 Sq Ft | Prime Site Center, LLC | Lot 1, Marvined Second Addition |
| 17A | 83+32.28 to 83+65.83 | L | Perm | Sidewalk | 344 Sq ft | Prime Site Center, LLC | Lot 1, Marvined Second Addition |

REGISTERED PROFESSIONAL ENGINEER
REG. NO.
9721
JOHN W.
DESENS
SOUTH DAKOTA

John W. Desens
12-31-14

PLANS BY: CLARK ENGINEERING, WATERTOWN, SD

12/30/2014 11:09 AM Z:\2013 PROJECTS\X13038 WATERTOWN 19TH STREET\DESIGN\SEC B\R-O-W SHEETS.DWG

# R-O-W LAYOUT

FOR BIDDING PURPOSES ONLY

| STATE OF SOUTH DAKOTA | PROJECT | SHEET | TOTAL SHEETS |
|---|---|---|---|
| | P 4243(03) | B20 | B99 |

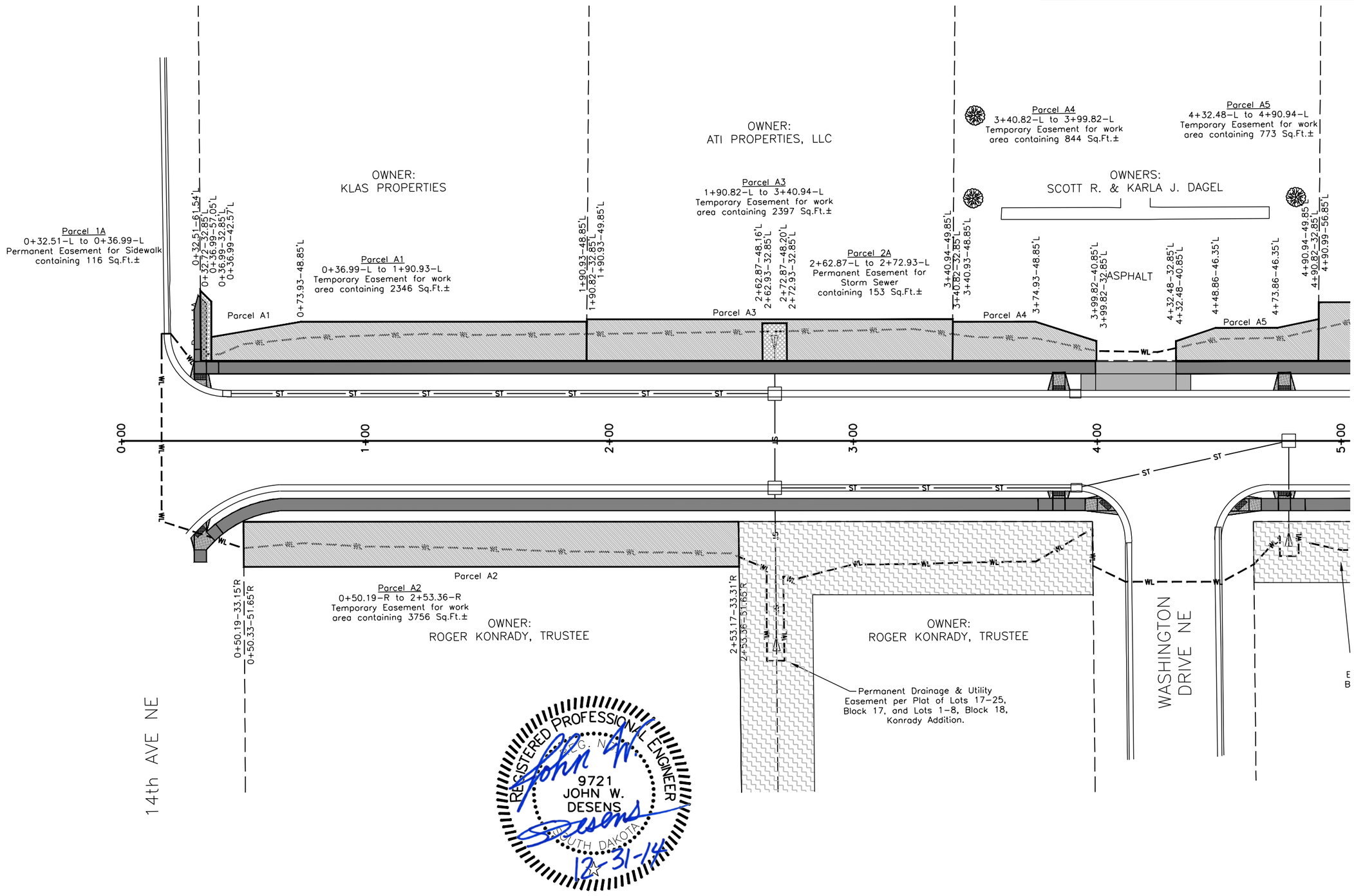


1/21/2015 8:24 AM Z:\2013 PROJECTS\X13038 WATERTOWN 19TH STREET\DESIGN\SEC B\R-O-W SHEETS.DWG

PLANS BY: CLARK ENGINEERING, WATERTOWN, SD

# R-O-W LAYOUT

FOR BIDDING PURPOSES ONLY

| STATE OF SOUTH DAKOTA | PROJECT | SHEET | TOTAL SHEETS |
|---|---|---|---|
| | P 4243(03) | B21 | B99 |

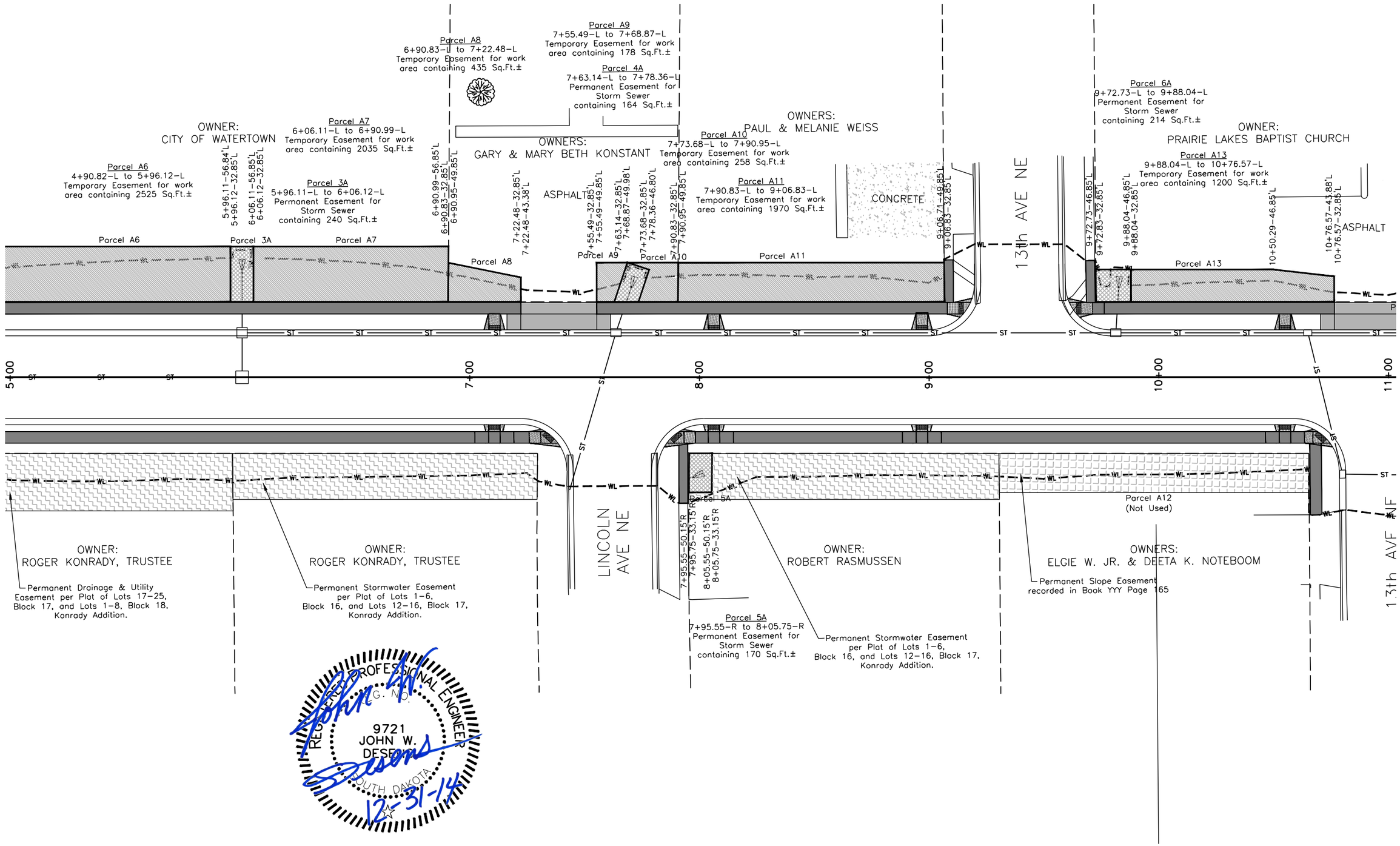


REGISTERED PROFESSIONAL ENGINEER
9721
JOHN W. DESEOM
SOUTH DAKOTA

John W. Deseom
12-31-14

PLANS BY: CLARK ENGINEERING, WATERTOWN, SD

1/21/2015 8:26 AM Z:\2013 PROJECTS\X13038 WATERTOWN 19TH STREET\DESIGN\SEC B\R-O-W SHEETS.DWG

# R-O-W LAYOUT

FOR BIDDING PURPOSES ONLY

| STATE OF SOUTH DAKOTA | PROJECT | SHEET | TOTAL SHEETS |
|---|---|---|---|
| | P 4243(03) | B22 | B99 |

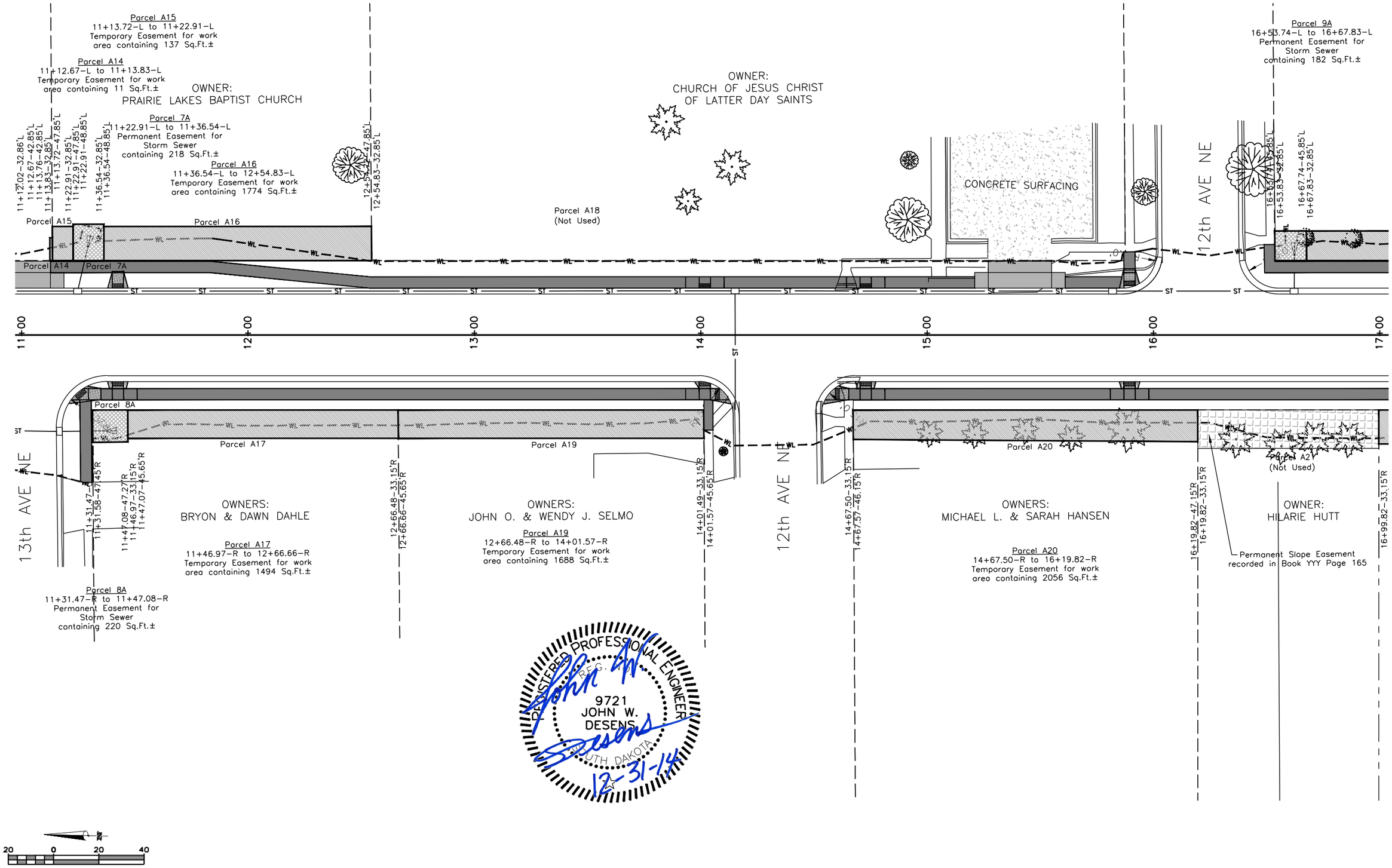


PLANS BY: CLARK ENGINEERING, WATERTOWN, SD

1/21/2015 8:27 AM Z:\2013 PROJECTS\X13038 WATERTOWN 19TH STREET\DESIGN\SEC B\R-O-W SHEETS.DWG

# R-O-W LAYOUT

FOR BIDDING PURPOSES ONLY

| STATE OF SOUTH DAKOTA | PROJECT | SHEET | TOTAL SHEETS |
|---|---|---|---|
| | P 4243(03) | B23 | B99 |

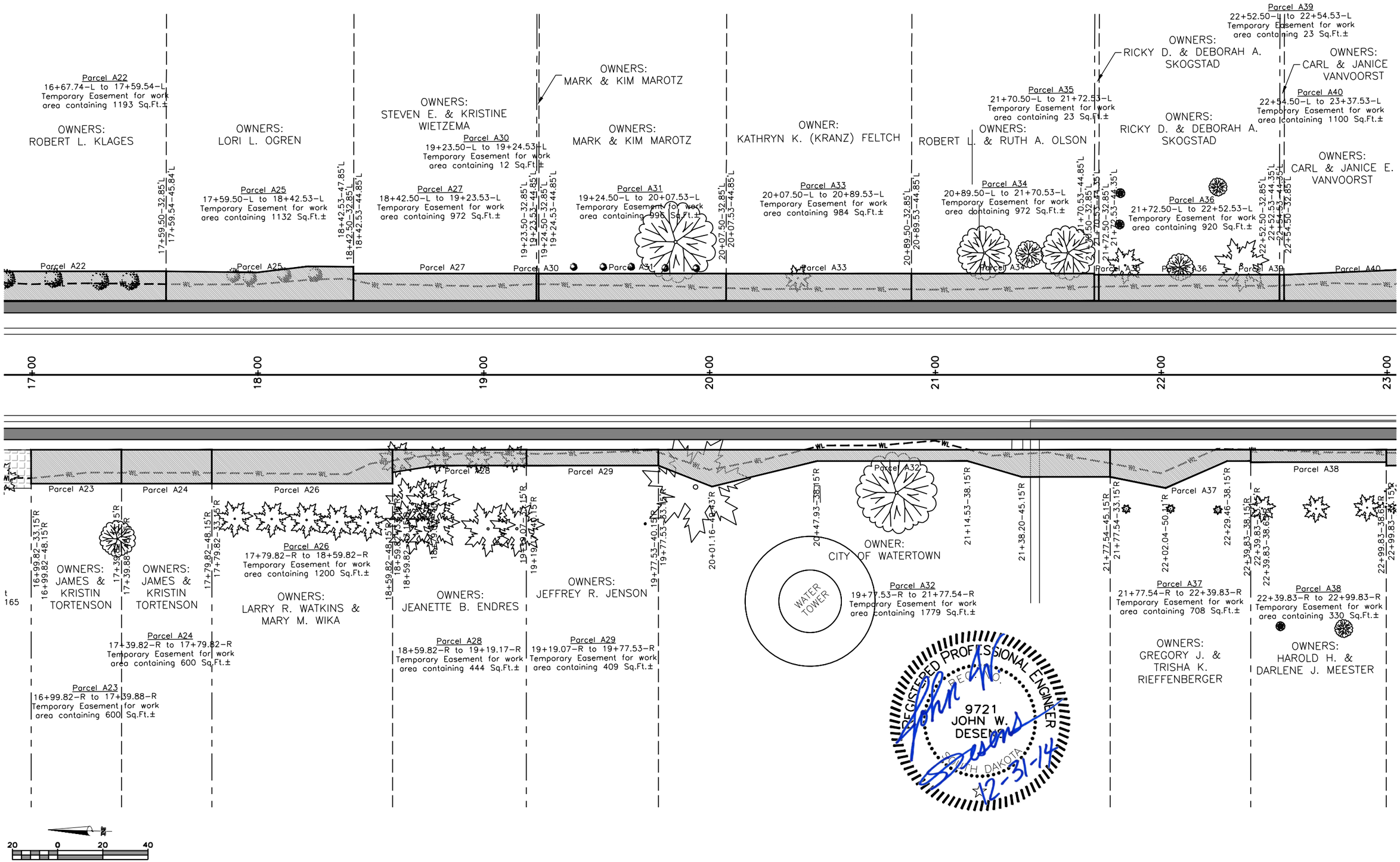


PLANS BY: CLARK ENGINEERING, WATERTOWN, SD

1/21/2015 8:28 AM Z:\2013 PROJECTS\X13038 WATERTOWN 19TH STREET\DESIGN\SEC B\R-O-W SHEETS.DWG

# R-O-W LAYOUT

FOR BIDDING PURPOSES ONLY

| STATE OF SOUTH DAKOTA | PROJECT | SHEET | TOTAL SHEETS |
|---|---|---|---|
| | P 4243(03) | B24 | B99 |

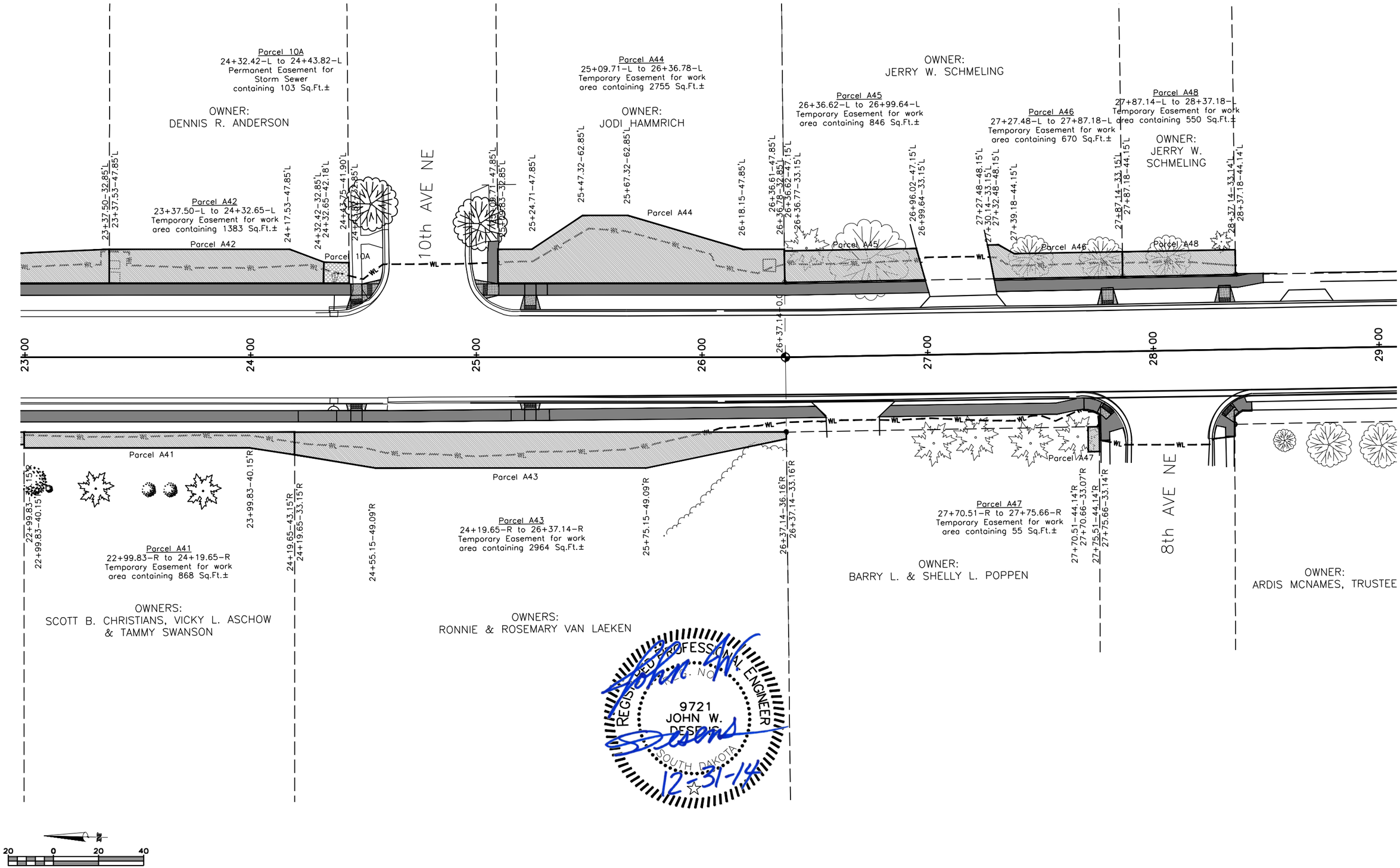


PLANS BY: CLARK ENGINEERING, WATERTOWN, SD

1/21/2015 8:29 AM Z:\2013 PROJECTS\X13038 WATERTOWN 19TH STREET\DESIGN\SEC B\R-O-W SHEETS.DWG

# R-O-W LAYOUT

FOR BIDDING PURPOSES ONLY

| STATE OF SOUTH DAKOTA | PROJECT | SHEET | TOTAL SHEETS |
|---|---|---|---|
| | P 4243(03) | B25 | B99 |

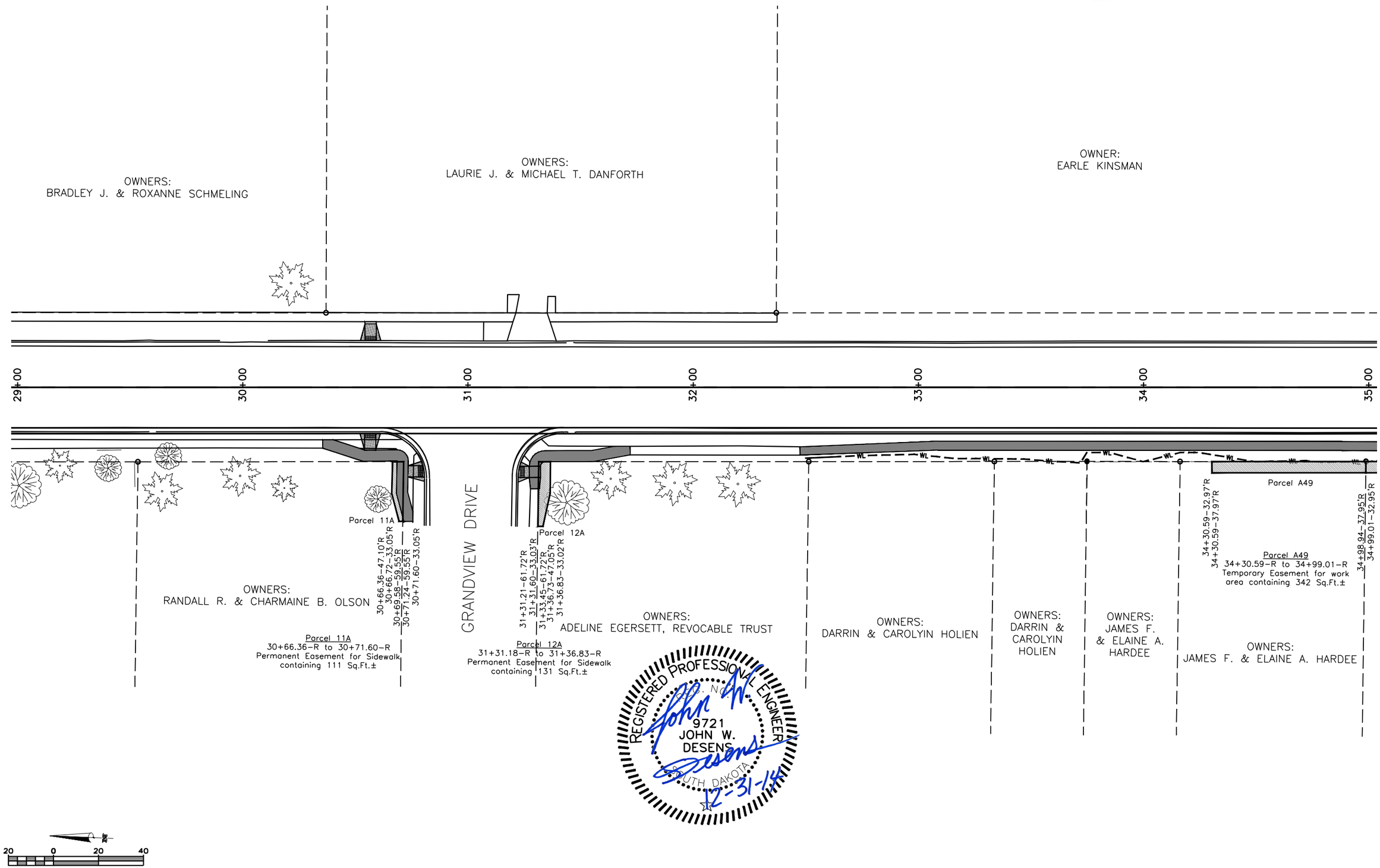


PLANS BY: CLARK ENGINEERING, WATERTOWN, SD

12/29/2014 5:46 PM Z:\2013 PROJECTS\X13038 WATERTOWN 19TH STREET\DESIGN\SEC B\R-O-W SHEETS.DWG

# R-O-W LAYOUT

FOR BIDDING PURPOSES ONLY

| STATE OF SOUTH DAKOTA | PROJECT | SHEET | TOTAL SHEETS |
|---|---|---|---|
| | P 4243(03) | B26 | B99 |

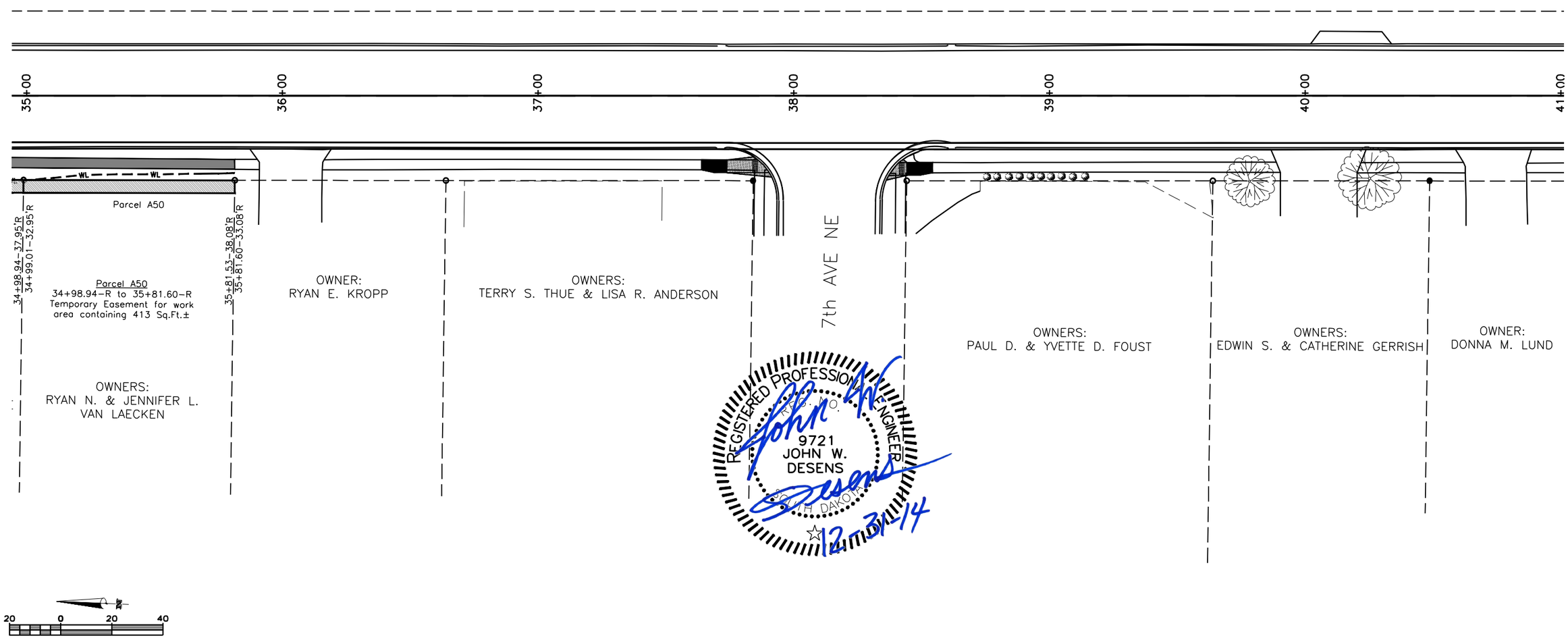


12/29/2014 5:47 PM Z:\2013 PROJECTS\X13038 WATERTOWN 19TH STREET\DESIGN\SEC B\R-O-W SHEETS.DWG

PLANS BY: CLARK ENGINEERING, WATERTOWN, SD

# R-O-W LAYOUT

FOR BIDDING PURPOSES ONLY

| STATE OF SOUTH DAKOTA | PROJECT | SHEET | TOTAL SHEETS |
|---|---|---|---|
| | P 4243(03) | B27 | B99 |

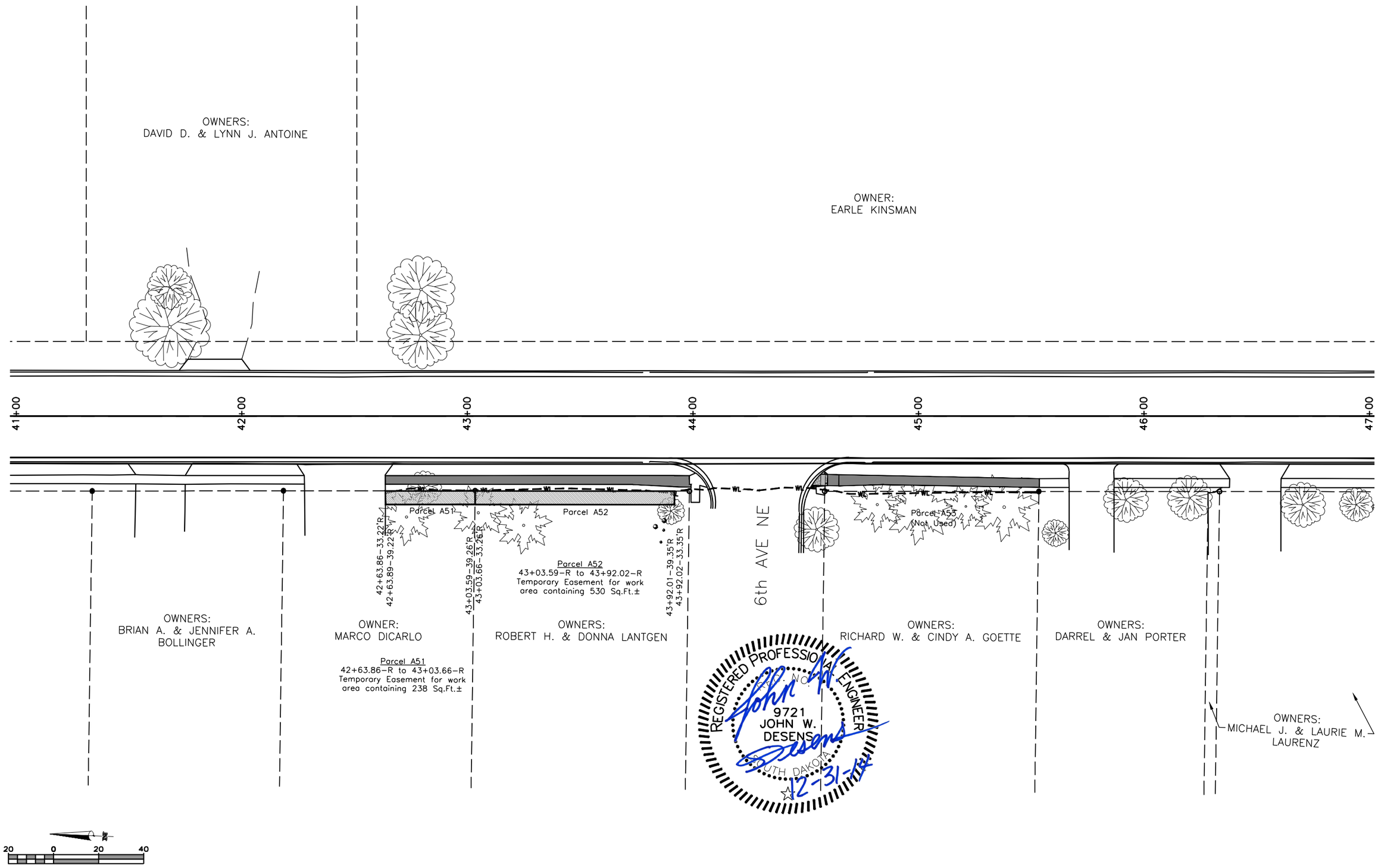


PLANS BY: CLARK ENGINEERING, WATERTOWN, SD

12/29/2014 5:48 PM Z:\2013 PROJECTS\X13038 WATERTOWN 19TH STREET\DESIGN\SEC B\R-O-W SHEETS.DWG

# R-O-W LAYOUT

FOR BIDDING PURPOSES ONLY

| STATE OF SOUTH DAKOTA | PROJECT | SHEET | TOTAL SHEETS |
|---|---|---|---|
| | P 4243(03) | B28 | B99 |

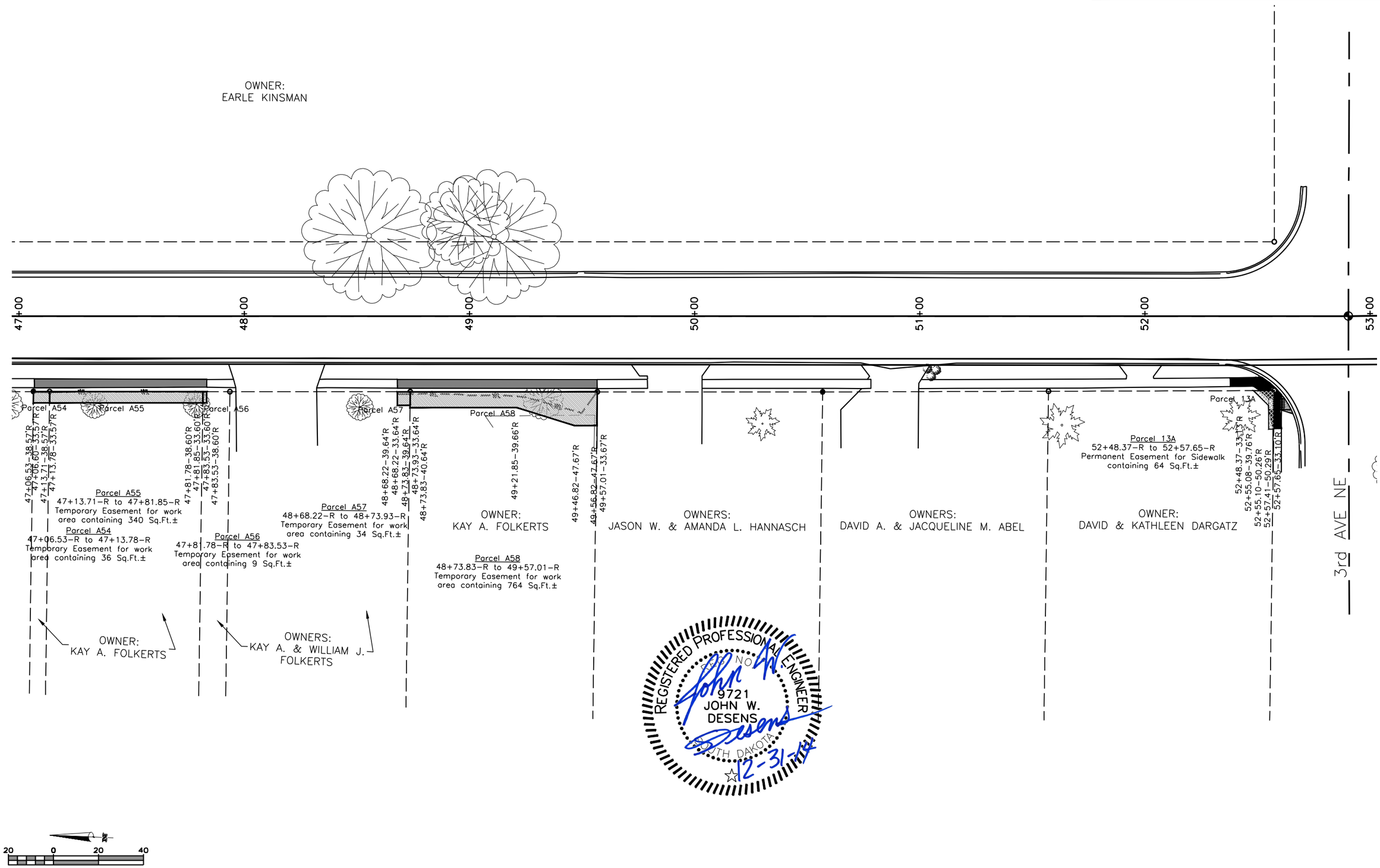


PLANS BY: CLARK ENGINEERING, WATERTOWN, SD

12/29/2014 5:49 PM Z:\2013 PROJECTS\X13038 WATERTOWN 19TH STREET\DESIGN\SEC B\R-O-W SHEETS.DWG

# R-O-W LAYOUT

FOR BIDDING PURPOSES ONLY

| STATE OF SOUTH DAKOTA | PROJECT | SHEET | TOTAL SHEETS |
|---|---|---|---|
| | P 4243(03) | B29 | B99 |

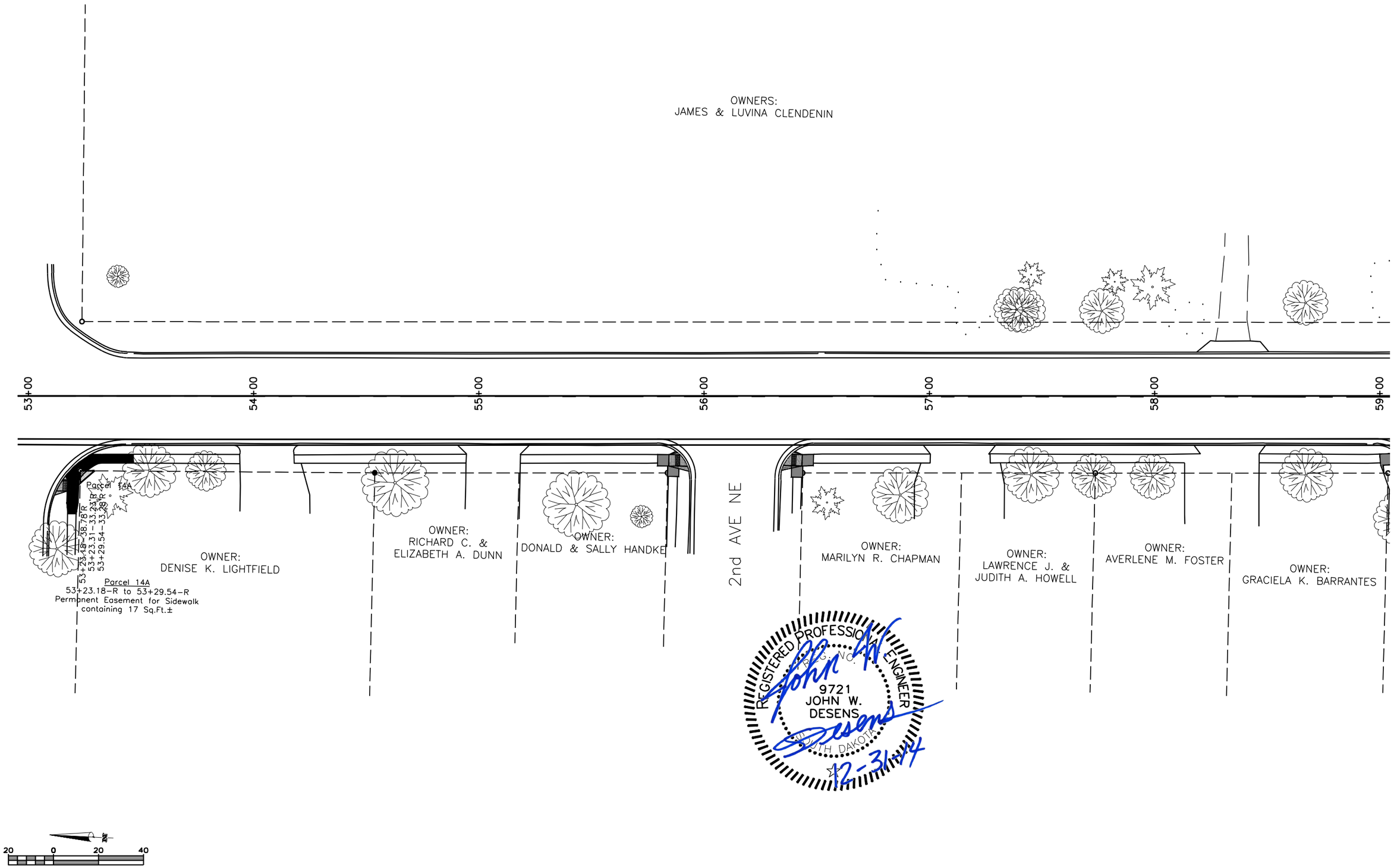


12/29/2014 5:50 PM Z:\2013 PROJECTS\X13038 WATERTOWN 19TH STREET\DESIGN\SEC B\R-O-W SHEETS.DWG

PLANS BY: CLARK ENGINEERING, WATERTOWN, SD

# R-O-W LAYOUT

FOR BIDDING PURPOSES ONLY

| STATE OF SOUTH DAKOTA | PROJECT | SHEET | TOTAL SHEETS |
|---|---|---|---|
| | P 4243(03) | B30 | B99 |

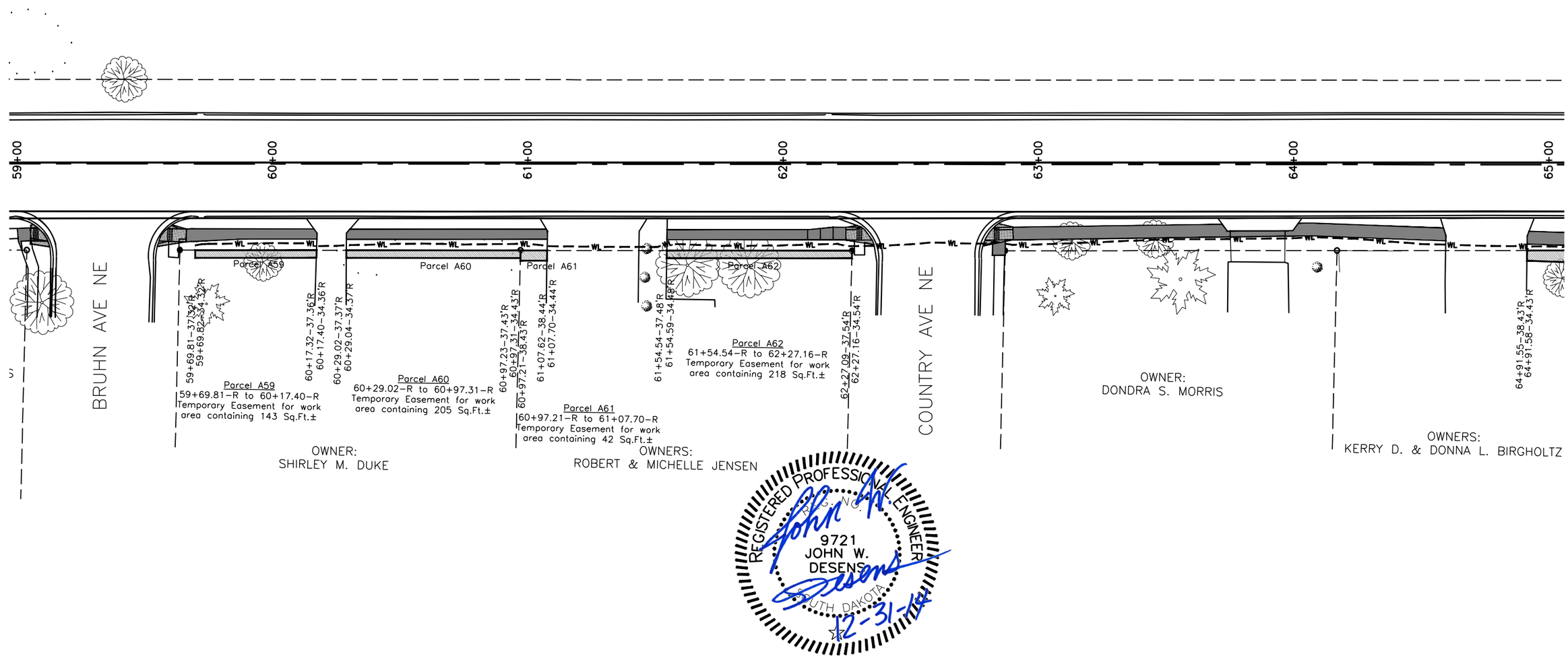


PLANS BY: CLARK ENGINEERING, WATERTOWN, SD

12/29/2014 5:51 PM Z:\2013 PROJECTS\X13038 WATERTOWN 19TH STREET\DESIGN\SEC B\R-O-W SHEETS.DWG

# R-O-W LAYOUT

FOR BIDDING PURPOSES ONLY

| STATE OF SOUTH DAKOTA | PROJECT | SHEET | TOTAL SHEETS |
|---|---|---|---|
| | P 4243(03) | B31 | B99 |

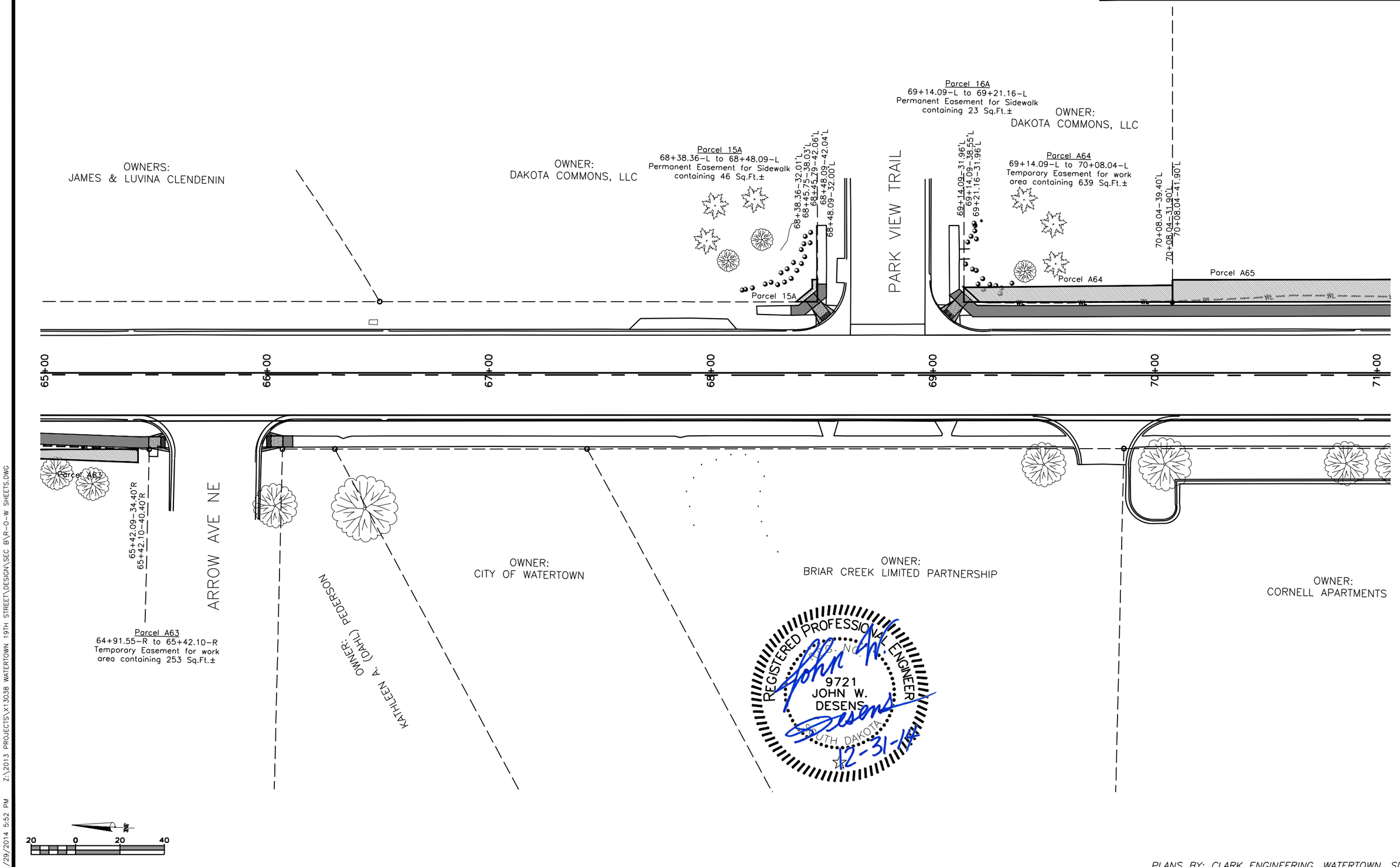


PLANS BY: CLARK ENGINEERING, WATERTOWN, SD

12/29/2014 5:52 PM Z:\2013 PROJECTS\X13038 WATERTOWN 19TH STREET\DESIGN\SEC B\R-O-W SHEETS.DWG

# R-O-W LAYOUT

FOR BIDDING PURPOSES ONLY

| STATE OF SOUTH DAKOTA | PROJECT | SHEET | TOTAL SHEETS |
|---|---|---|---|
| | P 4243(03) | B32 | B99 |

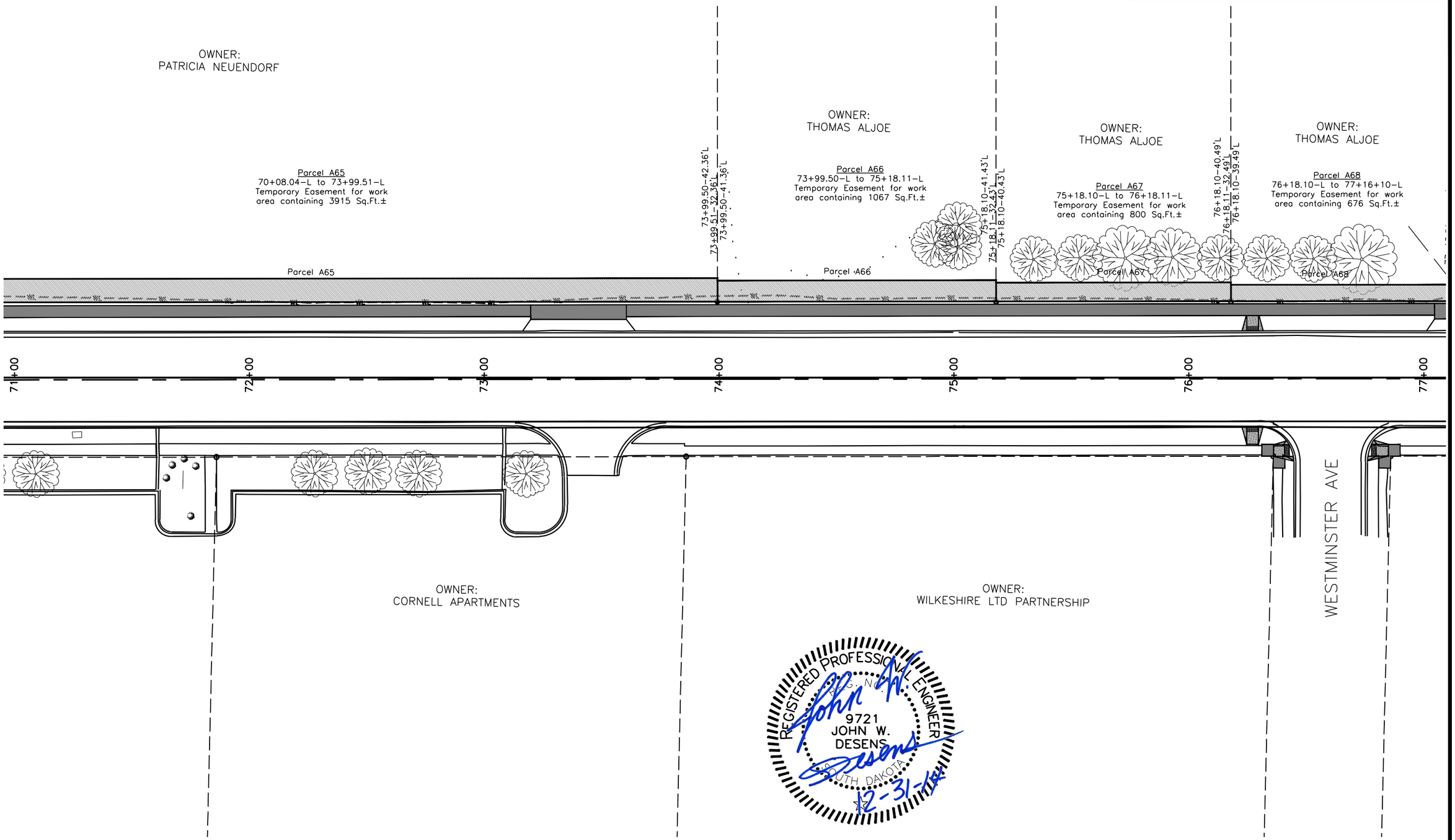


12/29/2014 5:53 PM Z:\2013 PROJECTS\X13038 WATERTOWN 19TH STREET\DESIGN\SEC B\R-O-W SHEETS.DWG

*PLANS BY: CLARK ENGINEERING, WATERTOWN, SD*

# R-O-W LAYOUT

FOR BIDDING PURPOSES ONLY

| STATE OF SOUTH DAKOTA | PROJECT | SHEET | TOTAL SHEETS |
|---|---|---|---|
| | P 4243(03) | B33 | B99 |

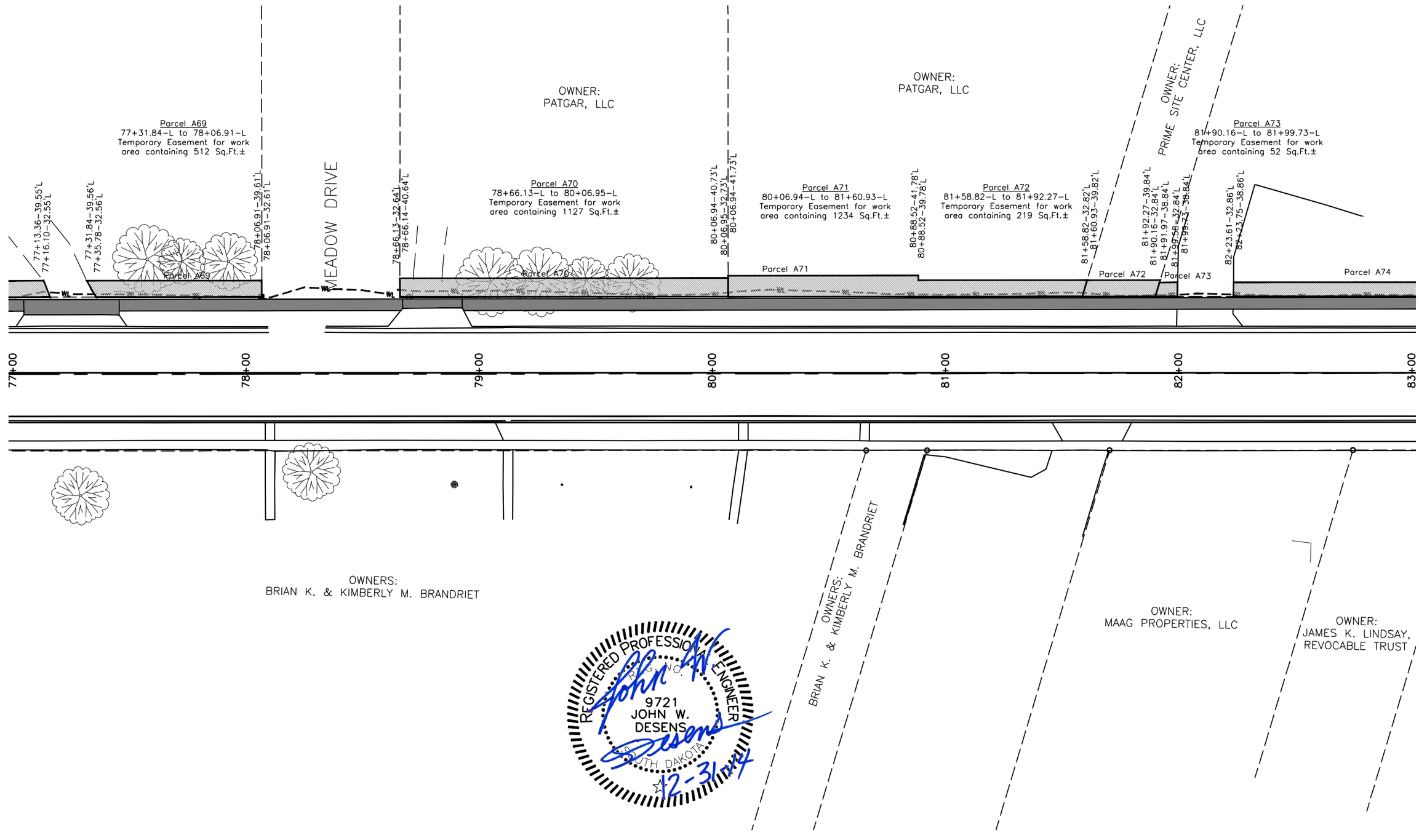


12/29/2014 5:54 PM Z:\2013 PROJECTS\X13038 WATERTOWN 19TH STREET\DESIGN\SEC B\R-O-W SHEETS.DWG

PLANS BY: CLARK ENGINEERING, WATERTOWN, SD

# R-O-W LAYOUT

FOR BIDDING PURPOSES ONLY

| STATE OF SOUTH DAKOTA | PROJECT | SHEET | TOTAL SHEETS |
|---|---|---|---|
| | P 4243(03) | B34 | B99 |

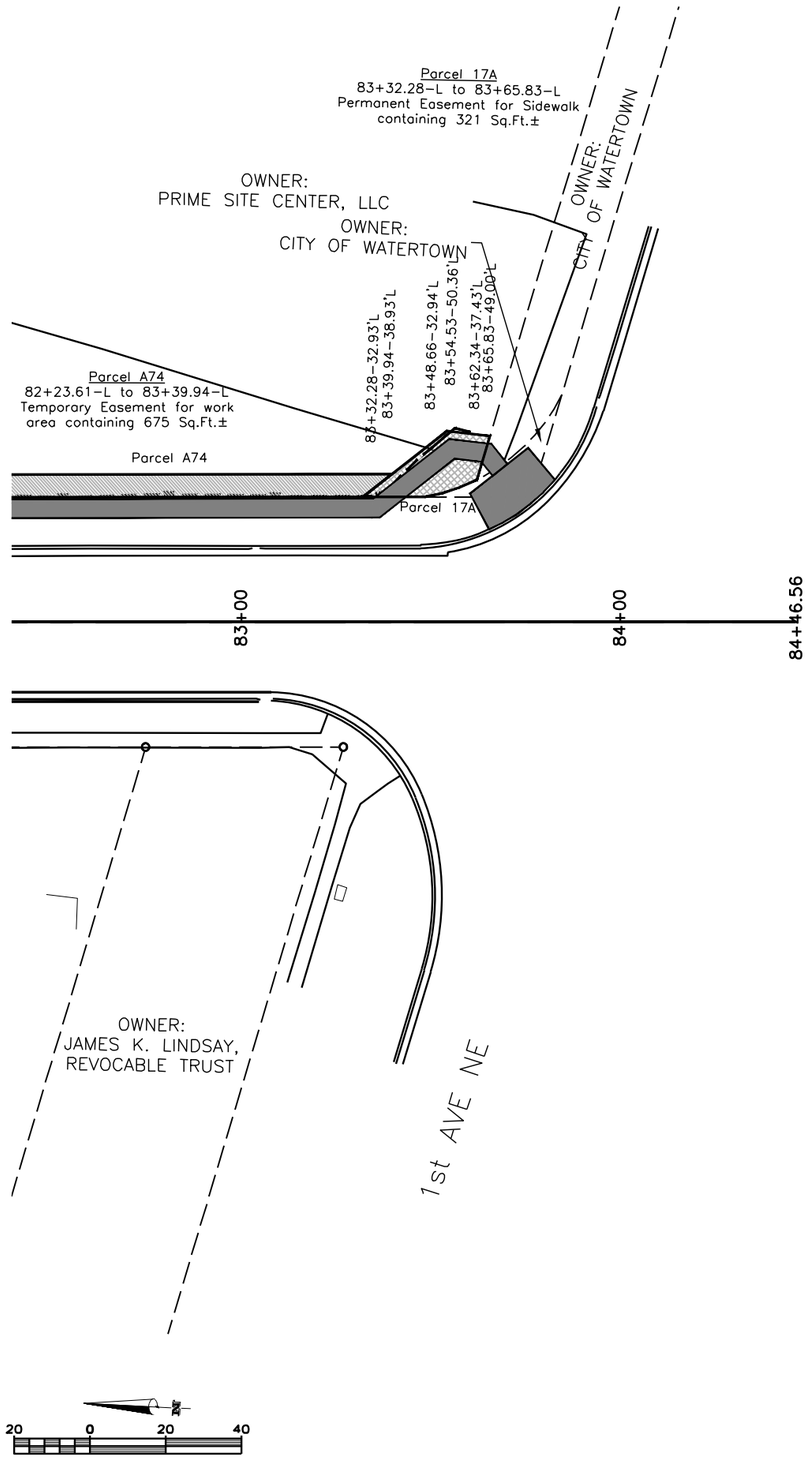

PLANS BY: CLARK ENGINEERING, WATERTOWN, SD

12/29/2014 5:56 PM Z:\2013 PROJECTS\X13038 WATERTOWN 19TH STREET\DESIGN\SEC B\R-O-W SHEETS.DWG

# REMOVAL PLAN

FOR BIDDING PURPOSES ONLY

| STATE OF SOUTH DAKOTA | PROJECT | SHEET | TOTAL SHEETS |
|---|---|---|---|
| | P 4243(03) | B35 | B99 |

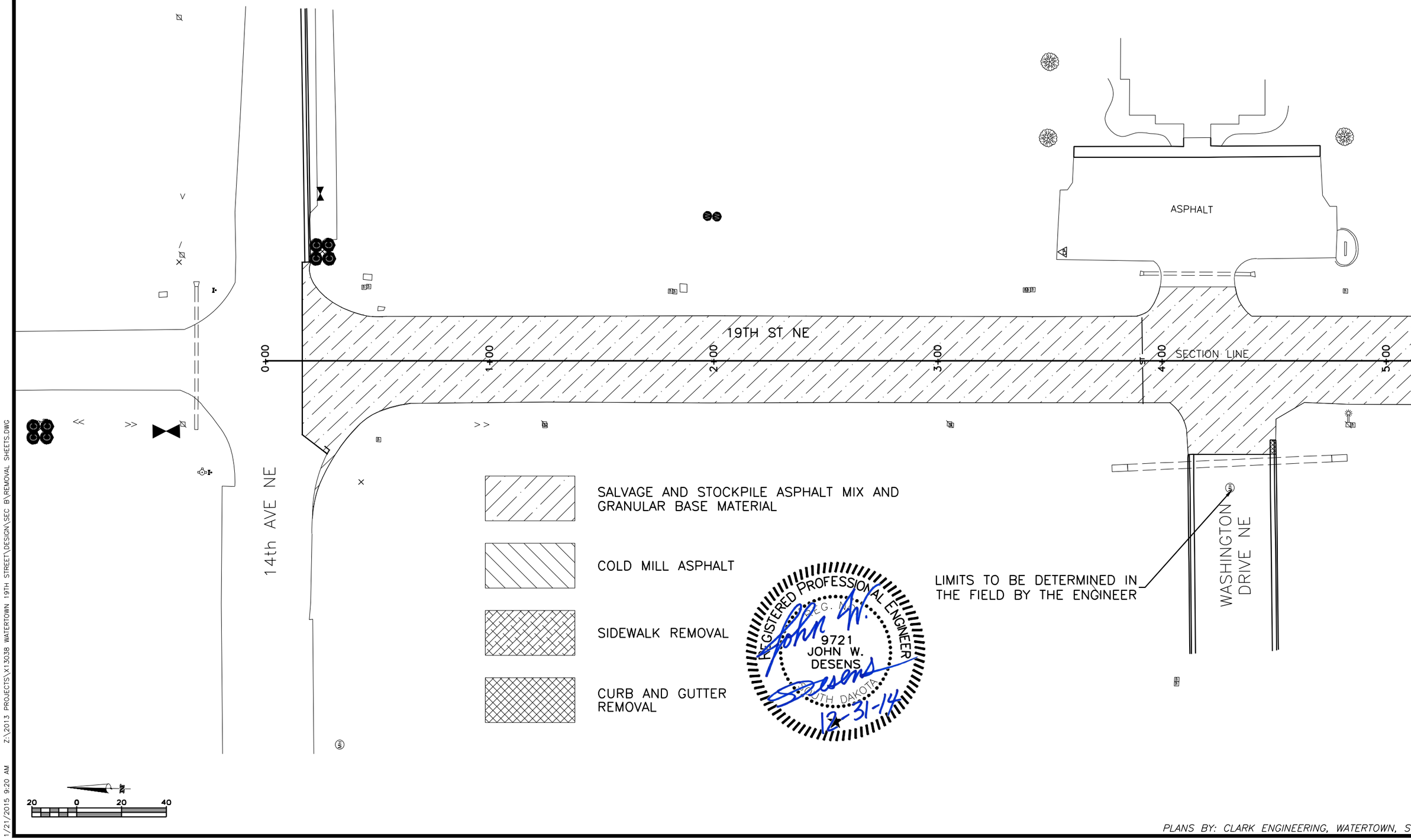


PLANS BY: CLARK ENGINEERING, WATERTOWN, SD

1/21/2015 9:20 AM Z:\2013 PROJECTS\X13038 WATERTOWN 19TH STREET\DESIGN\SEC B\REMOVAL SHEETS.DWG

# REMOVAL PLAN

FOR BIDDING PURPOSES ONLY

| STATE OF SOUTH DAKOTA | PROJECT | SHEET | TOTAL SHEETS |
|---|---|---|---|
| | P 4243(03) | B36 | B99 |

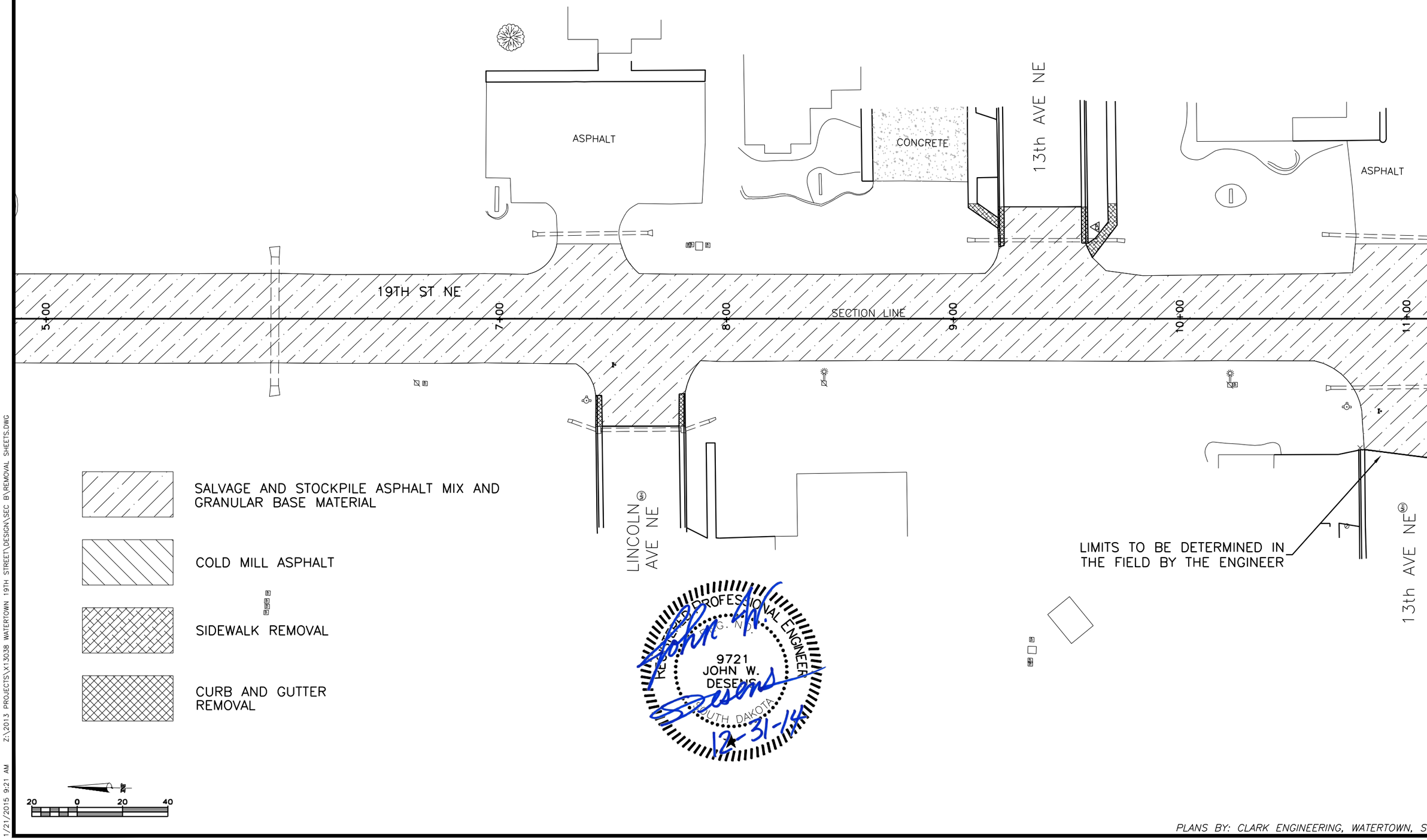


PLANS BY: CLARK ENGINEERING, WATERTOWN, SD

1/21/2015 9:21 AM Z:\2013 PROJECTS\X13038 WATERTOWN 19TH STREET\DESIGN\SEC B\REMOVAL SHEETS.DWG

# REMOVAL PLAN

FOR BIDDING PURPOSES ONLY

| STATE OF SOUTH DAKOTA | PROJECT | SHEET | TOTAL SHEETS |
|---|---|---|---|
| | P 4243(03) | B37 | B99 |

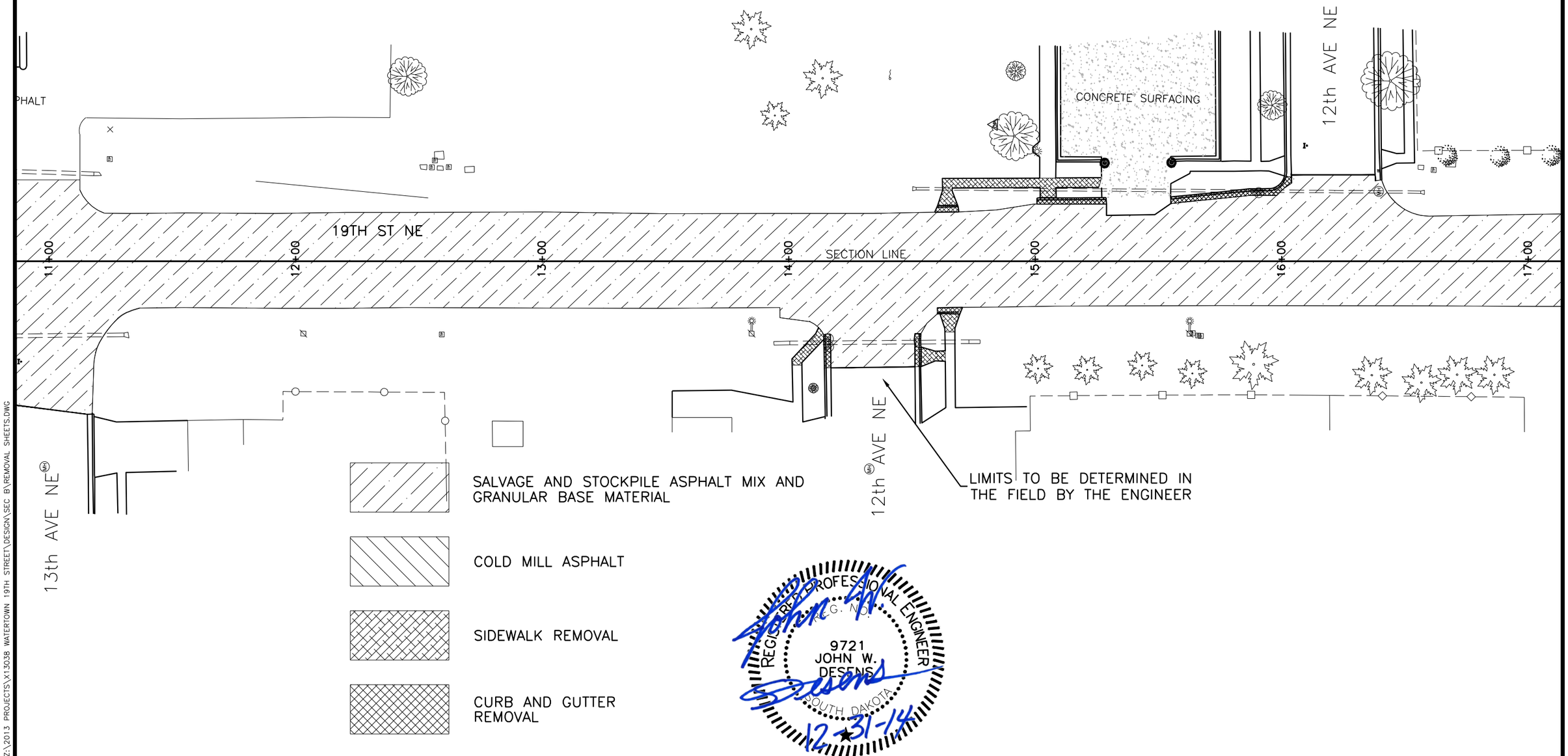


PLANS BY: CLARK ENGINEERING, WATERTOWN, SD

1/21/2015 9:22 AM Z:\2013 PROJECTS\X13038 WATERTOWN 19TH STREET\DESIGN\SEC B\REMOVAL SHEETS.DWG

# REMOVAL PLAN

FOR BIDDING PURPOSES ONLY

| STATE OF SOUTH DAKOTA | PROJECT | SHEET | TOTAL SHEETS |
|---|---|---|---|
| | P 4243(03) | B38 | B99 |

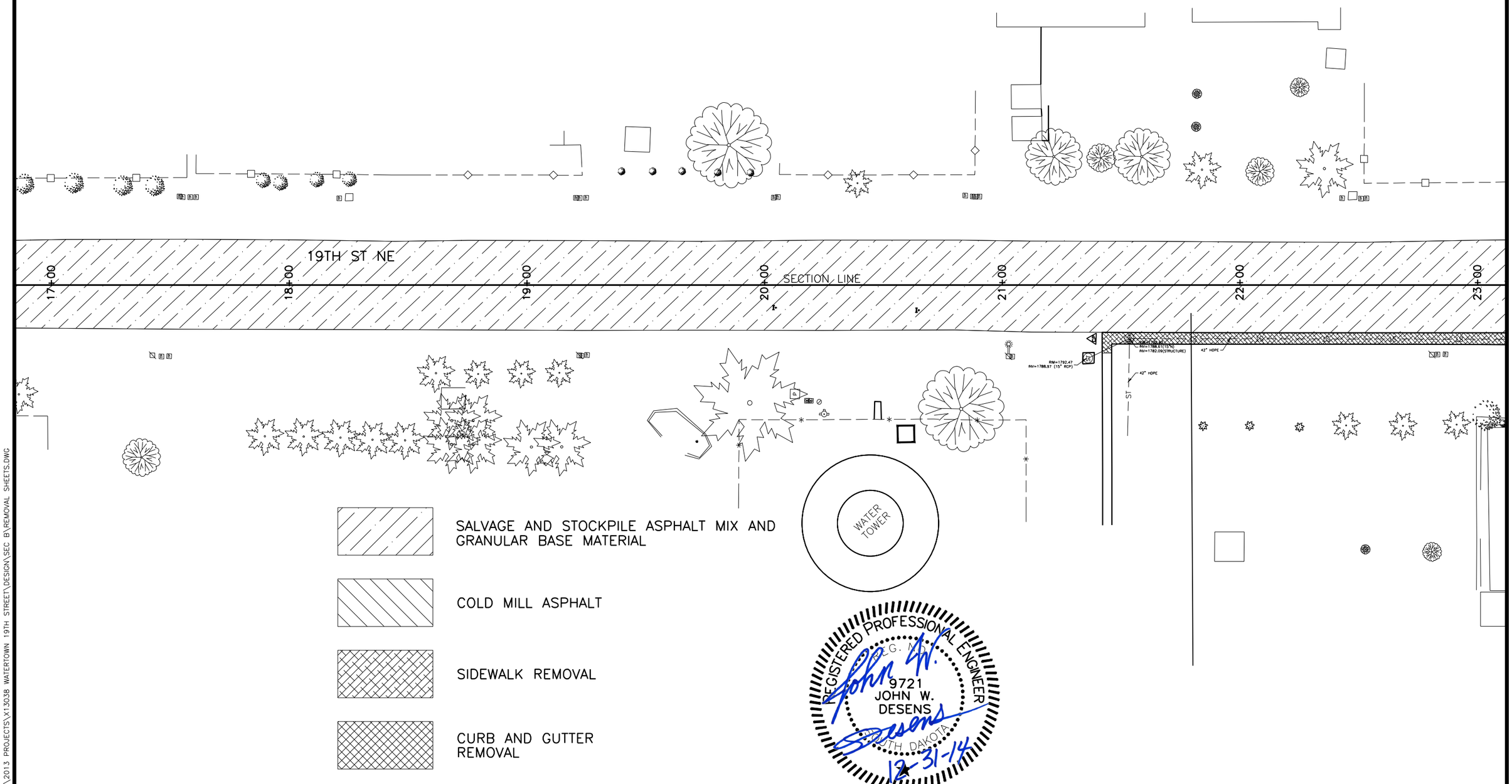


1/21/2015 9:22 AM Z:\2013 PROJECTS\X13038 WATERTOWN 19TH STREET\DESIGN\SEC B\REMOVAL SHEETS.DWG

PLANS BY: CLARK ENGINEERING, WATERTOWN, SD

# REMOVAL PLAN

FOR BIDDING PURPOSES ONLY

| STATE OF SOUTH DAKOTA | PROJECT | SHEET | TOTAL SHEETS |
|---|---|---|---|
| | P 4243(03) | B39 | B99 |

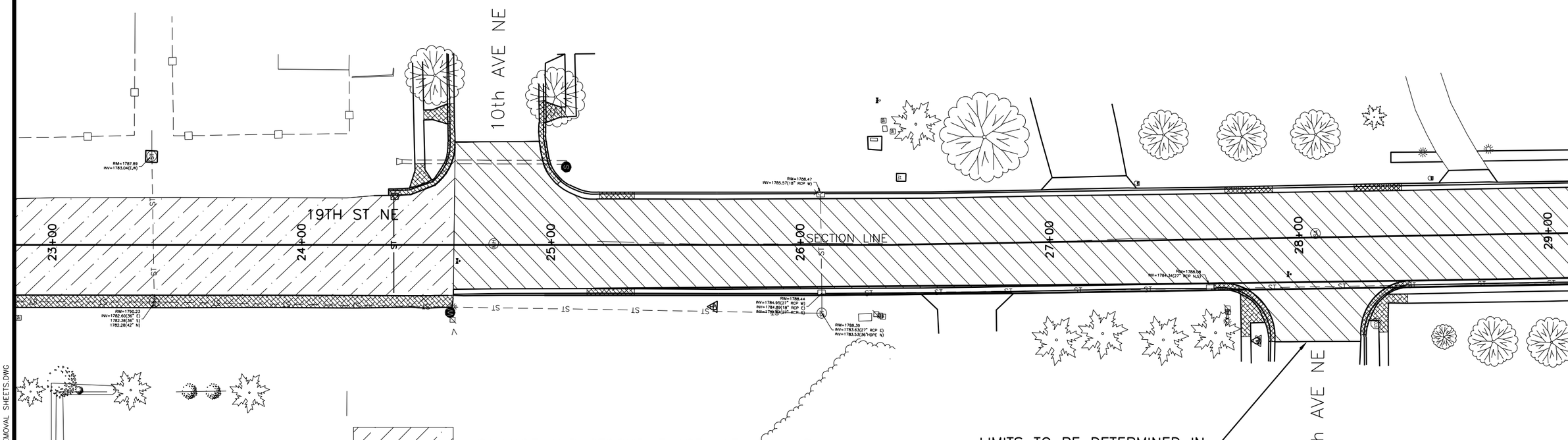


SALVAGE AND STOCKPILE ASPHALT MIX AND GRANULAR BASE MATERIAL

COLD MILL ASPHALT

SIDEWALK REMOVAL

CURB AND GUTTER REMOVAL

REGISTERED PROFESSIONAL ENGINEER
9721
JOHN W. DESENS
SOUTH DAKOTA

John W. Desens
12-31-14

20 0 20 40

1/21/2015 9:23 AM Z:\2013 PROJECTS\X13038 WATERTOWN 19TH STREET\DESIGN\SEC B\REMOVAL SHEETS.DWG

PLANS BY: CLARK ENGINEERING, WATERTOWN, SD

# REMOVAL PLAN

FOR BIDDING PURPOSES ONLY

| STATE OF SOUTH DAKOTA | PROJECT | SHEET | TOTAL SHEETS |
|---|---|---|---|
| | P 4243(03) | B40 | B99 |

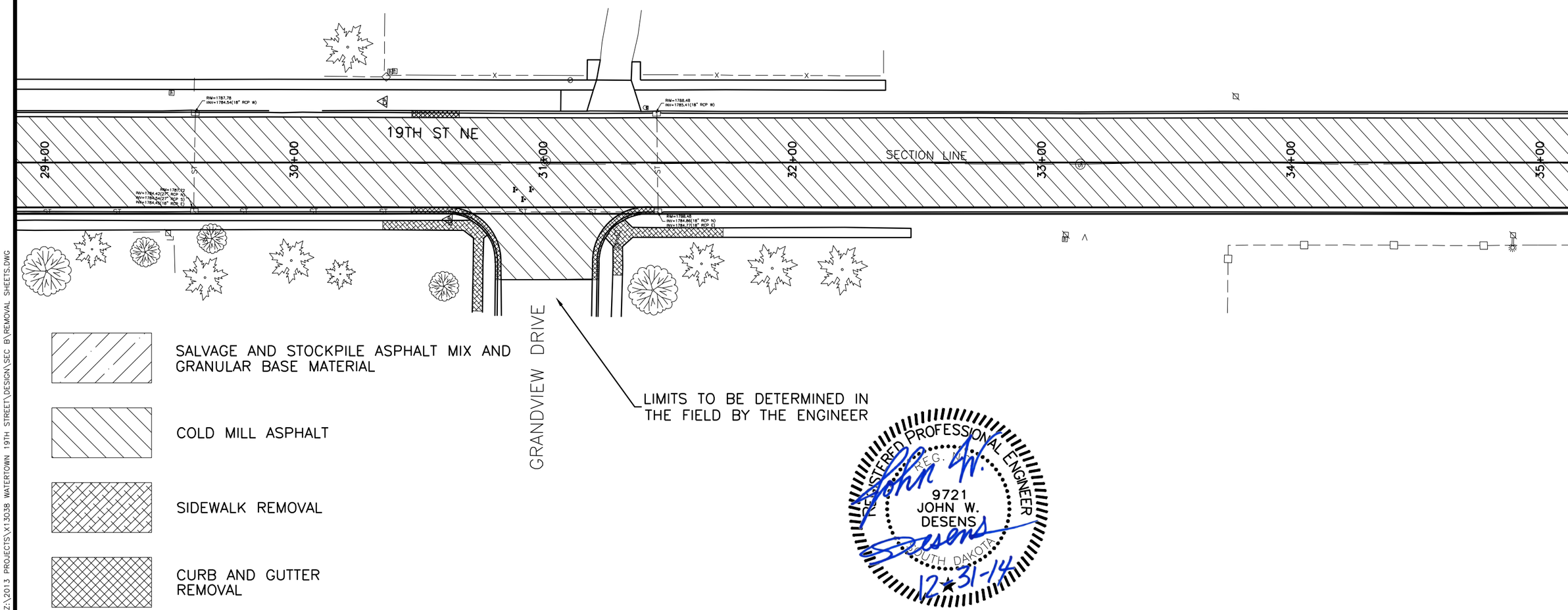


REGISTERED PROFESSIONAL ENGINEER
9721
JOHN W. DESENS
SOUTH DAKOTA
12-31-14

PLANS BY: CLARK ENGINEERING, WATERTOWN, SD

1/21/2015 9:24 AM Z:\2013 PROJECTS\X13038 WATERTOWN 19TH STREET\DESIGN\SEC B\REMOVAL SHEETS.DWG

# REMOVAL PLAN

FOR BIDDING PURPOSES ONLY

| STATE OF SOUTH DAKOTA | PROJECT | SHEET | TOTAL SHEETS |
|---|---|---|---|
| | P 4243(03) | B41 | B99 |

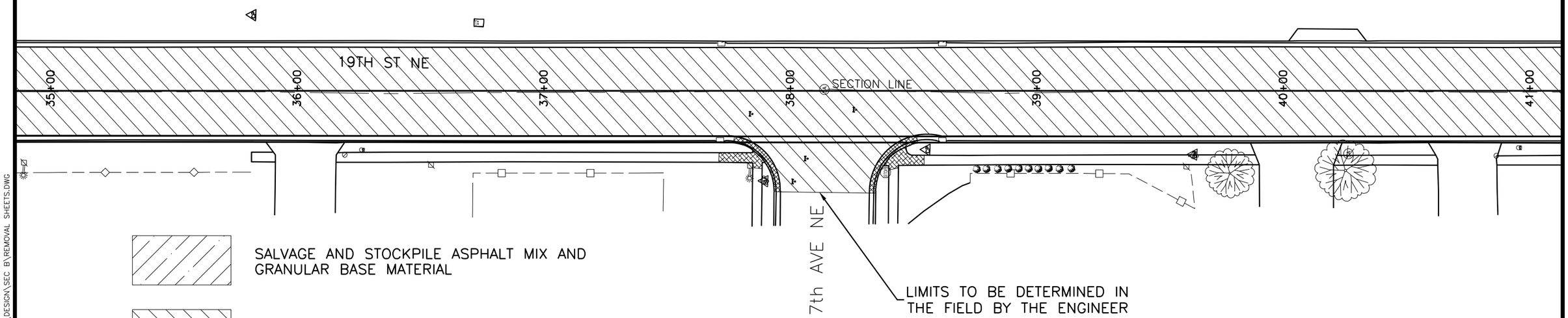


SALVAGE AND STOCKPILE ASPHALT MIX AND GRANULAR BASE MATERIAL

COLD MILL ASPHALT

SIDEWALK REMOVAL

CURB AND GUTTER REMOVAL

REGISTERED PROFESSIONAL ENGINEER
REG. NO.
9721
JOHN W. DESENS
SOUTH DAKOTA
12-31-14

20 0 20 40

PLANS BY: CLARK ENGINEERING, WATERTOWN, SD

1/21/2015 9:24 AM Z:\2013 PROJECTS\X13038 WATERTOWN 19TH STREET\DESIGN\SEC B\REMOVAL SHEETS.DWG

# REMOVAL PLAN

FOR BIDDING PURPOSES ONLY

| STATE OF SOUTH DAKOTA | PROJECT | SHEET | TOTAL SHEETS |
|---|---|---|---|
| | P 4243(03) | B42 | B99 |

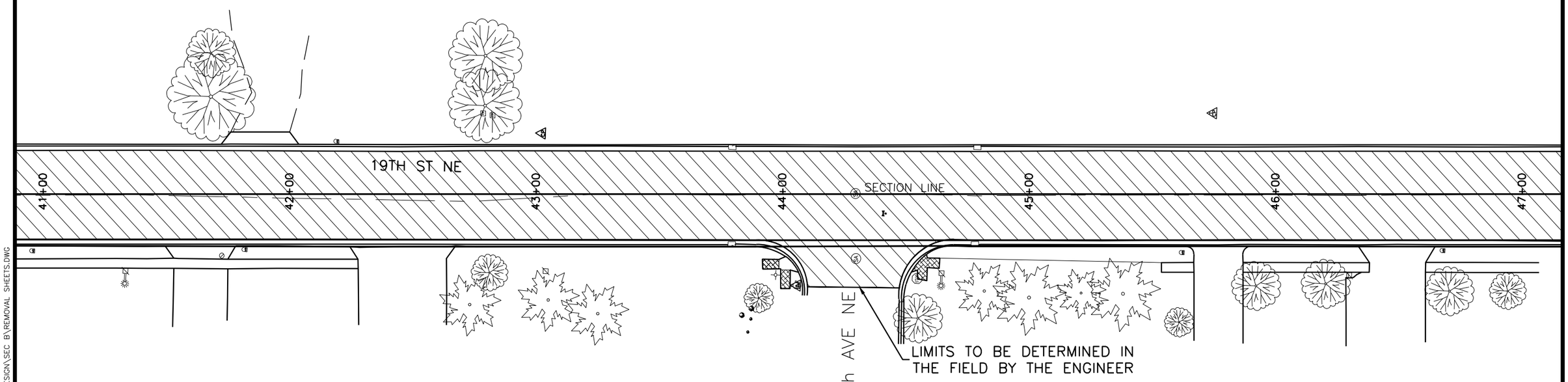


SALVAGE AND STOCKPILE ASPHALT MIX AND GRANULAR BASE MATERIAL

COLD MILL ASPHALT

SIDEWALK REMOVAL

CURB AND GUTTER REMOVAL

REGISTERED PROFESSIONAL ENGINEER
9721
JOHN W. DESENS
SOUTH DAKOTA

12-31-15

20 0 20 40

PLANS BY: CLARK ENGINEERING, WATERTOWN, SD

1/21/2015 9:25 AM Z:\2013 PROJECTS\X13038 WATERTOWN 19TH STREET\DESIGN\SEC B\REMOVAL SHEETS.DWG

# REMOVAL PLAN

FOR BIDDING PURPOSES ONLY

| STATE OF SOUTH DAKOTA | PROJECT | SHEET | TOTAL SHEETS |
|---|---|---|---|
| | P 4243(03) | B43 | B99 |

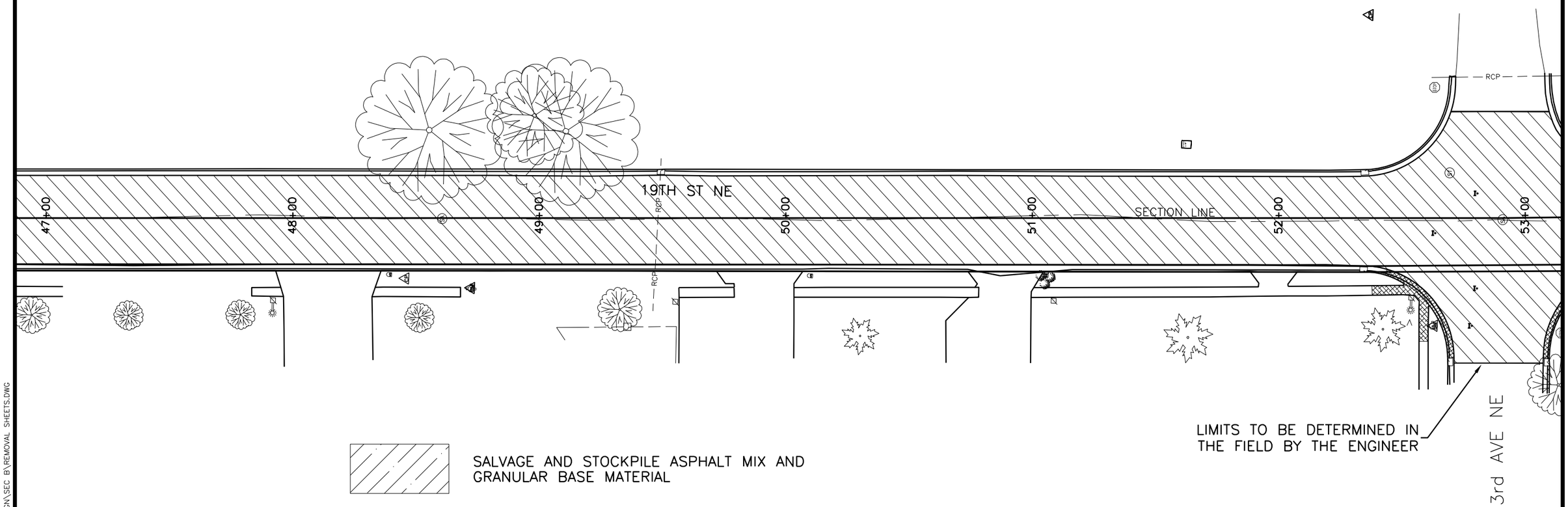


SALVAGE AND STOCKPILE ASPHALT MIX AND GRANULAR BASE MATERIAL

COLD MILL ASPHALT

SIDEWALK REMOVAL

CURB AND GUTTER REMOVAL

REGISTERED PROFESSIONAL ENGINEER
NO.
9721
JOHN W. DESENS
SOUTH DAKOTA

John W. Desens
12-31-14

20 0 20 40

1/21/2015 9:26 AM Z:\2013 PROJECTS\X13038 WATERTOWN 19TH STREET\DESIGN\SEC B\REMOVAL SHEETS.DWG

PLANS BY: CLARK ENGINEERING, WATERTOWN, SD

# REMOVAL PLAN

FOR BIDDING PURPOSES ONLY

| STATE OF SOUTH DAKOTA | PROJECT | SHEET | TOTAL SHEETS |
|---|---|---|---|
| | P 4243(03) | B44 | B99 |

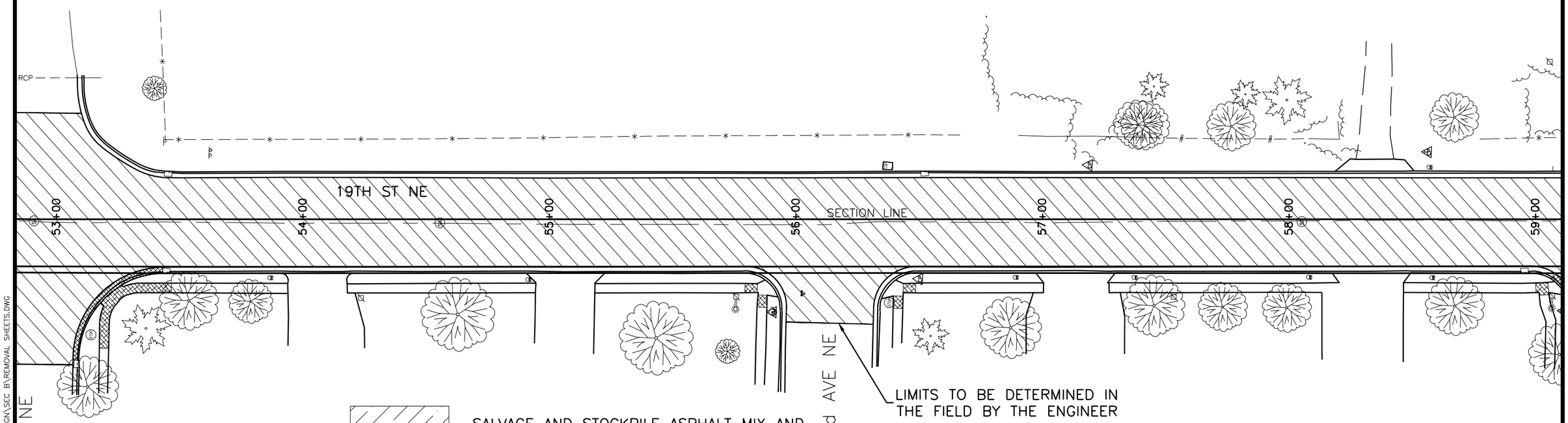


SALVAGE AND STOCKPILE ASPHALT MIX AND GRANULAR BASE MATERIAL

COLD MILL ASPHALT

SIDEWALK REMOVAL

CURB AND GUTTER REMOVAL

REGISTERED PROFESSIONAL ENGINEER
REG. NO. 9721
JOHN W. DESENS
SOUTH DAKOTA
John W. Desens
12-31-14

20 0 20 40

1/21/2015 9:26 AM Z:\2013 PROJECTS\X13038 WATERTOWN 19TH STREET\DESIGN\SEC B\REMOVAL SHEETS.DWG

PLANS BY: CLARK ENGINEERING, WATERTOWN, SD

# REMOVAL PLAN

FOR BIDDING PURPOSES ONLY

| STATE OF SOUTH DAKOTA | PROJECT | SHEET | TOTAL SHEETS |
|---|---|---|---|
| | P 4243(03) | B45 | B99 |

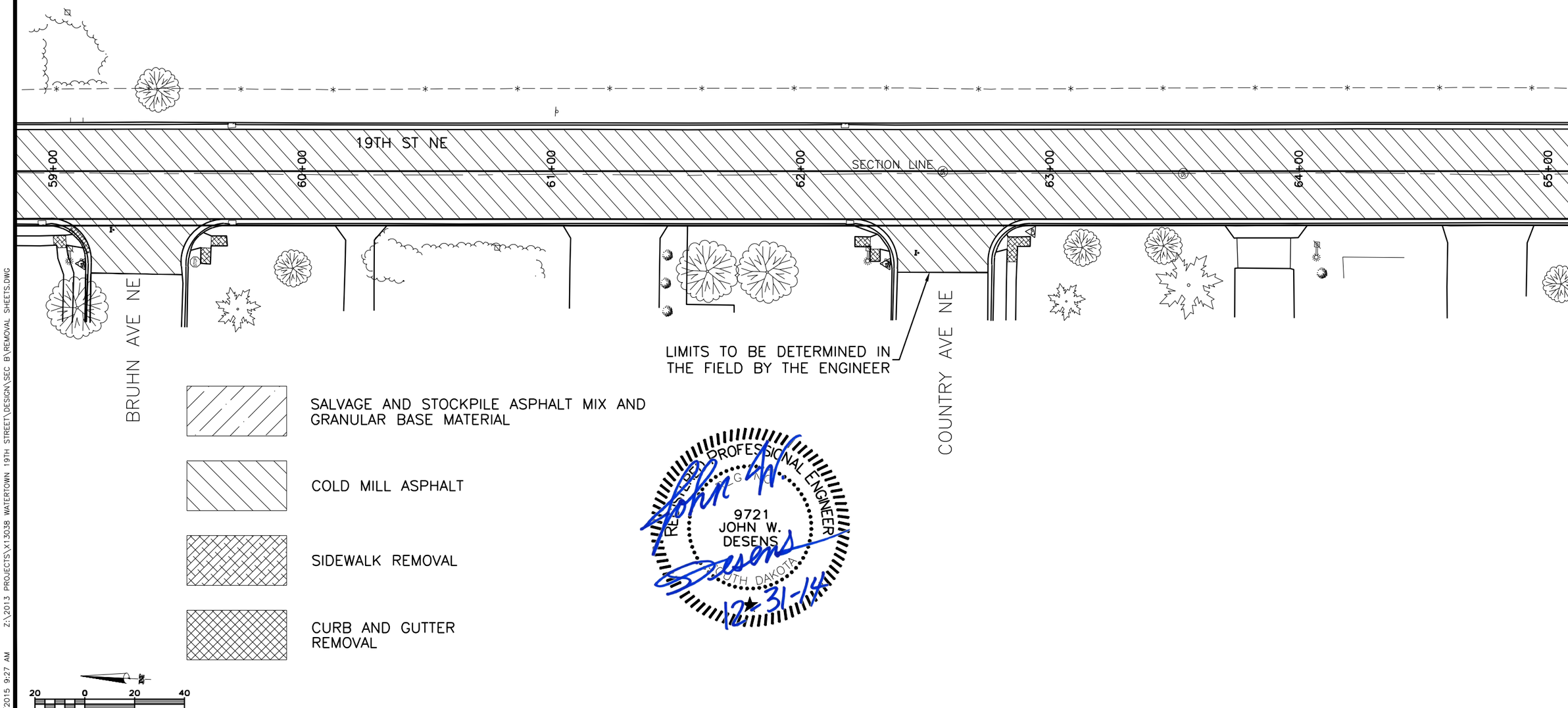


1/21/2015 9:27 AM Z:\2013 PROJECTS\X13038 WATERTOWN 19TH STREET\DESIGN\SEC B\REMOVAL SHEETS.DWG

PLANS BY: CLARK ENGINEERING, WATERTOWN, SD

# REMOVAL PLAN

FOR BIDDING PURPOSES ONLY

| STATE OF SOUTH DAKOTA | PROJECT | SHEET | TOTAL SHEETS |
|---|---|---|---|
| | P 4243(03) | B46 | B99 |

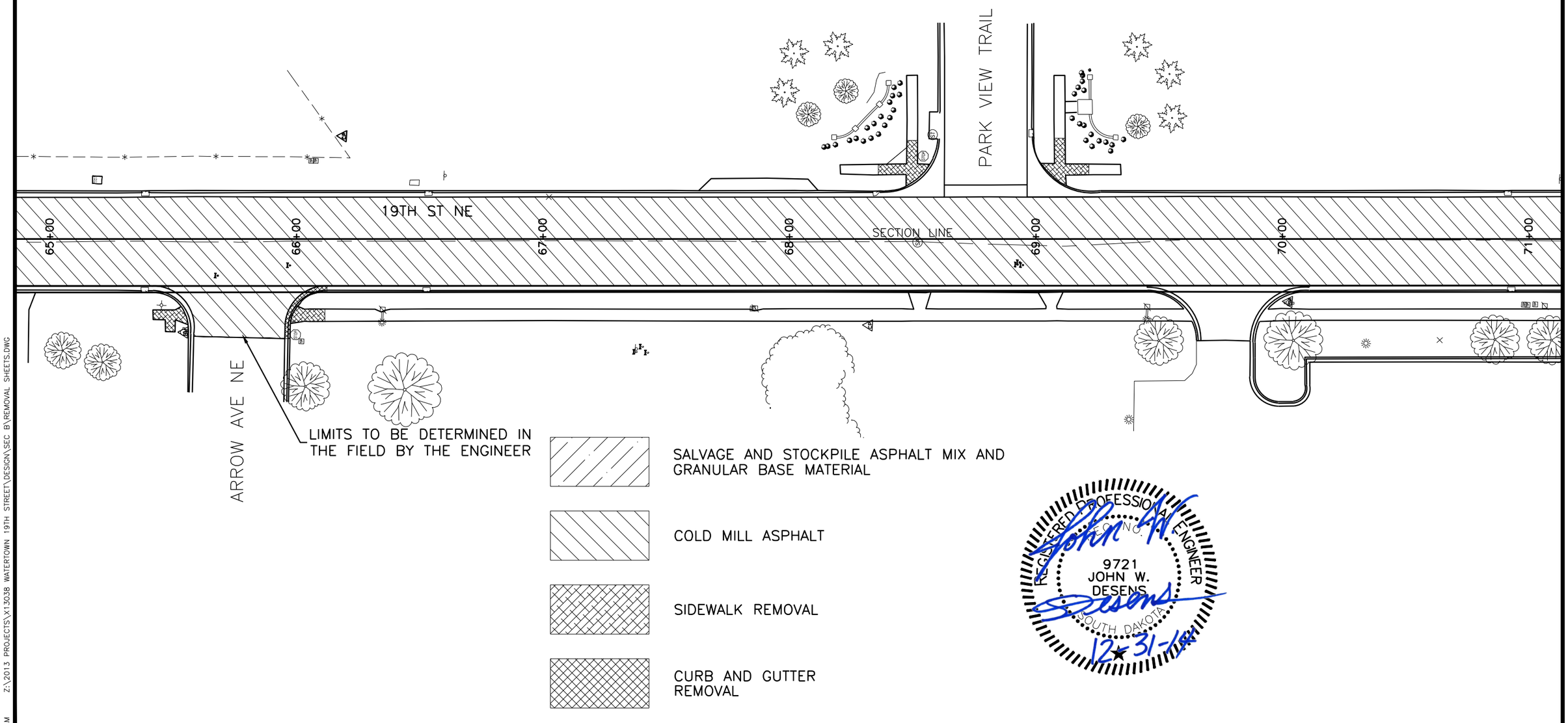


PLANS BY: CLARK ENGINEERING, WATERTOWN, SD

1/21/2015 9:28 AM Z:\2013 PROJECTS\X13038 WATERTOWN 19TH STREET\DESIGN\SEC B\REMOVAL SHEETS.DWG

# REMOVAL PLAN

FOR BIDDING PURPOSES ONLY

| STATE OF SOUTH DAKOTA | PROJECT | SHEET | TOTAL SHEETS |
|---|---|---|---|
| | P 4243(03) | B47 | B99 |

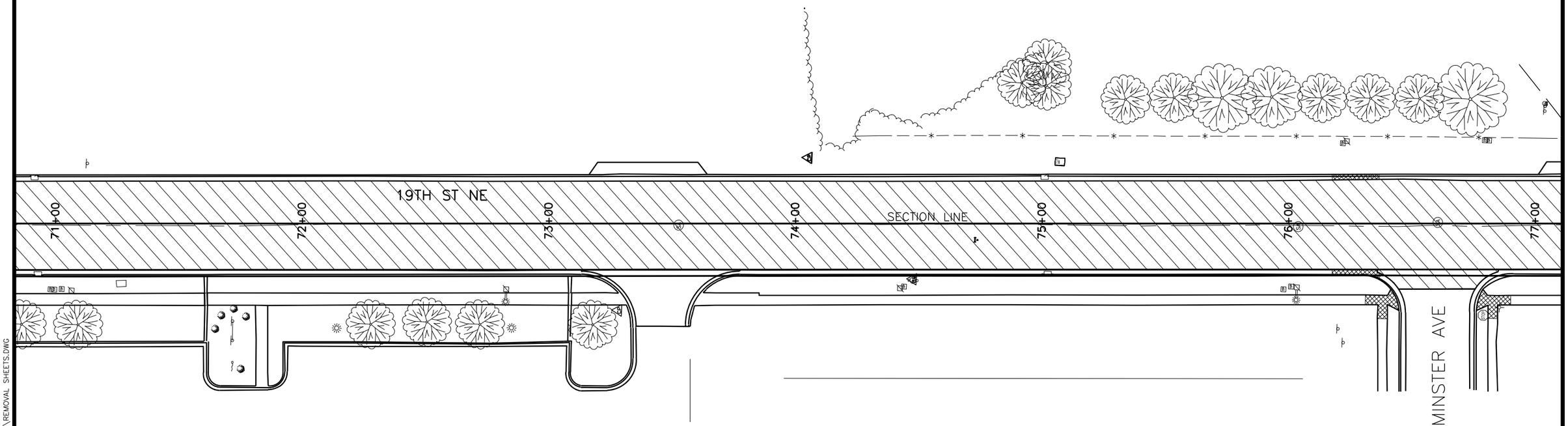


SALVAGE AND STOCKPILE ASPHALT MIX AND GRANULAR BASE MATERIAL

COLD MILL ASPHALT

SIDEWALK REMOVAL

CURB AND GUTTER REMOVAL

REGISTERED PROFESSIONAL ENGINEER
REG. NO.
9721
JOHN W.
DESENS
SOUTH DAKOTA

John W. Desens
12-31-14

20 0 20 40

PLANS BY: CLARK ENGINEERING, WATERTOWN, SD

1/21/2015 9:29 AM Z:\2013 PROJECTS\X13038 WATERTOWN 19TH STREET\DESIGN\SEC B\REMOVAL SHEETS.DWG

# REMOVAL PLAN

FOR BIDDING PURPOSES ONLY

| STATE OF SOUTH DAKOTA | PROJECT | SHEET | TOTAL SHEETS |
|---|---|---|---|
| | P 4243(03) | B48 | B99 |

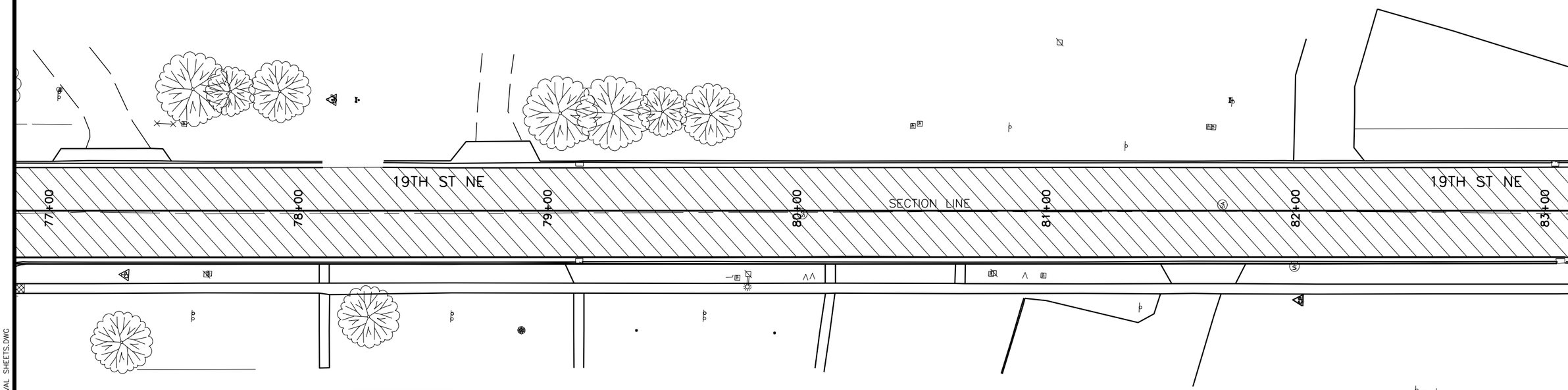


SALVAGE AND STOCKPILE ASPHALT MIX AND GRANULAR BASE MATERIAL

COLD MILL ASPHALT

SIDEWALK REMOVAL

CURB AND GUTTER REMOVAL

REGISTERED PROFESSIONAL ENGINEER
REG. NO.
9721
JOHN W. DESENS
SOUTH DAKOTA

John W. Desens
12-31-14

20 0 20 40

PLANS BY: CLARK ENGINEERING, WATERTOWN, SD

1/21/2015 9:29 AM Z:\2013 PROJECTS\X13038 WATERTOWN 19TH STREET\DESIGN\SEC B\REMOVAL SHEETS.DWG

# REMOVAL PLAN

FOR BIDDING PURPOSES ONLY

| STATE OF SOUTH DAKOTA | PROJECT | SHEET | TOTAL SHEETS |
|---|---|---|---|
| | P 4243(03) | B49 | B99 |

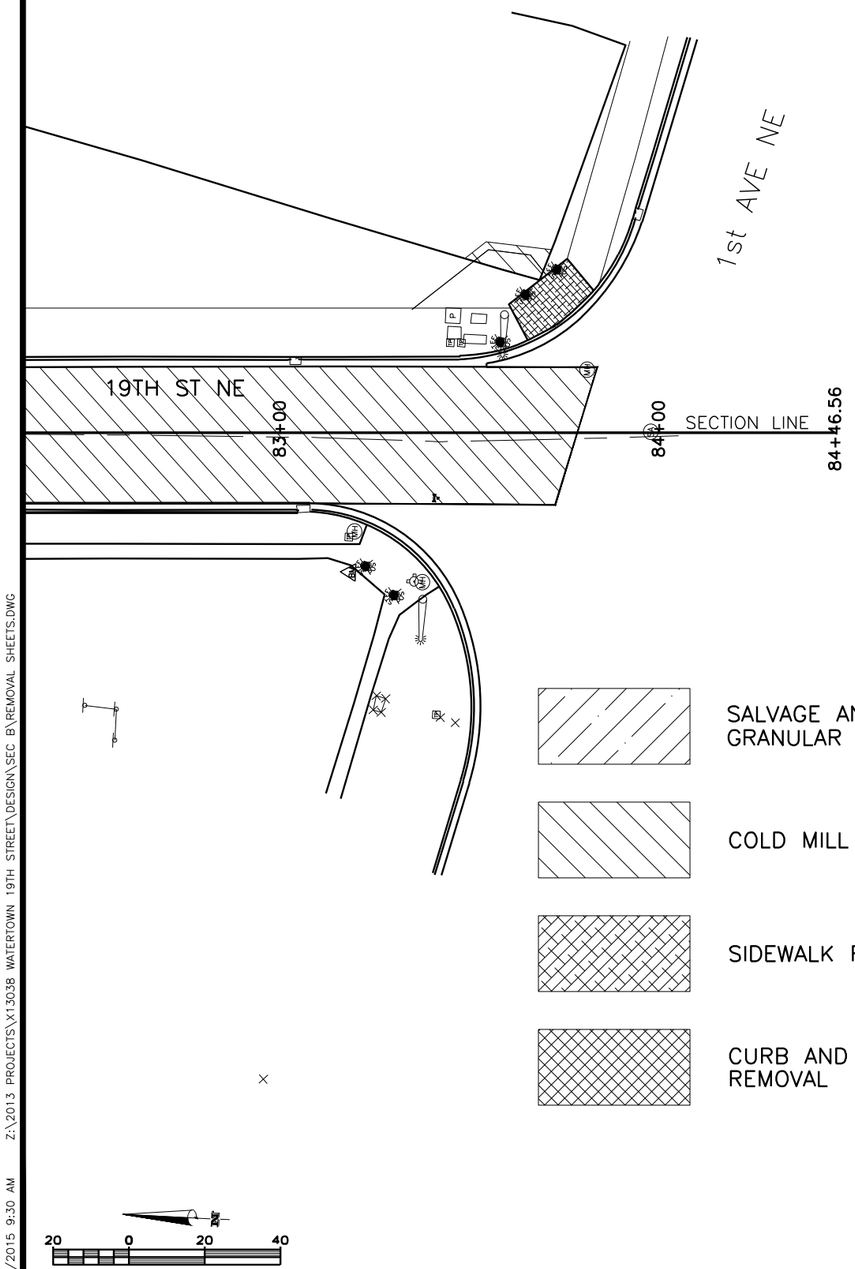


SALVAGE AND STOCKPILE ASPHALT MIX AND GRANULAR BASE MATERIAL

COLD MILL ASPHALT

SIDEWALK REMOVAL

CURB AND GUTTER REMOVAL

REGISTERED PROFESSIONAL ENGINEER
REG. NO.
9721
JOHN W.
DESENS
SOUTH DAKOTA

John W. Desens
12-31-14

1/21/2015 9:30 AM Z:\2013 PROJECTS\X13038 WATERTOWN 19TH STREET\DESIGN\SEC B\REMOVAL SHEETS.DWG

PLANS BY: CLARK ENGINEERING, WATERTOWN, SD

# CURB AND GUTTER LAYOUT

FOR BIDDING PURPOSES ONLY

| STATE OF SOUTH DAKOTA | PROJECT | SHEET | TOTAL SHEETS |
|---|---|---|---|
| | P 4243(03) | B50 | B99 |

1 0+20.38–43.87'LT
BEGIN STR C&G
BEGIN 20' RAD.
TC ELEV. 1792.35 (MATCH EXISTING)

2 0+29.99–24.96'LT
END STR C&G
BEGIN TYPE P C&G
TC ELEV. 1792.22 (THEOR)

3 0+34.99–22.25'LT
END TYPE P C&G
BEGIN STR C&G
TC ELEV. 1792.19 (THEOR)

4 0+43.38–20.67'LT
END 23' RAD.
TC ELEV. 1792.14

5 3+81.93–20.67'LT
END STR C&G
BEGIN TYPE P C&G
TC ELEV. 1790.67 (THEOR)

6 3+86.93–20.67'LT
END TYPE P C&G
BEGIN STR C&G
TC ELEV. 1790.57 (THEOR)

7 3+99.46–20.67'LT
END STR C&G
BEGIN TYPE P C&G
TC ELEV. 1790.31 (THEOR)

8 4+32.47–20.67'LT
END TYPE P C&G
BEGIN STR C&G
TC ELEV. 1790.30 (THEOR)

9 4+74.37–20.67'LT
END STR C&G
BEGIN TYPE P C&G
TC ELEV. 1790.42 (THEOR)

10 4+79.37–20.67'LT
END TYPE P C&G
BEGIN STR C&G
TC ELEV. 1790.40 (THEOR)

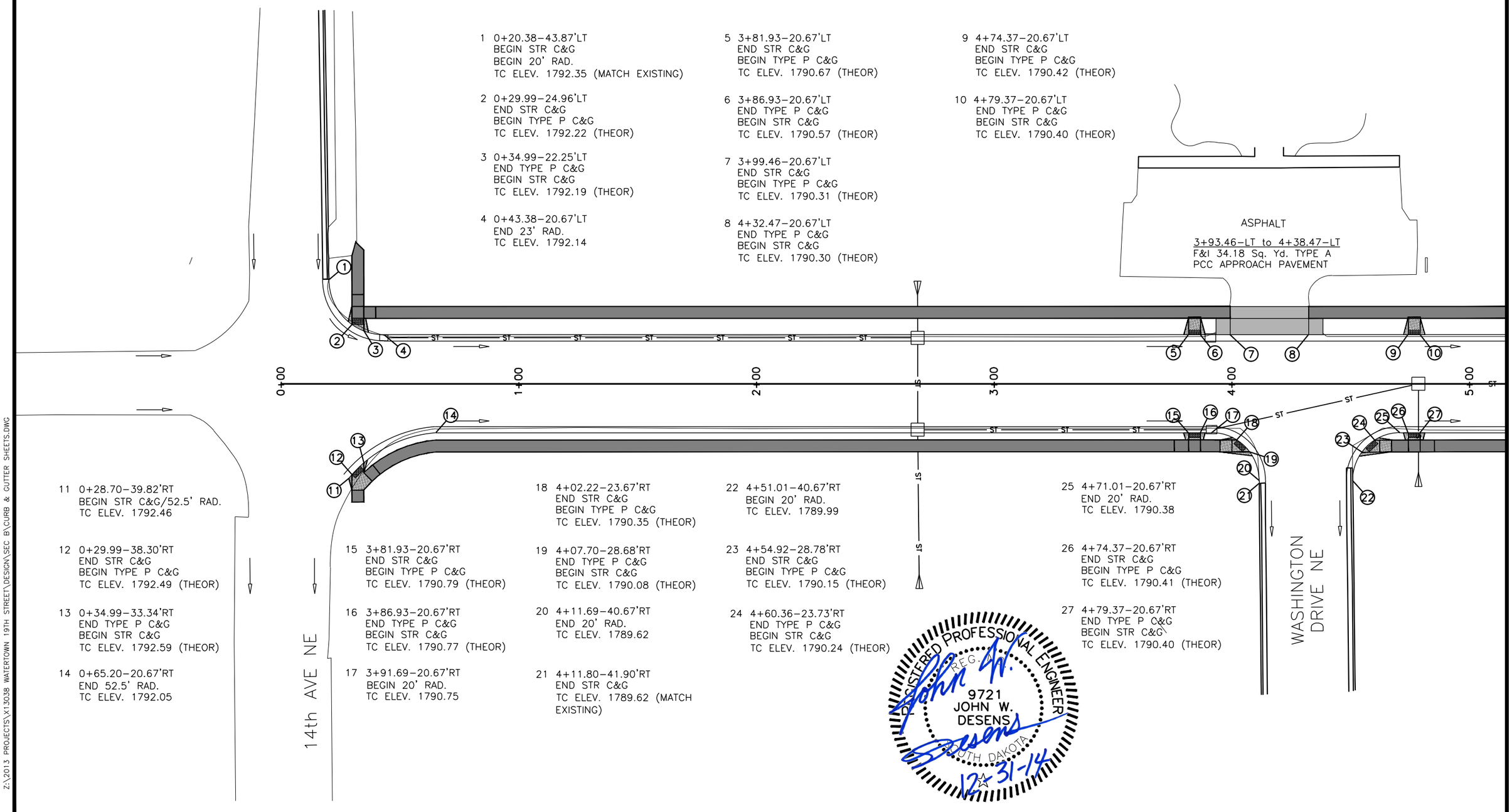


11 0+28.70–39.82'RT
BEGIN STR C&G/52.5' RAD.
TC ELEV. 1792.46

12 0+29.99–38.30'RT
END STR C&G
BEGIN TYPE P C&G
TC ELEV. 1792.49 (THEOR)

13 0+34.99–33.34'RT
END TYPE P C&G
BEGIN STR C&G
TC ELEV. 1792.59 (THEOR)

14 0+65.20–20.67'RT
END 52.5' RAD.
TC ELEV. 1792.05

15 3+81.93–20.67'RT
END STR C&G
BEGIN TYPE P C&G
TC ELEV. 1790.79 (THEOR)

16 3+86.93–20.67'RT
END TYPE P C&G
BEGIN STR C&G
TC ELEV. 1790.77 (THEOR)

17 3+91.69–20.67'RT
BEGIN 20' RAD.
TC ELEV. 1790.75

18 4+02.22–23.67'RT
END STR C&G
BEGIN TYPE P C&G
TC ELEV. 1790.35 (THEOR)

19 4+07.70–28.68'RT
END TYPE P C&G
BEGIN STR C&G
TC ELEV. 1790.08 (THEOR)

20 4+11.69–40.67'RT
END 20' RAD.
TC ELEV. 1789.62

21 4+11.80–41.90'RT
END STR C&G
TC ELEV. 1789.62 (MATCH EXISTING)

22 4+51.01–40.67'RT
BEGIN 20' RAD.
TC ELEV. 1789.99

23 4+54.92–28.78'RT
END STR C&G
BEGIN TYPE P C&G
TC ELEV. 1790.15 (THEOR)

24 4+60.36–23.73'RT
END TYPE P C&G
BEGIN STR C&G
TC ELEV. 1790.24 (THEOR)

25 4+71.01–20.67'RT
END 20' RAD.
TC ELEV. 1790.38

26 4+74.37–20.67'RT
END STR C&G
BEGIN TYPE P C&G
TC ELEV. 1790.41 (THEOR)

27 4+79.37–20.67'RT
END TYPE P C&G
BEGIN STR C&G
TC ELEV. 1790.40 (THEOR)

REGISTERED PROFESSIONAL ENGINEER
REG. 9721
JOHN W. DESENS
SOUTH DAKOTA
John W. Desens
12-31-14

20 0 20 40

1/21/2015 9:38 AM Z:\2013 PROJECTS\X13038 WATERTOWN 19TH STREET\DESIGN\SEC B\CURB & GUTTER SHEETS.DWG

PLANS BY: CLARK ENGINEERING, WATERTOWN, SD

# CURB AND GUTTER LAYOUT

FOR BIDDING PURPOSES ONLY

| STATE OF SOUTH DAKOTA | PROJECT | SHEET | TOTAL SHEETS |
|---|---|---|---|
| | P 4243(03) | B51 | B99 |

1 7+08.41–20.67'LT
END STR C&G
BEGIN TYPE P C&G
TC ELEV. 1789.35 (THEOR)

2 7+13.41–20.67'LT
END TYPE P C&G
BEGIN STR C&G
TC ELEV. 1789.25 (THEOR)

3 7+22.48–20.67'LT
END STR C&G
BEGIN TYPE P C&G
TC ELEV. 1789.06 (THEOR)

4 7+55.49–20.67'LT
END TYPE P C&G
BEGIN STR C&G
TC ELEV. 1789.07 (THEOR)

5 8+04.00–20.67'LT
END STR C&G
BEGIN TYPE P C&G
TC ELEV. 1789.44 (THEOR)

6 8+09.00–20.67'LT
END TYPE P C&G
BEGIN STR C&G
TC ELEV. 1789.46 (THEOR)

7 8+94.53–20.67'LT
END STR C&G
BEGIN TYPE P C&G
TC ELEV. 1789.62 (THEOR)

8 8+99.53–20.67'LT
END TYPE P C&G
BEGIN STR C&G
TC ELEV. 1789.63 (THEOR)

9 9+00.06–20.67'LT
BEGIN 20' RAD.
TC ELEV. 1789.63

10 9+15.11–27.50'LT
END STR C&G
BEGIN TYPE P C&G
TC ELEV. 1789.66 (THEOR)

11 9+18.31–32.50'LT
END TYPE P C&G
BEGIN STR C&G
TC ELEV. 1789.67 (THEOR)

12 9+20.06–40.95'LT
END 20' RAD.
TC ELEV. 1789.69 (THEOR)

13 9+19.92–49.39'LT
END STR C&G
TC ELEV. 1789.70 (MATCH EXISTING)

14 9+59.35–49.40'LT
BEGIN STR C&G
TC ELEV. 1789.66 (MATCH EXISTING)

15 9+59.47–40.39'LT
BEGIN 20' RAD.
TC ELEV. 1789.65

16 9+61.22–32.50'LT
END STR C&G
BEGIN TYPE P C&G
TC ELEV. 1789.64 (THEOR)

17 9+64.42–27.50'LT
END TYPE P C&G
BEGIN STR C&G
TC ELEV. 1789.62 (THEOR)

18 9+79.47–20.67'LT
END 20' RAD.
TC ELEV. 1789.60

19 10+52.60–20.67'LT
END STR C&G
BEGIN TYPE P C&G
TC ELEV. 1790.38 (THEOR)

20 10+57.60–20.67'LT
END TYPE P C&G
BEGIN STR C&G
TC ELEV. 1790.32 (THEOR)

21 10+76.57–20.67'LT
END STR C&G
BEGIN TYPE P C&G
TC ELEV. 1790.11 (THEOR)

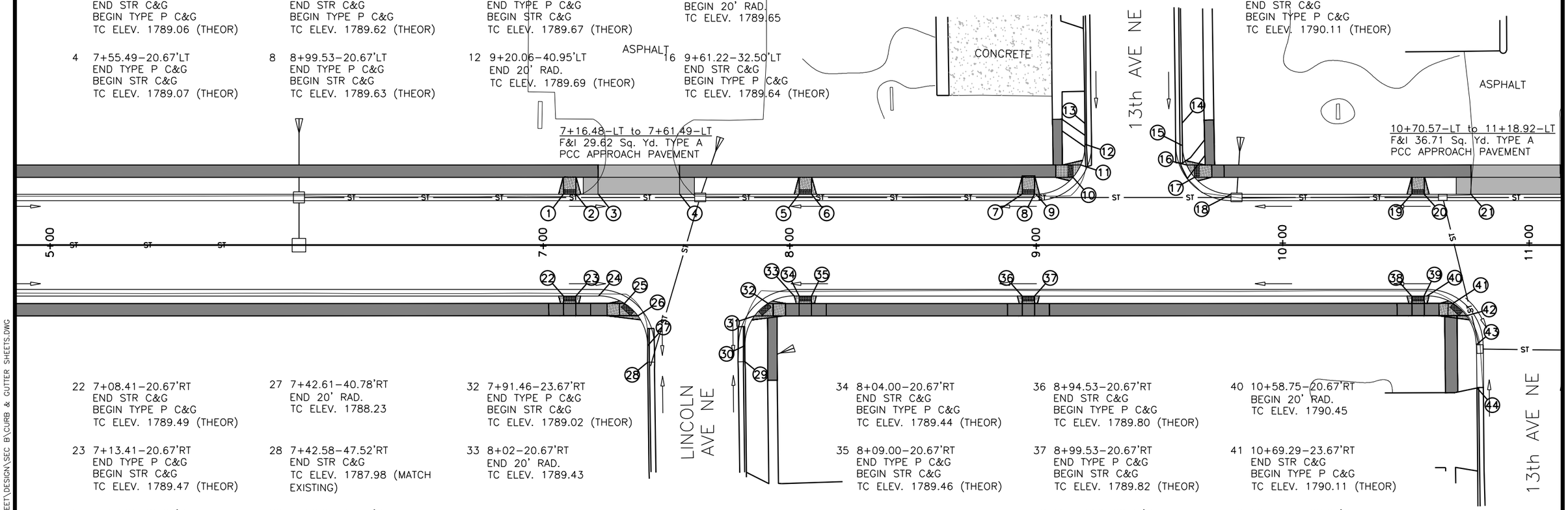


22 7+08.41–20.67'RT
END STR C&G
BEGIN TYPE P C&G
TC ELEV. 1789.49 (THEOR)

23 7+13.41–20.67'RT
END TYPE P C&G
BEGIN STR C&G
TC ELEV. 1789.47 (THEOR)

24 7+22.61–20.67'RT
BEGIN 20'RAD.
TC ELEV. 1789.43

25 7+33.15–23.67'RT
END STR C&G
BEGIN TYPE P C&G
TC ELEV. 1789.01 (THEOR)

26 7+38.61–28.67'RT
END TYPE O C&G
BEGIN STR C&G
TC ELEV. 1788.72 (THEOR)

27 7+42.61–40.78'RT
END 20' RAD.
TC ELEV. 1788.23

28 7+42.58–47.52'RT
END STR C&G
TC ELEV. 1787.98 (MATCH EXISTING)

29 7+82.05–47.32'RT
BEGIN STR C&G
TC ELEV. 1788.01 (MATCH EXISTING)

30 7+82.00–40.83'RT
BEGIN 20' RAD.
TC ELEV. 1788.25 (THEOR)

31 7+86.00–28.67'RT
END STR C&G
BEGIN TYPE P C&G
TC ELEV. 1788.74 (THEOR)

32 7+91.46–23.67'RT
END TYPE P C&G
BEGIN STR C&G
TC ELEV. 1789.02 (THEOR)

33 8+02–20.67'RT
END 20' RAD.
TC ELEV. 1789.43

34 8+04.00–20.67'RT
END STR C&G
BEGIN TYPE P C&G
TC ELEV. 1789.44 (THEOR)

35 8+09.00–20.67'RT
END TYPE P C&G
BEGIN STR C&G
TC ELEV. 1789.46 (THEOR)

36 8+94.53–20.67'RT
END STR C&G
BEGIN TYPE P C&G
TC ELEV. 1789.80 (THEOR)

37 8+99.53–20.67'RT
END TYPE P C&G
BEGIN STR C&G
TC ELEV. 1789.82 (THEOR)

38 10+52.60–20.67'RT
END STR C&G
BEGIN TYPE P C&G
TC ELEV. 1790.43 (THEOR)

39 10+57.60–20.67'RT
END TYPE P C&G
BEGIN STR C&G
TC ELEV. 1790.45 (THEOR)

40 10+58.75–20.67'RT
BEGIN 20' RAD.
TC ELEV. 1790.45

41 10+69.29–23.67'RT
END STR C&G
BEGIN TYPE P C&G
TC ELEV. 1790.11 (THEOR)

42 10+71.75–28.67'RT
END TYPE P C&G
BEGIN STR C&G
TC ELEV. 1789.89 (THEOR)

43 10+78.75–40.46'RT
END 20' RAD.
TC ELEV. 1789.50

44 10+78.93–57.78'RT
END STR C&G
TC ELEV. 1789.19 (MATCH EXISTING)

REGISTERED PROFESSIONAL ENGINEER
NO. 9721
JOHN W. DESENS
SOUTH DAKOTA
12-31-15

20 0 20 40

PLANS BY: CLARK ENGINEERING, WATERTOWN, SD

1/21/2015 9:38 AM Z:\2013 PROJECTS\X13038 WATERTOWN 19TH STREET\DESIGN\SEC B\CURB & GUTTER SHEETS.DWG

# CURB AND GUTTER LAYOUT

FOR BIDDING PURPOSES ONLY

| STATE OF SOUTH DAKOTA | PROJECT | SHEET | TOTAL SHEETS |
|---|---|---|---|
| | P 4243(03) | B52 | B99 |

1 11+12.92–20.67'LT
END TYPE P C&G
BEGIN STR C&G
TC ELEV. 1790.46 (THEOR)

2 11+40.19–20.67'LT
END STR C&G
BEGIN TYPE P C&G
TC ELEV. 1790.77 (THEOR)

3 11+45.19–20.67'LT
END TYPE P C&G
BEGIN STR C&G
TC ELEV. 1790.81 (THEOR)

4 13+99.52–20.67'LT
END STR C&G
BEGIN TYPE P C&G
TC ELEV. 1792.78 (THEOR)

5 14+04.52–20.67'LT
END TYPE P C&G
BEGIN STR C&G
TC ELEV. 1792.82 (THEOR)

6 14+70.59–20.67'LT
END STR C&G
BEGIN TYPE P C&G
TC ELEV. 1793.33 (THEOR)

7 14+75.59–20.67'LT
END TYPE P C&G
BEGIN STR C&G
TC ELEV. 1793.36 (THEOR)

8 15+27.25–20.67'LT
END STR C&G
BEGIN TYPE P C&G
TC ELEV. 1793.35 (THEOR)

9 15+55.22–20.67'LT
END TYPE P C&G
BEGIN STR C&G
TC ELEV. 1793.65 (THEOR)

10 15+86.57–20.67'LT
BEGIN 15' RAD.
TC ELEV. 1793.51

11 15+87.21–20.69'LT
END STR C&G
BEGIN TYPE P C&G
TC ELEV. 1793.52 (THEOR)

12 15+92.20–21.67'LT
END TYPE P C&G
BEGIN STR C&G
TC ELEV. 1793.53 (THEOR)

13 16+01.52–34.46'LT
END 15' RAD.
END STR C&G
TC ELEV. 1793.58 (MATCH EXISTING)

14 16+40.90–33.09'LT
BEGIN STR C&G
BEGIN 15' RAD.
TC ELEV. 1793.18 (MATCH EXISTING)

15 16+55.68–20.67'LT
END 15' RAD.
TC ELEV. 1794.75

15+21.25–LT to 15+61.22–LT
F&I 30.34 Sq. Yd. TYPE A
PCC APPROACH PAVEMENT

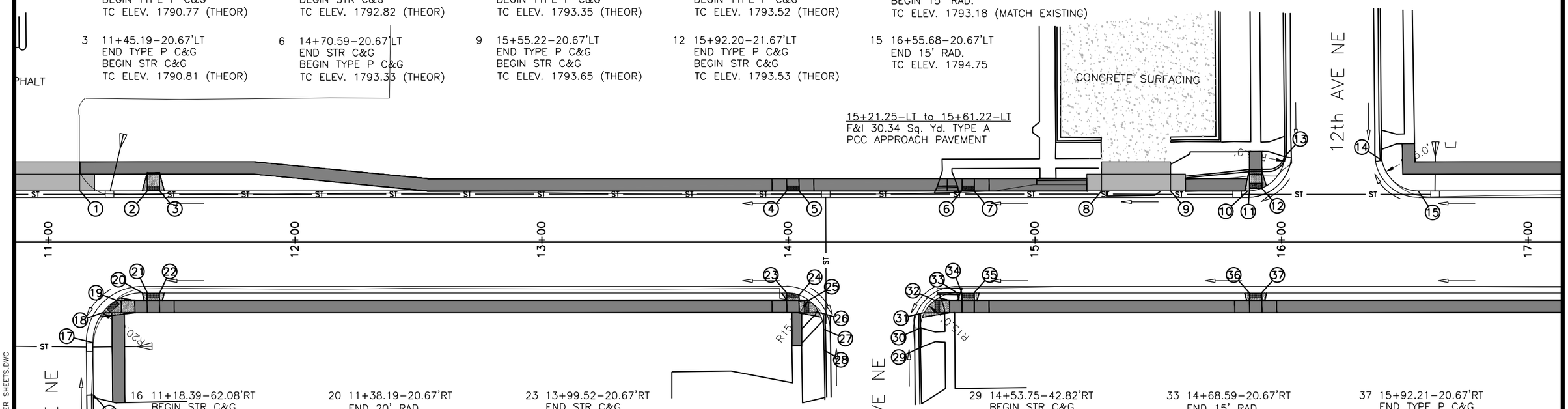


16 11+18.39–62.08'RT
BEGIN STR C&G
TC ELEV. 1789.31 (MATCH EXISTING)

17 11+18.19–40.85'RT
BEGIN 20' RAD.
TC ELEV. 1789.90

18 11+22.19–28.67'RT
END STR C&G
BEGIN TYPE P C&G
TC ELEV. 1790.26 (THEOR)

19 11+27.65–23.67'RT
END TYPE P C&G
BEGIN STR C&G
TC ELEV. 1790.46 (THEOR)

20 11+38.19–20.67'RT
END 20' RAD.
TC ELEV. 1790.77

21 11+40.19–20.67'RT
END STR C&G
BEGIN TYPE P C&G
TC ELEV. 1790.77 (THEOR)

22 11+45.19–20.67'RT
END TYPE P C&G
BEGIN STR C&G
TC ELEV. 1790.81 (THEOR)

23 13+99.52–20.67'RT
END STR C&G
BEGIN 15' RAD./TYPE P C&G
TC ELEV. 1792.78 (THEOR)

24 14+04.52–21.53'RT
END TYPE P C&G
BEGIN STR C&G
TC ELEV. 1792.64 (THEOR)

25 14+08.52–23.67'RT
END STR C&G
BEGIN TYPE P C&G
TC ELEV. 1792.51 (THEOR)

26 14+12.78–28.67'RT
END TYPE P C&G
BEGIN STR C&G
TC ELEV. 1792.33 (THEOR)

27 14+14.51–35.40'RT
END 15' RAD.
TC ELEV. 1792.13

28 14+14.66–43.85'RT
END STR C&G
TC ELEV. 1791.75 (MATCH EXISTING)

29 14+53.75–42.82'RT
BEGIN STR C&G
TC ELEV. 1791.75 (MATCH EXISTING)

30 14+53.61–34.88'RT
BEGIN 15' RAD.
TC ELEV. 1791.87

31 14+55.33–38.67'RT
END STR C&G
BEGIN TYPE P C&G
TC ELEV. 1792.26 (THEOR)

32 14+59.59–23.67'RT
END TYPE P C&G
BEGIN STR C&G
TC ELEV. 1792.65 (THEOR)

33 14+68.59–20.67'RT
END 15' RAD.
TC ELEV. 1793.22

34 14+70.58–20.67'RT
END STR C&G
BEGIN TYPE P C&G
TC ELEV. 1793.26 (THEOR)

35 14+75.59–20.67'RT
END TYPE P C&G
BEGIN STR C&G
TC ELEV. 1793.36 (THEOR)

36 15+87.18–20.67'RT
END STR C&G
BEGIN TYPE P C&G
TC ELEV. 1794.23 (THEOR)

37 15+92.21–20.67'RT
END TYPE P C&G
BEGIN STR C&G
TC ELEV. 1794.26 (THEOR)

REGISTERED PROFESSIONAL ENGINEER
REG. NO.
9721
JOHN W.
DESENS
SOUTH DAKOTA

12-31-14

20 0 20 40

PLANS BY: CLARK ENGINEERING, WATERTOWN, SD

1/21/2015 9:40 AM Z:\2013 PROJECTS\X13038 WATERTOWN 19TH STREET\DESIGN\SEC B\CURB & GUTTER SHEETS.DWG

# CURB AND GUTTER LAYOUT

FOR BIDDING PURPOSES ONLY

| STATE OF SOUTH DAKOTA | PROJECT | SHEET | TOTAL SHEETS |
|---|---|---|---|
| | P 4243(03) | B53 | B99 |

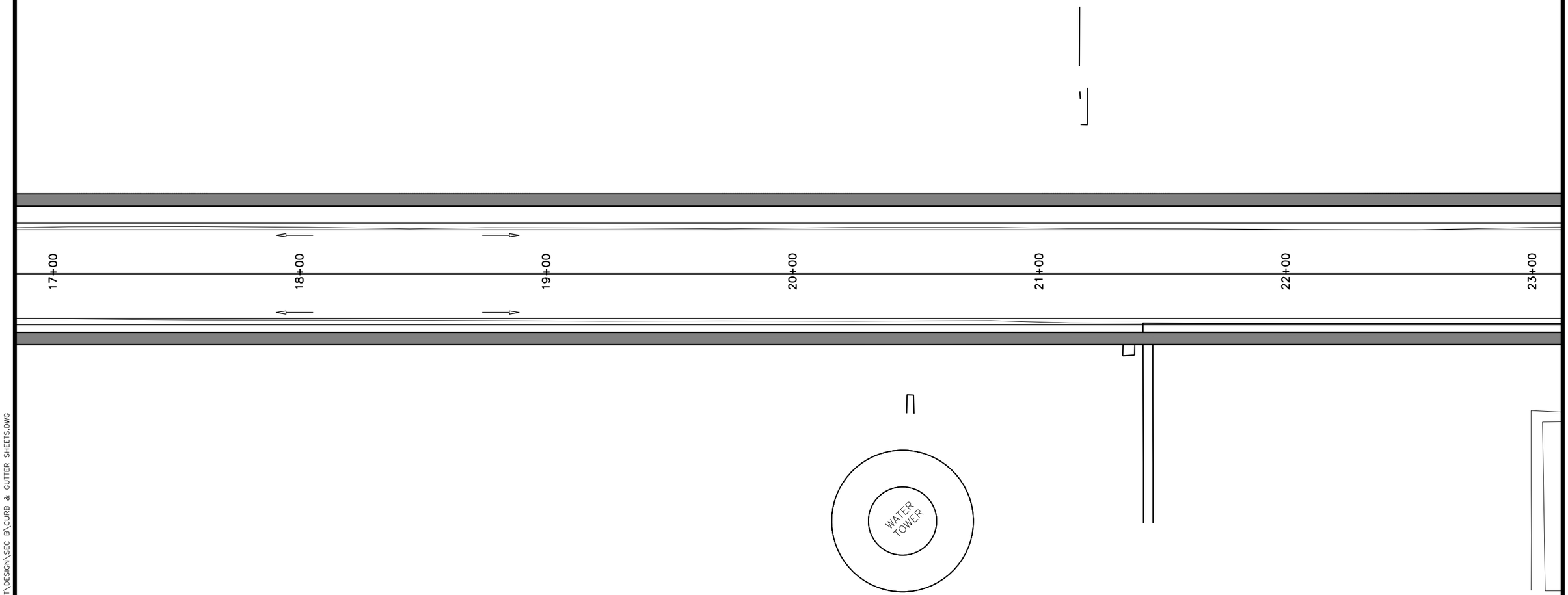


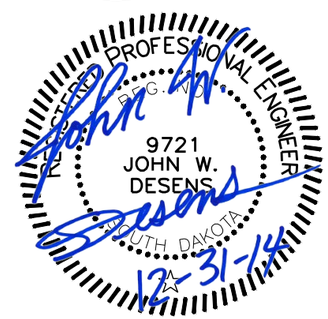


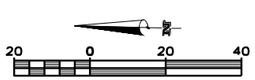


1/21/2015 9:40 AM Z:\2013 PROJECTS\X13038 WATERTOWN 19TH STREET\DESIGN\SEC B\CURB & GUTTER SHEETS.DWG

PLANS BY: CLARK ENGINEERING, WATERTOWN, SD

# CURB AND GUTTER LAYOUT

FOR BIDDING PURPOSES ONLY

| STATE OF SOUTH DAKOTA | PROJECT | SHEET | TOTAL SHEETS |
|---|---|---|---|
| | P 4243(03) | B54 | B99 |

1 24+38.82–20.67'LT
BEGIN 20' RAD.
TC ELEV. 1790.06

2 24+44.58–21.51'LT
END STR C&G
BEGIN TYPE P C&G
TC ELEV. 1790.07 (THEOR)

3 24+49.57–23.80'LT
END TYPE P C&G
BEGIN STR C&G
TC ELEV. 1790.09 (THEOR)

4 24+53.88–27.50'LT
END STR C&G
BEGIN TYPE P C&G
TC ELEV.=1790.10 (THEOR)

5 24+57.08–32.50'LT
END TYPE P C&G
BEGIN STR C&G
TC ELEV.=1790.11 (THEOR)

6 24+58.82–40.94'LT
END 20' RAD.
TC ELEV. 1790.12

7 24+58.60–56.55'LT
END STR C&G
TC ELEV.=1790.14 (MATCH EXISTING)

8 24+97.97–57.32'LT
BEGIN STR C&G REPLACEMENT
TC ELEV.=MATCH EXISTING

9 24+98.02–49.00'LT
BEGIN 50' RAD.
TC ELEV.=MATCH EXISTING

10 24+99.42–34.42'LT
END 50' RAD.
BEGIN 14' RAD.
TC ELEV.=MATCH EXISTING

11 24+99.96–32.50'LT
END STR C&G REPLACEMENT
BEGIN TYPE P C&G
TC ELEV.=MATCH EXISTING (THEOR.)

12 25+03.11–27.50'LT
END TYPE P C&G
BEGIN STR C&G REPLACEMENT
TC ELEV.=MATCH EXISTING (THEOR.)

13 25+04.53–26.09'LT
END STR C&G REPLACEMENT
TC ELEV.=MATCH EXISTING

14 25+19.58–21.10'LT
BEGIN STR C&G REPLACEMENT
TC ELEV.=MATCH EXISTING

15 25+21.58–21.10'LT
END STR C&G
BEGIN TYPE P C&G
TC ELEV.=MATCH EXISTING (THEOR)

16 25+26.58–21.10'LT
END TYPE P C&G
BEGIN STR C&G
TC ELEV.=MATCH EXISTING (THEOR)

17 25+33.58–21.10'LT
END STR C&G REPLACEMENT
TC ELEV.=MATCH EXISTING

18 27+70.70–20.83'LT
BEGIN STR C&G REPLACEMENT
TC ELEV.=MATCH EXISTING

19 27+77.78–20.87'LT
END STR C&G
BEGIN TYPE P C&G
TC ELEV.=MATCH EXISTING (THEOR)

20 27+82.78–20.90'LT
END TYPE P C&G
BEGIN STR C&G
TC ELEV.=MATCH EXISTING (THEOR)

21 27+89.89–20.94'LT
END STR C&G REPLACEMENT
TC ELEV.=MATCH EXISTING

22 28+22.63–21.04'LT
BEGIN STR C&G REPLACEMENT
TC ELEV.=MATCH EXISTING

23 28+29.63–21.03'LT
END STR C&G
BEGIN TYPE P C&G
TC ELEV.=MATCH EXISTING (THEOR)

24 28+34.63–21.03'LT
END TYPE P C&G
BEGIN STR C&G
TC ELEV.=MATCH EXISTING (THEOR)

25 28+41.63–21.03'LT
END STR C&G REPLACEMENT
TC ELEV.=MATCH EXISTING

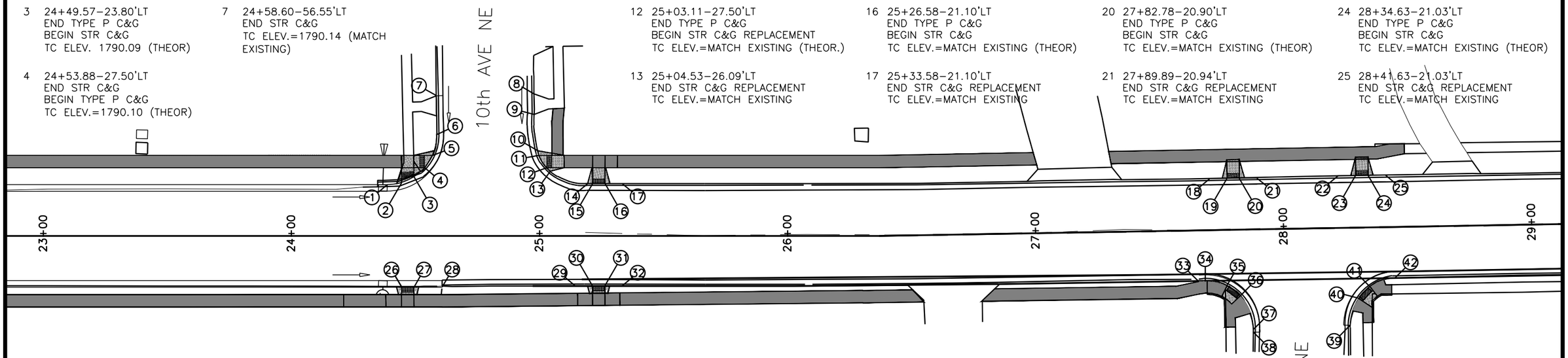


26 24+44.57–20.67'RT
END STR C&G
BEGIN TYPE P C&G
TC ELEV. 1790.22 (THEOR)

27 24+49.57–20.67'RT
END TYPE P C&G
BEGIN STR C&G
TC ELEV. 1789.86 (THEOR)

28 24+60.95–20.67'RT
END STR C&G
TC ELEV. 1790.48 (MATCH EXISTING)

29 25+14.57–20.15'RT
BEGIN STR C&G REPLACEMENT
TC ELEV.=MATCH EXISTING

30 25+21.57–20.15'RT
END STR C&G
BEGIN TYPE P C&G
TC ELEV.=MATCH EXISTING (THEOR)

31 25+26.57–20.15'RT
END TYPE P C&G
BEGIN STR C&G
TC ELEV.=MATCH EXISTING (THEOR)

32 25+33.57–20.15'RT
END STR C&G REPLACEMENT
TC ELEV.=MATCH EXISTING

33 27+65.67–20.36'RT
BEGIN STR C&G REPLACEMENT
TC ELEV.=MATCH EXISTING

34 27+68.36–20.67'RT
BEGIN 19' RAD.
TC ELEV.=MATCH EXISTING

35 27+76.90–22.69'RT
END STR C&G
BEGIN TYPE P C&G
TC ELEV.=MATCH EXISTING (THEOR)

36 27+82.29–26.75'RT
END TYPE P C&G
BEGIN STR C&G
TC ELEV.=MATCH EXISTING (THEOR)

37 27+87.35–40.35'RT
END 19' RAD.
TC ELEV.=MATCH EXISTING

38 27+87.31–41.39'RT
END STR C&G REPLACEMENT
TC ELEV.=MATCH EXISTING

39 28+26.41–39.35'RT
BEGIN STR C&G REPLACEMENT
BEGIN 19' RAD.
TC ELEV.=MATCH EXISTING

40 28+30.01–28.53'RT
END STR C&G
BEGIN TYPE P C&G
TC ELEV.=MATCH EXISTING (THEOR)

41 28+34.73–23.95'RT
END TYPE P C&G
BEGIN STR C&G
TC ELEV.=MATCH EXISTING (THEOR)

42 28+44.79–20.68'RT
END 19' RAD.
END STR C&G REPLACEMENT
TC ELEV.=MATCH EXISTING

REGISTERED PROFESSIONAL ENGINEER
REG. NO.
9721
JOHN W.
DESENS
SOUTH DAKOTA
12-31-14

20 0 20 40

PLANS BY: CLARK ENGINEERING, WATERTOWN, SD

1/21/2015 9:41 AM Z:\2013 PROJECTS\X13038 WATERTOWN 19TH STREET\DESIGN\SEC B\CURB & GUTTER SHEETS.DWG

# CURB AND GUTTER LAYOUT

FOR BIDDING PURPOSES ONLY

| STATE OF SOUTH DAKOTA | PROJECT | SHEET | TOTAL SHEETS |
|---|---|---|---|
| | P 4243(03) | B55 | B99 |

1 30+47.40–20.83'LT
BEGIN STR C&G REPLACEMENT
TC ELEV.=MATCH EXISTING

2 30+54.41–20.80'LT
END STR C&G
BEGIN TYPE P C&G
TC ELEV.=MATCH EXISTING (THEOR)

3 30+59.41–20.78'LT
END TYPE P C&G
BEGIN STR C&G
TC ELEV.=MATCH EXISTING (THEOR)

4 30+66.42–20.75'LT
END STR C&G REPLACEMENT
TC ELEV.=MATCH EXISTING (THEOR)

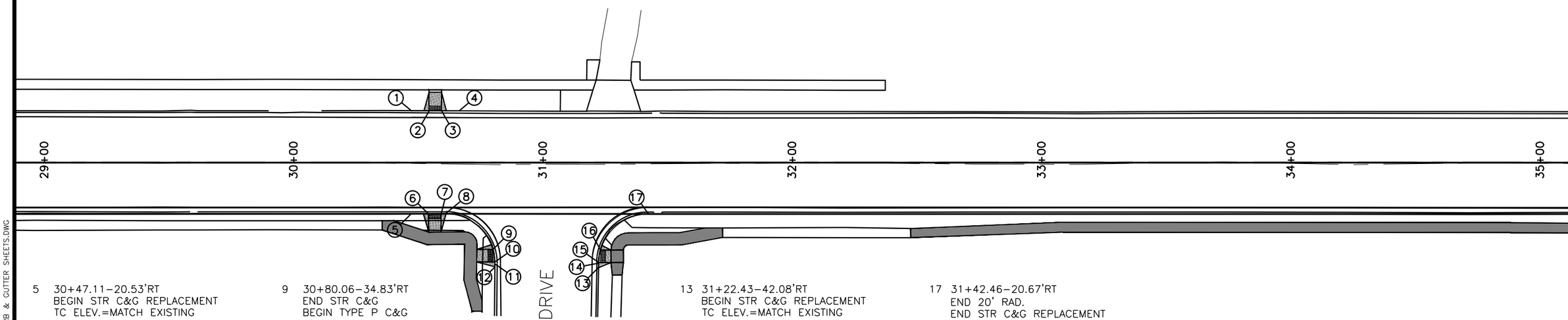


5 30+47.11–20.53'RT
BEGIN STR C&G REPLACEMENT
TC ELEV.=MATCH EXISTING

6 30+54.22–20.53'RT
END STR C&G
BEGIN TYPE P C&G
TC ELEV.=MATCH EXISTING (THEOR)

7 30+59.22–20.53'RT
END TYPE P C&G
BEGIN STR C&G
TC ELEV.=MATCH EXISTING (THEOR)

8 30+60.89–20.67'RT
BEGIN 20' RAD.
TC ELEV.=MATCH EXISTING

9 30+80.06–34.83'RT
END STR C&G
BEGIN TYPE P C&G
TC ELEV.=MATCH EXISTING (THEOR)

10 30+80.88–39.84'RT
END TYPE P C&G
BEGIN STR C&G
TC ELEV.=MATCH EXISTING (THEOR)

11 30+80.89–40.68'RT
END 20' RAD.
TC ELEV.=MATCH EXISTING

12 30+80.88–41.84'RT
END STR C&G REPLACEMENT
TC ELEV.=MATCH EXISTING

13 31+22.43–42.08'RT
BEGIN STR C&G REPLACEMENT
TC ELEV.=MATCH EXISTING

14 31+22.45–40.36'RT
BEGIN 20' RAD.
TC ELEV.=MATCH EXISTING

15 31+22.47–40.08'RT
END STR C&G
BEGIN TYPE P C&G
TC ELEV.=MATCH EXISTING (THEOR)

16 31+23.25–35.08'RT
END TYPE P C&G
BEGIN STR C&G
TC ELEV.=MATCH EXISTING (THEOR)

17 31+42.46–20.67'RT
END 20' RAD.
END STR C&G REPLACEMENT
TC ELEV.=MATCH EXISTING

REGISTERED PROFESSIONAL ENGINEER
9721
JOHN W.
DESENS
SOUTH DAKOTA
12-31-14

20 0 20 40

1/21/2015 9:41 AM Z:\2013 PROJECTS\X13038 WATERTOWN 19TH STREET\DESIGN\SEC B\CURB & GUTTER SHEETS.DWG

PLANS BY: CLARK ENGINEERING, WATERTOWN, SD

# CURB AND GUTTER LAYOUT

FOR BIDDING PURPOSES ONLY

| STATE OF SOUTH DAKOTA | PROJECT | SHEET | TOTAL SHEETS |
|---|---|---|---|
| | P 4243(03) | B56 | B99 |

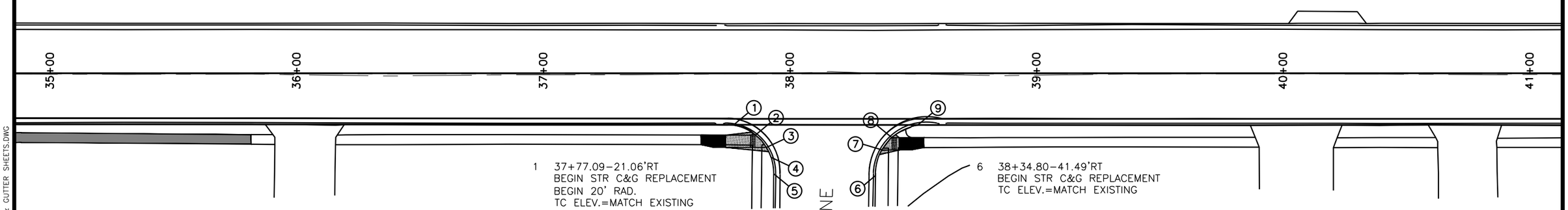


1 37+77.09–21.06'RT
BEGIN STR C&G REPLACEMENT
BEGIN 20' RAD.
TC ELEV.=MATCH EXISTING

2 37+86.11–25.06'RT
END STR C&G
BEGIN TYPE P C&G
TC ELEV.=MATCH EXISTING (THEOR)

3 37+90.61–30.06'RT
END TYPE P C&G
BEGIN STR C&G
TC ELEV.=MATCH EXISTING (THEOR)

4 37+92.59–34.23'RT
END 20' RAD.
BEGIN 22' RAD.
TC ELEV.=MATCH EXISTING

5 37+93.57–40.81'RT
END 22' RAD.
TC ELEV.=MATCH EXISTING

6 38+34.80–41.49'RT
BEGIN STR C&G REPLACEMENT
TC ELEV.=MATCH EXISTING

7 38+37.40–31.13'RT
END STR C&G
BEGIN TYPE P C&G
TC ELEV.=MATCH EXISTING (THEOR)

8 38+41.43–26.11'RT
END TYPE P C&G
BEGIN STR C&G
TC ELEV.=MATCH EXISTING (THEOR)

9 38+51.76–21.17'RT
END 20' RAD.
END STR C&G REPLACEMENT
TC ELEV.=MATCH EXISTING

REGISTERED PROFESSIONAL ENGINEER
9721
JOHN W. DESENS
SOUTH DAKOTA

John W. Desens
12-31-14

20 0 20 40

1/21/2015 9:42 AM Z:\2013 PROJECTS\X13038 WATERTOWN 19TH STREET\DESIGN\SEC B\CURB & GUTTER SHEETS.DWG

PLANS BY: CLARK ENGINEERING, WATERTOWN, SD

# CURB AND GUTTER LAYOUT

FOR BIDDING PURPOSES ONLY

| STATE OF SOUTH DAKOTA | PROJECT | SHEET | TOTAL SHEETS |
|---|---|---|---|
| | P 4243(03) | B57 | B99 |

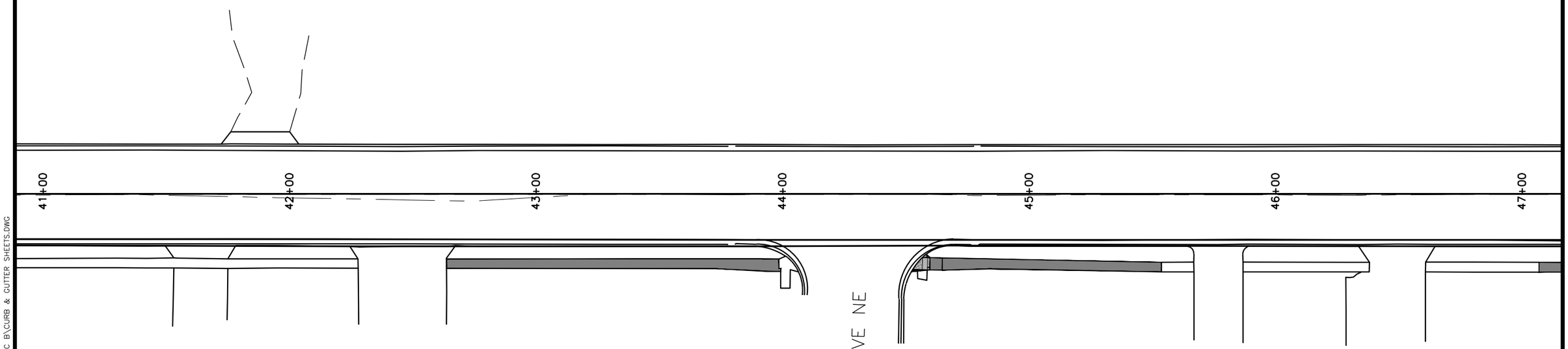


REGISTERED PROFESSIONAL ENGINEER
REG. NO.
9721
JOHN W.
DESENS
SOUTH DAKOTA
John W. Desens
12-31-14

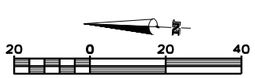


PLANS BY: CLARK ENGINEERING, WATERTOWN, SD

1/21/2015 9:43 AM Z:\2013 PROJECTS\X13038 WATERTOWN 19TH STREET\DESIGN\SEC B\CURB & GUTTER SHEETS.DWG

# CURB AND GUTTER LAYOUT

FOR BIDDING PURPOSES ONLY

| STATE OF SOUTH DAKOTA | PROJECT | SHEET | TOTAL SHEETS |
|---|---|---|---|
| | P 4243(03) | B58 | B99 |




1 52+43.35–23.17'RT
BEGIN STR C&G REPLACEMENT
BEGIN 35' RAD.
TC ELEV.=MATCH EXISTING

2 52+62.21–36.63'RT
END STR C&G
BEGIN TYPE P C&G
TC ELEV.=MATCH EXISTING

3 52+65.18–41.64'RT
END TYPE P C&G
BEGIN STR C&G
TC ELEV.=MATCH EXISTING (THEOR)

4 52+68.73–56.77'RT
END 35' RAD.
END STR C&G REPLACEMENT
TC ELEV.=MATCH EXISTING (THEOR)

NOTE: POWER POLE AT STA. 52+54, 32' RT. AND GUY WIRE WILL BE REMOVED AND RELOCATED BY WATERTOWN MUNICIPAL UTILITIES BEFORE SIDEWALK IS CONSTRUCTED.

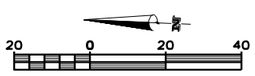


1/21/2015 9:43 AM Z:\2013 PROJECTS\X13038 WATERTOWN 19TH STREET\DESIGN\SEC B\CURB & GUTTER SHEETS.DWG

PLANS BY: CLARK ENGINEERING, WATERTOWN, SD

# CURB AND GUTTER LAYOUT

FOR BIDDING PURPOSES ONLY

| STATE OF SOUTH DAKOTA | PROJECT | SHEET | TOTAL SHEETS |
|---|---|---|---|
| | P 4243(03) | B59 | B99 |

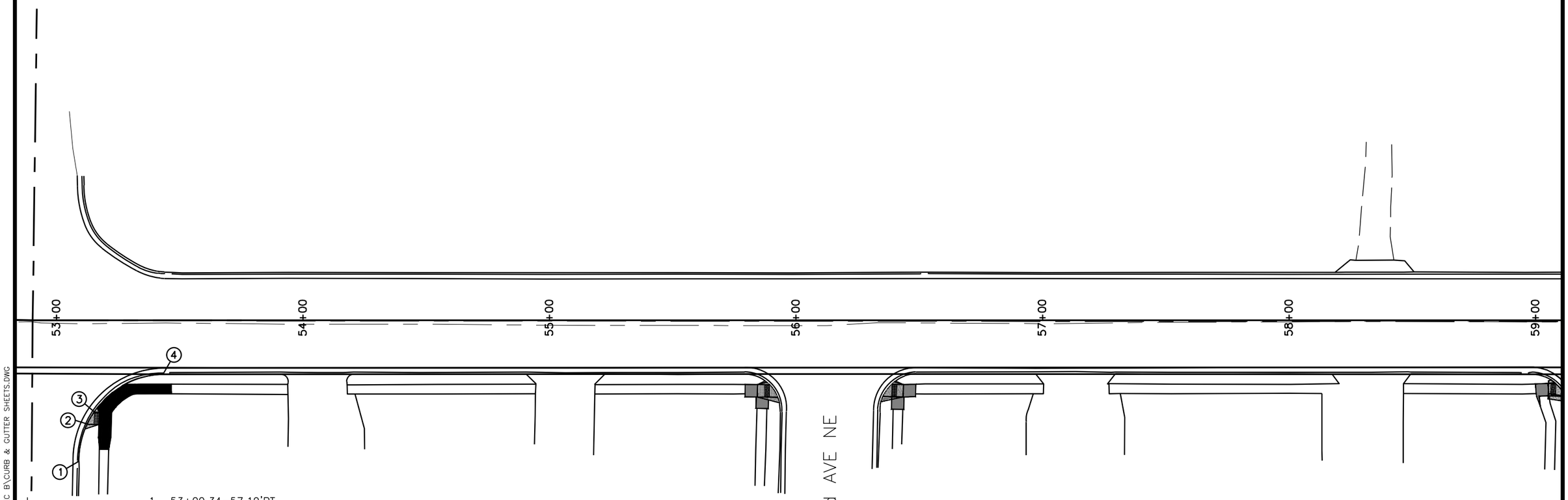


1 53+09.34–57.19'RT
BEGIN STR C&G REPLACEMENT
BEGIN 35' RAD.
TC ELEV.=MATCH EXISTING

2 53+12.72–42.17'RT
END STR C&G
BEGIN TYPE P C&G
TC ELEV.=MATCH EXISTING (THEOR)

3 53+15.55–37.23'RT
END TYPE P C&G
BEGIN STR C&G
TC ELEV.=MATCH EXISTING (THEOR)

4 53+43.30–21.90'RT
END 35' RAD.
END STR C&G REPLACEMENT
TC ELEV.=MATCH EXISTING

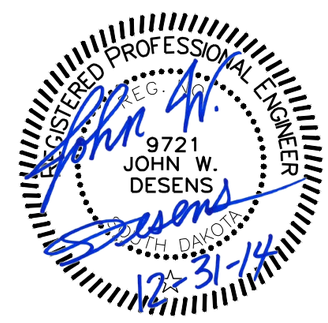


PLANS BY: CLARK ENGINEERING, WATERTOWN, SD

1/21/2015 9:44 AM Z:\2013 PROJECTS\X13038 WATERTOWN 19TH STREET\DESIGN\SEC B\CURB & GUTTER SHEETS.DWG

# CURB AND GUTTER LAYOUT

FOR BIDDING PURPOSES ONLY

| STATE OF SOUTH DAKOTA | PROJECT | SHEET | TOTAL SHEETS |
|---|---|---|---|
| | P 4243(03) | B60 | B99 |

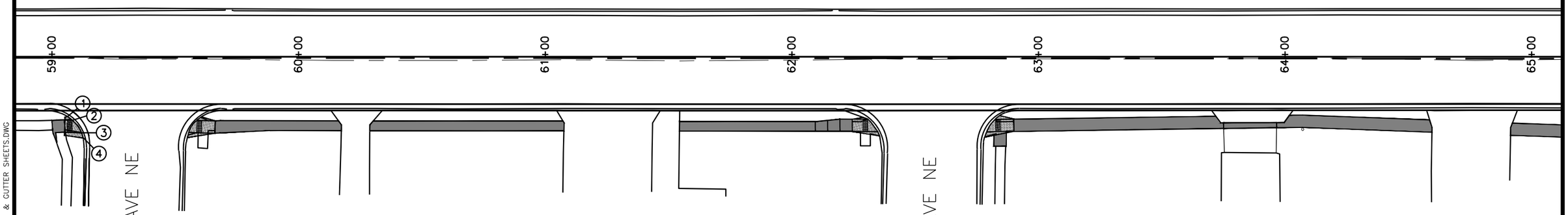


1 59+06.44–24.27'RT
BEGIN STR C&G REPLACEMENT
TC ELEV.=MATCH EXISTING

2 59+08.48–25.77'RT
END STR C&G
BEGIN TYPE P C&G
TC ELEV.=MATCH EXISTING (THEOR)

3 59+12.11–30.91'RT
END TYPE P C&G
BEGIN STR C&G
TC ELEV.=MATCH EXISTING (THEOR)

4 59+12.85–33.03'RT
END STR C&G REPLACEMENT
TC ELEV.=MATCH EXISTING

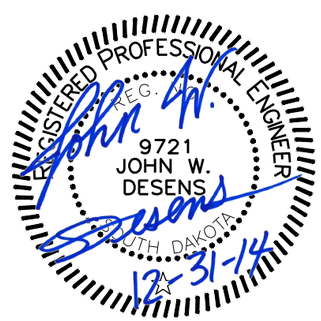


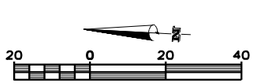


PLANS BY: CLARK ENGINEERING, WATERTOWN, SD

1/21/2015 9:44 AM Z:\2013 PROJECTS\X13038 WATERTOWN 19TH STREET\DESIGN\SEC B\CURB & GUTTER SHEETS.DWG

# CURB AND GUTTER LAYOUT

FOR BIDDING PURPOSES ONLY

| STATE OF SOUTH DAKOTA | PROJECT | SHEET | TOTAL SHEETS |
|---|---|---|---|
| | P 4243(03) | B61 | B99 |

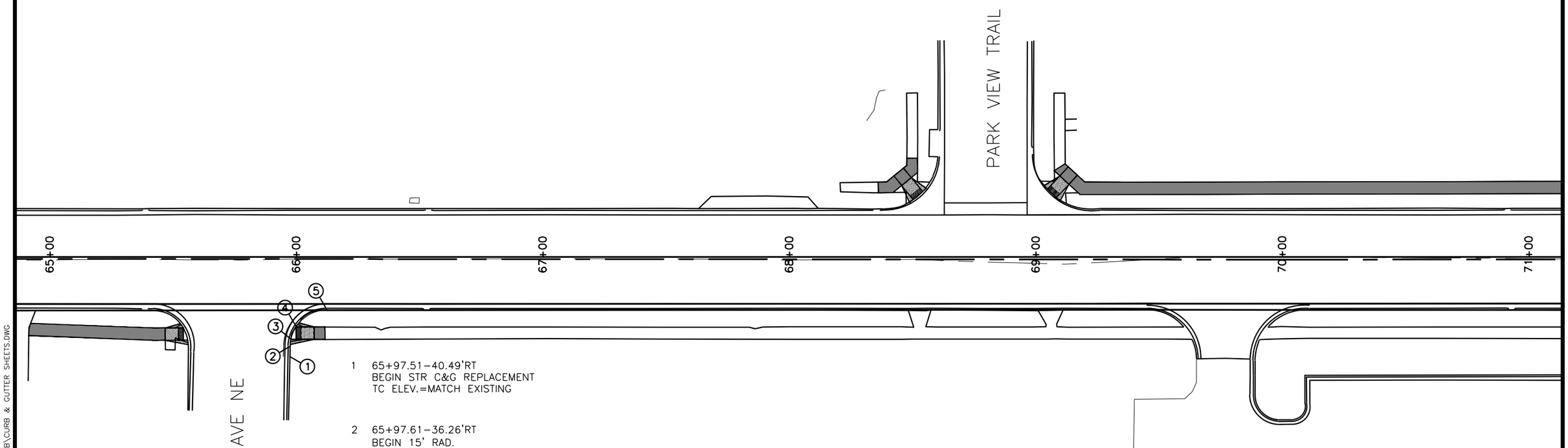


1 65+97.51–40.49'RT
BEGIN STR C&G REPLACEMENT
TC ELEV.=MATCH EXISTING

2 65+97.61–36.26'RT
BEGIN 15' RAD.
TC ELEV.=MATCH EXISTING

3 65+97.94–33.43'RT
END STR C&G
BEGIN TYPE P C&G
TC ELEV.=MATCH EXISTING (THEOR)

4 66+00.03–28.42'RT
END TYPE P C&G
BEGIN STR C&G
TC ELEV.=MATCH EXISTING (THEOR)

5 66+12.53–21.60'RT
END 15' RAD.
END STR C&G REPLACEMENT
TC ELEV.=MATCH EXISTING

REGISTERED PROFESSIONAL ENGINEER
REG. NO.
9721
JOHN W.
DESENS
SOUTH DAKOTA
12-31-14

20 0 20 40

1/21/2015 9:45 AM Z:\2013 PROJECTS\X13038 WATERTOWN 19TH STREET\DESIGN\SEC B\CURB & GUTTER SHEETS.DWG

PLANS BY: CLARK ENGINEERING, WATERTOWN, SD

# CURB AND GUTTER LAYOUT

FOR BIDDING PURPOSES ONLY

| STATE OF SOUTH DAKOTA | PROJECT | SHEET | TOTAL SHEETS |
|---|---|---|---|
| | P 4243(03) | B62 | B99 |

1 76+17.82–19.87'LT
BEGIN STR C&G REPLACEMENT
TC ELEV.=MATCH EXISTING

2 76+24.83–19.87'LT
END STR C&G
BEGIN TYPE P C&G
TC ELEV.=MATCH EXISTING (THEOR)

3 76+29.83–19.87'LT
END TYPE P C&G
BEGIN STR C&G
TC ELEV.=MATCH EXISTING (THEOR)

4 76+36.87–19.87'LT
END STR C&G REPLACEMENT
TC ELEV.=MATCH EXISTING

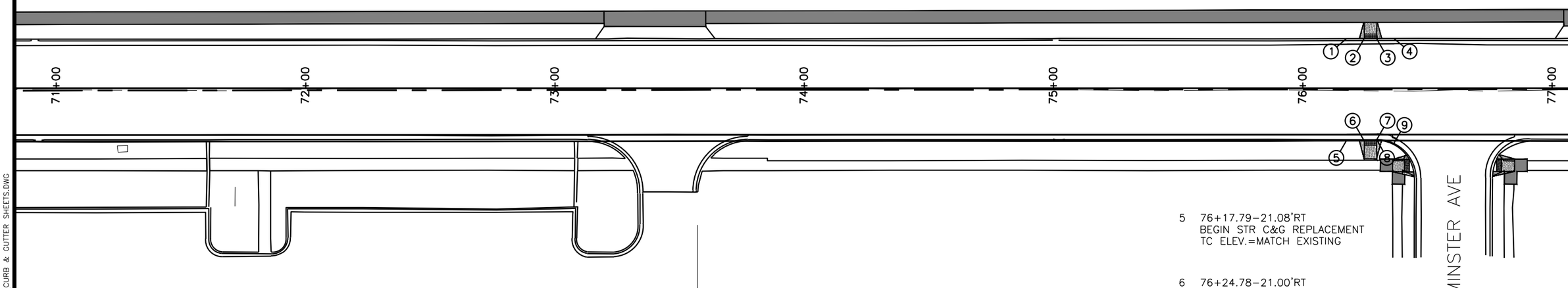


5 76+17.79–21.08'RT
BEGIN STR C&G REPLACEMENT
TC ELEV.=MATCH EXISTING

6 76+24.78–21.00'RT
END STR C&G
BEGIN TYPE P C&G
TC ELEV.=MATCH EXISTING (THEOR)

7 76+29.78–21.00'RT
END TYPE P C&G
BEGIN STR C&G
TC ELEV.=MATCH EXISTING (THEOR)

8 76+30.04–21.00'RT
BEGIN 14' RAD.
TC ELEV.=MATCH EXISTING

9 76+36.60–22.61'RT
END STR C&G REPLACEMENT
TC ELEV.=MATCH EXISTING

REGISTERED PROFESSIONAL ENGINEER
REG. NO.
9721
JOHN W. DESENS
SOUTH DAKOTA

John W. Desens
12-31-14

20 0 20 40

PLANS BY: CLARK ENGINEERING, WATERTOWN, SD

1/21/2015 9:46 AM Z:\2013 PROJECTS\X13038 WATERTOWN 19TH STREET\DESIGN\SEC B\CURB & GUTTER SHEETS.DWG

# CURB AND GUTTER LAYOUT

FOR BIDDING PURPOSES ONLY

| STATE OF SOUTH DAKOTA | PROJECT | SHEET | TOTAL SHEETS |
|---|---|---|---|
| | P 4243(03) | B63 | B99 |

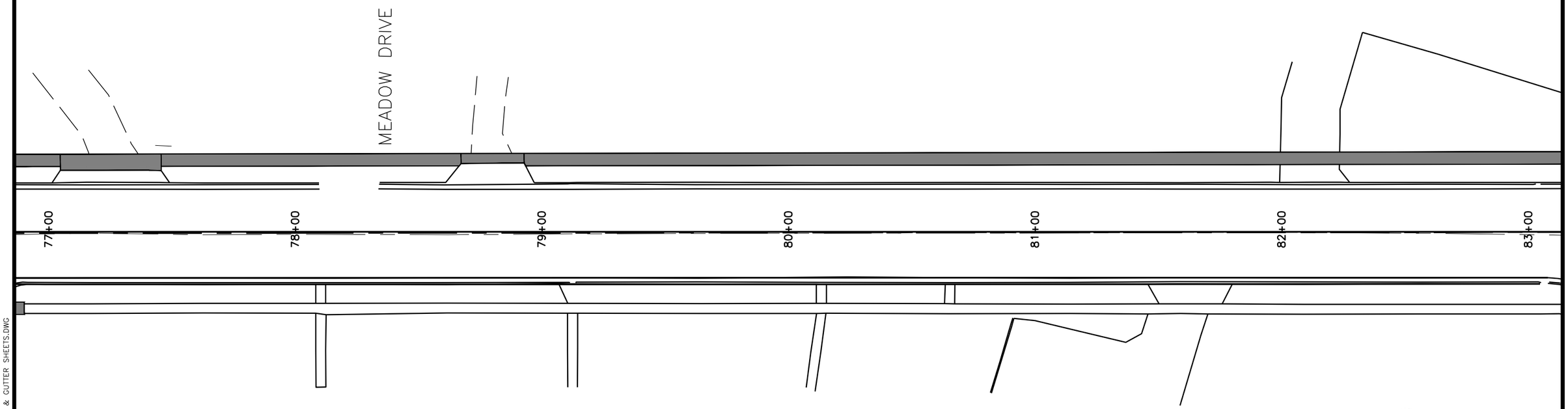


REGISTERED PROFESSIONAL ENGINEER
REG. NO.
9721
JOHN W.
DESENS
SOUTH DAKOTA

John W. Desens
12-31-14

20 0 20 40

1/21/2015 9:46 AM Z:\2013 PROJECTS\X13038 WATERTOWN 19TH STREET\DESIGN\SEC B\CURB & GUTTER SHEETS.DWG

PLANS BY: CLARK ENGINEERING, WATERTOWN, SD

# CURB AND GUTTER LAYOUT

FOR BIDDING PURPOSES ONLY

| STATE OF SOUTH DAKOTA | PROJECT | SHEET | TOTAL SHEETS |
|---|---|---|---|
| | P 4243(03) | B64 | B99 |

1 83+34.98–32.50'LT

2 83+55.11–48.28'LT

3 83+66.25–46.93'LT

4 83+70.44–41.58' LT

5 83+75.93–45.87'LT

6 83+82.92–37.45'LT

7 83+65.57–24.36'LT

8 83+60.60–33.87'LT

9 83+66.51–38.49'LT

10 83+63.59–42.22'LT

11 83+56.57–43.07'LT

12 83+36.70–27.50'LT

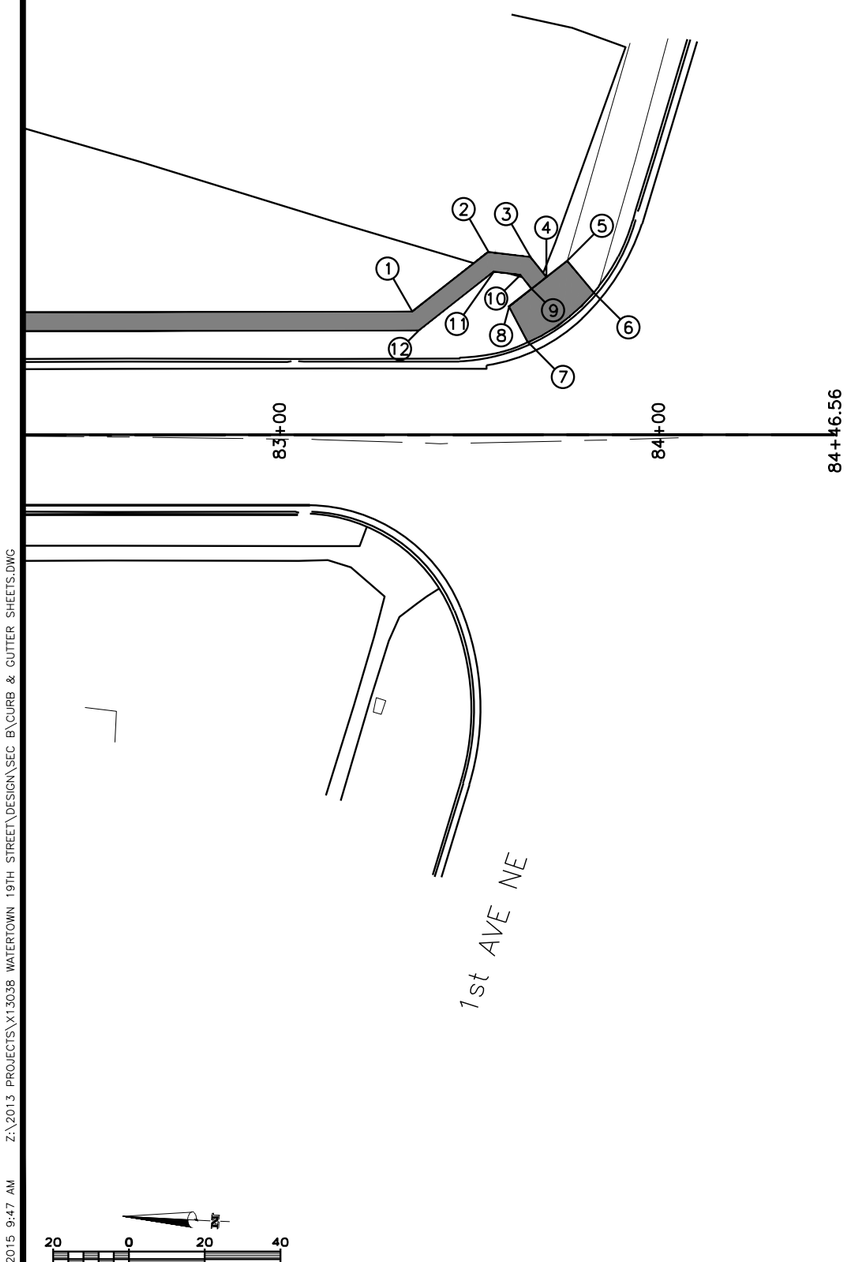


REGISTERED PROFESSIONAL ENGINEER
REG. NO.
9721
JOHN W.
DESENS
SOUTH DAKOTA
12-31-14

PLANS BY: CLARK ENGINEERING, WATERTOWN, SD

1/21/2015 9:47 AM Z:\2013 PROJECTS\X13038 WATERTOWN 19TH STREET\DESIGN\SEC B\CURB & GUTTER SHEETS.DWG

# STORM SEWER LAYOUT

FOR BIDDING PURPOSES ONLY

| STATE OF SOUTH DAKOTA | PROJECT | SHEET | TOTAL SHEETS |
|---|---|---|---|
| | P 4243(03) | B65 | B99 |

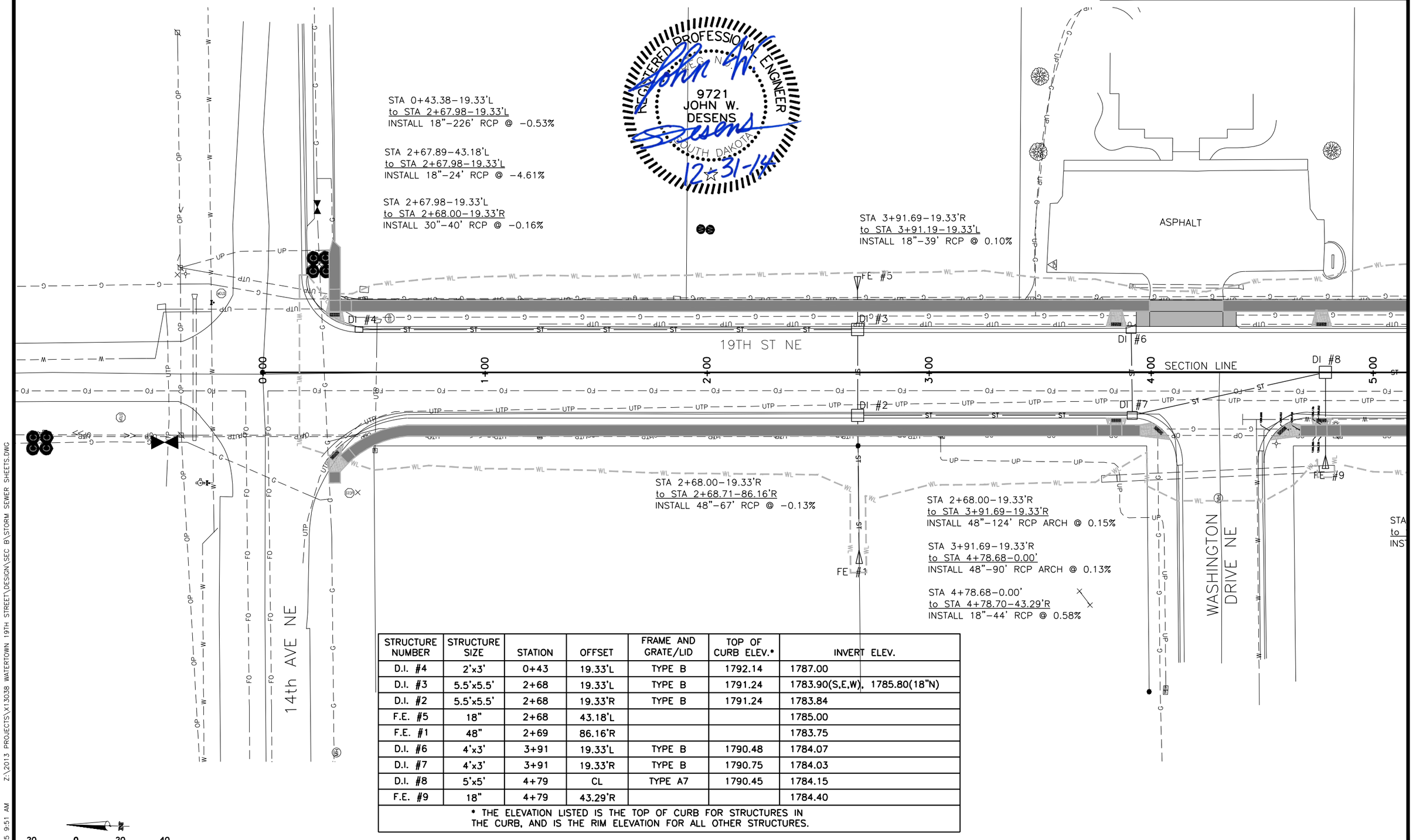


| STRUCTURE NUMBER | STRUCTURE SIZE | STATION | OFFSET | FRAME AND GRATE/LID | TOP OF CURB ELEV.* | INVERT ELEV. |
|---|---|---|---|---|---|---|
| D.I. #4 | 2'x3' | 0+43 | 19.33'L | TYPE B | 1792.14 | 1787.00 |
| D.I. #3 | 5.5'x5.5' | 2+68 | 19.33'L | TYPE B | 1791.24 | 1783.90(S,E,W), 1785.80(18"N) |
| D.I. #2 | 5.5'x5.5' | 2+68 | 19.33'R | TYPE B | 1791.24 | 1783.84 |
| F.E. #5 | 18" | 2+68 | 43.18'L | | | 1785.00 |
| F.E. #1 | 48" | 2+69 | 86.16'R | | | 1783.75 |
| D.I. #6 | 4'x3' | 3+91 | 19.33'L | TYPE B | 1790.48 | 1784.07 |
| D.I. #7 | 4'x3' | 3+91 | 19.33'R | TYPE B | 1790.75 | 1784.03 |
| D.I. #8 | 5'x5' | 4+79 | CL | TYPE A7 | 1790.45 | 1784.15 |
| F.E. #9 | 18" | 4+79 | 43.29'R | | | 1784.40 |

* THE ELEVATION LISTED IS THE TOP OF CURB FOR STRUCTURES IN THE CURB, AND IS THE RIM ELEVATION FOR ALL OTHER STRUCTURES.

PLANS BY: CLARK ENGINEERING, WATERTOWN, SD

1/21/2015 9:51 AM Z:\2013 PROJECTS\X13038 WATERTOWN 19TH STREET\DESIGN\SEC B\STORM SEWER SHEETS.DWG

# STORM SEWER LAYOUT

FOR BIDDING PURPOSES ONLY

| STATE OF SOUTH DAKOTA | PROJECT | SHEET | TOTAL SHEETS |
|---|---|---|---|
| | P 4243(03) | B66 | B99 |

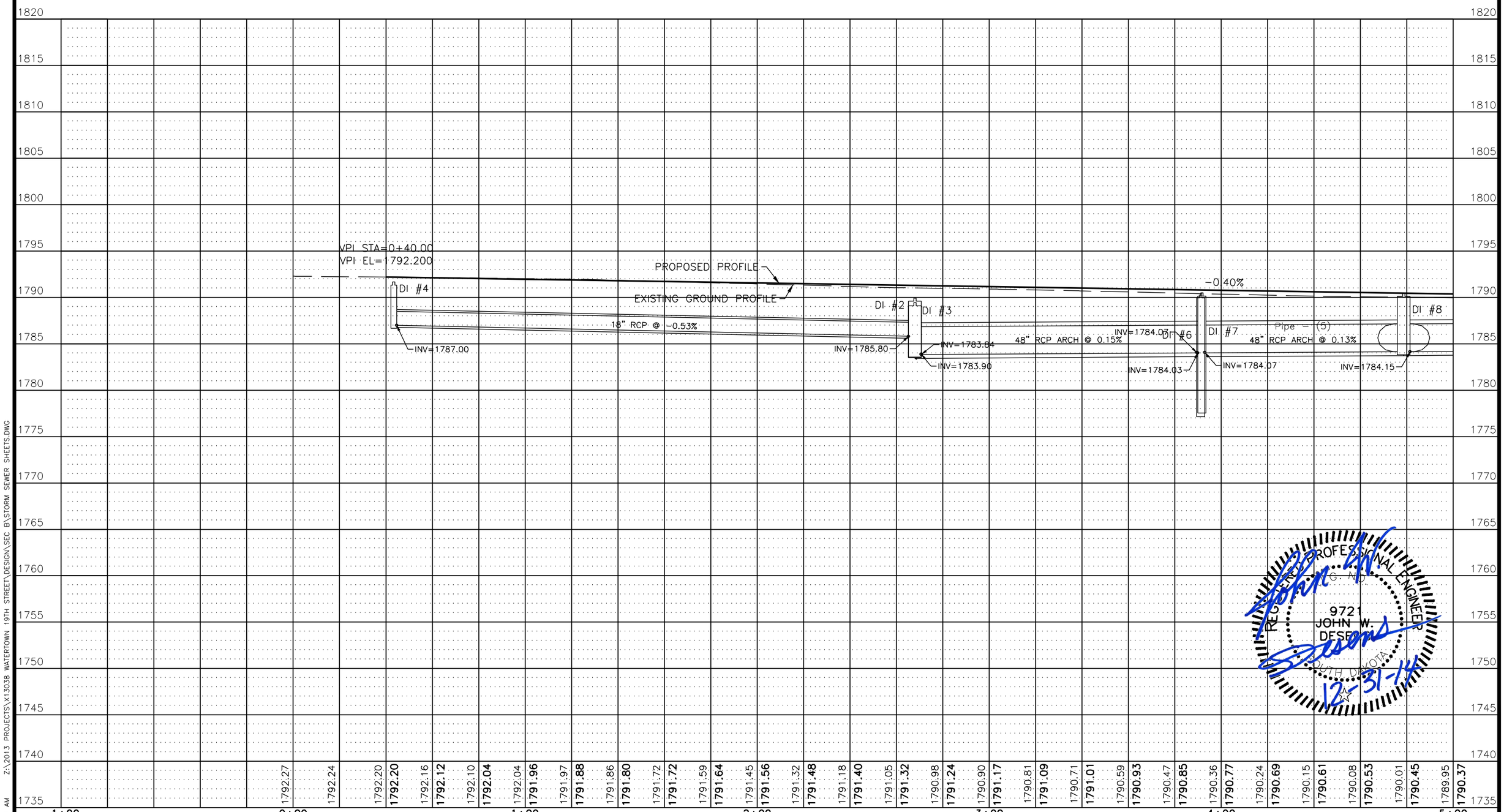


REGISTERED PROFESSIONAL ENGINEER
9721
JOHN W. DESEARS
SOUTH DAKOTA
12-31-14

PLANS BY: CLARK ENGINEERING, WATERTOWN, SD

Z:\2013 PROJECTS\X13038 WATERTOWN 19TH STREET\DESIGN\SEC B\STORM SEWER SHEETS.DWG 1/21/2015 9:52 AM

# STORM SEWER LAYOUT

FOR BIDDING PURPOSES ONLY

| STATE OF SOUTH DAKOTA | PROJECT | SHEET | TOTAL SHEETS |
|---|---|---|---|
| | P 4243(03) | B67 | B99 |

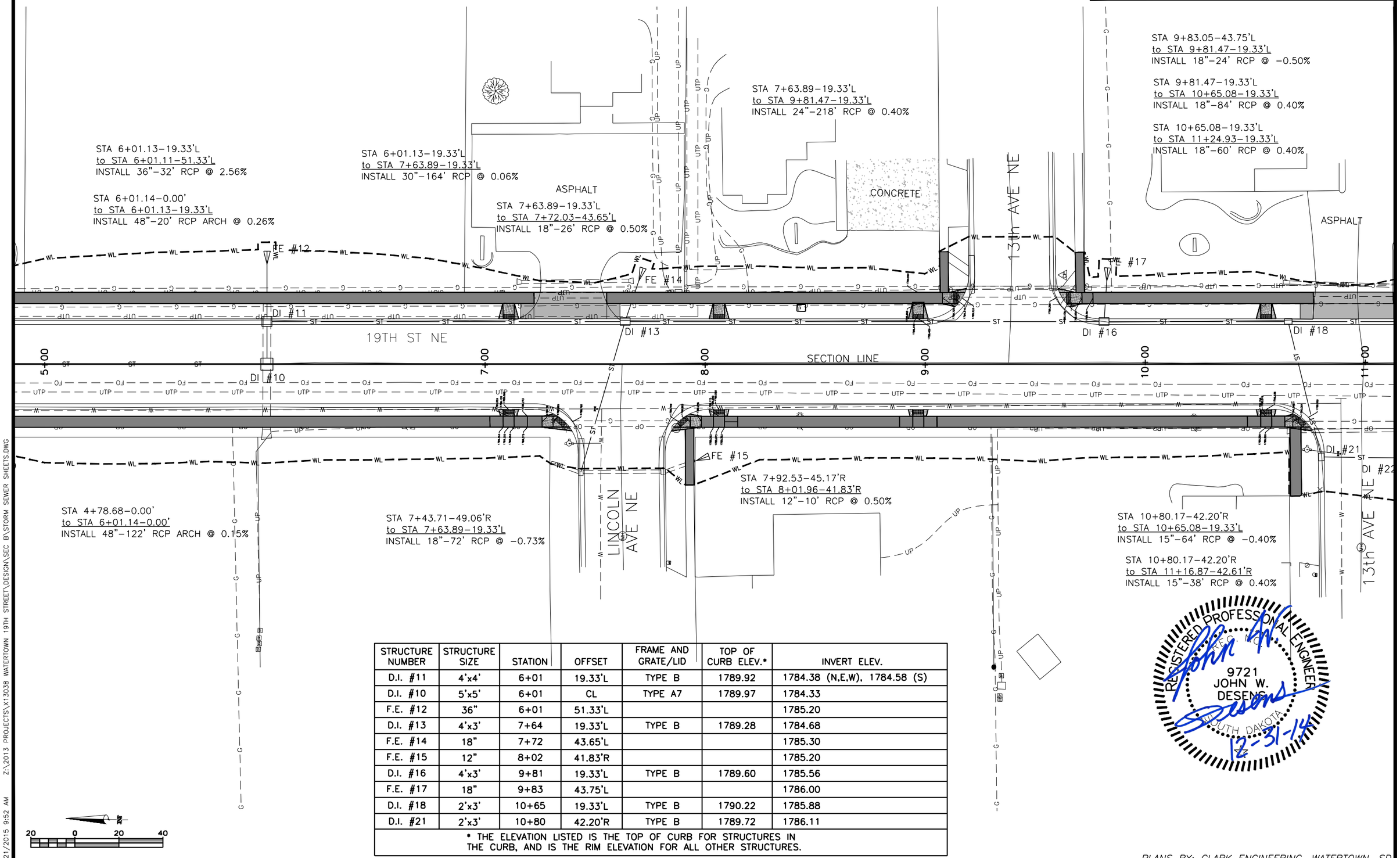


| STRUCTURE NUMBER | STRUCTURE SIZE | STATION | OFFSET | FRAME AND GRATE/LID | TOP OF CURB ELEV.* | INVERT ELEV. |
|---|---|---|---|---|---|---|
| D.I. #11 | 4'x4' | 6+01 | 19.33'L | TYPE B | 1789.92 | 1784.38 (N,E,W), 1784.58 (S) |
| D.I. #10 | 5'x5' | 6+01 | CL | TYPE A7 | 1789.97 | 1784.33 |
| F.E. #12 | 36" | 6+01 | 51.33'L | | | 1785.20 |
| D.I. #13 | 4'x3' | 7+64 | 19.33'L | TYPE B | 1789.28 | 1784.68 |
| F.E. #14 | 18" | 7+72 | 43.65'L | | | 1785.30 |
| F.E. #15 | 12" | 8+02 | 41.83'R | | | 1785.20 |
| D.I. #16 | 4'x3' | 9+81 | 19.33'L | TYPE B | 1789.60 | 1785.56 |
| F.E. #17 | 18" | 9+83 | 43.75'L | | | 1786.00 |
| D.I. #18 | 2'x3' | 10+65 | 19.33'L | TYPE B | 1790.22 | 1785.88 |
| D.I. #21 | 2'x3' | 10+80 | 42.20'R | TYPE B | 1789.72 | 1786.11 |

* THE ELEVATION LISTED IS THE TOP OF CURB FOR STRUCTURES IN THE CURB, AND IS THE RIM ELEVATION FOR ALL OTHER STRUCTURES.

REGISTERED PROFESSIONAL ENGINEER
REG. NO.
9721
JOHN W. DESENS
SOUTH DAKOTA
12-31-14

PLANS BY: CLARK ENGINEERING, WATERTOWN, SD

Z:\2013 PROJECTS\X13038 WATERTOWN 19TH STREET\DESIGN\SEC B\STORM SEWER SHEETS.DWG
1/21/2015 9:52 AM

# STORM SEWER LAYOUT

FOR BIDDING PURPOSES ONLY

| STATE OF SOUTH DAKOTA | PROJECT | SHEET | TOTAL SHEETS |
|---|---|---|---|
| | P 4243(03) | B68 | B99 |

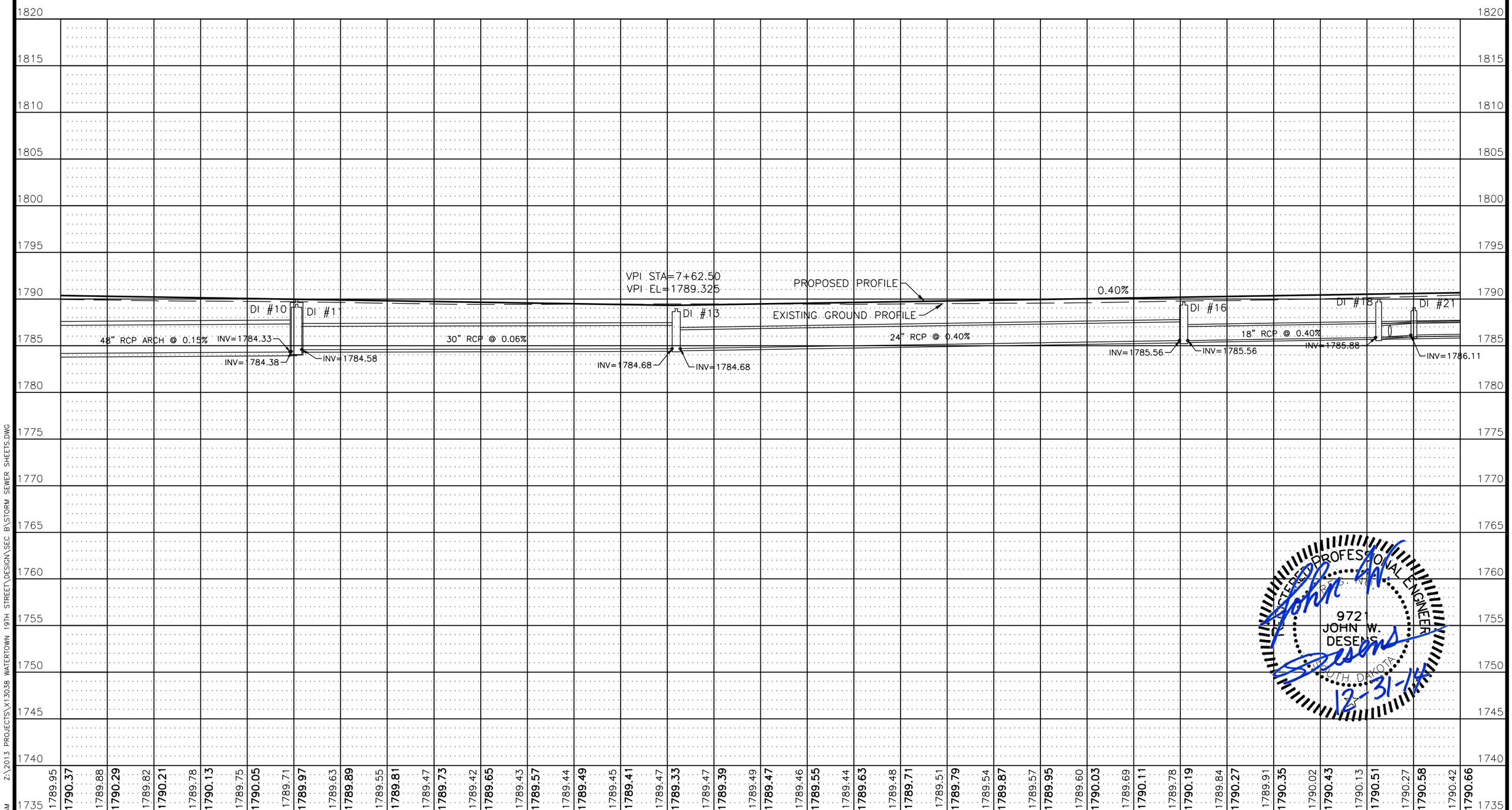


REGISTERED PROFESSIONAL ENGINEER
REG. NO.
9721
JOHN W. DESENS
SOUTH DAKOTA
12-31-14

PLANS BY: CLARK ENGINEERING, WATERTOWN, SD

Z:\2013 PROJECTS\X13038 WATERTOWN 19TH STREET\DESIGN\SEC B\STORM SEWER SHEETS.DWG
1/21/2015 9:53 AM

# STORM SEWER LAYOUT

FOR BIDDING PURPOSES ONLY

| STATE OF SOUTH DAKOTA | PROJECT | SHEET | TOTAL SHEETS |
|---|---|---|---|
| | P 4243(03) | B69 | B99 |

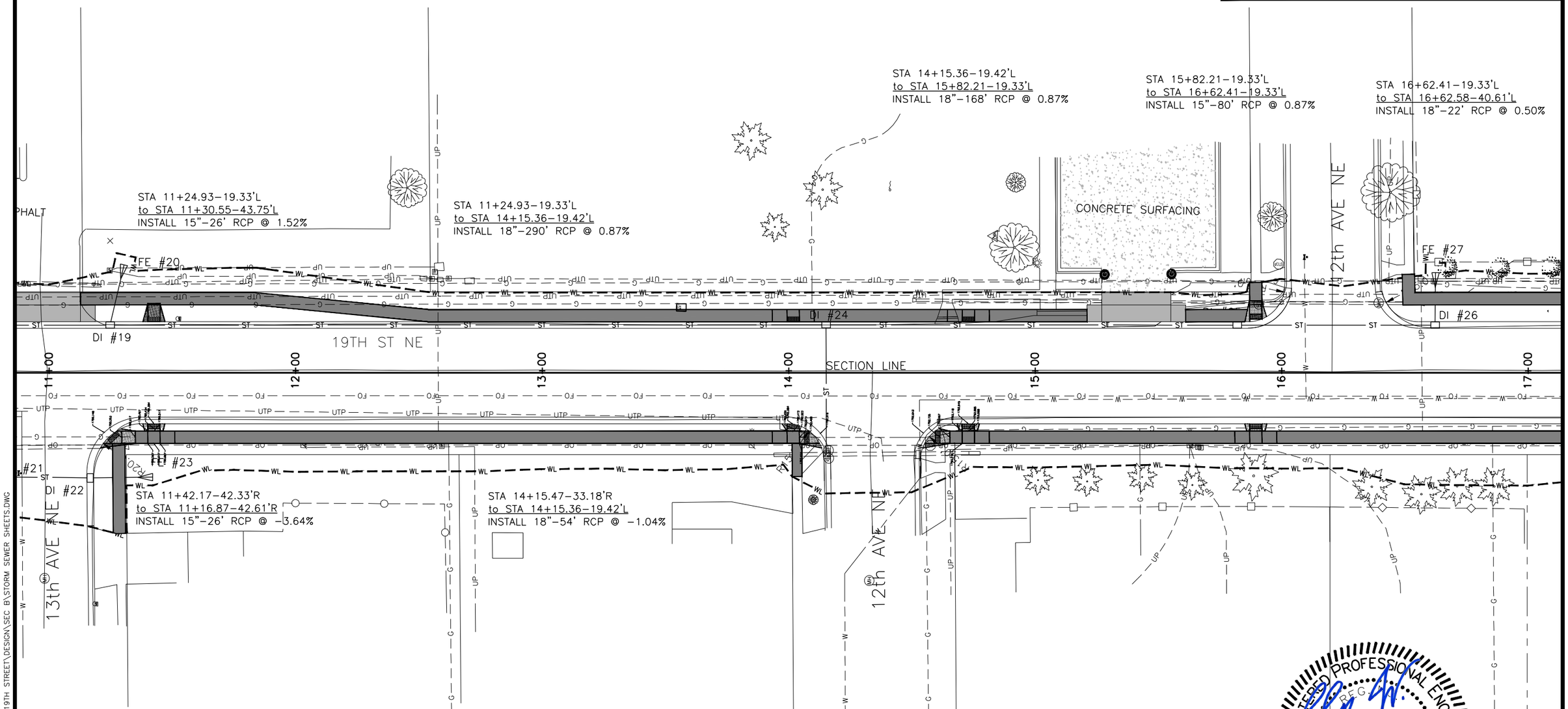


| STRUCTURE NUMBER | STRUCTURE SIZE | STATION | OFFSET | FRAME AND GRATE/LID | TOP OF CURB ELEV.* | INVERT ELEV. |
|---|---|---|---|---|---|---|
| D.I. #22 | 2'x3' | 11+17 | 42.61'R | TYPE B | 1789.90 | 1786.28 |
| D.I. #19 | 2'x3' | 11+25 | 19.33'L | TYPE B | 1790.71 | 1786.12 |
| F.E. #20 | 15" | 11+31 | 43.75'L | | | 1786.50 |
| F.E. #23 | 15" | 11+42 | 42.33'R | | | 1787.20 |
| D.I. #24 | 2'x3' | 14+15 | 19.42'L | TYPE B | 1792.90 | 1788.65(N,S), 1789.00(W) |
| D.I. #25 | 2'x3' | 15+82 | 19.33'L | TYPE B | 1793.50 | 1790.11 |
| D.I. #26 | 2'x3' | 16+62 | 19.33'L | TYPE B | 1794.81 | 1790.81 |
| F.E. #27 | 18" | 16+63 | 40.61'L | | | 1790.92 |

* THE ELEVATION LISTED IS THE TOP OF CURB FOR STRUCTURES IN THE CURB, AND IS THE RIM ELEVATION FOR ALL OTHER STRUCTURES.

REGISTERED PROFESSIONAL ENGINEER
9721
JOHN W. DESENS
SOUTH DAKOTA
12-31-14

20 0 20 40

PLANS BY: CLARK ENGINEERING, WATERTOWN, SD

1/21/2015 9:53 AM Z:\2013 PROJECTS\X13038 WATERTOWN 19TH STREET\DESIGN\SEC B\STORM SEWER SHEETS.DWG

# STORM SEWER LAYOUT

FOR BIDDING PURPOSES ONLY

| STATE OF SOUTH DAKOTA | PROJECT | SHEET | TOTAL SHEETS |
|---|---|---|---|
| | P 4243(03) | B70 | B99 |

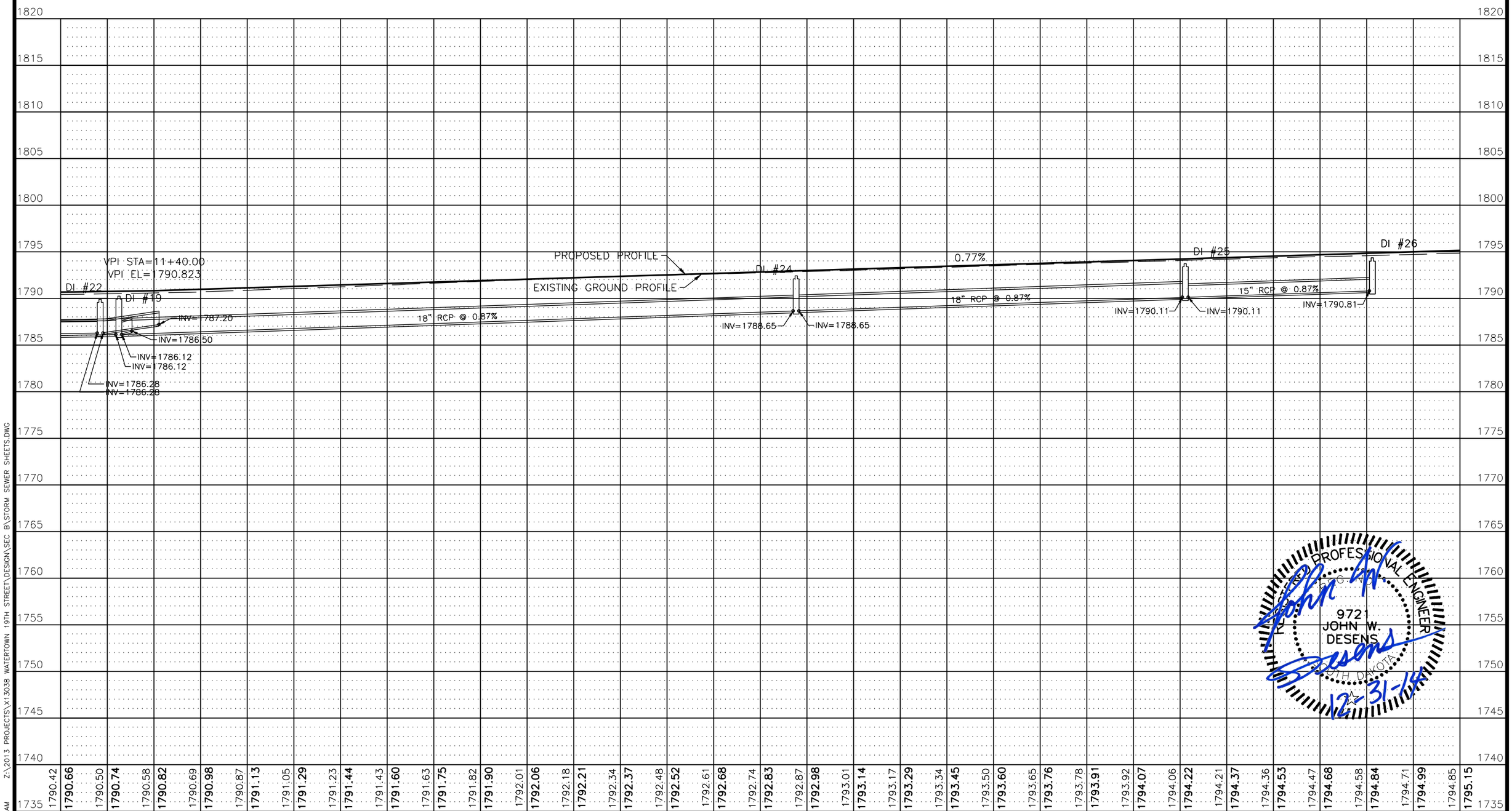


PROFESSIONAL ENGINEER
9721
JOHN W. DESENS
SOUTH DAKOTA
12-31-14

PLANS BY: CLARK ENGINEERING, WATERTOWN, SD

1/21/2015 9:54 AM Z:\2013 PROJECTS\X13038 WATERTOWN 19TH STREET\DESIGN\SEC B\STORM SEWER SHEETS.DWG

# STORM SEWER LAYOUT

FOR BIDDING PURPOSES ONLY

| STATE OF SOUTH DAKOTA | PROJECT | SHEET | TOTAL SHEETS |
|---|---|---|---|
| | P 4243(03) | B71 | B99 |

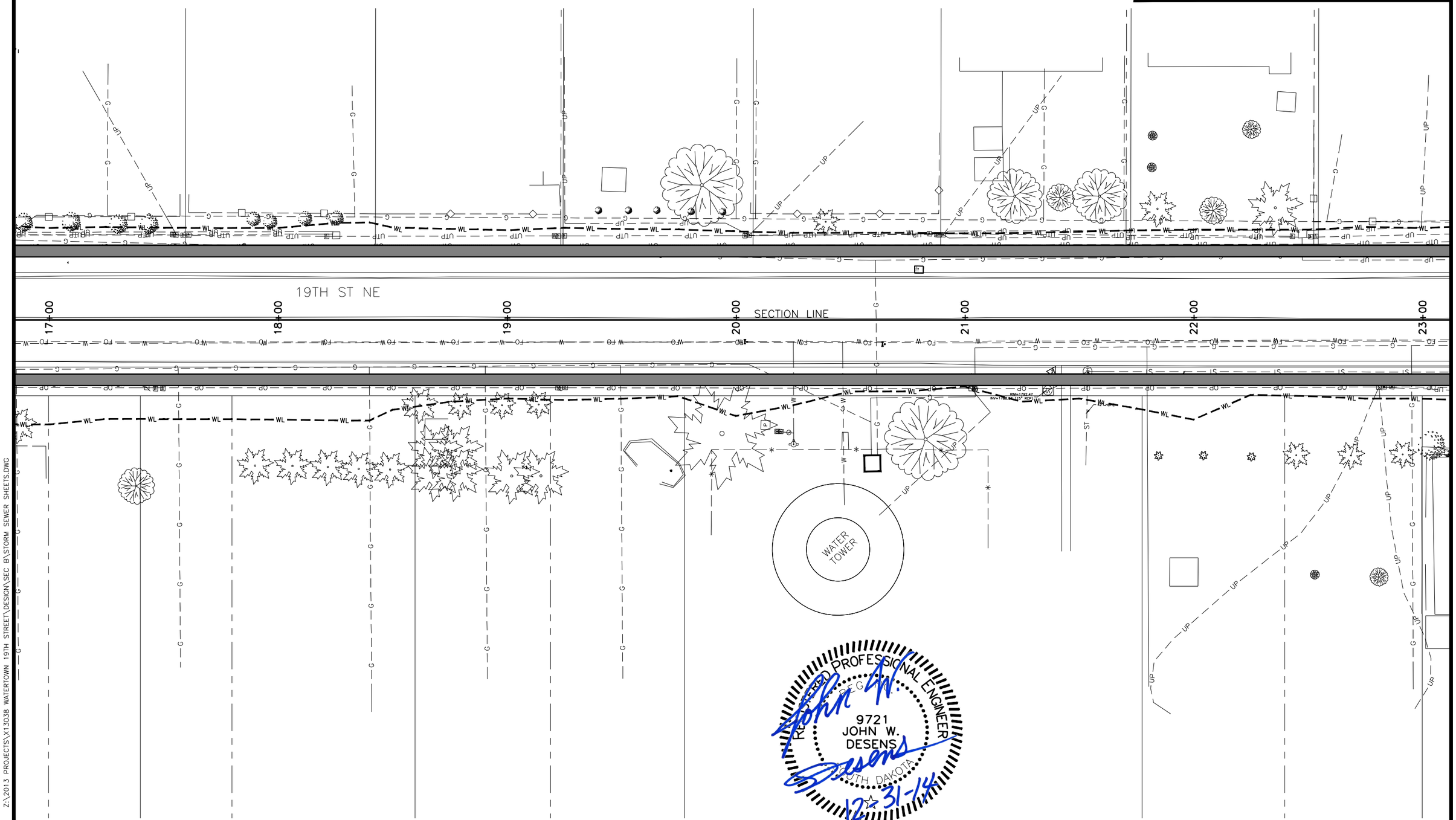


Z:\2013 PROJECTS\X13038 WATERTOWN 19TH STREET\DESIGN\SEC B\STORM SEWER SHEETS.DWG

1/21/2015 9:55 AM

PLANS BY: CLARK ENGINEERING, WATERTOWN, SD

# STORM SEWER LAYOUT

FOR BIDDING PURPOSES ONLY

| STATE OF SOUTH DAKOTA | PROJECT | SHEET | TOTAL SHEETS |
|---|---|---|---|
| | P 4243(03) | B72 | B99 |

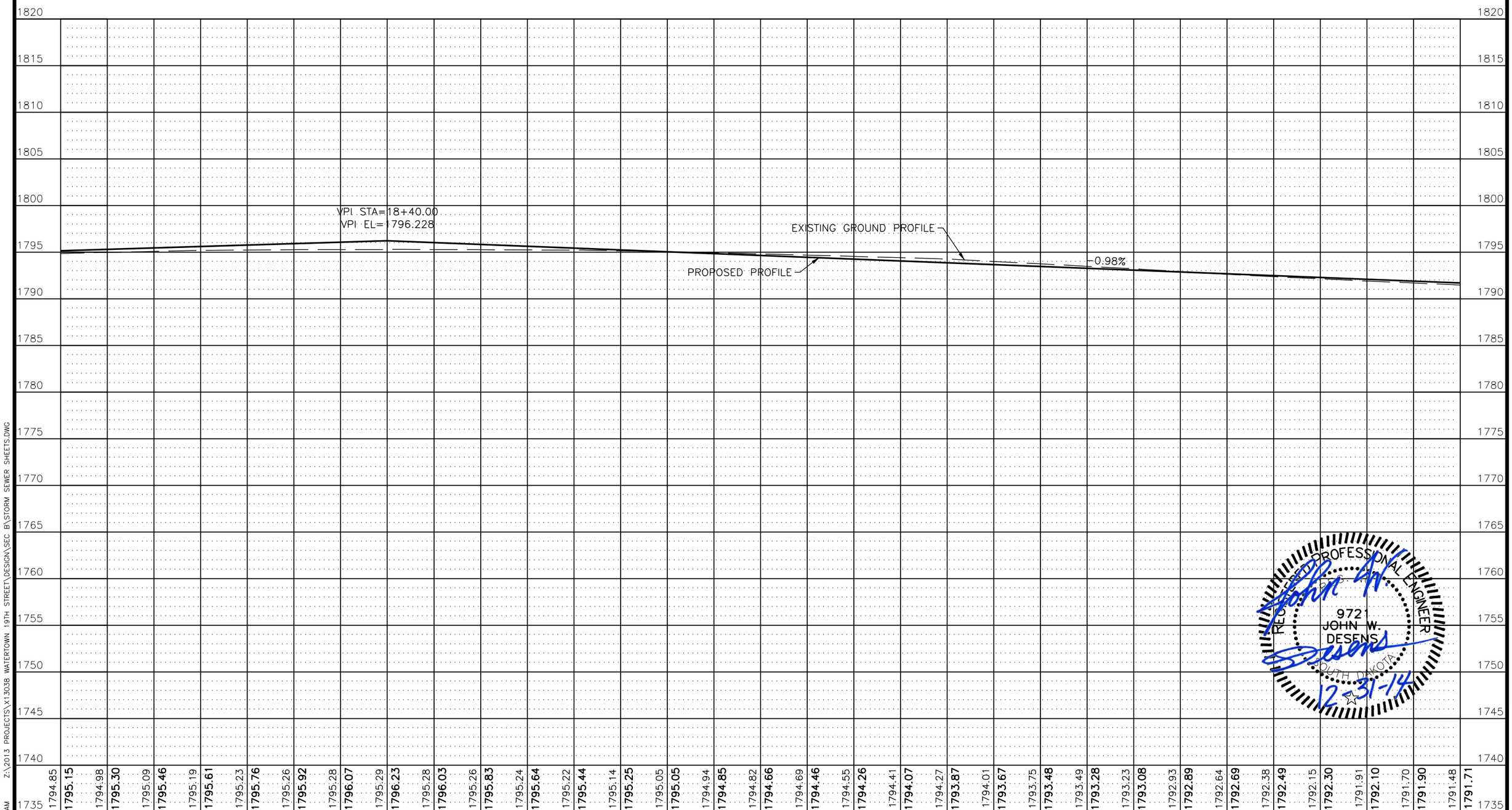


REGISTERED PROFESSIONAL ENGINEER
9721
JOHN W. DESENS
SOUTH DAKOTA
12-31-14

PLANS BY: CLARK ENGINEERING, WATERTOWN, SD

Z:\2013 PROJECTS\X13038 WATERTOWN 19TH STREET\DESIGN\SEC B\STORM SEWER SHEETS.DWG 1/21/2015 9:55 AM

# STORM SEWER LAYOUT

FOR BIDDING PURPOSES ONLY

| STATE OF SOUTH DAKOTA | PROJECT | SHEET | TOTAL SHEETS |
|---|---|---|---|
| | P 4243(03) | B73 | B99 |

STA 23+40.00–35.5'L
REMOVE CASTING, GROUT 4'x5' DROP INLET COVER ONTO EXISTING STRUCTURE, FILL OVER

STA 23+40.00–41.0'L
CONNECT 36" RCP TO STRUCTURE

STA 24+37.07–19.42'L
to STA 24+37.53–37.06'L
INSTALL 15"–22' RCP @ 2.05%

STA 24+37.07–19.33'R
to STA 24+37.07–19.42'L
INSTALL 15"–40' RCP @ 2.05%

STA 24+36.97–24.52'R
to STA 24+37.07–19.33'R
INSTALL 15"–6' RCP @ 2.06%

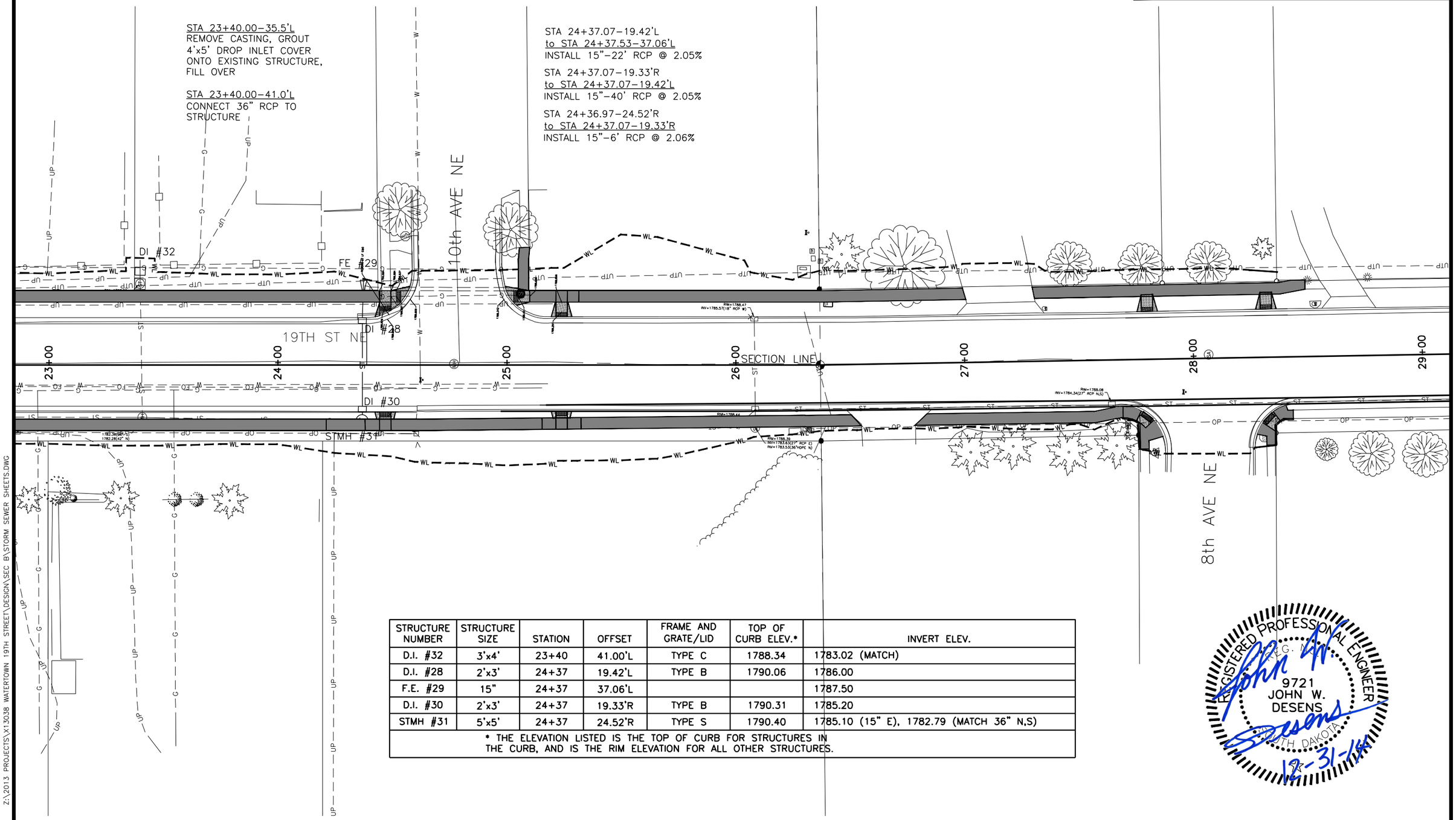


| STRUCTURE NUMBER | STRUCTURE SIZE | STATION | OFFSET | FRAME AND GRATE/LID | TOP OF CURB ELEV.* | INVERT ELEV. |
|---|---|---|---|---|---|---|
| D.I. #32 | 3'x4' | 23+40 | 41.00'L | TYPE C | 1788.34 | 1783.02 (MATCH) |
| D.I. #28 | 2'x3' | 24+37 | 19.42'L | TYPE B | 1790.06 | 1786.00 |
| F.E. #29 | 15" | 24+37 | 37.06'L | | | 1787.50 |
| D.I. #30 | 2'x3' | 24+37 | 19.33'R | TYPE B | 1790.31 | 1785.20 |
| STMH #31 | 5'x5' | 24+37 | 24.52'R | TYPE S | 1790.40 | 1785.10 (15" E), 1782.79 (MATCH 36" N,S) |

* THE ELEVATION LISTED IS THE TOP OF CURB FOR STRUCTURES IN THE CURB, AND IS THE RIM ELEVATION FOR ALL OTHER STRUCTURES.

REGISTERED PROFESSIONAL ENGINEER
REG. NO.
9721
JOHN W. DESENS
SOUTH DAKOTA
12-31-14

PLANS BY: CLARK ENGINEERING, WATERTOWN, SD

Z:\2013 PROJECTS\X13038 WATERTOWN 19TH STREET\DESIGN\SEC B\STORM SEWER SHEETS.DWG
1/21/2015 9:56 AM

# STORM SEWER LAYOUT

FOR BIDDING PURPOSES ONLY

| STATE OF SOUTH DAKOTA | PROJECT | SHEET | TOTAL SHEETS |
|---|---|---|---|
| | P 4243(03) | B74 | B99 |

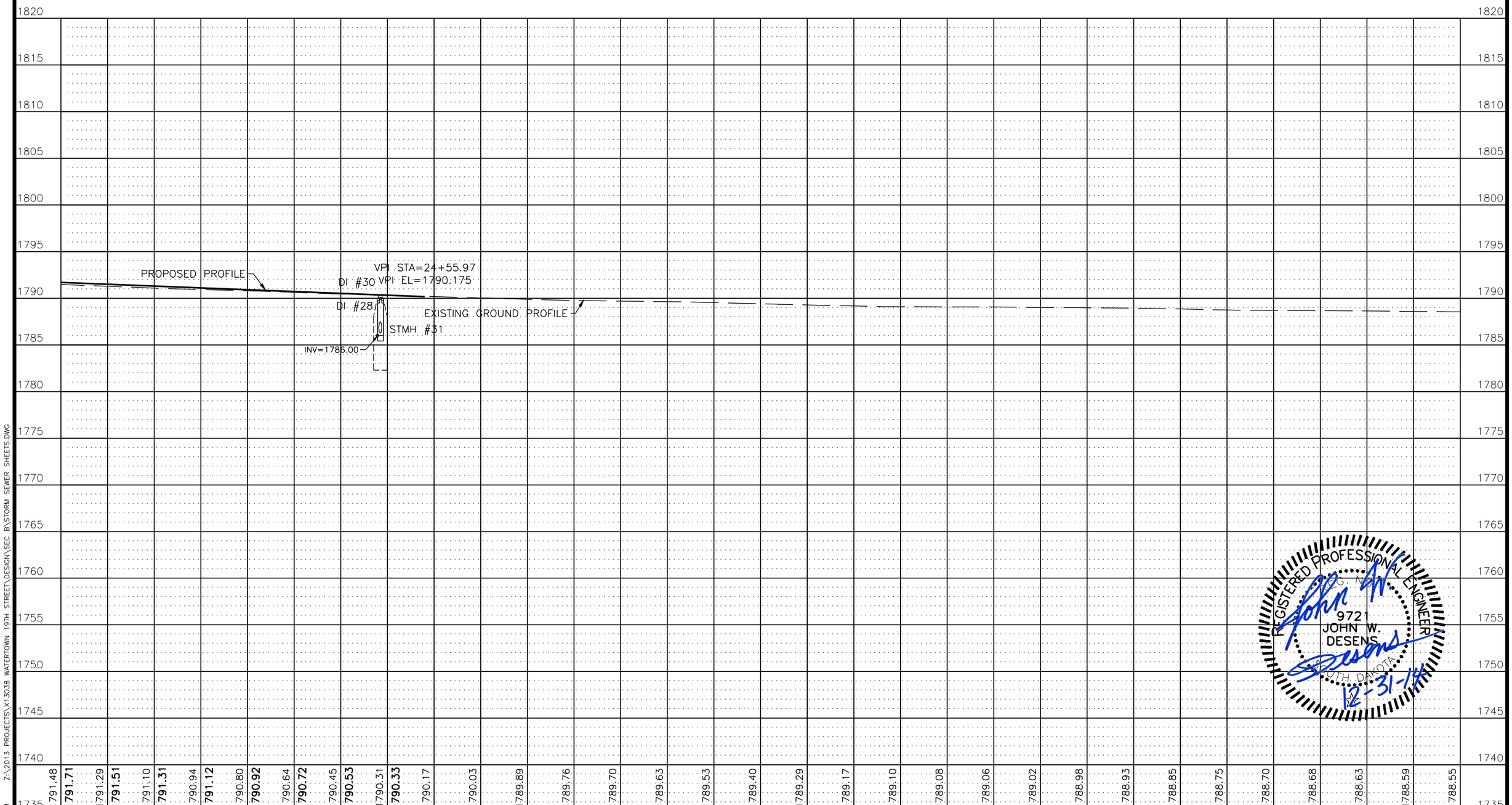


REGISTERED PROFESSIONAL ENGINEER
LIC. NO.
9721
JOHN W. DESENS
SOUTH DAKOTA
12-31-14

PLANS BY: CLARK ENGINEERING, WATERTOWN, SD

Z:\2013 PROJECTS\X13038 WATERTOWN 19TH STREET\DESIGN\SEC B\STORM SEWER SHEETS.DWG
1/21/2015 9:57 AM

# CUSTOM CURB RAMP

FOR BIDDING PURPOSES ONLY

| STATE OF SOUTH DAKOTA | PROJECT | SHEET | TOTAL SHEETS |
|---|---|---|---|
| | P 4243(03) | B75 | B99 |

* The ramp slope, at any location of the ramp, shall be 12:1 (8.3%) maximum. The ramp length shall not exceed 15' unless stated otherwise in the plans. Ramp slopes are designed at 12:1 (8.3%) unless stated otherwise in the plans.

** The ramp cross slope shall not be steeper than a 50:1 (2%) and the ramp width is 5' unless stated otherwise in the plans.

*** The slope in the turning space shall not be steeper than 50:1 (2%) in any direction of pedestrian travel.

**** The turning space is 5'x5' unless stated otherwise in the plans.

⊠ The curb height shall be 6".

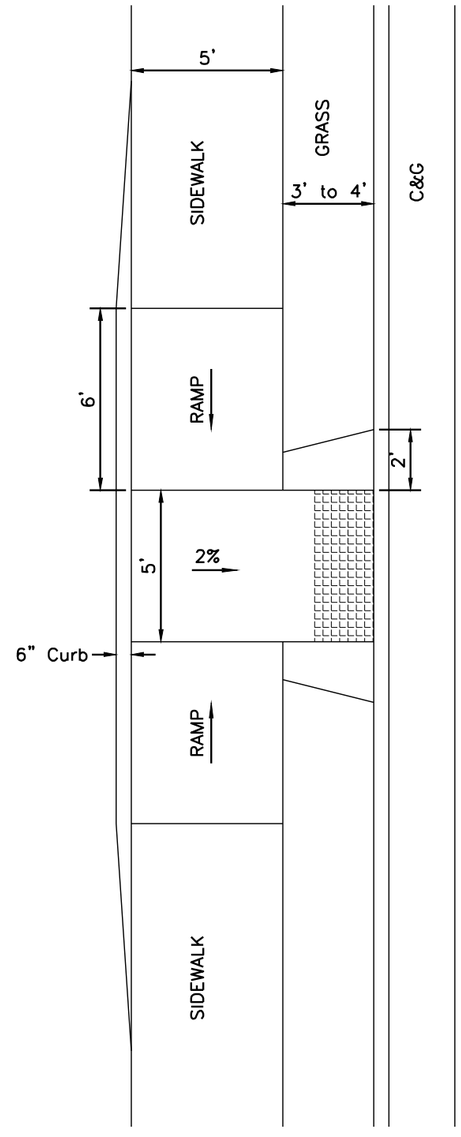


19th STREET

GENERAL NOTES:

For illustrative purpose only, type I detectable warnings are shown in the drawings.

The curb ramp shall be placed at the location stated in the plans.

Sidewalk adjacent to the curb ramp shall be as shown in the plans.

Care shall be taken to ensure a uniform grade on the ramp, free of sags and short grade changes.

Surface texture of the ramp shall be obtained by coarse brooming transverse to the slope of the ramp.

The normal gutter line profile shall be maintained through the area of the ramp.

Joints shall be sawed or tooled into the concrete adjacent to the detectable warnings to alleviate possible corner cracking (see plan view for joint location).

Care shall be taken to ensure that the surface of the detectable warnings are clean and maintains a uniform color.

The detectable warnings shall be cut as necessary to fit the plan specified limits of the detectable warnings. Cost for cutting the detectable warnings shall be incidental to the corresponding detectable warning bid item.

There will be no separate payment for curb ramps. The curb ramp shall be measured and paid for at the contract unit price per square foot for the corresponding concrete sidewalk bid item. The square foot area of the detectable warnings and the curb along the short radius shall be included in the measured and paid for quantity of sidewalk.

The curb transitions and ramp opening shall be measured and paid for at the contract unit price per foot for the corresponding curb and gutter bid item when curb and gutter is used. The curb transitions and ramp opening shall be measured and paid for at the contract unit price per square yard for the corresponding PCC fillet section bid item when a PCC fillet section is used.

The type I detectable warnings shall be measured to the nearest square foot. All costs for furnishing and installing the type I detectable warnings including labor, equipment, materials, and incidentals shall be paid for at the contract unit price per square foot for Type I Detectable Warnings".

The type 2 detectable warnings shall be measured to the nearest square foot. All costs for furnishing and installing the type 2 detectable warnings including labor, equipment, and materials, including adhesive, necessary sealant or grout, and necessary grinding shall be paid for at the contract unit price per square foot for "Type 2 Detectable Warnings".

PLANS BY: CLARK ENGINEERING, WATERTOWN, SD

1/21/2015 9:57 AM Z:\2013 PROJECTS\X13038 WATERTOWN 19TH STREET\DESIGN\SEC B\CUSTOM DETAIL.DWG

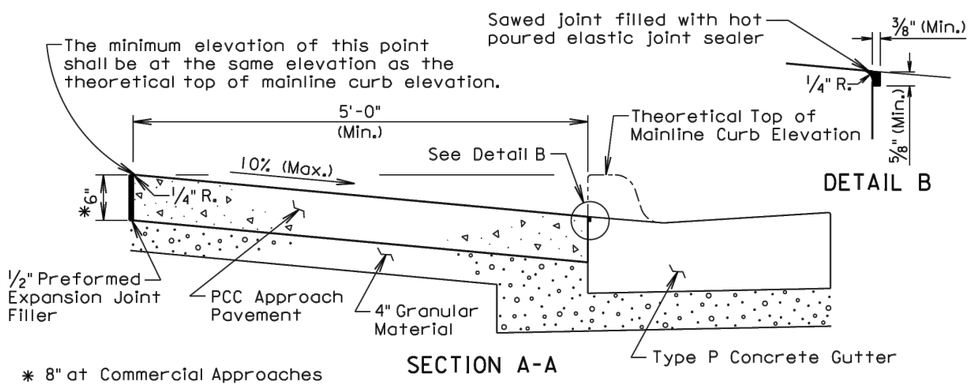


* 8" at Commercial Approaches

** Width for 6" high curb is 6' (See Standard Plate 650.35)

*** Within these areas, the surface of the type A PCC approach pavement shall be sloped transitionally as approved by the Engineer.

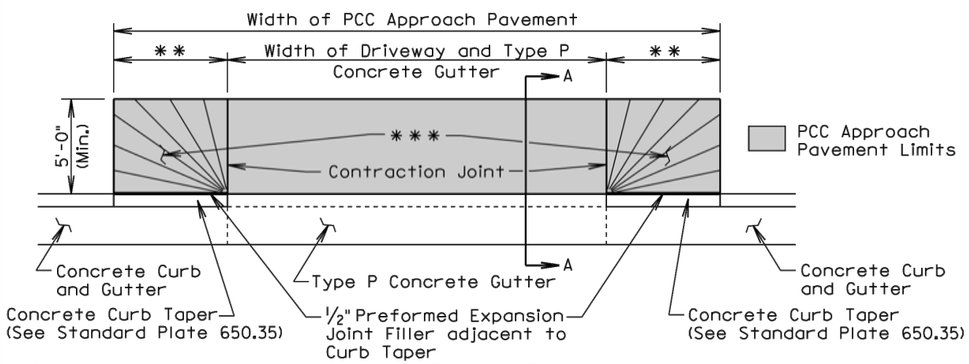


**GENERAL NOTES:**

The concrete for the type A PCC approach pavement and adjacent driveway shall comply with the requirements of the Standard Specifications for class M6 concrete unless otherwise stated in the plans.

Contraction joints in the type A PCC approach pavement shall be 1 1/2 inches deep if formed in the fresh concrete using a suitable grooving tool. If a saw is used to cut the contraction joints, then the depth of the joint shall be at least 1/4 the thickness of the approach pavement. Additional contraction joints not shown in the Plan View shall be spaced as follows:

One joint at the center of the approach for driveways 16' to 24' wide.
Two joints spaced at equal intervals for driveways greater than 24' to 40' wide.

All costs for furnishing and placing the type A PCC approach pavement and constructing the expansion and contraction joints including labor, equipment, and materials including the earthen backfill shall be incidental to the contract unit price per square yard for the corresponding PCC Approach Pavement bid item.

All costs for excavation required for placing the type A PCC approach pavement and granular material shall be incidental to the contract unit price per cubic yard for "Unclassified Excavation". All costs for furnishing and placing the granular material shall be incidental to the contract unit price per ton for the corresponding granular material bid item.

September 6, 2013

| Published Date: 4th Qtr. 2014 | SDDOT | TYPE A PCC APPROACH PAVEMENT | PLATE NUMBER 380.40 |
|---|---|---|---|
| | | | Sheet 1 of 1 |

**TOLERANCES IN DIMENSIONS**

Diameter: ±1.5% for 24" Dia. or less and ±1% or 3/8" whichever is more for 27" Dia. or greater.
Diameters at Joints: ±3/16" for 30" Dia. or less and ±1/4" for 36" or greater.
Length of joint (j): ±1/4".
Wall thickness (T): not less than design T by more than 5% or 3/16", whichever is greater.
Laying length: shall not underrun by more than 1/2".

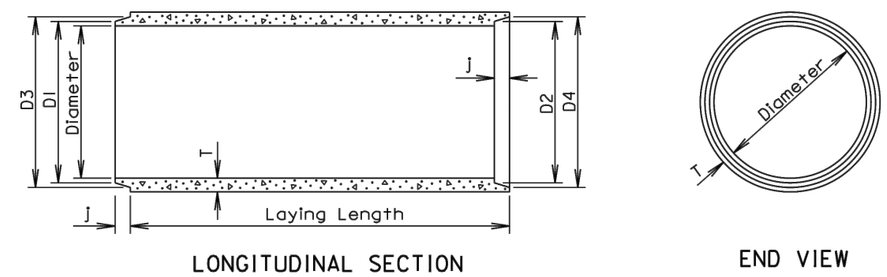


**GENERAL NOTES:**

Construction of R. C. P. shall conform to the requirements of Section 990 of the Standard Specifications for Roads and Bridges.

Not more than 2 four foot sections shall be permitted near the ends of any culvert. Four foot lengths shall be used only to secure the required length of culvert.

| Diam. (in.) | Approx. Wt. /Ft. (lb.) | T (in.) | J (in.) | D1 (in.) | D2 (in.) | D3 (in.) | D4 (in.) |
|---|---|---|---|---|---|---|---|
| 12 | 92 | 2 | 1 3/4 | 13 1/4 | 13 5/8 | 13 7/8 | 14 1/4 |
| 15 | 127 | 2 1/4 | 2 | 16 1/2 | 16 7/8 | 17 1/4 | 17 5/8 |
| 18 | 168 | 2 1/2 | 2 1/4 | 19 5/8 | 20 | 20 3/8 | 20 3/4 |
| 21 | 214 | 2 3/4 | 2 1/2 | 22 7/8 | 23 1/4 | 23 3/4 | 24 1/8 |
| 24 | 265 | 3 | 2 3/4 | 26 | 26 3/8 | 27 | 27 3/8 |
| 27 | 322 | 3 1/4 | 3 | 29 1/4 | 29 5/8 | 30 1/4 | 30 5/8 |
| 30 | 384 | 3 1/2 | 3 1/4 | 32 3/8 | 32 3/4 | 33 1/2 | 33 7/8 |
| 36 | 524 | 4 | 3 3/4 | 38 3/4 | 39 1/4 | 40 | 40 1/2 |
| 42 | 685 | 4 1/2 | 4 | 45 1/8 | 45 5/8 | 46 1/2 | 47 |
| 48 | 867 | 5 | 4 1/2 | 51 1/2 | 52 | 53 | 53 1/2 |
| 54 | 1070 | 5 1/2 | 4 1/2 | 57 7/8 | 58 3/8 | 59 3/8 | 59 7/8 |
| 60 | 1296 | 6 | 5 | 64 1/4 | 64 3/4 | 66 | 66 1/2 |
| 66 | 1542 | 6 1/2 | 5 1/2 | 70 5/8 | 71 1/8 | 72 1/2 | 73 |
| 72 | 1810 | 7 | 6 | 77 | 77 1/2 | 79 | 79 1/2 |
| 78 | 2098 | 7 1/2 | 6 1/2 | 83 3/8 | 83 7/8 | 85 5/8 | 86 1/8 |
| 84 | 2410 | 8 | 7 | 89 3/4 | 90 1/4 | 92 1/8 | 92 5/8 |
| 90 | 2740 | 8 1/2 | 7 | 95 3/4 | 96 1/4 | 98 1/8 | 98 5/8 |
| 96 | 2950 | 9 | 7 | 102 1/8 | 102 5/8 | 104 1/2 | 105 |
| 102 | 3075 | 9 1/2 | 7 1/2 | 109 | 109 1/2 | 111 1/2 | 112 |
| 108 | 3870 | 10 | 7 1/2 | 115 1/2 | 116 | 118 | 118 1/2 |

March 31, 2000

| Published Date: 4th Qtr. 2014 | SDDOT | REINFORCED CONCRETE PIPE | PLATE NUMBER 450.01 |
|---|---|---|---|
| | | | Sheet 1 of 1 |

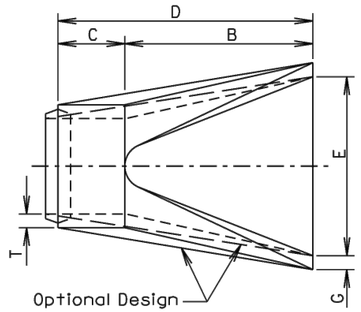


TOP VIEW

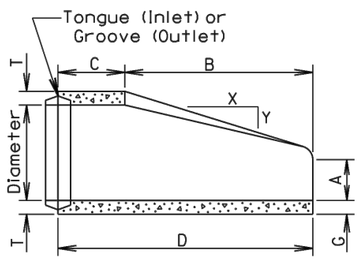


LONGITUDINAL SECTION

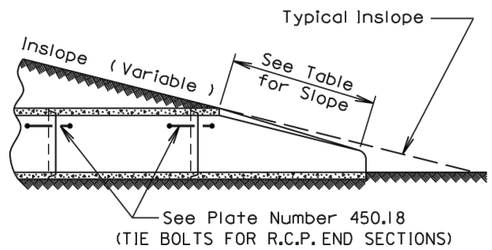


SLOPE DETAIL

**GENERAL NOTES:**

Lengths of concrete pipe shown on Plan Sheets are between flared Ends only.

Construction of R.C.P. Flared End shall conform to the requirements of Section 990 of the Standard Specifications for Roads and Bridges.

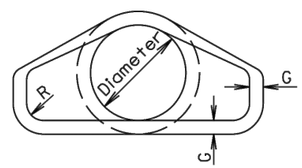


END VIEW

| Dia. (in.) | Approx. Wt. of Section (lbs.) | Approx. Slope (X to Y) | T (in.) | A (in.) | B (in.) | C (in.) | D (in.) | E (in.) | G (in.) | R (in.) |
|---|---|---|---|---|---|---|---|---|---|---|
| 12 | 530 | 2.4:1 | 2 | 4 | 24 | 48 7/8 | 72 7/8 | 24 | 2 | 1 1/2 |
| 15 | 740 | 2.4:1 | 2 1/4 | 6 | 27 | 46 | 73 | 30 | 2 1/4 | 1 1/2 |
| 18 | 990 | 2.3:1 | 2 1/2 | 9 | 27 | 46 | 73 | 36 | 2 1/2 | 1 1/2 |
| 21 | 1280 | 2.4:1 | 2 3/4 | 9 | 36 | 37 1/2 | 73 1/2 | 42 | 2 3/4 | 1 1/2 |
| 24 | 1520 | 2.5:1 | 3 | 9 1/2 | 43 1/2 | 30 | 73 1/2 | 48 | 3 | 1 1/2 |
| 27 | 1930 | 2.5:1 | 3 1/4 | 10 1/2 | 49 1/2 | 24 | 73 1/2 | 54 | 3 1/4 | 1 1/2 |
| 30 | 2190 | 2.5:1 | 3 1/2 | 12 | 54 | 19 3/4 | 73 3/4 | 60 | 3 1/2 | 1 1/2 |
| 36 | 4100 | 2.5:1 | 4 | 15 | 63 | 34 3/4 | 97 3/4 | 72 | 4 | 1 1/2 |
| 42 | 5380 | 2.5:1 | 4 1/2 | 21 | 63 | 35 | 98 | 78 | 4 1/2 | 1 1/2 |
| 48 | 6550 | 2.5:1 | 5 | 24 | 72 | 26 | 98 | 84 | 5 | 1 1/2 |
| 54 | 8240 | 2:1 | 5 1/2 | 27 | 65 | 33 1/4 | 98 1/4 | 90 | 5 1/2 | 1 1/2 |
| 60 | 8730 | 1.9:1 | 6 | 35 | 60 | 39 | 99 | 96 | 5 | 1 1/2 |
| 66 | 10710 | 1.7:1 | 6 1/2 | 30 | 72 | 27 | 99 | 102 | 5 1/2 | 1 1/2 |
| 72 | 12520 | 1.8:1 | 7 | 36 | 78 | 21 | 99 | 108 | 6 | 1 1/2 |
| 78 | 14770 | 1.8:1 | 7 1/2 | 36 | 90 | 21 | 111 | 114 | 6 1/2 | 1 1/2 |
| 84 | 18160 | 1.6:1 | 8 | 36 | 90 1/2 | 21 | 111 1/2 | 120 | 6 1/2 | 1 1/2 |
| 90 | 20900 | 1.5:1 | 8 1/2 | 41 | 87 1/2 | 24 | 111 1/2 | 132 | 6 1/2 | 6 |

March 31, 2000

**Published Date: 4th Qtr. 2014** | SDDOT | **R. C. P. FLARED ENDS** | PLATE NUMBER 450.10 | Sheet 1 of 1

| Wall "t" (in.) | Rod Dia. (in.) | Pipe Sleeve Dia. (nominal) |
|---|---|---|
| ≤ 3 1/4 | 5/8 | 3/4 |
| 3 1/2-6 1/2 | 3/4 | 1 |
| ≥ 7 | 1 | 1 1/4 |

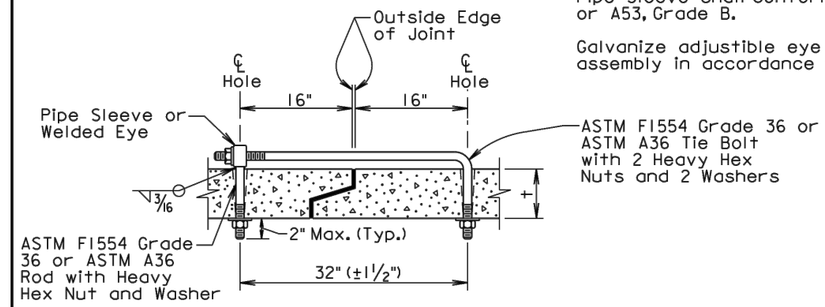


ADJUSTABLE EYE BOLT TIE

**GENERAL NOTES:**

Tie bolts shall conform to ASTM F1554 Grade 36 or ASTM A36. Nuts shall be heavy hex conforming to ASTM A563. Washers shall conform to ASTM F436.

Pipe Sleeve shall conform to ASTM A500 or A53, Grade B.

Galvanize adjustible eye bolt tie assembly in accordance with ASTM A153.

| Pipe Dia. (in.) | "L" (in.) | Bolt Dia. (in.) |
|---|---|---|
| ≤ 48 | 4 | 3/4 |
| > 48 | 6 | 1 |

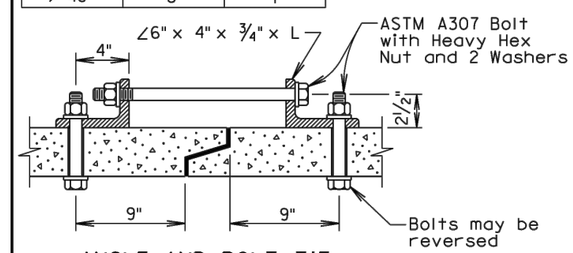


ANGLE AND BOLT TIE

**GENERAL NOTES:**

Angles shall conform to ASTM A36.

Bolts shall conform to ASTM A307. Nuts shall be heavy hex conforming to ASTM A563. Washers shall conform to ASTM F436.

Galvanize angles, bolts, nuts, and washers in accordance with ASTM A153.

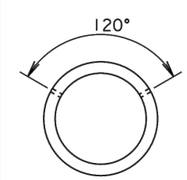


END VIEW "CIRCULAR"

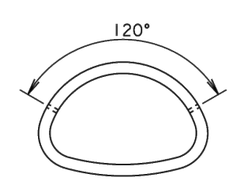


END VIEW "ARCH"

**GENERAL NOTES:**

In lieu of the tie bolts detailed above other types of tie bolt connections may be installed as approved by the Office of Bridge Design.

All pipe sections of R.C.P. and R.C.P. Arch shall be tied with tie bolts except for pipe located between drop inlets, manholes, and junction boxes. All pipe sections of pipes that only enter or exit drop inlets, manhole, and junction boxes shall be tied with tie bolts.

There will be no separate measurement or payment for the tie bolts. The cost for furnishing and installing the tie bolts shall be incidental to the contract unit price per foot for the corresponding bid item for R.C.P. or R.C.P. Arch.

February 28, 2013

**Published Date: 4th Qtr. 2014** | SDDOT | **TIE BOLTS FOR R.C.P. AND R.C.P. ARCH** | PLATE NUMBER 450.18 | Sheet 1 of 1

FOR BIDDING PURPOSES ONLY

| STATE OF SOUTH DAKOTA | PROJECT | SHEET | TOTAL SHEETS |
|---|---|---|---|
| | P 4243(03) | B78 | B99 |

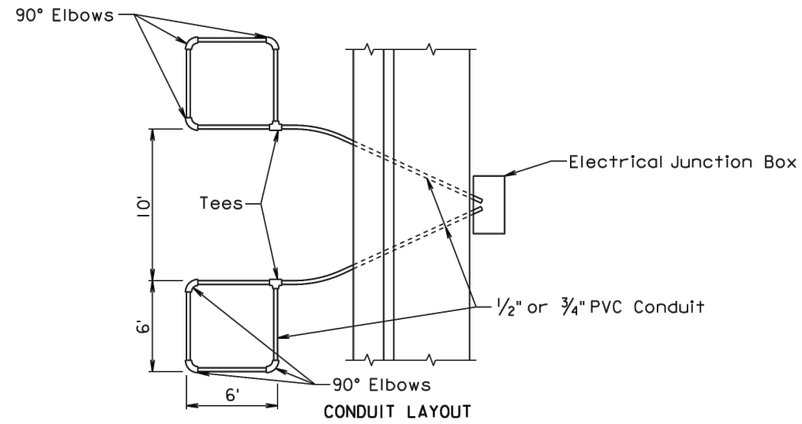


CONDUIT LAYOUT

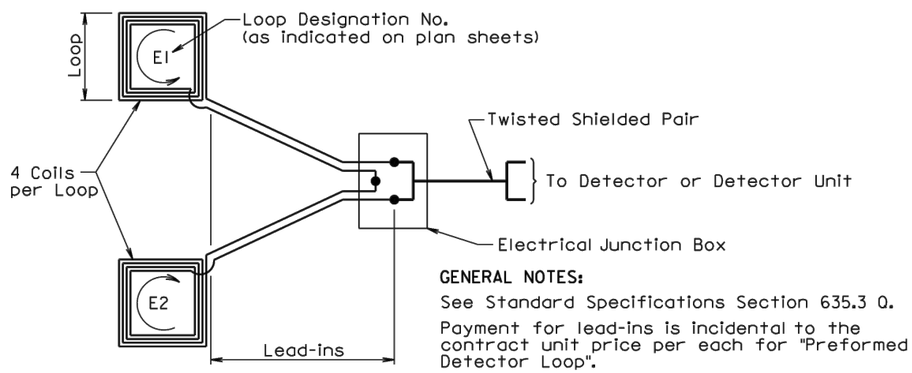


GENERAL NOTES:

See Standard Specifications Section 635.3 Q.

Payment for lead-ins is incidental to the contract unit price per each for "Preformed Detector Loop".

WIRING DIAGRAM

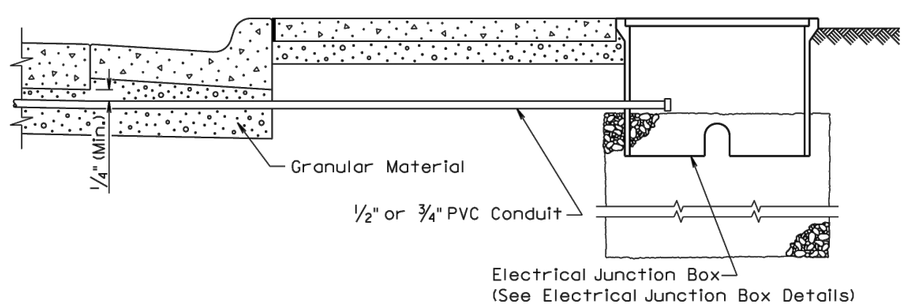


LEAD-IN DETAIL

February 14, 2011

Published Date: 4th Qtr. 2014

SDDOT

**PREFORMED DETECTOR LOOP**

PLATE NUMBER 635.70

Sheet 1 of 1

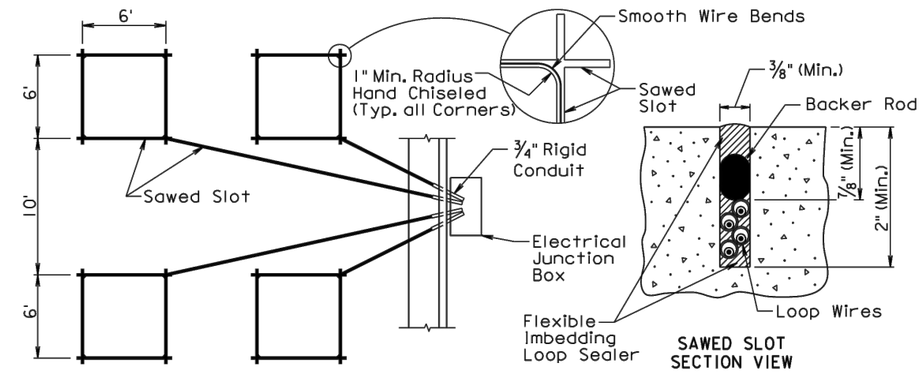


SAWED SLOT LAYOUT

SAWED SLOT SECTION VIEW

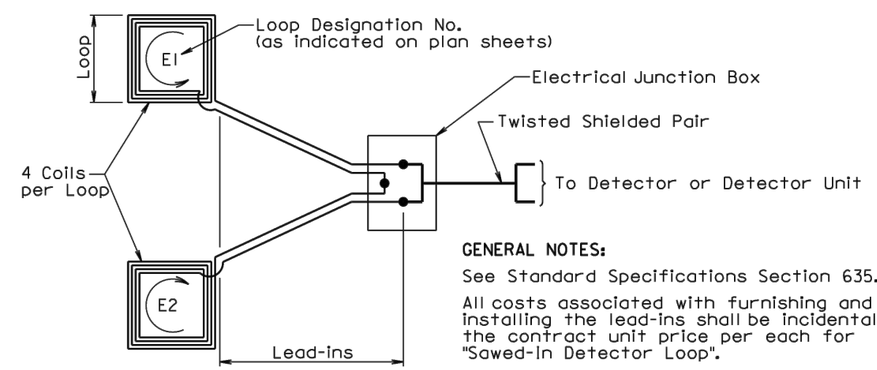


GENERAL NOTES:

See Standard Specifications Section 635.3 Q.

All costs associated with furnishing and installing the lead-ins shall be incidental to the contract unit price per each for "Sawed-In Detector Loop".

WIRING DIAGRAM

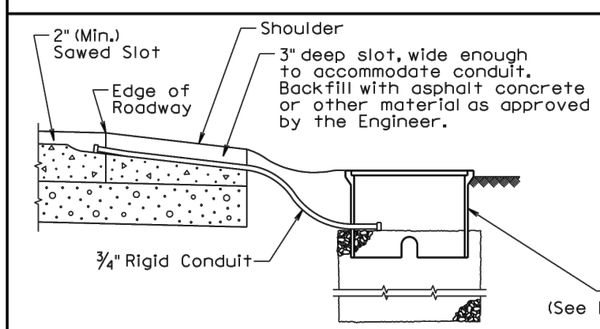


LEAD-IN THROUGH SHOULDER DETAIL

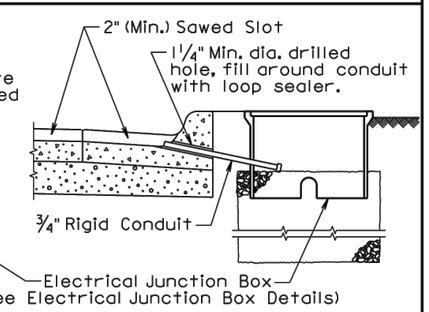


LEAD-IN THROUGH CURB AND GUTTER DETAIL

February 14, 2011

Published Date: 4th Qtr. 2014

SDDOT

**SAWED-IN DETECTOR LOOP**

PLATE NUMBER 635.71

Sheet 1 of 1

PLANS BY: CLARK ENGINEERING, WATERTOWN, SD

12/30/2014 7:58 AM Z:\2013 PROJECTS\X13038 WATERTOWN 19TH STREET\DESIGN\SEC B\STANDARD PLATES - B.DWG

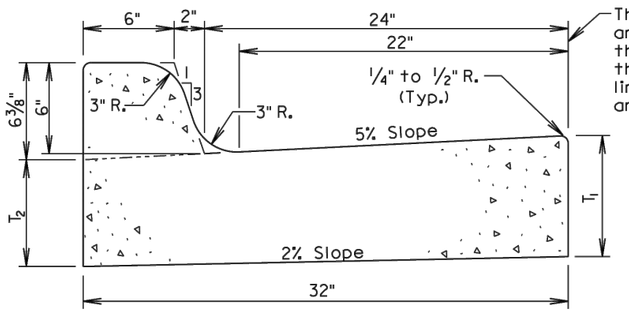


The stated radii on the plans and cross sections refer to this line and it shall also be the basis for horizontal linear foot measurement and payment.

| Type | $T_1$ (Inches) | $T_2$ (Inches) | Cu. Yd. Per Lin. Ft. | Lin. Ft. Per Cu. Yd. |
|---|---|---|---|---|
| B66 | 6 | 5 1/16 | 0.057 | 17.7 |
| B67 | 7 | 6 1/16 | 0.065 | 15.4 |
| B68 | 8 | 7 1/16 | 0.073 | 13.7 |
| B68.5 | 8.5 | 7 9/16 | 0.077 | 13.0 |
| B69 | 9 | 8 1/16 | 0.081 | 12.3 |
| B69.5 | 9.5 | 8 9/16 | 0.085 | 11.7 |
| B610 | 10 | 9 1/16 | 0.090 | 11.2 |
| B610.5 | 10.5 | 9 9/16 | 0.094 | 10.7 |
| B611 | 11 | 10 1/16 | 0.098 | 10.2 |
| B611.5 | 11.5 | 10 9/16 | 0.102 | 9.8 |
| B612 | 12 | 11 1/16 | 0.106 | 9.4 |

**GENERAL NOTES:**

When concrete curb and gutter longitudinally adjoins new concrete pavement, the method of attachment shall be by one of the methods shown on Standard Plate 380.11.

See Standard Plate 650.90 for expansion and contraction joints in the curb and gutter.

September 6, 2008

| Published Date: 4th Qtr. 2014 | SDDOT | TYPE B CONCRETE CURB AND GUTTER | PLATE NUMBER 650.01 |
|---|---|---|---|
| | | | Sheet 1 of 1 |

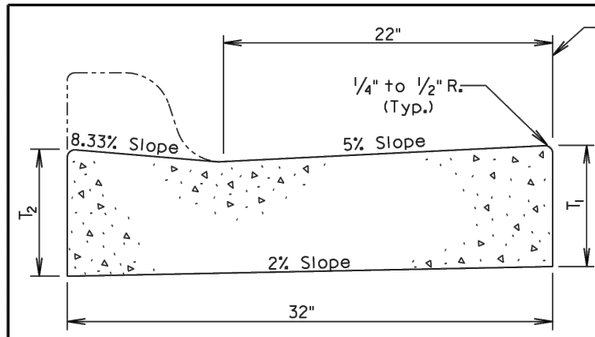


TRANSVERSE SECTION

The stated radii on the plans and cross sections refer to this line and it shall also be the basis for horizontal linear foot measurement and payment.

| Type | $T_1$ (Inches) | $T_2$ (Inches) | Cu. Yd. Per Lin. Ft. | Lin. Ft. Per Cu. Yd. |
|---|---|---|---|---|
| P6 | 6 | 6 3/8 | 0.047 | 21.2 |
| P7 | 7 | 7 3/8 | 0.055 | 18.1 |
| P8 | 8 | 8 3/8 | 0.064 | 15.7 |
| P8.5 | 8.5 | 8 7/8 | 0.068 | 14.8 |
| P9 | 9 | 9 3/8 | 0.072 | 13.9 |
| P9.5 | 9.5 | 9 7/8 | 0.076 | 13.2 |
| P10 | 10 | 10 3/8 | 0.080 | 12.5 |
| P10.5 | 10.5 | 10 7/8 | 0.084 | 11.9 |
| P11 | 11 | 11 3/8 | 0.088 | 11.3 |
| P11.5 | 11.5 | 11 7/8 | 0.092 | 10.8 |
| P12 | 12 | 12 3/8 | 0.096 | 10.4 |

Type P Concrete Gutter Limits

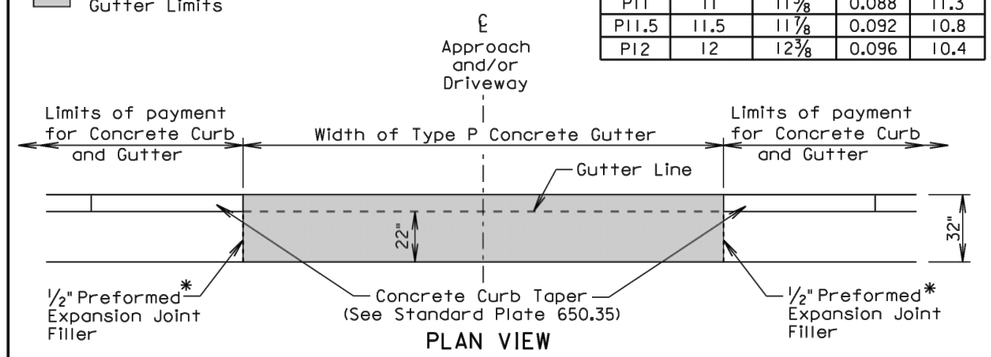


PLAN VIEW

* Joint will not be needed if concrete curb and gutter and type P concrete gutter is placed at the same time. If the 1/2" Preformed Expansion Joint Filler is provided, then the joint shall be sealed in accordance with standard plate 650.90.

**GENERAL NOTES:**

The concrete for the Type P Concrete Gutter shall comply with the requirements of the Standard Specifications for Class M6 Concrete.

When concrete gutter longitudinally adjoins new concrete pavement, the method of attachment shall be by one of the methods shown on Standard Plate 380.11.

Transverse contraction joints shall be constructed at 10' intervals in the concrete gutter except when concrete gutter is constructed adjacent to mainline PCC pavement. When concrete gutter is constructed adjacent to mainline PCC pavement, a transverse contraction joint shall be constructed in the concrete gutter at each mainline PCC pavement transverse contraction joint location.

When concrete gutter is placed monolithically with mainline PCC pavement, the transverse contraction joints in the concrete gutter shall be sawed and sealed the same as the transverse contraction joints in the mainline PCC pavement.

When concrete gutter is not placed monolithically with the mainline PCC pavement and when the adjacent mainline surfacing is not PCC concrete, the transverse contraction joints in the concrete gutter shall be 1 1/2 inches deep if formed in the fresh concrete using a suitable grooving tool. If a saw is used to cut the contraction joints, then the depth of the joint shall be at least 1/4 the thickness of the concrete.

September 6, 2013

| Published Date: 4th Qtr. 2014 | SDDOT | TYPE P CONCRETE GUTTER | PLATE NUMBER 650.30 |
|---|---|---|---|
| | | | Sheet 1 of 1 |

FOR BIDDING PURPOSES ONLY

| STATE OF SOUTH DAKOTA | PROJECT | SHEET | TOTAL SHEETS |
|---|---|---|---|
| | P 4243(03) | B80 | B99 |

This space intentionally left blank.

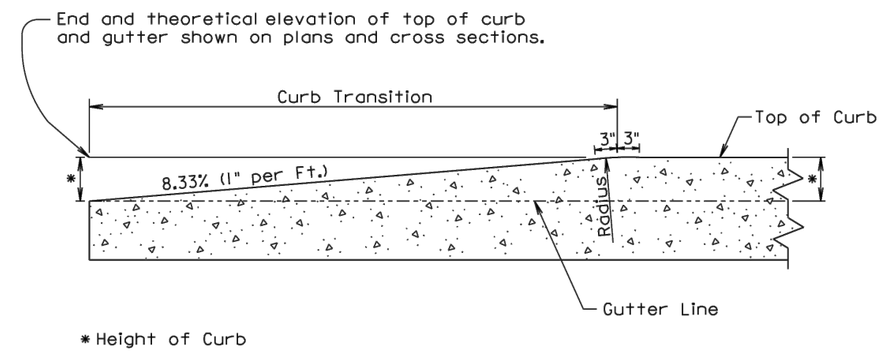


LONGITUDINAL SECTION OF CONCRETE CURB TAPER

September 14, 2005

| Published Date: 4th Qtr. 2014 | SDDOT | CONCRETE CURB TAPER | PLATE NUMBER 650.35 |
|---|---|---|---|
| | | | Sheet 1 of 1 |

PLANS BY: CLARK ENGINEERING, WATERTOWN, SD

12/30/2014 7:58 AM Z:\2013 PROJECTS\X13038 WATERTOWN 19TH STREET\DESIGN\SEC B\STANDARD PLATES - B.DWG

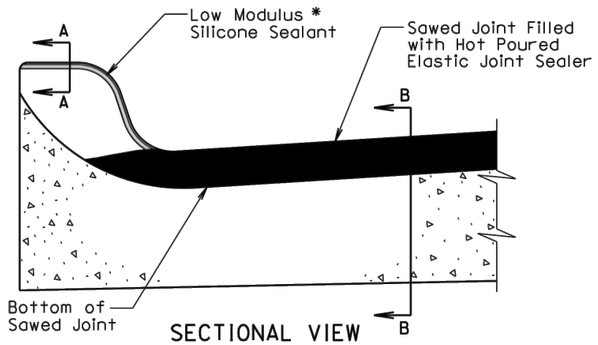


SECTIONAL VIEW

( Curb and Gutter Placed Monolithic with Adjacent Mainline PCC Pavement )

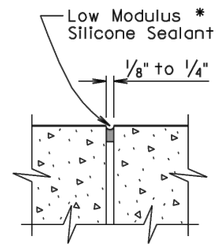


SECTION A-A

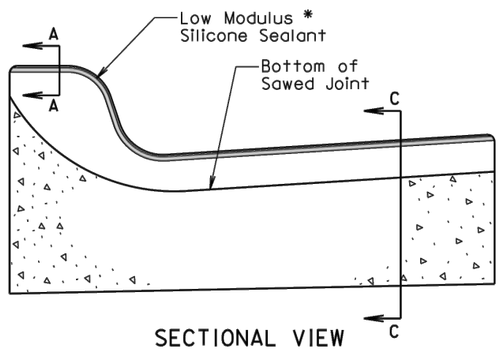


SECTIONAL VIEW

( Curb and Gutter not Placed Monolithic with Adjacent Mainline PCC Pavement or Mainline Surfacing is not PCC Pavement )

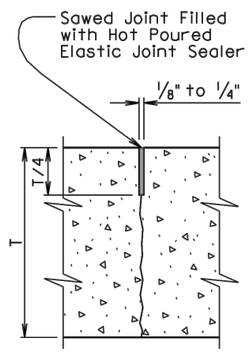


SECTION B-B

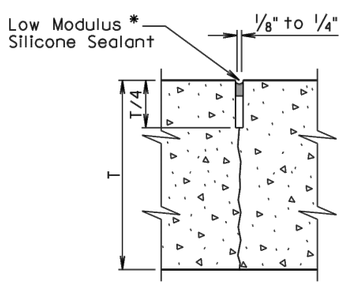


SECTION C-C

* The silicone sealant shall be placed such that it completely seals the joint and is bonded to the sides of the clean joint as approved by the Engineer.

September 6, 2013

| Published Date: 4th Qtr. 2014 | SDDOT | JOINTS IN CONCRETE CURB AND GUTTER | PLATE NUMBER 650.90 |
|---|---|---|---|
| | | | Sheet 1 of 2 |

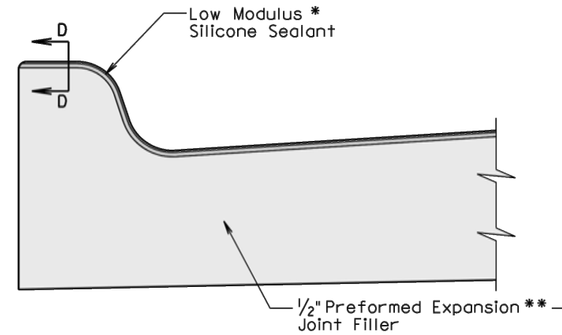


SECTIONAL VIEW

( Curb and Gutter at 1/2" Preformed Expansion Joint Filler Location )

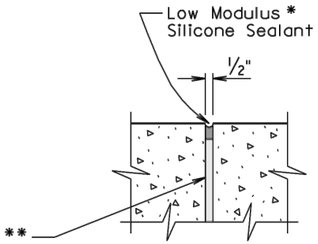


SECTION D-D

* The silicone sealant shall be placed such that it completely seals the joint and is bonded to the sides of the clean joint as approved by the Engineer.

GENERAL NOTES:

For illustrative reason, only the type B curb and gutter is shown.

** A 1/2" preformed expansion joint filler shall be placed transversely in the curb and gutter at the following locations:

1. At each junction between the radius return of curb and gutter and curb and gutter which is parallel to the project centerline.
2. At each junction between new curb and gutter and existing curb and gutter.

Transverse contraction joints shall be constructed at 10' intervals in the concrete curb and gutter except when the concrete curb and gutter is constructed adjacent to mainline PCC pavement. When concrete curb and gutter is constructed adjacent to mainline PCC pavement, a transverse contraction joint shall be constructed in the concrete curb and gutter at each mainline PCC pavement transverse contraction joint location.

When concrete curb and gutter is not placed monolithically with the mainline PCC pavement or when the adjacent mainline surfacing is not PCC concrete, the transverse contraction joints in the concrete curb and gutter shall be 1 1/2 inches deep if formed in the fresh concrete using a suitable grooving tool. If a saw is used to cut the contraction joints, then the depth of the joint shall be at least 1/4 the thickness of the concrete and the joint shall be sealed in accordance with the details shown above.

September 6, 2013

| Published Date: 4th Qtr. 2014 | SDDOT | JOINTS IN CONCRETE CURB AND GUTTER | PLATE NUMBER 650.90 |
|---|---|---|---|
| | | | Sheet 2 of 2 |

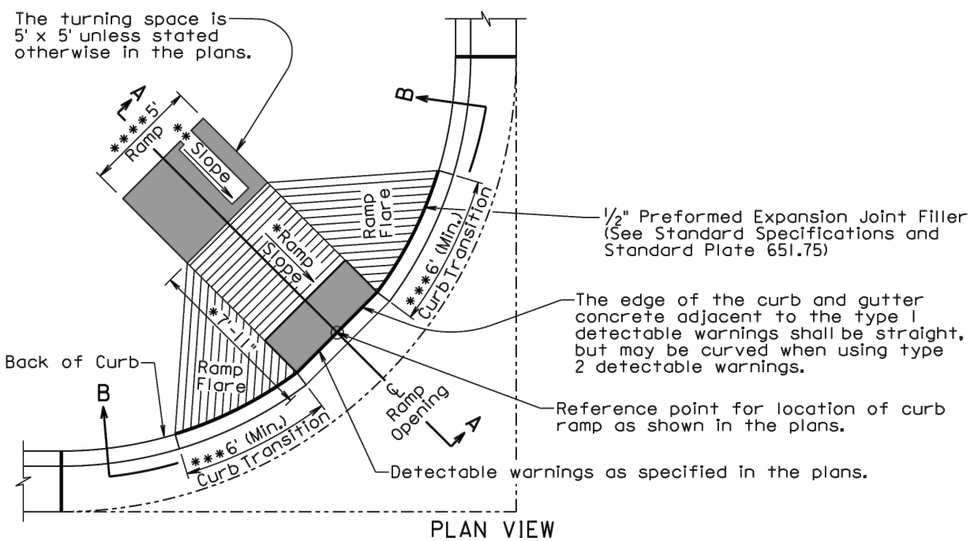


PLAN VIEW
(With 6'+ Curb Transition)

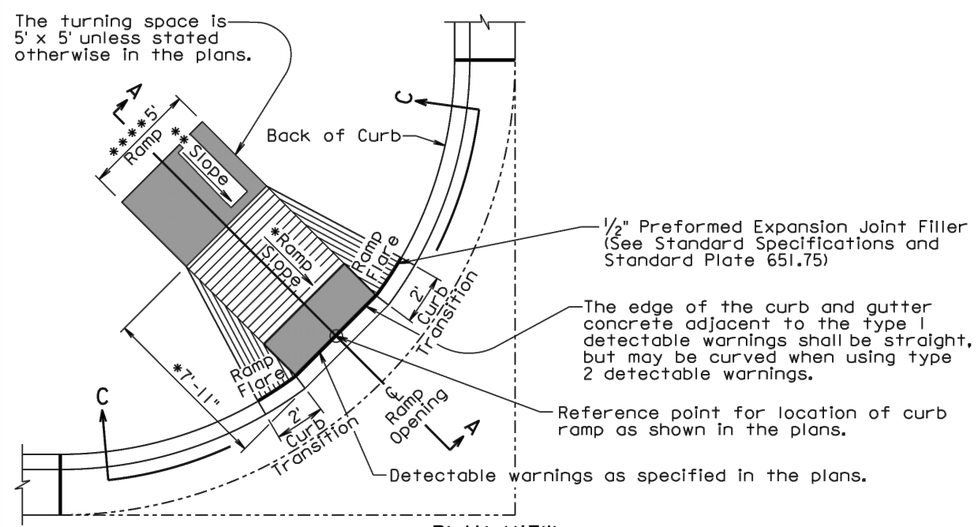


PLAN VIEW
(With 2' Curb Transition)

September 6, 2013

| Published Date: 4th Qtr. 2014 | SDDOT | TYPE 1 CURB RAMP (PERPENDICULAR CURB RAMP) | PLATE NUMBER 651.01 |
|---|---|---|---|
| | | | Sheet 1 of 3 |

The ramp slope shall be 12:1 (8.3%) maximum. The ramp length shall not exceed 15' unless stated otherwise in the plans. Ramp slopes are designed at 12:1 (8.3%) unless stated otherwise in the plans.

* The cross slope of the ramp shall not be steeper than 50:1 (2%).

The 7'-11" dimension was computed based on a flat roadway profile, a continuous 2% theoretical slope from top of theoretical curb to the top of ramp, and a 6" high curb. The dimension shall be adjusted based on the curb type shown in the plans, the roadway geometrics, and the sidewalk geometrics.

** The slope in the turning space shall not be steeper than 50:1 (2%) in any direction of pedestrian travel.

*** The curb transition shall be a minimum of 6' long, a maximum of 10' long, and the curb transition slope shall not be steeper than 10:1 (10%) unless stated otherwise in the plans.

**** The ramp width is 5' unless stated otherwise in the plans.

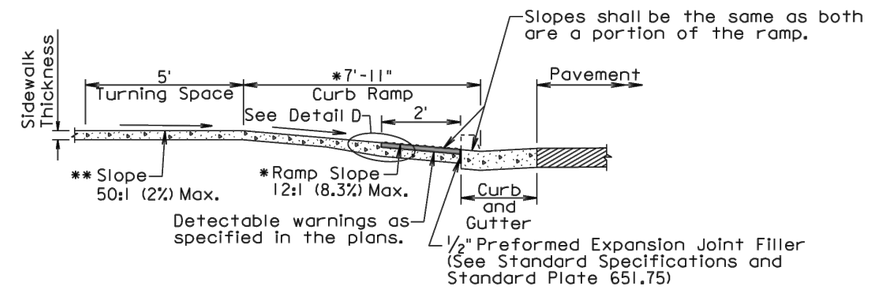


SECTION A-A

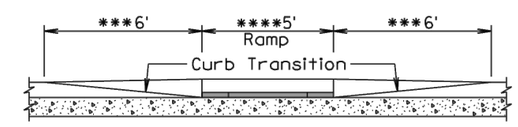


SECTIONAL VIEW B-B

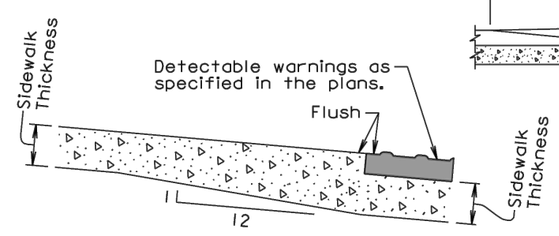


DETAIL D

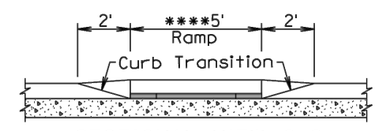


SECTIONAL VIEW C-C

September 6, 2013

| Published Date: 4th Qtr. 2014 | SDDOT | TYPE 1 CURB RAMP (PERPENDICULAR CURB RAMP) | PLATE NUMBER 651.01 |
|---|---|---|---|
| | | | Sheet 2 of 3 |

This space intentionally left blank.

**GENERAL NOTES:**

For illustrative purpose only, type 1 detectable warnings are shown in the drawings.

For illustrative purpose only, PCC fillet sections are shown in the drawings. The curb ramp depicted on this standard plate may be used with a PCC fillet section, with curved curb and gutter, or with straight curb and gutter.

For illustrative purpose only, the curb ramp location is shown at the center of a PCC fillet section. The curb ramp shall be placed at the location stated in the plans.

Sidewalk shall not be placed adjacent to the ramp flares when a 2' curb transition is used unless shown otherwise in the plans.

* Care shall be taken to ensure a uniform grade on the ramp, free of sags and short grade changes.

Surface texture of the ramp shall be obtained by coarse brooming transverse to the slope of the ramp.

The normal gutter line profile shall be maintained through the area of the ramp.

Joints shall be sawed or tooled into the concrete adjacent to the detectable warnings to alleviate possible corner cracking.

Care shall be taken to ensure that the surface of the detectable warnings are clean and maintains a uniform color.

The detectectable warnings shall be cut as necessary to fit the plan specified limits of the detectable warnings. Cost for cutting the detectable warnings shall be incidental to the corresponding detectable warning bid item.

There will be no separate payment for curb ramps. The curb ramp shall be measured and paid for at the contract unit price per square foot for the corresponding concrete sidewalk bid item. The square foot area of the detectable warnings shall be included in the measured and paid for quantity of sidewalk.

The curb transitions and ramp opening shall be measured and paid for at the contract unit price per foot for the corresponding curb and gutter bid item when curb and gutter is used. The curb transitions and ramp opening shall be measured and paid for at the contract unit price per square yard for the corresponding PCC fillet section bid item when a PCC fillet section is used.

The type 1 detectable warnings shall be measured to the nearest square foot. All costs for furnishing and installing the type 1 detectable warnings including labor, equipment, materials, and incidentals shall be paid for at the contract unit price per square foot for "Type 1 Detectable Warnings".

The type 2 detectable warnings shall be measured to the nearest square foot. All costs for furnishing and installing the type 2 detectable warnings including labor, equipment, and materials, including adhesive, necessary sealant or grout, and necessary grinding shall be paid for at the contract unit price per square foot for "Type 2 Detectable Warnings".

September 6, 2013

| Published Date: 4th Qtr. 2014 | SDDOT | TYPE 1 CURB RAMP (PERPENDICULAR CURB RAMP) | PLATE NUMBER 651.01 |
|---|---|---|---|
| | | | Sheet 3 of 3 |

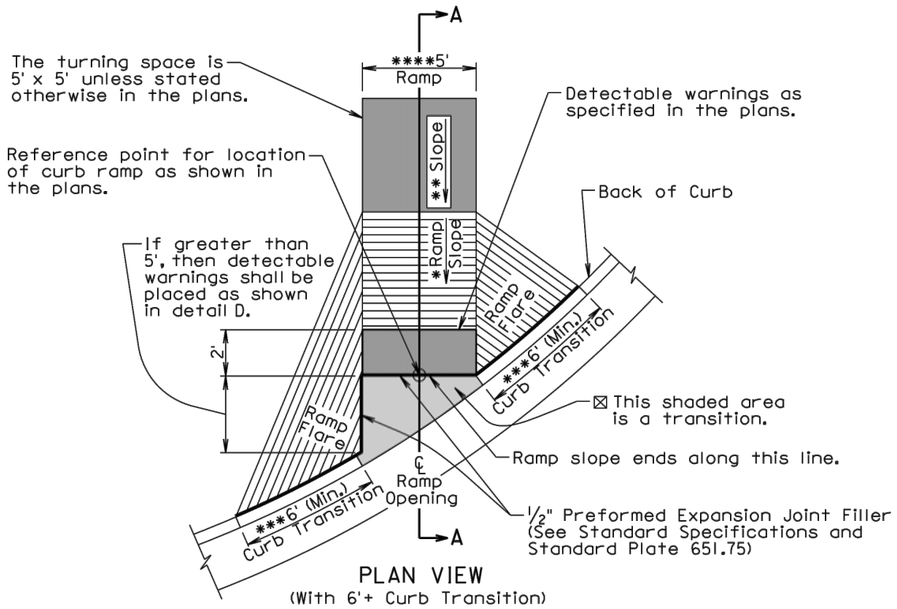


PLAN VIEW
(With 6'+ Curb Transition)

⊠ The slope within the transition area shall not be steeper than a 20:1 (5%). The concrete within the transition shall be placed monolithic with the curb and gutter or fillet section concrete. The concrete thickness within the transition shall be the same as the curb and gutter or fillet section concrete thickness.

*** The curb transition shall be a minimum of 6' long, a maximum of 10' long, and the curb transition slope shall not be steeper than a 10:1 (10%) unless stated otherwise in the plans.

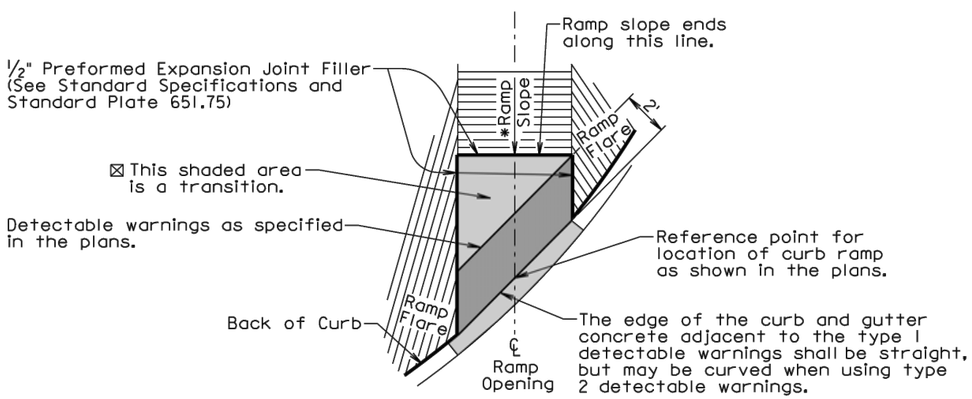


DETAIL D

September 6, 2013

| Published Date: 4th Qtr. 2014 | SDDOT | TYPE 2 CURB RAMP (DIRECTIONAL CURB RAMP) | PLATE NUMBER 651.02 |
|---|---|---|---|
| | | | Sheet 1 of 3 |

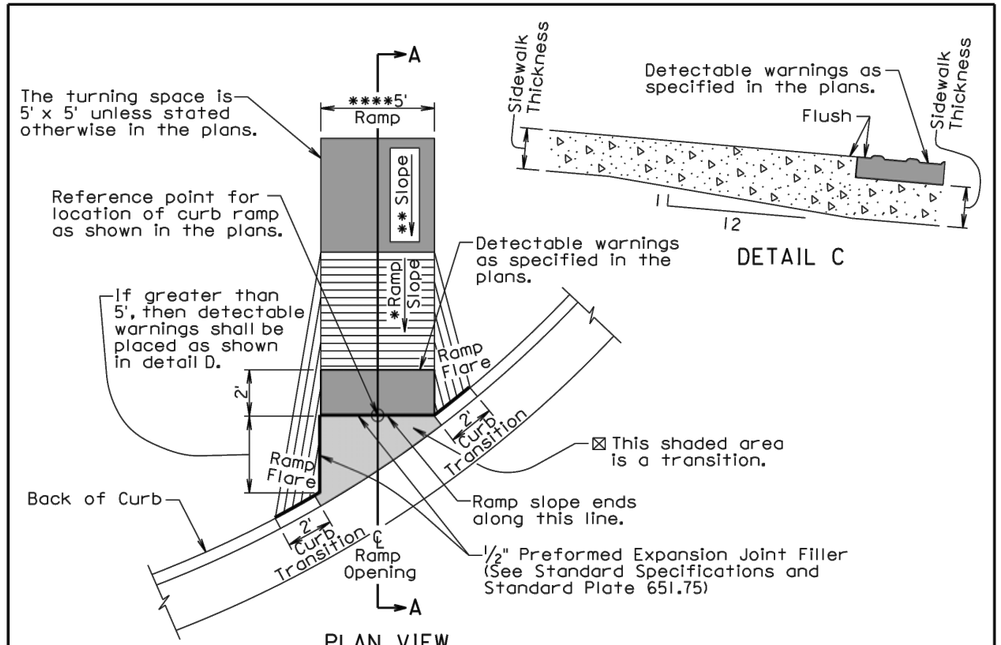


DETAIL C

PLAN VIEW
(With 2' Curb Transition)

* The ramp slope shall be 12:1 (8.3%) maximum. The ramp length shall not exceed 15' unless stated otherwise in the plans. Ramp slopes are designed at 12:1 (8.3%) unless stated otherwise in the plans.

The cross slope of the ramp shall not be steeper than 50:1 (2%).

** The slope in the turning space shall not be steeper than a 50:1 (2%) in any direction of pedestrian travel.

**** The ramp width is 5' unless stated otherwise in the plans.

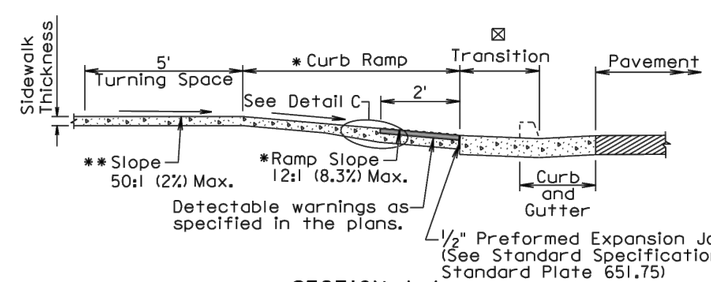


SECTION A-A

September 6, 2013

| Published Date: 4th Qtr. 2014 | SDDOT | TYPE 2 CURB RAMP (DIRECTIONAL CURB RAMP) | PLATE NUMBER 651.02 |
|---|---|---|---|
| | | | Sheet 2 of 3 |

FOR BIDDING PURPOSES ONLY



This space intentionally left blank.

**GENERAL NOTES:**

For illustrative purpose only, type I detectable warnings are shown in the drawings.

The curb ramp depicted on this standard plate may be used with a PCC fillet section, with curved curb and gutter, or with straight curb and gutter. The curb ramp shall be placed at the location stated in the plans.

Sidewalk shall not be placed adjacent to the ramp flares when a 2' curb transition is used unless shown otherwise in the plans.

* Care shall be taken to ensure a uniform grade on the ramp, free of sags and short grade changes.

Surface texture of the ramp shall be obtained by coarse brooming transverse to the slope of the ramp.

The normal gutter line profile shall be maintained through the area of the ramp.

Joints shall be sawed or tooled into the concrete adjacent to the detectable warnings to alleviate possible corner cracking.

Care shall be taken to ensure that the surface of the detectable warnings are clean and maintains a uniform color.

The detectectable warnings shall be cut as necessary to fit the plan specified limits of the detectable warnings. Cost for cutting the detectable warnings shall be incidental to the corresponding detectable warning bid item.

There will be no separate payment for curb ramps. The curb ramp shall be measured and paid for at the contract unit price per square foot for the corresponding concrete sidewalk bid item. The square foot area of the detectable warnings shall be included in the measured and paid for quantity of sidewalk.

The curb transitions and ramp opening shall be measured and paid for at the contract unit price per foot for the corresponding curb and gutter bid item when curb and gutter is used. The curb transitions and ramp opening shall be measured and paid for at the contract unit price per square yard for the corresponding PCC fillet section bid item when a PCC fillet section is used.

All costs for furnishing and installing the transition area at the base of the ramp shall be incidental to the contract unit price per foot for the corresponding curb and gutter bid item when curb and gutter is used and shall be incidental to the contract unit price per square yard for the corresponding PCC fillet section bid item when a PCC fillet section is used.

The type I detectable warnings shall be measured to the nearest square foot. All costs for furnishing and installing the type I detectable warnings including labor, equipment, materials, and incidentals shall be paid for at the contract unit price per square foot for "Type I Detectable Warnings".

The type 2 detectable warnings shall be measured to the nearest square foot. All costs for furnishing and installing the type 2 detectable warnings including labor, equipment, and materials, including adhesive, necessary sealant or grout, and necessary grinding shall be paid for at the contract unit price per square foot for "Type 2 Detectable Warnings".

*September 6, 2013*

| Published Date: 4th Qtr. 2014 | SDDOT | TYPE 2 CURB RAMP (DIRECTIONAL CURB RAMP) | PLATE NUMBER 651.02 |
|---|---|---|---|
| | | | Sheet 3 of 3 |



12/30/2014 7:59 AM Z:\2013 PROJECTS\X13038 WATERTOWN 19TH STREET\DESIGN\SEC B\STANDARD PLATES - B.DWG

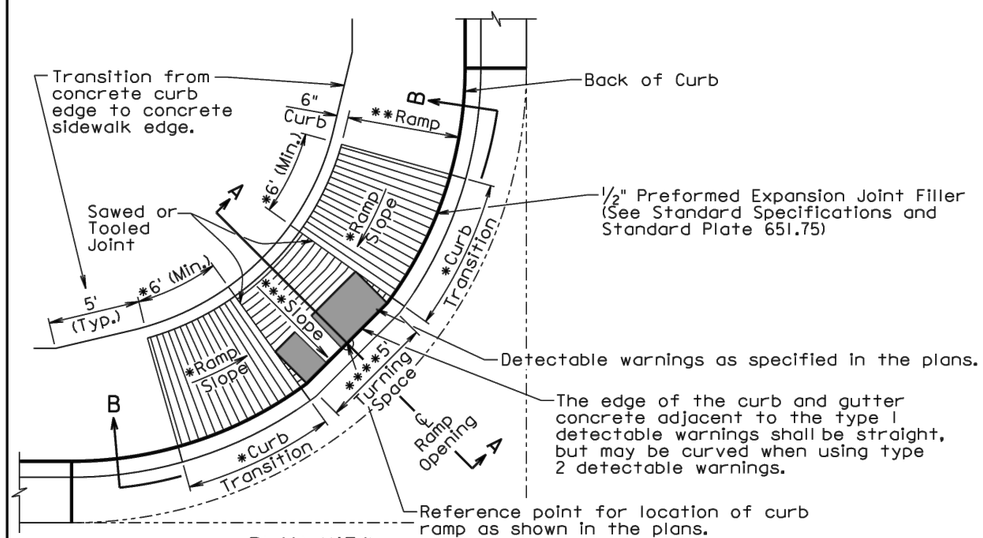


PLAN VIEW
(With Curved Curb and Gutter)

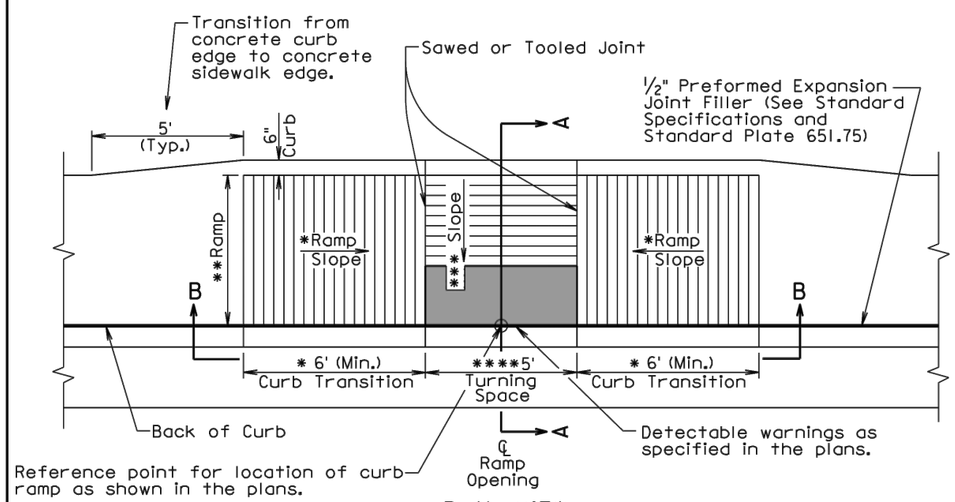


PLAN VIEW
(With Straight Curb and Gutter)

September 6, 2013

| Published Date: 4th Qtr. 2014 | SDDOT | TYPE 3 CURB RAMP (PARALLEL CURB RAMP) | PLATE NUMBER 651.03 |
|---|---|---|---|
| | | | Sheet 1 of 3 |

* The curb transition slope shall match the ramp slope. The ramp slope, at any location of the ramp, shall be 12:1 (8.3%) maximum. The ramp length shall not exceed 15' unless stated otherwise in the plans. Ramp slopes are designed at 12:1 (8.3%) unless stated otherwise in the plans. The minimum length of the curb transition shall be 6'.

** The ramp cross slope shall not be steeper than a 50:1 (2%) and the ramp width is 5' unless stated otherwise in the plans.

*** The slope in the turning space shall not be steeper than 50:1 (2%) in any direction of pedestrian travel.

**** The turning space is 5' x 5' unless stated otherwise in the plans.

☒ The curb height shall be 6" unless stated otherwise in the plans.

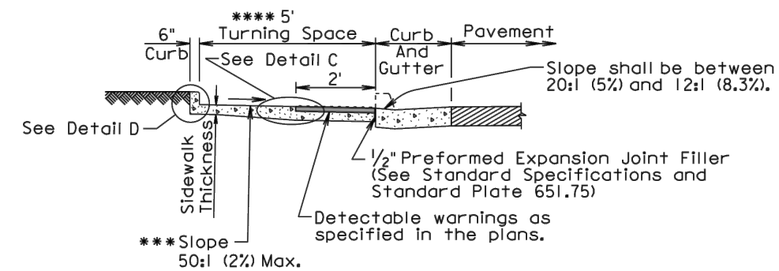


SECTION A-A

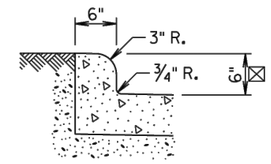


DETAIL D

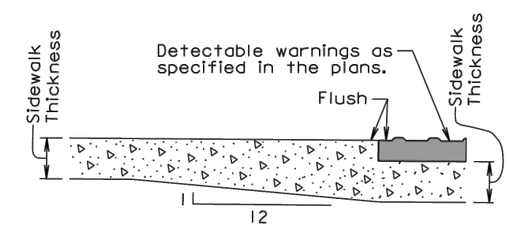


DETAIL C

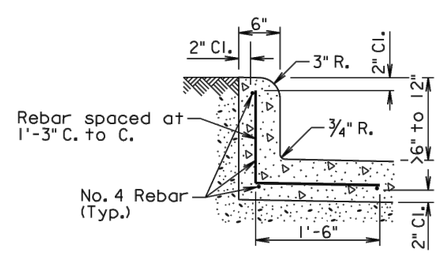


DETAIL D
(Use this detail when the curb height is greater than 6" and less than 12")

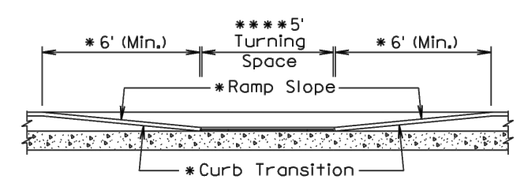


SECTIONAL VIEW B-B

September 6, 2013

| Published Date: 4th Qtr. 2014 | SDDOT | TYPE 3 CURB RAMP (PARALLEL CURB RAMP) | PLATE NUMBER 651.03 |
|---|---|---|---|
| | | | Sheet 2 of 3 |

This space intentionally left blank.

**GENERAL NOTES:**

For illustrative purpose only, type 1 detectable warnings are shown in the drawings.

For illustrative purpose only, a PCC fillet section is shown in one of the drawings. The curb ramp depicted on this standard plate may be used with a PCC fillet section, with curved curb and gutter, or with straight curb and gutter.

The curb ramp shall be placed at the location stated in the plans.

Sidewalk adjacent to the curb ramp shall be as shown in the plans.

Care shall be taken to ensure a uniform grade on the ramp, free of sags and short grade changes.

Surface texture of the ramp shall be obtained by coarse brooming transverse to the slope of the ramp.

The normal gutter line profile shall be maintained through the area of the ramp.

Joints shall be sawed or tooled into the concrete adjacent to the detectable warnings to alleviate possible corner cracking (see plan view for joint location).

Care shall be taken to ensure that the surface of the detectable warnings are clean and maintains a uniform color.

The detectectable warnings shall be cut as necessary to fit the plan specified limits of the detectable warnings. Cost for cutting the detectable warnings shall be incidental to the corresponding detectable warning bid item.

When curb height is greater than 6" and less than 12", reinforcing steel is required in accordance with the detail on sheet 2 of 3. The reinforcing steel shall conform to ASTM A615, Grade 60. Cost for furnishing and installing the reinforcing steel shall be incidental to the contract unit price per square foot for the corresponding concrete sidewalk bid item.

There will be no separate payment for curb ramps. The curb ramp shall be measured and paid for at the contract unit price per square foot for the corresponding concrete sidewalk bid item. The square foot area of the detectable warnings and the curb along the short radius shall be included in the measured and paid for quantity of sidewalk.

The curb transitions and ramp opening shall be measured and paid for at the contract unit price per foot for the corresponding curb and gutter bid item when curb and gutter is used. The curb transitions and ramp opening shall be measured and paid for at the contract unit price per square yard for the corresponding PCC fillet section bid item when a PCC fillet section is used.

The type 1 detectable warnings shall be measured to the nearest square foot. All costs for furnishing and installing the type 1 detectable warnings including labor, equipment, materials, and incidentals shall be paid for at the contract unit price per square foot for "Type 1 Detectable Warnings".

The type 2 detectable warnings shall be measured to the nearest square foot. All costs for furnishing and installing the type 2 detectable warnings including labor, equipment, and materials, including adhesive, necessary sealant or grout, and necessary grinding shall be paid for at the contract unit price per square foot for "Type 2 Detectable Warnings".

*September 6, 2013*

| | | | |
|---|---|---|---|
| ***Published Date: 4th Qtr. 2014*** | SDDOT | ***TYPE 3 CURB RAMP (PARALLEL CURB RAMP)*** | ***PLATE NUMBER*** 651.03 |
| | | | *Sheet 3 of 3* |

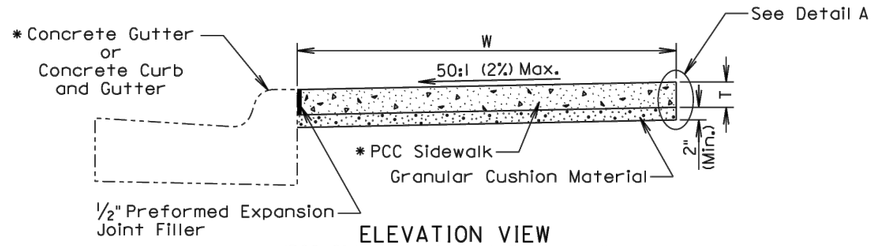


ELEVATION VIEW
(PCC Sidewalk without Boulevard)

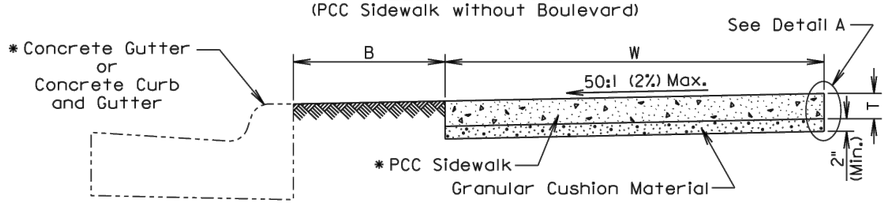


ELEVATION VIEW
(PCC Sidewalk with Boulevard)

B Width of boulevard as specified in the plans.
T Thickness of PCC sidewalk as specified in the plans.
W Width of PCC sidewalk as specified in the plans.
* Type as specified in the plans.

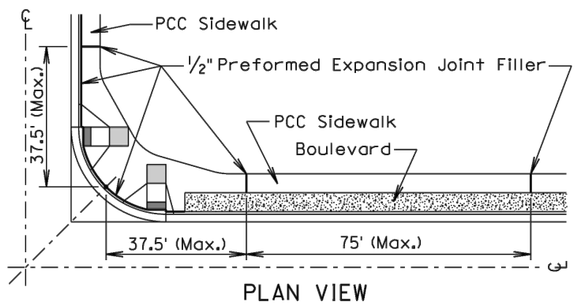


PLAN VIEW

**GENERAL NOTES:**

The PCC sidewalk shall be constructed in accordance with Section 651 of the Standard Specifications.

The maximum length between expansion joints in PCC sidewalk is 75 feet.

PCC sidewalk placed adjacent to intersection of roadways shall have an expansion joint placed transversely a maximum of 37.5 feet from the intersection. See PLAN VIEW.

An expansion joint in PCC sidewalk shall consist of a ½ inch thick preformed expansion joint filler material placed full depth and width of the PCC sidewalk.

** Large areas of PCC pavement adjacent to PCC sidewalk may require a different joint treatment than shown in the detail. If a different joint detail is necessary, plans will contain the joint detail and the Contractor shall construct the joint treatment in accordance with the plans.

August 31, 2013

| Published Date: 4th Qtr. 2014 | SDDOT | PCC SIDEWALK | PLATE NUMBER 651.75 |
|---|---|---|---|
| | | | Sheet 1 of 2 |

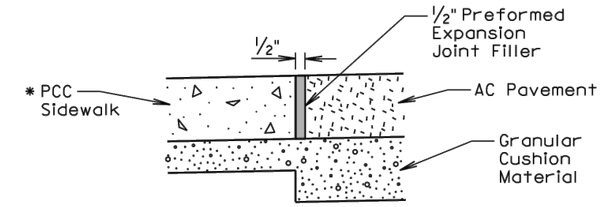


ELEVATION VIEW
(PCC sidewalk adjacent to asphalt concrete pavement)

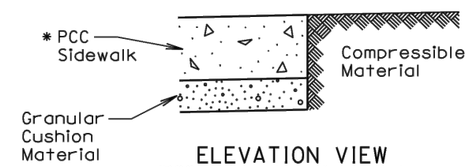


ELEVATION VIEW
(PCC sidewalk adjacent to earthen material, landscape rock, or other compressible materials)

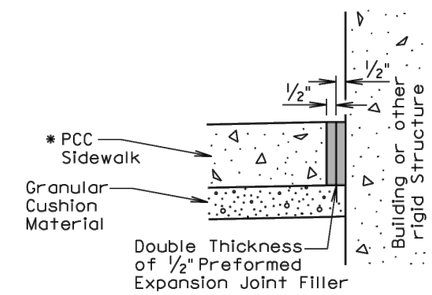


ELEVATION VIEW
(PCC sidewalk adjacent to building or other rigid structure)

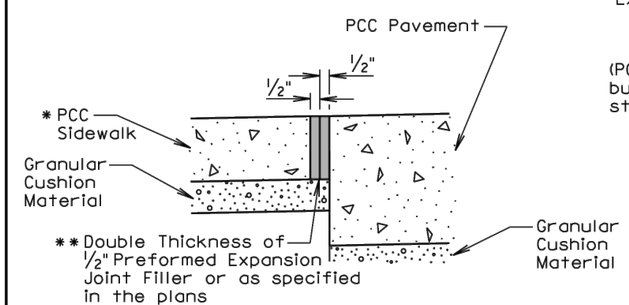


ELEVATION VIEW
(PCC sidewalk adjacent to PCC pavement)

Detail A
(Use Appropriate Detail(s))

August 31, 2013

| Published Date: 4th Qtr. 2014 | SDDOT | PCC SIDEWALK | PLATE NUMBER 651.75 |
|---|---|---|---|
| | | | Sheet 2 of 2 |

FOR BIDDING PURPOSES ONLY

| STATE OF SOUTH DAKOTA | PROJECT | SHEET | TOTAL SHEETS |
|---|---|---|---|
| | P 4243(03) | B89 | B99 |

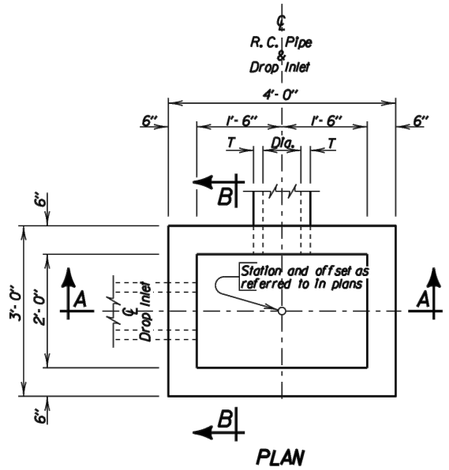


PLAN

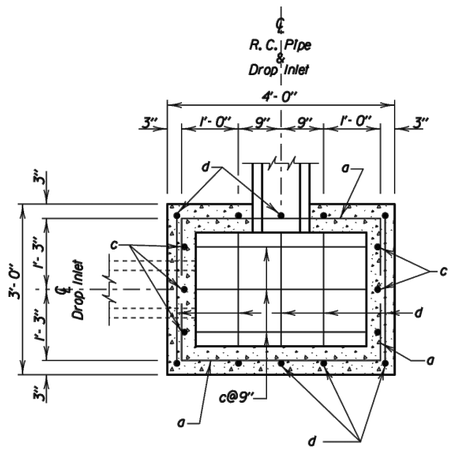


BOTTOM SECTION

| PIPE DISPLACEMENT REDUCTIONS | | |
|---|---|---|
| R.C. Pipe Diameter Inches | T Inches | Class M6 Concrete Cu'd |
| 12 | 2 | 0.03 |
| 15 | 2 1/4 | 0.04 |
| 18 | 2 1/2 | 0.05 |
| 24 | 3 | 0.09 |
| 27 | 3 1/4 | 0.11 |

| ESTIMATED QUANTITIES | | | |
|---|---|---|---|
| ITEM | UNIT | CONSTANT QUANTITY | VARIABLE QUANTITY |
| ✳ Class M6 Concrete | Cu'd | 0.26 | 0.22H |
| Reinforcing Steel | Lb | 37 | 20.04H |
| Frame and Grate Assembly | Each | 1 | ——— |

## DROP INLETS FOR 12" TO 27" DIAMETER PIPE

### GENERAL NOTES:

✳ Reduce total quantities of concrete by the amount of concrete displaced by the pipe. The total quantity of concrete shall be computed to the nearest hundredth of a cubic yard. The total quantity of reinforcing steel shall be computed to the nearest pound.

Drop inlets shown may be modified by the addition or omission of connecting pipes as shown on the layouts.

Reinforcing steel shall conform to ASTM A615 Grade 60. The b bars shall be lapped 12 inches. Cut and bend reinforcing steel as required to place pipe(s) through the drop inlet wall.

Pipe shall not enter through a corner of the drop inlet.

Use 2" clear cover on all reinforcing steel unless otherwise noted.

Precasting of reinforced drop inlets will be permissible. Prior to precasting, the Contractor shall submit details to the Engineer for approval.

Maximum pipe diameter shall not exceed 18 inches on the 3 foot wide side and shall not exceed 27 inches on the 4 foot wide side of the drop inlet.

The dimension of H is in feet.

December 23, 2009

Published Date: 4th Qtr. 2014 | SDDOT | 2'X 3' TYPE B REINFORCED CONCRETE DROP INLET | PLATE NUMBER 670.01 | Sheet 1 of 2

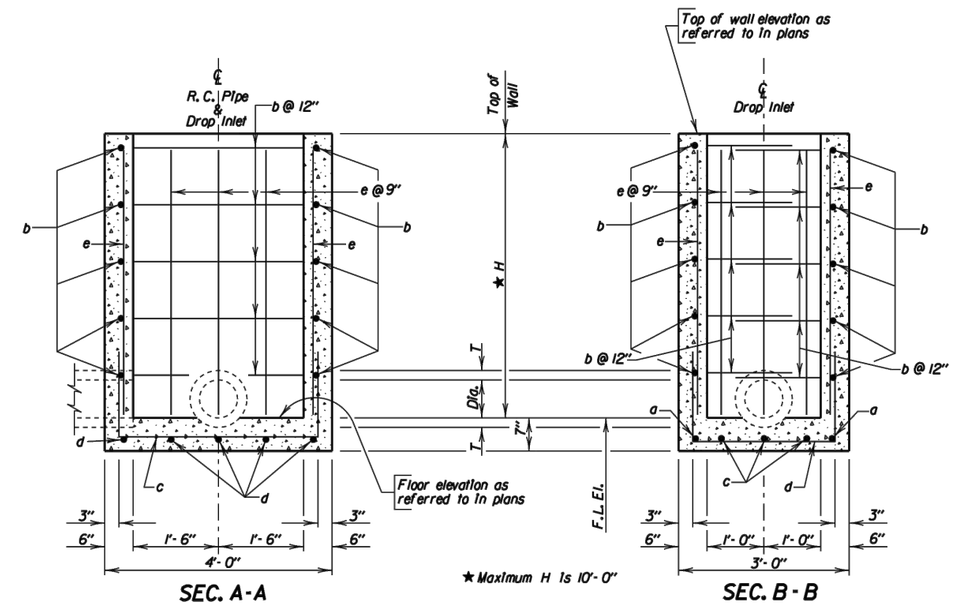


SEC. A-A

★ Maximum H is 10'- 0"

SEC. B - B

## DROP INLETS FOR 12" TO 27" DIAMETER PIPE

| REINFORCING SCHEDULE | | | | | |
|---|---|---|---|---|---|
| MK. | No. | Size | Length | Type | Bending Details |
| a | 2 | 4 | 5'- 6" | 17 | |
| b | 2H | 4 | 7'- 0" | 17 | |
| c | 3 | 4 | 6'- 6" | 17 | |
| d | 5 | 4 | 5'- 6" | 17 | |
| e | 16 | 4 | H - 2" | Str. | |

NOTE:
All dimensions are out to out of bars.

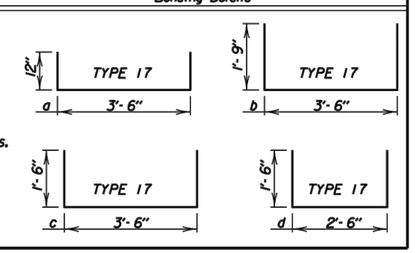


December 23, 2009

Published Date: 4th Qtr. 2014 | SDDOT | 2'X 3' TYPE B REINFORCED CONCRETE DROP INLET | PLATE NUMBER 670.01 | Sheet 2 of 2

PLANS BY: CLARK ENGINEERING, WATERTOWN, SD

12/30/2014 8:00 AM Z:\2013 PROJECTS\X13038 WATERTOWN 19TH STREET\DESIGN\SEC B\STANDARD PLATES - B.DWG

FOR BIDDING PURPOSES ONLY

| STATE OF SOUTH DAKOTA | PROJECT | SHEET | TOTAL SHEETS |
|---|---|---|---|
| | P 4243(03) | B90 | B99 |

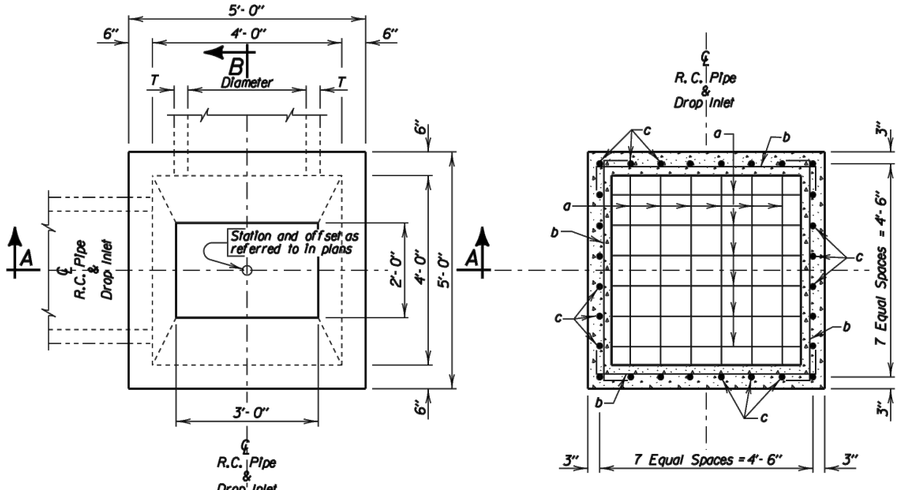


| ESTIMATED QUANTITIES | | | |
|---|---|---|---|
| ITEM | UNIT | CONSTANT QUANTITY | VARIABLE QUANTITY |
| ✳ Class M6 Concrete | Cu'd | 0.97 | 0.33H |
| Reinforcing Steel | Lb | 207 | 43.90H |
| Frame and Grate Assembly | Each | 1 | —— |

| PIPE DISPLACEMENT REDUCTIONS | | |
|---|---|---|
| R. C. Pipe Diameter Inches | T Inches | Class M6 Concrete Cu'd |
| 12 | 2 | 0.03 |
| 15 | 2 1/4 | 0.04 |
| 18 | 2 1/2 | 0.05 |
| 24 | 3 | 0.09 |
| 30 | 3 1/2 | 0.14 |
| 36 | 4 | 0.20 |

## DROP INLETS FOR 12" TO 36" DIAMETER PIPE

### GENERAL NOTES:

✳ Reduce total quantities of concrete by the amount of concrete displaced by the pipe. The total quantity of concrete shall be computed to the nearest hundredth of a cubic yard. The total quantity of reinforcing steel shall be computed to the nearest pound.

Drop inlets shown may be modified by the addition or omission of connecting pipes as shown on the layouts.

Reinforcing steel shall conform to ASTM A615 Grade 60. Cut and bend reinforcing steel as required to place pipe(s) through the drop inlet wall.

Pipe shall not enter through a corner of the drop inlet.

Use 2" clear cover on all reinforcing steel unless otherwise noted.

Precasting of reinforced drop inlets will be permissible. Prior to precasting, the Contractor shall submit details to the Engineer for approval.

Maximum pipe diameter shall not exceed 36 inches.

The dimension of H is in feet.

December 23, 2009

Published Date: 4th Qtr. 2014 | SDDOT | 4'X 4' TYPE B REINFORCED CONCRETE DROP INLET | PLATE NUMBER 670.04 | Sheet 1 of 2

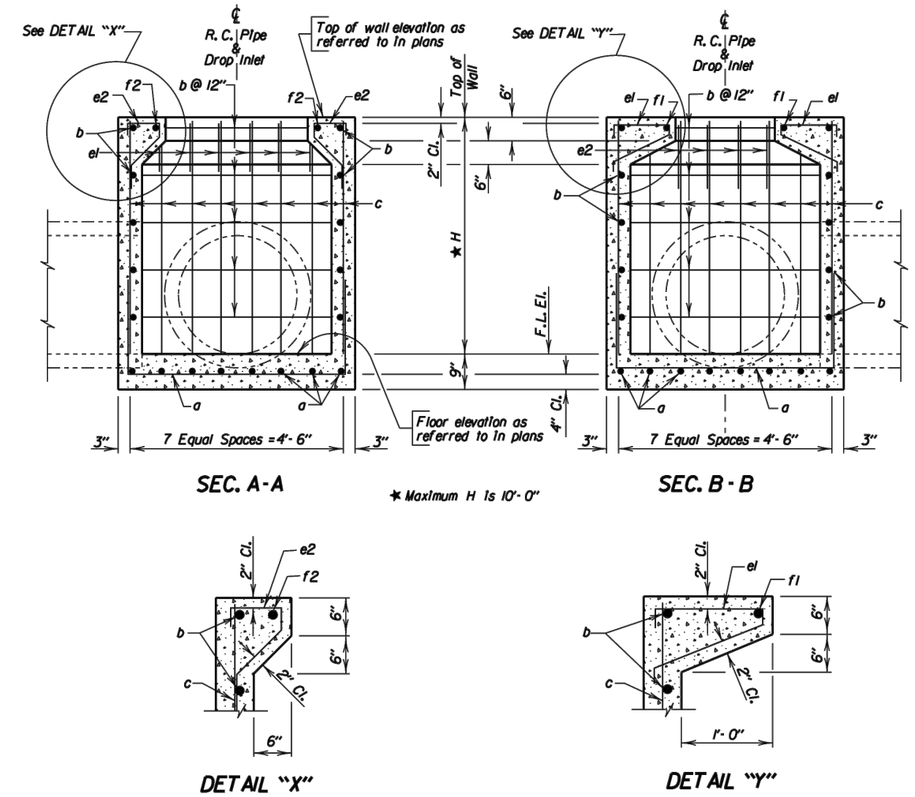


## DROP INLETS FOR 12" TO 36" DIAMETER PIPE

### REINFORCING SCHEDULE

| Mk. | No. | Size | Length | Type |
|---|---|---|---|---|
| a | 16 | 5 | 8'- 0" | 17 |
| b | 4H | 4 | 5'- 6" | 17 |
| c | 28 | 5 | H- 2" | Str. |
| el | 12 | 5 | 3'- 3" | 16A |
| e2 | 8 | 5 | 2'- 6" | 16A |
| f1 | 2 | 5 | 4'- 6" | 17 |
| f2 | 2 | 5 | 3'- 6" | 17 |

Bending Details

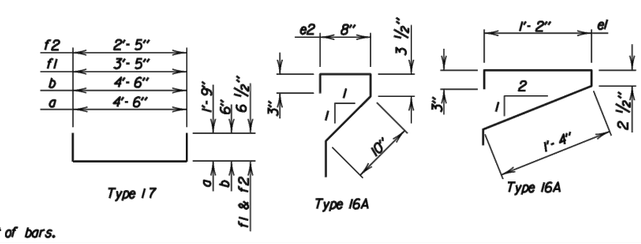


NOTE: All dimensions are out to out of bars.

December 23, 2009

Published Date: 4th Qtr. 2014 | SDDOT | 4'X 4' TYPE B REINFORCED CONCRETE DROP INLET | PLATE NUMBER 670.04 | Sheet 2 of 2

PLANS BY: CLARK ENGINEERING, WATERTOWN, SD

12/30/2014 8:00 AM Z:\2013 PROJECTS\X13038 WATERTOWN 19TH STREET\DESIGN\SEC B\STANDARD PLATES - B.DWG

FOR BIDDING PURPOSES ONLY

| STATE OF SOUTH DAKOTA | PROJECT | SHEET | TOTAL SHEETS |
|---|---|---|---|
| | P 4243(03) | B91 | B99 |

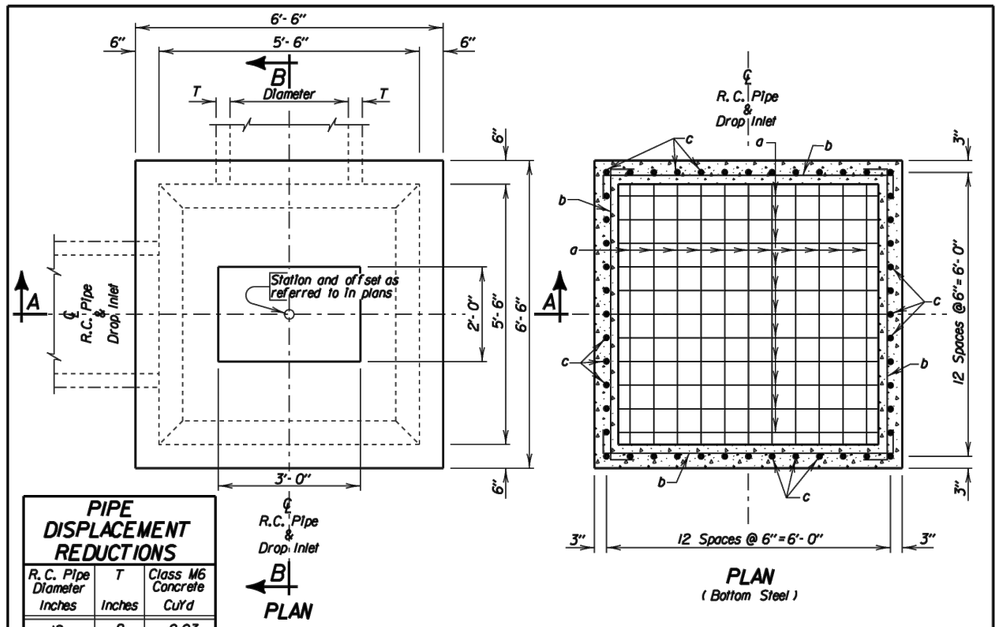


## PIPE DISPLACEMENT REDUCTIONS

| R.C. Pipe Diameter Inches | T Inches | Class M6 Concrete Cu'd |
|---|---|---|
| 12 | 2 | 0.03 |
| 15 | 2 1/4 | 0.04 |
| 18 | 2 1/2 | 0.05 |
| 24 | 3 | 0.09 |
| 30 | 3 1/2 | 0.14 |
| 36 | 4 | 0.20 |
| 42 | 4 1/2 | 0.26 |
| 48 | 5 | 0.34 |
| 54 | 5 1/2 | 0.43 |

## DROP INLETS FOR 12" TO 54" DIAMETER PIPE

## ESTIMATED QUANTITIES

| ITEM | UNIT | CONSTANT QUANTITY | VARIABLE QUANTITY |
|---|---|---|---|
| ✳ Class M6 Concrete | Cu'd | 2.13 | 0.44H |
| Reinforcing Steel | Lb | 828 | 90.80H |
| Frame and Grate Assembly | Each | 1 | —— |

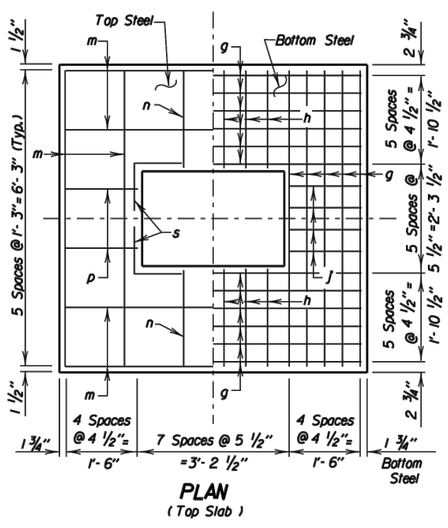


## GENERAL NOTES:

✳ Reduce total quantities of concrete by the amount of concrete displaced by the pipe. The total quantity of concrete shall be computed to the nearest hundredth of a cubic yard. The total quantity of reinforcing steel shall be computed to the nearest pound.

Drop inlets shown may be modified by the addition or omission of connecting pipes as shown on the layouts.

Reinforcing steel shall conform to ASTM A615 Grade 60. Cut and bend reinforcing steel as required to place pipe(s) through the drop inlet wall.

Pipe shall not enter through a corner of the drop inlet.

Use 2" clear cover on all reinforcing steel unless otherwise noted.

Precasting of reinforced drop inlets will be permissible. Prior to precasting, the Contractor shall submit details to the Engineer for approval.

Maximum pipe diameter shall not exceed 54 inches.

Before the top slab is placed, grout shall be applied to all bearing surfaces.

The dimension of H is in feet.

December 23, 2009

Published Date: 4th Qtr. 2014 | SDDOT | 5.5' X 5.5' TYPE B REINFORCED CONCRETE DROP INLET | PLATE NUMBER 670.06 | Sheet 1 of 2

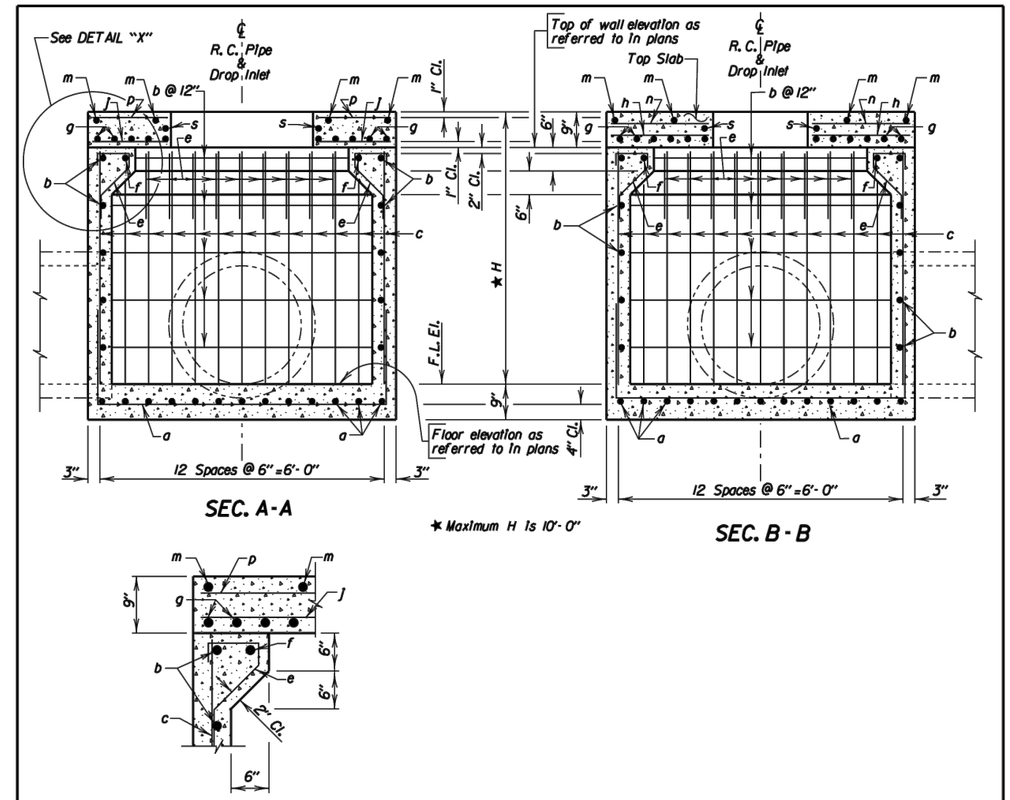


## DROP INLETS FOR 12" TO 54" DIAMETER PIPE

## REINFORCING SCHEDULE

| Mk. | No. | Size | Length | Type |
|---|---|---|---|---|
| a | 26 | 6 | 10'-0" | 17 |
| b | 4(H-1) | 4 | 7'-0" | 17 |
| c | 48 | 6 | H-11" | Str. |
| e | 36 | 5 | 2'-6" | 16A |
| f | 4 | 5 | 6'-0" | 17 |
| g | 22 | 7 | 6'-3" | Str. |
| h | 12 | 7 | 2'-0" | Str. |
| j | 8 | 7 | 1'-6" | Str. |
| m | 8 | 4 | 6'-3" | Str. |
| n | 4 | 4 | 2'-0" | Str. |
| p | 4 | 4 | 1'-6" | Str. |
| s | 4 | 4 | 2'-0" | 17A |

Bending Details

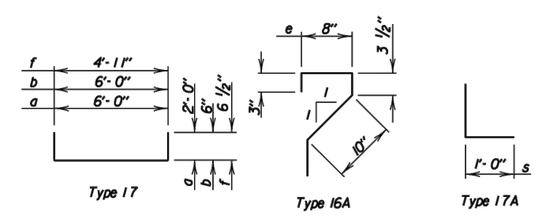


NOTE: All dimensions are out to out of bars.

December 23, 2009

Published Date: 4th Qtr. 2014 | SDDOT | 5.5' X 5.5' TYPE B REINFORCED CONCRETE DROP INLET | PLATE NUMBER 670.06 | Sheet 2 of 2

PLANS BY: CLARK ENGINEERING, WATERTOWN, SD

12/30/2014 8:00 AM Z:\2013 PROJECTS\X13038 WATERTOWN 19TH STREET\DESIGN\SEC B\STANDARD PLATES - B.DWG

FOR BIDDING PURPOSES ONLY

| STATE OF SOUTH DAKOTA | PROJECT | SHEET | TOTAL SHEETS |
|---|---|---|---|
| | P 4243(03) | B92 | B99 |

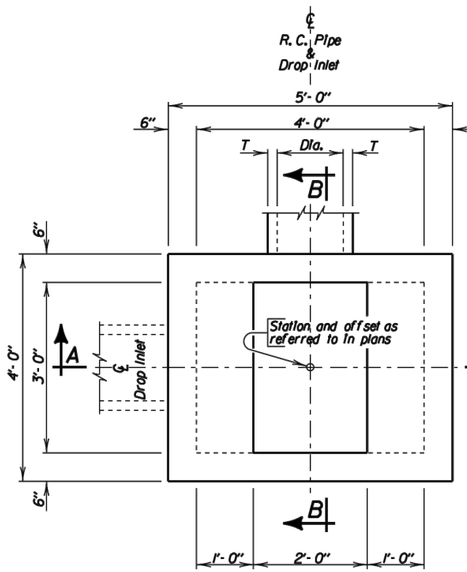


PLAN

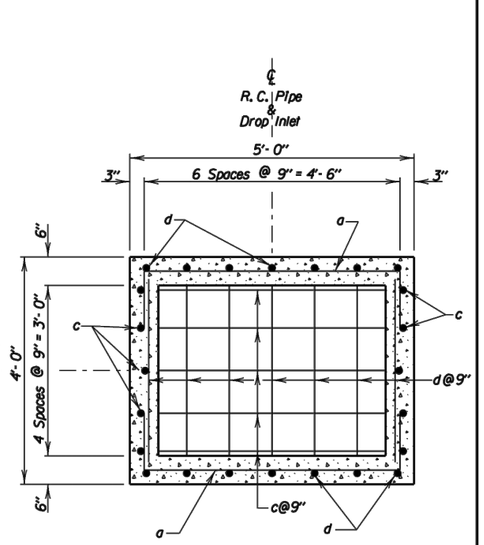


BOTTOM SECTION

## ESTIMATED QUANTITIES

| ITEM | UNIT | CONSTANT QUANTITY | VARIABLE QUANTITY |
|---|---|---|---|
| ✳ Class M6 Concrete | CuYd | 0.72 | 0.30H |
| Reinforcing Steel | Lb | 94 | 28.06H |
| Frame and Grate Assembly | Each | 1 | ——— |

DROP INLETS FOR 12" TO 36" DIAMETER PIPE

## GENERAL NOTES:

✳ Reduce total quantities of concrete by the amount of concrete displaced by the pipe. The total quantity of concrete shall be computed to the nearest hundredth of a cubic yard. The total quantity of reinforcing steel shall be computed to the nearest pound.

Drop inlets shown may be modified by the addition or omission of connecting pipes as shown on the layouts.

Reinforcing steel shall conform to ASTM A615 Grade 60. The b and f bars shall be lapped 12 inches. Cut and bend reinforcing steel as required to place pipe(s) through the drop inlet wall.

Pipe shall not enter through a corner of the drop inlet.

Use 2" clear cover on all reinforcing steel unless otherwise noted.

Precasting of reinforced drop inlets will be permissible. Prior to precasting, the Contractor shall submit details to the Engineer for approval.

Maximum pipe diameter shall not exceed 27 inches on the 4 foot wide side and shall not exceed 36 inches on the 5 foot wide side of the drop inlet.

The dimension of H is in feet.

## PIPE DISPLACEMENT REDUCTIONS

| R.C. Pipe Diameter Inches | T Inches | Class M6 Concrete CuYd |
|---|---|---|
| 12 | 2 | 0.03 |
| 15 | 2 1/4 | 0.04 |
| 18 | 2 1/2 | 0.05 |
| 24 | 3 | 0.09 |
| 30 | 3 1/2 | 0.14 |
| 36 | 4 | 0.20 |

December 23, 2009

Published Date: 4th Qtr. 2014

SDDOT

4'X 3' TYPE B
REINFORCED CONCRETE DROP INLET

PLATE NUMBER 670.07

Sheet 1 of 2

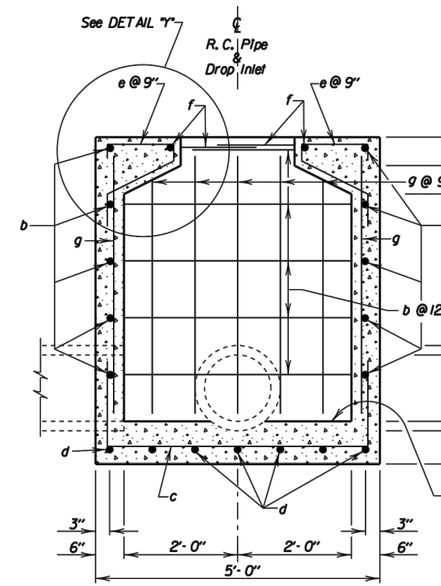


SEC. A-A

★ Maximum H is 10'-0"

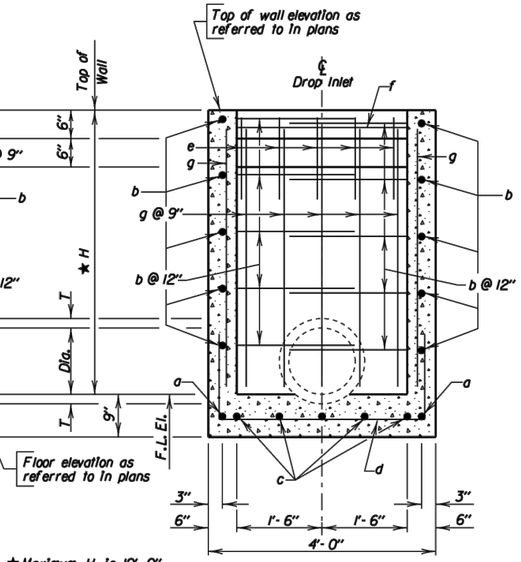


SEC. B-B

DROP INLETS FOR 12" TO 36" DIAMETER PIPE

## REINFORCING SCHEDULE

| MK. | No. | Size | Length | Type |
|---|---|---|---|---|
| a | 2 | 4 | 6'-6" | 17 |
| b | 2H | 4 | 9'-0" | 17 |
| c | 5 | 4 | 7'-6" | 17 |
| d | 7 | 4 | 6'-6" | 17 |
| e | 10 | 4 | 3'-6" | 16A |
| f | 2 | 4 | 7'-0" | 17 |
| g | 24 | 4 | H - 2" | Str. |

Bending Details

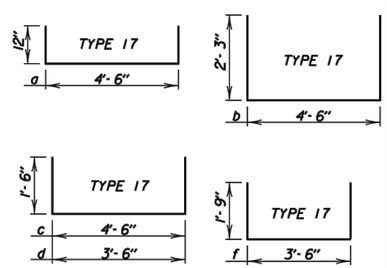


NOTE:
All dimensions are out to out of bars.

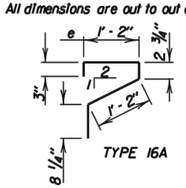


TYPE 16A

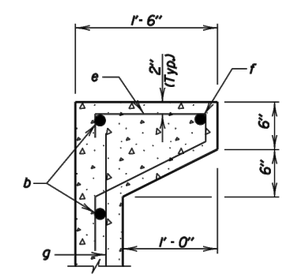


DETAIL "Y"

December 23, 2009

Published Date: 4th Qtr. 2014

SDDOT

4'X 3' TYPE B
REINFORCED CONCRETE DROP INLET

PLATE NUMBER 670.07

Sheet 2 of 2

PLANS BY: CLARK ENGINEERING, WATERTOWN, SD

12/30/2014 8:00 AM Z:\2013 PROJECTS\X13038 WATERTOWN 19TH STREET\DESIGN\SEC B\STANDARD PLATES - B.DWG

FOR BIDDING PURPOSES ONLY

| STATE OF SOUTH DAKOTA | PROJECT | SHEET | TOTAL SHEETS |
|---|---|---|---|
| | P 4243(03) | B93 | B99 |

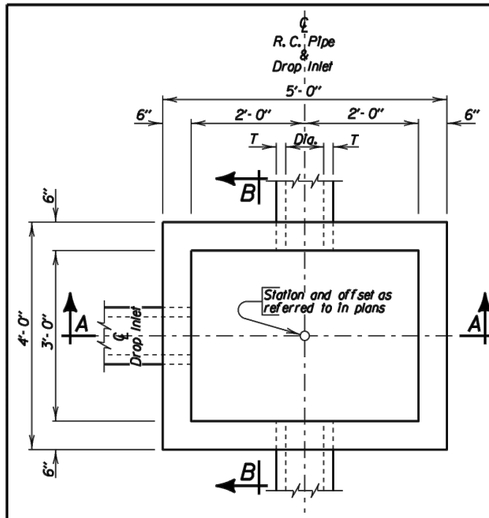


PLAN

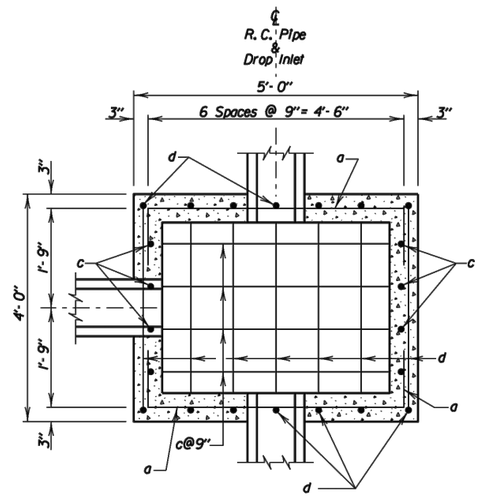


BOTTOM SECTION

| PIPE DISPLACEMENT REDUCTIONS | | |
|---|---|---|
| R.C. Pipe Diameter Inches | T Inches | Class M6 Concrete Cu Yd |
| 12 | 2 | 0.03 |
| 15 | 2 1/4 | 0.04 |
| 18 | 2 1/2 | 0.05 |
| 24 | 3 | 0.09 |
| 30 | 3 1/2 | 0.14 |
| 36 | 4 | 0.20 |

| ESTIMATED QUANTITIES | | | |
|---|---|---|---|
| ITEM | UNIT | CONSTANT QUANTITY | VARIABLE QUANTITY |
| ✳ Class M6 Concrete | Cu Yd | 0.43 | 0.29H |
| Reinforcing Steel | Lb | 57 | 26.72H |
| Frame and Grate | Each | 1 | ——— |

## DROP INLETS FOR 12" TO 36" DIAMETER PIPE

### GENERAL NOTES:

✳ Reduce total quantities of concrete by the amount of concrete displaced by the pipe. The total quantity of concrete shall be computed to the nearest hundredth of a cubic yard. The total quantity of reinforcing steel shall be computed to the nearest pound.

Drop inlets shown may be modified by the addition or omission of connecting pipes as shown on the layouts.

Reinforcing steel shall conform to ASTM A615 Grade 60. The b bars shall be lapped 12 inches. Cut and bend reinforcing steel as required to place pipe(s) through the drop inlet wall.

Pipe shall not enter through a corner of the drop inlet.

Use 2" clear cover on all reinforcing steel unless otherwise noted.

Precasting of reinforced drop inlets will be permissible. Prior to precasting, the Contractor shall submit details to the Engineer for approval.

Maximum pipe diameter shall not exceed 27 inches on the 4 foot wide side and shall not exceed 36 inches on the 5 foot wide side of the drop inlet.

The dimension of H is in feet.

December 23, 2009

| Published Date: 4th Qtr. 2014 | SDDOT | 3' X 4' TYPE C REINFORCED CONCRETE DROP INLET | PLATE NUMBER 670.10 |
|---|---|---|---|
| | | | Sheet 1 of 2 |

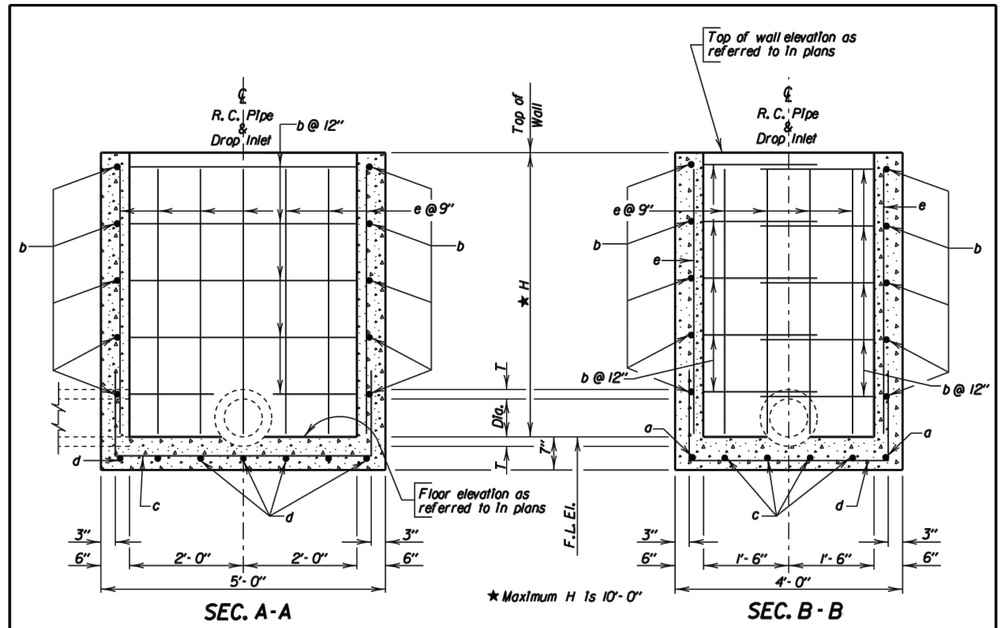


SEC. A-A

SEC. B-B

## DROP INLETS FOR 12" TO 36" DIAMETER PIPE

### REINFORCING SCHEDULE

| Mk. | No. | Size | Length | Type |
|---|---|---|---|---|
| a | 2 | 4 | 6'-6" | 17 |
| b | 2H | 4 | 9'-0" | 17 |
| c | 4 | 4 | 7'-6" | 17 |
| d | 7 | 4 | 6'-6" | 17 |
| e | 22 | 4 | H - 2" | Str. |

Bending Details

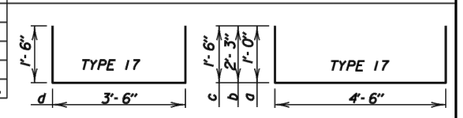


NOTE: All dimensions are out to out of bars.

December 23, 2009

| Published Date: 4th Qtr. 2014 | SDDOT | 3' X 4' TYPE C REINFORCED CONCRETE DROP INLET | PLATE NUMBER 670.10 |
|---|---|---|---|
| | | | Sheet 2 of 2 |

PLANS BY: CLARK ENGINEERING, WATERTOWN, SD

12/30/2014 8:00 AM Z:\2013 PROJECTS\X13038 WATERTOWN 19TH STREET\DESIGN\SEC B\STANDARD PLATES - B.DWG

FOR BIDDING PURPOSES ONLY

| STATE OF SOUTH DAKOTA | PROJECT | SHEET | TOTAL SHEETS |
|---|---|---|---|
| | P 4243(03) | B94 | B99 |

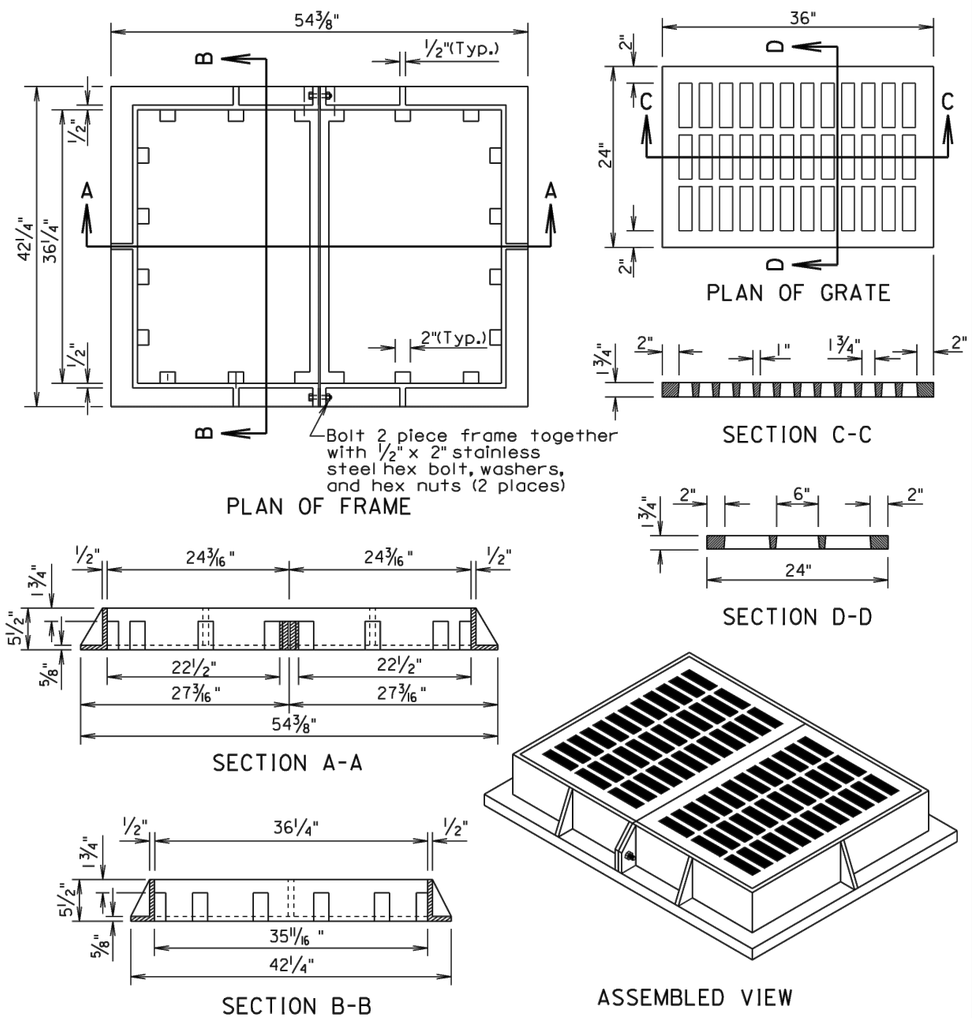


GENERAL NOTE:

The total weight of the frame and grate shall be 850 pounds minimum.

March 31, 2000

| Published Date: 4th Qtr. 2014 | SDDOT | TYPE C FRAME AND GRATE | PLATE NUMBER 670.82 |
|---|---|---|---|
| | | | Sheet 1 of 1 |

## SPECIFICATIONS

1. Design Specifications: AASHTO Specifications for Highway Bridges, 1996 Edition (Service Load).
2. Construction Specifications: South Dakota Standard Specifications for Roads and Bridges, Current Edition and required Provisions, Supplemental Specifications and/or Special Provisions as included in the Proposal.

## DESIGN MIX OF CONCRETE

1. Mix shall be designed to produce a concrete having a minimum compressive strength of 4000 p.s.i. at 28 days.
2. Type II Cement is required.

## GENERAL NOTES

1. Design Live Load: HS 20-44 and Alternate Loading. No construction loading in excess of legal Load was considered.
2. The design of the junction box is based on a maximum fill over the junction box of 5 feet.
3. Unit Stresses: Concrete fc = 1600 p.s.i.
   Reinforcing Steel fs = 24000 p.s.i.
4. All reinforcing steel shall conform to ASTM A615 Grade 60.
5. All exposed edges shall be chamfered 3/4".
6. Use 1" clear cover on all reinforcing steel except as shown.
7. The cost of furnishing and installing the manhole steps shall be incidental to the contract unit price per Lb. for "Reinforcing steel".
8. Reinforcing steel shall be cut and bent in field as necessary to fit pipe and manhole openings. ( Pipe openings are not shown in these details.) Number, size and location of pipes entering junction box are shown elsewhere on plan sheets.
9. All pipes entering the junction box must fit between the inside faces of the walls.

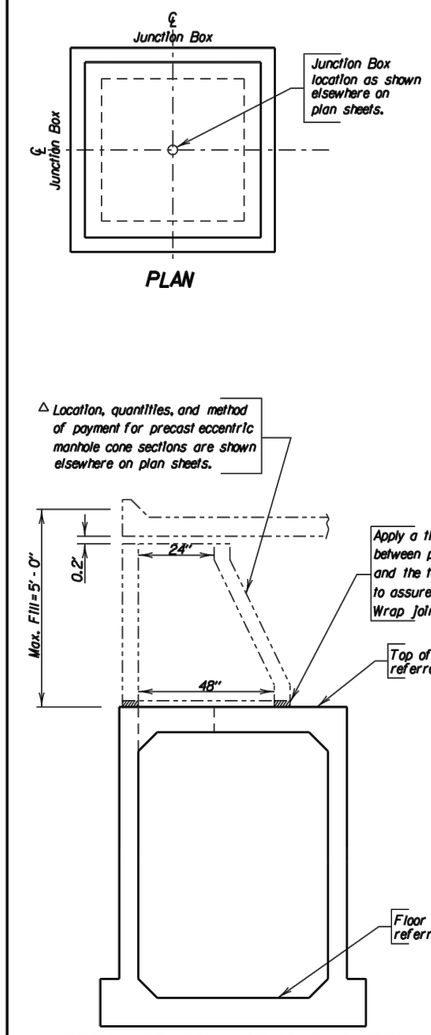


△ DETAIL OF CONNECTION BETWEEN PRECAST ECCENTRIC MANHOLE CONE SECTION AND JUNCTION BOX

| ITEM | Class M6 Concrete | Reinforcing Steel |
|---|---|---|
| UNIT | Cu. Yd. | Lb. |
| H = 4' - 0" | 4.37 | 821 |
| H = 4' - 6" | 4.61 | 846 |
| H = 5' - 0" | 4.85 | 908 |
| H = 5' - 6" | 5.10 | 933 |
| H = 6' - 0" | 5.34 | 958 |
| H = 6' - 6" | 5.58 | 1020 |
| H = 7' - 0" | 5.82 | 1045 |
| H = 7' - 6" | 6.06 | 1071 |
| H = 8' - 0" | 6.30 | 1132 |

NOTE:
For informational purposes only, the estimated quantities for Junction Box height H are shown above. These quantities do not include quantity reduction for pipe openings, but do include the reduction for the 24" diameter manhole opening.

March 31, 2000

| Published Date: 4th Qtr. 2014 | SDDOT | 5'X 5' JUNCTION BOX | PLATE NUMBER 671.01 |
|---|---|---|---|
| | | | Sheet 1 of 3 |

PLANS BY: CLARK ENGINEERING, WATERTOWN, SD

12/30/2014 8:00 AM Z:\2013 PROJECTS\X13038 WATERTOWN 19TH STREET\DESIGN\SEC B\STANDARD PLATES - B.DWG

**GENERAL NOTE:**

Top of grate elevation shall be 0.04' below theoretical elevation of gutter.

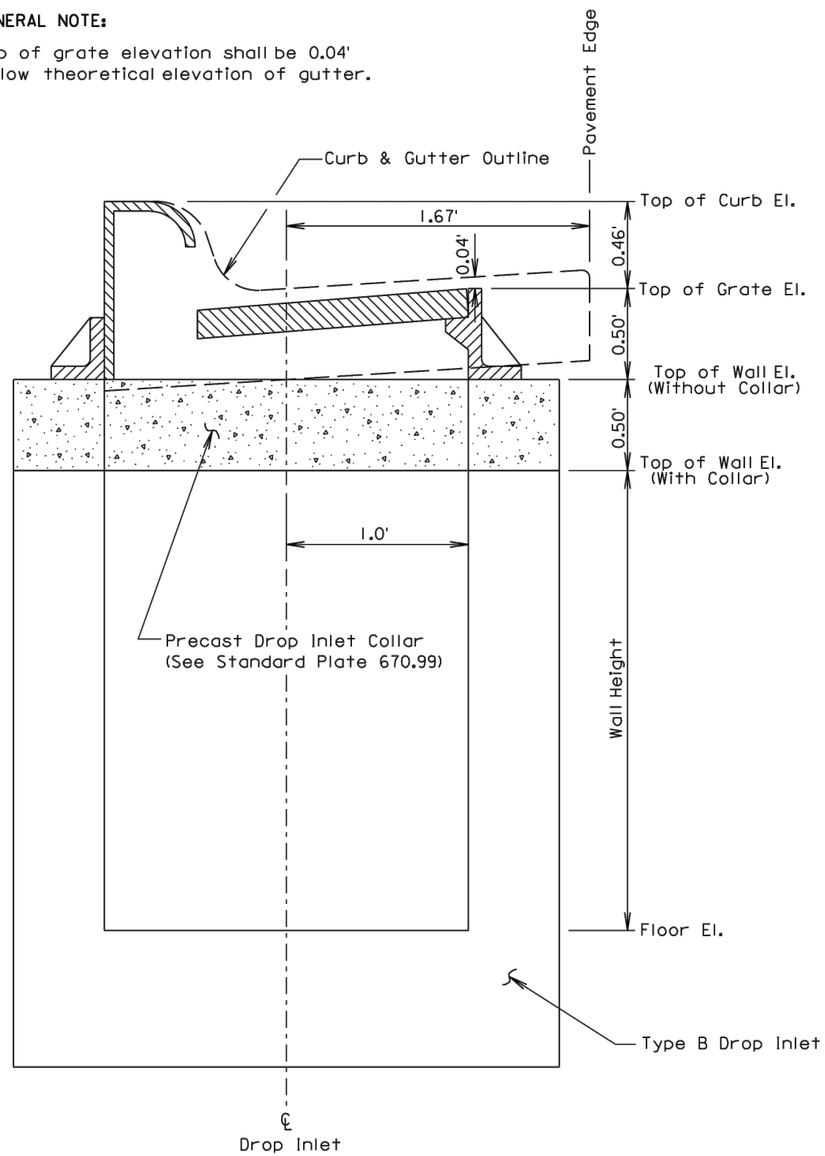


June 26, 2011

| Published Date: 4th Qtr. 2014 | SDDOT | INSTALLATION OF TYPE B DROP INLET | PLATE NUMBER 670.75 |
|---|---|---|---|
| | | | Sheet 1 of 1 |

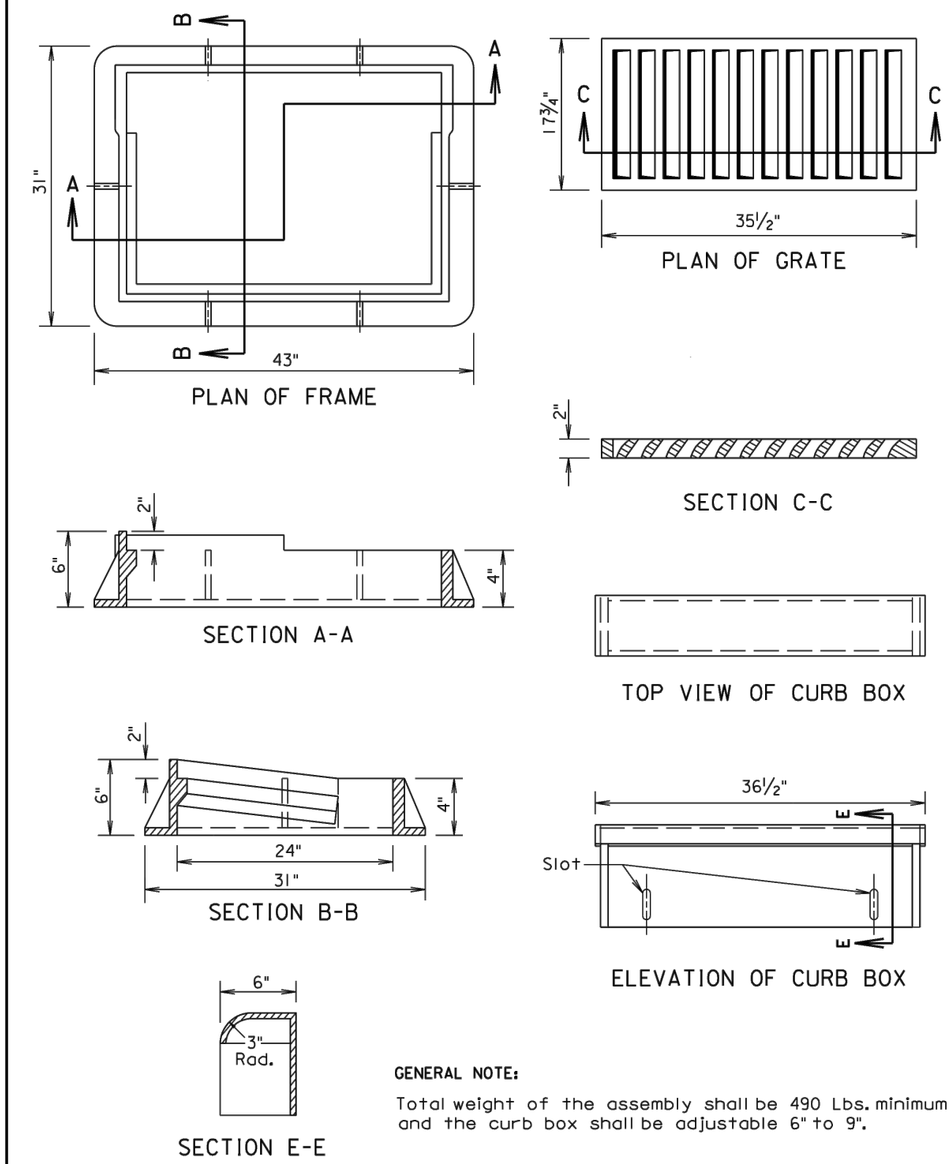


**GENERAL NOTE:**

Total weight of the assembly shall be 490 Lbs. minimum and the curb box shall be adjustable 6" to 9".

March 31, 2000

| Published Date: 4th Qtr. 2014 | SDDOT | TYPE B FRAME AND GRATE ASSEMBLY | PLATE NUMBER 670.80 |
|---|---|---|---|
| | | | Sheet 1 of 1 |

FOR BIDDING PURPOSES ONLY

| STATE OF SOUTH DAKOTA | PROJECT | SHEET | TOTAL SHEETS |
|---|---|---|---|
| | P 4243(03) | B96 | B99 |

## REINFORCING SCHEDULE

| | Mk. | No. | Size | Length | Type |
|---|---|---|---|---|---|
| H = 4'-0" | ⌀a1 | 1 | 6 | 9'-0" | T3 |
| | ⌀a2 | 4 | - | —— | - |
| | h3 | 28 | 4 | 5'-9" | 17A |
| | k3 | 48 | 4 | 8'-6" | 17 |
| | m1 | 18 | 5 | 6'-9" | Str. |
| | n1 | 18 | 5 | 5'-9" | Str. |
| | p1 | 52 | 4 | 5'-0" | Str. |
| | q1 | 8 | 4 | 3'-6" | 17A |
| H = 4'-6" | ⌀a1 | 1 | 6 | 9'-0" | T3 |
| | ⌀a2 | 4 | - | —— | - |
| | h4 | 28 | 4 | 6'-3" | 17A |
| | k4 | 48 | 4 | 9'-0" | 17 |
| | m1 | 18 | 5 | 6'-9" | Str. |
| | n1 | 18 | 5 | 5'-9" | Str. |
| | p1 | 52 | 4 | 5'-0" | Str. |
| | q1 | 8 | 4 | 3'-6" | 17A |
| H = 5'-0" | ⌀a1 | 1 | 6 | 9'-0" | T3 |
| | ⌀a2 | 5 | - | —— | - |
| | h5 | 28 | 4 | 6'-9" | 17A |
| | k5 | 48 | 4 | 9'-6" | 17 |
| | m1 | 18 | 5 | 6'-9" | Str. |
| | n1 | 18 | 5 | 5'-9" | Str. |
| | p1 | 60 | 4 | 5'-0" | Str. |
| | q1 | 12 | 4 | 3'-6" | 17A |
| H = 5'-6" | ⌀a1 | 1 | 6 | 9'-0" | T3 |
| | ⌀a2 | 5 | - | —— | - |
| | h6 | 28 | 4 | 7'-3" | 17A |
| | k6 | 48 | 4 | 10'-0" | 17 |
| | m1 | 18 | 5 | 6'-9" | Str. |
| | n1 | 18 | 5 | 5'-9" | Str. |
| | p1 | 60 | 4 | 5'-0" | Str. |
| | q1 | 12 | 4 | 3'-6" | 17A |
| H = 6'-0" | ⌀a1 | 1 | 6 | 9'-0" | T3 |
| | ⌀a2 | 6 | - | —— | - |
| | h7 | 28 | 4 | 7'-9" | 17A |
| | k7 | 48 | 4 | 10'-6" | 17 |
| | m1 | 18 | 5 | 6'-9" | Str. |
| | n1 | 18 | 5 | 5'-9" | Str. |
| | p1 | 60 | 4 | 5'-0" | Str. |
| | q1 | 12 | 4 | 3'-6" | 17A |
| H = 6'-6" | ⌀a1 | 1 | 6 | 9'-0" | T3 |
| | ⌀a2 | 6 | - | —— | - |
| | h8 | 28 | 4 | 8'-3" | 17A |
| | k8 | 48 | 4 | 11'-0" | 17 |
| | m1 | 18 | 5 | 6'-9" | Str. |
| | n1 | 18 | 5 | 5'-9" | Str. |
| | p1 | 68 | 4 | 5'-0" | Str. |
| | q1 | 16 | 4 | 3'-6" | 17A |
| H = 7'-0" | ⌀a1 | 1 | 6 | 9'-0" | T3 |
| | ⌀a2 | 7 | - | —— | - |
| | h9 | 28 | 4 | 8'-9" | 17A |
| | k9 | 48 | 4 | 11'-6" | 17 |
| | m1 | 18 | 5 | 6'-9" | Str. |
| | n1 | 18 | 5 | 5'-9" | Str. |
| | p1 | 68 | 4 | 5'-0" | Str. |
| | q1 | 16 | 4 | 3'-6" | 17A |

Bending Details

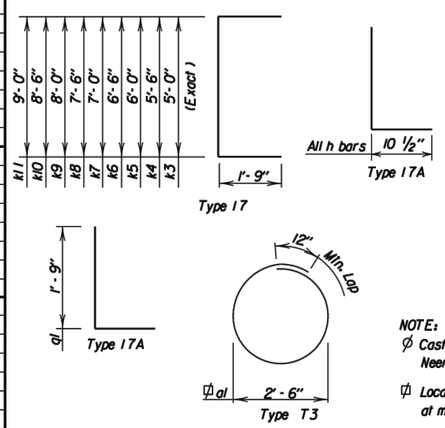


| | Mk. | No. | Size | Length | Type |
|---|---|---|---|---|---|
| H = 7'-6" | ⌀a1 | 1 | 6 | 9'-0" | T3 |
| | ⌀a2 | 7 | - | —— | - |
| | h10 | 28 | 4 | 9'-3" | 17A |
| | k10 | 48 | 4 | 12'-0" | 17 |
| | m1 | 18 | 5 | 6'-9" | Str. |
| | n1 | 18 | 5 | 5'-9" | Str. |
| | p1 | 68 | 4 | 5'-0" | Str. |
| | q1 | 16 | 4 | 3'-6" | 17A |
| H = 8'-0" | ⌀a1 | 1 | 6 | 9'-0" | T3 |
| | ⌀a2 | 8 | - | —— | - |
| | h11 | 28 | 4 | 9'-9" | 17A |
| | k11 | 48 | 4 | 12'-6" | 17 |
| | m1 | 18 | 5 | 6'-9" | Str. |
| | n1 | 18 | 5 | 5'-9" | Str. |
| | p1 | 76 | 4 | 5'-0" | Str. |
| | q1 | 20 | 4 | 3'-6" | 17A |

NOTE:

⌀ Cast Iron Manhole Steps ( R - 1980 - C ) from Neenah Foundry or equivalant.

⌀ Locate in center of top slab with 3" clearance at manhole opening.

All dimensions are out to out of bars.

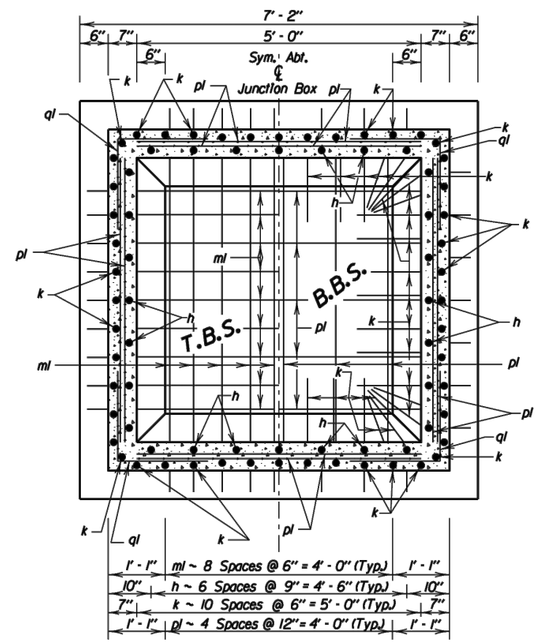


SEC. A-A

March 31, 2000

Published Date: 4th Qtr. 2014

SDDOT

5'X 5' JUNCTION BOX

PLATE NUMBER 671.01

Sheet 2 of 3

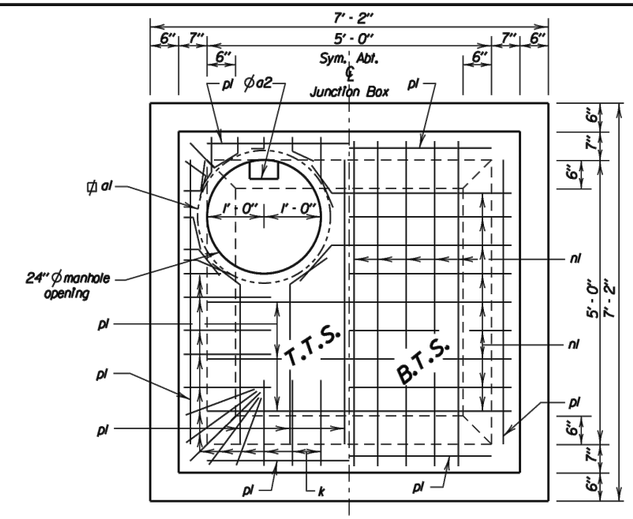


PLAN

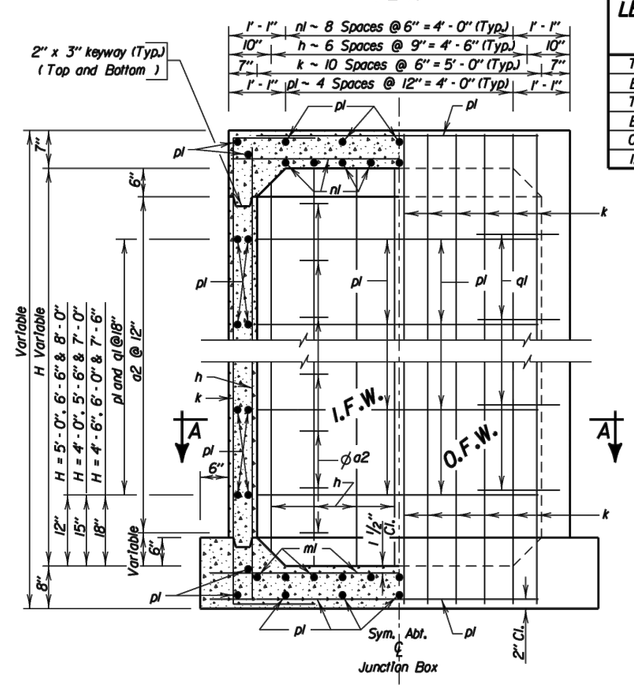


ELEVATION

| LEGEND FOR PLACING RE-STEEL |
|---|
| T. T. S. - Top of Top Slab |
| B. T. S. - Bottom of Top Slab |
| T. B. S. - Top of Bottom Slab |
| B. B. S. - Bottom of Bottom Slab |
| O. F. W. - Outside Face of Wall |
| I. F. W. - Inside Face of Wall |

March 31, 2000

Published Date: 4th Qtr. 2014

SDDOT

5'X 5' JUNCTION BOX

PLATE NUMBER 671.01

Sheet 3 of 3

PLANS BY: CLARK ENGINEERING, WATERTOWN, SD

12/30/2014 8:01 AM Z:\2013 PROJECTS\X13038 WATERTOWN 19TH STREET\DESIGN\SEC B\STANDARD PLATES - B.DWG

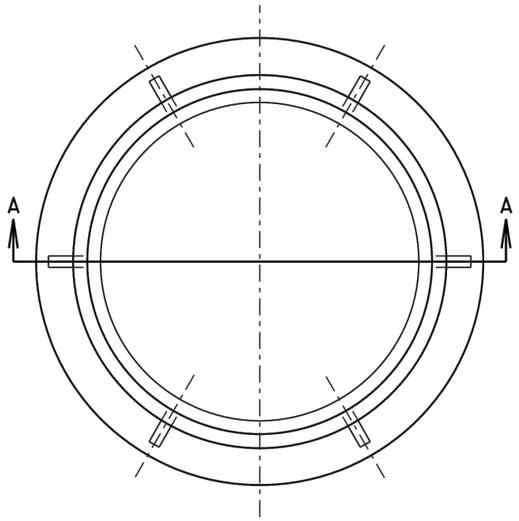


PLAN OF FRAME

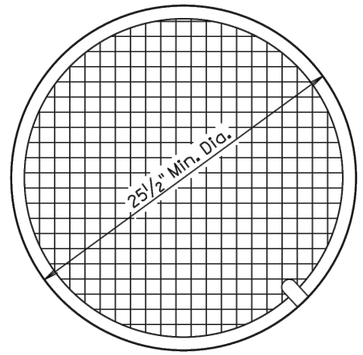


PLAN OF LID

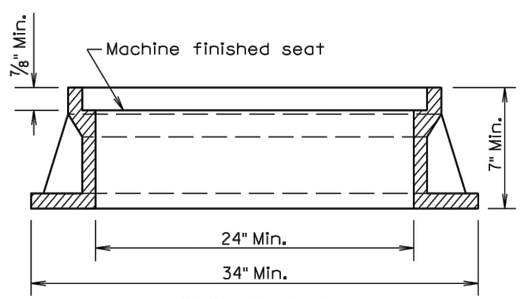


SECTION A-A

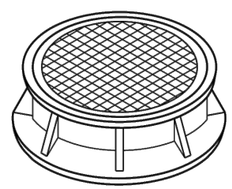

ASSEMBLED VIEW

| TYPE | HEIGHT | MIN. WEIGHT |
|---|---|---|
| A7 | 7" | 400Lbs. |
| A8 | 8" | 440Lbs. |
| A9 | 9" | 470Lbs. |
| A10 | 10" | 480Lbs. |

**GENERAL NOTE:**

Geometric pattern on top of lid other than that shown shall be approved by the Engineer.

March 31, 2000

| Published Date: 4th Qtr. 2014 | SDDOT | TYPE A MANHOLE FRAME AND LID | PLATE NUMBER 671.10 |
|---|---|---|---|
| | | | Sheet 1 of 1 |

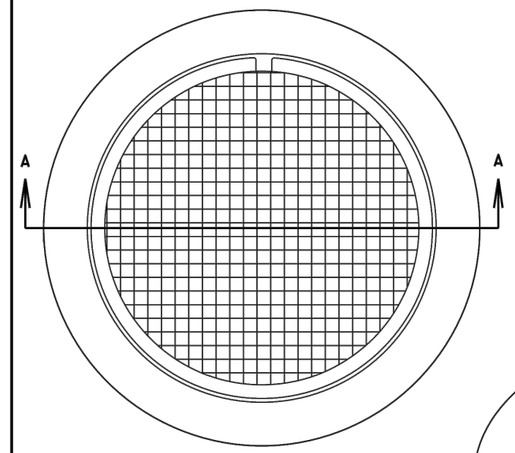


PLAN VIEW

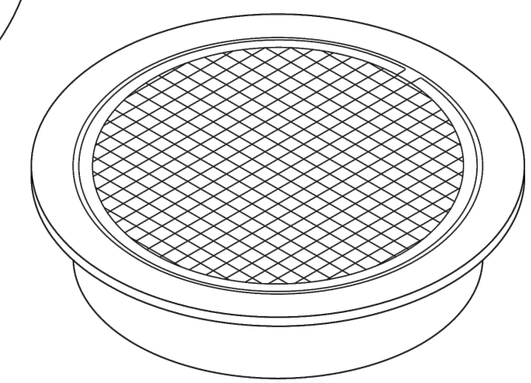

ASSEMBLED VIEW

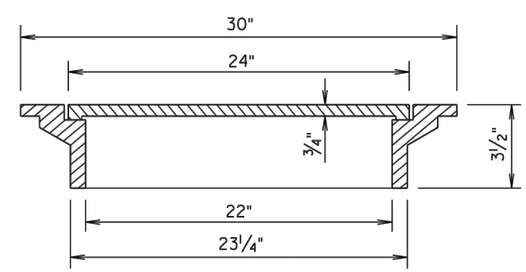


SECTION A-A

**GENERAL NOTE:**

Total weight of the frame and lid shall be 140 Lbs. minimum.

March 31, 2000

| Published Date: 4th Qtr. 2014 | SDDOT | TYPE S MANHOLE FRAME AND LID | PLATE NUMBER 671.30 |
|---|---|---|---|
| | | | Sheet 1 of 1 |

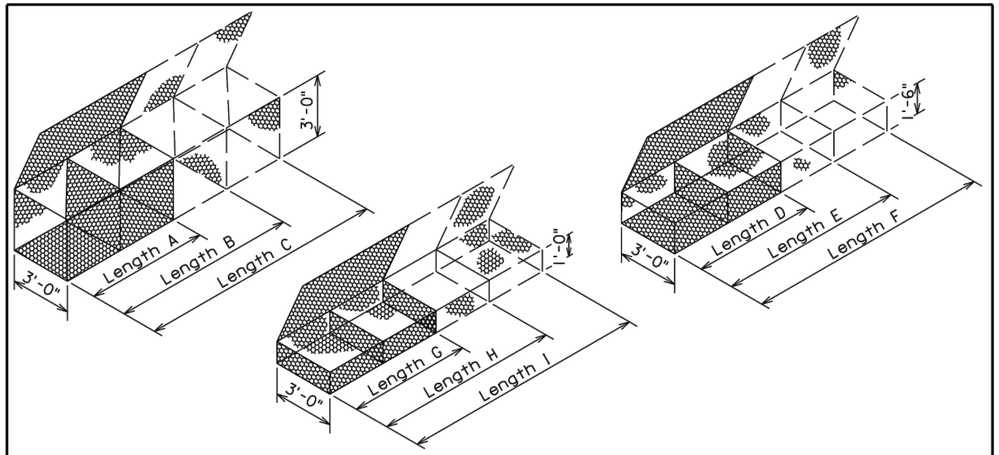


# GABION DETAILS

## STANDARD SIZES

| SIZE | LENGTH | WIDTH | HEIGHT | NUMBER OF CELLS | CAPACITY, Cu. Yd. |
|---|---|---|---|---|---|
| A | 6'-0" | 3'-0" | 3'-0" | 2 | 2.0 |
| B | 9'-0" | 3'-0" | 3'-0" | 3 | 3.0 |
| C | 12'-0" | 3'-0" | 3'-0" | 4 | 4.0 |
| D | 6'-0" | 3'-0" | 1'-6" | 2 | 1.0 |
| E | 9'-0" | 3'-0" | 1'-6" | 3 | 1.5 |
| F | 12'-0" | 3'-0" | 1'-6" | 4 | 2.0 |
| G | 6'-0" | 3'-0" | 1'-0" | 2 | 0.7 |
| H | 9'-0" | 3'-0" | 1'-0" | 3 | 1.0 |
| I | 12'-0" | 3'-0" | 1'-0" | 4 | 1.3 |

Above Dimensions subject to mill tolerances.

**GENERAL NOTES:**

Lacing and internal connecting wire shall be 0.0866 inch diameter steel wire ASTM A641 Class 3 soft temper measured after galvanizing and for PVC coated gabions shall be 0.0866 inch diameter steel wire measured after galvanizing but before PVC coating.

The lacing procedure is as follows:

1. Cut a length of lacing wire approximately 1 ½ times the distance to be laced but not exceeding 5 feet.
2. Secure the wire terminal at the corner by looping and twisting.
3. Proceed lacing with alternating single and double loops at a spacing not to exceed 6 inches.
4. Securely fasten the other lacing wire terminal.

Wire lacing or interlocking type fasteners shall be used for gabion assembly and final construction of gabion structures. Interlocking fasteners for galvanized gabions shall be high tensile 0.120 inch diameter galvanized steel wire measured after galvanizing. The galvanizing shall conform to ASTM A641-92 Class 3 coating. Fasteners shall also be in accordance with ASTM A764, Class II, Type III.

Interlocking fasteners for PVC coated gabions shall be high tensile 0.120 inch diameter stainless steel wire conforming to ASTM A313, Type 302, Class I. The spacing of the interlocking fasteners during all phases of assembly and construction shall not exceed 6 inches.
All fasteners shall be placed where the mesh weaves around the selvage wire at the vertical and horizontal joints.

*June 26, 2001*

| Published Date: 4th Qtr. 2014 | SDDOT | BANK AND CHANNEL PROTECTION GABIONS | PLATE NUMBER 720.01 |
|---|---|---|---|
| | | | Sheet 1 of 1 |

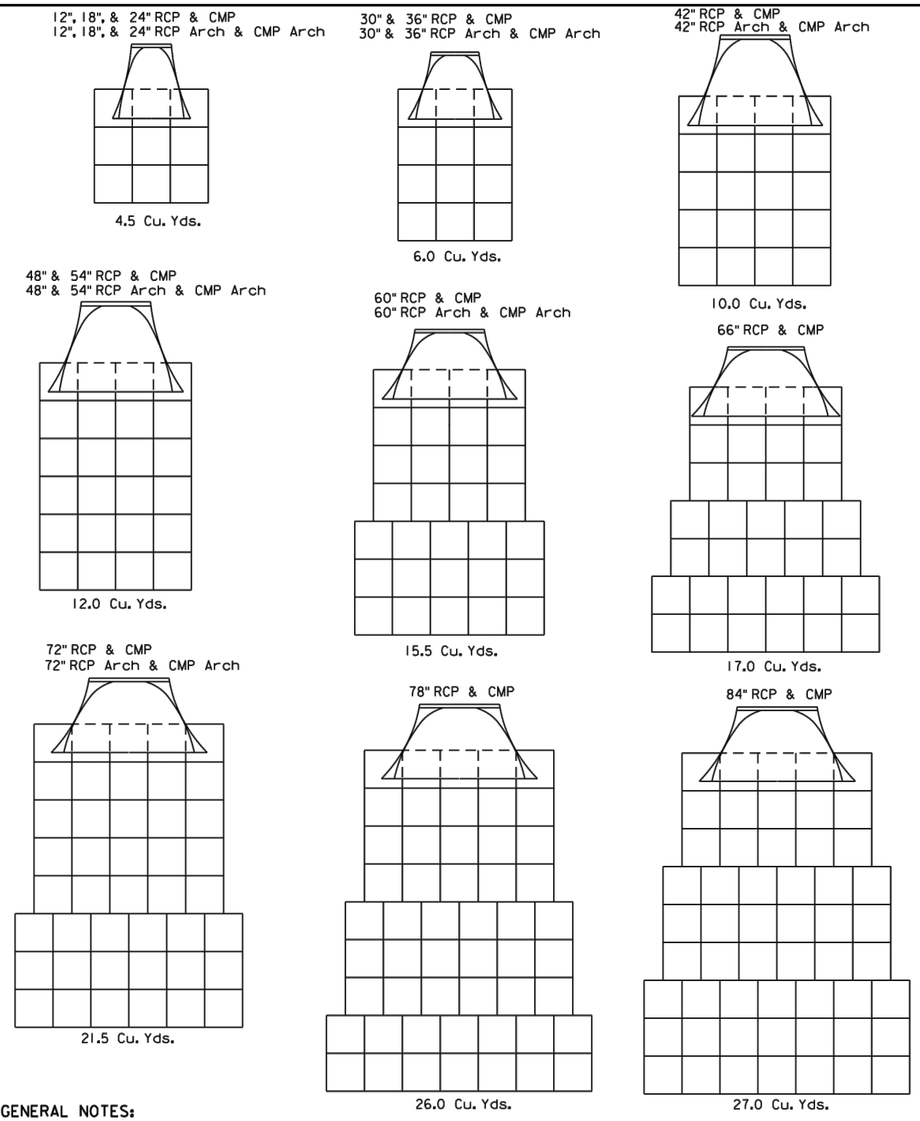


**GENERAL NOTES:**

Gabions at outlets of C. M. pipe and R. C. pipe shall be placed under the end section a distance of 2' from the outlet end of the section. For C. M. pipe end section installations, the upper fabric of the gabions shall be modified to accommodate the metal end section in a manner approved by the Engineer.

Quantities shown on this standard plate are based on standard gabion sizes D, E, and F (See Standard Plate 720.01).

*June 26, 2001*

| Published Date: 4th Qtr. 2014 | SDDOT | BANK AND CHANNEL PROTECTION GABION PLACEMENT UNDER PIPE END SECTIONS | PLATE NUMBER 720.03 |
|---|---|---|---|
| | | | Sheet 1 of 1 |

FOR BIDDING PURPOSES ONLY

| STATE OF SOUTH DAKOTA | PROJECT | SHEET | TOTAL SHEETS |
|---|---|---|---|
| | P 4243(03) | B99 | B99 |

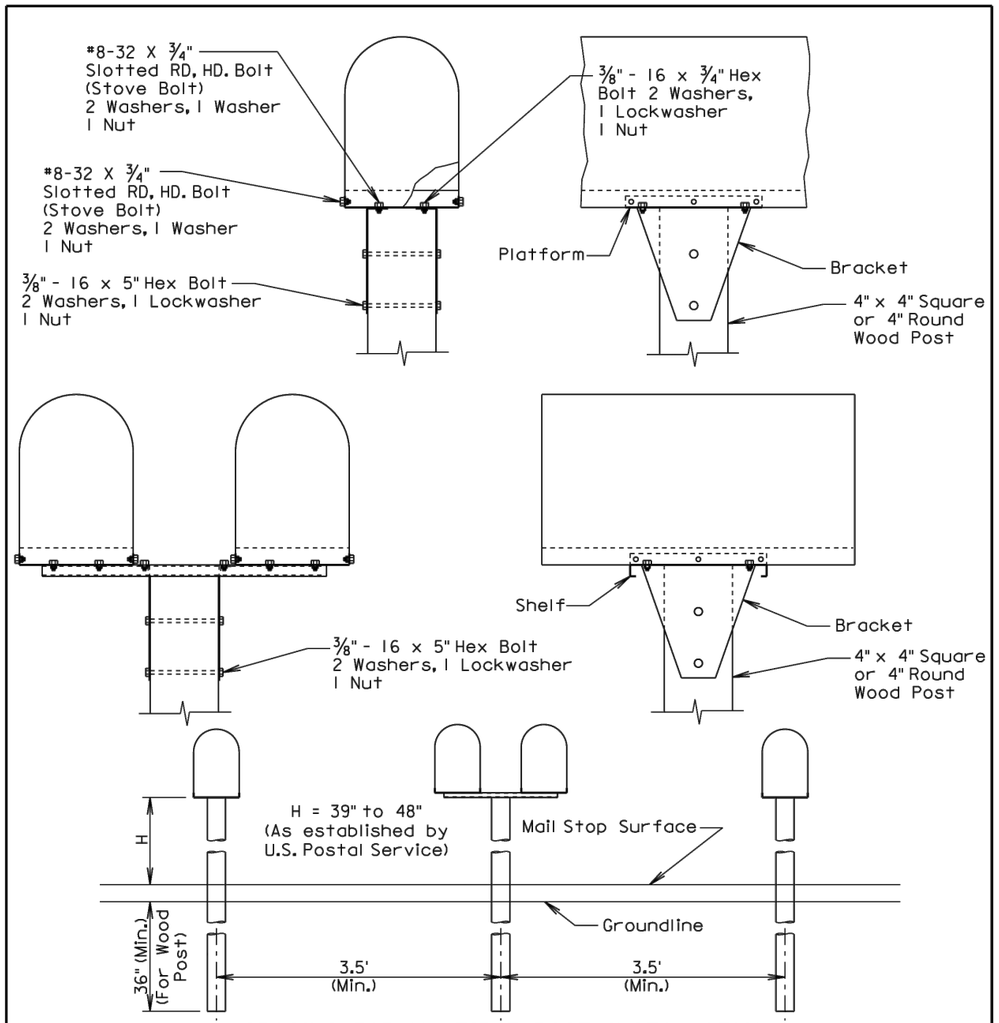


SPACING FOR MULTIPLE POST INSTALLATION

**GENERAL NOTES:**

The post support assemblies provided should be consistant throughout the project.

Single and double mailboxes may be in any sequence.

Post support assemblies shall be one from the approved products list, a 4"x4" or 4" round wood post, or an alternate post support assembly that meets the test level 3 crash testing requirements of NCHRP 350 or MASH.

Alternate mailbox support assemblies shall be approved by the Engineer prior to installation. The Contractor shall provide the Engineer written certification that the mailbox support assembly has met the crash testing requirements and will be installed in accordance with the manufacturer's installation instructions.

*September 6, 2013*

| | | | |
|---|---|---|---|
| **Published Date: 4th Qtr. 2014** | SDDOT | **SINGLE AND DOUBLE MAILBOX ASSEMBLIES** | PLATE NUMBER 900.02 |
| | | | Sheet 1 of 1 |

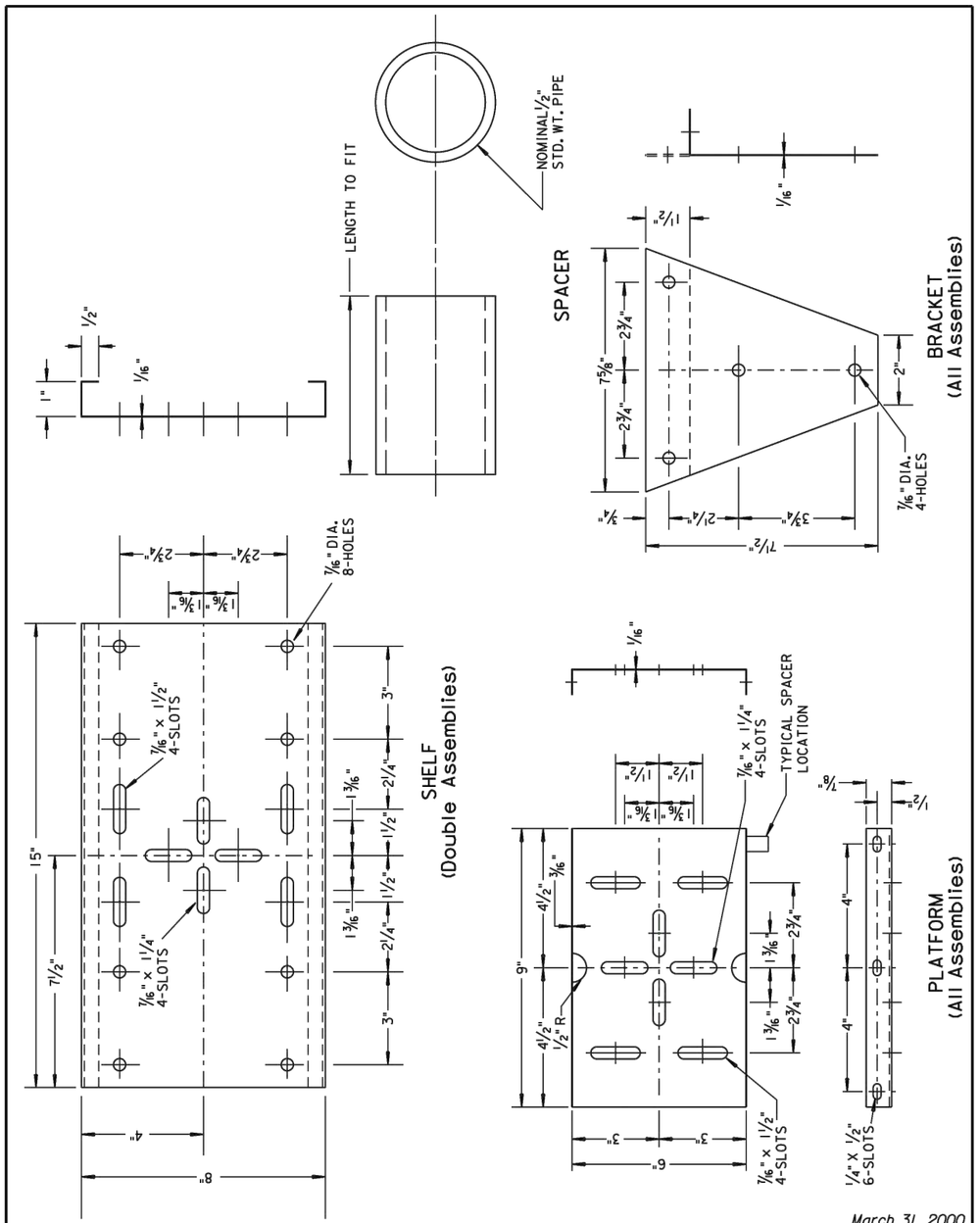


*March 31, 2000*

| | | | |
|---|---|---|---|
| **Published Date: 4th Qtr. 2014** | SDDOT | **MAILBOX SUPPORT HARDWARE** | PLATE NUMBER 900.03 |
| | | | Sheet 1 of 1 |

*PLANS BY: CLARK ENGINEERING, WATERTOWN, SD*

12/30/2014 8:01 AM Z:\2013 PROJECTS\X13038 WATERTOWN 19TH STREET\DESIGN\SEC B\STANDARD PLATES - B.DWG