STATE OF SOUTH DAKOTA	PROJECT	SHEET	TOTAL SHEETS
	NH 0014(186)225	B1	B35

Plotting Date: 05/19/2014 Revised 2 - 19 - 2014(BT)

Section B: Grading Plans

INDEX OF SHEETS

B1	General Layout W/Index
B2-B4	Estimate With General Notes & Tables
B5	Table of Pipe Quantities
B6	Table of Fence Quantities
B7	Typical Section
B8	Horizontal Alignment Sheets
B9	Control Data Sheet
B10	Topography Symbology & Legend
B11-B18	Plan & Profile Sheets
B19-B24	Detail Sheets
B25-B35	Standard Plates

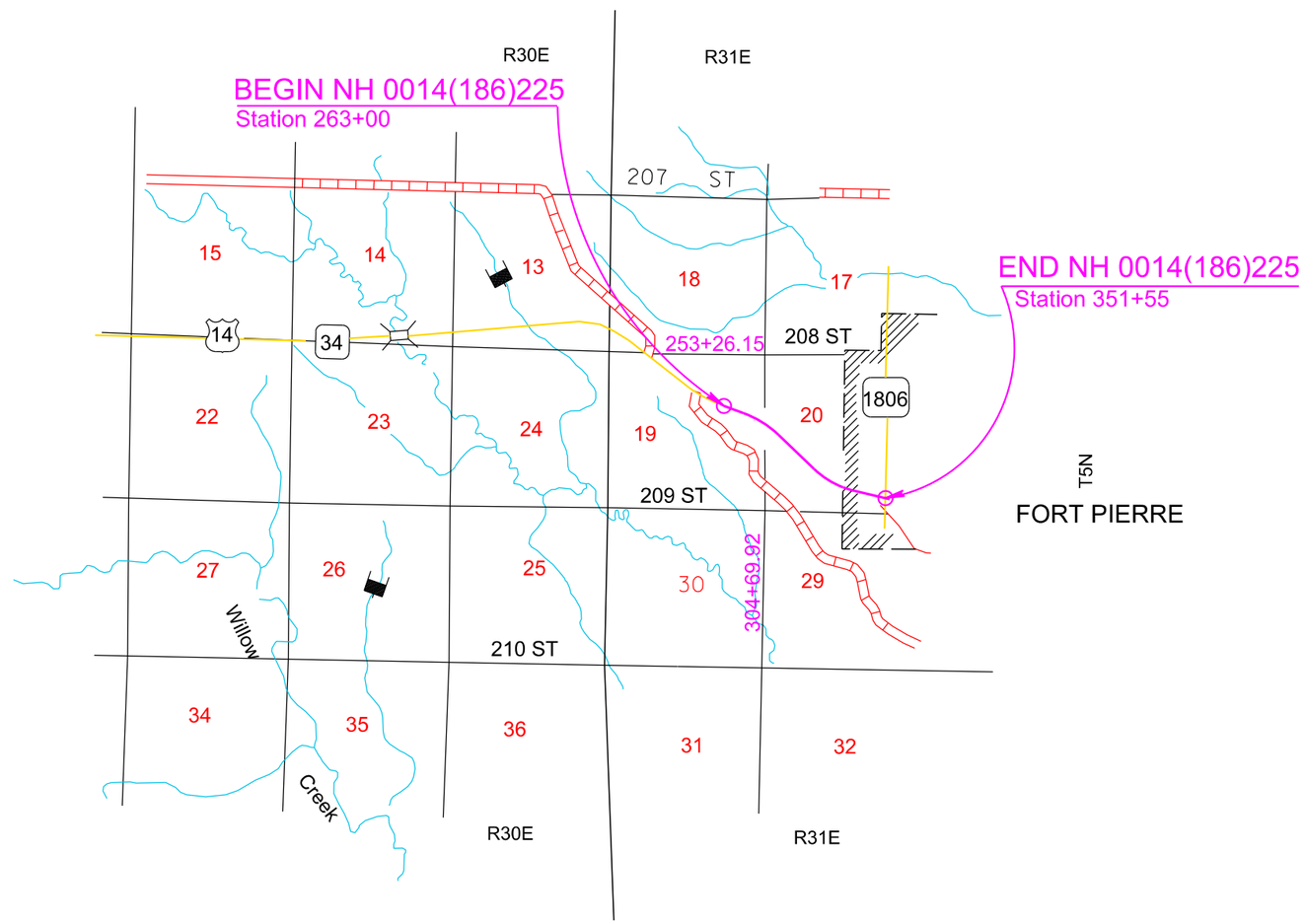

Plot Scale - 1:200
Plotted From - tssf12141
Plot Name - 1
File - U:\rd\prj\stan03J4\titleb.dgn

SECTION B ESTIMATE OF QUANTITIES

Bid Item Number	Item	Quantity	Unit
009E0010	Mobilization	Lump Sum	LS
100E0100	Clearing	Lump Sum	LS
110E0600	Remove Fence	5,295	Ft
110E7500	Remove Pipe for Reset	96	Ft
110E7510	Remove Pipe End Section for Reset	4	Each
120E0010	Unclassified Excavation	256,160	CuYd
120E6100	Water for Embankment	3,400.0	MGal
250E0020	Incidental Work, Grading	Lump Sum	LS
420E0400	Structure Excavation, Miscellaneous	16	CuYd
450E0142	24" RCP Class 2, Furnish	56	Ft
450E0150	24" RCP, Install	56	Ft
450E0162	30" RCP Class 2, Furnish	24	Ft
450E0170	30" RCP, Install	24	Ft
450E0182	36" RCP Class 2, Furnish	84	Ft
450E0190	36" RCP, Install	84	Ft
450E4758	18" CMP 14 Gauge, Furnish	90	Ft
450E4760	18" CMP, Install	90	Ft
450E4768	24" CMP 14 Gauge, Furnish	128	Ft
450E4770	24" CMP, Install	128	Ft
450E4788	36" CMP 14 Gauge, Furnish	388	Ft
450E4790	36" CMP, Install	388	Ft
450E4798	42" CMP 14 Gauge, Furnish	412	Ft
450E4800	42" CMP, Install	412	Ft
450E4818	54" CMP 14 Gauge, Furnish	94	Ft
450E4820	54" CMP, Install	94	Ft
450E5015	24" CMP Elbow, Furnish	4	Each
450E5016	24" CMP Elbow, Install	4	Each
450E5025	36" CMP Elbow, Furnish	4	Each
450E5026	36" CMP Elbow, Install	4	Each
450E5030	42" CMP Elbow, Furnish	4	Each
450E5031	42" CMP Elbow, Install	4	Each
450E5215	24" CMP Flared End, Furnish	2	Each
450E5216	24" CMP Flared End, Install	2	Each
450E5223	36" CMP Flared End, Furnish	4	Each
450E5224	36" CMP Flared End, Install	4	Each
450E5227	42" CMP Flared End, Furnish	6	Each
450E5228	42" CMP Flared End, Install	6	Each
450E5235	54" CMP Flared End, Furnish	2	Each
450E5236	54" CMP Flared End, Install	2	Each
450E5406	18" CMP Safety End, Furnish	2	Each
450E5407	18" CMP Safety End, Install	2	Each
450E8014	24" RCP to CMP Transition, Furnish	2	Each
450E8015	24" Pipe Transition, Install	2	Each
450E9000	Reset Pipe	96	Ft
450E9001	Reset Pipe End Section	4	Each
462E0100	Class M6 Concrete	18.6	CuYd
480E0100	Reinforcing Steel	2,160	Lb
600E0200	Type II Field Laboratory	1	Each
620E0020	Type 2 Right-of-Way Fence	7,307	Ft
620E0510	Type 1 Temporary Fence	6,626	Ft
620E1020	2 Post Panel	21	Each
620E1030	3 Post Panel	16	Each
680E0240	4" Corrugated Polyethylene Drainage Tubing	775	Ft
680E0440	4" Slotted Corrugated Polyethylene Drainage Tubing	6,225	Ft
680E2000	Concrete Headwall for Underdrain	5	Each
680E2010	Precast Concrete Headwall for Drain	4	Each
680E2500	Porous Backfill	2,926.0	Ton
700E0210	Class B Riprap	7,531.0	Ton
700E0310	Class C Riprap	1,298.0	Ton
831E0110	Type B Drainage Fabric	9,760	SqYd

SEQUENCE OF OPERATIONS

The Contractor shall take into account erodible soils, and the potential for drainage during inclement weather when sequencing operations. The Contractor's shall protect work throughout the project and promptly secure erosion control and seeding following completion various phases of work.

GRADING OPERATIONS

Water for Embankment is estimated at the rate of 15 gallons of water per cubic yard of Embankment.

The estimated cubic yards of excavation and/or embankment required to construct outlet ditches, ditch blocks, and approaches are included in the estimate of quantities, and will be paid for as "Unclassified Excavation".

Special ditch grades and other sections of the roadway different than the typical section(s) shall be constructed to the limits shown on the cross sections. If significant changes to the cross sections are necessary during construction, the Engineer shall approve the proposed change.

Temporary fence and/or permanent fence shall be placed ahead of the grading operation unless otherwise directed by the Engineer.

CLEARING

Before clearing activities begin, the Contractor shall contact the Engineer to determine the limits of clearing for the project. If the trees or shrubs that are supposed to remain within the limits of work are damaged or destroyed by the Contractor, the Contractor shall replace them with the same size and type at the Contractor's expense.

UTILITIES

The Contractor shall be aware that the existing utilities shown in the plans were surveyed prior to the design of this project and might have been relocated or replaced by a new utility facility prior to construction of this project, might be relocated or replaced by a new utility facility during the construction of this project, or might not require adjustment and may remain in its current location. The Contractor shall contact each utility owner and confirm the status of all existing and new utility facilities. The utility contact information is provided elsewhere in the plans or bidding documents.

TYPE II FIELD LABORATORY

The lab shall be equipped with an internet connection such as DSL, cable modem, or other approved service. The internet connection shall be provided with a multi-port wireless router. The internet connection shall be a minimum speed of 512 Kb unless limited by job location and approved by the DOT. Prior to installing the wireless router the Contractor shall submit the wireless router's technical data to the Area Office to check for compatibility with the state's computer equipment. The internet connection is intended for state personnel usage only. The Contractor's personnel are prohibited from using the internet connection unless pre-approved by the Project Engineer.

Reimbursement will not be made for fees associated with the purchase, installation, disconnection, monthly charges, and incidentals involved in the installation, maintenance, and disconnection of the internet connection (including attachments). These items shall be incidental to the contract unit price per each for "Type II Field Laboratory".

INCIDENTAL WORK, GRADING

The following items will be paid for as "Incidental Work, Grading".

Station	L/R	Remarks
289+35	L	Take Out 24" -42' CMP Downspout, 1 RC to CM Transition, and 1 CM Flared End
291+79 to 293+00	L	Take Out 36" – 108' CMP Downspout, 2 Elbows, and 2 Flared Ends
307+79 to 308+84	L	Take Out 42" – 102' CMP Downspout, 2 Elbows, & 2 Flared Ends
310+75	L	Take Out 24" – 72' CMP Downspout, 2 Elbows, 1 RC to CM Transition, & 1 Flared End
311+78 to 312+48	L	Take out 42" – 64' CMP, & 2 Flared Ends
318+77 to 319+59	L	Take out 42" – 72' CMP, & 2 Flared Ends
324+83 to 325+21	L	Take Out 54" – 36' CMP, & 2 Flared Ends
330+67 to 331+67	L	Take Ou4 54" – 34' CMP, & 2 Flared Ends

REMOVE PIPE FOR RESET

The following items will be Removed for Reset.

Station	L/R	Remarks
297+97	L	Remove for Reset 24" – 24' RCP, & 1 Remove Flared End for Reset
323+00	L	Remove for Reset 36" – 16' RCP, & 1 Remove Flared End for Reset
323+00	R	Remove for Reset 36" – 16' RCP, & 1 Remove Flared End for Reset
333+10	L	Remove for Reset 30" – 40' RCP, & 1 Remove Flared End for Reset

SHRINKAGE FACTOR: Embankment +25%

TABLE OF UNCLASSIFIED EXCAVATION

Excavation	224,840 Cu Yd
Topsoil	31,320 Cu Yd
Total	256,160 Cu Yd

Balance points are anticipated at the following locations:
Station 295+11
Station 297+25
Station 313+56
Station 319+66
Station 325+45
Station 336+86
Station 337+28

There is approximately 9934 Cu Yd of waste included in the Unclassified Excavation quantities from approximately Sta. 285+50 to 291+50 and 298+50 to 301+50. The waste material shall be disposed of at a location approved by the Engineer.

Plot Scale - 1:200
Plotted From - trsf12141
File - ...\prj\stan03J4\NotesSectionB.dgn

PROCEDURES FOR DETERMINING UNCLASSIFIED EXCAVATION QUANTITY

When plan quantities are used for payment, the Unclassified Excavation quantity shall be used for final payment. If final cross sections are taken in the field, add all of the items in the Table of Unclassified Excavation using the following procedures:

The Unstable Material Excavation quantity is included in the Excavation quantity listed in the Table of Unclassified Excavation. When finaling a project, the Unstable Material Excavation quantity shall be added to the Excavation quantity to compute the Unclassified Excavation quantity.

The Topsoil quantity in the Table of Unclassified Excavation is an estimate. When finaling a project, the total quantity of field measured Topsoil shall be used in place of the estimated Topsoil quantity. The quantity of Topsoil from the cuts will be paid for twice as Unclassified Excavation, as it will be in both the Excavation and Topsoil quantities. This will be full compensation for Excavation, which includes necessary undercutting to provide space for placement of topsoil.

UNSTABLE MATERIAL EXCAVATION

Unstable material excavation will be required throughout the project limits to excavate saturated or weak compressible soils and other organic materials. The areas of unstable material excavation are drawn on the cross sections. A nominal 5 ft. depth of compressible material is anticipated to be removed from each fill footprint prior to construction of the embankment. The depth of unstable material excavation may be adjusted by the Engineer to ensure a solid foundation free of organic, soft, unstable material is prepared. The unstable material excavated on this project shall be placed outside the subgrade shoulder in fill sections, or unstable and/or highly organic material shall be stockpiled for use as topsoil or wasted at a site approved by the Engineer

The estimated quantity of 67,576 cubic yards of unstable material excavation shall be paid for at the contract unit price per cubic yard for “Unclassified Excavation”.

All areas designated as Unstable shall be excavated.

Field measurement of unstable material excavation shall not be made. However, if there are additional areas of unstable material excavation other than what is shown in the plans, the Engineer shall direct removal of these areas and the additional areas will be measured according to the Engineer.

TABLE OF UNSTABLE MATERIAL EXCAVATION

Station	to	Station	L/R	Depth (Ft)	Quantity (CuYd)
288+50		305+00	L	5’	39999
308+50		311+00	L	5’	6839
312+50		321+00	L	5’	5194
321+00		335+50	L	5’	15544
				Total:	67576

INSLOPE RECONSTRUCTION

Inslope reconstruction will be required throughout the project as shown on the cross sections. Inplace embankment materials are likely over optimum moisture. It is anticipated that most of the excavated embankment materials can be used in the reconstruction of the proposed embankments provided that the material can be placed according to the Specified Density Requirements. Special excavation and construction techniques may be required. Unclassified Excavation will be used to construct the remaining embankment. The Landslide Debris Excavation limits shall not exceed those shown on the cross sections unless directed by the Engineer. Temporary 2:1 or 3:1 backslopes are required to excavate the Landslide Debris and reconstruct the mainline and channel slopes. The temporary slopes will be unstable over the long-term. However, these slopes should remain globally stable over the short-term during construction provided that measures are taken to divert runoff away from the slope and regular monitoring of the slope is conducted. Construction activities shall be sequenced to minimize the amount of time the temporary backslopes are left exposed and unsupported. Landslide Debris Excavation shall be paid for as Unclassified Excavation.

EMBANKMENT CONSTRUCTION

Embankment construction shall closely follow the excavation of unstable compressible materials from the embankment footprint to the satisfaction of the Engineer. A suitable embankment foundation consists of compacted soil which does not pump, rut, or otherwise displace when traveled over with construction equipment. Each embankment shall be benched into the existing slopes in accordance with Section 120.3.B.1 of the Standard Specifications for Roads and Bridges. Compaction of the embankment will be according to the Specified Density Method. Minimum density testing requirements shall be one test per zone per segment. Each segment shall be 400 feet in length. Zones shall be 3 feet in depth. Moisture testing shall remain as per Minimum Sample Testing Requirements.

A disk designed and constructed for construction purposes shall be in use as per Section 120.3, Standard Specifications.

CLASSIFICATION OF EXCAVATION

All materials encountered during the construction of this project, regardless of their nature or the manner, in which they are excavated, will be considered Unclassified Excavation.

Most of the material encountered should be able to be excavated using conventional methods. Prospective bidders are encouraged to review the boring information and geology report compiled by the SDDOT Geotechnical Engineering Activity as well as observe the project conditions in the field. The geology report is available at the Pierre Area Office.

MAINLINE INSLOPE CONSTRUCTION

Reconstruct the 4:1 inslope as shown on the cross sections from Station 281+00± to Station 293+00±, Rt. The inslope transitions from a 4:1 to a flatter slope at the check dam location. The inslope steepens and transitions to a fence berm ahead near the toe of the check dam.

Construct a 20’ wide fenceberm with a 3:1 berm slope and a 20:1 bench slope below a 4:1 inslope as shown on the cross sections from Station 293+00± to Station 301+00±, Lt. The inslope transitions from a 4:1 with a fence berm to a flatter continuous slope at the check dam location. The inslope steepens and transitions back to a fenceberm ahead near the toe of the check dam

MAINLINE INSLOPE CONSTRUCTION, CONTINUED

Re-construct the fenceberm from Station 301+00± to Station 303+00± as shown on the cross sections. The fenceberm slopes shall be 3:1 and shall be armored with riprap from Station 302+00± to Station 303+00±. The inslope transitions from a 4:1 with a fence berm to a flatter continuous slope at the check dam location. The inslope steepens and transitions back to a fenceberm ahead near the toe of the check dam.

Re-construct the fenceberm from Station 309+00± to Station 311+00± as shown on the cross sections. The fenceberm slopes shall vary from 3:1 to 4:1.

From Station 321+00 to Station 331+75 construct a 25’ wide fenceberm with a 4:1 berm slope and a 20:1 bench slope below a 4:1 inslope as shown on the cross sections. The inslope transitions from a 4:1 with a fence berm to a flatter continuous slope at the check dam location. The inslope steepens and transitions back to a fenceberm ahead near the toe of the check dam.

Construct a 25’ wide fenceberm with a 4:1 berm slope and a 20:1 bench slope from Station 331+75± to Station 334+50± as shown on the cross sections. The inslope shall be rebuilt to 4:1 from Station 331+75± to Station 335+50±. The inslope transitions from a 4:1 with a fence berm to a continuous slope to intersection with the 20:1 channel backslope ahead of Station 334+50±.

CHECK DAM CONSTRUCTION

The Check Dam Berm slopes shall be constructed as an engineered embankment. Each check dam embankment shall be benched into the adjoining drainage slopes and keyed into the underlying creek bed to minimize water seepage below and around the dam. The bottom limit of the unstable excavation shall be a flat horizontal surface as shown on the cross sections.

CORRUGATED METAL PIPE, POLYMER COATING

Corrugated metal pipes shall have 2 ⅔-inch X ½-inch corrugations for 42-inch and smaller round pipe and 48-inch and smaller arch pipe unless otherwise stated in the plans. Corrugated metal pipes shall have 3-inch X 1-inch or 5-inch X 1-inch corrugations for 48-inch and larger round pipe and 54-inch and larger arch pipe unless otherwise stated in the plans.

All CMP shall be 14 gauge. Connection bands shall be 24” wide. All CMP, CMP elbows, transitions, and 24” bands shall be Polymer Coated and shall conform to AASHTO M245 and AASHTO M 36. All costs associated for gauge, coating and connections shall be incidental to the corresponding CMP bid items.

All damage to the Polymer Coating shall be repaired according to the manufacturer’s recommendations prior to installation.

CORRUGATED METAL PIPE END SECTIONS, ALUMINIZED TYPE 2 COATING

All CMP end sections shall conform to AASHTO M 36, Aluminum Type 2. All costs associated for gauge, coating and connections shall be incidental to the corresponding CMP End Section bid items.

Plot Scale - 1:200
Plotted From - trsf12141
File - ...\prj\stan03J4\NotesSectionB.dgn

UNDERDRAINS

Underdrains shall be installed at the locations listed in the "Underdrain Installation Table" below.

All landslide debris and unstable compressible material shall be excavated as shown in the plans or as directed by the Engineer prior to underdrain installation. Underdrain installation shall be completed prior to embankment construction at each location.

Underdrain Installation Table				4" Corrugated PE Drainage Tubing		Precast Headwall	
Station / Offset	Station / Offset	Trench	Porous Backfill (ft.)	Slotted	Solid	680.01	680.03
280+00-40'R	285+25-60'R	2'x5'	3'	480'	50'	-	1
281+00-45'L	287+25-52'L	2'x5'	3'	570'	50'	-	1
289+00-70'L	293+50-121'L	2'x4'	4'	300'	50'	1	-
291+00-40'R	297+00-50'R	2'x5'	3'	500'	100'	-	1
293+00-80'L	301+50-145'L	2'x4'	4'	775'	25'	1	-
299+50-40'R	310+75-40'R	2'x5'	3'	1010'	100'	-	1
309+00-125'L	315+25-160'L	2'x5'	3'	615'	25'	1	-
313+00-45'R	322+00-60'R	2'x5'	3'	825'	75'	1	-
322+00-135'L	334+00-235'L	2'x3'	3'	1150'	50'	1	-
331+50-150'L	334+00-240'L	2'x3'	3'	-	250	-	-
			TOTAL	6225'	775	5	4

Install underdrain at locations shown in the Underdrain Installation Table. The underdrain will consist of 4 inch Slotted Corrugated Polyethylene Drainage Tubing placed in the corresponding trench backfilled with Porous Backfill. The underdrain shall outlet through 4 inch Corrugated Polyethylene Drainage Tubing placed in a 2 foot wide trench of variable depth backfilled with fill material. The underdrain outlet tubing shall daylight at an Outlet Headwall as directed by the Engineer.

UNDERDRAIN CONSTRUCTION

An existing underdrain system underlies the project area left of centerline and outlets near the toe of the check dam at Station 331+50±, 150' Lt. Underlying plans indicate that the existing underdrains lie under several feet of fill and should not be encountered within the proposed excavation limits. However, the underdrain locations may have been adjusted during construction and not documented.

Should an existing underdrain be encountered within the excavation limits during construction, the existing underdrain system shall be repaired inplace, day-lighted at a headwall, or incorporated into a proposed underdrain system as directed by the Engineer.

UNDERDRAIN CONSTRUCTION, CONTINUED

The underdrain at Station 331+50 – 150' Lt is to be extended to outlet near Station 334+00±, 240'Lt. The Contractor shall remove the existing headwall and reset at the new outlet location. Any costs associated with removing and resetting of the headwall will be incidental to the various bid items.

Each underdrain trench shall be graded to maintain a minimum of .01ft/ft or 1% drop from beginning to outlet. The Outlet Headwall shall be placed to blend in with the surrounding topography with the outlet tubing placed above the bottom of the drainage so as to permit proper flow from the outlet.

Care must be taken to insure that the underdrain and outlet tubing is not damaged during construction. Sufficient cover material is to be placed over the underdrains before heavy equipment is allowed to work over the underdrains.

The underdrain locations and elevations given are based on the best information available to the Geotechnical Engineering Activity. Actual field conditions may require that adjustments be made by the Project Engineer during construction to provide for sufficient drainage.

The total project underdrain quantities are summarized below:

Estimate of Quantities:

4 inch Corrugated Slotted Polyethylene Drainage Tubing	6225 feet
4 inch Corrugated Polyethylene Drainage Tubing	775 feet
Porous Backfill	2926 tons
Headwalls	
(Standard Plate No. 680.01)	5 each
(Standard Plate No. 680.03)	4 each

TABLE OF RIPRAP AND DRAINAGE FABRIC

Station	L/R	Class B Riprap (Ton)	Class C Riprap (Ton)	Type B Drainage Fabric (SqYd)
292+15	L	1673.5		1895.3
292+15	L		48.2	53.8
299+89	L	942.4		1085.8
299+89	L		48.2	53.8
302+00 -303+00	L		1002.0	820.4
308+00	L	830.1		958.4
308+00	L		48.2	53.8
314+20	L	926.3		1042.7
314+20	L		48.2	53.8
320+00	L	803.7		933.8
320+00	L		48.2	53.8
322+56	R	18.7		33.0
322+56	R	11.4		22.0
331+00	L	889.8		1013.6
331+00	L		55.0	59.6
333+10	L	551.6		632.9
337+31	L	883.5		993.7
TOTAL		7531.0	1298.0	9760.0

APPROACH SURFACING

The existing granular material on the approaches at Station 276+23.9 L and Station 321+32 R shall be salvaged and stockpiled. This material will then be placed back onto the new approaches at Station 277+63 L and 321+32 R. This material will not be measured for payment. All costs to salvage, stockpile, haul and place this material shall be incidental to the various contract items.

TEMPORARY FENCE DURING CONSTRUCTION

An estimated 6626 Ft of Temporary Fence has been included to block off the construction site from potential grazing cattle in the area. A station range has been given in the Table of Fence Quantities for general limits. Exact placement shall be determined by the Contractor with the Field Engineer's approval.

BRACE PANELS FOR ROW FENCE

The E-Z Brace or an approved equal may be utilized as an alternate horizontal brace in the brace panels if approved by the Engineer. The E-Z Brace shall be attached to each wood post utilizing two 5/16" x 3" lag screws. Holes of appropriate diameter, based on wood post condition, shall be drilled before placement of lag screws. The following are contacts regarding the E-Z Brace:

Roger Papka
E-Z Brace
1160 Karen St.
Watertown, SD 57201
605-881-6142

Dennis Mack
E-Z Brace
108 18th St. NE
Watertown, SD 57201
605-881-4990

CONCRETE PIPE CONNECTIONS

Pipe connections to existing pipes, shall be done by breaking a hole into the existing structure and inserting the pipe. A concrete collar shall then be poured around the pipe in the area of the connection.

There is a pipe connection at Station 323+00 R, connections to existing pipe shall be made by placing a 2' wide by 6" thick M6 concrete collar around the outside of the connection. The concrete collar shall be reinforced with 6x6 W2.9 x W2.9 wire mesh.

All costs for constructing the concrete collars including materials and labor shall be incidental to the contract unit price per foot for the corresponding pipe bid item.

Plot Scale - 1:200
Plotted From - trsf12141
File - ...\prj\stan03J4\NotesSectionB.dgn

TABLE OF PIPE QUANTITIES

STATE OF SOUTH DAKOTA	PROJECT	SHEET	TOTAL SHEETS
	NH 0014(186)225	B5	B35

Plotting Date: 05/19/2014

		RC Circular Pipes			Reinforced Concrete	CM Circular Pipes						Safety End		CM Circular Flared Ends					CM Elbows						Round RCP to CMP Transitions(Outlets)											
		Circular			Tee	Corrugated Metal																			Round RCP to CMP Transition											
Station	Offset (L/R)	24" Cl. 2 Ft	30" Cl. 2 Ft	36" Cl. 2 Ft	36" x 36" Each	18" 14 Ga Ft	24" 14 Ga Ft	36" 14 Ga Ft	42" 14 Ga 3x1 Ft	54" 14 Ga 3x1 Ft		18' Each		24" Each	36" Each	42" Each	54" Each		24" 15° Each	24" 20° Each	36" 10° Each	36" 7.5° Each	42" 10° Each	42" 12.5° Each	24" Outlet Each											
277+63.4	60' L					80						2																								
289+35	L						32							1					2						1											
291+27-144'L 293+63-144'L								224							2						2															
297+97	L	56																																		
299+57-161'L to 301+17-162'L								164							2							2														
307+06-172'L to 308+94-171'L									162							2							2													
310+75	L						96							1						2					1											
313+57-198'L to 314+96-198'L									140							2																				
319+84-216'L to 321+01-220'L									110							2								2												
323+00	R			32	1	10																														
330+67-176'L to 331+67-192'L										94							2																			
333+10	L		24																																	
323+00	L																																24			1
297+97	L																																16			1
323+00	L																																16			1
323+00	R																																40			1
333+10	L																																			
	Subtotal:	56	24	84	1	90	128	388	412	94		2		2	4	6	2		2	2	2	2	2	2	2								96			4

Reset Pipe

Reset Pipe End

Plot Scale - 1:200

Plotted From - trsf12141

File - ...\rd\prj\stan03J4\Tablepipe.dgn

TABLE OF FENCE QUANTITIES

STATE OF SOUTH DAKOTA	PROJECT	SHEET	TOTAL SHEETS
	NH 0014(186)225	B6	B35

Plotting Date: 05/19/2014

Station to Station		Side (L/R)	Right-of-Way Fence					Temporary Fence			Post Panels			Gates					
			Type 2 (Ft)					Type 1 (Ft)			2 Post Panel (Each)	3 Post Panel (Each)		24' Barb Wire Gate (Each)	40' Barb Wire Gate (Each)				Remove Fence (Ft)
273+83	278+25	L	484								2	3			1				504
284+25	288+10	L	690					661			3	3							
288+10	329+48	L	4168					4373			3	4		1					2433
329+48	336+81	L	626					620			3	3		1					1266
318+17	323+27	R	960					972			9	2		1					888
323+27	326+98	R	379								1	1							204
		TOTALS:	7307					6626			21	16		3	1				5295

Plot Scale - 1:200

Plotted From - trsf12141

File - ...\rd\pr\istan0344\Tablefence.dgn

STATE OF SOUTH DAKOTA	PROJECT	SHEET	TOTAL SHEETS
	NH 0014(186)225	B7	B35

Plotting Date: 05/19/2014

TYPICAL GRADING SECTION

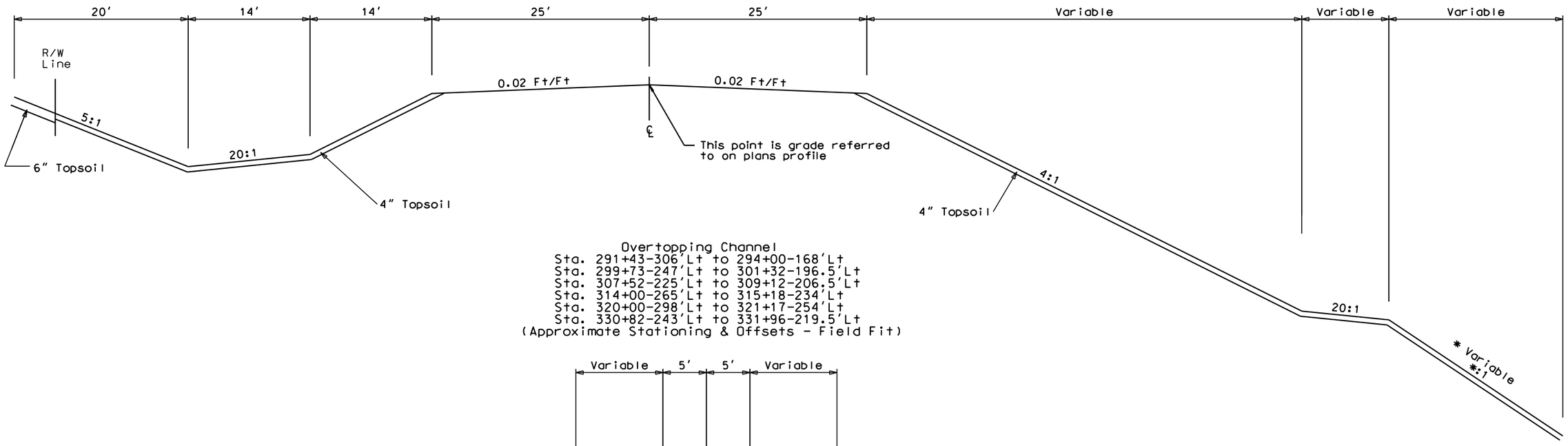

Overtopping Channel
Sta. 291+43-306'Lt to 294+00-168'Lt
Sta. 299+73-247'Lt to 301+32-196.5'Lt
Sta. 307+52-225'Lt to 309+12-206.5'Lt
Sta. 314+00-265'Lt to 315+18-234'Lt
Sta. 320+00-298'Lt to 321+17-254'Lt
Sta. 330+82-243'Lt to 331+96-219.5'Lt
(Approximate Stationing & Offsets - Field Fit)

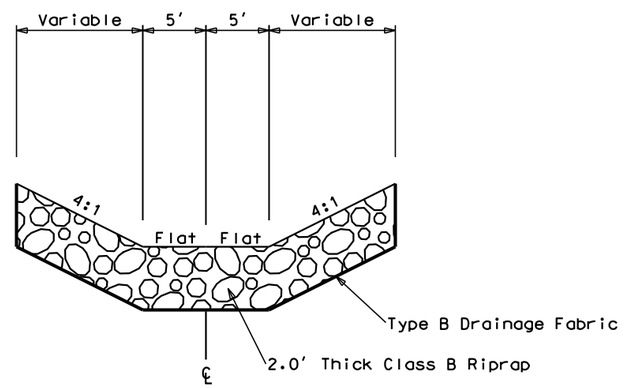

Outlet Channel
Station 333+10 Lt

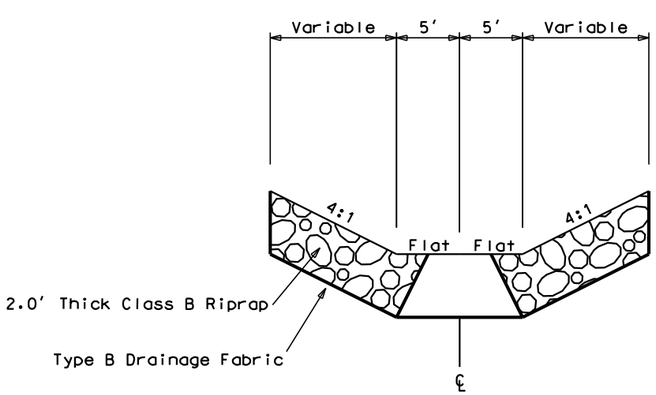

Check Dam Channel

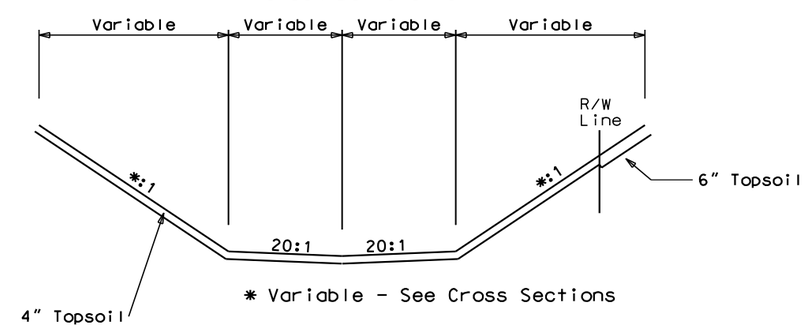

PLOT SCALE - 1:200

PLOT NAME - 7

FILE - U:\RD\PRJ\STAN03J4\TYP.DGN

PLOTTED FROM - TRSF12141

HORIZONTAL ALIGNMENT DATA

STATE OF SOUTH DAKOTA	PROJECT	SHEET	TOTAL SHEETS
	NH 0014(186)225	B8	B35

Plotting Date: 05/19/2014

Mainline

Type	Station			Northing	Easting
POB	250+98.67			748358.127	1943826.121
		TL= 3154.17	S 53°48'35" E		
PC	282+52.84			746495.690	1946371.723
PI	288+22.41	R = 4192.37	Delta = 15°28'25" L	746159.375	1946831.402
PT	293+85.05			745957.891	1947364.146
		TL= 528.86	S 69°17'00" E		
PC	299+13.91			745770.807	1947858.812
PI	305+06.33	R = 2794.92	Delta = 23°56'07" R	745561.238	1948412.932
PT	310+81.48			745144.882	1948834.377
		TL= 1372.51	S 45°20'53" E		
PC	324+53.99			744180.283	1949810.770
PI	331+20.55	R = 2455.53	Delta = 30°22'26" L	743711.831	1950284.949
PT	337+55.73			743547.441	1950930.912
		TL= 1000.00	S 75°43'19" E		
PI	347+55.73			743300.815	1951900.020
		TL= 399.54	S 75°43'19" E		
POE	351+55.27			743202.277	1952287.220

292+16 Check dam #1

Type	Station			Northing	Easting
POB	0+00.00			746020.928	1947206.889
		TL= 478.84	N 23°35'24" E		
POE	4+78.84			746459.749	1947398.513

299+88 Check dam #2

Type	Station			Northing	Easting
POB	0+00.00			745743.831	1947927.796
		TL= 184.97	N 22°27'19" E		
PI	1+84.97			745914.775	1947998.447
		TL= 207.93	N 20°40'29" E		
POE	3+92.90			746109.317	1948071.860

307+09 Check dam #3

Type	Station			Northing	Easting
POB	0+00.00			745335.879	1948619.669
		TL= 401.00	N 38°47'40" E		
POE	4+01.00			745648.415	1948870.903

314+20 Check dam #4

Type	Station			Northing	Easting
POB	0+00.00			744906.980	1949075.207
		TL= 444.64	N 44°41'15" E		
POE	4+44.64			745223.096	1949387.892

320+00 Check dam #5

Type	Station			Northing	Easting
POB	0+00.00			744499.348	1949487.804
		TL= 460.55	N 45°21'03" E		
POE	4+60.55			744823.007	1949815.452

: 331+00 Check dam #6

:

Type	Station			Northing	Easting
POB	0+00.00			743791.986	11950324.806
		TL= 429.26	N 29°13'46" E		
POE	4+29.26			744166.585	1950534.415

The coordinates shown on this sheet are based on the South Dakota State Plane Coordinate System. North Zone (NAD 83/96) SF = .9999670

Plot Scale - 1:200
Plotted From - trsf12141
File - ...\rd\prj\stan03J4\DataHoriz.dgn

CONTROL DATA

STATE OF SOUTH DAKOTA	PROJECT	SHEET	TOTAL SHEETS
	NH 0014(186)225	B9	B35

Plotting Date: 05/19/2014

HORIZONTAL AND VERTICAL CONTROL POINTS						
POINT	STATION	OFFSET	DESCRIPTION	NORTHING	EASTING	ELEVATION
CP100	323+25.62	5521.58	SEC COR. 17/16/20/21	748193.500	1953600.000	1443.592
S466	311+12.79	73.49	BENCHMARK/SS ROD	745070.621	1948805.214	1598.852
MC57	275+71.64	376.04	TRIANGLATION STATION (DIRECTOR) BRASS DISC TOP OF CONC.	747201.411	1946044.213	1749.425

The coordinates shown on this sheet are based on the South Dakota State Plane Coordinate System.
North Zone (NAD 83/96) SF = 0.9999670
The elevations shown on this sheet are based on NAVD 88.

Plot Scale - 1:200
Plotted From - trsf12141
File - ...\prj\stan03J4\Datacontrol.dgn

STATE OF SOUTH DAKOTA	PROJECT	SHEET	TOTAL SHEETS
	NH 0014(186)225	B10	B35

Plotting Date: 05/19/2014

EXISTING TOPOGRAPHY SYMBOLOGY AND LEGEND

Anchor
Antenna
Approach
Assumed Corner
Azimuth Marker
BBQ Grill/ Fireplace
Bearing Tree
Bench Mark
Box Culvert
Bridge
Brush
Buildings
Bulk Tank
Cattle Guard
Cemetery
Centerline
Cistern
Clothes Line
Commercial Sign Double Face
Commercial Sign One Post
Commercial Sign Overhead
Commercial Sign Two Post
Concrete Symbol
Creek Edge
Curb/Gutter
Curb
Dam Grade/Dike/Levee
Deck Edge
Ditch Block
Doorway Threshold
Drainage Profile
Drop Inlet
Edge Of Asphalt
Edge Of Concrete
Edge Of Gravel
Edge Of Other
Edge Of Shoulder
Elec. Trans./Power Jct. Box
Fence Barbwire
Fence Chainlink
Fence Electric
Fence Misc.
Fence Rock
Fence Snow
Fence Wood
Fence Woven
Fire Hydrant
Flag Pole
Flower Bed
Gas Valve Or Meter
Gas Pump Island
Grain Bin
Guardrail
Guide Sign One Post
Guide Sign Two Post
Gutter
Guy Pole
Haystack

Hedge
Highway R.O.W. Marker
Interstate Close Gate
Iron Pin
Irrigation Ditch
Lake Edge
Lawn Sprinkler
Mailbox
Manhole Electric
Manhole Gas
Manhole Misc
Manhole Sanitary Sewer
Manhole Storm Sewer
Manhole Telephone
Manhole Water
Merry-Go-Round
Microwave Radio Tower
Misc. Line
Misc. Property Corner
Misc. Post
Overhang Or Encroachment
Overhead Utility Line — OH —
Parking Meter
Pipe With End Section
Pipe With Headwall
Pipe Without End Section
Playground Slide
Playground Swing
Power And Light Pole
Power And Telephone Pole
Power Meter
Power Pole
Power Pole And Transformer
Power Tower Structure
Propane Tank
Property Pipe
Property Pipe With Cap
Property Stone
Public Telephone
Railroad Crossing Signal
Railroad Milepost Marker
Railroad Profile
Railroad R.O.W. Marker
Railroad Signs
Railroad Switch
Railroad Track
Railroad Trestle
Rebar
Rebar With Cap
Reference Mark
Regulatory Sign One Post
Regulatory Sign Two Post
Retaining Wall
Riprap
River Edge
Rock And Wire Baskets
Rockpiles
Satellite Dish
Septic Tank

Shrub Tree
Sidewalk
Sign Face
Sign Post
Slough Or Marsh
Spring
Stream Gauge
Street Marker
Subsurface Utility Exploration Test Hole
Telephone Fiber Optics — T/F —
Telephone Junction Box
Telephone Pole
Television Cable Jct Box
Television Tower
Test Wells/Bore Holes
Traffic Signal
Trash Barrel
Tree Belt
Tree Coniferous
Tree Deciduous
Tree Stumps
Triangulation Station
Underground Electric Line — P —
Underground Gas Line — G —
Underground High Pressure Gas Line — HG —
Underground Sanitary Sewer — S —
Underground Storm Sewer — S —
Underground Tank
Underground Telephone Line — T —
Underground Television Cable — TV —
Underground Water Line — W —
Warning Sign One Post
Warning Sign Two Post
Water Fountain
Water Hydrant
Water Meter
Water Tower
Water Valve
Water Well
Weir Rock
Windmill
Wingwall
Witness Corner

State and National Line
County Line
Section Line
Quarter Line
Sixteenth Line
Property Line
Construction Line
R. O. W. Line
New R. O. W. Line
Cut and Fill Limits
Control of Access
New Control of Access
Proposed ROW (After Property Disposal)

Plot Scale - 1:200
Plotted From - tesf12141
File - U:\rdr\prj\stan03j4\topog.dgn

STATE OF SOUTH DAKOTA	PROJECT	SHEET	TOTAL SHEETS
	NH 0014(186)225	B11	B35

Plotting Date: 05/19/2014 Revised 2-13 -2014 (BT)

277+93 - 34' R
Retain Entrance

277+63 - 60' L (0.5 ac)
Install 18" - 80' Polymer Coated CMP (14ga)
& 2 Safety Ends w/out bars

Sec. 19 - T5N - R31E

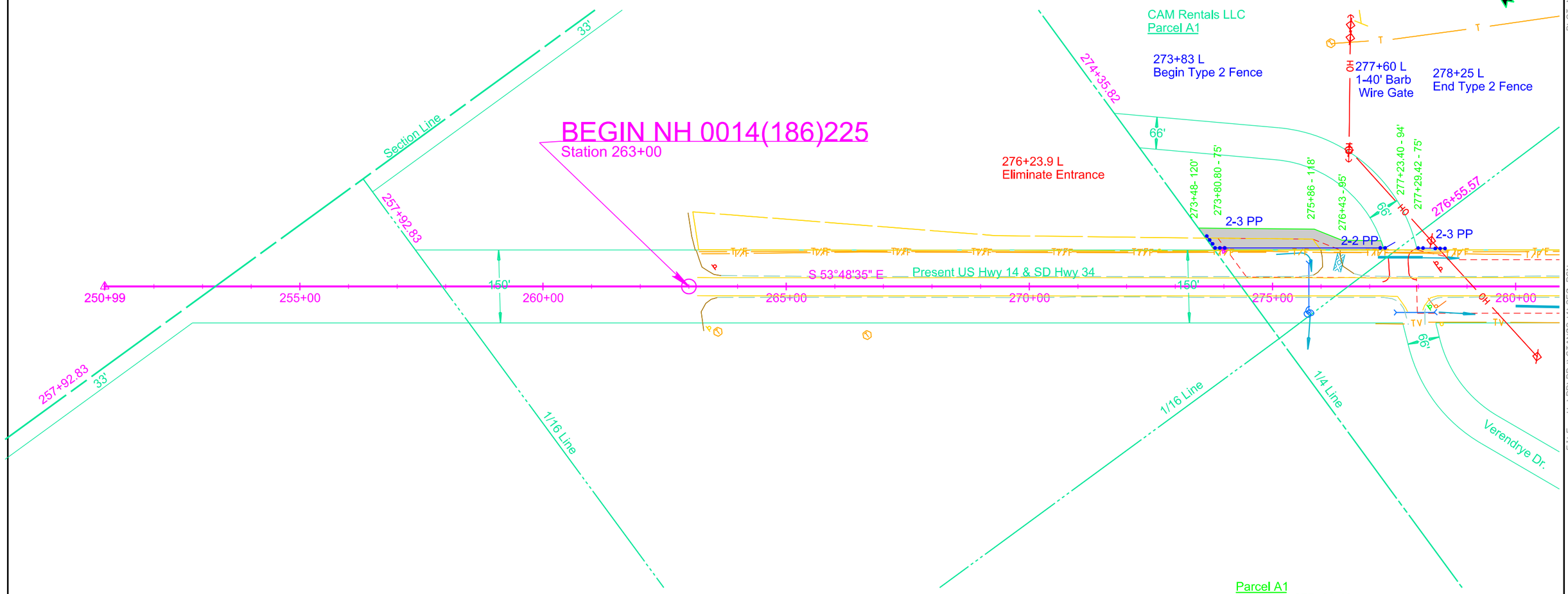

Parcel A1
273+48 to 277+29.42
Temporary Easement for
Cut & Fill containing 0.3 ac,
more or less

PLOT SCALE - 1:200
PLOTTED FROM - TRSF12141
PLOT NAME - 11
FILE - U:\RD\PRJ\STAN\03J4\250.DGN

STATE OF SOUTH DAKOTA	PROJECT	SHEET	TOTAL SHEETS
	NH 0014(186)225	B12	B35

Plotting Date: 05/19/2014

Plot Scale - 1:200

Plotted From - trsf12141

File - U:\rdlep\stan03\4250v.dgn

STATE OF SOUTH DAKOTA	PROJECT	SHEET	TOTAL SHEETS
	NH 0014(186)225	B13	B35

Plotting Date: 05/19/2014 Revised 4-14 -2014 (BT)

289+35
Take Out 24" - 42' CMP
Downspout & 1 RC to CM
Transition & 1 CM Flared End
(Incidental Work Grading)

289+35 L (16 ac)
Install 24" - 32' Polymer Coated CMP Downspout
(16', 16', Str Pipe) (14Ga)
& 1 - RC to CM Transition
& 2 - 15° Elbows
& 1 Flared End

280+00 - 40' R to 284+76 - 54.7' R
Install Underdrain
Install 4" Slotted PE Drainage Tubing

281+00 - 45' L to 286+74 - 54.6' L
Install Underdrain
Install 4" Slotted PE Drainage Tubing

284+76 - 54.7' R to 285+25 - 25.60' R
Install Underdrain
Install 4" Solid PE Drainage Tubing

286+74 - 54.6' L to 287+25 - 52' L
Install Underdrain
Install 4" Solid PE Drainage Tubing

291+79.4 - 139.6 L to 292+99.8 - 146.3' L
Take Out 36" - 108' CMP Downspout,
& 2 Elbows & 2 Flared Ends

289+00 - 70' L to 293+06 - 94.6' L
Install Underdrain
Install 4" Slotted PE Drainage Tubing

293+06 - 94.6' L to 293+50 - 121' L
Install Underdrain
Install 4" Solid PE Drainage Tubing

291+00 - 40' R to 296+00.05 - 40' R
Install Underdrain
Install 4" Slotted PE Drainage Tubing

297+97 L (17 ac)
Reset Salvage 24" - 24' RCP
Install 24" - 56' RCP
Reset Salvage Flared End

292+15 L
Retain Entrance

297+97
Remove for Reset 24" - 24' RCP
& 1 Flared End for Reset
(Incidental Work Grading)

299+56.7 - 160.5' L to 301+17.3 - 162.8' L (74 ac)
Install 36" - 164' Polymer Coated CMP Downspout
(18', 122', & 24' Str Pipe) (14Ga)
& 2 - 7.5° Elbows
& 2 Flared Ends
& 1 Thrust Block

291+26.7 - 143.8' L to 293+63.6 - 143.6' L (42 ac)
Install 36" - 224' Polymer Coated CMP Downspout
(22', 178', & 24' Str Pipe) (14Ga)
& 2 - 10° Elbows
& 2 Flared Ends
& 1 Thrust Block

307+78.9 to 308.84.2 -170' L
Take Out 42" - 102' CMP Downspout
& 2 Elbows, & 2 Flared Ends

293+00 - 80' L to 301+28 - 135' L
Install Underdrain
Install 4" Slotted PE Drainage Tubing

301+28 - 135' L to 301+50 - 145' L
Install Underdrain
Install 4" Solid PE Drainage Tubing

307+05.8 - 171.5' L to 308+94.4 - 171.1' L (99 ac)
Install 42" - 162' Polymer Coated CMP Downspout
(30', 112', & 20' Str Pipe) (14Ga)
& 2 - 10° Elbows
& 2 Flared Ends
& 1 Thrust Block

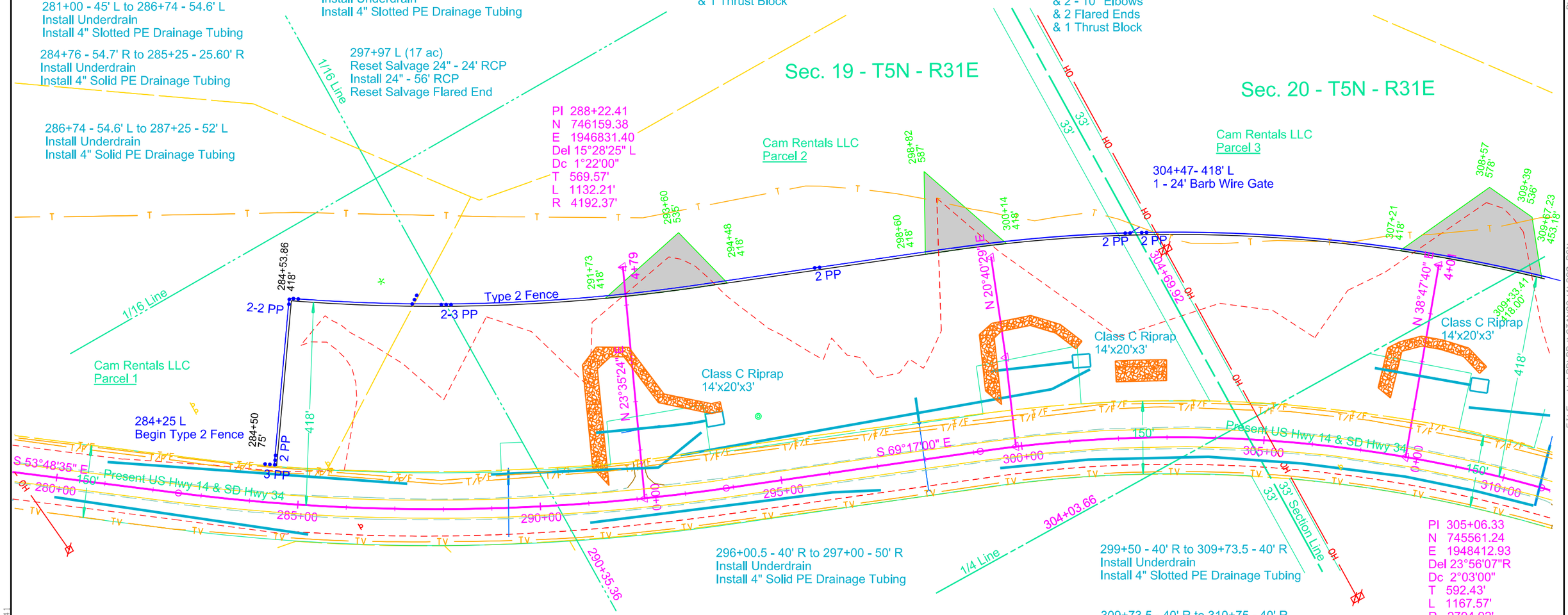

296+00.5 - 40' R to 297+00 - 50' R
Install Underdrain
Install 4" Solid PE Drainage Tubing

299+50 - 40' R to 309+73.5 - 40' R
Install Underdrain
Install 4" Slotted PE Drainage Tubing

309+73.5 - 40' R to 310+75 - 40' R
Install Underdrain
Install 4" Solid PE Drainage Tubing

Parcel 2
291+73 to 294+48 L
Temporary Easement for
Cut & Fill containing
0.3 ac, more or less

Parcel 2
298+60 to 300+14 L
Temporary Easement for
Cut & Fill containing
0.3 ac, more or less

Parcel A3
Omitted

Parcel 3
307+21 to 309+67 L
Temporary Easement for
Cut & Fill containing
0.6 ac, more or less

PLOT SCALE - 1:200
PLOT NAME - 13
PLOTTED FROM - TRSF12141
FILE - U:\RDV\PROJ\STAN03J4\280.DGN

STATE OF SOUTH DAKOTA	PROJECT	SHEET	TOTAL SHEETS
	NH 0014(186)225	B14	B35

Plotting Date: 05/19/2014 Revised 2 - 06 - 2014(BT)

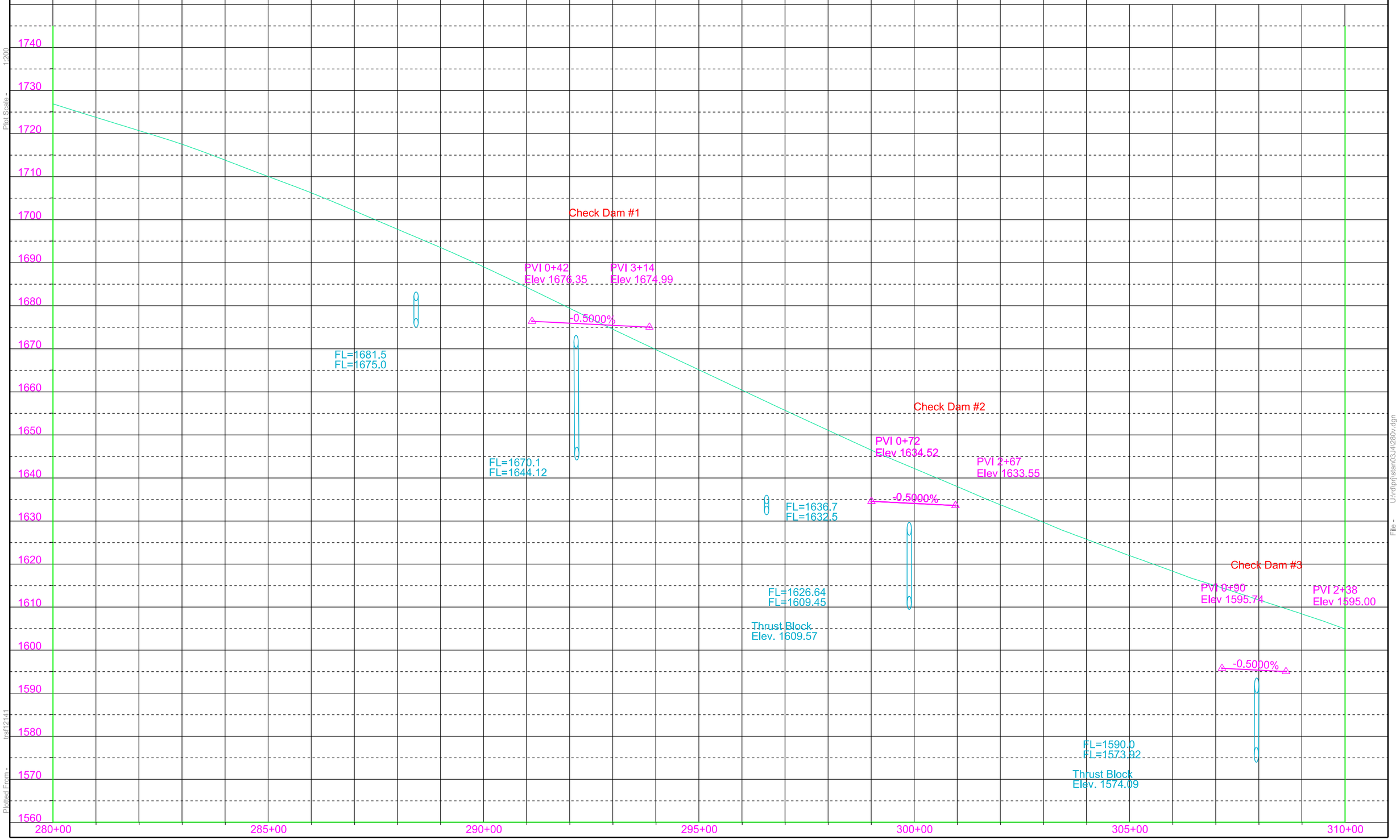

Plot Scale - 1:200

Plotted From - tsf12141

File - U:\rdip\stan03\4280v.dgn

STATE OF SOUTH DAKOTA	PROJECT	SHEET	TOTAL SHEETS
	NH 0014(186)225	B15	B35

Plotting Date: 05/19/2014

Revised 5 - 8 - 2014 (BT)

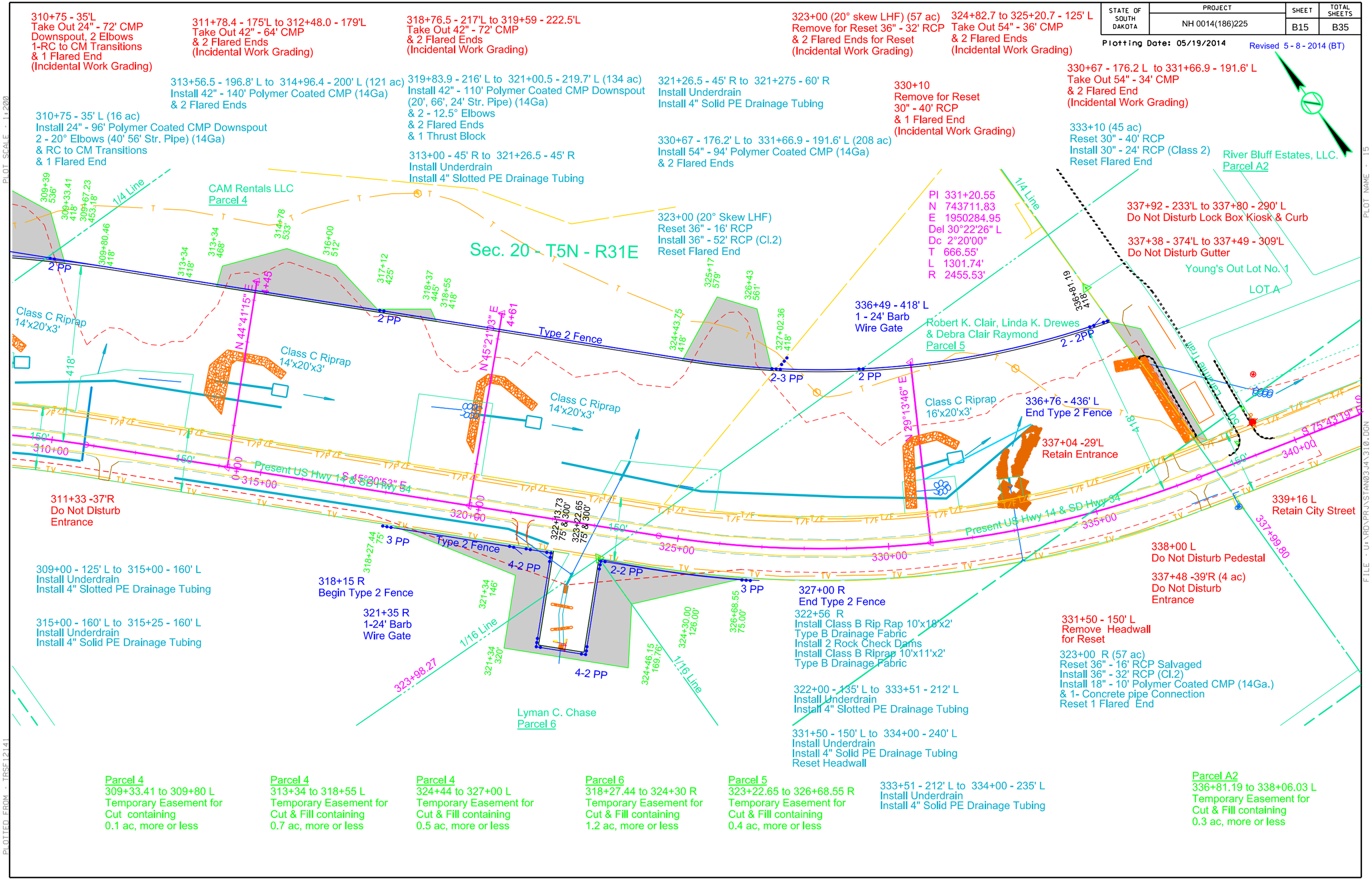

STATE OF SOUTH DAKOTA	PROJECT	SHEET	TOTAL SHEETS
	NH 0014(186)225	B16	B35

Plotting Date: 05/19/2014 Revised 2 - 06 - 2014(BT)

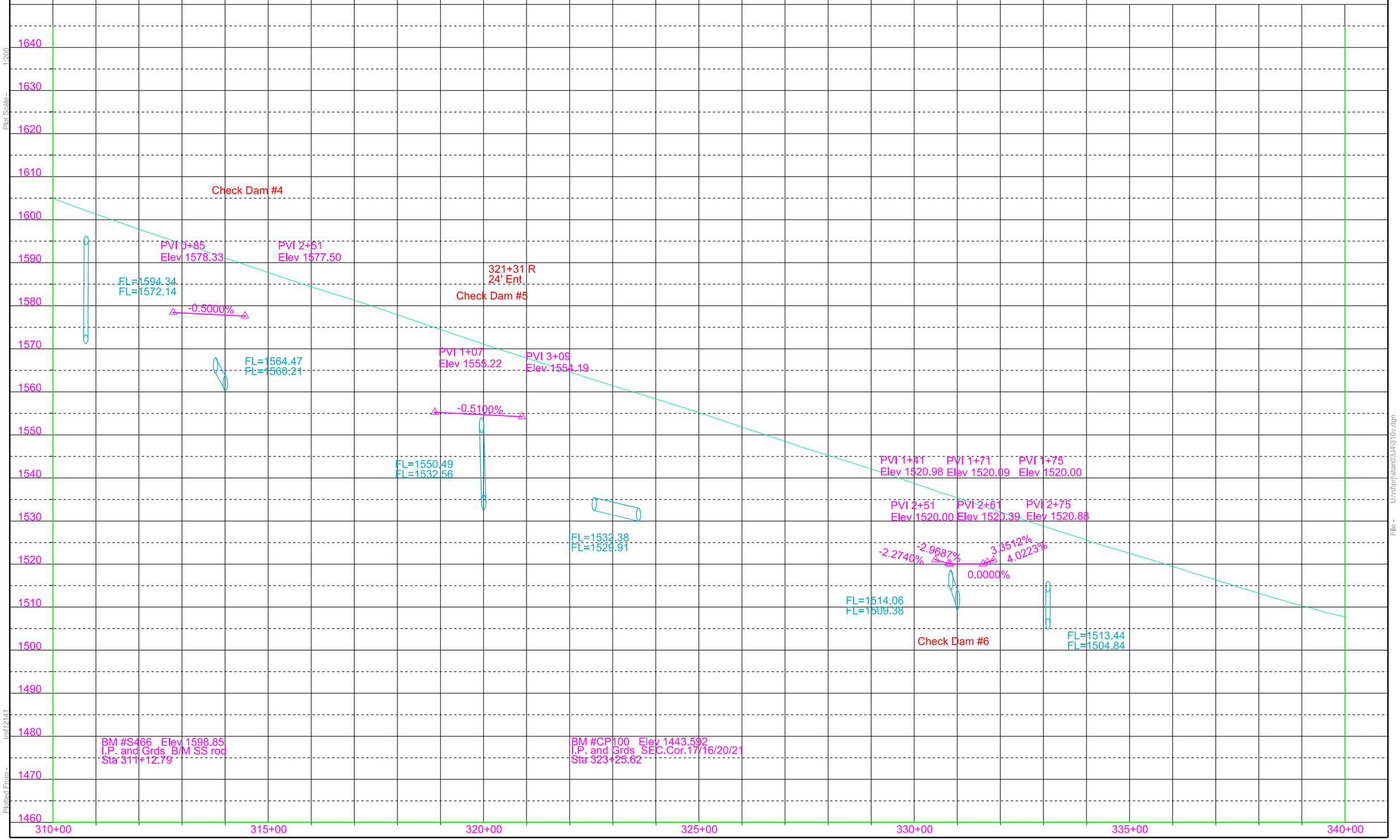

Plot Scale - 1:200

Plotted From - trsf1241

File - U:\rdlp\stand03\4310v.dgn

STATE OF SOUTH DAKOTA	PROJECT	SHEET	TOTAL SHEETS
	NH 0014(186)225	B17	B35

Plotting Date: 05/19/2014 Revised 2-10 -2014 (BT)

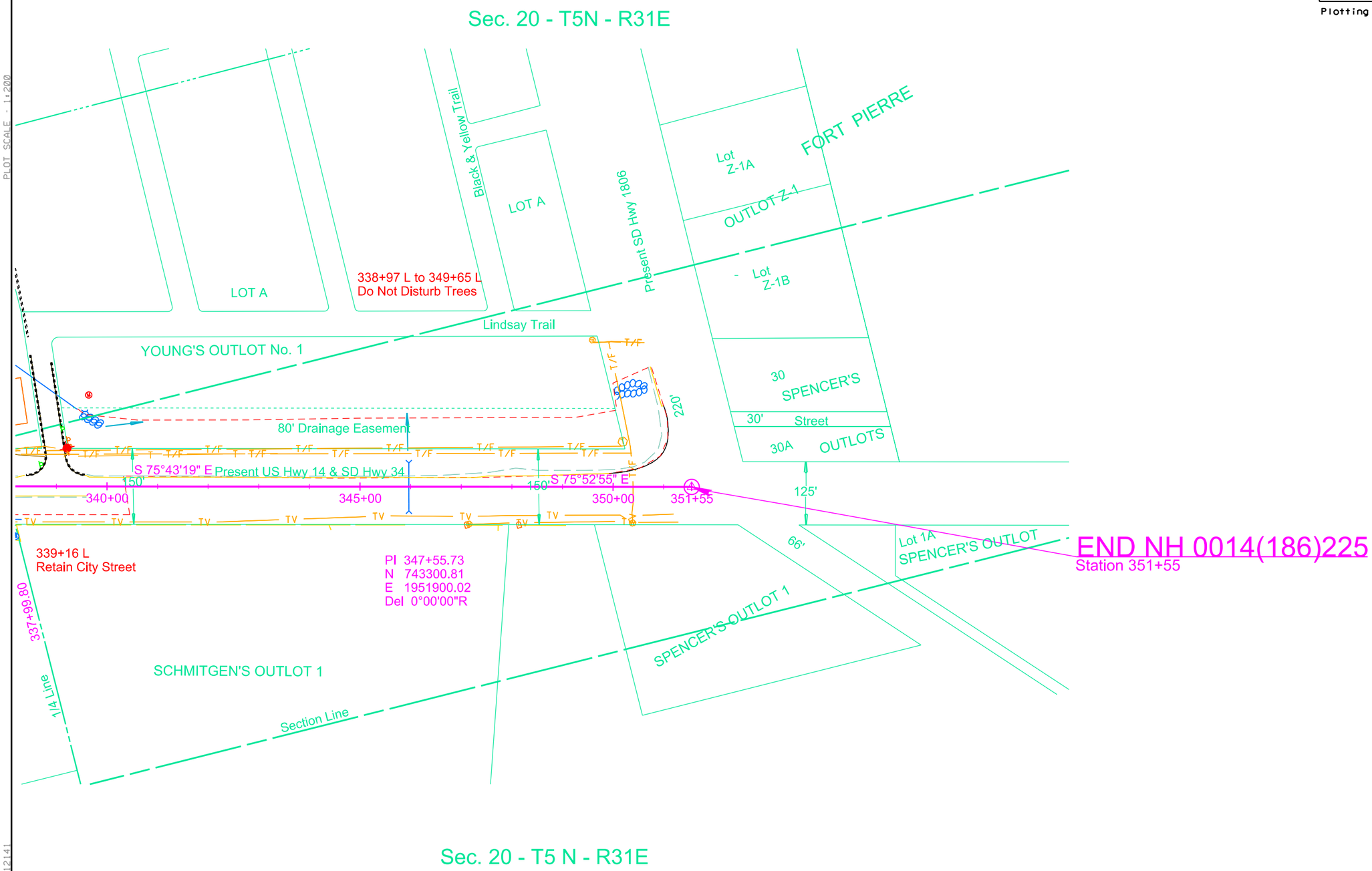

PLOT SCALE - 1:200

PLOTTED FROM - TRSF12141

PLOT NAME - 17

FILE - U:\RD\PRJ\STAN\03J4\340.DGN

STATE OF SOUTH DAKOTA	PROJECT	SHEET	TOTAL SHEETS
	NH 0014(186)225	B18	B35

Plotting Date: 05/19/2014

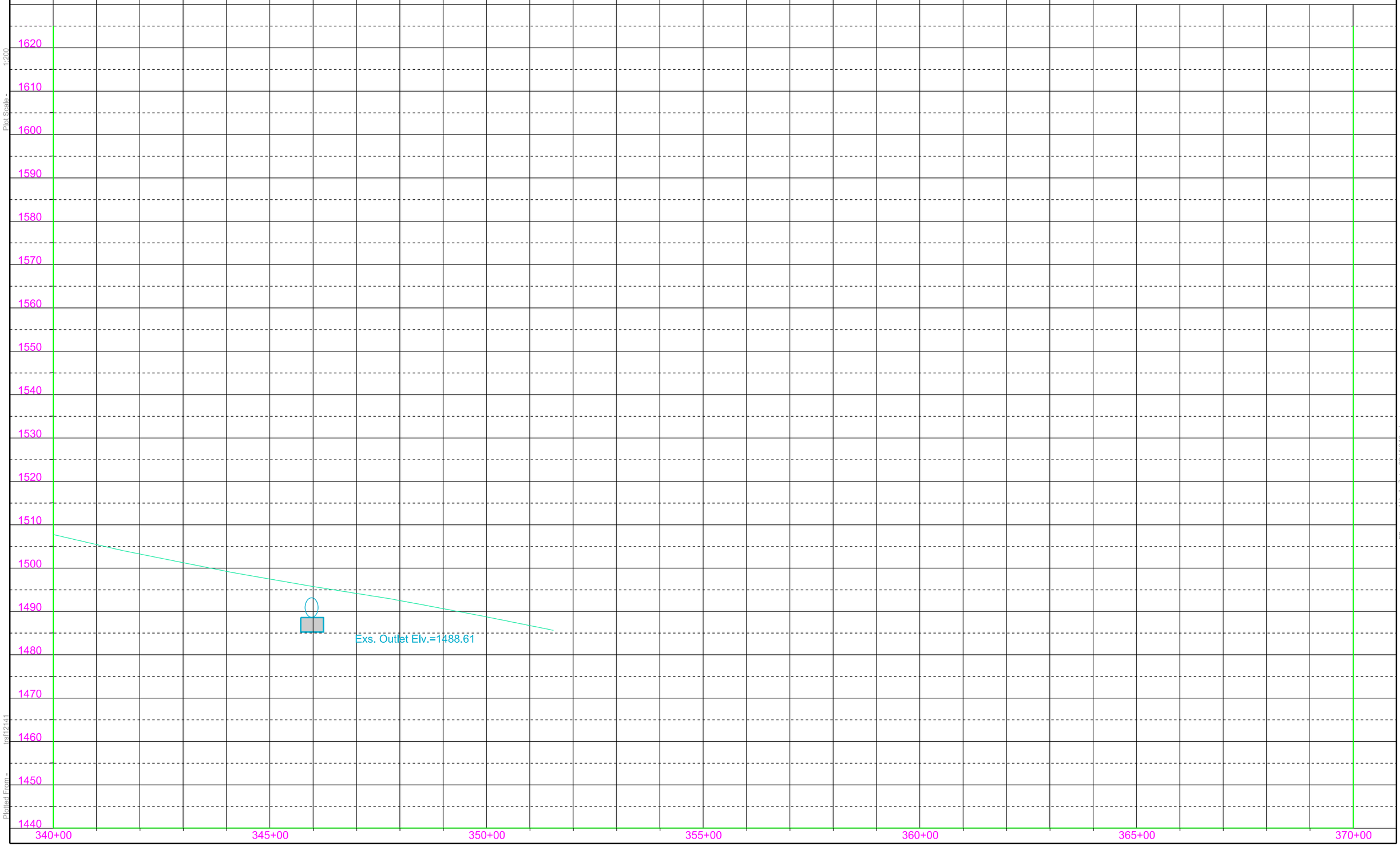

Plot Scale - 1:200

Plotted From - trsf12141

File - U:\rdlp\rlstan\0343\340v.dgn

TYPICAL UNDERDRAIN INSTALLATION

Station 322+00 to Station 331+75, Lt.

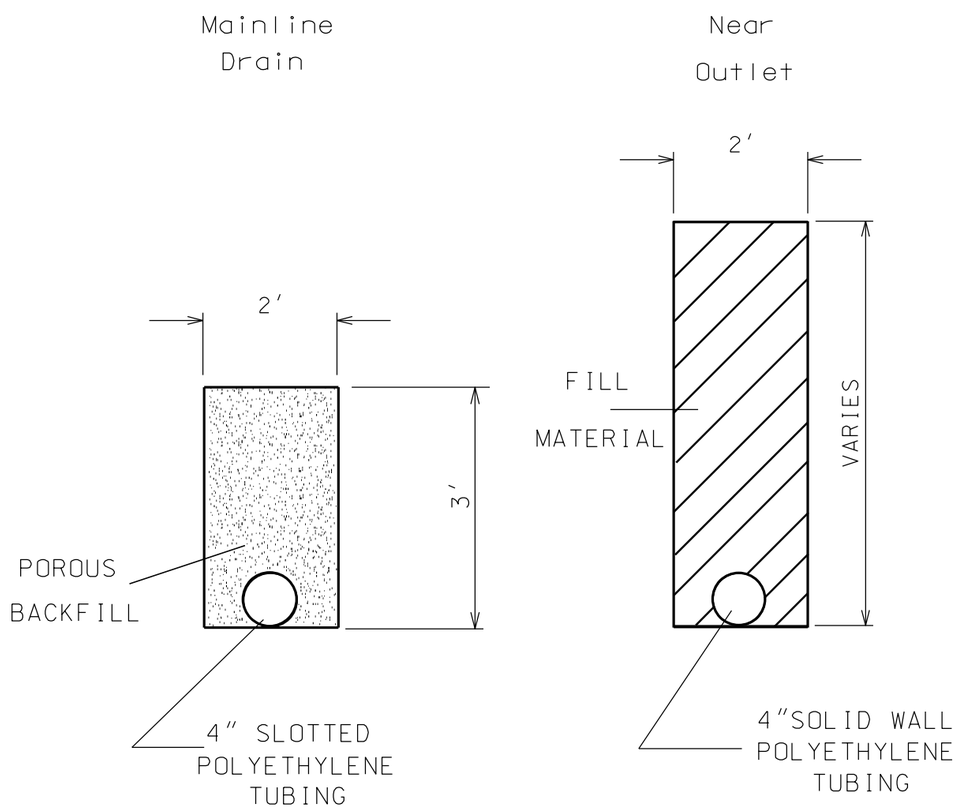

UNDERDRAINS SHALL BE CONSTRUCTED IN ACCORDANCE WITH SECTION 680, STANDARD SPECIFICATONS FOR ROADS AND BRIDGES 2004 EDITION

TYPICAL UNDERDRAIN INSTALLATION

Station 289+00 to Station 293+00, Lt.
Station 293+00 to Station 301+00, Lt.

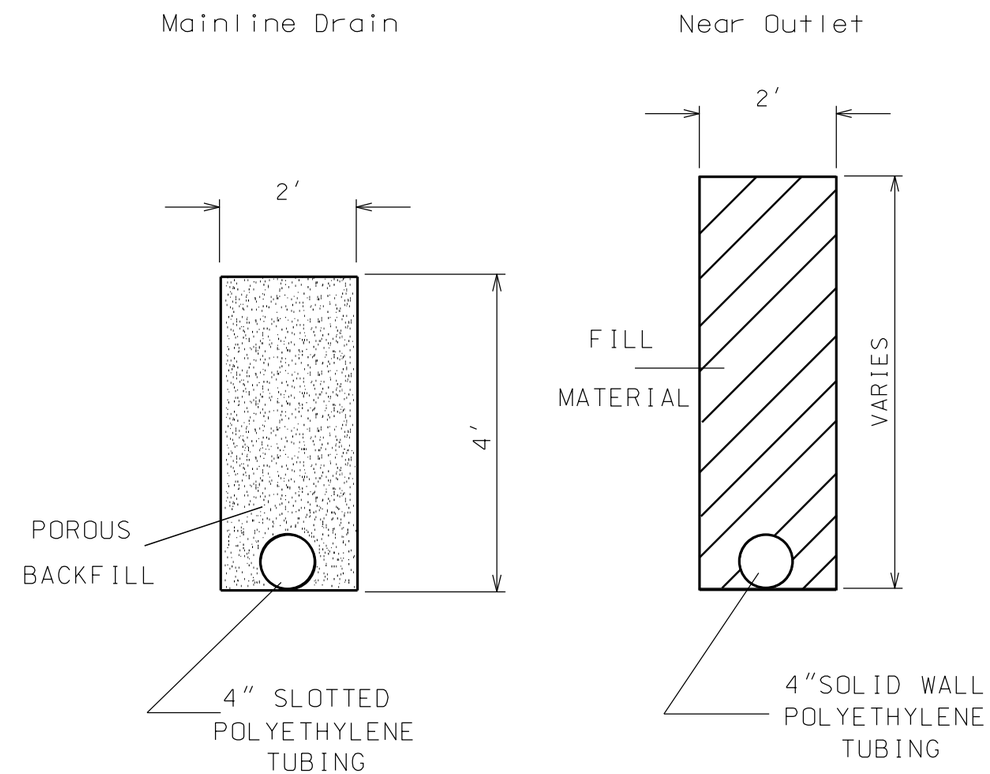

UNDERDRAINS SHALL BE CONSTRUCTED IN ACCORDANCE WITH SECTION 680, STANDARD SPECIFICATONS FOR ROADS AND BRIDGES 2004 EDITION

Plot Scale - 1:40
Plotted From - trsf12141
File - ...\prj\stan03J4\underdrains2.dgn

Plotting Date: 05/19/2014

TYPICAL UNDERDRAIN INSTALLATION

Stations 280+00 to 285+25, Rt. - 281+00 to 287+25, Lt.

291+00 to 297+00, Rt. - 299+50 to 310+75, Rt.

309+00 to 314+75, Lt. - 313+00 to 321+75, Rt.

Mainline Drain

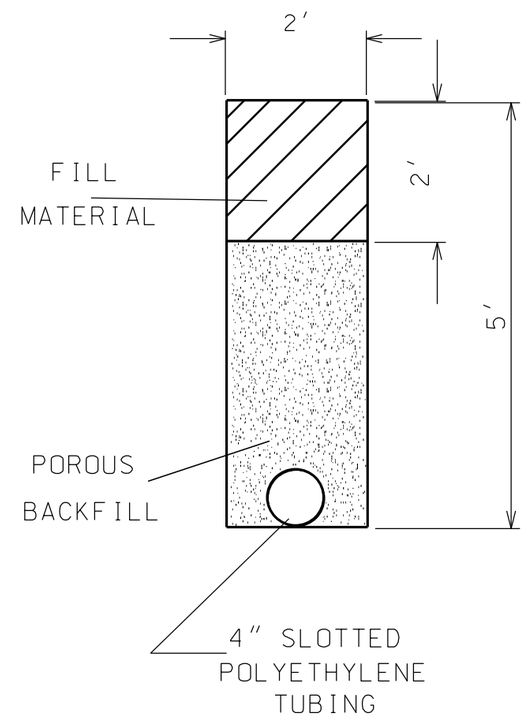

Near Outlet

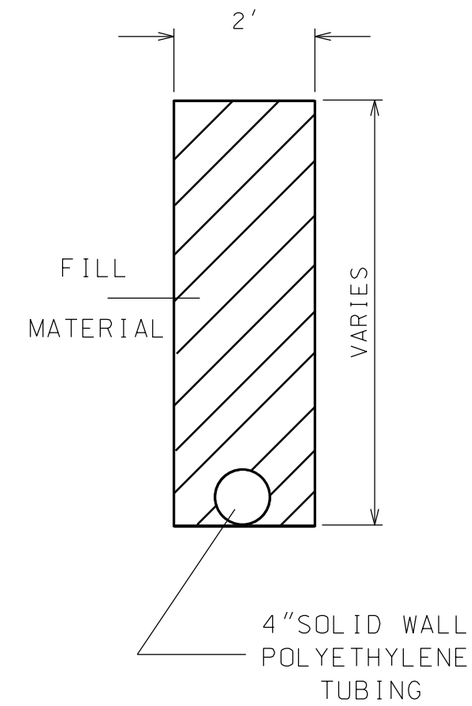

UNDERDRAINS SHALL BE CONSTRUCTED IN ACCORDANCE WITH SECTION 680, STANDARD SPECIFICATONS FOR ROADS AND BRIDGES 2004 EDITION

Plot Scale - 1:40

Plotted From - trsf12141

File - ...\prj\stan03J4\underdrains2.dgn

STATE OF	PROJECT	SHEET NO.	TOTAL SHEETS
S.D.	NH 0014(186)225	B21	B35

REINFORCING SCHEDULE
(For One Inlet or One Outlet Cutoff Wall)

Mk.	No.	Size	Length	Type	Bending Details
a1	4	5	8' - 9"	Str.	
a2	4	4	8' - 9"	Str.	
e1	18	4	5' - 0"	S10	

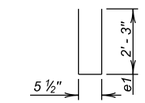

Type S10

NOTE:
All dimensions are out to out of bars.

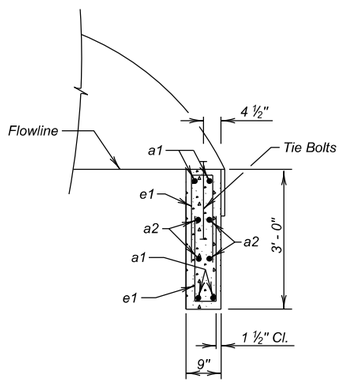

SEC. A-A

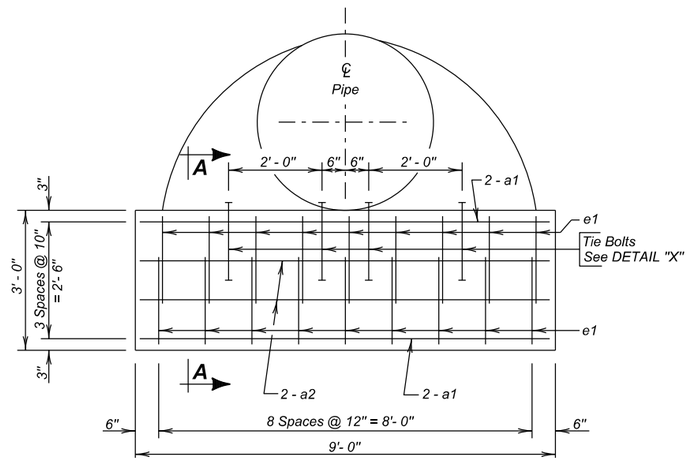

ELEVATION
(Inlet or Outlet Cutoff Wall)

SPECIFICATIONS-

Construction Specifications: South Dakota Standard Specifications for Roads and Bridges, 2004 Edition and Required Provisions, Supplemental Specifications and/or Special Provisions as included in the Proposal.

GENERAL NOTES-

1. Concrete shall be Class M6 in conformance with Section 462.
2. Reinforcing Steel shall conform to ASTM A615 Grade 60.
3. Use 1 ½" clear cover on all reinforcing steel except as shown.
4. All exposed edges shall be chamfered ¾".
5. Tie Bolts shall be 1"Ø x 20" A307 bolts with heavy hex nuts and 2 washers. Bolts, nuts and washers shall be galvanized in accordance with ASTM A153 or ASTM F2329 as applicable. Four bolts, or equivalent as approved by the Engineer, are required for each cutoff wall. Embed bolts in concrete cutoff wall as detailed.
6. Cutoff wall dimensions and quantities shown are based on S. D. Standard Plate No. 450.35. For CMP Flared Ends with differing dimensions, adjust cutoff wall as required and submit revised details to the Office of Bridge Design, thru proper channels, for approval. Minimum cutoff wall depth below Flowline is 3' - 0". Payment will be for plans quantities unless changes are ordered by the Engineer.
7. All costs for furnishing and installing the galvanized Tie Bolts shall be incidental to the other contract items.

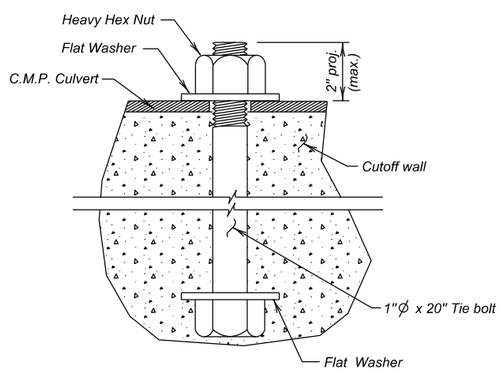

DETAIL "X"

ESTIMATED QUANTITIES
(for one cutoff wall)

ITEM	Class M6 Concrete	Reinforcing Steel	★ Structure Excavation, Misc.
UNI T	Cu. Yd.	Lb.	Cu. Yd.
30" to 36" C.M.P.	0.8	120	0.8

★ Quantity based on neat line excavation to the dimensions of the cutoff wall below the bottom of the pipe. Payment will be for plans quantity regardless of actual volume excavated.

3'- 0" CUTOFF WALL DETAILS
FOR
30" TO 36" C.M.P. FLARED ENDS
0° SKEW
S. D. DEPT. OF TRANSPORTATION
FEBRUARY 2010

1 OF 1

PLANS BY :
OFFICE OF BRIDGE DESIGN, SOUTH DAKOTA DEPARTMENT OF TRANSPORTATION

DESIGNED BY	DRAWN BY	CHECKED BY	
JMH STAN03J4	BT	BB	Kevin N. Goeden BRIDGE ENGINEER

STATE OF	PROJECT	SHEET NO.	TOTAL SHEETS
S.D.	NH 0014(186)225	B22	B35

REINFORCING SCHEDULE
(For One Thrust Block)

Mk.	No.	Size	Length	Type	Bending Details
G1	4	4	11' - 3"	T2	
J1	8	4	4' - 0"	Str	
J2	8	4	2' - 0"	17A	

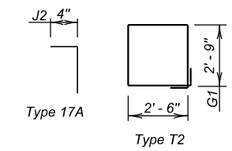

NOTE:
All dimensions are out to out of bars.

ESTIMATED QUANTITIES
(For One Thrust Block)

ITEM	Class M6 Concrete	Reinforcing Steel	★ Structure Excavation, Misc.
UNIT	Cu. Yd.	Lb.	Cu. Yd.
36" Thrust Block	1.1	62	0.8

SPECIFICATIONS:

1. Design Specification: AASHTO LRFD Bridge Design Specifications, 2012 Edition with 2013 Interims.
2. Construction Specifications: South Dakota Specifications for Roads and Bridges, 2004 Edition and Required Provisions, Supplemental Specifications and/or Special Provisions as included in the Proposal.

GENERAL NOTES:

1. Concrete shall be Class M6 in conformance with Section 462.
2. All reinforcing steel shall conform to ASTM A615 Grade 60.
3. All exposed edges shall be chamfered ¾".
4. Thrust block must be cast around corrugated metal downspout.
5. Tie Bolts shall be 1"Ø x 12" A307 bolts with heavy hex nuts and 2 washers. Bolts, nuts and washers shall be galvanized in accordance with ASTM A153 or ASTM F2329 as applicable. Three bolts, or equivalent as approved by the Engineer, are required for each thrust block. Embed bolts in concrete thrust block as detailed.
6. All costs for furnishing and installing the galvanized Tie Bolts shall be incidental to the other contract items.

★ 7. Structure Excavation, Misc. is the volume of excavation for thrust block below pipe invert. Payment will be for plans quantity regardless of actual volume excavated.

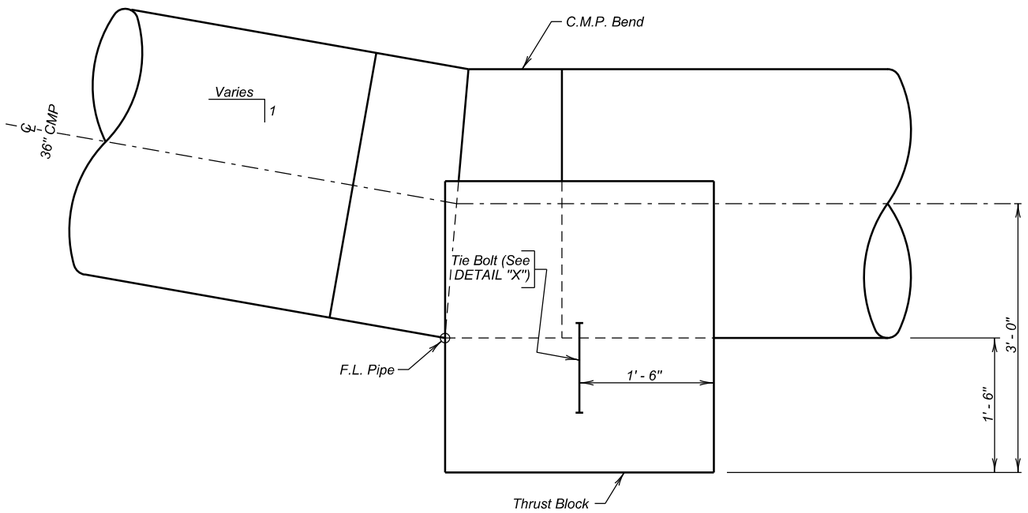

THRUST BLOCK DETAIL

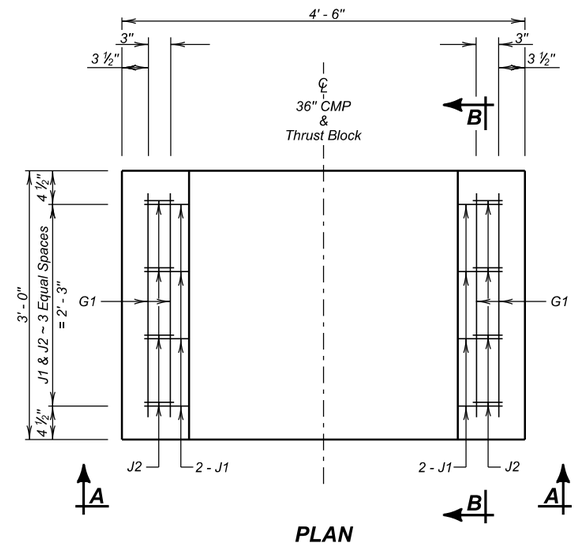

PLAN

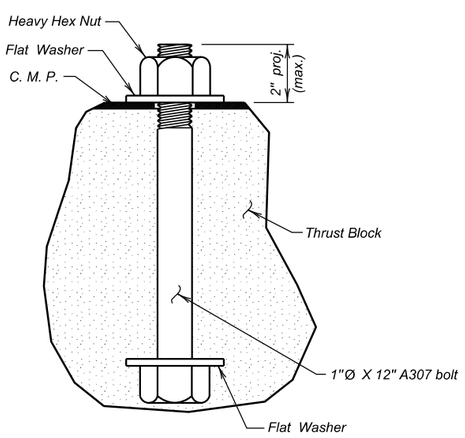

DETAIL "X"

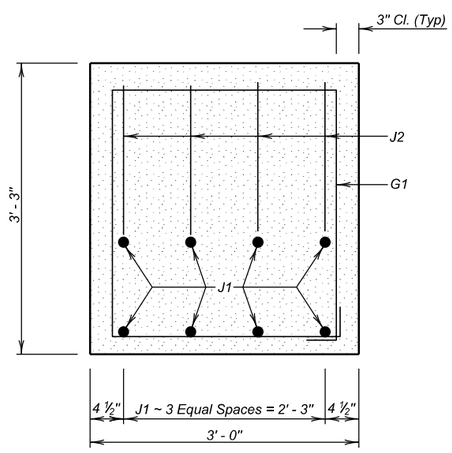

SEC. B - B

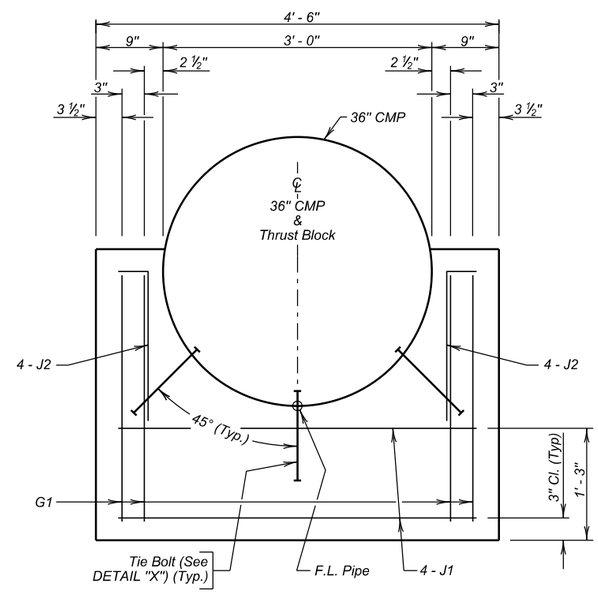

VIEW A - A

DETAILS
FOR
36" C.M.P. THRUST BLOCK

PCN 03J4 NH 0014(186)225

STANLEY COUNTY
S. D. DEPT. OF TRANSPORTATION
SEPTEMBER 2013

1 OF 1

PLANS BY :
OFFICE OF BRIDGE DESIGN, SOUTH DAKOTA DEPARTMENT OF TRANSPORTATION

DESIGNED BY	DRAWN BY	CHECKED BY	
JMH STAN03J4	BT	BB	Kevin N. Goeden BRIDGE ENGINEER

STATE OF	PROJECT	SHEET NO.	TOTAL SHEETS
S.D.	NH 0014(186)225	B23	B35

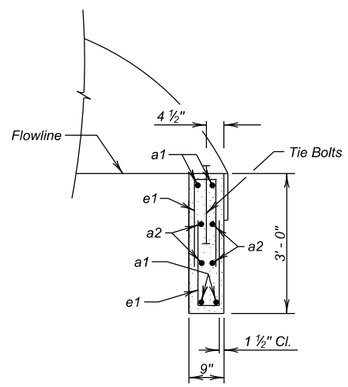

SEC. A - A

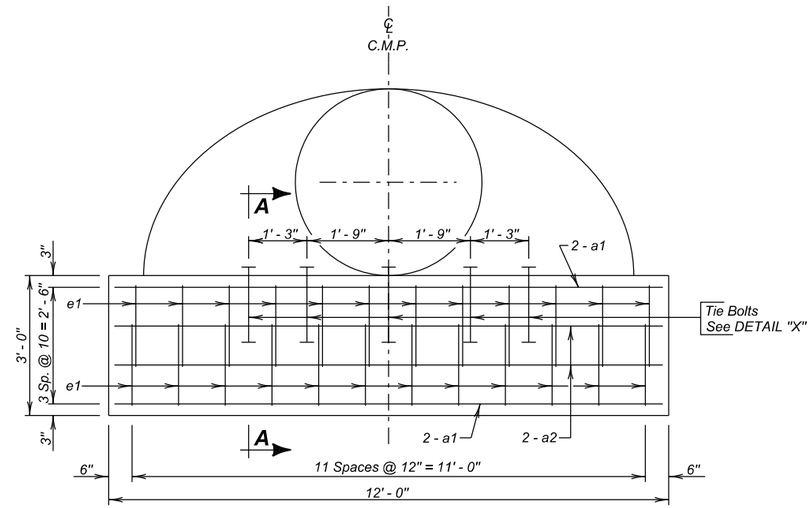

ELEVATION
(Inlet or Outlet Cutoff Wall)

REINFORCING SCHEDULE
(For One Inlet or One Outlet Cutoff Wall)

Mk.	No.	Size	Length	Type	Bending Details
a1	4	5	11' - 9"	Str.	
a2	4	4	11' - 9"	Str.	
e1	24	4	5' - 0"	S10	

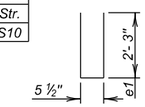

Type S10

NOTE:
All dimensions are out to out of bars.

SPECIFICATIONS -

Construction Specifications: South Dakota Standard Specifications for Roads and Bridges, 2004 Edition and Required Provisions, Supplemental Specifications and/or Special Provisions as included in the Proposal.

GENERAL NOTES -

1. Concrete shall be Class M6 in conformance with Section 462.
2. Reinforcing Steel shall conform to ASTM A615 Grade 60.
3. Use 1 ½" clear cover on all reinforcing steel except as shown.
4. All exposed edges shall be chamfered ¾".
5. Tie Bolts shall be 1"∅ x 20" A307 bolts with heavy hex nuts and 2 washers. Bolts, nuts and washers shall be galvanized in accordance with ASTM A153 or ASTM F2329 as applicable. Five bolts, or equivalent as approved by the Engineer, are required for each cutoff wall. Embed bolts in comcrete cutoff wall as detailed.
6. Cutoff wall dimensions and quantities shown are based on S. D. Standard Plate No. 450.35. For CMP Flared Ends with differing dimensions, adjust cutoff wall as required and submit revised details to the Office of Bridge Design, thru proper channels, for approval. Minimum cutoff wall depth below Flowline is 3' - 0". Payment will be for plans quantities unless changes are ordered by the Engineer.
7. All costs for furnishing and installing the galvanized Tie Bolts shall be incidental to the other contract items.

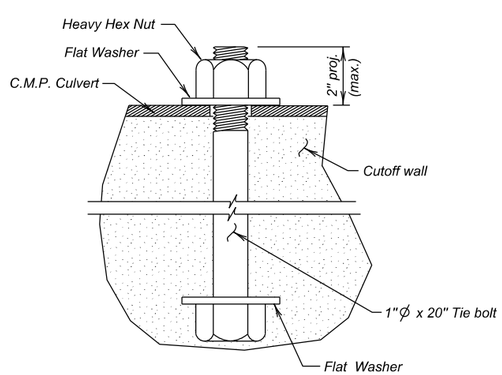

DETAIL "X"

INFORMATIONAL QUANTITIES
(for one cutoff wall)

ITEM	Class M6 Concrete	Reinforcing Steel	★Structure Excavation, Misc.
UNIT	Cu. Yd.	Lb.	Cu. Yd.
42" to 54" C.M.P.	1.0	161	1.0

★ Quantity based on neat line excavation to the dimensions of the cutoff wall below the bottom of the pipe. Payment will be for plans quantity regardless of actual volume excavated.

3'- 0" CUTOFF WALL DETAILS
FOR
42" TO 54" C.M.P. FLARED ENDS
0° SKEW
S. D. DEPT. OF TRANSPORTATION
FEBRUARY 2010

1 OF 1

PLANS BY :
OFFICE OF BRIDGE DESIGN, SOUTH DAKOTA DEPARTMENT OF TRANSPORTATION

DESIGNED BY	DRAWN BY	CHECKED BY	
JMH	BT	BB	Kevin N. Goeden
STAN03J4			BRIDGE ENGINEER

STATE OF	PROJECT	SHEET NO.	TOTAL SHEETS
S.D.	NH 0014(186)225	B24	B35

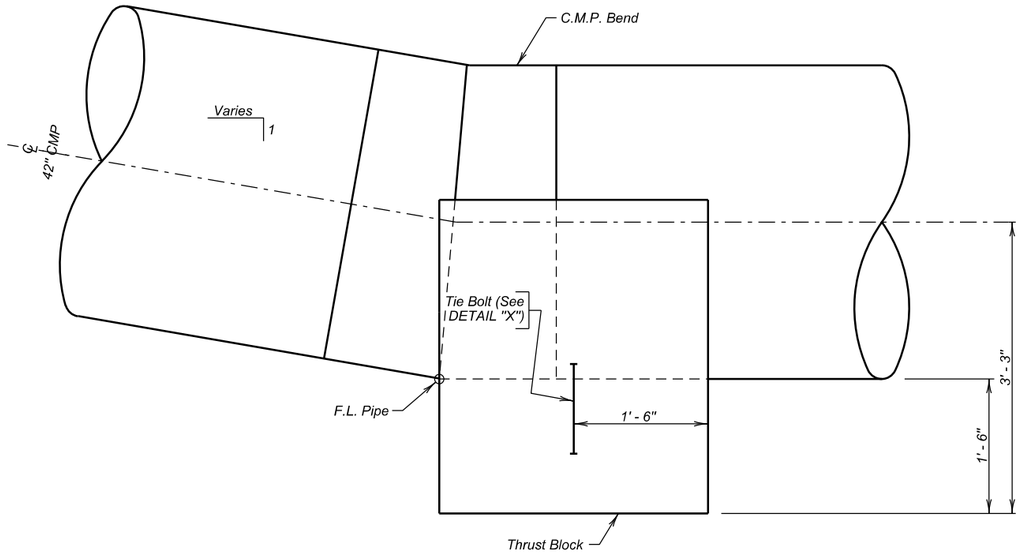

THRUST BLOCK DETAIL

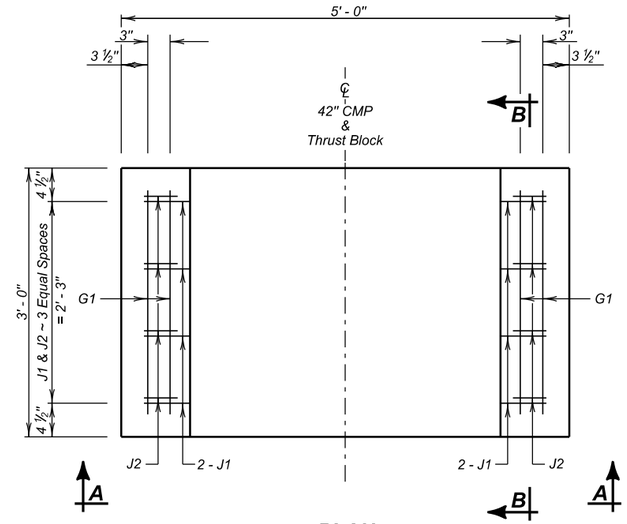

PLAN

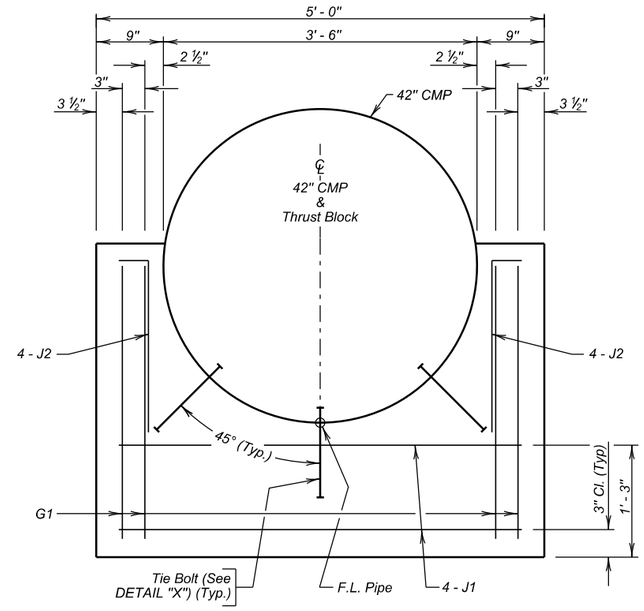

VIEW A - A

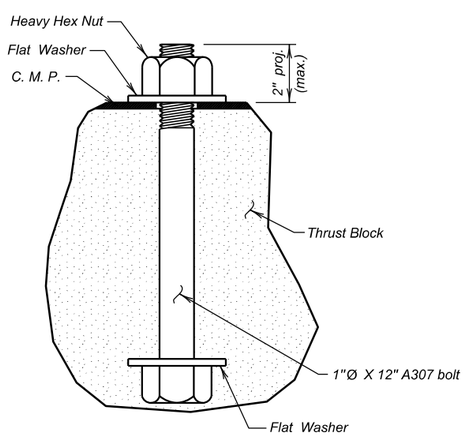

DETAIL "X"

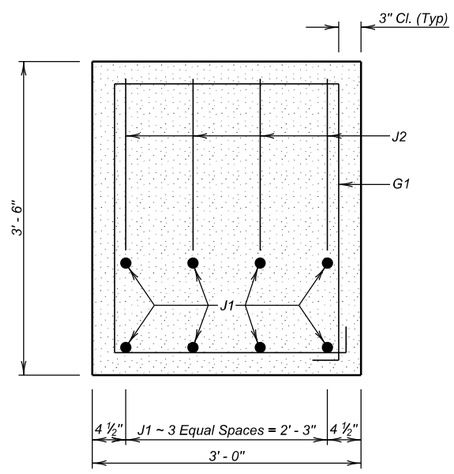

SEC. B - B

REINFORCING SCHEDULE

(For One Thrust Block)

Mk.	No.	Size	Length	Type
G1	4	4	11' - 9"	T2
J1	8	4	4' - 6"	Str
J2	8	4	2' - 3"	17A

Bending Details

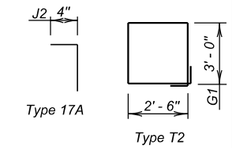

NOTE:
All dimensions are out to out of bars.

ESTIMATED QUANTITIES

(For One Thrust Block)

ITEM	Class M6 Concrete	Reinforcing Steel	★ Structure Excavation, Misc.
UNIT	Cu. Yd.	Lb.	Cu. Yd.
42" Thrust Block	1.3	67	0.8

SPECIFICATIONS:

1. Design Specification: AASHTO LRFD Bridge Design Specifications, 2012 Edition with 2013 Interims.
2. Construction Specifications: South Dakota Specifications for Roads and Bridges, 2004 Edition and Required Provisions, Supplemental Specifications and/or Special Provisions as included in the Proposal.

GENERAL NOTES:

1. Concrete shall be Class M6 in conformance with Section 462.
2. All reinforcing steel shall conform to ASTM A615 Grade 60.
3. All exposed edges shall be chamfered ¾".
4. Thrust block must be cast around corrugated metal downspout.
5. Tie Bolts shall be 1"Ø x 12" A307 bolts with heavy hex nuts and 2 washers. Bolts, nuts and washers shall be galvanized in accordance with ASTM A153 or ASTM F2329 as applicable. Three bolts, or equivalent as approved by the Engineer, are required for each thrust block. Embed bolts in concrete thrust block as detailed.
6. All costs for furnishing and installing the galvanized Tie Bolts shall be incidental to the other contract items.

★ 7. Structure Excavation, Misc. is the volume of excavation for thrust block below pipe invert. Payment will be for plans quantity regardless of actual volume excavated.

DETAILS

FOR

42" C.M.P. THRUST BLOCK

PCN 03J4 NH 0014(186)225

STANLEY COUNTY

S. D. DEPT. OF TRANSPORTATION

SEPTEMBER 2013

1 OF 1

PLANS BY :
OFFICE OF BRIDGE DESIGN, SOUTH DAKOTA DEPARTMENT OF TRANSPORTATION

DESIGNED BY	DRAWN BY	CHECKED BY	
JMH STAN03J4	BT	BB	Kevin N. Goeden BRIDGE ENGINEER

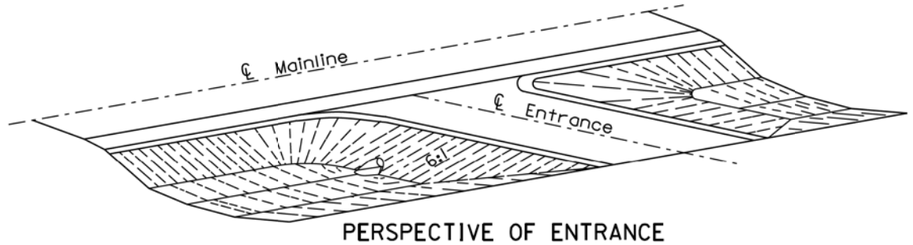

PERSPECTIVE OF ENTRANCE

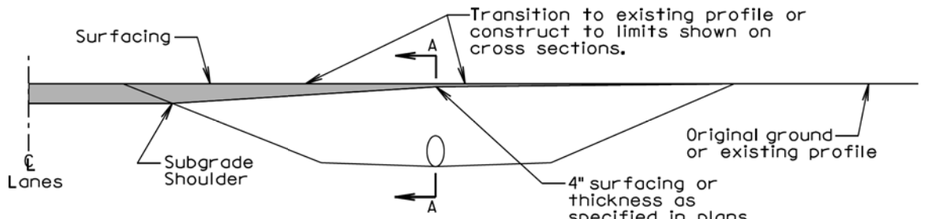

ELEVATION VIEW (ENTRANCE)

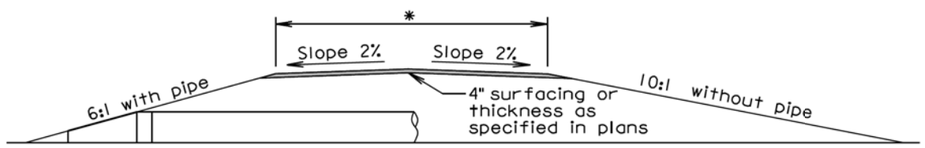

SECTION A-A (ENTRANCE)

*The finished surfacing width is stated elsewhere in the plans. The subgrade width is 4' wider than the finished surfacing width unless stated otherwise in the plans.

GENERAL NOTES:

The ditch section shown above in the perspective and elevation view is only for illustrative purposes.

A 6:1 inslope shall be constructed for an entrance when a pipe is required. A 10:1 inslope shall be constructed when a pipe is not required.

Pipe lengths shall be adjusted if necessary during construction to obtain the 6:1 slopes. For grading projects, the pipe lengths are estimated typically using a 4" thickness of surfacing directly over the subgrade above the pipe.

The transition area between the mainline inslope and the approach inslope for entrances shall be rounded to eliminate an abrupt transition.

The turning radii shall be 35' for intersecting roads and entrances unless stated otherwise in the plans.

September 6, 2013

Published Date: 2nd Qtr. 2014	SDDOT	INTERSECTING ROADS AND ENTRANCES	PLATE NUMBER 120.01
			Sheet 1 of 2

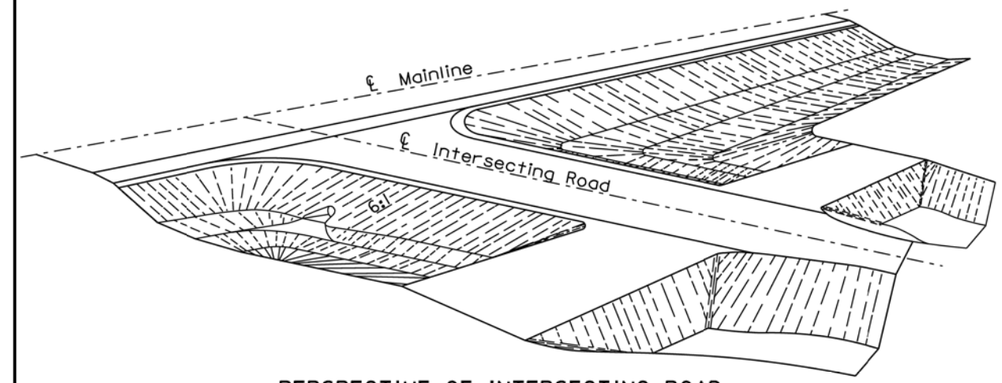

PERSPECTIVE OF INTERSECTING ROAD

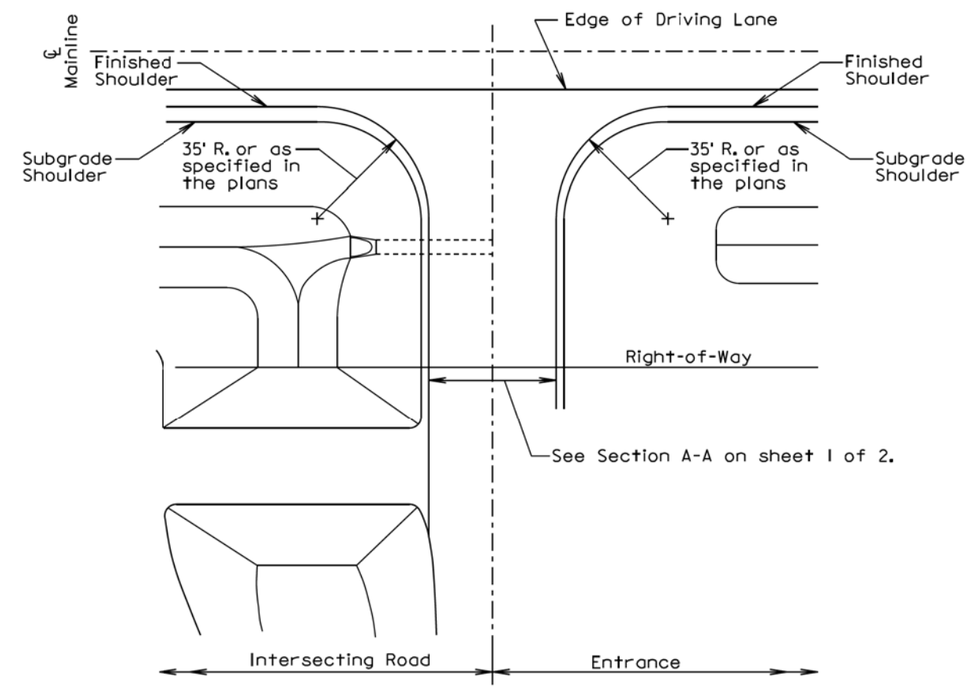

PLAN VIEW

September 6, 2013

Published Date: 2nd Qtr. 2014	SDDOT	INTERSECTING ROADS AND ENTRANCES	PLATE NUMBER 120.01
			Sheet 2 of 2

Plot Scale - 1:200
- Plotted From - trsf12141
File - ...\stan03J4\s12001_s12001_2.dgn

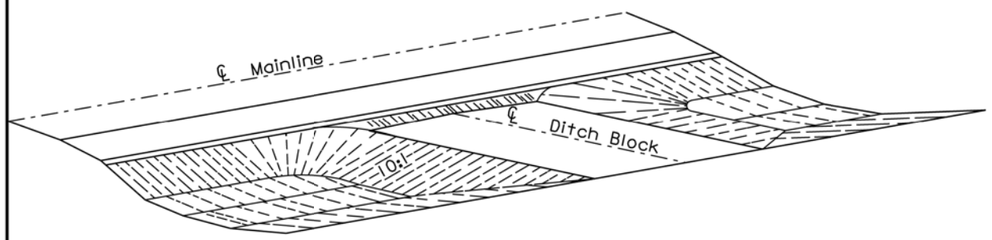

PERSPECTIVE OF DITCH BLOCK

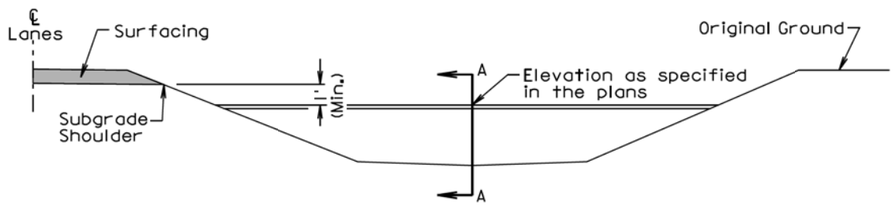

ELEVATION VIEW

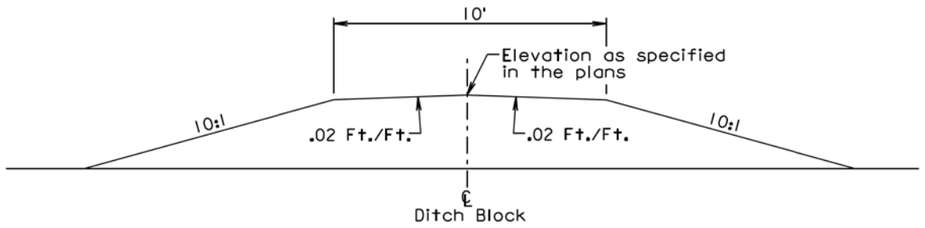

SECTION A-A

GENERAL NOTES:

The ditch section shown above in the perspective and elevation view is only for illustrative purposes.

The inslopes of the ditch block shall be 10:1 or as specified in the plans.

The transition area between the mainline inslope and the ditch block inslope shall be rounded to eliminate an abrupt transition.

February 14, 2011

Published Date: 2nd Qtr. 2014	SDDOT	DITCH BLOCK	PLATE NUMBER 120.02
			Sheet 1 of 1

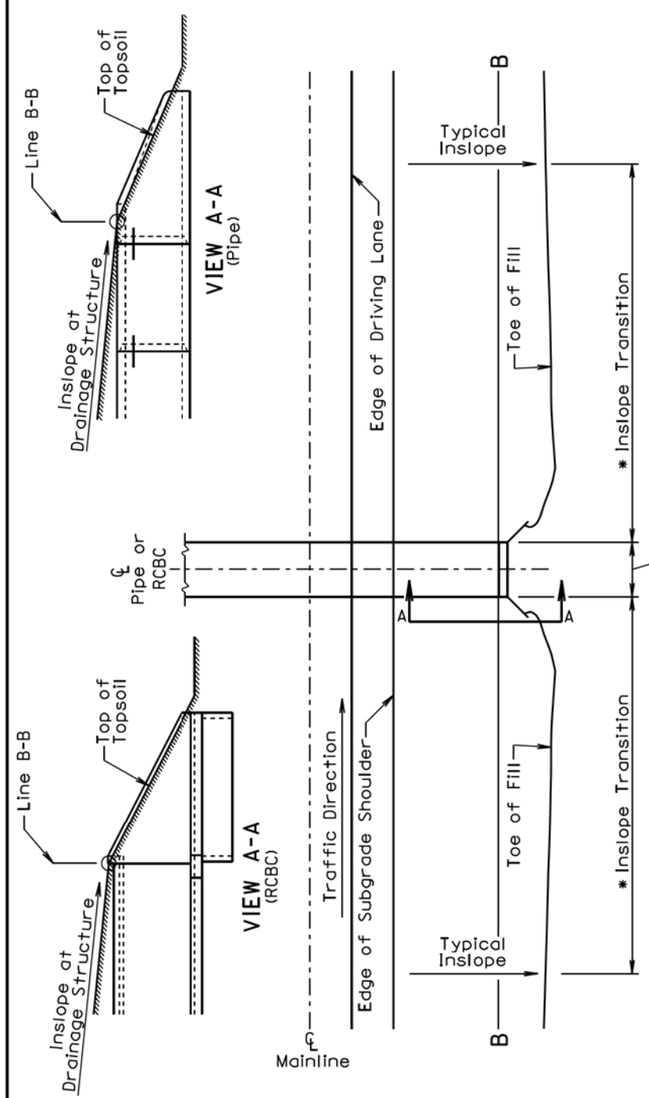

TYPE 1 INSLOPE TRANSITION

GENERAL NOTES:

This Type 1 Inslope Transition is used when the specified inslope at the drainage structure is flatter than the typical inslope and the inslope at the drainage structure is between a 4:1 slope and 6:1 slope.

Line B-B represents the clear zone line, the location where soil intercepts the parapet on an RCBC, the location where the soil intercepts the top of the pipe adjacent to the opening of the pipe end section, or may represent a change in slope.

* Transition from the typical inslope to the inslope at the drainage structure. Within the clear zone (area from edge of subgrade shoulder to line B-B) use 100' length for each 1:1 slope change. Example: transition from a 4:1 to a 6:1 would require a 200' length transition. The typical inslope outside of the clear zone shall be transitioned gradually to the slope necessary adjacent to the RCBC wing wall or pipe culvert end section within the transition length necessary for the transition within the clear zone.

February 14, 2011

Published Date: 2nd Qtr. 2014	SDDOT	INSLOPE TRANSITIONS AT PIPE CULVERTS OR REINFORCED CONCRETE BOX CULVERTS	PLATE NUMBER 120.05
			Sheet 1 of 2

Plot Scale - 1:200
Plotted From - trsf12141
File - ...\stan03J4\s12002_s12005_1.dgn

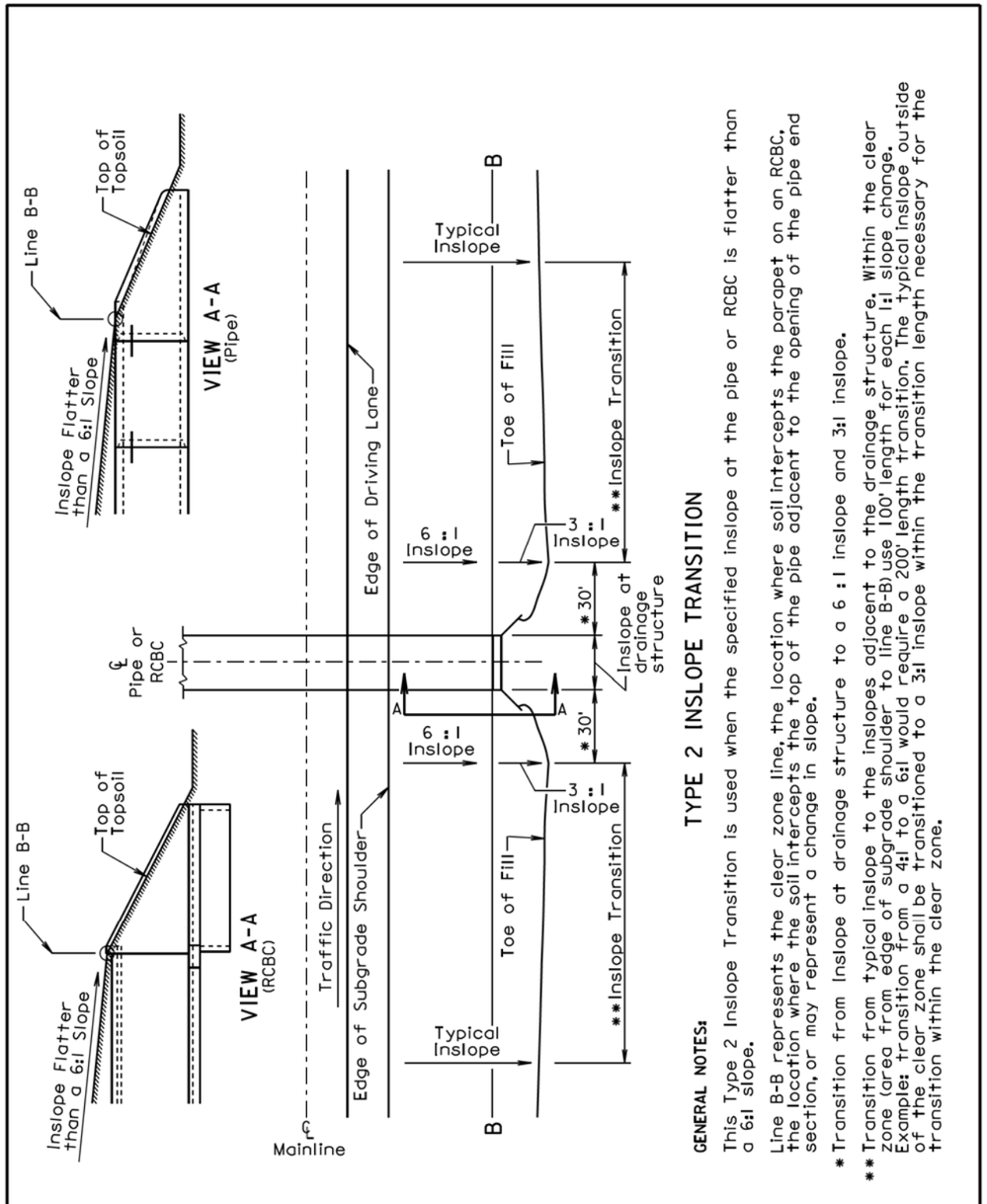

TYPE 2 INSLOPE TRANSITION

GENERAL NOTES:

This Type 2 Inslope Transition is used when the specified inslope at the pipe or RCBC is flatter than a 6:1 slope.

Line B-B represents the clear zone line, the location where soil intercepts the parapet on an RCBC, the location where the soil intercepts the top of the pipe adjacent to the opening of the pipe end section, or may represent a change in slope.

* Transition from Inslope at drainage structure to a 6 : 1 inslope and 3:1 inslope.

** Transition from typical inslope to the inslopes adjacent to the drainage structure. Within the clear zone (area from edge of subgrade shoulder to line B-B) use 100' length for each 1:1 slope change. Example: transition from a 4:1 to a 6:1 would require a 200' length transition. The typical inslope outside of the clear zone shall be transitioned to a 3:1 inslope within the transition length necessary for the transition within the clear zone.

February 14, 2011

Published Date: 2nd Qtr. 2014	SDDOT	INSLOPE TRANSITIONS AT PIPE CULVERTS OR REINFORCED CONCRETE BOX CULVERTS	PLATE NUMBER 120.05
			Sheet 2 of 2

TOLERANCES IN DIMENSIONS

Diameter: ±1.5% for 24" Dia. or less and ±1% or 3/8" whichever is more for 27" Dia. or greater.
Diameters at Joints: ±3/16" for 30" Dia. or less and ±1/4" for 36" or greater.
Length of joint (j): ±1/4".
Wall thickness (T): not less than design T by more than 5% or 3/16", whichever is greater.
Laying length: shall not underrun by more than 1/2".

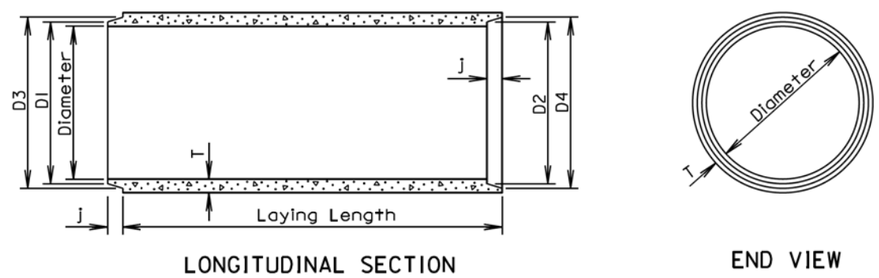

GENERAL NOTES:

Construction of R. C. P. shall conform to the requirements of Section 990 of the Standard Specifications for Roads and Bridges.

Not more than 2 four foot sections shall be permitted near the ends of any culvert. Four foot lengths shall be used only to secure the required length of culvert.

Diam. (in.)	Approx. Wt. /Ft. (lb.)	T (in.)	J (in.)	D1 (in.)	D2 (in.)	D3 (in.)	D4 (in.)
12	92	2	1 3/4	13 1/4	13 5/8	13 7/8	14 1/4
15	127	2 1/4	2	16 1/2	16 7/8	17 1/4	17 5/8
18	168	2 1/2	2 1/4	19 5/8	20	20 3/8	20 3/4
21	214	2 3/4	2 1/2	22 7/8	23 1/4	23 3/4	24 1/8
24	265	3	2 3/4	26	26 3/8	27	27 3/8
27	322	3 1/4	3	29 1/4	29 5/8	30 1/4	30 5/8
30	384	3 1/2	3 1/4	32 3/8	32 3/4	33 1/2	33 7/8
36	524	4	3 3/4	38 3/4	39 1/4	40	40 1/2
42	685	4 1/2	4	45 1/8	45 5/8	46 1/2	47
48	867	5	4 1/2	51 1/2	52	53	53 1/2
54	1070	5 1/2	4 1/2	57 7/8	58 3/8	59 3/8	59 7/8
60	1296	6	5	64 1/4	64 3/4	66	66 1/2
66	1542	6 1/2	5 1/2	70 5/8	71 1/8	72 1/2	73
72	1810	7	6	77	77 1/2	79	79 1/2
78	2098	7 1/2	6 1/2	83 3/8	83 7/8	85 5/8	86 1/8
84	2410	8	7	89 3/4	90 1/4	92 1/8	92 5/8
90	2740	8 1/2	7	95 3/4	96 1/4	98 1/8	98 5/8
96	2950	9	7	102 1/8	102 5/8	104 1/2	105
102	3075	9 1/2	7 1/2	109	109 1/2	111 1/2	112
108	3870	10	7 1/2	115 1/2	116	118	118 1/2

March 31, 2000

Published Date: 2nd Qtr. 2014	SDDOT	REINFORCED CONCRETE PIPE	PLATE NUMBER 450.01
			Sheet 1 of 1

Plot Scale - 1:200
Plotted From - tsf12141
File - ...\stan03\4\s12005_2s450.01.dgn

STATE OF SOUTH DAKOTA	PROJECT	SHEET	TOTAL SHEETS
	NH 0014(186)225	B28	B35

Plotting Date: 05/19/2014

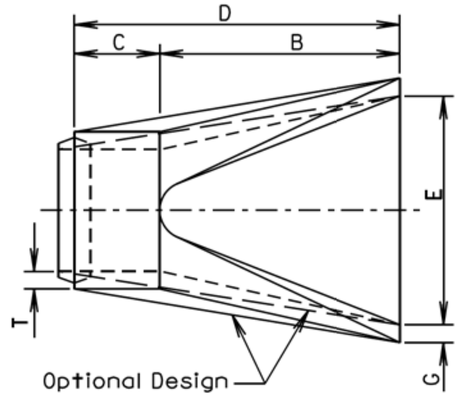

TOP VIEW

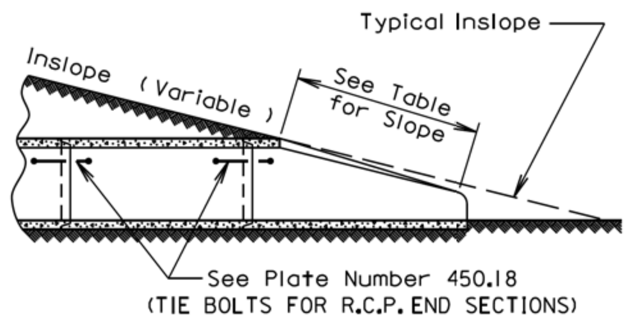

SLOPE DETAIL

GENERAL NOTES:

Lengths of concrete pipe shown on Plan Sheets are between flared Ends only.

Construction of R.C.P. Flared End shall conform to the requirements of Section 990 of the Standard Specifications for Roads and Bridges.

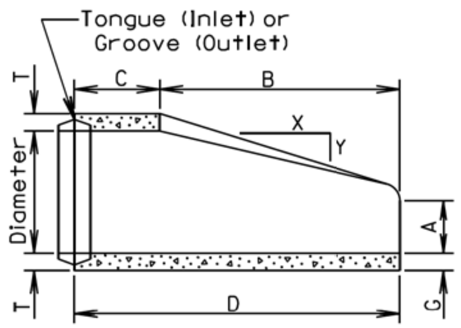

LONGITUDINAL SECTION

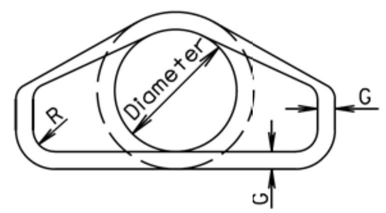

END VIEW

Dia. (in.)	Approx. Wt. of Section (lbs.)	Approx. Slope (X to Y)	T (in.)	A (in.)	B (in.)	C (in.)	D (in.)	E (in.)	G (in.)	R (in.)
12	530	2.4: 1	2	4	24	48⅞	72⅞	24	2	1½
15	740	2.4: 1	2¼	6	27	46	73	30	2¼	1½
18	990	2.3: 1	2½	9	27	46	73	36	2½	1½
21	1280	2.4: 1	2¾	9	36	37½	73½	42	2¾	1½
24	1520	2.5: 1	3	9½	43½	30	73½	48	3	1½
27	1930	2.5: 1	3¼	10½	49½	24	73½	54	3¼	1½
30	2190	2.5: 1	3½	12	54	19¾	73¾	60	3½	1½
36	4100	2.5: 1	4	15	63	34¾	97¾	72	4	1½
42	5380	2.5: 1	4½	21	63	35	98	78	4½	1½
48	6550	2.5: 1	5	24	72	26	98	84	5	1½
54	8240	2: 1	5½	27	65	33¼	98¼	90	5½	1½
60	8730	1.9: 1	6	35	60	39	99	96	5	1½
66	10710	1.7: 1	6½	30	72	27	99	102	5½	1½
72	12520	1.8: 1	7	36	78	21	99	108	6	1½
78	14770	1.8: 1	7½	36	90	21	111	114	6½	1½
84	18160	1.6: 1	8	36	90½	21	111½	120	6½	1½
90	20900	1.5: 1	8½	41	87½	24	111½	132	6½	6

March 31, 2000

Published Date: 2nd Qtr. 2014

SDDOT

R. C. P. FLARED ENDS

PLATE NUMBER 450.10

Sheet 1 of 1

Wall "t" (in.)	Rod Dia. (in.)	Pipe Sleeve Dia. (nominal)
≤ 3¼	⅝	¾
3½-6½	¾	1
≥ 7	1	1¼

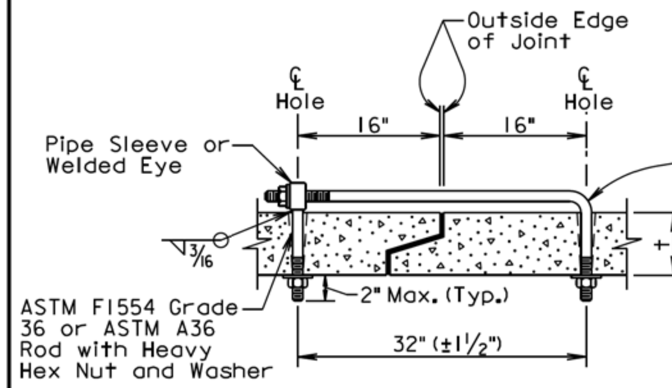

ADJUSTABLE EYE BOLT TIE

GENERAL NOTES:

Tie bolts shall conform to ASTM F1554 Grade 36 or ASTM A36. Nuts shall be heavy hex conforming to ASTM A563. Washers shall conform to ASTM F436.

Pipe Sleeve shall conform to ASTM A500 or A53, Grade B.

Galvanize adjustible eye bolt tie assembly in accordance with ASTM A153.

Pipe Dia. (in.)	"L" (in.)	Bolt Dia. (in.)
≤ 48	4	¾
> 48	6	1

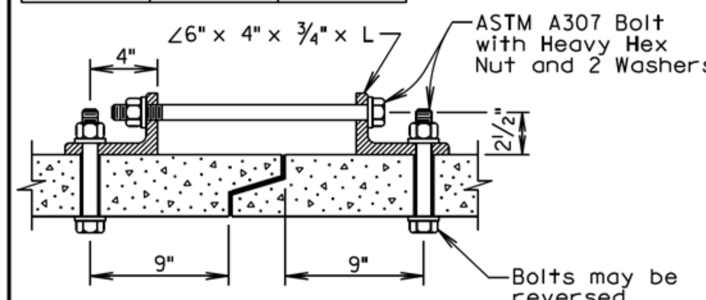

ANGLE AND BOLT TIE

GENERAL NOTES:

Angles shall conform to ASTM A36.

Bolts shall conform to ASTM A307. Nuts shall be heavy hex conforming to ASTM A563. Washers shall conform to ASTM F436.

Galvanize angles, bolts, nuts, and washers in accordance with ASTM A153.

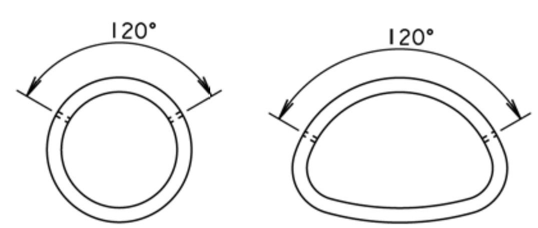

END VIEW "CIRCULAR" END VIEW "ARCH"

GENERAL NOTES:

In lieu of the tie bolts detailed above other types of tie bolt connections may be installed as approved by the Office of Bridge Design.

All pipe sections of R.C.P. and R.C.P. Arch shall be tied with tie bolts except for pipe located between drop inlets, manholes, and junction boxes. All pipe sections of pipes that only enter or exit drop inlets, manhole, and junction boxes shall be tied with tie bolts.

There will be no separate measurement or payment for the tie bolts. The cost for furnishing and installing the tie bolts shall be incidental to the contract unit price per foot for the corresponding bid item for R.C.P. or R.C.P. Arch.

February 28, 2013

Published Date: 2nd Qtr. 2014

SDDOT

TIE BOLTS FOR R.C.P. AND R.C.P. ARCH

PLATE NUMBER 450.18

Sheet 1 of 1

Plot Scale - 1:200

trsf12141

Plotted From -

File - ...\prj\stan03\4\s45010_s45018.dgn

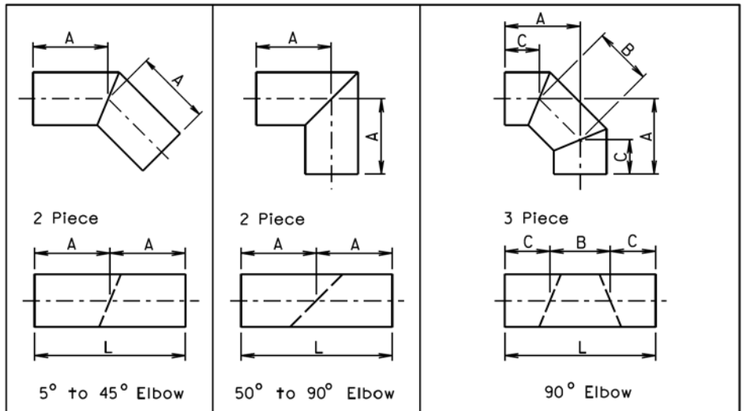

Diameter	A	L	Diameter	A	L	Diameter	A	B	C	L
Inches	Feet	Feet	Inches	Feet	Feet	Inches	Inches			Feet
12	1	2	12	2	4	12	25½	11	18½	4
15	1	2	15	2	4	15	26½	12	18	4
18	1	2	18	2	4	18	27	14	17	4
21	2	4	21	2	4	21	27	15	16½	4
24	2	4	24	2	4	24	27½	16	16	4
27	2	4	27	2	4	27	27½	17	15½	4
30	2	4	30	3	6	30	40	19	26½	6
33	2	4	33	3	6	33	40	20	26	6
36	2	4	36	3	6	36	40½	21	25½	6
42	2	4	42	3	6	42	41	23	24½	6
48	2	4	48	4	8	48	53½	26	35	8
54	3	6	54	4	8	54	54	28	34	8
60	3	6	60	4	8	60	54½	31	32½	8
66	3	6	66	4	8	66	54	33	31½	8
72	3	6	72	5	10	72	67½	36	42	10
78	3	6	78	5	10	78	68	39	40½	10
84	3	6	84	5	10	84	68½	41	39½	10
90	3	6	90	6	12	90	70	46	37	10
96	3	6	96	6	12	96	82	46	49	12

FABRICATED ELBOW LENGTHS FOR ALL CORRUGATIONS

GENERAL NOTES:

All dimensions shown are nominal.

L = Linear Feet of C.M.P. required to fabricate fitting.

June 26, 2001

Published Date: 2nd Qtr. 2014

SDDOT

C.M.P. FABRICATED LENGTHS FOR ELBOWS

PLATE NUMBER 450.32

Sheet 1 of 1

Alternate Type Connector Sections may be used with approval of the Engineer.

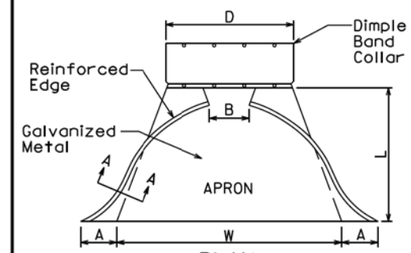

PLAN

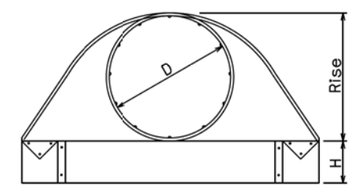

ELEVATION

Dia. D (in.)	Ga.	DIMENSIONS (in.) A	B	H	L	W	Approx. Slope	Body
12	16	6	6	6	21	24	2½:1	1 Pc.
15	16	7	8	6	26	30	2½:1	1 Pc.
18	16	8	10	6	31	36	2½:1	1 Pc.
21	16	9	12	6	36	42	2½:1	1 Pc.
24	16	10	13	6	41	48	2½:1	1 Pc.
30	14	12	16	8	46	60	2½:1	1 Pc.
36	14	14	19	9	51	72	2½:1	2 Pc.
42	12	16	22	11	60	84	2½:1	2 Pc.
48	12	18	27	12	69	90	2¼:1	2 Pc.
54	12	18	30	12	78	102	2:1	3 Pc.
60	12	18	33	12	84	114	1¾:1	3 Pc.
66	12	18	36	12	87	120	1½:1	3 Pc.
72	12	18	39	12	87	126	1⅓:1	3 Pc.
78	12	18	42	12	87	132	1¼:1	3 Pc.
84	12	18	45	12	87	138	1⅙:1	3 Pc.

STANDARD CONNECTIONS

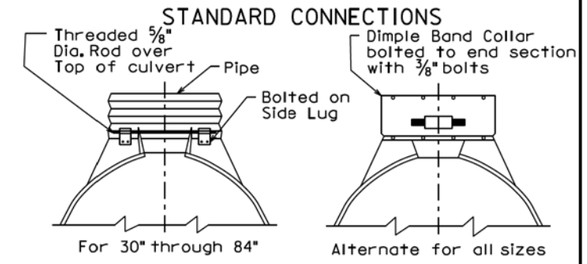

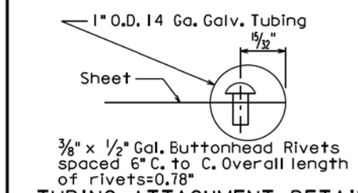

TUBING ATTACHMENT DETAILS
SECTION A-A

NOTE:
Tubing is slipped over the sheet and rivets or lugs prior to forming operations of the apron.

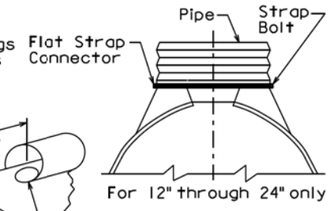

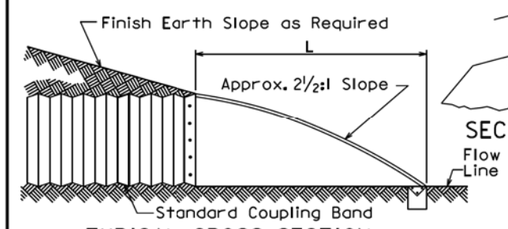

TYPICAL CROSS-SECTION

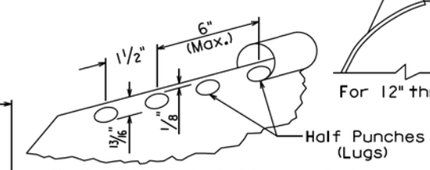

SECTION A-A (alternate)

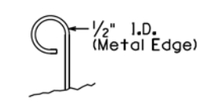

SECTION A-A (alternate)

GENERAL NOTES:

All 3 pc. bodies shall have 12 Ga. sides and 10 Ga. center panels. Width of center panels shall be greater than 20% of the pipe periphery. Multiple panel bodies to have lap seams tightly joined by ⅜" Dia. galvanized rivets or bolts.

For 60" through 84" sizes, reinforced edges shall be supplemented with galvanized stiffener angles. The angles will be 2" x 2" x ¼" for 60" through 72" diameters and 2½" x 2½" x ¼" for 78" and 84" diameters. The angles shall be attached by ⅜" diameter galvanized nuts and bolts.

Rivets and Bolts shall be ⅜" Dia. Min. for 10 Ga. and 12 Ga. sheet, and 5/16" Dia. Min. for 14 Ga. and 16 Ga. sheets. Tighten nuts with torque wrench to 25 lbs. torque.

March 31, 2000

Published Date: 2nd Qtr. 2014

SDDOT

C.M.P. FLARED ENDS

PLATE NUMBER 450.35

Sheet 1 of 1

Plot Scale - 1:200
Plotted From - trsf12141
File - ...\prj\stan\03J4\s45032_s450351.dgn

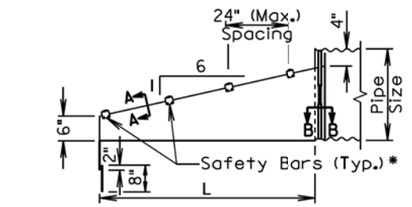

ELEVATION VIEW

*Number of bars required will vary depending on the length of the end section.

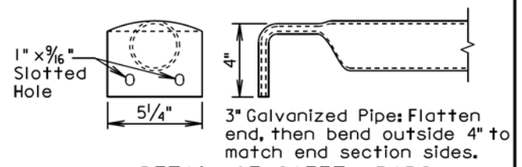

DETAIL OF SAFETY BARS

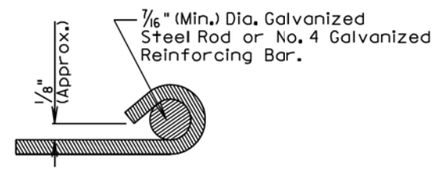

SECTION A-A

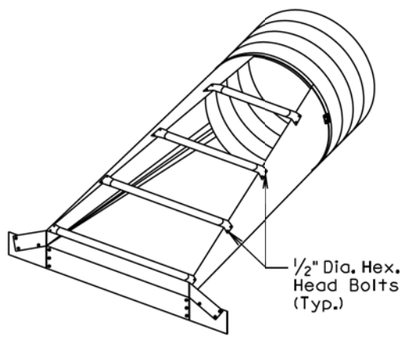

ISOMETRIC VIEW

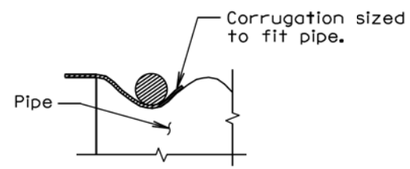

SECTION B-B

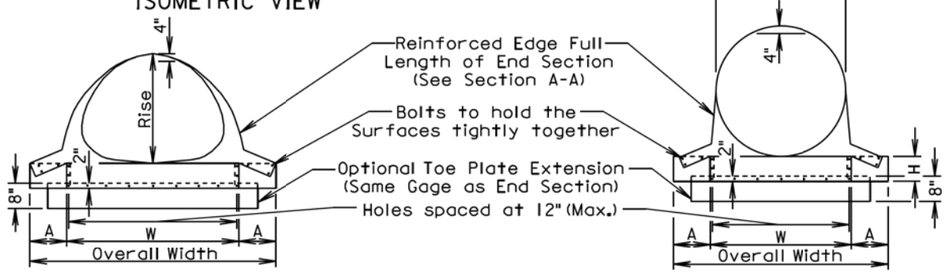

FRONT VIEW

FRONT VIEW

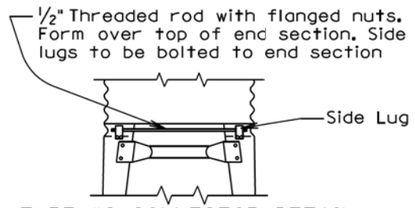

TYPE #2 CONNECTOR DETAIL
(For 30" and Larger)
(For 21" X 15" and Larger)

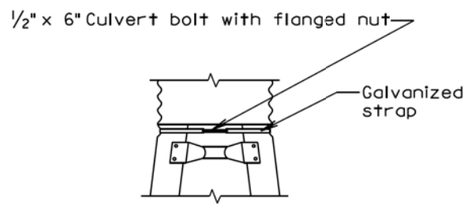

TYPE #1 CONNECTOR DETAIL
(For 15" Through 24")

August 31, 2013

Published Date: 2nd Qtr. 2014	SDDOT	C. M. P. SAFETY ENDS	PLATE NUMBER 450.38
			Sheet 1 of 2

ARCH C.M.P. SAFETY ENDS

Equv. Dia. (Inch)	(Inches)		Min. Thick.		Dimensions (Inches)				L Dimensions	
	Span	Rise	Inch	Gage	A	H	W	Overall Width	Slope	Length (Inch)
18	21	15	.064	16	8	6	27	43	6:1	30
21	24	18	.064	16	8	6	30	46	6:1	48
24	28	20	.064	16	8	6	34	50	6:1	60
30	35	24	.079	14	12	9	41	65	6:1	84
36	42	29	.109	12	12	9	48	72	6:1	114
42	49	33	.109	12	16	12	55	87	6:1	138
48	57	38	.109	12	16	12	63	95	6:1	168
54	64	43	.109	12	16	12	70	102	6:1	198
60	71	47	.109	12	16	12	77	109	6:1	222
72	83	57	.109	12	16	12	89	121	6:1	282

CIRCULAR C.M.P. SAFETY ENDS

Pipe Dia. (Inch)	Min. Thick.		Dimensions (Inches)				L Dimensions	
	Inch	Gage	A	H	W	Overall Width	Slope	Length (Inch)
15	.064	16	8	6	21	37	6:1	30
18	.064	16	8	6	24	40	6:1	48
21	.064	16	8	6	27	43	6:1	66
24	.064	16	8	6	30	46	6:1	84
30	.109	12	12	9	36	60	6:1	120
36	.109	12	12	9	42	66	6:1	156
42	.109	12	16	12	48	80	6:1	192
48	.109	12	16	12	54	86	6:1	228
54	.109	12	16	12	60	92	6:1	264
60	.109	12	16	12	66	98	6:1	300

GENERAL NOTES:

Safety ends shall be fabricated from galvanized steel conforming to the requirements of the Standard Specifications.

Safety bars shall be fabricated from steel schedule 40 pipe in conformance with ASTM A53, grade B or HSS 3.5X.216 in conformance with ASTM A500, grade B.

Slotted holes for safety bar attachment shall be provided for all end sections.

Attachment to circular pipes 15" through 24" diameter shall be made with Type #1 straps. All other sizes shall be attached with Type #2 rods and lugs.

When stated in the plans, optional toe plate extension shall be punched and bolted to end section apron lip with 3/8" diameter galvanized bolts. Steel for toe plate extension shall be same gauge as end section. Dimensions shall be overall width less 6" by 8" high.

Installation shall be performed in accordance with the Standard Specifications.

Cost of all work and materials required for fabrication and installation of safety ends shall be incidental to the bid items for the various sizes of safety ends.

August 31, 2013

Published Date: 2nd Qtr. 2014	SDDOT	C. M. P. SAFETY ENDS	PLATE NUMBER 450.38
			Sheet 2 of 2

Plot Scale - 1:200
Plotted From - trsf12141
File - ...\stan03J4\s45038_1s45038-2.dgn

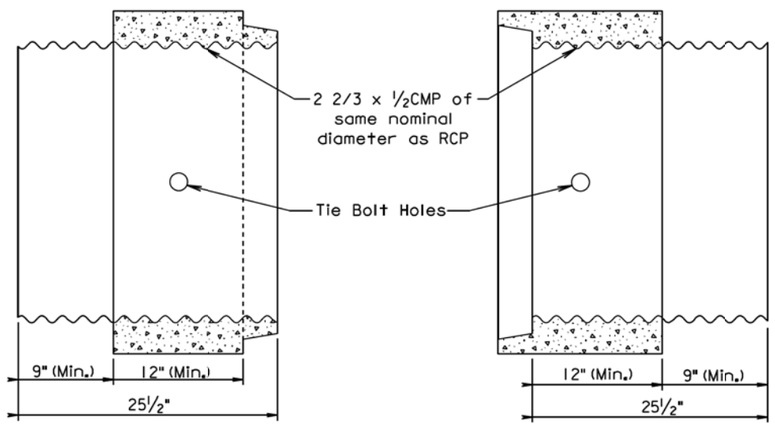

INLET
(CMP to RCP Transition)

OUTLET
(RCP to CMP Transition)

GENERAL NOTE:

Arch pipe transitions shall be fabricated similar to the round transition shown above.

March 31, 2000

Published Date: 2nd Qtr. 2014

SDDOT

C.M.P. TO R.C.P. TRANSITION AND R.C.P. TO C.M.P. TRANSITION

PLATE NUMBER 450.50

Sheet 1 of 1

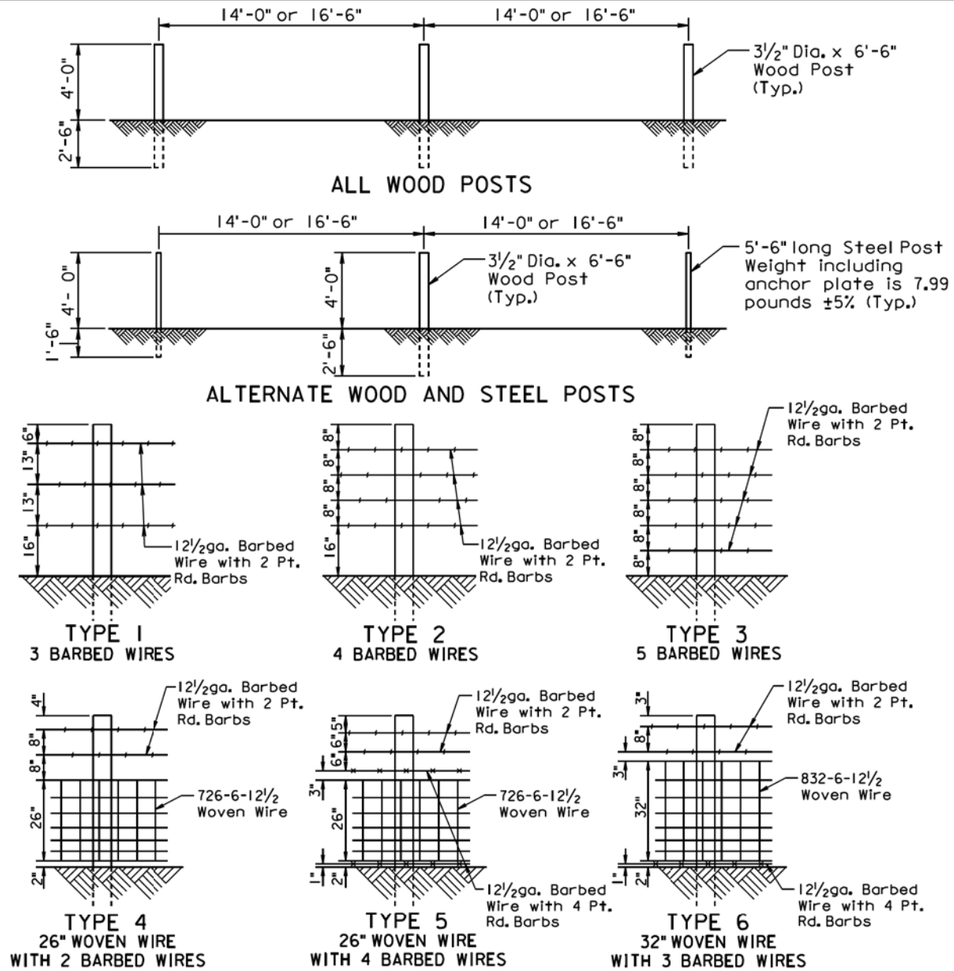

TYPE OF FENCE		LINE POST SPACING	BARBED WIRE		WOVEN WIRE
TYPE	DESCRIPTION		WIRE GAGE	NUMBER AND SHAPE OF BARBS	STYLE OR DESIGN NO.
1	3 Barbed Wires	16'-6"	12½	2 Point Round	—
2	4 Barbed Wires	16'-6"	12½	2 Point Round	—
3	5 Barbed Wires	16'-6"	12½	2 Point Round	—
4	26" Woven Wire with 2 Barbed Wires	14'-0"	12½	2 Point Round	726-6-12½
5	26" Woven Wire with 4 Barbed Wires	14'-0"	12½	2 wires with 2 Pt. Rd. 2 wires with 4 Pt. Rd.	726-6-12½
6	32" Woven Wire with 3 Barbed Wires	14'-0"	12½	2 wires with 2 Pt. Rd. 1 wire with 4 Pt. Rd.	832-6-12½

GENERAL NOTES:

Fence types designated on the plans that are followed by the letter S shall have smooth (barbless) wires.

When type 5S or 6S is designated the bottom wire may be barbed, smooth, or left off.

All degrees of curvature stated for fence are at centerline of roadway.

September 14, 2009

Published Date: 2nd Qtr. 2014

SDDOT

RIGHT-OF-WAY FENCE

PLATE NUMBER 620.01

Sheet 1 of 1

Plot Scale - 1:200
Plotted From - trsf12141
File - ...\prj\stan03\4\s45050_s62001.dgn

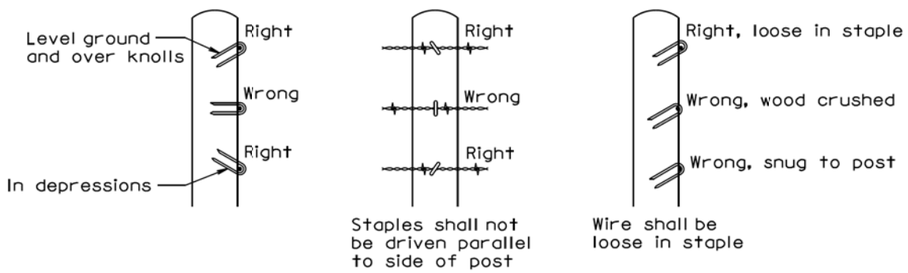

STAPLE INSTALLATION

GENERAL NOTES:

The Right-of-Way fence shall consist of barbed wire or a combination of woven wire and barbed wire. The barbed wire and/or woven wire shall be fastened to all wood posts or fastened to alternating wood and steel posts. Only wood posts shall be used for brace panels. Gates shall be of the type designated in the plans or as otherwise directed by the Engineer. Fence shall be constructed conforming to the details on the standard plates and in the plans unless otherwise directed by the Engineer.

Right-of-Way fence on Interstate Projects shall be constructed one foot within the Interstate Right-of-Way lines except at bridge openings, cattle passes, and as otherwise directed by the Engineer.

Right-of-Way fence other than on Interstate Projects shall be constructed within one foot of the Right-of-Way on the Landowner's side except at bridge openings, cattle passes, and as otherwise directed by the Engineer.

Barbs shall be fabricated from zinc coated 14 ga. wire. Two point barbs shall be wrapped twice around one main strand at 4" spacings and the four point barbs shall be interlocked and wrapped around both main strands at 5" spacings.

The gages of wire and wood post lengths and sizes are the minimum acceptable unless otherwise specified in the plans. The tolerances for steel posts shall be as stated in AASHTO M281. Woven wire shall conform to design and specifications of ASTM A116 and barbed wire shall conform to ASTM A121.

December 23, 2004

Published Date: 2nd Qtr. 2014	SDDOT	STAPLE INSTALLATION AND GENERAL RIGHT-OF-WAY FENCE NOTES	PLATE NUMBER 620.02
			Sheet 1 of 1

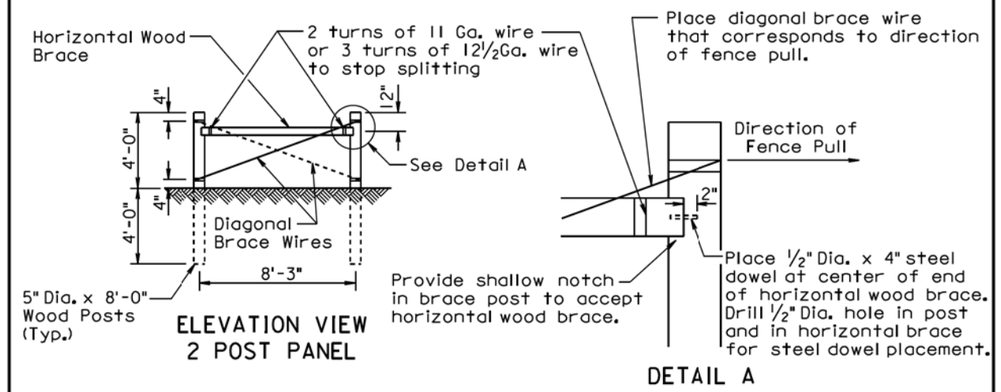

ELEVATION VIEW
2 POST PANEL

DETAIL A

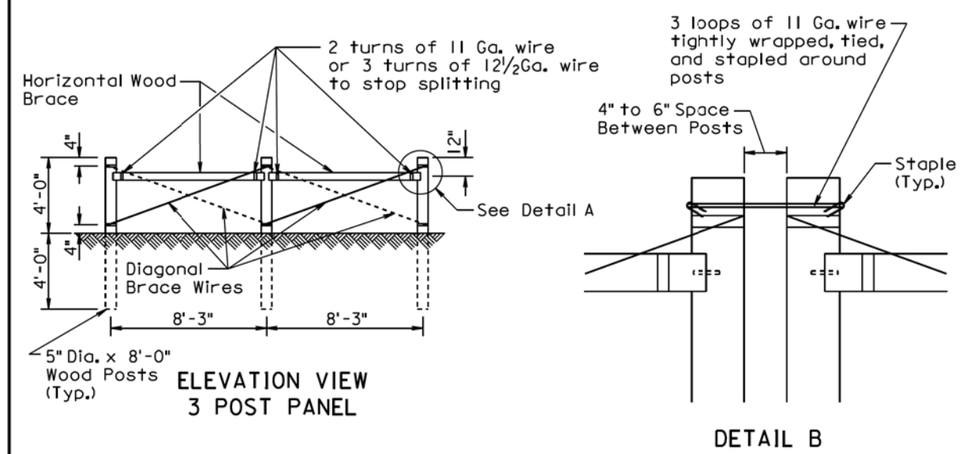

ELEVATION VIEW
3 POST PANEL

DETAIL B

GENERAL NOTES:

Two Post Panels shall be installed at least every 1320' between corners.

Two Post Panels shall be installed at any sharp vertical angle crest points and as directed by the Engineer.

Horizontal wood braces shall consist of 4" dia. x 8' wood posts or rough 4" x 4" x 8' timbers.

Diagonal brace wires shall be fabricated with 4 strands of 9 Ga. galvanized wire twisted tight. The diagonal brace wires shall be installed in accordance with the direction of the fence pull. Two diagonal brace wires are required if fence pull is in both directions.

December 23, 2004

Published Date: 2nd Qtr. 2014	SDDOT	BRACE PANELS AND APPLICATIONS OF BRACE PANELS	PLATE NUMBER 620.03
			Sheet 1 of 3

Plot Scale - 1:200
- Plotted From- tesf12141
File - ...\stan03J4\s62002_62003_1.dgn

SPACING OF 2 POST PANELS WITHIN CURVES	
DEGREE OF CURVE	SPACING OF 2 POST PANEL
less than 3°15'	** 1320'
3°15' and greater	**At P.C., P.T., and at every 1320' between P.C. and P.T.

GENERAL NOTE:

All degrees of curvature stated for fence are at centerline of roadway.

* If fence length is less than 600' to next corner use a 2 post panel.
If fence length is greater than 600' to next corner use a 3 post panel.

** Fence lengths greater than 1320' and less than 2640' place 2 Post Panel approximately at midpoint.

① See Detail B on Sheet 1 of 3.

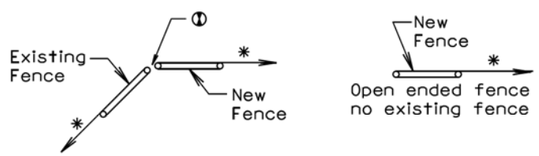

BEGIN OR END FENCE
(where new fence ties into existing fence)

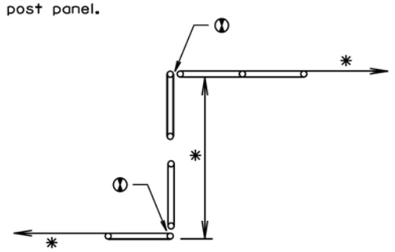

SHORT JOGS IN FENCE

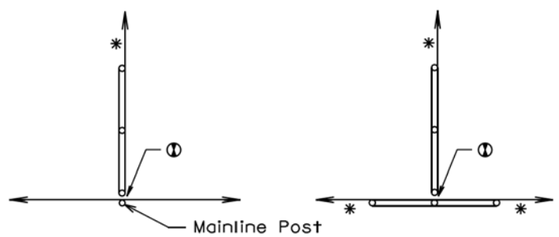

CROSS FENCE

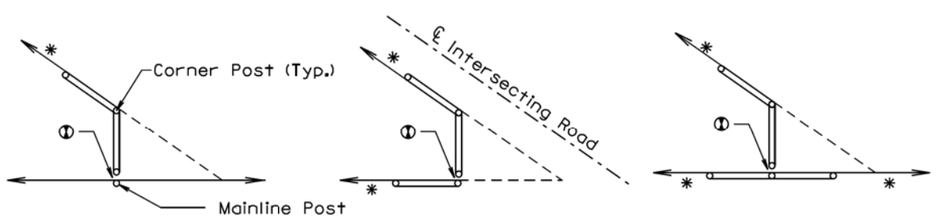

SHARP ANGLES IN CROSS FENCE

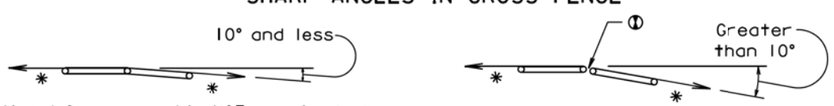

Additional fence panel is NOT required when an angle in the mainline fence is 10° and less.

Additional fence panel is required when an angle in the mainline fence is greater than 10°.

ANGLES IN MAINLINE FENCE

December 23, 2004

Published Date: 2nd Qtr. 2014	SDDOT	BRACE PANELS AND APPLICATIONS OF BRACE PANELS	PLATE NUMBER 620.03
			Sheet 2 of 3

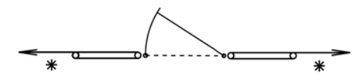

ENTRANCE
(NOT ON CORNER)

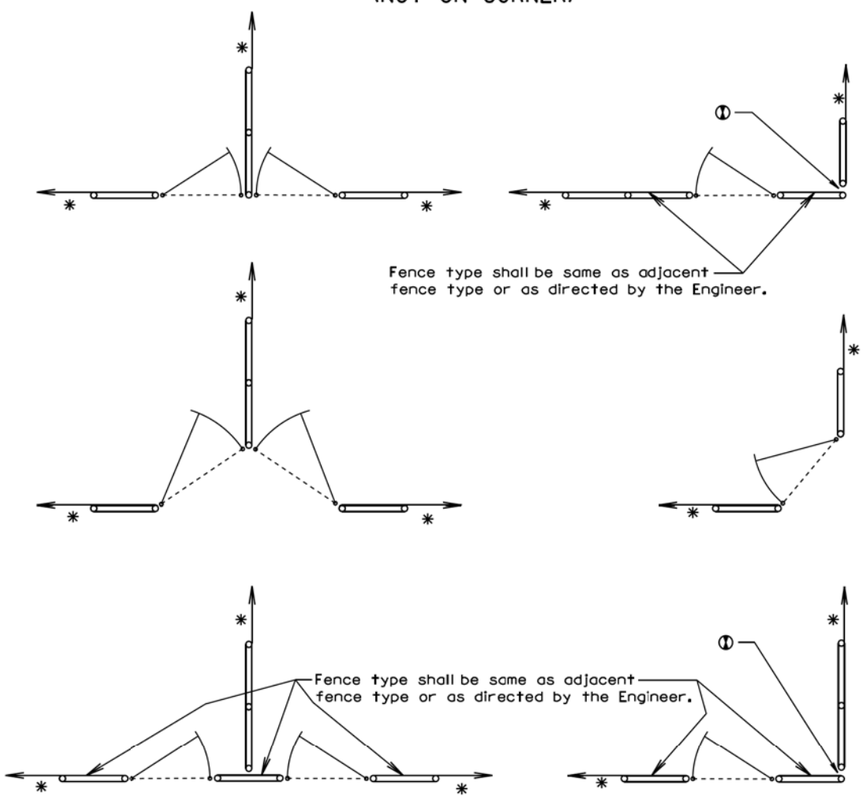

DOUBLE ENTRANCES

ENTRANCES AT CORNERS

GATES

* If fence length is less than 600' to next corner use a 2 post panel.
If fence length is greater than 600' to next corner use a 3 post panel.

① See Detail B on Sheet 1 of 3.

December 23, 2004

Published Date: 2nd Qtr. 2014	SDDOT	BRACE PANELS AND APPLICATIONS OF BRACE PANELS	PLATE NUMBER 620.03
			Sheet 3 of 3

Plot Scale - 1:200
Plotted From - trsf12141
File - ...\stan03J4\ts62003_2s62003_3.dgn

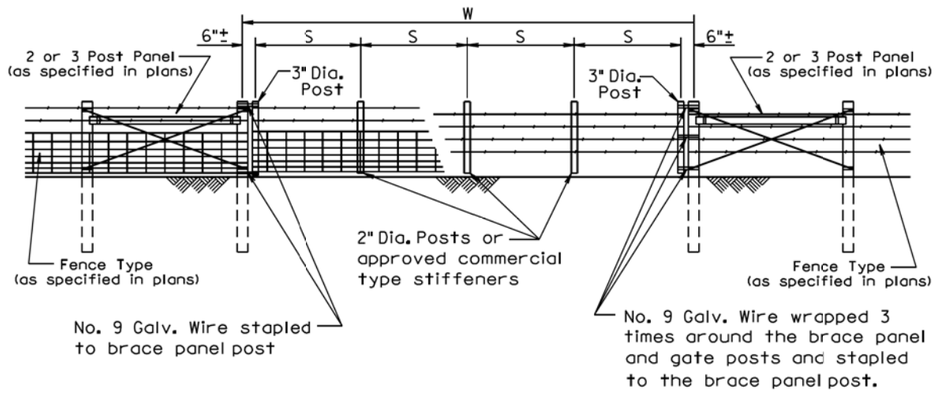

W Gate Width (ft.)	S Post Spacing
16	3 @ 5'-0" ±
20	4 @ 4'-9" ±
24	4 @ 5'-9" ±
30	5 @ 5'-10" ±
40	6 @ 6'-6" ±

GENERAL NOTES:

Creosote treatment of the gate posts will not be accepted.

The type of fencing in the gate shall be of the same type as specified for the adjacent Right-of-Way fence.

All costs for furnishing and constructing the wire gate(s) shall be incidental to the contract unit price per Ft for the respective Right-of-Way fence bid item.

March 31, 2000

Published Date: 2nd Qtr. 2014	SDDOT	WIRE GATES	PLATE NUMBER 620.20
			Sheet 1 of 1

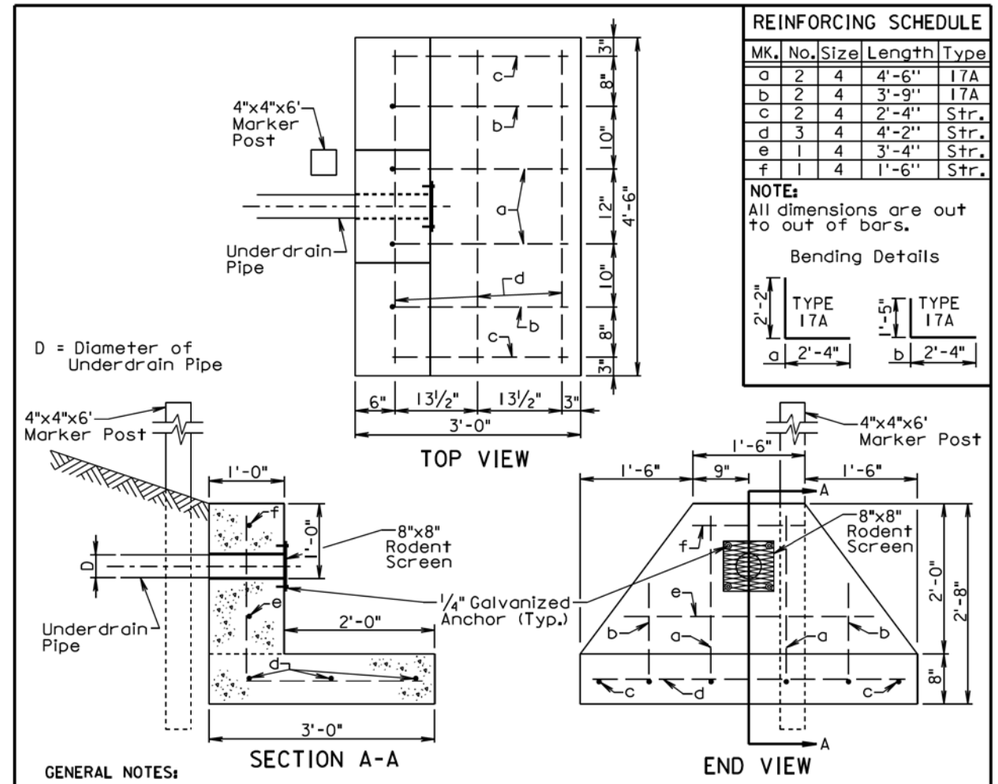

REINFORCING SCHEDULE				
MK.	No.	Size	Length	Type
a	2	4	4'-6"	17A
b	2	4	3'-9"	17A
c	2	4	2'-4"	Str.
d	3	4	4'-2"	Str.
e	1	4	3'-4"	Str.
f	1	4	1'-6"	Str.

NOTE:
All dimensions are out to out of bars.

Bending Details

GENERAL NOTES:

The concrete shall be Class M6. The concrete shall conform to the requirements of section 462 of the Standard Specifications except the minimum curing time shall be 72 hours. It is estimated that 0.55 cubic yards of concrete is required for each unit.

Four cast-in-place or drilled-in ¼" galvanized anchors shall be placed in the headwall. Each galvanized anchor shall be placed approximately 1" from the outside corner of the rodent screen. It is preferred that the anchor location be centered at an opening in the rodent screen.

All reinforcing steel shall conform to ASTM A615 Grade 60. It is estimated that 25.7 pounds of reinforcing steel is required for each unit.

The underdrain pipe shall be placed in the concrete headwall with the pipe end flush with the concrete surface adjacent to the rodent screen.

The 8"x8" rodent screen shall be galvanized 13 Ga. steel with a diamond shaped flattened mesh pattern. The size shall be ½". The size refers to the measurement across the smallest diamond shaped opening measured from the centers of the wires. The rodent screen shall be centered about the hole in the headwall and fastened to the headwall with the appropriate bolts or nuts with washers.

A 4"x4"x6' marker post shall be placed at the approximate location as depicted in the above drawings for each concrete headwall. The marker post shall project 3'± above the ground line. The marker post shall be cedar or treated with a wood preservative and shall be painted with two coats of white paint.

All costs for furnishing and installing the concrete headwall including equipment, labor, and materials including concrete, reinforcing steel, rodent screen, anchors, and marker post shall be incidental to the contract unit price per each for "Concrete Headwall for Underdrain".

March 28, 2001

Published Date: 2nd Qtr. 2014	SDDOT	CONCRETE HEADWALL FOR UNDERDRAIN	PLATE NUMBER 680.01
			Sheet 1 of 1

Plot Scale - 1:200
Plotted From - tcsf12141
File - ...\pr\stan03J4\s62020_s6801.dgn

STATE OF SOUTH DAKOTA	PROJECT	SHEET	TOTAL SHEETS
	NH 0014(186)225	B35	B35

Plotting Date: 05/19/2014

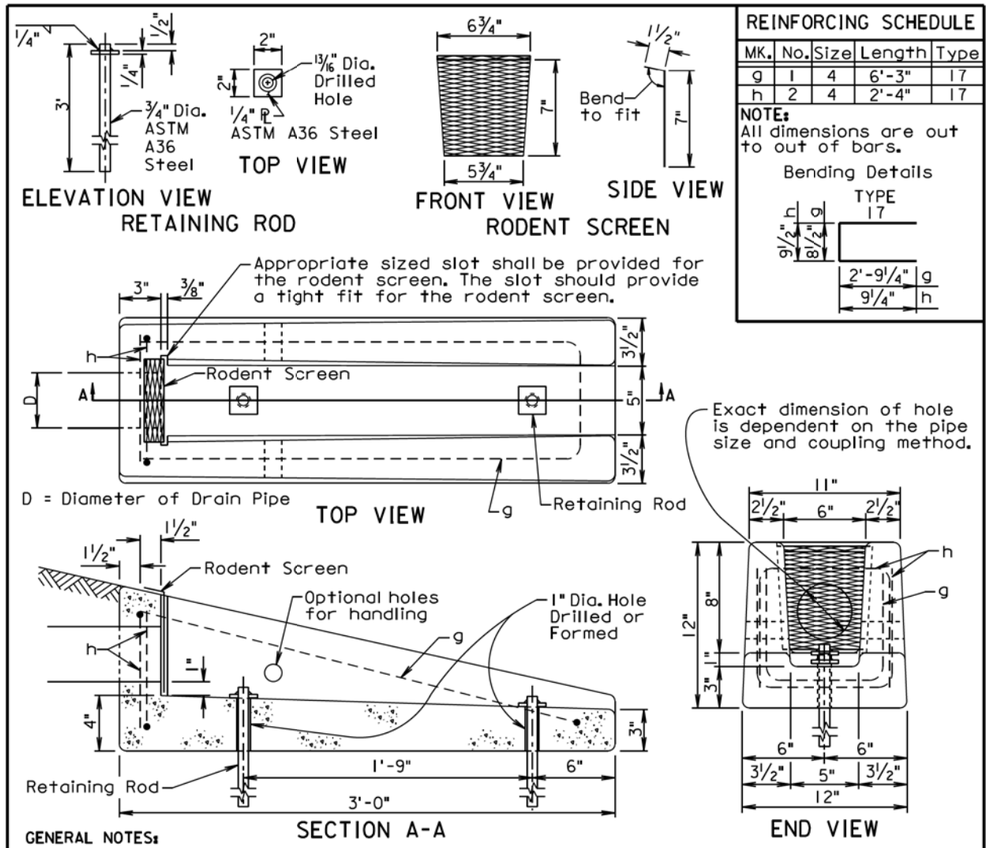

REINFORCING SCHEDULE

MK.	No.	Size	Length	Type
g	1	4	6'-3"	17
h	2	4	2'-4"	17

NOTE:
All dimensions are out to out of bars.

Bending Details

TYPE 17

GENERAL NOTES:

The concrete shall be Class M6. The concrete shall conform to the requirements of section 462 of the Standard Specifications. It is estimated that each unit weighs approximately 210 pounds.

All reinforcing steel shall conform to ASTM A615 Grade 60 and shall be epoxy coated. The reinforcing steel shall be securely retained to prevent displacement during placement of concrete. It is estimated that 7.3 pounds of reinforcing steel is required for each unit.

The pipe shall be placed in the concrete headwall with the pipe end flush with the concrete surface adjacent to the rodent screen.

The rodent screen shall be galvanized 13 Ga. steel with a diamond shaped flattened mesh pattern. The size shall be 1/2". The size refers to the measurement across the smallest diamond shaped opening measured from the centers of the wires.

The retaining rod shall be galvanized in accordance with ASTM A123 after all shop welding has been completed.

The drawing indicates using 1/2" fillets; however, 3/4" chamfers may be substituted for the 1/2" fillets.

All costs for furnishing and installing the concrete headwall including equipment, labor, and materials including concrete, reinforcing steel, retaining rods, and rodent screen shall be incidental to the contract unit price per each for "Precast Concrete Headwall for Drain".

December 23, 2010

Published Date: 2nd Qtr. 2014	SDDOT	***PRECAST CONCRETE HEADWALL FOR DRAIN***	***PLATE NUMBER*** *680.03*
			Sheet 1 of 1

Plot Scale - 1:200

Plotted From - trsf12141

File - U:\rdproj\stan03\j41s680f03.dgn