SECTION B: GRADING PLANS

FOR BIDDING PURPOSES ONLY

STATE OF SOUTH DAKOTA	PROJECT	SHEET NO.	TOTAL SHEETS
	EM 8050(65)	B1	B26

FILE: 1412 – Title Page.dwg
PLOTTING DATE: 2014–04–29 INTIALS: JRK
REVISION DATE:

R 49 W

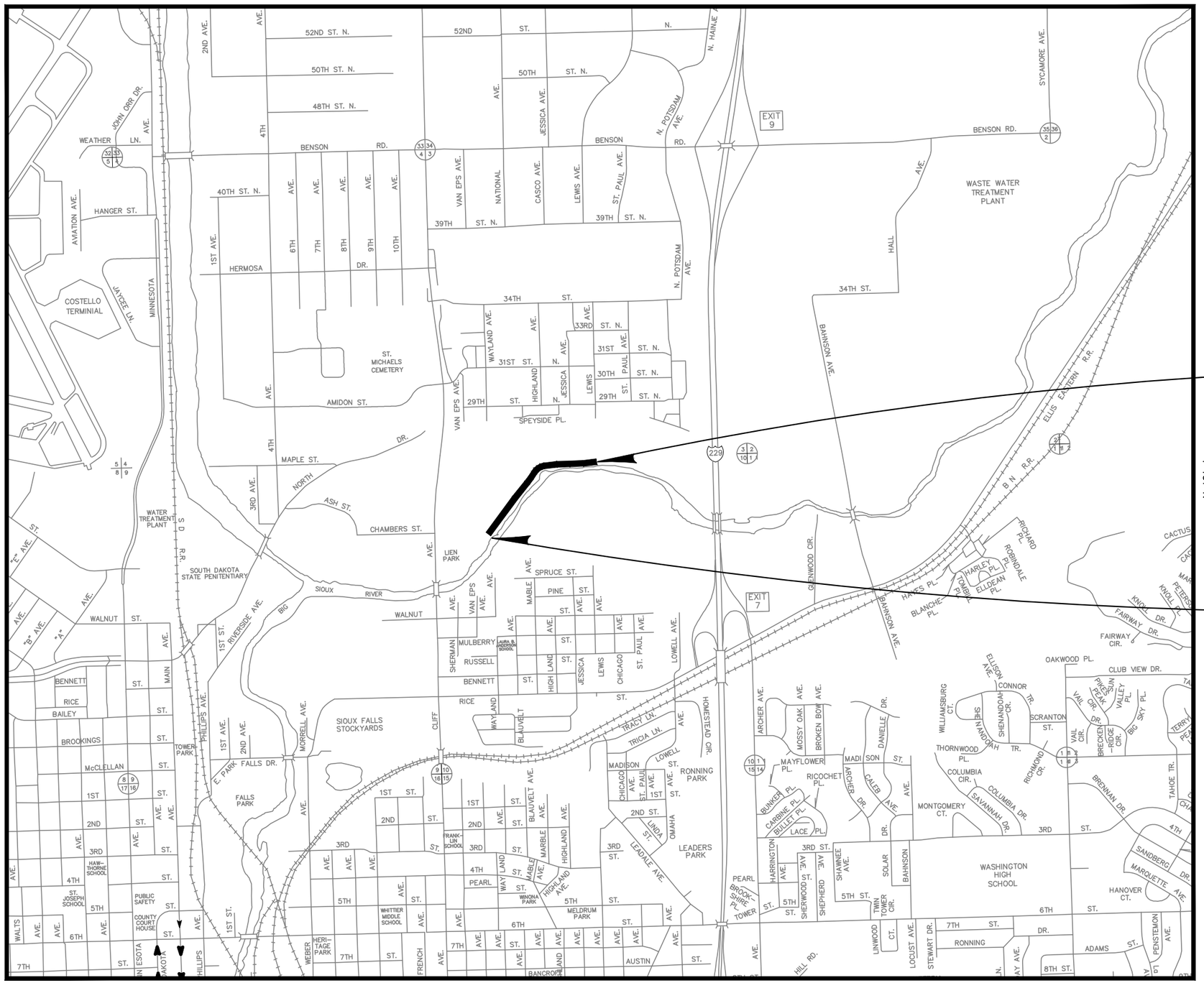

INDEX OF SHEETS

B1	TITLE SHEET
B2 THRU B5	ESTIMATE OF QUANTITIES, GENERAL NOTES & TABLES
B6	TABLE OF PIPE QUANTITIES
B7	EXISTING TOPOGRAPHY SYMBOLOGY & LEGENDS SHEET
B8 THRU B11	HORIZONTAL ALIGNMENT & CONTROL DATA
B12	TYPICAL GRADING & SURFACING SECTIONS
B13 THRU B15	REMOVALS & IN PLACE UTILITIES
B16 THRU B21	BIKE TRAIL & STORM SEWER PLAN & PROFILE
B22 THRU B26	DETAIL & STANDARD PLATES

END PROJECT EM 8050(65)
SIOUX FALLS BIKE TRAIL STA. 25+75
APPROX. 4500' EAST OF CLIFF AVENUE
ALONG THE BIG SIOUX RIVER

BEGIN PROJECT EM 8050(65)
SIOUX FALLS BIKE TRAIL STA. 0+99
APPROX. 2000' EAST OF CLIFF AVENUE
ALONG THE BIG SIOUX RIVER

REGISTERED PROFESSIONAL ENGINEER
REG. NO. 6853
JON R. BROWN
SOUTH DAKOTA
4-29-14

STOCKWELL ENGINEERS
600 N. MAIN AVENUE #100
SIOUX FALLS, SD 57104
PH. (605) 338-6668
FAX (605) 338-8750
WWW.STOCKWELLENGINEERS.COM

SECTION B ESTIMATE OF QUANTITIES

BID ITEM NUMBER	ITEM	QUANTITY	UNIT
009E0010	Mobilization	LS	LS
100E0020	Clear and Grub Tree	41	Each
100E0100	Clearing	LS	LS
120E0010	Unclassified Excavation	5027	CuYd
120E6200	Water For Granular Material	20.0	MGal
250E0020	Incidental Work, Grading	LS	LS
260E1010	Base Course	1837.0	Ton
320E1200	Asphalt Concrete Composite	363.1	Ton
450E0103	12" RCP Class 3, Furnish	128	Ft
450E0110	12" RCP, Install	128	Ft
450E0193	42" RCP Class 3, Furnish	32	Ft
450E0200	42" RCP, Install	32	Ft
450E2000	12" RCP Flared End, Furnish	10	Each
450E2001	12" RCP Flared End, Install	10	Each
462E0100	Class M6 Concrete	11.2	CuYd
480E0100	Reinforcing Steel	2102	LB
510E8005	Sheet Piling, Furnish and Drive	120	SqFt
620E0300	Special Right-Of-Way Fence	120	Ft
621E0240	Special 4' Chain Link Fence	30.8	Ft
651E0150	5" Reinforced Concrete Sidewalk	11725	SqFt
651E0750	5" Reinforced Colored Concrete Sidewalk	1200	SqFt
700E0210	Class B Riprap	20	Ton
735E4000	Tree Trimming	36	Each
831E0110	Type B Drainage Fabric	15	SqYd
900E2030	Miscellaneous Work	1	Site
900E5100	Bench	1	Each
900E8100	Boulder	18	Each

GRADING OPERATIONS

Water for Embankment is estimated at the rate of 12 gallons of water per cubic yard of Embankment minus Waste. The estimated quantity of Water for Embankment is 12 MGal. No separate payment will be made for the Water for Embankment and all costs associated shall be incidental to the contract unit price per cubic yard of "Unclassified Excavation".

The estimated cubic yards of excavation and/or embankment required to construct outlet ditches, ditch blocks, and approaches are included in the earthwork balance notes on the profile sheets.

Special ditch grades and other sections of the roadway different than the typical sections shall be constructed to the limits shown on the cross sections. If significant changes to the cross sections are necessary during construction, the Engineer shall contact the Designer for the proposed change.

UTILITIES

The Contractor shall be aware that the existing utilities shown in the plans were surveyed prior to the design of this project and might have been relocated or replaced by a new utility facility prior to construction of this project, might be relocated or replaced by a new utility facility during the construction of this project, or might not require adjustment and may remain in its current location. The Contractor shall contact each utility owner and confirm the status of all existing and new utility facilities. The utility contact information is provided elsewhere in the plans or bidding documents.

The Contractor shall cooperate with the utility companies in accordance with section 5.6 of the Standard Specifications and shall refer to the list of utility owners below. It is the responsibility of the Contractor to verify, with the various utility companies, the proposed utility relocations.

Fiber optic cable exists along the project. The approximate location is shown in the plans.

The Contractor shall safeguard all utilities and coordinate his efforts to coincide with utility work in order to avoid interference and to minimize inconvenience between Contractors and the Public. Any damage to utilities because of the Contractor's carelessness shall be repaired at the Contractor's expense.

The Contractor shall call One-Call Utility Locating Services at 1-800-781-7474 to obtain utility locates prior to any excavation. Individual utility contacts are as follows:

GAS
MidAmerican Energy
1200 S Blauvelt
Sioux Falls, SD 57105
Attn: Eric Berg
605-373-6038

POWER
Xcel Energy
500 W. Russell St
Sioux Falls, SD 57104
Attn: Ron Aaker
605-339-8341

POWER
Municipal Light & Power
2000 North Minnesota
Sioux Falls, SD 57104
Attn: Mike Burkard
605-373-6979

WATER
Sioux Falls Water
668 W. Algonquin Street
Sioux Falls, SD 57104
605-367-8811
Attn: Brad Maddox

SEWER
Sioux Falls Water Reclamation
4500 N Sycamore Ave
Sioux Falls, SD 57117
605-367-8194
Attn: Paul Faris

CLEARING

Before clearing activities begin, the Contractor shall contact the Engineer to determine the limits of clearing for the project. If the trees or shrubs that are suppose to remain within the limits of work are damaged or destroyed by the Contractor, the Contractor shall replace them with the same size and type at the Contractor's expense.

TREE TRIMMING

Various trees located within the project limits have dead or low hanging braches. For aesthetic reasons, clearance and proper use of the new trail, these trees will need to be pruned. All trees identified for trimming are shown in the removals section of the plans. All tree trimming shall be done in accordance with the tree trimming detail. The contractor will be allowed to chip branches and evenly spread the waste throughout the forest floor of

the project limits. All costs associated with pruning, chipping and spreading of the branches shall be paid for by the bid item "Tree Trimming" per each.

WATER SOURCE

The Contractor shall not withdraw water with equipment previously used outside the State of South Dakota without prior approval from the DOT Environmental Office.

The Contractor shall not withdraw water directly from streams of the James, Big Sioux, and Vermillion watersheds without prior approval from the DOT Environmental Office.

The DOT Environmental Office contact is the Environmental Project Scientist, 605-773-3268. The WATER SOURCE plan note does not relieve the Contractor of his/her responsibility to obtain the necessary permits from other agencies such as the Department of Environment and Natural Resources (DENR) and the United States Army Corps of Engineers (COE).

INSLOPE TRANSITIONS

Inslope transitions will be required at various drainage structures and pipe locations. Refer to Standard Plate 120.05 for details.

REGISTERED PROFESSIONAL ENGINEER
REG. NO. 6853
JON R. BROWN
SOUTH DAKOTA
4-29-14

STOCKWELL ENGINEERS
SIOUX FALLS, SD

SAW EXISTING ASPHALT CONCRETE PAVEMENT

Asphalt sawing shall be performed at all locations shown on the plans or as directed by the Engineer during construction. The pavement shall be sawed full depth. The Contractor shall exercise particular care to ensure that the adjacent surface is left intact and undamaged when removing the sawed out portion.

Where new surfacing is placed adjacent to existing asphalt concrete, a joint shall be sawed in the existing bituminous pavement to create a clean, straight, vertical edge for new pavement to abut. All sawing shall be considered incidental to "Incidental Work, Grading".

SAW CUTTING

Station	L/R	Remarks	Length
0+99	6' LT to 6' Rt	Saw cut existing asphalt Trail	12'

TABLE OF EARTHWORK QUANTITIES	
Excavation	2,657
Total Excavation	2,657
Embankment	979
Shrink	293
Waste	1,385
Total Embankment	2,657
Excavation	2,657
Stripping Topsoil	2,370
Total Unclassified Excavation	5,027

The estimated quantity of stripped Topsoil has been added to the Unclassified Excavation quantity. By doing this, the quantity of Topsoil from the cuts will be paid for twice as Unclassified Excavation. This will be full compensation for Excavation, which includes necessary undercutting to provide space for placement of topsoil.

UNCLASSIFIED EXCAVATION

Excavate the existing subgrade to provide for the required depth of base course and asphalt surfacing or concrete surfacing. Contractor is to scarify and recompact the subgrade of all surfacing to a depth of 6", for the entire width of the gravel section. No additional payment shall be made for scarifying and recompaction work. All costs associated with scarifying and re-compaction work shall be incidental to the contract unit price per cubic yard for Unclassified Excavation. Earthwork shall be performed as shown on appropriate cross sections.

Due to the difficulty in making field measurements on this project and to expedite final payment, the computed quantity of Unclassified Excavation shall be the basis of payment for this item. No field measurements will be made for payments except when changes from the plan shown construction limits are ordered by the engineer.

All excavations made for underground utilities are incidental to the installation of that utility. All spoil material removed for pipe installation is the property of the Contractor and is to be removed from the project by the Contractor. All spoil material and costs for removing it are incidental to pipe installation costs.

The excess soil resulting from earthwork activities, if any, shall become the property of the contractor who shall be responsible for its removal from the site.

Water for compaction of subgrade and embankments shall be provided by the contractor and used to maintain soil at or near optimum moisture content to obtain required density. Compaction of subgrade and embankments shall be governed by the specified density method. Separate payment will be made for water used for compaction of subgrade.

SHRINKAGE FACTOR: Embankment +30% (Assumed)

INCIDENTAL WORK, GRADING

The lump sum bid price for "Incidental Work, Grading" shall be full compensation for all work listed below.

Station	L/R	Remarks
0+99	6' LT to 6' Rt	Saw cut existing asphalt Trail.
0+99	LT / RT	Remove existing asphalt. (1.3SqYd)
13+70	10' LT	Remove existing concrete headwall structure.
17+60	LT / RT	Saw cut (in half) dead 36" tree trunk. Place the two (2) pieces as directed by Engineer.

At approximately 17+60 a large (36" diameter) dead tree has fallen over and is lying on its side. The contractor is to cut the tree in half. After saw cutting the tree trunk into two (2) sections, the contractor shall take the two halves and place them, (at the direction of the engineer), near the proposed trail location. The contractor shall plan on appropriate sized equipment (excavator) to pick up and set down the tree halves. One half will be placed on the north side of the trail and the other will be placed on the south side of the trail. The engineer will stake locations for locating the tree halves prior to placing.

STORM SEWER

Reinforced concrete pipe may be either bell and spigot or tongue and groove. The pipe sections shall be adjoined such that the ends are fully entered and the inner surfaces are reasonably flush and even.

Lift holes in the reinforced concrete pipe shall be plugged with grout.

Watertight joints are required where reinforced concrete pipes, drop inlets, manholes, or junction boxes cross water mains and are separated a distance of 18 inches or less, above or below, the water main.

If watertight joints are required then the watertight joints shall extend for a distance of 10 feet beyond the water main. This measurement shall be from the sealed concrete joint to the outer most surface of the water main.

Watertight joint seals shall conform to the following requirements:

1. Reinforced Concrete Pipe (Circular): Gasketed pipe shall conform to the requirements of ASTM C443. Non-gasketed concrete pipe shall be sealed with a mastic joint seal conforming to the requirements of ASTM C990 and encased with a minimum 2' wide by 6" thick M6 concrete collar reinforced with 6x6 W2.9 x W2.9 wire mesh.

2. Drop Inlets, Manholes, and Junction Boxes: Joints shall be sealed with a waterstop seal or seal wrap meeting the requirements of ASTM C990 or encased with a minimum 2' wide by 6" thick M6 concrete collar reinforced with 6x6 W2.9 x W2.9 wire mesh. Waterstop seal shall contain hydrophilic compounds such as Waterstop-RX or ConSeal CS-

3. 231. Seal wrap shall be a self adhesive external joint wrap such as ConWrap CS-217 or Mar Mac Seal Wrap.

Gaskets and seals (mastic, waterstop, and seal wraps) shall be installed in accordance with the manufacturer's recommendations.

The cost for furnishing and installing all gaskets, mastic joint seal, waterstop seal, seal wrap, concrete collars, and for plugging the lift holes shall be incidental to the contract unit price per foot for the corresponding pipe bid item.

Storm sewer inlets and reinforced concrete pipe shall be constructed and installed as shown on the plans and as specified in the City of Sioux Falls Supplemental Standard Specifications for Storm Sewer Construction.

RCP shall be Class III. Pipe joints shall be sealed with an approved pipe joint sealant. Payment for storm sewer pipe will be paid for on a per linear foot basis of actual pipe laid. No separate payment will be made for standard pipe bedding material.

Any preformed butyl rope sealant used for joint sealant shall be furnished and installed and considered incidental to the various size of storm sewer pipe.

TABLE OF RIPRAP AND DRAINAGE FABRIC

Station	LT/RT	Class B Riprap (Ton)	Type B Drainage Fabric (SqYd)
13+70	25' RT	20.0	15
	Total:	20.0	15

REGISTERED PROFESSIONAL ENGINEER
REG. NO. 6853
JON R. BROWN
SOUTH DAKOTA
4-29-14

STOCKWELL ENGINEERS
SIOUX FALLS, SD

SURFACING THICKNESS DIMENSIONS

Plans tonnage will be applied even though the thickness may vary from that shown on the plans.

At those locations where material must be placed to achieve a required elevation, plans tonnage may be varied to achieve that required elevation.

BASE COURSE

Base course will be utilized under asphalt surfacing and reinforced concrete surfacing.

All Base Course shall be in accordance with SDDOT Specifications Section 260. Material for base course shall meet requirements set forth in SDDOT Specifications Section 882.

Base Course shall be compacted with pneumatic rollers and shall continue on each lift of the base course until the surface is firm and unyielding, and attains a density of 97% of the maximum dry density as determined by SD 104, Method 4 and SD 105 or SD 114.

Payment shall be made on a per ton basis. Any base course delivered to the site without a scale ticket will not be measured for payment.

MISCELLANEOUS WORK

The per site bid price for "Miscellaneous Work" shall be full compensation for all work listed below.

Station	L/R	Remarks
13+70	18.5' RT	Salvage and reinstall existing flap gate.

CONCRETE HEADWALL STRUCTURE

The concrete headwall structure shall be constructed as detailed on sheet B-23 of the plans. All costs associated with furnishing and installing the various components that make up the concrete headwall structure shall be incidental to the contract unit price for the various bid items.

WATER FOR GRANULAR MATERIAL

Water for compaction is estimated at 12 gallons per ton and shall be paid for at the contract unit price per thousand gallons for "Water for Granular Material".

ASPHALT CONCRETE COMPOSITE

Placement of asphalt concrete shall be by self-propelled pavers. Compaction of the asphalt concrete shall be by methods and equipment satisfactory to the Engineer.

Compaction of asphalt concrete shall be by the specified density method. The minimum density requirement is 92% of specified density or to the satisfaction of the Engineer.

Asphalt concrete composite shall conform to the SDDOT Specifications for Class G, Asphalt Concrete. The single lift shall conform to Class G-2 for the mineral aggregate specifications.

The asphalt cement used in the mixture shall be Performance Graded AASHTO Designation:PG58-28 and shall conform to the 2004 SDDOT Specifications. A mix design shall be submitted for approval prior to paving operations. Certificates of compliance will be required on the asphalt concrete composite mix and the performance graded asphalt binder.

Tack coat (SS-1h or CSS-1h) shall be applied along existing concrete and asphalt faces and any areas as determined by the Engineer at the rate of 0.05 gal./sq. yd.

Seasonal Limitations:

1. Asphalt Concrete Composite will not be laid if the underling surface is wet or frozen.
2. Temperature for lower lifts shall be, at minimum, 35 degrees Fahrenheit, with a forecast of holding or rising temperatures.
3. Temperatures for top lift shall be, at minimum, 40 degrees Fahrenheit, with a forecast of holding or rising temperatures.
4. The Engineer may require tarping of loads during cool or windy conditions.

Asphalt concrete composite shall be paid for at the contract unit price per ton, furnished complete in place, and shall be full compensation for asphalt cement, mineral aggregate, tack coat (SS-1h or CSS-1h), all materials, equipment, labor and incidentals necessary to complete the work.

5" REINFORCED COLORED CONCRETE SIDEWALK

All colored concrete shall be constructed using class M6 concrete and jointed in accordance with the plan. All concrete joints shall be saw cut, not tooled, to a minimum of 1.25 inch deep. All colored concrete shall be constructed using an integral color that is mixed prior to pouring and a color hardener that is worked into the surface prior to booming. The finished product shall be a light broom finish with no dragging. All colored concrete shall be reinforced with #4 rebar 18" O.C. both ways.

Integral Color: Coffee LC-2165 by Brickform Rafco Products
(Or approved equal)

Color Hardner: Modified Dusty Rose SP-Sioux Falls by Brickform Rafoco Products.
(Or approved equal)

Bench

Furnish and install bolt down surface mount 6' bench with ADA compliant arm rests.

Bench Model: PCXB/G-6VW

Arm rest Model: AR/vw-7

Color to be black. All furnishings are to be mounted directly to the concrete in accordance with the plans and manufacturer's recommendations using Engineer approved concrete anchor bolts.

Manufacturer: Pilot Rock Manufacturing
P.O. Box 946
Cherokee, Iowa 51012-0946
800.762.5002 ph.
712.225.5796 fax
(Or Approved Equal)

BIKE TRAIL SURFACING

All concrete bike trail shall be jointed longitudinally down the center and laterally every 8'. All joints shall be saw cut to a minimum of 1.25 inch deep. The contractor shall make an effort to curve the center longitudinal joint with the alignment of the trail. All costs associated with the saw cutting of concrete joints shall be incidental to the per square foot price of 5" reinforced concrete sidewalk.

TABLE OF 3" ASPHALT CONCRETE SIDEWALK

Station	to	Station	Quantity (Ton)
0+99.00		15+50.00	363.10
		Total:	363.10

TABLE OF 5" REINFORCED CONCRETE SIDEWALK

Station	to	Station	Quantity (SqFt)
15+50.00		25+25.00	11725.00
		Total:	11725.00

REGISTERED PROFESSIONAL ENGINEER
REG. NO. 6853
JON R. BROWN
SOUTH DAKOTA
11-29-14

STOCKWELL ENGINEERS
SIOUX FALLS, SD

SPECIAL RIGHT-OF-WAY FENCE (SPLIT RAIL)

All split rail fence to be "American Style" 2-rail fencing, constructed of naturally weathering timber that will not require maintenance by means of painting, staining or weather proof sealing. (i.e. cedar or redwood)

All rails must be 10-foot lengths. Line and end post must be two-hole, 5 feet 6 inches long and have a girth of 18 to 24 inches. Corner posts must be four-hole, 5 feet 4 inches long and have a girth of 18 to 24 inches.

All costs associated with furnishing and installing Split Rail Fence shall be incidental to the contract unit price per linear foot of “Special Right-Of-Way Fence”.

TABLE OF SPECIAL R.O.W. FENCE (SPLIT RAIL)

Station	to	Station	LT/RT		Quantity (FT)
13+50		13+90	9’ RT		40.0
19+61		19+95	12’ RT		40.0
20+05		20+45	12’ RT		40.0
			Total:	Total:	120.0

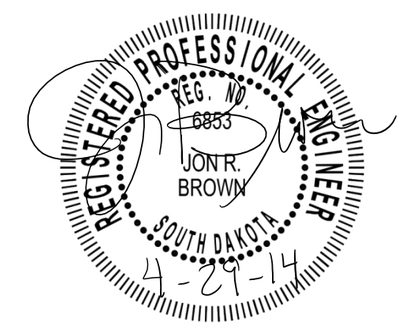

STOCKWELL ENGINEERS
SIOUX FALLS, SD

TABLE OF PIPE QUANTITIES

FOR BIDDING PURPOSES ONLY

STATE OF SOUTH DAKOTA	PROJECT	SHEET	TOTAL SHEETS
	EM 8050(65)	B6	B26

	Storm Sewer		
	Reinforced Concrete Pipe		
	12" Cl. 3	12" Flared End Sction	42" Class 3
Station Offset (L/R)	Ft	Ea	Ft
13+70 L to 13+70 R (Headwall)			32
16+49 L (FES) to 16+64 R (FES)	24	2	
18+35 L (FES) to 18+55 R (FES)	32	2	
20+00 L (FES) to 19+82 R (FES)	24	2	
21+89 L (FES) to 21+74 R (FES)	24	2	
23+40 L (FES) to 23+26 R (FES)	24	2	
Total:	128	10	32

REGISTERED PROFESSIONAL ENGINEER
REG. NO. 6853
JON R. BROWN
SOUTH DAKOTA
4-29-14

EXISTING TOPOGRAPHY SYMBOLOGY AND LEGEND SHEET

FOR BIDDING PURPOSES ONLY

STATE OF SOUTH DAKOTA	PROJECT	SHEET NO.	TOTAL SHEETS
	EM 8050(65)	B7	B26

FILE: 1412 – Title Page.dwg
PLOTTING DATE: 2014–04–29 INTIALS: JRK
REVISION DATE:

- CENTERLINE
- PROPERTY LINE
- 1400 – MAJOR CONTOUR
- 1402 – MINOR CONTOUR
- W – WATER MAIN
- ST – STORM SEWER
- S – SANITARY SEWER
- FM – SANITARY SEWER FORCE MAIN
- CS – COMBINED SEWER
- G – GAS MAIN
- UT – UNDERGROUND TELEPHONE
- OT – OVERHEAD TELEPHONE
- UP – UNDERGROUND POWER
- OP – OVERHEAD POWER
- F – FIBER OPTIC
- UTV – UNDERGROUND CABLE TV
- OTV – OVERHEAD CABLE TV
- TR – TRAFFIC
- IW – INDUSTRIAL WASTE
- SL – LAWN SPRINKLER LINE
- CONC. CURB & GUTTER
- APPROACH
- WOOD FENCE
- CHAIN LINK FENCE
- BARBED WIRE FENCE
- 30" – DECIDUOUS TREE
- 8" – CONIFEROUS TREE
- 18" – TREE STUMP
- SHRUB
- SIGN
- PARKING METER POST
- MAIL BOX
- FLAGPOLE
- SPRINKLER HEAD
- GAS VALVE
- TRAFFIC SIGNAL LIGHT
- POWER POLE
- GUY WIRE
- STREET LIGHT
- FLOOD LIGHT
- HISTORICAL STREET LIGHT
- UTILITY CLOSURE
- WELL
- WATERMAIN SHUTOFF
- FIRE HYDRANT
- WATERMAIN VALVE & BOX
- WATERMAIN CAP
- WATERMAIN TEE
- WATERMAIN CROSS
- WATERMAIN REDUCER
- WATERMAIN SLEEVE
- UTILTIY CLEANOUT
- UTILTIY RISER
- UTILITY METER
- STORM SEWER MANHOLE
- SANITARY MANHOLE
- WATER MANHOLE
- ELECTRIC MANHOLE
- TELEPHONE MANHOLE
- FIBER OPTIC MANHOLE

REGISTERED PROFESSIONAL ENGINEER
REG. NO. 6853
JON R. BROWN
SOUTH DAKOTA
11-29-14

STOCKWELL ENGINEERS
SIOUX FALLS, SD

HORIZONTAL ALIGNMENT & CONTROL DATA

FOR BIDDING PURPOSES ONLY

STATE OF SOUTH DAKOTA	PROJECT	SHEET NO.	TOTAL SHEETS
	EM 8050(65)	B8	B26

FILE: 1412 – Survey Data.dwg
PLOTTING DATE: 2014–04–29 INITIALS: JRK
REVISION DATE:

Bike Trail Alignment

Tangent Data

Description	PT Station	Northing	Easting
Start:	0+00.000	15835271.65	2247626.465
End:	15+51.622	15836517.97	2248550.7

Tangent Data

Parameter	Value	Parameter	Value
Length:	1551.622	Course:	N 36° 33' 34.2250" E

Curve Point Data

Description	Station	Northing	Easting
PC:	15+51.622	15836517.97	2248550.7
RP:		15836473.3	2248610.943
PT:	16+26.881	15836548.11	2248616.244

Circular Curve Data

Parameter	Value	Parameter	Value
Delta:	57° 29' 37.1923"	Type:	RIGHT
Radius:	75		
Length:	75.259	Tangent:	41.141
Mid-Ord:	9.243	External:	10.543
Chord:	72.141	Course:	N 65° 18' 22.8211" E

Tangent Data

Description	PT Station	Northing	Easting
Start:	16+26.881	15836548.11	2248616.244
End:	16+63.320	15836545.53	2248652.592

Tangent Data

Parameter	Value	Parameter	Value
Length:	36.438	Course:	S 85° 56' 48.5828" E

Curve Point Data

Description	Station	Northing	Easting
PC:	16+63.320	15836545.53	2248652.592
RP:		15836595.41	2248656.126
PT:	16+86.093	15836549.06	2248674.891

Circular Curve Data

Parameter	Value	Parameter	Value
Delta:	26° 05' 47.2693"	Type:	LEFT
Radius:	50		
Length:	22.773	Tangent:	11.588
Mid-Ord:	1.291	External:	1.325
Chord:	22.577	Course:	N 81° 00' 17.7826" E

Tangent Data

Description	PT Station	Northing	Easting
Start:	16+86.093	15836549.06	2248674.891
End:	17+40.122	15836569.34	2248724.971

Tangent Data

Parameter	Value	Parameter	Value
Length:	54.029	Course:	N 67° 57' 24.1480" E

Curve Point Data

Description	Station	Northing	Easting
PC:	17+40.122	15836569.34	2248724.971
RP:		15836523	2248743.736
PCC:	17+77.979	15836569.57	2248761.929

Circular Curve Data

Parameter	Value	Parameter	Value
Delta:	43° 22' 49.5416"	Type:	RIGHT
Radius:	50		
Length:	37.857	Tangent:	19.888
Mid-Ord:	3.54	External:	3.81
Chord:	36.959	Course:	N 89° 38' 48.9188" E

Curve Point Data

Description	Station	Northing	Easting
PCC:	17+77.979	15836569.57	2248761.929
RP:		15836662.72	2248798.314
PT:	18+65.411	15836575.05	2248846.425

Circular Curve Data

Parameter	Value	Parameter	Value
Delta:	50° 05' 42.5282"	Type:	LEFT
Radius:	100		
Length:	87.433	Tangent:	46.732
Mid-Ord:	9.404	External:	10.381
Chord:	84.674	Course:	N 86° 17' 22.4255" E

Tangent Data

Description	PT Station	Northing	Easting
Start:	18+65.411	15836575.05	2248846.425
End:	18+87.837	15836585.84	2248866.086

Tangent Data

Parameter	Value	Parameter	Value
Length:	22.426	Course:	N 61° 14' 31.1615" E

REGISTERED PROFESSIONAL ENGINEER
REG. NO. 6853
JON R. BROWN
SOUTH DAKOTA
4-29-14

HORIZONTAL DATUM: THE COORDINATE ZONE ON THIS SHEET IS BASED ON UTM 14 NORTH.

VERTICAL DATUM: NORTH AMERICAN VERTICAL DATUM OF 1988

STOCKWELL ENGINEERS
SIOUX FALLS, SD

HORIZONTAL ALIGNMENT & CONTROL DATA

FOR BIDDING PURPOSES ONLY

STATE OF SOUTH DAKOTA	PROJECT	SHEET NO.	TOTAL SHEETS
	EM 8050(65)	B9	B26

FILE: 1412 – Survey Data.dwg
PLOTTING DATE: 2014–04–29 INITIALS: JRK
REVISION DATE:

Bike Trail Alignment (cont.)

Curve Point Data

Description	Station	Northing	Easting
PC:	18+87.837	15836585.84	2248866.086
RP:		15836542.01	2248890.141
PT:	19+31.829	15836588.48	2248908.59

Circular Curve Data

Parameter	Value	Parameter	Value
Delta:	50° 24' 37.0198"	Type:	RIGHT
Radius:	50		
Length:	43.991	Tangent:	23.534
Mid-Ord:	4.761	External:	5.262
Chord:	42.586	Course:	N 86° 26' 49.6714" E

Tangent Data

Description	PT Station	Northing	Easting
Start:	19+31.829	15836588.48	2248908.59
End:	19+66.445	15836575.71	2248940.764

Tangent Data

Parameter	Value	Parameter	Value
Length:	34.616	Course:	S 68° 20' 51.8188" E

Curve Point Data

Description	Station	Northing	Easting
PC:	19+66.445	15836575.71	2248940.764
RP:		15836622.18	2248959.212
PT:	19+92.475	15836572.69	2248966.323

Circular Curve Data

Parameter	Value	Parameter	Value
Delta:	29° 49' 40.4777"	Type:	LEFT
Radius:	50		
Length:	26.03	Tangent:	13.317
Mid-Ord:	1.684	External:	1.743
Chord:	25.737	Course:	S 83° 15' 42.0576" E

Tangent Data

Description	PT Station	Northing	Easting
Start:	19+92.475	15836572.69	2248966.323
End:	20+35.152	15836578.75	2249008.566

Tangent Data

Parameter	Value	Parameter	Value
Length:	42.677	Course:	N 81° 49' 27.7035" E

Curve Point Data

Description	Station	Northing	Easting
PC:	20+35.152	15836578.75	2249008.566
RP:		15836380.79	2249037.007
PT:	20+68.164	15836580.74	2249041.481

Circular Curve Data

Parameter	Value	Parameter	Value
Delta:	09° 27' 26.1715"	Type:	RIGHT
Radius:	200		
Length:	33.012	Tangent:	16.544
Mid-Ord:	0.681	External:	0.683
Chord:	32.975	Course:	N 86° 33' 10.7893" E

Tangent Data

Description	PT Station	Northing	Easting
Start:	20+68.164	15836580.74	2249041.481
End:	21+18.915	15836579.6	2249092.219

Tangent Data

Parameter	Value	Parameter	Value
Length:	50.751	Course:	S 88° 43' 06.1249" E

Curve Point Data

Description	Station	Northing	Easting
PC:	21+18.915	15836579.6	2249092.219
RP:		15836679.58	2249094.456
PT:	21+41.243	15836581.59	2249114.412

Circular Curve Data

Parameter	Value	Parameter	Value
Delta:	12° 47' 35.0874"	Type:	LEFT
Radius:	100		
Length:	22.328	Tangent:	11.211
Mid-Ord:	0.623	External:	0.626
Chord:	22.282	Course:	N 84° 53' 06.3314" E

Tangent Data

Description	PT Station	Northing	Easting
	21+41.243	15836581.59	2249114.412
	21+79.176	15836589.16	2249151.582

Tangent Data

Parameter	Value	Parameter	Value
Length:	37.933	Course:	N 78° 29' 18.7877" E

REGISTERED PROFESSIONAL ENGINEER
REG. NO. 6853
JON R. BROWN
SOUTH DAKOTA
4-29-14

HORIZONTAL DATUM: THE COORDINATE ZONE ON THIS SHEET IS BASED ON UTM 14 NORTH.

VERTICAL DATUM: NORTH AMERICAN VERTICAL DATUM OF 1988

STOCKWELL ENGINEERS
SIOUX FALLS, SD

HORIZONTAL ALIGNMENT & CONTROL DATA

FOR BIDDING PURPOSES ONLY

STATE OF SOUTH DAKOTA	PROJECT	SHEET NO.	TOTAL SHEETS
	EM 8050(65)	B10	B26

FILE: 1412 – Survey Data.dwg
PLOTTING DATE: 2014–04–29 INITIALS: JRK
REVISION DATE:

Bike Trail Alignment (cont.)

Curve Point Data			
Description	**Station**	**Northing**	**Easting**
PC:	21+79.176	15836589.16	2249151.582
RP:		15836540.16	2249161.561
PT:	21+98.218	15836589.36	2249170.508
Circular Curve Data			
Parameter	**Value**	**Parameter**	**Value**
Delta:	21° 49' 13.9729"	Type:	RIGHT
Radius:	50		
Length:	19.042	Tangent:	9.638
Mid-Ord:	0.904	External:	0.92
Chord:	18.927	Course:	N 89° 23' 55.7741" E
Tangent Data			
Description	**PT Station**	**Northing**	**Easting**
Start:	21+98.218	15836589.36	2249170.508
End:	23+99.791	15836553.28	2249368.827
Tangent Data			
Parameter	**Value**	**Parameter**	**Value**
Length:	201.572	Course:	S 79° 41' 27.2395" E
Curve Point Data			
Description	**Station**	**Northing**	**Easting**
PC:	23+99.791	15836553.28	2249368.827
RP:		15837045.21	2249458.306
PT:	25+31.076	15836546.92	2249499.581
Circular Curve Data			
Parameter	**Value**	**Parameter**	**Value**
Delta:	15° 02' 39.1840"	Type:	LEFT
Radius:	500		
Length:	131.286	Tangent:	66.023
Mid-Ord:	4.303	External:	4.34
Chord:	130.909	Course:	S 87° 12' 46.8314" E
Tangent Data			
Description	**PT Station**	**Northing**	**Easting**
Start:	25+31.076	15836546.92	2249499.581
End:	25+72.032	15836550.3	2249540.396
Tangent Data			
Parameter	**Value**	**Parameter**	**Value**
Length:	40.955	Course:	N 85° 15' 53.5766" E

Curve Point Data			
Description	**Station**	**Northing**	**Easting**
PC:	25+72.032	15836550.3	2249540.396
RP:		15836450.64	2249548.651
PT:	26+04.296	15836547.78	2249572.422
Circular Curve Data			
Parameter	**Value**	**Parameter**	**Value**
Delta:	18° 29' 10.3318"	Type:	RIGHT
Radius:	100		
Length:	32.265	Tangent:	16.274
Mid-Ord:	1.298	External:	1.316
Chord:	32.125	Course:	S 85° 29' 31.2575" E

REGISTERED PROFESSIONAL ENGINEER
REG. NO. 6853
JON R. BROWN
SOUTH DAKOTA
4-29-14

HORIZONTAL DATUM: THE COORDINATE ZONE ON THIS SHEET IS BASED ON UTM 14 NORTH.

VERTICAL DATUM: NORTH AMERICAN VERTICAL DATUM OF 1988

STOCKWELL ENGINEERS
SIOUX FALLS, SD

HORIZONTAL ALIGNMENT & CONTROL DATA

FOR BIDDING PURPOSES ONLY

STATE OF SOUTH DAKOTA	PROJECT	SHEET NO.	TOTAL SHEETS
	EM 8050(65)	B11	B26

FILE: 1412 – Survey Data.dwg
PLOTTING DATE: 2014–04–29 INITIALS: JRK
REVISION DATE:

Control Point Data

Point	Northing	Easting	Elevation	Description
10	15836510.0310	2248478.0470	1324.144	Rebar
11	15835573.6450	2247785.5990	1324.549	Rebar
12	15836593.0690	2248934.9540	1314.271	Rebar
13	15836539.5880	2249314.9130	1310.692	Rebar
14	15836581.9600	2249649.4800	1336.314	Rebar
15	15836591.6690	2249825.0640	1342.857	Rebar
16	15836627.9200	2250083.7170	1348.856	Rebar
17	15836494.2000	2250239.9200	1339.949	Rebar
18	15836402.1270	2250327.3740	1314.405	Rebar
19	15836444.5730	2250192.3480	1315.773	Rebar
20	15836416.6720	2250493.9460	1319.921	Rebar
21	15836192.9680	2250765.2100	1311.936	Rebar
22	15835885.7590	2251024.3600	1312.641	Rebar
23	15835687.6470	2251357.3830	1312.196	Rebar
24	15835626.7660	2251692.0470	1310.107	Rebar
25	15836498.6720	2250084.5320	1320.914	Rebar
26	15836504.9330	2250002.9860	1319.237	Rebar
27	15836522.3670	2249882.2140	1320.863	Rebar
28	15836529.1580	2249757.6290	1324.231	Rebar
29	15836521.5520	2249422.4850	1310.083	Rebar
30	15835718.8910	2252242.7190	1310.863	Rebar
31	15836158.3120	2252149.1850	1306.941	Rebar
32	15836057.5460	2251780.3490	1309.284	Rebar
40	15836560.4920	2249136.7070	1311.949	Rebar
41	15836512.1340	2249693.7500	1312.629	Rebar
42	15836529.1670	2249757.0510	1324.278	Rebar
43	15836526.1320	2249859.9390	1321.067	Rebar
44	15836506.2450	2249958.4600	1319.890	Rebar
45	15836478.6270	2250037.4130	1316.588	Rebar
46	15836488.3260	2250134.3390	1318.752	Rebar
48	15836436.2240	2250213.8080	1315.752	Rebar
49	15836399.8620	2250330.0280	1314.329	Rebar
50	15836141.1770	2251031.7730	1310.512	Rebar

REGISTERED PROFESSIONAL ENGINEER
REG. NO. 6853
JON R. BROWN
SOUTH DAKOTA
4-29-14

HORIZONTAL DATUM: THE COORDINATE ZONE ON THIS SHEET IS BASED ON UTM 14 NORTH.

VERTICAL DATUM: NORTH AMERICAN VERTICAL DATUM OF 1988

STOCKWELL ENGINEERS
SIOUX FALLS, SD

FOR BIDDING PURPOSES ONLY

STATE OF SOUTH DAKOTA	PROJECT	SHEET NO.	TOTAL SHEETS
	EM 8050(65)	B12	B26

FILE: 1412 – Typical Sections.dwg
PLOTTING DATE: 2014–04–29 INITIALS: JRK
REVISION DATE:

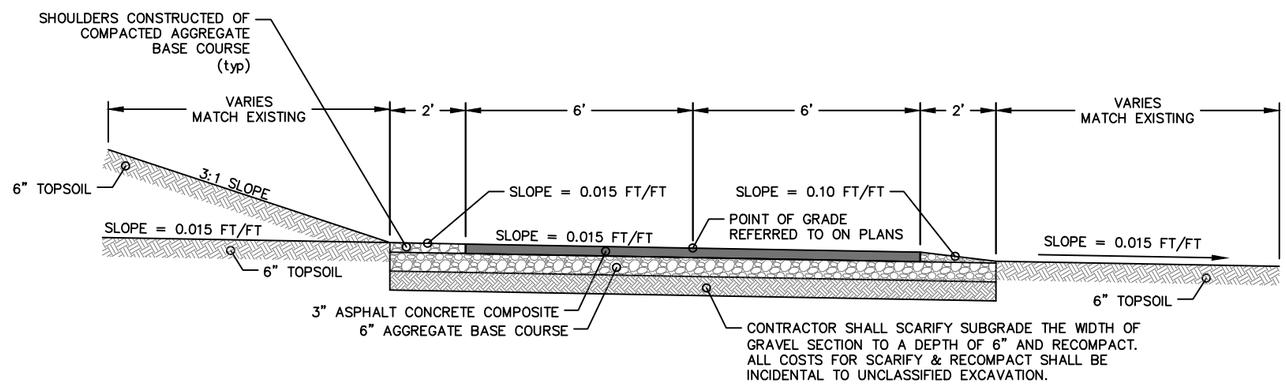

ASPHALT TRAIL SECTION
STATION 1+00 TO 15+50

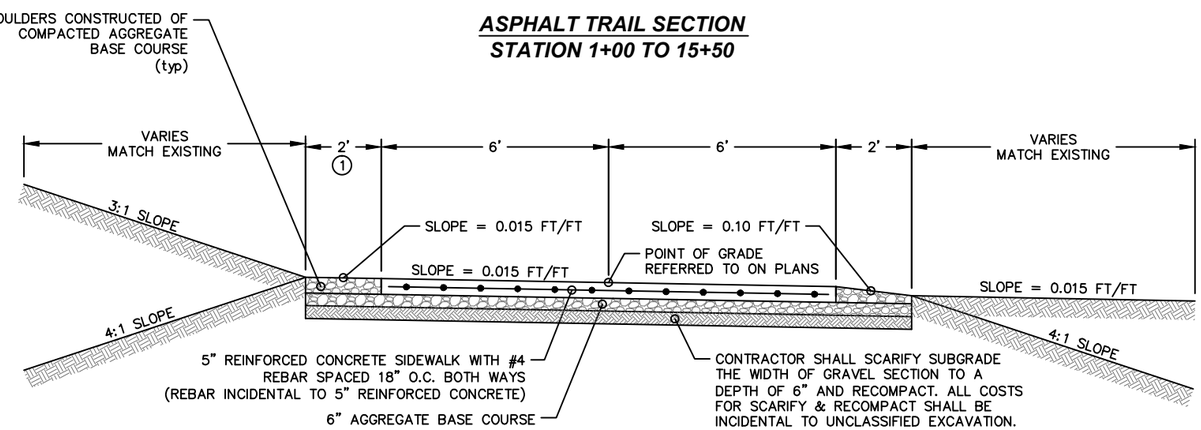

① – SHOULDER WIDTH IS 0' AT THE FOLLOWING STATIONS:
STA. 21+50 TO 23+20
(6" AGGREGATE BASE COURSE TO EXTEND 1' BEYOND 5" REINFORCED CONCRETE)

REINFORCED CONCRETE TRAIL SECTION
STATION 15+50 TO 25+75

STOCKWELL ENGINEERS
SIOUX FALLS, SD

REMOVALS & INPLACE UTILITIES

FOR BIDDING PURPOSES ONLY

STATE OF SOUTH DAKOTA	PROJECT	SHEET NO.	TOTAL SHEETS
	EM 8050(65)	B13	B26

FILE: 1412 – Removals Plan.dwg
PLOTTING DATE: 2014–04–29 INITIALS: JRK
REVISION DATE:

LEGEND

- CLEAR & GRUB TREE
- TREE TRIMMING
- GRADING / CLEARING LIMITS

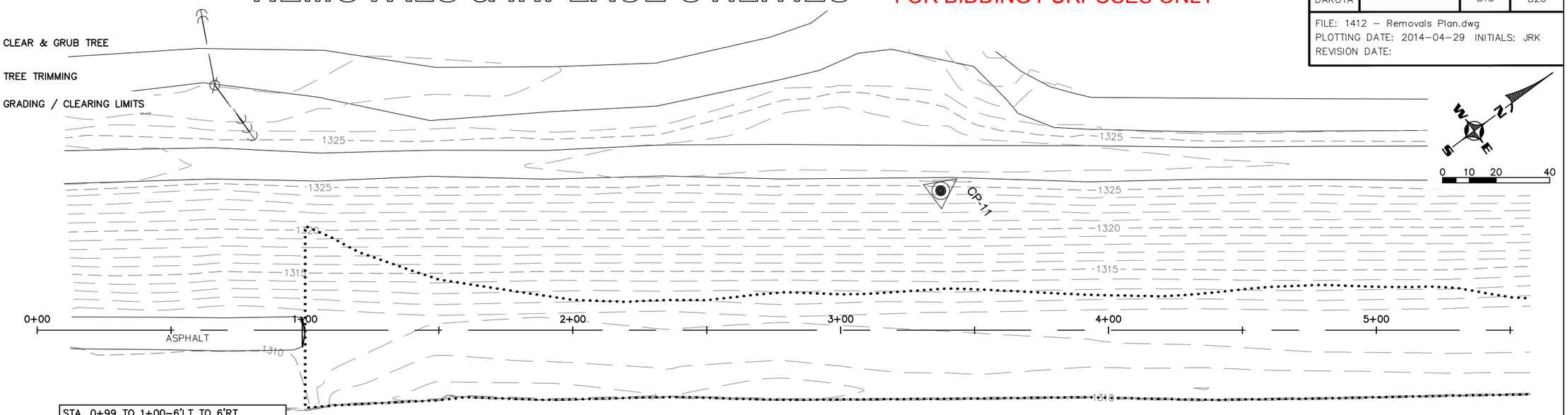

STA. 0+99 TO 1+00–6'LT TO 6'RT
SAWCUT AND REMOVE ASPHALT CONCRETE
(INCIDENTAL WORK, GRADING)

NO REMOVALS
STA. 5+00 TO 10+00

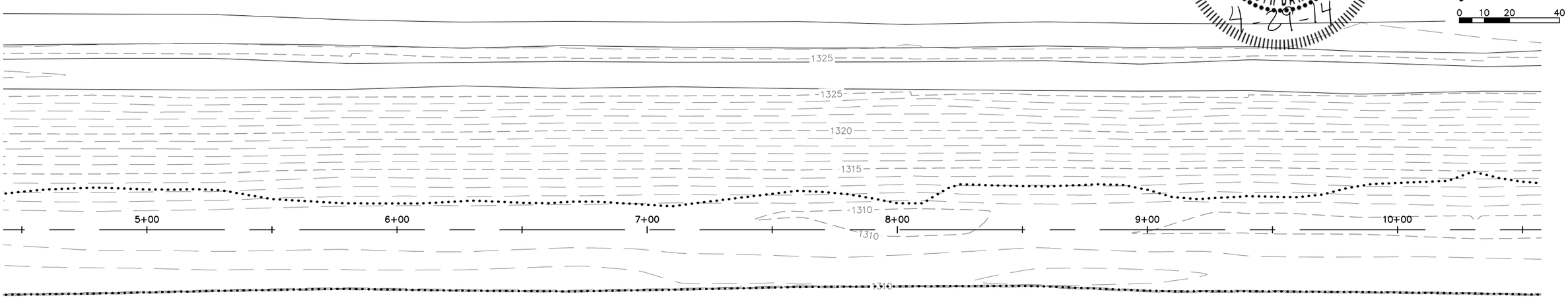

REGISTERED PROFESSIONAL ENGINEER
REG. NO. 6853
JON R. BROWN
SOUTH DAKOTA
4-29-14

STOCKWELL ENGINEERS
SIOUX FALLS, SD

REMOVALS & INPLACE UTILITIES

FOR BIDDING PURPOSES ONLY

STATE OF SOUTH DAKOTA	PROJECT	SHEET NO.	TOTAL SHEETS
	EM 8050(65)	B14	B26

FILE: 1412 – Removals Plan.dwg
PLOTTING DATE: 2014–04–29 INITIALS: JRK
REVISION DATE:

LEGEND

- CLEAR & GRUB TREE
- TREE TRIMMING
- GRADING / CLEARING LIMITS

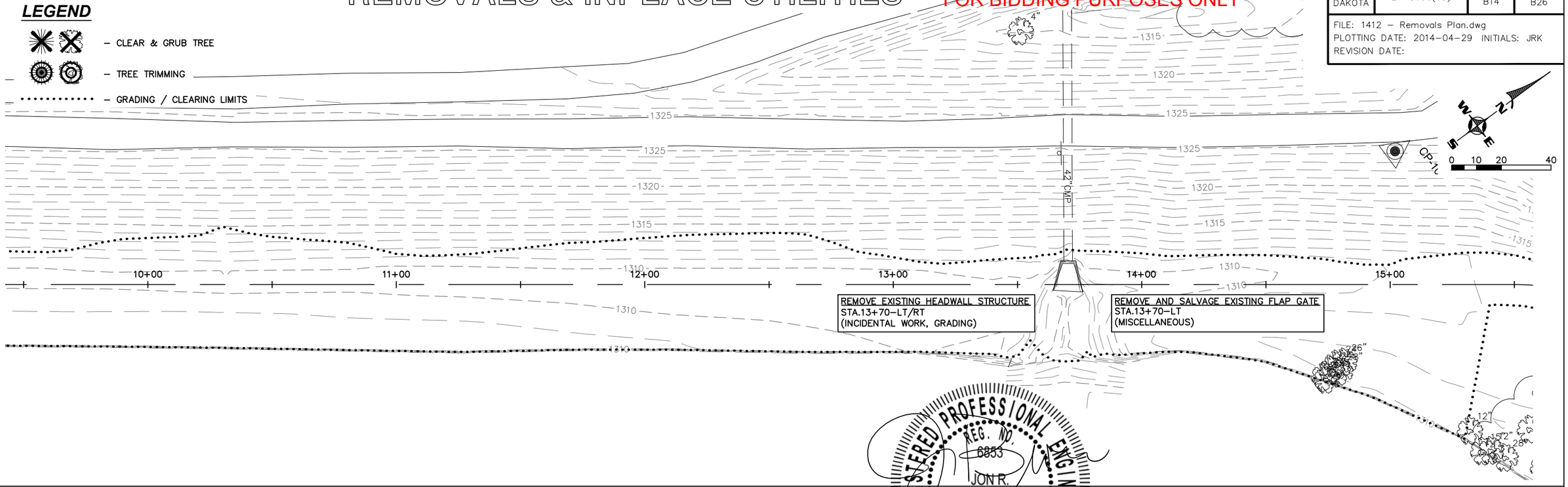

REGISTERED PROFESSIONAL ENGINEER
REG. NO. 6853
JON R. BROWN
SOUTH DAKOTA
4-29-14

CLEAR & GRUB TREE (17 EACH)
STA. 16+39–3'RT (24")
STA. 16+58–7'RT (18")
STA. 16+87–6'LT (15")
STA. 17+38–1'LT (10")
STA. 17+56–3'LT (18")
STA. 17+60–8'LT (6")
STA. 17+79–15'LT (10")
STA. 17+96–13'LT (8")
STA. 18+09–15'LT (15")
STA. 18+35–9'LT (15")
STA. 18+36–15'LT (15")
STA. 18+48–14'LT (15")
STA. 18+51–14'LT (12")
STA. 18+75–13'RT (18")
STA. 18+90–14'RT (18")
STA. 18+99–8'RT (12")
STA. 19+84–14'LT (12")
(ALL TREES UNDER 6" AND SHRUBS TO BE INCLUDED IN BID ITEM "CLEARING")

SAW CUT DEAD 36" TREE TRUNK AND PLACE HALVES AS DIRECTED BY ENGINEER
STA.17+60–LT/RT
(INCIDENTAL WORK, GRADING)

TREE TRIMMING (16 EACH)
STA. 16+81–11'LT (12")
STA. 16+88–11'RT (20")
STA. 17+23–18'LT (36")
STA. 17+66–19'LT (24")
STA. 17+80–13'RT (26")
STA. 18+30–20'LT (18")
STA. 18+41–20'RT (26")
STA. 18+65–17'RT (28")
STA. 18+72–21'LT (18")
STA. 18+98–10'LT (26")
STA. 18+99–12'RT (26")
STA. 18+99–14'LT (24")
STA. 19+38–19'LT (36")
STA. 19+41–17'LT (60")
STA. 19+59–12'LT (24")
STA. 19+60–25'LT (26")

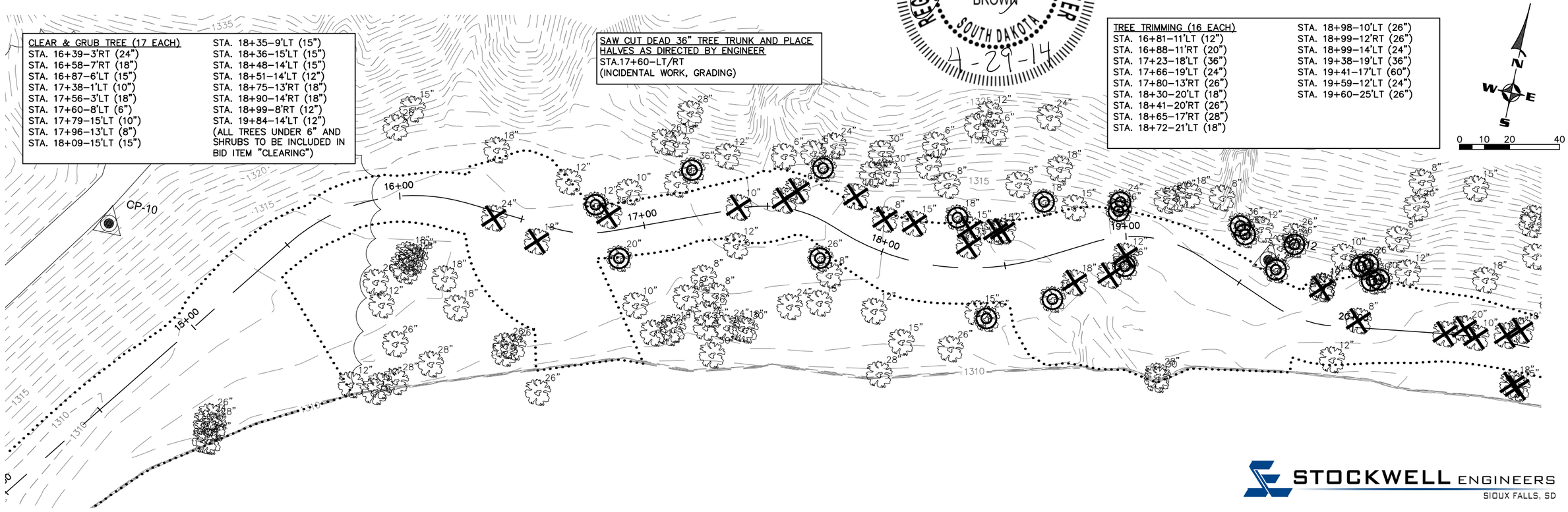

STOCKWELL ENGINEERS
SIOUX FALLS, SD

REMOVALS & INPLACE UTILITIES

FOR BIDDING PURPOSES ONLY

STATE OF SOUTH DAKOTA	PROJECT	SHEET NO.	TOTAL SHEETS
	EM 8050(65)	B15	B26

FILE: 1412 – Removals Plan.dwg
PLOTTING DATE: 2014–04–29 INITIALS: JRK
REVISION DATE:

LEGEND

- CLEAR & GRUB TREE
- TREE TRIMMING
- GRADING / CLEARING LIMITS

CLEAR & GRUB TREE (21 EACH)
STA. 20+02–3'LT (8")
STA. 20+37–CL (20")
STA. 20+44–3'LT (20")
STA. 20+49–CL (10")
STA. 20+61–3'LT (15")
STA. 20+66–6'LT (18")
STA. 20+68–16'RT (18")
STA. 20+70–17'RT (15")
STA. 21+58–9'LT (8")
STA. 21+85–4'RT (8")
STA. 21+86–4'RT (12")
STA. 22+00–12'RT (6")
STA. 22+01–9'RT (28")
STA. 22+33–8'RT (12")
STA. 22+36–8'LT (10")
STA. 22+83–17'LT (24")
STA. 23+19–6'LT (24")
STA. 23+45–14'LT (6")
STA. 23+83–1'LT (18")
STA. 24+34–30'LT (6")
STA. 24+92–6'RT (18")
(ALL TREES UNDER 6" AND SHRUBS TO BE INCLUDED IN BID ITEM "CLEARING")

TREE TRIMMING (17 EACH)
STA. 20+02–24'LT (20")
STA. 20+04–26'LT (26")
STA. 20+06–19'LT (30")
STA. 20+09–20'LT (30")
STA. 20+76–19'LT (20")
STA. 20+89–16'LT (18")
STA. 21+25–16'LT (26")
STA. 21+56–11'LT (36")
STA. 21+61–11'RT (28")
STA. 22+04–20'LT (18")
STA. 22+19–15'LT (24")
STA. 22+37–11'LT (18")
STA. 23+70–13'LT (24")
STA. 23+77–17'LT (24")
STA. 24+03–25'LT (18")
STA. 24+61–27'LT (30")
STA. 24+99–20'LT (24")

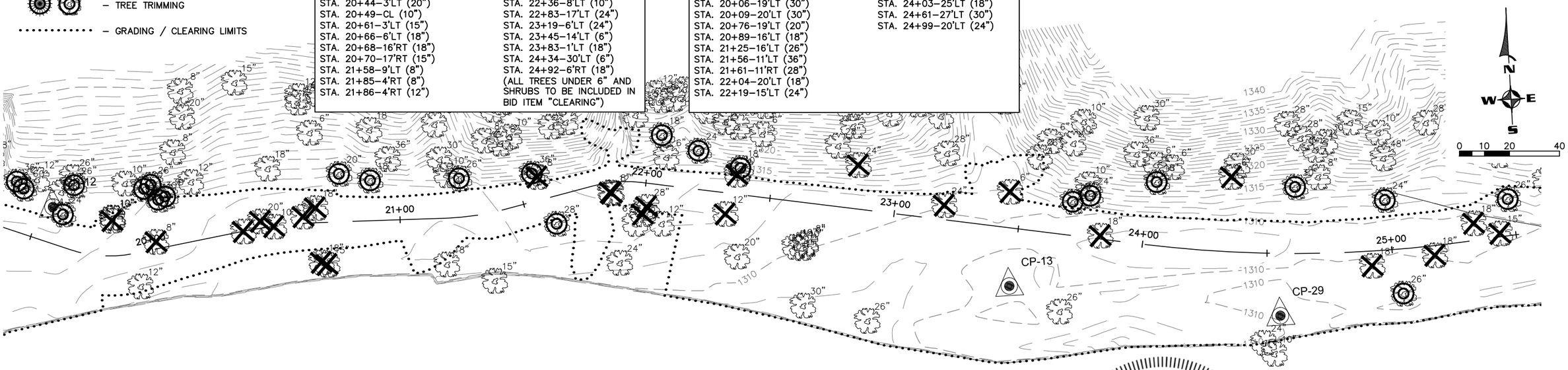

CLEAR & GRUB TREE (3 EACH)
STA. 25+17–4'RT (18")
STA. 25+34–7'LT (18")
STA. 25+44–1'LT (15")
(ALL TREES UNDER 6" AND SHRUBS TO BE INCLUDED IN BID ITEM "CLEARING")

TREE TRIMMING (3 EACH)
STA. 25+03–18'RT (26")
STA. 25+49–15'LT (26")
STA. 25+88–15'LT (36")

REGISTERED PROFESSIONAL ENGINEER
REG. NO. 6853
JON R. BROWN
SOUTH DAKOTA
4-29-14

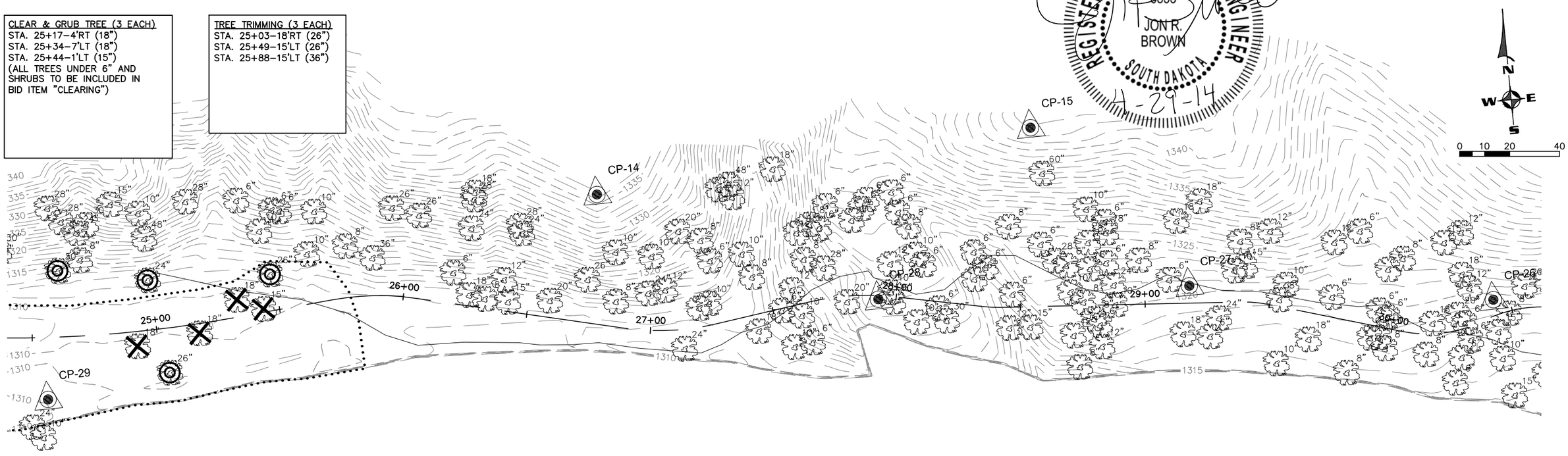

STOCKWELL ENGINEERS
SIOUX FALLS, SD

STATE OF SOUTH DAKOTA	PROJECT	SHEET NO.	TOTAL SHEETS
	EM 8050(65)	B16	B26

FILE: 1412 – Pavement Plan.dwg
PLOTTING DATE: 2014-05-05 INITIALS: JRK
REVISION DATE:

FOR BIDDING PURPOSES ONLY

LEGEND

– COLORED REINFORCED CONCRETE
– ASPHALT TRAIL SECTION #1

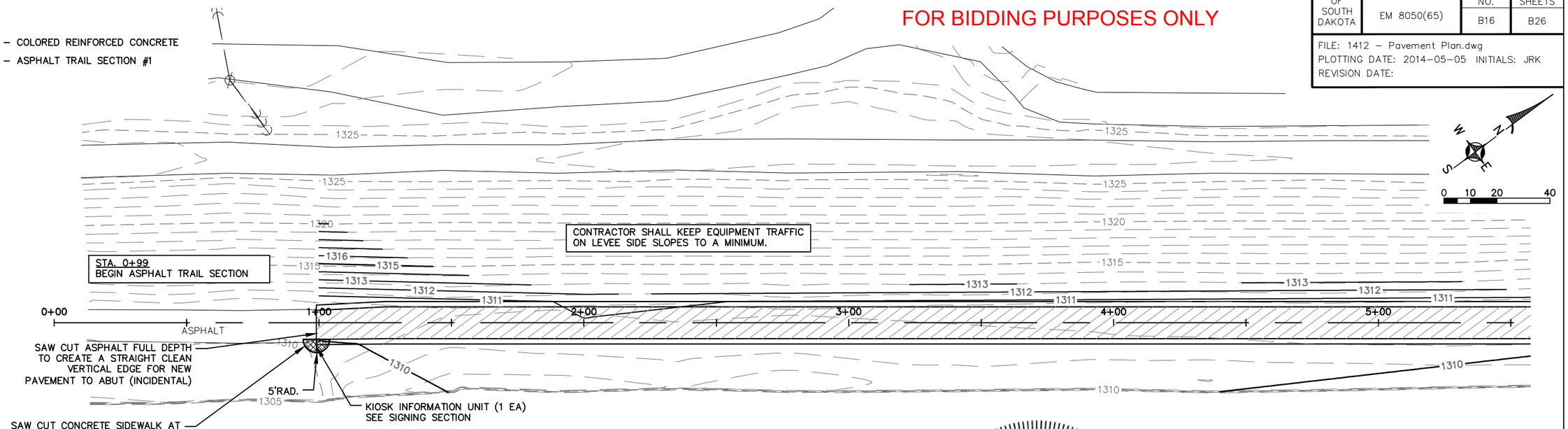

STA. 0+99 – RT
40 SQFT – 5" REINFORCED COLORED CONCRETE SIDEWALK
1.7 TON – BASE COURSE

STA. 0+99 TO 5+00
304 TON – BASE COURSE
98.1 TON – ASPHALT CONCRETE COMPOSITE

REGISTERED PROFESSIONAL ENGINEER
REG. NO. 6853
JON R. BROWN
SOUTH DAKOTA
11-29-14

STOCKWELL ENGINEERS
SIOUX FALLS, SD

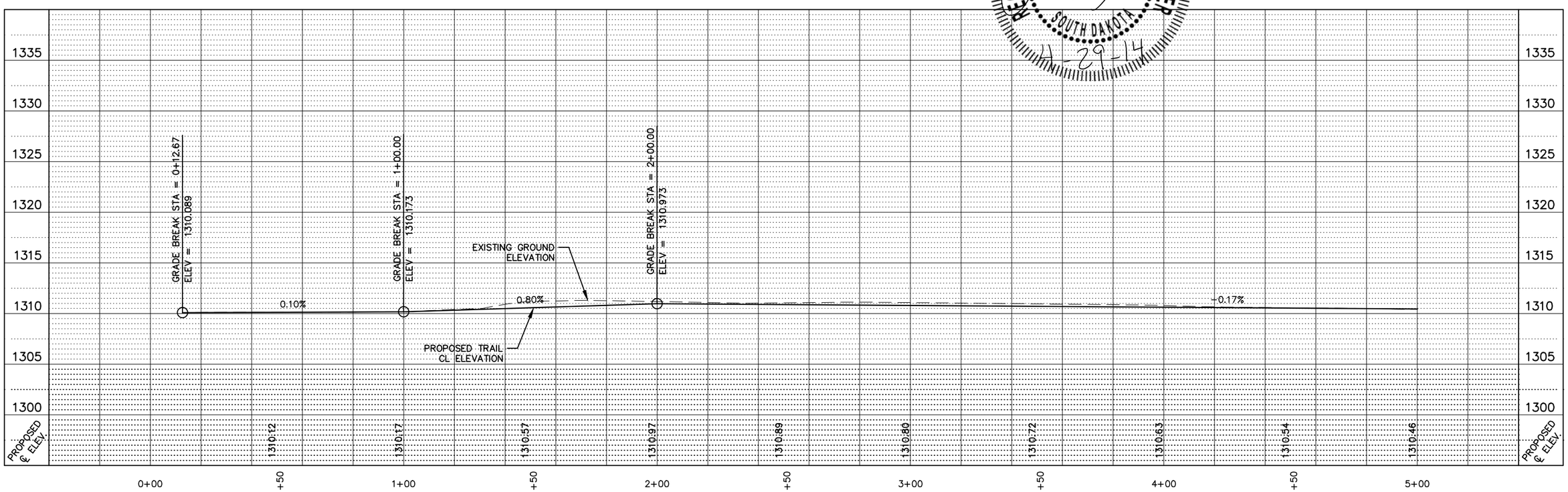

STATE OF SOUTH DAKOTA	PROJECT	SHEET NO.	TOTAL SHEETS
	EM 8050(65)	B17	B26

FILE: 1412 – Pavement Plan.dwg
PLOTTING DATE: 2014–05–05 INITIALS: JRK
REVISION DATE:

FOR BIDDING PURPOSES ONLY

LEGEND

– ASPHALT TRAIL SECTION #1

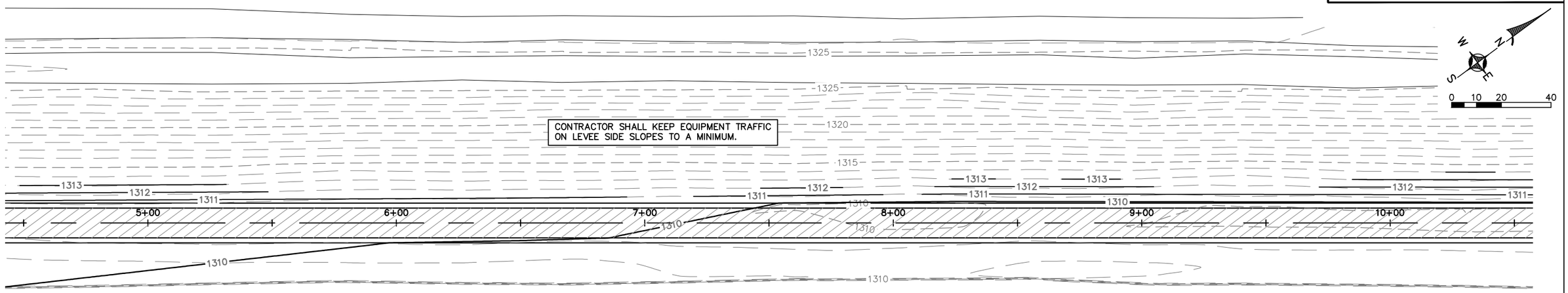

STA. 5+00 TO 10+00
380 TON – BASE COURSE
126.5 TON – ASPHALT CONCRETE COMPOSITE

REGISTERED PROFESSIONAL ENGINEER
REG. NO. 6853
JON R. BROWN
SOUTH DAKOTA
4-29-14

STOCKWELL ENGINEERS
SIOUX FALLS, SD

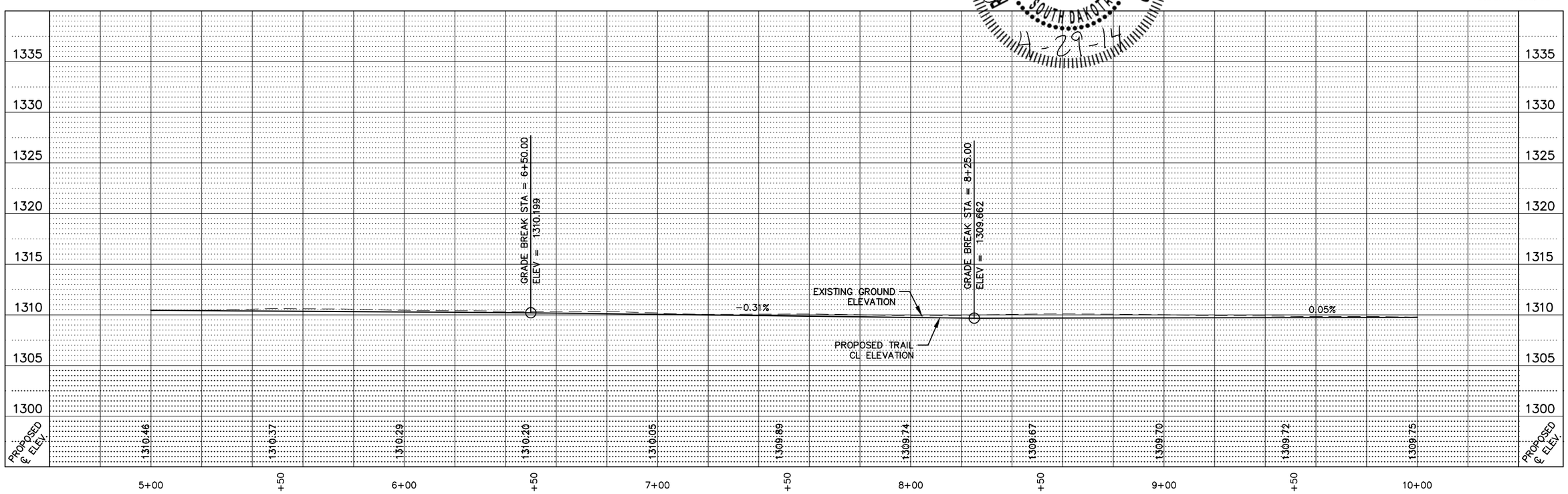

STATE OF SOUTH DAKOTA	PROJECT	SHEET NO.	TOTAL SHEETS
	EM 8050(65)	B18	B26

FILE: 1412 – Pavement Plan.dwg
PLOTTING DATE: 2014–05–05 INITIALS: JRK
REVISION DATE:

FOR BIDDING PURPOSES ONLY

LEGEND

- ASPHALT TRAIL SECTION #1
- SPLIT RAIL FENCE

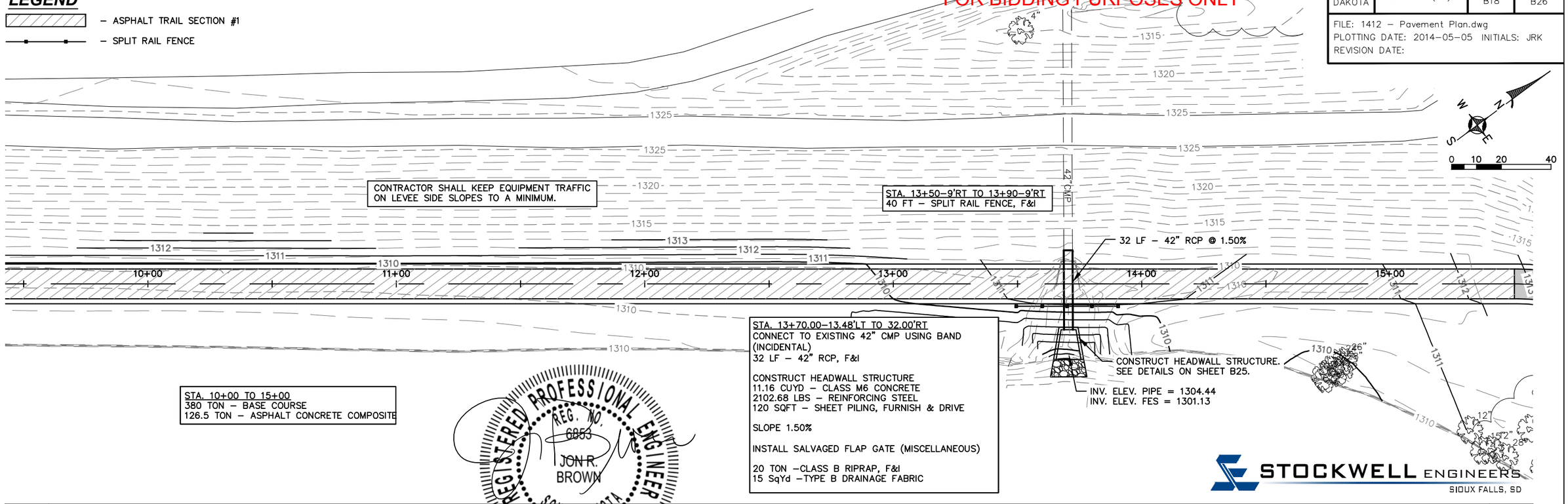

REGISTERED PROFESSIONAL ENGINEER
REG. NO. 6853
JON R. BROWN
SOUTH DAKOTA
11-29-14

STOCKWELL ENGINEERS
SIOUX FALLS, SD

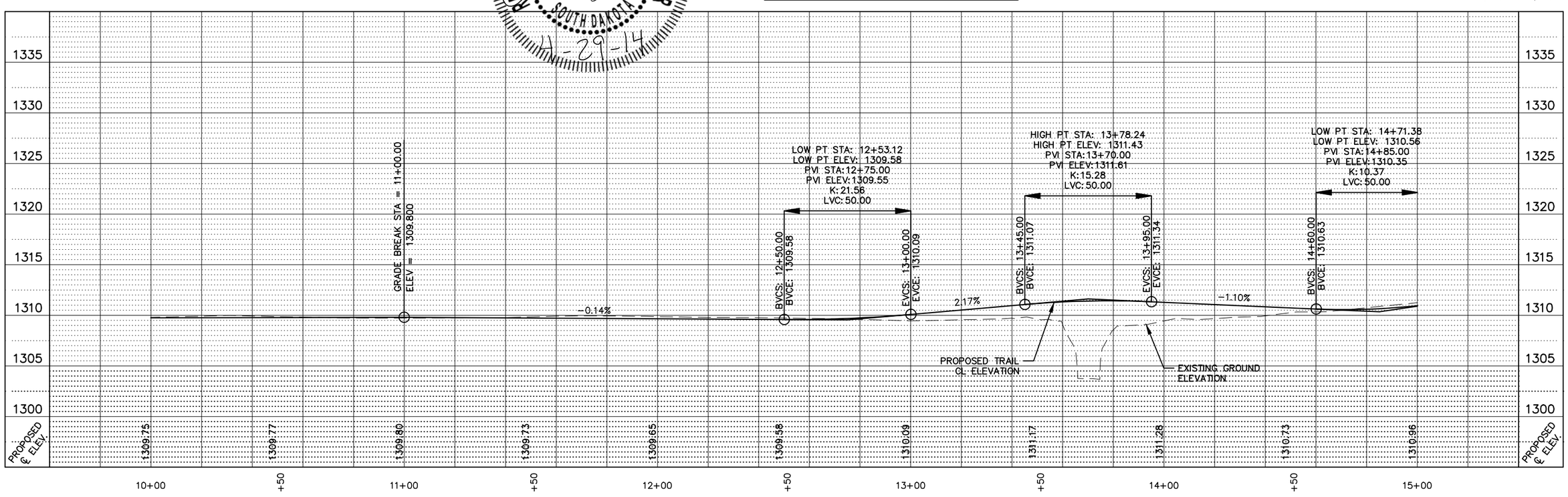

STATE OF SOUTH DAKOTA	PROJECT	SHEET NO.	TOTAL SHEETS
	EM 8050(65)	B19	B26

FILE: 1412 – Pavement Plan.dwg
PLOTTING DATE: 2014-05-05 INITIALS: JRK
REVISION DATE:

FOR BIDDING PURPOSES ONLY

LEGEND

- REINFORCED CONCRETE TRAIL SECTION
- ASPHALT TRAIL SECTION #1
- SPLIT RAIL FENCE

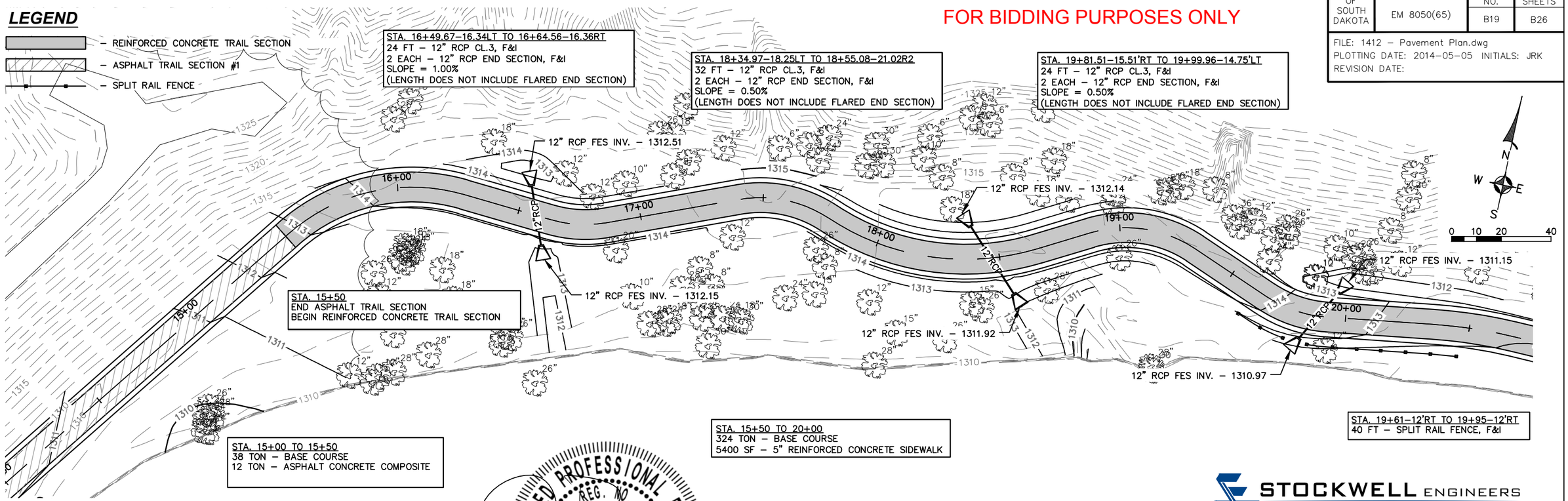

STOCKWELL ENGINEERS
SIOUX FALLS, SD

REGISTERED PROFESSIONAL ENGINEER
REG. NO. 6853
JON R. BROWN
SOUTH DAKOTA
11-29-14

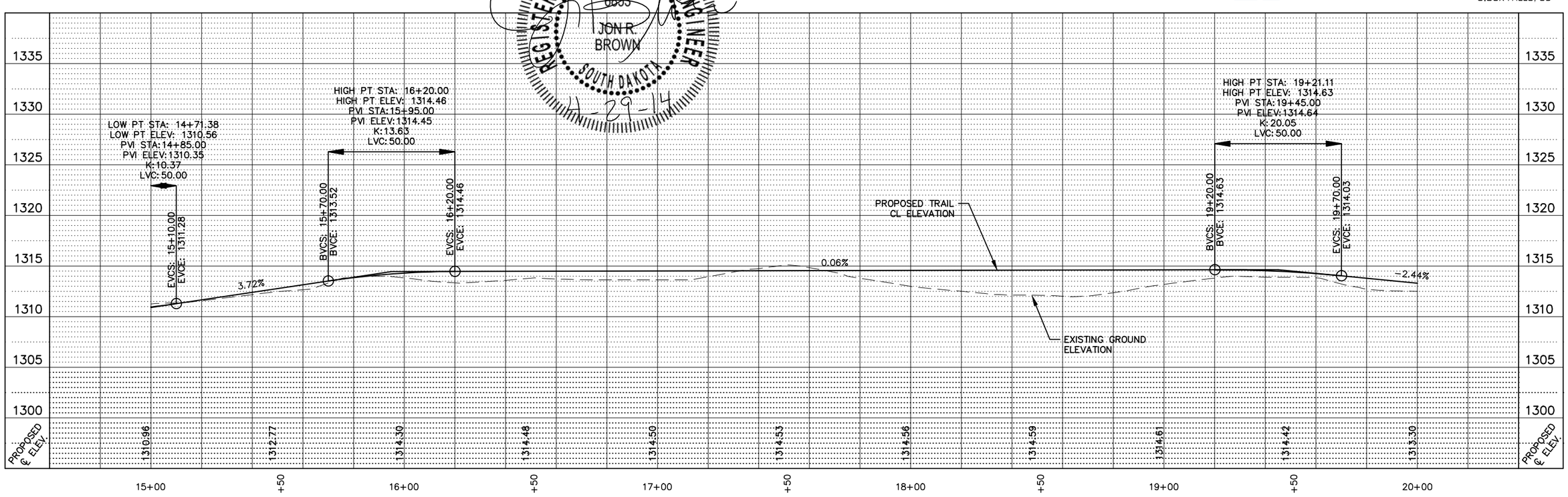

STATE OF SOUTH DAKOTA	PROJECT	SHEET NO.	TOTAL SHEETS
	EM 8050(65)	B20	B26

FILE: 1412 – Pavement Plan.dwg
PLOTTING DATE: 2014–05–05 INITIALS: JRK
REVISION DATE:

FOR BIDDING PURPOSES ONLY

LEGEND

– REINFORCED CONCRETE TRAIL SECTION

– SPLIT RAIL FENCE

STA. 21+73.78–19.20'RT TO 21+88.74–13.44'LT
24 FT – 12" RCP CL.3, F&I
2 EACH – 12" RCP END SECTION, F&I
SLOPE = 1.50%
(LENGTH DOES NOT INCLUDE FLARED END SECTION)

STA. 23+26.47–17.36'RT TO 23+40.00–16.00'LT
24 FT – 12" RCP CL.3, F&I
2 EACH – 12" RCP END SECTION, F&I
SLOPE = 1.50%
(LENGTH DOES NOT INCLUDE FLARED END SECTION)

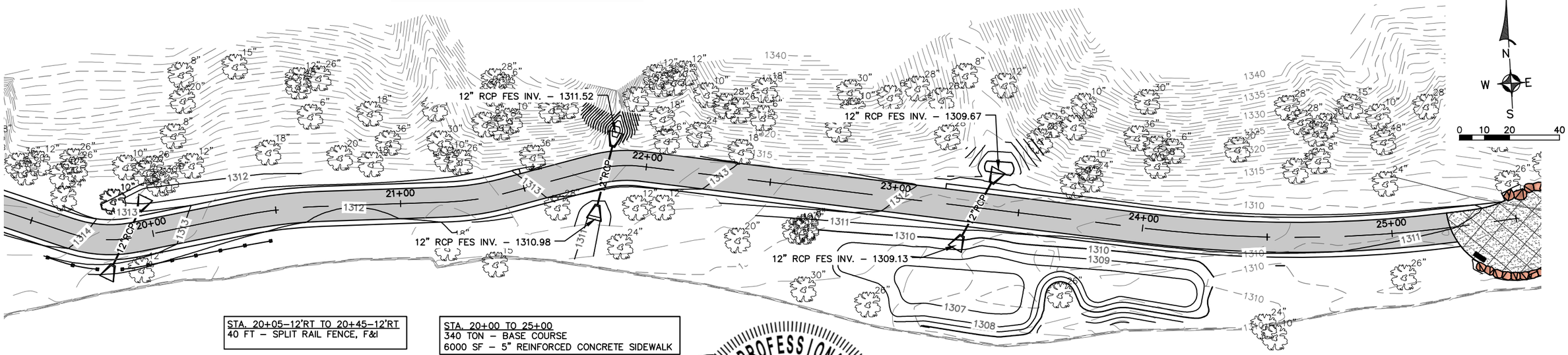

STA. 20+05–12'RT TO 20+45–12'RT
40 FT – SPLIT RAIL FENCE, F&I

STA. 20+00 TO 25+00
340 TON – BASE COURSE
6000 SF – 5" REINFORCED CONCRETE SIDEWALK

REGISTERED PROFESSIONAL ENGINEER
REG. NO. 6853
JON R. BROWN
SOUTH DAKOTA
4-29-14

STOCKWELL ENGINEERS
SIOUX FALLS, SD

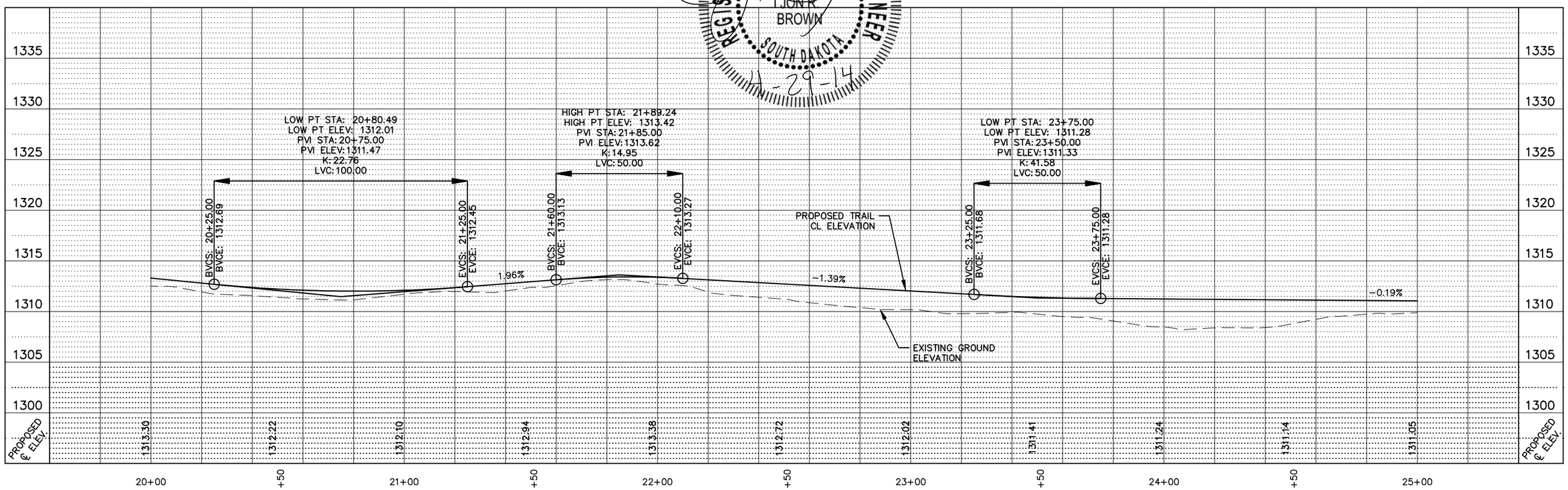

STATE OF SOUTH DAKOTA	PROJECT	SHEET NO.	TOTAL SHEETS
	EM 8050(65)	B21	B26

FILE: 1412 – Pavement Plan.dwg
PLOTTING DATE: 2014-05-05 INITIALS: JRK
REVISION DATE:

FOR BIDDING PURPOSES ONLY

LEGEND

- REINFORCED CONCRETE TRAIL SECTION
- COLORED REINFORCED CONCRETE
- SPLIT RAIL FENCE

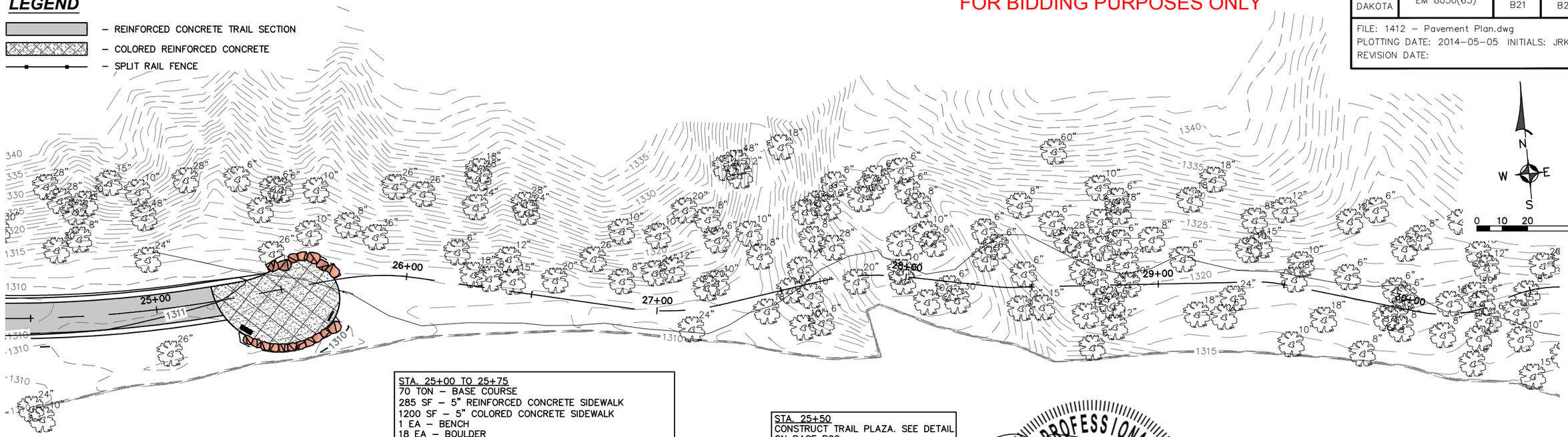

STA. 25+00 TO 25+75
70 TON – BASE COURSE
285 SF – 5" REINFORCED CONCRETE SIDEWALK
1200 SF – 5" COLORED CONCRETE SIDEWALK
1 EA – BENCH
18 EA – BOULDER
1 EA – KIOSK INFORMATION UNIT

STA. 25+50
CONSTRUCT TRAIL PLAZA. SEE DETAIL ON PAGE B22.

REGISTERED PROFESSIONAL ENGINEER
REG. NO. 6853
JON R. BROWN
SOUTH DAKOTA
11-29-14

STOCKWELL ENGINEERS
SIOUX FALLS, SD

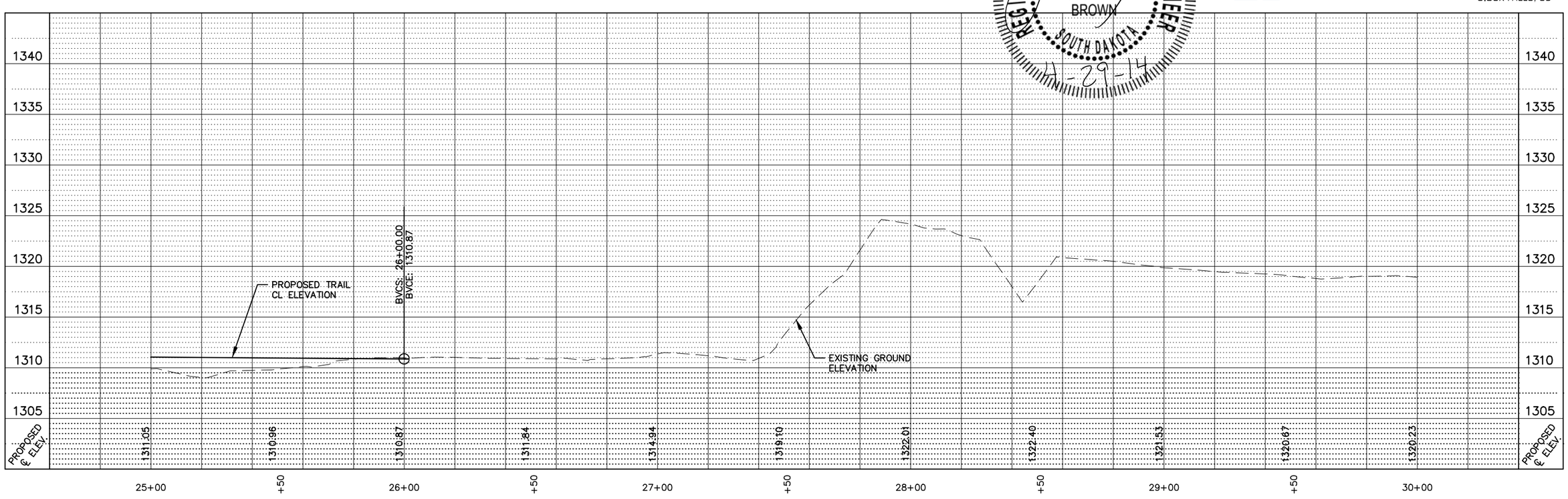

STATE OF SOUTH DAKOTA	PROJECT	SHEET NO.	TOTAL SHEETS
	EM 8050(65)	B22	B26

FILE: 1412 – Pavement Plan.dwg
PLOTTING DATE: 2014–05–05 INITIALS: JRK
REVISION DATE:

FOR BIDDING PURPOSES ONLY

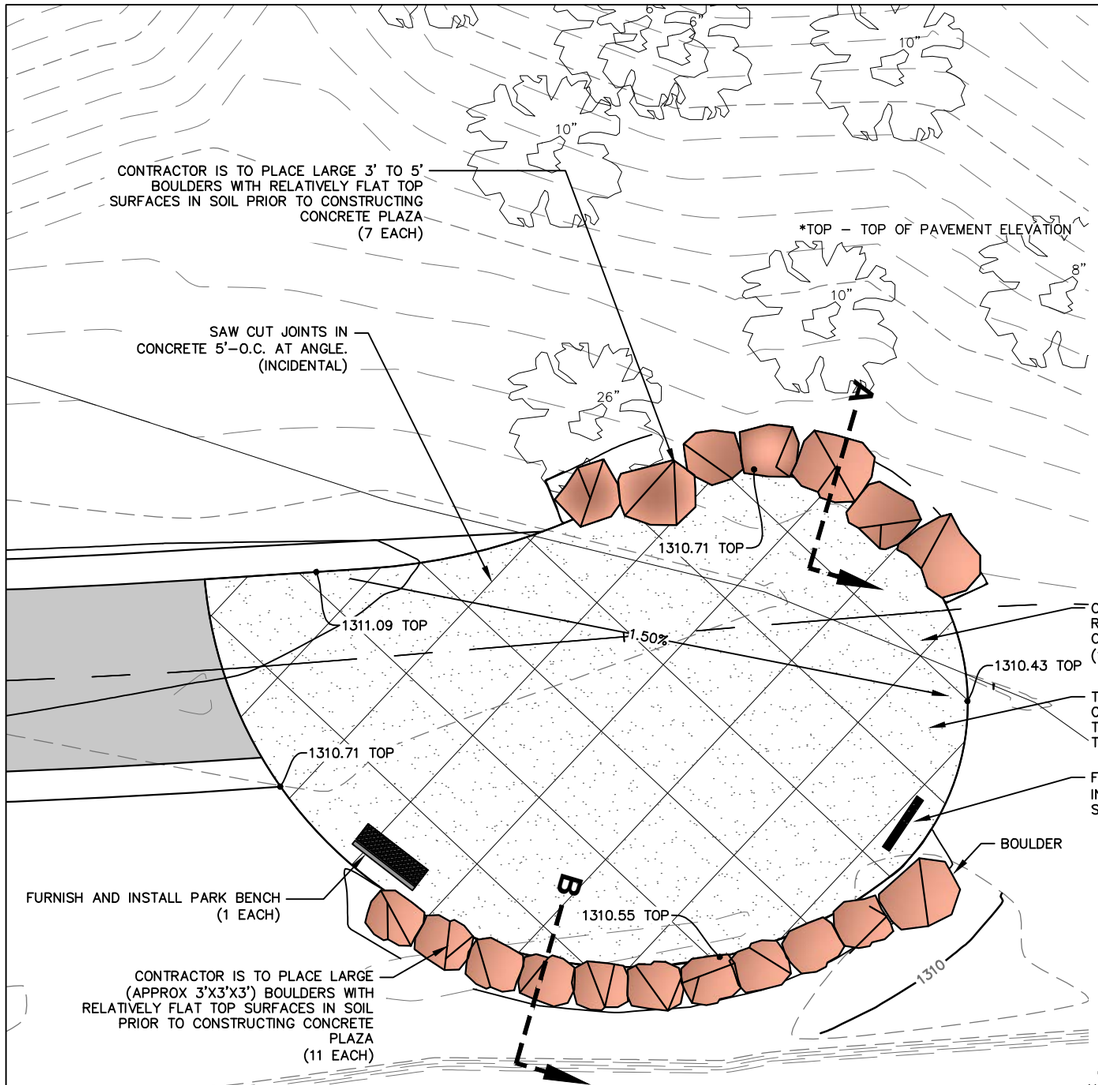

Trail Plaza

SCALE 1" = 10'-0"

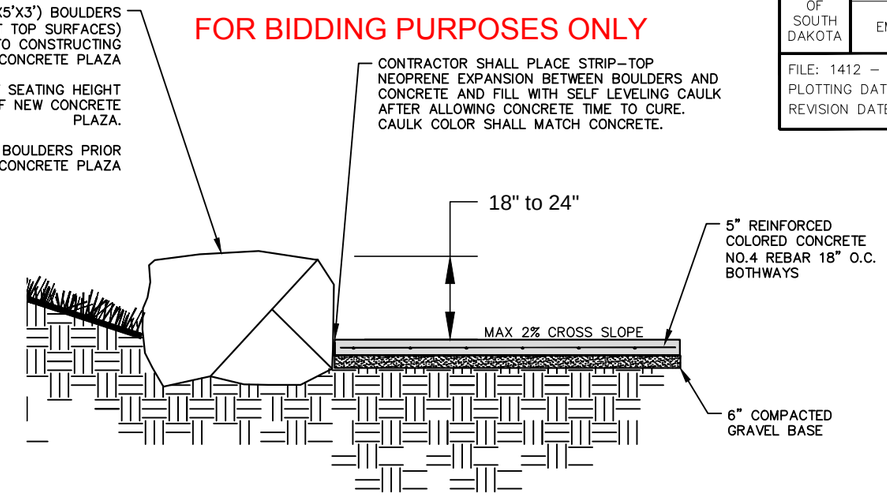

Trail Plaza (SECTION "A")

SCALE 1" = 4'-0"

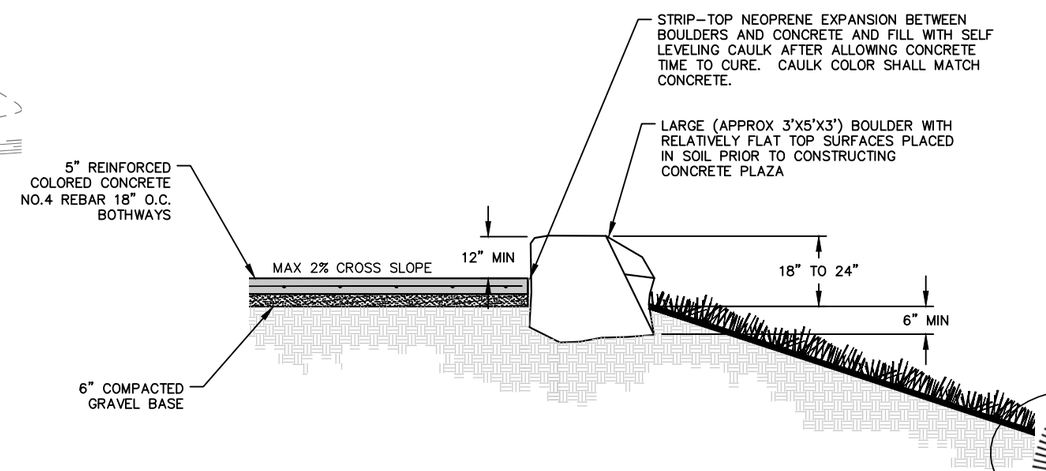

Trail Plaza (SECTION "B")

SCALE 1" = 4'-0"

NOTES:

ALL JOINTS SHALL BE SAW CUT TO A MINIMUM OF 1.25" DEEP. ALL SAW CUTTING SHALL BE INCIDENTAL TO BID ITEM "5" REINFORCED COLORED CONCRETE SIDEWALK".

ALL BOULDERS SHALL BE "SIOUX QUARTZITE" AND ROUGHLY 3'X5'X3' IN SIZE. BOULDERS SHALL BE PLACED GENERALLY AS SHOWN IN THE PLANS AND AT THE ILLUSTRATED IN THE DETAILS.

ALL BOULDERS SHALL BE SET AND APPROVED BY THE ENGINEER PRIOR TO POURING ADJACENT CONCRETE.

REGISTERED PROFESSIONAL ENGINEER
REG. NO. 6853
JON R. BROWN
SOUTH DAKOTA
11-29-14

STOCKWELL ENGINEERS
SIOUX FALLS, SD

STATE OF SOUTH DAKOTA	PROJECT	SHEET NO.	TOTAL SHEETS
	EM 8050(65)	B23	B26

FILE: 1412 – Headwall Detail.dwg
PLOTTING DATE: 2014–05–05 INTIALS: JRK
REVISION DATE:

FOR BIDDING PURPOSES ONLY

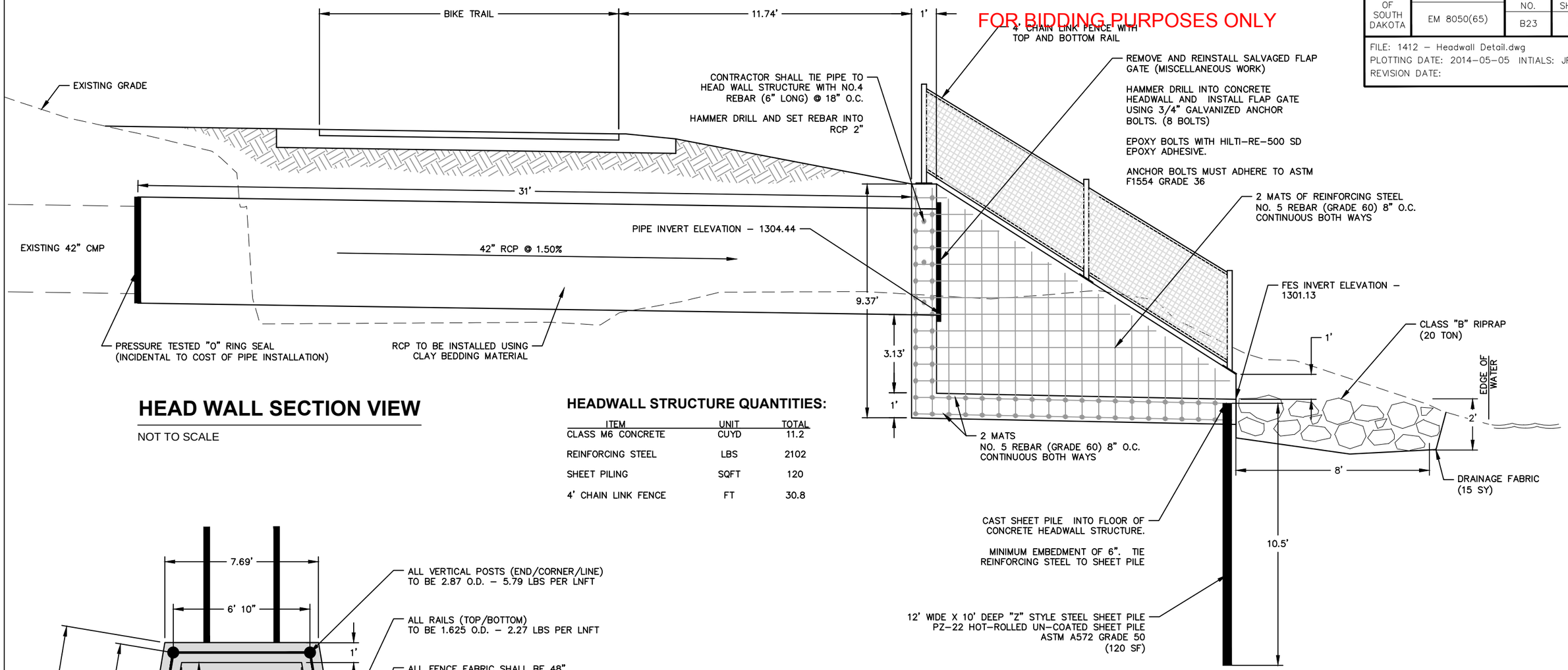

HEAD WALL SECTION VIEW

NOT TO SCALE

HEADWALL STRUCTURE QUANTITIES:

ITEM	UNIT	TOTAL
CLASS M6 CONCRETE	CUYD	11.2
REINFORCING STEEL	LBS	2102
SHEET PILING	SQFT	120
4' CHAIN LINK FENCE	FT	30.8

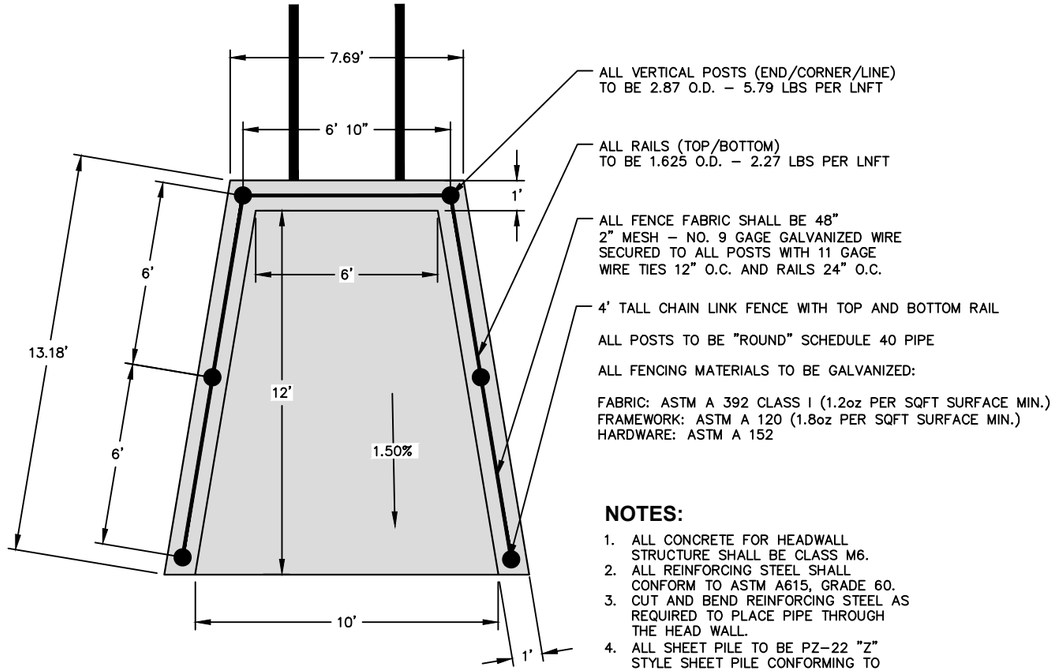

NOTES:

1. ALL CONCRETE FOR HEADWALL STRUCTURE SHALL BE CLASS M6.
2. ALL REINFORCING STEEL SHALL CONFORM TO ASTM A615, GRADE 60.
3. CUT AND BEND REINFORCING STEEL AS REQUIRED TO PLACE PIPE THROUGH THE HEAD WALL.
4. ALL SHEET PILE TO BE PZ–22 "Z" STYLE SHEET PILE CONFORMING TO ASTM A572 GRADE 50 (UNCOATED)

HEAD WALL PLAN VIEW

SCALE: 1" = 5'-0"

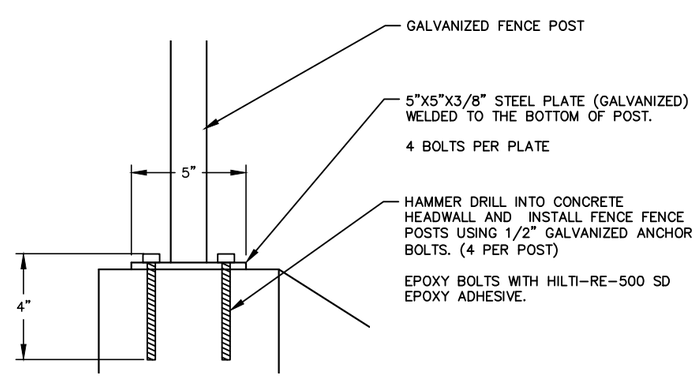

FENCE POST CONNECTION

NOT TO SCALE

REGISTERED PROFESSIONAL ENGINEER
REG. NO. 6853
JON R. BROWN
SOUTH DAKOTA
11-29-14

STOCKWELL ENGINEERS
SIOUX FALLS, SD

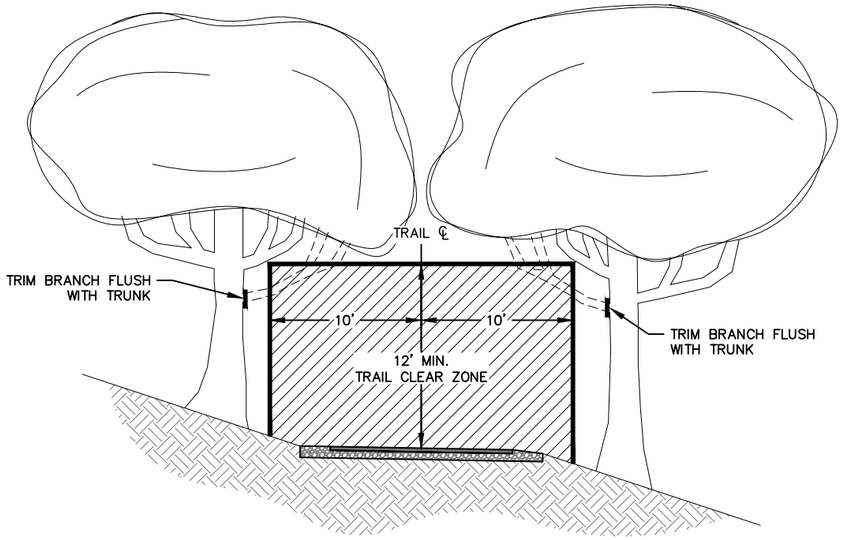

NOTES:

ALL BRANCHES WITHIN THE TRAIL CLEAR ZONE SHALL BE PRUNED FLUSH WITH THE TRUNK, CHIPPED & SPREAD, OR REMOVED FROM THE SITE.

ALL DEAD BRANCHES WITHIN TREES MARKED FOR TRIMMING SHALL BE REMOVED FLUSH FROM THE TRUNK.

TREE TRIMMING DETAIL

NO SCALE

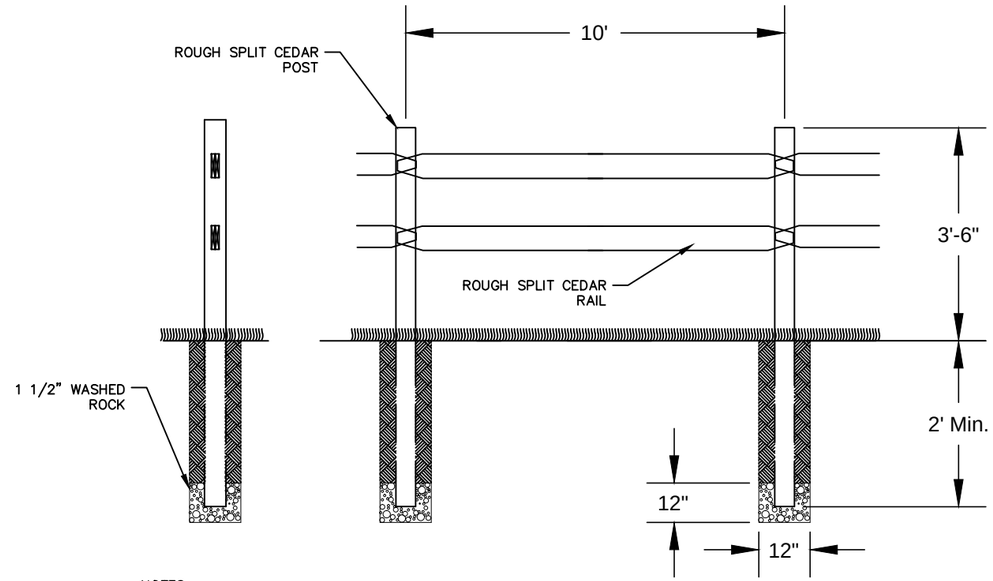

NOTES:

ALL SPLIT RAIL FENCE TO BE "AMERICAN STYLE" 2–RAIL FENCING, CONSTRUCTED OF NATURALLY WEATHERING TIMBER THAT WILL NOT REQUIRE MAINTENANCE BY MEANS OF PAINTING, STAINING OR WEATHER PROOF SEALING. (I.E. CEDAR OR REDWOOD)

ALL POSTS AND RAILS TO BE "JUMBO GRADE".

ALL POSTS, LINE, AND END: MUST BE TWO–HOLE, 5 FEET 6 INCHES LONG AND HAVE A GIRTH OF 18 TO 24 INCHES.

POSTS, CORNER: MUST BE FOUR–HOLE, 5 FEET 4 INCHES LONG AND HAVE A GIRTH OF 18 TO 24 INCHES.

ALL COSTS ASSOCIATED WITH CONSTRUCTION OF SPLIT RAIL FENCE SHALL BE INCIDENTAL TO THE PER FT BID ITEM OF "SPECIAL RIGHT–OF–WAY FENCE"

CEDAR SPLIT RAIL FENCE DETAIL

NO SCALE

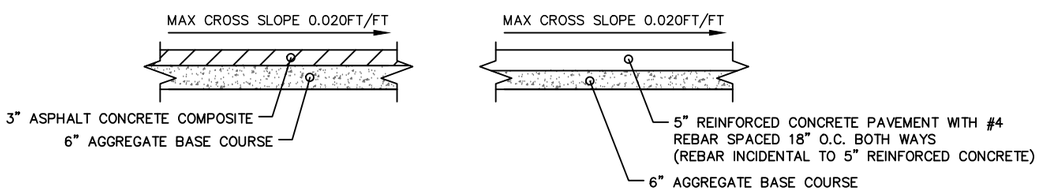

NOTES:

ALL TRAIL SLOPES NOT TO EXCEED A 2.00% CROSS SLOPE AND 5.00% RUNNING SLOPE.

ADA TRAIL DETAIL

NO SCALE

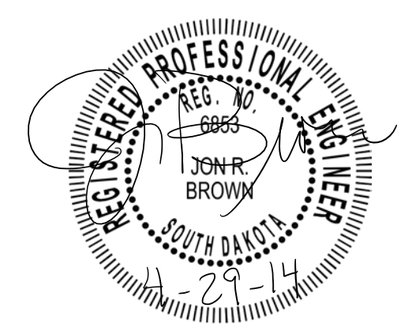

STOCKWELL ENGINEERS
SIOUX FALLS, SD

TOLERANCES IN DIMENSIONS

Diameter: ±1.5% for 24" Dia. or less and ±1% or 3/8" whichever is more for 27" Dia. or greater.
Diameters at Joints: ±3/16" for 30" Dia. or less and ±1/4" for 36" or greater.
Length of joint (j): ±1/4".
Wall thickness (T): not less than design T by more than 5% or 3/16", whichever is greater.
Laying length: shall not underrun by more than 1/2".

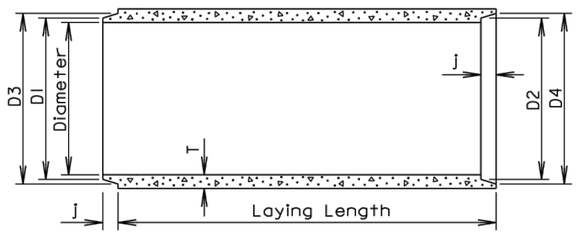

LONGITUDINAL SECTION

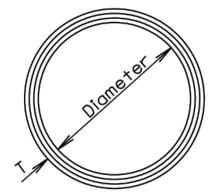

END VIEW

GENERAL NOTES:

Construction of R. C. P. shall conform to the requirements of Section 990 of the Standard Specifications for Roads and Bridges.

Not more than 2 four foot sections shall be permitted near the ends of any culvert. Four foot lengths shall be used only to secure the required length of culvert.

Diam. (in.)	Approx. Wt. /Ft. (lb.)	T (in.)	J (in.)	D1 (in.)	D2 (in.)	D3 (in.)	D4 (in.)
12	92	2	1 3/4	13 1/4	13 5/8	13 7/8	14 1/4
15	127	2 1/4	2	16 1/2	16 7/8	17 1/4	17 5/8
18	168	2 1/2	2 1/4	19 5/8	20	20 3/8	20 3/4
21	214	2 3/4	2 1/2	22 7/8	23 1/4	23 3/4	24 1/8
24	265	3	2 3/4	26	26 3/8	27	27 3/8
27	322	3 1/4	3	29 1/4	29 5/8	30 1/4	30 5/8
30	384	3 1/2	3 1/4	32 3/8	32 3/4	33 1/2	33 7/8
36	524	4	3 3/4	38 3/4	39 1/4	40	40 1/2
42	685	4 1/2	4	45 1/8	45 5/8	46 1/2	47
48	867	5	4 1/2	51 1/2	52	53	53 1/2
54	1070	5 1/2	4 1/2	57 7/8	58 3/8	59 3/8	59 7/8
60	1296	6	5	64 1/4	64 3/4	66	66 1/2
66	1542	6 1/2	5 1/2	70 5/8	71 1/8	72 1/2	73
72	1810	7	6	77	77 1/2	79	79 1/2
78	2098	7 1/2	6 1/2	83 3/8	83 7/8	85 5/8	86 1/8
84	2410	8	7	89 3/4	90 1/4	92 1/8	92 5/8
90	2740	8 1/2	7	95 3/4	96 1/4	98 1/8	98 5/8
96	2950	9	7	102 1/8	102 5/8	104 1/2	105
102	3075	9 1/2	7 1/2	109	109 1/2	111 1/2	112
108	3870	10	7 1/2	115 1/2	116	118	118 1/2

March 31, 2000

Published Date: 3rd Qtr. 2013

SDDOT

REINFORCED CONCRETE PIPE

PLATE NUMBER 450.01

Sheet 1 of 1

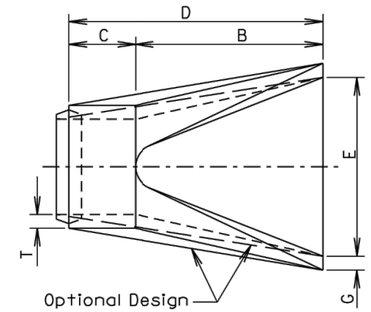

TOP VIEW

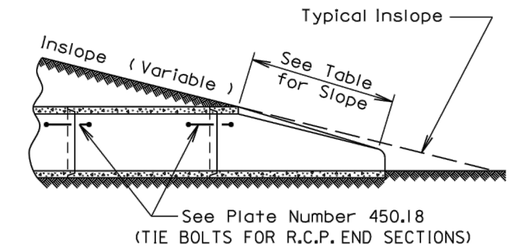

SLOPE DETAIL

GENERAL NOTES:

Lengths of concrete pipe shown on Plan Sheets are between flared Ends only.

Construction of R.C.P. Flared End shall conform to the requirements of Section 990 of the Standard Specifications for Roads and Bridges.

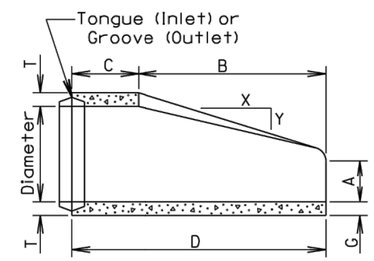

LONGITUDINAL SECTION

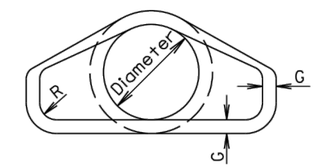

END VIEW

Dia. (in.)	Approx. Wt. of Section (lbs.)	Approx. Slope (X to Y)	T (in.)	A (in.)	B (in.)	C (in.)	D (in.)	E (in.)	G (in.)	R (in.)
12	530	2.4: 1	2	4	24	48 7/8	72 7/8	24	2	1 1/2
15	740	2.4: 1	2 1/4	6	27	46	73	30	2 1/4	1 1/2
18	990	2.3: 1	2 1/2	9	27	46	73	36	2 1/2	1 1/2
21	1280	2.4: 1	2 3/4	9	36	37 1/2	73 1/2	42	2 3/4	1 1/2
24	1520	2.5: 1	3	9 1/2	43 1/2	30	73 1/2	48	3	1 1/2
27	1930	2.5: 1	3 1/4	10 1/2	49 1/2	24	73 1/2	54	3 1/4	1 1/2
30	2190	2.5: 1	3 1/2	12	54	19 3/4	73 3/4	60	3 1/2	1 1/2
36	4100	2.5: 1	4	15	63	34 3/4	97 3/4	72	4	1 1/2
42	5380	2.5: 1	4 1/2	21	63	35	98	78	4 1/2	1 1/2
48	6550	2.5: 1	5	24	72	26	98	84	5	1 1/2
54	8240	2: 1	5 1/2	27	65	33 1/4	98 1/4	90	5 1/2	1 1/2
60	8730	1.9: 1	6	35	60	39	99	96	5	1 1/2
66	10710	1.7: 1	6 1/2	30	72	27	99	102	5 1/2	1 1/2
72	12520	1.8: 1	7	36	78	21	99	108	6	1 1/2
78	14770	1.8: 1	7 1/2	36	90	21	111	114	6 1/2	1 1/2
84	18160	1.6: 1	8	36	90 1/2	21	111 1/2	120	6 1/2	1 1/2
90	20900	1.5: 1	8 1/2	41	87 1/2	24	111 1/2	132	6 1/2	6

March 31, 2000

Published Date: 3rd Qtr. 2013

SDDOT

R. C. P. FLARED ENDS

PLATE NUMBER 450.10

Sheet 1 of 1

STOCKWELL ENGINEERS
SIOUX FALLS, SD

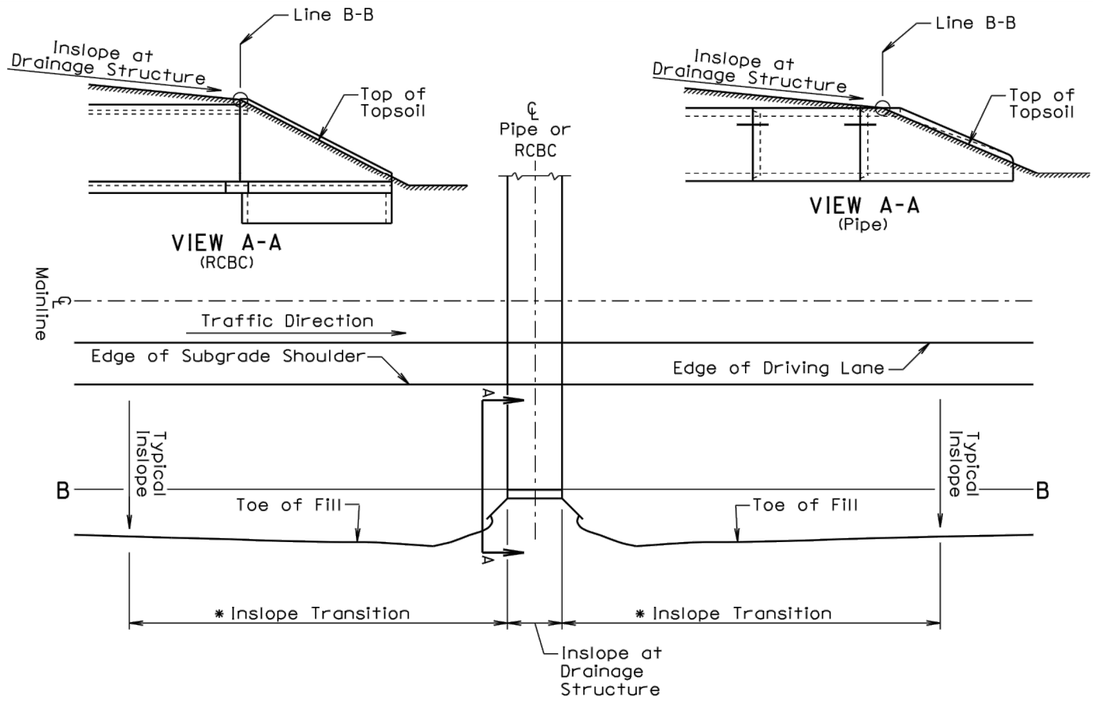

TYPE 1 INSLOPE TRANSITION

GENERAL NOTES:

This Type 1 Inslope Transition is used when the specified inslope at the drainage structure is flatter than the typical inslope and the inslope at the drainage structure is between a 4:1 slope and 6:1 slope.

Line B-B represents the clear zone line, the location where soil intercepts the parapet on an RCBC, the location where the soil intercepts the top of the pipe adjacent to the opening of the pipe end section, or may represent a change in slope.

* Transition from the typical inslope to the inslope at the drainage structure. Within the clear zone (area from edge of subgrade shoulder to line B-B) use 100' length for each 1:1 slope change. Example: transition from a 4:1 to a 6:1 would require a 200' length transition. The typical inslope outside of the clear zone shall be transitioned gradually to the slope necessary adjacent to the RCBC wing wall or pipe culvert end section within the transition length necessary for the transition within the clear zone.

Published Date: 1st Qtr. 2014

SDDOT

INSLOPE TRANSITIONS AT PIPE CULVERTS OR REINFORCED CONCRETE BOX CULVERTS

PLATE NUMBER 120.05

Sheet 1 of 2

February 14, 2011

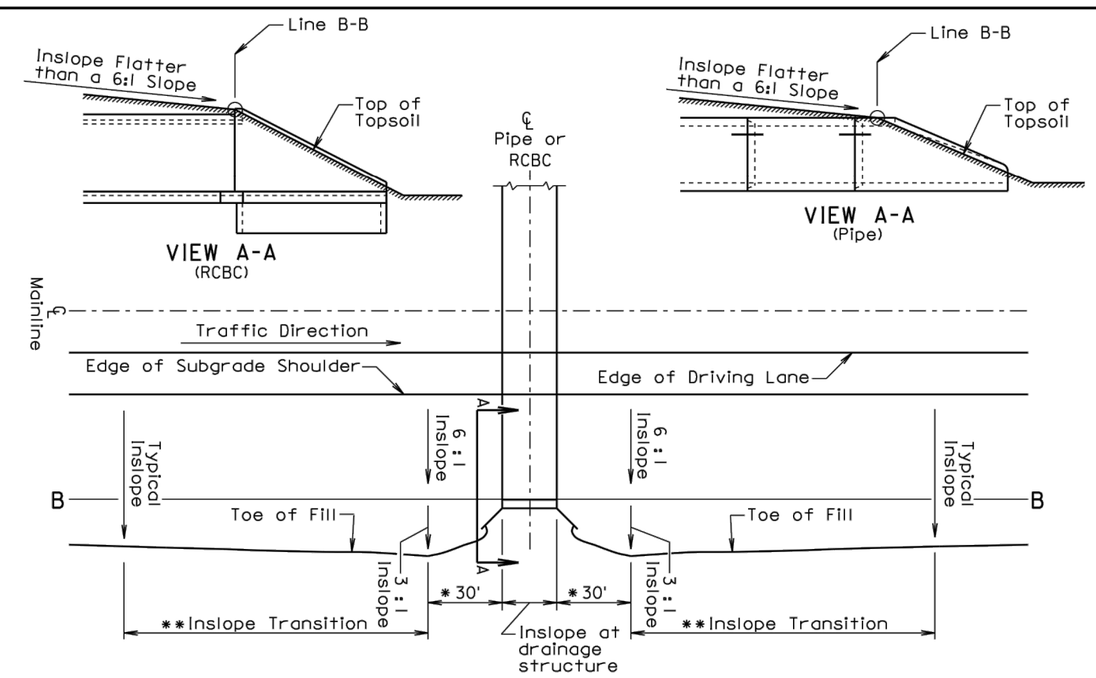

TYPE 2 INSLOPE TRANSITION

GENERAL NOTES:

This Type 2 Inslope Transition is used when the specified inslope at the pipe or RCBC is flatter than a 6:1 slope.

Line B-B represents the clear zone line, the location where soil intercepts the parapet on an RCBC, the location where the soil intercepts the top of the pipe adjacent to the opening of the pipe end section, or may represent a change in slope.

* Transition from inslope at drainage structure to a 6 : 1 inslope and 3:1 inslope.

** Transition from typical inslope to the inslopes adjacent to the drainage structure. Within the clear zone (area from edge of subgrade shoulder to line B-B) use 100' length for each 1:1 slope change. Example: transition from a 4:1 to a 6:1 would require a 200' length transition. The typical inslope outside of the clear zone shall be transitioned to a 3:1 inslope within the transition length necessary for the transition within the clear zone.

Published Date: 1st Qtr. 2014

SDDOT

INSLOPE TRANSITIONS AT PIPE CULVERTS OR REINFORCED CONCRETE BOX CULVERTS

PLATE NUMBER 120.05

Sheet 2 of 2

February 14, 2011

STOCKWELL ENGINEERS
SIOUX FALLS, SD

FOR BIDDING PURPOSES ONLY

FILE: 1412 - Details.dwg
PLOTTING DATE: 2014-04-29
INITIALS: JRK

STATE OF SOUTH DAKOTA	PROJECT	SHEET NO.	TOTAL SHEETS
	EM 8050(65)	B26	B26