Section L: Signal & Lighting Plans

STATE OF SOUTH DAKOTA	PROJECT	SHEET	TOTAL SHEETS
	IM 0291(126)1	L1	L19

Plotting Date: 07/16/2015

INDEX OF SHEETS

L1	General Layout w/Index
L2 - L4	Estimate w/General Notes and Tables
L5 - L6	Existing Signal & Signal Layout
L7 - L9	Existing Conduit & Conduit Layouts
L10	Wiring Diagram
L11 - L12	Signal Timings
L13 - L19	Standard Plates

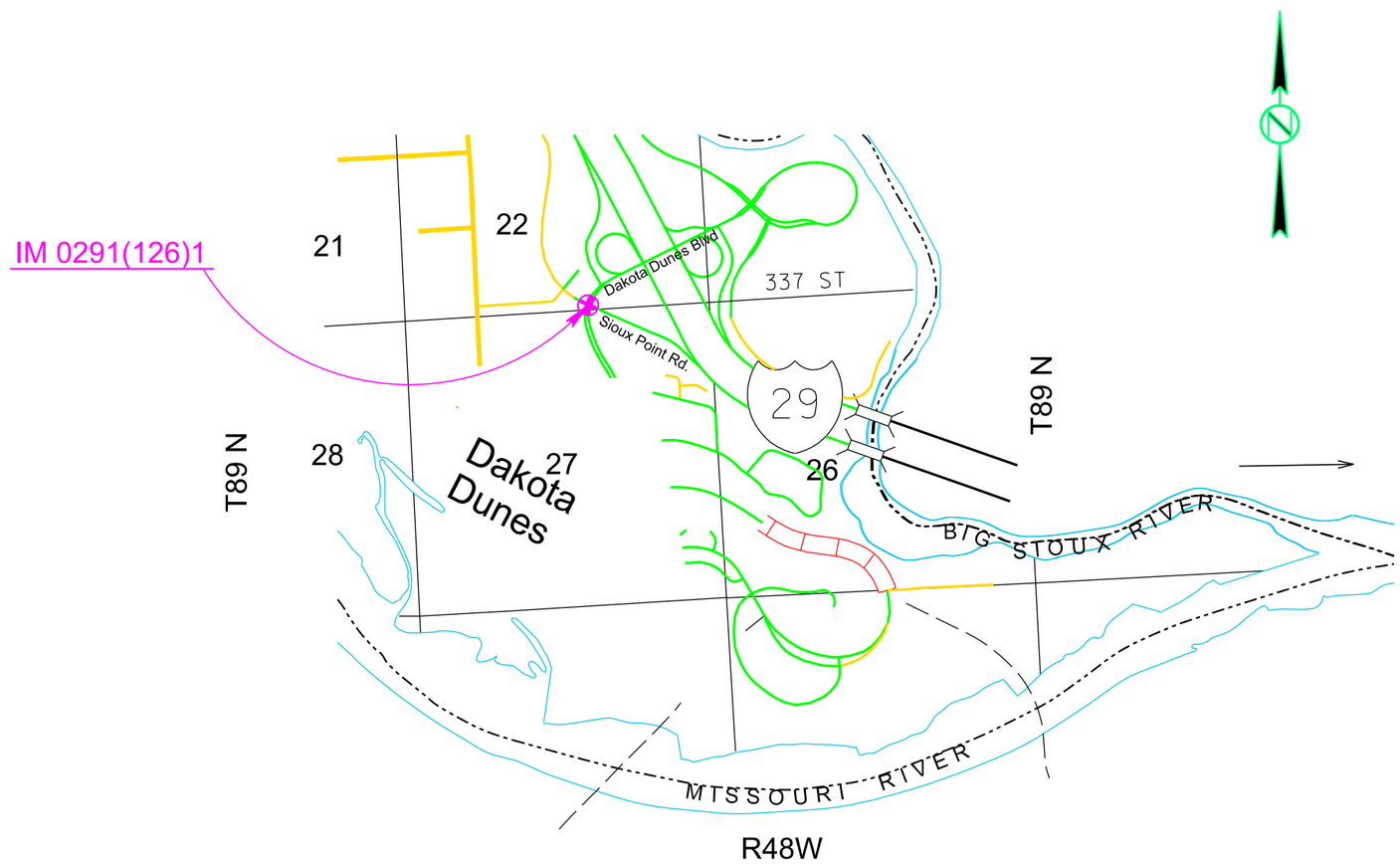

Plot Scale - 1:200

Plotted From - trpr14341

File - U:\rd\prj\unin03RK\titleL.dgn

SECTION L ESTIMATE OF QUANTITIES

BID ITEM NUMBER	ITEM	QUANTITY	UNIT
110E1540	Remove Luminaire Pole Footing	2	Each
110E5100	Salvage Luminaire Pole	2	Each
635E2150	Signal Pole with 50' Mast Arm and Luminaire Arm	2	Each
635E2165	Signal Pole with 65' Mast Arm and Luminaire Arm	2	Each
635E3340	Roadway Luminaire, 400 Watt with Photoelectric Cell	4	Each
635E4030	3 Section Vehicle Signal Head	10	Each
635E4050	5 Section Vehicle Signal Head	1	Each
635E4080	3 Section Directional Vehicle Signal Head	4	Each
635E4090	4 Section Directional Vehicle Signal Head	4	Each
635E5030	3' Diameter Footing	50.0	Ft
635E5302	Type 2 Electrical Junction Box	9	Each
635E5303	Type 3 Electrical Junction Box	1	Each
635E5405	Electrical Service Cabinet with Secondary Disconnect	1	Each
635E5430	Traffic Signal Controller	1	Each
635E5440	Master Controller	1	Each
635E5470	Wireless Interconnect System	1	Each
635E5515	Signal Head Battery Backup and Flash System	1	Each
635E5540	Sawed-In Detector Loop	30	Each
635E5550	Detector Unit	10	Each
635E5560	Emergency Vehicle Preemption Unit	1	Each
635E5570	Optical Detector	4	Each
635E5900	Pedestrian Push Button	4	Each
635E5910	Pedestrian Push Button Pole	4	Each
635E5922	Pedestrian Signal Head with Countdown Timer	4	Each
635E5930	Pedestrian Crossing Sign	4	Each
635E8120	2" Rigid Conduit, Schedule 40	340	Ft
635E8130	3" Rigid Conduit, Schedule 40	740	Ft
635E8150	5" Rigid Conduit, Schedule 40	20	Ft
635E8240	4" Rigid Conduit, Schedule 80	430	Ft
635E9013	1/C #3 AWG Copper Wire	2,355	Ft
635E9016	1/C #6 AWG Copper Wire	3,960	Ft
635E9504	4/C #14 AWG Copper Tray Cable, K2	2,010	Ft
635E9505	5/C #14 AWG Copper Tray Cable, K2	195	Ft
635E9507	7/C #14 AWG Copper Tray Cable, K2	205	Ft
635E9524	24/C #14 AWG Copper Tray Cable, K2	815	Ft
635E9600	#16 AWG Copper Twisted Shielded Pair	2,225	Ft
635E9710	2/C #10 AWG Copper Pole and Bracket Cable	260	Ft
635E9800	Preemption Cable	2,205	Ft
900E2024	Miscellaneous Work, Electrical	Lump Sum	LS

SUPPLYING AS BUILT PLANS

If the traffic signal systems or roadway lighting systems are constructed differently than what is stated in the plans, the Contractor shall supply as built plans to the Engineer and a copy shall be sent to the Traffic Design Engineer. The as built plans may include conduit layouts, wiring diagrams, or other drawings depicting the changes from the original plans.

SHOP DRAWING AND CATALOG CUTS SUBMITTALS

The Contractor shall submit shop drawings and catalog cuts in accordance with Section 985 of the Specifications.

Adobe PDF submittals shall be sent to the following email addresses:

Norris.Leone@state.sd.us
Pete.Longman@state.sd.us

ON-SITE INSPECTION

An on-site inspection of the traffic signals shall be conducted before acceptance of the project, once the traffic signals are completed and operational. The on-site inspection shall be conducted by the Project Engineer or Region Traffic Engineer with the Contractor, and the Traffic Design Engineer present.

SALVAGE LUMINAIRE POLE

Existing luminaire poles ES1-ES2 shall be salvaged and delivered to Dakota Dunes Community Improvement District (CID) by the Contractor. The Contractor shall notify the CID 5 days before the delivery of the salvaged luminaire poles. The CID contact is Jeff Dooley at (605) 232-4211.

All costs for work involved in the salvage and delivery of the existing luminaire poles shall be incidental to the contract unit price per each for “Salvage Luminaire Pole”.

REMOVE LUMINAIRE POLE FOOTING

The footings of existing luminaire poles ES1-ES2 shall be removed by the Contractor to a minimum of 2’ below the ground surface. Restoration of the disturbed area shall be to the satisfaction of the Engineer.

All costs for removing the footings of the existing luminaire poles shall be incidental to the contract unit price per each for “Remove Luminaire Pole Footing”.

TABLE OF FOOTING DATA

Site Designation	Footing Diameter	* Footing Depth	**Spiral Diameter	**Spiral Length	Vertical Reinforcement
A1, A2	3’ - 0”	12’ - 0”	2’ - 8”	120’ - 9”	14-#8 x 11’ -6”
A3, A4	3’ - 0”	13’ - 0”	2’ - 8”	129’ - 3”	14-#8 x 12’ -6”

* Footing depth shall be below ground level.
** The size of all spirals shall be #3.

FOOTING DATA

The subsurface conditions at the intersection of Dakota Dunes Blvd. and Sioux Point Road consist of silt-clay to 30’ below the surface. Groundwater was encountered only at the east corner 20.5’ below the surface two days after drilling; the rest of the borings remained dry.

During construction of the cylindrical footings, concrete placement operations should closely follow excavation procedures. The longer the excavations are left open the more likely caving may occur. If caving soils are encountered during excavation, casing may be required to construct the cylindrical footings.

Concrete shall not be dropped through standing water. If water is present in the excavation it shall be removed prior to concrete placement or the concrete shall be tremied. If caving occurs during dewatering the concrete shall be placed through a tremie or by means of a casing.

The boring logs and laboratory tests are available for review at the Central Office in Pierre. If questions arise or additional information is needed concerning the cylindrical footings contact the Geotechnical Engineering Activity in Pierre at (605) 773 3401.

POLES

Cantilever traffic signal supports, including anchor bolts, shall be designed for fatigue in accordance with Fatigue Importance Category III without galloping and truck induced gusts.

Signal poles shall have rotatable mast arms.

Luminaire extension(s) shall have a 50 Ft. mounting height with 6 Ft. arm.

LUMINAIRES

The accepted design for the intersection luminaires shall provide 1.5 and greater average maintained foot-candles and a uniformity ratio (average maintained to minimum maintained foot-candles) of 3:1.

The following luminaires meet the requirements for this design:

b.) Hubbell: Test No. HP03019.IES High Pressure Sodium, Medium, semi-cutoff, Type III

c.) Cooper Lighting: Test No. OVY4S3E High Pressure Sodium, Medium, semi-cutoff, Type III

Three copies of the isofootcandle charts and utilization curves shall be furnished to the Engineer for approval. The Contractor must get approval from the Engineer prior to installation of the luminaires.

The approved isofootcandle data for each case shall be used to determine the correct socket position at each site. Each luminaire shall be installed with its lamp socket in the proper position and in a level attitude.

Plot Scale - 1:200
Plotted From - tmp14341
File - ...\pn\lumin03RK\NotesSectionL.dgn

TRAFFIC SIGNAL METER SOCKETS

The meter sockets provided for traffic signals by the Contractor shall be a 200 amp, positive by-pass.

SIGNAL BACKPLATES

Signal backplates shall extend not less than 5 inches from the edge of the signal head at the top, bottom, and sides. The bottom of the backplate on vehicle signal faces mounted directly above pedestrian signal indications shall be sized to permit the separate adjustment of the vehicle and pedestrian signal indication and may be less than 4 inches.

TRAFFIC SIGNAL CONTROLLER

Vehicle detectors W7-W9 and S7-S9 shall operate in the presence (non-locking) mode and shall have call delay timing capability. The call delay feature shall be inhibited by the controller. Set these detectors to 6 seconds delay.

The Contractor is responsible for programming controllers with the signal timings provided in these plans.

All costs for constructing the concrete pad and footing, materials, labor, and furnishing and installing the controller cabinet shall be incidental to the contract unit price per each for “Traffic Signal Controller”.

MASTER CONTROLLER

The master controller shall be capable of operating by the time of day or traffic responsive. The master controller shall be compatible with any new or existing equipment used by Dakota Dunes Community Improvement District (CID). The master controller for the coordinated signal system shall be located at the intersection of Dakota Dunes Blvd and Sioux Point Rd.

CONTROLLER SOFTWARE

One copy of controller software shall be provided to the South Dakota Department of Transportation Traffic Design Engineer in the Office of Road Design.

The controller software shall provide communication between a personal computer and the controllers being supplied by the contractor. The controller software shall allow permanent storage of all controller input data on a hard disk drive. The controller software shall work with isolated intersections as well as a closed loop system.

All costs for the controller software shall be incidental to the contract unit price per each for “Master Controller”.

CONTROLLER PROGRAMMING

Existing controller shall be reprogrammed to use the patterns and timings specified on the Signal Timing Sheets by a qualified technician. Costs for reprogramming the controllers shall be incidental to the contract lump sum price for “Miscellaneous Work, Electrical”.

The Contractor shall furnish the Road Design Office with a copy of the data programmed into the Controller prior to the full operation of the Controller for approval. The address is as follows:

Pete Longman
Norris Leone
Traffic Design Engineer
Office of Road Design
700 East Broadway
Pierre, SD 57501

BATTERY HOUSING AND FLASHING SYSTEM

The Contractor shall supply a cabinet with concrete pad and footing for housing the battery backup at the traffic signal controller at Dakota Dunes Blvd and Sioux Point Rd intersection. The cabinet shall be aluminum NEMA 3R type. The cabinet shall be securely attached to the controller cabinet.

All work involved in supplying and installing the riser units shall be incidental to the contract unit price per each for “Signal Head Battery Backup and Flash System”.

900 MHZ WIRELESS INTERCONNECT SYSTEM

The intersection of Dakota Dunes Blvd and NB Off Ramp shall utilize wireless interconnect for communication back to the Master Controller at the intersection of Dakota Dunes Blvd and Sioux Point Rd.

All costs for materials (including antenna, cables, and interconnect units), labor, and equipment required at Dakota Dunes Blvd & I29 NB off Ramp intersection and at the master controller at intersection shall be incidental to the contract unit price per each for “Wireless Interconnect System”.

MULTICONDUCTOR CONTROL CABLE FOR SIGNAL CIRCUITS

The cable furnished for signal circuits shall be furnished with the number and size of the conductors shown in the plans and shall meet the specifications for either of the two types specified below.

1. General Purpose Control Cable with stranded copper conductors, ICEA S-61-402, PE-PV Insulated (20-10), 600 volts.

2. General Purpose Control Cable, with standard copper conductors, Aerial and Duct., IMSA 20-1, 600 volts.

The Conductor Jackets for the above cables shall be color coded in accordance with ICEA S-73-532 Table E2.

SECONDARY SERVICE DISCONNECT

The Contractor shall install an additional Nema 3R rainproof, 60 amp rated, and non-fused safety switch (with lock) adjacent to the traffic signal cabinet. The Secondary Service Disconnect shall be mounted on a galvanized steel post in accordance with the Standard Plate 635.41.

All Costs for work involved furnishing and installing the Secondary Service Disconnect shall be incidental to the contract unit price per each for “Electrical Service Cabinet with Secondary Disconnect”.

JUNCTION BOX JL1

The Contractor shall install junction box JL1 near or at the location of the removed luminaire pole ES2 to intercept the existing conduit.

The Contractor shall splice the existing 1/C #4 AWG copper wires at the junction box to energize luminaire pole EF9.

All work involved with installing the junction box to intercept the existing conduit shall be incidental to the contract unit price per each for “Type 2 Electrical Junction Box”.

Plot Scale - 1:200
Plotted From - trpr14341
File - ...\prj\unin03RK\NotesSectionL.dgn

TABLE OF CONDUIT AND CABLE QUANTITIES

STATE OF SOUTH DAKOTA	PROJECT	SHEET	TOTAL SHEETS
	IM 0291(126)1	L4	L19

Plotting Date: 07/31/2015

Location to Location		Rigid Conduit Schedule 40 2" Ft	Rigid Conduit Schedule 40 3" Ft	Rigid Conduit Schedule 40 5" Ft	Rigid Conduit Schedule 80 4" Ft	Copper Wire 1/C #3 AWG Ft	Copper Wire 1/C #6 AWG Ft	Copper Tray Cable, K2 #14 4/C Ft	Copper Tray Cable, K2 #14 5/C Ft	Copper Tray Cable, K2 #14 7/C Ft	Copper Tray Cable, K2 #14 24/C Ft	Twisted Shielded Pair #16 AWG Ft	Pole and Bracket Cable 2/C #10 AWG Ft	Preemption Cable Ft
DAKOTA DUNES BOULEVARD & SIOUX POINT ROAD														
SERVICE CABINET	JA9		370			1,145	1,145							
JA9	JA3		370			1,145	1,145							
JA3	CONTROLLER			20		65		125		25	85	210		165
JA3	JA4	35										75		
JA3	A2	30					95	35			35			65
JA3	PA3	25						30						
JA3	JA5				150		465				155	465		310
JA5	JA6	25										80		
JA5	A3	20					65				25			45
JA3	JA1				155		480	640		160	320	800		640
JA1	JA2	60										125		
JA1	A1	15					50			20	20			35
JA1	PA1	20						25						
JA1	PA2	30						35						
JA1	JA7				125		390	260			130	390		260
JA7	JA8	25										80		
JA7	A4	40					125	45			45			85
JA7	PA4	15						20						
SIGNAL POLE	A1							175	15				65	135
SIGNAL POLE	A2							155	75				65	135
SIGNAL POLE	A3							240	15				65	165
SIGNAL POLE	A4							185	90				65	165
PED PB POLE	PA1							10						
PED PB POLE	PA2							10						
PED PB POLE	PA3							10						
PED PB POLE	PA4							10						
	Total:	340	740	20	430	2,355	3,960	2,010	195	205	815	2,225	260	2,205

Plot Scale - 1:200

Plotted From - trpr14341

File - ...\prj\unin03RK\TableConduit.dgn

EXISTING SIGNAL LAYOUT
I29 NB OFF RAMP & TWO RIVERS DRIVE

STATE OF SOUTH DAKOTA	PROJECT	SHEET	TOTAL SHEETS
	IM 0291(126)1	L5	L19

Plotting Date: 07/13/2015

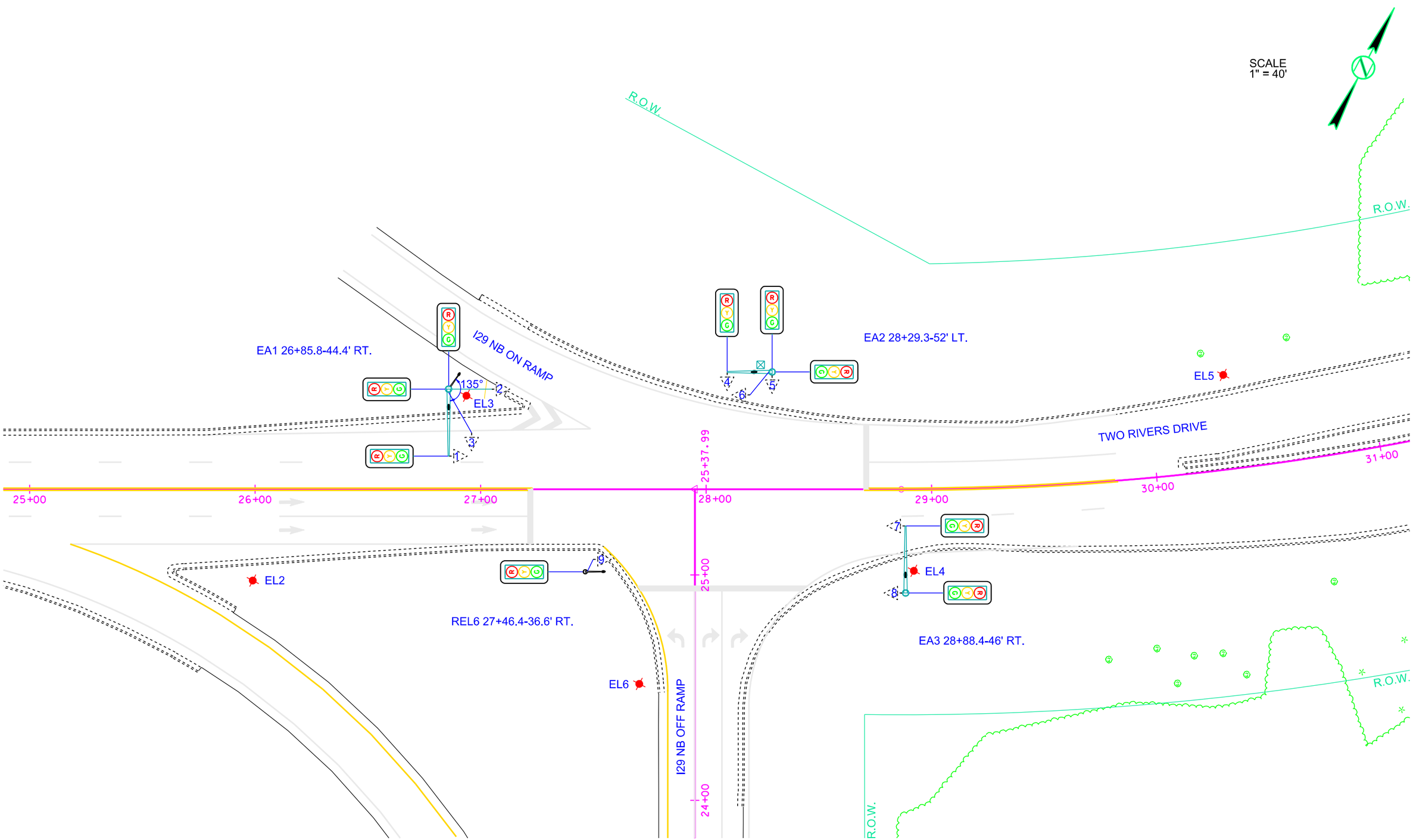

Plot Scale - 1:40

Plotted From - trpr14341

File - U:\trd\prj\unin03RK\028es.dgn

STATE OF SOUTH DAKOTA	PROJECT	SHEET	TOTAL SHEETS
	IM 0291(126)1	L6	L19

Plotting Date: 07/23/2015

SIGNAL LAYOUT
DAKOTA DUNES BOULEVARD & SIOUX POINT ROAD

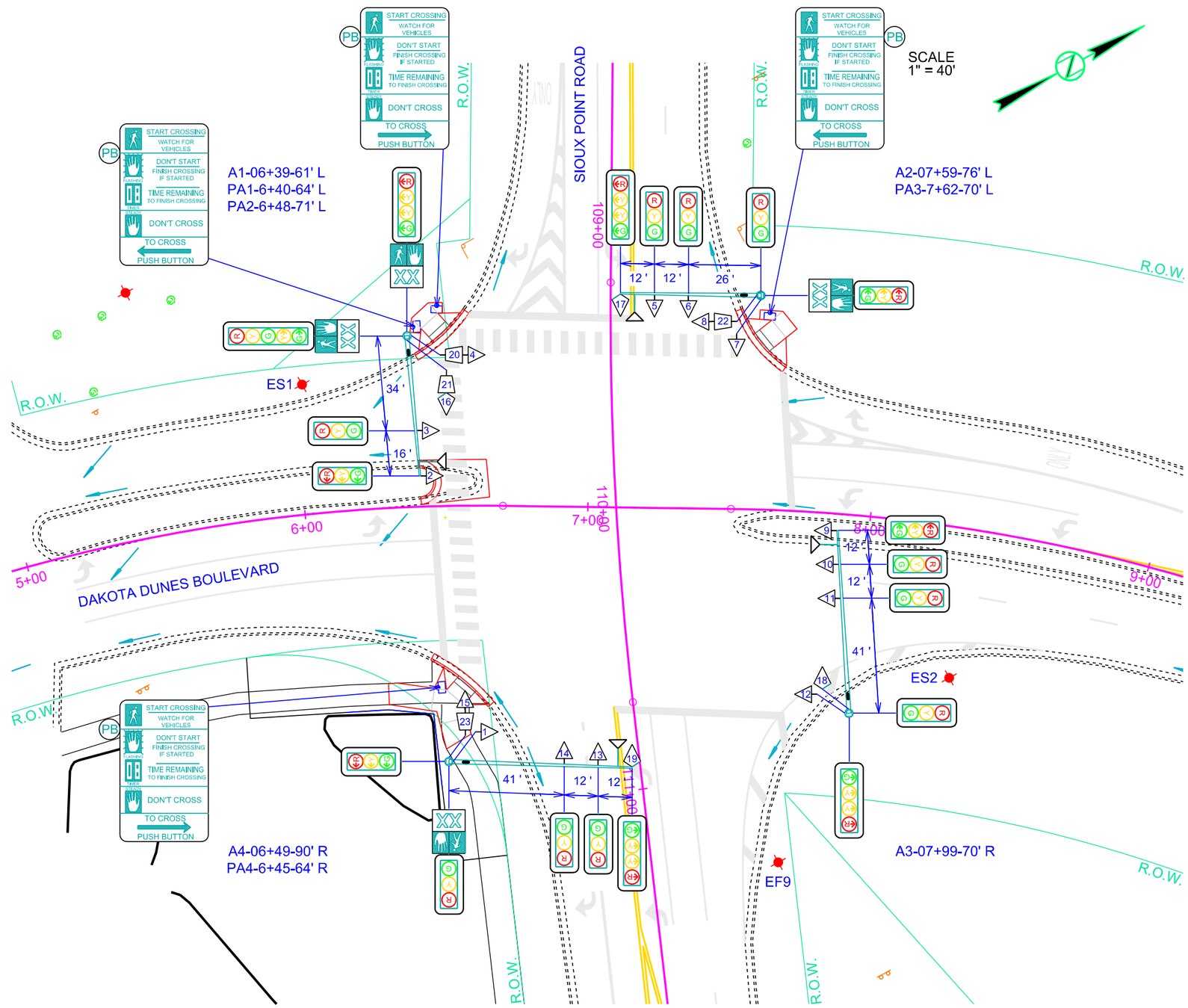

ESTIMATE OF QUANTITIES

KEY	ITEM	EST QUANT	UNIT
	SALVAGE LUMINAIRE POLE (ES1,ES2)	2	EACH
	REMOVE LUMINAIRE POLE FOOTING (ES1,ES2)	2	EACH
	SIGNAL POLE W/50' MAST ARM & 6' LUMIN ARM (A1,A2)	2	EACH
	SIGNAL POLE W/65' MAST ARM & 6' LUMIN ARM (A3,A4)	2	EACH
	ROADWAY LUMINAIRE, 400W WITH P.E. (A1,A2,A3,A4)	4	EACH
	3 SECTION VEHICLE SIGNAL HEAD (1-3,5-15)	14	EACH
	4 SECTION VEHICLE SIGNAL HEAD (16-19)	4	EACH
	5 SECTION VEHICLE SIGNAL HEAD (4)	1	EACH
	EMERGENCY VEHICLE PREEMPTION UNIT (4-CHANNEL)	1	EACH
	OPTICAL DETECTOR	4	EACH
PB	PEDESTRIAN PUSH BUTTON	4	EACH
	PEDESTRIAN PUSH BUTTON POLE (PA1-PA4)	4	EACH
	PEDESTRIAN SIGNAL HEAD W/COUNTDOWN TIMER (20-23)	4	EACH
	PEDESTRIAN CROSSING SIGN R10-3e (LEFT - 2 /RIGHT - 2)	4	EACH

Plot Scale - 1:40

Plotted From - trpr14341

File - U:\rd\prj\unin03RK\007s.dgn

EXISTING CONDUIT LAYOUT
I29 NB OFF RAMP & TWO RIVERS DRIVE

STATE OF SOUTH DAKOTA	PROJECT	SHEET	TOTAL SHEETS
	IM 0291(126)1	L7	L19

Plotting Date: 07/16/2015

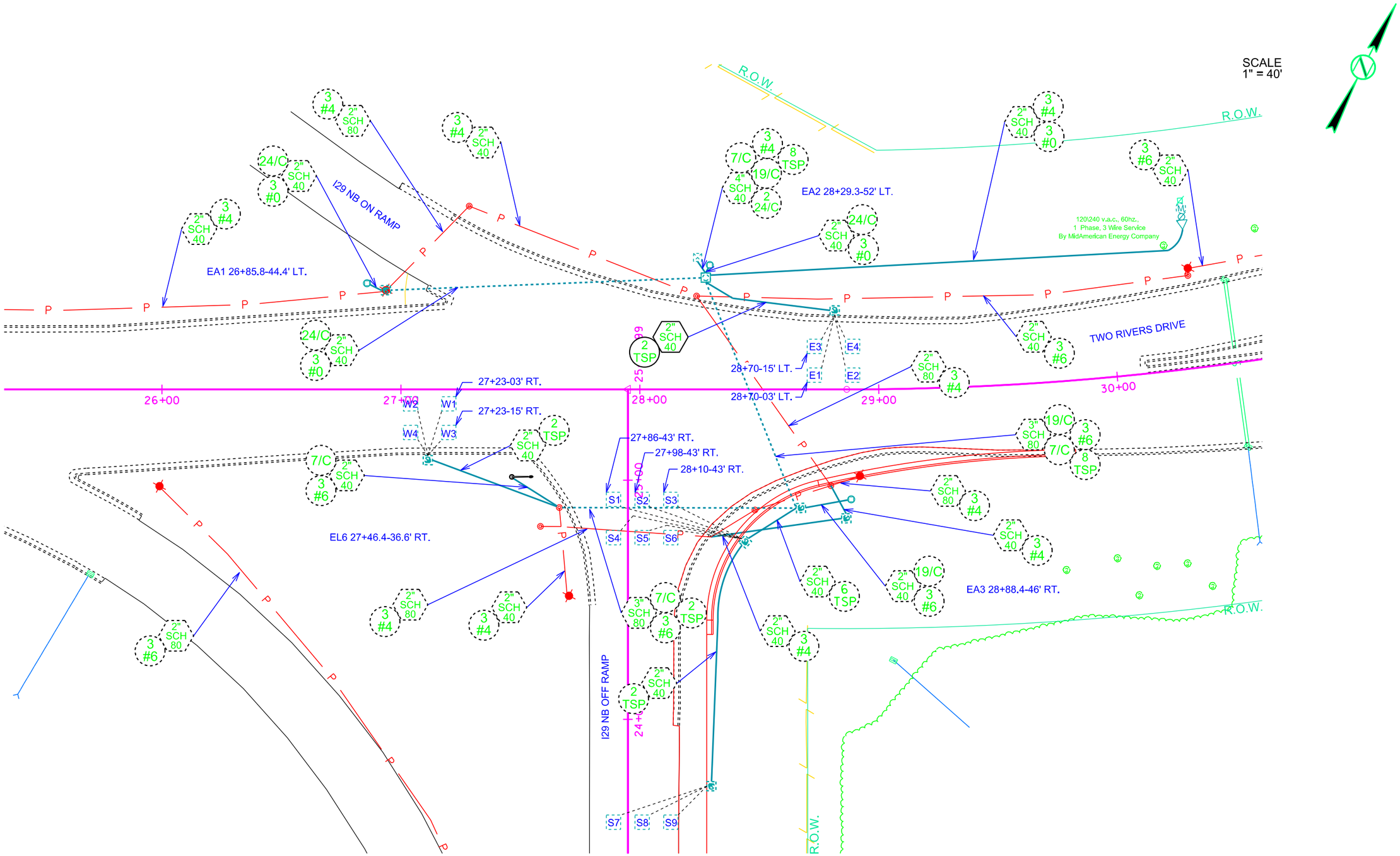

Plot Scale - 1:40

Plotted From - trpr14341

File - U:\rd\prj\unin03RK\027c.dgn

CONDUIT LAYOUT
DAKOTA DUNES BOULEVARD & SIOUX POINT ROAD

STATE OF SOUTH DAKOTA	PROJECT	SHEET	TOTAL SHEETS
	IM 0291(126)1	L8	L19

Plotting Date: 07/31/2015

ESTIMATE OF QUANTITIES

KEY	ITEM	EST QUANT	UNIT
○	3' DIAMETER FOOTING (A1-A4)	50	FT
◉	TYPE 2 ELECTRICAL JUNCTION BOX (JA1,JA2,JA4-JA9,JL1)	9	EACH
◎	TYPE 3 ELECTRICAL JUNCTION BOX (JA3)	1	EACH
▲	ELECTRICAL SERVICE CABINET WITH SECONDARY DISCONNECT	1	EACH
⌀	GALVANIZED STEEL UTILITY POLE NOT A BID ITEM	1	EACH
Ⓜ	METER SOCKET NOT A BID ITEM	1	EACH
⊠	TRAFFIC SIGNAL CONTROLLER	1	EACH
□	SAWED-IN DETECTOR LOOP (E1-E6,N1-N6,S1-S9,W1-W9)	30	EACH
	DETECTOR UNIT	10	EACH
2" SCH 40	2" RIGID CONDUIT, SCHEDULE 40	340	FT
3" SCH 40	3" RIGID CONDUIT, SCHEDULE 40	740	FT
5" SCH 40	5" RIGID CONDUIT, SCHEDULE 40	20	FT
4" SCH 80	4" RIGID CONDUIT, SCHEDULE 80	430	FT
#3	1/C #3 AWG COPPER WIRE	2,355	FT
#6	1/C #6 AWG COPPER WIRE	3,960	FT
4/C	4/C #14 AWG COPPER TRAY CABLE, K2	2,010	FT
5/C	5/C #14 AWG COPPER TRAY CABLE, K2	195	FT
7/C	7/C #14 AWG COPPER TRAY CABLE, K2	205	FT
24/C	24/C #14 AWG COPPER TRAY CABLE, K2	815	FT
TSP	#16 AWG COPPER TWISTED SHIELDED PAIR	2,225	FT
	2/C #10 AWG COPPER POLE & BRACKET CABLE	260	FT
PC	PREEMPTION CABLE	2,205	FT

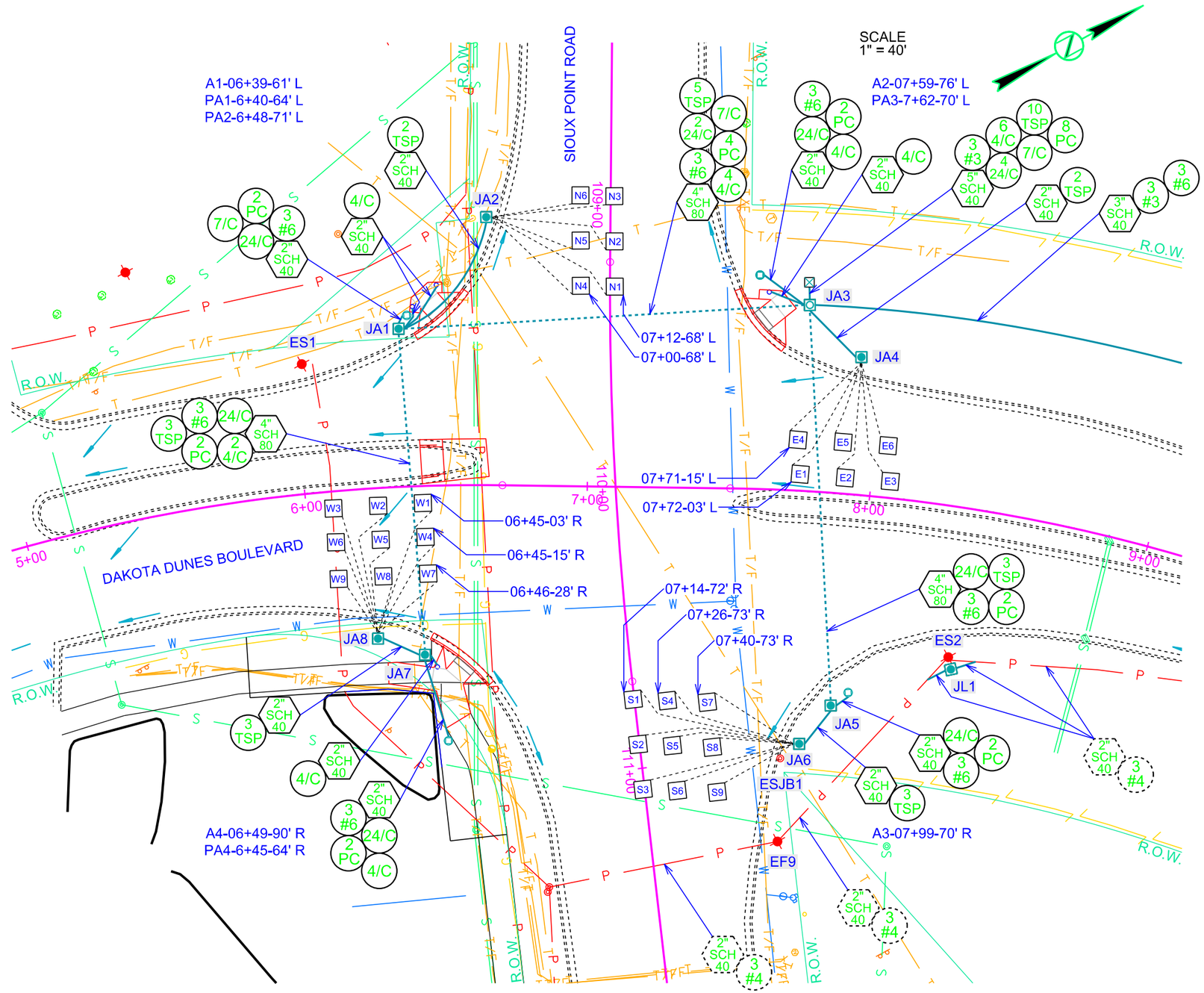

Plot Scale - 1:40

Plotted From - tmpr14341

File - U:\radprj\unlin\03RK\007c.dgn

CONDUIT LAYOUT
DAKOTA DUNES BOULEVARD

STATE OF SOUTH DAKOTA	PROJECT	SHEET	TOTAL SHEETS
	IM 0291(126)1	L9	L19

Plotting Date: 07/31/2015

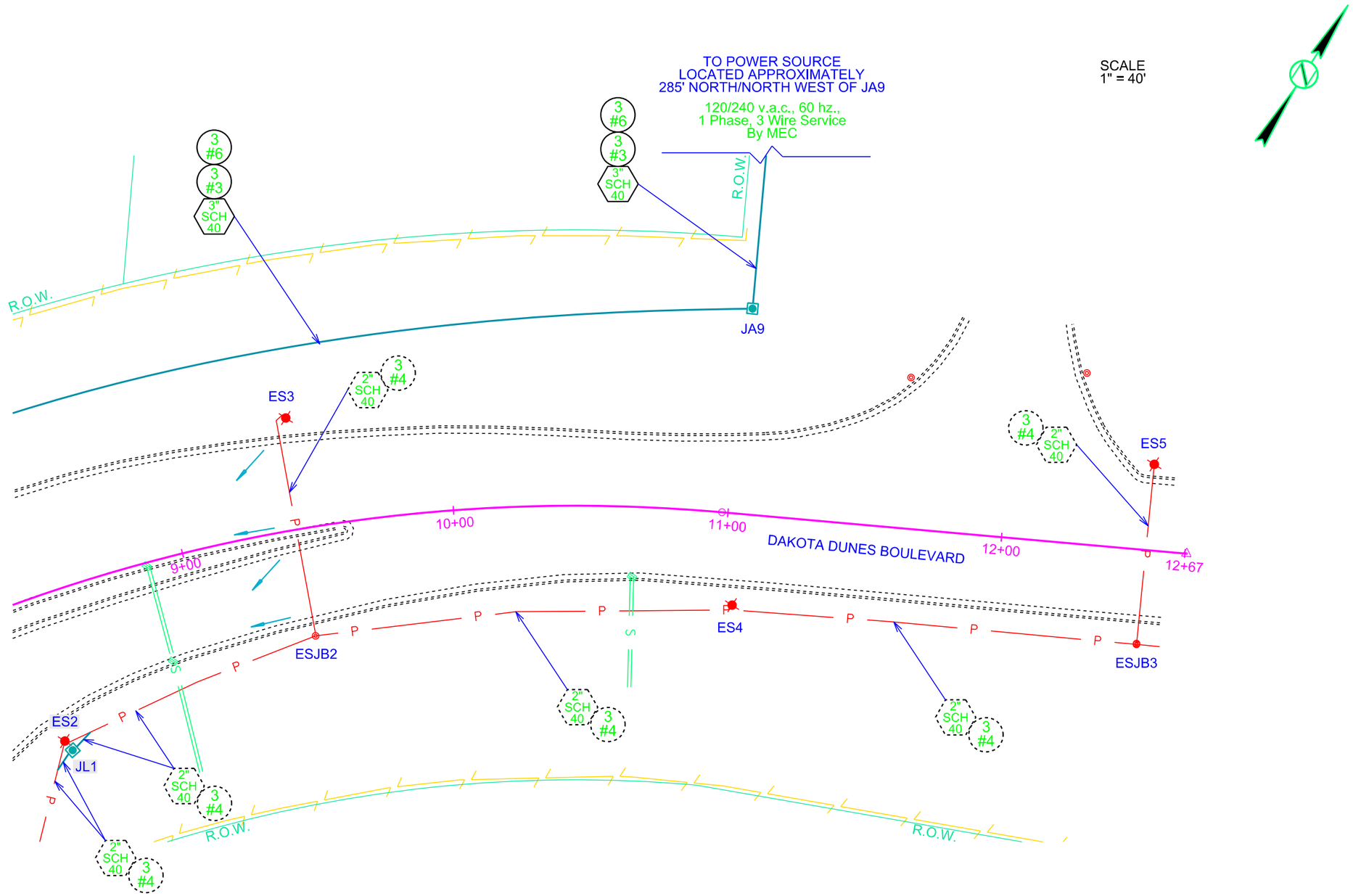

Plot Scale - 1:40

Plotted From - tpr14341

File - U:\rdprj\uni\03RK\009c.dgn

WIRING DIAGRAM
DAKOTA DUNES BOULEVARD & SIOUX POINT ROAD

STATE OF SOUTH DAKOTA	PROJECT	SHEET	TOTAL SHEETS
	IM 0291(126)1	L10	L19

Plotting Date: 07/14/2015

LEGEND:

FUSE: 6 amp. Non-Time Delay or 2 8/10 amp. Dual Element

LUMINAIRE: 400 watt High Pressure Sodium Lamp

NOTE:
All circuits shall be bonded in accordance with the NATIONAL ELECTRICAL CODE. Quantities for bonding conductors are not included in these plans.

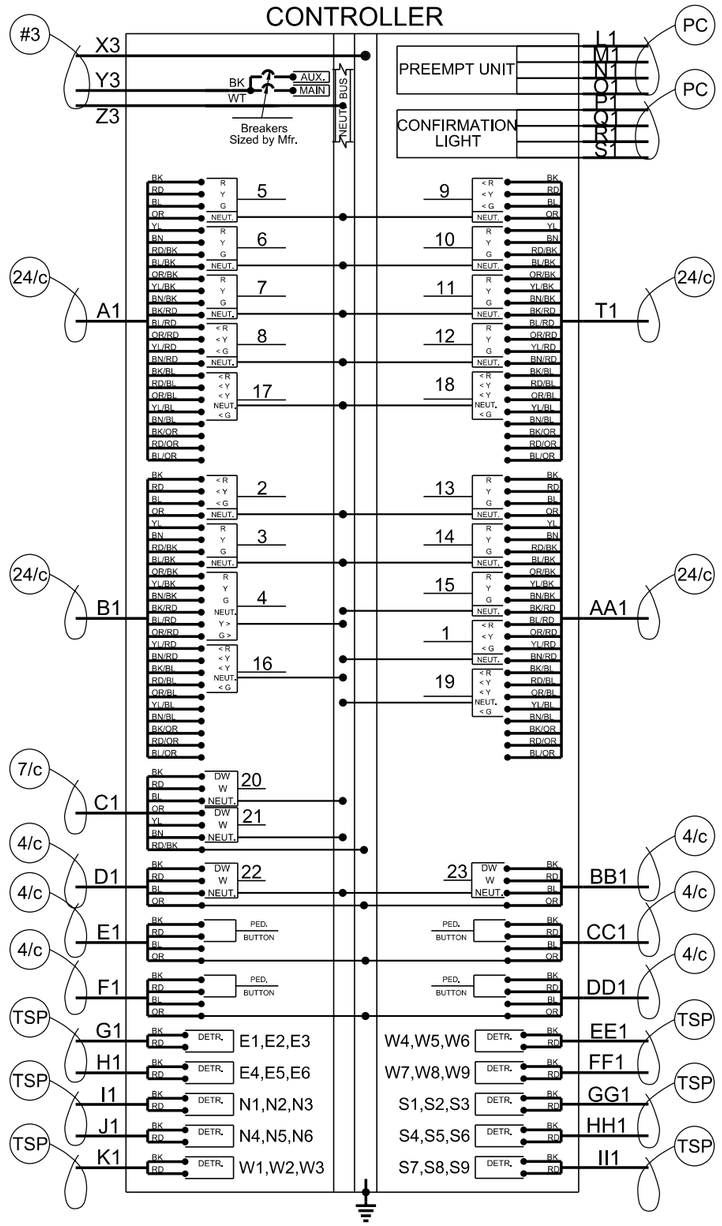

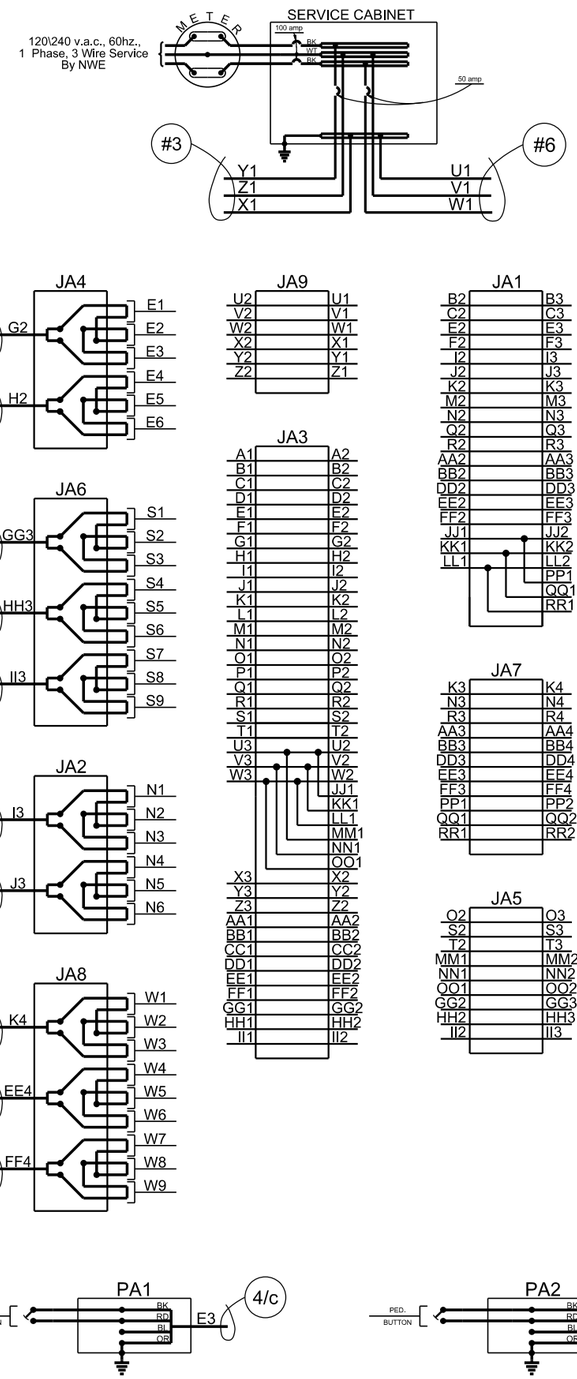

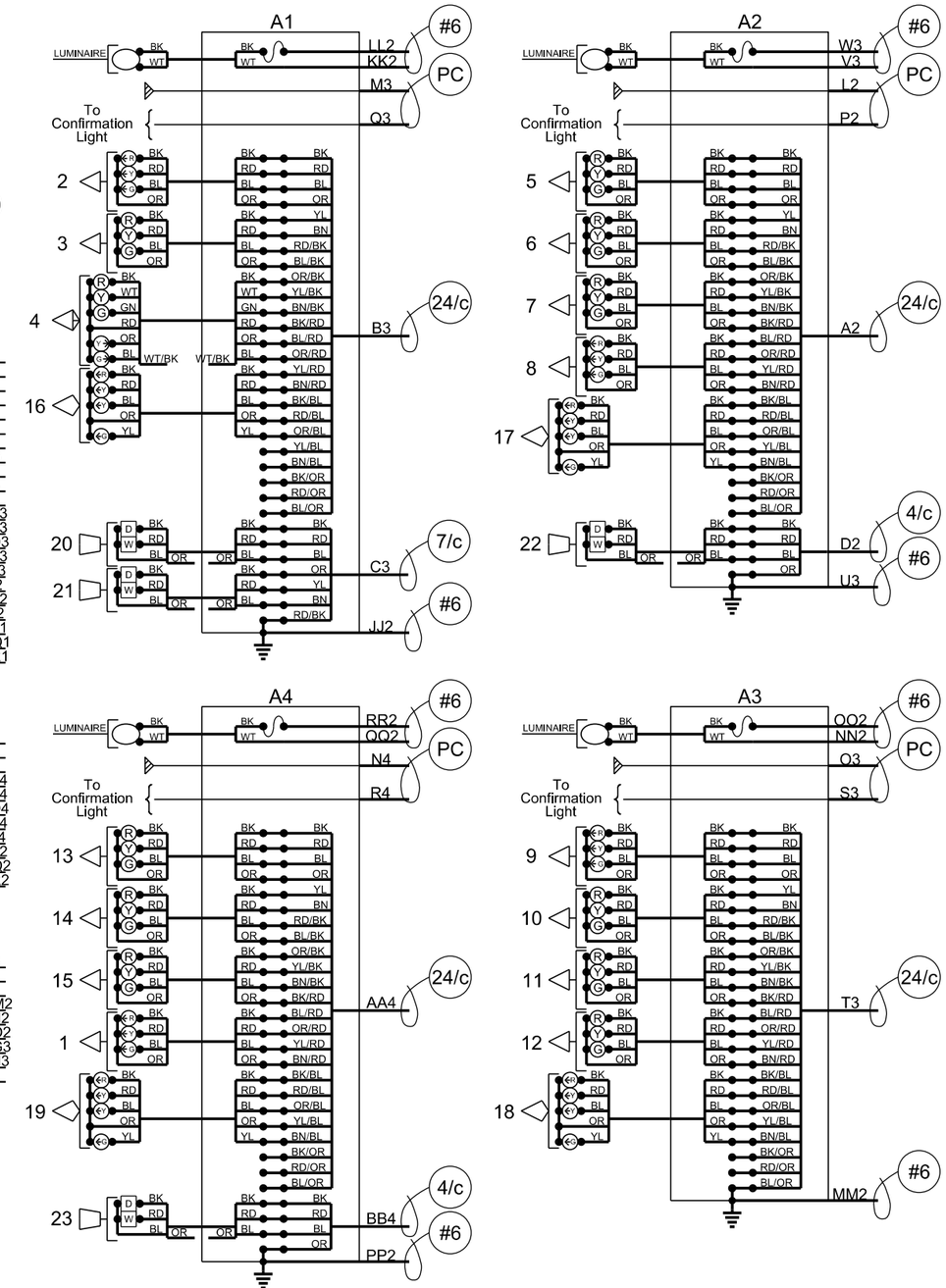

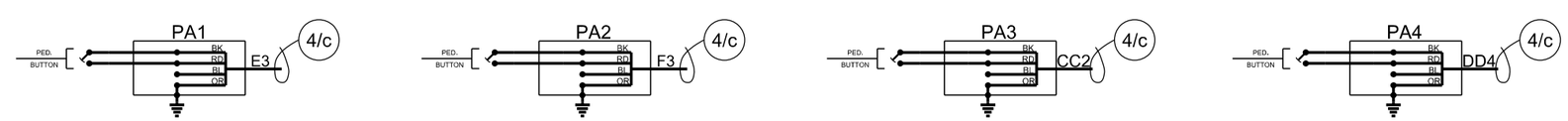

Plot Scale - 1:40

Plotted From - trpr14341

File - U:\trdprj\uni\03RK\007w.dgn

SIGNAL TIMING
DAKOTA DUNES BOULEVARD & SIOUX POINT ROAD

STATE OF SOUTH DAKOTA	PROJECT	SHEET	TOTAL SHEETS
	IM 0291(126)1	L11	L19

Plotting Date: 08/04/2015

PHASING AND SEQUENCING

SIGNAL HEAD \ INTERVAL	1	2	3	4	5	6	7	8	9	10	11	12	13	14	15	16	17	18	19	20	21	22	FLASH DISPLAY
NB LEFT: 16,17	<G	<Y	F <Y	<Y		F <Y	F <Y	<Y															R
NB: 5,6,7			G	Y		G	G	Y															R
SB LEFT: 18,19	<G	<Y	F <Y	<Y		F <Y	F <Y	<Y															R
SB: 13,14,15			G	Y		G	G	Y															R
EB LEFT: 8,9										<G	<Y	<G	<Y										R
EB: 10,11,12												G	Y			G	Y		G	G	Y		R
WB LEFT: 1,2										<G	<Y			<G	<Y								R
WB: 3														G	Y	G	Y		G	G	Y		R
WBR: 4	G>	Y>												G>	Y>	G	Y						R
NB & SB: 21, 23	DW	DW	DW	DW	DW	W	F DW	DW	DW	DW	DW	DW	DW	DW	DW	DW	DW	DW	DW	DW	DW	DW	NO DISPLAY
EB & WB: 20, 22	DW	DW	DW	DW	DW	DW	DW	DW	DW	DW	DW	DW	DW	DW	DW	DW	DW	DW	W	F DW	DW	DW	NO DISPLAY
MOVEMENTS	1&5		2&6			2&6 W/PED				3&7		4&7		3&8		4&8			4&8 W/PED				
PHASES																							

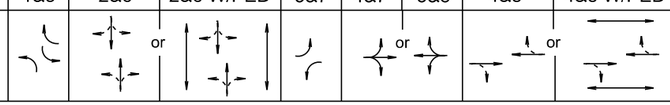

CONTROLLER TIMINGS (FREE OPERATION)								
MOVEMENT	1	2	3	4	5	6	7	8
PHASE								
MIN GREEN	5	7	5	10	5	7	5	10
ADDED INITIAL								
MAX INITIAL								
PASSAGE TIME	3	3	3	3	3	3	3	3
MAXIMUM 1	12	16	12	20	12	16	12	20
MAXIMUM 2								
TIME BEFORE								
TIME TO REDUCE								
MINIMUM GAP								
YELLOW CHANGE	4	4	4	4	4	4	4	4
RED CLEARANCE	2.5	1.5	2.5	1.5	2.5	1.5	2.5	1.5
WALK		10		10		10		10
PED CLEARANCE		32		29		32		29

TIMING PLAN 1	
TIME OF DAY (TOD)	PATTERN (C/S/O)
6:00 - 8:30	1/1/1
8:30 - 11:15	FREE
11:15 - 15:15	2/2/1
15:15 - 18:00	3/3/1
18:00 - 23:00	FREE
23:00 - 6:00	FLASH

TIMING PLAN 2	
TIME OF DAY (TOD)	PATTERN (C/S/O)
6:00 - 23:00	FREE
23:00 - 6:00	FLASH

WEEKLY PROGRAM							
	SUN	MON	TUE	WED	THU	FRI	SAT
TIMING PLAN	2	1	1	1	1	1	2

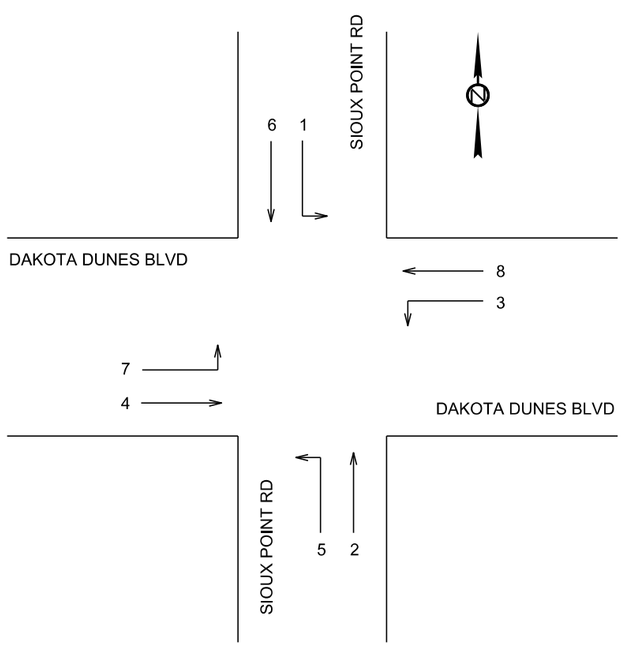

DETECTOR SETTINGS								
DETECTOR LABEL	AMPLIFIED CHANNEL DETECTOR	DETECTOR TYPE	DETECTOR OPERATION			LOCKING CALL	MOVEMENT CALLED	MOVEMENT EXTENDED
			CALLS & EXTENDS	CALLS ONLY	EXTENDS ONLY			
N1,N2,N3	1	SAWED-IN	X				1	1&5
N4, N5, N6	2	SAWED-IN	X				6	2&6
S1,S2,S3	3	SAWED-IN	X				5	1&5
S4-S9	4 & 5	SAWED-IN	X				2	2&6
W1-W3	6	SAWED-IN	X				7	7
W4-W9	7 & 8	SAWED-IN	X				4	4&7 or 4&8
E1-E3	9	SAWED-IN	X				3	3
E4-E6	10	SAWED-IN	X				8	3&8 or 4&8

COORDINATION TIMING								
CYCLE 1 = 70 SEC								
MOVEMENT	1	2	3	4	5	6	7	8
PHASE								
TIME - SPLIT 1	12	14	13	31	12	14	21	23
COORDINATED PHASE				X				X
OFFSET 1 = 0 SEC								

COORDINATION TIMING								
CYCLE 2 = 60 SEC								
MOVEMENT	1	2	3	4	5	6	7	8
PHASE								
TIME - SPLIT 2	11	16	12	20	11	16	12	20
COORDINATED PHASE				X				X
OFFSET 1 = 0 SEC								

COORDINATION TIMING								
CYCLE 3 = 90 SEC								
MOVEMENT	1	2	3	4	5	6	7	8
PHASE								
TIME - SPLIT 3	11	26	21	31	11	26	15	38
COORDINATED PHASE				X				X
OFFSET 1 = 0 SEC								

Plot Scale - 1:40

Plotted From - tnpr14341

File - U:\rdprj\umin\03RK\007time.dgn

SIGNAL TIMING
I29 NB OFF RAMP & TWO RIVERS DRIVE

STATE OF SOUTH DAKOTA	PROJECT	SHEET	TOTAL SHEETS
	IM 0291(126)1	L12	L19

Plotting Date: 08/04/2015

PHASING AND SEQUENCING							
INTERVAL / SIGNAL HEAD	1	2	3	4	5	6	FLASH DISPLAY
3,4,5	G	Y					R
1,2,9				G	Y		Y
6,7,8				G	Y		Y
MOVEMENTS	5&2			4&8			
PHASES							

CONTROLLER TIMINGS (FREE OPERATION)								
MOVEMENT	1	2	3	4	5	6	7	8
PHASE								
MIN GREEN		10		10	10			10
ADDED INITIAL								
MAX INITIAL								
PASSAGE TIME		3		3	3			3
MAXIMUM 1		38		22	38			22
MAXIMUM 2								
TIME BEFORE								
TIME TO REDUCE								
MINIMUM GAP								
YELLOW CHANGE		4		4	4			4
RED CLEARANCE		2.5		1.5	2.5			1.5
WALK								
PED CLEARANCE								

TIMING PLAN 1	
TIME OF DAY (TOD)	PATTERN (C/S/O)
6:00 - 8:30	1/1/1
8:30 - 11:15	FREE
11:15 - 15:15	2/2/2
15:15 - 18:00	3/3/3
18:00 - 23:00	FREE
23:00 - 6:00	FLASH

TIMING PLAN 2	
TIME OF DAY (TOD)	PATTERN (C/S/O)
6:00 - 23:00	FREE
23:00 - 6:00	FLASH

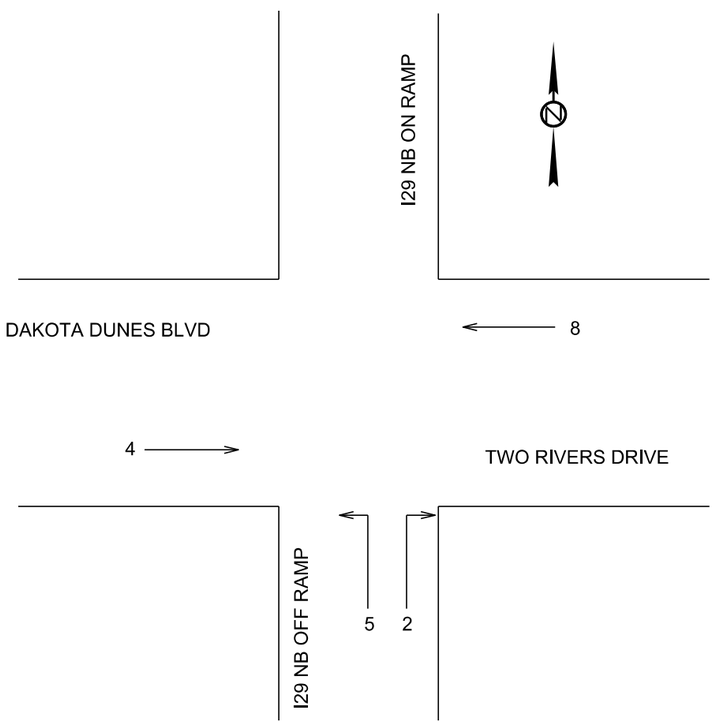

WEEKLY PROGRAM							
	SUN	MON	TUE	WED	THU	FRI	SAT
TIMING PLAN	2	1	1	1	1	1	2

DETECTOR SETTINGS								
DETECTOR LABEL	AMPLIFIED CHANNEL DETECTOR	DETECTOR TYPE	DETECTOR OPERATION			LOCKING CALL	MOVEMENT CALLED	MOVEMENT EXTENDED
			CALLS & EXTENDS	CALLS ONLY	EXTENDS ONLY			
E1,E2	1	EXISTING	X				8	4&8
E3,E4	2	EXISTING	X				8	4&8
S1,S4	3	EXISTING	X				5	2&5
S2,S5	4	EXISTING	X				2	2&5
S3,S6	5	EXISTING	X				2	2&5
S7	6	EXISTING			X	X	5	2&5
S8	7	EXISTING			X	X	2	2&5
S9	8	EXISTING			X	X	2	2&5
W1,W2	9	EXISTING	X				4	4&8
W3,W4	10	EXISTING	X				4	4&8

COORDINATION TIMING								
CYCLE 1 = 70 SEC								
MOVEMENT	1	2	3	4	5	6	7	8
PHASE								
TIME - SPLIT 1		52		18	52			18
COORDINATED PHASE					X			
OFFSET 1 = 11 SEC								

COORDINATION TIMING								
CYCLE 2 = 60 SEC								
MOVEMENT	1	2	3	4	5	6	7	8
PHASE								
TIME - SPLIT 2		39		21	39			21
COORDINATED PHASE				X				X
OFFSET 2 = 54 SEC								

COORDINATION TIMING								
CYCLE 3 = 90 SEC								
MOVEMENT	1	2	3	4	5	6	7	8
PHASE								
TIME - SPLIT 3		48		42	48			42
COORDINATED PHASE				X				X
OFFSET 3 = 46 SEC								

Plot Scale - 1:40

Plotted From - trpr14341

File - U:\rdtpr\umin03RK\028time.dgn

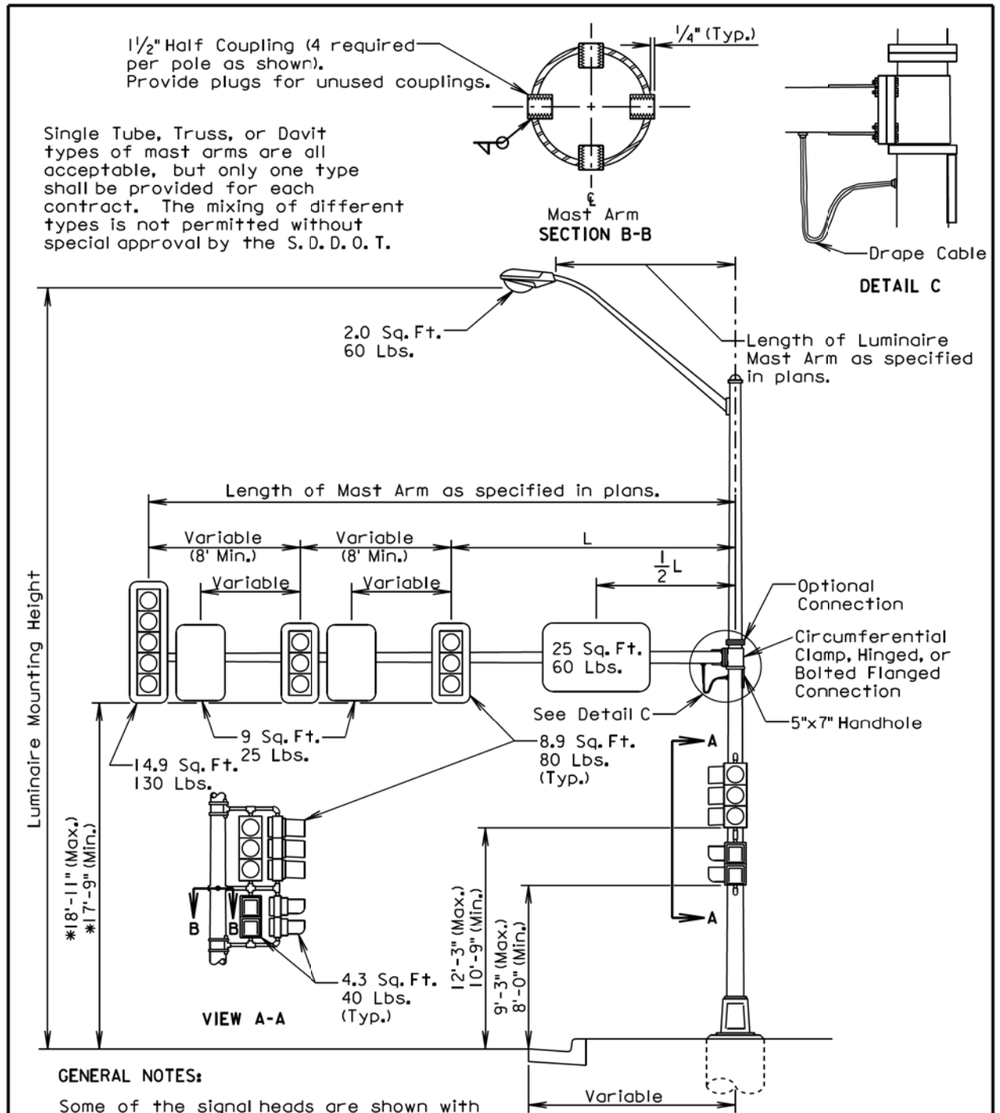

GENERAL NOTES:

Some of the signal heads are shown with backplates removed so that the mounting hardware is visible.

* The signal height allowances shown above are based on a horizontal distance greater than 53' between the signals and stop line. For horizontal distance of 53' and less between the signals and the stop line, the height allowances shall be as specified in Section 4D.15 of the MUTCD.

December 23, 2008

Published Date: 2nd Qtr. 2015	SDDOT	SIGNAL POLE (WITH MAST ARM AND LUMINAIRE EXTENSION)	PLATE NUMBER 635.32 Sheet 1 of 1

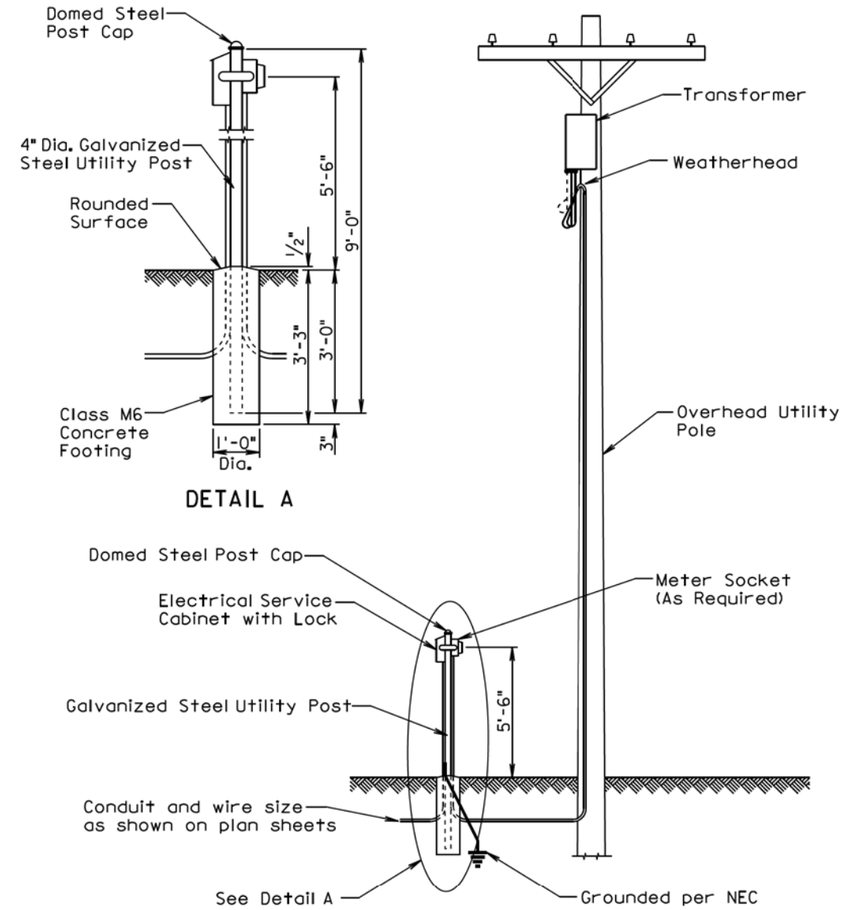

GENERAL NOTES:

The concrete for the post footing shall be class M6 concrete.

The 4" diameter galvanized steel utility post shall be 9' long and shall be in conformance with AASHTO Standard Specifications M181. The post shall be Type 1 and either Grade 1 or Grade 2. The domed steel post cap shall be in conformance with AASHTO Standard Specifications M181 and shall be Type 1.

The Contractor shall contact and coordinate his/her work with the Utility Companies regarding hookup requirements, fees, materials, and equipment necessary.

All costs for furnishing and installing all materials from the electrical service cabinet to the transformer including labor, equipment, hookup fees, all items within the cabinet, post, concrete footing, post cap, meter socket if required, conduit, and incidentals shall be incidental to the contract unit price per each for "Electrical Service Cabinet".

June 26, 2006

Published Date: 2nd Qtr. 2015	SDDOT	GALVANIZED STEEL UTILITY POST WITH OVERHEAD UTILITY POLE	PLATE NUMBER 635.35 Sheet 1 of 1

Plot Scale - 1:200
Plotted From - tmpr14341
File - ...\prj\unlin03RK\s635\32\s635.dgn

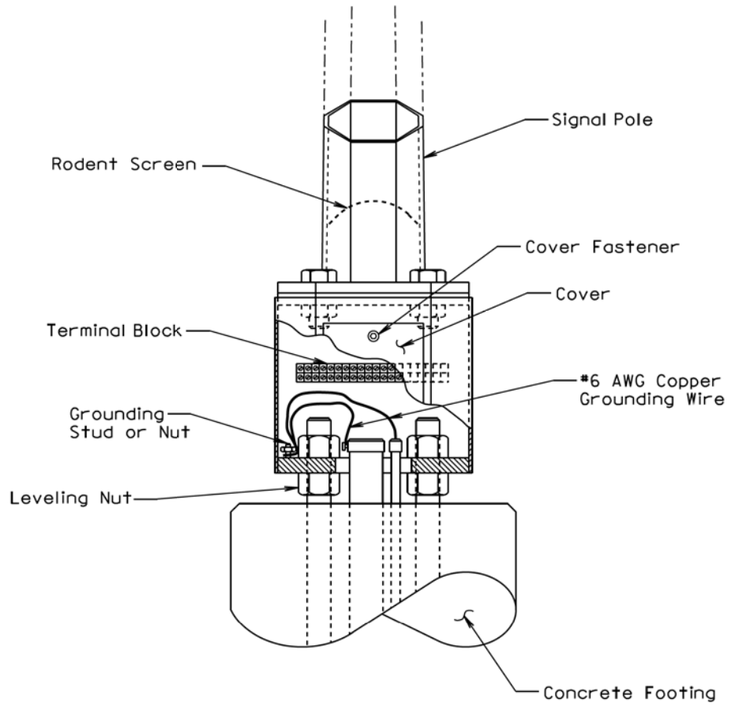

GENERAL NOTES:

Base details are provided for example only and are not intended to be a complete design.

The Contractor shall furnish and install a rodent screen in the signal pole above the tranformer base. The rodent screen shall be a galvanized steel mesh with a maximum opening size of 1/4 inch. The rodent screen shall be friction fitted or installed by other methods approved by the Engineer.

All costs for furnishing and installing the rodent screen including labor, equipment, and materials shall be incidental to the contract unit price per each for the corresponding signal pole bid item.

December 23, 2008

Published Date: 2nd Qtr. 2015	SDDOT	TRANSFORMER SIGNAL POLE BASE	PLATE NUMBER 635.50
			Sheet 1 of 1

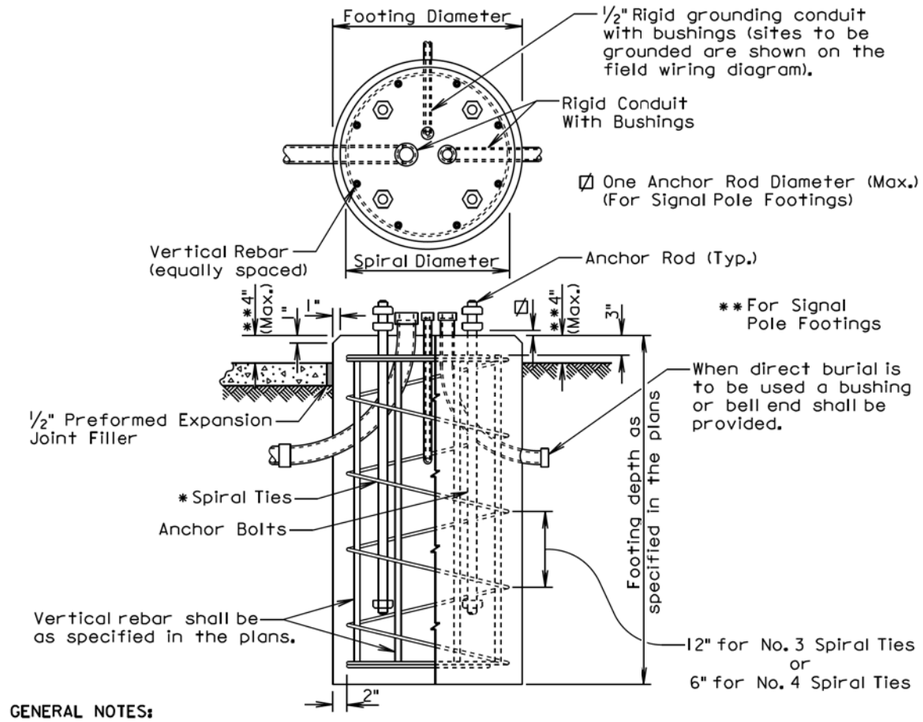

GENERAL NOTES:

* The tie sizes are specified in the plans. Circular ties may be used in lieu of the spiral ties. The No. 3 ties shall be spaced 12 inches apart except for the top two which shall be spaced 6 inches apart. The No. 4 ties shall be spaced 6 inches apart except for the top two which shall be spaced 3 inches apart. The ties shall be lapped 18 inches and the laps shall be staggered around the cage.

Spiral ties shall have 1-1/2 extra turns at each end.

See section 985 of the Standard Specifications for footing materials.

Conduits and bushings may project 2 1/2 inches to 6 inches above footing for fixed base poles but shall not project above the slip plane or fracture plane for breakaway poles.

Conduits shall be sealed water-tight during all phases of construction until poles are in place.

The anchor rods shall fit inside the reinforcing steel cage. If the anchor rods designed by the Pole Manufacturer do not fit, contact the Office of Bridge Design for footing redesign. No additional payment will be made for the redesigned footing.

Costs of conduit and conduit bushings shown on footing detail shall be incidental to the footing bid item(s).

The pole shall not be installed until the concrete has attained design strength (4000 psi).

The contour of the area surrounding the breakaway pole shall be flat, though not necessarily level for a distance of 5 feet in all directions. The Contractor may be required to provide finish grading at some breakaway pole locations.

September 6, 2013

Published Date: 2nd Qtr. 2015	SDDOT	POLE FOOTING	PLATE NUMBER 635.55
			Sheet 1 of 1

Plot Scale - 1:200
Plotted From - trpr14341
File - ...\prj\unin03RK\s63550s63555.dgn

STATE OF SOUTH DAKOTA	PROJECT	SHEET	TOTAL SHEETS
	IM 0291(126)1	L15	L19

Plotting Date: 05/14/2015

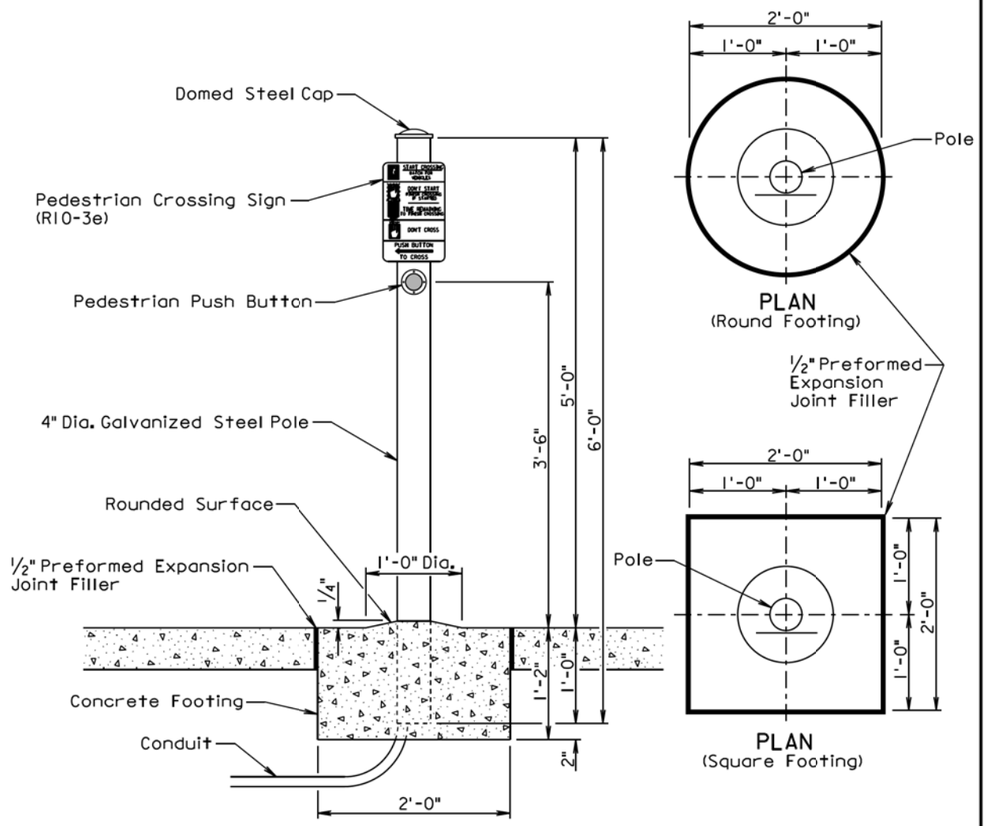

ELEVATION

GENERAL NOTES:

The Contractor shall install either the round or the square concrete footing. For informational purpose, the quantity of concrete for one footing is 0.14 cubic yards for the round footing and 0.17 cubic yards for the square footing.

The concrete for the footing shall be class M6 concrete.

The 4" diameter galvanized steel pole shall be 6' long and shall be in conformance with AASHTO Standard Specifications M181. The pole shall be Type 1 and either Grade 1 or Grade 2. The domed steel pole cap shall be in conformance with AASHTO Standard Specifications M181 and shall be Type 1.

All costs for furnishing and installing the pedestrian push button pole including labor, equipment, and materials including the pole, concrete footing, steel cap, and the conduit in the footing shall be incidental to the contract unit price per each for "Pedestrian Push Button Pole".

February 14, 2010

Published Date: 2nd Qtr. 2015	SDDOT	PEDESTRIAN PUSH BUTTON POLE	PLATE NUMBER 635.57
			Sheet 1 of 1

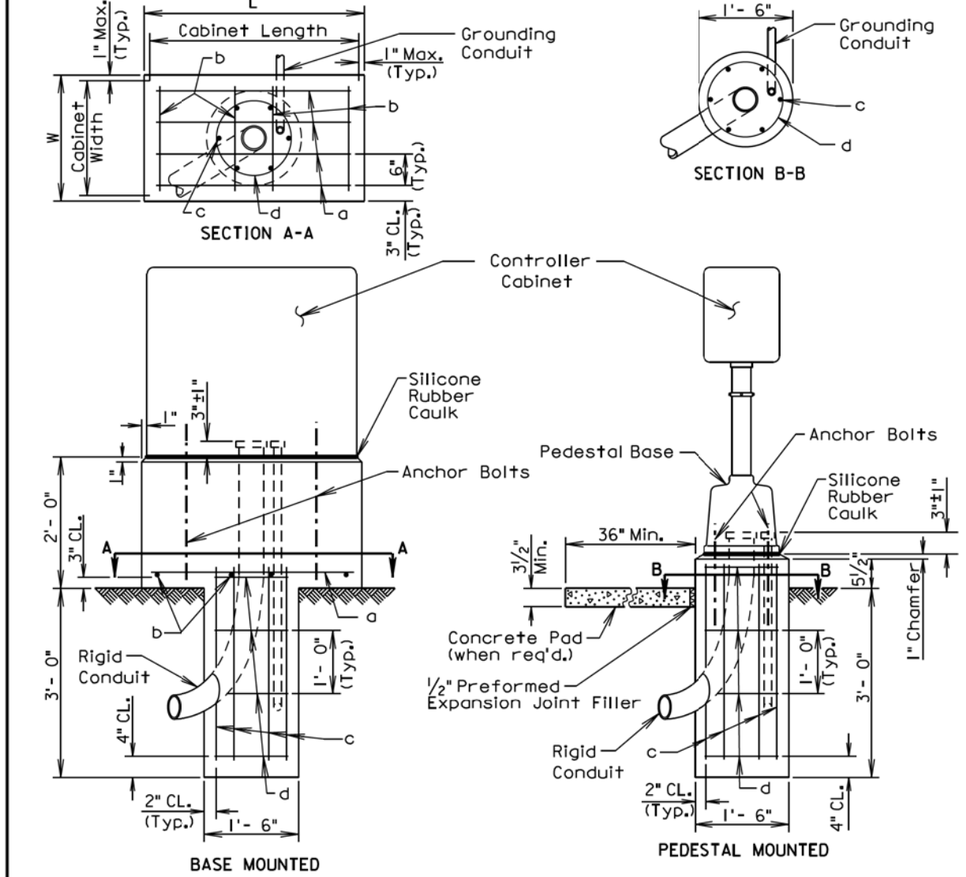

BASE MOUNTED

PEDESTAL MOUNTED

GENERAL NOTES:

The above ground portion of the footing shall conform to the base of the controller to the satisfaction of the Engineer.

Conduits shall be sealed and water-tight until the conductor cables are installed.

If the controller is not located within or adjacent to an existing sidewalk, the Contractor shall provide a concrete pad as directed by the Engineer.

Anchor bolts and related hardware shall conform to the controller manufacturer's requirements and recommendations.

A continuous bead of silicone rubber caulk shall provide a weather-tight seal between the base and the concrete.

Reinforcing Schedule (for one footing)

Mk.	No.	Size	Length	Type	Bending Detail
a	*	3	L - 4"	Str.	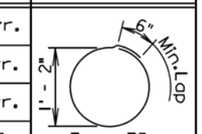
b	*	3	W - 4"	Str.	
c	6	6	3'- 0"	Str.	
d	4	3	4'- 0"	T3	Type T3

Note: Dimensions are out to out of bar

* Vary number of bars as required by footing size.

March 31, 2000

Published Date: 2nd Qtr. 2015	SDDOT	CONTROLLER CABINET AND FOOTING	PLATE NUMBER 635.60
			Sheet 1 of 1

Plot Scale - 1:200
- Plotted From - trpr14341
File - ...\prj\unin03RK\s63557s63560.dgn

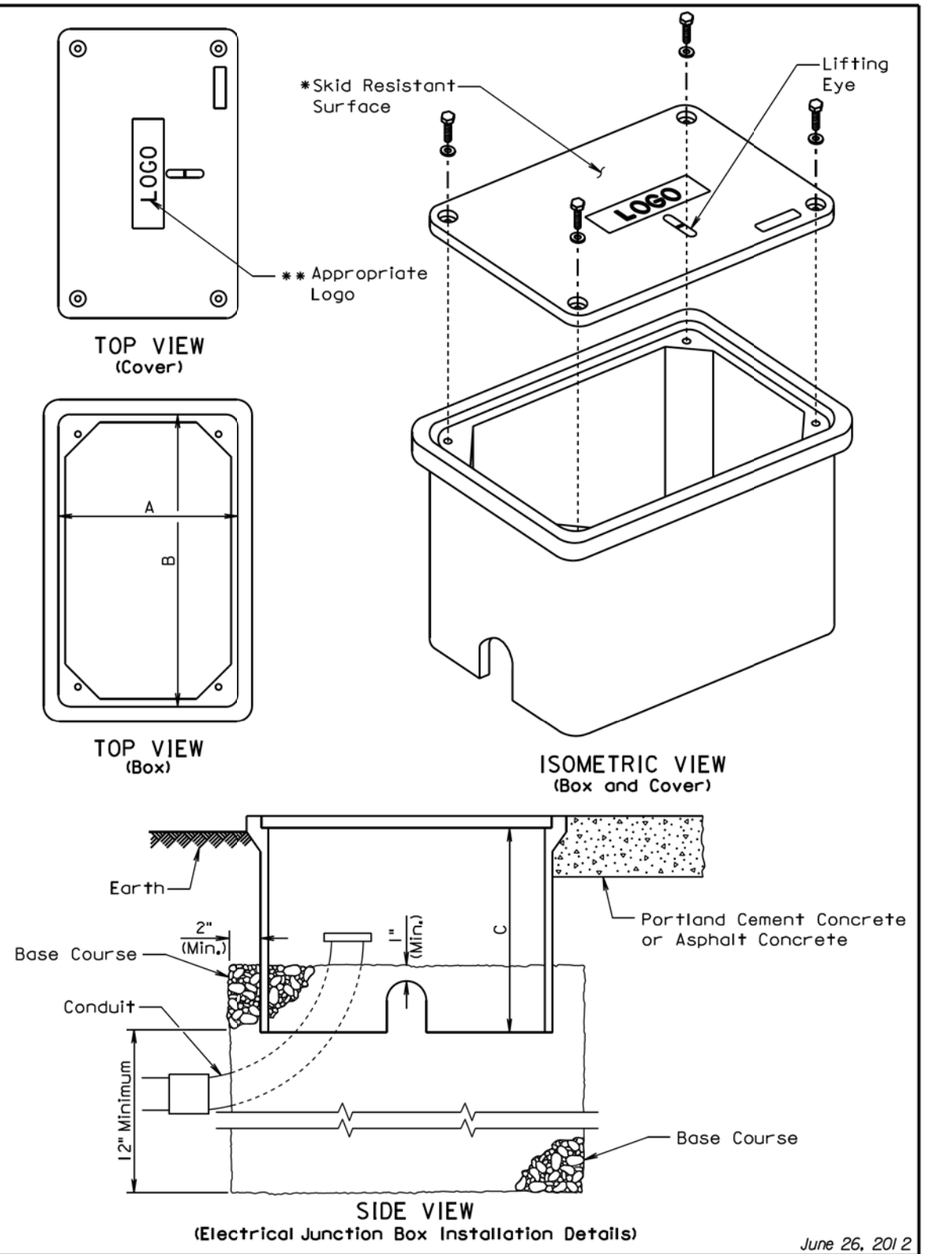

June 26, 2012

Published Date: 2nd Qtr. 2015	SDDOT	ELECTRICAL JUNCTION BOXES TYPE 1 THROUGH TYPE 4	PLATE NUMBER 635.65
			Sheet 1 of 2

ELECTRICAL JUNCTION BOX

TYPE	DESCRIPTION	DIMENSIONS A	B	C
1	Open Bottom with Gasket	11"-15"	18"-21"	18" (Min.)
2	Open Bottom with Gasket	13"-18"	23"-28"	18" (Min.)
3	Open Bottom with Gasket	17"-22"	24"-30"	18" (Min.)
4	Open Bottom with Gasket	28"-33"	36"-48"	24" (Min.)

GENERAL NOTES:

The cover shall be gasketed with a minimum of two stainless steel bolts and washers.

The cover shall have a lifting eye.

* The surface of the cover shall have a minimum wet and dry coefficient of friction value of 0.5 as determined by ASTM F 609.

** The cover of the junction box shall have the appropriate logo in one inch size letters and shall be recessed. When the junction box contains cables or wires for a traffic signal then the logo shall be "Signal". When the junction box contains lighting conductors then the logo shall be "Lighting".

The electrical junction boxes shall comply with the American National Standards Institute (ANSI)/Society of Cable Telecommunications Engineers (SCTE) 77 2007 Specification for Underground Enclosure Integrity. The loading requirement for all the electrical junction boxes shall be Tier 8 of ANSI/SCTE 77 2007.

The electrical junction boxes shall be UL listed.

June 26, 2012

Published Date: 2nd Qtr. 2015	SDDOT	ELECTRICAL JUNCTION BOXES TYPE 1 THROUGH TYPE 4	PLATE NUMBER 635.65
			Sheet 2 of 2

Plot Scale - 1:200
File - ...\unin03RK\s63565_1s63565_2.dgn
- Plotted From - trpr14341

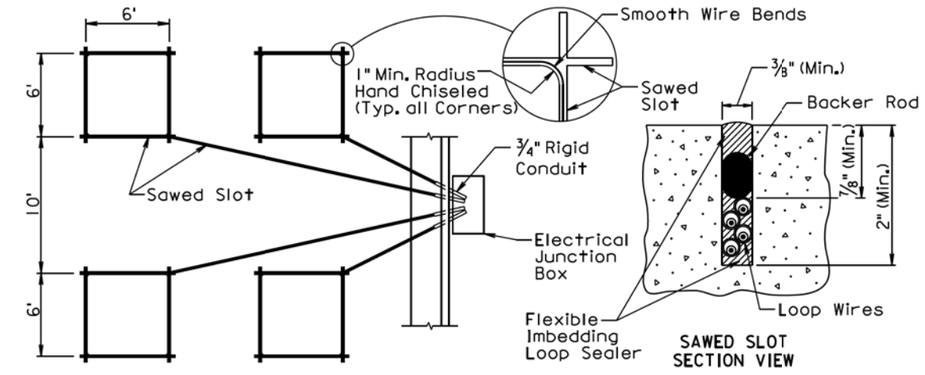

SAWED SLOT LAYOUT

SAWED SLOT SECTION VIEW

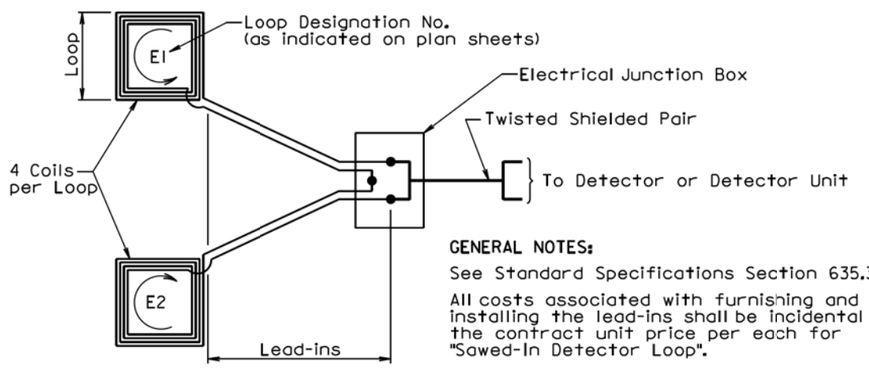

GENERAL NOTES:

See Standard Specifications Section 635.3 Q.

All costs associated with furnishing and installing the lead-ins shall be incidental to the contract unit price per each for "Sawed-In Detector Loop".

WIRING DIAGRAM

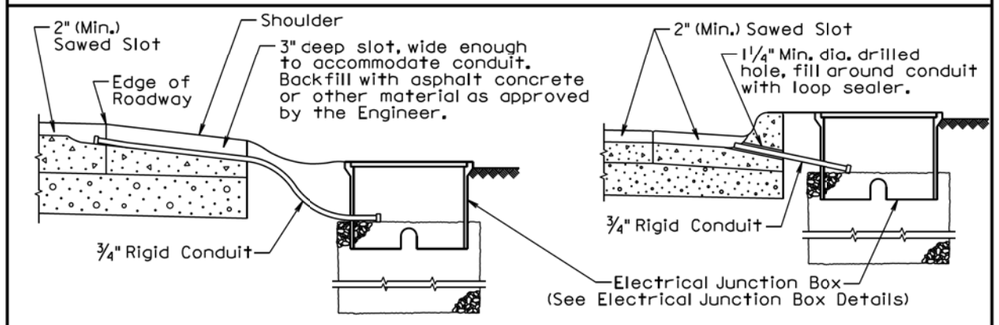

LEAD-IN THROUGH SHOULDER DETAIL

LEAD-IN THROUGH CURB AND GUTTER DETAIL

February 14, 2011

Published Date: 2nd Qtr. 2015	SDDOT	SAWED-IN DETECTOR LOOP	PLATE NUMBER 635.71
			Sheet 1 of 1

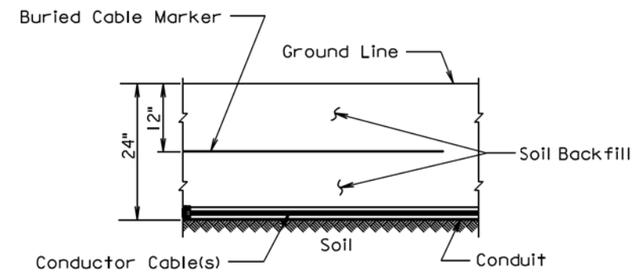

SECTION VIEW

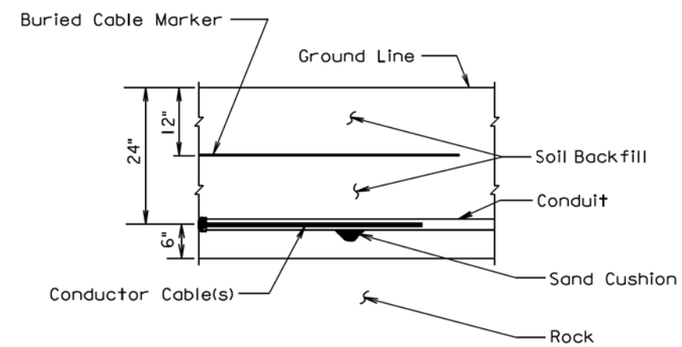

SECTION VIEW

GENERAL NOTE:

The Buried Cable Marker shall be plastic, approximately 6" wide, and shall be capable of sustaining a minimum of a 350% tolerance of elongation without tearing. The Buried Cable Marker shall have a life expectancy approximately equal to that of the conductor(s) beneath it. A phrase indicating the presence of a buried electric circuit below shall be printed in a contrasting color on the cable marker. The Buried Cable Marker shall be subject to approval by the Engineer. All costs associated with furnishing and installing the Buried Cable Marker shall be incidental to the contract unit price per Foot for the bid item used for the electrical conductor.

March 31, 2000

Published Date: 2nd Qtr. 2015	SDDOT	CONDUIT INSTALLATION	PLATE NUMBER 635.76
			Sheet 1 of 1

Plot Scale - 1:200
Plotted From - trpr14341
File - ...\prj\unin03RK\s63571s63576.dgn

Step 1. Strip loop wires and lead-in cable.

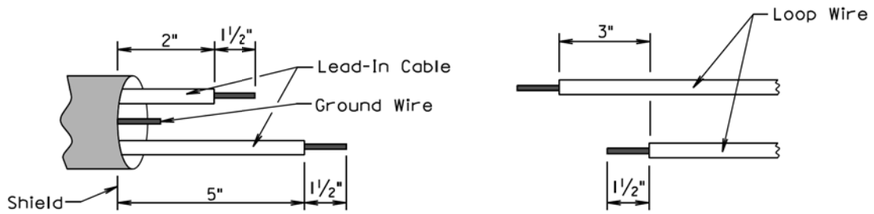

Step 2. Connect and solder.

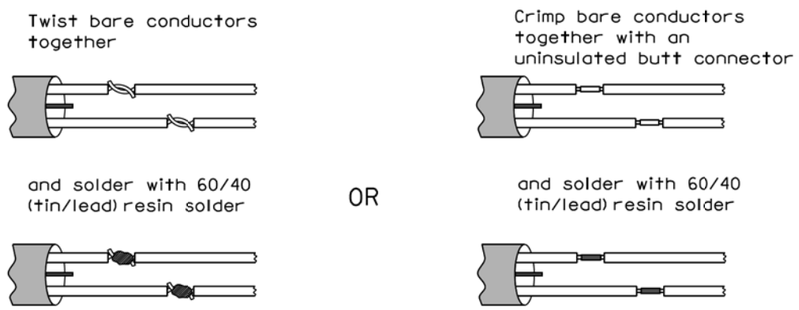

Step 3. Insulate each solder joint seperately.

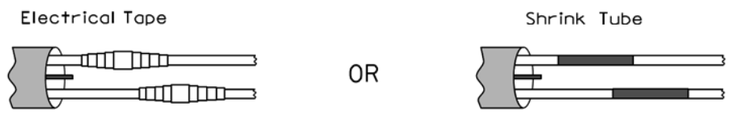

Step 4. Environmentally seal total splice against weather, moisture and abrasion. Methods for environmentally sealing the splice include heat-shrinkable tubing, special sealing kits, special forms to be filled by sealant, and tape and coating.

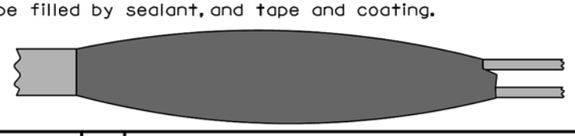

June 20, 2000

Published Date: 2nd Qtr. 2015	SDDOT	DETECTOR LOOP WIRE SPLICING	PLATE NUMBER 635.77 Sheet 1 of 1

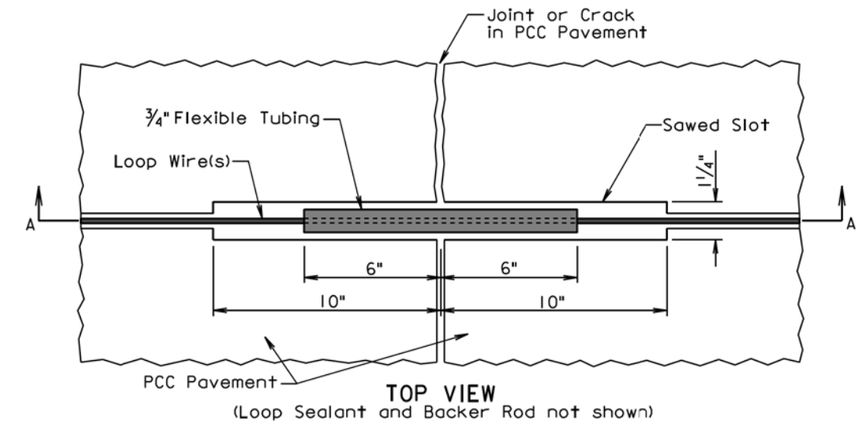

TOP VIEW
(Loop Sealant and Backer Rod not shown)

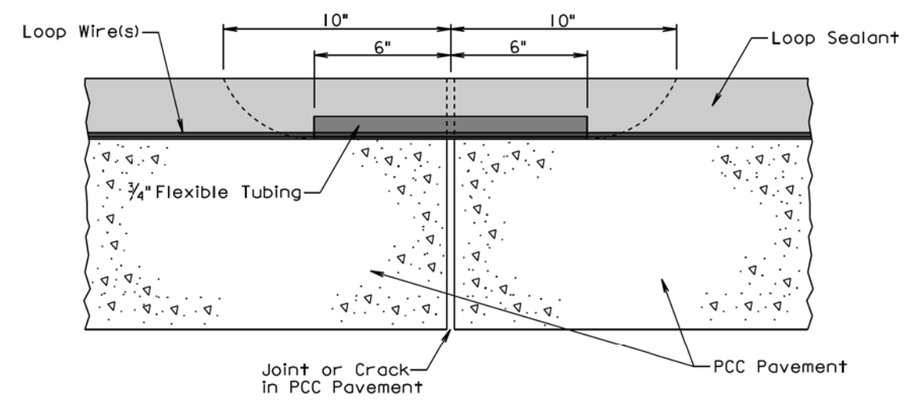

SECTION A-A
(Backer Rod not shown)

GENERAL NOTE:

All costs for constructing the sawed-in detector loop protection including labor, equipment, and materials shall be incidental to the contract unit price per each for "Sawed-In Detector Loop".

March 28, 2001

Published Date: 2nd Qtr. 2015	SDDOT	SAWED-IN DETECTOR LOOP PROTECTION AT JOINT OR CRACK IN PCC PAVEMENT	PLATE NUMBER 635.78 Sheet 1 of 1

Plot Scale - 1:200
File - ...\prj\unin03RK\s63577s63578.dgn
Plotted From - trpr14341

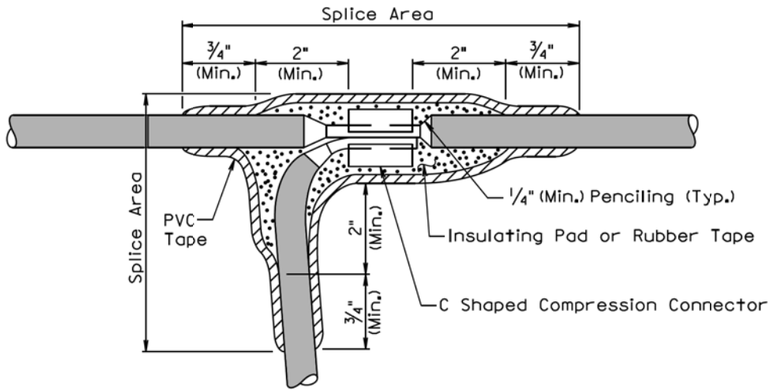

TYPE C SPLICE
(Between 1 free end and 1 through conductor)

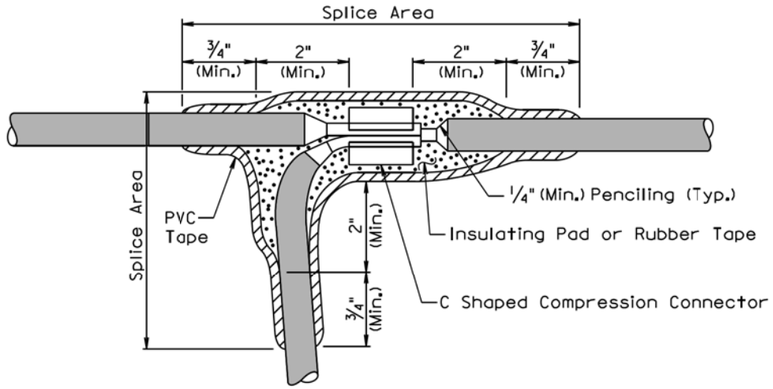

TYPE T SPLICE
(For 3 free ends)

February 14, 2010

Published Date: 2nd Qtr. 2015	SDDOT	WIRE SPLICING FOR LIGHTING (LOW VOLTAGE CIRCUITS (0 to 600 V))	PLATE NUMBER 635.80 Sheet 1 of 2

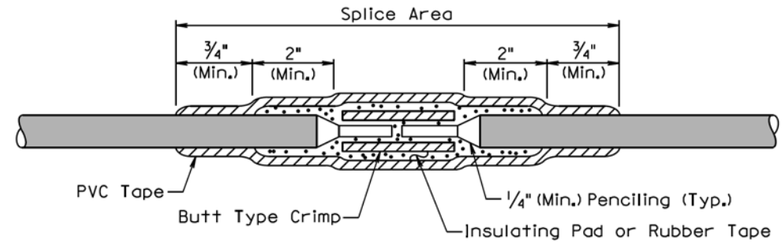

TYPE S SPLICE
(Between 2 free ends)

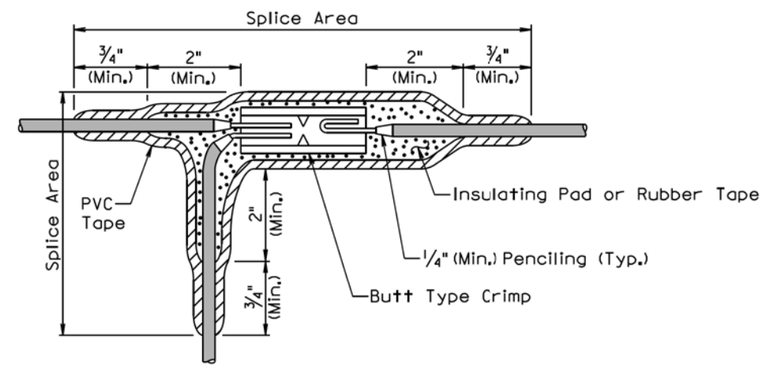

TYPE ST SPLICE
(For 3 free ends)

GENERAL NOTES:

The splice shall be environmentally sealed for protection from weather, moisture, and abrasion in accordance with the method stated below.

The rubber tapes shall be rolled after application.

Method for insulating splice area:

1. The splice area shall be completely covered with electrical insulating coating and dried.
2. Apply two layers of 1/8" minimum thickness electrical insulating pad or two layers of half lapped synthetic oil resistant self fusing rubber tape.
3. Three layers of half lapped polyvinyl chloride tape shall be applied.
4. The entire splice area shall be covered with electrical insulating coating and dried.

February 14, 2010

Published Date: 2nd Qtr. 2015	SDDOT	WIRE SPLICING FOR LIGHTING (LOW VOLTAGE CIRCUITS (0 to 600 V))	PLATE NUMBER 635.80 Sheet 2 of 2

Plot Scale - 1:200
File - ...\unin03RK\s63580_1s63580_2.dgn
- Plotted From - trpr14341