Section S: Permanent Signing Plans

STATE OF SOUTH DAKOTA	PROJECT	SHEET	TOTAL SHEETS
	IM 0291(126)1	S1	S9

Plotting Date: mmm-ddd-yyy

INDEX OF SHEETS

S1	General Layout W/Index
S2-S5	Estimate With General Notes & Tables
S6	Permanent Signing Layout
S7	Delineator Erection Details
S8-S9	Erection Details for Breakaway Sign Supports

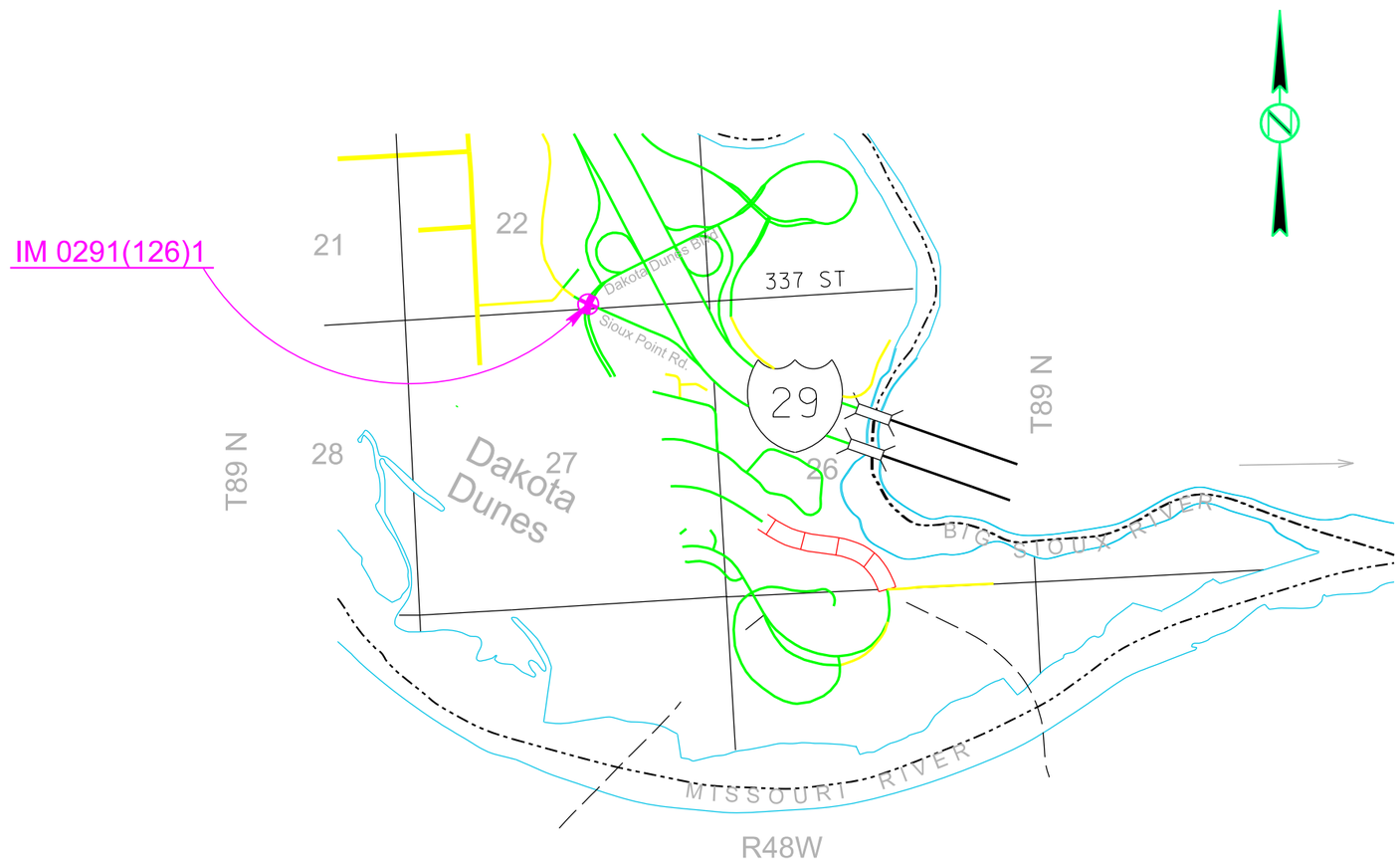

Plot Scale - $$scale$$

Plotted From - $$username$$

File - $$filename$$

SECTION S ESTIMATE OF QUANTITIES

BID ITEM NUMBER	ITEM	QUANTITY	UNIT
110E0100	Remove Concrete Footing(s)	Lump Sum	LS
110E5020	Salvage Traffic Sign	9	Each
110E7152	Remove Delineator for Reset	2	Each
632E0010	1.25' Diameter Breakaway Support Concrete Footing	8.0	Ft
632E1320	2.0"x2.0" Perforated Tube Post	19.0	Ft
632E1340	2.5"x2.5" Perforated Tube Post	9.7	Ft
632E1410	3" Diameter Steel Post, .216" Shell	10.2	Ft
632E2100	Reset Delineator	2	Each
632E3203	Flat Aluminum Sign, Nonremovable Copy High Intensity	30.8	SqFt
632E3205	Flat Aluminum Sign, Nonremovable Copy Super/Very High Intensity	61.0	SqFt

SCOPE OF PERMANENT SIGN WORK

The permanent sign work includes, but is not limited to, the following:

A. Items to be removed by the Contractor:

1. Existing permanent signs.
2. Existing fixed and breakaway sign posts and anchors.
3. Fixed and breakaway concrete sign footings.

B. Items to be furnished and installed by the Contractor:

1. Breakaway steel post sign supports with concrete footings.
2. Breakaway steel post sign supports and anchors.
3. Flat sheet aluminum signs.

SIGN NUMBERING CONVENTION

All sign removals and new installations in these plans are numbered with prefixes that correspond to the following general locations:

Dakota Dunes Blvd Signs and Stationing:
DD-1XX

Sioux Point Road Signs and Stationing:
SP-1XX

Sign Removals and Stationing:
RS-2XX

REMOVAL AND SALVAGE OF EXISTING SIGNS

1. Removal and Salvage of Existing Signs:

The Contractor shall remove and salvage the existing signs listed in the Permanent Signing Tables. Stationing shown is approximate. The signs are flat aluminum signs with nonremovable copy.

For single post sign assemblies, the Contractor may remove and salvage the flat aluminum sign(s), post, and footing (if present), as one unit. For multiple post assemblies, the Contractor shall remove the sign(s) first, and remove the posts and footings (if present), separate.

2. Miscellaneous Sign Related Items:

The existing footings for fixed base sign posts shall be removed entirely or broken down a minimum of 1 foot below the surface of the final grade at topsoil elevation.

The Contractor shall separate signs from supports prior to stockpiling. Salvaged signs and supports shall be neatly stockpiled at a site designated by the Project Engineer. Salvaged galvanized steel posts shall be adequately labeled with the Station from which they were removed, and neatly stockpiled. Salvaged mounting hardware shall be returned to the SDDOT.

Salvaged posts, signs and sign materials shall be returned to the SDDOT Maintenance Yard at Junction City, I-29 Exit 26.

Stockpiling of salvaged material shall be coordinated with the Engineer and Lead Highway Maintenance Worker, at the SDDOT Maintenance Yard. Richard Jahn, Lead Maintenance Worker, may be contacted at (605)667-8695.

Signs or posts for reset that are damaged due to improper handling shall be replaced in-kind at the Contractor's expense.

All nuts, bolts, and miscellaneous mounting hardware salvaged from existing signs shall not be reused.

3. Payment for Sign Related Work:

The cost for removal and salvage of flat aluminum sign assemblies, including posts and footings, utility or light pole mounted signs, overhead mounted signs, miscellaneous hardware, landscaping and reseeding, shall be incidental to the contract unit price per each for Salvage Traffic Sign.

SIGN LEGEND, BORDER AND BACKGROUND

All sign materials shall comply with Section 982 of the Specifications. All flat aluminum signs shall be 0.100” sheet aluminum.

All auxiliary signs for M1-5 State Route Marker signs shall have green borders with black legend and symbols on white background.

All sign sheeting shall conform to AASHTO M 268.

SIGN POSTS

The plan post lengths shall be field verified by the Contractor prior to installation. Wood post and direct drive post lengths listed in the Post Sizes and Quantities section of the Sign Installation tables include 3 or 4 ft./post buried length, and shall be cut to the proper sign height where necessary.

2” square perforated tube post shall be fabricated from 12 gauge steel and 2 ½” square perforated tube post from 10 gauge galvanized steel. Anchor posts shall be 4 ft in length. Two-piece anchor post systems are required for 2” and 2 ¼” square steel perforated tube post anchor stub posts. Heavy duty 7 gauge galvanized steel anchor stub posts that do not require stiffener sleeves are required for 2 ½” square steel perforated tube post non slip base post installations. Anchor wings are required for signs greater than 6 sq. ft. in total size.

The Contractor shall provide block-outs or shall core holes 6”-9” in diameter, or as specified by the Engineer, in concrete where sign posts are to be installed. The Contractor shall backfill each hole with cold mix asphalt concrete after the sign post has been installed, to the satisfaction of the Engineer.

Multi-directional surface mount sign bases shall be Kleen Break type or equivalent.

All breakaway sign supports shall comply with NCHRP 350 or MASH crash-worthy requirements.

Costs for sign supports shall be included in the respective contract unit price per foot for the post and footing size indicated. Costs for telescoped reinforced square steel perforated tube posts and anchor stub posts shall be incidental to the respective contract unit price per foot for the post size indicated, and are not included in the Estimate of Quantities.

PLOT SCALE - $$SCALE$$
PLOTTED FROM - $$USERNAME$$
PLOT NAME - $$PLOTNAME$$
FILE - $$FILENAME$$

PLOT SCALE - $$SCALE$$

PLOT NAME - $$PLOTNAME$$

FILE - $$FILENAME$$

PLOTTED FROM - $$USERNAME$$

CONCRETE FOOTINGS

The exposed portion of fixed base concrete footings shall be formed to provide a uniform diameter section and half-inch chamfer on the grout pad as shown on the footing details. The amount of exposed concrete footings on the up-slope side of the footing shall not be greater than 3 inches as shown on the footing details.

Footings for breakaway signs shall be below ground as shown on the footing details and need not be formed.

New concrete footings shall be installed a minimum of 10 ft from old footings greater than 4 ft in depth that have been completely removed, or 5 ft from old footings that have been broken down approximately 1 ft below ground level. New concrete footings may be installed a minimum of 5 ft from old footings 4 ft or less in depth that have been completely removed. The Contractor may adjust new footing locations to comply with the indicated minimum distances if lateral plan offset is maintained, with the approval of the Engineer.

Extreme care should be used to make certain that the footings are constructed in accordance with the plan sheets, and the finished ground line at all footings are per the details shown on the plan sheets. Disturbed areas within the grading project limits shall be seeded in accordance with Section D – Erosion Control Plans. Disturbed areas outside the grading project limits shall be seeded to the satisfaction of the Engineer. The cost of seeding outside the grading project limits shall be incidental to the contract unit price per foot for the various Concrete Footing items.

ACCEPTANCE OF SIGN INSTALLATIONS

Acceptance of completed signs will be considered on a sign by sign basis in accordance with Section 5.16 of the Specifications.

PERMANENT SIGNING TABLE

SIGN DATA										POST DATA								FOOTING DATA	REMOVAL DATA		WORK DESCRIPTION
SIGN #	STATION	DESCRIPTION	SIGN CODE	SIGN SIZE (FT)	SIGN AREA (SQ FT) FA	DG	FDG	DIR FAC-ING	OFFSET* RIGHT/LEFT OVERHEAD	POST LENGTHS (ABOVE GROUND) INSIDE	OUTSIDE	FIXED or BREAK-AWAY**	(N)EW or (R)EUSE POST IN	OUT	SIZES & QUANTITIES (FT) 2" SQ. STEEL	2 ½" SQ. STEEL	3" Dia. X 0.216"		1'-3" BKWY	RESET DELIN (EA)	SALVAGE TRAFFIC SIGN (EA)	
DAKOTA DUNES BLVD					632E3203	632E3205									632E1320	632E1340	632E1410		632E0010	110E7152	110E5020	
RS - 201	6.+30 R		R1-1	4 X 4				SW	2' R	9'-06"		S									1	REMOVE EXISTING SIGN, STEEL PIPE SUPPORT, AND CONCRETE FOOTING.
DD - 101	6+39 L		R3-5L R3-5R	2.5 X 3 2.5 X 3		7.5 7.5		NE	OVERHEAD	MAST ARM		F	N									INSTALL NEW SIGNS ON NEW TRAFFIC SIGNAL MAST ARM.
RS - 202	6+38 R 6+56 R		DELIN	0.33 X 0.50					2' R	7'-00"		B	R							2		REMOVE, SALVAGE AND RESET DELINEATORS.
DD - 102	6+49 R		R3-5L R3-5R	2.5 X 3 2.5 X 3		7.5 7.5		NW	OVERHEAD	MAST ARM		F	N									INSTALL NEW SIGNS ON NEW TRAFFIC SIGNAL MAST ARM.
DD - 103	7+59 L		R3-5L	2.5 X 3		7.5		SE	OVERHEAD	MAST ARM		F	N									INSTALL NEW SIGNS ON NEW TRAFFIC SIGNAL MAST ARM.
RS - 203	7+75 L		R1-1	4 X 4				NE	2' R	9'-06"		S									1	REMOVE EXISTING SIGN, STEEL PIPE SUPPORT, AND CONCRETE FOOTING.
DD - 104	7+99 R		R3-5L	2.5 X 3		7.5		SE	OVERHEAD	MAST ARM		F	N									INSTALL NEW SIGNS ON NEW TRAFFIC SIGNAL MAST ARM.
RS - 204	8+90 L		R3-8b	4 X 2.5				NE	2' R	9'-06"		W									1	REMOVE EXISTING SIGN AND WOOD SUPPORT.
DD - 105	9+55 L		R3-7R	2.5 X 2.5	6.3			NE	2' R	9'-06"		A	N		9.5							INSTALL NEW SIGN AND STEEL SUPPORT WITH ANCHOR.
RS - 205	10+52 L		W3-1	4 X 4				NE	2' R	9'-06"		S									1	REMOVE EXISTING SIGN, STEEL SUPPORT, AND SLIP BASE ANCHOR.
DD - 106	10+65 L		R3-8b	4 X 2.5	10.0			NE	2' R	9'-08"		S	N			9.7			4.0			INSTALL NEW SIGN, STEEL SUPPORT AND CONCRETE FOOTING.
RS - 206	10+80 L		R3-7R	2.5 X 2.5				NE	2' R	9'-06"		W									1	REMOVE EXISTING SIGN AND WOOD SUPPORT.
TOTALS THIS SHEET					16.3	45.0									9.5	9.7	0.0		4.0	2	5	

* - Distance from White or Yellow Edgeline, or Back of Curb, to Edge of Sign.

** - (F)ixed Base, or Breakaway (S)lip Base, (A)nchor Stub Post, (D)irect drive, or (W)ood Post.

DG = Flat Aluminum Signs w/Nonremovable Copy - Super/Very High Intensity Sheeting

FDG = Flat Aluminum Signs w/Nonremovable Copy - Fluorescent Yellow Super/Very High Intensity Sheeting

FA = Flat Aluminum Signs w/Non-Removable Copy - High Intensity Sheeting

TABLE 1 OF 2

PLOT SCALE - $$SCALE$$
PLOTTED FROM - $$USERNAME$$
PLOT NAME - $$PLOTNAME$$
FILE - $$FILENAME$$

PERMANENT SIGNING TABLE

SIGN DATA										POST DATA								FOOTING DATA	REMOVAL DATA		WORK DESCRIPTION
SIGN #	STATION	DESCRIPTION	SIGN CODE	SIGN SIZE (FT)	SIGN AREA (SQ FT) FA	DG	FDG	DIR FAC-ING	OFFSET* RIGHT/LEFT OVERHEAD	POST LENGTHS (ABOVE GROUND) INSIDE	OUTSIDE	FIXED or BREAK-AWAY**	(N)EW or (R)EUSE POST IN	OUT	SIZES & QUANTITIES (FT) 2" SQ. STEEL	2 ½" SQ. STEEL	3" Dia. X 0.216"		1'-3" BKWY	RESET DELIN (EA)	SALVAGE TRAFFIC SIGN (EA)	
SIOUX POINT RD					632E3203	632E3205									632E1320	632E1340	632E1410		632E0010	110E7152	110E5020	
RS - 207	106+00 R		W3-1	4 X 4				NW	2' R	9'-06"		S									1	REMOVE EXISTING SIGN ONLY AND REPLACE WITH NEW SIGN ON EXISTING POST.
SP - 107			W3-3	4 X 4			16.0	NW	2' R													
SP - 108	108+00 R		R3-7R	2.5 X 2.5	6.3			NW	2' R	9'-06"		A	N		9.5							INSTALL NEW SIGN AND STEEL SUPPORT WITH ANCHOR.
RS - 208	109+00 R		R1-1	4 X 4				NW	2' R	9'-06"		S									1	REMOVE EXISTING SIGN, STEEL PIPE SUPPORT, AND CONCRETE FOOTING.
RS - 209	111+15 L		R1-1	4 X 4				SE	2' R	9'-06"		S									1	REMOVE EXISTING SIGN, STEEL PIPE SUPPORT, AND CONCRETE FOOTING.
RS - 210	109+22 L		M3-1 M1-1 M6-1	2 X 1 2 X 2 1.75 X 1.25				SE	2' R	10'-02"		S									1	REMOVE EXISTING SIGNS, STEEL PIPE SUPPORT AND CONCRETE FOOTING.
SP - 109	111+60 L		M3-1 M1-1 M6-1	2 X 1 2 X 2 1.75 X 1.25	2.0 4.0 2.2			SE	2' R	10'-02"		S					10.2		4.0			INSTALL NEW SIGNS, STEEL PIPE SUPPORT, AND CONCRETE FOOTING AT NEW LOCATION.
TOTALS THIS SHEET					14.5	16.0									9.5	0.0	10.2		4.0	0	4	
TOTALS					30.8	61.0									19.0	9.7	10.2		8.0	2	9	

* - Distance from White or Yellow Edgeline, or Back of Curb, to Edge of Sign.

** - (F)ixed Base, or Breakaway (S)lip Base, (A)nchor Stub Post, (D)irect drive, or (W)ood Post.

DG = Flat Aluminum Signs w/Nonremovable Copy - Super/Very High Intensity Sheeting

FDG = Flat Aluminum Signs w/Nonremovable Copy - Fluorescent Yellow Super/Very High Intensity Sheeting

FA = Flat Aluminum Signs w/Non-Removable Copy - High Intensity Sheeting

PLOT SCALE - $$SCALE$$
PLOT NAME - $$PLOTNAME$$
FILE - $$FILENAME$$
PLOTTED FROM - $$USERNAME$$

STATE OF SOUTH DAKOTA	PROJECT	SHEET	TOTAL SHEETS
	IM 0291(126)1	S6	S9

PERMANENT SIGNING

I-29 EXIT 1 - DAKOTA DUNES BLVD & SIOUX POINT RD

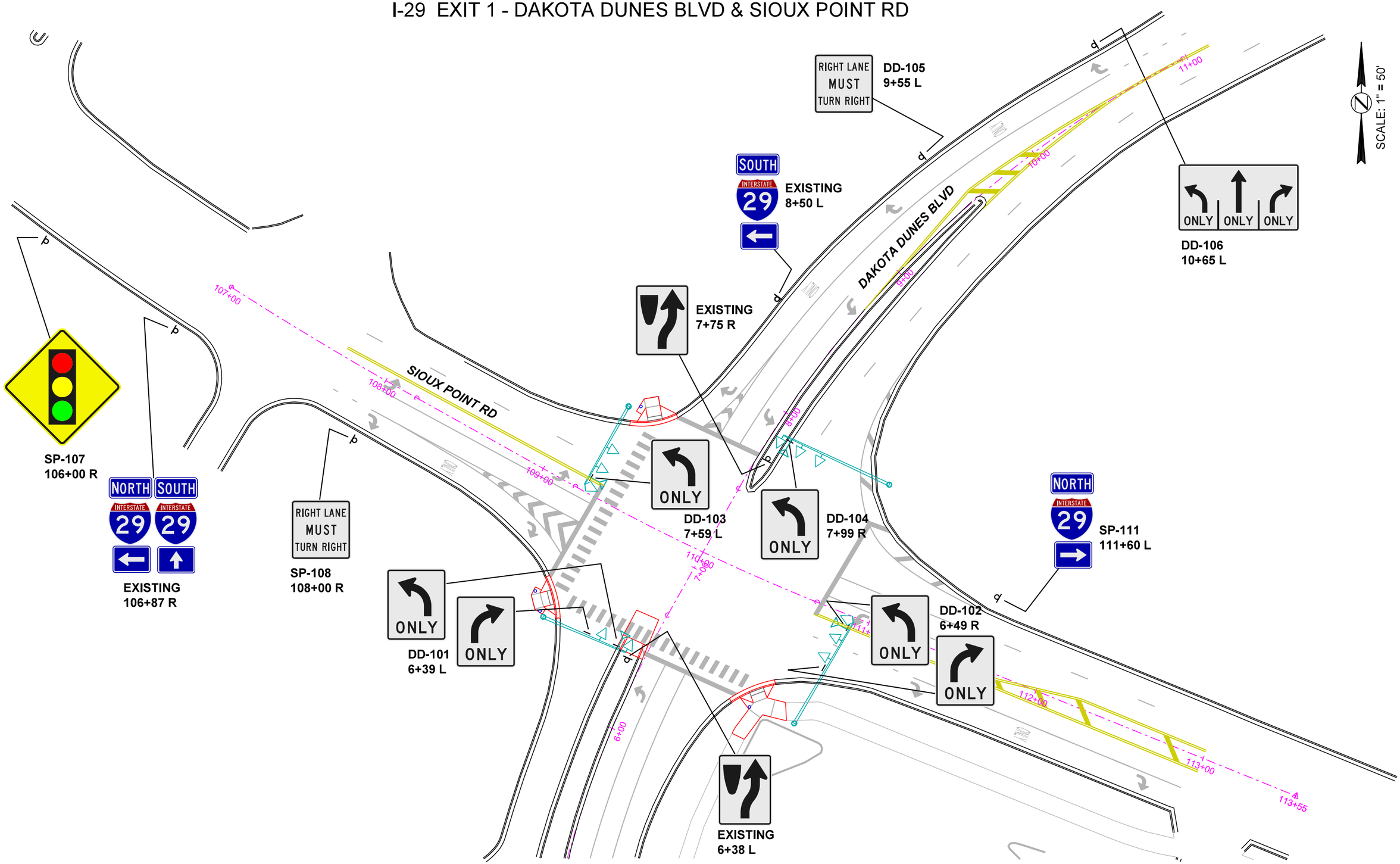

PLOT SCALE - $$SCALE$$
PLOT NAME - $$PLOTNAME$$
FILE - $$FILENAME$$
PLOTTED FROM - $$USERNAME$$

DELINEATOR ERECTION DETAILS

STATE OF SOUTH DAKOTA	PROJECT	SHEET	TOTAL SHEETS
	IM 0291(126)1	S7	S9

4" X 4" DELINEATORS MOUNTED BACK-TO-BACK

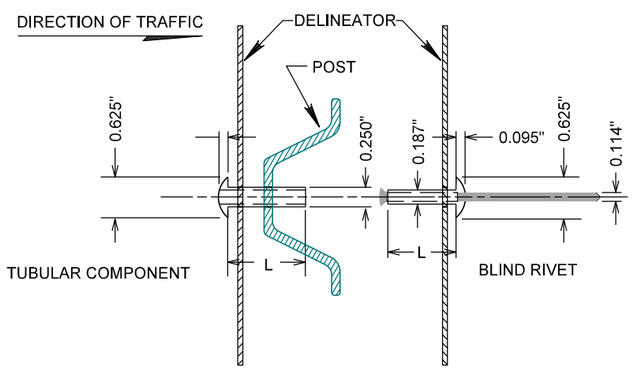

(L)ength varies with Grip Range of Rivet

1/4" Two Piece Oval Head Blind Rivet with Aluminum Sleeve, Aluminum Mandrel,and Aluminum Tubular Component is shown. An alternative method of fastening, such as a two piece 3/16 rivet lock bolt, may be used if approved by the Engineer.

4"X 4" and 4"X 8" DELINEATORS

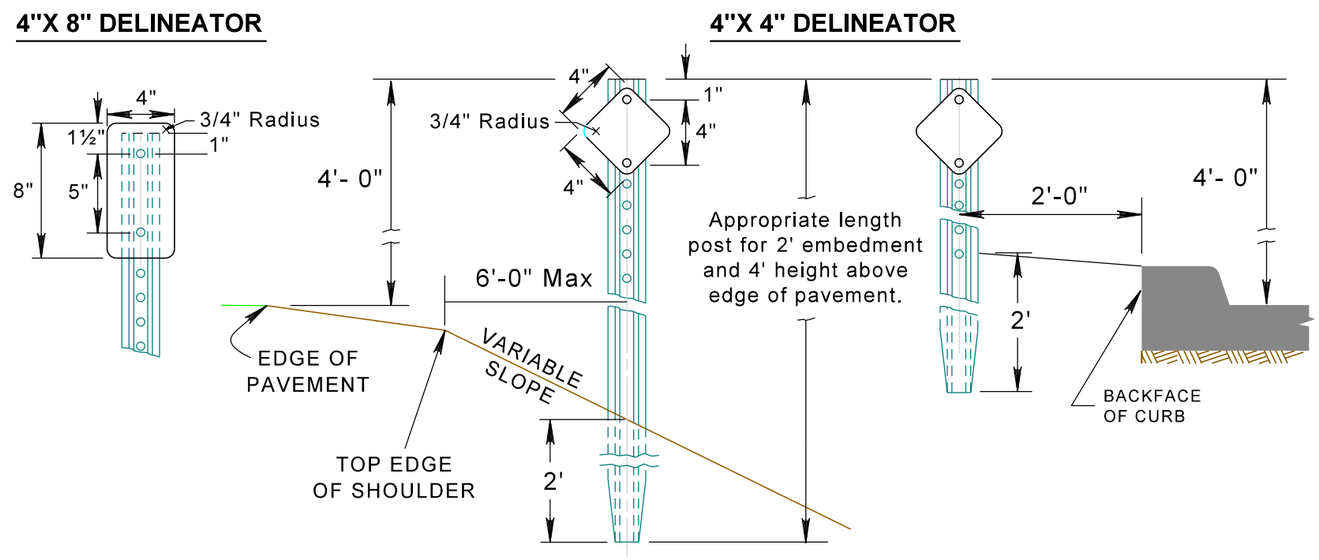

1/4 " Diameter Mounting Holes in all Delineators

POST DETAIL

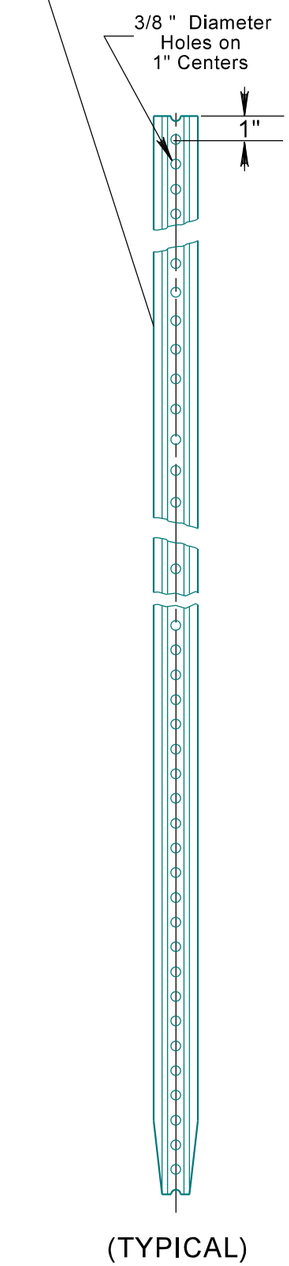

(TYPICAL)

4" X 4" DELINEATORS MOUNTED ON BRACKET

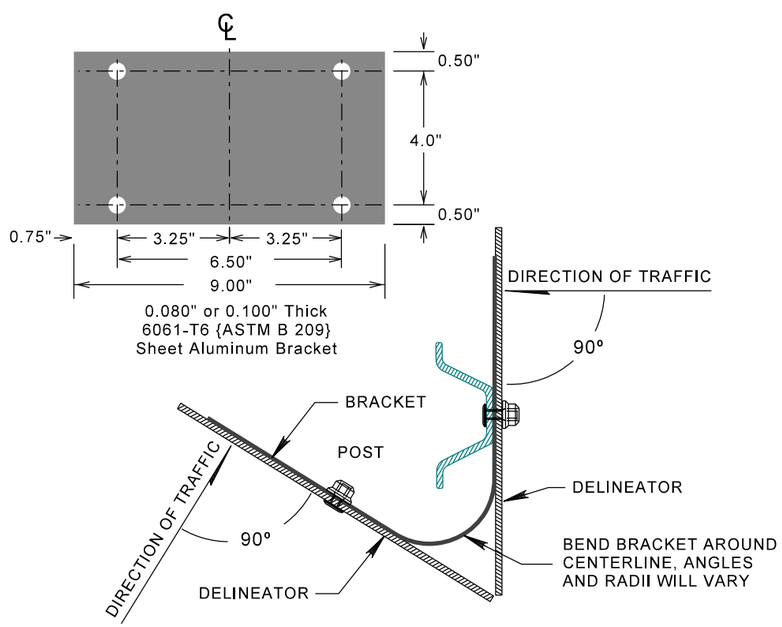

SINGLE 4"X 4" DELINEATOR MOUNTED ON POST

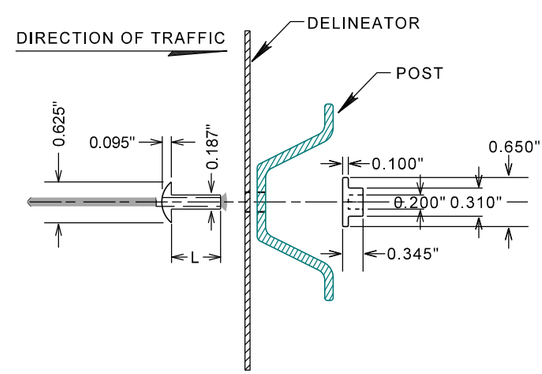

(L)ength varies with Grip Range of Rivet

3/16" Nail Type Blind Rivet with Large Flange Aluminum Rivet and Aluminum Mandrel is shown. An alternative method of fastening, such as two piece 3/16 rivet lock bolt, may be approved by the Engineer.

4" TUBULAR DELINEATOR MOUNTED ON POST

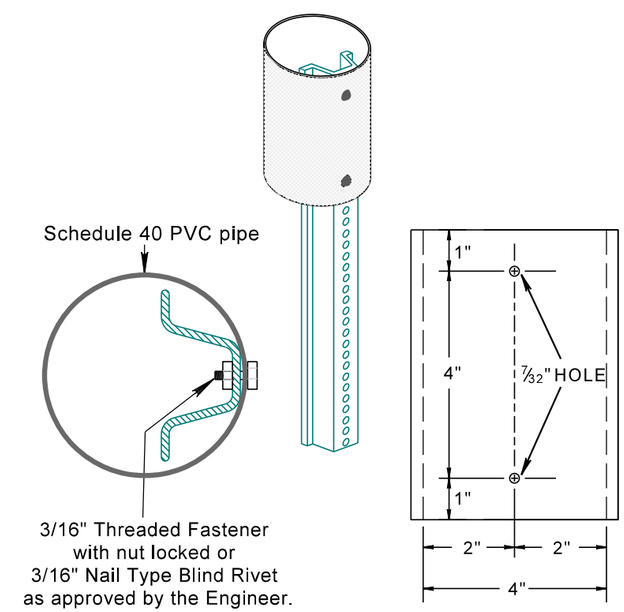

3/16" Threaded Fastener with nut locked or 3/16" Nail Type Blind Rivet as approved by the Engineer.

PLOT SCALE - $$SCALE$$
PLOTTED FROM - $$USERNAME$$
PLOT NAME - $$PLOTNAME$$
FILE - $$FILENAME$$

2" and 2 1/4" SQUARE STEEL PERFORATED TUBE POST BREAKAWAY WINGED ANCHOR BASE DETAILS (Typical)

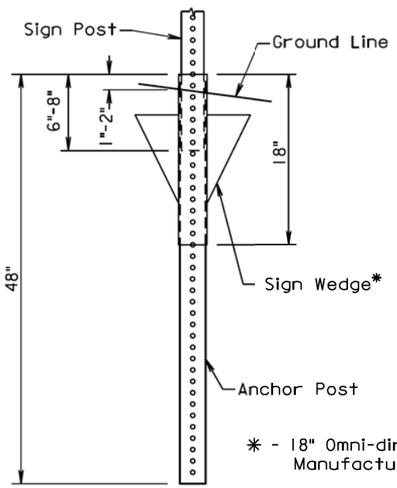

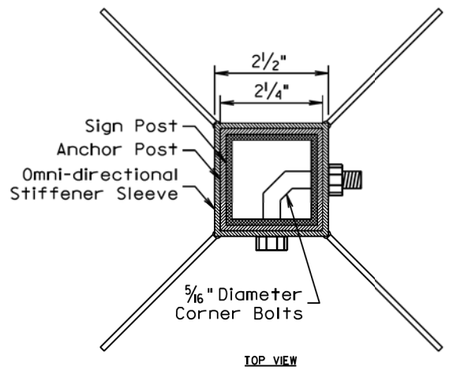

* - 18" Omni-directional Sleeve w/4 Blades, or Equivalent. Manufacturer Recommended Dimensions and Installation.

TWO-PIECE SIGN BASE DETAILS FOR A 2" SIGN POST

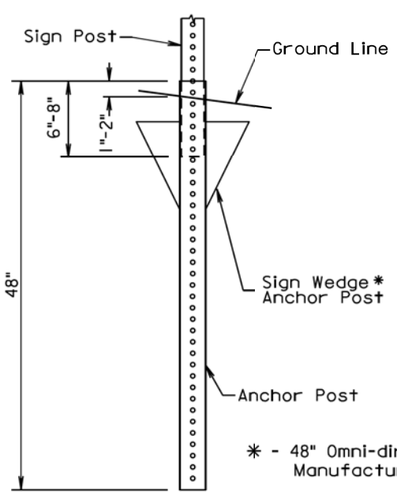

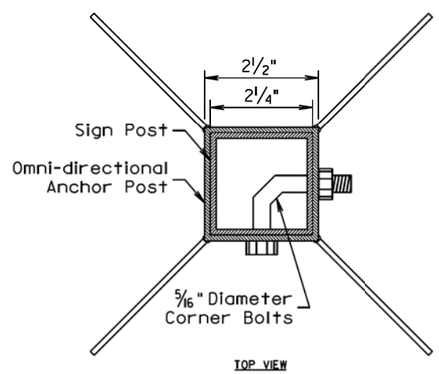

* - 48" Omni-directional Sleeve w/4 Blades, or Equivalent. Manufacturer Recommended Dimensions and Installation.

ONE-PIECE SIGN BASE DETAILS FOR A 2 1/4" SIGN POST

2 1/2" SQUARE STEEL PERFORATED TUBE POST BREAKAWAY SLIP-BASE WITH FOOTING DETAILS (Typical)

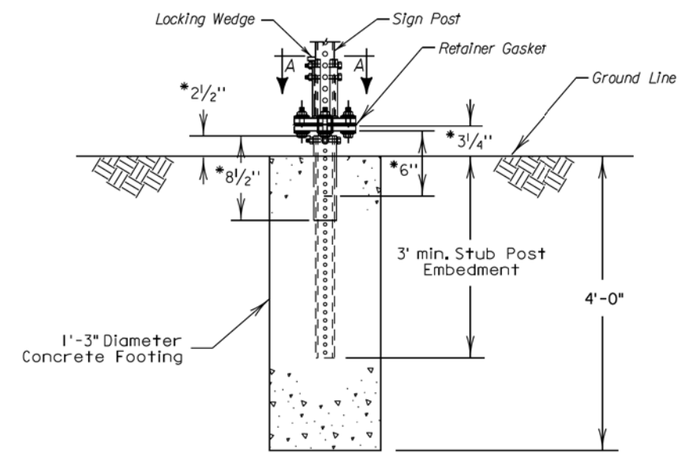

ELEVATION VIEW

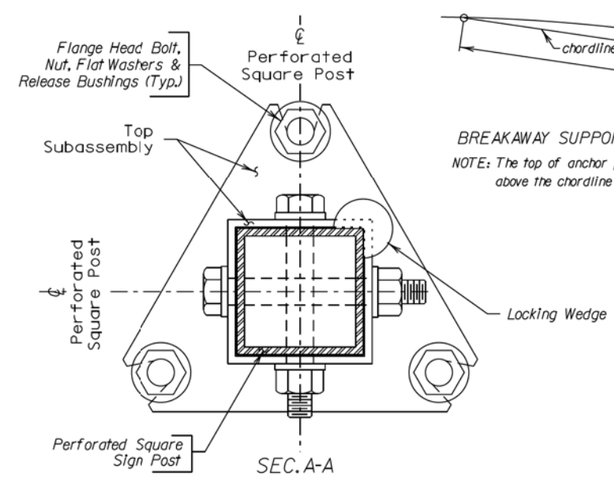

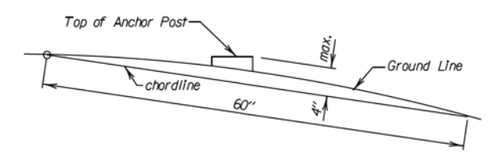

BREAKAWAY SUPPORT STUB CLEARANCE DIAGRAM

NOTE: The top of anchor post shall NOT extend more than 4" max. above the chordline within a 60" chord.

* Dimensions shown may vary by Manufacturer. The Contractor shall use Manufacturer recommended assembly parts and procedures. Sign installations must meet or exceed NCHRP 350 or MASH breakaway requirements and be FHWA approved.

Plot Scale - $$scale$$
Plotted From - $$username$$
File - $$filename$$

STATE OF SOUTH DAKOTA	PROJECT	SHEET	TOTAL SHEETS
	IM 0291(126)1	S9	S9

ERECTION DETAILS FOR INTERSTATE HIGHWAY SIGNS

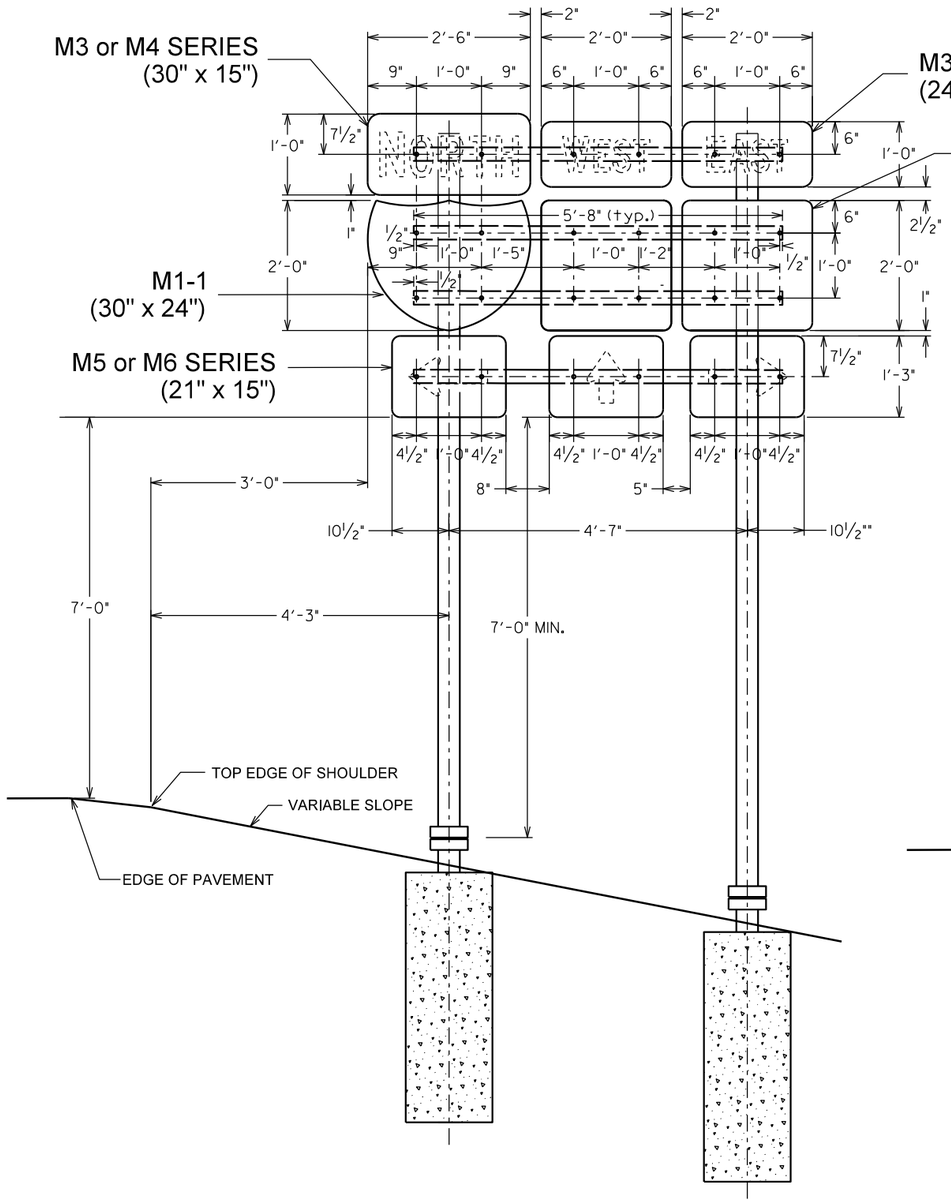

THREE SIGN COMBINATION
ROUTE MARKER ASSEMBLY
FOR CROSS ROADS & LOOPS

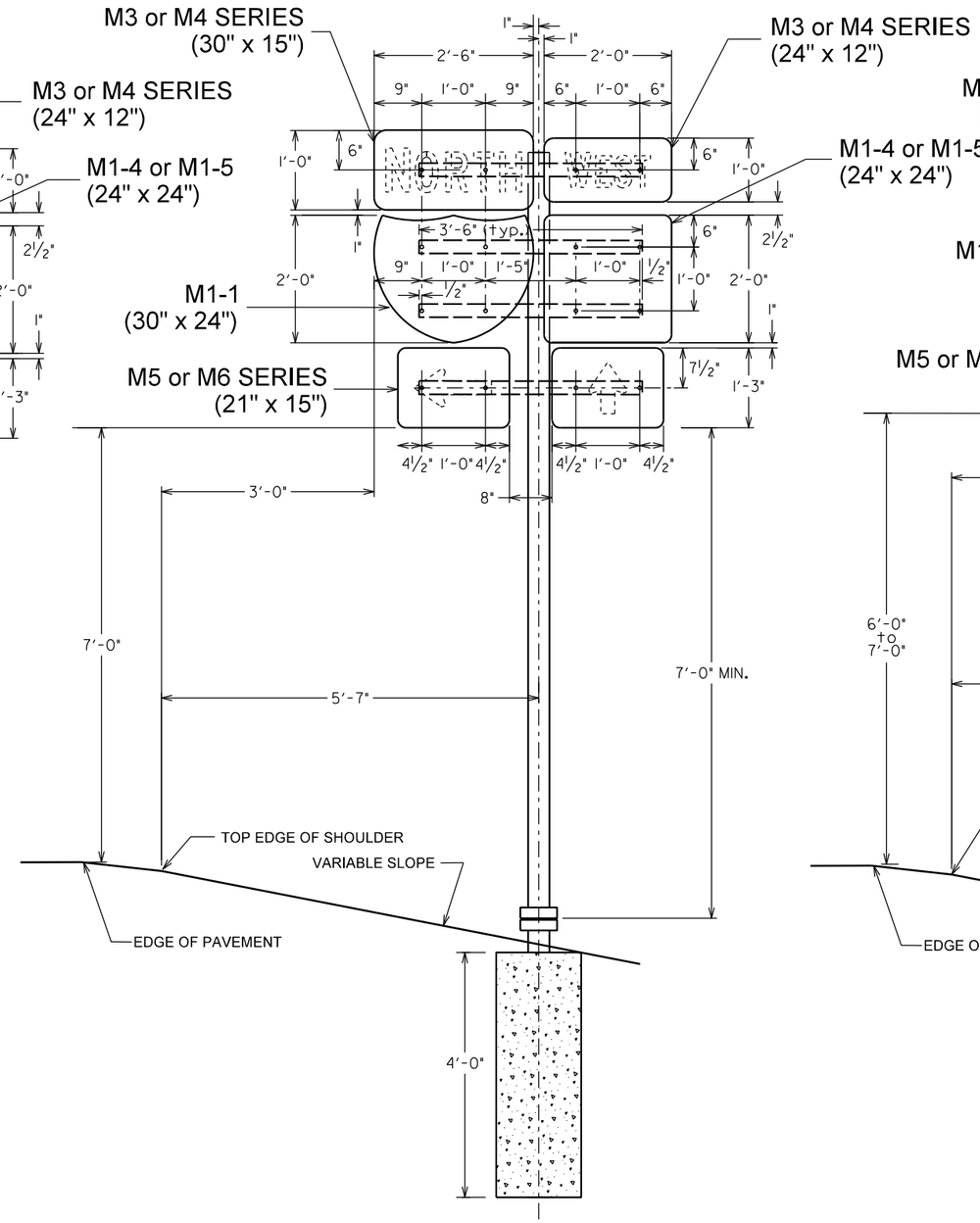

TWO SIGN COMBINATION
ROUTE MARKER ASSEMBLY
FOR CROSS ROADS & LOOPS

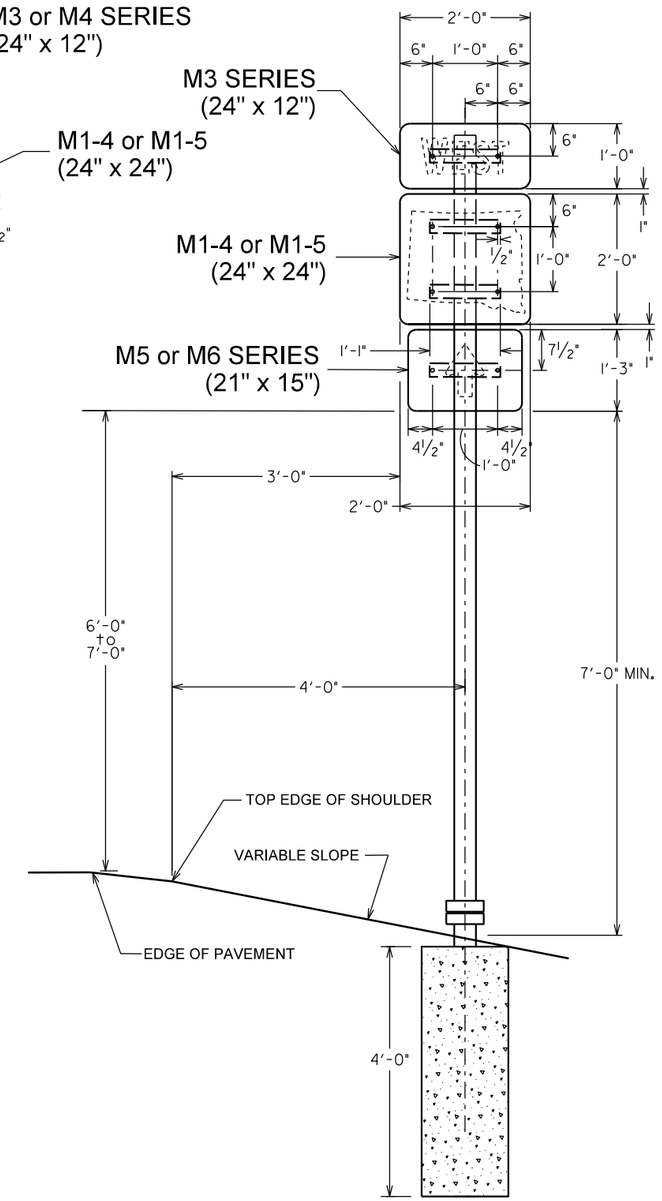

US or SOUTH DAKOTA
ROUTE MARKER ASSEMBLY
FOR CROSS ROADS & LOOPS

(Offsets as shown unless otherwise specified in the plans)

PLOT SCALE - $$SCALE$$
PLOTTED FROM - $$USERNAME$$
PLOT NAME - $$PLOTNAME$$
FILE - $$FILENAME$$