STATE OF SOUTH DAKOTA	PROJECT	SHEET	TOTAL SHEETS
	NH 0212(162)380	F1	F57

Plotting Date: 08/12/2015

SECTION F: SURFACING PLANS

INDEX OF SHEETS

F1	General Layout with Index
F2 - F7	Estimate of Quantities, Notes, Rates, and Tables
F8 - F12	Typical Surfacing Sections
F13 - F15	PCC Pavement Layouts
F16	PCC Residential Driveway Layouts
F17	Curb and Gutter Layouts
F18 - F25	Driving Surface Transition Details
F26	Special Details
F27 - F38	Standard Plates
F39 - F57	PCC Overlay Centerline Profile Sheets

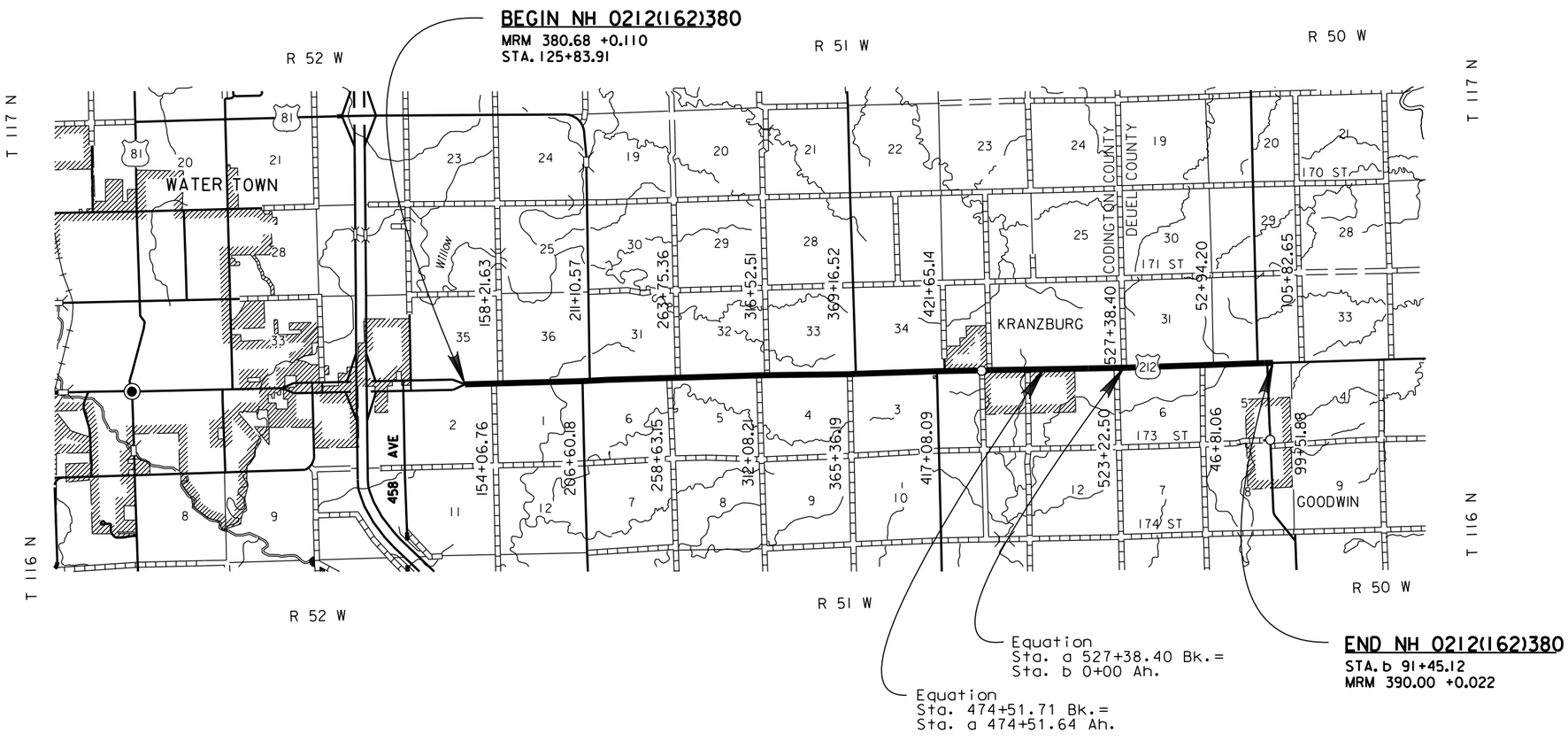

PLOT SCALE - 1:7920

PLOTTED FROM - TRPR18387

PLOT NAME - 1

FILE - U:\MS\PRJ\CODN03RN\TITLEF.DGN

SECTION F ESTIMATE OF QUANTITIES

BID ITEM NUMBER	ITEM	QUANTITY	UNIT
009E0010	Mobilization	Lump Sum	LS
009E3230	Grade Staking	9.337	Mile
009E3240	Graded Centerline Staking	9.337	Mile
009E3250	Miscellaneous Staking	9.337	Mile
009E3300	Three Man Survey Crew	40.0	Hour
110E0320	Remove Concrete Gutter	77	Ft
110E1100	Remove Concrete Pavement	7,384.6	SqYd
110E1110	Remove Concrete Approach Pavement	313.6	SqYd
110E1130	Remove Concrete Driveway Pavement	154.7	SqYd
120E0010	Unclassified Excavation	941	CuYd
120E0100	Unclassified Excavation, Digouts	233	CuYd
120E6200	Water for Granular Material	427.9	MGal
210E1005	Surface Preparation	0.356	Mile
210E2000	Shoulder Shaping	17.858	Mile
260E1010	Base Course	33,562.7	Ton
320E0006	PG 64-22 Asphalt Binder	770.0	Ton
320E1050	Class E Asphalt Concrete	13,420.0	Ton
320E1200	Asphalt Concrete Composite	20.0	Ton
320E3000	Compaction Sample	3	Each
320E5010	Saw and Seal Shoulder Joint	96,602	Ft
330E0010	MC-70 Asphalt for Prime	108.0	Ton
330E0100	SS-1h or CSS-1h Asphalt for Tack	21.3	Ton
330E0210	SS-1h or CSS-1h Asphalt for Flush Seal	17.4	Ton
330E2000	Sand for Flush Seal	22.4	Ton
332E0010	Cold Milling Asphalt Concrete	663	SqYd
380E0070	9" Nonreinforced PCC Pavement	7,141.2	SqYd
380E1500	PCC Overlay, Furnish	30,468.4	CuYd
380E1570	7" PCC Overlay, Placement	146,669.3	SqYd
380E3020	6" PCC Driveway Pavement	231.5	SqYd
380E3540	8" PCC Approach Pavement	316.5	SqYd
380E6000	Dowel Bar	84,766	Each
380E6110	Insert Steel Bar in PCC Pavement	96	Each
380E6500	Planing PCC Pavement	266.7	SqYd
600E0300	Type III Field Laboratory	1	Each
650E1090	Type F69 Concrete Curb and Gutter	1,063	Ft
650E4690	Type P9 Concrete Gutter	265	Ft
831E1500	Geotextile Bond Breaker Fabric	251,433	SqYd
900E0010	Refurbish Single Mailbox	23	Each
900E0012	Refurbish Double Mailbox	3	Each

SURFACING THICKNESS DIMENSIONS

Plans tonnage will be applied even though the thickness may vary from that shown on the plans.

At those locations where material must be placed to achieve a required elevation, plans tonnage may be varied to achieve the required elevation.

UTILITIES

The Contractor shall contact the involved utility companies through South Dakota One Call (1-800-781-7474) prior to starting work. It shall be the responsibility of the Contractor to coordinate work with the utility owners to avoid damage to existing facilities.

Utilities are not planned to be affected on this project. If utilities are identified near the improvement area through the SD One Call Process as required by South Dakota Codified Law 49-7A and Administrative Rule Article 20:25, the Contractor shall contact the Engineer to determine modifications that will be necessary to avoid utility impacts.

SHOULDER SHAPING

Prior to placing the Geotextile Bond Breaker Fabric, the upper 4 inches of existing gravel surfacing on the shoulders shall be scarified, reworked and shaped as detailed on the typical sections, Compaction of the reworked shoulders shall be according to Section 260.3.E of the Specifications.

Included in the Estimate of Quantities is Water for Granular Material, for shaping and recompaction, to be applied at the locations and rate as follows:

ML Sta. 128+78.91 to Sta. 424+69 Lt. & Rt.
ML Sta. 440+50 to Sta. b 88+65.12 Lt. & Rt. Through Equations

Water for Granular Material at the rate of 12.0 M gallons per mile.

Included in the Estimate of Quantities are 17.858 miles of Shoulder Shaping.

Included in the Estimate of Quantities are 500 tons of Base Course per mile, per shoulder for repair of the shoulders at locations as designated by the Engineer prior to paving the first mainline pass and carrying traffic.

TYPE III FIELD LABORATORY

The lab shall be equipped with an internet connection such as DSL, cable modem, or other approved service. The internet connection shall be provided with a multi-port wireless router. The internet connection shall be a minimum speed of 512 Kb unless limited by job location and approved by the DOT. Prior to installing the wireless router the Contractor shall submit the wireless router's technical data to the Area Office to check for compatibility with the state's computer equipment. The internet connection is intended for state personnel usage only. The Contractor's personnel are prohibited from using the internet connection unless pre-approved by the Project Engineer.

These items shall be incidental to the contract unit price per each for "Type III Field Laboratory".

The Contractor will provide an extra oven and a 6'x4'x4" thick concrete level pad placed outside of the lab to the satisfaction of the Engineer. If the Contractor provides a four aggregate PCCP mix design; a second 6' x 4'x4" thick concrete pad shall be required.

Plot Scale - 1:200
Plotted From - tnpr18387
File - ...\ms\prj\codn03RN\NotesSeed.dgn

EXCAVATION OF UNSTABLE MATERIAL

Included in the Estimate of Quantities are 25 cubic yards of UNCLASSIFIED EXCAVATION, DIGOUTS per mile on the shoulders for the necessary removal of unstable material.

Backfill shall be Base Course paid for at the contract unit price.

UNCLASSIFIED EXCAVATION

Unclassified Excavation consisting of earth embankment and/or asphalt mix and granular base material shall be removed from the locations listed in the Table of Unclassified Excavation.

The unclassified excavation waste material shall be disposed of as directed by the Engineer.

TABLE OF UNCLASSIFIED EXCAVATION

Location of Removal Areas	Waste Material CuYds
Mainline	
Sta. 125+83.91 to Sta. 128+78.91	122
Sta. 424+69 to Sta. 427+49	116
Sta. 427+49 to Sta. 430+21.50	138
Sta. 430+21.50 to Sta. 433+28	136
Sta. 433+28 to Sta. 437+70	224
Sta. 437+70 to Sta. 440+50	116
Intersecting Road Sta. 126+45 R	83
2 Residential Driveways	6
(PCC Driveway Pavement to ROW)	
Total:	941

EXISTING PCC PAVEMENT

The existing PCC Pavement consists of 8.5" Nonreinforced PCC Pavement.

The aggregate in the existing Nonreinforced PCC Pavement may be Gravel, Crushed Gravel or Crushed Ledge Rock.

The existing contraction joints are spaced at approximately 15 feet. The existing joints are skewed from Sta. 125+83.91 to Sta. 427+49 and Sta. 437+70 to Sta. b 88+65.12 and perpendicular from Sta. 427+49 to Sta. 437+70.

The PCC Pavement removed from this project may be crushed and reused as Base Course provided the material meets the Specifications for Base Course. If the material is utilized as Base Course, payment for the material will be at the contract unit price per ton for Base Course. There are approximately 2,783.2 tons of PCC Pavement on this project that could be crushed and reused.

RECLAIMED CONCRETE AGGREGATE

Portland cement concrete pavement (RCA) removed from mainline within the project limits may be crushed and reused as granular material provided it meets the requirements for the granular material it is replacing.

All in place rebar shall be separated and removed from the RCA.

There are an estimated 2,783.2 tons of PCC Pavement on this project that can be crushed and reused. This quantity is based on a unit weight of 118 lbs. per cubic foot for the reclaimed concrete aggregate.

The Contractor shall dispose of the material (including existing rebar) not utilized on the project at a site approved by the Engineer.

Payment for the reclaimed concrete aggregate will be at the contract unit price per ton for granular material that it is replacing.

TABLE OF REMOVE CONCRETE PAVEMENT

Location	In Place PCC Pavement SqYds
Mainline	
Sta. 125+83.91 to Sta. 128+78.91	983.3
Sta. 424+69 to Sta. 427+49	933.3
Sta. 427+49 to Sta. 430+21.50	1,140.6
Sta. 430+21.50 to Sta. 433+28	1,544.1
Sta. 433+28 to Sta. 437+70	1,850.0
Sta. 437+70 to Sta. 440+50	933.3
Total	7,384.6

Removal of curb & gutter is included in the above quantities.
See Typical Sections and Driving Surface Transition Details located elsewhere in these plans for the limits of removal.

TABLE OF CONCRETE TYPE C GUTTER REMOVAL

Station to	Station	Quantity (Ft)
427+34.6 – 32.1' R	427+49 – 20' R	17.4
429+87.5 – 40' L	430+21.5 – 20' L	38.8
437+70 – 20' L	437+88 – 32' L	20.9
	Total:	77.1

TABLE OF CONCRETE DRIVEWAY PAVEMENT REMOVAL

Station	L/R	Quantity (SqYd)
162+60	R	85.4
169+90	R	69.3
	Total:	154.7

TABLE OF CONCRETE APPROACH PAVEMENT REMOVAL

Station to	Station	L/R	Quantity (SqYd)
427+60	427+92	R	15.6
430+08	430+40	R	15.6
430+27	430+75	L	48.1
432+02	432+50	L	48.1
432+79	433+27	L	48.1
434+11	434+59	L	48.1
435+96	436+44	L	57.8
437+33.5	437+68.5	L	32.2
		Total:	313.6

COLD MILLING ASPHALT CONCRETE

The cold milled asphalt concrete material, estimated at 34.9 tons, shall become the property of the Contractor for disposal and may not be reused on the project.

TABLE OF COLD MILLING ASPHALT CONCRETE

Location	Cold Milling Asphalt Concrete SqYd	Width of Cold Milling Asphalt Concrete Feet	Depth of Cold Milling Asphalt Concrete Inches
7 Intersecting Roads – Asphalt to ROW	603.2	Variable	0 to 2
2 Residential Driveways – Asphalt to ROW	60.1	Variable	0 to 2
Total:	663.3		

See Driving Surface Transition Details located elsewhere in these plans for additional details and limits.

Plot Scale - 1:200
Plotted From - trpr18387
File - ...\rns\prj\cochr03RN\NotesSeed.dgn

PLANING PCC PAVEMENT

Planing PCC Pavement shall be done at the locations listed in the Table of Planing PCC Pavement.

Asphalt concrete resurfacing shall follow Planing PCC Pavement within seven calendar days.

The Contractor shall establish a positive means for the removal of the planing residue. Solid residue shall be removed from the pavement surfaces before being blown by traffic action or wind. Residue shall not be permitted to flow across lanes being used by public traffic or into drainage facilities. Residue shall be disposed of in a manner that will prevent residue, whether in solid or slurry form, from entering any waterway in a concentrated state.

The slurry shall be placed in storage tanks and deposited in settling basins, spread over flat vegetated areas, or filtered by other means approved by the Engineer at no additional cost.

TABLE OF PLANING PCC PAVEMENT

Location	Planing PCC Pavement SqYd	Width of Planing PCC Pavement Feet	Depth of Planing PCC Pavement Inches
Mainline			
Sta. b 90+65.12 to Sta. b 91+45.12	266.7	30	0 to 2

See Driving Surface Transition Details located elsewhere in these plans for additional details.

SURFACE PREPARATION

Water for Granular Material shall be applied at the following locations and rates per station:

ML Sta. 125+83.91 to Sta. 128+78.91
ML Sta. 424+69 to Sta. 427+49
ML Sta. 437+70 to Sta. 440+50

Water for Granular Material at the rate of 1.51 M gallons

ML Sta. 427+49 to Sta. 430+21.50
ML Sta. 433+28 to Sta. 437+70

Water for Granular Material at the rate of 1.42 M gallons

ML Sta. 430+21.50 to Sta. 433+28

Water for Granular Material at the rate of 1.33 M gallons

BASE COURSE

Included in the Estimate of Quantities are 50 tons of Base Course and 0.6 Mgal of Water for Granular Material per mile for the shoulders for backfill of Unclassified Excavation, Digouts.

ASPHALT CONCRETE COMPOSITE

Included in the Estimate of Quantities are 20 tons of Asphalt Concrete Composite to fill partial depth repair areas and spalls of the existing concrete pavement. Placement and locations shall be at discretion of the Engineer.

CLASS E ASPHALT CONCRETE

Mineral aggregate for Class E Asphalt Concrete shall conform to the requirements for Class E, Type 1.

SUMMARY OF ASPHALT CONCRETE

Location	Class E Asphalt Concrete With Specified Density Tons	Class E Asphalt Concrete Without Specified Density Tons	Asphalt Concrete Composite Without Specified Density Tons
Mainline			
Sta. b 88+65.12 to Sta. b 91+45.12	---	270	---
Partial Depth Repair Areas & Spalls	---	---	20
Mainline Shoulders			
Sta. 125+83.91 L to Sta. 430+21.50 L	6,080	---	---
Sta. 437+70 L to Sta. b 88+65.12			
Through Equations			
Sta. 125+94 R to Sta. 427+49 R	6,032	---	---
Sta. 433+28 R to Sta. b 88+65.12 R			
Through Equations			
Intersecting Roads	---	993	---
Residential Driveways	---	45	---
Totals:	12,112	1,308	20

SAW AND SEAL SHOULDER JOINT

See Standard Plate 320.15, located elsewhere in these plans, for details for sawing and sealing asphalt concrete shoulder joint adjacent to PCC Pavement. Included in the Estimate of Quantities are 96,602 feet for Saw and Seal Shoulder Joint.

PCC OVERLAY CENTERLINE PROFILE

The PCC Overlay centerline profile shall be constructed with a minimum of 7 inches of PCC at all locations.

The PCC Overlay, Furnished, quantity shown in these plans shall be used for bidding purposes only.

The Contractor shall create a PCC Overlay centerline profile in accordance with the Special Provision for Contractor Staking.

9" NONREINFORCED CONCRETE PAVEMENT AND PCC OVERLAY

The fine aggregate shall be screened over a 1 inch square opening screen just prior to introduction into the concrete paving mix. The Contractor will screen all of the aggregate to prevent the incorporation of foreign materials (i.e.: mud balls) into the concrete mix.

The concrete mix shall conform to the special provision for Contractor Furnished Mix Design for PCC Pavement.

There will be no direct payment for trimming of the Gravel Cushion for PCC pavement. The trimming will be considered incidental to the related items required for PCC Pavement. Trimming shall be performed as required by Section 380.3 C. of the Specifications.

A minimum of 2 pavement blockouts may be required at various locations on the project to facilitate traffic during the paving activity.

A construction joint will be sawed whenever new concrete pavement is placed adjacent to existing concrete pavement.

The transverse contraction joints shall be perpendicular to the centerline as detailed in the special detail for PCC Pavement Typical Contraction Joint Spacing and standard plate for PCC Pavement Dowel Bar Assembly for Transverse Contraction Joints. In multilane areas the transverse contraction joints shall be perpendicular to the centerline and be in a straight line across the width of the pavement. In special situations the Engineer may pre-approve transverse contraction joints that do not meet these requirements. All nonconforming transverse contraction joints shall be removed at the Contractor's expense. Any method of placement that cannot produce these requirements shall not be allowed to continue.

The surface of the mainline paving shall be longitudinally tined. All other areas shall be tined as directed by the Engineer.

Plot Scale - 1:200
Plotted From - tnpr18387
File - ...\ms\prj\codn03RN\NotesSeed.dgn

ALKALI SILICA REACTIVITY

Fine aggregate shall conform to Section 800.2 D. Alkali Silica Reactivity (ASR) Requirements.

Below is a list of known fine aggregate sources and the average corresponding 14 day expansion values:

Source	Location	Expansion Value
Bachman	Winner, SD	0.335*
Bitterman	Delmont, SD	0.316*
Concrete Materials	Corson, SD	0.170
Croell	Hot Springs, SD	0.089
Croell	Wasta, SD	0.212
Emme Sand & Gravel	Oneil, NE	0.217
Fisher S&G – Mickelson Pit	E. of Nisland, SD	0.129
Fisher S&G - Vallery Pit	Nisland, SD	0.110
Fisher S&G	Rapid City, SD	0.092
Fisher S&G	Spearfish, SD	0.053
Fisher S&G	Wasta, SD	0.159
Fuchs	Pickstown, SD	0.275*
Higman	Akron, IA	0.203
Higman	Hudson, SD	0.187
Hilde	Madison, SD	0.116
Jensen	Herried, SD	0.276*
L.G. Everist	Brookings, SD	0.186
L.G. Everist	Hawarden, IA	0.166
L.G. Everist	Summit, SD	0.178
Morris	Blunt, SD	0.192
Morris - Richards Pit	Onida, SD	0.188
Myrl & Roys – Ode Pit	E Sioux Falls, SD	0.214
Myrl & Roys - Nelson Pit	NE Sioux Falls, SD	0.156
Northern Concrete Agg.	Rauville, SD	0.113
Northern Concrete Agg.	Luverne, MN	0.133
Opperman - Gunvordahl Pit	Burke, SD	0.362*
Opperman - Cahoy Pit	Herrick, SD	0.307*
Opperman - Jones Pit	Burke, SD	0.321*
Opperman - Randall Pit	Pickstown, SD	0.239
Pete Lien & Sons	Creston, SD	0.158
Pete Lien & Sons	Oral, SD	0.129
Pete Lien & Sons	Wasta, SD	0.192
Thorpe Pit	Britton, SD	0.098
Wagner Building Supplies	Pickstown (Wagner), SD	0.241
Winter Brothers- Whitehead Pit	Brookings, SD	0.197

* These sources will require Type V cement in the concrete mix design and Class F (Modified) fly ash as specified.

The Department will use the running average of the last three known expansion test results or less for determining acceptability of source and the required Type of cement. These expansion results are reported in the preceding table. Additional testing, when requested by the Contractor, will be performed by the Department at the Contractor's expense.

The values listed in the table are intended for use in bidding. If a previously tested pit by SDDOT with acceptable test values (less than 0.250) is discovered after letting to require Type V cement (greater than 0.250) the Department will accept financial responsibility for the change from Type II to Type V cement.

Type II or Type V cement will not change the requirement for the fly ash. The cost for either type of cement shall be subsidiary to the contract item.

PAVEMENT SMOOTHNESS

The following locations will be tested for smoothness in accordance with the special provision for IRI PCC Pavement Smoothness:

ML Sta. 125+83.91 to Sta. b 88+65.12 Through Equations

RUMBLE STRIPS

Rumble Strips for the shoulders shall be constructed as per Standard Plate 380.15.

TABLE OF GEOTEXTILE BOND BREAKER FABRIC

Location	Geotextile Bond Breaker Fabric SqYd
Mainline	
Sta.128+78.91 to Sta. 424+69	157,814
Sta. 440+50 to Sta. b 88+65.12 Through Equations	93,619
Total	251,433

Quantity shown is the actual square yardage required with no laps. Plans quantity shall be the basis of payment for the Geotextile Bond Breaker Fabric unless additional quantity is ordered by the Engineer.

TABLE OF PCC PAVEMENT

Location	PCC Overlay, Furnish CuYd	7" PCC Overlay, Placement SqYd	9" Nonreinforced PCC Pavement SqYd
Mainline			
Sta. 125+83.91 to Sta. 128+78.91	---	---	917.4
Sta. 128+78.91 to Sta. 424+69	19,042.1	92,058.1	---
Sta. 424+69 to Sta. 427+49	---	---	871.1
Sta. 427+49 to Sta. 430+21.50	---	---	1,029.4
Sta. 430+21.50 to Sta. 433+28	---	---	1,362.2
Sta. 433+28 to Sta. 437+70	---	---	1,669.8
Sta. 437+70 to Sta. 440+50	---	---	871.1
Sta. 440+50 to Sta. b 88+65.12 Through Equations	11,426.3	54,611.2	---
Intersecting Road Sta. 126+45 R.	---	---	420.2
Totals	30,468.4	146,669.3	7,141.2

TABLE OF DOWEL BARS

Location	12 Bar Assembly (size 1") Each	12 Bar Assembly (size 1 ¼") Each	Transverse Contraction Joint Spacing Feet
Mainline			
Sta. 125+83.91 to Sta. 128+78.91	---	522	15
Sta. 128+78.91 to Sta. 424+69	50,736	---	14
Sta. 424+69 to Sta. 427+49	---	452	15
Sta. 427+49 to Sta. 430+21.50	---	608	15
Sta. 430+21.50 to Sta. 433+28	---	800	15
Sta. 433+28 to Sta. 437+70	---	928	15
Sta. 437+70 to Sta. 440+50	---	480	15
Sta. 440+50 to Sta. b 88+65.12	30,120	---	14
Through Equations			
Intersecting Road Sta. 126+45 R.	---	120	15
Subtotals:	80,856	3,910	
Grand Total:	84,766		

INSERT STEEL BAR IN PCC PAVEMENT

The Contractor shall insert the Steel Bars (1" x 18" and 1 ¼" x 18" epoxy coated plain round dowel bars) into drilled holes in the existing concrete pavement.

The steel bars shall be cut to the specified length by sawing or shearing and shall be free from burring or other deformations.

Epoxy coated plain round steel bars shall be inserted on 12 inch centers in the transverse joint and shall be placed a minimum of 3 inches and a maximum of 6 inches from the outside edge of slab.

TABLE OF INSERT STEEL BAR IN PCC PAVEMENT

Location	1" x 18" Plain Round Dowel Bar Each	1 1/4" x 18" Plain Round Dowel Bar Each
Mainline		
Sta. 125+83.91 – 14' L. to 26' R.	---	40
Sta. 424+69 – 14' L. to 14' R.	28	---
Sta. 440+50 – 14' L. to 14' R.	28	---
Totals:	56	40

See PCC Pavement Joint Layouts located elsewhere in these plans for additional details.

Plot Scale - 1:200
Plotted From - tnpr18387
File - ...\rns\prj\cochr03RN\NotesSeed.dgn

6" PCC DRIVEWAY PAVEMENT

The concrete for the 6" PCC driveway pavement shall comply with the requirements of the specifications for Class M6 concrete unless otherwise stated in the plans. In Lieu of the M6 mix design the same concrete can be used as specified for the 7" and 9" PCCP.

The surface of the 6" PCC driveway pavement shall not exceed 10% and the tie ins shall match the existing and/or new adjoining PCC pavement.

Contraction joints in the 6" PCC driveway pavement shall be 1½ inches deep if formed in the fresh concrete using a suitable grooving tool. If a saw is used to cut the contraction joints, then the depth of the joint shall be at least ¼ the thickness of the approach pavement.

All costs for furnishing and placing the 6" PCC driveway pavement and constructing the expansion and contraction joints including labor, equipment and materials including the earthen backfill shall be incidental to the contract unit price per square yard for 6" PCC Driveway Pavement" accordingly.

All costs for excavation required for placing the 6" PCC driveway pavement and granular material shall be incidental to the contract unit price per cubic yard for "Unclassified Excavation".

All costs for furnishing and placing the granular material shall be incidental to the contract unit price per ton for "Base Course".

TABLE OF PCC DRIVEWAY PAVEMENT

Location	6" PCC Driveway Pavement SqYd
Residential Driveways	
ML Sta. 162+60 R	129.3
ML Sta. 169+90 R	102.2
Total:	231.5

See Layout showing Surfacing Limits for Residential Driveways with PCC Driveway Pavement to ROW and Driving Surface Transition Details located elsewhere in these plans for additional details showing limits of work.

TABLE OF TYPE F69 CONCRETE CURB AND GUTTER

Station	to	Station	L/R	Quantity (Ft)
427+88		430+12	R	224.0
430+36		433+28	R	292.0
430+71		432+06	L	135.0
432+46		434+15	L	169.0
434+55		436+00	L	145.0
436+40		437+38	L	98.0
			Total:	1,063.0

TABLE OF TYPE P9 CONCRETE GUTTER

Station	to	Station	L/R	Quantity (Ft)
427+69		427+88	R	39.0
430+12		430+36	R	24.0
430+12.50		430+71	L	49.5
432+06		432+46	L	40.0
434+15		434+55	L	40.0
436+00		436+40	L	40.0
437+38		437+70	L	32.0
			Total:	264.5

TABLE OF 8" PCC APPROACH PAVEMENT

Station	L/R	Opening (Ft)	Type	Quantity (SqYd)
427+76	R	24	A	20.0
430+24	R	24	A	20.0
430+51	L	40	A	56.1
432+26	L	40	A	56.1
434+35	L	40	A	56.1
436+20	L	40	A	65.8
437+51	L	28	A	42.4
			Total:	316.5

MAILBOXES

The Contractor shall reset the existing mailboxes on new posts with the necessary support hardware for single or double mailbox assemblies. The local Postmaster will determine the recommended mounting height of the mailboxes throughout the project. The Contractor shall coordinate with the Engineer on the proper postal representative to contact.

All costs for removing existing mailboxes, providing temporary mailboxes, and resetting mailboxes with new posts and necessary support hardware shall be incidental to the contract unit price per each for "Refurbish Single Mailbox" or "Refurbish Double Mailbox".

TABLE OF REFURBISH MAILBOX

Station	L/R	Single (Each)	Double (Each)
128+71	R	1	---
153+51	R	---	1
158+54	R	---	1
162+79	R	1	---
164+52	R	1	---
166+19	R	1	---
168+00	R	1	---
169+83	R	1	---
171+19	R	1	---
173+02	R	1	---
174+76	R	1	---
176+74	R	1	---
178+68	R	1	---
179+92	R	1	---
182+16	R	1	---
183+16	R	1	---
234+47	R	1	---
331+93	R	1	---
361+71	R	1	---
378+08	R	1	---
378+92	R	1	---
380+26	R	1	---
383+04	R	1	---
392+88	R	1	---
429+95 #	R	1	---
456+43	L	---	1
	Totals:	23	3

Plot Scale - 1:200
Plotted From - tnpr18387
File - ...\ms\prj\codn03RN\NotesSeed.dgn

RATES OF MATERIALS

The Estimate of Surfacing Quantities is based on the following quantities of materials per mile.

MAINLINE SHOULDERS – RATES FOR ONE SHOULDER ONLY

Sta.128+78.91 L. & R. to Sta. 424+69 L. & R.
Sta. 440+50 L. & R. to Sta. b 88+65.12 L. & R. Through Equations

BASE COURSE

Crushed Material 1,128 tons

Water for Granular Material at the rate of 13.5 M Gallons

Sta. 125+83.91 L. to Sta. 430+21.50 L.
Sta. 437+70 L. to Sta. b 88+65.12 L. Through Equations
Sta. 126+94 R. to Sta. 427+49 R.
Sta. 433+28 R. to Sta. b 88+65.12 R. Through Equations

MC-70 Asphalt for Prime at the Rate of 5.9 ton applied 8.5 feet wide (Rate = 0.30 gallon per square yard).

CLASS E ASPHALT CONCRETE

Crushed Aggregate	621 tons
PG 64-22 Asphalt Binder	38 tons
Total	659 tons

The exact proportions of these materials will be determined on construction.

SS-1h or CSS-1h Asphalt for Tack at the rate of 1.0 ton applied 8 feet wide (Rate = 0.05 gallon per square yard).

FLUSH SEAL

SS-1h or CSS-1h Asphalt for Flush Seal at the rate of 0.9 ton applied 7.5 feet wide (Rate = 0.05 gallon per square yard).

TABLE OF ADDITIONAL QUANTITIES

Location	Water Granular Material	Base Course	PG 64-22 Asphalt Binder	Class E Asphalt Concrete	SS-1h or CSS-1h Asphalt for Tack	SS-1h or CSS-1h Asphalt for Flush Seal	Sand for Flush Seal	Depth of Granular Material	Depth of Asphalt Material
Mainline	MGal	Ton	Ton	Ton	Ton	Ton	Ton	Inches	Inches
Sta.125+83.91 to Sta. 128+78.91	4.7	397.5	---	---	---	---	---	#	---
Sta. 424+69 to Sta. 427+49	4.6	389.2	---	---	---	---	---	#	---
Sta. 427+49 to Sta. 430+21.50	1.6	134.7	---	---	---	---	---	#	---
Sta. 433+28 to Sta. 437+70	2.6	218.4	---	---	---	---	---	#	---
Sta. 437+70 to Sta. 440+50	4.6	389.2	---	---	---	---	---	#	---
Sta. b 88+65.12 to Sta. b 91+45.12	---	---	15.8	270	0.6	0.3	2.7		#
Intersecting Road – ML 126+45 R.	0.2	14.4	---	---	---	---	---	9 to 0	---
Wedge adjacent to PCC Pavement									
7 Intersecting Roads – Asphalt to ROW	---	---	29.4	512	1.2	0.5	10.7	---	##
13 Intersecting Roads – Gravel to ROW	1.1	89.7	26.7	481	1.0	0.2	9	##	##
74 Farm and Field Entrances	23.7	2,076.5	---	---	---	---	---	##	---
Residential Driveways									
2 – PCC Driveway Pavement to ROW	0.5	44.5	---	---	---	---	---	##	---
2 – Asphalt Concrete to ROW	---	---	2.6	45	0.1	---	---	##	---
6 – Base Course to ROW	2.1	188	---	---	---	---	---	##	---
7 - Approaches	0.8	66.4	---	---	---	---	---	4	---
Maintenance of Cross Roads & Entrances	7.2	600.0	---	---	---	---	---	---	---
Shoulder Shaping	107.1	8,929.0	---	---	---	---	---	---	---
Backfill of Digouts	5.6	467.0	---	---	---	---	---	---	---
Totals:	166.4	14,004.5	74.5	1,308	2.9	1.0	22.4	---	---

- See Typical Surfacing Sections and Driving Surface Transition Details
- See Driving Surface Transition Details

TABLE OF CONSTRUCTION STAKING

(See Special Provision for Contractor Staking)

Roadway and Description	Begin Station	End Station	Number of Lanes	Grade Staking: Length (Ft)	Grade Staking: Length (Mile)	Grade Staking: Lane Factor	Grade Staking: *Sets of Stakes	Grade Staking: **Grade Staking Quantity (Mile)	Miscellaneous Staking Quantity (Mile)	Graded Centerline Staking Quantity (Mile)
US212 (2 Lanes)	125+83.91	b 91+45.12	2	49,299.68	9.337	1	1	9.337	9.337	9.337
							Totals:	9.337	9.337	9.337

* 1 = Paving Hubs Stakes Only (PCC Pavement)
** Grade Staking Quantity = (Length) x (Lane Factor) x (Sets of Stakes)

Plot Scale - 1:200
Plotted From - tnpr18387
File - ...\ms\prj\codh03RN\NotesSeed.dgn

TYPICAL SURFACING SECTIONS

STATE OF SOUTH DAKOTA	PROJECT	SHEET	TOTAL SHEETS
	NH 0212(162)380	F8	F57

Plotting Date: 08/12/2015

4" Shoulder Shaping prior to placing the shoulder lifts of Base Course and Asphalt Concrete. Existing 0.05'/ft. slope shall be resloped to a 0.04'/ft. slope. Additional granular material to bring the existing slope to the new slope is included in the 500 tons of Base Course per mile, per shoulder for Shoulder Shaping. After completion of the shoulder shaping and prior to placing the geotextile bond breaker fabric, the shoulders shall be primed as stated in the Rates of Materials.

MAINLINE

Sta. 128+78.91 to Sta. 424+69
Sta. 440+50 to Sta. b 88+65.12 Thru Equations

In Place Section

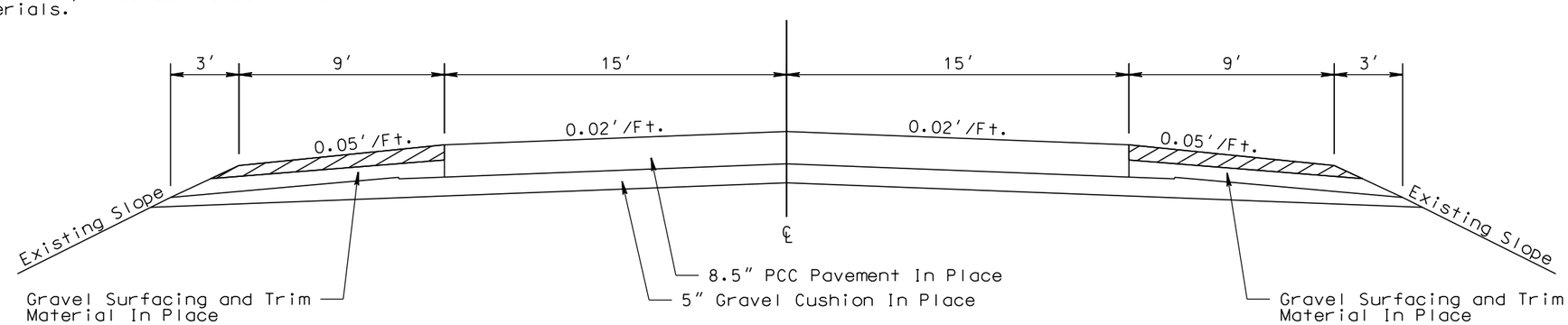

MAINLINE

Sta. 128+78.91 to Sta. 424+69
Sta. 440+50 to Sta. b 88+65.12 Thru Equations

Surfacing Section

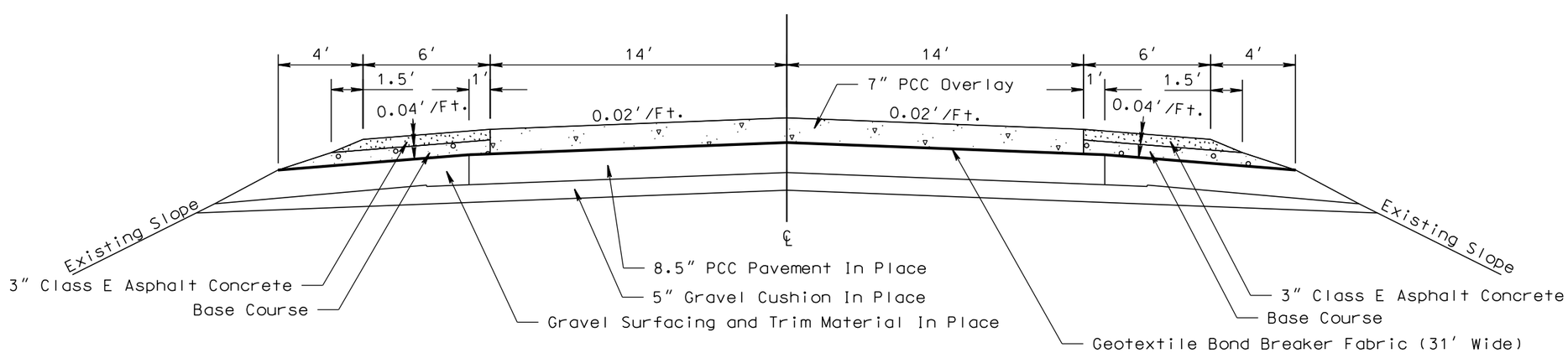

PLOT SCALE - 1:6.00001

PLOTTED FROM - TRPR18387

PLOT NAME - 8

FILE - ...\PRJ\CODN03RN\03RN TYPICALS.DGN

TYPICAL SURFACING SECTIONS

STATE OF SOUTH DAKOTA	PROJECT	SHEET	TOTAL SHEETS
	NH 0212(162)380	F9	F57

Plotting Date: 08/12/2015

Remove PCC Pavement

Unclassified Excavation - Waste Material

See DRIVING SURFACE TRANSITION DETAILS located elsewhere in these plans for additional details for removal and surfacing.

- 3" Asphalt Concrete Shoulder In Place

Sta. 125+83.91 L to Sta. 130+75 L
Sta. 125+83.91 R to Sta. 128+49 R

MAINLINE

Sta. 125+83.91 to Sta. 128+78.91
Sta. 424+69 to Sta. 427+49
Sta. 437+70 to Sta. 440+50

In Place Section

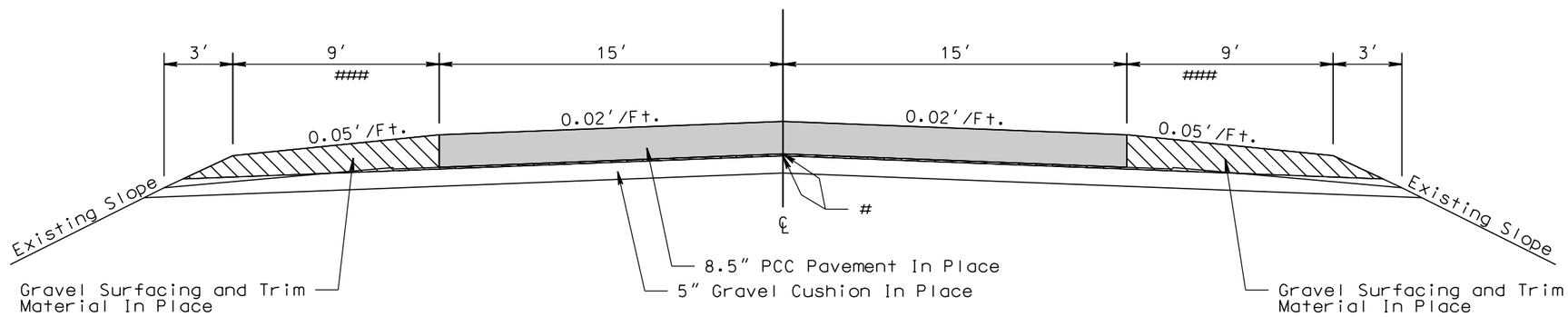

Depth of Removal Below PCC Pavement

Sta. 125+83.91 to Sta. 126+18.91 - 0.5" to 0"
Sta. 128+18.91 to Sta. 128+78.91 - 0"
Sta. 424+69 to Sta. 427+29 - 0"
Sta. 427+29 to Sta. 427+49 - 0" to 0.5"
Sta. 437+70 to Sta. 437+90 - 0.5" to 0"
Sta. 437+90 to Sta. 440+50 - 0"

Depth of Base Course

Sta. 125+83.91 to Sta. 126+18.91 - 0"
Sta. 126+18.91 to Sta. 128+78.91 - 0" to 6.5"
Sta. 424+69 to Sta. 427+29 - 6.5" to 0"
Sta. 427+29 to Sta. 427+49 - 0"
Sta. 437+70 to Sta. 437+90 - 0"
Sta. 437+90 to Sta. 440+50 - 0" to 6.5"

MAINLINE

Sta. 125+83.91 to Sta. 128+78.91
Sta. 424+69 to Sta. 427+49
Sta. 437+70 to Sta. 440+50

Surfacing Section

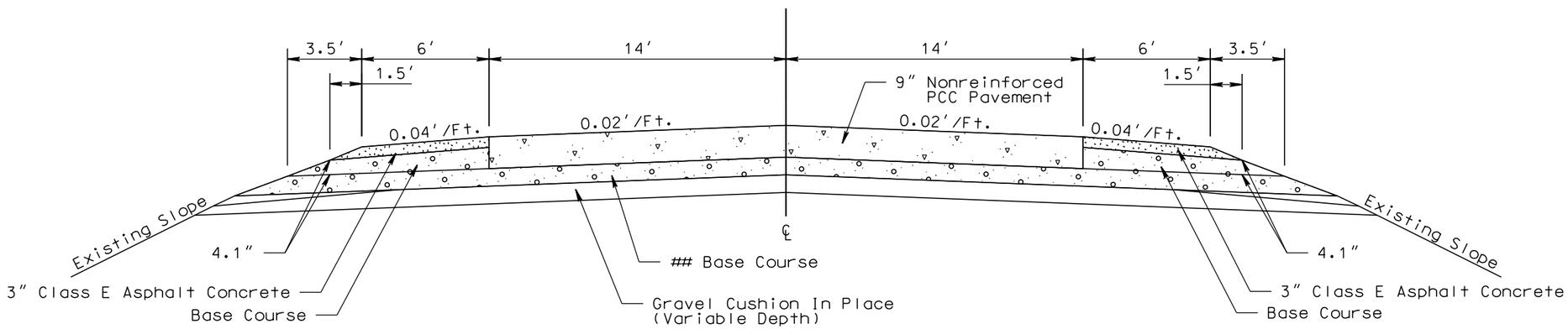

PLOT SCALE - 1:6.00001

PLOTTED FROM - TRPR18387

PLOT NAME - 9

FILE - ...\PRJ\CODN03RN\03RN TYPICALS.DGN

TYPICAL SURFACING SECTIONS

STATE OF SOUTH DAKOTA	PROJECT	SHEET	TOTAL SHEETS
	NH 0212(162)380	F10	F57

Plotting Date: 08/12/2015

Remove PCC Pavement

Unclassified Excavation - Waste Material

Earth Embankment

MAINLINE

Sta. 427+49 to Sta. 430+21.50
Sta. 433+28 to Sta. 437+70 (Reversed)

In Place Section

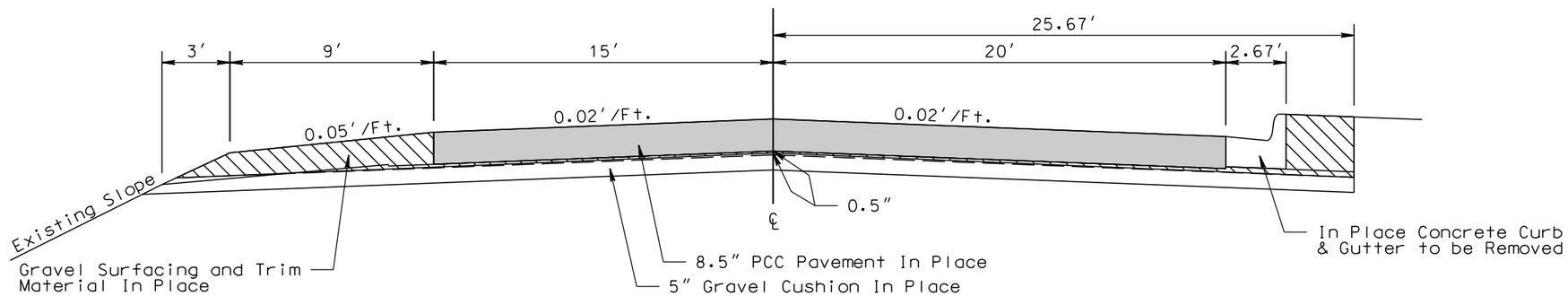

MAINLINE

Sta. 427+49 to Sta. 430+21.50
Sta. 433+28 to Sta. 437+70 (Reversed)

Surfacing Section

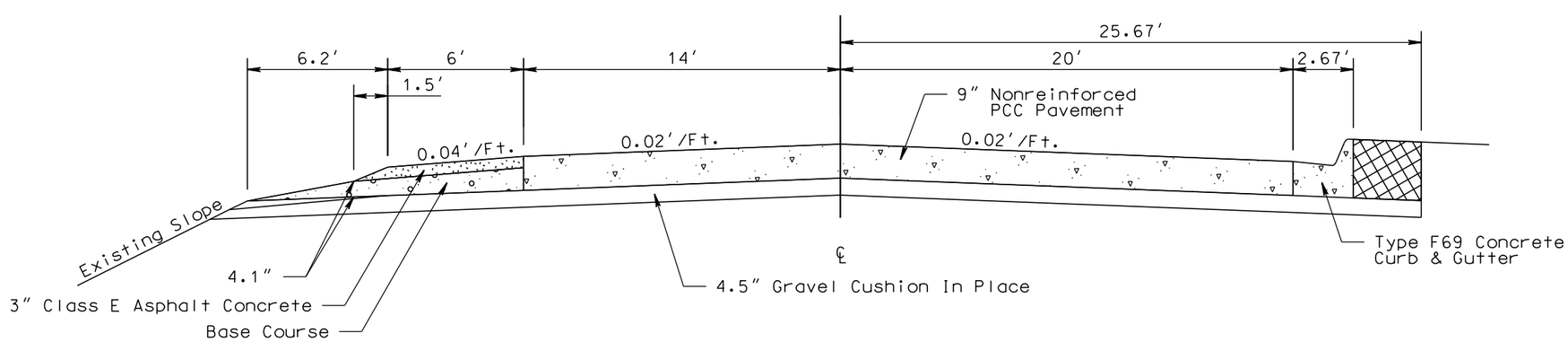

PLOT SCALE - 1:6.00001

PLOTTED FROM - TRPR18387

PLOT NAME - 10

FILE - ...\PRJ\CODN03RN\03RN TYPICALS.DGN

TYPICAL SURFACING SECTIONS

STATE OF SOUTH DAKOTA	PROJECT	SHEET	TOTAL SHEETS
	NH 0212(162)380	F11	F57

Plotting Date: 08/12/2015

Remove Curb & Gutter and PCC Pavement

Unclassified Excavation - Earth Embankment

MAINLINE

Sta. 430+21.50 to Sta. 433+28

In Place Section

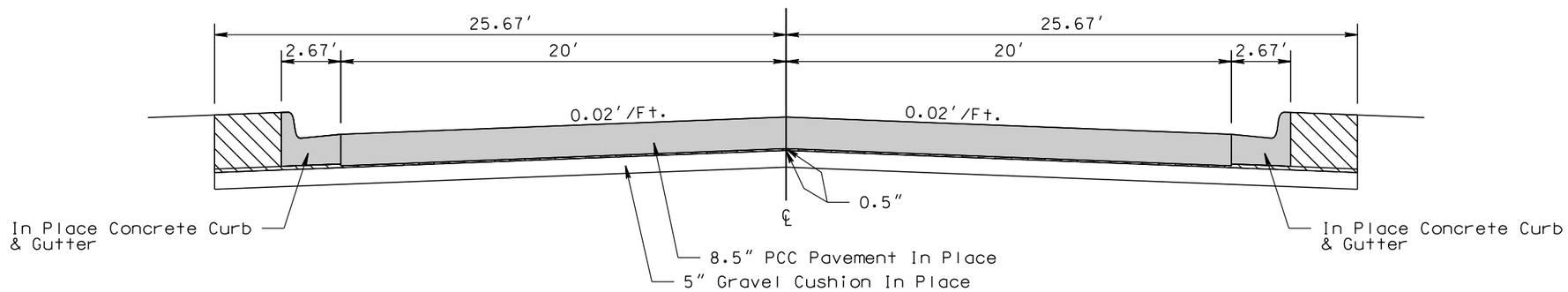

Earth Embankment

MAINLINE

Sta. 430+21.50 to Sta. 433+28

Surfacing Section

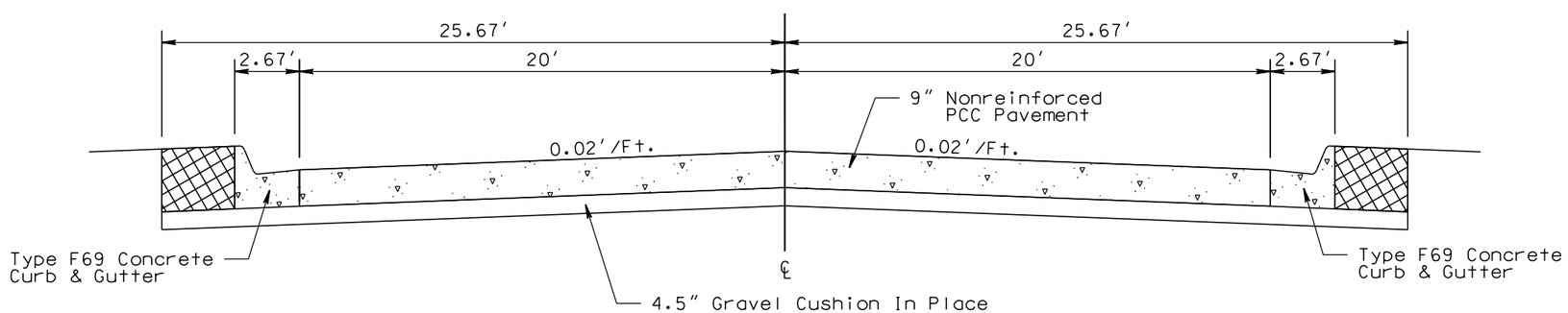

PLOT SCALE - 1:6.00001

PLOTTED FROM - TRPR18387

PLOT NAME - 11

FILE - ...\PRJ\CODN03RN\03RN TYPICALS.DGN

TYPICAL SURFACING SECTIONS

STATE OF SOUTH DAKOTA	PROJECT	SHEET	TOTAL SHEETS
	NH 0212(162)380	F12	F57

Plotting Date: 08/12/2015

See DRIVING SURFACE TRANSITION DETAILS located elsewhere in these plans for additional details for removal and surfacing.

MAINLINE

Sta. b 88+65.12

Surfacing Section

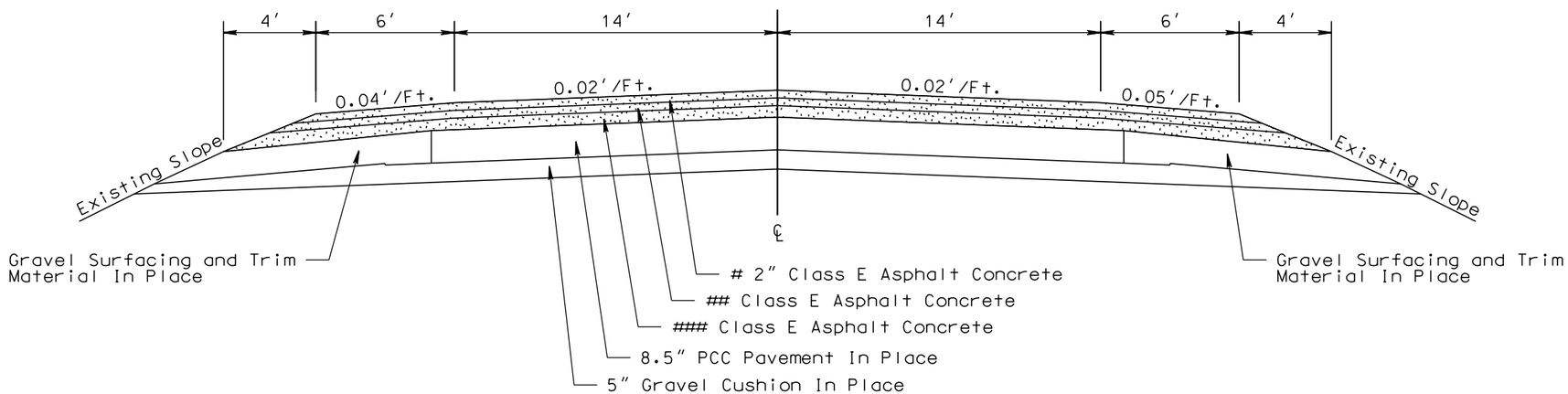

Transitions:

2″ - Sta. b 88+65.12 to Sta. b 91+45.12

2″ - Sta. b 88+65.12 to Sta. b 89+85.12
2″ to 0″ - Sta. b 89+85.12 to b 90+65.12

3″ to 0″ - Sta. b 88+65.12 to Sta. b 89+85.12

MAINLINE

Sta. b 91+45.12

Surfacing Section

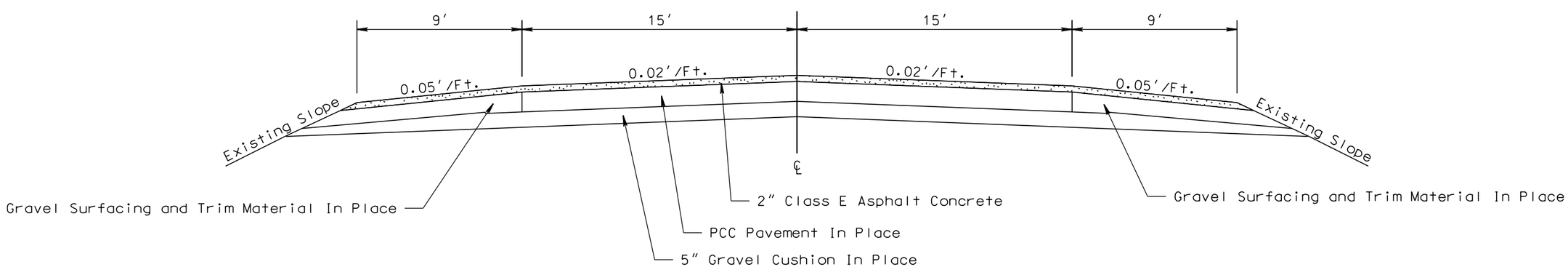

PLOT SCALE - 1:6.00001
PLOT NAME - 12
FILE -...\PRJ\CODN03RN\03RN TYPICALS.DGN
PLOTTED FROM - TRPR18387

PCC PAVEMENT JOINT LAYOUT

STATE OF SOUTH DAKOTA	PROJECT	SHEET	TOTAL SHEETS
	NH 0212(162)380	F13	F57

Plotting Date: 08/12/2015

Scale 1 Inch = 40 Feet
Sheet 1 of 3 Sheets

See TYPICAL SURFACING SECTIONS and DRIVING SURFACE TRANSITION DETAILS located elsewhere in these plans for additional details for removal and surfacing.

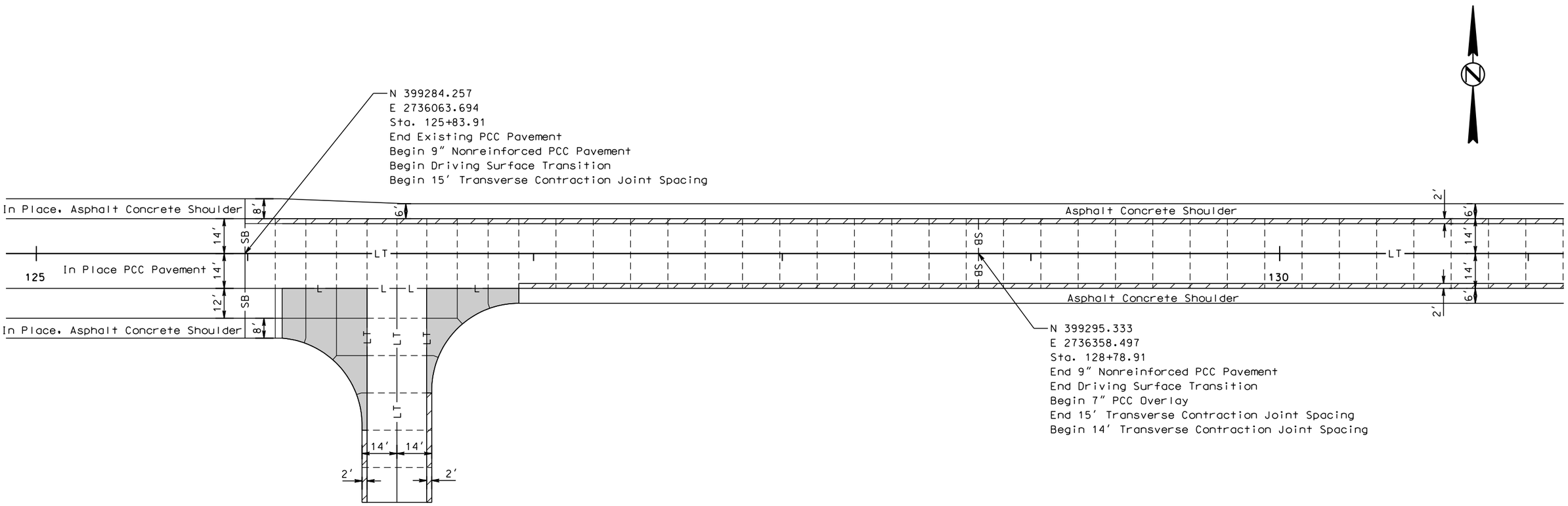

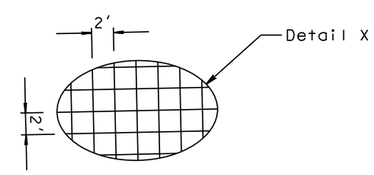

LEGEND:

Longitudinal Joint Without Tie Bars (Construction or Sawed) ——L——L——
Longitudinal Joint With Tie Bars (Construction or Sawed) ——LT——LT——
Transverse Contraction Joint — — — — — — — — — — — — — — — — — —
Steel Bar Installation in Longitudinal or Transverse Joint ——SB——SB——

Transverse contraction joints within these areas shall not have dowel bar assemblies. All other transverse contraction joints shall have dowel bar assemblies.

Fillet Area shall be reinforced with #4 rebar 24 inches on center both directions. Cost for furnishing and placing the rebar shall be incidental to the contract unit price per cubic yard for 9 INCH NONREINFORCED PCC PAVEMENT (See Detail X) No dowel assemblies shall be placed in these areas.

PLOT SCALE - 1:40
PLOTTED FROM - TRPR18387
PLOT NAME - 13
FILE - ...\PCC PAVEMENT LAYOUTS.DGN

PCC PAVEMENT JOINT LAYOUT

STATE OF SOUTH DAKOTA	PROJECT	SHEET	TOTAL SHEETS
	NH 0212(162)380	F14	F57

Plotting Date: 08/12/2015

Scale 1 Inch = 40 Feet
Sheet 2 of 3 Sheets

See TYPICAL SURFACING SECTIONS and DRIVING SURFACE TRANSITION DETAILS located elsewhere in these plans for additional details for removal and surfacing.

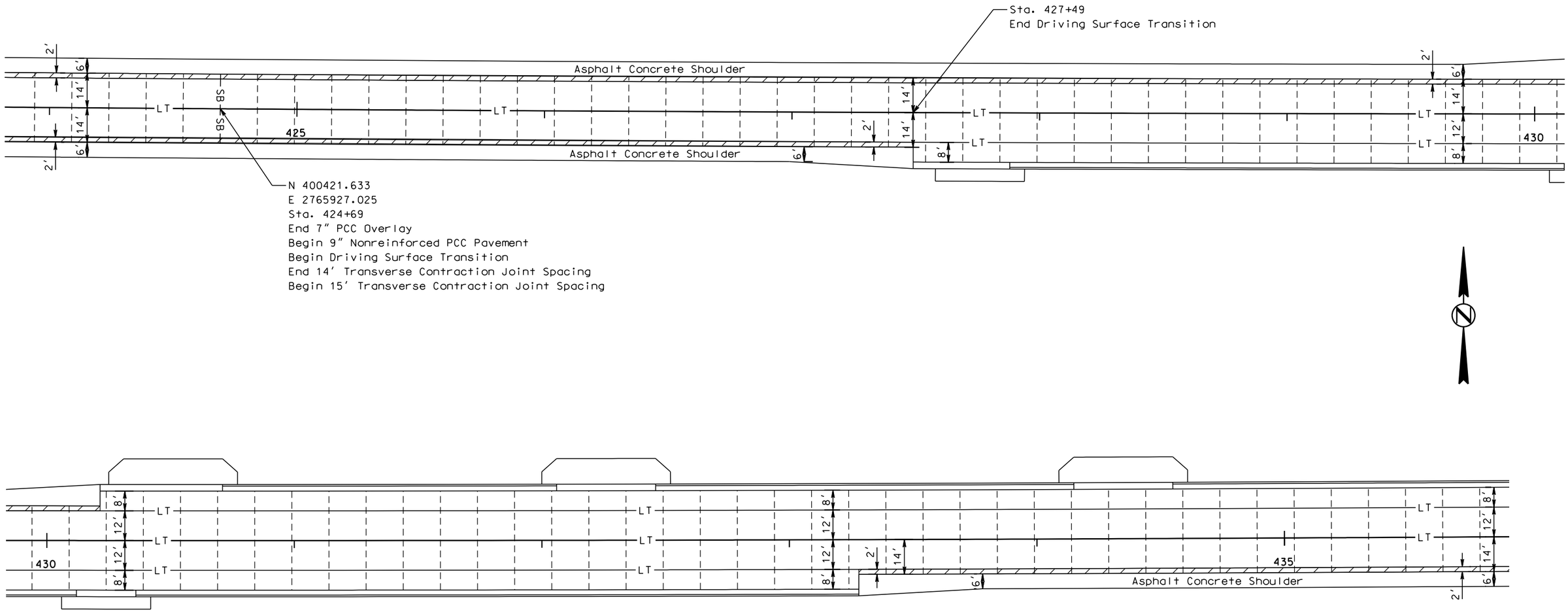

PLOT SCALE - 1:40

PLOT NAME - 14

FILE - ...\PCC PAVEMENT LAYOUTS.DGN

PLOTTED FROM - TRPR19387

PCC PAVEMENT JOINT LAYOUT

STATE OF SOUTH DAKOTA	PROJECT	SHEET	TOTAL SHEETS
	NH 0212(162)380	F15	F57

Plotting Date: 08/12/2015

Scale 1 Inch = 40 Feet
Sheet 3 of 3 Sheets

See TYPICAL SURFACING SECTIONS and DRIVING SURFACE TRANSITION DETAILS located elsewhere in these plans for additional details for removal and surfacing.

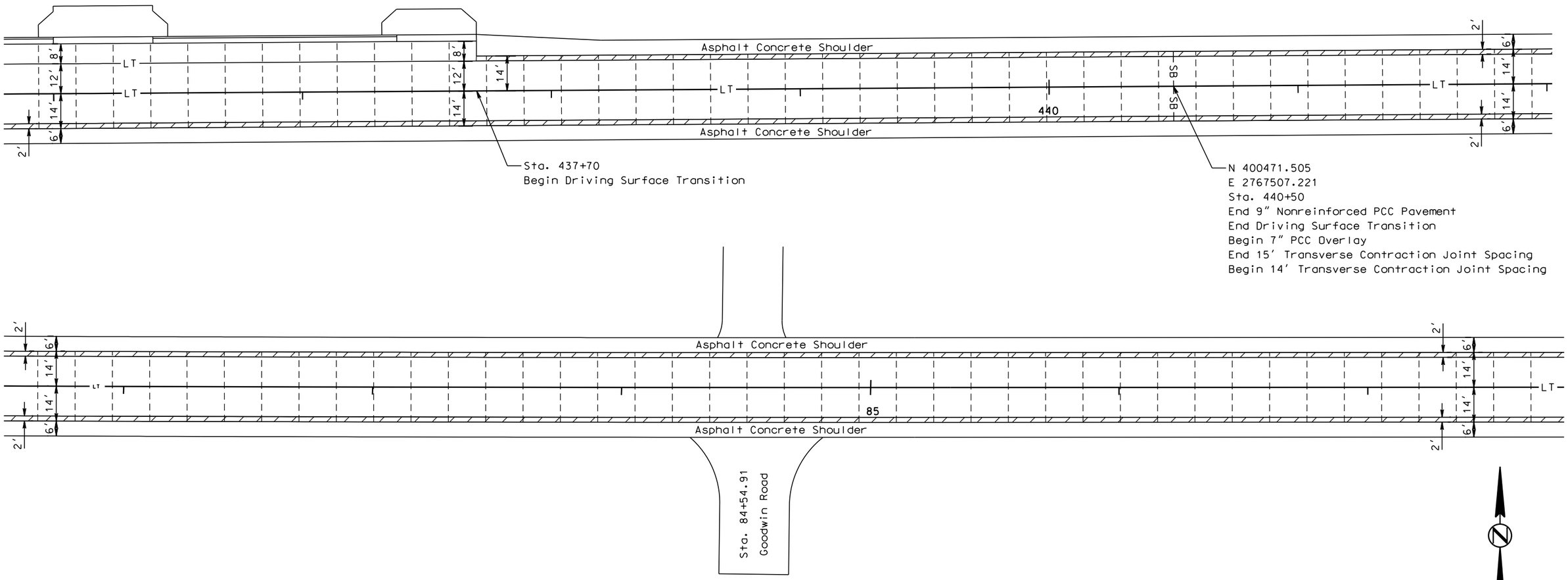

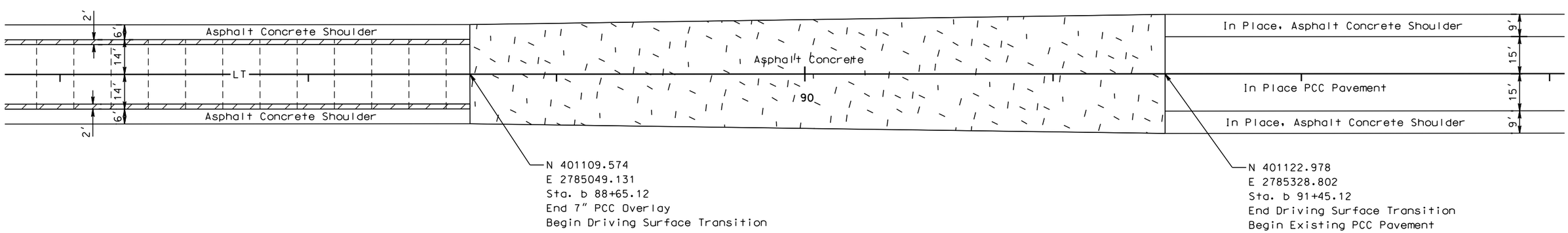

PLOT SCALE - 1:40

PLOT NAME - 15

FILE ....\PCC PAVEMENT LAYOUTS.DGN

PLOTTED FROM - TRPR18387

Plotting Date: 08/12/2015

LAYOUT SHOWING SURFACING LIMITS FOR RESIDENTIAL DRIVEWAYS WITH PCC DRIVEWAY PAVEMENT TO ROW

See DRIVING SURFACE TRANSITION DETAILS located elsewhere in these plans for additional details for removal and surfacing.

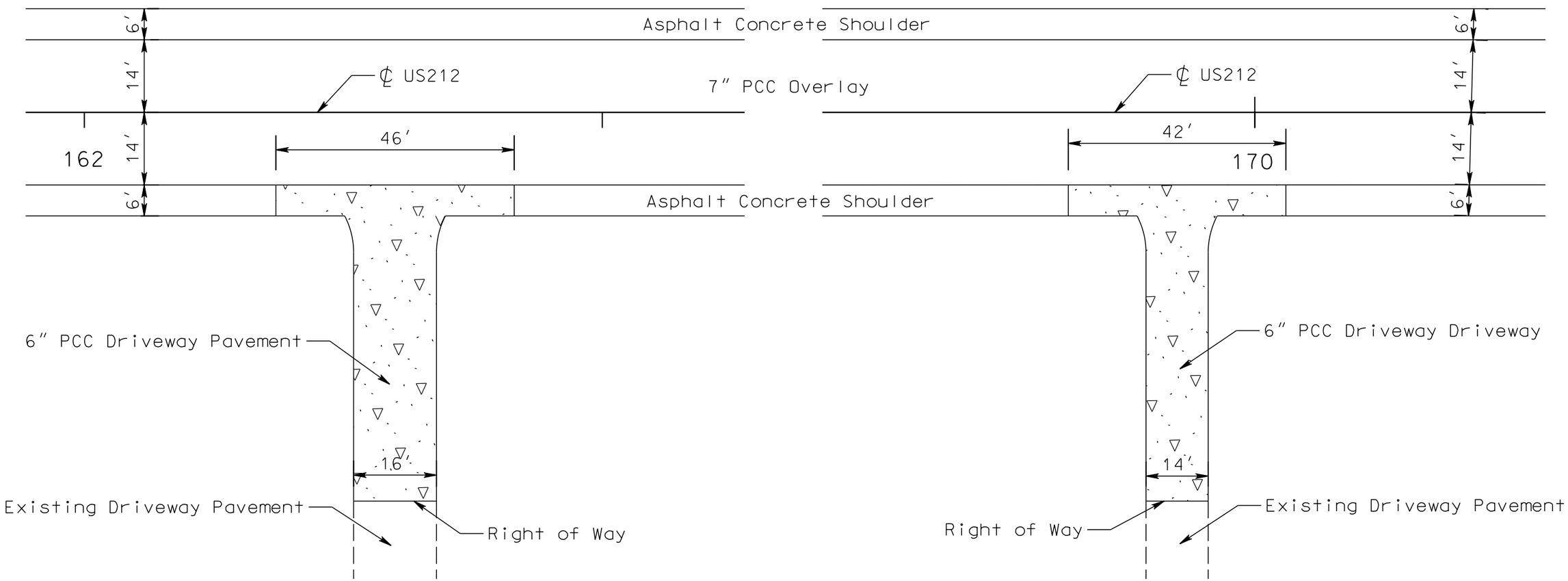

PLOT SCALE - 1:20
PLOTTED FROM - TRPR18387
PLOT NAME - 16
FILE - ...\RESIDENTAL DRIVEWAYS.DGN

STATE OF SOUTH DAKOTA	PROJECT	SHEET	TOTAL SHEETS
	NH 0212(162)380	F17	F57

Plotting Date: 08/12/2015

CURB AND GUTTER LAYOUT

Scale 1 Inch = 40 Feet
Sheet 1 of 1 Sheet

Note:
All Curb & Gutter shown on this sheet is Type F69 and all P Gutter is Type P9.

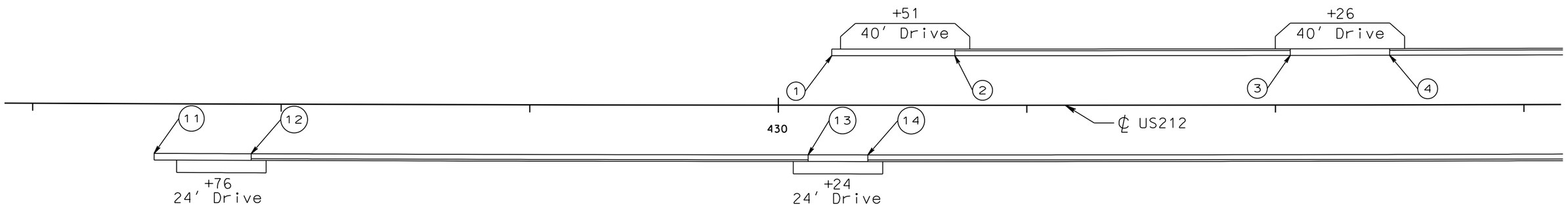

1. 430+21.50 - 20' L.
   Begin Type P Gutter
   El. 82.62

2. 430+71 - 20' L.
   End Type P Gutter
   Begin Str. C&G
   T.C. El. 83.10 (THEOR.)

3. 432+06 - 20' L.
   End Str. C&G
   Begin Type P Gutter
   T.C. El. 83.12 (THEOR.)

4. 432+46 - 20' L.
   End Type P Gutter
   Begin Str. C&G
   T.C. El. 83.13 (THEOR.)

11. 427+49 - 20' R.
    Begin Type P Gutter
    El. 82.11

12. 427+88 - 20' R.
    End Type P Gutter
    Begin Str. C&G
    T.C. El. 82.60 (THEOR.)

13. 430+12 - 20' R.
    End Type P Gutter
    Begin Str. C&G
    T.C. El. 83.02 (THEOR.)

14. 430+36 - 20' R.
    End Type P Gutter
    Begin Str. C&G
    T.C. El. 83.06 (THEOR.)

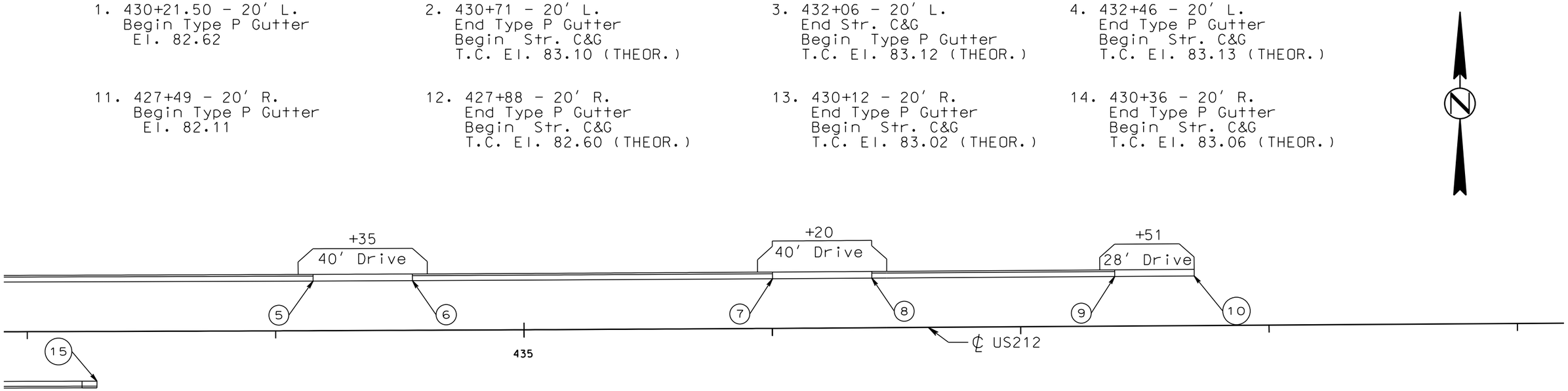

5. 434+15 - 20' L.
   End Str. C&G
   Begin Type P Gutter
   T.C. El. 83.09 (THEOR.)

6. 434+55 - 20' L.
   End Type P Gutter
   Begin Str. C&G
   T.C. El. 83.08 (THEOR.)

7. 436+00 - 20' L.
   End Str. C&G
   Begin Type P Gutter
   T.C. El. 82.98 (THEOR.)

8. 436+40 - 20' L.
   End Type P Gutter
   Begin Str. C&G
   T.C. El. 82.92 (THEOR.)

9. 437+38 - 20' L.
   End Str. C&G
   Begin Type P Gutter
   T.C. El. 82.78 (THEOR.)

10. 437+70 - 20' L.
    End Type P Gutter
    El. 82.28

15. 433+28 - 20' R.
    End Str. C&G
    El. 82.73

PLOT SCALE - 1:40
PLOT NAME - 17
FILE - ...\PRJ\CODN03RN\C&G LAYOUTS.DGN
PLOTTED FROM - TRPR19387

DRIVING SURFACE TRANSITION DETAILS

STATE OF SOUTH DAKOTA	PROJECT	SHEET	TOTAL SHEETS
	NH 0212(162)380	F18	F57

Plotting Date: 08/12/2015

Sheet 1 of 8 Sheets
NOT TO SCALE

Remove Concrete Pavement or PCC Driveway Pavement

Unclassified Excavation - Waste Material

See Typical Surfacing Sections for additional details for removal and Surfacing.

STA. 125+83.91 TO STA. 128+78.91

LONGITUDINAL SECTION AT CENTERLINE SHOWING REMOVAL OF IN PLACE SURFACING

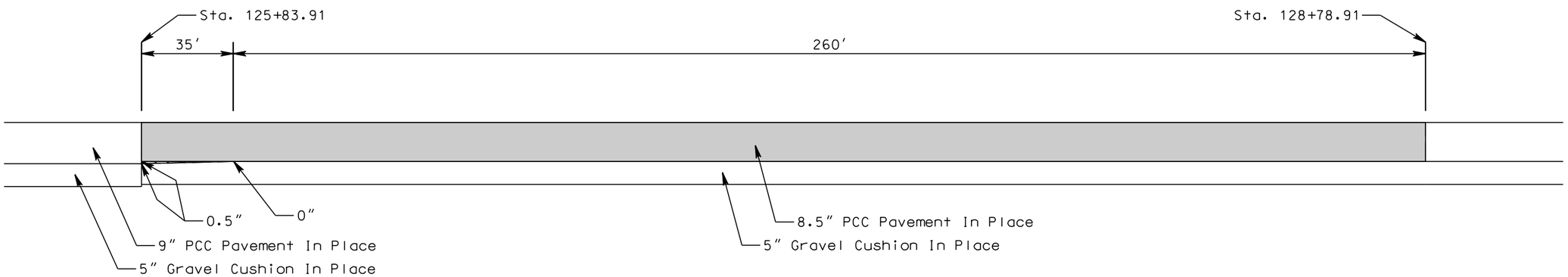

STA. 125+83.91 TO STA. 128+78.91

LONGITUDINAL SECTION AT CENTERLINE SHOWING SURFACING

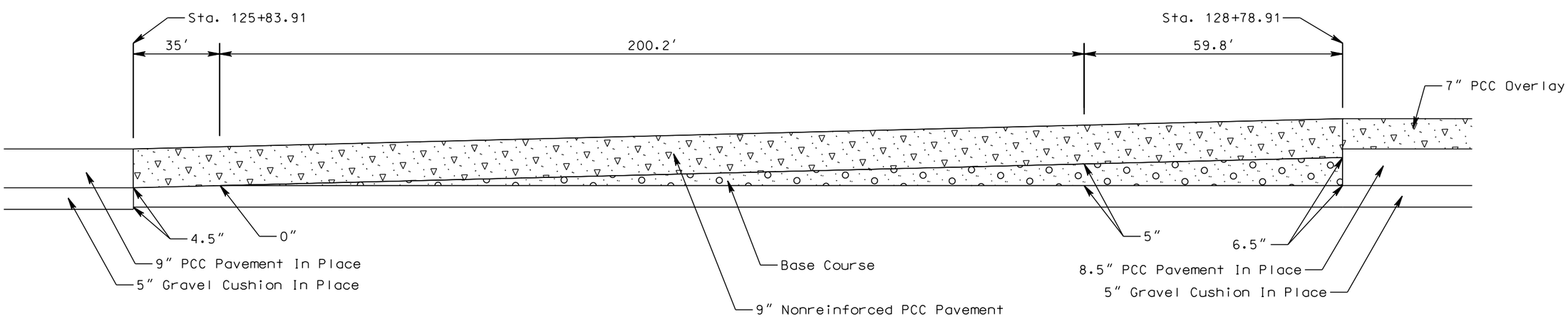

PLOT SCALE - 1:25

PLOTTED FROM - TRPR18387

PLOT NAME - 18

FILE - ...\03RN DR SURF TRANS.DGN

DRIVING SURFACE TRANSITION DETAILS

STATE OF SOUTH DAKOTA	PROJECT	SHEET	TOTAL SHEETS
	NH 0212(162)380	F19	F57

Plotting Date: 08/12/2015

Sheet 2 of 8 Sheets
NOT TO SCALE

Remove Concrete Pavement or PCC Driveway Pavement

Unclassified Excavation - Waste Material

See Typical Surfacing Sections for additional details for removal and Surfacing.

STA. 424+69 TO STA. 427+49
STA. 437+70 TO STA. 440+50 (REVERSED)

LONGITUDINAL SECTION AT CENTERLINE SHOWING REMOVAL OF IN PLACE SURFACING

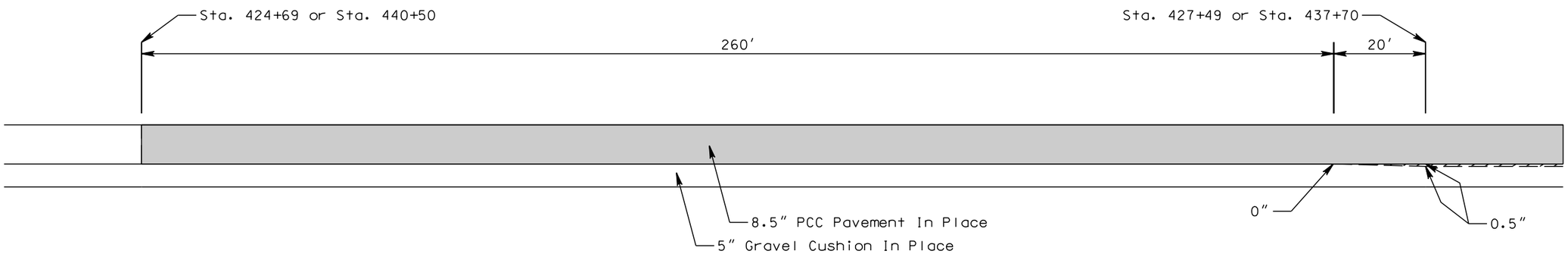

STA. 424+69 TO STA. 427+49
STA. 437+70 TO STA. 440+50 (REVERSED)

LONGITUDINAL SECTION AT CENTERLINE SHOWING SURFACING

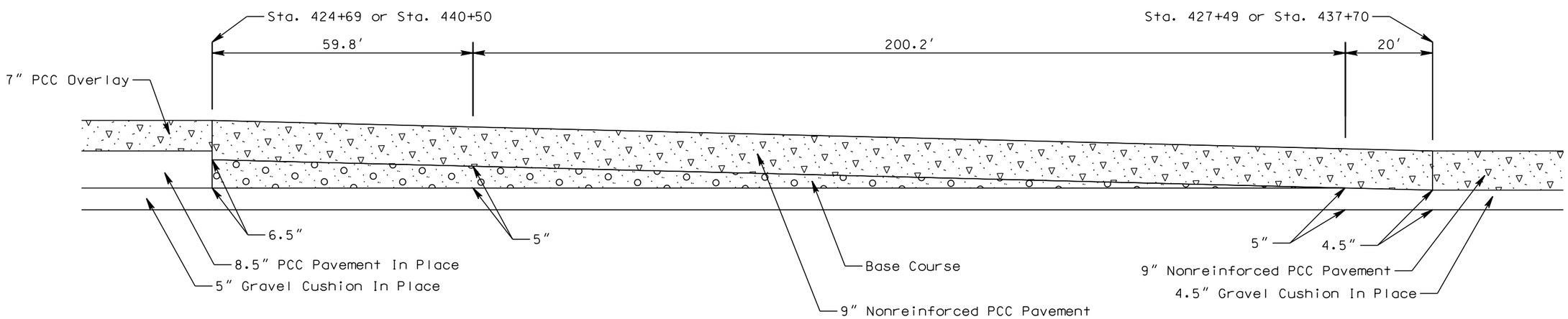

PLOT SCALE - 1:25

PLOTTED FROM - TRPR18387

PLOT NAME - 19

FILE - ...\03RN DR SURF TRANS.DGN

DRIVING SURFACE TRANSITION DETAILS

STATE OF SOUTH DAKOTA	PROJECT	SHEET	TOTAL SHEETS
	NH 0212(162)380	F20	F57

Plotting Date: 08/12/2015

Sheet 3 of 8 Sheets
NOT TO SCALE

Planing PCC Pavement

See Typical Surfacing Sections for additional details for removal and Surfacing.

STA. b 88+65.12 TO STA. b 91+45.12

LONGITUDINAL SECTION AT CENTERLINE SHOWING REMOVAL OF IN PLACE SURFACING

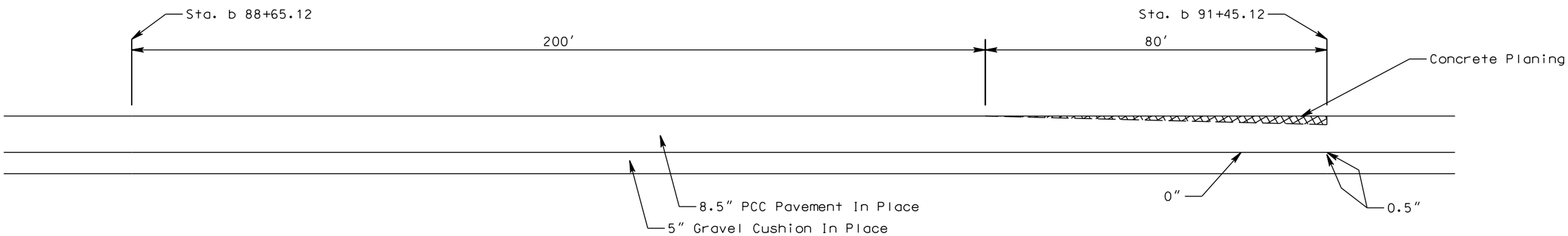

STA. b 88+65.12 TO STA. b 91+45.12

LONGITUDINAL SECTION AT CENTERLINE SHOWING SURFACING

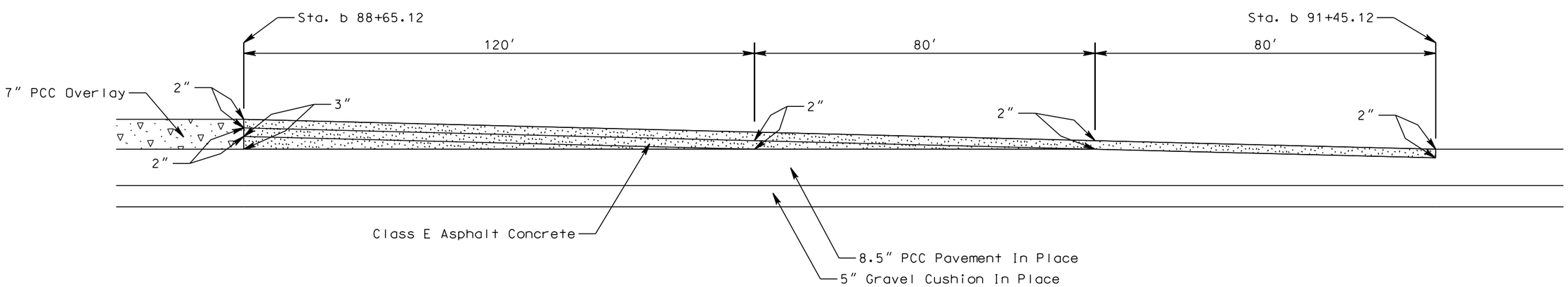

PLOT SCALE - 1:25
PLOT NAME - 20
FILE -...\03RN DR SURF TRANS.DGN
PLOTTED FROM - TRPR18387

DRIVING SURFACE TRANSITION DETAILS

STATE OF SOUTH DAKOTA	PROJECT	SHEET	TOTAL SHEETS
	NH 0212(162)380	F21	F57

Plotting Date: 08/12/2015

Sheet 4 of 8 Sheets
NOT TO SCALE

Remove Concrete Pavement or PCC Driveway Pavement

Unclassified Excavation - Waste Material

ENTRANCE TO DOT YARD

INTERSECTING ROAD - STA. 126+45 R.

LONGITUDINAL SECTION AT CENTERLINE SHOWING REMOVAL OF IN PLACE SURFACING

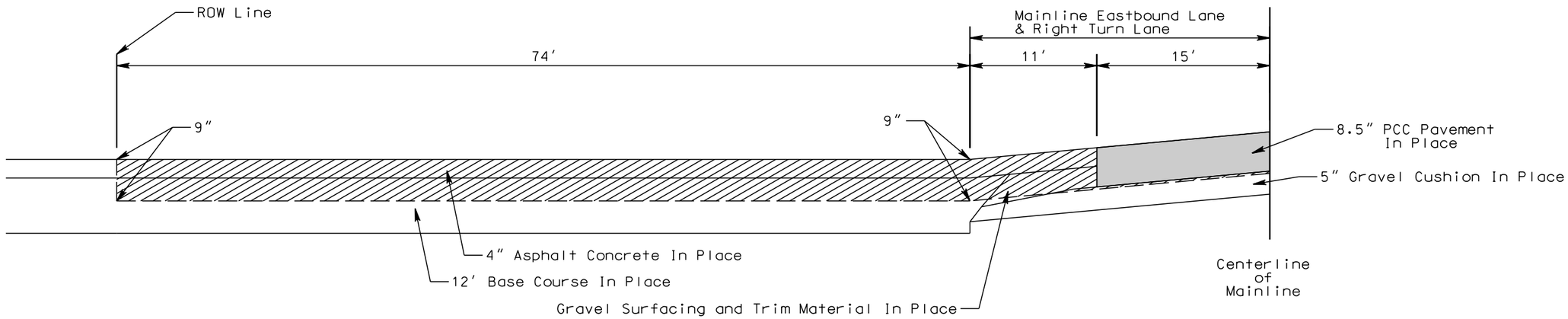

LONGITUDINAL SECTION AT CENTERLINE SHOWING SURFACING

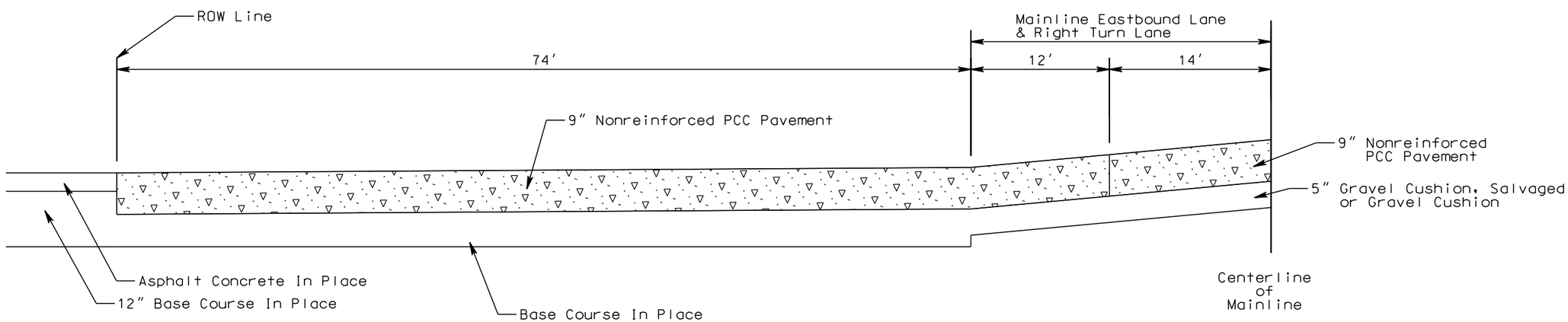

PLOT SCALE - 1:25

PLOTTED FROM - TRPR19387

PLOT NAME - 21

FILE - ...\03RN DR SURF TRANS.DGN

DRIVING SURFACE TRANSITION DETAILS

STATE OF SOUTH DAKOTA	PROJECT	SHEET	TOTAL SHEETS
	NH 0212(162)380	F22	F57

Plotting Date: 08/12/2015

Sheet 5 of 8 Sheets
NOT TO SCALE

Limits of Cold Milling Asphalt Concrete

7 - ASPHALT INTERSECTING ROADS

LONGITUDINAL SECTION AT CENTERLINE SHOWING REMOVAL OF IN PLACE SURFACING

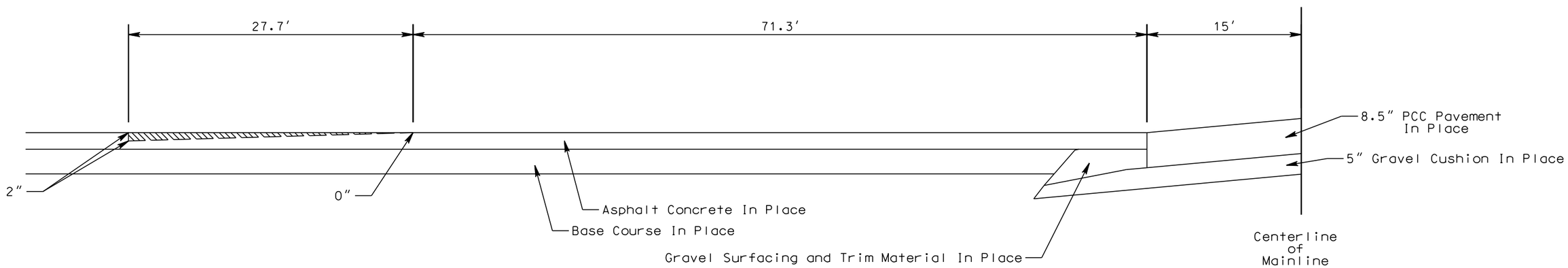

LONGITUDINAL SECTION AT CENTERLINE SHOWING SURFACING

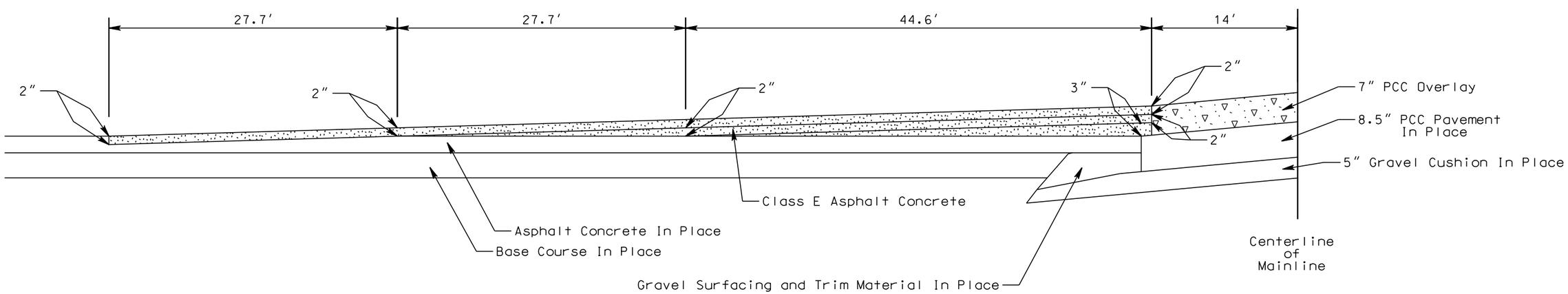

PLOT SCALE - 1:25

PLOT NAME - 22

FILE - ...\03RN DR SURF TRANS.DGN

PLOTTED FROM - TRPR18387

DRIVING SURFACE TRANSITION DETAILS

STATE OF SOUTH DAKOTA	PROJECT	SHEET	TOTAL SHEETS
	NH 0212(162)380	F23	F57

Plotting Date: 08/12/2015

Sheet 6 of 8 Sheets
NOT TO SCALE

INTERSECTING ROADS - GRAVEL BEYOND ROW

LONGITUDINAL SECTION AT CENTERLINE SHOWING SURFACING

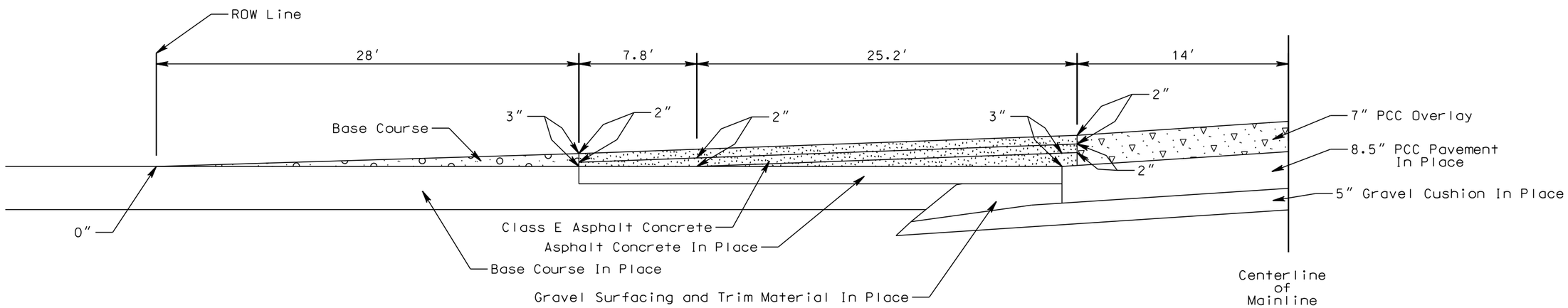

RESIDENTAL DRIVES AND FARM & FIELD ENTRANCES - GRAVEL BEYOND ROW

LONGITUDINAL SECTION AT CENTERLINE SHOWING SURFACING

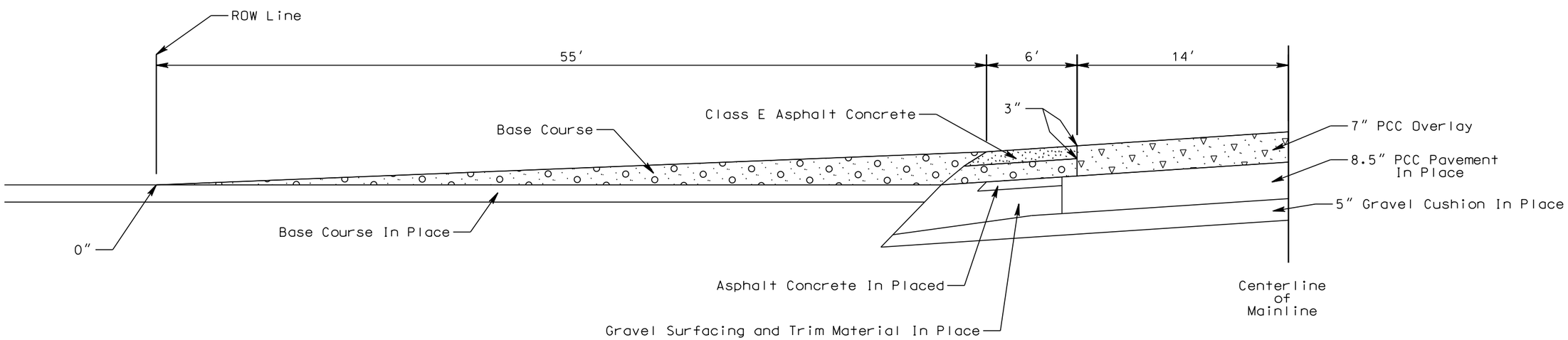

PLOT SCALE - 1:25

PLOT NAME - 23

FILE - ...\03RN DR SURF TRANS.DGN

PLOTTED FROM - TRPR18387

DRIVING SURFACE TRANSITION DETAILS

STATE OF SOUTH DAKOTA	PROJECT	SHEET	TOTAL SHEETS
	NH 0212(162)380	F24	F57

Plotting Date: 08/12/2015

Sheet 7 of 8 Sheets
NOT TO SCALE

Limits of Cold Milling Asphalt Concrete

RESIDENTAL DRIVES - ASPHALT CONCRETE BEYOND ROW

LONGITUDINAL SECTION AT CENTERLINE SHOWING REMOVAL OF IN PLACE SURFACING

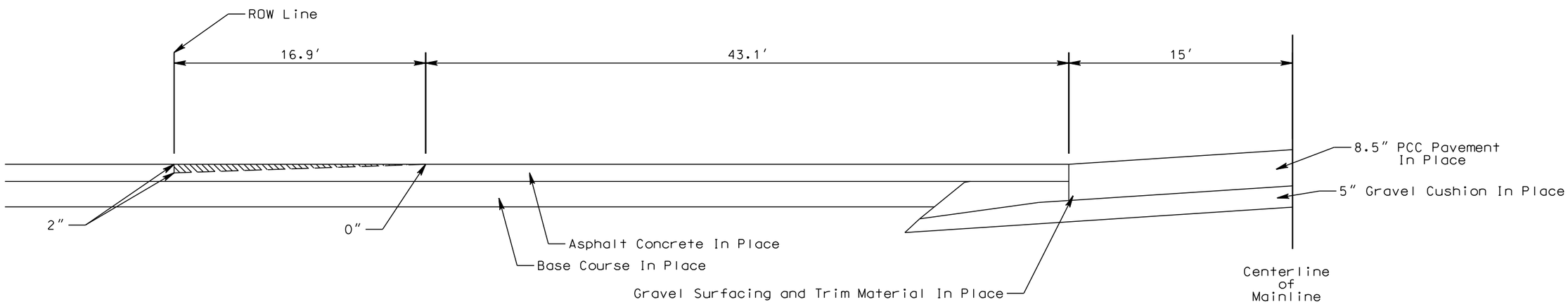

LONGITUDINAL SECTION AT CENTERLINE SHOWING SURFACING

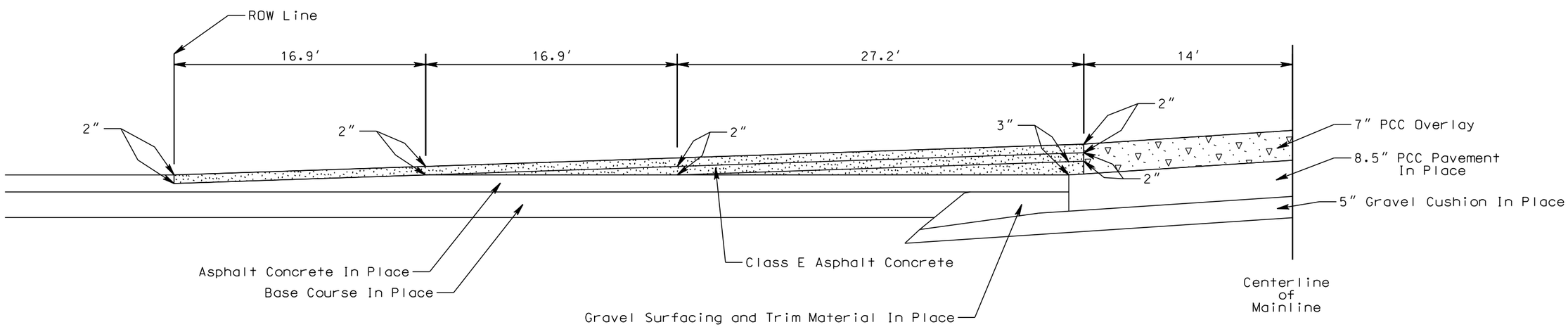

PLOT SCALE - 1:25

PLOT NAME - 24

FILE - ...\03RN DR SURF TRANS.DGN

PLOTTED FROM - TRPR18387

DRIVING SURFACE TRANSITION DETAILS

STATE OF SOUTH DAKOTA	PROJECT	SHEET	TOTAL SHEETS
	NH 0212(162)380	F25	F57

Plotting Date: 08/12/2015

Sheet 8 of 8 Sheets
NOT TO SCALE

Remove Concrete Pavement or PCC Driveway Pavement

Unclassified Excavation - Waste Material

Location	#	##
Sta. 162+60 R	45′	8′
Sta. 169+90 R	52′	15′

Distances are Approximate.

RESIDENTAL DRIVES - CONCRETE PAVEMENT BEYOND ROW

LONGITUDINAL SECTION AT CENTERLINE SHOWING REMOVAL OF IN PLACE SURFACING

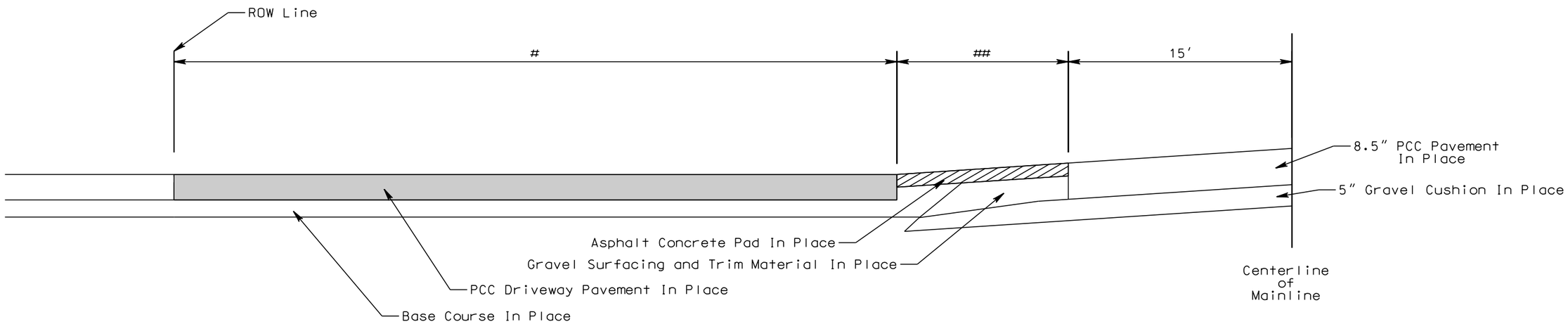

LONGITUDINAL SECTION AT CENTERLINE SHOWING SURFACING

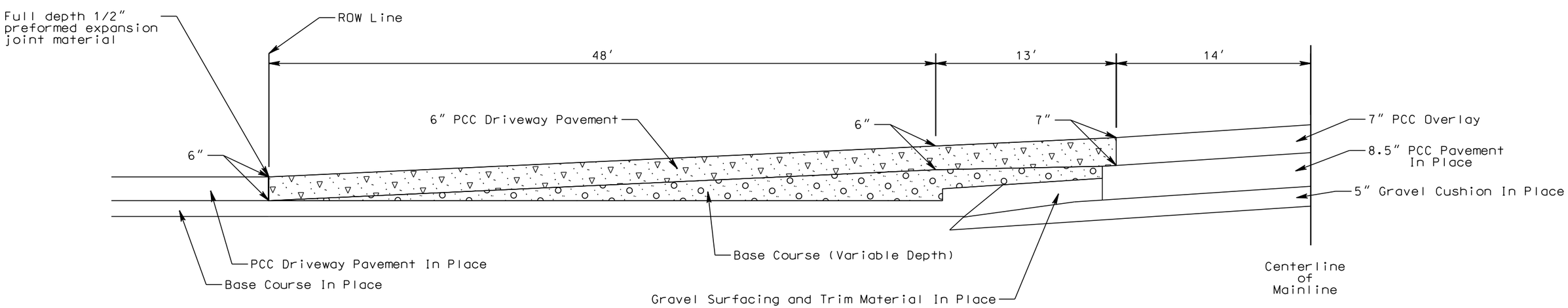

PLOT SCALE - 1:25

PLOT NAME - 25

FILE - ...\03RN DR SURF TRANS.DGN

PLOTTED FROM - TRPR19387

SPECIAL DETAILS

SURFACING OF INTERSECTING ROADS AND ENTRANCES (PCCP OR AC PAVED SHOULDERS)

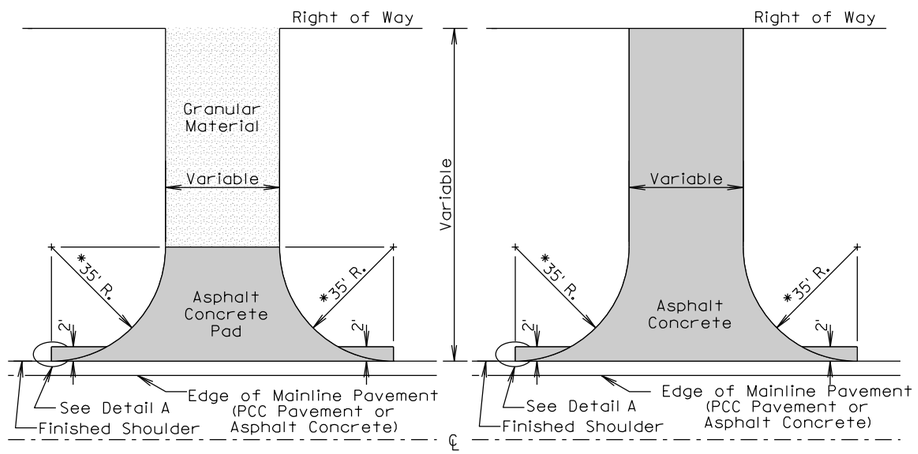

INTERSECTING ROAD
NO ASPHALT CONCRETE SURFACING
BEYOND RIGHT OF WAY

INTERSECTING ROAD
ASPHALT CONCRETE SURFACING
BEYOND RIGHT OF WAY

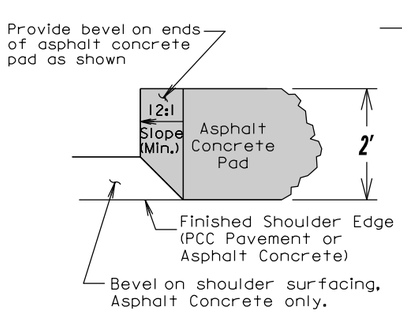

DETAIL A

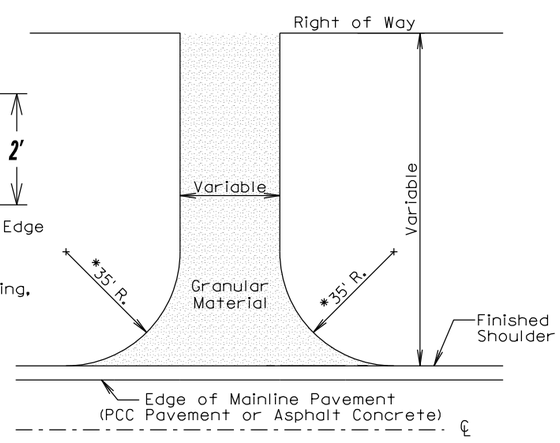

ENTRANCE

GENERAL NOTES:

The details shown are provided as a guide for surfacing. The precise construction limits for situations other than the standards shown will be determined by the Engineer during construction.

*35' Radius except as noted elsewhere in plans.

ROADWAY WITH SHOULDER

PCC PAVEMENT TYPICAL CONTRACTION JOINT SPACING

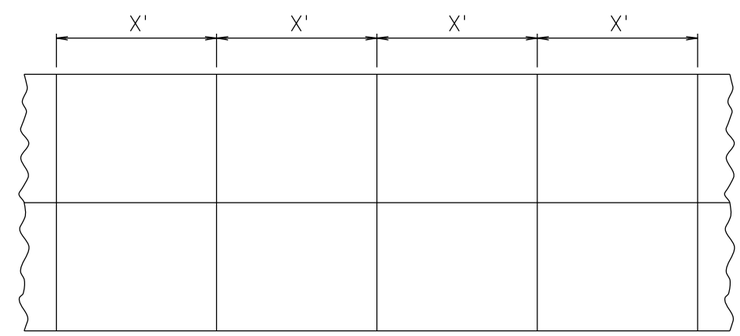

PCCP Thickness	Transverse Contraction Joint Spacing (X)
7"	14'
8" to 9.5"	15'
10" and Thicker	20'

PLOT SCALE - 1:212.56
PLOTTED FROM - TRPR19387
PLOT NAME - 26
FILE - ...\CODN03RN\SPECIAL DETAILS.DGN

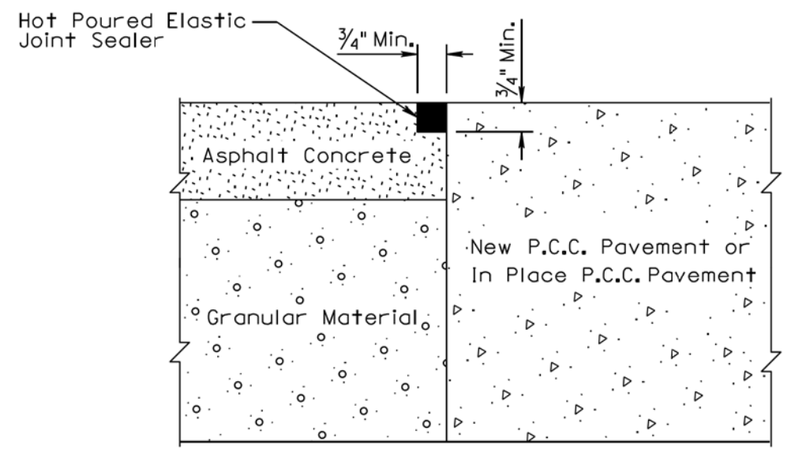

March 31, 2000

Published Date: 3rd Qtr. 2015

SDDOT

ASPHALT CONCRETE SHOULDER JOINT ADJACENT TO PCC PAVEMENT

PLATE NUMBER 320.15

Sheet 1 of 1

PLOT SCALE - 1:200

PLOT NAME - 27

FILE - ...\STDPLATEPAGE1.DGN

PLOTTED FROM - TRPR18387

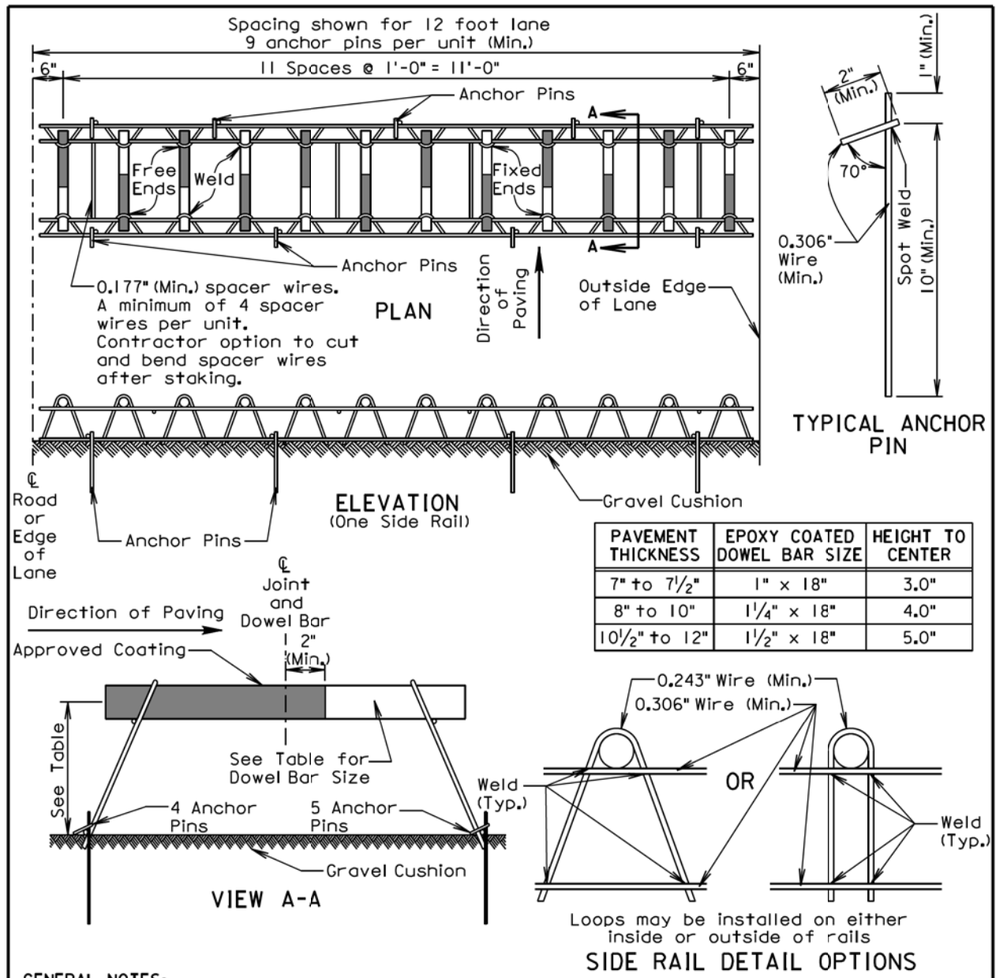

PAVEMENT THICKNESS	EPOXY COATED DOWEL BAR SIZE	HEIGHT TO CENTER
7" to 7½"	1" x 18"	3.0"
8" to 10"	1¼" x 18"	4.0"
10½" to 12"	1½" x 18"	5.0"

GENERAL NOTES:

Longitudinal joint tie bars shall be placed a minimum of 15 inches from the transverse contraction joint.

Centerline of individual dowel bars shall be parallel to top of subgrade ±1/8 inch in 18 inches and to all other dowel bars in the assembly ±1/16 inch in 18 inches.

Centerline of individual dowel bars shall be parallel to the centerline of the roadway ±1/2 inch in 18 inches.

The transverse contraction joints shall be sawed perpendicular to the centerline of the roadway and the dowel bars shall be centered on the sawed joint ±1 inch.

Supporting devices as shown on this sheet, or equivalent as approved by the Engineer, shall be used to maintain proper horizontal and vertical alignment of the dowel bars.

August 30, 2013

Published Date: 3rd Qtr. 2015	SDDOT	PCC PAVEMENT DOWEL BAR ASSEMBLY FOR TRANSVERSE CONTRACTION JOINTS 12 Bar Assembly on Granular Base Material	PLATE NUMBER 380.01 Sheet 1 of 1

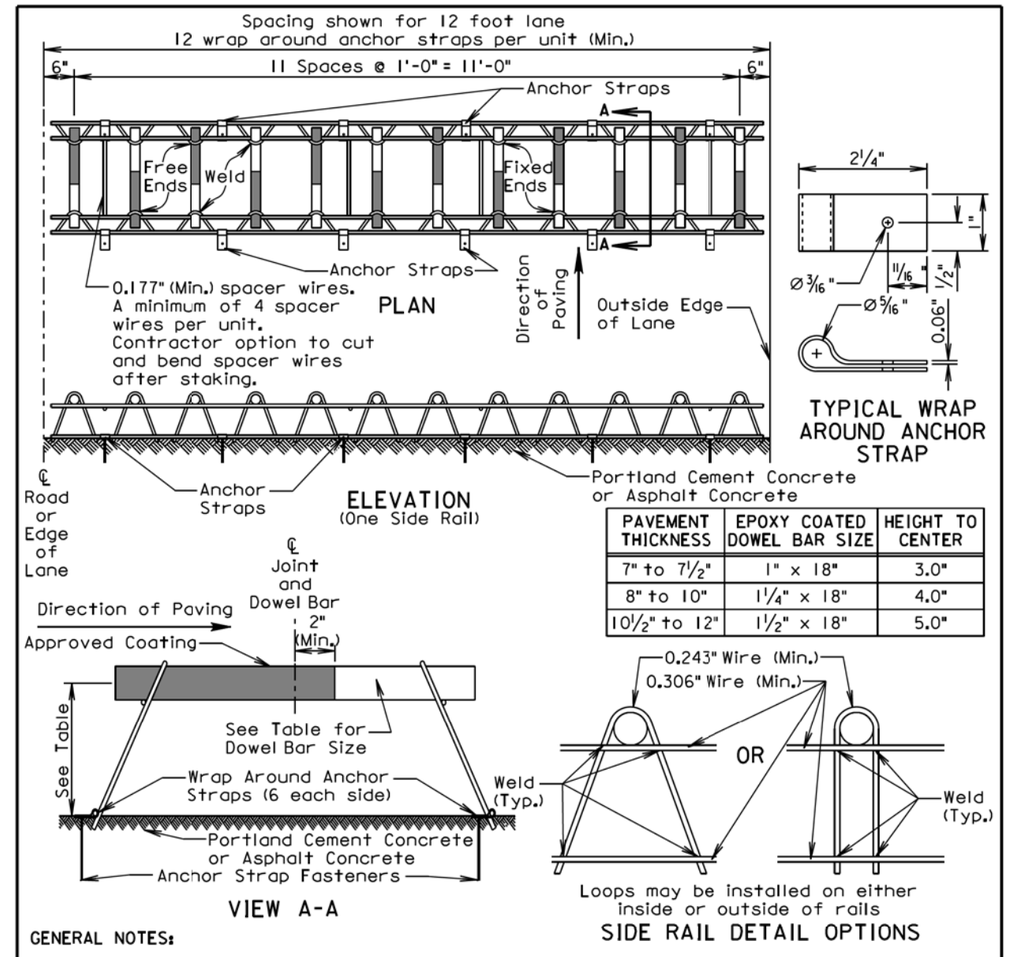

PAVEMENT THICKNESS	EPOXY COATED DOWEL BAR SIZE	HEIGHT TO CENTER
7" to 7½"	1" x 18"	3.0"
8" to 10"	1¼" x 18"	4.0"
10½" to 12"	1½" x 18"	5.0"

GENERAL NOTES:

Longitudinal joint tie bars shall be placed a minimum of 15 inches from the transverse contraction joint.

Centerline of individual dowel bars shall be parallel to top of subgrade ±1/8 inch in 18 inches and to all other dowel bars in the assembly ±1/16 inch in 18 inches.

Centerline of individual dowel bars shall be parallel to the centerline of the roadway ±1/2 inch in 18 inches.

The transverse contraction joints shall be sawed perpendicular to the centerline of the roadway and the dowel bars shall be centered on the sawed joint ±1 inch.

Supporting devices as shown on this sheet, or equivalent as approved by the Engineer, shall be used to maintain proper horizontal and vertical alignment of the dowel bars.

Appropriate anchor strap fasteners shall be used to prevent movement of the dowel bar assemblies during the paving operation.

August 30, 2013

Published Date: 3rd Qtr. 2015	SDDOT	PCC PAVEMENT DOWEL BAR ASSEMBLY FOR TRANSVERSE CONTRACTION JOINTS 12 Bar Assembly on Hard Surfaced Base Material	PLATE NUMBER 380.02 Sheet 1 of 1

PLOT SCALE - 1:200
PLOT NAME - 28
FILE - ...\STDPLATEPAGE2.DGN
-PLOTTED FROM - TRPR18387

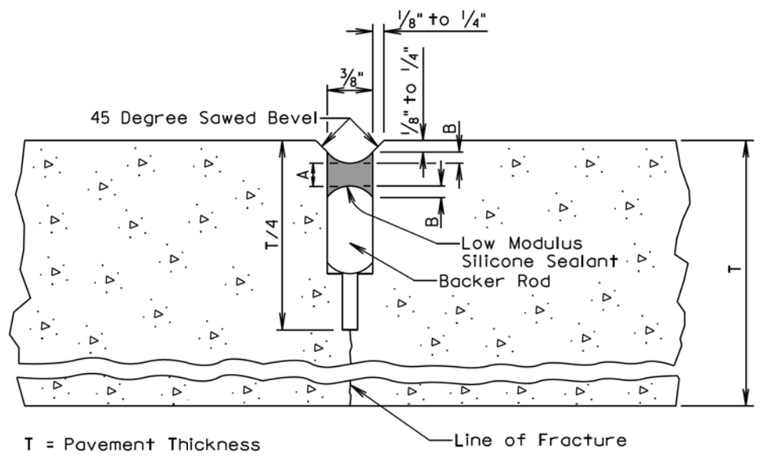

LOW MODULUS SILICONE SEALANT ALLOWABLE CONSTRUCTION TOLERANCES			
A (Min.) (In.)	A (Max.) (In.)	B (Min.) (In.)	B (Max.) (In.)
3/16	5/16	1/8	1/4

GENERAL NOTES:

The first saw cut to control cracking shall be a minimum of 1/4 the thickness of the pavement. Additional sawing for widening the saw cut to provide the width for the installation of the low modulus silicone joint sealant will be necessary.

The backer rod shall be a nonmoisture absorbing resilient material approximately 25% larger in diameter than the width of the joint to be sealed.

June 26, 2013

Published Date: 3rd Qtr. 2015	SDDOT	PCC PAVEMENT BEVELED TRANSVERSE CONTRACTION JOINT WITH OR WITHOUT DOWEL BAR ASSEMBLY	PLATE NUMBER 380.06
			Sheet 1 of 1

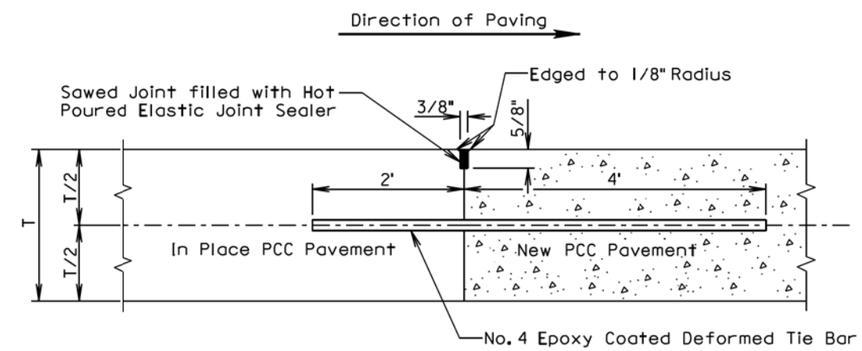

GENERAL NOTES:

No. 4 epoxy coated deformed tie bars shall be spaced 12 inches center to center and shall be a minimum of 3 inches and a maximum of 6 inches from the pavement edges.

The minimum distance between a transverse construction joint with tie bars and an adjacent transverse contraction joint shall be 5 feet.

When a transverse construction joint is made, paving will not be allowed in this area for 12 hours.

A transverse construction joint may be placed in lieu of the transverse contraction joint when shown in the plans.

The term "In Place PCC Pavement" in the above drawing indicates that the in place PCC pavement was placed on the current project.

June 26, 2013

Published Date: 3rd Qtr. 2015	SDDOT	PCC PAVEMENT MID PANEL TRANSVERSE CONSTRUCTION JOINT	PLATE NUMBER 380.07
			Sheet 1 of 1

DETAIL A
TRANSVERSE CONSTRUCTION JOINT WITH TIE BARS

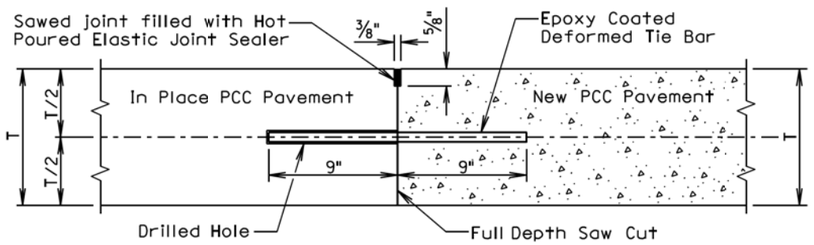

T = In Place PCC Pavement and New PCC Pavement Thickness

GENERAL NOTES:

The term "In Place PCC Pavement" in the above drawing indicates that the in place PCC pavement was placed on a previous project.

See sheet 2 of 2 of this standard plate to determine if Detail A shall be used.

The tie bars shall be embedded a minimum depth of 9 inches into the in place PCC pavement and anchored with an epoxy resin adhesive.

No. 9 epoxy coated deformed tie bars shall be used in 10 inch thickness and less PCC Pavement and No. 11 epoxy coated deformed tie bars shall be used in 10.5 inch thickness and greater PCC Pavement. The tie bar spacing shall be 18 inches center to center and shall be a minimum of 3 inches and a maximum of 9 inches from the pavement edges.

DETAIL B
TRANSVERSE CONSTRUCTION JOINT WITH DOWEL BARS

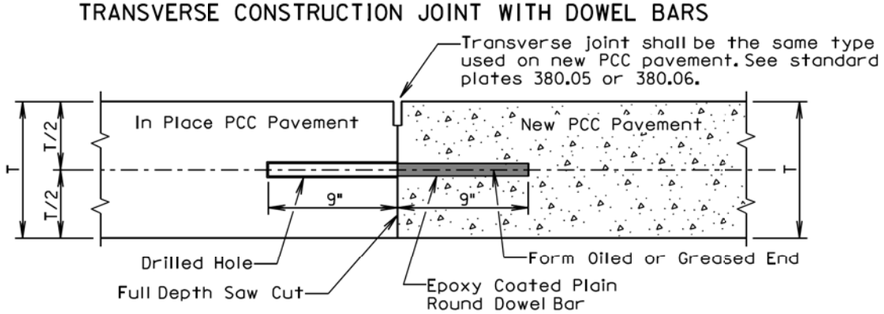

T = In Place PCC Pavement and New PCC Pavement Thickness

GENERAL NOTES:

The term "In Place PCC Pavement" in the above drawing indicates that the in place PCC pavement was placed on a previous project or current project.

See sheet 2 of 2 of this standard plate to determine if Detail B shall be used.

The plain round dowel bars shall be embedded a minimum depth of 9 inches into the in place PCC pavement and anchored with an epoxy resin adhesive.

The epoxy coated plain round dowel bar size, number, and spacing shall be the same as detailed on the corresponding dowel bar assembly standard plate (380.01, 380.02, 380.03, or 380.04). The epoxy coated plain round dowel bars shall be a minimum of 3 inches and a maximum of 6 inches from the pavement edges.

September 6, 2013

Published Date: 3rd Qtr. 2015	SDDOT	PCC PAVEMENT TRANSVERSE CONSTRUCTION JOINTS WITH TIE BARS OR DOWEL BARS	PLATE NUMBER 380.08
			Sheet 1 of 2

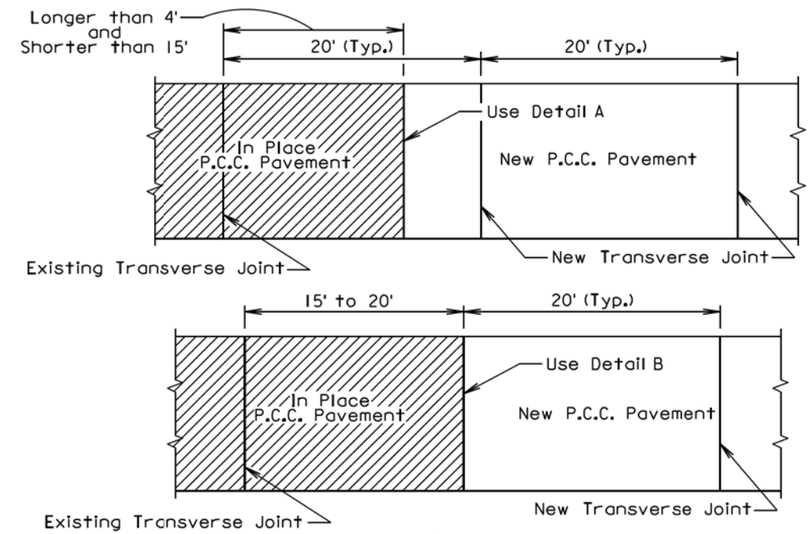

PLAN VIEW
(For typical transverse joint spacing of 20' on the current project)

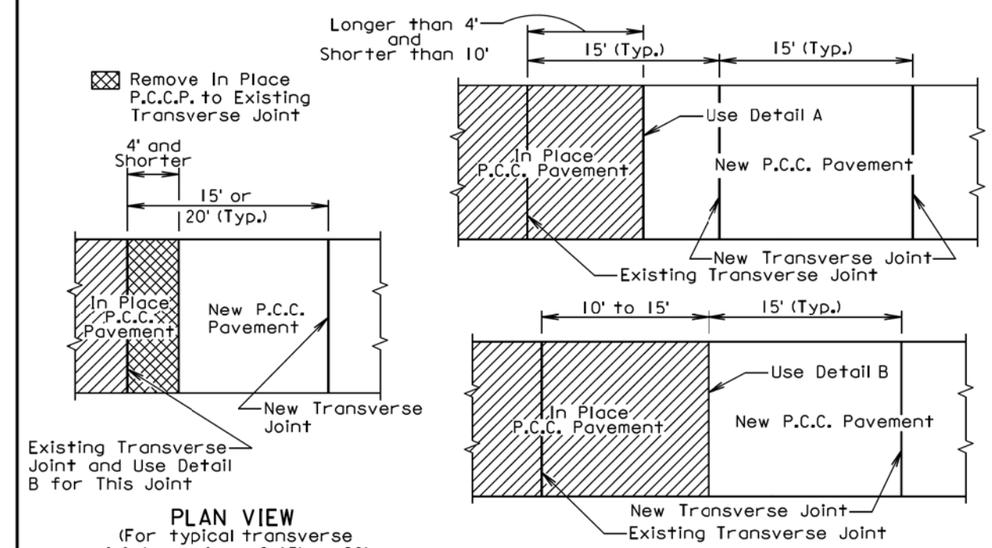

PLAN VIEW
(For typical transverse joint spacing of 15' or 20' on the current project)

PLAN VIEW
(For typical transverse joint spacing of 15' on the current project)

September 6, 2013

Published Date: 3rd Qtr. 2015	SDDOT	PCC PAVEMENT TRANSVERSE CONSTRUCTION JOINTS WITH TIE BARS OR DOWEL BARS	PLATE NUMBER 380.08
			Sheet 2 of 2

PLOT SCALE - 1:200
PLOT NAME - 30
FILE - ...\STDPLATEPAGE4.DGN
PLOTTED FROM - TRPR18387

LONGITUDINAL CONSTRUCTION JOINT WITH TIE BARS

(DRILLED IN BARS)

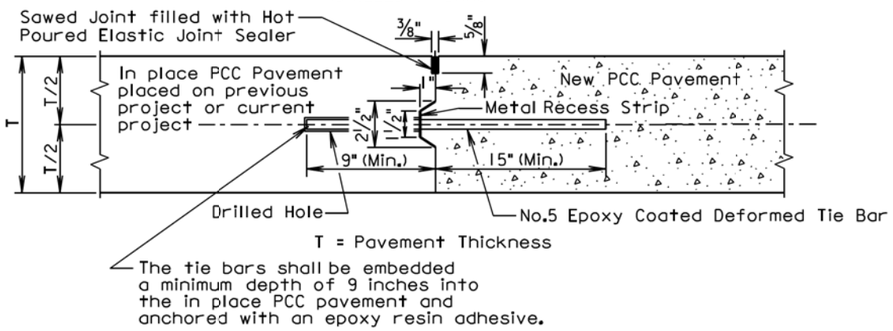

LONGITUDINAL CONSTRUCTION JOINT WITH TIE BARS

(INSERTED OR FORMED IN BARS)

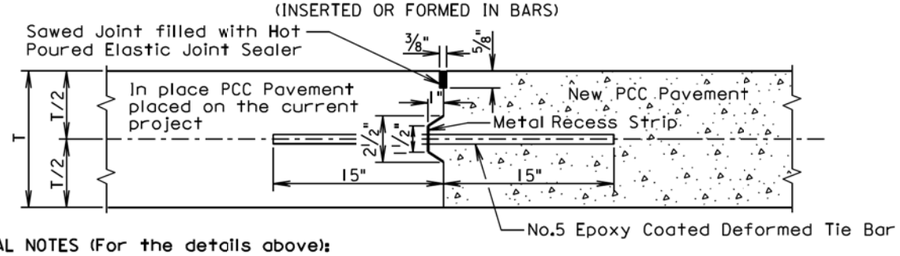

GENERAL NOTES (For the details above):

The epoxy coated deformed tie bars shall be spaced in accordance with the following tables:

Tie Bar Spacing 48" Maximum	
Transverse Contraction Joint Spacing	Number of Tie Bars
6.5' to 10'	2
10.5' to 14'	3
14.5' to 18'	4
18.5' to 22'	5

Tie Bar Spacing 30" Maximum	
Transverse Contraction Joint Spacing	Number of Tie Bars
5' to 7'	2
7.5' to 9.5'	3
10' to 12'	4
12.5' to 14.5'	5
15' to 17'	6
17.5' to 19.5'	7
20' to 22'	8

The tie bars shall be placed a minimum of 15 inches from transverse contraction joints.

The required number of tie bars as shown in the table shall be uniformly spaced within each panel. The uniformly spaced tie bars shall be spaced a maximum of 48 inches center to center for a female keyway and shall be spaced a maximum of 30 inches center to center for a vertical face and male keyway. The maximum tie bar spacing shall apply to tie bars within each panel.

The keyway illustrated in the above details depict a female keyway.

The keyway is optional and is not required. When concrete pavement is formed and a keyway is provided, a metal recess strip shall be used. When concrete pavement is slip formed, a metal recess strip is not required.

August 31, 2013

Published Date: 3rd Qtr. 2015	SDDOT	PCC PAVEMENT LONGITUDINAL JOINTS WITH TIE BARS	PLATE NUMBER 380.10
			Sheet 1 of 2

SAWED LONGITUDINAL JOINT WITH TIE BARS

(POURED MONOLITHICALLY)

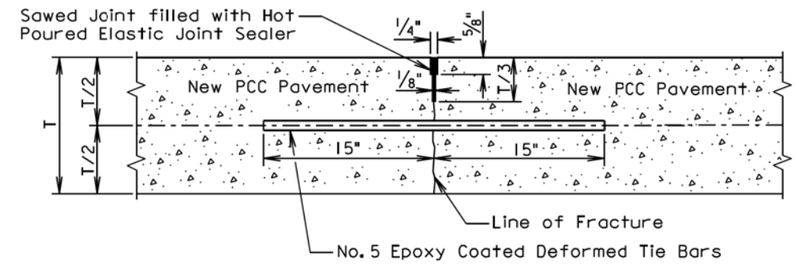

T = Pavement Thickness

GENERAL NOTES (For the detail above):

The epoxy coated deformed tie bars shall be spaced in accordance with the following table:

Tie Bar Spacing 48" Maximum	
Transverse Contraction Joint Spacing	Number of Tie Bars
6.5' to 10'	2
10.5' to 14'	3
14.5' to 18'	4
18.5' to 22'	5

The tie bars shall be placed a minimum of 15 inches from the transverse contraction joints.

The required number of tie bars as shown in the table shall be uniformly spaced within each panel with a maximum space of 48 inches center to center. The maximum tie bar spacing shall apply to tie bars within each panel.

The first saw cut to control cracking shall be a minimum of 1/3 the thickness of the pavement. Additional sawing for widening the saw cut to provide the width for the installation of the hot poured elastic joint sealer is necessary.

August 31, 2013

Published Date: 3rd Qtr. 2015	SDDOT	PCC PAVEMENT LONGITUDINAL JOINTS WITH TIE BARS	PLATE NUMBER 380.10
			Sheet 2 of 2

PLOT SCALE - 1:200
PLOT NAME - 31
FILE - ...\STDPLATEPAGE5.DGN
-PLOTTED FROM - TRPR18387

LONGITUDINAL CONSTRUCTION JOINT WITH TIE BARS
(Individually Formed)

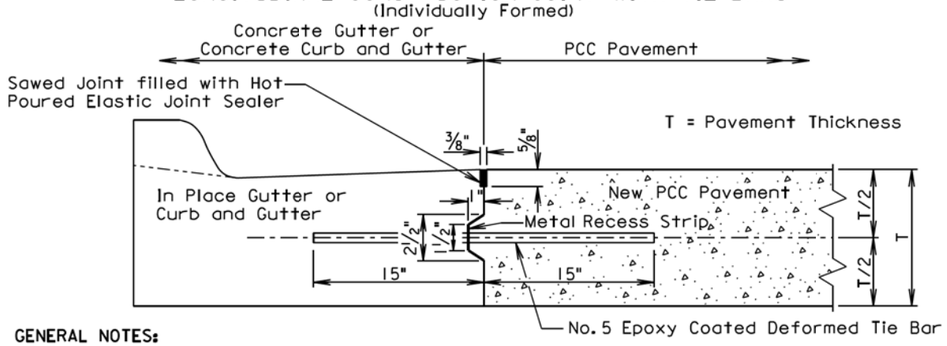

GENERAL NOTES:

No. 5 epoxy coated deformed tie bars shall be spaced 48 inches center to center. The keyway shown above is a female keyway.

The tie bars shall be placed a minimum of 15 inches from existing transverse contraction joints.

The keyway is optional and is not required. When concrete pavement is formed and a keyway is provided, a metal recess strip shall be used. When concrete pavement is slip formed, a metal recess strip is not required.

The transverse contraction joints in the concrete gutter or concrete curb and gutter shall be placed at each mainline PCC pavement transverse contraction joint. The transverse contraction joints in the concrete gutter or the concrete curb and gutter shall be 1 1/2 inches deep if formed in fresh concrete using a suitable grooving tool. If a saw is used to cut the transverse contraction joints, then the depth of the joint shall be at least 1/4 the thickness of the concrete gutter or concrete curb and gutter.

The term "In Place Gutter or Curb and Gutter" in the above drawing indicates that the in place concrete gutter and concrete curb and gutter was placed on the current project.

POURED MONOLITHICALLY

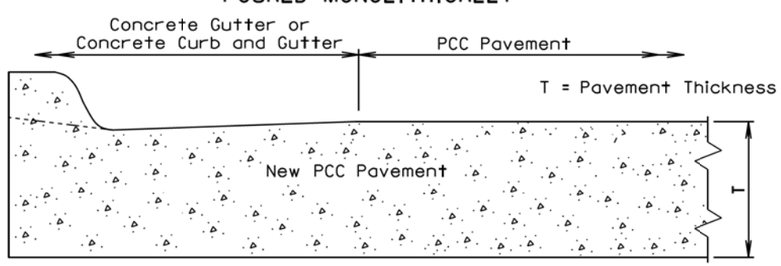

GENERAL NOTES:

The mainline curb and gutter may be placed monolithically with the PCC pavement if the mainline lane width is less than or equal to 12 feet. If this method of construction is used, the tie bars and the sawed joint between the curb and gutter and the PCC pavement shall be eliminated.

The gutter or curb and gutter shall be sawed transversely at each mainline transverse contraction joint. The transverse contraction joints in the gutter or curb and gutter shall be sawed and sealed same as the transverse contraction joints in the PCC pavement.

The slope of the gutter shall be the slope designated for the type of gutter or curb and gutter to be constructed. The bottom slope of the gutter or curb and gutter shall be constructed at the same slope as the mainline concrete pavement.

June 26, 2013

Published Date: 3rd Qtr. 2015	SDDOT	PCC PAVEMENT LONGITUDINAL CONSTRUCTION JOINTS WITH CONCRETE GUTTER OR CONCRETE CURB AND GUTTER	PLATE NUMBER 380.11 / Sheet 1 of 1

LONGITUDINAL CONSTRUCTION JOINT WITHOUT TIE BARS

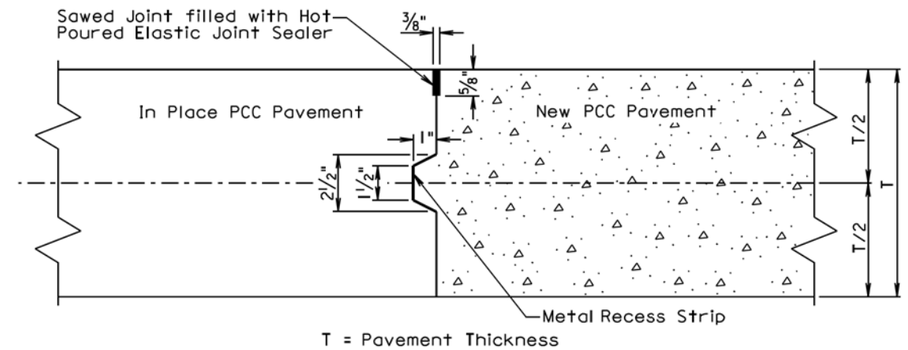

GENERAL NOTES:

When concrete pavement is formed and a keyway is provided, a metal recess strip shall be used. When concrete pavement is slip formed, a metal recess strip is not required.

The term "In Place PCC Pavement" in the above drawing indicates that the in place PCC pavement was placed on the current project.

LONGITUDINAL CONSTRUCTION JOINT WITHOUT TIE BARS

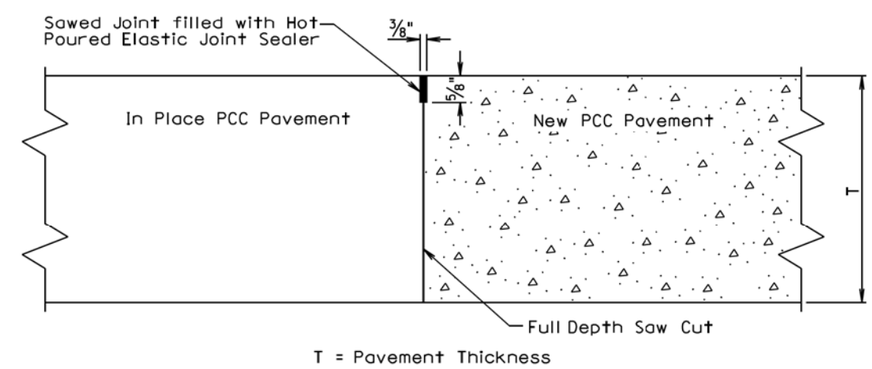

GENERAL NOTE:

The term "In Place PCC Pavement" in the above drawing indicates that the in place PCC pavement was placed on a previous project.

September 14, 2001

Published Date: 3rd Qtr. 2015	SDDOT	PCC PAVEMENT LONGITUDINAL JOINTS WITHOUT TIE BARS	PLATE NUMBER 380.12 / Sheet 1 of 2

PLOT SCALE - 1:200
PLOTTED FROM - TRPR18387
PLOT NAME - 32
FILE - ...\STDPLATEPAGE6.DGN

SAWED LONGITUDINAL JOINT WITHOUT TIE BARS

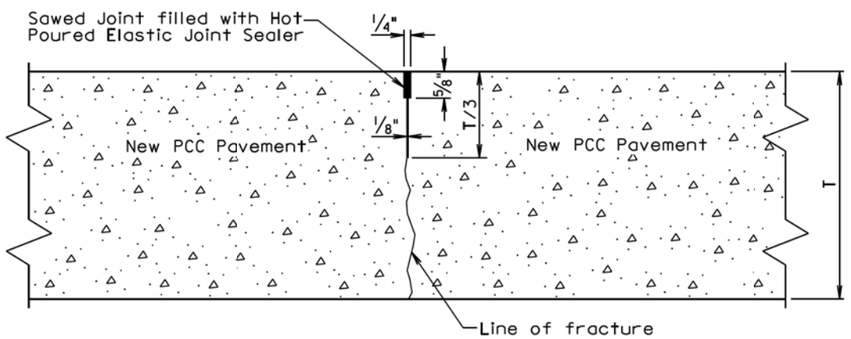

T = Pavement Thickness

GENERAL NOTE:

The first saw cut to control cracking shall be a minimum of 1/3 the thickness of the pavement. Additional sawing for widening the saw cut to provide the width for the installation of the hot poured elastic joint sealer will be necessary.

September 14, 2001

Published Date: 3rd Qtr. 2015 | SDDOT | PCC PAVEMENT LONGITUDINAL JOINTS WITHOUT TIE BARS | PLATE NUMBER 380.12 | Sheet 2 of 2

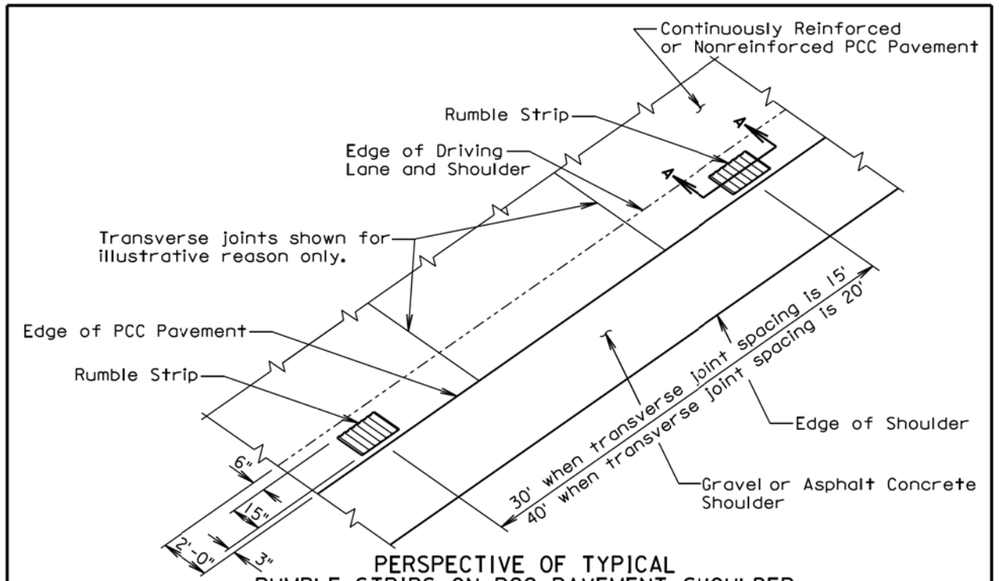

PERSPECTIVE OF TYPICAL
RUMBLE STRIPS ON PCC PAVEMENT SHOULDER
ADJACENT TO GRAVEL OR ASPHALT CONCRETE SHOULDER

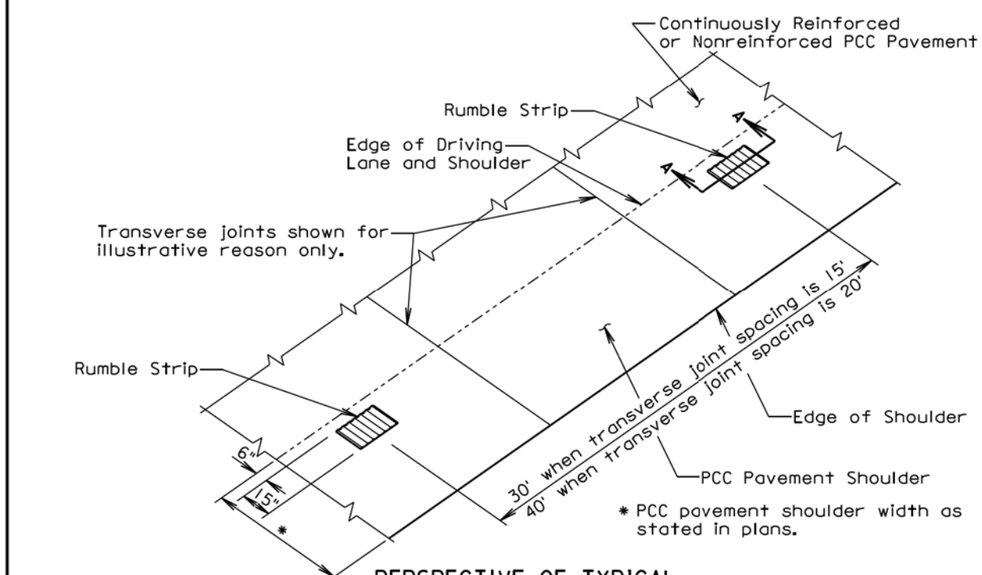

* PCC pavement shoulder width as stated in plans.

PERSPECTIVE OF TYPICAL
RUMBLE STRIPS ON PCC PAVEMENT SHOULDER

August 31, 2013

Published Date: 3rd Qtr. 2015 | SDDOT | RUMBLE STRIP ON PCC PAVEMENT SHOULDER | PLATE NUMBER 380.15 | Sheet 1 of 2

PLOT SCALE - 1:200
PLOTTED FROM - TRPR18387
PLOT NAME - 33
FILE - ...\STDPLATEPAGE7.DGN

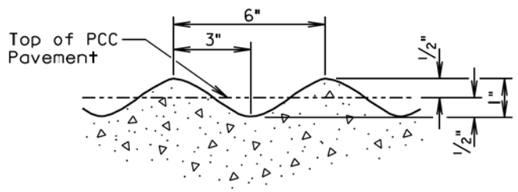

DETAIL B

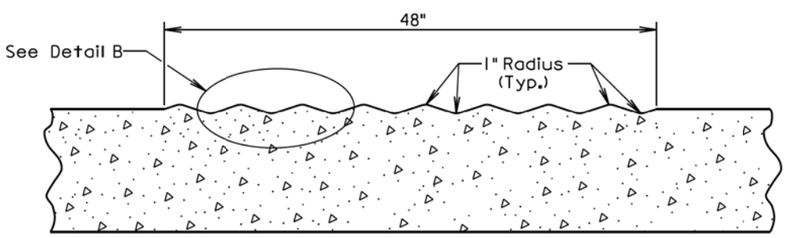

SECTION A-A

GENERAL NOTES:

The rumble strips shall be evenly spaced and shall not coincide with any transverse contraction joints.

The rumble strips shall NOT be placed along areas adjacent to entrance ramps, exit ramps, and gore areas.

Payment for constructing the PCC Pavement Rumble Strips shall be incidental to the contract unit price per square yard for the corresponding PCC Pavement bid item.

August 31, 2013

Published Date: 3rd Qtr. 2015	SDDOT	RUMBLE STRIP ON PCC PAVEMENT SHOULDER	PLATE NUMBER 380.15
			Sheet 2 of 2

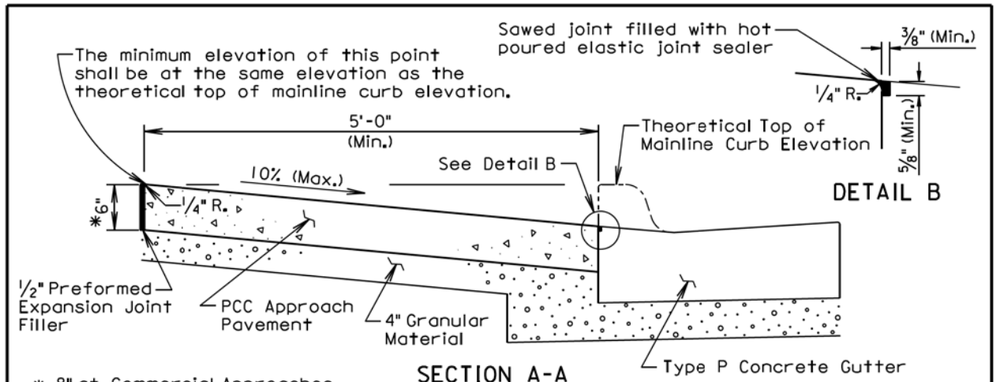

DETAIL B

SECTION A-A

* 8" at Commercial Approaches

** Width for 6" high curb is 6' (See Standard Plate 650.35)

*** Within these areas, the surface of the type A PCC approach pavement shall be sloped transitionally as approved by the Engineer.

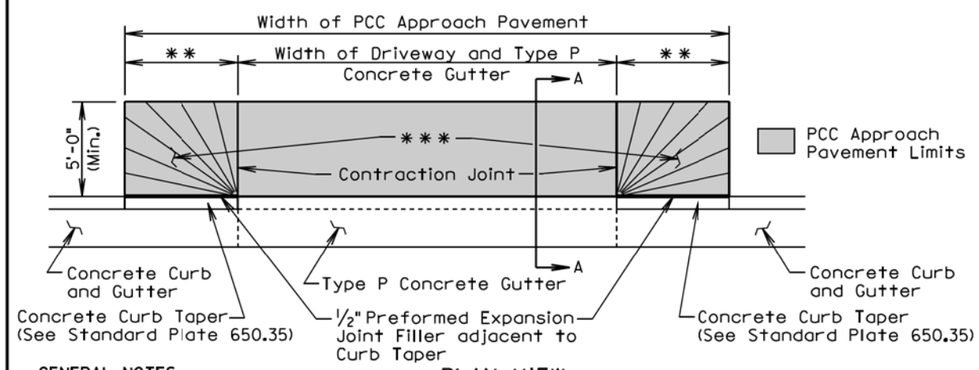

PLAN VIEW

GENERAL NOTES:

The concrete for the type A PCC approach pavement and adjacent driveway shall comply with the requirements of the Specifications for class M6 concrete unless otherwise stated in the plans.

Contraction joints in the type A PCC approach pavement shall be 1 1/2 inches deep if formed in the fresh concrete using a suitable grooving tool. If a saw is used to cut the contraction joints, then the depth of the joint shall be at least 1/4 the thickness of the approach pavement. Additional contraction joints not shown in the Plan View shall be spaced as follows:

One joint at the center of the approach for driveways 16' to 24' wide.
Two joints spaced at equal intervals for driveways greater than 24' to 40' wide.

All costs for furnishing and placing the type A PCC approach pavement and constructing the expansion and contraction joints including labor, equipment, and materials including the earthen backfill shall be incidental to the contract unit price per square yard for the corresponding PCC Approach Pavement bid item.

All costs for excavation required for placing the type A PCC approach pavement and granular material shall be incidental to the contract unit price per cubic yard for "Unclassified Excavation". All costs for furnishing and placing the granular material shall be incidental to the contract unit price per ton for the corresponding granular material bid item.

June 26, 2015

Published Date: 3rd Qtr. 2015	SDDOT	TYPE A PCC APPROACH PAVEMENT	PLATE NUMBER 380.40
			Sheet 1 of 1

PLOT SCALE - 1:200
PLOT NAME - 34
FILE - ...\STDPLATEPAGE8.DGN
PLOTTED FROM - TRPR18387

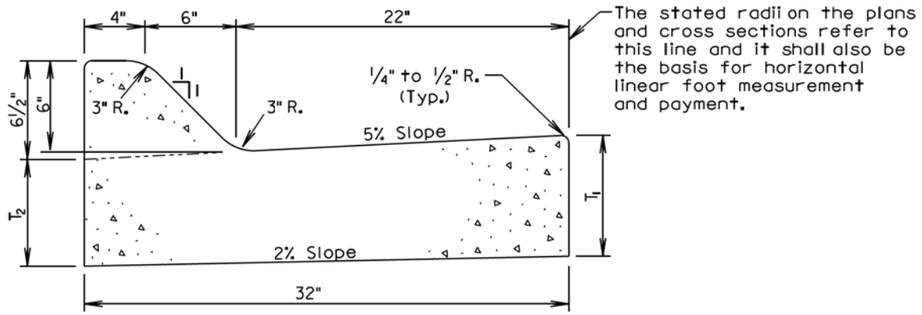

Type	T_1 (Inches)	T_2 (Inches)	Cu. Yd. Per Lin. Ft.	Lin. Ft. Per Cu. Yd.
F66	6	5 1/16	0.057	17.6
F67	7	6 1/16	0.065	15.4
F68	8	7 1/16	0.073	13.6
F68.5	8.5	7 9/16	0.077	12.9
F69	9	8 1/16	0.082	12.3
F69.5	9.5	8 9/16	0.086	11.7
F610	10	9 1/16	0.090	11.1
F610.5	10.5	9 9/16	0.094	10.7
F611	11	10 1/16	0.098	10.2
F611.5	11.5	10 9/16	0.102	9.8
F612	12	11 1/16	0.106	9.4

GENERAL NOTES:

When concrete curb and gutter longitudinally adjoins new concrete pavement, the method of attachment shall be by one of the methods shown on Standard Plate 380.11.

See Standard Plate 650.90 for expansion and contraction joints in the curb and gutter.

September 6, 2008

Published Date: 3rd Qtr. 2015	SDDOT	TYPE F CONCRETE CURB AND GUTTER	PLATE NUMBER 650.20
			Sheet 1 of 1

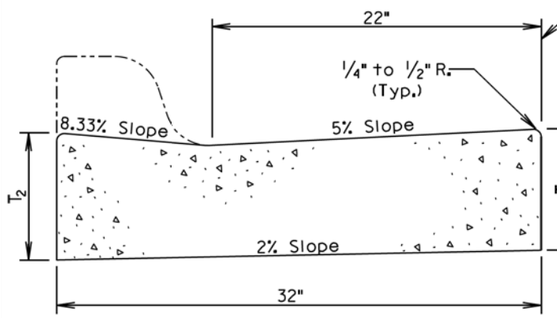

TRANSVERSE SECTION

Type	T_1 (Inches)	T_2 (Inches)	Cu. Yd. Per Lin. Ft.	Lin. Ft. Per Cu. Yd.
P6	6	6 3/8	0.047	21.2
P7	7	7 3/8	0.055	18.1
P8	8	8 3/8	0.064	15.7
P8.5	8.5	8 7/8	0.068	14.8
P9	9	9 3/8	0.072	13.9
P9.5	9.5	9 7/8	0.076	13.2
P10	10	10 3/8	0.080	12.5
P10.5	10.5	10 7/8	0.084	11.9
P11	11	11 3/8	0.088	11.3
P11.5	11.5	11 7/8	0.092	10.8
P12	12	12 3/8	0.096	10.4

Type P Concrete Gutter Limits

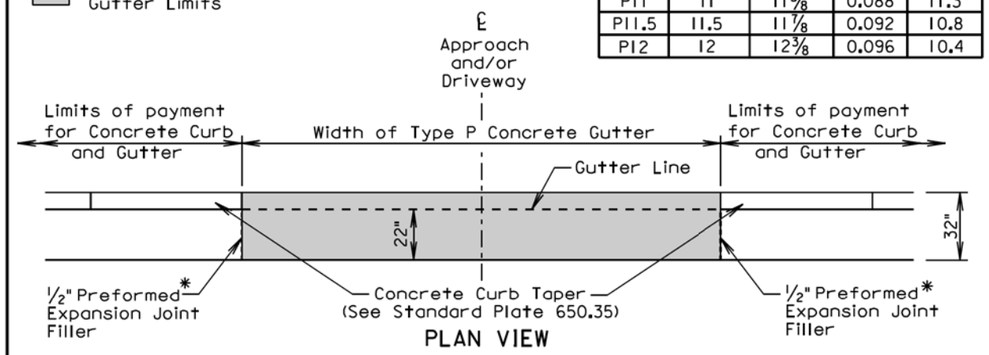

PLAN VIEW

* Joint will not be needed if concrete curb and gutter and type P concrete gutter is placed at the same time. If the ½" Preformed Expansion Joint Filler is provided, then the joint shall be sealed in accordance with standard plate 650.90.

GENERAL NOTES:

The concrete for the Type P Concrete Gutter shall comply with the requirements of the Standard Specifications for Class M6 Concrete.

When concrete gutter longitudinally adjoins new concrete pavement, the method of attachment shall be by one of the methods shown on Standard Plate 380.11.

Transverse contraction joints shall be constructed at 10' intervals in the concrete gutter except when concrete gutter is constructed adjacent to mainline PCC pavement. When concrete gutter is constructed adjacent to mainline PCC pavement, a transverse contraction joint shall be constructed in the concrete gutter at each mainline PCC pavement transverse contraction joint location.

When concrete gutter is placed monolithically with mainline PCC pavement, the transverse contraction joints in the concrete gutter shall be sawed and sealed the same as the transverse contraction joints in the mainline PCC pavement.

When concrete gutter is not placed monolithically with the mainline PCC pavement and when the adjacent mainline surfacing is not PCC concrete, the transverse contraction joints in the concrete gutter shall be 1½ inches deep if formed in the fresh concrete using a suitable grooving tool. If a saw is used to cut the contraction joints, then the depth of the joint shall be at least ¼ the thickness of the concrete.

September 6, 2013

Published Date: 3rd Qtr. 2015	SDDOT	TYPE P CONCRETE GUTTER	PLATE NUMBER 650.30
			Sheet 1 of 1

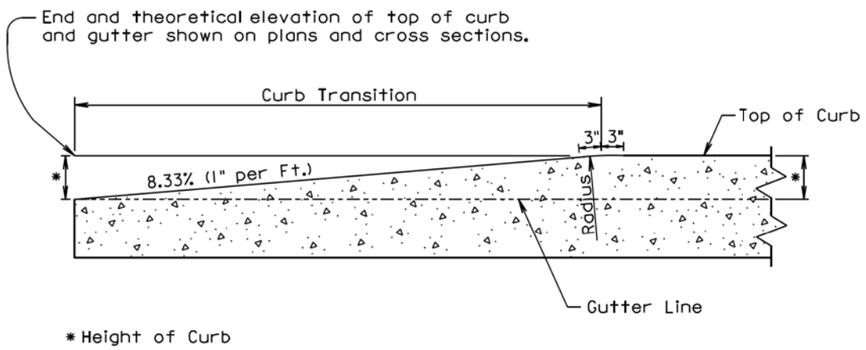

LONGITUDINAL SECTION OF CONCRETE CURB TAPER

September 14, 2005

Published Date: 3rd Qtr. 2015	SDDOT	CONCRETE CURB TAPER	PLATE NUMBER 650.35 Sheet 1 of 1

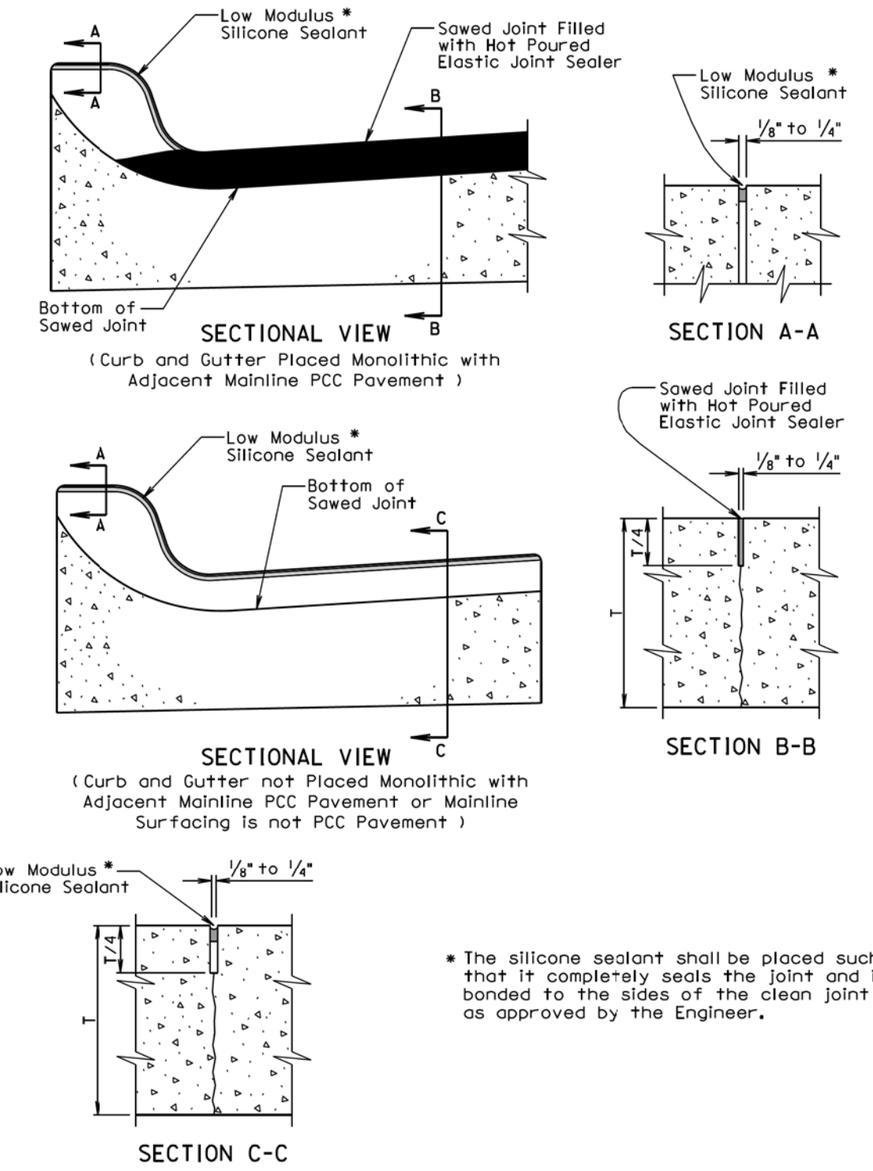

* The silicone sealant shall be placed such that it completely seals the joint and is bonded to the sides of the clean joint as approved by the Engineer.

September 6, 2013

Published Date: 3rd Qtr. 2015	SDDOT	JOINTS IN CONCRETE CURB AND GUTTER	PLATE NUMBER 650.90 Sheet 1 of 2

PLOT SCALE - 1:200
PLOT NAME - 36
FILE - ...\STDPLATEPAGE10.DGN
PLOTTED FROM - TRPR19387

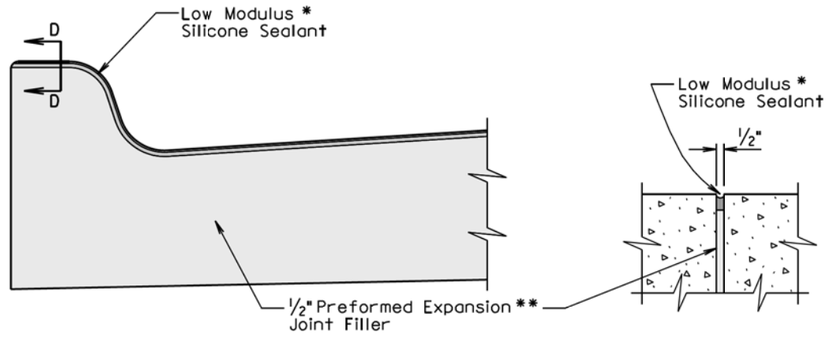

SECTIONAL VIEW
(Curb and Gutter at ½" Preformed Expansion Joint Filler Location)

SECTION D-D

* The silicone sealant shall be placed such that it completely seals the joint and is bonded to the sides of the clean joint as approved by the Engineer.

GENERAL NOTES:

For illustrative reason, only the type B curb and gutter is shown.

** A ½" preformed expansion joint filler shall be placed transversely in the curb and gutter at the following locations:

1. At each junction between the radius return of curb and gutter and curb and gutter which is parallel to the project centerline.
2. At each junction between new curb and gutter and existing curb and gutter.

Transverse contraction joints shall be constructed at 10' intervals in the concrete curb and gutter except when the concrete curb and gutter is constructed adjacent to mainline PCC pavement. When concrete curb and gutter is constructed adjacent to mainline PCC pavement, a transverse contraction joint shall be constructed in the concrete curb and gutter at each mainline PCC pavement transverse contraction joint location.

When concrete curb and gutter is not placed monolithically with the mainline PCC pavement or when the adjacent mainline surfacing is not PCC concrete, the transverse contraction joints in the concrete curb and gutter shall be 1½ inches deep if formed in the fresh concrete using a suitable grooving tool. If a saw is used to cut the contraction joints, then the depth of the joint shall be at least ¼ the thickness of the concrete and the joint shall be sealed in accordance with the details shown above.

September 6, 2013

Published Date: 3rd Qtr. 2015	SDDOT	JOINTS IN CONCRETE CURB AND GUTTER	PLATE NUMBER 650.90
			Sheet 2 of 2

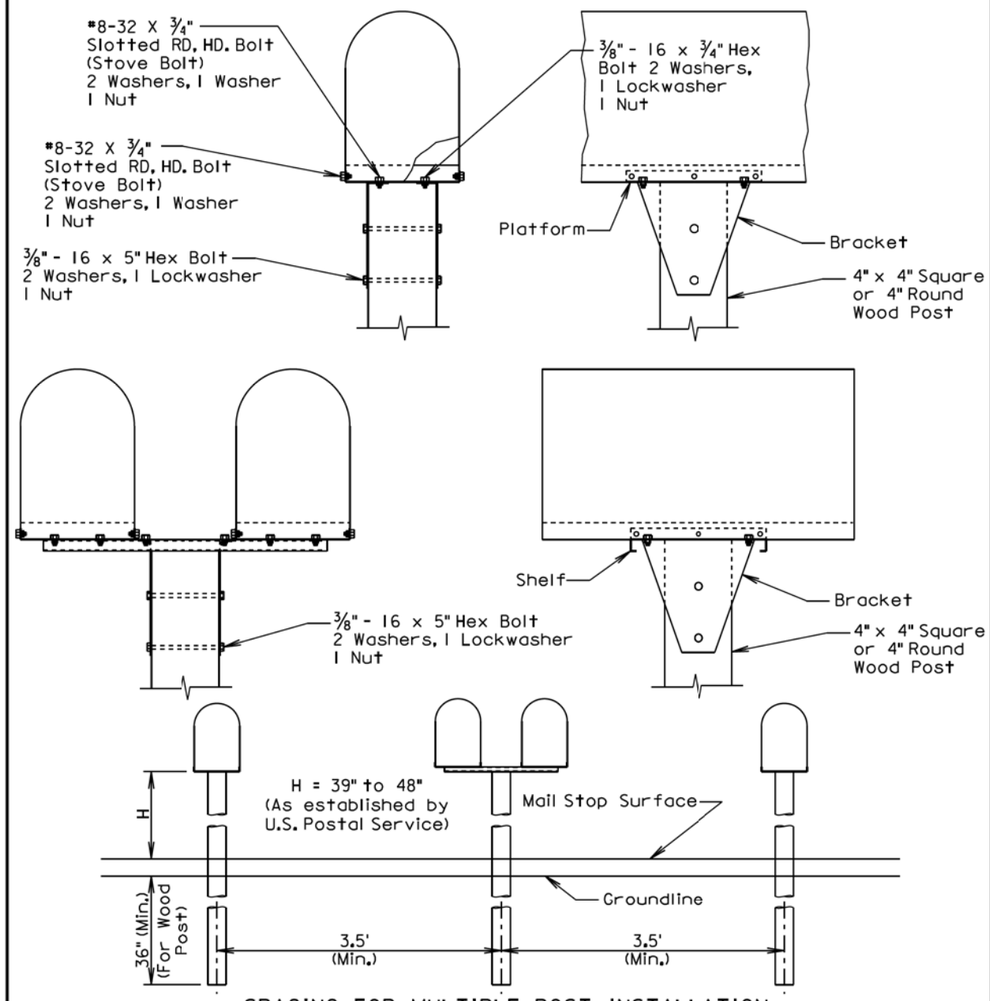

SPACING FOR MULTIPLE POST INSTALLATION

GENERAL NOTES:

The post support assemblies provided should be consistant throughout the project.

Single and double mailboxes may be in any sequence.

Post support assemblies shall be one from the approved products list, a 4"x4" or 4" round wood post, or an alternate post support assembly that meets the test level 3 crash testing requirements of NCHRP 350 or MASH.

Alternate mailbox support assemblies shall be approved by the Engineer prior to installation. The Contractor shall provide the Engineer written certification that the mailbox support assembly has met the crash testing requirements and will be installed in accordance with the manufacturer's installation instructions.

September 6, 2013

Published Date: 3rd Qtr. 2015	SDDOT	SINGLE AND DOUBLE MAILBOX ASSEMBLIES	PLATE NUMBER 900.02
			Sheet 1 of 1

PLOT SCALE - 1:200
PLOT NAME - 37
FILE - ...\STDPLATEPAGE11.DGN
PLOTTED FROM - TRPR18387

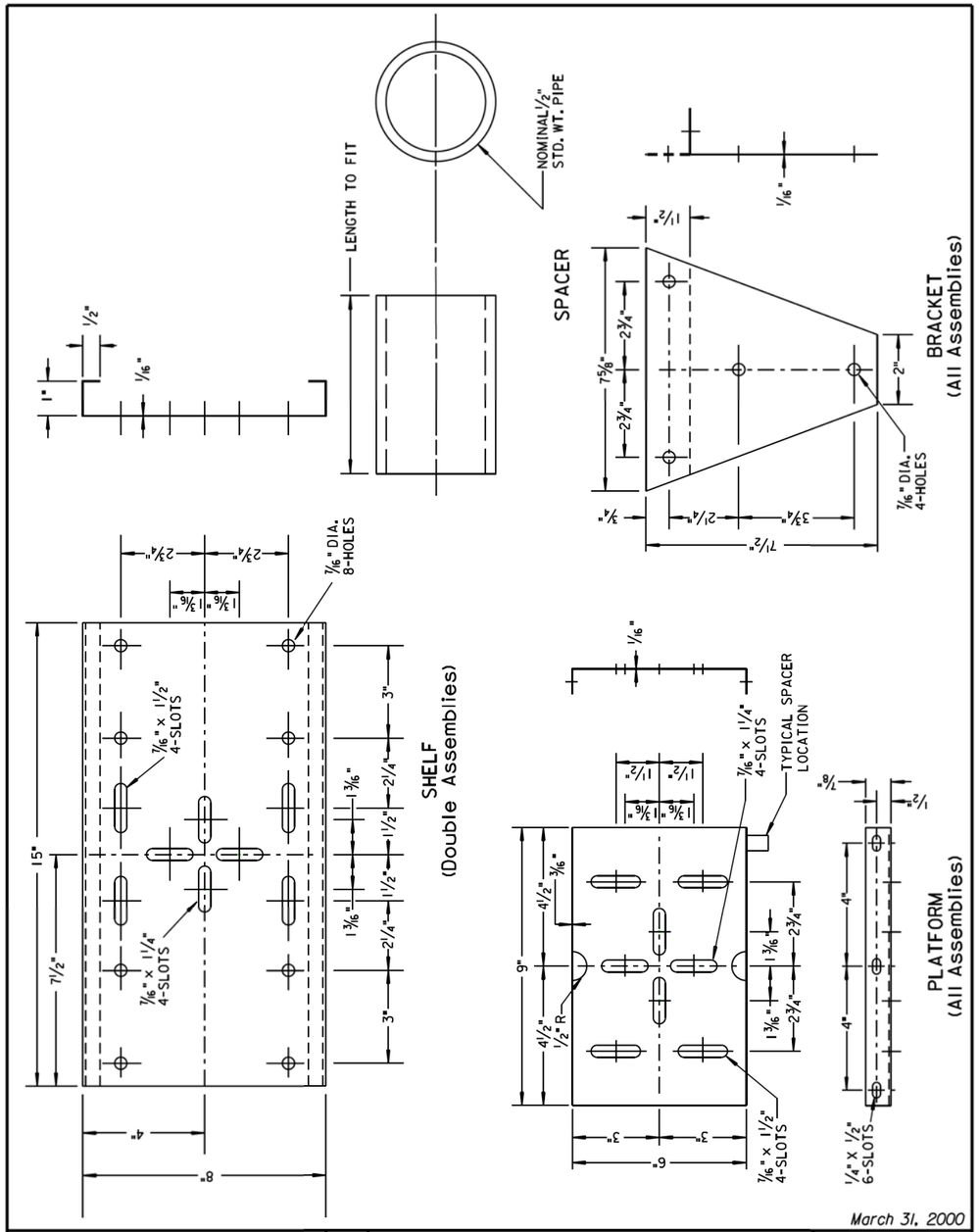

March 31, 2000

Published Date: 3rd Qtr. 2015	SDDOT	MAILBOX SUPPORT HARDWARE	PLATE NUMBER 900.03
			Sheet 1 of 1

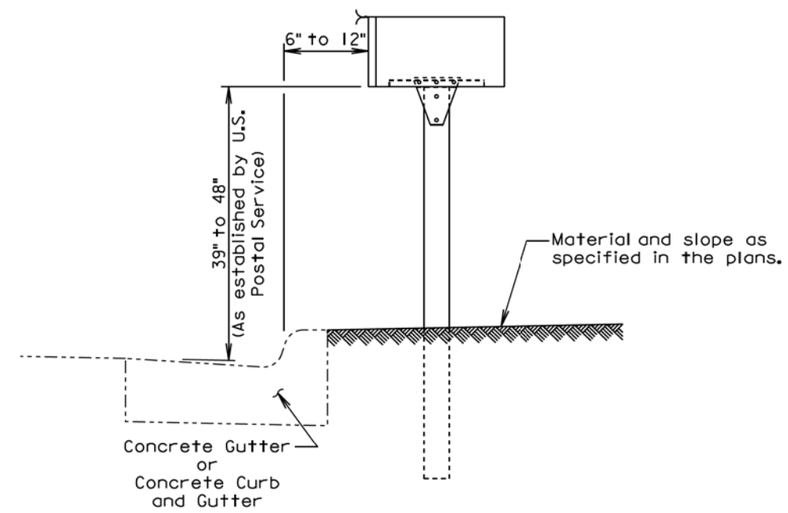

ELEVATION VIEW

GENERAL NOTES:

The post support assemblies provided should be consistant throughout the project.

Post support assemblies shall be one from the approved products list, a 4"x4" or 4" round wood post, or an alternate post support assembly that meets the test level 3 crash testing requirements of NCHRP 350 or MASH.

Alternate mailbox support assemblies shall be approved by the Engineer prior to installation. The Contractor shall provide the Engineer written certification that the mailbox support assembly has met the crash testing requirements and will be installed in accordance with the manufacturer's installation instructions.

February 10, 2014

Published Date: 3rd Qtr. 2015	SDDOT	MAILBOX ADJACENT TO CONCRETE GUTTER OR CONCRETE CURB AND GUTTER	PLATE NUMBER 900.05
			Sheet 1 of 1

PCC OVERLAY CENTERLINE PROFILE

The PCC Overlay centerline profile shown in these plans was used to calculate the cubic yards for the PCC Overlay furnished.
The PCC Overlay centerline profile was designed so that there will be a minimum of 7 inches of PCC at all locations of the typical sections.
The PCC Overlay centerline profile sheets are included in the plans for information only.
The Contractor shall create a new PCC Overlay centerline profile in accordance with the Special Provision for Contractor Staking.
The elevations shown are the top of the PCC Overlay at Centerline.
Profile west of Kranzburg begins at N 399295.335 E 2736358.555 Station 128+78.91 and ends at N 400421.633 E 2765927.041 Station 424+69

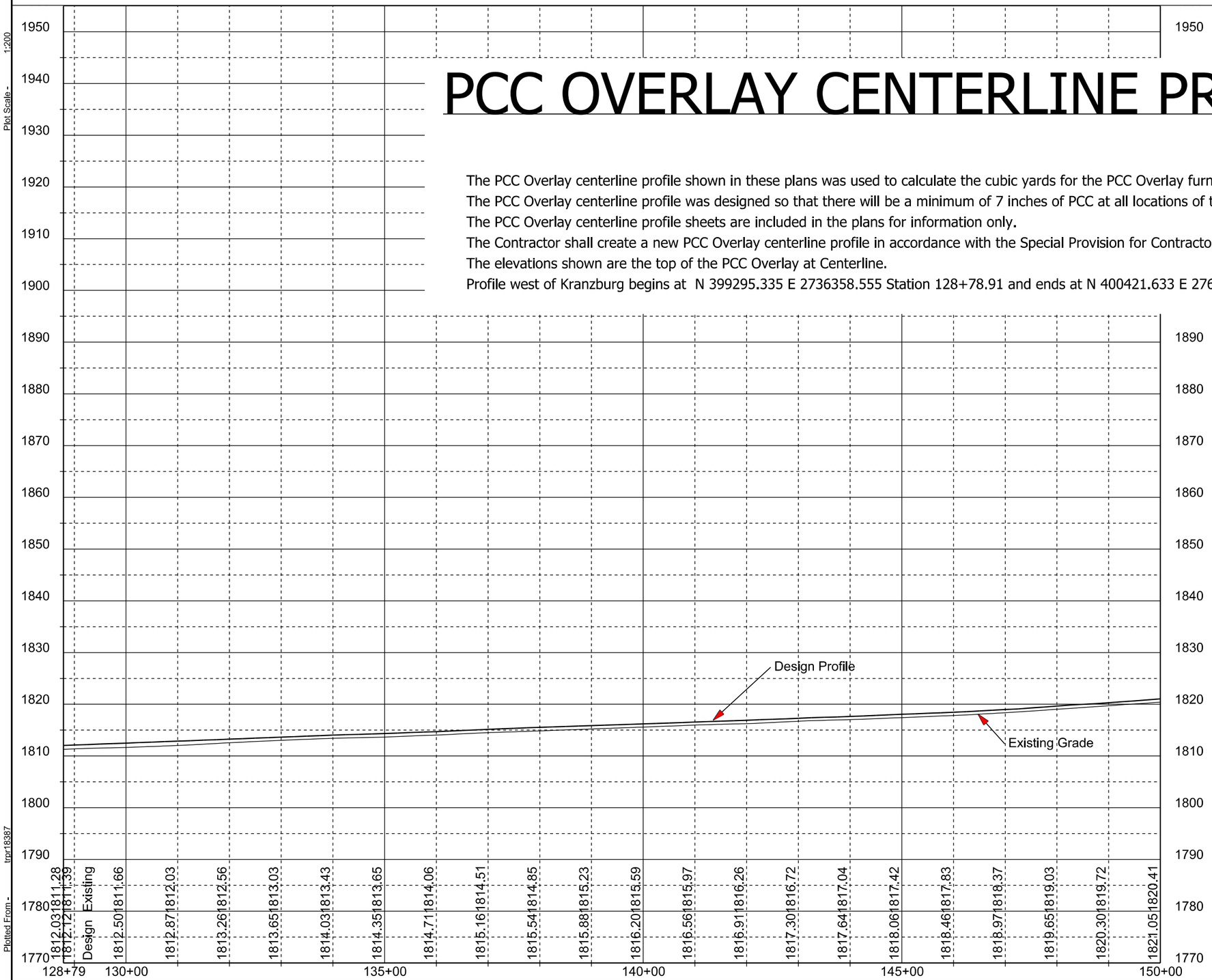

Plot Scale - 1:200
Plotted From - trpr18387
File - U:\ms\prj\codn03RN\1pro.dgn

STATE OF SOUTH DAKOTA	PROJECT	SHEET	TOTAL SHEETS
	NH 0212(162)380	F40	F57

Plotting Date: 08/12/2015

PCC OVERLAY CENTERLINE PROFILE

The PCC Overlay centerline profile shown in these plans was used to calculate the cubic yards for the PCC Overlay furnished.
The PCC Overlay centerline profile was designed so that there will be a minimum of 7 inches of PCC at all locations of the typical sections.
The PCC Overlay centerline profile sheets are included in the plans for information only.
The Contractor shall create a new PCC Overlay centerline profile in accordance with the Special Provision for Contractor Staking.
The elevations shown are the top of the PCC Overlay at Centerline.
Profile west of Kranzburg begins at N 399295.335 E 2736358.555 Station 128+78.91 and ends at N 400421.633 E 2765927.041 Station 424+69

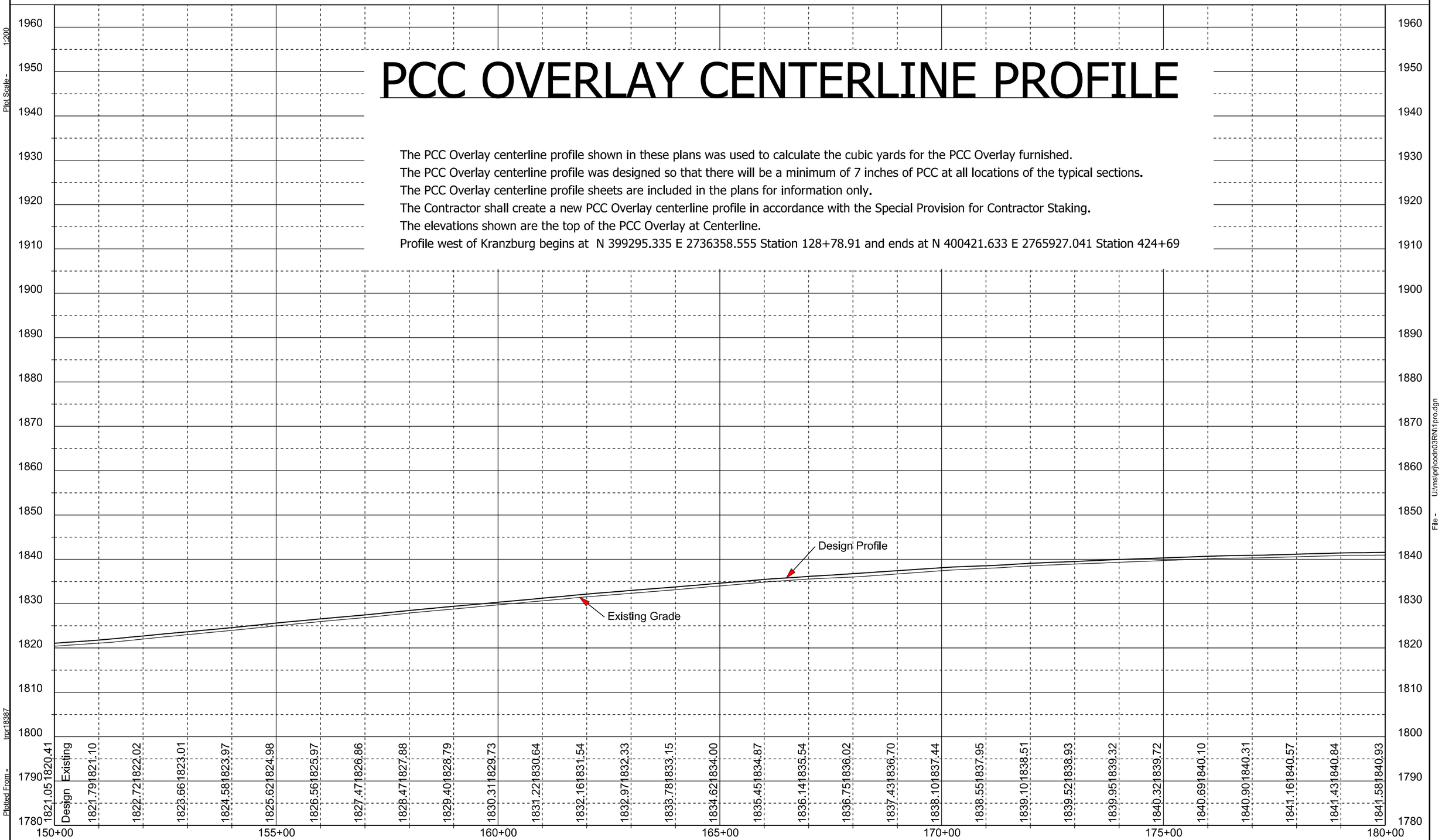

Plot Scale - 1:200
Plotted From - trpr18387
File - U:\ms\prj\codh03RN\1pro.dgn

STATE OF SOUTH DAKOTA	PROJECT	SHEET	TOTAL SHEETS
	NH 0212(162)380	F41	F57

Plotting Date: 08/12/2015

PCC OVERLAY CENTERLINE PROFILE

The PCC Overlay centerline profile shown in these plans was used to calculate the cubic yards for the PCC Overlay furnished.
The PCC Overlay centerline profile was designed so that there will be a minimum of 7 inches of PCC at all locations of the typical sections.
The PCC Overlay centerline profile sheets are included in the plans for information only.
The Contractor shall create a new PCC Overlay centerline profile in accordance with the Special Provision for Contractor Staking.
The elevations shown are the top of the PCC Overlay at Centerline.
Profile west of Kranzburg begins at N 399295.335 E 2736358.555 Station 128+78.91 and ends at N 400421.633 E 2765927.041 Station 424+69

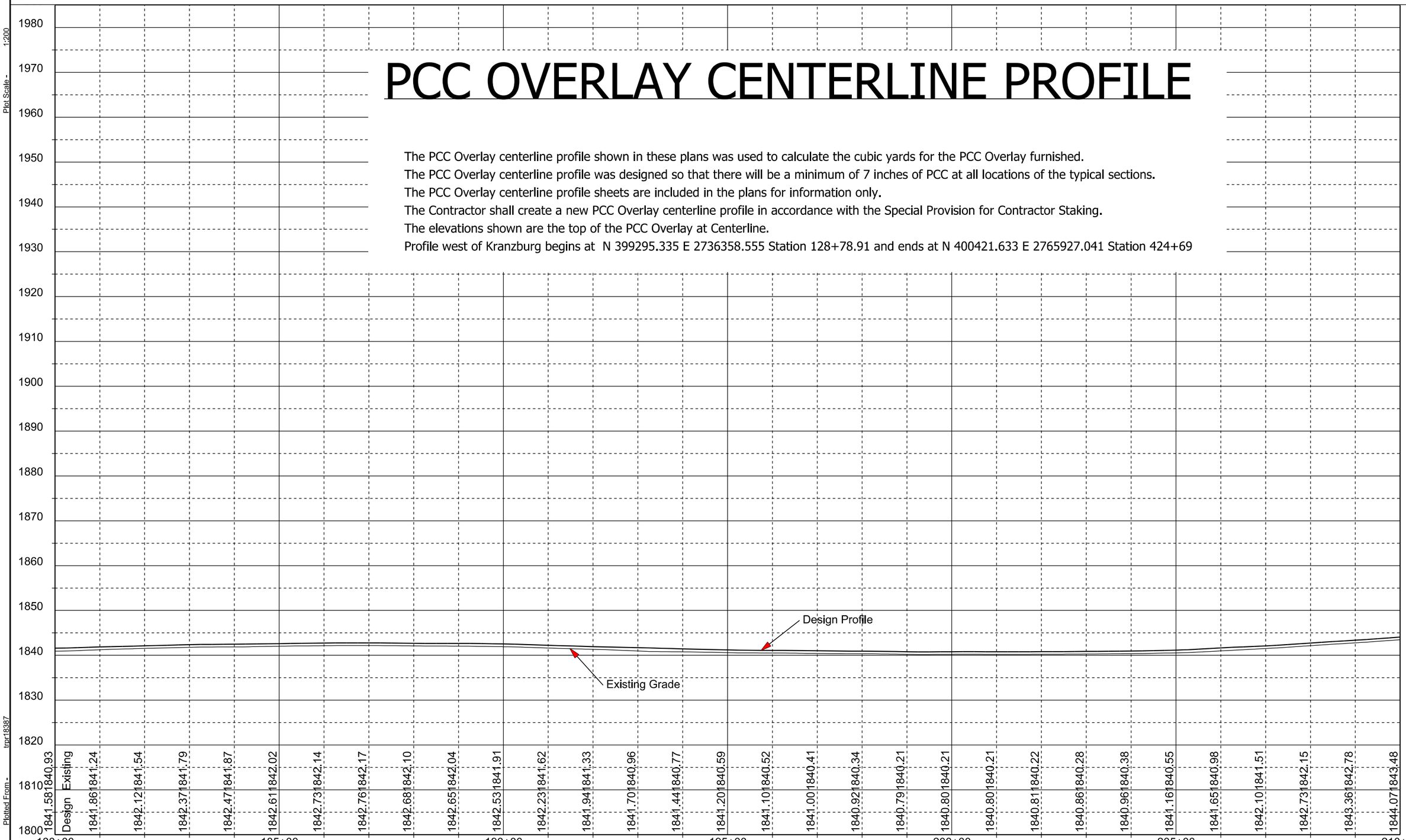

Plot Scale - 1:200

Plotted From - trpr18387

File - U:\ms\prj\codh03RN\1pro.dgn

STATE OF SOUTH DAKOTA	PROJECT	SHEET	TOTAL SHEETS
	NH 0212(162)380	F42	F57

Plotting Date: 08/12/2015

PCC OVERLAY CENTERLINE PROFILE

The PCC Overlay centerline profile shown in these plans was used to calculate the cubic yards for the PCC Overlay furnished.
The PCC Overlay centerline profile was designed so that there will be a minimum of 7 inches of PCC at all locations of the typical sections.
The PCC Overlay centerline profile sheets are included in the plans for information only.
The Contractor shall create a new PCC Overlay centerline profile in accordance with the Special Provision for Contractor Staking.
The elevations shown are the top of the PCC Overlay at Centerline.
Profile west of Kranzburg begins at N 399295.335 E 2736358.555 Station 128+78.91 and ends at N 400421.633 E 2765927.041 Station 424+69

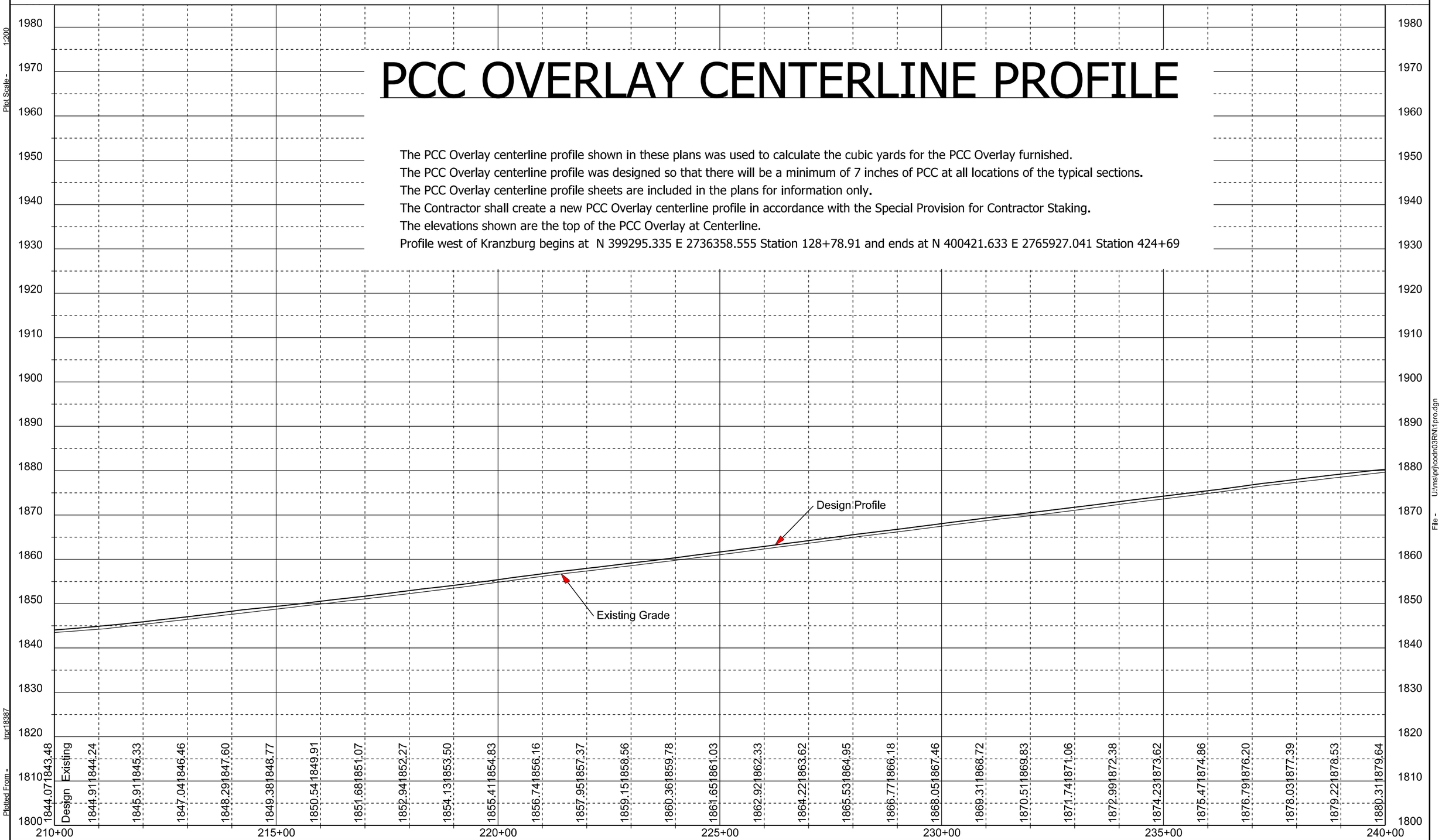

Plot Scale - 1:200

Plotted From - trpr18387

File - U:\ms\prj\codh03RN\1pro.dgn

STATE OF SOUTH DAKOTA	PROJECT	SHEET	TOTAL SHEETS
	NH 0212(162)380	F43	F57

Plotting Date: 08/12/2015

PCC OVERLAY CENTERLINE PROFILE

The PCC Overlay centerline profile shown in these plans was used to calculate the cubic yards for the PCC Overlay furnished.
The PCC Overlay centerline profile was designed so that there will be a minimum of 7 inches of PCC at all locations of the typical sections.
The PCC Overlay centerline profile sheets are included in the plans for information only.
The Contractor shall create a new PCC Overlay centerline profile in accordance with the Special Provision for Contractor Staking.
The elevations shown are the top of the PCC Overlay at Centerline.
Profile west of Kranzburg begins at N 399295.335 E 2736358.555 Station 128+78.91 and ends at N 400421.633 E 2765927.041 Station 424+69

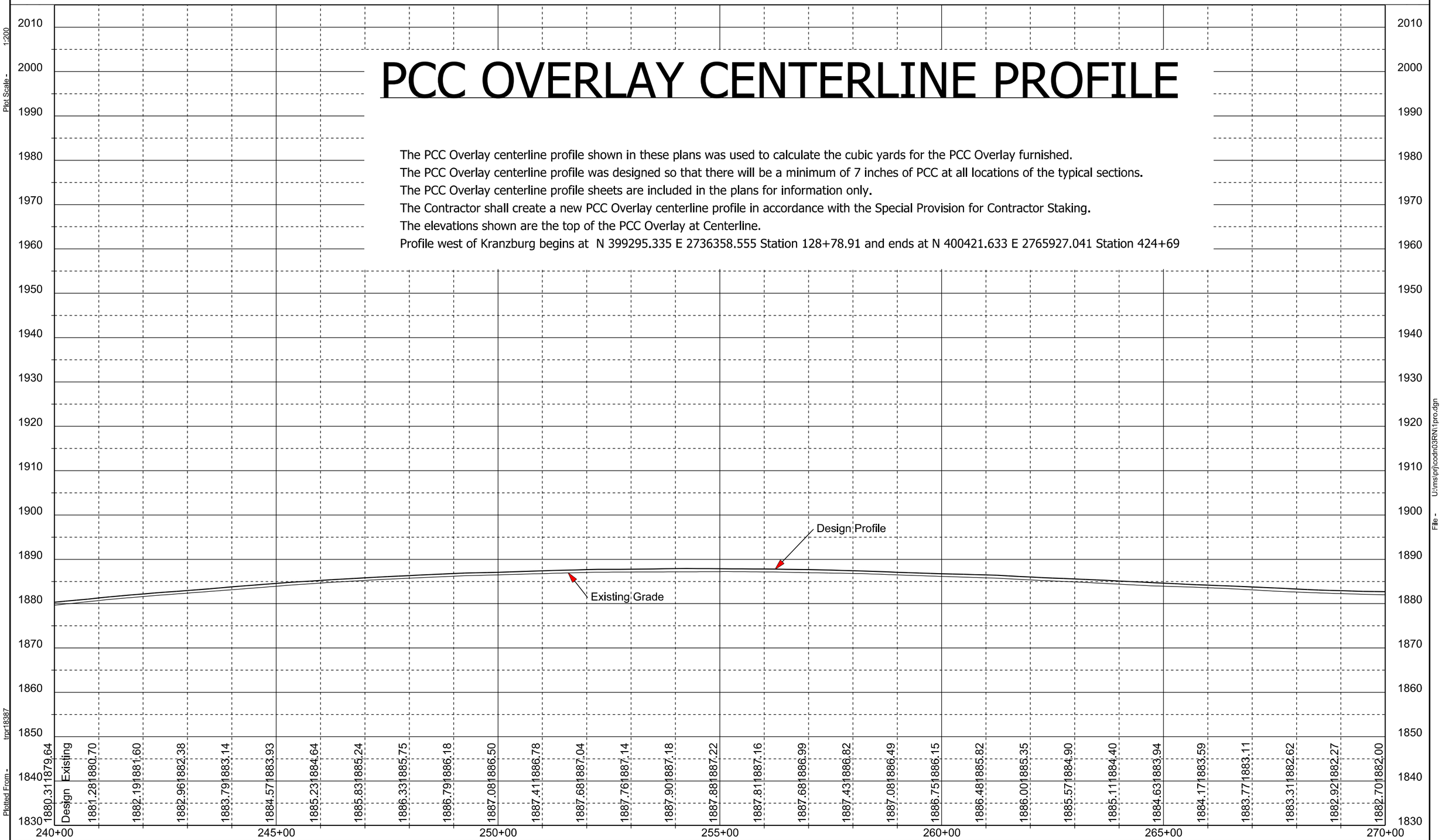

Plot Scale - 1:200
Plotted From - tnpr18387
File - U:\ms\prj\codh03RN\1pro.dgn

STATE OF SOUTH DAKOTA	PROJECT	SHEET	TOTAL SHEETS
	NH 0212(162)380	F44	F57

Plotting Date: 08/12/2015

PCC OVERLAY CENTERLINE PROFILE

The PCC Overlay centerline profile shown in these plans was used to calculate the cubic yards for the PCC Overlay furnished.
The PCC Overlay centerline profile was designed so that there will be a minimum of 7 inches of PCC at all locations of the typical sections.
The PCC Overlay centerline profile sheets are included in the plans for information only.
The Contractor shall create a new PCC Overlay centerline profile in accordance with the Special Provision for Contractor Staking.
The elevations shown are the top of the PCC Overlay at Centerline.
Profile west of Kranzburg begins at N 399295.335 E 2736358.555 Station 128+78.91 and ends at N 400421.633 E 2765927.041 Station 424+69

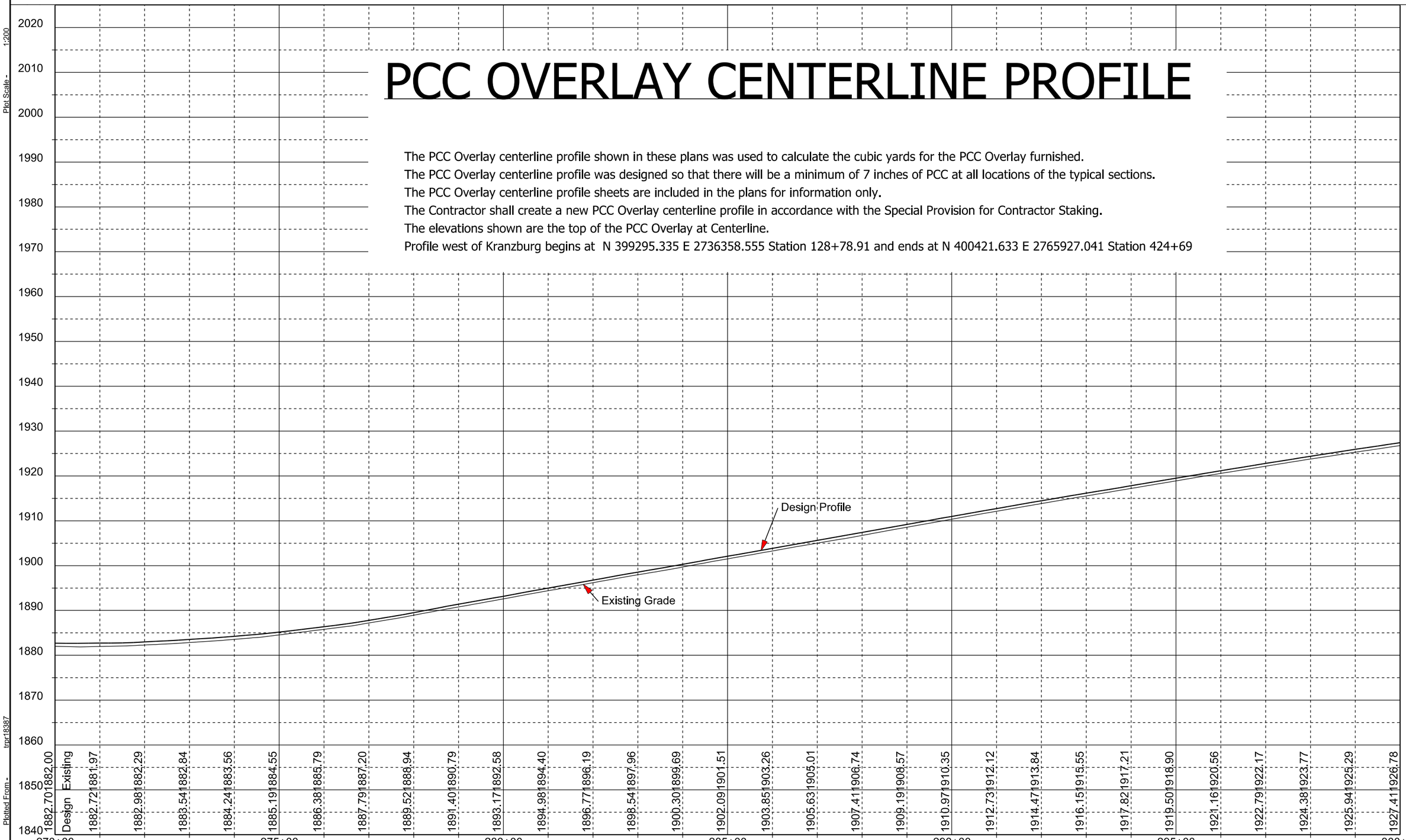

Plot Scale - 1:200

Plotted From - trpr18387

File - U:\ms\prj\codh03RN\1pro.dgn

STATE OF SOUTH DAKOTA	PROJECT	SHEET	TOTAL SHEETS
	NH 0212(162)380	F45	F57

Plotting Date: 08/12/2015

PCC OVERLAY CENTERLINE PROFILE

The PCC Overlay centerline profile shown in these plans was used to calculate the cubic yards for the PCC Overlay furnished.
The PCC Overlay centerline profile was designed so that there will be a minimum of 7 inches of PCC at all locations of the typical sections.
The PCC Overlay centerline profile sheets are included in the plans for information only.
The Contractor shall create a new PCC Overlay centerline profile in accordance with the Special Provision for Contractor Staking.
The elevations shown are the top of the PCC Overlay at Centerline.
Profile west of Kranzburg begins at N 399295.335 E 2736358.555 Station 128+78.91 and ends at N 400421.633 E 2765927.041 Station 424+69

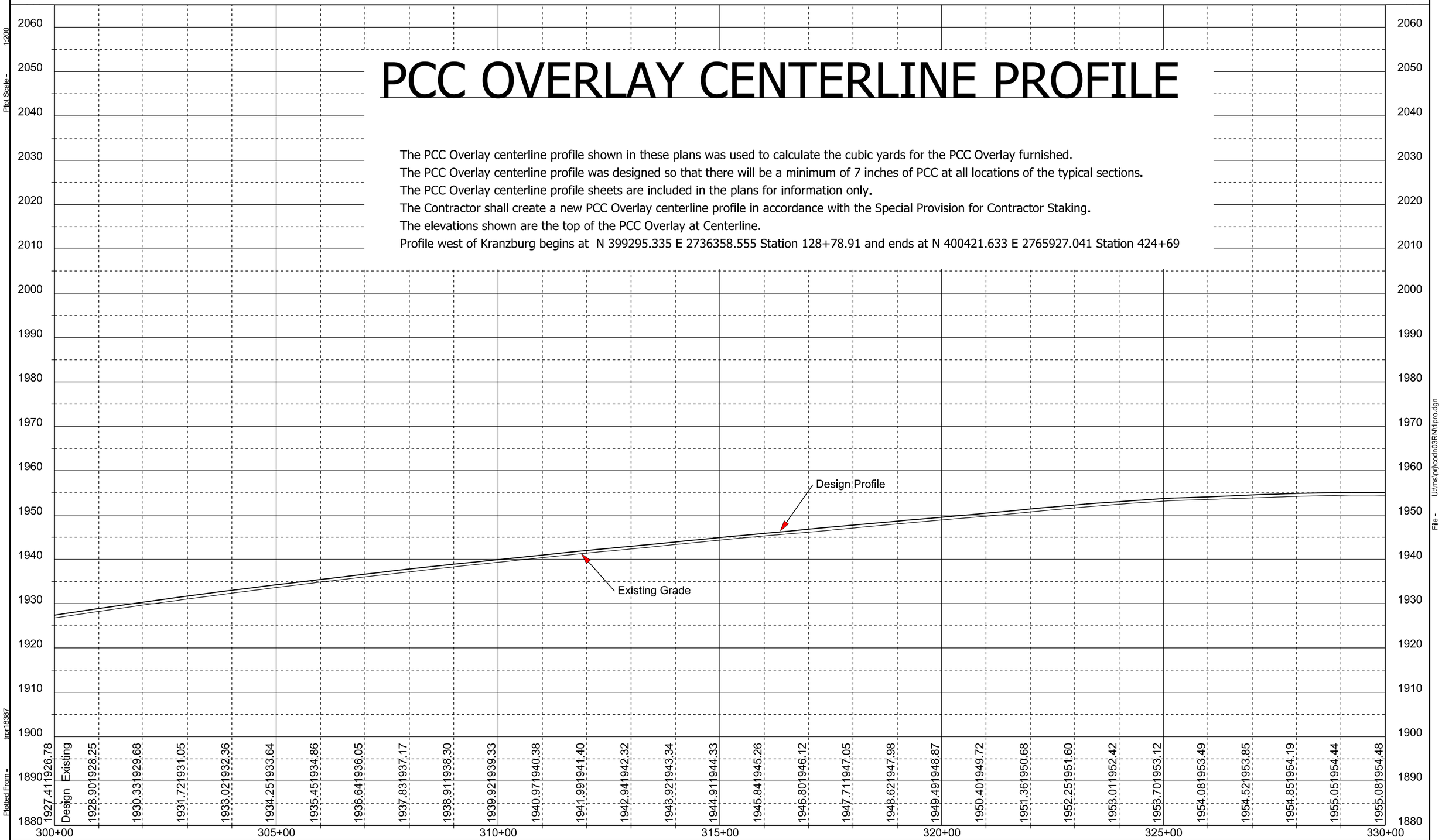

Plot Scale - 1:200
Plotted From - trpr18387
File - U:\ms\prj\codh03RN\1pro.dgn

STATE OF SOUTH DAKOTA	PROJECT	SHEET	TOTAL SHEETS
	NH 0212(162)380	F46	F57

Plotting Date: 08/12/2015

PCC OVERLAY CENTERLINE PROFILE

The PCC Overlay centerline profile shown in these plans was used to calculate the cubic yards for the PCC Overlay furnished.
The PCC Overlay centerline profile was designed so that there will be a minimum of 7 inches of PCC at all locations of the typical sections.
The PCC Overlay centerline profile sheets are included in the plans for information only.
The Contractor shall create a new PCC Overlay centerline profile in accordance with the Special Provision for Contractor Staking.
The elevations shown are the top of the PCC Overlay at Centerline.
Profile west of Kranzburg begins at N 399295.335 E 2736358.555 Station 128+78.91 and ends at N 400421.633 E 2765927.041 Station 424+69

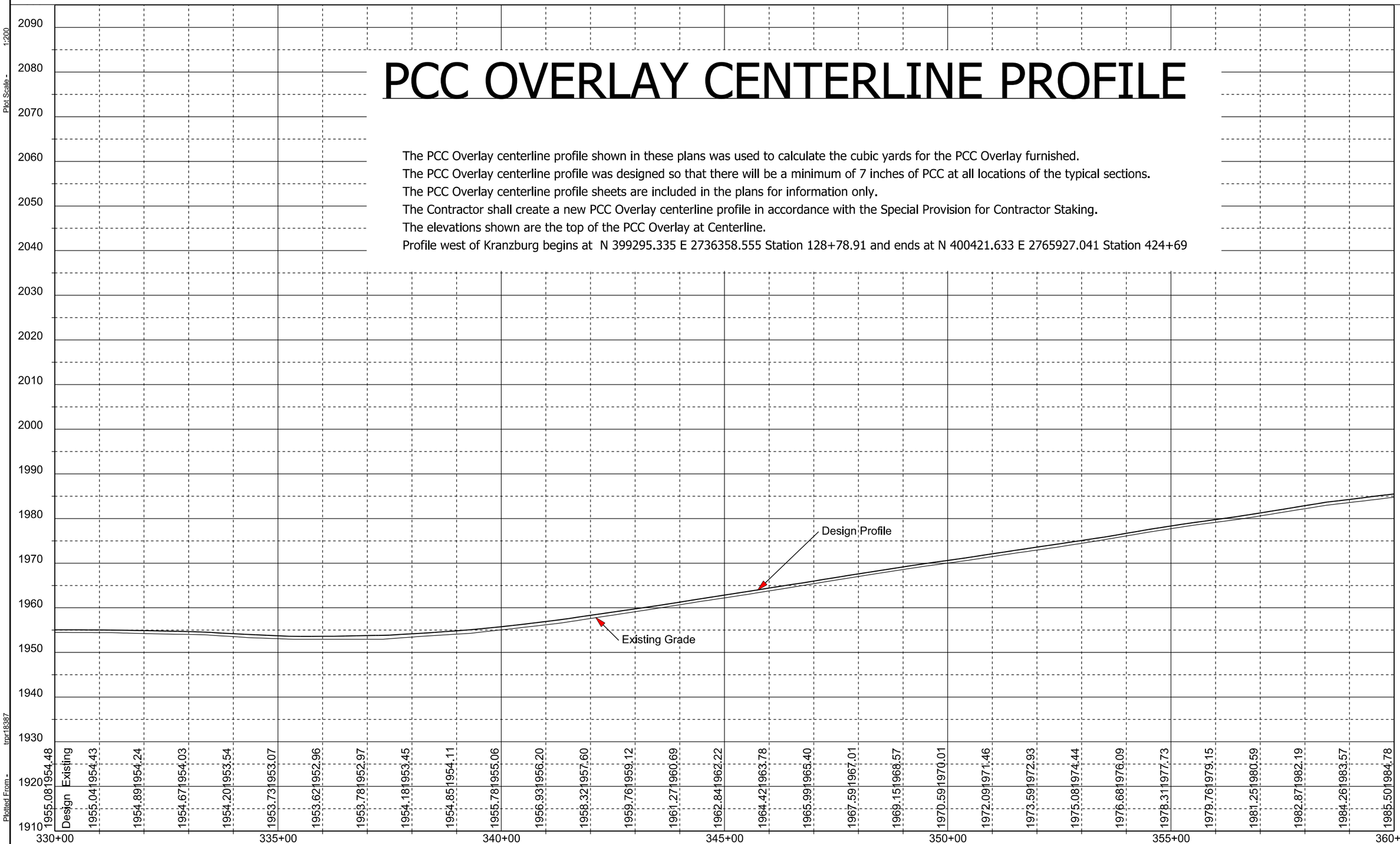

Plot Scale - 1:200

Plotted From - trpr18387

File - U:\ms\prj\codh03RN\1pro.dgn

STATE OF SOUTH DAKOTA	PROJECT	SHEET	TOTAL SHEETS
	NH 0212(162)380	F47	F57

Plotting Date: 08/12/2015

PCC OVERLAY CENTERLINE PROFILE

The PCC Overlay centerline profile shown in these plans was used to calculate the cubic yards for the PCC Overlay furnished.
The PCC Overlay centerline profile was designed so that there will be a minimum of 7 inches of PCC at all locations of the typical sections.
The PCC Overlay centerline profile sheets are included in the plans for information only.
The Contractor shall create a new PCC Overlay centerline profile in accordance with the Special Provision for Contractor Staking.
The elevations shown are the top of the PCC Overlay at Centerline.
Profile west of Kranzburg begins at N 399295.335 E 2736358.555 Station 128+78.91 and ends at N 400421.633 E 2765927.041 Station 424+69

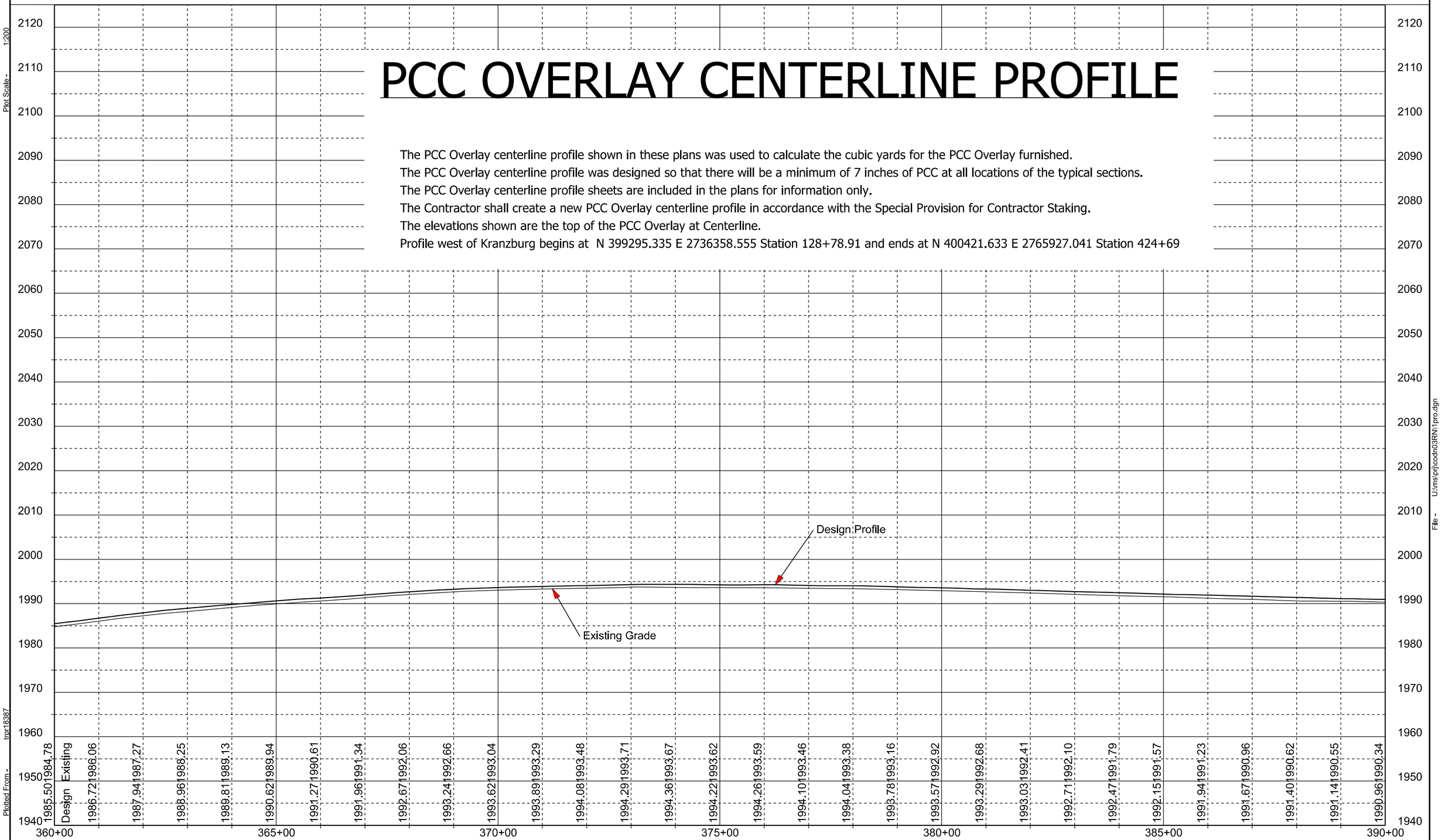

Plot Scale - 1:200

Plotted From - trpr18387

File - U:\ms\prj\codh03RN\1pro.dgn

STATE OF SOUTH DAKOTA	PROJECT	SHEET	TOTAL SHEETS
	NH 0212(162)380	F48	F57

Plotting Date: 08/12/2015

PCC OVERLAY CENTERLINE PROFILE

The PCC Overlay centerline profile shown in these plans was used to calculate the cubic yards for the PCC Overlay furnished.
The PCC Overlay centerline profile was designed so that there will be a minimum of 7 inches of PCC at all locations of the typical sections.
The PCC Overlay centerline profile sheets are included in the plans for information only.
The Contractor shall create a new PCC Overlay centerline profile in accordance with the Special Provision for Contractor Staking.
The elevations shown are the top of the PCC Overlay at Centerline.
Profile west of Kranzburg begins at N 399295.335 E 2736358.555 Station 128+78.91 and ends at N 400421.633 E 2765927.041 Station 424+69

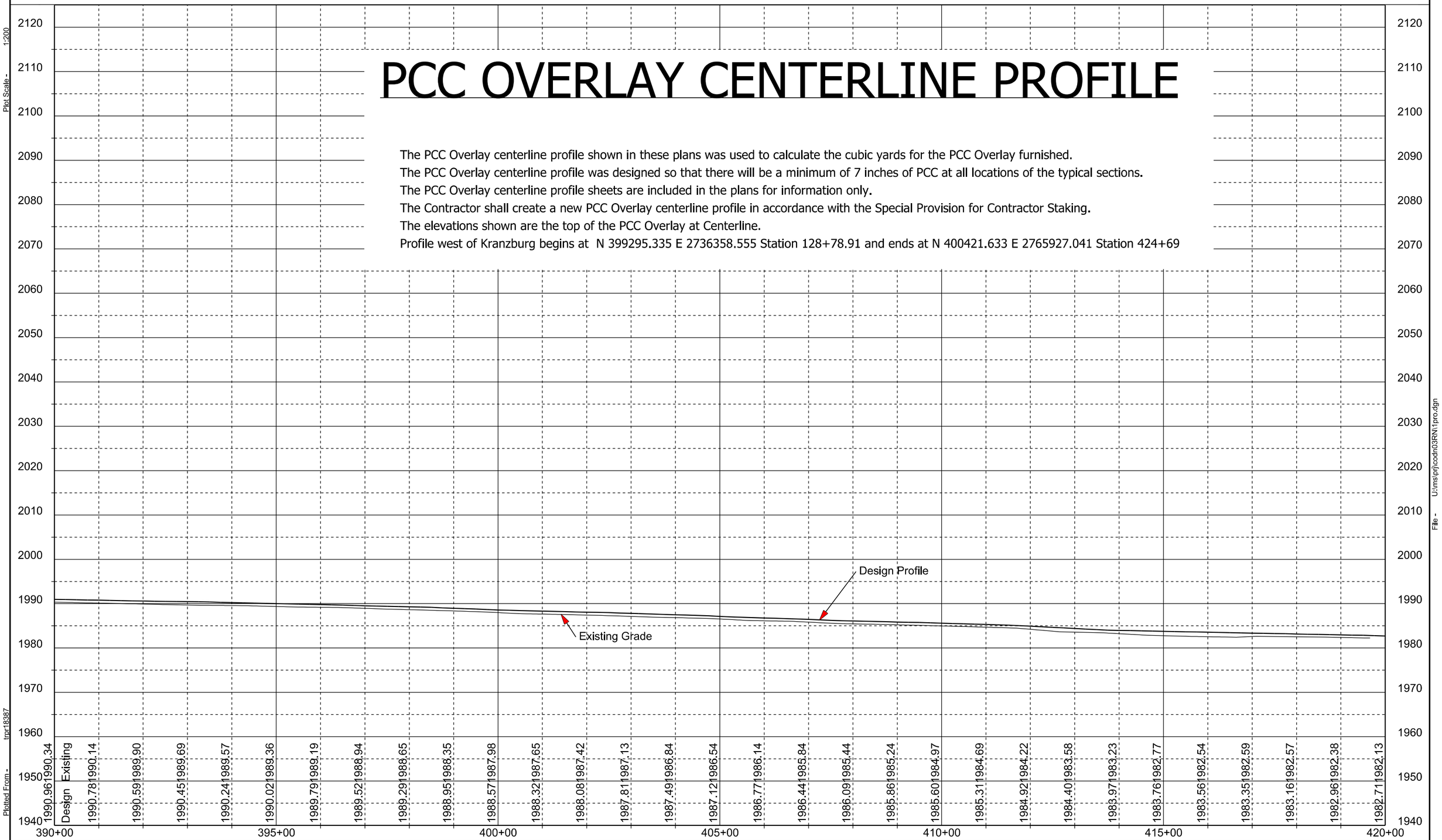

Plot Scale - 1:200

Plotted From - trpr18387

File - U:\ms\prj\codh03RN\1pro.dgn

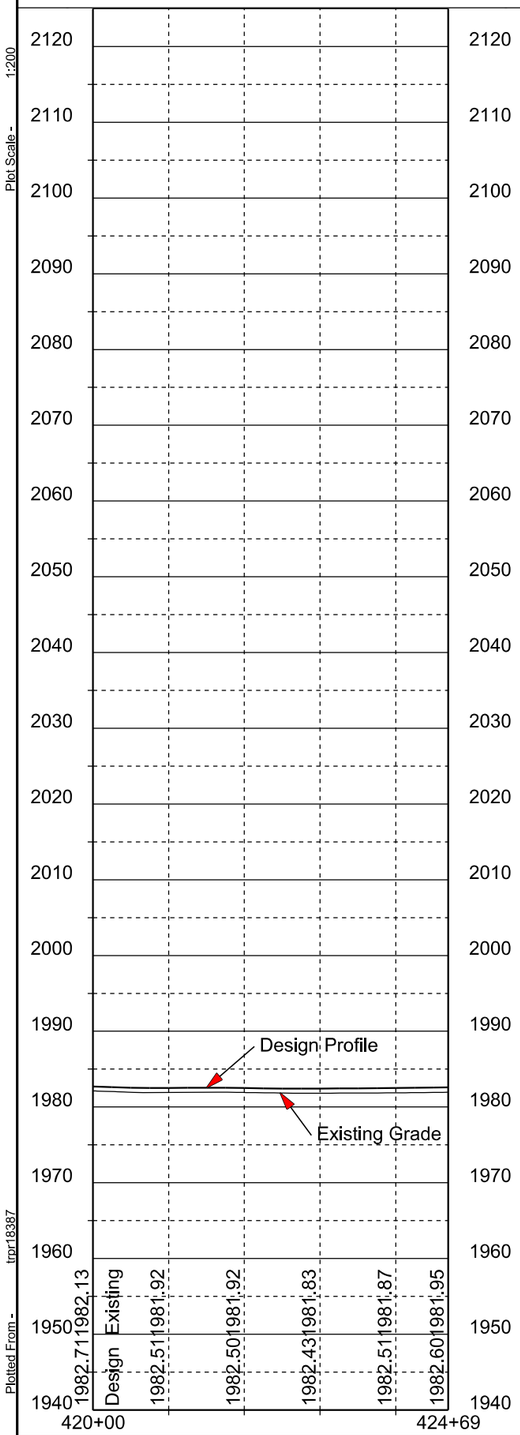

PCC OVERLAY CENTERLINE PROFILE

The PCC Overlay centerline profile shown in these plans was used to calculate the cubic yards for the PCC Overlay furnished.
The PCC Overlay centerline profile was designed so that there will be a minimum of 7 inches of PCC at all locations of the typical sections.
The PCC Overlay centerline profile sheets are included in the plans for information only.
The Contractor shall create a new PCC Overlay centerline profile in accordance with the Special Provision for Contractor Staking.
The elevations shown are the top of the PCC Overlay at Centerline.
Profile west of Kranzburg begins at N 399295.335 E 2736358.555 Station 128+78.91 and ends at N 400421.633 E 2765927.041 Station 424+69

Plot Scale - 1:200
Plotted From - trpr18387
File - U:\ms\prj\codn03RN\1pro.dgn

STATE OF SOUTH DAKOTA	PROJECT	SHEET	TOTAL SHEETS
	NH 0212(162)380	F50	F57

Plotting Date: 08/12/2015

PCC OVERLAY CENTERLINE PROFILE

The PCC Overlay centerline profile shown in these plans was used to calculate the cubic yards for the PCC Overlay furnished.
The PCC Overlay centerline profile was designed so that there will be a minimum of 7 inches of PCC at all locations of the typical sections.
The PCC Overlay centerline profile sheets are included in the plans for information only.
The Contractor shall create a new PCC Overlay centerline profile in accordance with the Special Provision for Contractor Staking.
The elevations shown are the top of the PCC Overlay at Centerline.
Profile east of Kranzburg begins at N 400471.507 E 2767507.256 Station 440+50 and ends at N 401109.574 E 2785049.131 Station b 88+65.12

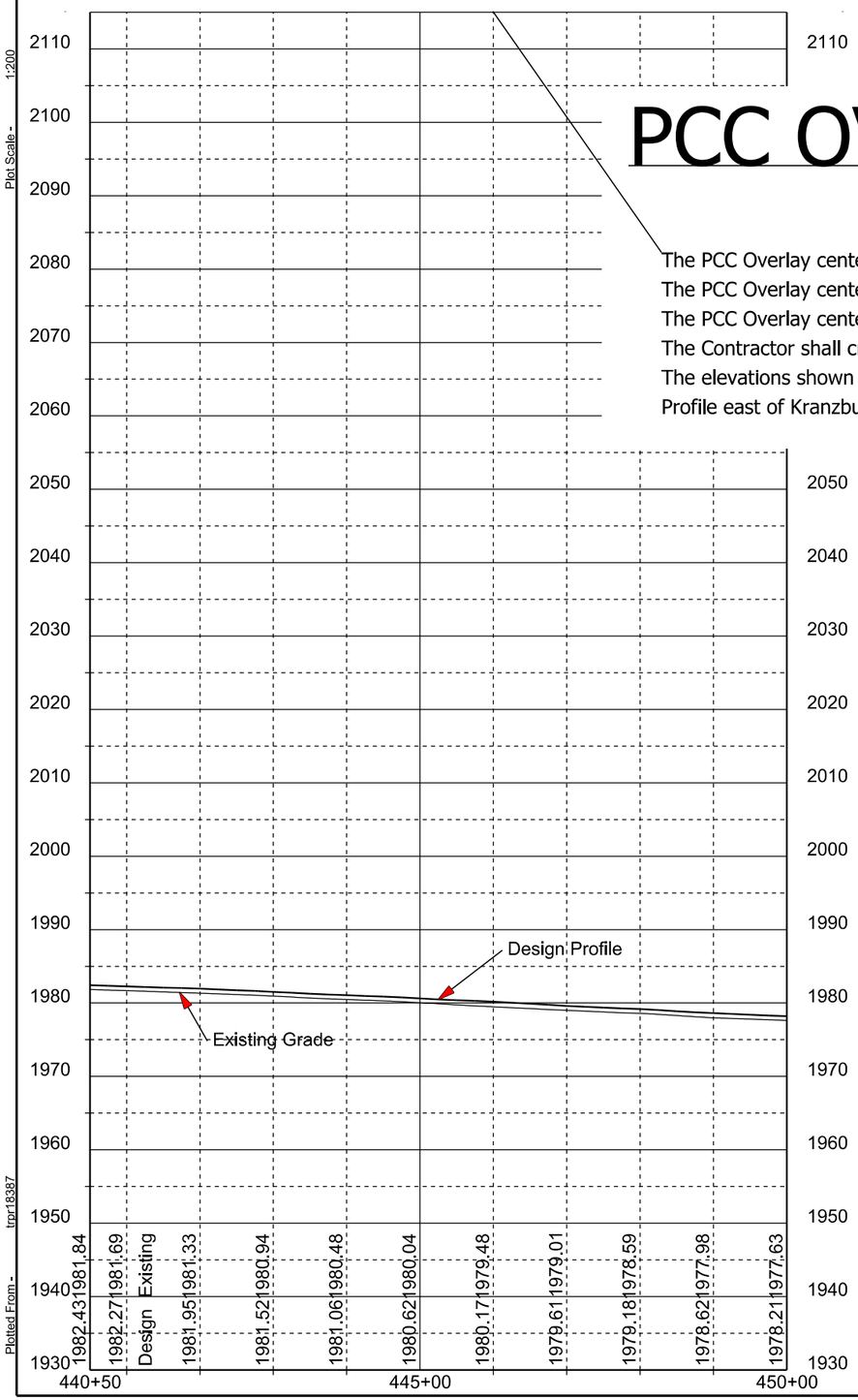

Plot Scale - 1:200
Plotted From - trpr18387
File - U:\ms\prj\codn03RN\2pro.dgn

STATE OF SOUTH DAKOTA	PROJECT	SHEET	TOTAL SHEETS
	NH 0212(162)380	F51	F57

Plotting Date: 08/12/2015

PCC OVERLAY CENTERLINE PROFILE

The PCC Overlay centerline profile shown in these plans was used to calculate the cubic yards for the PCC Overlay furnished.
The PCC Overlay centerline profile was designed so that there will be a minimum of 7 inches of PCC at all locations of the typical sections.
The PCC Overlay centerline profile sheets are included in the plans for information only.
The Contractor shall create a new PCC Overlay centerline profile in accordance with the Special Provision for Contractor Staking.
The elevations shown are the top of the PCC Overlay at Centerline.
Profile east of Kranzburg begins at N 400471.507 E 2767507.256 Station 440+50 and ends at N 401109.574 E 2785049.131 Station b 88+65.12

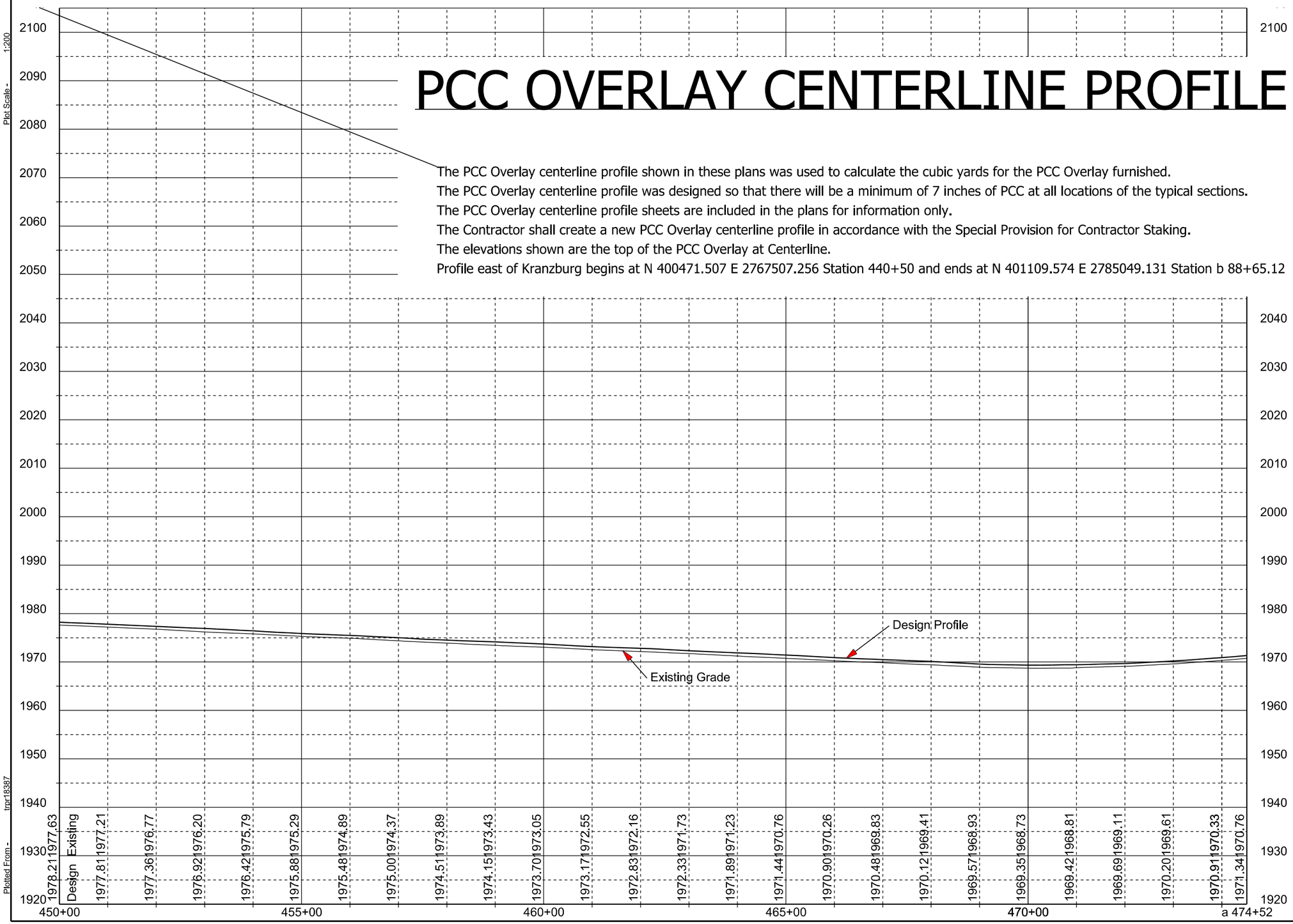

Plot Scale - 1:200

Plotted From - trpr18387

File - U:\ms\prj\codn03RN\2pro.dgn

STATE OF SOUTH DAKOTA	PROJECT	SHEET	TOTAL SHEETS
	NH 0212(162)380	F52	F57

Plotting Date: 08/12/2015

PCC OVERLAY CENTERLINE PROFILE

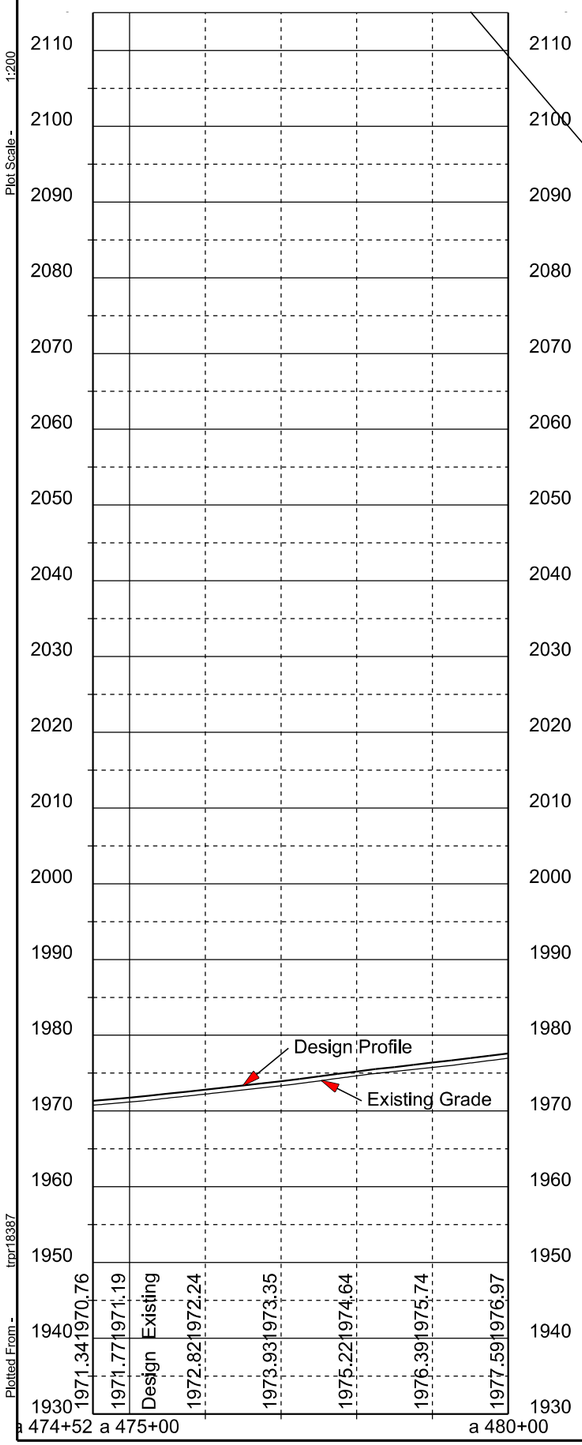

The PCC Overlay centerline profile shown in these plans was used to calculate the cubic yards for the PCC Overlay furnished.
The PCC Overlay centerline profile was designed so that there will be a minimum of 7 inches of PCC at all locations of the typical sections.
The PCC Overlay centerline profile sheets are included in the plans for information only.
The Contractor shall create a new PCC Overlay centerline profile in accordance with the Special Provision for Contractor Staking.
The elevations shown are the top of the PCC Overlay at Centerline.
Profile east of Kranzburg begins at N 400471.507 E 2767507.256 Station 440+50 and ends at N 401109.574 E 2785049.131 Station b 88+65.12

Plot Scale - 1:200
Plotted From - trpr18387
File - U:\ms\prj\codn03RN\2pro.dgn

STATE OF SOUTH DAKOTA	PROJECT	SHEET	TOTAL SHEETS
	NH 0212(162)380	F53	F57

Plotting Date: 08/12/2015

PCC OVERLAY CENTERLINE PROFILE

The PCC Overlay centerline profile shown in these plans was used to calculate the cubic yards for the PCC Overlay furnished.
The PCC Overlay centerline profile was designed so that there will be a minimum of 7 inches of PCC at all locations of the typical sections.
The PCC Overlay centerline profile sheets are included in the plans for information only.
The Contractor shall create a new PCC Overlay centerline profile in accordance with the Special Provision for Contractor Staking.
The elevations shown are the top of the PCC Overlay at Centerline.
Profile east of Kranzburg begins at N 400471.507 E 2767507.256 Station 440+50 and ends at N 401109.574 E 2785049.131 Station b 88+65.12

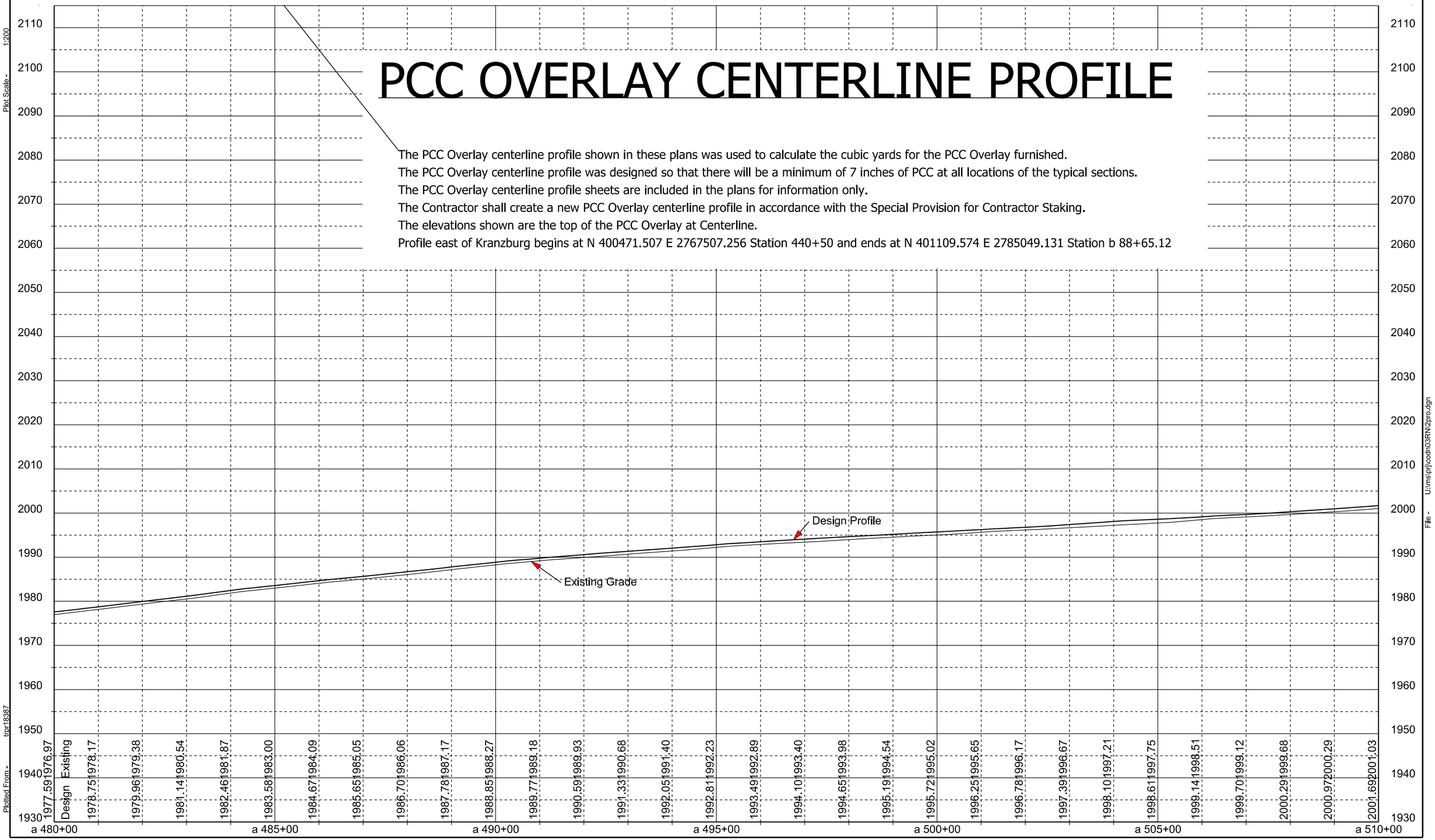

Plot Scale - 1:200

Plotted From - tnpr18387

File - U:\ms\prj\codh03RN\2pro.dgn

STATE OF SOUTH DAKOTA	PROJECT	SHEET	TOTAL SHEETS
	NH 0212(162)380	F54	F57

Plotting Date: 08/12/2015

PCC OVERLAY CENTERLINE PROFILE

The PCC Overlay centerline profile shown in these plans was used to calculate the cubic yards for the PCC Overlay furnished.
The PCC Overlay centerline profile was designed so that there will be a minimum of 7 inches of PCC at all locations of the typical sections.
The PCC Overlay centerline profile sheets are included in the plans for information only.
The Contractor shall create a new PCC Overlay centerline profile in accordance with the Special Provision for Contractor Staking.
The elevations shown are the top of the PCC Overlay at Centerline.
Profile east of Kranzburg begins at N 400471.507 E 2767507.256 Station 440+50 and ends at N 401109.574 E 2785049.131 Station b 88+65.12

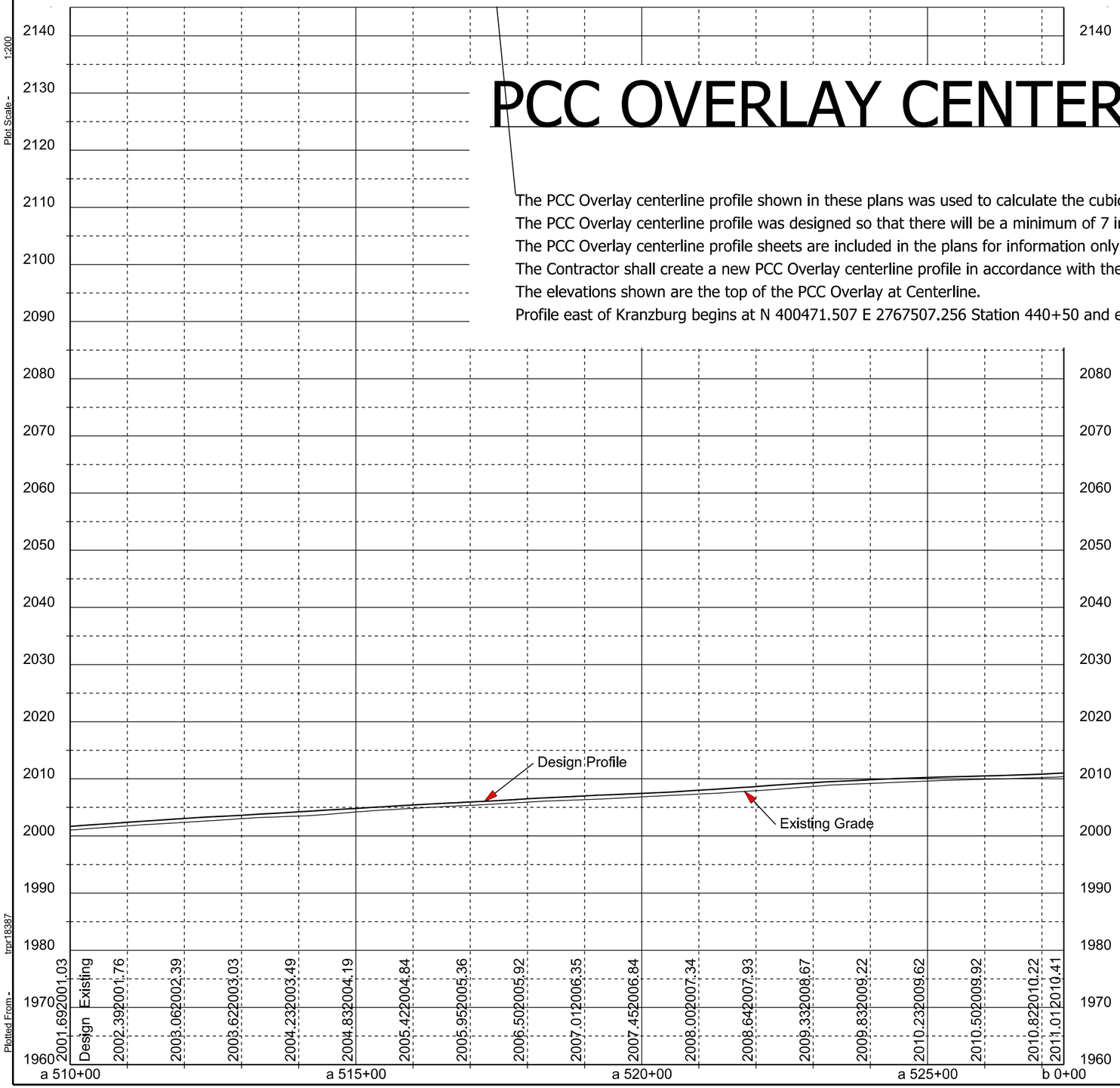

Plot Scale - 1:200
Plotted From - tmpr18387
File - U:\ms\prj\codh03RN\2pro.dgn

STATE OF SOUTH DAKOTA	PROJECT	SHEET	TOTAL SHEETS
	NH 0212(162)380	F55	F57

Plotting Date: 08/12/2015

PCC OVERLAY CENTERLINE PROFILE

The PCC Overlay centerline profile shown in these plans was used to calculate the cubic yards for the PCC Overlay furnished.
The PCC Overlay centerline profile was designed so that there will be a minimum of 7 inches of PCC at all locations of the typical sections.
The PCC Overlay centerline profile sheets are included in the plans for information only.
The Contractor shall create a new PCC Overlay centerline profile in accordance with the Special Provision for Contractor Staking.
The elevations shown are the top of the PCC Overlay at Centerline.
Profile east of Kranzburg begins at N 400471.507 E 2767507.256 Station 440+50 and ends at N 401109.574 E 2785049.131 Station b 88+65.12

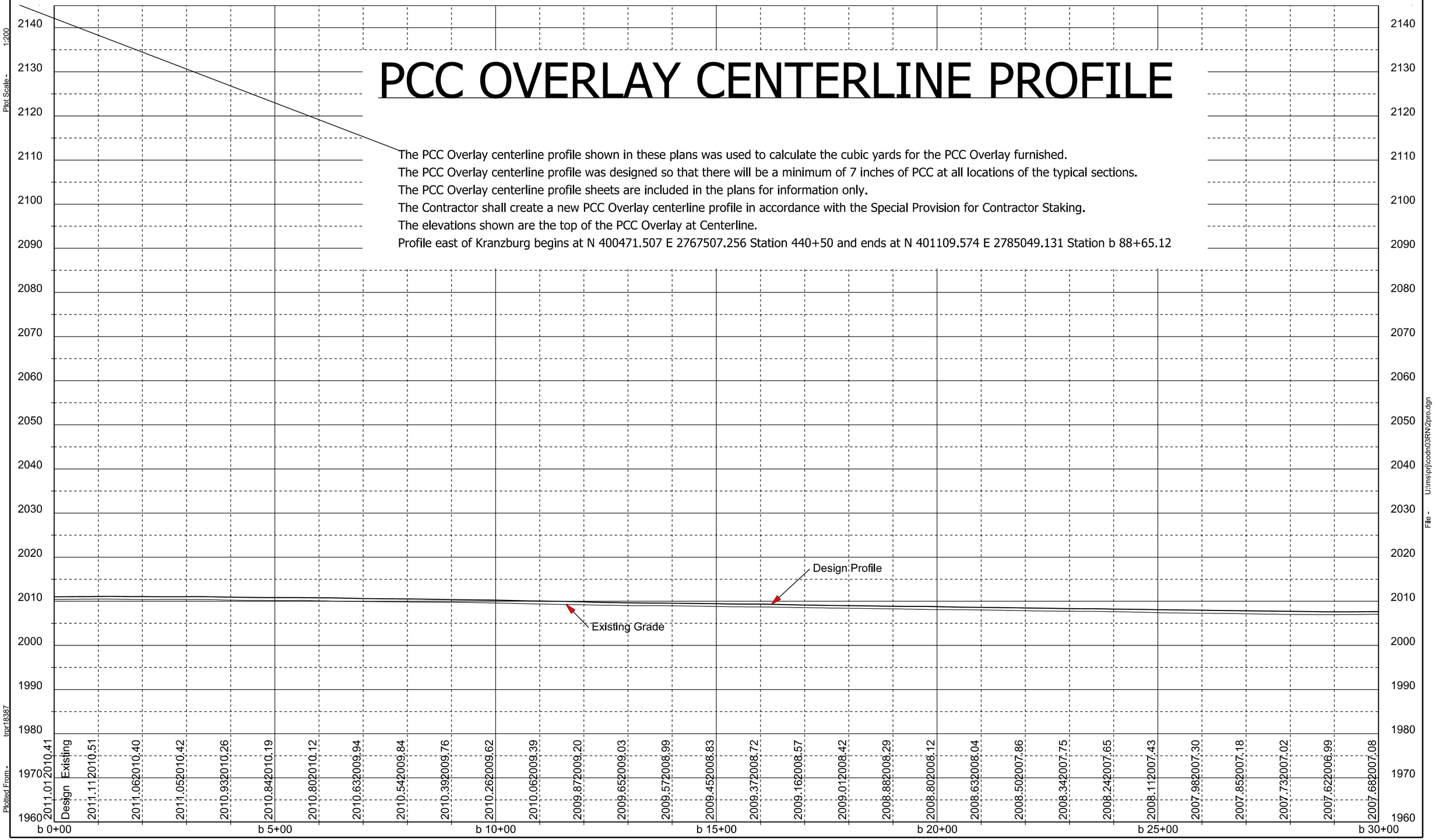

Plot Scale - 1:200
Plotted From - tmpr18387
File - U:\ms\prj\codh03RN\2pro.dgn

STATE OF SOUTH DAKOTA	PROJECT	SHEET	TOTAL SHEETS
	NH 0212(162)380	F56	F57

Plotting Date: 08/12/2015

PCC OVERLAY CENTERLINE PROFILE

The PCC Overlay centerline profile shown in these plans was used to calculate the cubic yards for the PCC Overlay furnished.
The PCC Overlay centerline profile was designed so that there will be a minimum of 7 inches of PCC at all locations of the typical sections.
The PCC Overlay centerline profile sheets are included in the plans for information only.
The Contractor shall create a new PCC Overlay centerline profile in accordance with the Special Provision for Contractor Staking.
The elevations shown are the top of the PCC Overlay at Centerline.
Profile east of Kranzburg begins at N 400471.507 E 2767507.256 Station 440+50 and ends at N 401109.574 E 2785049.131 Station b 88+65.12

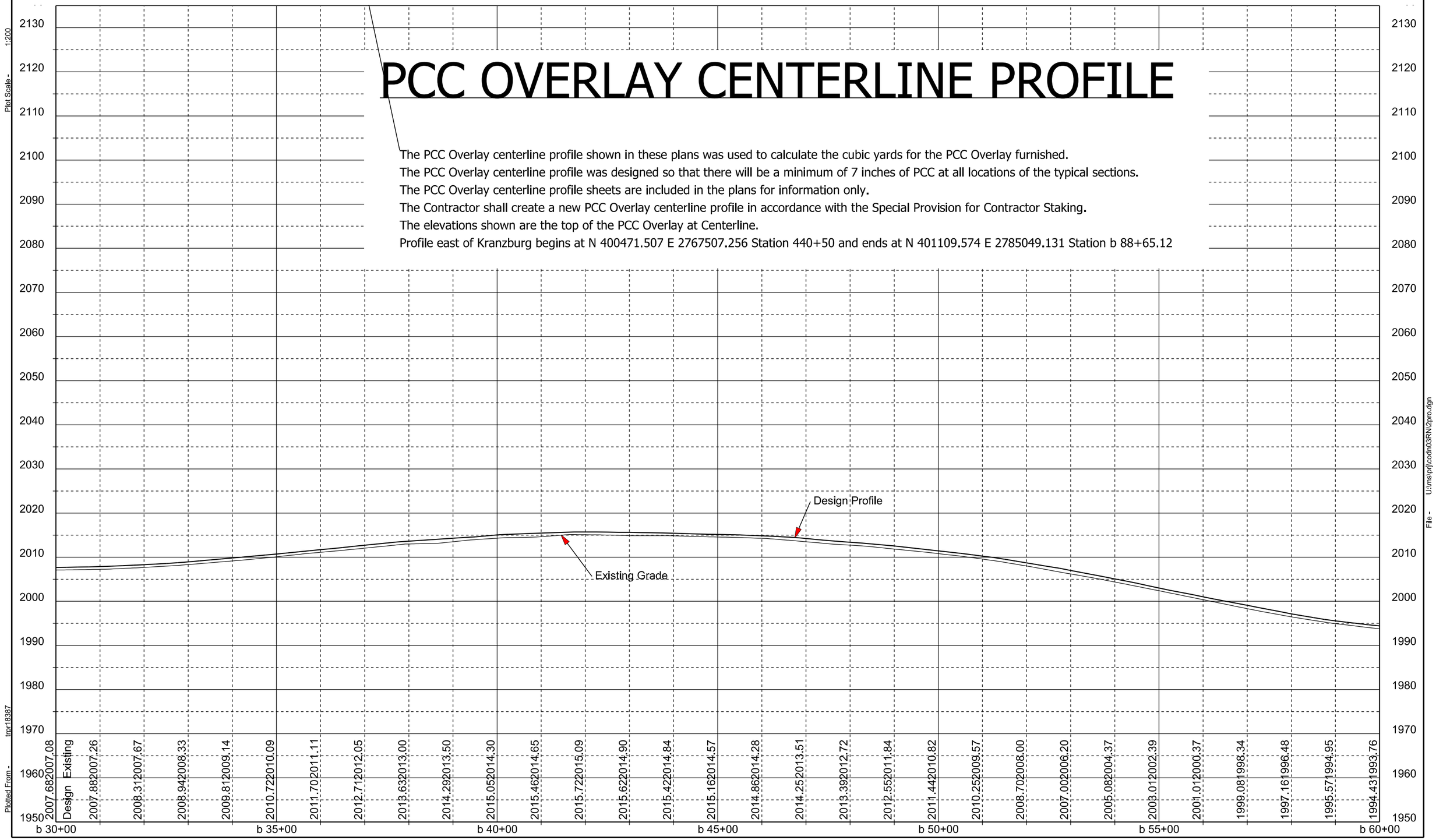

Plot Scale - 1:200
Plotted From - tnpr18387
File - U:\ms\prj\codh03RN\2pro.dgn

STATE OF SOUTH DAKOTA	PROJECT	SHEET	TOTAL SHEETS
	NH 0212(162)380	F57	F57

Plotting Date: 08/12/2015

PCC OVERLAY CENTERLINE PROFILE

The PCC Overlay centerline profile shown in these plans was used to calculate the cubic yards for the PCC Overlay furnished.
The PCC Overlay centerline profile was designed so that there will be a minimum of 7 inches of PCC at all locations of the typical sections.
The PCC Overlay centerline profile sheets are included in the plans for information only.
The Contractor shall create a new PCC Overlay centerline profile in accordance with the Special Provision for Contractor Staking.
The elevations shown are the top of the PCC Overlay at Centerline.
Profile east of Kranzburg begins at N 400471.507 E 2767507.256 Station 440+50 and ends at N 401109.574 E 2785049.131 Station b 88+65.12

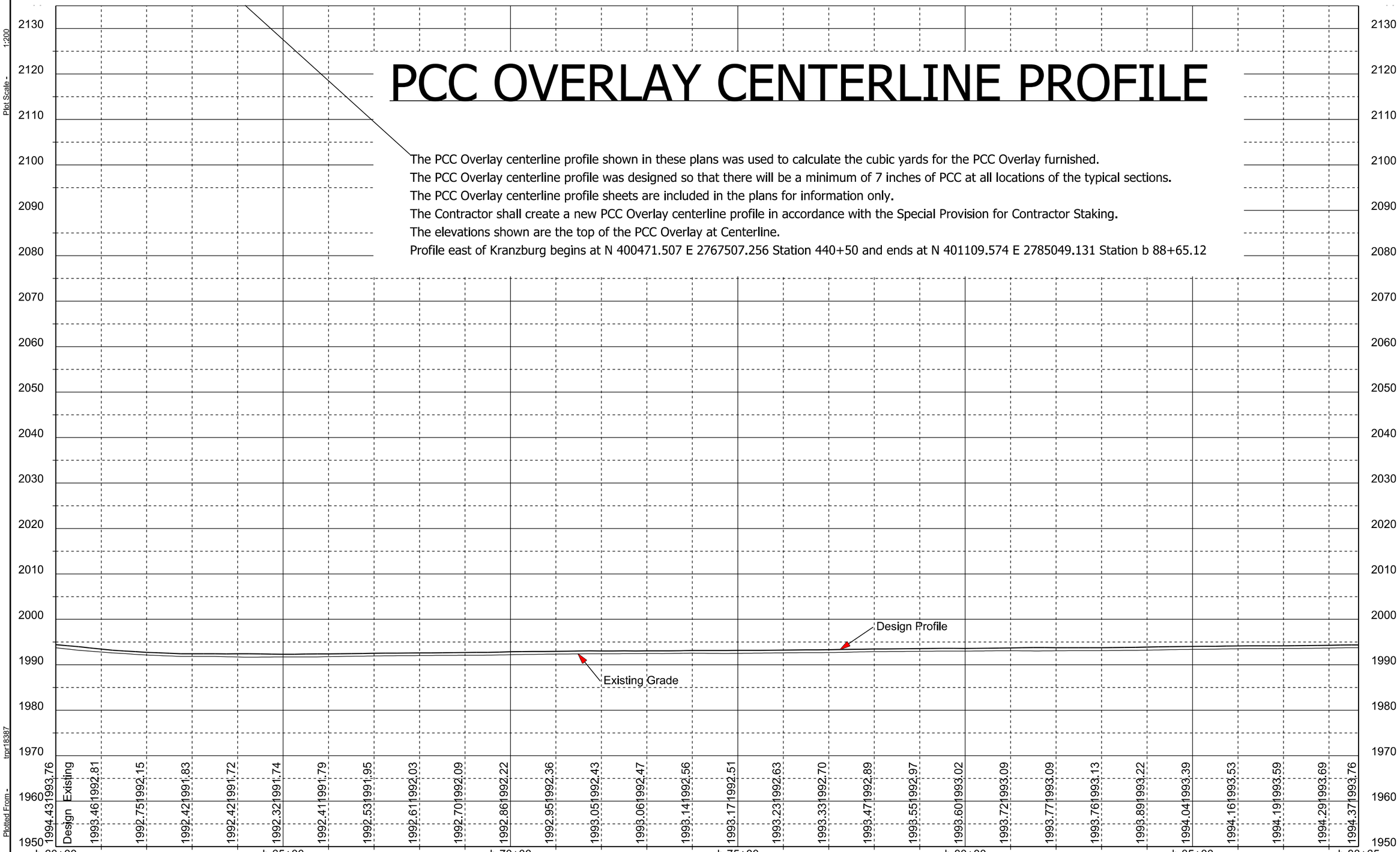

Plot Scale - 1:200

Plotted From - trpr18387

File - U:\ms\prj\codh03RN\2pro.dgn