STATE OF SOUTH DAKOTA	PROJECT	SHEET	TOTAL SHEETS
	IM 0903(102)112 & NH 0014(216)112	F1	F56

Plotting Date: 12/30/2015

SECTION F: SURFACING PLANS

INDEX OF SHEETS

F1	General Layout with Index
F2-F12	Estimate With General Notes & Tables
F13-F21	Typical Sections
F22-F30	Guardrail Layouts
F31	Traffic Counter Detail
F32- F33	Cold Milling Detail
F34	Surfacing Gore Area Detail
F35	US 14 Layout
F36-F56	Standard Plates

BEGIN PROJECT
IM 0903(102)112
Sta. 8+04.61
MRM 112.12 + 0.180

BEGIN PROJECT
NH 0014(216)112
EB Sta. 8+02.81
MRM 112.3

BEGIN PROJECT
NH 0014(216)112
WB Sta. 8+57
MRM 112.5

END PROJECT
NH 0014(216)112
WB Sta. 82+00
MRM 113.74 + 0.036

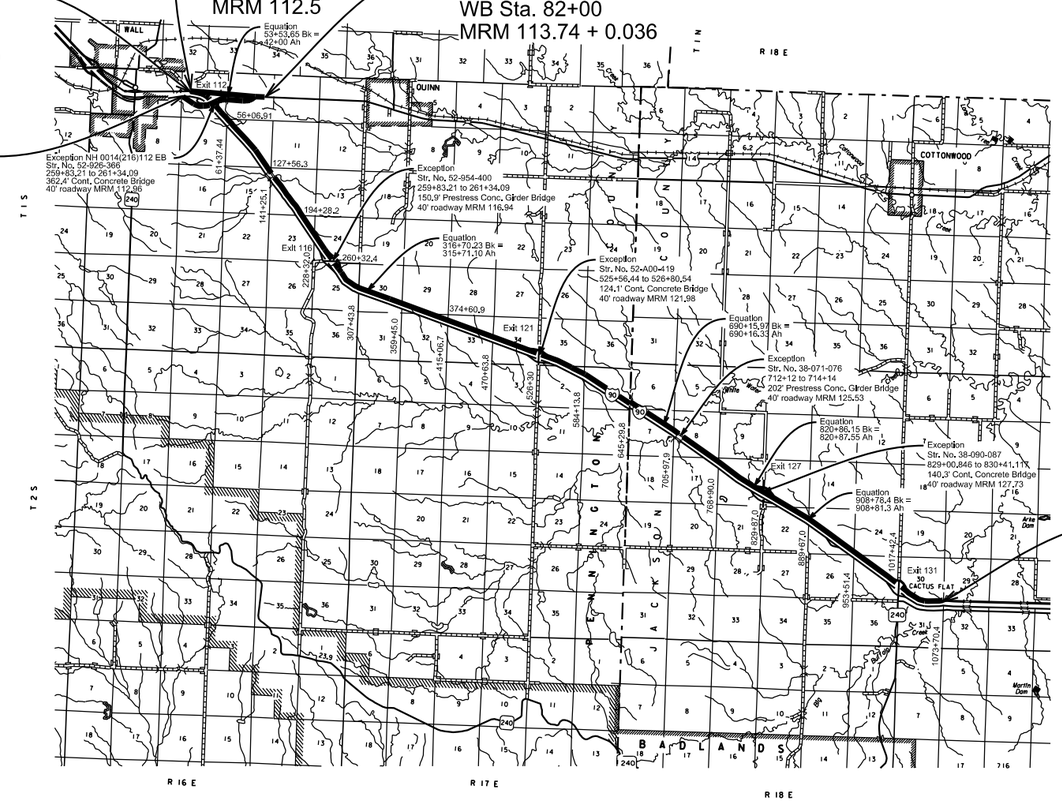

END PROJECT
IM 0903(102)112
Sta. 1063+89
MRM 132.0 + 0.165

Plot Scale - 1:200

Plotted From - trrc11610

File - ...\Design\03w0_TitleF.dgn

SECTION F ESTIMATE OF QUANTITIES

PCN 03W0

	BID ITEM NUMBER	ITEM	QUANTITY	UNIT
	009E0010	Mobilization	Lump Sum	LS
	009E3320	Checker	Lump Sum	LS
	110E0300	Remove Concrete Curb and Gutter	183	Ft
	110E0320	Remove Concrete Gutter	54	Ft
	110E0740	Remove 3 Cable Guardrail Anchor Assembly	8	Each
	110E4100	Salvage 3 Cable Guardrail	150	Ft
	110E4290	Salvage Beam Guardrail	950.0	Ft
	110E4350	Salvage Beam Guardrail Trailing End Terminal	1	Each
	110E4370	Salvage W Beam Guardrail Flared End Terminal	4	Each
	110E4380	Salvage W Beam Guardrail Tangent End Terminal	3	Each
	110E6000	Remove 3 Cable Guardrail for Reset	1,718	Ft
	110E6200	Remove Double Thrie Beam Guardrail for Reset	100.0	Ft
	110E6230	Remove W Beam Guardrail for Reset	675.0	Ft
	110E6240	Remove W Beam to Thrie Beam Guardrail Transition for Reset	8	Each
	110E6250	Remove Beam Guardrail Trailing End Terminal for Reset	1	Each
	110E6260	Remove W Beam Guardrail Breakaway Cable Terminal for Reset	3	Each
	120E0100	Unclassified Excavation, Digouts	1,026	CuYd
	120E0600	Contractor Furnished Borrow Excavation	1,525	CuYd
	260E1050	Base Course, Salvaged Asphalt Mix	9,089.7	Ton
	320E0008	PG 64-34 Asphalt Binder	1,754.9	Ton
	320E1080	Class S Asphalt Concrete	30,195.1	Ton
	320E3000	Compaction Sample	3	Each
	320E3100	Stabilizing Additive for Asphalt Concrete	84.8	Ton
	320E7012	Grind 12" Rumble Strip or Stripe in Asphalt Concrete	41.0	Mile
	330E0100	SS-1h or CSS-1h Asphalt for Tack	253.7	Ton
	330E0210	SS-1h or CSS-1h Asphalt for Flush Seal	14.0	Ton
	332E4000	Micro-Milling Asphalt Concrete	339,185	SqYd
	600E0300	Type III Field Laboratory	1	Each
	629E0100	3 Cable Guardrail	1,632	Ft
	629E0110	NCHRP 350 Test Level 3 High Tension Cable Guardrail	1,502	Ft
	629E0200	Reset 3 Cable Guardrail	1,718	Ft
	629E0290	NCHRP 350 Test Level 3 High Tension Cable Guardrail Anchor Assembly	6	Each
	629E0300	3 Cable Guardrail Slip Base Anchor Assembly	9	Each
	629E0400	3 Cable Guardrail Anchor Assembly	7	Each
*	629E1109	Furnish High Tension Cable Guardrail Post and Sleeve	25	Each
	630E2030	W Beam Guardrail Breakaway Cable Terminal	6	Each
	630E2110	Beam Guardrail Post and Block	188	Each
	630E5130	Reset Double Thrie Beam Rail	100.0	Ft
	630E5160	Reset W Beam Rail	675.0	Ft
	630E5180	Reset W Beam Guardrail Breakaway Cable Terminal	3	Each
	630E5190	Reset W Beam to Thrie Beam Guardrail Transition	8	Each
	630E5210	Reset Beam Guardrail Trailing End Terminal	1	Each

PCN 03W0 (Cont)

BID ITEM NUMBER	ITEM	QUANTITY	UNIT
632E2220	Guardrail Delineator	67	Each
632E2510	Type 2 Object Marker Back to Back	4	Each
632E2520	Type 2 Object Marker	5	Each
900E5840	Permanent Vehicle Classification System	1	Each

*** - Denotes Non-Participating**

PCN 05EE

BID ITEM NUMBER	ITEM	QUANTITY	UNIT
009E0010	Mobilization	Lump Sum	LS
009E3320	Checker	Lump Sum	LS
110E0740	Remove 3 Cable Guardrail Anchor Assembly	6	Each
110E0745	Remove 3 Cable Guardrail Slip Base Anchor Assembly	1	Each
110E4100	Salvage 3 Cable Guardrail	75	Ft
110E4290	Salvage Beam Guardrail	12.5	Ft
110E6000	Remove 3 Cable Guardrail for Reset	1,332	Ft
110E6200	Remove Double Thrie Beam Guardrail for Reset	25.0	Ft
110E6230	Remove W Beam Guardrail for Reset	125.0	Ft
110E6240	Remove W Beam to Thrie Beam Guardrail Transition for Reset	2	Each
110E6260	Remove W Beam Guardrail Breakaway Cable Terminal for Reset	2	Each
120E0100	Unclassified Excavation, Digouts	155	CuYd
120E0600	Contractor Furnished Borrow Excavation	35	CuYd
260E1050	Base Course, Salvaged Asphalt Mix	708.9	Ton
320E0008	PG 64-34 Asphalt Binder	179.9	Ton
320E1080	Class S Asphalt Concrete	3,110.7	Ton
320E3100	Stabilizing Additive for Asphalt Concrete	10.2	Ton
320E7012	Grind 12" Rumble Strip or Stripe in Asphalt Concrete	6.2	Mile
330E0100	SS-1h or CSS-1h Asphalt for Tack	30.5	Ton
330E0210	SS-1h or CSS-1h Asphalt for Flush Seal	2.3	Ton
332E4000	Micro-Milling Asphalt Concrete	52,220	SqYd
629E0200	Reset 3 Cable Guardrail	223	Ft
629E0300	3 Cable Guardrail Slip Base Anchor Assembly	6	Each
629E0400	3 Cable Guardrail Anchor Assembly	1	Each
630E2110	Beam Guardrail Post and Block	38	Each
630E5130	Reset Double Thrie Beam Rail	25.0	Ft
630E5160	Reset W Beam Rail	125.0	Ft
630E5180	Reset W Beam Guardrail Breakaway Cable Terminal	2	Each
630E5190	Reset W Beam to Thrie Beam Guardrail Transition	2	Each
632E2220	Guardrail Delineator	31	Each
632E2510	Type 2 Object Marker Back to Back	5	Each
632E2520	Type 2 Object Marker	1	Each

Surfacing Alt A

PCN 03W0

	BID ITEM NUMBER	ITEM	QUANTITY	UNIT
*	260E6000	Granular Material, Furnish	592.0	Ton
*	270E0200	Blend, Haul, and Stockpile Granular Material	1,184.0	Ton
	320E0005	PG 58-34 Asphalt Binder	516.4	Ton
	320E1070	Class HR Asphalt Concrete	13,196.9	Ton
	320E4000	Hydrated Lime	124.0	Ton

*** - Denotes Non-Participating**

Surfacing Alt A

PCN 05EE

	BID ITEM NUMBER	ITEM	QUANTITY	UNIT
*	260E6000	Granular Material, Furnish	1,908.0	Ton
*	270E0200	Blend, Haul, and Stockpile Granular Material	3,816.0	Ton
	320E0005	PG 58-34 Asphalt Binder	93.7	Ton
	320E1070	Class HR Asphalt Concrete	2,302.0	Ton
	320E4000	Hydrated Lime	21.1	Ton

*** - Denotes Non-Participating**

Section F – Surfacing Alt B

PCN 03W0

	BID ITEM NUMBER	ITEM	QUANTITY	UNIT
*	260E6000	Granular Material, Furnish	504.0	Ton
*	270E0200	Blend, Haul, and Stockpile Granular Material	1,008.0	Ton
	320E0005	PG 58-34 Asphalt Binder	479.2	Ton
	320E1070	Class HR Asphalt Concrete	13,445.7	Ton
	320E4000	Hydrated Lime	124.0	Ton

*** - Denotes Non-Participating**

Section F – Surfacing Alt B

PCN 005EE

	BID ITEM NUMBER	ITEM	QUANTITY	UNIT
*	260E6000	Granular Material, Furnish	1,996.0	Ton
*	270E0200	Blend, Haul, and Stockpile Granular Material	3,992.0	Ton
	320E0005	PG 58-34 Asphalt Binder	86.4	Ton
	320E1070	Class HR Asphalt Concrete	2,345.0	Ton
	320E4000	Hydrated Lime	22.3	Ton

*** - Denotes Non-Participating**

FLEXIBLE PAVEMENT SMOOTHNESS PROVISION

All sections, not excluded by the Special Provision for Flexible Pavement Smoothness, will be evaluated as 1 opportunity.

UTILITIES

The Contractor shall be responsible for locating and protecting any utility that would conflict with any work. Utilities are not planned to be affected on this project. If utilities are identified near the improvement area through the SD One Call Process as required by South Dakota Codified Law 49-7A and Administrative Rule Article 20:25, the contractor shall contact the project engineer to determine modifications that will be necessary to avoid utility impacts.

Any damage done to a utility will be the Contractor's responsibility to repair.

TYPE III FIELD LABORATORY

The lab shall be equipped with an internet connection such as DSL, cable modem, or other approved service. The internet connection shall be provided with a multi-port wireless router. The internet connection shall be a minimum speed of 512 Kb unless limited by job location and approved by the DOT. Prior to installing the wireless router the Contractor shall submit the wireless router's technical data to the Area Office to check for compatibility with the state's computer equipment. The internet connection is intended for state personnel usage only. The Contractor's personnel are prohibited from using the internet connection unless pre-approved by the Project Engineer.

The Contractor shall submit a copy of each monthly bill for calls charged to this phone at the end of each month. The Project Engineer will then audit the bills to ensure all calls are legitimate and then initiate a Construction Change Order (CCO) to reimburse the Contractor for the actual phone calls made, including local and long distance calls. Reimbursement will not be made for fees associated with the purchase, installation, disconnection, monthly line charges, and incidentals involved in the installation, maintenance, and disconnection of the phone (including attachments). These items shall be incidental to the contract unit price per each for "Type III Field Laboratory".

UPDATES TO THE PERMANENT VEHICLE CLASSIFICATION SYSTEM (PEEK TRAFFIC INC MODEL ADR 6000)

The contractor shall install on Interstate 90 West Bound Lanes at Approximate MRM 116.94 + 0.019 (Approximately 190' West of MRM 117) loops for updating the permanent vehicle axle classification system (Peek Traffic Inc Model ADR 6000).

The repairs shall include:

A. 4 (2 per lane) standard inductive traffic loops which must meet NEMA TS-2 Environmental Specifications installed by sawing or routing them into the top of the roadway surface after surfacing is completed. A representative of the SDDOT Office of Inventory Management - Traffic Section (contact Ken Marks 605-773-3336 two weeks prior to installation) will be on site and direct the installation of the inductive loops. The contractor shall provide all supplies necessary for complete installation of the loops including wire, sealant, numbering loops by location, etc.

B. 4 (2 per lane) advanced IRDIS inductive axle detection loops installed by sawing or routing them into the top of the roadway surface after surfacing is completed. A representative of the supplier of the IRDIS inductive axle detection loops (ACT Traffic Solutions Inc. 1-952-288-4830 or equal) shall be on site and direct the installation of the IRDIS inductive axle detection loops and the Contractor shall complete this installation in an continuous manner (no time delays). The Contractor shall provide the supplier at least a two week notice of the dates of this installation. Layout A on Permanent Vehicle Classification System Detail sheet shows the general layout for a lane of inductive and IRDIS loops. Layout B on Permanent Vehicle Classification System Detail sheet shows some general details of the installation of the IRDIS inductive axle detection loops.

C. The contractor will run loop wire (from the new West Bound Passing Lane loops) into existing 3/4" conduit and then into the existing poll box on the south side of the west bound roadway and then through existing conduit into the existing electronics cabinet. The contractor will run loop wire (from the new West Bound Driving Lane loops) into new ¾" conduit and then into a new type 2 pull box located on the north side of the west bound roadway. The west bound driving lane loop wire will then run through (a new 2" conduit, which will need to be bored under the west bound roadway) and then tie into the existing pull box on the south side of the west bound roadway. Then the west bound passing lane loop wire will run through existing conduit into the existing electronics cabinet. Layout C on Permanent Vehicle Classification System Detail sheet shows a general layout and specifications of how to connect the loops to the conduit. The contractor will not damage the existing poll boxes, conduit or electronics cabinet in the west bound lanes, as well as the poll boxes, conduit or loops in the East Bound Lanes during this construction project. Any poll boxes, conduit, cabinet or loops damaged during the construction project will be replaced by the contractor at his expense.

D. All costs associated with furnishing and installing a working vehicle classification system shall be incidental to the contract unit price per each for "Permanent Vehicle Classification System".

SURFACING THICKNESS DIMENSIONS

Plans tonnage will be applied even though the thickness may vary from that shown in the plans. At those locations where material must be placed to achieve a required elevation, plans tonnages may be varied to achieve the required elevation.

SHOULDER WORK

Vegetation and accumulated material on or adjacent to the existing roadway edge shall be removed to the satisfaction of the Engineer prior to asphalt concrete resurfacing. Any remaining windrow of accumulated material shall be spread evenly on the inslope adjacent to the asphalt shoulder, to the satisfaction of the Engineer.

Shoulder work shall be incidental to other contract items. Separate measurement and payment will not be made.

CONTRACTOR FURNISHED BORROW EXCAVATION

The Contractor shall provide a suitable site for Contractor furnished borrow excavation material. The Contractor is responsible for obtaining all required permits and clearances for the borrow site. The borrow material shall be approved by the Engineer.

Restoration of the Contractor furnished borrow excavation site shall be the responsibility of the Contractor.

The plans quantity for "Contractor Furnished Borrow Excavation" as shown in the Estimate of Quantities will be the basis of payment for this item.

TABLE OF CONCRETE CURB AND GUTTER REMOVAL

Station	to	Station	L/R	Quantity (Ft)
1015+55		1017+38	R	183
			Total:	183.

TABLE OF CONCRETE GUTTER REMOVAL

Station	to	Station	L/R	Quantity (Ft)
1017+38		1017+83	R	54
			Total:	54.

EXCAVATION OF UNSTABLE MATERIAL

Included in the Estimate of Quantities are 50 cubic yards of Unclassified Excavation, Digouts per mile for necessary removal of unstable material.

Backfill shall be Base Course, Salvaged Asphalt Mix paid for at the contract unit price per ton for Base Course, Salvaged Asphalt Mix.

BASE COURSE, SALVAGED ASPHALT MIX

Base Course Salvaged Asphalt Mix estimated at 9,089.7 tons 03W0 and 708.9 tons 05EE shall be obtained from the material produced and stockpiled on this project.

Base Course Salvaged Asphalt Mix shall be compacted to the satisfaction of the Engineer.

At the time of compaction the material shall have approximately 4% moisture uniformly blended throughout the depth of material. The percent moisture may be adjusted by the Engineer. The estimated quantity of Water for Granular Material is 87 MGal. No separate payment will be made for the Water for Granular Material and all costs associated shall be incidental to the contract unit price per ton of “Base Course, Salvaged Asphalt Mix”.

Base Course, Salvaged Asphalt Mix shall be used for backfill of Unclassified Excavation Digouts.

The Base Course, Salvaged Asphalt Mix material shall be crushed to meet the requirements of Section 884 prior to use.

Included in the Estimate of Quantities are 100 cubic yards of Base Course, Salvaged Asphalt Mix per mile for backfill of Unclassified Excavation Digouts. Compaction of the Base Course, Salvaged shall be to the satisfaction of the Engineer.

The contract unit price per ton for Base Course, Salvaged Asphalt Mix shall include loading, placing, and compacting the cold milled material.

ADDITIONAL QUANTITIES

Included in the Table of Additional Quantities are:

200 tons of Class HR Hot Mixed Asphalt Concrete, 2.0 tons of Hydrated Lime, and 8.0 tons of PG 58-34 Asphalt Binder per mile for Alt A and 200 tons of Class HR Hot Mixed Asphalt Concrete, 2.0 tons of Hydrated Lime, and 7.2 tons of PG 58-34 Asphalt Binder per mile for Alt B for spot leveling, strengthening, and repair of the existing surface.

10 tons of SS-1h or CSS-1h Emulsified Asphalt for Tack for repair and leveling areas throughout the project.

MICRO-MILLING ASPHALT CONCRETE

Included in the Estimate of Quantities is 0.75” of micro-milling asphalt as shown on all mainline typical sections. Provide for 3” of micro- milling asphalt as shown in Section 5 to maintain clearance at the overhead structure at Exit 131. The material will be used as RAP in the Class HR Asphalt Concrete or hauled and stockpiled as detailed in the plans.

The Los Angeles Abrasion Loss value on the aggregate used for the in place asphalt concrete for the I90 WBL was 26 percent. The Los Angeles Abrasion Loss value on the aggregate used for the in place asphalt concrete for US14 was 25 percent. These values were obtained from testing during construction of the in place asphalt concrete.

Micro-milling asphalt is estimated to produce 18,245 tons of RAP material. An estimated 3,759 tons of RAP for Alt A, 3,847 tons of RAP for Alt B will be used on project 03W0 in the Class HR Asphalt Concrete mixture. An estimated 477 tons of RAP for Alt A, 485 tons of RAP for Alt B will be used on project 05EE in the Class HR Asphalt Concrete mixture. An estimated 9,090 tons of RAP will be used on project 03W0 as Base Course, Salvaged Asphalt Mix. An estimated 709 tons of RAP will be used on project 05EE as Base Course, Salvaged Asphalt Mix. The Contractor is responsible to assure enough RAP is available for the Class HR Asphalt Concrete. 2,500 tons of RAP will be hauled to the Wall Maintenance Yard located at 212 2nd Ave at Exit 109 to be blended and stockpiled. The remainder of the Rap material estimated at 1,711 tons Alt A, 1,615 tons Alt B of RAP will become the property of the Contractor

GRANULAR MATERIAL, FURNISH

Granular Material shall be furnished by the Contractor for use in blending with the salvaged asphalt mix material from this project.

The Granular Material shall be Base Course meeting the requirements of Section 882.

BLEND, HAUL & STOCKPILE GRANULAR MATERIAL

An Estimated 2,500 tons (for informational purposes only) of RAP material shall be blended with 2500 tons of Granular Material, Furnish and hauled and stockpiled at Wall Maintenance Yard located at 212 2nd Ave at Exit 109.

The Contractor shall use a portable platform scale, stationary commercial scale, stationary commercial plant, portable plant scale, or a belt scale to control the blending and weighing of the salvage material with Contractor furnished granular material.

The RAP shall be crushed to meet the requirements of Section 884.2 C.1 prior to blending into the stockpile.

RAP shall be blended with Granular Material, Furnished at a rate of 50% RAP material and 50% Granular Material, Furnished to obtain stockpile material. The use of a pugmill to blend the materials will be accepted.

Screening or scalping of the RAP stockpile(s) will not be allowed.

Calibrated conveyor(s) shall be used to provide a uniform blending and stockpiling of the materials. Material shall be blended prior to incorporation into the pile.

No further testing of the blended material will be required.

All costs for crushing the salvaged asphalt mix material, hauling, stockpiling, and blending the materials shall be incidental to the contract unit price per ton for “Blend, Haul & Stockpile Granular Material”.

CHECKING SPREAD RATES

The Contractor shall be responsible for checking the Asphalt Concrete Surfacing and Base Course spread rates and take the weigh delivery tickets as the surfacing material arrives on the project and is placed onto the roadway.

The Contractor shall compute the required spread rates for each typical surfacing section and create a spread chart prior to the start of material delivery and placement. The Engineer will review and check the Contractor's calculations and spread charts.

The station to station spread shall be written on each ticket as the surfacing material is delivered to the roadway.

At the end of each day's shift, the Contractor shall verify the following:

- All tickets are present and accounted for,
- The quantity summary for each item is calculated,
- The amount of material wasted if any,
- Each day's ticket summary is marked with the corresponding 'computed by',
- The ticket summary is initialed and certified that the delivered and placed quantity is correct.

All daily tickets and the summary by item shall be given to the Engineer no later than the following morning.

If the checker is not properly and accurately performing the required duties, the Contractor shall correct the problem or replace the checker with an individual capable of performing the duties to the satisfaction of the Engineer. Failure to do so will result in suspension of the work.

The Department will perform depth checks. The Contractor shall be responsible for placement of material to the correct depth unless otherwise directed by the Engineer. If the placed material is not within a tolerance of ±1/4" of the plan shown depth, the Contractor shall correct the problem at no additional cost to the Department. Excess material above the tolerance will not be paid for. Achieving the correct depth may require picking up and moving material or other action as required by the Engineer.

All costs for providing the Contractor furnished checker and performing all related duties shall be incidental to the contract lump sum price for the CHECKER. No allowances will be made to the contract lump sum price for CHECKER due to authorized quantity variations unless the quantities for the material being checked vary above or below the estimated quantities by more than 25%. Payment for the CHECKER shall then be increased or decreased by the same proportion as the placed material quantity bears to the estimated material quantity.

RUMBLE STRIPS

Rumble Strip installation shall be completed prior to application of the Flush Seal and Permanent Pavement Markings. The Engineer shall provide the exact start and stop locations for the rumble strip installation.

Water shall be used with the rumble strip installation for dust control.

Rumble strips shall not be placed on any bridge decks or approach slabs.

The gaps for the rumble strip installation as detailed on the standard plates shall be included with the measurement and payment.

Construction of Asphalt Concrete Rumble Strips shall be paid for at the contract unit price per mile for "Grind 12" Rumble Strip or Stripe in Asphalt Concrete".

RUMBLE STRIP ROADWAY CLEANING

The Contractor shall remove loose material from the driving surface and/or asphalt shoulders of the roadway on a daily basis following rumble strip installation. Loose material may be broomed so that there will not be a windrow of loose material left after the brooming along the edge of the shoulder. Any windrow left shall be picked up by the Contractor. It shall be the Contractor's responsibility to ensure the loose material does not enter any vegetated areas and/or waterways.

All costs associated with this work shall be incidental to the contract unit price per mile for "Grind 12" Rumble Strip or Stripe in Asphalt Concrete".

CLASS HR ASPHALT CONCRETE

Virgin mineral aggregate for Class HR Asphalt Concrete Alternate A shall conform to the requirements for Class E, Type 1.

Virgin mineral aggregate for Class HR Asphalt Concrete Alternate B shall consist of a minimum of 80 percent crushed limestone ledgerock and shall conform to the requirements for Class E, Type 1.

The RAP shall be crushed so the particle size in the cold feed will meet the requirements specified in Section 884.2 C.1.

Screening or scalping of the RAP stockpile(s) will not be allowed.

An estimated 2,876 tons of RAP for Alt A, 2,922 tons of RAP for Alt B is needed on project 03W0 in the Class HR Asphalt Concrete mixture. An estimated 253 tons of RAP for Alt A, 260 tons of RAP for Alt B is needed on project 05EE in the Class HR Asphalt Concrete mixture.

The Class HR Asphalt Concrete shall include 30 percent RAP in the mixture.

CLASS S ASPHALT CONCRETE

Mineral aggregate for the Class S shall conform to the requirements for Class S, Type 1.

When directed by the Engineer, the Contractor shall saw and remove a total of three undamaged compaction cores (4" dia. min.) from designated area(s) and repair the hole(s) to the satisfaction of the Engineer. All costs associated with the compaction cores shall be incidental to the contract unit price per ton for CLASS S ASPHALT CONCRETE.

All other requirements in the Specifications for Class S Asphalt Concrete shall apply

RATES OF MATERIALS

The Estimate of Quantities is based on the following quantities of materials **per mile**.

I90 WBL
Sections 1, 2, 3, 4, 5, & 6
Outside Shoulder Lift – 1.5”

HR ASPHALT CONCRETE

	Alt A	Alt B	
Aggregate	192	198	Tons
Salvaged Asphalt Concrete	82	84	Tons
PG 58-34 Asphalt Binder	12	11	Tons
Total Mix	286	293	Tons
Hydrated Lime	3	3	Tons
Total Mix with Hydrated Lime	289	296	Tons

The exact proportions of these materials will be determined on construction.

SS-1h or CSS-1h Emulsified Asphalt for Tack applied at the rate of 2.7 ton applied 11 feet wide (0.10 gallons per square yard).

I90 WBL
Sections 1, 2, 3, 4, 5, & 6
Wearing Course – 1.25”

CLASS S ASPHALT CONCRETE

Aggregate	1341	Tons
PG 64-34 Asphalt Binder	83	Tons
Total Mix	1424	Tons
Stabilizing Additive For Asphalt Concrete	4	Tons
Total Mix with Stabilizing Additive	1428	Tons

The exact proportions of these materials will be determined on construction.

Sections 1, 2, 3, 4, & 6
SS-1h or CSS-1h Emulsified Asphalt for Tack applied at the rate of 8.9 ton applied 35.5 feet wide (0.10 gallons per square yard).

Section 5
SS-1h or CSS-1h Emulsified Asphalt for Tack applied at the rate of 9.3 ton applied 37.5 feet wide (0.10 gallons per square yard).

FLUSH SEAL

I90 WBL
Sections 1, 2, 3, 4, 5, & 6:
Outside Shoulder 5.5 feet (one Shoulder Only)

SS-1h or CSS-1h Emulsified Asphalt for Flush Seal applied at the rate of 0.7 ton applied 5.5 feet wide (0.05 gallons per square yard).

US 14 EB & WB Lanes
Sections 1a
Outside Shoulder Lift – 1.25” (one lane shoulder only)

HR ASPHALT CONCRETE

	Alt A	Alt B	
Aggregate	157	162	Tons
Salvaged Asphalt Concrete	67	69	Tons
PG 58-34 Asphalt Binder	10	9	Tons
Total Mix	234	240	Tons
Hydrated Lime	2	2	Tons
Total Mix with Hydrated Lime	236	242	Tons

The exact proportions of these materials will be determined on construction.

SS-1h or CSS-1h Emulsified Asphalt for Tack applied at the rate of 2.7 ton applied 11 feet wide (0.10 gallons per square yard).

US 14 EB & WB Lanes
Sections 1b
Inside Shoulder Lift – 1.5” (one lane shoulder only)

HR ASPHALT CONCRETE

	Alt A	Alt B	
Aggregate	428	441	Tons
Salvaged Asphalt Concrete	184	189	Tons
PG 58-34 Asphalt Binder	25	24	Tons
Total Mix	637	654	Tons
Hydrated Lime	6	7	Tons
Total Mix with Hydrated Lime	643	661	Tons

The exact proportions of these materials will be determined on construction.

SS-1h or CSS-1h Emulsified Asphalt for Tack applied at the rate of 3.2 ton applied 13 feet wide (0.10 gallons per square yard).

US 14 EB & WB Lanes
Sections 1a &1b
Wearing Course – 1.25” (one Set of Lanes only)

CLASS S ASPHALT CONCRETE

Aggregate	848	Tons
PG 64-34 Asphalt Binder	52	Tons
Total Mix	900	Tons
Stabilizing Additive For Asphalt Concrete	3	Tons
Total Mix with Stabilizing Additive	903	Tons

The exact proportions of these materials will be determined on construction.

SS-1h or CSS-1h Emulsified Asphalt for Tack applied at the rate of 6.4 ton applied 25.5 feet wide (0.10 gallons per square yard).

US14 EB & WB Lanes Sections 1 & 2:
Outside Shoulder 5.5 feet (one Shoulder Only)

SS-1h or CSS-1h Emulsified Asphalt for Flush Seal applied at the rate of 0.7 ton applied 5.5 feet wide (0.05 gallons per square yard).

Revised: 1/26/16 klh

TABLE OF QUANTITIES – I90 WESTBOUND LANES

										Alt A			Alt B						
MRM to	MRM	Section	Station to	Station	Length	Micro-Milling Asphalt Concrete	Unclassified Excavation, Dugouts	Base Course, Salvaged Asphalt Mix	SS-1h or CSS-1h Emulsified Asphalt for Tack	PG 58-34 Asphalt Binder	HR Asphalt Concrete	Hydrated Lime	PG 58-34 Asphalt Binder	HR Asphalt Concrete	Hydrated Lime	PG 64-34 Asphalt Binder	Class S Asphalt Concrete	Stabilizing Additive for Asphalt Concrete	SS-1h or CSS-1h Emulsified Asphalt for Flush Seal
					Ft	SqYd	CuYd	Ton	Ton	Ton	Ton	Ton	Ton	Ton	Ton	Ton	Ton	Ton	Ton
112.144	112.256	1	8+04.61	14+00.00	595.39	1779.6	5.6	21.3	1.31	1.92	49.5	0.45	1.8	50.9	0.45	9.36	161.0	0.45	0.08
112.256	112.787	2	14+00.00	42+00.00	2800.00	8368.9	26.5	100.2	6.15	9.02	232.8	2.12	8.48	239.2	2.12	44.02	757.3	2.12	0.36
112.787	112.900	1	42+00.00	48+00.00	600.00	1793.3	5.7	21.5	1.32	1.93	49.9	0.45	1.82	51.3	0.45	9.43	162.3	0.45	0.08
112.900	113.029	2	48+00.00	54+00.00	600.00	1793.3	5.7	21.5	1.32	1.93	49.9	0.45	1.82	51.3	0.45	9.43	162.3	0.45	0.08
113.029	113.691	1	54+00.00	89+00.00	3500.00	10461.1	33.1	125.3	7.68	11.27	291	2.65	10.61	299.0	2.65	55.02	946.6	2.65	0.45
113.691	113.881	2	89+00.00	99+00.00	1000.00	2988.9	9.5	35.8	2.20	3.22	83.1	0.76	3.03	85.4	0.76	15.72	270.5	0.76	0.13
113.881	113.995	1	99+00.00	105+00.00	600.00	1793.3	5.7	21.5	1.32	1.93	49.9	0.45	1.82	51.3	0.45	9.43	162.3	0.45	0.08
113.995	114.146	2	105+00.00	113+00.00	800	2391.1	7.6	28.6	1.76	2.58	66.5	0.61	2.42	68.3	0.61	12.58	216.4	0.61	0.1
114.146	114.582	1	113+00.00	136+00.00	2300	6874.4	21.8	82.3	5.05	7.41	191.2	1.74	6.97	196.5	1.74	36.16	622.0	1.74	0.3
114.582	114.841	2	136+00.00	149+70.00	1370	4094.8	13.0	49.0	3.01	4.41	113.9	1.04	4.15	117.0	1.04	21.54	370.5	1.04	0.18
114.842	115.092	1	149+70.00	163+00.00	1330	3975.2	12.6	47.6	2.92	4.28	110.6	1.01	4.03	113.6	1.01	20.91	359.7	1.01	0.17
115.092	116.227	2	163+00.00	224+00.00	6100	18232.2	57.8	218.4	13.39	19.64	507.2	4.62	18.48	521.0	4.62	95.89	1649.8	4.62	0.79
116.247	116.917	1	224+00.00	259+37.37	3537.37	10572.8	33.5	126.6	7.77	11.39	294.1	2.68	10.72	302.2	2.68	55.61	956.7	2.68	0.46
116+.94		Structure	259+83.21	261+34.09															
116.964	118.015	1	261+84.69	316+70.23	9270.23	27707.7	87.8	331.8	20.35	29.85	770.8	7.02	28.09	791.8	7.02	145.73	2507.2	7.02	1.2
		Equation	316+70.23	315+71.10															
118.015	118.153	1	315+71.10	324+00.00	828.9	2477.5	7.8	29.7	1.82	2.67	68.9	0.63	2.51	70.8	0.63	13.03	224.2	0.63	0.11
118.153	118.229	2	324+00.00	328+00.00	400	1195.6	3.8	14.3	0.88	1.29	33.3	0.3	1.21	34.2	0.3	6.29	108.2	0.30	0.05
118.229	118.399	1	328+00.00	337+00.00	900	2690.0	8.5	32.2	1.98	2.9	74.8	0.68	2.73	76.9	0.68	14.15	243.4	0.68	0.12
118.399	118.683	2	337+00.00	352+00.00	1500	4483.3	14.2	53.7	3.29	4.83	124.7	1.14	4.55	128.1	1.14	23.58	405.7	1.14	0.19
118.683	118.797	1	352+00.00	358+00.00	600	1793.3	5.7	21.5	1.32	1.93	49.9	0.45	1.82	51.3	0.45	9.43	162.3	0.45	0.08
118.797	118.891	2	358+00.00	363+00.00	500	1494.4	4.7	17.9	1.10	1.61	41.6	0.38	1.52	42.7	0.38	7.86	135.2	0.38	0.06
118.891	119.005	1	363+00.00	369+00.00	600	1793.3	5.7	21.5	1.32	1.93	49.9	0.45	1.82	51.3	0.45	9.43	162.3	0.45	0.08
119.005	121.502	2	369+00.00	503+00.00	13400	40051.1	126.9	479.7	29.42	43.14	1114.1	10.15	40.61	1144.6	10.15	210.64	3624.1	10.15	1.74
121.502	121.917	1	503+00.00	524+90.50	2190.5	6547.2	20.7	78.4	4.81	7.05	182.1	1.66	6.64	187.1	1.66	34.43	592.4	1.66	0.28
121.980		Structure	525+56.44	526+80.54															
121.956	122.417	1	526+94.78	549+50.00	2255.22	6740.6	21.4	80.7	4.95	7.26	187.5	1.71	6.83	192.6	1.71	35.45	609.9	1.71	0.29
122.417	123.031	2	549+50.00	582+00.00	3250	9713.9	30.8	116.3	7.14	10.46	270.2	2.46	9.85	277.6	2.46	51.09	879.0	2.46	0.42
123.031	123.088	1	582+00.00	585+00.00	300	896.7	2.8	10.7	0.66	0.97	24.9	0.23	0.91	25.6	0.23	4.72	81.1	0.23	0.04
123.088	123.239	2	585+00.00	593+00.00	800	2391.1	7.6	28.6	1.76	2.58	66.5	0.61	2.42	68.3	0.61	12.58	216.4	0.61	0.1
123.239	123.410	1	593+00.00	602+00.00	900	2690.0	8.5	32.2	1.98	2.9	74.8	0.68	2.73	76.9	0.68	14.15	243.4	0.68	0.12
123.410	123.845	2	602+00.00	625+00.00	2300	6874.4	21.8	82.3	5.05	7.41	191.2	1.74	6.97	196.5	1.74	36.16	622.0	1.74	0.3
123.845	124.230	1	625+00.00	645+30.00	2030	6067.4	19.2	72.7	4.46	6.54	168.8	1.54	6.15	173.4	1.54	31.91	549.0	1.54	0.26
124.230	125.080	1	645+30.00	690+15.97	4485.97	13408.1	42.5	160.6	9.85	14.44	373	3.4	13.59	383.2	3.4	70.52	1213.3	3.4	0.58
		Equation	690+15.97	690+16.33															
125.080	125.468	1	690+16.33	710+62.21	2045.88	6114.9	19.4	73.2	4.49	6.59	170.1	1.55	6.2	174.8	1.55	32.16	553.3	1.55	0.27
125.530		Structure	712+12.00	714+14.00															
125.554	125.948	1	715+20.59	736+00.00	2079.41	6215.1	19.7	74.4	4.57	6.7	172.9	1.58	6.3	177.6	1.58	32.69	562.4	1.58	0.27
125.948	126.233	2	736+00.00	751+00.00	1500	4483.3	14.2	53.7	3.29	4.83	124.7	1.14	4.55	128.1	1.14	23.58	405.7	1.14	0.19
126.233	126.328	1	751+00.00	756+00.00	500	1494.4	4.7	17.9	1.10	1.61	41.6	0.38	1.52	42.7	0.38	7.86	135.2	0.38	0.06
126.328	126.726	2	756+00.00	777+00.00	2100	6276.7	19.9	75.2	4.61	6.76	174.6	1.59	6.36	179.4	1.59	33.01	568.0	1.59	0.27
126.726	126.839	1	777+00.00	783+00.00	600	1793.3	5.7	21.5	1.32	1.93	49.9	0.45	1.82	51.3	0.45	9.43	162.3	0.45	0.08
126.839	126.972	2	783+00.00	790+00.00	700	2092.2	6.6	25.1	1.54	2.25	58.2	0.53	2.12	59.8	0.53	11	189.3	0.53	0.09
126.972	127.556	1	790+00.00	820+86.15	3086.15	9224.2	29.2	110.5	6.78	9.94	256.6	2.34	9.35	263.6	2.34	48.51	834.7	2.34	0.4
		Equation	820+86.15	820+87.55															
127.557	127.711	1	820+87.55	829+00.85	813.3	2430.9	7.7	29.1	1.79	2.62	67.6	0.62	2.46	69.5	0.62	12.78	220.0	0.62	0.11
127.730		Structure	829+00.85	830+41.12															
127.737	128.202	1	830+41.12	855+00.00	2458.88	7349.3	23.3	88.0	5.40	7.92	204.4	1.86	7.45	210.0	1.86	38.65	665.0	1.86	0.32
128.202	128.482	2	855+00.00	869+78.00	1478	4417.6	14.0	52.9	3.25	4.76	122.9	1.12	4.48	126.2	1.12	23.23	399.7	1.12	0.19
128.482	129.221	1	869+78.00	908+78.40	3900.4	11657.9	36.9	139.6	8.56	12.56	324.3	2.95	11.82	333.2	2.95	61.31	1054.9	2.95	0.51
		Equation	908+78.40	908+81.30															
129.221	129.708	2	908+81.30	934+50.00	2568.7	7677.6	24.3	91.9	5.64	8.27	213.6	1.95	7.78	219.4	1.95	40.38	694.7	1.95	0.33
129.708	129.840	1	934+50.00	941+50.00	700	2092.2	6.6	25.1	1.54	2.25	58.2	0.53	2.12	59.8	0.53	11	189.3	0.53	0.09
129.840	130.028	2	941+50.00	951+00.00	950	2839.4	9.0	34.0	2.09	3.06	79	0.72	2.88	81.1	0.72	14.93	256.9	0.72	0.12
130.028	130.123	1	951+00.00	956+00.00	500	1494.4	4.7	17.9	1.10	1.61	41.6	0.38	1.52	42.7	0.38	7.86	135.2	0.38	0.06
130.123	130.265	3	956+00.00	963+50.00	750	2241.7	7.1	26.8	1.65	2.41	62.4	0.57	2.27	64.1	0.57	11.79	202.8	0.57	0.1
130.265	130.397	4	963+50.00	970+50.00	700	2092.2	6.6	25.1	1.54	2.25	58.2	0.53	2.12	59.8	0.53	11	189.3	0.53	0.09
130.397	130.634	3	970+50.00	983+00.00	1250	3736.1	11.8	44.7	2.74	4.02	103.9	0.95	3.79	106.8	0.95	19.65	338.1	0.95	0.16
130.634	131.255	4	983+00.00	1015+85.00	3285	9818.5	31.1	117.6	7.21	10.58	273.1	2.49	9.95	280.6	2.49	51.64	888.4	2.49	0.43
131.255	131.289	5	1015+85.00	1017+65.00	180	662.0	1.7	6.4	0.32	0.58	15	0.14	0.55	15.4	0.14	2.83	48.7	0.14	0.02
131.289	132.165	4	1017+65.00	1063+89.00	4624	13820.6	43.8	165.5	10.15	14.89	384.5	3.5	14.01	395.0	3.5	72.69	1250.6	3.5	0.6
Additional Quantities						15026.0	0	5209.2	15.65	167.3	4183	41.84	150.66	4184.9	41.85	50.7	874.1	2.62	0
		TOTALS:			**108413.30**	**339185.0**	**1026.5**	**9089.7**	**253.67**	**516.38**	**13196.9**	**123.97**	**479.18**	**13445.7**	**123.98**	**1754.93**	**30195.1**	**84.75**	**14.04**

TABLE OF ADDITIONAL QUANTITIES – I90 WESTBOUND LANES

								Alt A			Alt B						
Location			**Length**	**Micro-Milling Asphalt Concrete**	**Unclassified Excavation, Dugouts**	**Base Course, Salvaged Asphalt Mix**	**SS-1h or CSS-1h Emulsified Asphalt for Tack**	**PG 58-34 Asphalt Binder**	**HR Asphalt Concrete**	**Hydrated Lime**	**PG 58-34 Asphalt Binder**	**HR Asphalt Concrete**	**Hydrated Lime**	**PG 64-34 Asphalt Binder**	**Class S Asphalt Concrete**	**Stabilizing Additive for Asphalt Concrete**	**SS-1h or CSS-1h Emulsified Asphalt for Flush Seal**
			Ft	**SqYd**	**CuYd**	**Ton**	**Ton**	**Ton**	**Ton**	**Ton**	**Ton**	**Ton**	**Ton**	**Ton**	**Ton**	**Ton**	**Ton**
Spot leveling, strengthing,and repair of existing surfacing			108413.30				10	164.26	4106.6	41.07	147.84	4106.6	41.07				
Ramp Tapers/Gores				12600			5.36							50.7	874.1	2.62	
Maintenance Crossovers						4368											
Guardrail																	
Str. No. 52-954-400		L		74		7.4	0.03	0.29	7.3	0.07	0.27	7.5	0.08				
MRM 116.94		M		514		166.3	0.05	0.5	12.6	0.13	0.46	12.9	0.13				
Str. No. 52-A00-419		L		96		5.4	0.03	0.32	8	0.08	0.3	8.2	0.08				
MRM 121.98		M		463		200.9	0.04	0.46	11.6	0.12	0.43	11.9	0.12				
Str. No. 36-071-076		L		74		3.9	0.02	0.24	6.1	0.06	0.22	6.2	0.06				
MRM 125.53		M		551		189.1	0.03	0.27	6.7	0.07	0.25	6.9	0.07				
MRM 126.36 RCBC		L				12.8	0.03	0.28	7	0.07	0.26	7.2	0.07				
Str. No. 36-090-087		L		76		1.3	0.02	0.24	6.1	0.06	0.22	6.2	0.06				
MRM 127.73		M		578		254.1	0.04	0.44	11	0.11	0.41	11.3	0.11				
I90 Add Quantities Total:				**15026.0**	**0.0**	**5209.2**	**15.65**	**167.30**	**4183.0**	**41.84**	**150.66**	**4184.9**	**41.85**	**50.70**	**874.1**	**2.62**	**0.0**

TABLE OF QUANTITIES – US 14

										Alt A			Alt B						
MRM to	MRM	Section	Station to	Station	Length	Micro-Milling Asphalt Concrete	Unclassified Excavation, Dugouts	Base Course, Salvaged Asphalt Mix	SS-1h or CSS-1h Emulsified Asphalt for Tack	PG 58-34 Asphalt Binder	HR Asphalt Concrete	Hydrated Lime	PG 58-34 Asphalt Binder	HR Asphalt Concrete	Hydrated Lime	PG 64-34 Asphalt Binder	Class S Asphalt Concrete	Stabilizing Additive for Asphalt Concrete	SS-1h or CSS-1h Emulsified Asphalt for Flush Seal
					Ft	SqYd	CuYd	Ton	Ton	Ton	Ton	Ton	Ton	Ton	Ton	Ton	Ton	Ton	Ton
112.169	112.931	1a WB	8+57.00	48+84.70	4027.70	13783.7	38.1	144.2	6.94	7.63	180	1.53	6.87	184.6	1.53	39.67	686.5	2.29	0.53
112.931	113.020	1b WB	48+84.70	53+53.65	468.95	1042.1	4.4	16.8	0.85	3.11	78.1	0.71	2.93	80.2	0.8	4.62	79.9	0.27	0.06
		Equation	53+53.65	42+00.00															
113.020	113.551	1b WB	42+00.00	70+00.00	2800.00	6222.2	26.5	100.2	5.09	18.56	466.1	4.24	17.5	478.9	4.77	27.58	477.3	1.59	0.37
112.346	112.882	1a EB	8+02.81	36+24.83	2822.02	9657.6	26.7	101.0	4.86	5.34	126.1	1.07	4.81	129.3	1.07	27.79	481.0	1.6	0.37
112.96		Structure	36+24.83	40+35.94															
112.960	112.932	1a EB	40+35.94	58+01.71	1765.77	6042.9	16.7	63.2	3.04	3.34	78.9	0.67	3.01	80.9	0.67	17.39	301.0	1.0	0.23
		Equation	58+01.71	48+86.85															
112.932	112.960	1a EB	48+86.85	50+34.77	147.92	506.2	1.4	5.3	0.25	0.28	6.6	0.06	0.25	6.8	0.06	1.46	25.2	0.1	0.02
112.960	113.021	1b EB	50+34.77	53+53.65	318.88	708.6	3.0	11.4	0.58	2.11	53.1	0.48	1.99	54.5	0.54	3.14	54.4	0.18	0.04
		Equation	53+53.65	42+00.00															
113.021	113.551	1b EB	42+00.00	70+00.00	2800.00	6222.2	26.5	100.2	5.09	18.56	466.1	4.24	17.5	478.9	4.77	27.58	477.3	1.59	0.37
US14 Add Quantities					1200.00	8034.1	11.4	166.6	3.83	34.76	847	8.06	31.55	850.9	8.06	30.63	528.1	1.58	0.32
US14 TOTALS:					**16351.24**	**52219.60**	**154.70**	**708.90**	**30.53**	**93.69**	**2302.00**	**21.06**	**86.41**	**2345.00**	**22.27**	**179.86**	**3110.70**	**10.18**	**2.31**

TABLE OF ADDITIONAL QUANTITIES – US 14

										Alt A			Alt B						
MRM to	MRM	Section	Station to	Station	Length	Micro-Milling Asphalt Concrete	Unclassified Excavation, Dugouts	Base Course, Salvaged Asphalt Mix	SS-1h or CSS-1h Emulsified Asphalt for Tack	PG 58-34 Asphalt Binder	HR Asphalt Concrete	Hydrated Lime	PG 58-34 Asphalt Binder	HR Asphalt Concrete	Hydrated Lime	PG 64-34 Asphalt Binder	Class S Asphalt Concrete	Stabilizing Additive for Asphalt Concrete	SS-1h or CSS-1h Emulsified Asphalt for Flush Seal
					Ft	SqYd	CuYd	Ton	Ton	Ton	Ton	Ton	Ton	Ton	Ton	Ton	Ton	Ton	Ton
113.551	113.78	2	70+00.00	82+00.00	1200.00	4812.1	11.4	43.0	2.05	4.55	107.3	0.91	4.09	110.0	0.91	19.36	333.8	1.0	0.32
		Spot leveling, strengthing,and repair			16351.24					24.77	619.4	6.19	22.3	619.4	6.19				
		Ramp Tapers/Gores				2800			1.19							11.27	194.3	0.58	
		Bridge End width Transistion 250'				422			0.18	2.04	35.2	0.11	2.09	36.1	0.11				
		Maintenance Crossover & Approaches							0.36	2.84	70.9	0.71	2.55	70.9	0.71				
		Guardrail																	
		Str. No. 52-926-366						123.6	0.03	0.32	8.1	0.08	0.3	8.3	0.08				
		MRM 112.96							0.02	0.24	6.1	0.06	0.22	6.2	0.06				
US14 Add Quantities Totals:					**1200.0**	**8034.1**	**11.4**	**166.6**	**3.83**	**34.76**	**847.0**	**8.06**	**31.55**	**850.9**	**8.06**	**30.63**	**528.1**	**1.6**	**0.32**

TABLE OF GUARDRAIL REMOVAL & SALVAGE

Location	Left Side/ Median	Salvage 3 Cable Guardrail	Remove 3 Cable Guardrail Anchor Assembly	Remove 3 Cable Guardrail Slip Base Anchor Assembly	Salvage Beam Guardrail	Salvage Beam Guardrail Trailing End Terminal	Salvage W Beam Guardrail Flared End Terminal	Salvage W Beam Guardrail Tangent End Terminal	Remove 3 Cable Guardrail for Reset	Remove Double Thrie Beam Guardrail for Reset	Remove W Beam Guardrail for Reset	Remove W Beam to Thrie Beam Guardrail Transition for Reset	Remove Beam Guardrail Trailing End Terminal for Reset	Remove W Beam Guardrail Breakaway Cable Terminal for Reset	Comments
		Ft	Each	Each	Ft	Each	Each	Each	Ft	Ft	Ft	Each	Each	Each	
I90 WESTBOUND															
Str. No. 52-954-400	L	53	2		50				342	12.5	62.5	1		1	
MRM 116.94	M				75		1			12.5	112.5	1			
Str. No. 52-A00-419	L	59	2		37.5				326	12.5	75	1		1	
MRM 121.98	M				75		1			12.5	75	1			
Str. No. 36-071-076	L				150			1		12.5	62.5	1			
MRM 125.53	M				87.5		1			12.5	62.5	1			
RCBC MRM 126.36	L				162.5			1			100		1		
Str. No. 36-090-087	L								270	12.5	62.5	1		1	
MRM 127.73	M				87.5		1			12.5	62.5	1			
Str. No. 36-120-107	L				225	1		1							
MRM 131.27	M	14	2						342						3 Cable Guardrail removed for reset shall be reset at MRM 126.36
RCBC MRM 131.72	L	24	2						438						3 Cable Guardrail removed for reset shall be reset at MRM 127.73 Str. No. 36-090-087
03W0 TOTALS:		**150**	**8**	**0**	**950**	**1**	**4**	**3**	**1718**	**100**	**675**	**8**	**1**	**3**	
US 14															
Str. No. 52-926-366	M	13		1					263	12.5	62.5	1		1	
MRM 112.96	R	62	2		12.5				230	12.5	62.5	1		1	
MRM 113.57	L		2						372						
	R		2						467						
05EE TOTALS:		**75**	**6**	**1**	**12.5**	**0**	**0**	**0**	**1332**	**25**	**125**	**2**	**0**	**2**	

TABLE OF GUARDRAIL

Location	Left Side/ Median	3 Cable Guardrail	NCHRP 350 Test Level 3 High Tension Cable Guardrail	NCHRP 350 Test Level 3 High Tension Cable Guardrail Anchor Assembly	Reset 3 Cable Guardrail	3 Cable Guardrail Slip Base Anchor Assembly	3 Cable Guardrail Anchor Assembly	W Beam Guardrail Breakaway Cable Terminal	Beam Guardrail Post and Block	Reset Double Thrie Beam Rail	Reset W Beam Rail	Reset W Beam Guardrail Breakaway Cable Terminal	Reset W Beam to Thrie Beam Guardrail Transition	Reset Beam Guardrail Trailing End Terminal	Borrow Unclassified Excavation	Guardrail Delineation	Type 2 Object Marker	Type 2 Object Marker Back to Back	Comments
		Ft	Ft	Each	Ft	Each	Each	Each	Each	Ft	Ft	Each	Each	Each	CuYd	Each	Each	Each	
I90 WESTBOUND																			
Str. No. 52-954-400	L				342	1	1		19	12.5	62.5	1	1		47	7	1		
MRM 116.94	M	358				1	1	1	27	12.5	112.5		1		226	7		1	
Str. No. 52-A00-419	L				326	1	1		21	12.5	75	1	1		34	7	1		
MRM 121.98	M	422				1	1	1	21	12.5	75		1		317	8		1	
Str. No. 36-071-076	L	326				1	1	1	19	12.5	62.5		1		28	7	1		
MRM 125.53	M	422				1	1	1	19	12.5	62.5		1		298	8		1	
RCBC MRM 126.36	L				342	1	1	1	24		100			1	79	7	1		Reset 3 Cable Guardrail from MRM
Str. No. 36-090-087	L	104			270	1			19	12.5	62.5	1	1		8	7	1		
MRM 127.73	M				438	1		1	19	12.5	62.5		1		476	9		1	Reset 3 Cable Guardrail from MRM 131.72
Str. No. 36-120-107	L		458	2											12				
MRM 131.27	M		522	2															
RCBC MRM 131.72	L		522	2															
03W0 TOTALS:		**1632**	**1502**	**6**	**1718**	**9**	**7**	**6**	**188**	**100**	**675**	**3**	**8**	**1**	**1525**	**67**	**5**	**4**	
US 14																			
Str. No. 52-926-366	M				263	1			19	12.5	62.5	1	1		35	5		1	
MRM 112.96	R				230	1	1		19	12.5	62.5	1	1			5	1		
MRM 113.57	L	142			372	2										10		2	
	R	81			467	2										11		2	
05EE TOTALS:		**223**	**0**	**0**	**1332**	**6**	**1**	**0**	**38**	**25**	**125**	**2**	**2**	**0**	**35**	**31**	**1**	**5**	

SALVAGE BEAM GUARDRAIL

Steel beam rail, end terminals, and hardware items shall become the property of the State and shall be removed, hauled, and neatly stacked at the Wall Maintenance Yard located at 212 2nd Ave at Exit 109 as approved by the Engineer. Posts and blocks shall become the property of the Contractor and shall be removed from the project limits.

Payment for removing, hauling, and stacking the guardrail items shall be incidental to the contract unit price per foot for “Salvage Beam Guardrail”.

SALVAGE 3 CABLE GUARDRAIL

The cables, posts, and hardware items shall become the property of the State and shall be removed, hauled, and neatly stacked at the Wall Maintenance Yard located at 212 2nd Ave at Exit 109 as approved by the Engineer. The cable >20’ should be rolled on a spool and the lengths labeled. Anchor assemblies shall become the property of the Contractor and shall be removed from the project limits.

Payment for removing, hauling, and stacking the salvaged guardrail items except for the anchor assemblies shall be incidental to the contract unit price per foot for “Salvage 3 Cable Guardrail”.

RESET 3 CABLE GUARDRAIL

In the areas where the Reset 3 Cable Guardrail is more than the Remove for Reset 3 Cable Guardrail, the Contractor shall minimize splicing the 3 cable guardrail by utilizing the longer lengths removed at other locations on the project. The total amount of salvaged 3 cable guardrail has been reduced to accommodate the additional 3 cable guardrail needed for resetting.

RESET W BEAM GUARDRAIL END TERMINALS

Bid items are provided for resetting “W Beam Guardrail Breakaway Cable Terminal” and “Beam Guardrail Trailing End Terminal” at the locations provided in the table of guardrail. An additional quantity of “Beam Guardrail Post and Block” has been provided for installing new posts in the W Beam Guardrail Terminals. All costs associated with this work shall be incidental to the contract unit price per each for resetting “W Beam Guardrail Breakaway Cable Terminal”, “Beam Guardrail Trailing End Terminal” and for “Beam Guardrail Post and Block”.

RESET BEAM GUARDRAIL

The Contractor shall not reset beam guardrail that has drilled holes, extra holes, tears, and dents 6” or greater.

GUARDRAIL DELINEATORS

The Contractor shall place guardrail delineators on all portions of guardrail as per standard plate 632.40. All costs for furnishing and installing guardrail delineation shall be incidental to the contract unit price per each for “Guardrail Delineator”.

The Contractor shall use aluminum delineators and the use of flexible plastic will not be allowed as shown on standard plate 632.40.

HIGH TENSION CABLE GUARDRAIL

The Contractor shall furnish and install a 3 or 4 cable high tension guardrail system that meets the Test Level 3 crash testing requirements of National Cooperative Highway Research Program (NCHRP) 350 or current Manual for Assessing Safety Hardware (MASH). The maximum dynamic deflection of the system shall be less than 8 feet and the maximum post spacing shall be 16 feet unless specified otherwise in the plans.

The high tension cable guardrail system shall be in compliance with Specifications Section 6.9 Buy America.

The Contractor shall install the system according to the manufacturer’s installation recommendations except where stated otherwise in the plans. A copy of the detail drawings and installation instructions for the high tension cable guardrail and anchor assemblies shall be given to the Engineer a minimum of 4 weeks prior to installation of the high tension cable guardrail system.

All posts shall be galvanized and inserted into driven galvanized steel sleeves with soil plates.

Reflective sheeting shall be placed back-to-back on every other post cap or cable spacer and on the cable release post. The sheeting shall be in conformance with Section 982.2 K.2. of the Specifications. The color of the reflective sheeting shall be the same as the nearest pavement marking.

The cables provided shall be pre-stretched in the factory.

The Contractor shall check and adjust the tension of the cables a minimum of 3 weeks after installation and not longer than 6 weeks after installation. Cost for this work shall be incidental to the contract unit price per foot for “NCHRP 350 Test Level 3 High Tension Cable Guardrail”.

The lengths of high tension cable guardrail stated in the plans were based on a non-effective length of 26’ at each end of the “run” of guardrail. The length and location of the high tension cable guardrail at each site will need to be adjusted during construction as necessary if a system with a different non-effective length is used and it shall be approved by the Design Engineer before installation.

The Contractor shall provide a signed letter of compliance to the Engineer upon completion of the high tension cable guardrail installation(s) stating that the high tension cable barrier system has been installed in conformance to the installation instructions, specifications, and at a minimum meets the TL-3 crash test requirements of NCHRP 350 or MASH 2009.

The high tension cable guardrail shall be measured along the centerline of the cable guardrail from center of anchor assembly to center of anchor assembly to the nearest foot. Example: If the system utilizes 4 anchor footings in the anchor assembly, then the center of the anchor assembly would be centered between the 2nd and 3rd footing.

All costs for furnishing and installing the 3 or 4 cable high tension guardrail system including all labor, materials, and equipment shall be incidental to the contract unit price per foot for “NCHRP 350 Test Level 3 High Tension Cable Guardrail”.

HIGH TENSION CABLE GUARDRAIL ANCHOR ASSEMBLY

The beginning and end of each “run” of high tension cable guardrail shall terminate with an anchor assembly that meets the Test Level 3 crash testing requirements of NCHRP 350 or MASH 2009.

The footing for the anchor assembly shall be designed to allow for 1 inch maximum of lateral deflection. The allowable design soil pressure shall be 1000 psf. The top 2 feet of soil pressure shall be neglected in the design of the footing. The footing shall be a minimum of 5’ deep. The footing design shall be submitted through proper channels to the Office of Bridge Design for approval a minimum of 4 weeks prior to construction of the anchor footings.

All costs for furnishing and installing the High Tension Cable Guardrail Anchor Assembly including all labor, equipment, and materials which include the anchor footing, hardware, and all attachments to the anchor footing, shall be incidental to the contract unit price per each for “NCHRP 350 Test Level 3 High Tension Cable Guardrail Anchor Assembly”.

FURNISH HIGH TENSION CABLE GUARDRAIL POST AND SLEEVE

The Contractor shall furnish an additional 25 galvanized posts, 25 sleeves with soil plates, and 25 caps or cable spacers with back to back white reflective sheeting and shall deliver and stockpile the materials at the Wall Maintenance Yard located at 212 2nd Ave at Exit 109. The posts and sleeves shall be the same type of posts and sleeves provided in the installation of the high tension cable guardrail on the project.

All costs for furnishing the posts, sleeves with soil plates, caps, and delivering them to the Wall Maintenance Yard located at 212 2nd Ave at Exit 109 shall be incidental to the contract unit price per each for “Furnish High Tension Cable Guardrail Post and Sleeve”.

STATE OF SOUTH DAKOTA	PROJECT	SHEET	TOTAL SHEETS
	IM 0903(102)112 & NH 0014(216)112	F13	F56

Plotting Date: 12/30/2015

TYPICAL SURFACING SECTION

I90 WBL - Section 1

* Sta a 8+04.61 to Sta a14+00
* Sta a 42+00 to Sta a 48+00
* Sta a 54+00 to Sta a 89+00
* Sta a 99+00 to Sta a 105+00
* Sta a 113+00 to Sta a 136+00
* Sta a 149+70 to Sta a 163+00
* Sta a 224+00 to Sta b 324+00
* Sta b 328+00 to Sta b 337+00
* Sta b 352+00 to Sta b 358+00
* Sta b 363+00 to Sta b 369+00
* Sta b 503+00 to Sta b 549+50
* Sta b 582+00 to Sta b 585+00
* Sta b 593+00 to Sta b 602+00
* Sta b 625+00 to Sta b 645+30
** Sta b 645+30 to Sta c 736+00
** Sta c 751+00 to Sta c 756+00
** Sta c 777+00 to Sta c 783+00
** Sta c 790+00 to Sta d 855+00
** Sta d 869+78 to Sta d 908+78
** Sta e 934+50 to Sta e 941+50
** Sta e 951+00 to Sta e 956+00

In Place & Micro-Milling Section

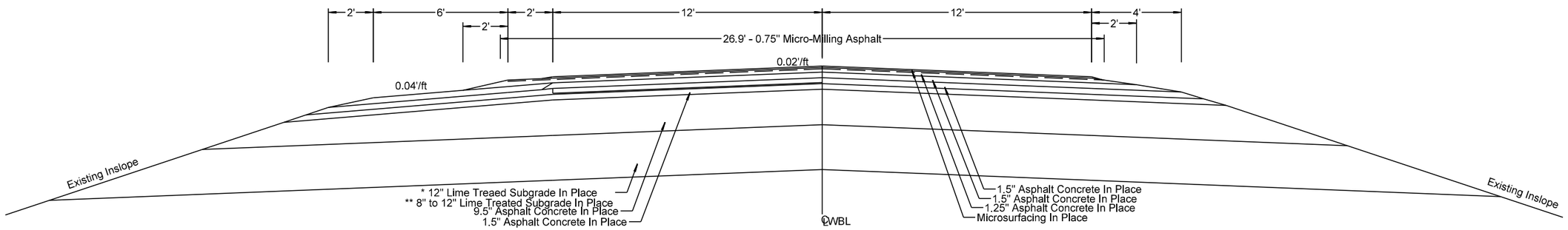

Resurfacing Section

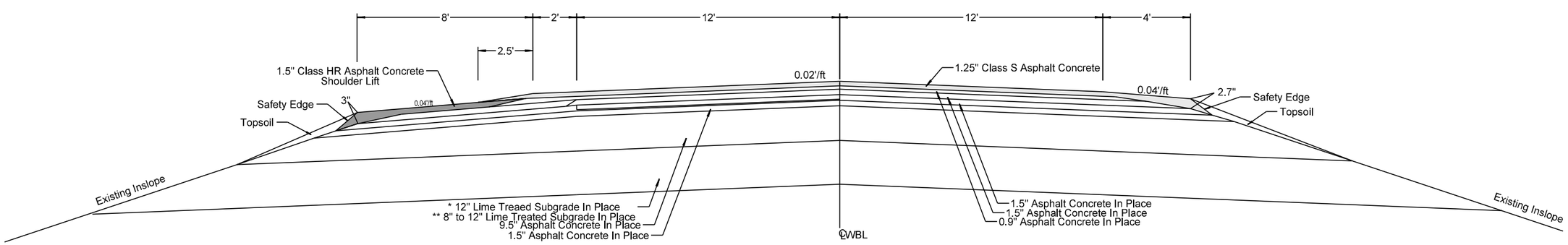

Plot Scale - 1:5

Plotted From - trrc11610

File - ...\Penn03W0\Design\03w0_typ.dgn

STATE OF SOUTH DAKOTA	PROJECT	SHEET	TOTAL SHEETS
	IM 0903(102)112 & NH 0014(216)112	F14	F56

Plotting Date: 12/30/2015

TYPICAL SURFACING SECTION

I90 WBL - Section 2

Sta a 14+00 to Sta a 42+00
Sta a 48+00 to Sta a 54+00
Sta a 89+00 to Sta a 99+00
Sta a 105+00 to Sta a 113+00
Sta a 136+00 to Sta a 149+70
Sta a 163+00 to Sta a 224+00
Sta b 324+00 to Sta b 328+00
Sta b 337+00 to Sta b 352+00
Sta b 358+00 to Sta b 363+00
Sta b 369+00 to Sta b 503+00
Sta b 549+50 to Sta b 582+00
Sta b 585+00 to Sta b 593+00
Sta b 602+00 to Sta b 625+00
* Sta c 736+00 to Sta c 751+00
* Sta c 756+00 to Sta c 777+00
* Sta c 783+00 to Sta c 790+00
* Sta d 855+00 to Sta d 869+78
* Sta d 908+78 to Sta e 934+50
* Sta e 941+50 to Sta e 951+00

In Place & Micro-Milling Section

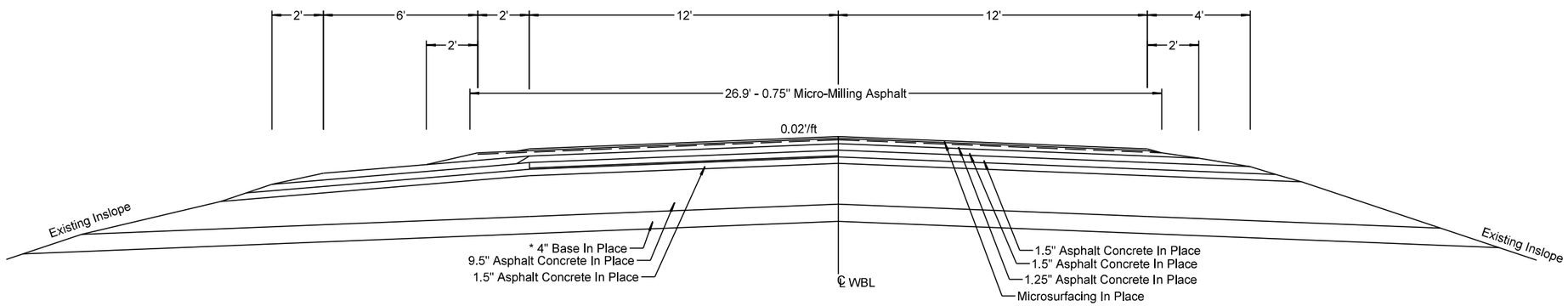

Resurfacing Section

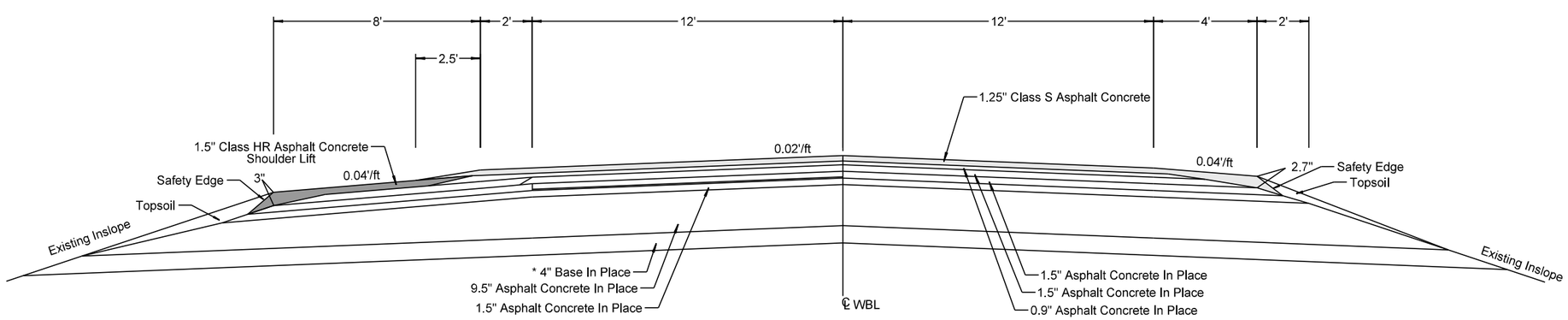

Plot Scale - 1:5

Plotted From - trrc11610

File - ...\Penn03W0\Design\03w0_typ.dgn

STATE OF SOUTH DAKOTA	PROJECT	SHEET	TOTAL SHEETS
	IM 0903(102)112 & NH 0014(216)112	F15	F56

Plotting Date: 12/30/2015

TYPICAL SURFACING SECTION

I90 WBL - Section 3

Sta e 956+00 to Sta e 963+50
Sta e 970+50 to Sta e 983+00

In Place & Micro-Milling Section

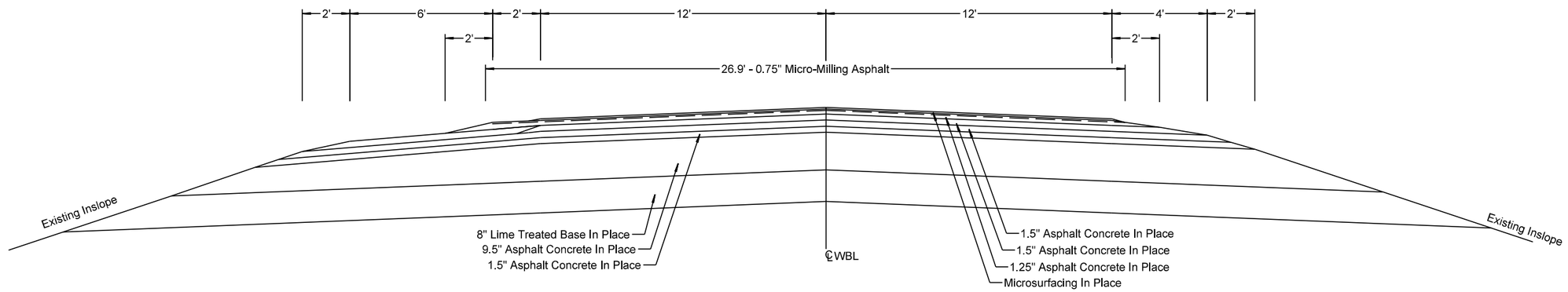

Resurfacing Section

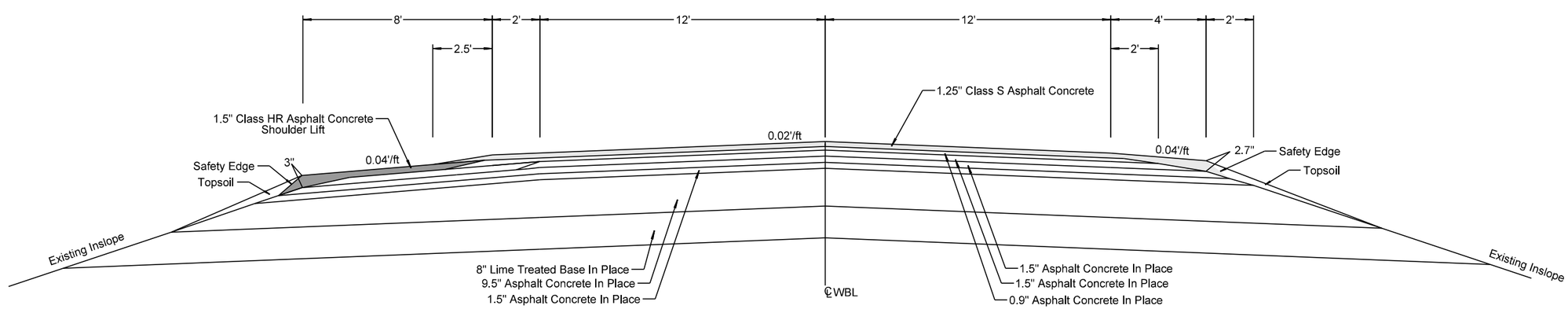

Plot Scale - 1:5

Plotted From - trrc11610

File - ...\Penn03W0\Design\03w0_typ.dgn

STATE OF SOUTH DAKOTA	PROJECT	SHEET	TOTAL SHEETS
	IM 0903(102)112 & NH 0014(216)112	F16	F56

Plotting Date: 12/30/2015

TYPICAL SURFACING SECTION

I90 WBL - Section 4

Sta e 963+50 to Sta e 970+50
Sta e 983+00 to Sta e 1015+85
Sta e 1017+65 to Sta e 1052+79

In Place & Micro-Milling Section

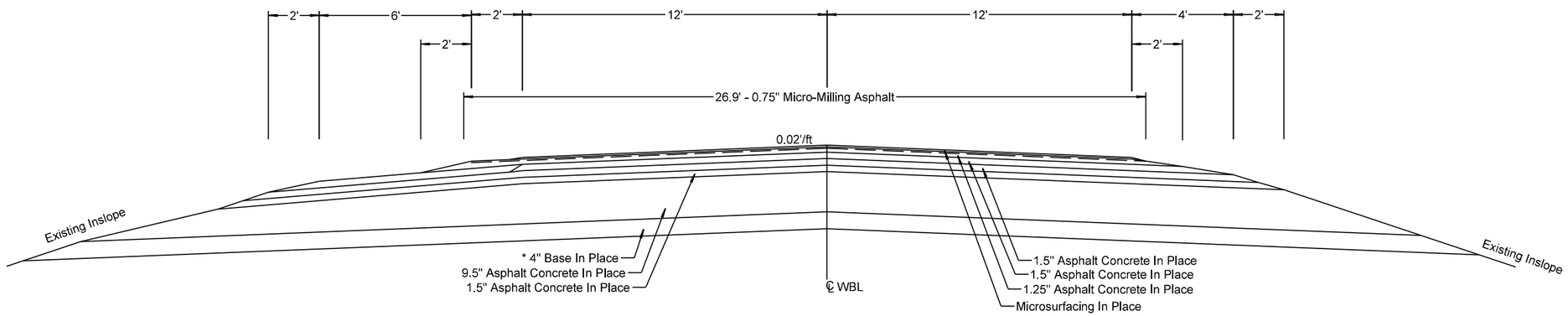

Resurfacing Section

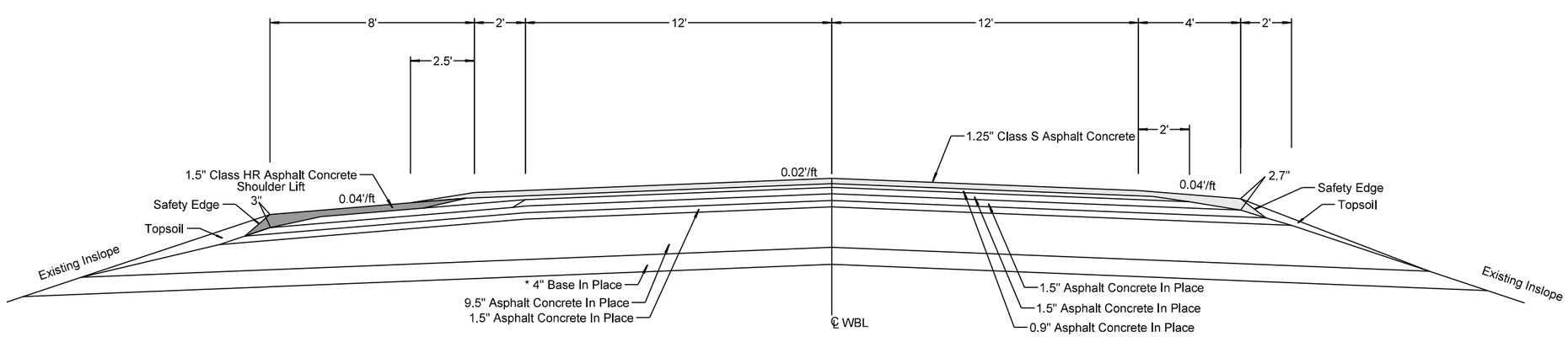

Plot Scale - 1:5

Plotted From - trrc11610

File - ...\Penn03W0\Design\03w0_typ.dgn

STATE OF SOUTH DAKOTA	PROJECT	SHEET	TOTAL SHEETS
	IM 0903(102)112 & NH 0014(216)112	F17	F56

Plotting Date: 12/30/2015

TYPICAL SURFACING SECTION

I90 WBL - Section 5

Under the Structure at 1017+42.4

In Place & Micro-Milling Section

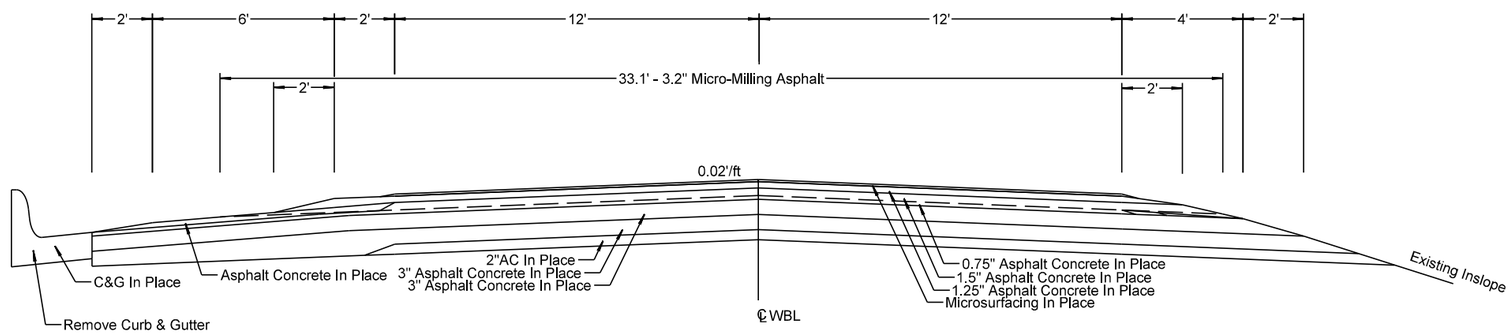

Resurfacing Section

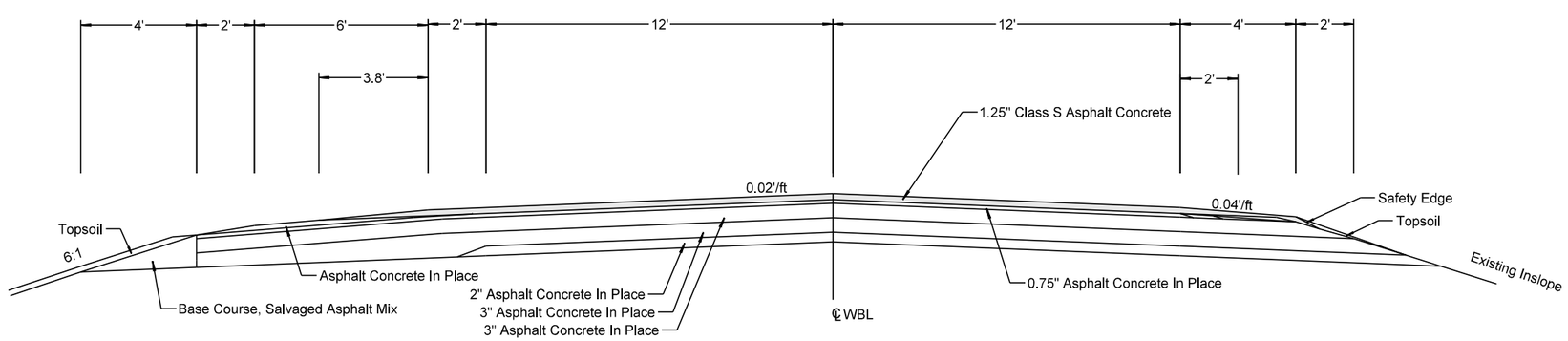

Plot Scale - 1:5

Plotted From - trrc11610

File - ...\Penn03W0\Design\03w0_typ.dgn

STATE OF SOUTH DAKOTA	PROJECT	SHEET	TOTAL SHEETS
	IM 0903(102)112 & NH 0014(216)112	F18	F56

Plotting Date: 12/30/2015

TYPICAL SURFACING SECTION

I90 WBL - Section 6 (these Areas are contained within the Other Sections)

@ MRM 113.36 to MRM 113.51 *
@ MRM 114.04 to MRM 114.32 **
@ MRM 118.20 to MRM 118.43
@ MRM 119.02 to MRM 119.07
@ MRM 119.08 to MRM 119.11
@ MRM 120.67 to MRM 120.92

@ MRM 122.44 to MRM 122.62
@ MRM 125.70 to MRM 125.78 ***
@ MRM 128.57 to MRM 128.73 *
@ MRM 129.15 to MRM 129.24
@ MRM 129.93 to MRM 130.09
@ MRM 130.35 to MRM 130.57

Repair Areas:
* - 100' (4 - 25' Long Repair Areas)
** - 50' (2 - 25' Long Repair Areas)
*** - 25' (1 25' Lone Repair Area)

In Place & Micro-Milling Section

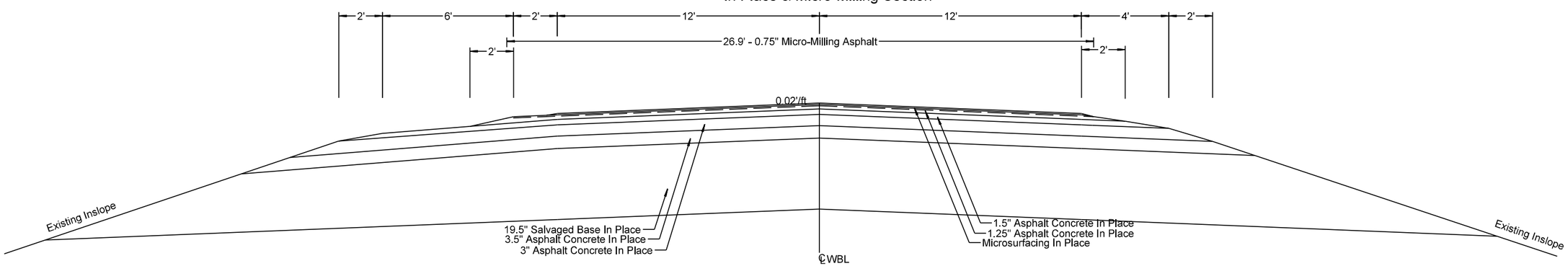

Resurfacing Section

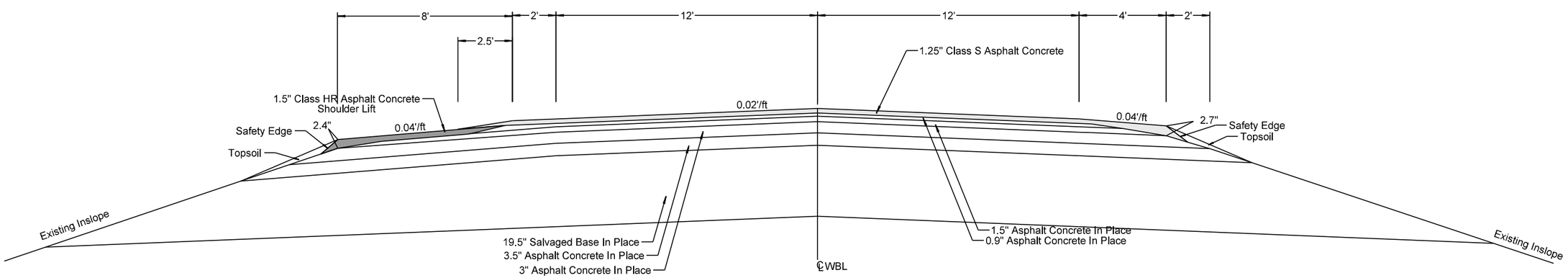

Plot Scale - 1:5

Plotted From - trrc11610

File - ...\Penn03W0\Design\03w0_typ.dgn

STATE OF SOUTH DAKOTA	PROJECT	SHEET	TOTAL SHEETS
	IM 0903(102)112 & NH 0014(216)112	F19	F56

Plotting Date: 01/07/2016 Revised: 1/7/16 klh

TYPICAL SURFACING SECTION

US14 - Section 1a
Westbound Reversed

Westbound Lane

Sta 8+57 to Sta 48+84.7

Eastbound Lane
Sta 7+50 to Sta a 50+34.77

In Place & Micro-Milling Section

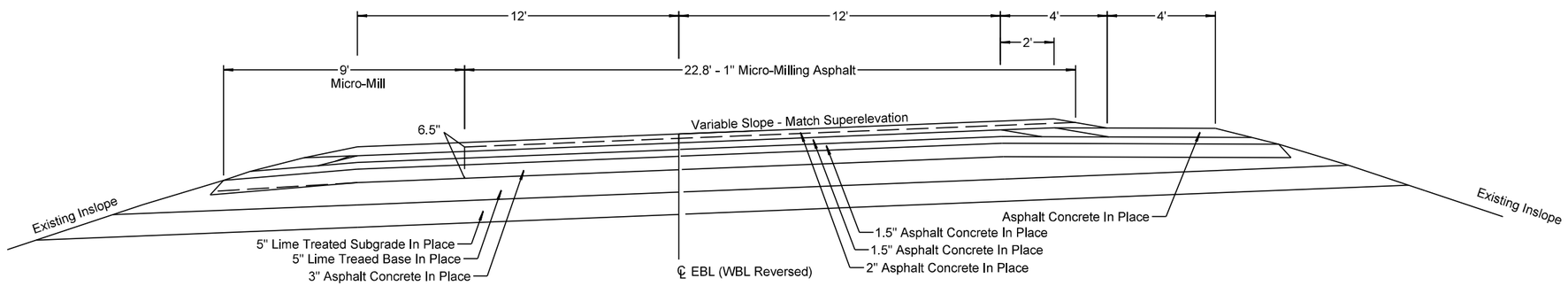

Resurfacing Section

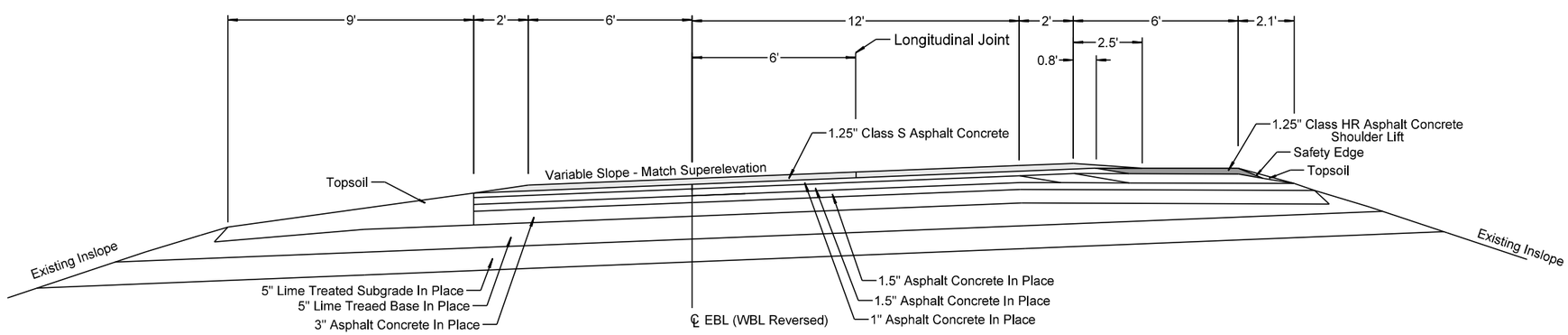

Plot Scale - 1:5

Plotted From - trrc11610

File - ...\Penn03W0\Design\03w0_typ.dgn

STATE OF SOUTH DAKOTA	PROJECT	SHEET	TOTAL SHEETS
	IM 0903(102)112 & NH 0014(216)112	F20	F56

Plotting Date: 01/07/2016 Revised: 1/7/16 klh

TYPICAL SURFACING SECTION

US14 - Section 1b
Westbound Reversed

Westbound Lane
Sta 48+84.7 to Sta a 70+00

Eastbound Lane
Sta a 50+34.77 to b 70+00

In Place & Micro-Milling Section

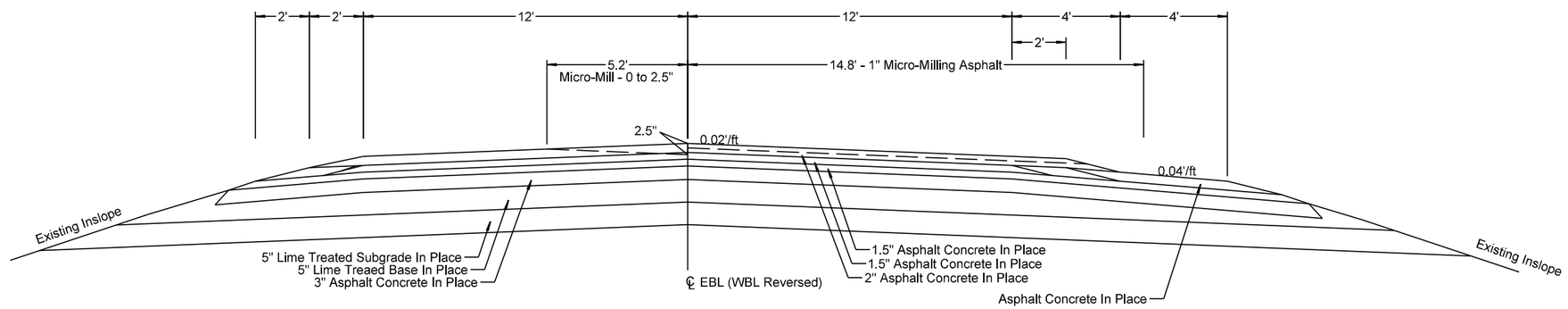

Resurfacing Section

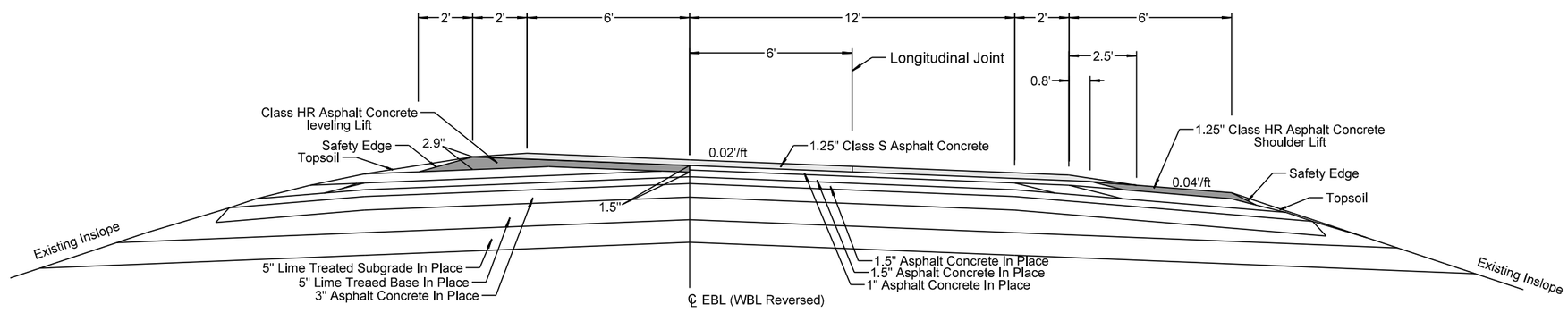

Plot Scale - 1:5

Plotted From - trrc11610

File - ...\Penn03W0\Design\03w0_typ.dgn

STATE OF SOUTH DAKOTA	PROJECT	SHEET	TOTAL SHEETS
	IM 0903(102)112 & NH 0014(216)112	F21	F56

Plotting Date: 12/30/2015

TYPICAL SURFACING SECTION

US14 - Divided to Undivided - EB & WB Lanes Combined

Sta a 70+00 to Sta a 82+00 WB

In Place & Micro-Milling Section

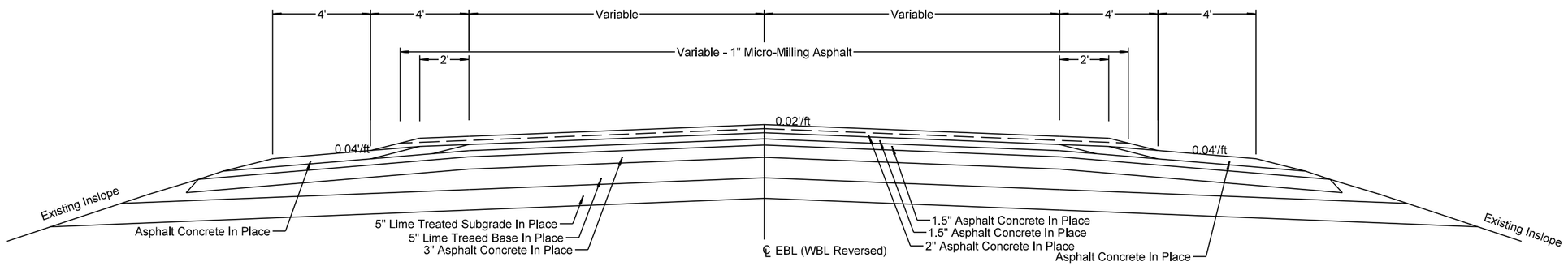

Resurfacing Section

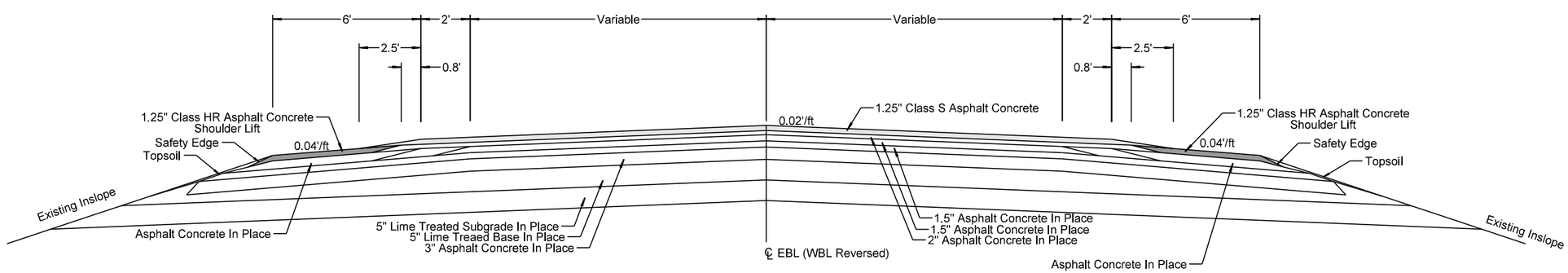

Plot Scale - 1:5

Plotted From - trrc11610

File - ...\Penn03W0\Design\03w0_typ.dgn

STATE OF SOUTH DAKOTA	PROJECT	SHEET	TOTAL SHEETS
	IM 0903(102)112 & NH 0014(216)112	F22	F56

Plotting Date: 12/30/2015

GUARDRAIL LAYOUT

STR. NO. 52-954-400
MRM 116.94

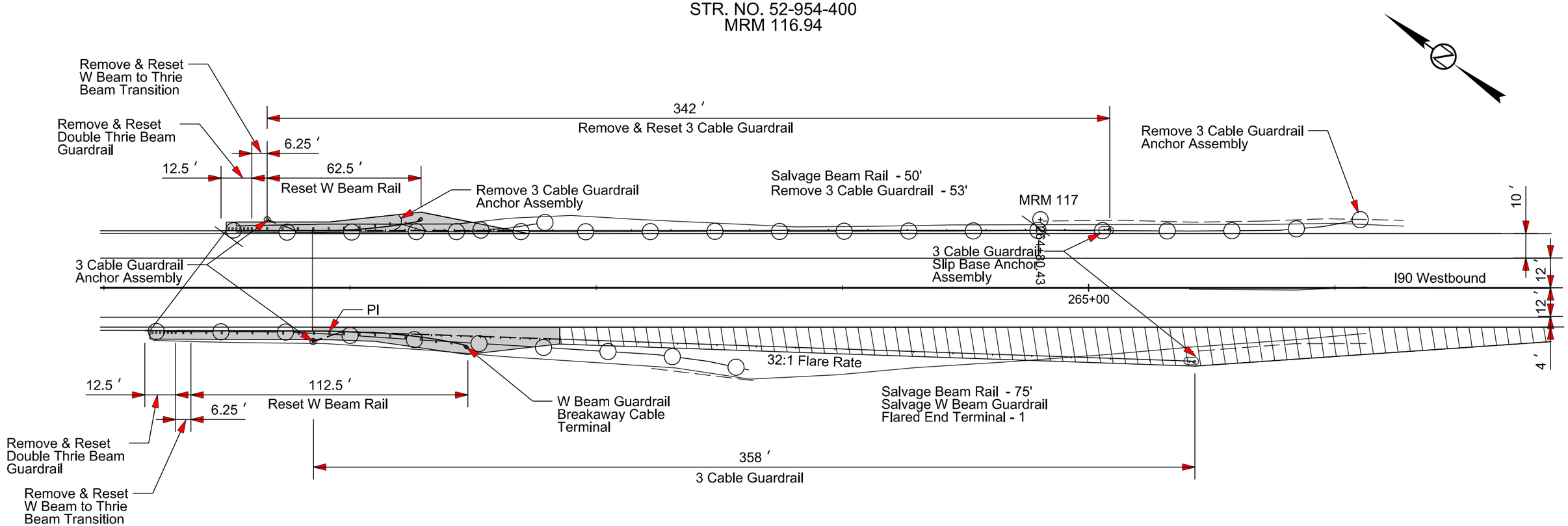

Guardrail Embankment Layout

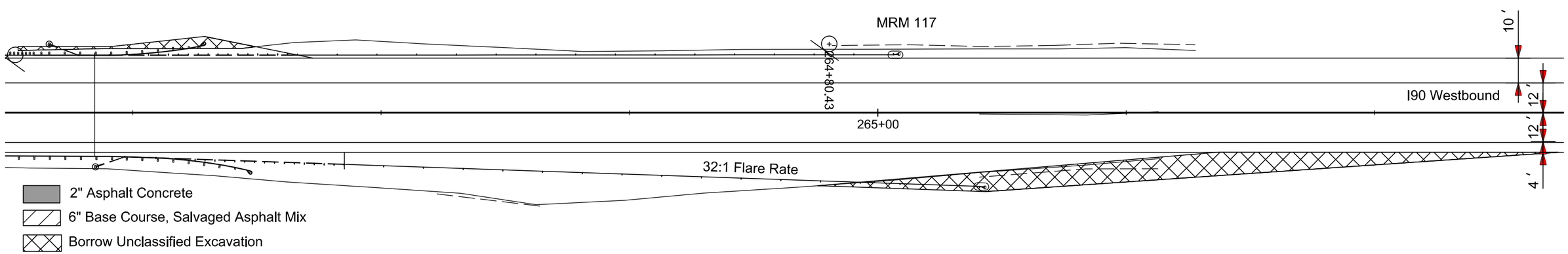

Plot Scale - 1:40
Plotted From - trrc11610
File - ...\prj\Penn03W0\Design\gr261.dgn

GUARDRAIL LAYOUT

STATE OF SOUTH DAKOTA	PROJECT	SHEET	TOTAL SHEETS
	IM 0903(102)112 & NH 0014(216)112	F23	F56

Plotting Date: 12/30/2015

STR. NO. 52-A00-419
MRM 121.98

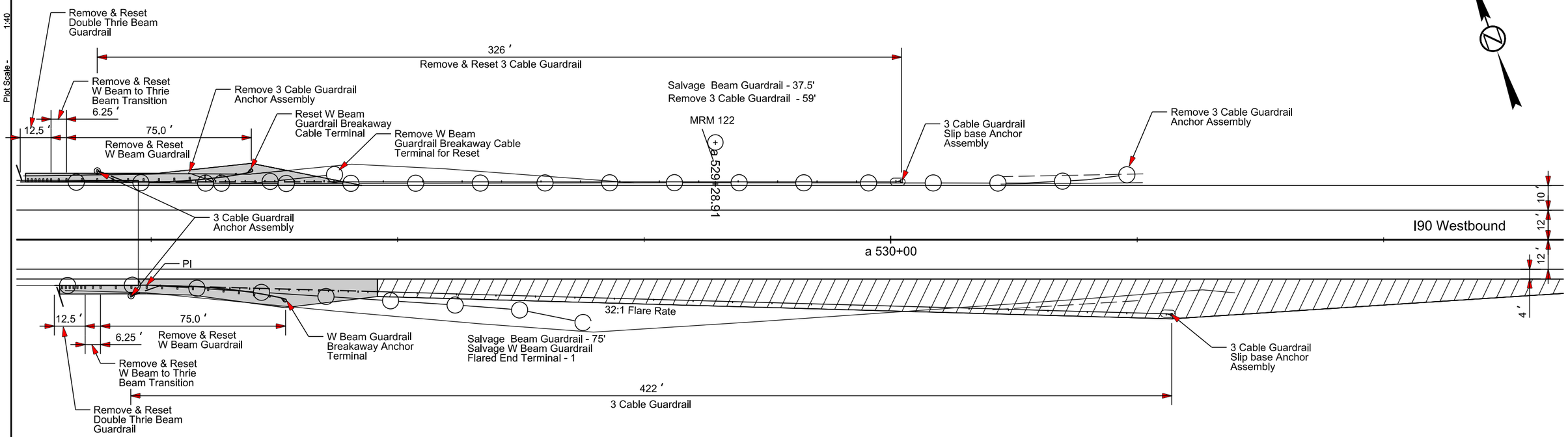

Guardrail Embankment Layout

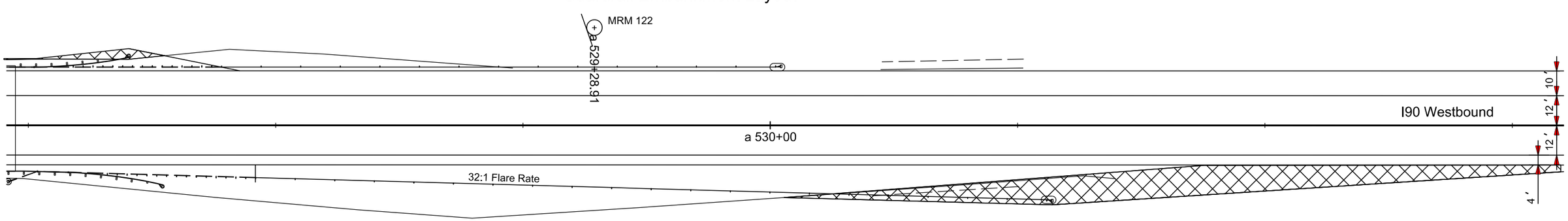

- 2" Asphalt Concrete
- 6" Base Course, Salvaged Asphalt Mix
- Borrow Unclassified Excavation

Plot Scale - 1:40
Plotted From - trrc11610
File - ...\pp\Penn03W0\Design\gr526.dgn

STATE OF SOUTH DAKOTA	PROJECT	SHEET	TOTAL SHEETS
	IM 0903(102)112 & NH 0014(216)112	F24	F56

Plotting Date: 12/30/2015

GUARDRAIL LAYOUT

STR. NO. 36-071-076
MRM 125.53

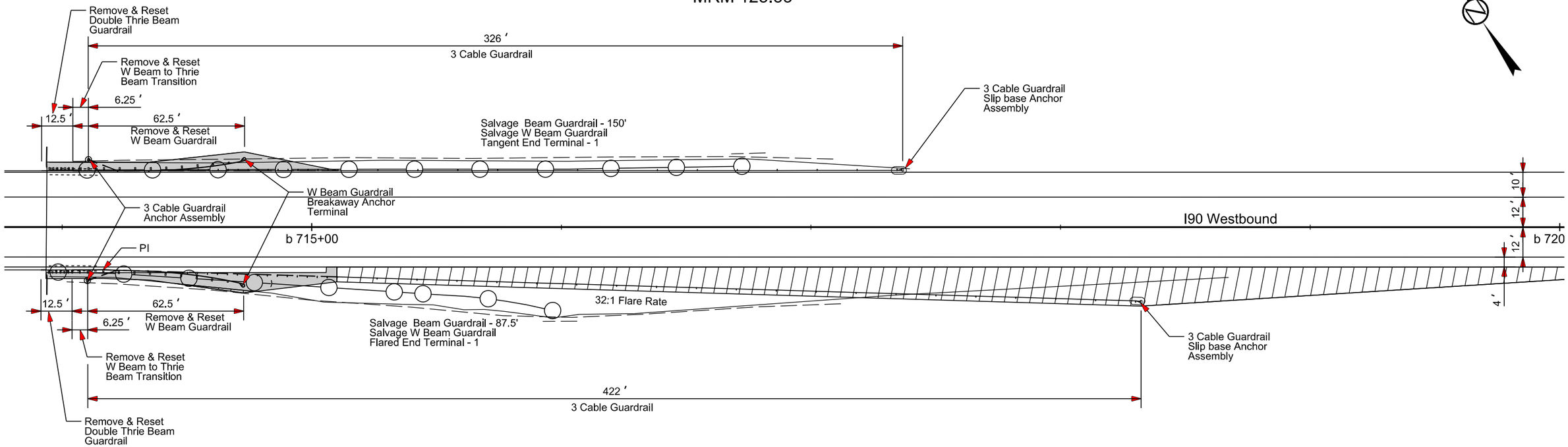

Guardrail Embankment Layout

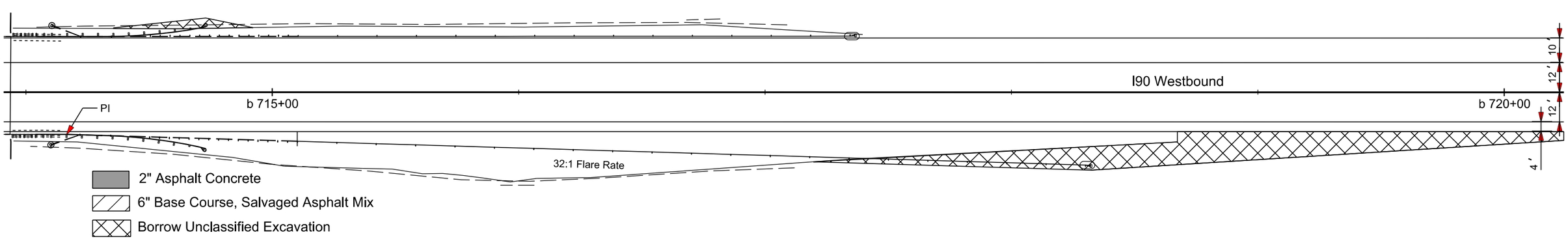

Plot Scale - 1:40

Plotted From - trrc11610

File - ...\prj\Penn03\W0\Design\gr713.dgn

STATE OF SOUTH DAKOTA	PROJECT	SHEET	TOTAL SHEETS
	IM 0903(102)112 & NH 0014(216)112	F25	F56

Plotting Date: 12/30/2015

GUARDRAIL LAYOUT

MRM 126.36

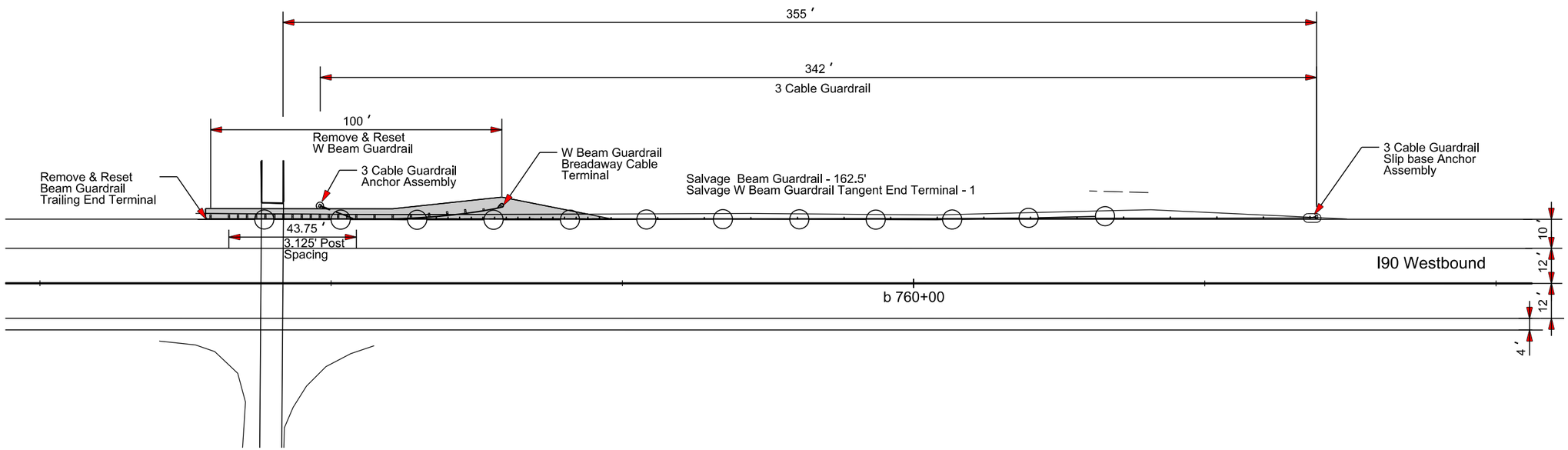

Guardrail Embankment Layout

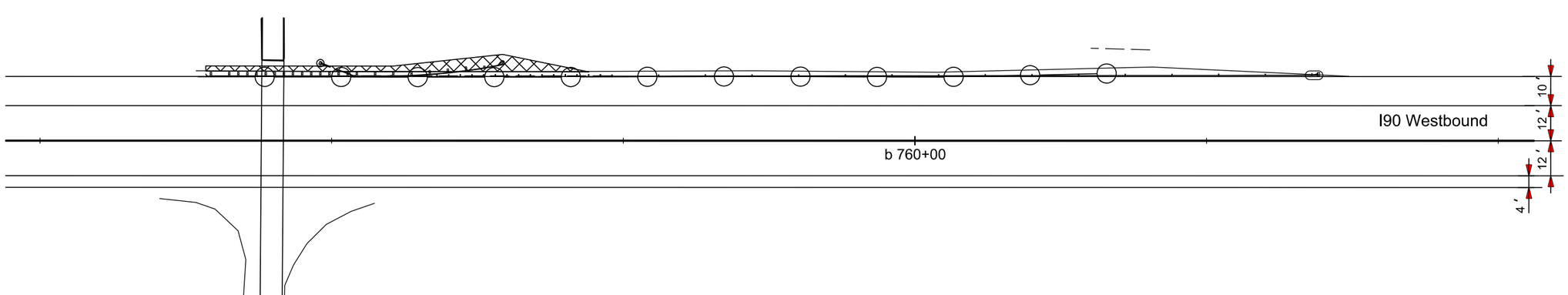

- 2" Asphalt Concrete
- 6" Base Course, Salvaged Asphalt Mix
- Borrow Unclassified Excavation

Plot Scale - 1:40

Plotted From - trrc11610

File - ...\prj\Penn03W0\Design\gr757.dgn

STATE OF SOUTH DAKOTA	PROJECT	SHEET	TOTAL SHEETS
	IM 0903(102)112 & NH 0014(216)112	F26	F56

Plotting Date: 12/30/2015

GUARDRAIL LAYOUT

STR. NO. 36-090-087
MRM 127.73

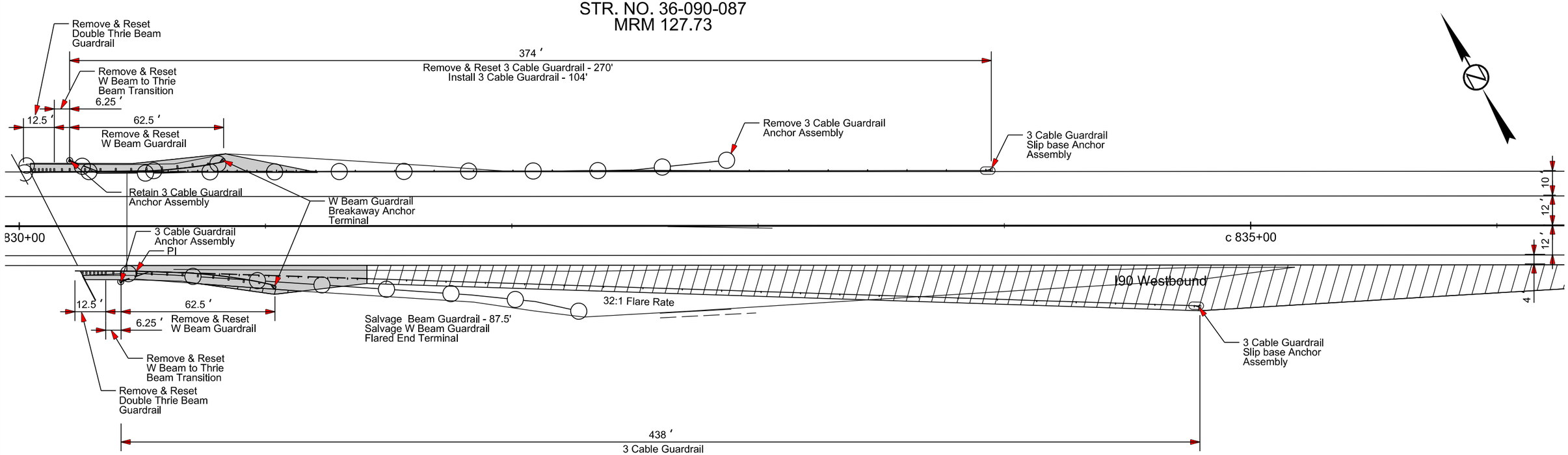

Guardrail Embankment Layout

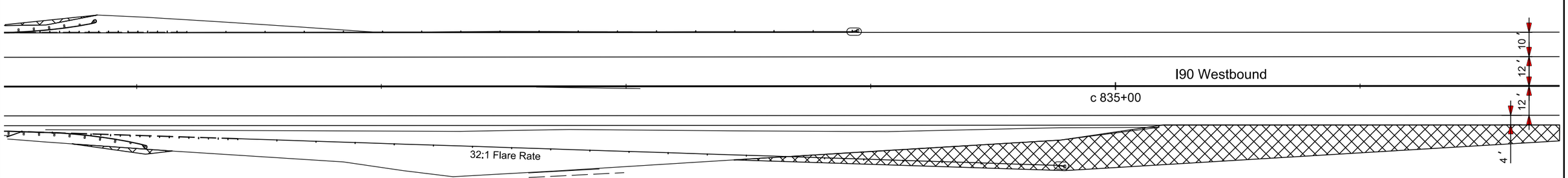

- 2" Asphalt Concrete
- 6" Base Course, Salvaged Asphalt Mix
- Borrow Unclassified Excavation

Plot Scale - 1:40
Plotted From - trrc11610
File - ...\prj\Penn03W0\Design\gr829.dgn

STATE OF SOUTH DAKOTA	PROJECT	SHEET	TOTAL SHEETS
	IM 0903(102)112 & NH 0014(216)112	F27	F56

Plotting Date: 12/30/2015

GUARDRAIL LAYOUT

MRM 131.27

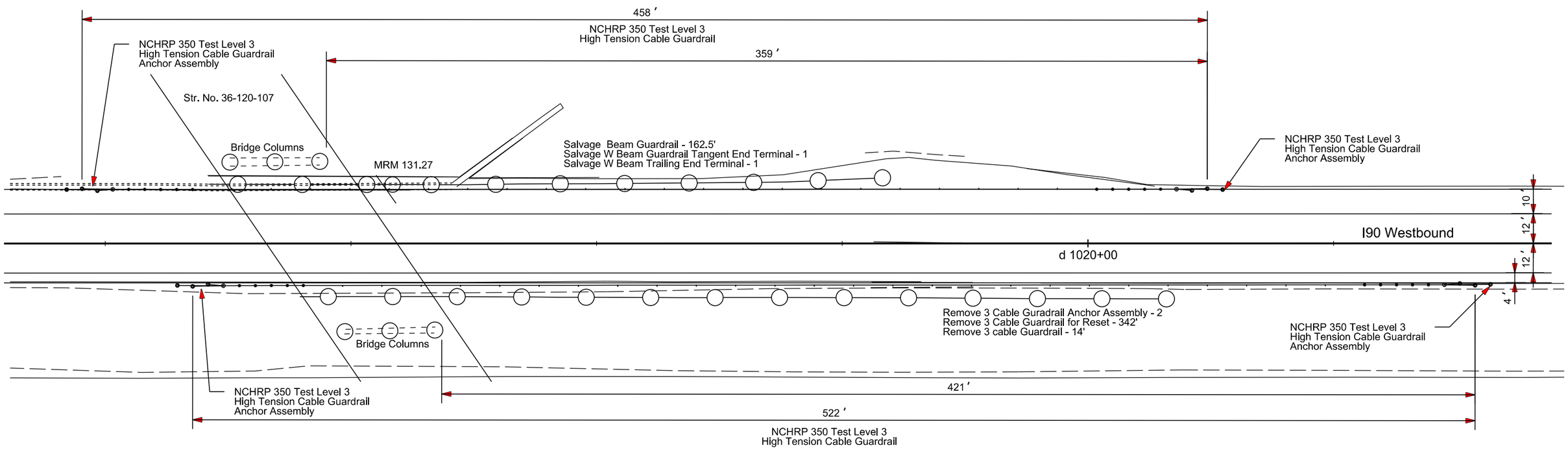

Plot Scale - 1:40

Plotted From - trrc11610

File - ...\prj\Penn03W0\Design\gr1016.dgn

STATE OF SOUTH DAKOTA	PROJECT	SHEET	TOTAL SHEETS
	IM 0903(102)112 & NH 0014(216)112	F28	F56

Plotting Date: 12/30/2015

GUARDRAIL LAYOUT

MRM 131.72

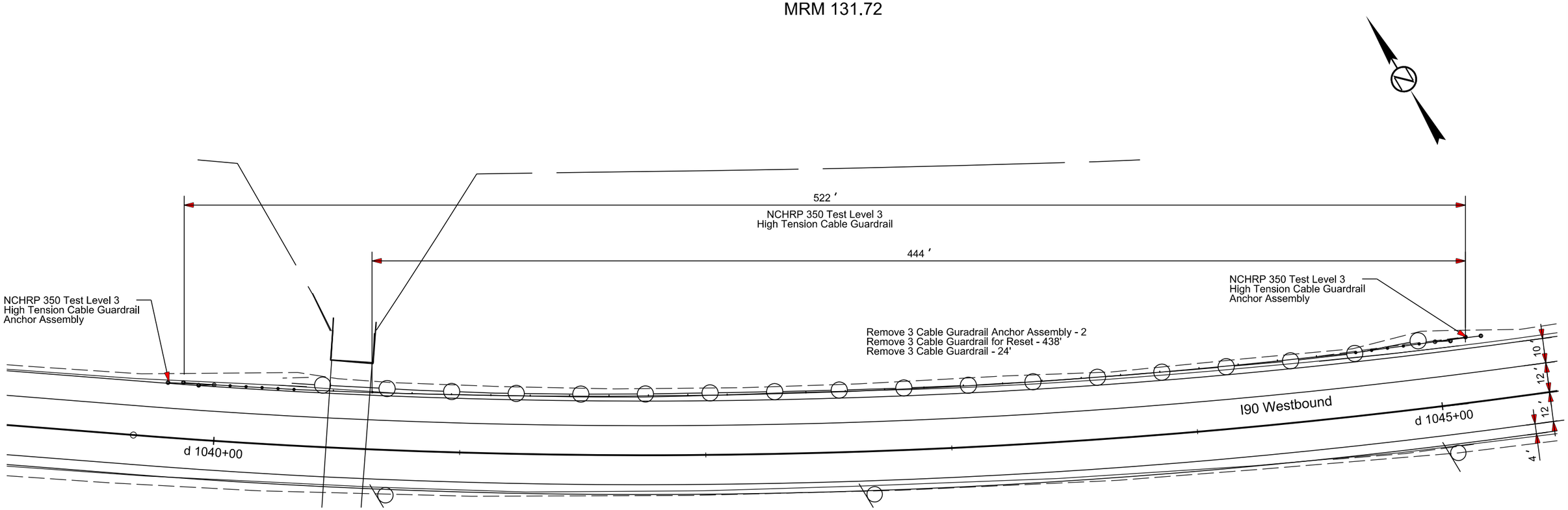

Plot Scale - 1:40

Plotted From - trrc11610

File - ...\proj\Penn03W0\Design\gr1039.dgn

STATE OF SOUTH DAKOTA	PROJECT	SHEET	TOTAL SHEETS
	IM 0903(102)112 & NH 0014(216)112	F29	F56

Plotting Date: 12/30/2015

GUARDRAIL LAYOUT

STR. NO. 52-926-366
MRM 112.96

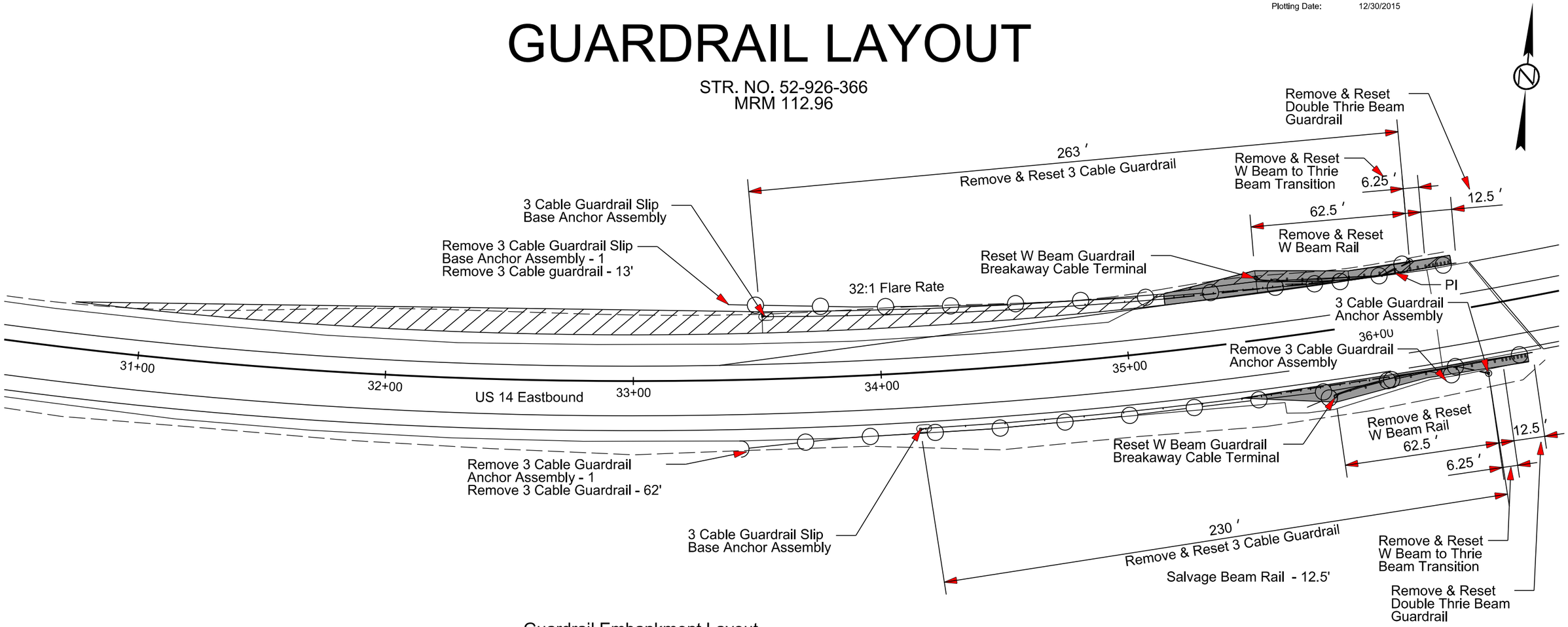

Guardrail Embankment Layout

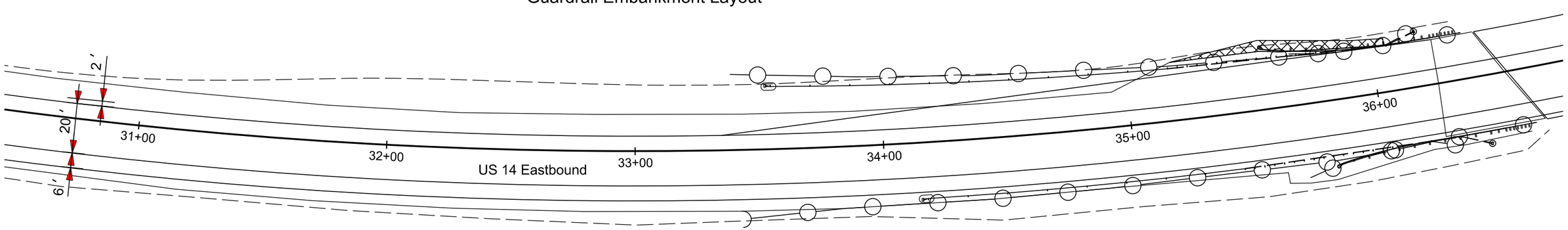

2" Asphalt Concrete
6" Base Course, Salvaged Asphalt Mix
Borrow Unclassified Excavation

Plot Scale - 1:40
Plotted From - trrc11610
File - ...\prj\Penn03W0\Design\gr14A1.dgn

STATE OF SOUTH DAKOTA	PROJECT	SHEET	TOTAL SHEETS
	IM 0903(102)112 & NH 0014(216)112	F30	F56

Plotting Date: 12/30/2015

GUARDRAIL LAYOUT

MRM 113.57

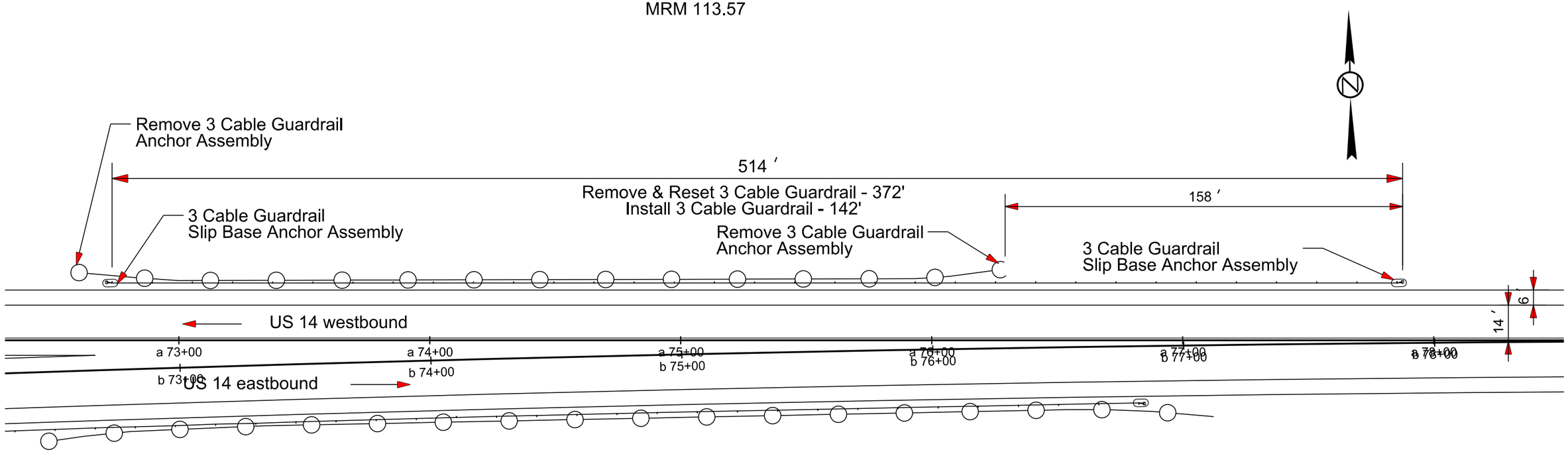

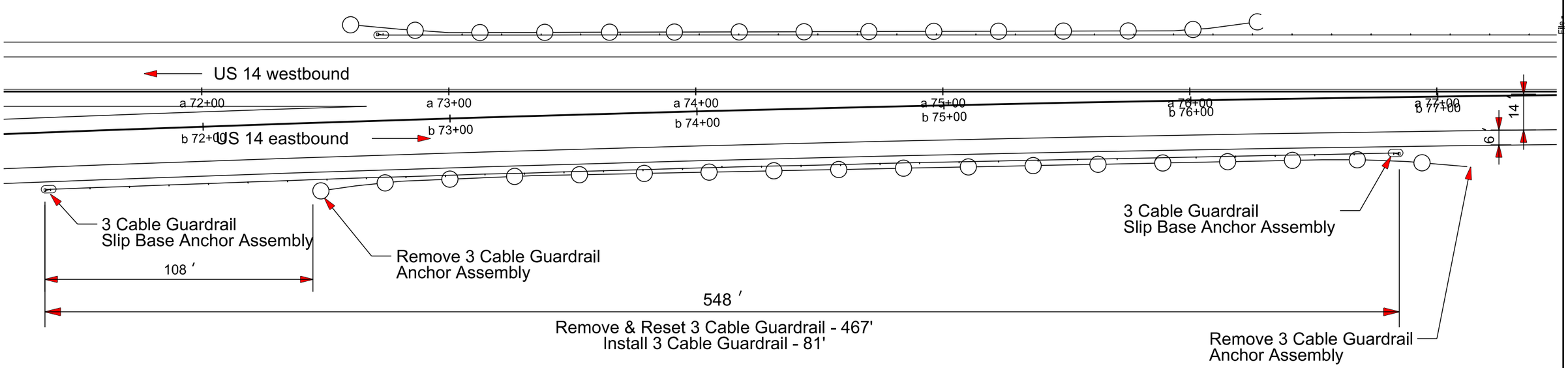

Plot Scale - 1:40

Plotted From - trrc11610

File - \Pegn03W0\Designg\14A_72.dgn

PERMANENT VEHICLE CLASSIFICATION SYSTEMS DETAIL

Layout A

GENERAL LAYOUT

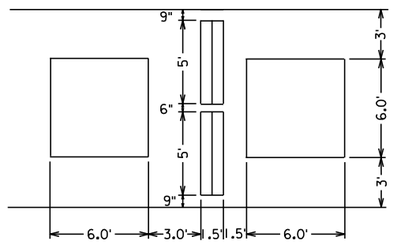

NOTES:
1. SAW CUT DEPTH A-1.25", B-1.75" DEEP. DEPTH FOR LOOPS ARE 1.75".
2. SAW CUTS ARE TYPICALLY 0.25" WIDE.
3. WIRE LENGTH NEEDED FOR A 5' AXLE LOOP IS 96', AND FOR A 6.0' MAIN LOOP IS 69'. ALL LOOPS ALSO NEED THE TWISTED LEAD-IN (2 WIRES-IN A LEAD IN).

NOTE:
1. MAIN LOOPS ARE (6.0') AND ARE 4 TURNS EACH.

Layout C

CURB LEAD-IN ROUTING DETAIL

(NTS)

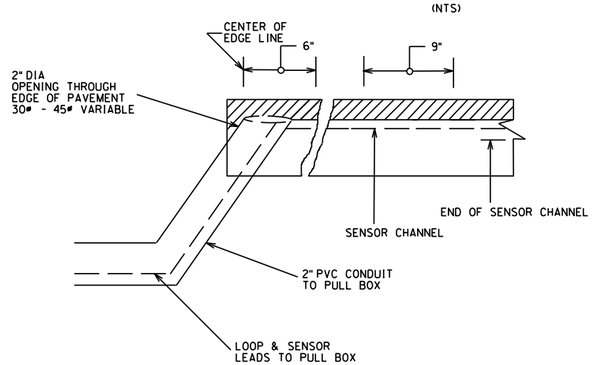

Layout B

CROSS SECTION VIEW

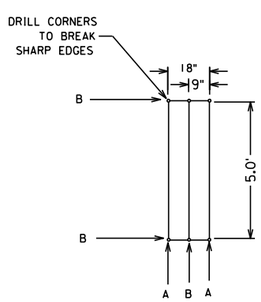

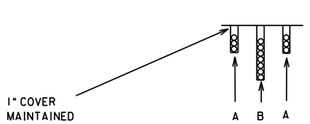

Plot Scale - 1:10
Plotted From - trrc11610
File - ...\Design\traffic counter.dgn

STATE OF SOUTH DAKOTA	PROJECT	SHEET	TOTAL SHEETS
	IM 0903(102)112 & NH 0014(216)112	F32	F56

Plotting Date: 12/30/2015

PAVING TRANSITION FOR BRIDGE CLEARANCE

WBL - MRM 131.27
Str. No. 36-120-107

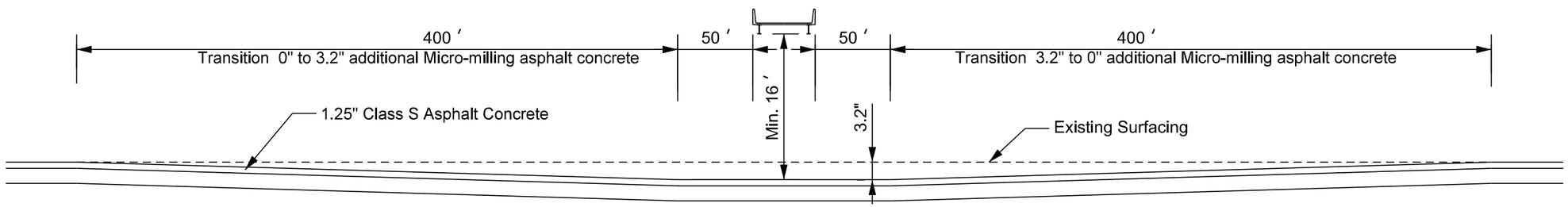

See Typical Section 5 - I90 WBL

Plot Scale - 1:80

Plotted From - trrc11610

File - ...\bridge vertical transition.dgn

STATE OF SOUTH DAKOTA	PROJECT	SHEET	TOTAL SHEETS
	IM 0903(102)112 & NH 0014(216)112	F33	F56

Plotting Date: 12/30/2015

MICRO-MILLING ASPHALT CONCRETE

BEGIN & END OF PROJECT

BEGIN & END OF STRUCTURES

Str. No. 52-954-400 MRM 116.94

Str. No. 52-A00-419 MRM 121.98

Str. No. 36-071-076 MRM 125.53

Str. No. 36-090-087 MRM 127.73

Str. No. 52-926-366 MRM 112.96

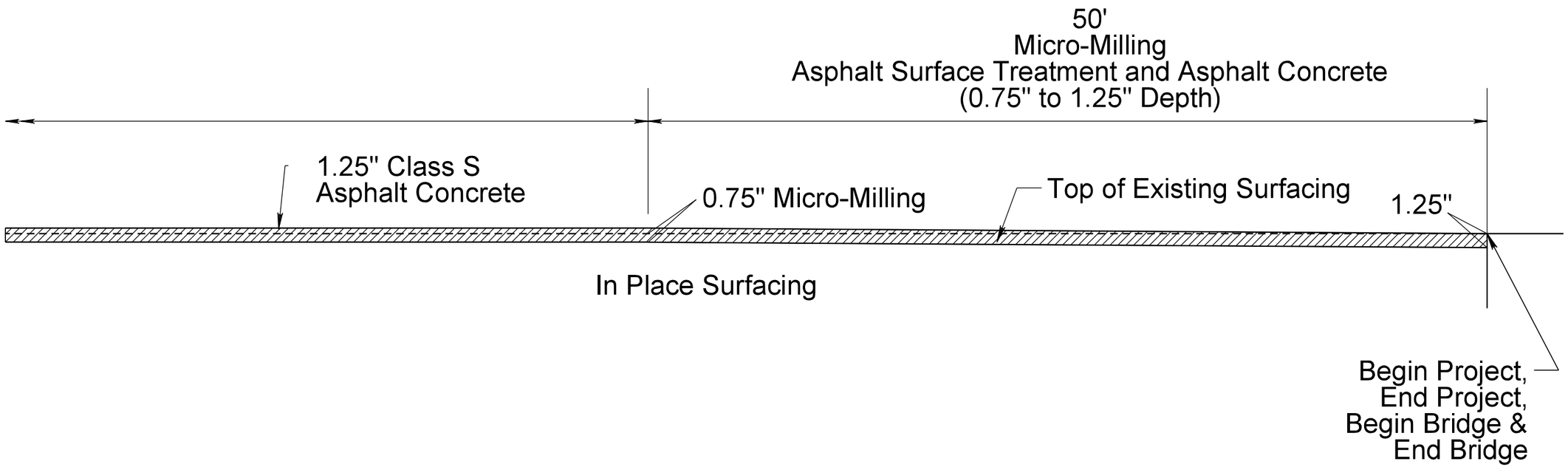

Plot Scale - 1:200

Plotted From - trrc11610

File - ...\Design\Cold Milling.dgn

STATE OF SOUTH DAKOTA	PROJECT	SHEET	TOTAL SHEETS
	IM 0903(102)112 & NH 0014(216)112	F34	F56

Plotting Date: 12/30/2015

TYPICAL SURFACING ADJACENT TO GORES

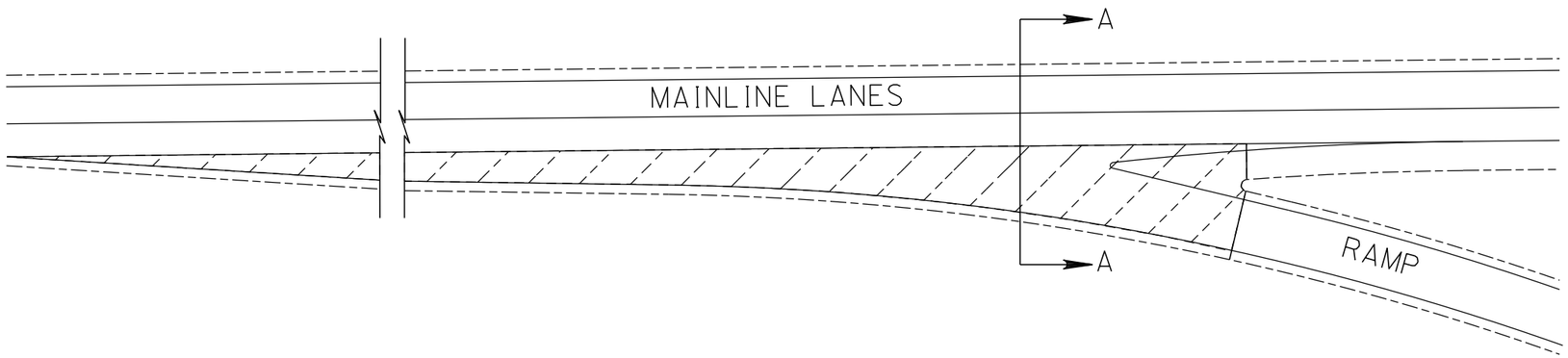

Resurfacing Section

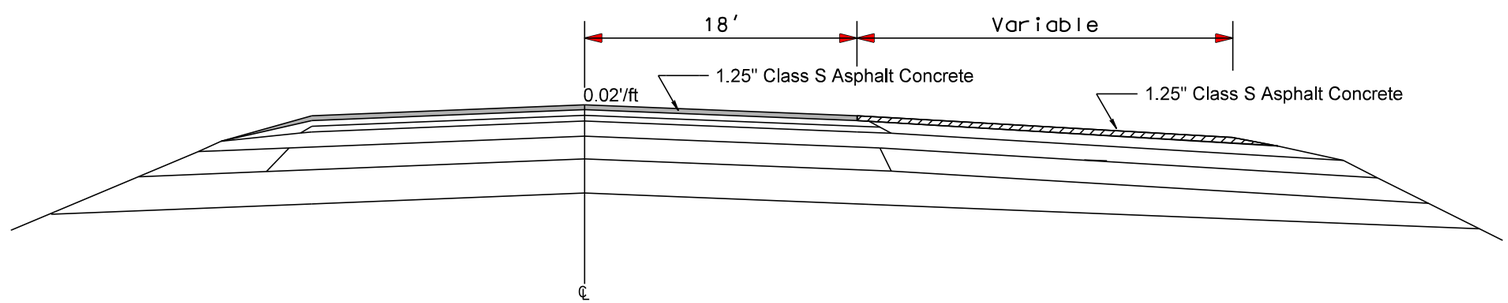

A–A

Plot Scale - 1:200

Plotted From - trrc11610

File - ...\Design\Cold Milling.dgn

STATE OF SOUTH DAKOTA	PROJECT	SHEET	TOTAL SHEETS
	IM 0903(102)112 & NH 0014(216)112	F35	F56

Plotting Date: 12/30/2015

US 14 LAYOUT

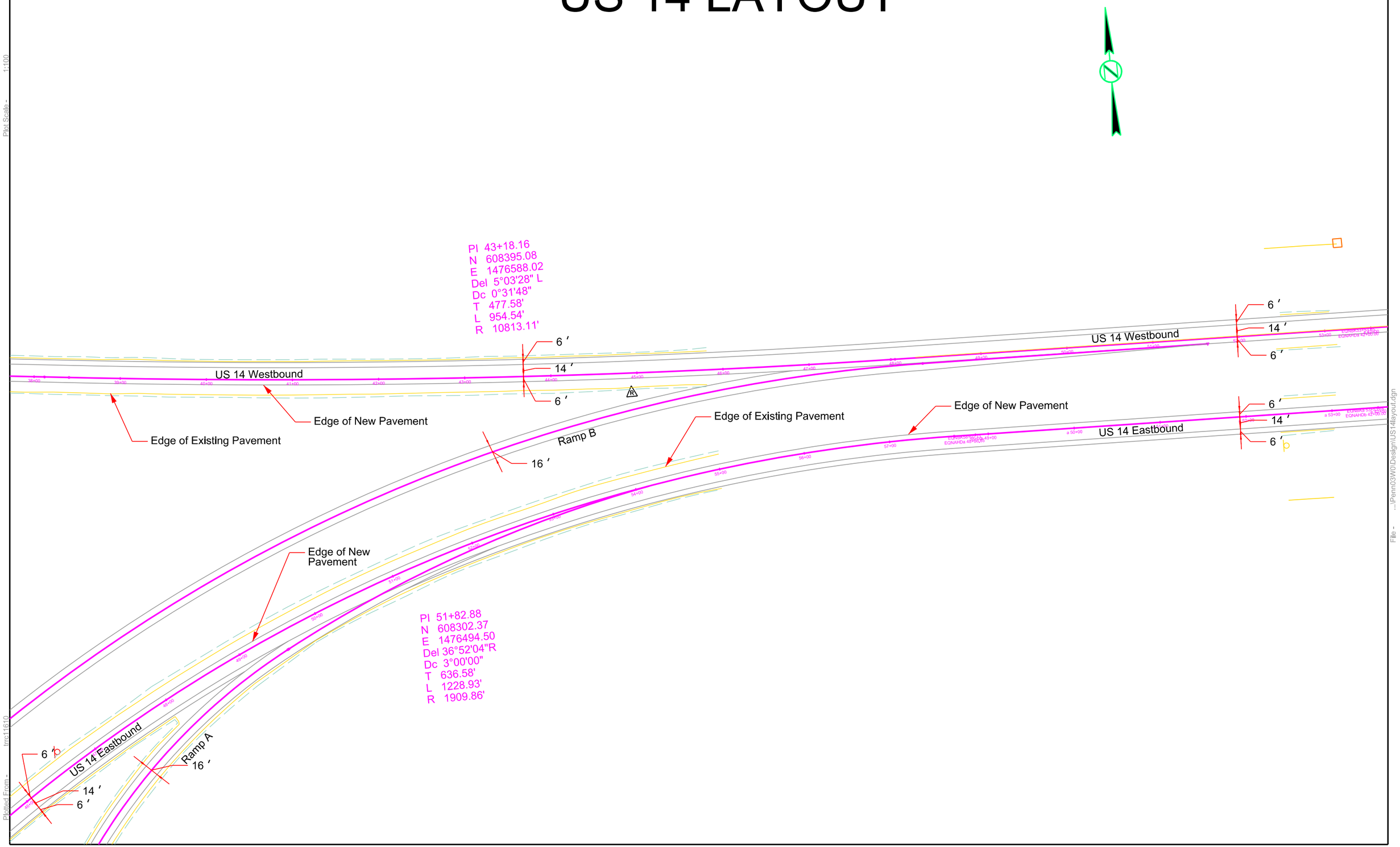

Plot Scale - 1:100

Plotted From - trrc11610

File - ...\Penn03W01Design\US14layout.dgn

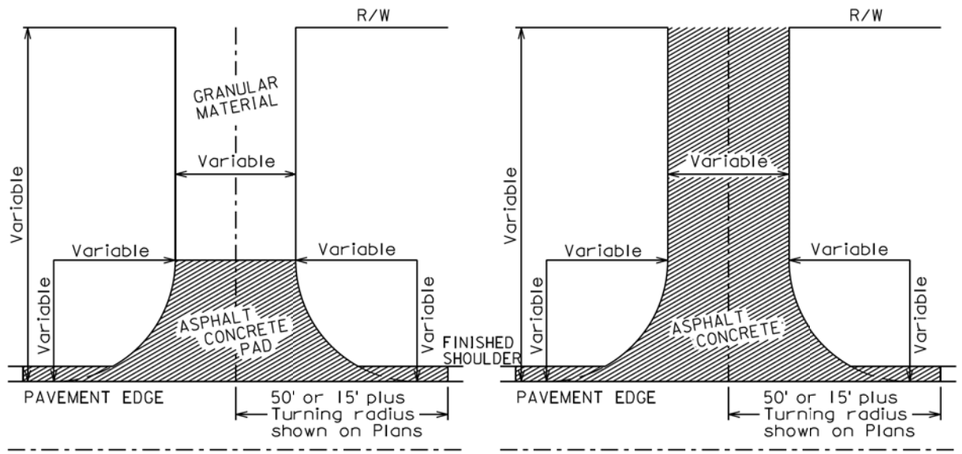

INTERSECTING ROAD
NO ASPHALT CONCRETE SURFACING
BEYOND R/W

INTERSECTING ROAD
ASPHALT CONCRETE SURFACING
BEYOND R/W

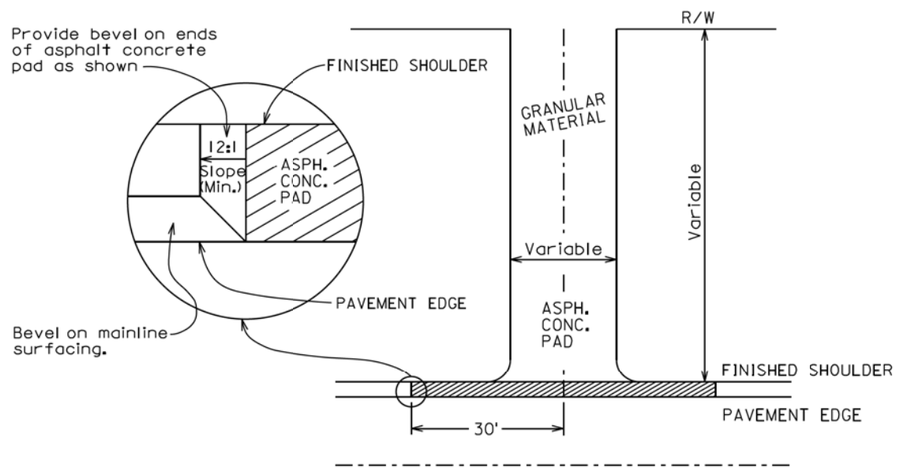

ENTRANCE

The surfacing details shown on this sheet are provided as a guide for surfacing these facilities. The precise construction limits for situations other than the standards shown will be determined by the Engineer, at the time of construction.

ROADWAY WITH SHOULDER

March 31, 2000

Published Date: 4th Qtr. 2015	SDDOT	RESURFACING OF INTERSECTING ROADS AND ENTRANCES	PLATE NUMBER 320.13 Sheet 1 of 1

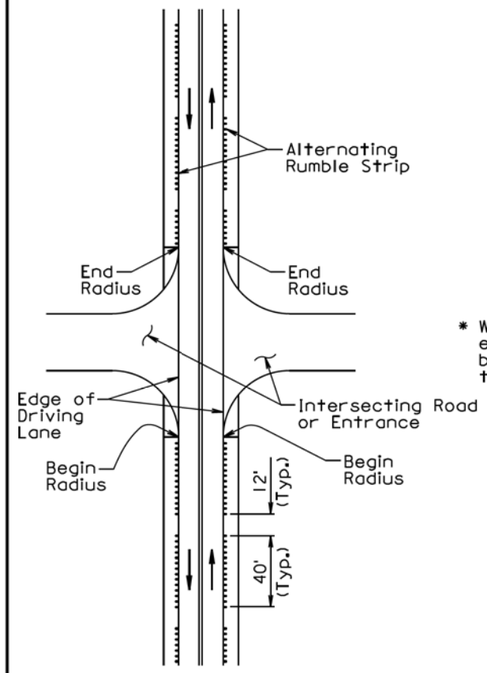

PLAN VIEW

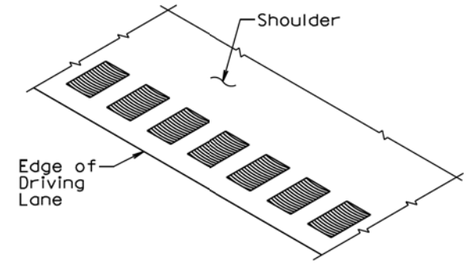

PERSPECTIVE OF TYPICAL
RUMBLE STRIP IN ASPHALT CONCRETE

* When PCC pavement width from centerline to edge of pavement is 12', the rumble strip may be placed a maximum of 2' from the edge of the driving lane.

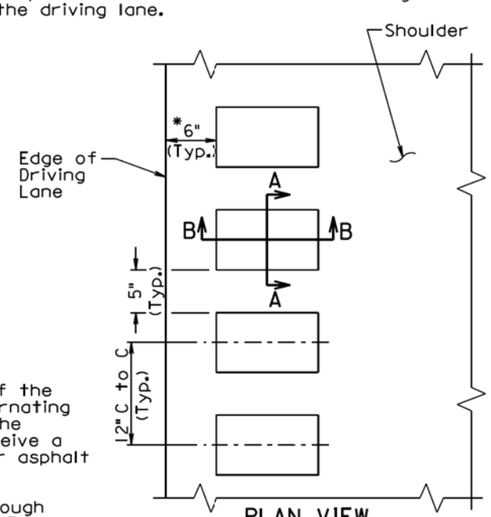

PLAN VIEW
TYPICAL RUMBLE STRIP
IN ASPHALT CONCRETE

GENERAL NOTES:

A rumble strip shall be constructed on all of the asphalt concrete shoulders by grinding alternating patterns of 40' continuous indentations in the asphalt concrete. The rumble strip shall receive a flush seal with the shoulder flush sealing or asphalt surface treatment.

A rumble strip shall not be constructed through intersecting roads, entrances, and turnouts. The lengths of the 40' segments with continuous indentations and the 12' segments without a rumble strip adjacent to the intersecting roads, entrances, and turnouts shall be adjusted as approved by the Engineer.

Prior to constructing the rumble strip the Contractor shall submit to the Engineer, for approval, the proposed method of constructing the rumble strip.

Measurement of the rumble strip shall be to the nearest 0.1 of a mile for each shoulder. Measurement and payment of the rumble strip shall include the 12' long segments without rumble strips and the segments adjacent to the intersecting roads, entrances, and turnouts without rumble strips. Payment for constructing the rumble strip shall be at the contract unit price per mile for "Grind 12" Rumble Strip or Stripe in Asphalt Concrete".

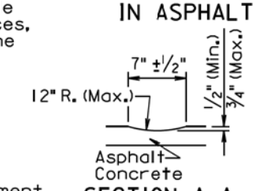

SECTION A-A

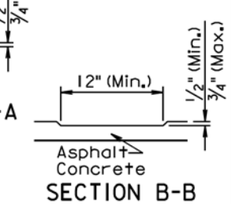

SECTION B-B

June 26, 2011

Published Date: 4th Qtr. 2015	SDDOT	12" RUMBLE STRIP IN ASPHALT CONCRETE ON NONDIVIDED HIGHWAY SHOULDERS	PLATE NUMBER 320.24 Sheet 1 of 1

Plot Scale - 1:200
- Plotted From - trrc11610
File - ...\Design\StdPlatePg1.dgn

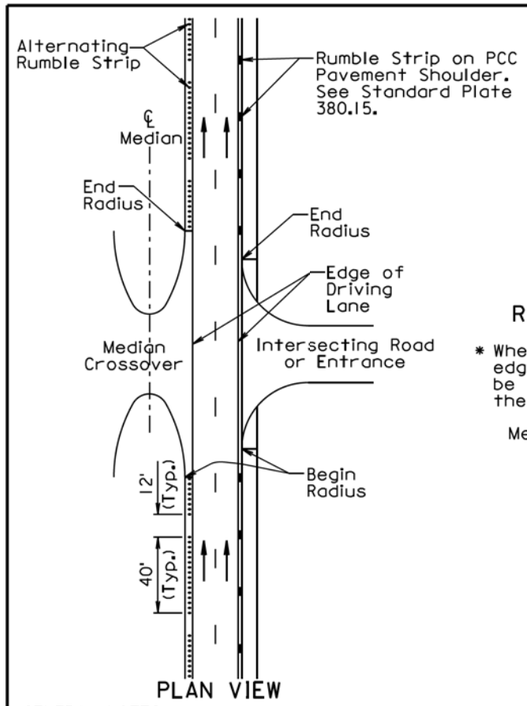

PLAN VIEW

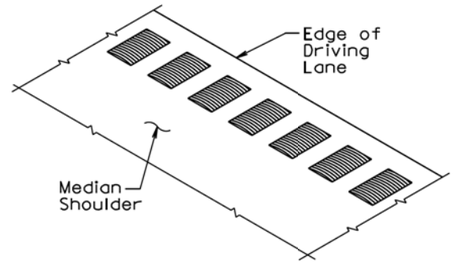

PERSPECTIVE OF TYPICAL RUMBLE STRIP IN ASPHALT CONCRETE

* When PCC pavement width from centerline to edge of pavement is 12', the rumble strip may be placed a maximum of 2' from the edge of the driving lane.

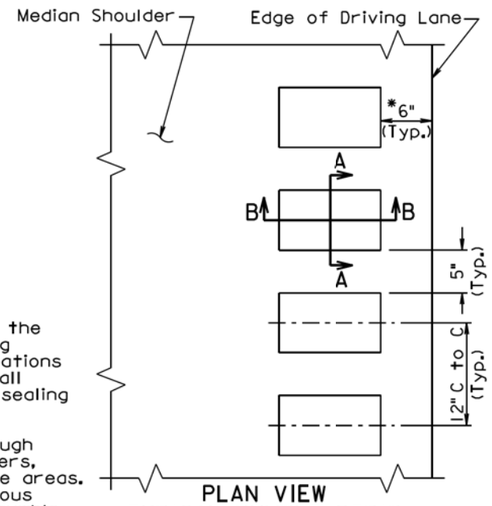

PLAN VIEW
TYPICAL RUMBLE STRIP IN ASPHALT CONCRETE

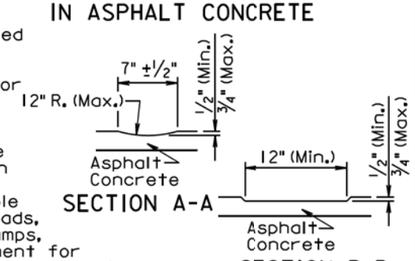

SECTION A-A

SECTION B-B

GENERAL NOTES:

A rumble strip shall be constructed on all of the asphalt concrete median shoulders by grinding alternating patterns of 40' continuous indentations in the asphalt concrete. The rumble strip shall receive a flush seal with the shoulder flush sealing or asphalt surface treatment.

A rumble strip shall not be constructed through intersecting roads, entrances, median crossovers, entrance ramps, exit ramps, turnouts, and gore areas. The lengths of the 40' segments with continuous indentations and the 12' segments without a rumble strip adjacent to the intersecting roads, entrances, median crossovers, entrance ramps, exit ramps, turnouts, and gore areas shall be adjusted as approved by the Engineer.

Prior to constructing the rumble strip the Contractor shall submit to the Engineer, for approval, the proposed method of constructing the rumble strip.

Measurement of the rumble strip in asphalt concrete shall be to the nearest 0.1 of a mile for each median shoulder. Measurement and payment of the rumble strip shall include the 12' long segments without rumble strips and the segments adjacent to intersecting roads, entrances, median crossovers, entrance ramps, exit ramps, turnouts, and gore areas without rumble strips. Payment for constructing the rumble strip shall be at the contract unit price per mile for "Grind 12" Rumble Strip or Stripe in Asphalt Concrete".

June 26, 2011

Published Date: 4th Qtr. 2015	SDDOT	12" RUMBLE STRIP IN ASPHALT CONCRETE ON DIVIDED HIGHWAY MEDIAN SHOULDER	PLATE NUMBER 320.26
			Sheet 1 of 1

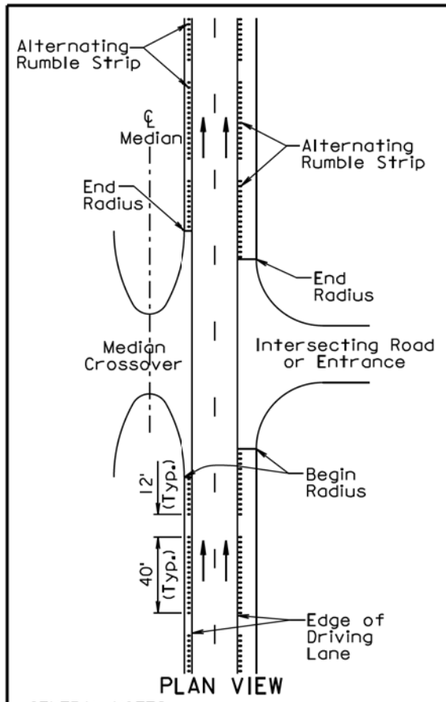

PLAN VIEW

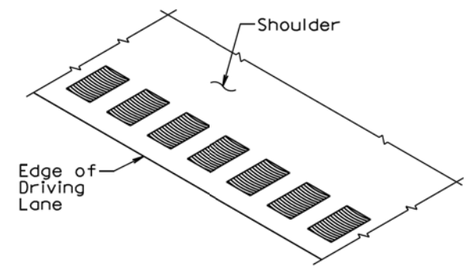

PERSPECTIVE OF TYPICAL RUMBLE STRIP IN ASPHALT CONCRETE

* When PCC pavement width from centerline to edge of pavement is 12', the rumble strip may be placed a maximum of 2' from the edge of the driving lane.

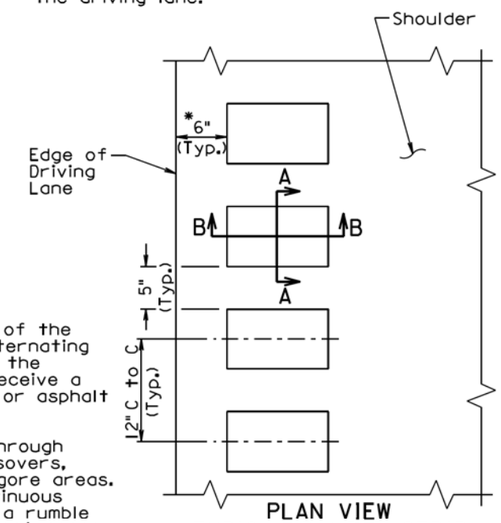

PLAN VIEW
TYPICAL RUMBLE STRIP IN ASPHALT CONCRETE

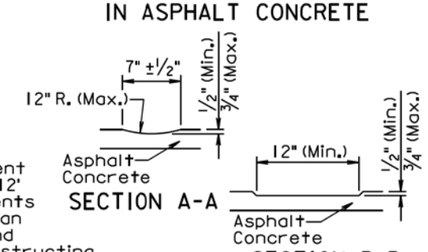

SECTION A-A

SECTION B-B

GENERAL NOTES:

A rumble strip shall be constructed on all of the asphalt concrete shoulders by grinding alternating patterns of 40' continuous indentations in the asphalt concrete. The rumble strip shall receive a flush seal with the shoulder flush sealing or asphalt surface treatment.

A rumble strip shall not be constructed through intersecting roads, entrances, median crossovers, entrance ramps, exit ramps, turnouts, and gore areas. The lengths of the 40' segments with continuous indentations and the 12' segments without a rumble strip adjacent to the intersecting roads, entrances, median crossovers, entrance ramps, exit ramps, turnouts, and gore areas shall be adjusted as approved by the Engineer.

Prior to constructing the rumble strip the Contractor shall submit to the Engineer, for approval, the proposed method of constructing the rumble strip.

Measurement of the rumble strip shall be to the nearest 0.1 of a mile for each shoulder. Measurement and payment of the rumble strip shall include the 12' long segments without rumble strips and the segments adjacent to the intersecting roads, entrances, median crossovers, entrance ramps, exit ramps, turnouts, and gore areas without rumble strips. Payment for constructing the rumble strip shall be at the contract unit price per mile for "Grind 12" Rumble Strip or Stripe in Asphalt Concrete".

June 26, 2015

Published Date: 4th Qtr. 2015	SDDOT	12" RUMBLE STRIP IN ASPHALT CONCRETE ON DIVIDED HIGHWAY SHOULDERS	PLATE NUMBER 320.28
			Sheet 1 of 1

Plot Scale - 1:200
- Plotted From - lmc11610
File - ...\Design\StdPlatePg2.dgn

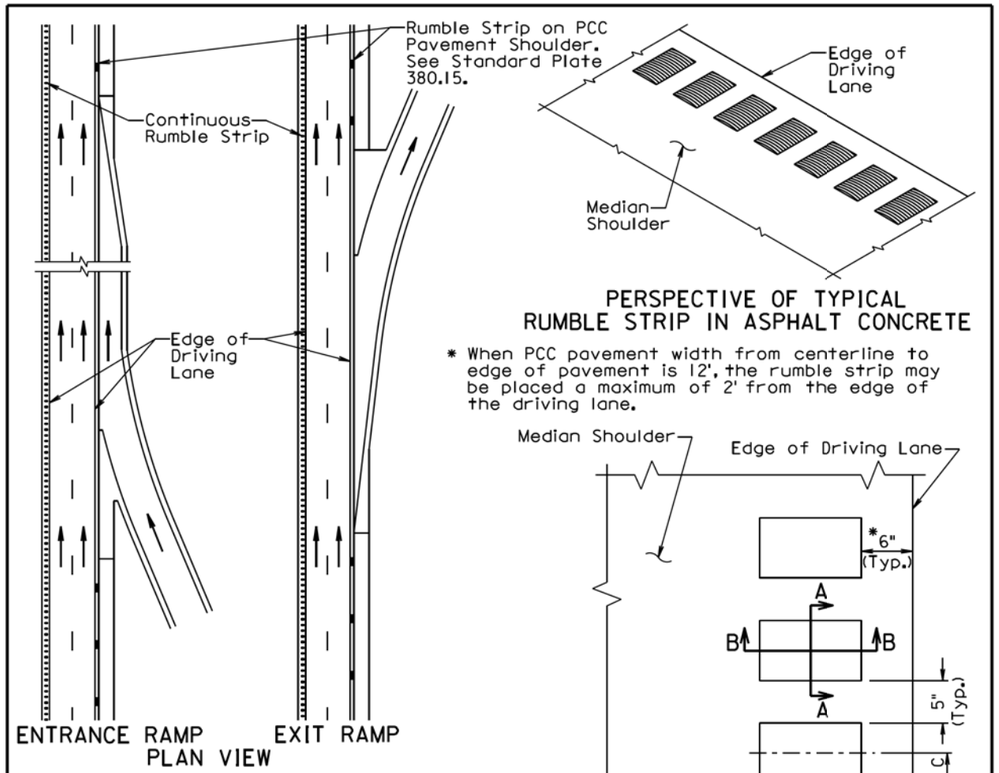

PERSPECTIVE OF TYPICAL RUMBLE STRIP IN ASPHALT CONCRETE

* When PCC pavement width from centerline to edge of pavement is 12', the rumble strip may be placed a maximum of 2' from the edge of the driving lane.

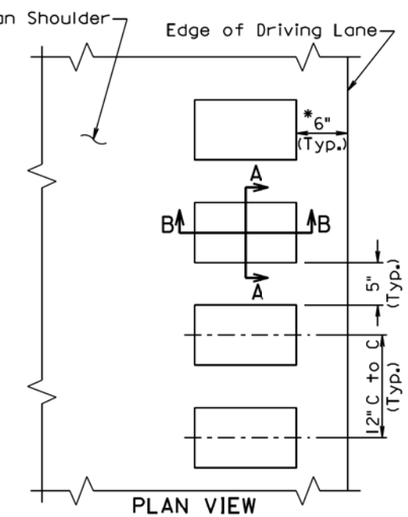

PLAN VIEW
TYPICAL RUMBLE STRIP IN ASPHALT CONCRETE

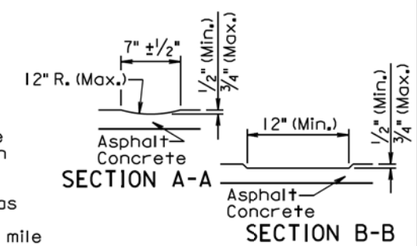

GENERAL NOTES:

A rumble strip shall be constructed on all of the asphalt concrete median shoulders by grinding continuous indentations in the asphalt concrete. The rumble strip shall receive a flush seal with the shoulder flush sealing or asphalt surface treatment.

A rumble strip should be placed through median crossovers as directed by the Engineer.

A rumble strip shall not be constructed through entrance ramps, exit ramps, and gore areas.

Prior to constructing the rumble strip the Contractor shall submit to the Engineer, for approval, the proposed method of constructing the rumble strip.

Measurement of the rumble strip in asphalt concrete shall be to the nearest 0.1 of a mile for each median shoulder. Measurement and payment of the rumble strip shall include the segments adjacent to median crossovers, entrance ramps, exit ramps, and gore areas without rumble strips. Payment for constructing the rumble strip shall be at the contract unit price per mile for "Grind 12" Rumble Strip or Stripe in Asphalt Concrete".

June 26, 2011

Published Date: 4th Qtr. 2015	SDDOT	12" RUMBLE STRIP IN ASPHALT CONCRETE ON INTERSTATE MEDIAN SHOULDER	PLATE NUMBER 320.30
			Sheet 1 of 1

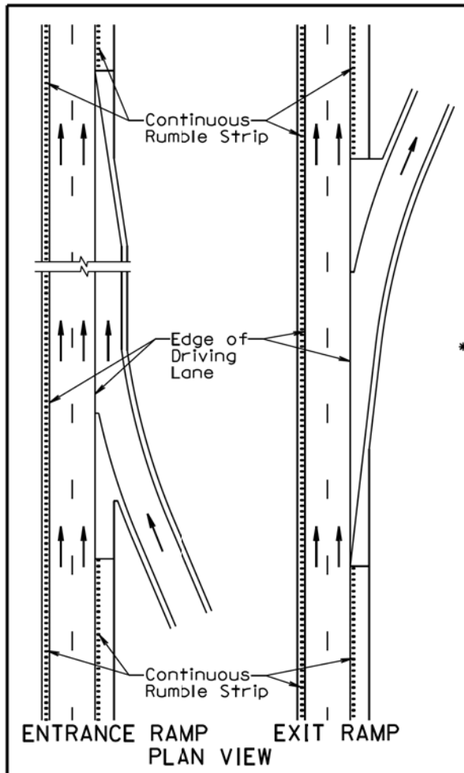

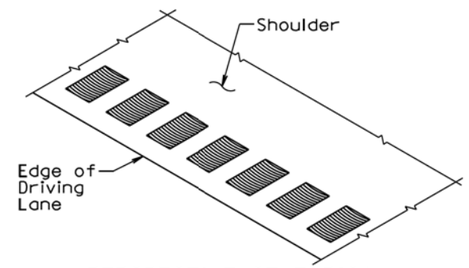

PERSPECTIVE OF TYPICAL RUMBLE STRIP IN ASPHALT CONCRETE

* When PCC pavement width from centerline to edge of pavement is 12', the rumble strip may be placed a maximum of 2' from the edge of the driving lane.

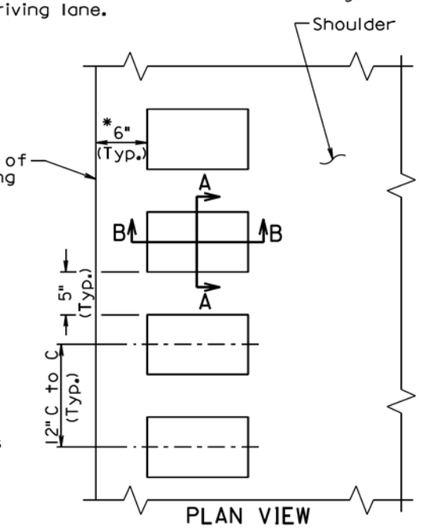

PLAN VIEW
TYPICAL RUMBLE STRIP IN ASPHALT CONCRETE

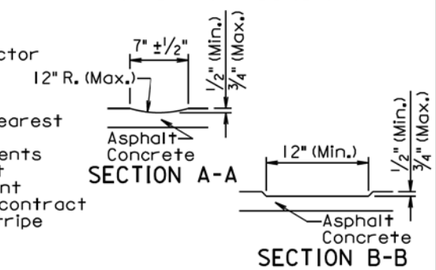

GENERAL NOTES:

A rumble strip shall be constructed on all of the asphalt concrete shoulders by grinding continuous indentations in the asphalt concrete. The rumble strip shall receive a flush seal with the shoulder flush sealing or asphalt surface treatment.

A rumble strip should be placed through median crossovers as directed by the Engineer.

A rumble strip shall not be constructed through entrance ramps, exit ramps, and gore areas.

Prior to constructing the rumble strip the Contractor shall submit to the Engineer, for approval, the proposed method of constructing the rumble strip.

Measurement of the rumble strip shall be to the nearest 0.1 of a mile for each shoulder. Measurement and payment of the rumble strip shall include the segments adjacent to median crossovers, entrance ramps, exit ramps, and gore areas without rumble strips. Payment for constructing the rumble strip shall be at the contract unit price per mile for "Grind 12" Rumble Strip or Stripe in Asphalt Concrete".

June 26, 2011

Published Date: 4th Qtr. 2015	SDDOT	12" RUMBLE STRIP IN ASPHALT CONCRETE ON INTERSTATE SHOULDERS	PLATE NUMBER 320.32
			Sheet 1 of 1

Plot Scale - 1:200
- Plotted From- trrc11610
File - ...\Design\StdPlatePg3.dgn

GENERAL NOTES:

Either flanged channel steel posts or S3x5.7 steel I beam posts shall be used, but post type shall be consistent thoughout the project. The S3x5.7 Steel I Beam post shall be used for the end posts.

All costs associated with furnishing and constructing the 3 cable guardrail anchor assembly including the concrete anchor, cable anchor bracket, compensating device, steel turnbuckle cable assembly, and necessary hardware shall be incidental to the contract unit price per each for "3 Cable Guardrail Anchor Assembly".

All costs associated with furnishing and constructing the 3 cable guardrail including posts, cable, cable splices, and hardware shall be incidental to the contract unit price per foot for "3 Cable Guardrail".

The following table and criteria shall apply to the arrangement of the Spring Cable End Assemblies (Compensation Devices) and Turnbuckle Cable End Assemblies:

LENGTH OF CABLE RUN	CRITERIA FOR ARRANGEMENT OF THE SPRING CABLE END ASSEMBLIES (COMPENSATION DEVICES) AND TURNBUCKLE CABLE END ASSEMBLIES
Less than 500'	Use turnbuckle on the approaching traffic end and compensating device on the other end of each individual cable, except in the W Beam to 3 Cable Transition where all compensating devices shall be provided at the bridge ends.
Greater than 500' to 1000'	Use compensating device on each end of each individual cable.
Greater than 1000'	Start new run by interlacing at last parallel post as shown on sheet 2 of 6.

All Compensating Devices shall be attached to the cable anchor bracket when one end of the run is attached to a bridge.

Compensating Devices must have a spring rate of 450 ± 50 pounds per inch and shall have a total available travel of 6 inches minimum.

The cable shall be retensioned after the initial 2 week pretension period in accordance with the following table:

CABLE TENSIONING SPECIFICATIONS													
Temperature Range (Degree F)	-20 to -11	-10 to -1	0 to 9	10 to 19	20 to 29	30 to 39	40 to 49	50 to 59	60 to 69	70 to 79	80 to 89	90 to 99	100 to 109	110 to 120
Spring Compression (Inch)	4¼	4	3¾	3½	3¼	3	2¾	2½	2¼	2	1¾	1½	1¼	1

POST SPACING FOR HORIZONTAL CURVES	
Roadway ℄ Curvature	Maximum Post Spacing (Ft)
1° and Less	16'
Greater than 1° to 8°	12'
Greater than 8° to 13°	8'
Greater than 13°	NOT ALLOWED

June 26, 2015

Published Date: 4th Qtr. 2015

SDDOT

3 CABLE GUARDRAIL (LOW TENSION)

PLATE NUMBER 629.01

Sheet 1 of 6

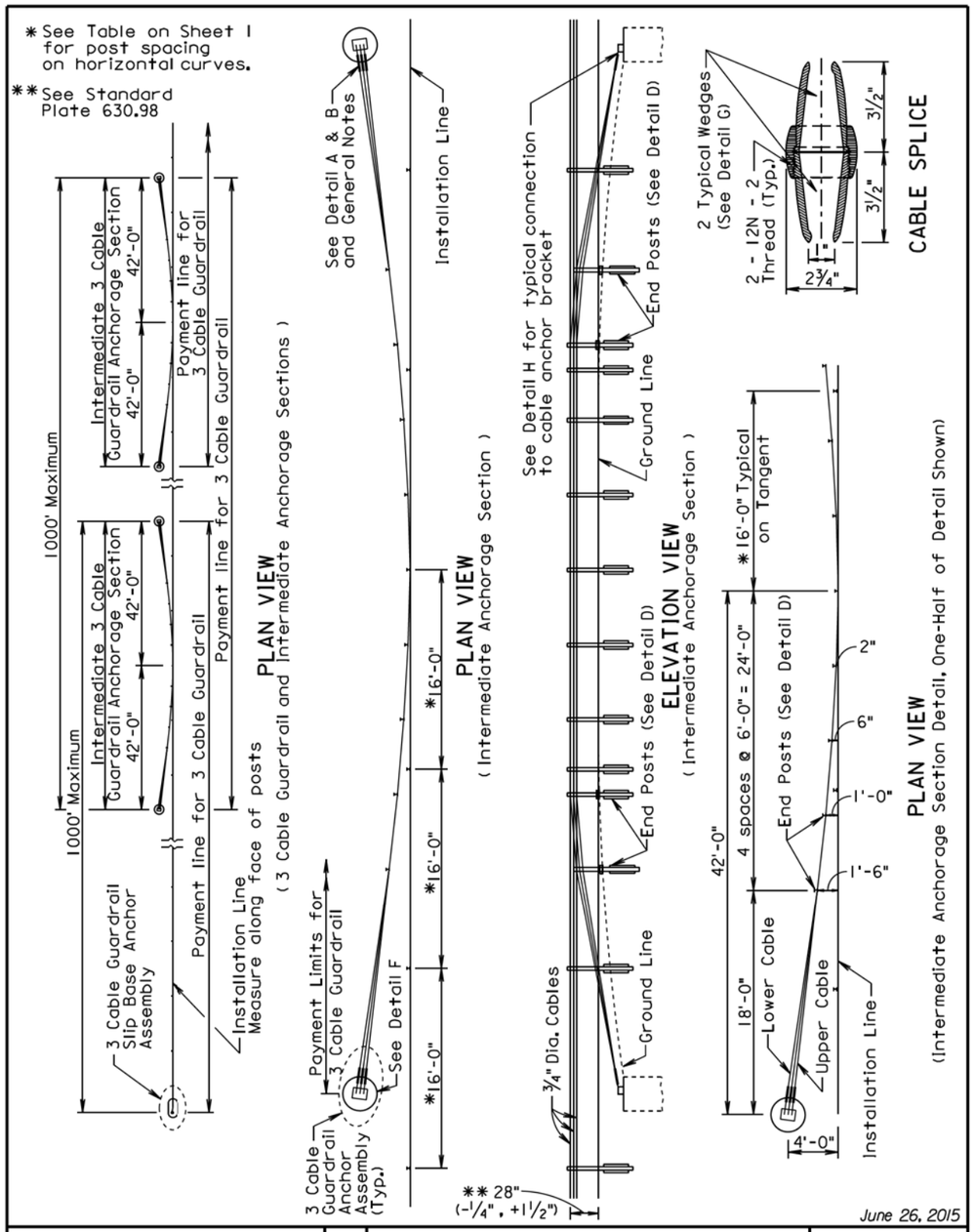

June 26, 2015

Published Date: 4th Qtr. 2015

SDDOT

3 CABLE GUARDRAIL (LOW TENSION)

PLATE NUMBER 629.01

Sheet 2 of 6

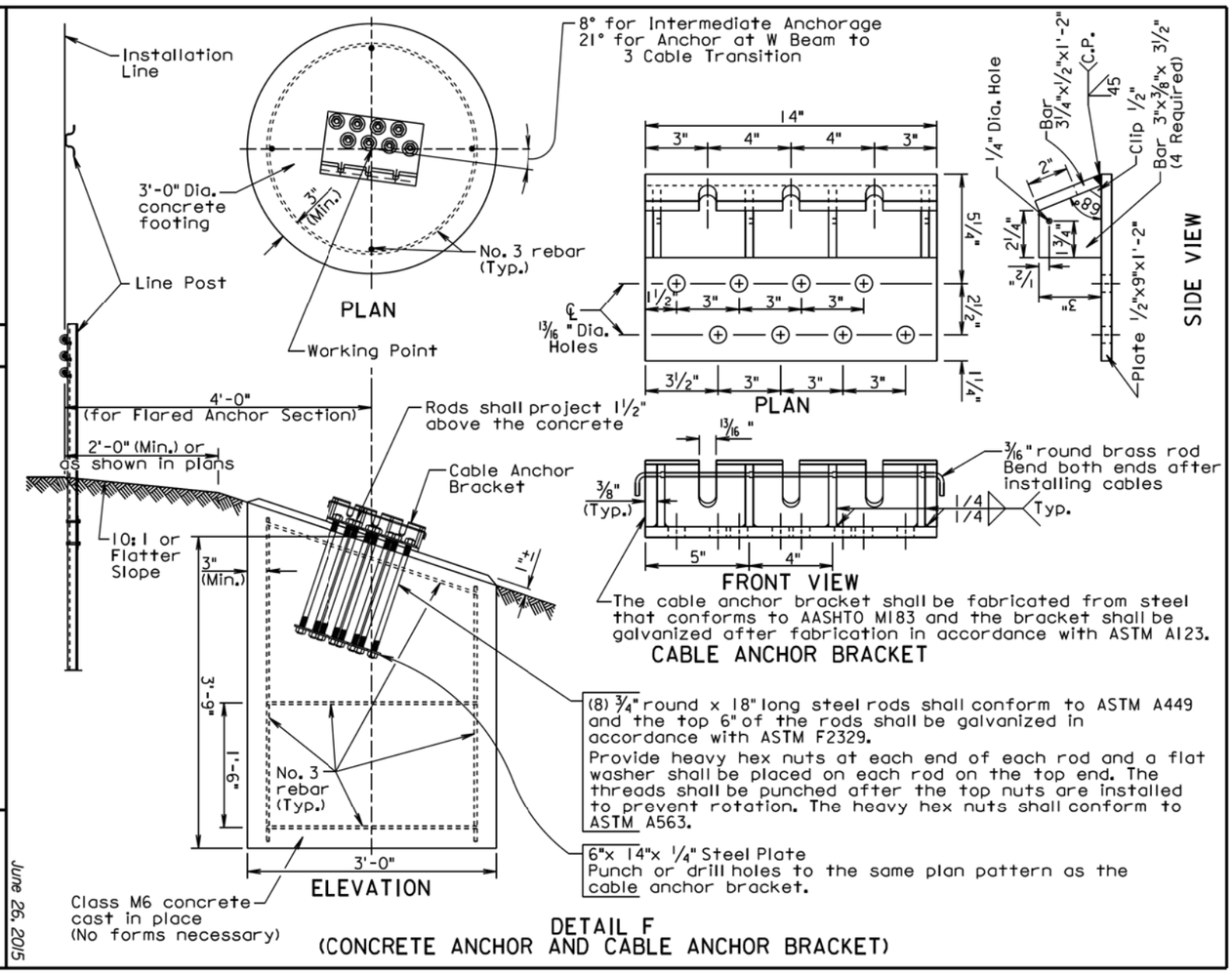

DETAIL F
(CONCRETE ANCHOR AND CABLE ANCHOR BRACKET)

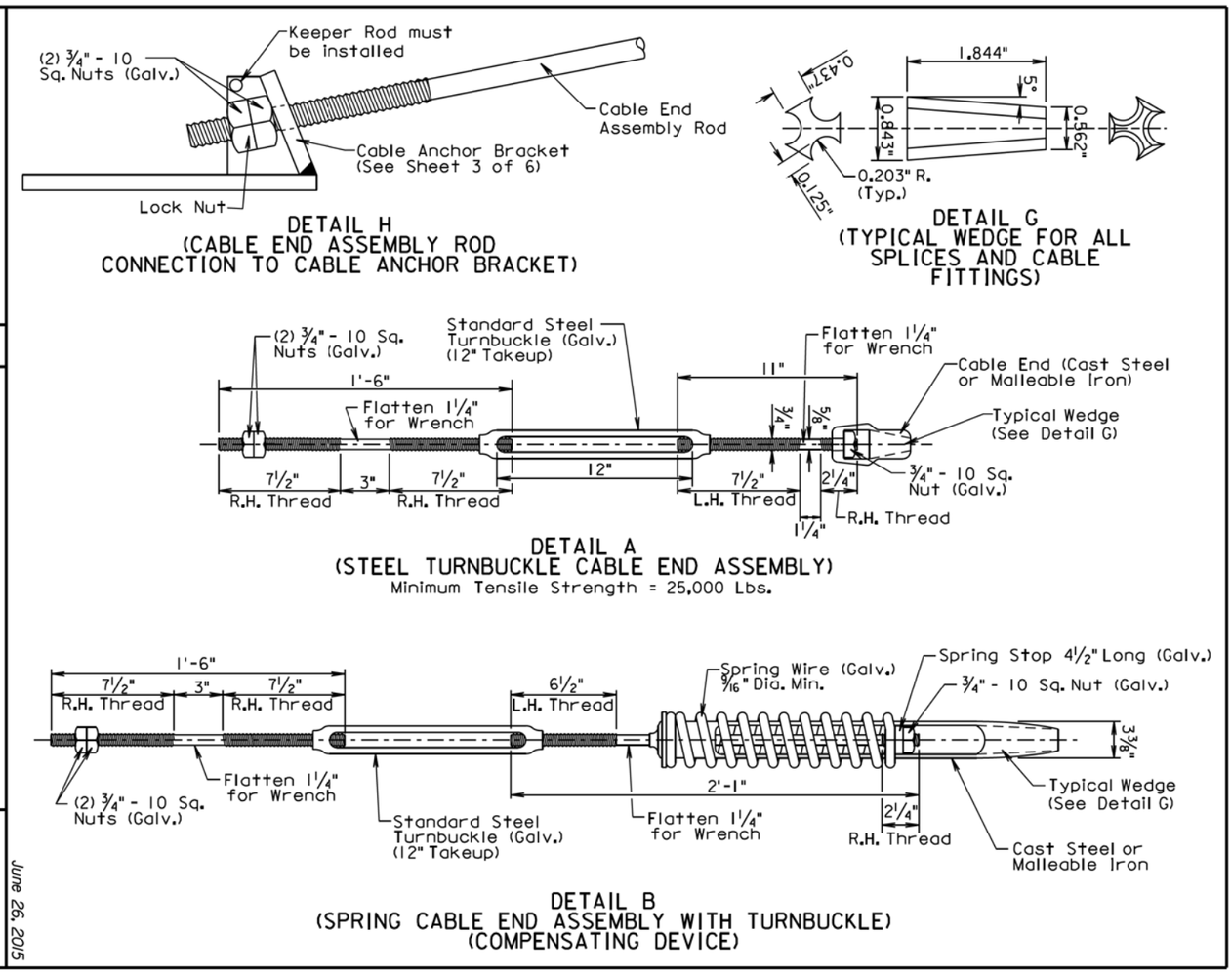

Published Date: 4th Qtr. 2015

SDDOT

3 CABLE GUARDRAIL (LOW TENSION)

PLATE NUMBER 629.01

Sheet 3 of 6

June 26, 2015

Published Date: 4th Qtr. 2015

SDDOT

3 CABLE GUARDRAIL (LOW TENSION)

PLATE NUMBER 629.01

Sheet 4 of 6

June 26, 2015

STATE OF SOUTH DAKOTA

PROJECT IM 0903(102)112 & NH 0014(216)112

Plotting Date: 12/30/2015

SHEET F40

TOTAL SHEETS F56

Published Date: 4th Qtr. 2015

SDDOT

3 CABLE GUARDRAIL (LOW TENSION)

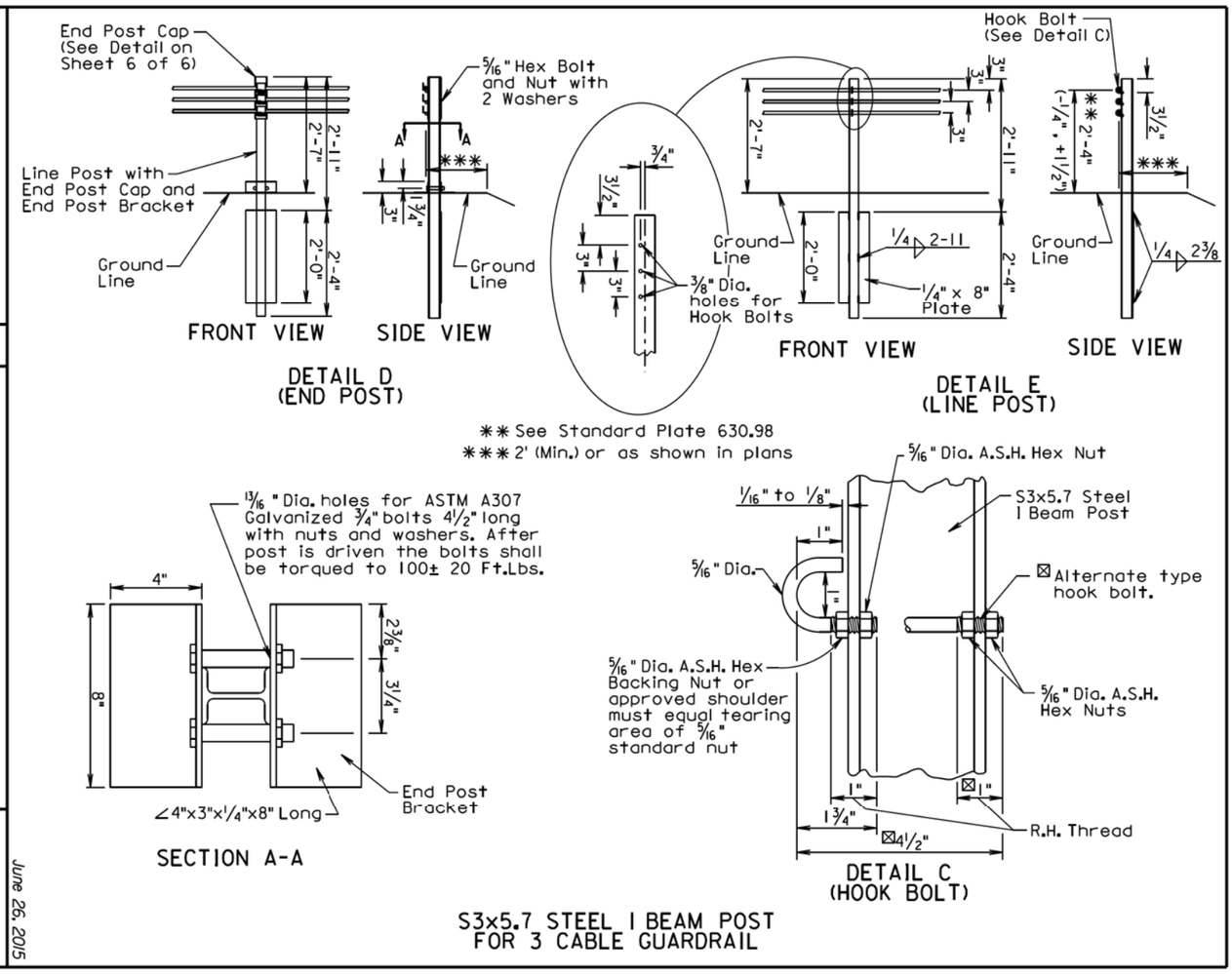

June 26, 2015

PLATE NUMBER 629.01

Sheet 5 of 6

Published Date: 4th Qtr. 2015

SDDOT

3 CABLE GUARDRAIL (LOW TENSION)

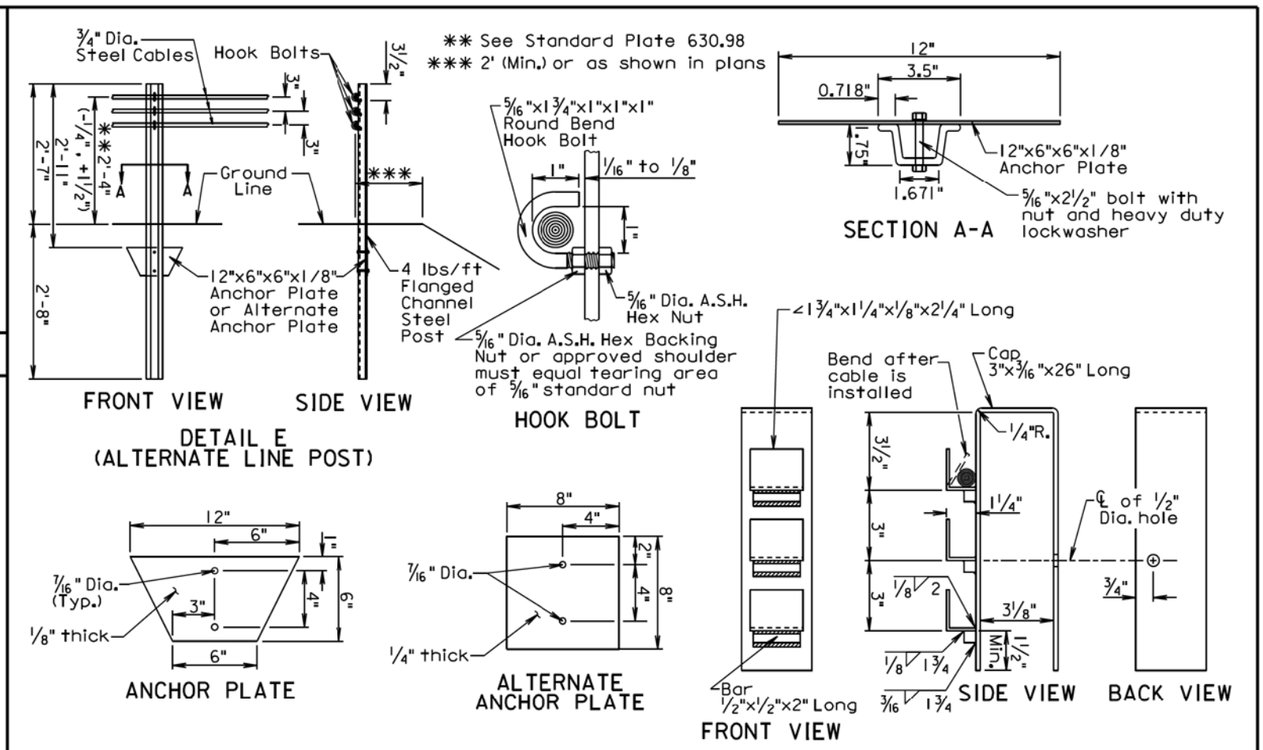

GENERAL NOTES:

Flanged channel steel posts shall be produced from high strength steel in accordance with ASTM A499, Grade 60.

Anchor plates shall be in conformance with ASTM A709, Grade 36.

Bolt shall be in conformance with ASTM A354 Grade BD or BC. Nut shall be in conformance with ASTM A563 Grade DH.

Bolt shall be galvanized in accordance with ASTM F2329.

Finish for the post and anchor plate shall be a baked on high quality dark green enamel.

Alternate anchor plate may be unfinished.

June 26, 2015

PLATE NUMBER 629.01

Sheet 6 of 6

STATE OF SOUTH DAKOTA	PROJECT IM 0903(102)112 & NH 0014(216)112	SHEET F41	TOTAL SHEETS F56

Plotting Date: 12/30/2015

Published Date: 4th Qtr. 2015

SDDOT

W BEAM TO 3 CABLE TRANSITION

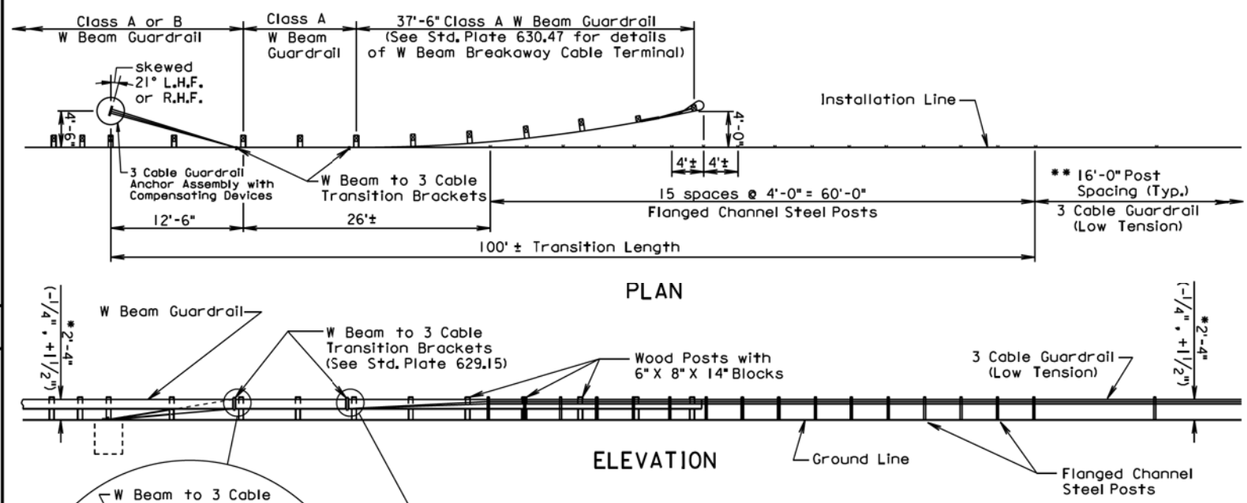

PLAN

ELEVATION

* See Standard Plate 630.98

** or post spacing as specified in the plans

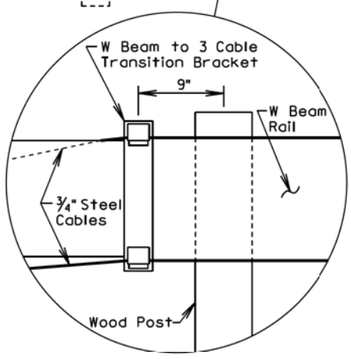

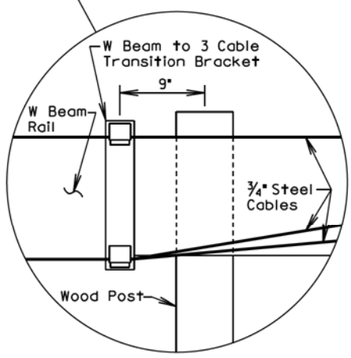

GENERAL NOTES:

Flanged channel steel posts are shown on this standard plate, however, S3 X 5.7 steel I beam posts may be substituted for the flanged channel steel posts.

All costs associated with furnishing and installing the W Beam to 3 Cable Transition Bracket shall be incidental to the contract unit price per Ft. for "3 Cable Guardrail", "Reset 3 Cable Guardrail", or "Reset 3 Cable Guardrail, Cable Only".

See Standard Plates 630.31, 630.32, and 630.33 for details and payment information for W Beam Guardrail.

See Standard Plate 629.01 for details and payment information for 3 Cable Guardrail.

December 16, 2014

PLATE NUMBER 629.05

Sheet 1 of 1

Published Date: 4th Qtr. 2015

SDDOT

3 CABLE GUARDRAIL SLIP BASE ANCHOR ASSEMBLY

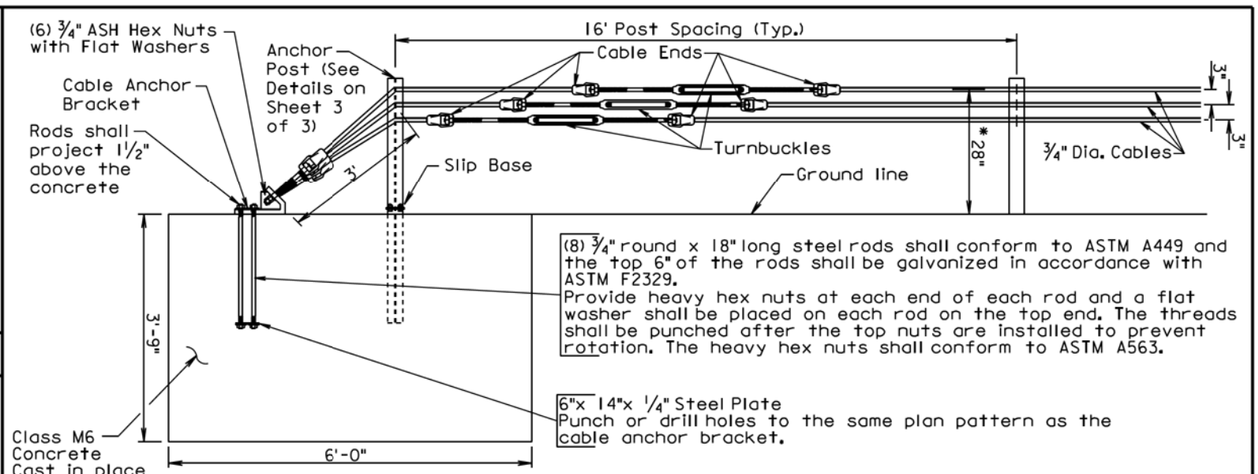

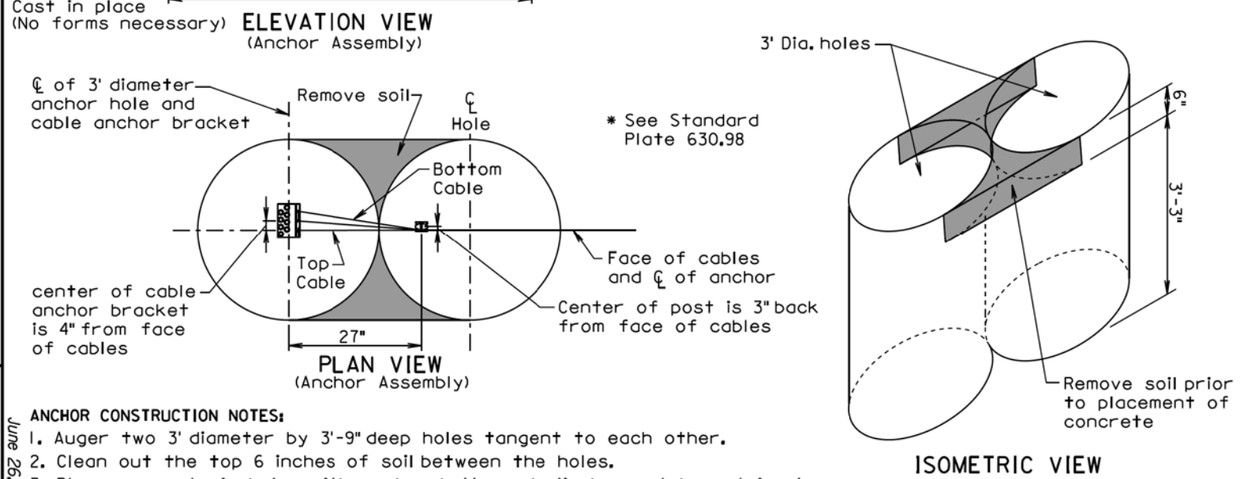

ELEVATION VIEW
(Anchor Assembly)

PLAN VIEW
(Anchor Assembly)

* See Standard Plate 630.98

ISOMETRIC VIEW

ANCHOR CONSTRUCTION NOTES:

1. Auger two 3' diameter by 3'-9" deep holes tangent to each other.
2. Clean out the top 6 inches of soil between the holes.
3. Place concrete in holes with anchor bolts and slip base stub post in place.
4. For informational purposes the neat line concrete volume of the anchor is 1.9 cubic yards.

June 26, 2015

PLATE NUMBER 629.10

Sheet 1 of 3

STATE OF SOUTH DAKOTA	PROJECT IM 0903(102)112 & NH 0014(216)112	SHEET F42	TOTAL SHEETS F56

Plotting Date: 12/30/2015

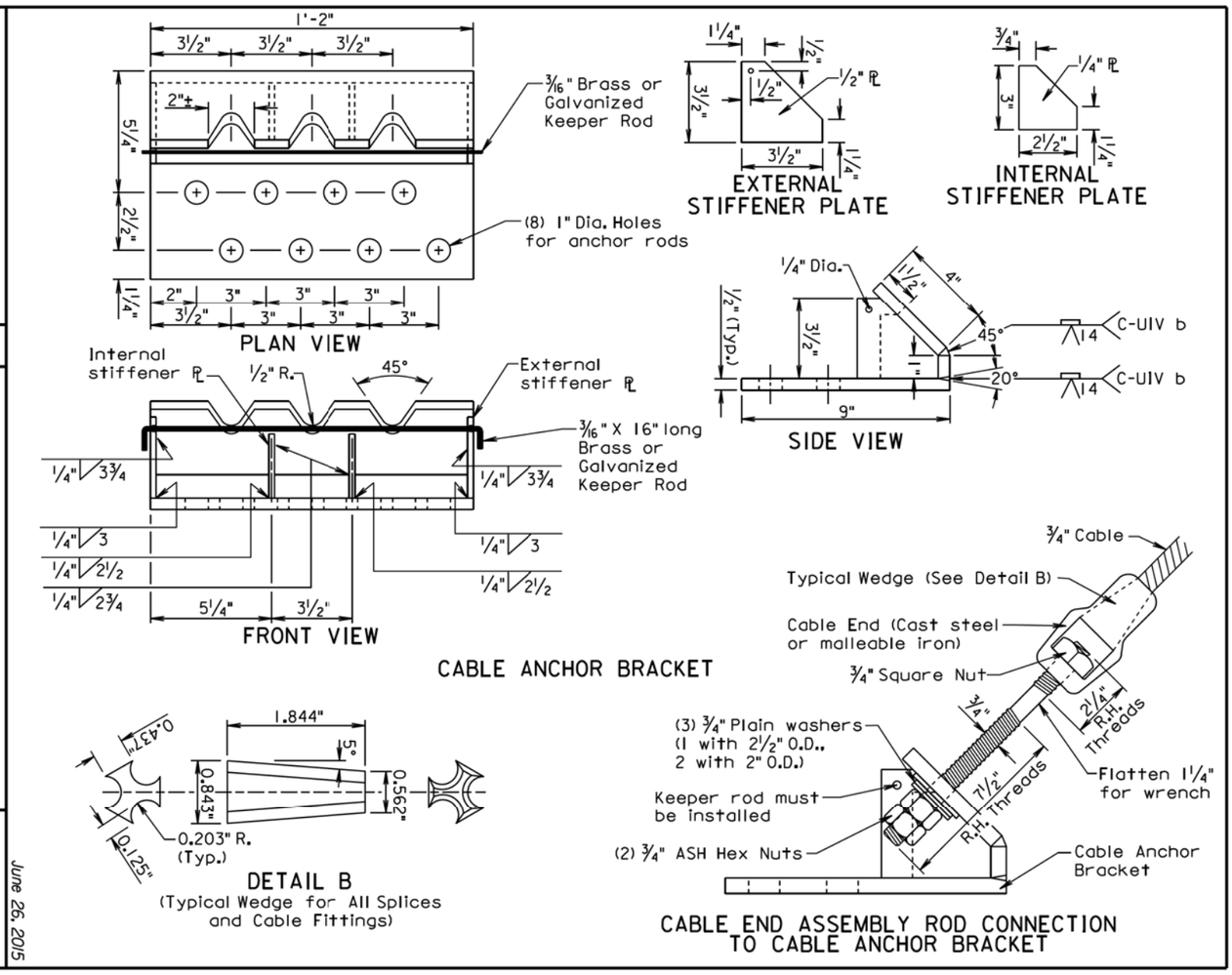

Published Date: 4th Qtr. 2015

SDDOT

3 CABLE GUARDRAIL SLIP BASE ANCHOR ASSEMBLY

PLATE NUMBER 629.10

Sheet 2 of 3

June 26, 2015

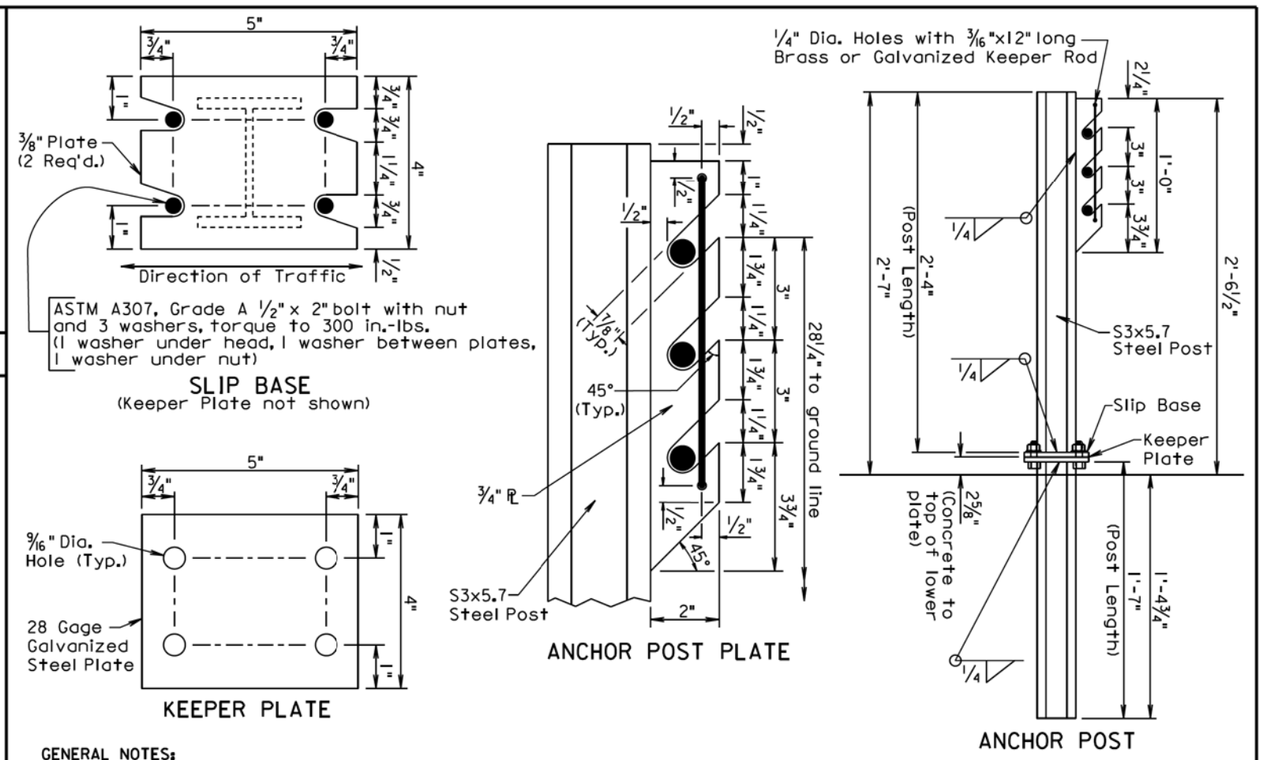

GENERAL NOTES:

Anchor post shall be a S3x5.7 rolled steel section. Post and plates shall conform to ASTM A709, Grade 36 and shall be galvanized in accordance with ASTM A123.

¾" round wire cable shall consist of three strands (7 wires per strand) and have a minimum tensile strength of 25,000 pounds.

Cast steel elements shall conform to AASHTO M103 (ASTM 27-73) grade U-60-30.

All costs associated with furnishing and constructing the 3 cable guardrail slip base anchor assembly including the concrete anchor, cable anchor bracket, anchor bolts, plates, slip base stub post, anchor post, steel turnbuckles, cable ends, U-bolt cable clips, and necessary hardware shall be incidental to the contract unit price per each for "3 Cable Guardrail Slip Base Anchor Assembly".

Published Date: 4th Qtr. 2015

SDDOT

3 CABLE GUARDRAIL SLIP BASE ANCHOR ASSEMBLY

PLATE NUMBER 629.10

Sheet 3 of 3

June 26, 2015

STATE OF SOUTH DAKOTA	PROJECT IM 0903(102)112 & NH 0014(216)112	SHEET F43	TOTAL SHEETS F56

Plotting Date: 12/30/2015

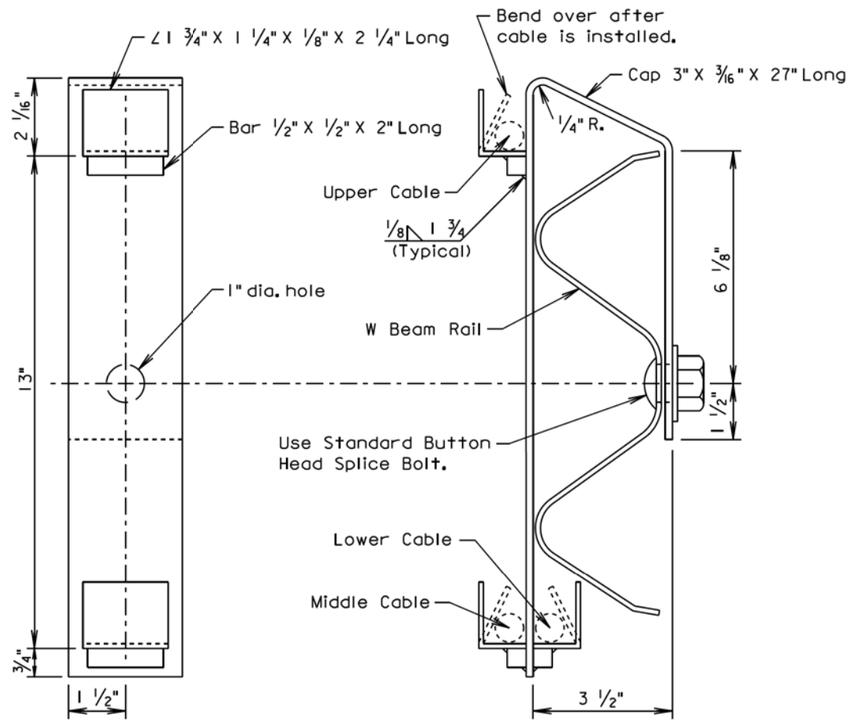

ELEVATION
(TRANSITION BRACKET)

END VIEW
(W BEAM RAIL AND TRANSITION BRACKET)

GENERAL NOTES:

Steel used in the fabrication of the bracket shall conform to ASTM A36 and the bracket shall be galvanized after fabrication in accordance with ASTM A123.

March 31, 2000

Published Date: 4th Qtr. 2015	SDDOT	W BEAM TO 3 CABLE TRANSITION BRACKET	PLATE NUMBER 629.15
			Sheet 1 of 1

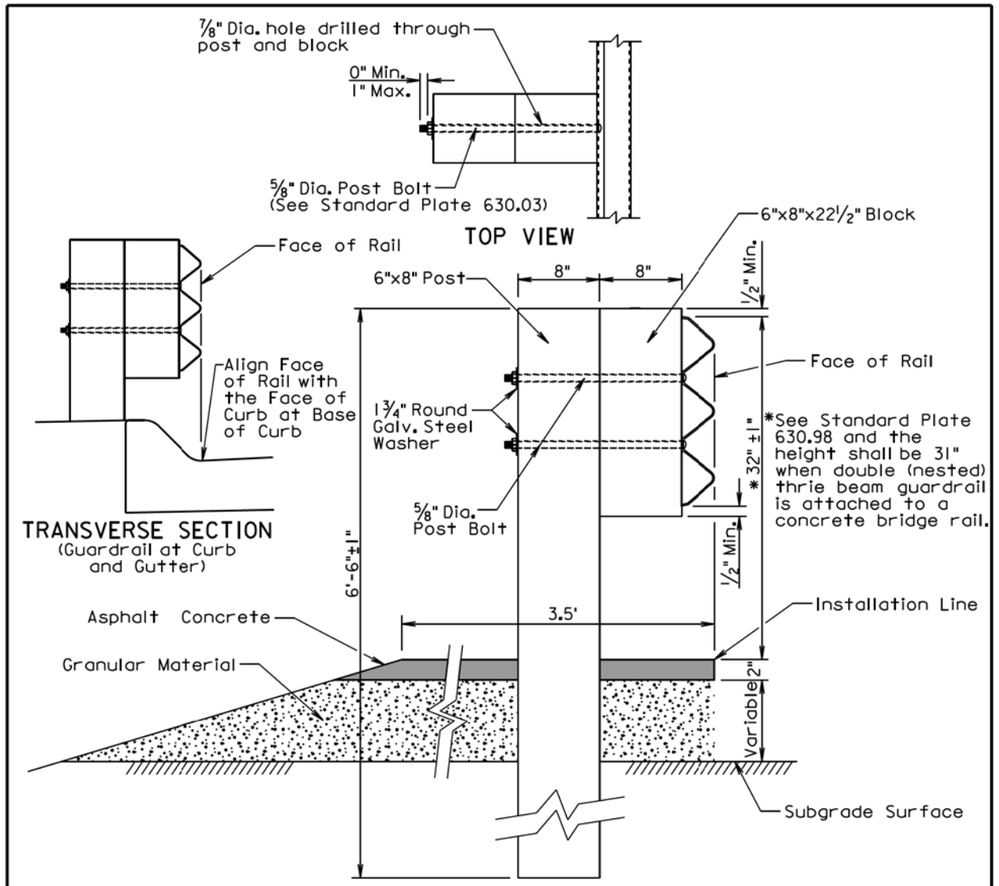

TRANSVERSE SECTION

GENERAL NOTES:

Asphalt concrete shall be the same type used elsewhere on the project or shall be as specified in the plans. If asphalt concrete is not specified in the plans, the asphalt concrete shall conform to the Specifications for "Asphalt Concrete Composite." For informational purposes, the Rate of Materials for the 3.5' wide section of asphalt concrete as shown above shall be 4.80 Tons per Station.

Granular material shall be the same type used elsewhere on the project or shall be as specified in the plans. If granular material type is not specified in the plans, the material shall conform to the Specifications for "Base Course". The granular material shall be placed the same thickness as the mainline surfacing or as specified in the plans.

The cross slope for the surfacing and subgrade surface shall be as specified in the plans (See Typical Sections and/or Cross Sections).

The top of post and top of block shall have a true square cut. The top of block shall be ±1 inch from the top of the post.

June 26, 2015

Published Date: 4th Qtr. 2015	SDDOT	THRIE BEAM GUARDRAIL POST INSTALLATION	PLATE NUMBER 630.01
			Sheet 1 of 1

Plot Scale - 1:200
- Plotted From - trrc11610
File - ...\Design\StdPlatePg9.dgn

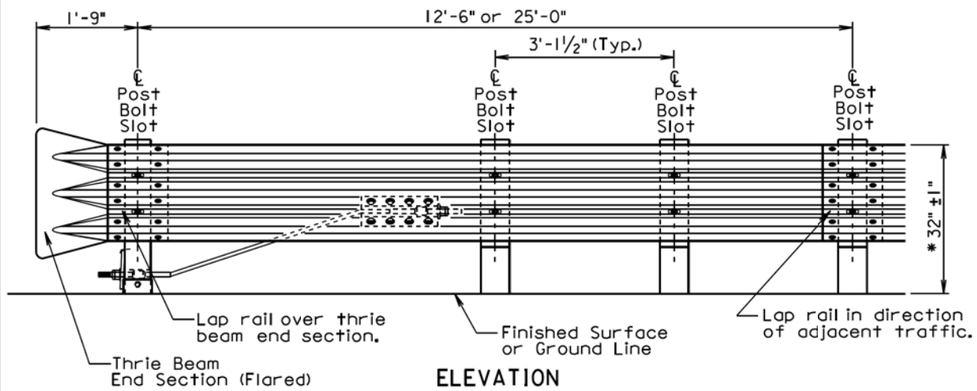

ELEVATION

* See Standard Plate 630.98 and the height shall be 31" when double (nested) thrie beam guardrail is attached to a concrete bridge rail.

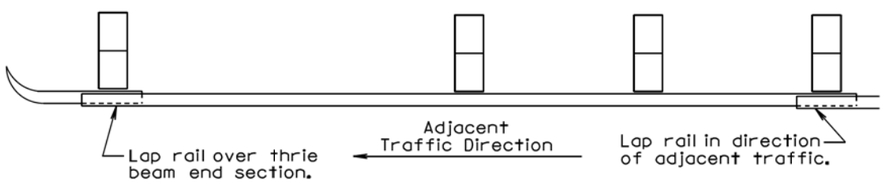

PLAN

THRIE BEAM GUARDRAIL DEFLECTION CRITERIA	
POST SPACING	MAXIMUM DEFLECTION
6'-3"	2'-6"
3'-1½"	1'-9"

For Informational Purposes Only

GENERAL NOTES:

All thrie beam rail shall be Type I.

There will be no separate payment for furnishing and installing Thrie Beam End Sections (Flared) and Thrie Beam Terminal Connectors. All costs for the Thrie Beam End Sections (Flared) and Thrie Beam Terminal Connectors shall be incidental to the contract unit price per foot for the respective "Thrie Beam Guardrail" bid item.

Thrie beam rail section lengths may be 12'-6" and/or 25'-0". The combination of section lengths used shall be compatible with the total length of rail per site as shown in the plans.

Thrie Beam End Sections (Flared) shall only be used in a one-way traffic situation. See Standard Plate 630.80 for Thrie Beam End Section (Flared) in the Beam Guardrail Trailing End Terminal.

All costs for constructing thrie beam guardrail including labor, equipment, and materials including all posts, blocks, steel beam rail, and hardware shall be incidental to the contract unit price per foot for the respective "Thrie Beam Guardrail" bid item.

June 26, 2015

Published Date: 4th Qtr. 2015	SDDOT	THRIE BEAM GUARDRAIL INSTALLATION	PLATE NUMBER 630.02
			Sheet 1 of 1

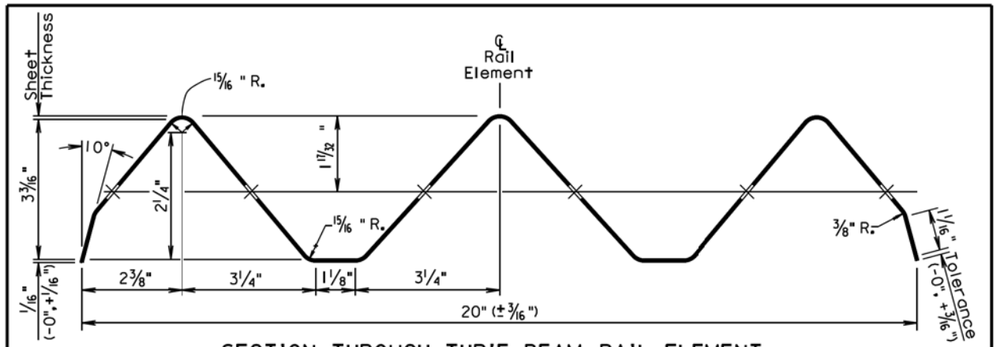

SECTION THROUGH THRIE BEAM RAIL ELEMENT

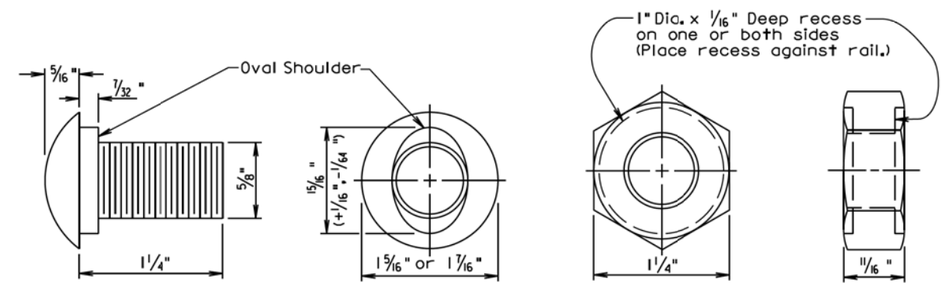

The Post Bolt is similar except the post bolt is 18" long.

SPLICE BOLT
(5/8" BUTTON HEAD BOLT AND RECESS NUT)

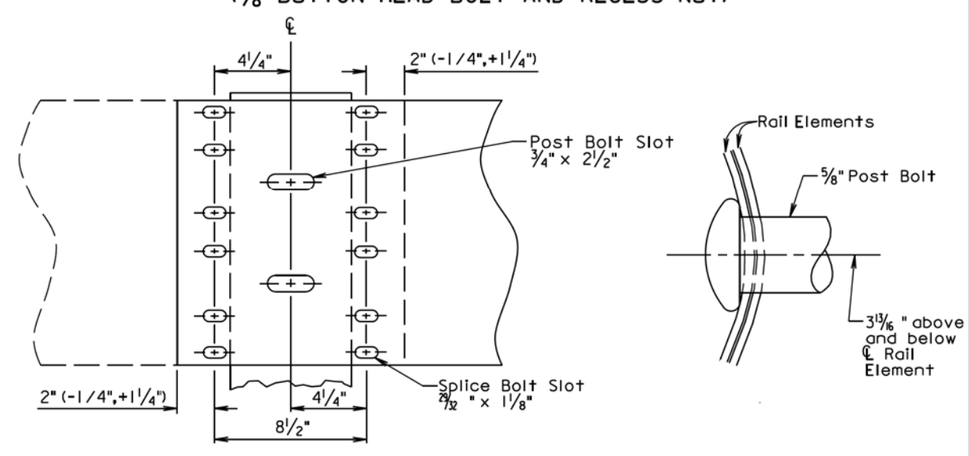

Lap in direction of traffic.

RAIL SPLICE

March 31, 2000

Published Date: 4th Qtr. 2015	SDDOT	THRIE BEAM RAIL, RAIL SPLICE, AND HARDWARE	PLATE NUMBER 630.03
			Sheet 1 of 1

Plot Scale - 1:200
- Plotted From - trrc11610
File - ...\Design\StdPlatePg10.dgn

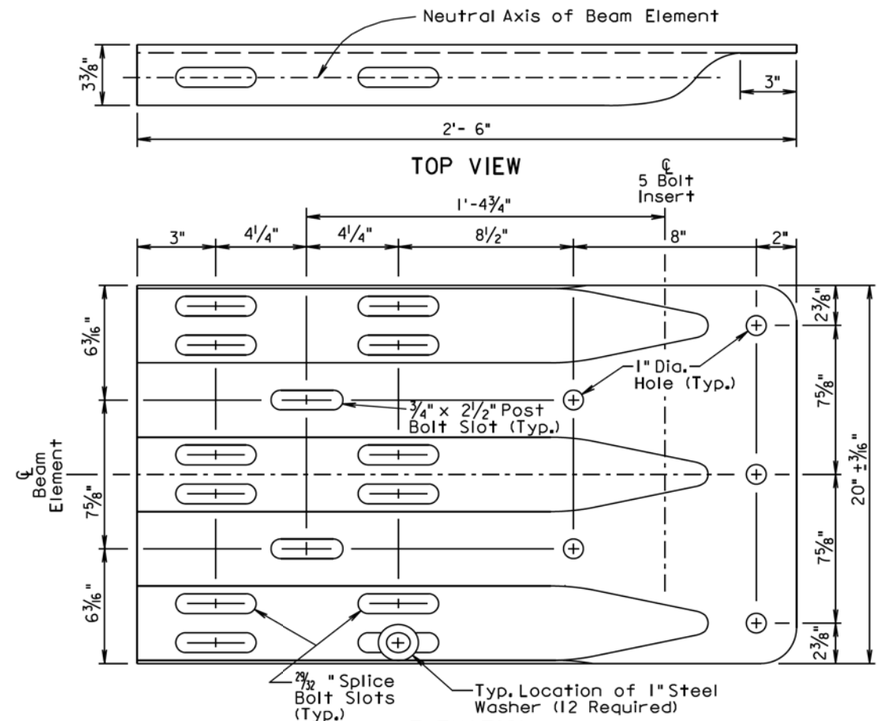

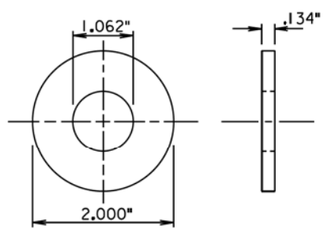

1" STEEL WASHER

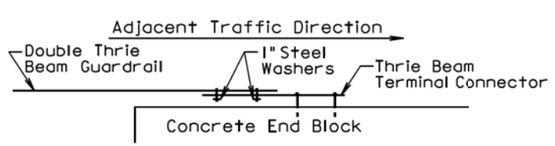

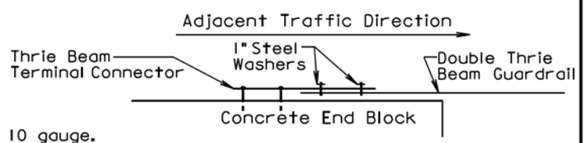

GENERAL NOTES:

Thrie Beam Terminal Connectors shall be 10 gauge.

When the thrie beam terminal connector is used to connect the rail to the bridge, 1" steel washers shall be used at the lap splice and the washers shall be in direct contact with the 3" slots of the thrie beam terminal connector. See the drawings above for the typical locations of the 1" steel washers.

There will be no separate payment for furnishing and installing the Thrie Beam Terminal Connector. All costs for the Thrie Beam Terminal Connector shall be incidental to the contract unit price per foot for the respective "Thrie Beam Guardrail" bid item.

September 14, 2001

Published Date: 4th Qtr. 2015	SDDOT	THRIE BEAM TERMINAL CONNECTOR AND 1" STEEL WASHER	PLATE NUMBER 630.05 Sheet 1 of 1

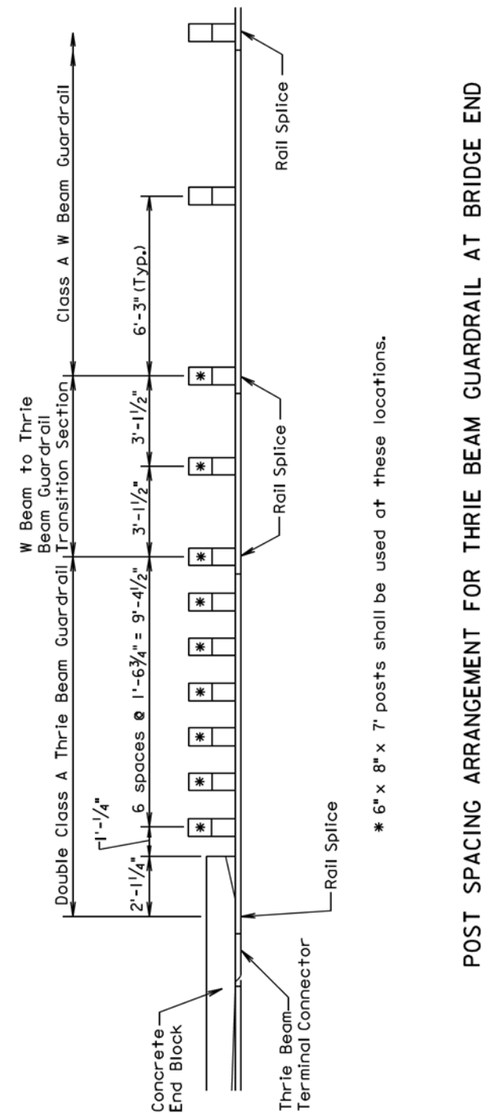

* 6" x 8" x 7' posts shall be used at these locations.

POST SPACING ARRANGEMENT FOR THRIE BEAM GUARDRAIL AT BRIDGE END

December 23, 2002

Published Date: 4th Qtr. 2015	SDDOT	POST SPACING ARRANGEMENT FOR THRIE BEAM GUARDRAIL AT BRIDGE END	PLATE NUMBER 630.15 Sheet 1 of 1

Plot Scale - 1:200
- Plotted From- trrc11610
File - ...\Design\StdPlatePg11.dgn

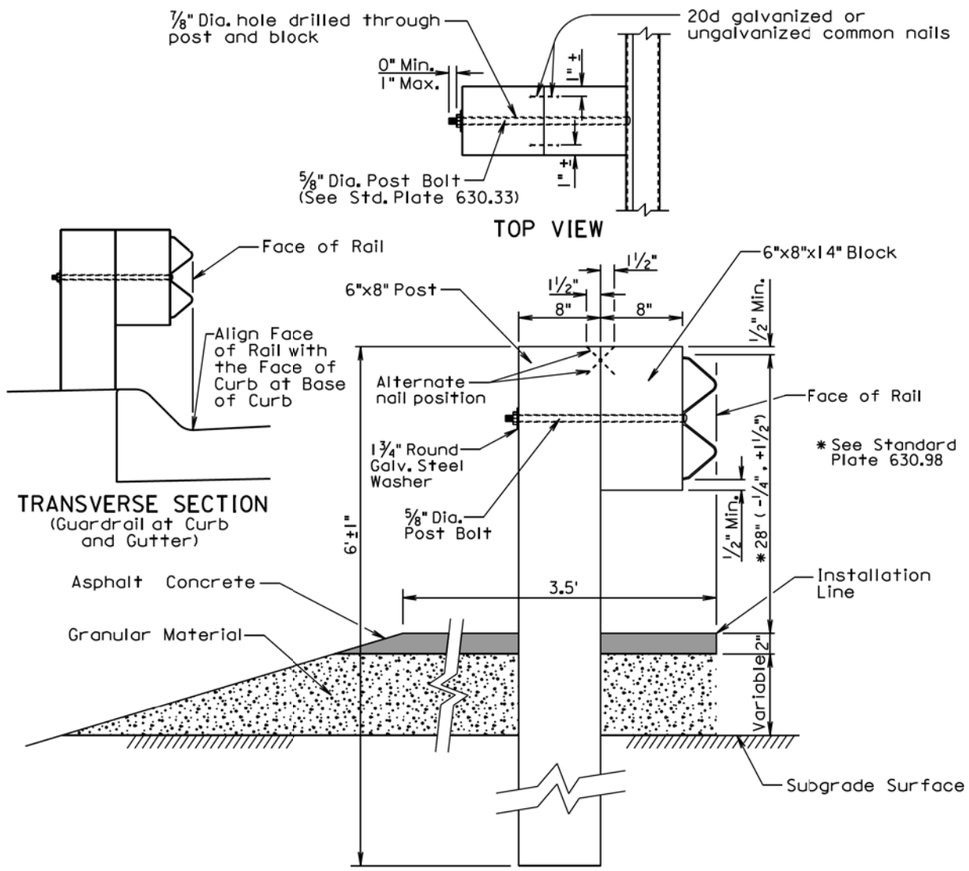

GENERAL NOTES:

Asphalt concrete shall be the same type used elsewhere on the project or shall be as specified in the plans. If asphalt concrete is not specified in the plans, the asphalt concrete shall conform to the Specifications for "Asphalt Concrete Composite." For informational purposes, the Rate of Materials for the 3.5' wide section of asphalt concrete as shown above shall be 4.80 Tons per Station.

Granular material shall be the same type used elsewhere on the project or shall be as specified in the plans. If granular material type is not specified in the plans, the material shall conform to the Specifications for "Base Course". The granular material shall be placed the same thickness as the mainline surfacing or as specified in the plans.

The cross slope for the surfacing and subgrade surface shall be as specified in the plans (See Typical Sections and/or Cross Sections).

The top of post and top of block shall have a true square cut. The top of block shall be ±1 inch from the top of the post.

June 26, 2015

Published Date: 4th Qtr. 2015	SDDOT	W BEAM GUARDRAIL POST INSTALLATION	PLATE NUMBER 630.31 Sheet 1 of 1

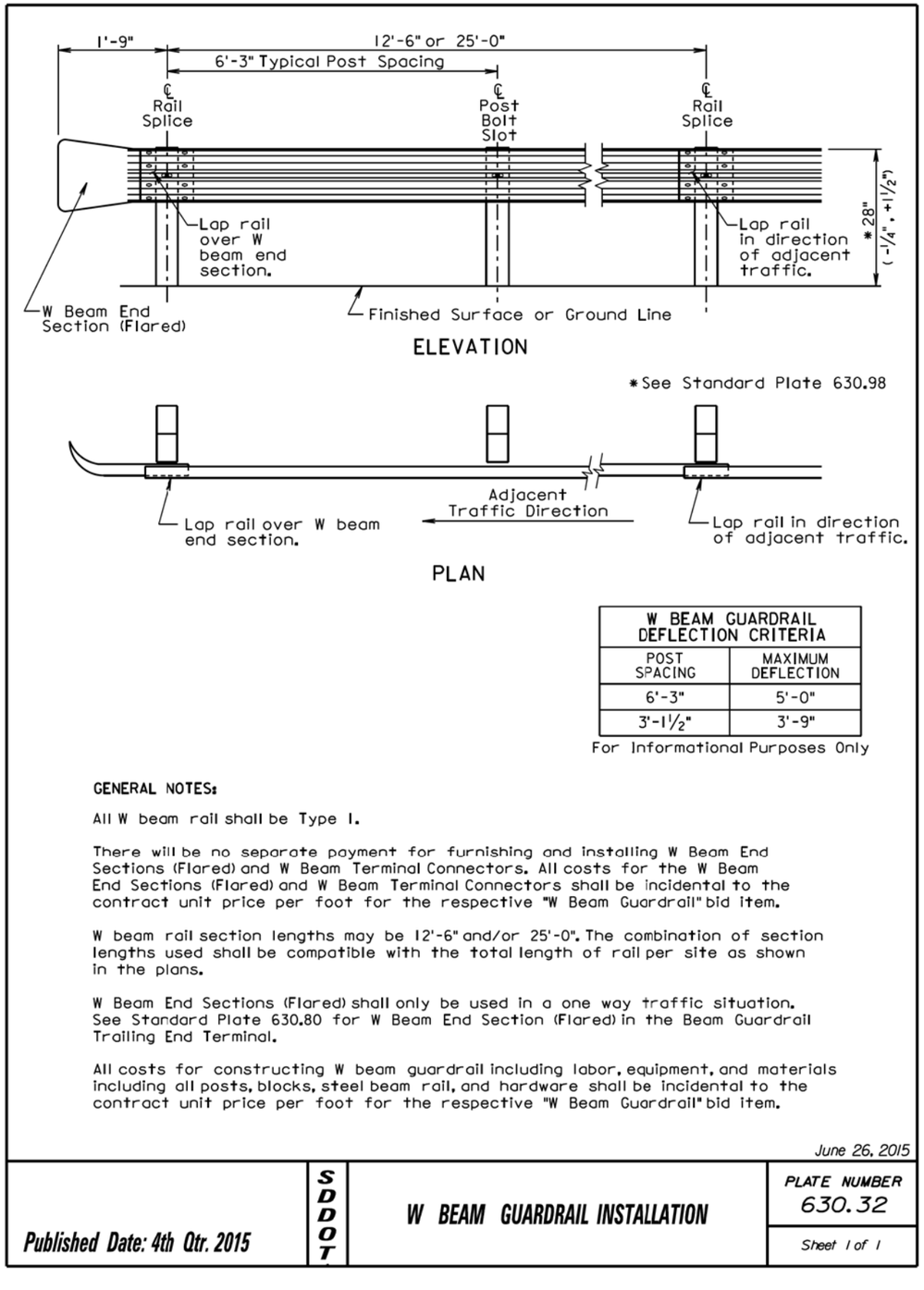

W BEAM GUARDRAIL DEFLECTION CRITERIA	
POST SPACING	MAXIMUM DEFLECTION
6'-3"	5'-0"
3'-1 1/2"	3'-9"

For Informational Purposes Only

GENERAL NOTES:

All W beam rail shall be Type 1.

There will be no separate payment for furnishing and installing W Beam End Sections (Flared) and W Beam Terminal Connectors. All costs for the W Beam End Sections (Flared) and W Beam Terminal Connectors shall be incidental to the contract unit price per foot for the respective "W Beam Guardrail" bid item.

W beam rail section lengths may be 12'-6" and/or 25'-0". The combination of section lengths used shall be compatible with the total length of rail per site as shown in the plans.

W Beam End Sections (Flared) shall only be used in a one way traffic situation. See Standard Plate 630.80 for W Beam End Section (Flared) in the Beam Guardrail Trailing End Terminal.

All costs for constructing W beam guardrail including labor, equipment, and materials including all posts, blocks, steel beam rail, and hardware shall be incidental to the contract unit price per foot for the respective "W Beam Guardrail" bid item.

June 26, 2015

Published Date: 4th Qtr. 2015	SDDOT	W BEAM GUARDRAIL INSTALLATION	PLATE NUMBER 630.32 Sheet 1 of 1

Plot Scale - 1:200
- Plotted From - trrc11610
File - ...\Design\StdPlatePg12.dgn

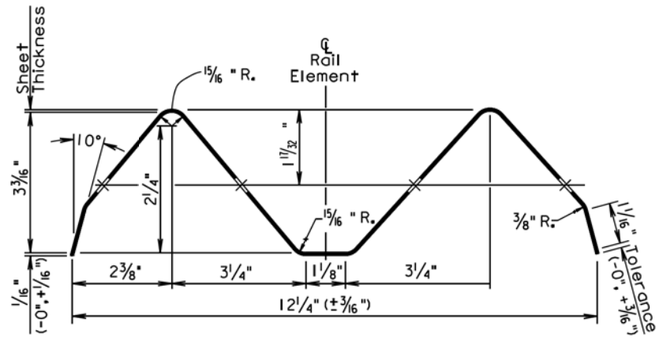

SECTION THROUGH W BEAM RAIL ELEMENT

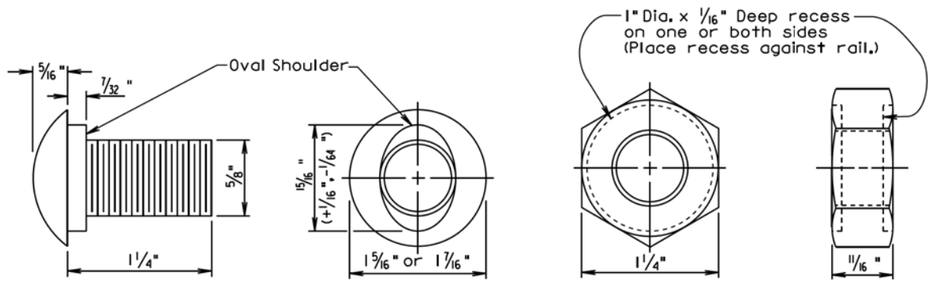

The Post Bolt is similar except the post bolt is 18" long.

SPLICE BOLT
(5/8" BUTTON HEAD BOLT AND RECESS NUT)

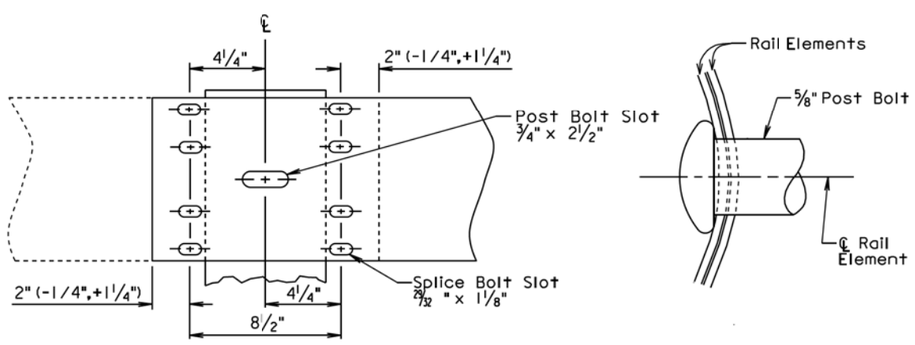

Lap in direction of traffic.

RAIL SPLICE

December 23, 2004

Published Date: 4th Qtr. 2015	SDDOT	W BEAM RAIL, RAIL SPLICE, AND HARDWARE	PLATE NUMBER 630.33
			Sheet 1 of 1

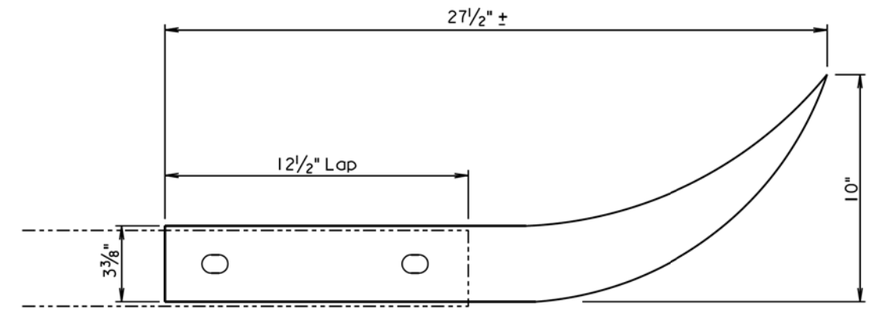

TOP VIEW

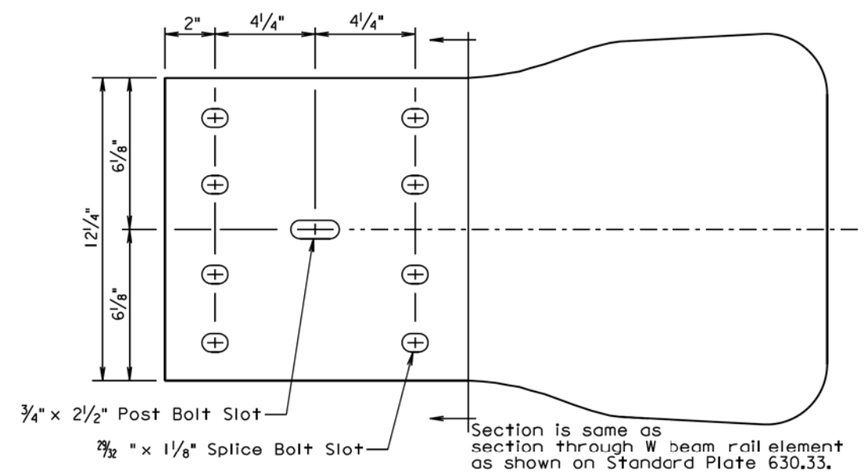

ELEVATION

GENERAL NOTES:

W Beam End Sections (Flared) shall be 12 gage.

There will be no separate payment for furnishing and installing W Beam End Sections (Flared). All costs for the W Beam End Sections (Flared) shall be incidental to the contract unit price per foot for the respective "W Beam Guardrail" bid item.

W Beam End Sections (Flared) shall only be used in a one way traffic situation. See Standard Plate 630.80 for W Beam End Section (Flared) in the Beam Guardrail Trailing End Terminal.

March 31, 2000

Published Date: 4th Qtr. 2015	SDDOT	W BEAM END SECTION (FLARED)	PLATE NUMBER 630.40
			Sheet 1 of 1

Plot Scale - 1:200
- Plotted From - trnc11610
File - ...\Design\StdPlatePg13.dgn

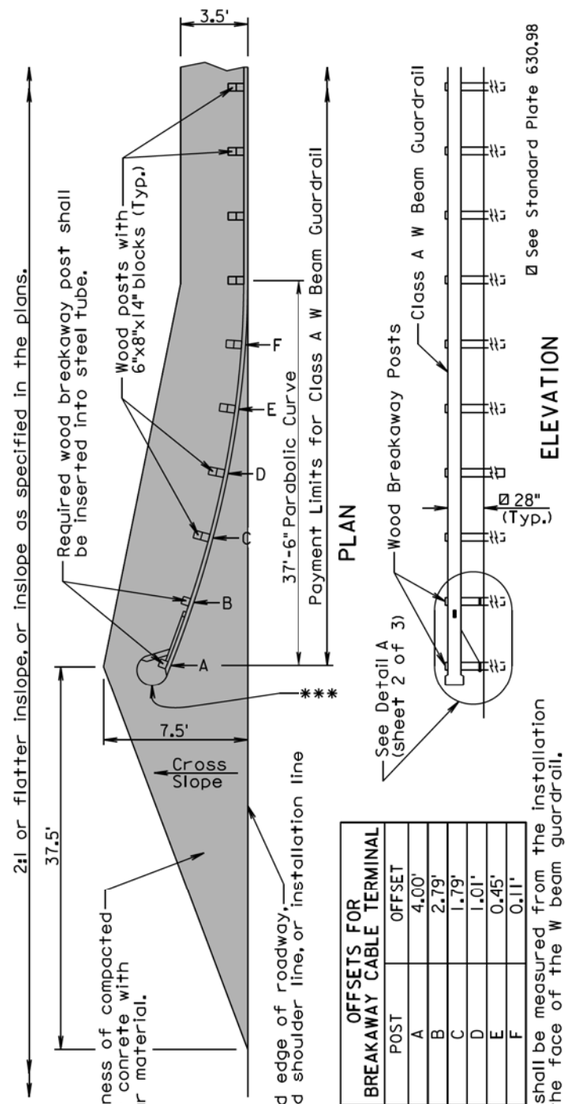

OFFSETS FOR BREAKAWAY CABLE TERMINAL

POST	OFFSET
A	4.00'
B	2.79'
C	1.79'
D	1.01'
E	0.45'
F	0.11'

GENERAL NOTES:

The finished embankment surfacing cross slope shall match the roadway cross slope; however, if a steeper cross slope is necessary the steepest allowable cross slope is 10:1.

Asphalt concrete shall be the same type used elsewhere on the project or shall be as specified in the plans. If asphalt concrete is not specified in the plans, the asphalt concrete shall conform to the Specifications for "Asphalt Concrete Composite."

Granular material shall be the same type used elsewhere on the project or shall be as specified in the plans. If granular material type is not specified in the plans, the material shall conform to the Specifications for "Base Course". The granular material shall be placed the same thickness as the mainline surfacing or as specified in the plans.

***An adhesive object marker shall be placed on the end section buffer after placement of the end section buffer. The adhesive object marker dimensions may be 16" x 16" or other variation due to the shape of the end section buffer. A minimum of 256 square inches of object marker reflective sheeting area is required. The reflective sheeting shall be fluorescent yellow super or very high intensity. All costs for furnishing and installing the adhesive object marker shall be incidental to various contract items.

Costs for constructing the W Beam Guardrail Breakaway Cable Terminal including labor, equipment, and materials including the anchor bracket, cable assembly, soil plates, bearing plate, pipe sleeve, W beam end section(buffer), modified W beam terminal connector, and all necessary hardware shall be incidental to the contract unit price per each for "W Beam Guardrail Breakaway Cable Terminal".

December 16, 2014

Published Date: 4th Qtr. 2015

SDDOT

W BEAM GUARDRAIL BREAKAWAY CABLE TERMINAL

PLATE NUMBER 630.47

Sheet 1 of 3

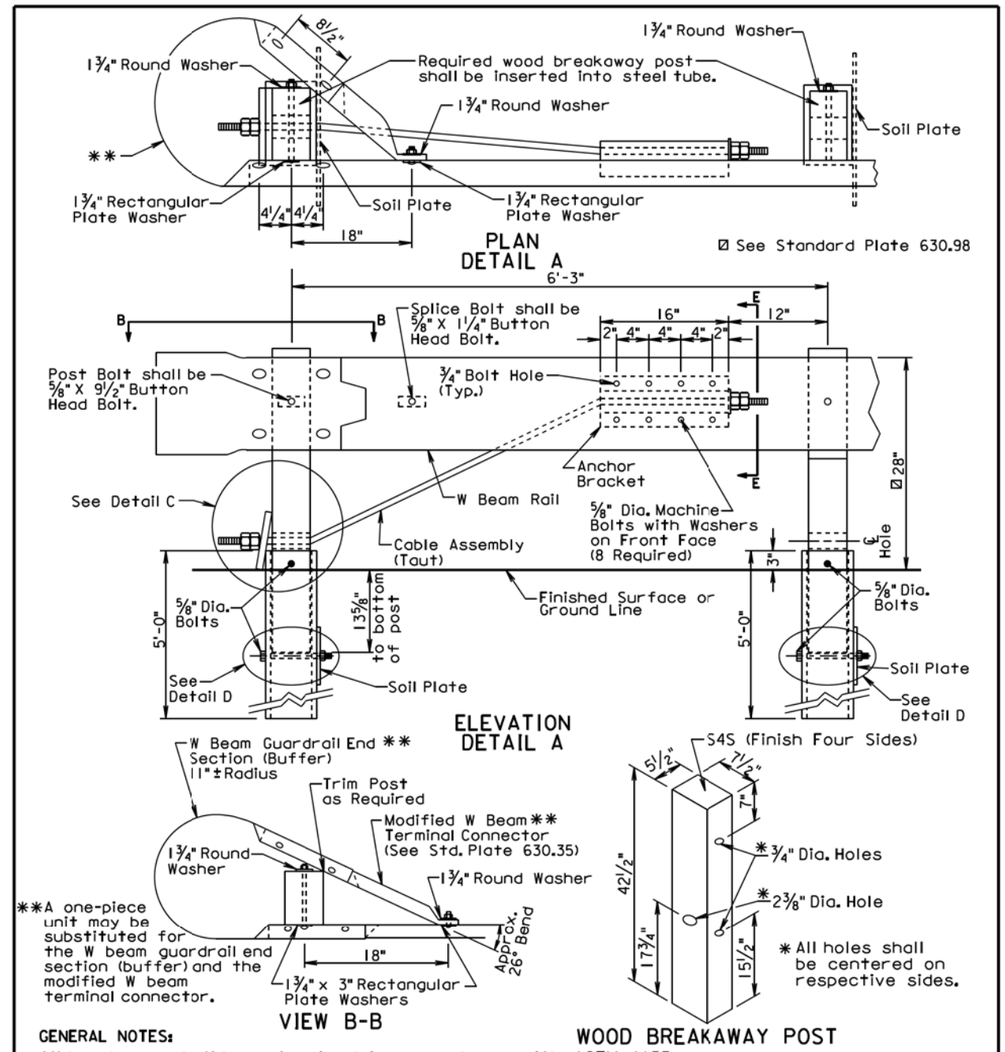

GENERAL NOTES:

All hardware shall be galvanized in accordance with ASTM A153.

The steel tubes shall meet the requirements of ASTM Specification A500, Grade B, and shall be galvanized after fabrication in accordance with the requirements of AASHTO Specification M111.

The anchor bracket, soil plate, and bearing plate shall be fabricated from steel that meets ASTM A36 Specifications. They shall be galvanized after fabrication in accordance with ASTM A123.

The W Beam End Section (Buffer) shall be 12 gage galvanized steel.

The cable shall be ¾", Type II, with Class A coating in conformance with AASHTO M30.

December 16, 2014

Published Date: 4th Qtr. 2015

SDDOT

W BEAM GUARDRAIL BREAKAWAY CABLE TERMINAL

PLATE NUMBER 630.47

Sheet 2 of 3

Plot Scale - 1:200
- Plotted From- trrc11610
File - ...\Design\StdPlatePg14.dgn

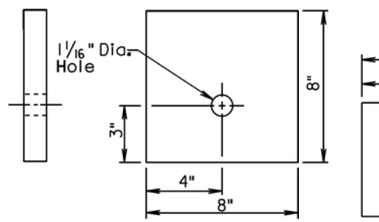

BEARING PLATE

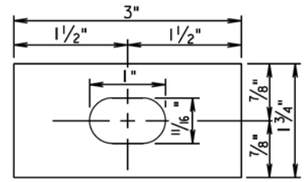

RECTANGULAR PLATE WASHER

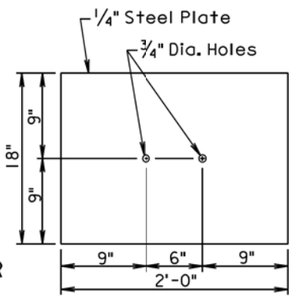

SOIL PLATE

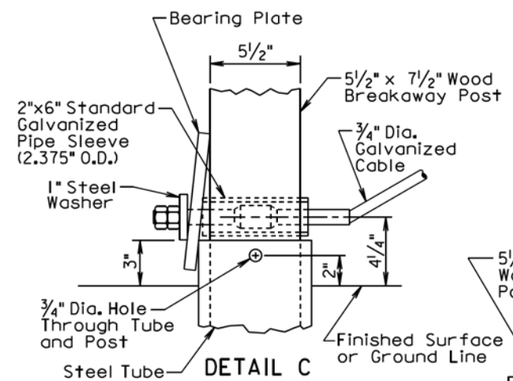

DETAIL C

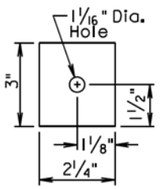

END PLATE

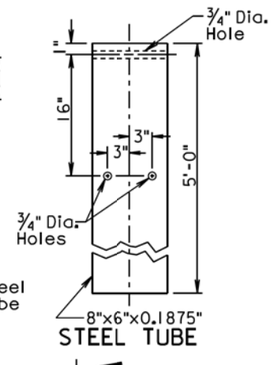

STEEL TUBE

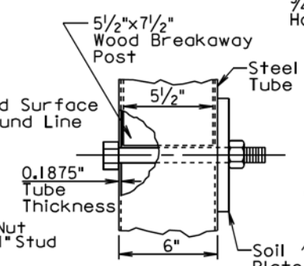

DETAIL D

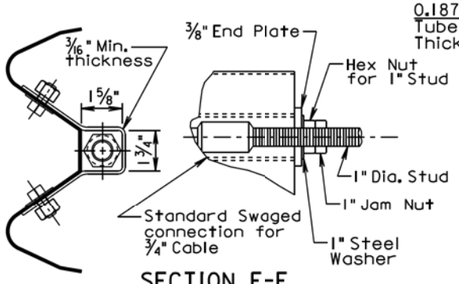

SECTION E-E
(END PLATE REMOVED)

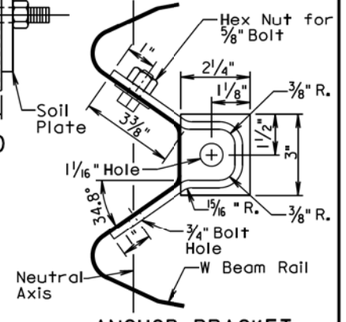

ANCHOR BRACKET

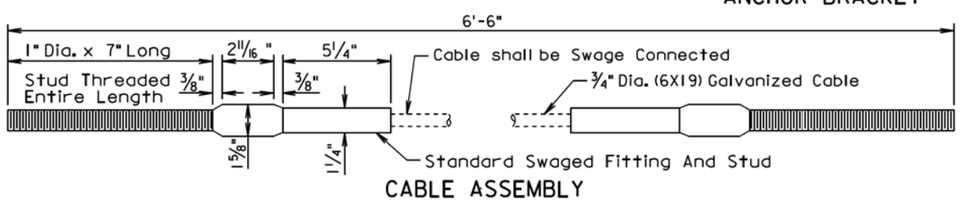

CABLE ASSEMBLY

December 16, 2014

Published Date: 4th Qtr. 2015	SDDOT	W BEAM GUARDRAIL BREAKAWAY CABLE TERMINAL	PLATE NUMBER 630.47
			Sheet 3 of 3

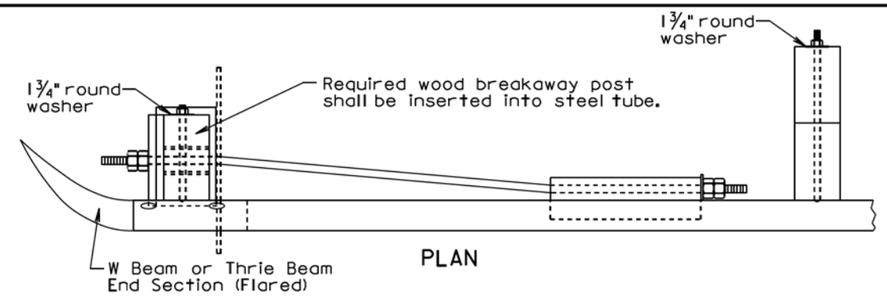

PLAN

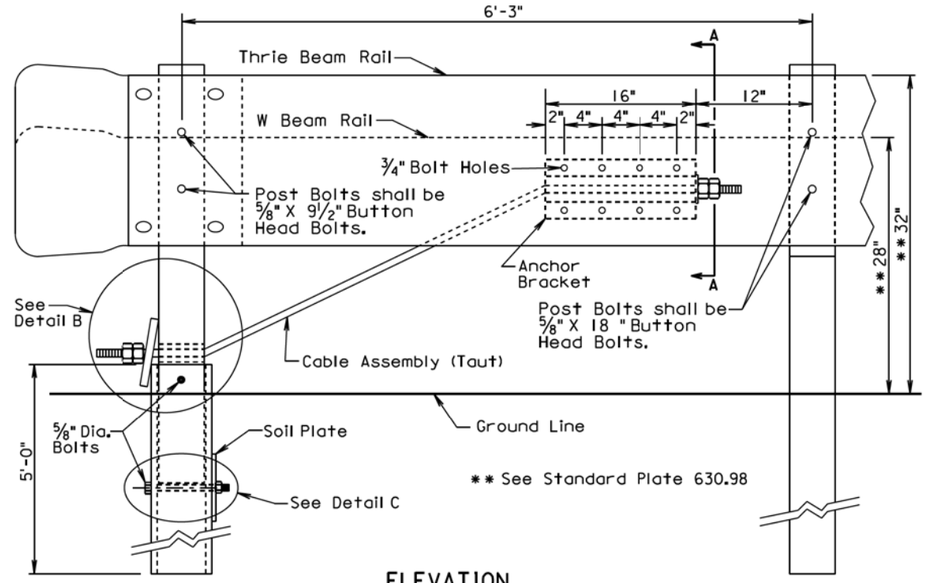

ELEVATION

GENERAL NOTES:

All hardware shall be galvanized in accordance with ASTM A153.

The cable shall be 3/4", Type II, with Class A coating in conformance with AASHTO M30.

The steel tube shall meet the requirements of ASTM Specification A500, Grade B, and shall be galvanized after fabrication in accordance with the requirements of AASHTO Specification M111.

The anchor bracket, soil plate, and bearing plate shall be fabriccted from steel that meets ASTM A36 Specifications. They shall be galvanized after fabrication in accordance with ASTM A123.

Costs for constructing the beam guardrail trailing end terminal and furnishing the anchor bracket, cable assembly, steel tube, soil plate, bearing plate, pipe sleeve, wood breakaway post, and all hardware necessary to attach anchor bracket, cable assembly, steel tube, soil plate, bearing plate, pipe sleeve, and wood breakaway post shall be incidental to the contract unit price per each for "Beam Guardrail Trailing End Terminal".

Costs for the thrie beam or W beam guardrail and the thrie beam or W beam end sections (Flared) shall be incidental to the contract unit price per foot for the respective "Thrie Beam Guardrail" or "W Beam Guardrail" bid items.

June 26, 2010

Published Date: 4th Qtr. 2015	SDDOT	BEAM GUARDRAIL TRAILING END TERMINAL	PLATE NUMBER 630.80
			Sheet 1 of 2

Plot Scale - 1:200
- Plotted From - lrrc11610
File - ...\Design\StdPlatePg15.dgn

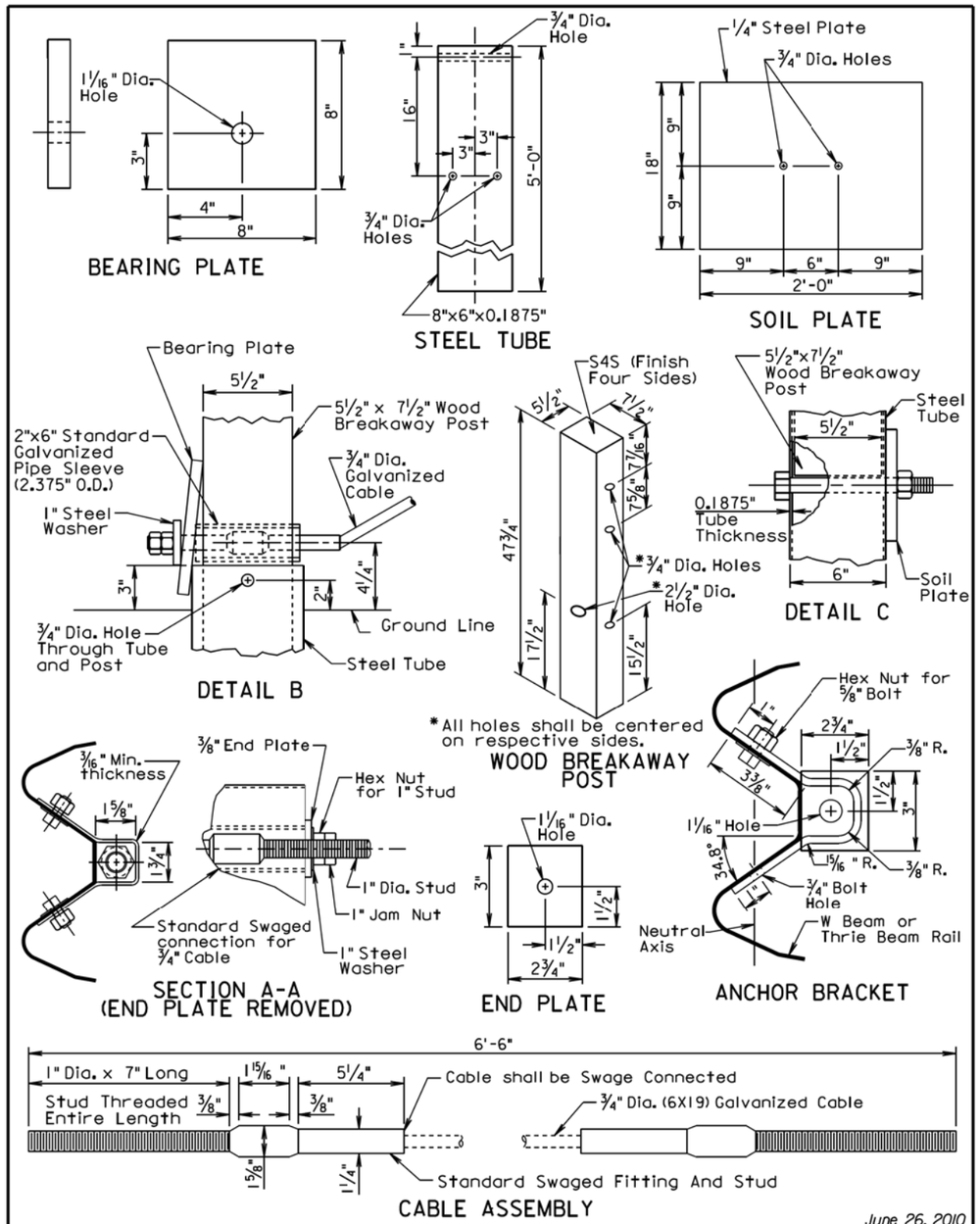

June 26, 2010

Published Date: 4th Qtr. 2015	SDDOT	BEAM GUARDRAIL TRAILING END TERMINAL	PLATE NUMBER 630.80
			Sheet 2 of 2

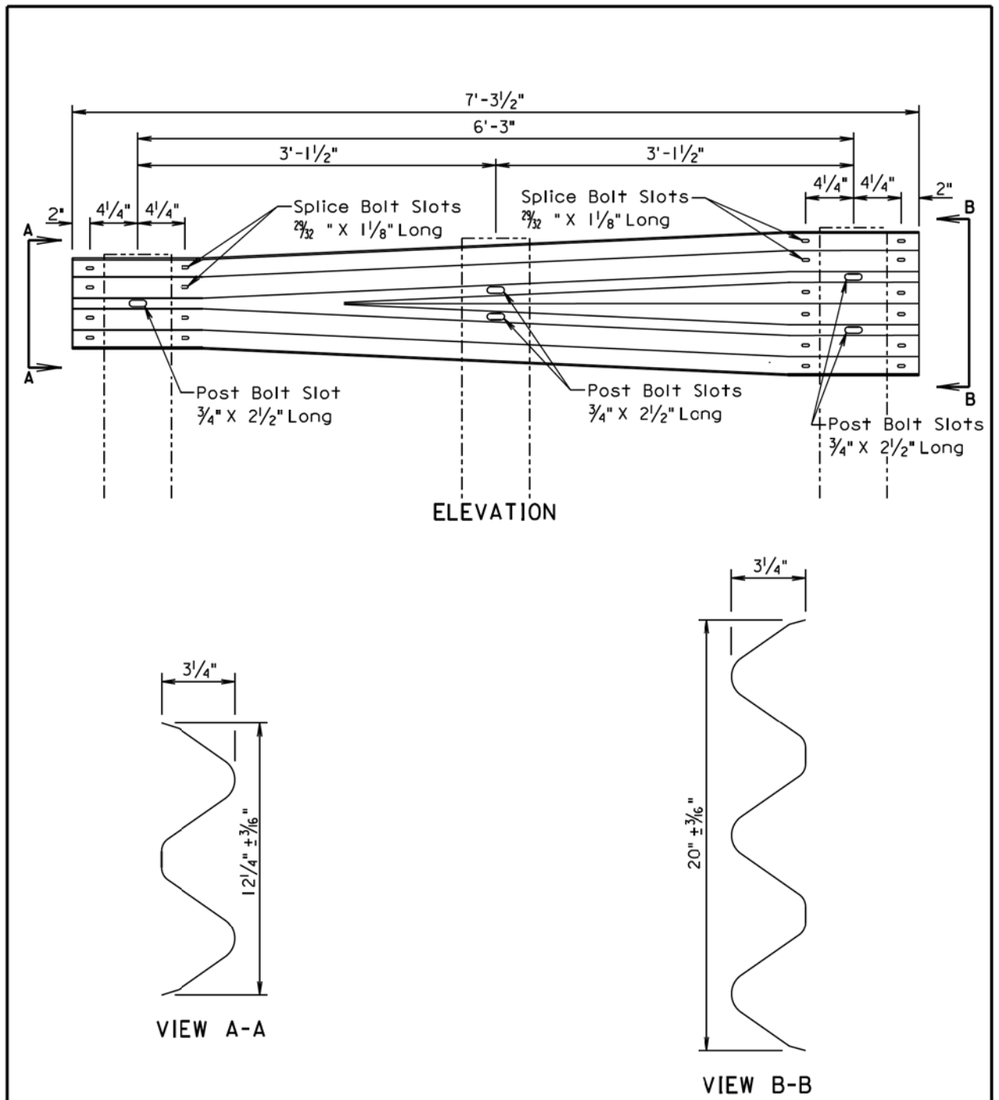

GENERAL NOTE:

All costs for constructing the W Beam to Thrie Beam Guardrail Transition including labor, equipment, and materials including two posts, two blocks, W beam to thrie beam transition section, and hardware shall be incidental to the contract unit price per each for "W Beam to Thrie Beam Guardrail Transition".

March 31, 2000

Published Date: 4th Qtr. 2015	SDDOT	W BEAM TO THRIE BEAM GUARDRAIL TRANSITION SECTION	PLATE NUMBER 630.82
			Sheet 1 of 1

Plot Scale - 1:200
- Plotted From - trnc11610
File - ...\Design\StdPlatePg16.dgn

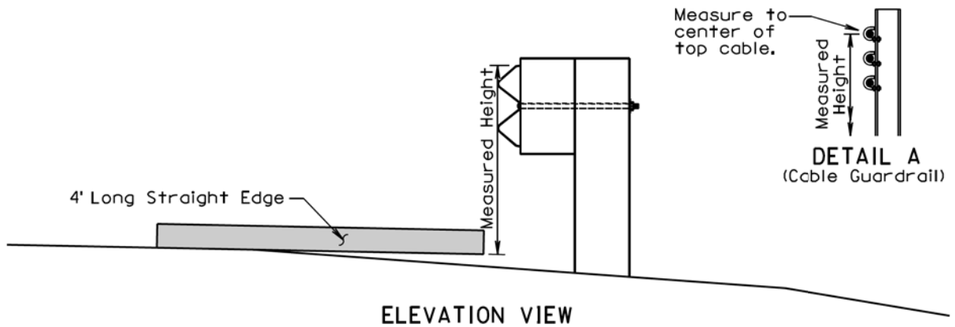

ELEVATION VIEW
(Guardrail Adjacent to Differential Slopes)

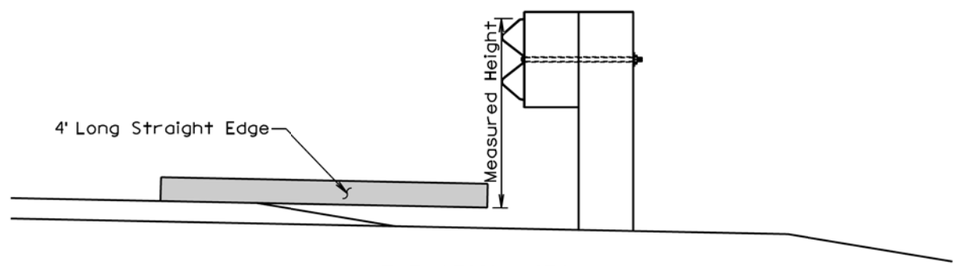

ELEVATION VIEW
(Guardrail Adjacent to Differential Surfacing Elevations)

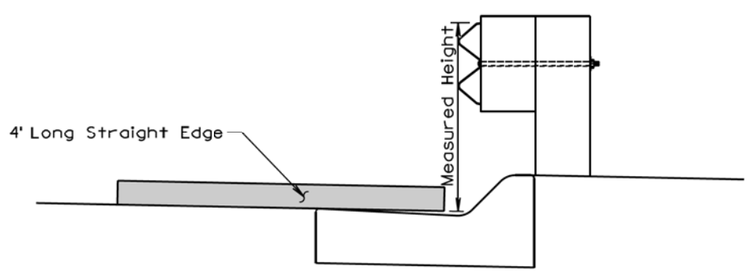

ELEVATION VIEW
(Guardrail at Curb and Gutter)

GENERAL NOTES:

The W Beam guardrail shown is for illustrative purpose. The guardrail height for all types of guardrail systems shall be measured in accordance with this standard plate.

When measuring height of cable guardrail or cable barrier the height shall be measured to the center of the top cable. See Detail A.

June 26, 2010

Published Date: 4th Qtr. 2015	SDDOT	MEASURING GUARDRAIL HEIGHT	PLATE NUMBER 630.98
			Sheet 1 of 1

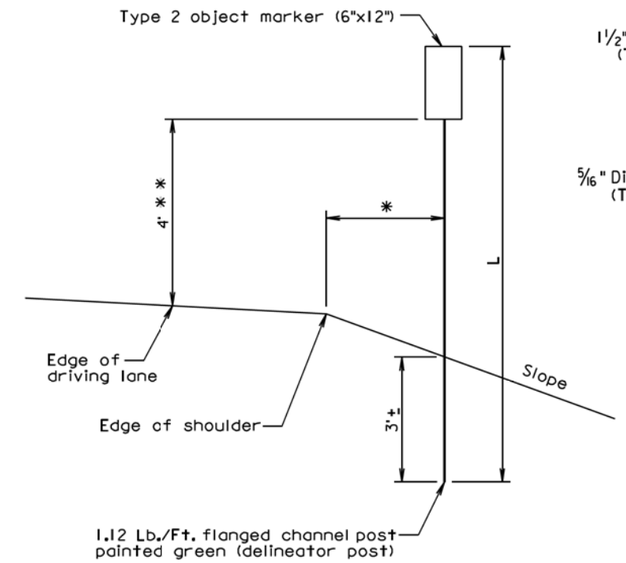

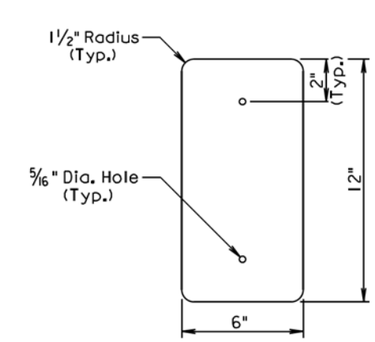

TYPE 2 OBJECT MARKER DETAIL
⅞" to 1⅛" grip range
¼" twin rivet (single and back to back)

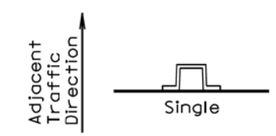

DIVIDED HIGHWAYS EXCEPT MEDIANS

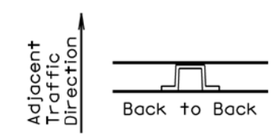

UNDIVIDED HIGHWAYS AND DIVIDED HIGHWAYS MEDIANS

* Type 2 object markers to be in same line as existing delineators. If no delineators are present, place type 2 object markers 6' from the edge of shoulder.

** Type 2 object markers shall be 4' above the ground when placed more than 8' from edge of shoulder.

TYPE 2 OBJECT MARKER DETAILS AND POST ORIENTATION

Distance To Marker (Ft.) *		2	3	4	5	6	7	8
		Post Length L (Ft.)						
Slope	4:1	9	9	9	9	10	10	10
	3:1	9	9	9	10	10	10	11

June 26, 2006

Published Date: 4th Qtr. 2015	SDDOT	TYPE 2 OBJECT MARKER (DIRECT DRIVE)	PLATE NUMBER 632.01
			Sheet 1 of 1

Plot Scale - 1:200
- Plotted From- trrc11610
File - ...\Design\StdPlatePg17.dgn

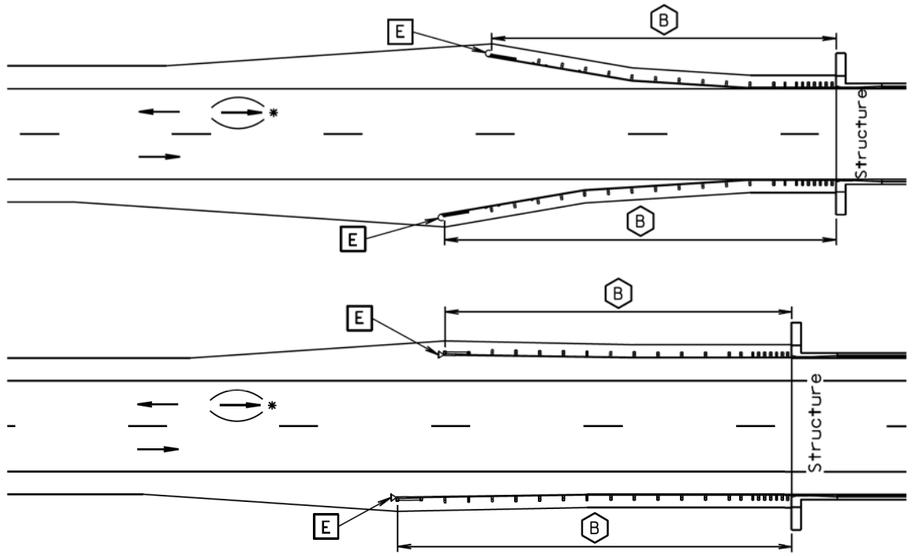

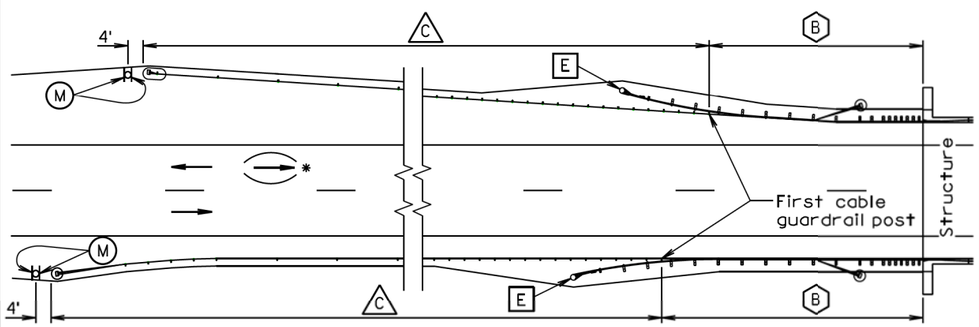

TYPICAL GUARDRAIL LAYOUTS

(B) Steel Beam Guardrail Delineation

[E] Guardrail Terminal End Object Marker

(C) 3 Cable Guardrail Delineation

(M) Type 2 Object Marker

* For two-way traffic, install delineation at the opposite end of structure the same as shown. Back-to-back delineation is required for two-way traffic, single-sided delineation for one-way traffic.

June 26, 2011

Published Date: 4th Qtr. 2015	SDDOT	DELINEATION OF GUARDRAIL AT BRIDGES	PLATE NUMBER 632.40
			Sheet 1 of 4

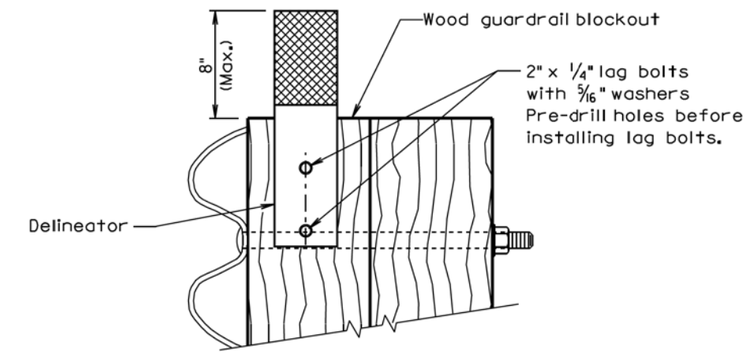

(B) STEEL BEAM GUARDRAIL DELINEATION

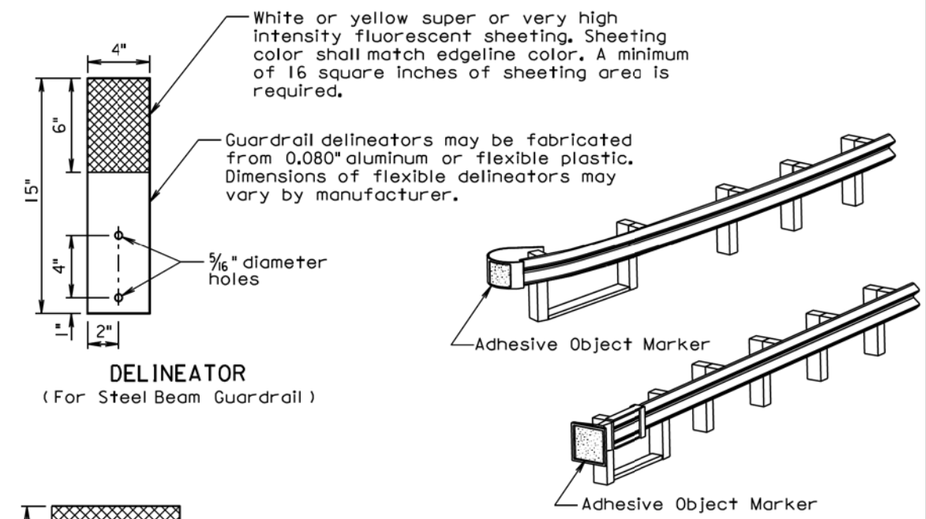

DELINEATOR
(For Steel Beam Guardrail)

[E] GUARDRAIL TERMINAL END OBJECT MARKER

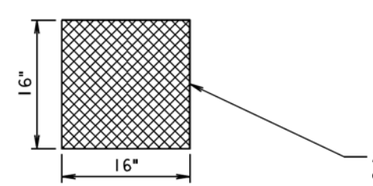

ADHESIVE OBJECT MARKER

Adhesive object marker dimensions may vary due to shape of terminal end. A minimum of 256 square inches of object marker sheeting area is required. The sheeting shall be fluorescent yellow super or very high intensity.

June 26, 2011

Published Date: 4th Qtr. 2015	SDDOT	DELINEATION OF GUARDRAIL AT BRIDGES	PLATE NUMBER 632.40
			Sheet 2 of 4

Plot Scale - 1:200
- Plotted From - trrc11610
File - ...\Design\StdPlatesPg18.dgn

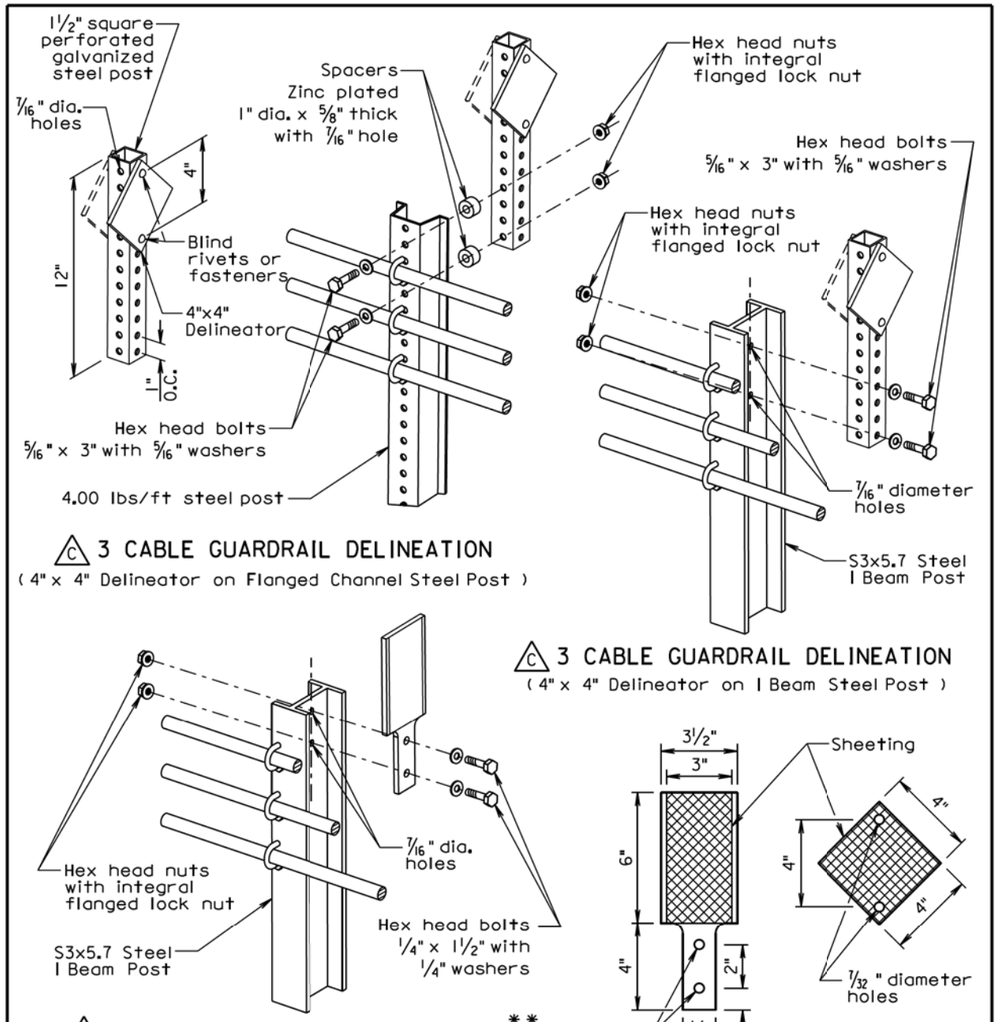

C 3 CABLE GUARDRAIL DELINEATION
(4" x 4" Delineator on Flanged Channel Steel Post)

C 3 CABLE GUARDRAIL DELINEATION
(4" x 4" Delineator on I Beam Steel Post)

C 3 CABLE GUARDRAIL DELINEATION**
(Flexible 3" x 6" Delineator on I Beam Post)

DELINEATORS***
(For 3 Cable Guardrail)

** Flexible delineators may be attached to post with manufacturer approved adhesive instead of bolts.

*** Dimensions of flexible delineators may vary by manufacturer. A minimum of 16 square inches of sheeting area is required. The sheeting shall be white or yellow super or very high intensity fluorescent sheeting. The sheeting color shall match the edgeline color.

June 26, 2011

Published Date: 4th Qtr. 2015	SDDOT	DELINEATION OF GUARDRAIL AT BRIDGES	PLATE NUMBER 632.40
			Sheet 3 of 4

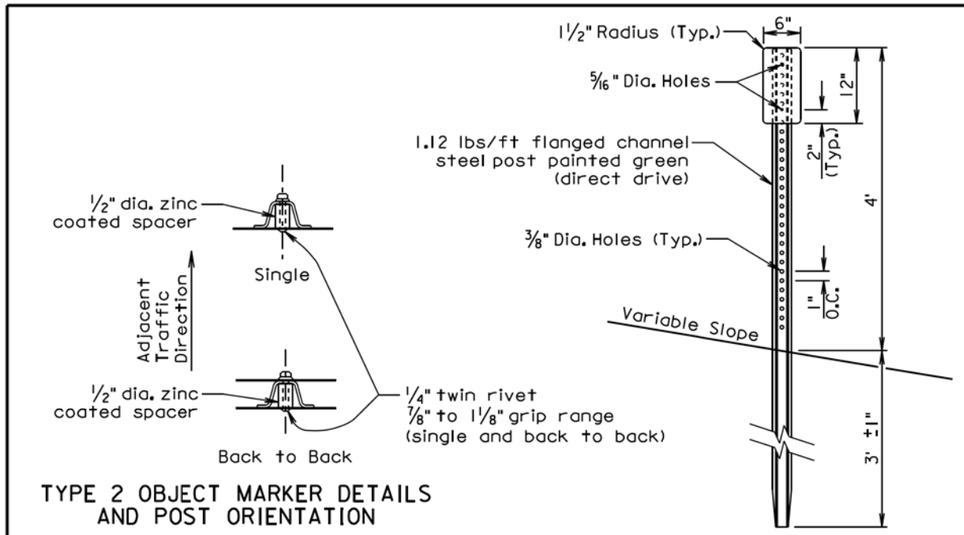

TYPE 2 OBJECT MARKER DETAILS AND POST ORIENTATION

M TYPE 2 OBJECT MARKER
(For Marking 3 Cable Guardrail Anchor)

GENERAL NOTES:

The delineators shall be covered with a minimum of 16 square inches of reflective sheeting. The reflective sheeting shall be of either very high intensity or super high intensity material. For bridges along two-way roadways the sheeting shall be on both sides of the delineator and shall be white in color. For one-way roadways the sheeting will only be required on the side facing traffic and the color will be the same as the nearest pavement marking, yellow on the left side of the roadway and white on the right side.

The first delineator shall be attached to the post nearest the bridge with additional delineators spaced in advance of the bridge at approximately 50 foot intervals. At bridges with short lengths of guardrail, less than 200 feet, a minimum of 4 delineators shall be placed in addition to the yellow object marker. The spacing between the delineators shall be approximately one third of the length of the guardrail. This will provide for a shorter spacing. At bridges with longer lengths of guardrail, greater than 200 feet, including bridges that have cable guardrail transitioning into the steel beam guardrail, the delineators will be placed at a spacing of approximately 50 feet. Delineation shall extend throughout the length of the guardrail system.

All costs for furnishing and installing single or back to back guardrail delineation shall be included in the contract unit price per each for "Guardrail Delineator".

An adhesive object marker shall be placed on the end of the W beam guardrail end terminal. The adhesive object marker dimensions may vary due to the shape of the terminal end. A minimum of 256 square inches of object marker reflective sheeting area is required. The reflective sheeting shall be fluorescent yellow super or very high intensity. All costs for furnishing and installing the adhesive object marker shall be incidental to various contract items.

A type 2 object marker shall be placed adjacent to the 3 cable guardrail anchor at the location noted on sheet 1 of this standard plate. The type 2 object marker (6" x 12") shall have a fluorescent yellow very high or super high intensity reflective sheeting. All costs for furnishing and installing the type 2 object marker including the steel post, 6" x 12" reflective panel, and hardware shall be included in the contract unit price per each for "Type 2 Object Marker" for single-sided and "Type 2 Object Marker Back to Back" for back to back type 2 object markers.

June 26, 2011

Published Date: 4th Qtr. 2015	SDDOT	DELINEATION OF GUARDRAIL AT BRIDGES	PLATE NUMBER 632.40
			Sheet 4 of 4

Plot Scale - 1:200
- Plotted From - trrc11610
File - ...\Design\StdPlatePg19.dgn

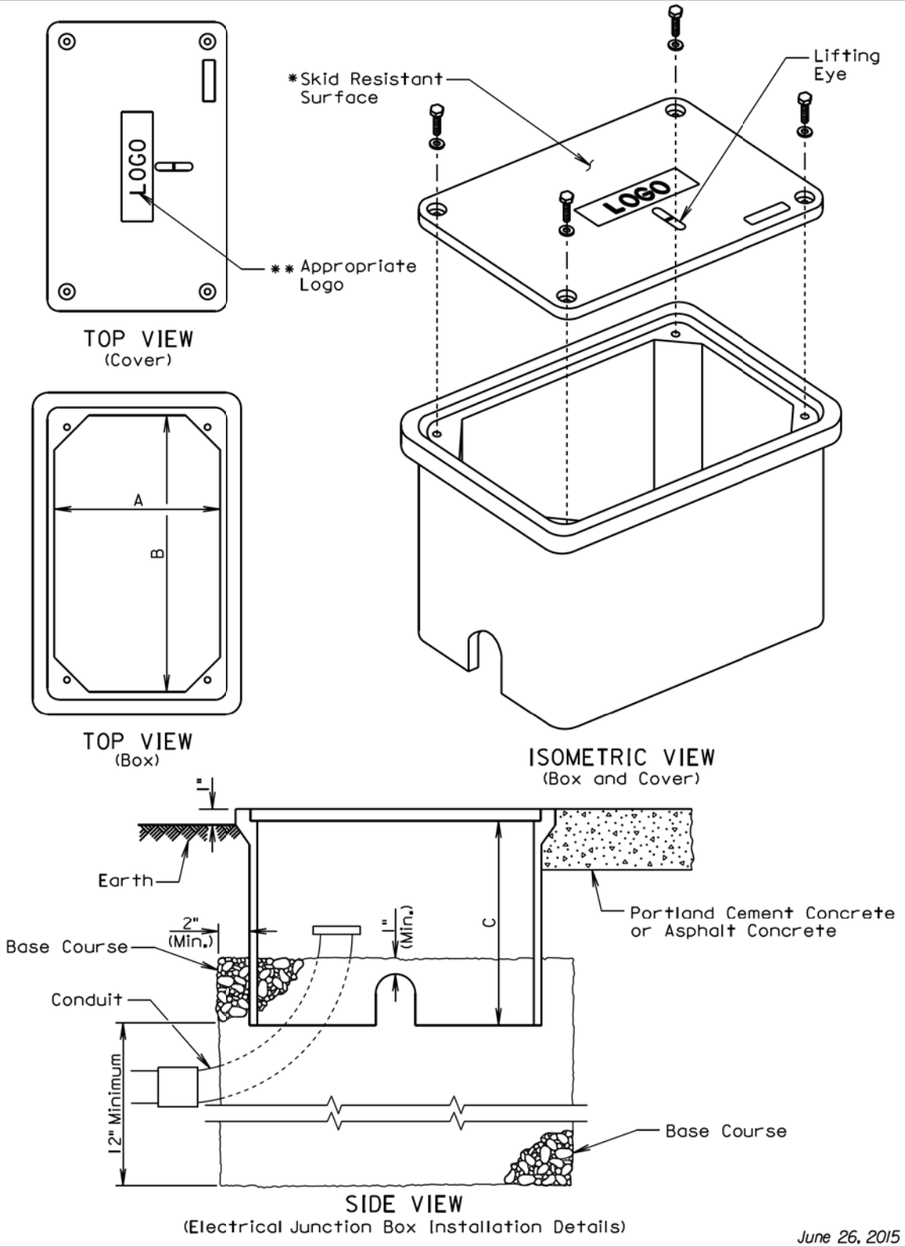

June 26, 2015

Published Date: 4th Qtr. 2015

SDDOT

ELECTRICAL JUNCTION BOXES TYPE 1 THROUGH TYPE 4

PLATE NUMBER 635.65

Sheet 1 of 2

ELECTRICAL JUNCTION BOX

TYPE	DESCRIPTION	DIMENSIONS		
		A	B	C
1	Open Bottom with Gasket	11"-15"	18"-21"	18" (Min.)
2	Open Bottom with Gasket	13"-18"	23"-28"	18" (Min.)
3	Open Bottom with Gasket	17"-22"	24"-30"	18" (Min.)
4	Open Bottom with Gasket	28"-33"	36"-48"	24" (Min.)

GENERAL NOTES:

The cover shall be gasketed with a minimum of two stainless steel bolts and washers.

The cover shall have a lifting eye.

* The surface of the cover shall have a minimum wet and dry coefficient of friction value of 0.5 as determined by ASTM F 609.

** The cover of the junction box shall have the appropriate logo in one inch size letters and shall be recessed. When the junction box contains cables or wires for a traffic signal then the logo shall be "Signal". When the junction box contains lighting conductors then the logo shall be "Lighting".

The electrical junction boxes shall comply with the American National Standards Institute (ANSI)/Society of Cable Telecommunications Engineers (SCTE) 77 2007 Specification for Underground Enclosure Integrity. The loading requirement for all the electrical junction boxes shall be Tier 8 of ANSI/SCTE 77 2007.

The electrical junction boxes shall be UL listed.

June 26, 2015

Published Date: 4th Qtr. 2015

SDDOT

ELECTRICAL JUNCTION BOXES TYPE 1 THROUGH TYPE 4

PLATE NUMBER 635.65

Sheet 2 of 2

Plot Scale - 1:200

- Plotted From - trrc11610

File - ...\Design\StdPlatePg20.dgn

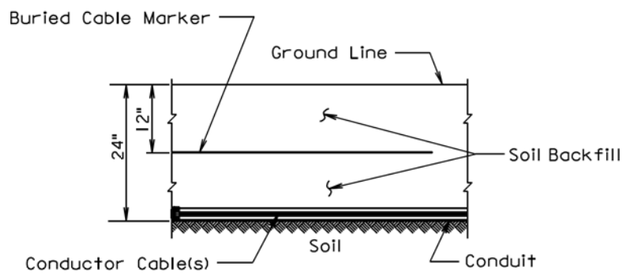

SECTION VIEW

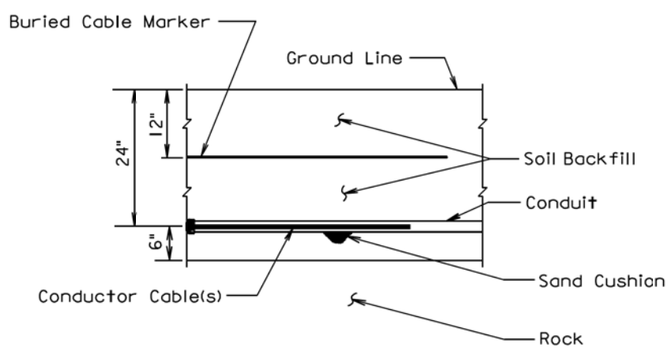

SECTION VIEW

GENERAL NOTE:

The Buried Cable Marker shall be plastic, approximately 6" wide, and shall be capable of sustaining a minimum of a 350% tolerance of elongation without tearing. The Buried Cable Marker shall have a life expectancy approximately equal to that of the conductor(s) beneath it. A phrase indicating the presence of a buried electric circuit below shall be printed in a contrasting color on the cable marker. The Buried Cable Marker shall be subject to approval by the Engineer. All costs associated with furnishing and installing the Buried Cable Marker shall be incidental to the contract unit price per Foot for the bid item used for the electrical conductor.

March 31, 2000

Published Date: 4th Qtr. 2015	SDDOT	***CONDUIT INSTALLATION***	***PLATE NUMBER*** 635.76
			Sheet 1 of 1

Plot Scale - 1:200
- Plotted From - trrc11610
File - ...\Design\StdPlatePg21.dgn