STATE OF SOUTH DAKOTA	PROJECT	SHEET NO.	TOTAL SHEETS
	PP 3245(08)	1	47

FOR BIDDING PURPOSES ONLY

STATE OF SOUTH DAKOTA
DEPARTMENT OF TRANSPORTATION

PLANS FOR PROPOSED

PROJECT PP 3245(08)
BROOKINGS COUNTY

Railroad Crossing Signals, Grading, Storm Sewer,
Curb and Gutter, and Asphalt Paving
PCN 03WF

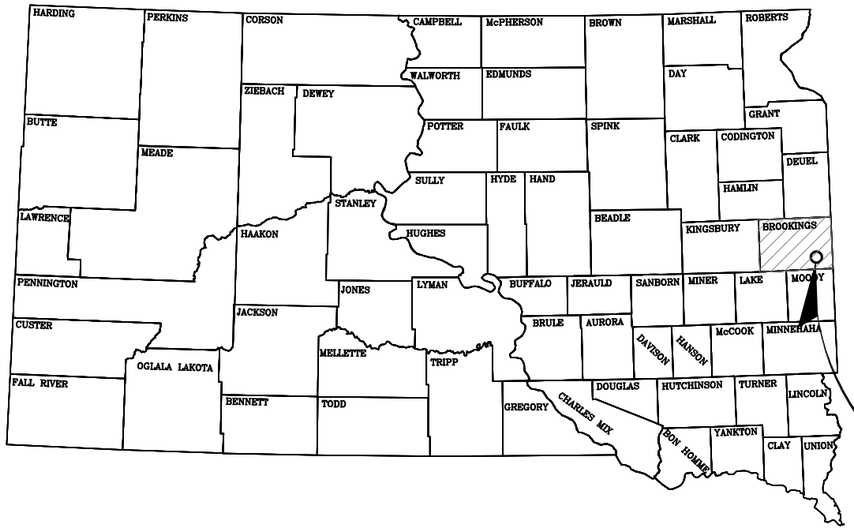

PROJECT LOCATION

INDEX OF SHEETS

Sheet No.	Description
1	Title Sheet
2	Estimates of Quantities
3	Environmental Commitments
4–7	Grading Notes
8	Traffic Control Notes
9–11	Erosion & Sediment Control Notes
12–14	Typical Sections
15–20	Traffic Control Plan
21	Horizontal Alignment & Control Data
22	Existing Conditions
23	Erosion Control Plan
24	Demolition Plan
25	ROW Layout
26	Curb and Gutter Layout
27	Rail House Exhibit and Grading
28	Pavement Marking Layout
29	Storm Sewer Layout
30–42	Standard Plates
43–44	Special Details
45–47	Cross Sections

DESIGN DESIGNATION
ADT (2013) – 7,940
ADT (2035) – 16,700
DHV – NA
D – NA
T DHV – NA
T ADT – NA
v = 35 mph

STORM WATER PERMIT
Area Disturbed NA
Major Stream: Brookings Storm Sewer System

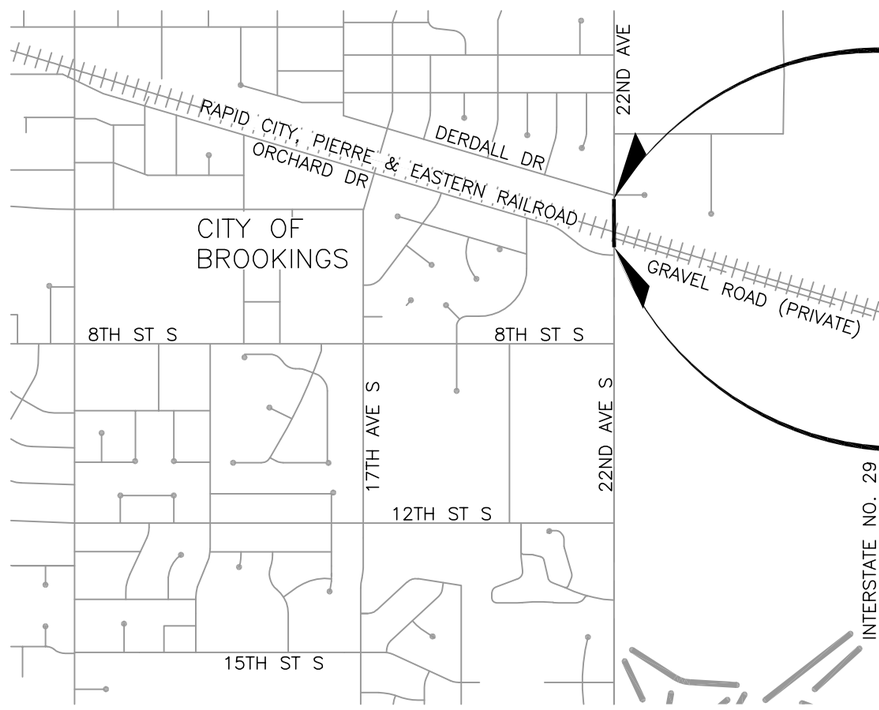

End PP 3245 (08)
22nd Ave S
Station 9+60
Approximately 650 feet North of the
Southeast corner of Section 25
Township 110 North – Range 50 West
of the 5th P.M.

Begin PP 3245 (08)
22nd Ave S
Station 6+89
Approximately 150 feet North of the
Southeast corner of Section 25
Township 110 North – Range 50 West
of the 5th P.M.

North

Scales

PLAN & PROFILE	HORIZONTAL:	See Plans
	VERTICAL:	See Plans
CROSS SECTIONS	HORIZONTAL:	1"=15'
	VERTICAL:	1"=10'

LEGEND

SECTION LINE
PROPERTY LINE
UTILITY EASEMENT
CONSTRUCTION LINE
WORK LIMITS
CUT & FILL LIMITS
ELECTIRC LINE
TELEPHONE LINE
WOOD FENCE
BARBED WIRE FENCE
UNDERGROUND ELECTRIC — P
UNDERGROUND TELE/FO — T/F
OVERHEAD POWERLINE — OHE
STORM SEWER — S
SANITARY SEWER — SS
WATER LINE — W
MANHOLE
WATER VALVE
ELECTRIC VAULT
ELECTRIC TERMINAL
CABLE TERMINAL
SIGN
POWER POLE
DECIDUOUS TREE
RAILROAD TRACKS

See Pavement Marking Layout for Striping Details

REGISTERED PROFESSIONAL ENGINEER
REG. NO. 11315
JEFFREY J. COOLEY
SOUTH DAKOTA
5-2-16

ESTIMATE OF QUANTITIES

FOR BIDDING PURPOSES ONLY

STATE OF SOUTH DAKOTA	PROJECT	SHEET NO.	TOTAL SHEETS
	PP 3245(08)	2	47

Grading

BID ITEM NUMBER	ITEM	QUANTITY	UNIT
009E0010	Mobilization	Lump Sum	LS
110E0300	Remove Concrete Curb and Gutter	271	Ft
110E0400	Remove Drop Inlet	2	Each
110E0530	Remove Storm Sewer Pipe	15	Ft
110E1010	Remove Asphalt Concrete Pavement	439.2	SqYd
110E1140	Remove Concrete Sidewalk	81.7	SqYd
110E1700	Remove Silt Fence	33.0	Ft
110E7150	Remove Sign for Reset	2	Each
110E7510	Remove Pipe End Section for Reset	2	Each
120E0600	Contractor Furnished Borrow Excavation	56	CuYd
250E0020	Incidental Work, Grading	Lump Sum	LS
380E1000	6" Miscellaneous PCC Pavement	28.9	SqYd
380E2564	4" Barrier Type Colored Median PCC Pavement	55.1	SqYd
380E3520	6" PCC Approach Pavement	13.3	SqYd
380E4010	6" PCC Fillet Section	2.5	SqYd
450E0123	18" RCP Class 3, Furnish	12	Ft
450E0130	18" RCP Install	12	Ft
450E3013	24" RCP Arch Class 3, Furnish	40	Ft
450E3020	24" RCP Arch, Install	40	Ft
450E9001	Reset Pipe End Section	2	Each
632E3500	Reset Sign	2	Each
634E0560	Remove Pavement Marking 4" or Equivalent	3,133	Ft
634E0580	Remove Pavement Marking, Railroad Crossing	4	Each
650E2100	Special Concrete Curb and Gutter	604	Ft
651E0060	6" Concrete Sidewalk	1,084.1	SqFt
651E7000	Type 1 Detectable Warnings	40.0	SqFt
670E1015	3'x4' Type B Drop Inlet	3	Each
670E1200	Type B Frame and Grate Assembly	3	Each
671E1048	48" Manhole	1	Each
671E6007	Type A7 Manhole Frame and Lid	1	Each
671E7020	Connect Into Existing Manhole	1	Each
680E0260	6" Corrugated Polyethylene Drainage Tubing	32	Ft
680E0660	6" Slotted Corrugated Polyethylene Drainage Tubing	146	Ft
997E0100	Ballast	40	Ton
998E0100	Railroad Protective Insurance	Lump Sum	LS

Erosion and Sediment Control

BID ITEM NUMBER	ITEM	QUANTITY	UNIT
230E0100	Remove and Replace Topsoil	Lump Sum	LS
730E0251	Special Permanent Seed Mixture 1	15	Lb
731E0100	Fertilizing	73	Lb
732E0250	Fiber Mulching	105	Lb
734E0101	Type 1 Erosion Control Blanket	119	SqYd
734E0604	High Flow Silt Fence	131	Ft
734E0610	Mucking Silt Fence	10	CuYd
734E0620	Repair Silt Fence	33	Ft
734E0845	Sediment Control at Inlet with Frame and Grate	3	Each
734E5010	Sweeping	24	Hour

Surfacing

BID ITEM NUMBER	ITEM	QUANTITY	UNIT
260E1010	Base Course	294.5	Ton
320E1200	Asphalt Concrete Composite	230.0	Ton
332E0010	Cold Milling Asphalt Concrete	1,027	SqYd

Pavement Marking

BID ITEM NUMBER	ITEM	QUANTITY	UNIT
633E0010	Cold Applied Plastic Pavement Marking, 4"	733	Ft
633E0030	Cold Applied Plastic Pavement Marking, 24"	50	Ft
633E0055	Cold Applied Plastic Pavement Marking, Railroad Crossing	4	Each
633E5000	Grooving for Cold Applied Plastic Pavement Marking, 4"	733	Ft
633E5015	Grooving for Cold Applied Plastic Pavement Marking, 24"	50	Ft
633E5040	Grooving for Cold Applied Plastic Pavement Marking, Railroad Crossing	4	Each

Traffic Control

BID ITEM NUMBER	ITEM	QUANTITY	UNIT
632E1320	2.0" X 2.0" Perforated Tube Post	18	Ft
632E2540	Flexible Object Marker Post	10	Each
632E3203	Flat Aluminum Sign, Nonremovable Copy High Intensity	12	SqFt
634E0010	Flagging	40	Hour
634E0110	Traffic Control Signs	219	SF
634E0120	Traffic Control, Miscellaneous	Lump Sum	LS
634E0285	Type 3 Barricade, 8' Double Sided	7	Each
634E0400	Type A Advance Warning Arrow Board	2	Each
634E0640	Temporary Pavement Marking	64	Each

SPECIFICATIONS

Standard Specifications for Roads & Bridges, 2015 Edition and Required Provisions, Supplemental Specifications and Special Provisions as included in the Proposal.

REGISTERED PROFESSIONAL ENGINEER
REG. NO. 11315
JEFFREY J. COOLEY
SOUTH DAKOTA

5-2-16

ENVIRONMENTAL COMMITMENTS

An Environmental Commitment is a measure that SDDOT commits to implement in order to avoid, minimize, and/or mitigate a real or potential environmental impact. Environmental commitments to various agencies and the public have been made to secure approval of this project. An agency mentioned below with permitting authority can influence a project if perceived environmental impacts have not been adequately addressed. Unless otherwise designated, the Contractor's primary contact regarding matters associated with these commitments will be the Project Engineer. These environmental commitments are not subject to change without prior written approval from the SDDOT Environmental Office. The environmental commitments associated with this project are as follows:

COMMITMENT C: WATER SOURCE

The Contractor shall not withdraw water with equipment previously used outside the State of South Dakota without prior approval from the SDDOT Environmental Office. Thoroughly wash all construction equipment before entering South Dakota to reduce the risk of invasive species introduction into the project vicinity.

The Contractor shall not withdraw water directly from streams of the James, Big Sioux, and Vermillion watersheds without prior approval from the SDDOT Environmental Office.

Action Taken/Required:

The Contractor shall obtain the necessary permits from the regulatory agencies such as the Department of Environment and Natural Resources (DENR) and the United States Army Corps of Engineers (COE) prior to executing water extraction activities.

COMMITMENT E: STORM WATER

Construction activities constitute less than 1 acre of disturbance.

Action Taken/Required:

At a minimum and regardless of project size, appropriate erosion and sediment control measures must be installed to control the discharge of pollutants from the construction site.

COMMITMENT H: WASTE DISPOSAL SITE

The Contractor shall furnish a site(s) for the disposal of construction and/or demolition debris generated by this project.

Action Taken/Required:

Construction and/or demolition debris may not be disposed of within the Public ROW.

The waste disposal site(s) shall be managed and reclaimed in accordance with the following from the General Permit for Construction/Demolition Debris Disposal Under the South Dakota Waste Management Program issued by the Department of Environment and Natural Resources.

The waste disposal site(s) shall not be located in a wetland, within 200 feet of surface water, or in an area that adversely affects wildlife, recreation, aesthetic value of an area, or any threatened or endangered species, as approved by the Project Engineer.

If the waste disposal site(s) is located such that it is within view of any ROW, the following additional requirements shall apply:

1. Construction and/or demolition debris consisting of concrete, asphalt concrete, or other similar materials shall be buried in a trench completely separate from wood debris. The final cover over the construction and/or demolition debris shall consist of a minimum of 1 foot of soil capable of supporting vegetation. Waste disposal sites provided outside of the Public ROW shall be seeded in accordance with Natural Resources Conservation Service recommendations. The seeding recommendations may be obtained through the appropriate County NRCS Office. The Contractor shall control the access to waste disposal sites not within the Public ROW through the use of fences, gates, and placement of a sign or signs at the entrance to the site stating “No Dumping Allowed”.

2. Concrete and asphalt concrete debris may be stockpiled within view of the ROW for a period of time not to exceed the duration of the project. Prior to project completion, the waste shall be removed from view of the ROW or buried and the waste disposal site reclaimed as noted above.

The above requirements will not apply to waste disposal sites that are covered by an individual solid waste permit as specified in SDCL 34A-6-58, SDCL 34A-6-1.13, and ARSD 74:27:10:06.

Failure to comply with the requirements stated above may result in civil penalties in accordance with South Dakota Solid Waste Law, SDCL 34A-6-1.31.

All costs associated with furnishing waste disposal site(s), disposing of waste, maintaining control of access (fence, gates, and signs), and reclamation of the waste disposal site(s) shall be incidental to the various contract items.

COMMITMENT I: HISTORICAL PRESERVATION OFFICE CLEARANCES

The SDDOT has obtained concurrence with the State Historical Preservation Office (SHPO or THPO) for all work included within the project limits and all department designated sources and designated option material sources, stockpile sites, storage areas, and waste sites provided within the plans.

Action Taken/Required:
All earth disturbing activities not designated within the plans require review of cultural resources impacts. This work includes, but is not limited to: staging areas, borrow sites, waste disposal sites, and all material processing sites.

The Contractor shall arrange and pay for a cultural resource survey and/or records search. The Contractor has the option to contact the state Archaeological Research Center (ARC) at 605-394-1936 or another qualified archaeologist, to obtain either a records search or a cultural resources survey. A record search might be sufficient for review; however, a cultural resources survey may need to be conducted by a qualified archaeologist.

The Contractor shall provide ARC with the following: a topographical map or aerial view on which the site is clearly outlined, site dimensions, project number, and PCN. If applicable, provide evidence that the site has been previously disturbed by farming, mining, or construction activities with a landowner statement that artifacts have not been found on the site.

The Contractor shall submit the records search or cultural resources survey report and if the location of the site is within the current geographical or historic boundaries of any South Dakota reservation to SDDOT Environmental Engineer, 700 East Broadway Avenue, Pierre, SD 57501-2586 (605-773-3180). SDDOT will submit the information to the appropriate SHPO/THPO. Allow **30 Days** from the date this information is submitted to the Environmental Engineer for SHPO/THPO review.

If evidence for cultural resources is uncovered during project construction activities, then such activities shall cease and the Project Engineer shall be immediately notified. The Project Engineer will contact the SDDOT Environmental Engineer in order to determine an appropriate course of action.

SHPO/THPO review does not relieve the Contractor of the responsibility for obtaining any additional permits and clearances for staging areas, borrow sites, waste disposal sites, or material processing sites that affect wetlands, threatened and endangered species, or waterways. The Contractor shall provide the required permits and clearances to the Project Engineer at the preconstruction meeting.

REGISTERED PROFESSIONAL ENGINEER
REG. NO. 11315
JEFFREY J. COOLEY
SOUTH DAKOTA
5-2-16

SCOPE OF WORK

This project includes the installation of medians adjacent to the Rapid City, Pierre & Eastern (RCP&E) Railroad Crossing on 22nd Avenue. The project will require asphalt concrete milling, removal of asphalt concrete, curb and gutter and sidewalk. The Contractor shall install drain tile, curb and gutter, sidewalk, medians, and asphalt surfacing.

SEQUENCE OF OPERATIONS

1. Install temporary traffic control signing
2. Install sediment control at structures and in ditches.
3. Mill existing asphalt concrete surface.
4. Remove existing concrete and asphalt.
5. Grade roadway and ditches.
6. Install new curb and gutter.
7. Install surfacing.
8. Reseed areas disturbed by construction activities.
9. Complete remaining project items.
10. Reposition temporary traffic control signing for next phase.

The Traffic Control Plan is broken down into Three Phases. The Three Phases of Traffic Control are shown on pages 15 - 20. The Contractor may select to perform the work in any order but must maintain traffic during all construction activities. The Contractor shall present their proposed schedule and phasing sequence at the Pre-Construction Meeting for review by the Owner and Engineer.

During milling and paving, the Contractor may elect to use 42" cones and flaggers to channelize traffic. It is expected that these processes will require the Contractor to shift traffic multiple times for completion.

The Contractor shall cooperate and coordinate activities with the RCP&E and any Railroad Contractor.

GRADING OPERATIONS

Water for Embankment is estimated at the rate of 8 gallons of water per cubic yard of Embankment minus Waste. No separate payment will be made for the Water for Embankment and all costs associated shall be incidental to other bid items.

RESTRICTED WORK AREA

The Contractor's work limits shall be confined to the area within the existing right-of-way for all parcels.

UTILITIES

The Contractor shall be aware that the existing utilities shown in the plans were surveyed prior to the design of this project and might have been relocated or replaced by a new utility facility prior to construction of this project, might be relocated or replaced by a new utility facility during the construction of this project, or might not require adjustment and may remain in its current location. The Contractor shall contact each utility owner and confirm the status of all existing and new utility facilities. The utility contact information is provided elsewhere in the plans or bidding documents.

It is expected that the overhead power lines crossing the Mainline Railroad will be de-engerized on or before February 1, 2016 by Brookings Municipal Utilities.

The power lines will be removed after the completion of this project.

BMU Sewer and Water:
525 Western Avenue / PO Box 588
Brookings, SD 57006
(605) 692-6325

INCIDENTAL WORK, GRADING

The Contractor shall perform all grading necessary for the reconstruction of the subgrade in the area adjacent to the rail crossing, medians and curb and gutter. The subgrade shall be prepared and compacted with native earthen materials, pit run or recycled asphalt material. The contractor shall place the subgrade materials in maximum 12" lifts, compacted to 95% standard proctor density.

CONTRACTOR FURNISHED BORROW

The Contractor shall provide a suitable site for Contractor furnished borrow material. The Contractor is responsible for obtaining all required permits and clearances for the borrow site. The material shall be approved by the Engineer. The plans quantity for "Contractor Furnished Borrow" as shown in the Estimate of Quantities will be the basis of payment for this item. In general, Contractor Furnished Borrow will be placed on the west side of the crossing under the sidewalk.

Restoration of the Contractor furnished borrow site shall be the responsibility of the Contractor.

REMOVAL OF EXISTING ASPHALT CONCRETE PAVEMENT

Existing asphalt concrete and/or existing asphalt concrete patch shall be removed for its full depth within 10 feet of the railroad crossing, locations for the installation of the medians and installation of new curb and gutter. The Contractor will be required to saw-cut the existing asphalt concrete surface full depth prior to removal. If the saw-cut line becomes damaged by construction traffic, the Contractor shall saw-cut the asphalt surface at a location approved by the Engineer. The additional cost for the second saw-cut will be the responsibility of the Contractor. The Owner will not be responsible for the additional cost for the asphalt removal or saw-cut.

Where new asphalt concrete pavement is placed adjacent to existing asphalt concrete, the existing asphalt concrete shall be sawn full depth to a true line with a vertical face. No separate measurement shall be made for sawing

The Contractor shall dispose of the concrete pavement and asphalt concrete at a site approved by the Engineer.

TABLE OF ASPHALT CONCRETE PAVEMENT REMOVAL

Station	to	Station	L/R	Quantity (SqYd)
6+89		8+12	L	219.7
8+18		8+82	L	219.5
			Total:	439.2

TABLE OF CONCRETE CURB AND GUTTER REMOVAL

Station	to	Station	L/R	Quantity (Ft)
6+89		7+63	L	73.8
7+46		7+67	R	20.9
8+12		9+34	R	122.0
8+28		8+82	L	54.4
			Total:	271.1

TABLE OF CONCRETE SIDEWALK REMOVAL

Station	to	Station	L/R	Quantity (SqYd)
7+45		7+80	R	16.7
7+58		7+89	L	14.3
8+11		8+58	R	22.2
8+28		8+82	L	28.5
			Total:	81.7

TABLE OF DROP INLET REMOVAL

Station	L/R	Quantity (Each)
8+18	R	1
8+32	L	1
	Total:	2

REMOVE EXISTING PLANT AND LANDSCAPE MATERIAL

The existing landscape material shall be removed as indicated on the plans and disposed of off site at an approved location.

All costs for labor and equipment for Remove Existing Plant and Landscaping Material shall be incidental to the contract lump sum price for "Incidental work, Grading."

REGISTERED PROFESSIONAL ENGINEER
REG. NO. 11315
JEFFREY J. COOLEY
SOUTH DAKOTA

5-2-16

DRAIN TILE

Drain tile shall be dual-walled corrugated polyethylene or PVC. Pipe size shall be 6" diameter. See Storm Sewer Layout and details for installation requirements. The drain tile shall be either solid or perforated as indicated on plan sheet 29. The manufacturer's installation methods shall be followed unless otherwise noted. The drain tile shall be installed to the depths indicated on the plan sheets. Drain tile shall be installed in phases. The Contractor shall take necessary precautions to insure that the drain tile does not get crushed or plugged during installation.

It is recommended that drain tile be installed using a track driven mini-excavator. The bucket of the excavator shall be a maximum of 18" wide. The pearock and drain tile shall be installed immediately upon getting the trench to grade. After installing the drain tile and pearock, the trench shall be backfilled. The Contractor will be required to install end caps at the terminating end of the tile. The end caps shall be furnished and installed incidental to other bid items.

The contract unit price per foot for 6" Slotted Corrugated Polyethylene Drainage Tubing shall include trenching, pearock, drainage fabric, furnishing & installing drain tile, fittings and backfilling.

The contract unit price per foot for 6" Corrugated Polyethylene Drainage Tubing shall include trenching, furnishing & installing drain tile, fittings and backfilling.

6" Slotted Corrugated Polyethylene Drainage Tubing	146 Ft
6" Corrugated Polyethylene Drainage Tubing	32 Ft

CONCRETE PIPE CONNECTIONS

Pipe connections to existing pipes and manholes shall be done by breaking a hole into the existing structure and inserting the pipe. A concrete collar shall then be poured around the pipe in the area of the connection.

All costs for constructing the concrete collars including materials and labor shall be incidental to the contract unit price per foot for the corresponding pipe bid item or manhole.

STORM SEWER

Reinforced concrete pipe may be either bell and spigot or tongue and groove. The contractor should verify the type that is currently installed prior to ordering new pipe so same pipe connections are used at the existing & new pipe connections. The pipe sections shall be adjoined such that the ends are fully entered and the inner surfaces are reasonably flush and even.

Lift holes in the reinforced concrete pipe shall be plugged with grout.

Watertight joints are required for reinforced concrete pipe, drop inlets, manholes, and junction boxes where storm sewers run parallel to and within 10 feet horizontally from existing or proposed water mains.

Watertight joints are required where reinforced concrete pipes, drop inlets, manholes, or junction boxes cross water mains and are separated a distance of 18 inches or less, above or below, the water main.

If watertight joints are required then the watertight joints shall extend for a distance of 10 feet beyond the water main. This measurement shall be from the sealed concrete joint to the outer most surface of the water main.

Watertight joint seals shall conform to the following requirements:

Reinforced Concrete Pipe (Circular): Gasketed pipe shall conform to the requirements of ASTM C443. Non-gasketed concrete pipe shall be sealed with a mastic joint seal conforming to the requirements of ASTM C990 and encased with a minimum 2' wide by 6" thick M6 concrete collar reinforced with 6x6 W2.9 x W2.9 wire mesh.

Reinforced Concrete Pipe (Arch): Joints shall be sealed with a waterstop seal meeting the requirements of ASTM C990. Waterstop seals shall consist of hydrophilic compounds such as Waterstop-RX or ConSeal CS-231.

Drop Inlets, Manholes, and Junction Boxes: Joints shall be sealed with a waterstop seal or seal wrap meeting the requirements of ASTM C990 or encased with a minimum 2' wide by 6" thick M6 concrete collar reinforced with 6x6 W2.9 x W2.9 wire mesh. Waterstop seal shall contain hydrophilic compounds such as Waterstop-RX or ConSeal CS-231. Seal wrap shall be a self adhesive external joint wrap such as ConWrap CS-217 or Mar Mac Seal Wrap.
Gaskets and seals (mastic, waterstop, and seal wraps) shall be installed in accordance with the manufacturer's recommendations.

The cost for furnishing and installing all gaskets, mastic joint seal, waterstop seal, seal wrap, concrete collars, and for plugging the lift holes shall be incidental to the contract unit price per foot for the corresponding pipe bid item.

DROP INLETS

Drop inlets shall be installed in accordance to the Standard Plates, the plans and Section 670 of the Specifications. The Contractor shall verify the required drop inlet size before ordering. If drop inlets are precast, shop drawings shall be provided to the Owner's Representative for approval. The Contractor shall contact the Owner or Owner's Representative to inspect rebar and forms for all cast-in-place structures. Drop inlets may not be cast without approval. Shop drawings will be required for all frames and grates.

Drop inlets shall be properly backfilled using vibratory equipment in maximum 6" loose lifts. Backfill shall be compacted to a minimum of 97% Standard Proctor Density.

TABLE OF DROP INLETS

Station	L/R	Size	Type
8+18	R	3'x4'	B
8+33	L	3'x4'	B
8+48	L	3'x4'	B

CURB AND GUTTER

Curb & gutter shall be installed in accordance to Section 650 of the Specifications and the details shown in these plans. Concrete shall be Class M6 with the coarse aggregate being crushed ledge rock. Tooled joints shall be spaced evenly, at a typical 10' spacing. A ½" preformed expansion joint filler shall be placed transversely at each radius return on a curve, at each junction between new curb & gutter and existing curb & gutter, and at every 200' in straight sections. All work required to provide the needed curb cuts shall be incidental to the contract unit price per foot for Special Curb and Gutter.

TABLE OF SPECIAL CONCRETE CURB AND GUTTER

Station	to	Station	L/R	Quantity (Ft)
6+89.19		8+08.28	L	119.1
8+18.66		8+82.07	L	63.4
7+36.70		7+89.23	L	52.5 (Tipout)
8+23.39		8+91.39	L	68.0 (Tipout)
8+91.39		8+91.39	L/R	2.0
7+36.70		7+89.32	R	52.5 (Tipout)
7+45.97		7+94.31	R	48.3
8+04.04		9+33.92	R	129.9
8+23.39		8+91.39	R	68.0 (Tipout)
			Total:	603.7

4" BARRIER TYPE COLORED MEDIAN PCC PAVEMENT

4" Barrier Type Colored Median PCC Pavement shall be Solomon 413-Fox Red or equivalent.

TABLE OF 4" BARRIER TYPE COLORED MEDIAN PCC PAVEMENT

Station	to	Station	L/R	Quantity (SqYd)
7+36		7+90	L/R	24.14
8+22		8+91	L/R	31.02
			Total:	55.1

REGISTERED PROFESSIONAL ENGINEER
REG. NO. 11315
JEFFREY J. COOLEY
SOUTH DAKOTA

5-2-16

6" PCC FILLET SECTIONS

Payment for "6" PCC Fillet Section" shall be based on plans quantity. If additions or reductions to the area of PCC fillet sections are ordered by the Engineer, payment will be made in accordance with the contract unit price per square yard for "6" PCC Fillet Section".

TABLE OF 6" PCC FILLET SECTION

Station	to	Station	L/R	Radius (Ft)	Quantity (SqYd)
8+91.39		8+92.39	L	1	1.27
8+91.39		8+92.39	R	1	1.27
				Total:	2.5

6" MISCELLANEOUS PCC PAVEMENT

6" Miscellaneous PCC Pavement shall be placed between the median and concrete railroad crossing. If additions or reductions to the area of Miscellaneous PCC Pavement are ordered by the Engineer, payment will be made in accordance with the contract unit price per square yard for "6" Miscellaneous Pavement".

TABLE OF 6" MISCELLANEOUS PCC PAVEMENT

Station	to	Station	L/R	Quantity (SqYd)
7+30.20		7+35.70	L/R	6.10
7+90.23		8+01.32	L/R	11.52
8+11.72		8+22.39	L/R	11.28
				28.9

BASE COURSE

Aggregate Base Course shall be in accordance with the Specifications. Material for base course shall meet requirements set forth in Section 882 of the Specifications. Aggregate Base Course shall be compacted with pneumatic rollers and shall continue on each lift of the base course until the surface is firm and unyielding, and attains a density of 97% of the maximum dry density as determined by SD 104, Method 4 and SD 105 or SD 114.

Water for compaction is estimated at 12 gallons per ton and shall incidental to base course installation.

Payment shall be made on a per ton basis. Any aggregate base course delivered to the site without a scale ticket will not be measured for payment.

SUMMARY OF BASE COURSE QUANTITIES

DEPTH	LOCATION	TONS
8"	Miscellaneous PCC Pavement	15.0
8"	6" PCC Fillet Section	5.0
8"	22nd Ave Curb & Gutter	170.0
8.5"	4" Barrier Type Colored Median	30.0
6"	Rail House Approach & Parking	34.5
8"	Railroad Crossing	40.0
		Total: 294.5

BALLAST

Ballast for the project will be Granite, Traprock, or Quartzite. Gradation shall be AREMA Size #4A. Ballast shall be quarried rock, crushed to proper gradation, with fully fractured faces.

Sieve	Percent Passing
2 $\frac{1}{2}$"	100%
2"	90-100%
1 $\frac{1}{2}$"	60-90%
1"	10-35%
$\frac{3}{4}$"	0-10%
3/8"	0-2%

ASPHALT CONCRETE COMPOSITE

Placement of asphalt concrete shall be by self-propelled pavers. Compaction of the asphalt concrete shall be by methods and equipment satisfactory to the Engineer. Compaction of asphalt concrete shall be by the specified density method. The minimum density requirement is 92% (Rice Method) of specified density.

Asphalt concrete composite shall conform to the SDDOT Specifications for Class E, Asphalt Concrete or Class HR, Asphalt Concrete. All lower lift(s) shall conform to Class E-1 for the mineral aggregate specifications unless otherwise noted or by direction of the Engineer.

For sections 3" or thicker, the Contractor will be required to place in multiple lifts. the maximum lift shall not exceed 2.5" in compacted thickness.

The asphalt cement used in the mixture shall be Performance Graded AASHTO Designation: PG64-22 or PG58-28 and shall conform to the current SDDOT Specifications. Certificates of compliance will be required on the asphalt concrete composite mix and the performance graded asphalt binder. The Engineer may accept the mixture on the basis of the certificate of compliance and visual inspection or may test the mixture for specification compliance.

Longitudinal Joints:

1. Rolling operations for confined edges, the first pass adjacent to the confined edge, the compaction equipment shall be entirely on the hot mat 6" from the longitudinal joint.
2. Rolling operations for un-confined edges, the compaction equipment shall extend 6" beyond the edge of the mat.
3. Longitudinal joints of succeeding lifts should be offset approximately 6".
4. Longitudinal joints should be on the lane lines in the top lift. A paving plan will be required from the Contractor.

REGISTERED PROFESSIONAL ENGINEER
REG. NO. 11315
JEFFREY J. COOLEY
SOUTH DAKOTA
5-2-16

CONCRETE SIDEWALK

Concrete sidewalk shall be constructed as shown on the plans and in accordance with Section 651 of the Specifications except that coarse aggregate for concrete shall be crushed ledge rock. Tooled joints shall be spaced evenly transverse to the sidewalk. On curbside sidewalk, tooled joints shall match up with the joints in the curb & gutter.

Provide a 1/2" Preformed Expansion Joint Filler where new and existing concrete meet.

The sidewalk shall be six (6") inches thick, and a minimum two (2") inches of base course shall be placed beneath the sidewalk. Sidewalk shall be five (5') feet wide except the last panel that ties into the existing sidewalk. Sidewalk shall meet Americans with Disabilities Act (ADA) Requirements. Maximum cross slope shall be 2% and maximum running slope shall be 5%. The maximum ramp slope shall be 8.33%. Notify Owner or Owner's Representative if discrepancies are observed.

TABLE OF 6" CONCRETE SIDEWALK

Station	to	Station	L/R	Quantity (SqFt)
7+44.84		7+92.11	R	239.1
7+58.39		8+10.44	L	268.0
8+02.60		8+57.53	R	269.6
8+20.81		8+82.07	L	307.4
			Total:	1,084.1

TYPE 1 DETECTABLE WARNINGS

Detectable warnings shall be in compliance with the Americans with Disability Act regulations.

The detectable warnings shall be installed according to the manufacturer's installation instructions.

A concrete thickness equal to the adjacent concrete sidewalk thickness and 2 inches of granular cushion material shall be placed below the Type 1 Detectable Warnings. When concrete is placed below the detectable warnings then the concrete thickness shall be transitioned at the rate of 1" per foot to match the adjacent concrete sidewalk thickness.

The detectable warnings shall be a **Brick Red Color** for application in concrete curb ramps. Cast iron plates may be a **Natural Patina (Weathered Steel)**.

When Type 1 Detectable Warnings are specified, the Contractor shall furnish and install only one of the products listed in the Type 1 Detectable Warnings table.

Type 1 Detectable Warnings

Product	Manufacturer
Detectable Warning Plate Cast Iron Plate	Neenah Foundry Company Neenah, WI 800-558-5075 http://www.neenahfoundry.com/
Detectable Warning Plate Cast Iron Plate	Deeter Foundry Lincoln, NE 800-234-7466 http://www.deeter.com/
Detectable Warning Plate Cast Iron Plate	East Jordan Iron Works, Inc 301 Spring Street East Jordan, MI 49727 800-626-4653 http://www.ejiw.com/
CAST-DWD Cast Iron Plate	Key 3 Casting (Northern Foundry) 555 West 25th Street Hibbing, MN 55746 218-263-8871 http://www.key3casting.com/

TABLE OF TYPE 1 DETECTABLE WARNINGS

Station	L/R	Detectable Warnings (Type)	Quantity (SqFt)
7+79.36	29.45R	1	10.0
8+01.28	29.17'L	1	10.0
8+08.51	29.21'R	1	10.0
8+34.61	29.16'L	1	10.0
		Total:	40.0

REGISTERED PROFESSIONAL ENGINEER
REG. NO. 11315
JEFFREY J. COOLEY
SOUTH DAKOTA

5-2-16

GENERAL MAINTENANCE OF TRAFFIC

1. Installation of traffic control shall conform to the Manual on Uniform Traffic Control Devices (MUTCD - most recent addition) unless otherwise modified in the plans.

2. The Contractor shall notify the engineer 7 days prior to start of construction and before any substantial traffic control change so that coordination with business owners, the City, and press releases may occur. The Contractor shall notify the engineer 48 hours in advance of all other traffic control changes.

3. Installation, maintenance, relocation and removal of cones, vertical panels, drums, barricade warning lights, watchmen, tubular markers and flags shall be included in the contract lump sum price for "Traffic Control Miscellaneous". 8' Type 3 Barricades - Double Sided are paid per each. Right for payment is earned upon initial installation. Relocating the same barricade within a single Traffic Control Phase does not qualify for additional payment but would be incidental to the contract lump sum price for "Traffic Control Miscellaneous".

4. The Contractor or designated traffic control subcontractor shall ensure the adequacy, legibility, and reflectivity of each sign and device. Sign washing shall be considered incidental to Traffic Control and required as directed by the Engineer.

5. Spacing of channelization devices shall be 25 feet unless otherwise noted.

6. Signs and barricades that are periodically required to be moved due to construction operations shall be placed at locations where they give sufficient warning to motorists and pedestrians of the conditions ahead and shall be relocated as needed to keep signing current at all required locations.

7. During milling and paving processes, the Contractor will be required to use flaggers and 42" cones to channelize traffic into the proper lanes. The Contractor shall submit to the engineer a proposed plan and schedule. The Contractor is expected to work continuous on either process until they are complete. It is the Contractor's responsibility to verify that traffic control devices are in place at the end of each working day for safe vehicle travel.

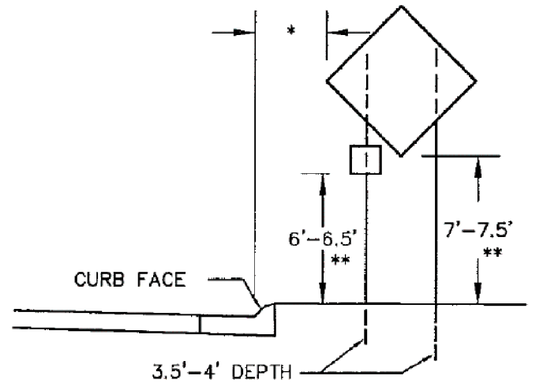

TYPICAL POST MOUNTING – URBAN

* 2' - 2.5' without curb sidewalk
6' - 6.5' with curb sidewalk

** Use these mounting heights when signs are adjacent to a 4-lane undivided roadway or where sidewalk exists or where curbside parking is permitted. In all other cases, use the lesser mounting heights.

PEDESTRIAN TRAFFIC

The Contractor shall protect and restrict all pedestrians from work areas. Safety fence shall be installed around all work areas when the open trench will be un-manned and where trench depths exceed 2 feet and at other locations as designated by the Engineer. Payment for all work and associated materials regarding safety fence, additional delineators or drums, etc., shall be incidental to the contract lump sum price for "Traffic Control, Miscellaneous". During construction, the Contractor shall place sidewalk closed signs and barricades at the locations of 22nd Avenue and Orchard Drive and 22nd Avenue and Derdall Drive. Placement of signs and barricades shall be verified by the Engineer.

CHANNELIZING DEVICES

In transition and taper sections, channelizing devices shall be reflectorized drums or 42" tall grabber cones or temporary tubular markers. Payment for channelizing devices shall be incidental to the contract lump sum price for "Traffic Control, Miscellaneous." Estimated quantities of delineators are shown for reference only.

ITEMIZED LIST FOR PERMANENT TRAFFIC CONTROL DEVICES

SIGN CODE	SIGN DESCRIPTION	NUMBER	SIGN SIZE	SQFT PER SIGN	SQFT
R4-1	KEEP RIGHT (Symbol)	2	24" x 30"	5.0	10.0
OM1-1	Object Marker	2	12" x 12"	1.0	2.0
				TOTAL	12.0

ITEM DESCRIPTION	Quantity	Unit
Flexible Object Marker	10	Each

REGISTERED PROFESSIONAL ENGINEER
REG. NO.
11315
JEFFREY J.
COOLEY
SOUTH DAKOTA

5-2-16

REMOVE AND REPLACE TOPSOIL

All cost associated with removing and replacing the topsoil along areas to be resurfaced shall be incidental to the lump sum price for "Remove and Replace Topsoil"

MYCORRHIZAL INOCULUM

Mycorrhizal inoculum shall consist of mycorrhizal fungi spores and mycorrhizal fungi-infected root fragments in a solid carrier. The carrier may include organic materials, calcinated clay, or other materials consistent with application and good plant growth. The supplier shall provide certification of the fungal species claimed and the live propagule count. The inoculum shall include the following fungal species:

Glomus intraradices	25%
Glomus aggregatu	25%
Glomus mosseae	25%
Glomus etunicatum	25%

All seed shall be inoculated by the seed supplier with a minimum of 20,000 live propagules of mycorrhizal fungi per 1,000 square feet. All costs of inoculating the seed shall be incidental to the contract unit price per pound for the corresponding permanent seed mixture.

The mycorrhizal inoculum shall be from the list below or an approved equal:

Product	Manufacturer
MycoApply	Mycorrhizal Applications, Inc. Grants Pass, OR Phone: 1-866-476-7800 http://www.mycorrhizae.com/

FERTILIZING

The Contractor shall apply an all-natural slow release fertilizer prior to seeding or placing sod. The all-natural fertilizer shall have a minimum guaranteed analysis of 4-6-4 and be USDA Certified BioBased. It should provide a minimum of 4% (N) nitrogen with a minimum water insoluble nitrogen (WIN) fraction of 3.2%, a minimum of 6% (P2O5) available phosphate, a minimum of 4% (K2O) soluble potash, and a maximum carbon to nitrogen ratio (C:N ratio) of 5:1. The all-natural fertilizer shall be free of weed-seed and pathogens accomplished through thermophilic composting, and not mechanical or chemical sterilization, to assure presence of beneficial soil microbiology. The fertilizer shall have a near neutral pH, a low salt index, a low biological oxygen demand, contain organic humic and fulvic acids, and have high aerobic organism counts. The fertilizer shall also be stable, free of bad odors, and be unattractive as a food source for animals. It should also be in a granular form that is easily spread.

The all-natural slow release fertilizer shall be applied according to the manufacturer's application recommendations.

The application rate is 34 pounds per 1,000 square feet.

The all-natural slow release fertilizer shall be from the list below or an approved equal:

Product	Manufacturer
Sustane	Sustane Corporate headquarters Cannon Falls, Minnesota Phone: 1-800-352-9245 http://www.sustane.com

PERMANENT SEEDING

The areas to be seeded consist of all newly graded areas within the project limits except for the top of roadways and temporary easements under cultivation.

Special Permanent Seed Mixture 1 shall consist of the following (or approved equal):

Grass Species	Variety	Pure Live Seed (PLS) lbs/1000 SqFt (%)
Kentucky Bluegrass	Avalanche, Appalachian, Wildhorse, Blue Bonnet	4.2 (60%)
Fine Leaf Perennial Rye	Turf Type Varieties	1.6 (23%)
Creeping Red Fescue	Epic, Boreal	1.2 (17%)
		7 lbs/1000 SqFt

WATER FOR VEGETATION

Water for vegetation consists of applying water to seeded areas to enhance germination and/or root growth. When watering, use the following guidelines:

Immediately after seeding:
Keep the topsoil moist but not excessively wet until the seed has germinated.
Water a minimum of 3 days a week for 2 weeks preferably watering 2 or 3 times a day in small quantities.
Use fine spray and low pressure to avoid topsoil wash and to prevent uncovering buried seeds.

After emergence:
Topsoil shall be kept thoroughly moistened by sprinkling, as necessary, for 6 weeks. After the 6 week period, an inspection shall be made to determine if grass is established enough to suspend watering. Continue watering until grass has been thoroughly established.
Never apply water at a rate faster than the topsoil can absorb.
Water during early morning hours or early evening hours.
Do not water when rain is forecasted for the area.
If rainfall occurs, suspend watering according to rainfall amount.

All costs for furnishing and applying the water including hauling, materials, equipment, labor, and incidentals necessary shall be incidental to the contract unit bid price per pound for "Special Permanent Seed Mix 1" bid item.

REGISTERED PROFESSIONAL ENGINEER
REG. NO.
11315
JEFFREY J.
COOLEY
SOUTH DAKOTA

5-2-16

FIBER MULCHING

Fiber mulch shall be applied in a separate operation following permanent seeding.

Fiber mulch shall be applied at the rate of 2,000 pounds per acre.

The Contractor shall allow the fiber mulch to cure a minimum of 18 hours prior to watering or any storm event to ensure proper cohesion between the soil and fiber particles.

All costs for the additional tackifier added to the fiber mulch including labor, equipment, and materials shall be incidental to the contract unit price per pound for "Fiber Mulching".

The fiber mulch provided shall be from the approved product list. The approved product list for fiber mulch may be viewed at the following internet site:

http://sddot.com/business/certification/products/Default.aspx

TABLE OF FIBER MULCHING

Station	to	Station	L/R	Quantity (Lb)
7+58		8+10	L	31
7+45		7+92	R	23
8+21		8+82	L	37
8+02		8+58	R	14
			Total	105

HIGH FLOW SILT FENCE

The high flow silt fence fabric provided shall be from the approved product list. The approved product list for high flow silt fence may be viewed at the following internet site:

http://sddot.com/business/certification/products/Default.aspx

High flow silt fence shall be placed at the locations noted in the table and at locations that will minimize siltation of adjacent streams, lakes, dams, or drainage areas as determined by the Engineer during construction. Refer to Standard Plate 734.05 for details.

TABLE OF HIGH FLOW SILT FENCE

Station	L/R	Location	Quantity (Ft)
8+05	L	Inlet Protection	18
8+40	L	Inlet Protection	18
7+30 to 7+65	R	Ditch	37
7+78 to 8+33	R	Ditch	58
		Total	131

EROSION CONTROL BLANKET

Erosion control blanket shall be installed 8 feet wide at the locations noted in the table and at locations determined by the Engineer during construction.

The erosion control blanket provided shall be from the approved product list. The approved product list for erosion control blanket may be viewed at the following internet site:

http://sddot.com/business/certification/products/Default.aspx

The Contractor shall install erosion control blanket according to the manufacturer's installation instructions. The contract unit price per square yard for "Type 1 Erosion Control Blanket" shall include shaping and finishing ditches and channels, installing material and the furnishing of labor, equipment, staples, material, and incidentals necessary.

TABLE OF EROSION CONTROL BLANKET

Station	to	Station	L/R	Location	Type	Quantity (SqYd)
7+87		8+10	L	Slope	1	52
8+21		8+77	L	Slope	1	67
			Total Type 1 Erosion Control Blanket:			119

SEDIMENT CONTROL AT INLETS WITH FRAMES AND GRATES

This type of sediment control device should be used where there is pavement in the vicinity of the drop inlets and storm water or sediment could possibly enter the frame and grate. Sediment Control at Inlets with Frame and Grates shall be installed prior to working in the vicinity of the drop inlets. The Contractor shall be responsible for maintaining and repairing the sediment control devices for the duration of the project for which sediment control measures are required. Maintenance shall be scheduled to prevent storm water from backing up into the driving lane.

"Sediment Control at Inlets with Frames and Grates" will be paid for one time at each location, regardless of the number of times the sediment control devices are installed, inspected, cleaned, removed, repaired, or replaced. All costs associated with furnishing, installing, inspecting, maintaining, cleaning, sediment removal, and repairing Sediment Control at Inlets with Frames and Grates shall be incidental to the contract unit price per each for "Sediment Control at Inlet with Frame and Grate".
Sediment collection devices shall be:

A commercial made sediment collection device from the "Sediment Control at Inlet with Frame and Grate" list or an approved equal. The device shall be installed in reinforced concrete drop inlets according to the manufacturer's recommendations.

A sediment control device as shown on Standard Plate 734.10. Filter fabric used for constructing the sediment control at inlets with frames and grates shall be the same type of fabric that is used in high flow silt fence from the approved product list. The approved product list may be viewed at the following internet site:

http://sddot.com/business/certification/products/Default.aspx

Sediment Control at Inlet with Frame and Grate Approved List:

Product	Manufacturer
InfraSafe Debris Collection Device with filter sock	Royal Environmental Systems, Inc. Stacy, MN Phone: 1-800-817-3240 www.royalenterprises.com
Dandy Curb Sack	Dandy Products Inc. Dublin, OH Phone: 1-800-591-2284 www.dandyproducts.com
Silt Trapper	Storm Water Solutions Lakeville, MN Phone: 1-952-461-4376 www.silttrapper.com

REGISTERED PROFESSIONAL ENGINEER
REG. NO. 11315
JEFFREY J. COOLEY
SOUTH DAKOTA
5-2-16

SEDIMENT CONTROL AT INLETS WITH FRAMES AND GRATES(Continued)

DIP Basket	Skyview Construction Co., LLC Waubay, SD Phone: 1-605-520-0555 www.skyviewconst.com
FLEXSTROM Inlet Filters	Inlet and Pipe Protection, Inc. Naperville, IL Phone: 1-866-287-8655 www.inletfilters.com
GR-8 Guard or Combo Guard	ERTEC Environmental Systems LLC Alameda, CA Phone: 1-866-521-0724 www.ertecsystems.com
Sediment Catchers	Shaun Jensen Brookings, SD Phone: 1-605-690-4950
Grate FX, Slammer, or VertPro	Enviroscape ECM, Ltd. Oakwood, OH Phone: 1-419-594-3210 www.strawblanket.com
BX Inlet Sediment Boxes	BX Civil and Construction Dell Rapids, SD Phone: 1-605-428-5483 bx-cc.com

TABLE OF SEDIMENT CONTROL AT INLETS WITH FRAMES AND GRATES

Station	L/R	Quantity (Each)
8+18	R	1
8+33	L	1
8+48	L	1
	Total:	3

STREET SWEEPING

Vehicle tracking of sediment from the construction site shall be minimized. Street sweeping shall be used if erosion and sediment control best management practices are not adequate to prevent sediment from being tracked onto the street.

The Contractor shall use a pickup broom having integral self-contained storage to clean the roadway. The pickup broom used shall be a minimum of 6 feet wide and have working gutter brooms.

At a minimum, sweeping will be required:

Prior to opening any segment or roadway to traffic.

Following pavement grooving operations and prior to the application of the pavement marking tape.

When sawing operations are underway in the inside driving lanes, the outside driving lanes and gutter may need to be swept to control dust.

All costs for cleaning the roadway with a pickup broom shall be incidental to the contract unit price per hour for “Sweeping”.

REGISTERED PROFESSIONAL ENGINEER
REG. NO.
11315
JEFFREY J.
COOLEY
SOUTH DAKOTA

5-2-16

TYPICAL GRADING SECTIONS

FOR BIDDING PURPOSES ONLY

STATE OF SOUTH DAKOTA	PROJECT	SHEET NO.	TOTAL SHEETS
	PP 3245(08)	12	47

EXISTING SURFACING SECTION

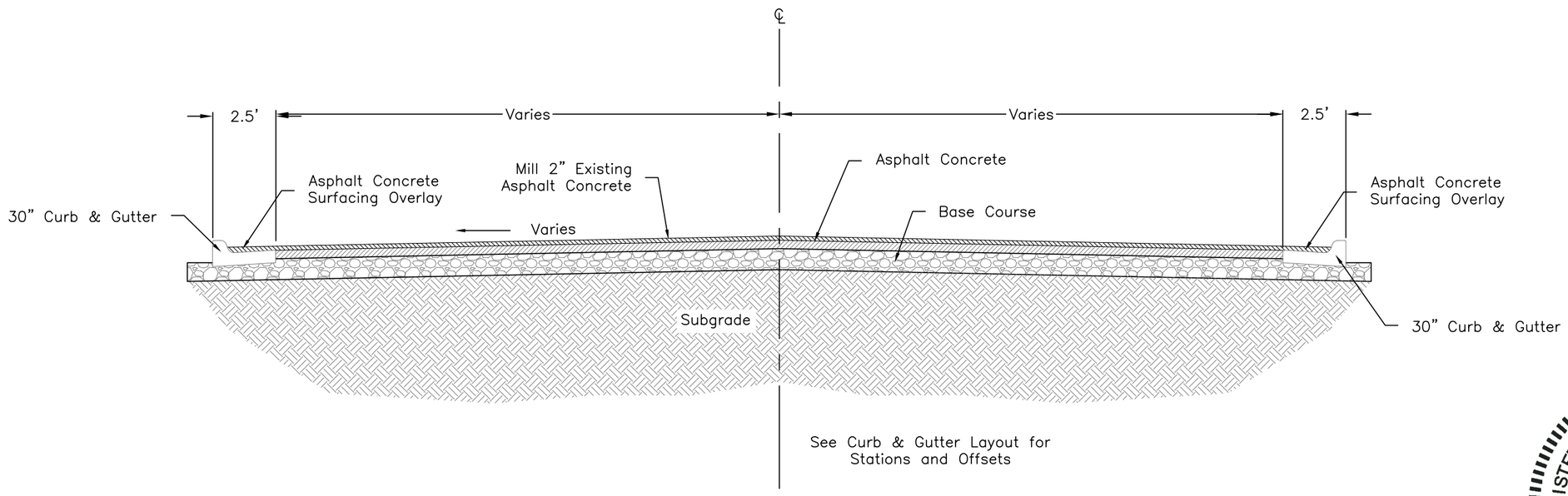

REGISTERED PROFESSIONAL ENGINEER
REG. NO. 11315
JEFFREY J. COOLEY
SOUTH DAKOTA
5-2-16

PROPOSED SURFACING

Sta: 6+89.19 to 7+30.20
Sta: 8+94.89 to 9+33.92

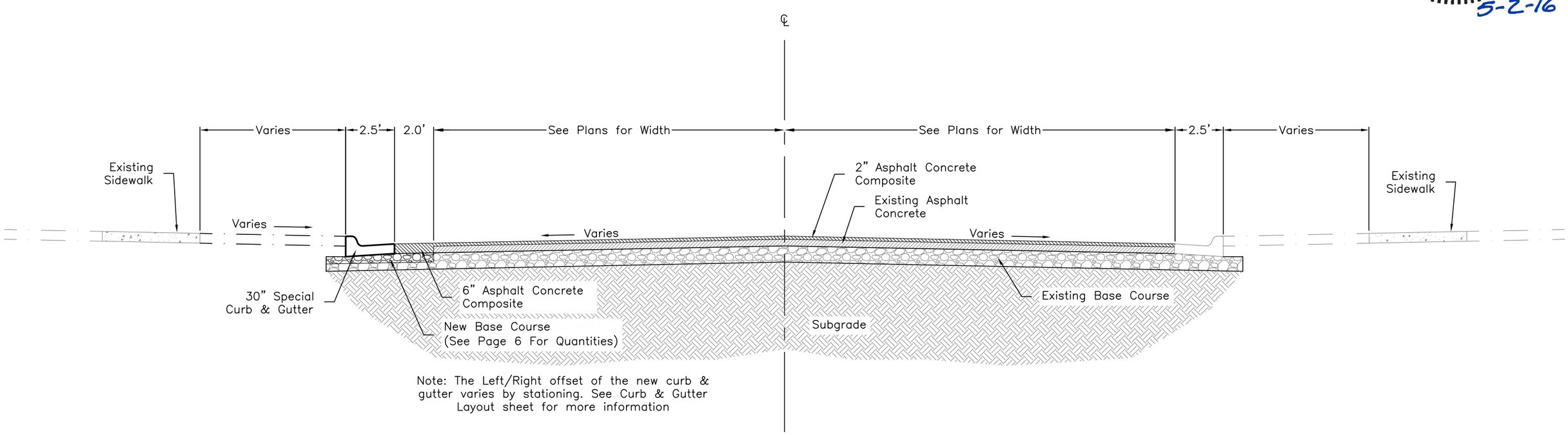

Note: The Left/Right offset of the new curb & gutter varies by stationing. See Curb & Gutter Layout sheet for more information

TYPICAL GRADING SECTIONS

FOR BIDDING PURPOSES ONLY

STATE OF SOUTH DAKOTA	PROJECT	SHEET NO.	TOTAL SHEETS
	PP 3245(08)	13	47

PROPOSED SURFACING & 6" MISCELLANEOUS PCC PAVEMENT

Sta: 7+30.20 to 7+35.20
Sta: 8+92.89 to 8+94.89

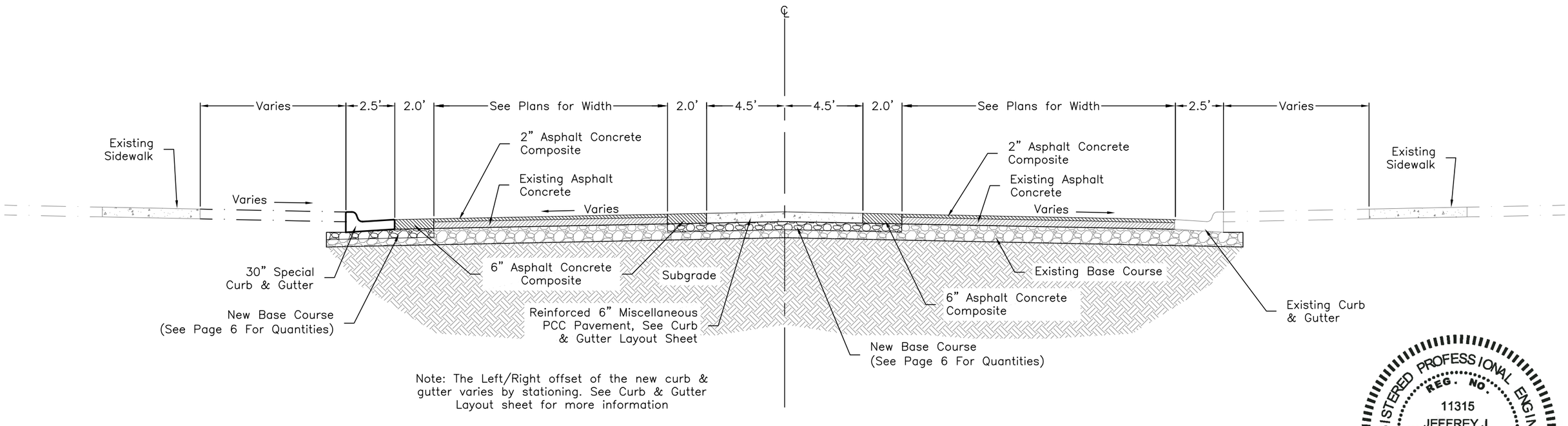

Note: The Left/Right offset of the new curb & gutter varies by stationing. See Curb & Gutter Layout sheet for more information

REGISTERED PROFESSIONAL ENGINEER
REG. NO. 11315
JEFFREY J. COOLEY
SOUTH DAKOTA
5-2-16

PROPOSED SURFACING & 6" MISCELLANEOUS PCC PAVEMENT

Sta: 7+90.73 to 8+21.89

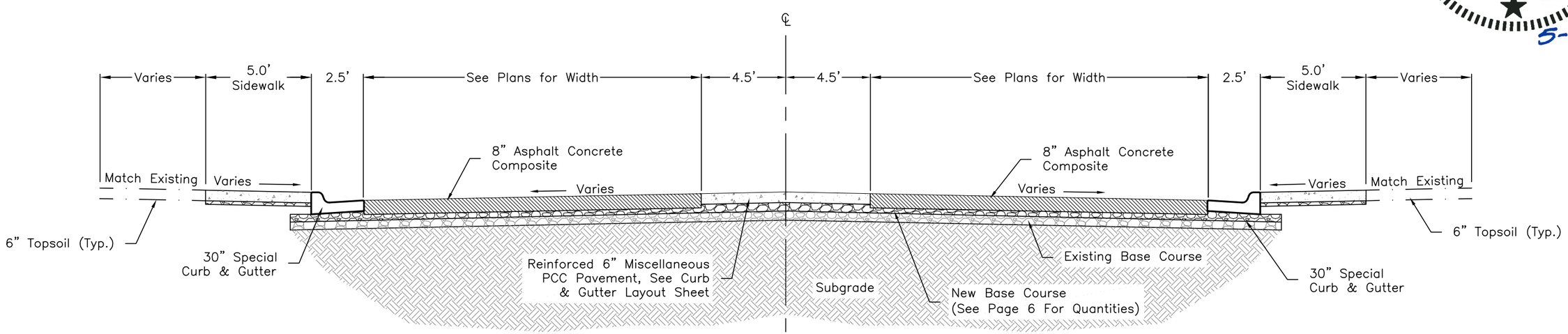

Note: New Asphalt Concrete Composite shall be 8" thick within 10 feet of the railroad crossing only. See Special Detail: Railroad Crossing Detail

TYPICAL GRADING SECTIONS

FOR BIDDING PURPOSES ONLY

STATE OF SOUTH DAKOTA	PROJECT	SHEET NO.	TOTAL SHEETS
	PP 3245(08)	14	47

PROPOSED SURFACING & MEDIAN SECTION

See Curb & Gutter Layout Sheet for Stationing

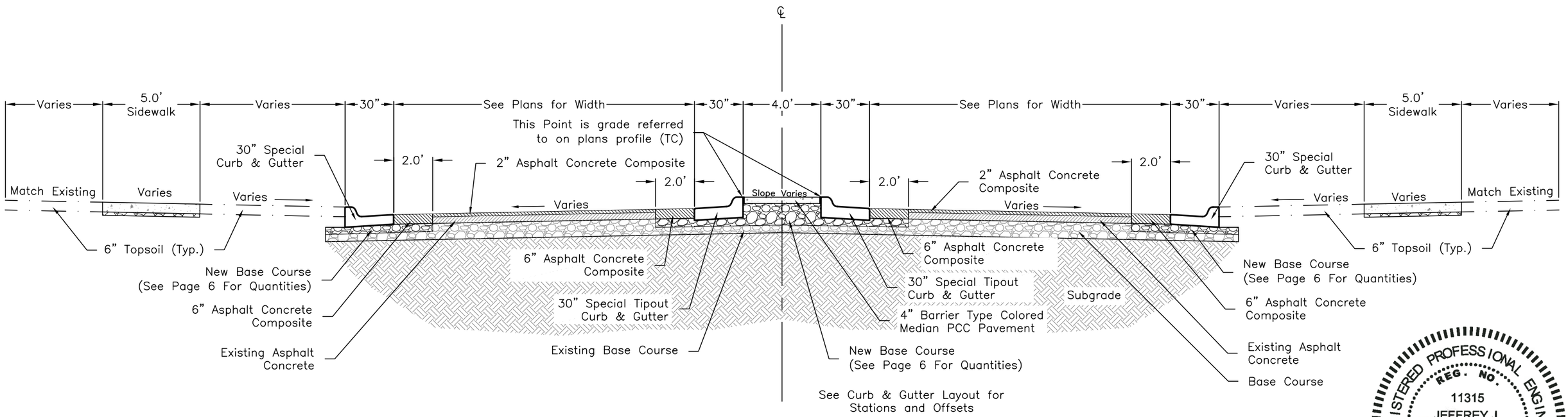

PROPOSED SURFACING & MEDIAN SECTION

See Curb & Gutter Layout Sheet for Stationing

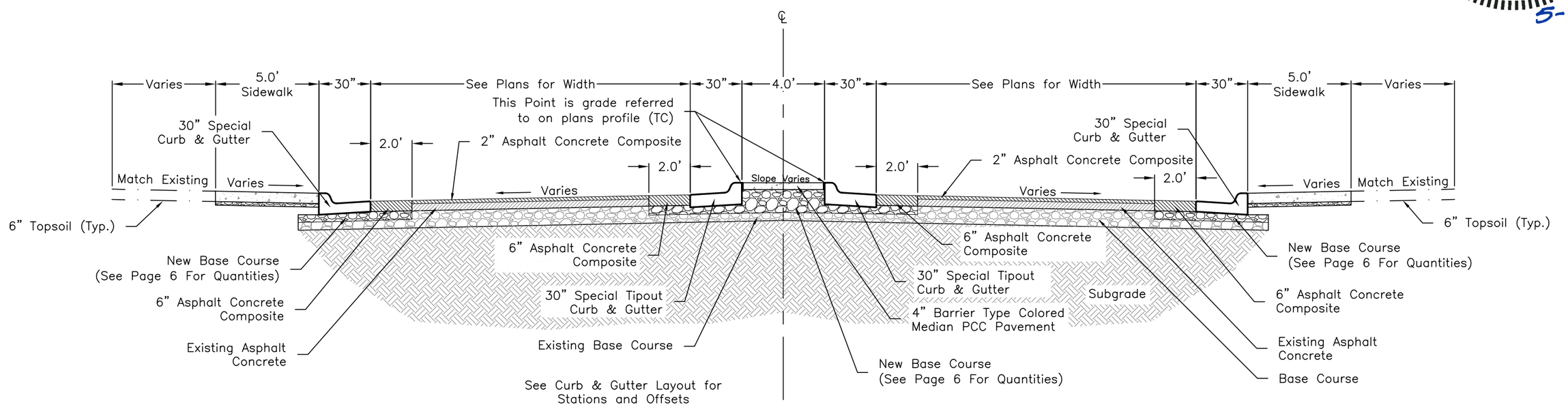

TRAFFIC CONTROL - PHASE 1

FOR BIDDING PURPOSES ONLY

STATE OF SOUTH DAKOTA	PROJECT	SHEET NO.	TOTAL SHEETS
	PP 3245(08)	15	47

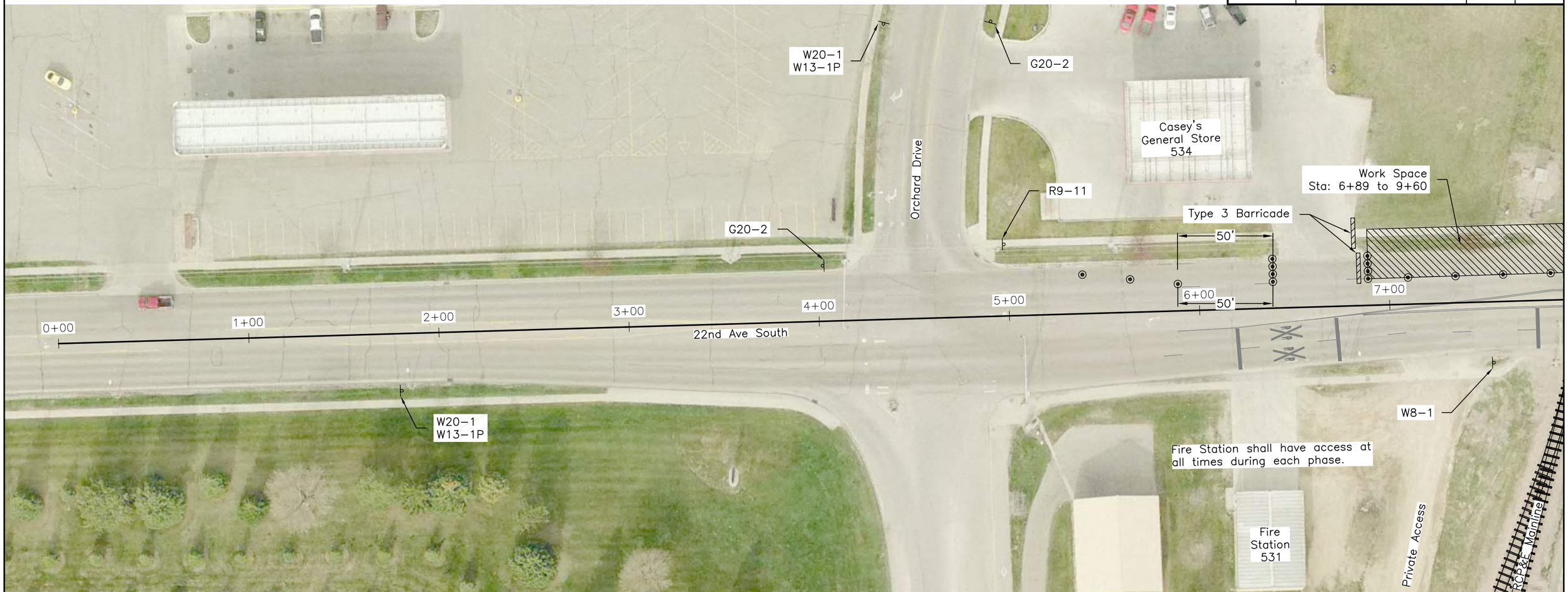

Sign Code	Sign Size	Description	Number Required	SqFt Per Sign	SqFt
G20–2	36" x 18"	END ROAD WORK	3	5	15
R3–2	24" x 24"	NO LEFT TURN	1	4	4
R9–11	24" x 18'	SIDEWALK CLOSED, CROSS HERE	2	3	6
W4–2R	48" x 48"	RIGHT LANE ENDS (SYMBOL)	1	16	16
W4–2L	48" x 48"	LEFT LANE ENDS (SYMBOL)	2	16	32
W8–1	48" x 48"	BUMP	2	16	32
W13–1P	30" x 30"	ADVISORY SPEED PLATE	3	6	18
W20–1	48" x 48"	ROAD WORK AHEAD	3	16	48
W20–5R	48" x 48"	RT. LANE CLOSED AHEAD	1	16	16
W20–5L	48" x 48"	LT. LANE CLOSED AHEAD	2	16	32
*****		TYPE A ADVANCE WARNING ARROW PANEL	2		
*****		TYPE 3 BARRICADE, 8' DOUBLE SIDED	7		
				TOTAL	219

◉ Reflectorized Drum
• Channelizing Device shall be 42" cones or drums

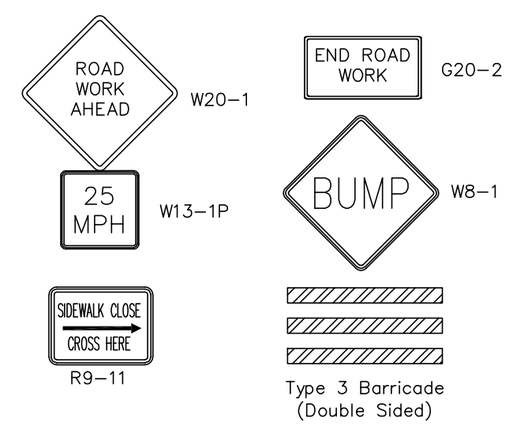

North

1" = 50'

REGISTERED PROFESSIONAL ENGINEER
REG. NO.
11315
JEFFREY J.
COOLEY
SOUTH DAKOTA

5-2-16

TRAFFIC CONTROL - PHASE 1 cont.

FOR BIDDING PURPOSES ONLY

STATE OF SOUTH DAKOTA	PROJECT	SHEET NO.	TOTAL SHEETS
	PP 3245(08)	16	47

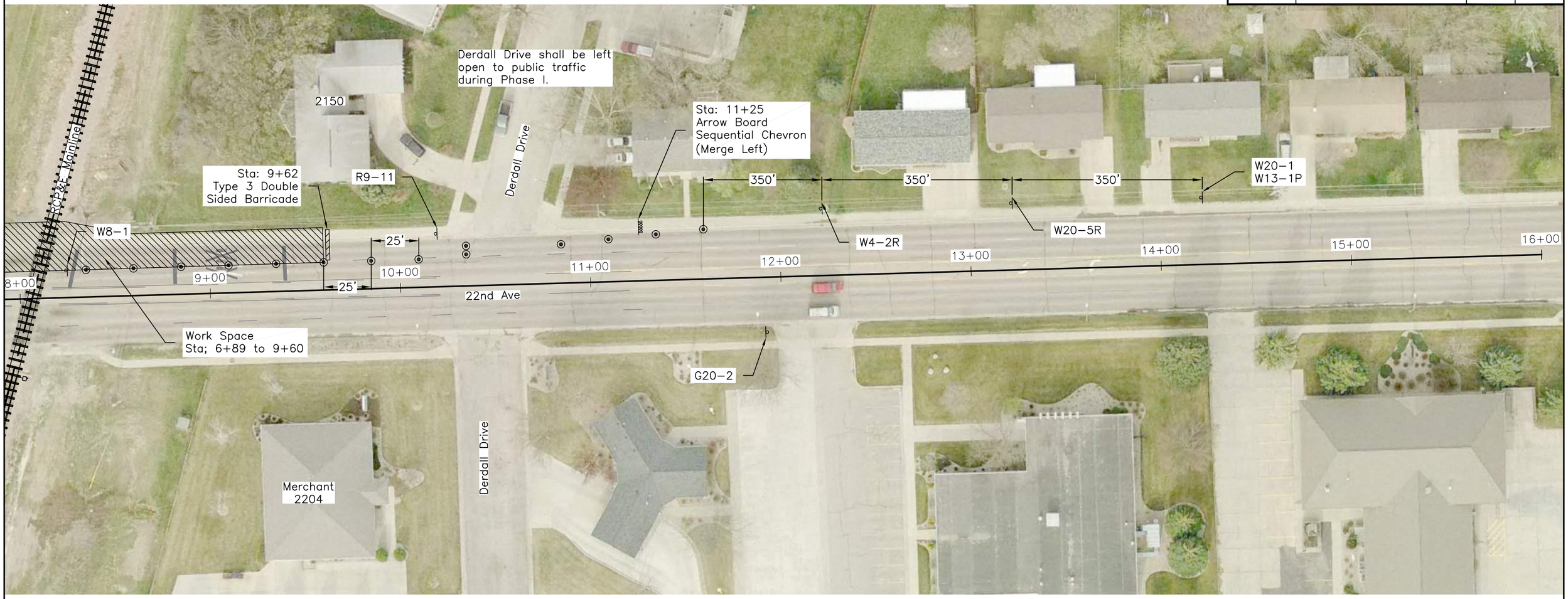

◉ Reflectorized Drum
• Channelizing Device shall be 42" cones or drums

Type 3 Barricade (Double Sided)

Arrow Board Sequential Chevron

END ROAD WORK — G20-2

ROAD WORK AHEAD — W20-1

25 MPH — W13-1P

RIGHT LANE CLOSED AHEAD — W20-5R

W4-2R

BUMP — W8-1

SIDEWALK CLOSE CROSS HERE — R9-11

North

1" = 50'

REGISTERED PROFESSIONAL ENGINEER
REG. NO. 11315
JEFFREY J. COOLEY
SOUTH DAKOTA

5-2-16

TRAFFIC CONTROL - PHASE 2

FOR BIDDING PURPOSES ONLY

STATE OF SOUTH DAKOTA	PROJECT	SHEET NO.	TOTAL SHEETS
	PP 3245(08)	17	47

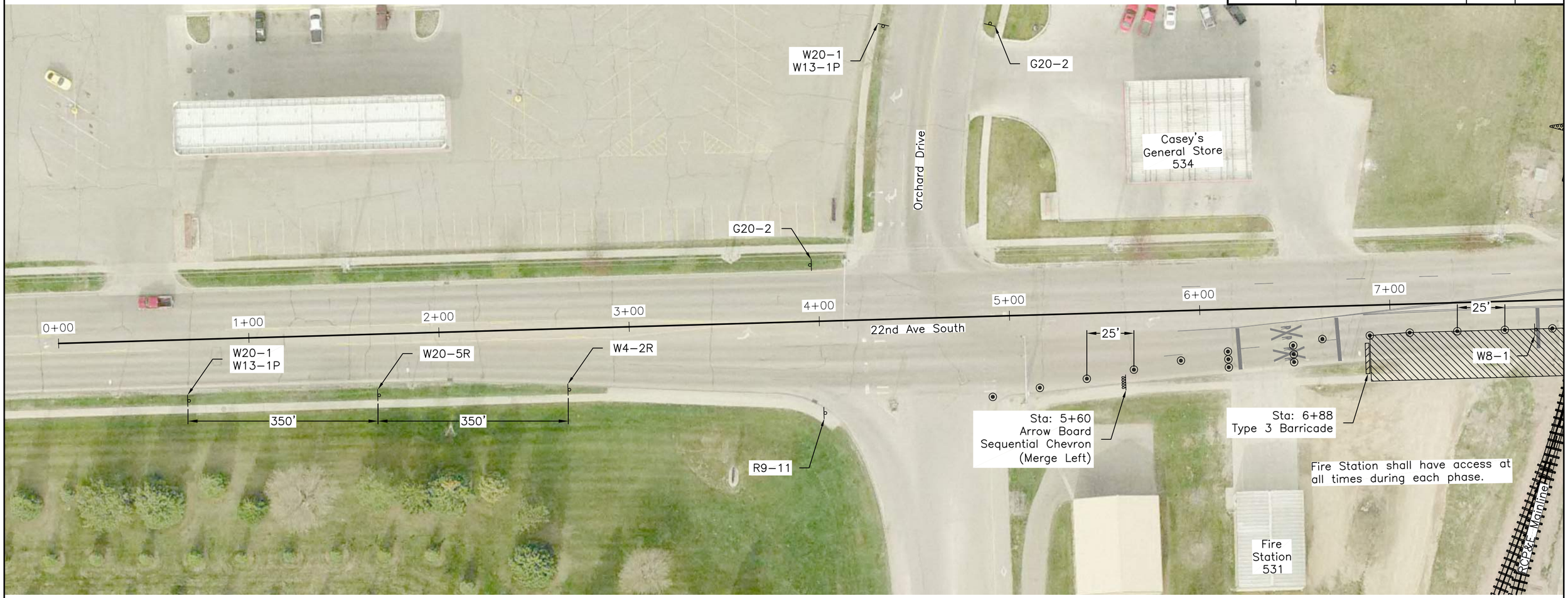

- ⊙ Reflectorized Drum
- • Channelizing Device shall be 42" cones or drums

North

1" = 50'

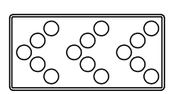

Arrow Board
Sequential Chevron

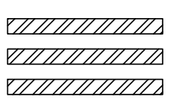

Type 3 Barricade
(Double Sided)

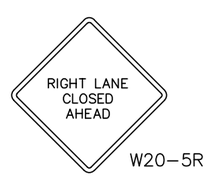

W20-5R

W8-1

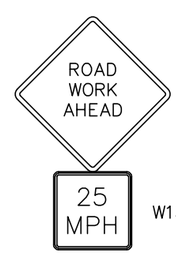

W20-1

W13-1P

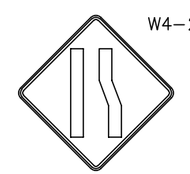

W4-2R

R9-11

G20-2

TRAFFIC CONTROL - PHASE 2 cont.

FOR BIDDING PURPOSES ONLY

STATE OF SOUTH DAKOTA	PROJECT	SHEET NO.	TOTAL SHEETS
	PP 3245(08)	18	47

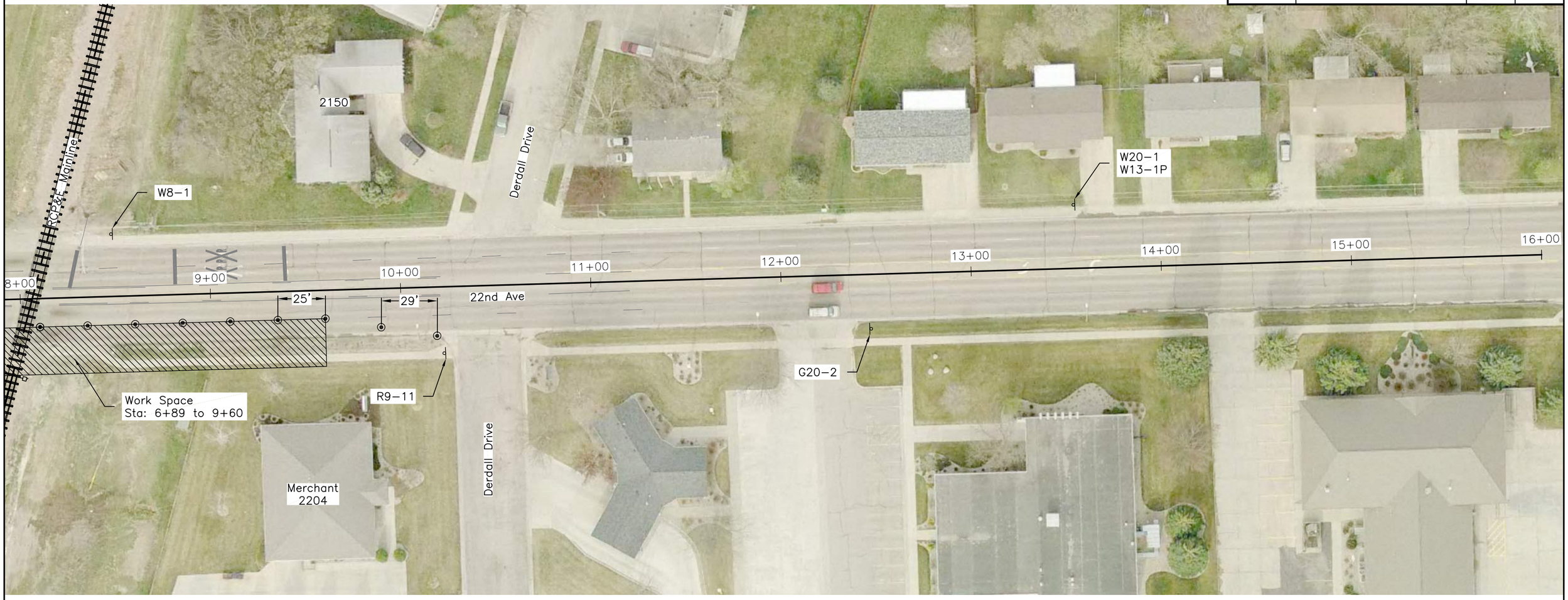

- ◉ Reflectorized Drum
- • Channelizing Device shall be 42" cones or drums

North

1" = 50'

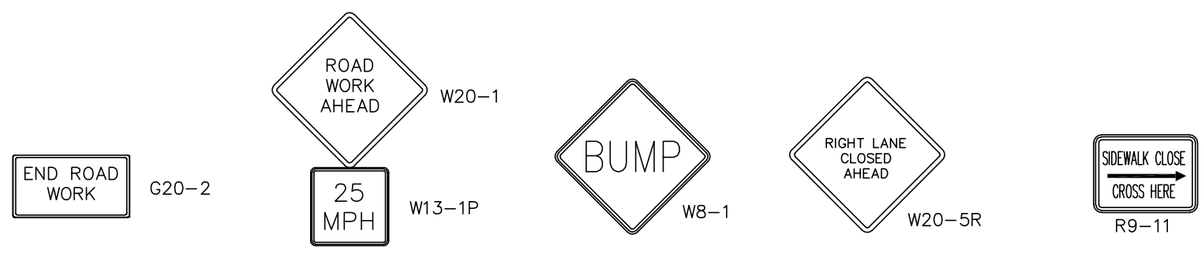

REGISTERED PROFESSIONAL ENGINEER
REG. NO.
11315
JEFFREY J.
COOLEY
SOUTH DAKOTA

5-2-16

TRAFFIC CONTROL - PHASE 3

FOR BIDDING PURPOSES ONLY

STATE OF SOUTH DAKOTA	PROJECT	SHEET NO.	TOTAL SHEETS
	PP 3245(08)	19	47

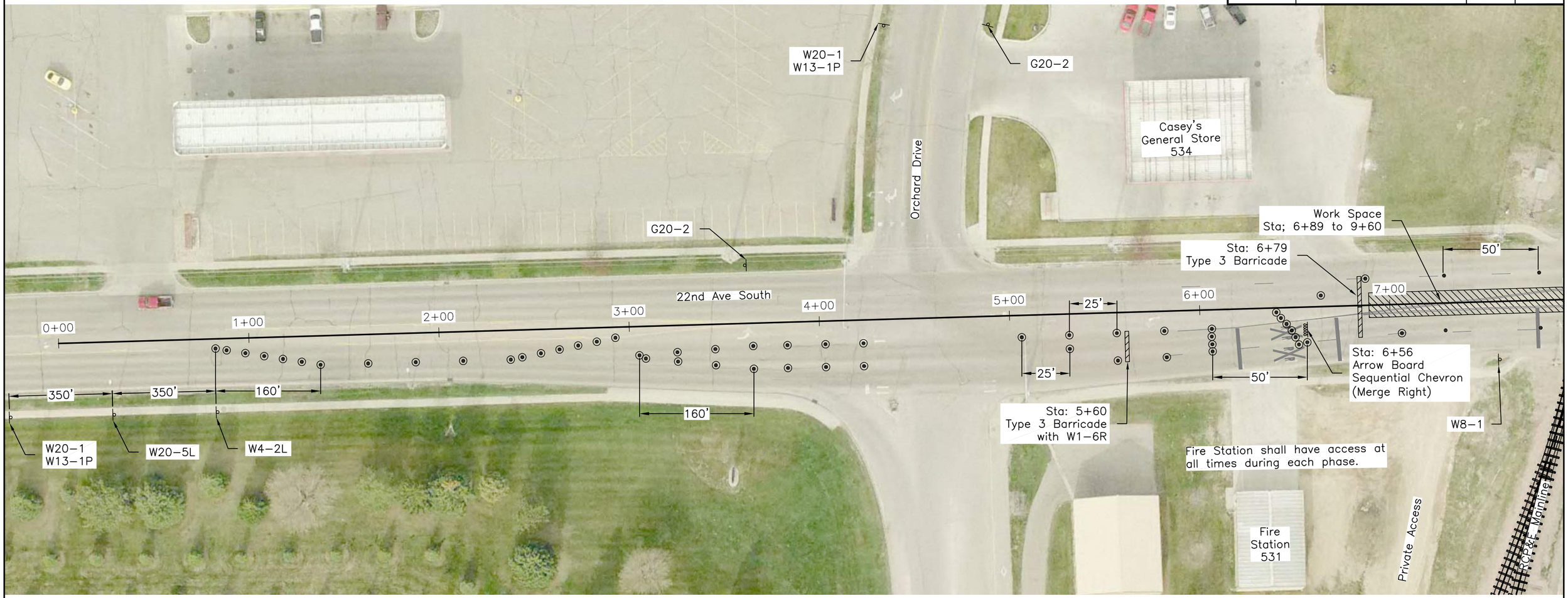

North

1" = 50'

- ◉ Reflectorized Drum
- • Channelizing Device shall be 42" cones or drums

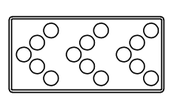

Arrow Board
Sequential Chevron

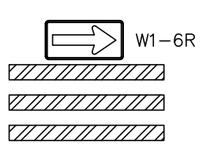

Type 3 Barricade
(Double Sided)

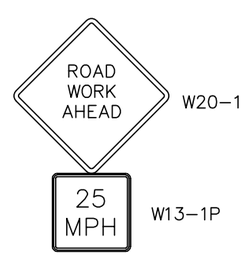

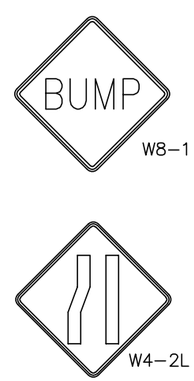

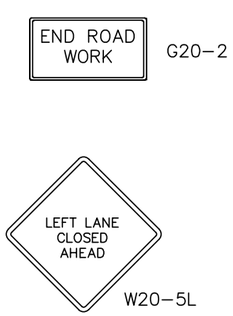

TRAFFIC CONTROL - PHASE 3 cont.

FOR BIDDING PURPOSES ONLY

STATE OF SOUTH DAKOTA	PROJECT	SHEET NO.	TOTAL SHEETS
	PP 3245(08)	20	47

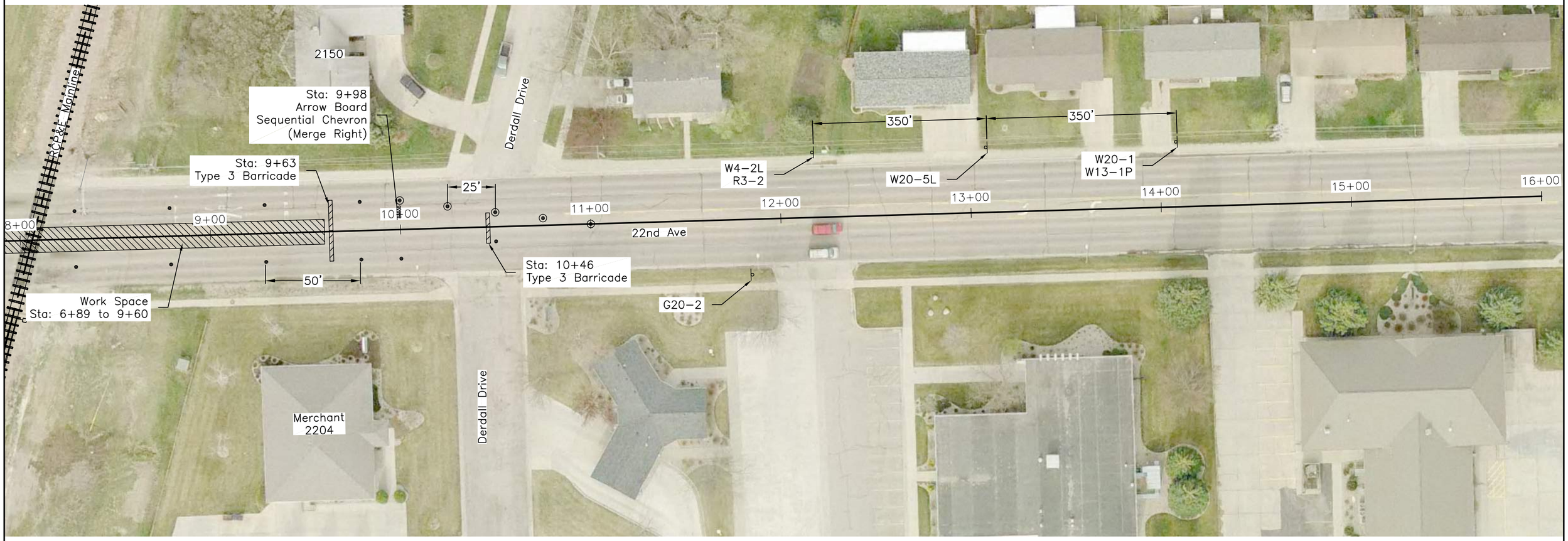

- Reflectorized Drum
- Channelizing Device shall be 42" cones or drums

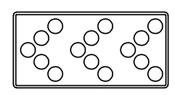
Arrow Board
Sequential Chevron

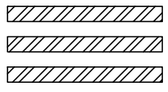
Type 3 Barricade
(Double Sided)

W20-5L

W20-1

W13-1P

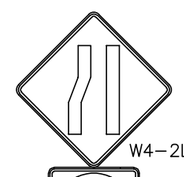
W4-2L

R3-2

W8-1

G20-2

North

1" = 50'

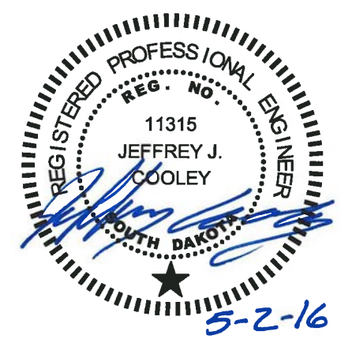

HORIZONTAL ALIGNMENT DATA & CONTROL DATA

FOR BIDDING PURPOSES ONLY

STATE OF SOUTH DAKOTA	PROJECT	SHEET NO.	TOTAL SHEETS
	PP 3245(08)	21	47

22ND AVENUE SOUTH

Type	Station		Bearing	Northing	Easting
POB	6+89.00	TL = 271.00 Ft	N1°40'17"W	186,906.471	2,814,403.093
POE	9+60.00			187,403.270	2,814,388.597

HORIZONTAL AND VERTICAL CONTROL POINTS

POINT	STATION & OFFSET	DESCRIPTION	NORTHING	EASTING	ELEVATION
1	SDSU Campus	Crothers Engineering Hall	192,245.8250	2,809,480.7380	1,700.66
PR1044	Interstate I29 Corridor	1/2" Galvanized Steel Pipe	193,249.1400	2,816,891.8100	1,656.62

*Note: Control points will be set for staking purposes once the project has started. These points will be available upon request.

REGISTERED PROFESSIONAL ENGINEER
REG. NO.
11315
JEFFREY J.
COOLEY
SOUTH DAKOTA

5-2-16

The coodinates shown on this sheet are based on the South Dakota State Plane Coordinate System.
North Zone (NAD83)
The elevations shown on the sheet are based on NAVD/88

EXISTING CONDITIONS

FOR BIDDING PURPOSES ONLY

STATE OF SOUTH DAKOTA	PROJECT	SHEET NO.	TOTAL SHEETS
	PP 3245(08)	22	47

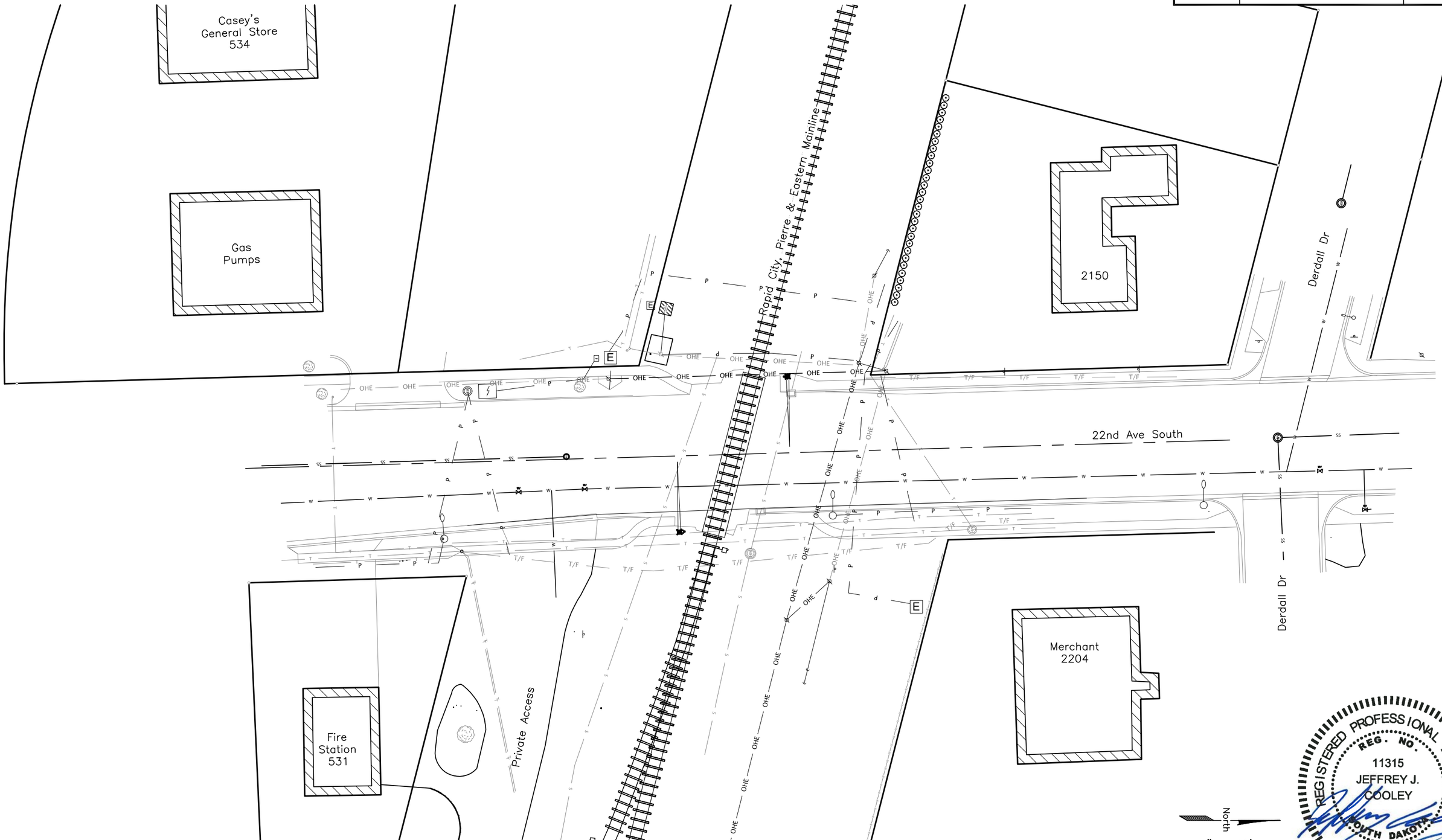

REGISTERED PROFESSIONAL ENGINEER
REG. NO. 11315
JEFFREY J. COOLEY
SOUTH DAKOTA

5-2-16

EROSION CONTROL PLAN FOR BIDDING PURPOSES ONLY

STATE OF SOUTH DAKOTA	PROJECT	SHEET NO.	TOTAL SHEETS
	PP 3245(08)	23	47

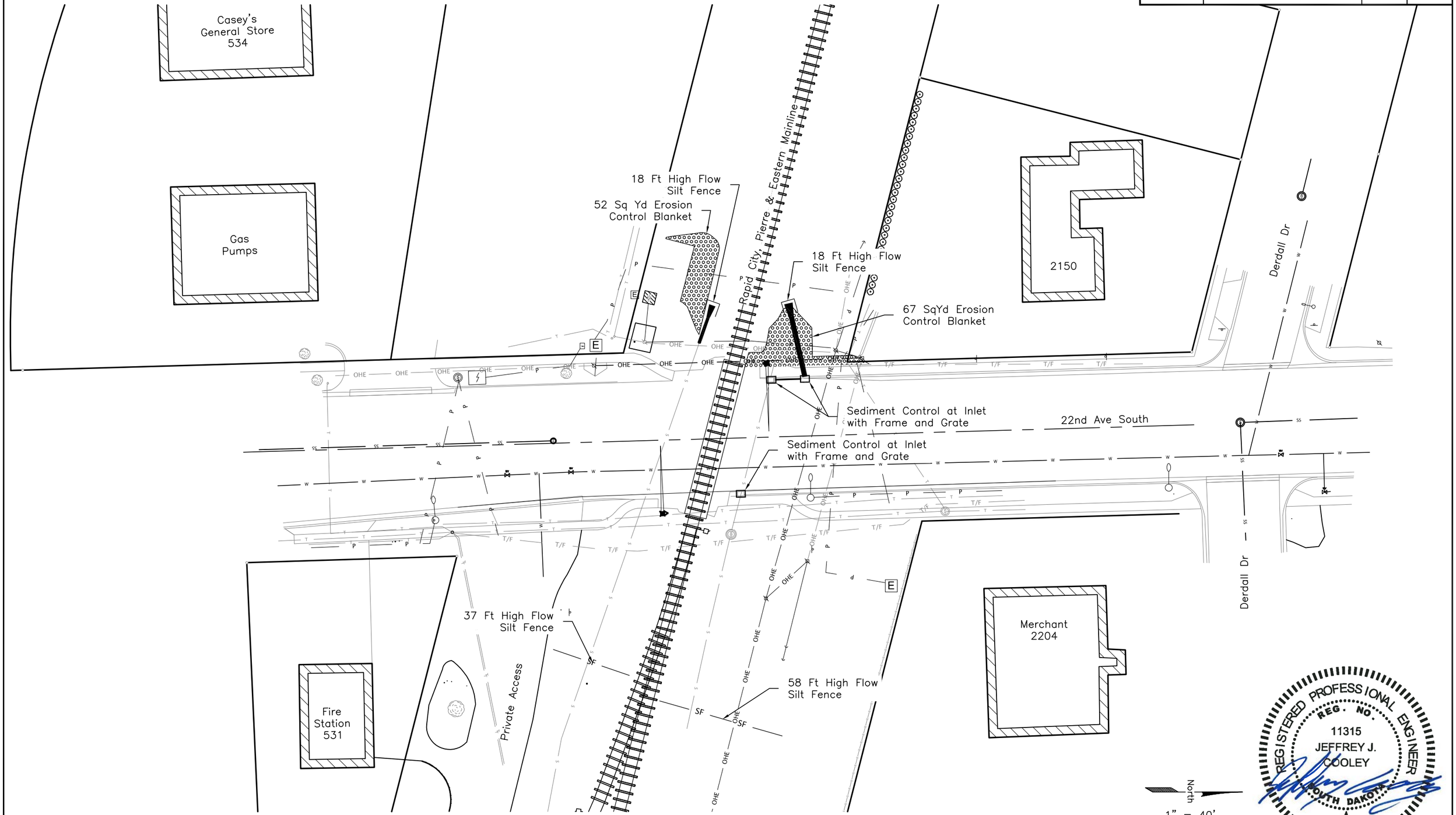

REGISTERED PROFESSIONAL ENGINEER
REG. NO. 11315
JEFFREY J. COOLEY
SOUTH DAKOTA

5-2-16

DEMOLITION PLAN

FOR BIDDING PURPOSES ONLY

STATE OF SOUTH DAKOTA	PROJECT	SHEET NO.	TOTAL SHEETS
	PP 3245(08)	24	47

Remove Concrete Sidewalk

Cold Milling Asphalt Concrete

Remove Concrete Curb and Gutter

Remove Asphalt Concrete Pavement

Remove Concrete Curb and Gutter at the Following Locations:
6+89 to 7+63–27'L (74 Ft)
7+46 to 7+67–27'R (21 Ft)
8+12 to 9+34–27'R (122 Ft)
8+28 to 8+82–27'L (54 Ft)

Remove Drop Inlet at the Following Locations:
8+18–26'R
8+32–27'L

7+69 to 7+81–42'L
Remove Existing Plant and Landscape Materials

Cold Milling Asphalt Concrete at the Following Locations:
6+89 to 7+97 (438 SqYd)
8+16 to 9+60 (590 SqYd)

Remove Concrete Sidewalk at the Following Locations:
7+45–40'R to 7+80–31'R (17 SqYd)
7+58–40'L to 7+89–31'L (15 SqYd)
8+11–31'R to 8+58–39'R (23 SqYd)
8+28–33'L to 8+82–31'L (29 SqYd)

Remove Asphalt Concrete Pavement at the Following Locations:
6+89–22'L to 8+12–37'L (54 SqYd)
7+28–6.5'L/R to 8+08–22'L/R (142 SqYd)
7+46–22'R to 7+92–34'R (24 SqYd)
8+01–36'R to 9+34–22'R (38 SqYd)
8+05–22'L/R to 8+97–6.5'L/R (160 SqYd)
8+18–34'L to 8+82–22'L (22 SqYd)

Relocate Signal Equipment at the Following Locations:
7+84–33'R
8+29–33'L
(By Rapid City, Pierre & Eastern Railroad)

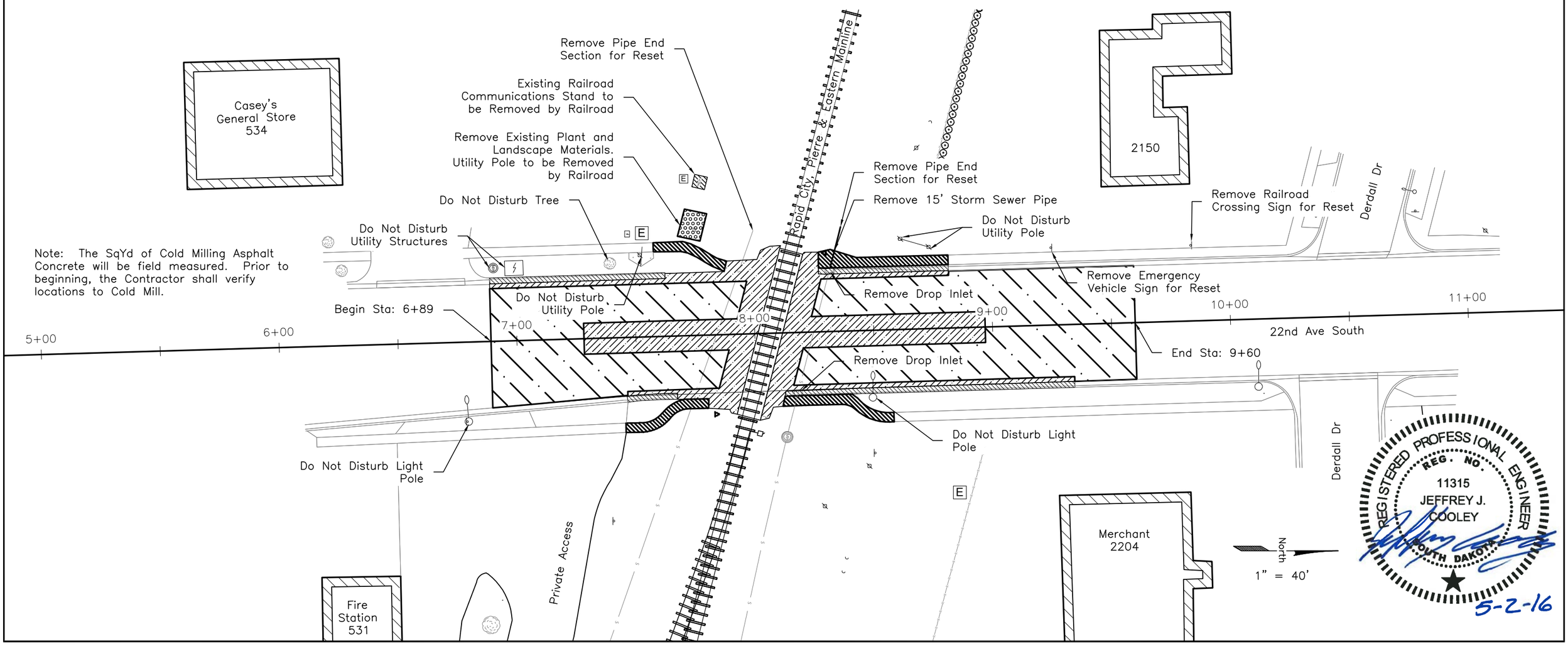

Note: The SqYd of Cold Milling Asphalt Concrete will be field measured. Prior to beginning, the Contractor shall verify locations to Cold Mill.

RIGHT OF WAY LAYOUT

FOR BIDDING PURPOSES ONLY

STATE OF SOUTH DAKOTA	PROJECT	SHEET NO.	TOTAL SHEETS
	PP 3245(08)	25	47

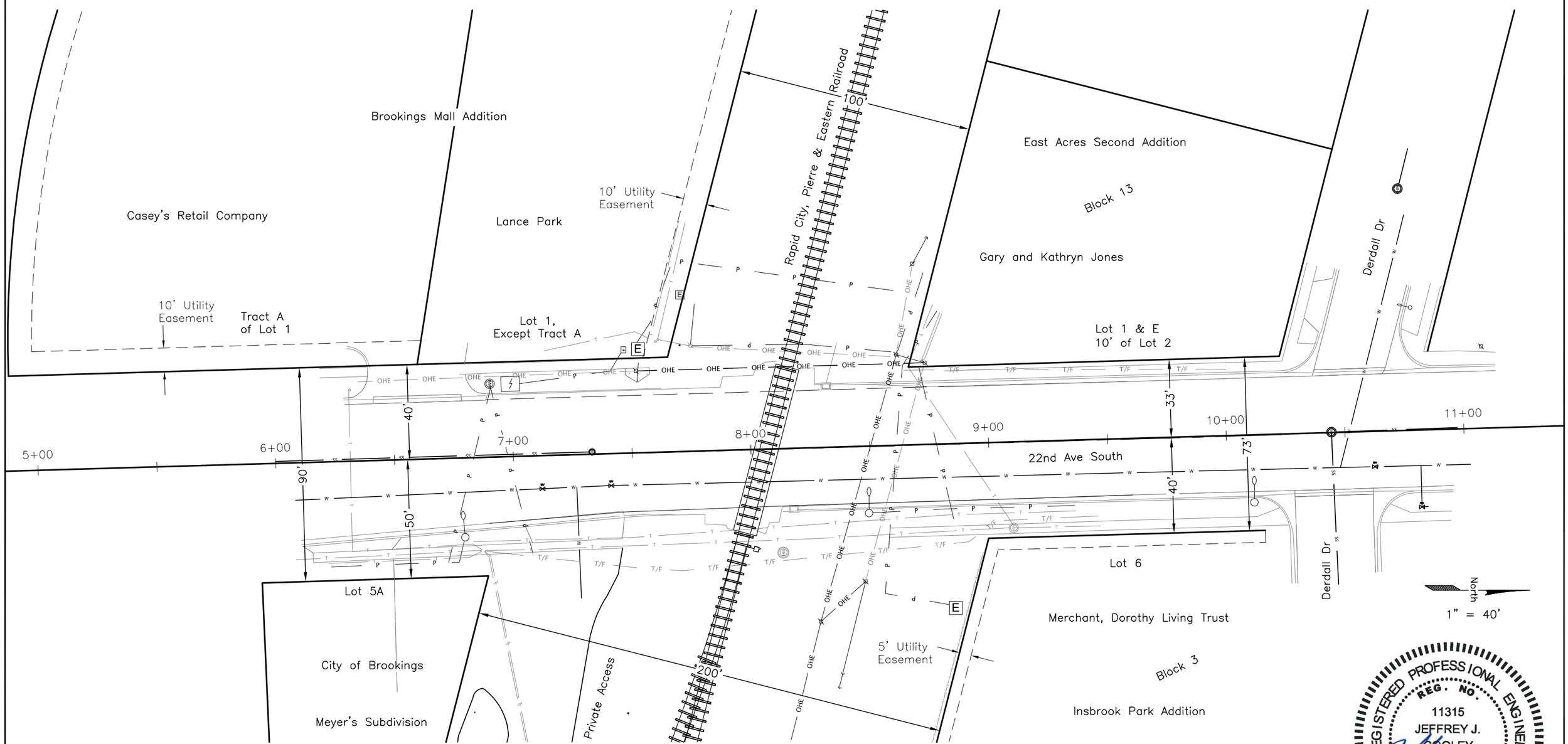

REGISTERED PROFESSIONAL ENGINEER
REG. NO. 11315
JEFFREY J. COOLEY
SOUTH DAKOTA

5-2-16

CURB AND GUTTER LAYOUT

FOR BIDDING PURPOSES ONLY

STATE OF SOUTH DAKOTA	PROJECT	SHEET NO.	TOTAL SHEETS
	PP 3245(08)	26	47

1 6+89.19–26.68'L
Begin Str C & G
Match Existing
TC Elev. 1675.24±

1A 7+64.20–26.67'L
Curb Grade Change
Begin Taper for Driveway (Top)
TC Elev. 1677.11

1B 7+68.33–26.67'L
End Taper (Bottom)
TC Elev. 1676.75

1C 7+80.33–26.67'L
Begin Taper for Driveway (Bottom)
TC Elev. 1676.99

1D 7+84.44–26.67'L
End Taper (Top)
TC Elev. 1677.62

2 7+90.28–26.67'L
Curb Grade Change
TC Elev. 1677.76

3 8+01.28–29.17'L
Center Detectable Warning

4 8+02.28–26.66'L
Curb Grade Change
Begin 6' Taper (Top)
TC Elev. 1677.96

5 8+08.28–26.66'L
End Str C & G
End 6' Taper (Bottom)
Match Existing RR Crossing
TC Elev. 1677.64±

6 8+18.66–26.66'L
Begin Str C & G
Begin 6' Taper (Bottom)
Match Existing RR Crossing
TC Elev. 1677.72±

7 8+25.37–26.66'L
End 6' Taper (Top)
TC Elev. 1678.08

8 8+34.61–29.16'L
Center Detectable Warning

9 8+32.77–26.66'L
See Storm Sewer Layout
TC Elev. 1678.12

10 8+82.07–26.65'L
End Str C & G
Match Existing
TC Elev. 1678.48±

25 7+35.70
TC Elev. 1676.85

26 7+36.70–2.00'L
Begin Str Tipout C & G
TC Elev. 1676.92

27 7+67.32–2.00'L
Grade Change
TC Elev. 1677.50

28 7+83.32–2.00'L
Curb Grade Change
TC Elev. 1677.81

29 7+89.23–2.00'L
End Str Tipout C & G
TC Elev. 1677.92

30 8+02.61–4.50'L
FG Elev. 1677.38

31 8+13.01–4.50'L
FG Elev. 1677.46

32 8+23.39–2.00'L
Begin Str Tipout C & G
TC Elev. 1677.90

33 8+29.72–2.00'L
Curb Grade Change
TC Elev. 1678.01

34 8+91.39–2.00'L
End Str Tipout C & G
TC Elev. 1679.35

35 8+92.39–1.00'L
TC Elev. 1679.37

51 8+47.88–26.66'L
See Storm Sewer Layout
TC Elev. 1678.22

NOTE: All Curb & Gutter shown on this sheet is Standard 30" unless otherwise specified. All Sidewalk is 5.0' except where Contractor shall match existing Sidewalk width. All Curb & Gutter station/offsets reference TC.

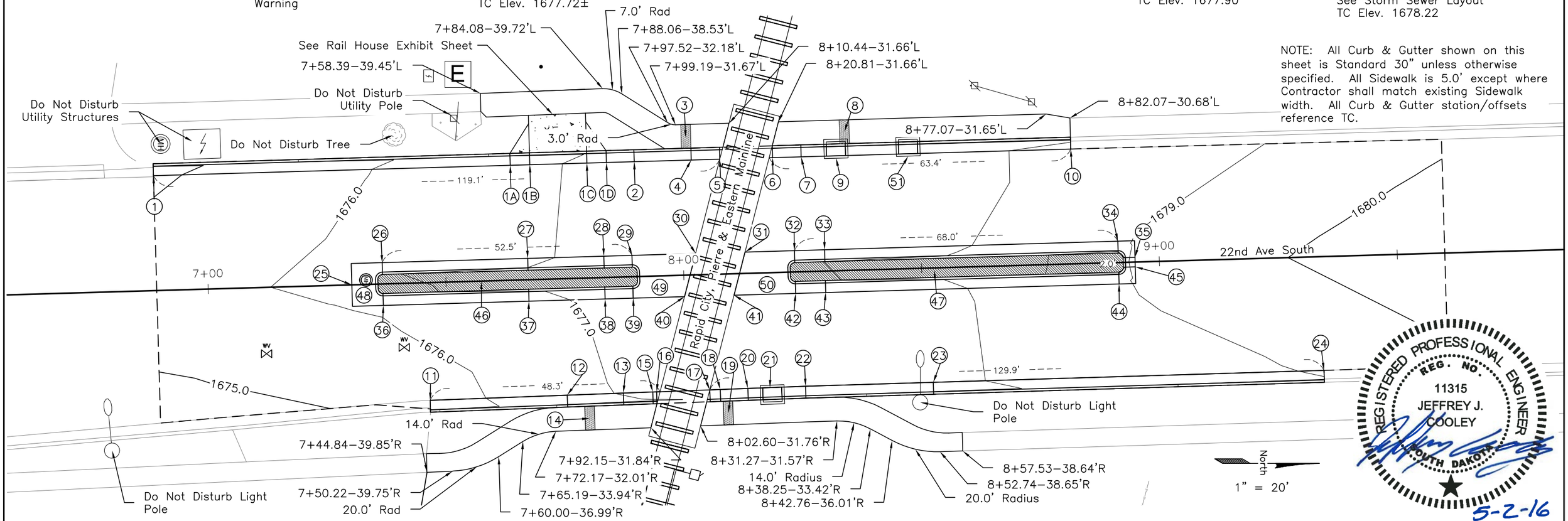

11 7+45.97–27.09'R
Begin Str C & G
Match Existing
TC Elev. 1675.93±

12 7+74.79–26.99'R
Curb Grade Change
TC Elev. 1677.09

13 7+86.59–26.88'R
Begin 7' Taper (Top)
TC Elev. 1677.42

14 7+79.39–29.45'R
Center Detectable Warning

15 7+92.79–26.84'R
Curb Grade Change
TC Elev. 1677.07

16 7+93.59–26.83'R
End Str C & G
End 7' Taper (Bottom)
Match Existing RR Crossing
TC Elev. 1677.03±

17 8+04.76–26.75'R
Begin Str C & G
Begin 8' Taper (Bottom)
Match Existing RR Crossing
TC Elev. 1677.11±

18 8+06.97–26.71'R
Curb Grade Change
TC Elev. 1677.24

19 8+08.51–29.21'R
Center Detectable Warning

20 8+12.76–26.68'R
End 8' Taper (Top)
TC Elev. 1677.62

21 8+17.89–26.64'R
See Storm Sewer Layout
TC Elev. 1677.72

22 8+24.90–26.58'R
Curb Align. Change
Curb Grade Change
TC Elev. 1677.80

23 8+51.76–26.54'R
Curb Grade Change
TC Elev. 1678.22

24 9+33.92–26.42'R
End Str C & G
Match Existing
TC Elev. 1679.47±

36 7+36.70–2.00'R
Begin Str Tipout Curb
TC Elev. 1676.73

37 7+67.32–2.00'R
Curb Grade Change
TC Elev. 1677.42

38 7+83.32–2.00'R
Curb Grade Change
TC Elev. 1677.77

39 7+89.23–2.00'R
End Str Tipout C & G
TC Elev. 1677.85

40 8+00.02–4.50'R
FG Elev. 1677.28

41 8+10.43–4.50'R
FG Elev. 1677.36

42 8+23.39–2.00'R
Begin Str Tipout C & G
TC Elev. 1677.87

43 8+29.72–2.00'R
Curb Grade Change
TC Elev. 1677.92

44 8+91.39–2.00'R
End Str Tipout C & G
TC Elev. 1679.36

45 8+92.39–1.00'R
TC Elev. 1679.38

46 7+35.70–2.00'L/R to
7+90.23–2.00'L/R
4" Barrier Type Colored
Median PCC Pavement
(24.14 SqYd)

47 8+22.39–2.00'L/R to
8+92.39–2.00'L/R
4" Barrier Type Colored
Median PCC Pavment
(31.02 SqYds)

48 See Detail B

49 See Detail C

50 See Detail D

STATE OF SOUTH DAKOTA	PROJECT	SHEET NO.	TOTAL SHEETS
	PP 3245(08)	27	47

FOR BIDDING PURPOSES ONLY

RAIL HOUSE EXHIBIT AND GRADING

1 7+82.32–92.20'L
Edge of Gravel
Match Existing Elevation
Elev. 1677.93±

2 7+99.62–87.23'L
Edge of Gravel
Elev. 1677.39

3 7+68.33–43.46'L
Edge of Gravel
Match Existing Elevation
Elev. 1677.15±

4 7+68.33–39.56'L
Edge of Gravel
Match Sidewalk Elevation
Elev. 1677.16

5 7+85.92–39.49'L
Edge of Gravel
Match Sidewalk Elevation
Elev. 1677.40

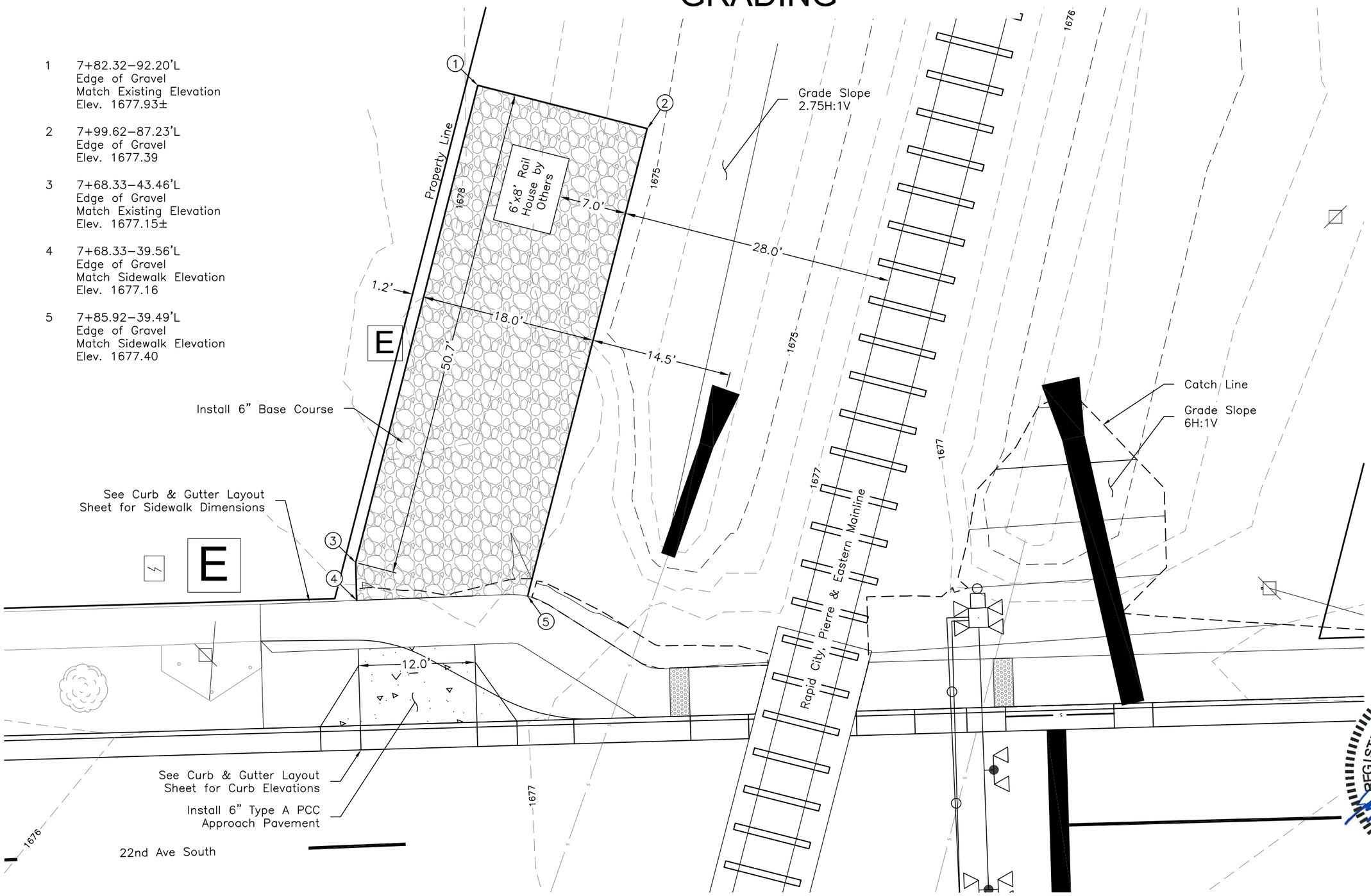

REGISTERED PROFESSIONAL ENGINEER
REG. NO. 11315
JEFFREY J. COOLEY
SOUTH DAKOTA

5-2-16

STATE OF SOUTH DAKOTA	PROJECT	SHEET NO.	TOTAL SHEETS
	PP 3245(08)	28	47

FOR BIDDING PURPOSES ONLY

PAVEMENT MARKING LAYOUT

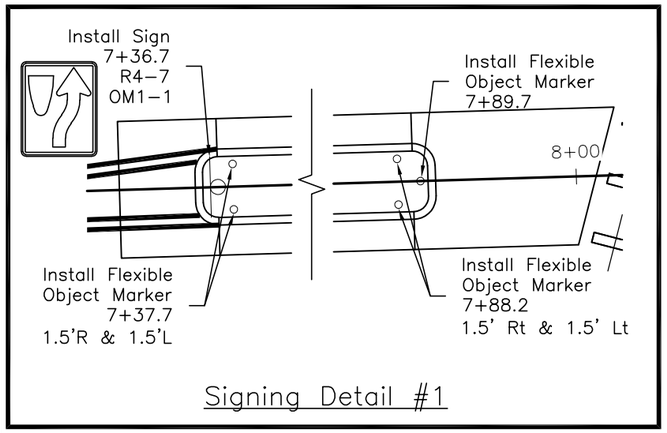

Signing Detail #1

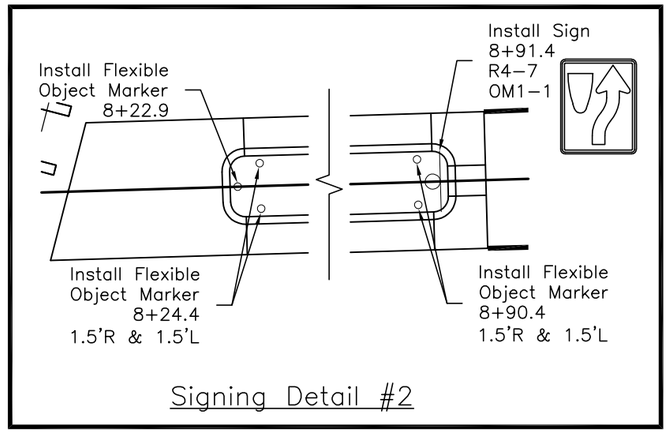

Signing Detail #2

ESTIMATE OF QUANTITIES

KEY	ITEM	UNIT	EST. QUAN.
4 W	COLD APPLIED PLASTIC PAVEMENT MARKING, 4" WHITE – 282	FT	282
4 Y	COLD APPLIED PLASTIC PAVEMENT MARKING, 4" YELLOW – 451	FT	451
24 Y	COLD APPLIED PLASTIC PAVEMENT MARKING, 24" YELLOW – 50	FT	50
RR	COLD APPLIED PLASTIC PAVEMENT MARKING, RAILROAD CROSSING	EACH	4
	GROOVE PAVEMENT FOR PAVEMENT MARKING, 4" WHITE – 282, YELLOW – 451	FT	733
24 Y	GROOVE PAVEMENT FOR PAVEMENT MARKING, 24" YELLOW – 50	FT	50
RR	GROOVE PAVEMENT FOR PAVEMENT MARKING, RAILROAD CROSSING	EACH	4

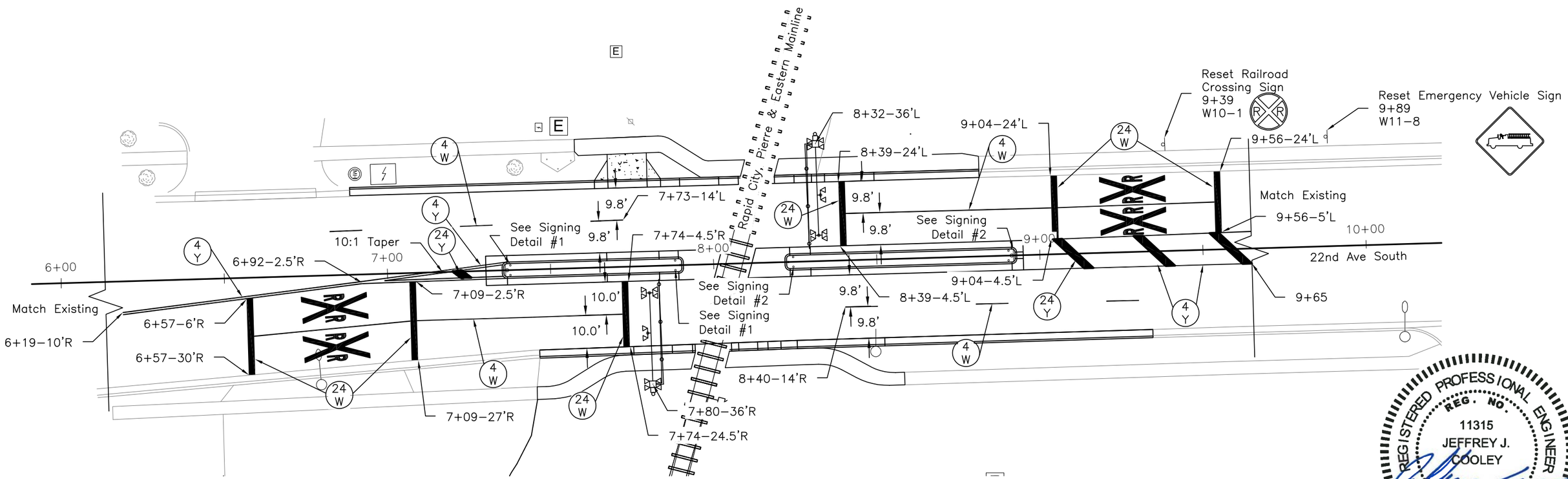

REGISTERED PROFESSIONAL ENGINEER
REG. NO.
11315
JEFFREY J.
COOLEY
SOUTH DAKOTA

5-2-16

STORM SEWER LAYOUT

FOR BIDDING PURPOSES ONLY

STATE OF SOUTH DAKOTA	PROJECT	SHEET NO.	TOTAL SHEETS
	PP 3245(08)	29	47

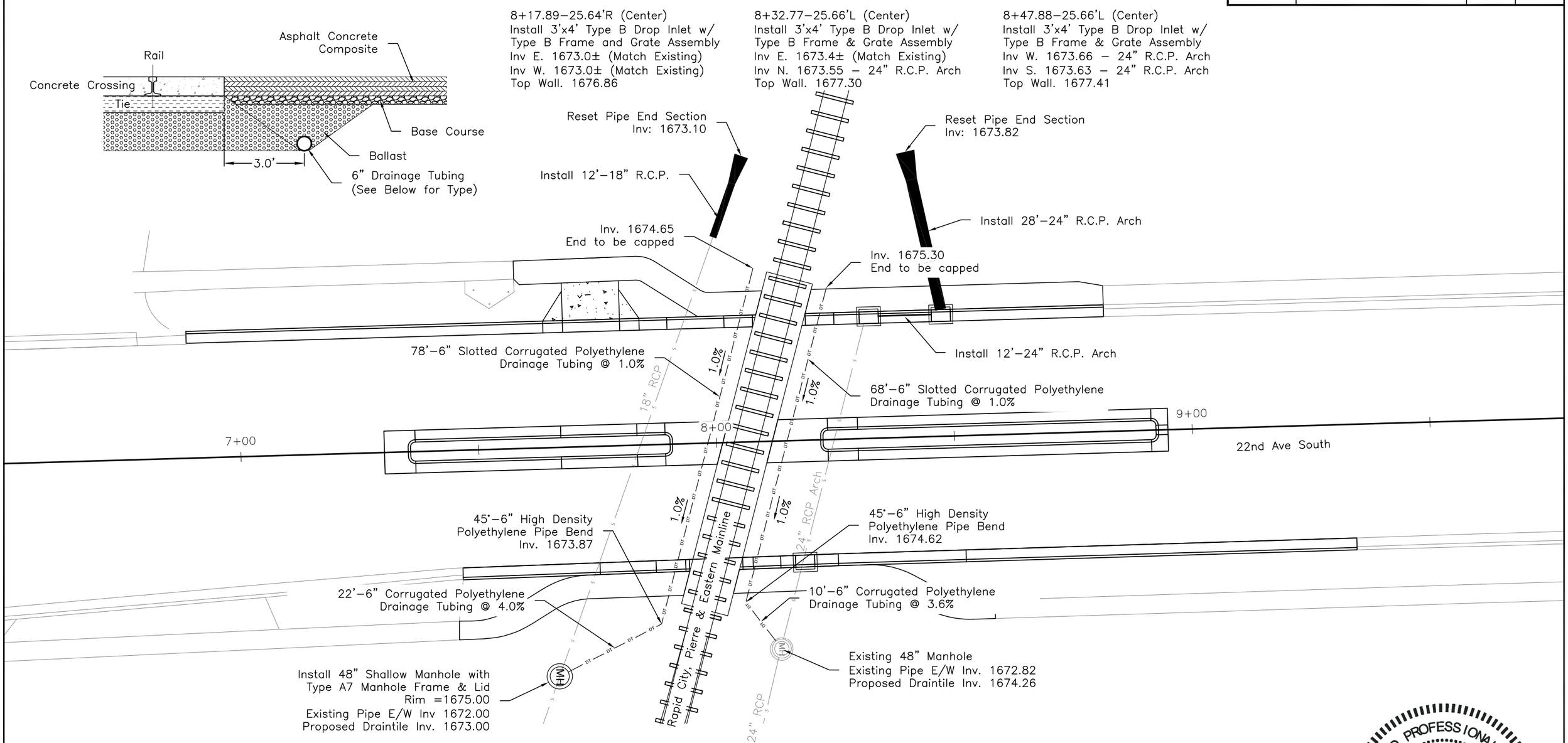

Note: Draintile shall typically be placed 3' minimum from edge of timber cross tie and concrete panel.

Note: The Contractor shall field verify all invert elevations prior to any storm sewer installation.

REGISTERED PROFESSIONAL ENGINEER
REG. NO. 11315
JEFFREY J. COOLEY
SOUTH DAKOTA

5-2-16

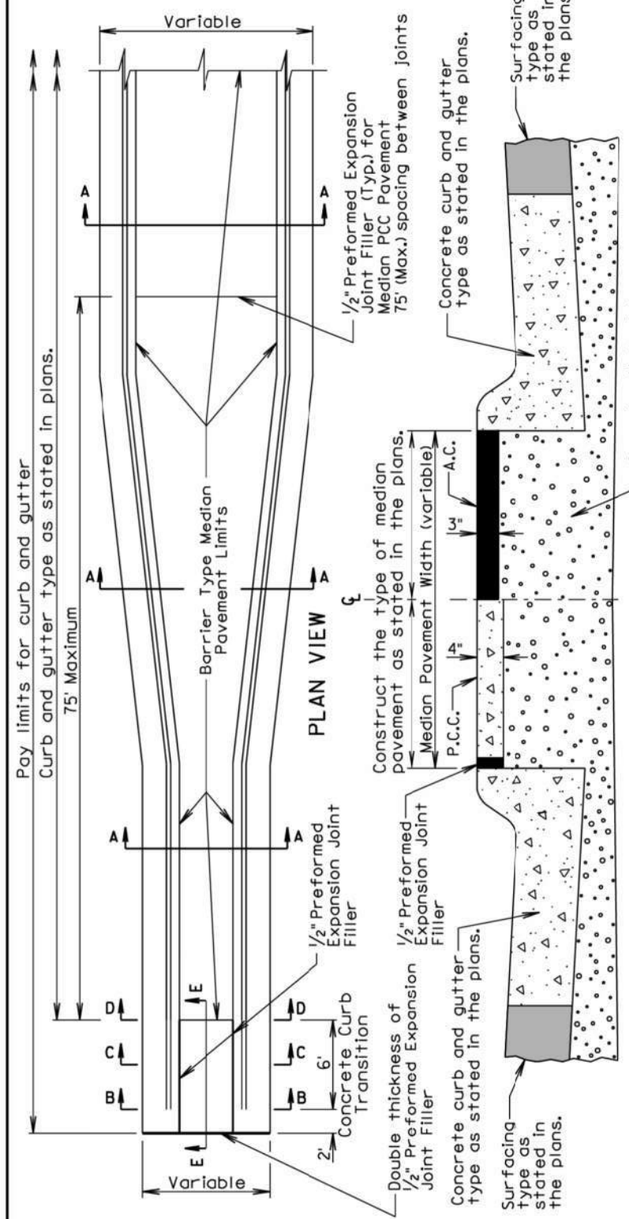

GENERAL NOTES:

Necessary excavation for construction of barrier type PCC and asphalt concrete median pavements and excavation for granular material will be measured and paid for as "Unclassified Excavation".

Concrete for barrier type median PCC pavement shall comply with the requirements of the Specifications for Class M6 Concrete. One-half inch expansion joint filler shall be placed transversely in the median PCC pavement at a maximum spacing of 75'. Where median PCC pavement is wider than 8', a longitudinal joint shall be sawed or grooved along the centerline of the median PCC pavement. Where the median PCC pavement is 4' or narrower and at width transitions, contraction joints shall be sawed or grooved at spacings as approved by the Engineer. All other contraction joints shall be sawed in square sections. All joints shall be sawed or grooved to a depth of 1/3 the thickness of the median PCC pavement.

All costs for labor, materials, and incidentals necessary for construction of the barrier type median pavement shall be incidental to the contract unit price per square yard for "Barrier Type Median PCC Pavement" or "Barrier Type Median Asphalt Concrete Pavement".

All costs for labor, materials, and incidentals necessary for construction of the 6' concrete curb transition (See Sections B-B, C-C, and D-D) and the adjacent 8" thick concrete (See Section E-E) shall be incidental to the contract unit price per foot for the corresponding curb and gutter bid item.

Granular material shall be paid for at the contract unit price for the respective granular material bid item.

June 26, 2015

Published Date: 1st Qtr. 2016	SDDOT	BARRIER TYPE MEDIAN PAVEMENT	PLATE NUMBER 380.22
			Sheet 1 of 2

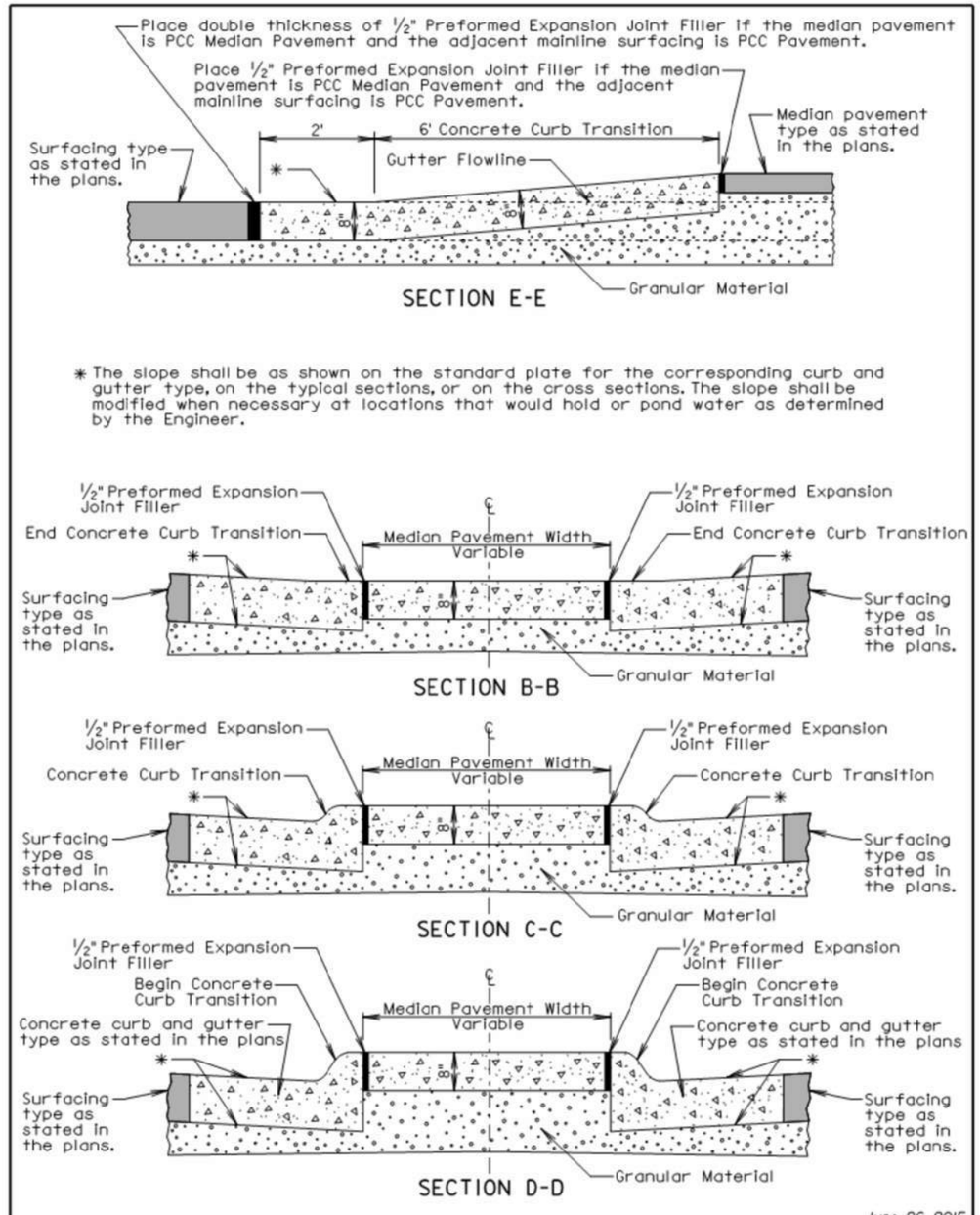

June 26, 2015

Published Date: 1st Qtr. 2016	SDDOT	BARRIER TYPE MEDIAN PAVEMENT	PLATE NUMBER 380.22
			Sheet 2 of 2

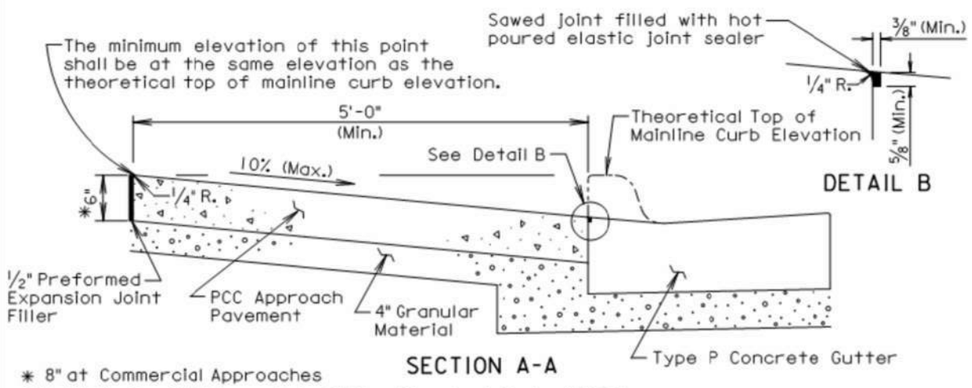

* 8" at Commercial Approaches

** Width for 6" high curb is 6' (See Standard Plate 650.35)

*** Within these areas, the surface of the type A PCC approach pavement shall be sloped transitionally as approved by the Engineer.

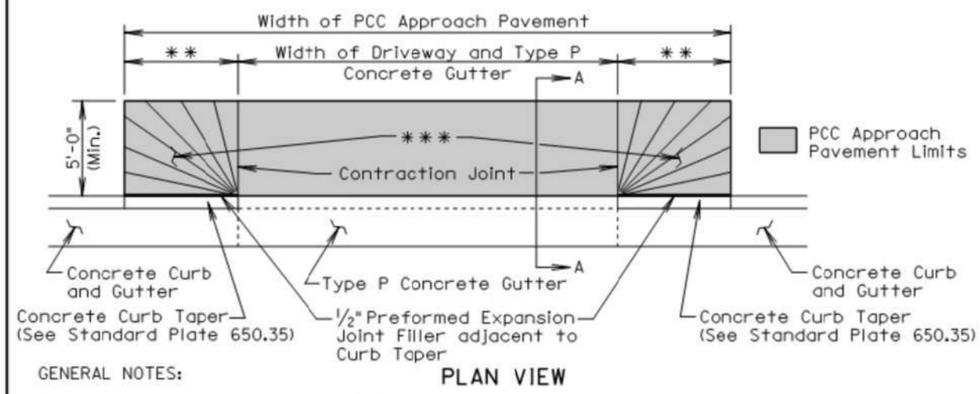

PLAN VIEW

GENERAL NOTES:

The concrete for the type A PCC approach pavement and adjacent driveway shall comply with the requirements of the Specifications for class M6 concrete unless otherwise stated in the plans.

Contraction joints in the type A PCC approach pavement shall be 1½ inches deep if formed in the fresh concrete using a suitable grooving tool. If a saw is used to cut the contraction joints, then the depth of the joint shall be at least ¼ the thickness of the approach pavement. Additional contraction joints not shown in the Plan View shall be spaced as follows:

One joint at the center of the approach for driveways 16' to 24' wide.
Two joints spaced at equal intervals for driveways greater than 24' to 40' wide.

All costs for furnishing and placing the type A PCC approach pavement and constructing the expansion and contraction joints including labor, equipment, and materials including the earthen backfill shall be incidental to the contract unit price per square yard for the corresponding PCC Approach Pavement bid item.

All costs for excavation required for placing the type A PCC approach pavement and granular material shall be incidental to the contract unit price per cubic yard for "Unclassified Excavation". All costs for furnishing and placing the granular material shall be incidental to the contract unit price per ton for the corresponding granular material bid item.

June 26, 2015

Published Date: 1st Qtr. 2016	SDDOT	TYPE A PCC APPROACH PAVEMENT	PLATE NUMBER 380.40
			Sheet 1 of 1

TOLERANCES IN DIMENSIONS

Diameter: ±1.5% for 24" Dia. or less and ±1% or ⅜" whichever is more for 27" Dia. or greater.
Diameters at joints: ± 3/16" for 30" Dia. or less and ± ¼" for 36" or greater.
Length of joint (J): ± ¼".
Wall thickness (T): not less than design T by more than 5% or 3/16", whichever is greater.
Laying length: shall not underrun by more than ½".

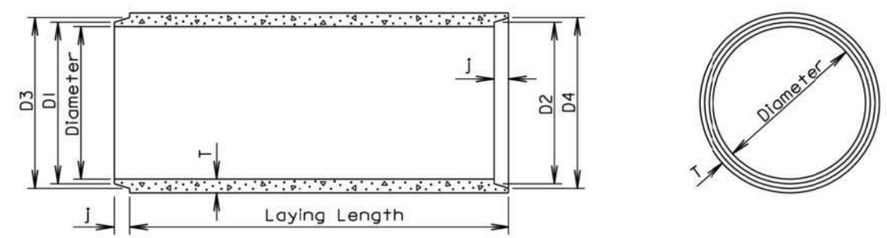

LONGITUDINAL SECTION

END VIEW

GENERAL NOTES:

Construction of R.C.P. shall conform to the requirements of Section 990 of the Specifications.

Not more than 2 four-foot sections shall be permitted near the ends of any culvert. Four-foot lengths shall be used only to secure the required length of culvert.

Diam. (in.)	Approx. Wt. /Ft. (lb.)	T (in.)	J (in.)	D1 (in.)	D2 (in.)	D3 (in.)	D4 (in.)
12	92	2	1¾	13¼	13⅝	13⅞	14¼
15	127	2¼	2	16½	16⅞	17¼	17⅝
18	168	2½	2¼	19⅝	20	20⅜	20¾
21	214	2¾	2½	22⅞	23¼	23¾	24⅛
24	265	3	2¾	26	26⅜	27	27⅜
27	322	3¼	3	29¼	29⅝	30¼	30⅝
30	384	3½	3¼	32⅜	32¾	33½	33⅞
36	524	4	3¾	38¾	39¼	40	40½
42	685	4½	4	45⅛	45⅝	46½	47
48	867	5	4½	51½	52	53	53½
54	1070	5½	4½	57⅞	58⅜	59⅜	59⅞
60	1296	6	5	64¼	64¾	66	66½
66	1542	6½	5½	70⅝	71⅛	72½	73
72	1810	7	6	77	77½	79	79½
78	2098	7½	6½	83⅜	83⅞	85⅝	86⅛
84	2410	8	7	89¾	90¼	92⅛	92⅝
90	2740	8½	7	95¾	96¼	98⅛	98⅝
96	2950	9	7	102⅛	102⅝	104½	105
102	3075	9½	7½	109	109½	111½	112
108	3870	10	7½	115½	116	118	118½

June 26, 2015

Published Date: 1st Qtr. 2016	SDDOT	REINFORCED CONCRETE PIPE	PLATE NUMBER 450.01
			Sheet 1 of 1

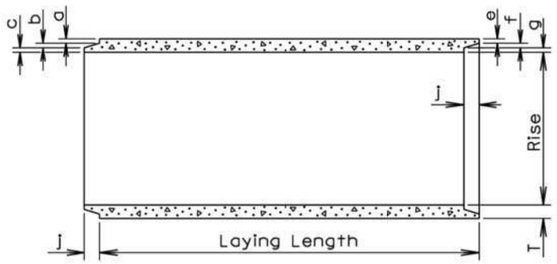

LONGITUDINAL SECTION

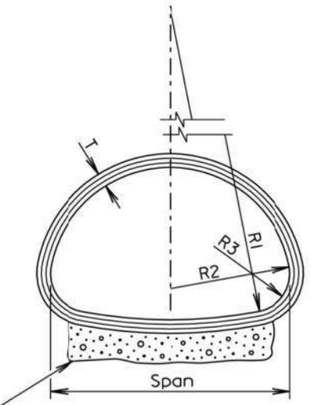

END VIEW

TOLERANCES IN DIMENSIONS

Radial dimensions at joints: ± 1/8" for 65" span or less and ± 1/4" for longer spans.
Rise and Span: ±2% of tabular values.
Length of Joint (J): ± 1/4".
Wall thickness (T): not less than design T by more than 5% or 3/16", whichever is greater.
Laying length: shall not underrun by more than 1/2".

Gravel Bedding Material shall be supplied for 102" to 169" spans. It shall be placed to a thickness of 6" (Min.) x 85% of the Span x Length of culvert and shall conform to the gradation requirements for gravel surfacing except material may be screened or may be plan provided material.

* Size (in.)	Approx. Wt./Ft. (lb.)	Rise (in.)	Span (in.)	T (in.)	a (in.)	b (in.)	c (in.)	j (in.)	e (in.)	f (in.)	g (in.)	R1 (in.)	R2 (in.)	R3 (in.)
18	170	13 1/2	22	2 1/2	1 3/8	3/8	3/4	2	1 1/8	3/8	1	27 1/2	13 3/4	5 1/4
24	320	18	28 1/2	3 1/2	1 5/8	1/2	1 3/8	3	1 3/8	1/2	1 5/8	40 11/16	14 3/4	4 5/8
30	450	22 1/2	36 1/4	4	1 13/16	5/8	1 9/16	3 1/2	1 9/16	5/8	1 13/16	51	18 3/4	6 1/8
36	600	26 5/8	43 3/4	4 1/2	2	3/4	1 3/4	4	1 3/4	3/4	2	62	22 1/2	6 1/2
42	740	31 5/16	51 1/8	4 1/2	2	3/4	1 3/4	4	1 3/4	3/4	2	73	26 1/4	7 3/4
48	890	36	58 1/2	5	2 1/4	3/4	2	5	2	3/4	2 1/4	84	30	8 7/8
54	1100	40	65	5 1/2	2 1/2	3/4	2 1/4	5	2 1/4	3/4	2 1/2	92 1/2	33 3/8	10
60	1400	45	73 1/2	6	3 5/16	3/4	1 15/16	5	2 3/4	3/4	2 1/2	105	37 1/2	11
72	1900	54	88	7	3 13/16	1	2 3/16	6	3 1/4	1	2 3/4	126	45	13 5/16
84	2500	62	102	8	4 1/8	1	2 7/8	6	3 1/2	1	3 1/2	162 1/2	52	14 1/2
96	3300	78	122 3/8	9	4 1/2	1	3 1/2	7	4	1	4	218	62	20
108	4200	88	138 1/2	10	5	1	4	7	4 1/2	1	4 1/2	269	70	22
120	5100	96 7/8	154	11	5 1/2	1	4 1/2	7	5	1	5	301 3/8	78	24
132	5100	106 1/2	168 3/4	10		1	4	7	4 1/2	1	4 1/2	329	85 5/8	26 7/8

* Equivalent Diameter of Circular R. C. P.

GENERAL NOTES:

Construction of R.C.P. Arch shall conform to the requirements of Section 990 of the Specifications. Not more than 2 four-foot sections shall be permitted near the ends of any culvert. Four-foot lengths shall be used only to secure the required length of culvert.

June 26, 2015

Published Date: 1st Qtr. 2016	SDDOT	REINFORCED CONCRETE PIPE ARCH	PLATE NUMBER 450.02
			Sheet 1 of 1

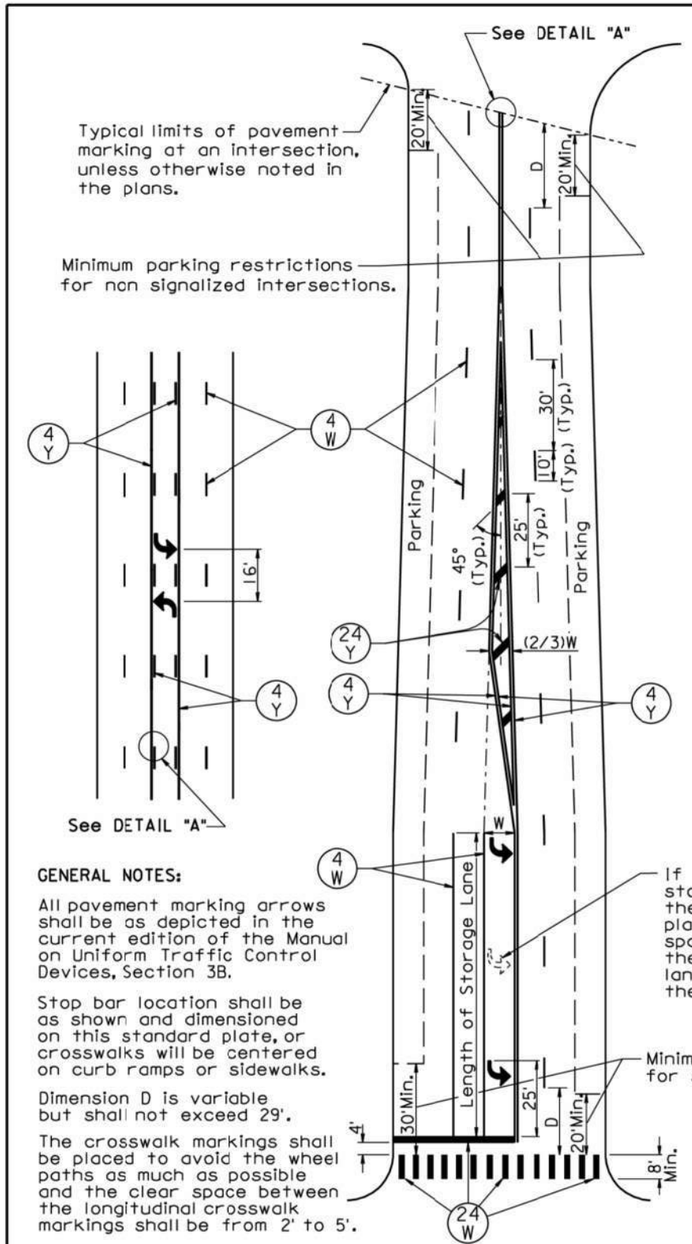

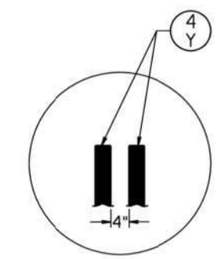

DETAIL "A"

KEY	ITEM
4 W	4" White
4 Y	4" Yellow
12 W	12" White
24 W	24" White
24 Y	24" Yellow
↱	Arrow

GENERAL NOTES:

All pavement marking arrows shall be as depicted in the current edition of the Manual on Uniform Traffic Control Devices, Section 3B.

Stop bar location shall be as shown and dimensioned on this standard plate, or crosswalks will be centered on curb ramps or sidewalks.

Dimension D is variable but shall not exceed 29'.

The crosswalk markings shall be placed to avoid the wheel paths as much as possible and the clear space between the longitudinal crosswalk markings shall be from 2' to 5'.

If more than 2 arrows per storage lane are shown, then the additional arrows shall be placed at approximately equal spaces between the arrow at the beginning of the storage lane and the arrow nearest the stop bar.

Minimum parking restrictions for signalized intersections.

September 14, 2011

Published Date: 1st Qtr. 2016	SDDOT	PAVEMENT MARKINGS FOR ADJACENT INTERSECTIONS AND CENTER TURN LANE	PLATE NUMBER 633.01
			Sheet 1 of 1

KEY	ITEM
24 W	24" White
RXR	White

Posted Speed Limit (M.P.H.)	L (Ft.)
≤ 30	100
35	100
40	125
45	175
50	250
55	325
60	400
65	475
70	550

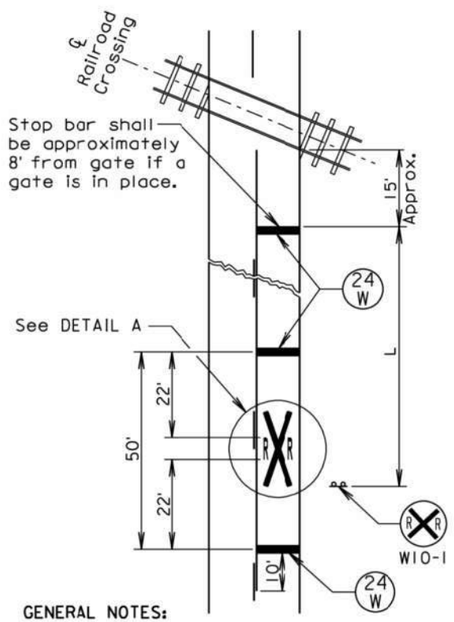

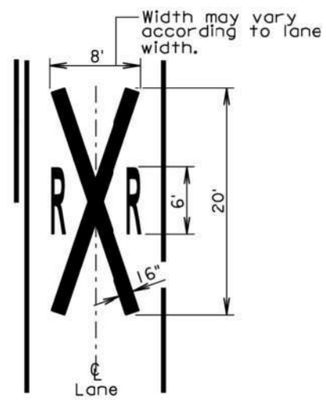

DETAIL A

GENERAL NOTES:

The railroad crossing pavement markings shall be placed symmetrically about the centerline of the railroad crossing.

When pavement markings are used, a portion of the RXR symbol shall be placed directly opposite of the advance warning sign W10-1.

On multi-lane roads the transverse bands shall extend across all approach lanes and individual RXR symbols shall be placed in each approach lane.

The railroad crossing pavement markings shall consist of all the transverse bands, stop bars, and RXR symbols.

When pavement marking paint is used for marking the railroad crossing, all costs for furnishing and painting the markings, materials, labor, and necessary equipment shall be incidental to the contract unit price per gallon for "Pavement Marking Paint, White".

When pavement marking tape is used for marking the railroad crossing, all costs for furnishing and placing the markings, materials, labor, and necessary equipment shall be incidental to the contract unit price per each for "Cold Applied Plastic Pavement Marking, Railroad Crossing".

June 26, 2013

Published Date: 1st Qtr. 2016	SDDOT	PAVEMENT MARKINGS AT RAILROAD CROSSING	PLATE NUMBER 633J0 Sheet 1 of 1

Posted Speed Prior to Work (M.P.H.)	Spacing of Advance Warning Signs (Feet) (A)	Taper Length (Feet) (L)
0 - 30	200	180
35 - 40	350	320
45 - 50	500	600

■ Channelizing Device

4 Y 4" Yellow temporary pavement marking

The standard procedure is to close on the near side of the intersection any lane that is not carried through the intersection; therefore, the left through lane is closed on the near-side approach. The LEFT LANE MUST TURN LEFT sign is placed in the median to deter through traffic from entering the left turn bay.

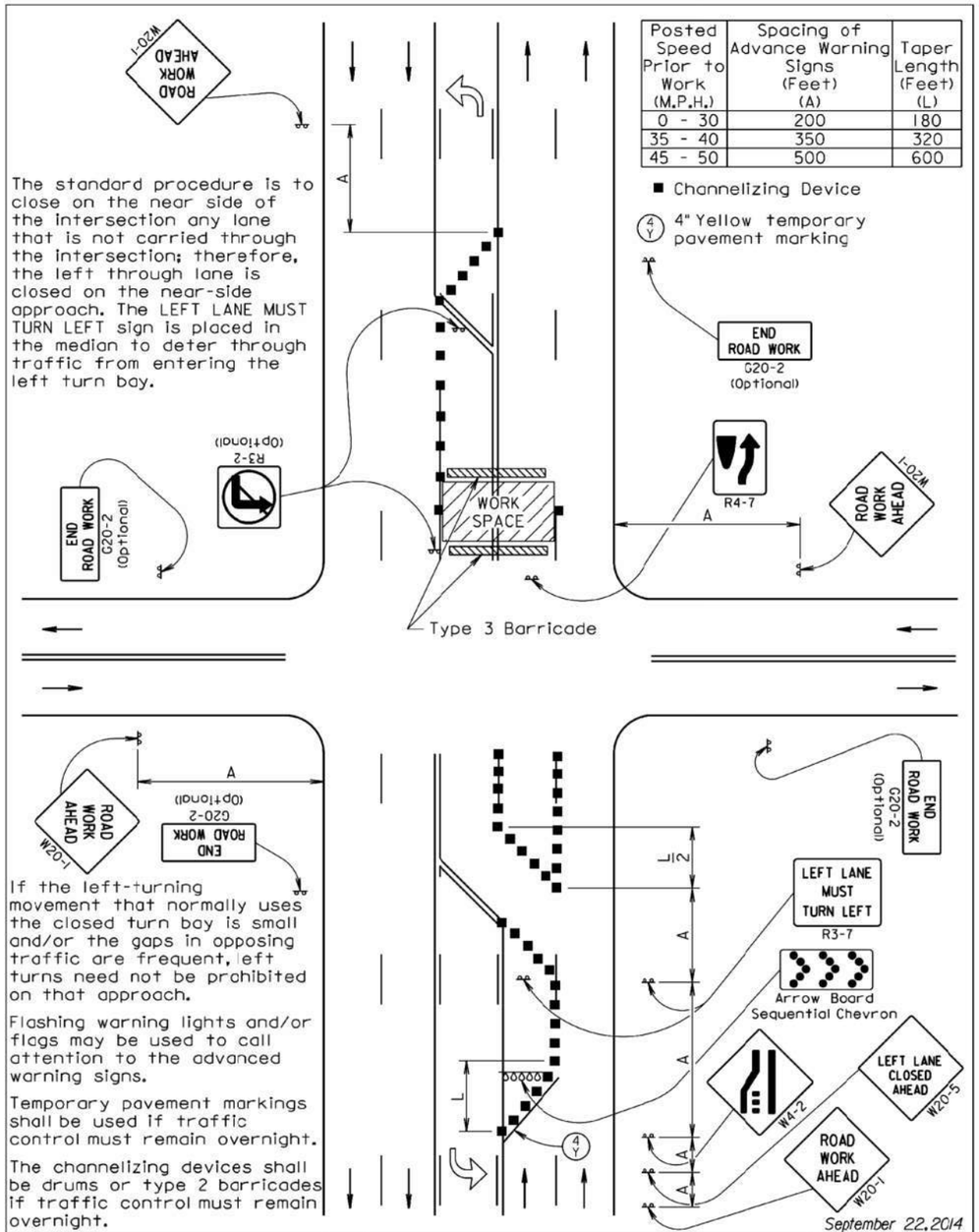

If the left-turning movement that normally uses the closed turn bay is small and/or the gaps in opposing traffic are frequent, left turns need not be prohibited on that approach.

Flashing warning lights and/or flags may be used to call attention to the advanced warning signs.

Temporary pavement markings shall be used if traffic control must remain overnight.

The channelizing devices shall be drums or type 2 barricades if traffic control must remain overnight.

September 22, 2014

Published Date: 2nd Qtr. 2016	SDDOT	GUIDES FOR TRAFFIC CONTROL DEVICES MULTIPLE LANE CLOSURES AT INTERSECTION	PLATE NUMBER 634.45 Sheet 1 of 1

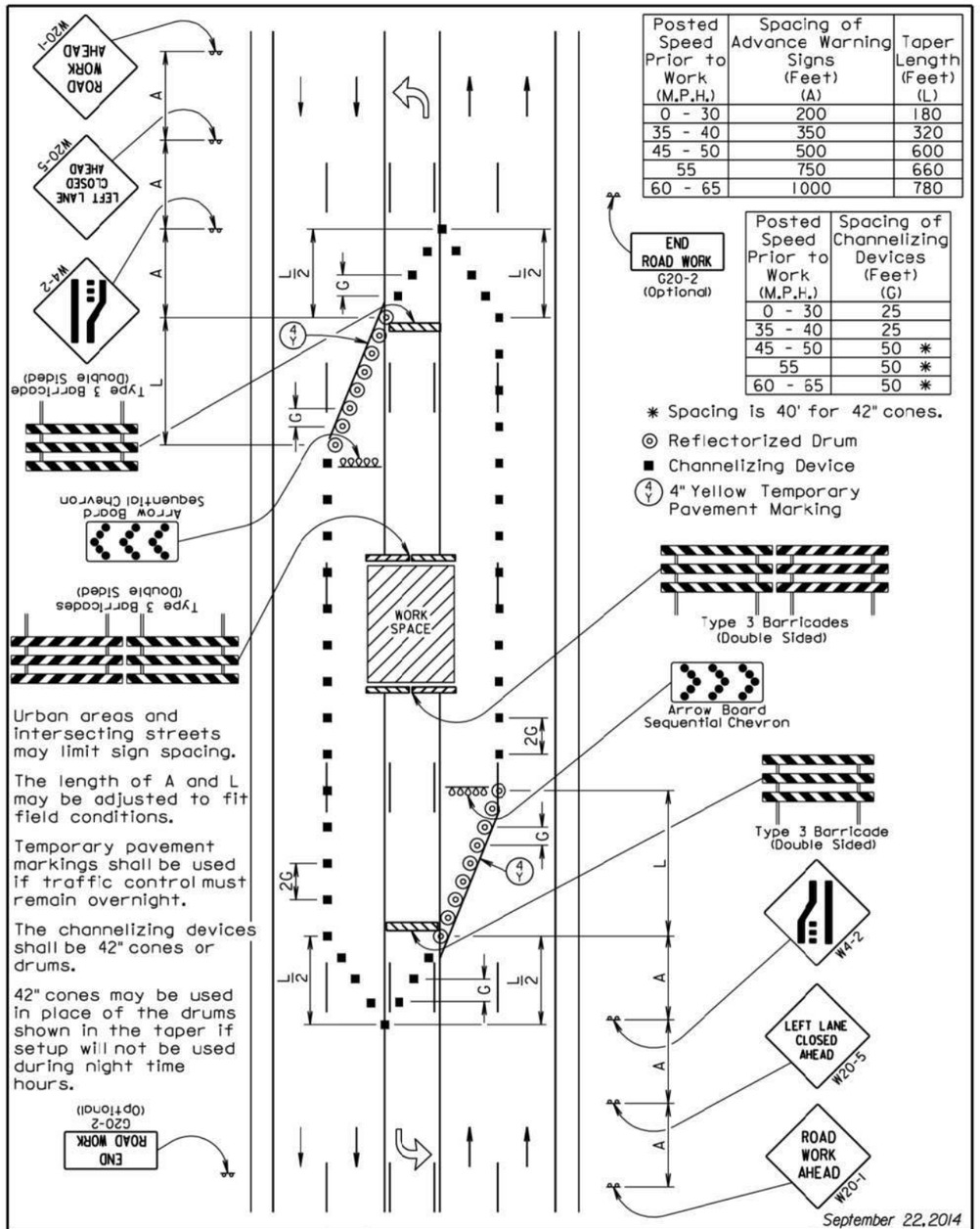

Posted Speed Prior to Work (M.P.H.)	Spacing of Advance Warning Signs (Feet) (A)	Taper Length (Feet) (L)
0 - 30	200	180
35 - 40	350	320
45 - 50	500	600
55	750	660
60 - 65	1000	780

END ROAD WORK
G20-2
(Optional)

Posted Speed Prior to Work (M.P.H.)	Spacing of Channelizing Devices (Feet) (G)
0 - 30	25
35 - 40	25
45 - 50	50 *
55	50 *
60 - 65	50 *

* Spacing is 40' for 42" cones.

◎ Reflectorized Drum

■ Channelizing Device

(4 Y) 4" Yellow Temporary Pavement Marking

Urban areas and intersecting streets may limit sign spacing.

The length of A and L may be adjusted to fit field conditions.

Temporary pavement markings shall be used if traffic control must remain overnight.

The channelizing devices shall be 42" cones or drums.

42" cones may be used in place of the drums shown in the taper if setup will not be used during night time hours.

September 22, 2014

Published Date: 1st Qtr. 2016

SDDOT

GUIDES FOR TRAFFIC CONTROL DEVICES
5-LANE, CENTER 3 LANES CLOSED

PLATE NUMBER 634.57

Sheet 1 of 1

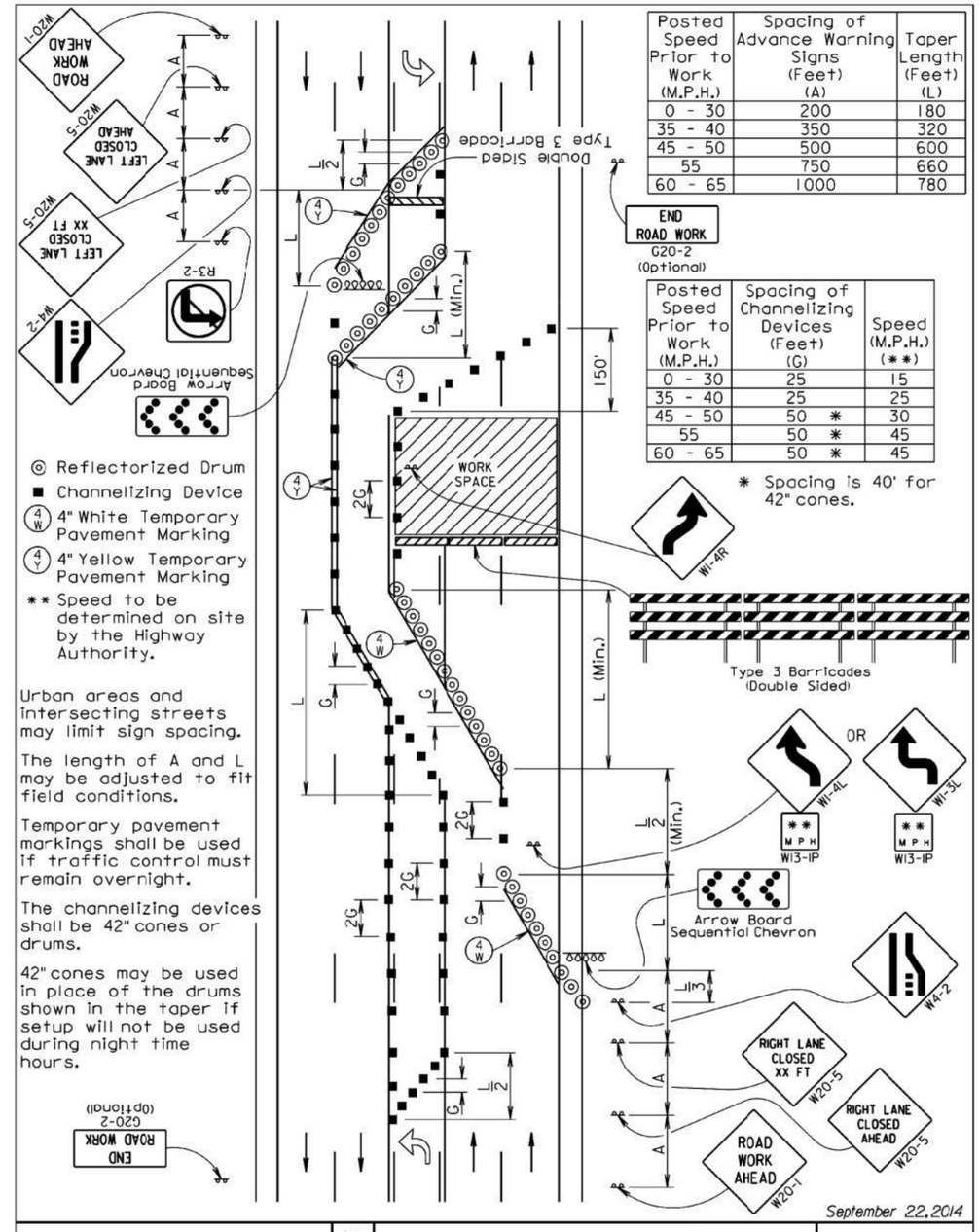

Posted Speed Prior to Work (M.P.H.)	Spacing of Advance Warning Signs (Feet) (A)	Taper Length (Feet) (L)
0 - 30	200	180
35 - 40	350	320
45 - 50	500	600
55	750	660
60 - 65	1000	780

END ROAD WORK
G20-2
(Optional)

Posted Speed Prior to Work (M.P.H.)	Spacing of Channelizing Devices (Feet) (G)	Speed (M.P.H.) (**)
0 - 30	25	15
35 - 40	25	25
45 - 50	50 *	30
55	50 *	45
60 - 65	50 *	45

* Spacing is 40' for 42" cones.

◎ Reflectorized Drum

■ Channelizing Device

(4 W) 4" White Temporary Pavement Marking

(4 Y) 4" Yellow Temporary Pavement Marking

** Speed to be determined on site by the Highway Authority.

Urban areas and intersecting streets may limit sign spacing.

The length of A and L may be adjusted to fit field conditions.

Temporary pavement markings shall be used if traffic control must remain overnight.

The channelizing devices shall be 42" cones or drums.

42" cones may be used in place of the drums shown in the taper if setup will not be used during night time hours.

September 22, 2014

Published Date: 2nd Qtr. 2016

SDDOT

GUIDES FOR TRAFFIC CONTROL DEVICES
5-LANE, 3 LANES CLOSED ONE SIDE

PLATE NUMBER 634.59

Sheet 1 of 1

FOR BIDDING PURPOSES ONLY

STATE OF SOUTH DAKOTA	PROJECT	SHEET NO.	TOTAL SHEETS
	PP 3245(08)	35	47

Posted Speed Prior to Work (M.P.H.)	Spacing of Advance Warning Signs (Feet) (A)	Taper Length (Feet) (L)	Spacing of Channelizing Devices (Feet) (G)
0 - 30	200	180	25
35 - 40	350	320	25
45 - 50	500	600	50 *
55	750	660	50 *
60 - 65	1000	780	50 *

* Spacing is 40' for 42" cones.

◎ Reflectorized Drum

■ Channelizing Device

(4 W) 4" White Temporary Pavement Marking

Urban areas and intersecting streets may limit sign spacing.

The length of A and L may be adjusted to fit field conditions.

Temporary pavement markings shall be used if traffic control must remain overnight.

The channelizing devices shall be 42" cones or drums.

42" cones may be used in place of the drums shown in the taper if setup will not be used during night time hours.

Additional channelizing devices at 4' spacing may be needed to control traffic entering and leaving intersections.

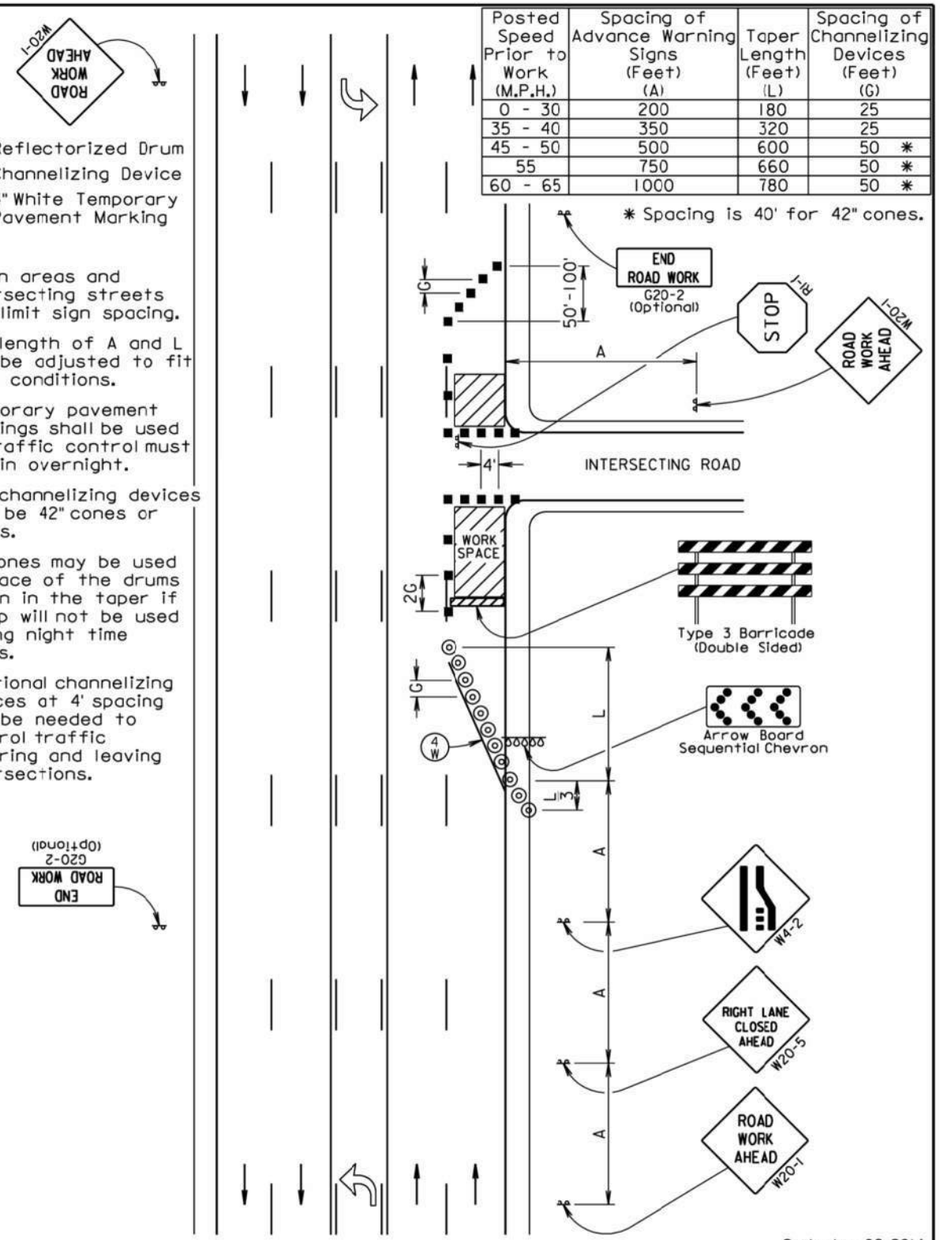

September 22, 2014

Published Date: 1st Qtr. 2016

SDDOT

GUIDES FOR TRAFFIC CONTROL DEVICES
5-LANE, OUTSIDE LANE CLOSED

PLATE NUMBER 634.60

Sheet 1 of 1

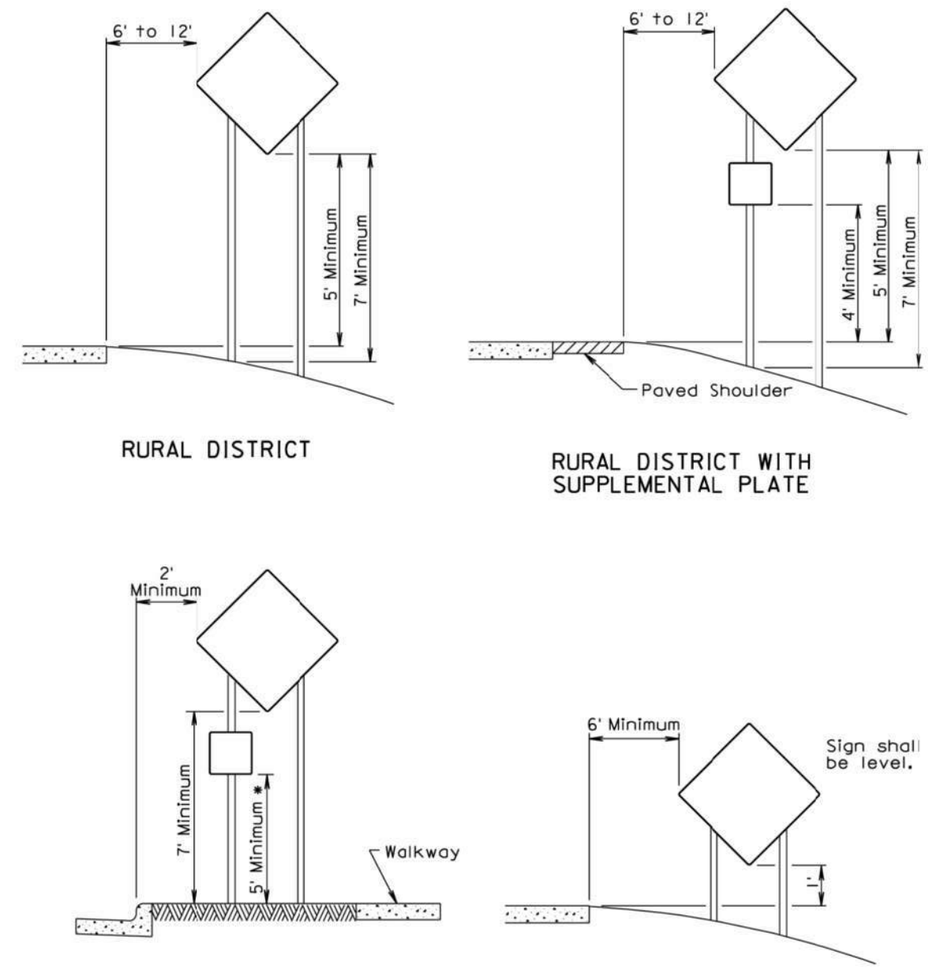

* If the bottom of supplemental plate is mounted lower than 7 feet above a pedestrian walkway, the supplemental plate should not project more than 4" into the pedestrian facility.

September 22, 2014

Published Date: 1st Qtr. 2016

SDDOT

CRASHWORTHY SIGN SUPPORTS
(Typical Construction Signing)

PLATE NUMBER 634.85

Sheet 1 of 1

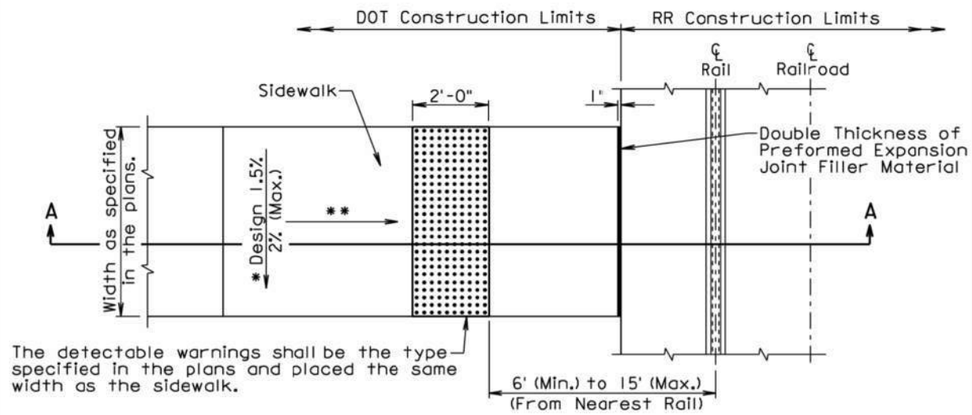

PLAN VIEW
(Railroad Crossing Not Skewed)

*The cross slope of the sidewalk shall not be steeper than 2%. Plans are designed using a 1.5% cross slope unless stated otherwise in the plans.

**If the sidewalk is curbside, then the surface of the curbside sidewalk shall match the slope of the curb transition. The longitudinal slope of the sidewalk and curb transition, where the sidewalk transitions to the railroad crossing elevation, is designed at 4.5% and shall not be steeper than 5% unless stated otherwise in the plans.

**If there is a boulevard sidewalk, then the curb and gutter transition shall be in accordance with Standard Plate 650.35. The longitudinal slope of the sidewalk, where the sidewalk transitions to the railroad crossing elevation, is designed at 4.5% and shall not be steeper than 5% unless stated otherwise in the plans.

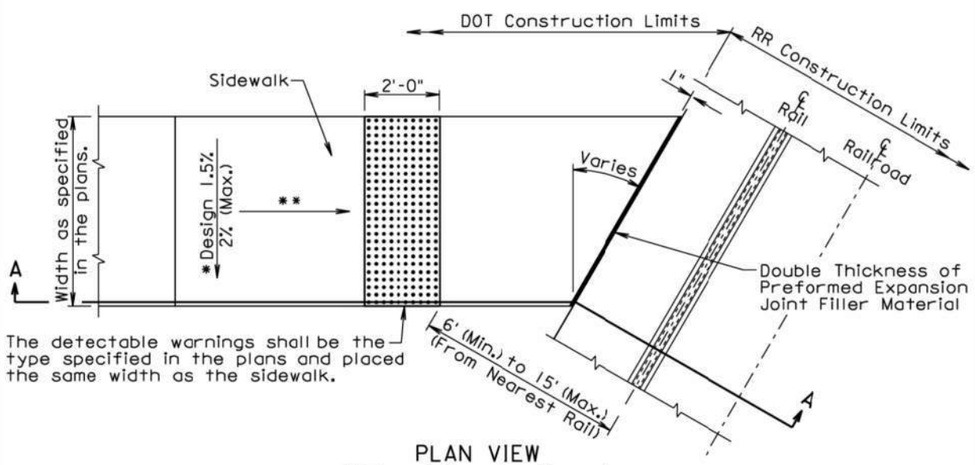

PLAN VIEW
(Railroad Crossing Skewed)

September 6, 2015

Published Date: 1st Qtr. 2016	SDDOT	SIDEWALK AND DETECTABLE WARNINGS ADJACENT TO RAILROAD CROSSING	PLATE NUMBER 651.20
			Sheet 1 of 2

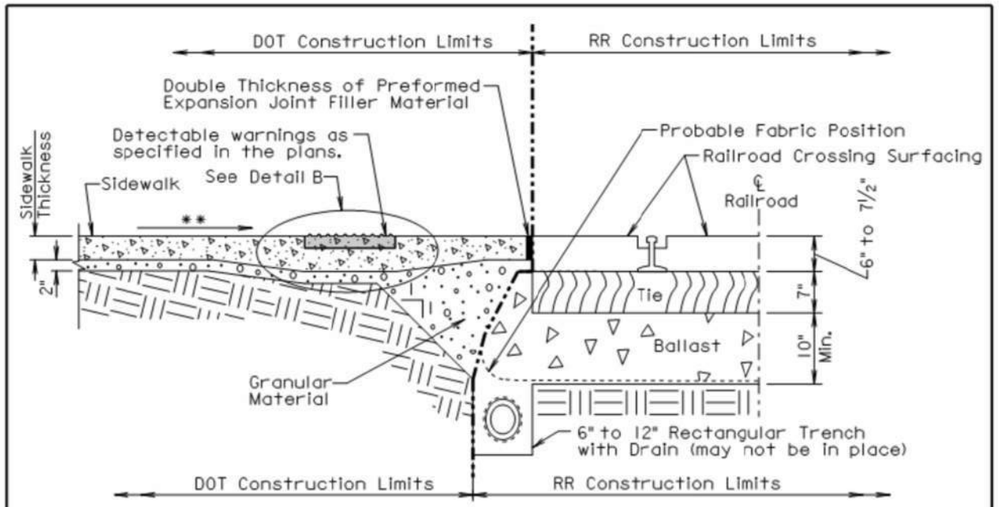

SECTION A-A

GENERAL NOTES:

For illustrative purpose only, type 1 detectable warnings are shown in the drawings.

Ballast material shall not be disturbed during construction work adjacent to the railroad crossing unless the adjacent work involves reconstruction or maintenance of the railroad crossing.

The sidewalk shall be placed at the location stated in the plans.

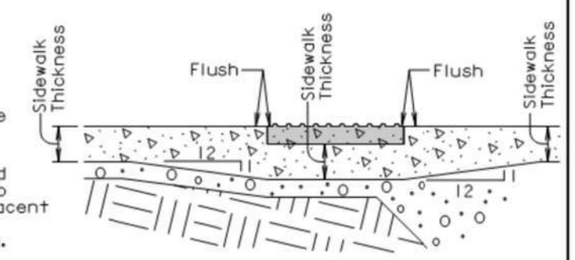

DETAIL B

Care shall be taken to ensure that the surface of the detectable warnings are clean and maintains a uniform color.

If curb and gutter is required adjacent to the railroad crossing, the curb transition shall be measured and paid for at the contract unit price per foot for the corresponding curb and gutter bid item.

The type 1 detectable warnings shall be measured to the nearest square foot. All costs for furnishing and installing the type 1 detectable warnings including labor, equipment, materials, and incidentals shall be paid for at the contract unit price per square foot for "Type 1 Detectable Warnings".

The type 2 detectable warnings shall be measured to the nearest square foot. All costs for furnishing and installing the type 2 detectable warnings including labor, equipment, and materials, including adhesive, necessary sealant or grout, and necessary grinding shall be paid for at the contract unit price per square foot for "Type 2 Detectable Warnings".

The square foot area of the detectable warnings shall be included in the measured and paid for quantity of sidewalk.

September 6, 2015

Published Date: 1st Qtr. 2016	SDDOT	SIDEWALK AND DETECTABLE WARNINGS ADJACENT TO RAILROAD CROSSING	PLATE NUMBER 651.20
			Sheet 2 of 2

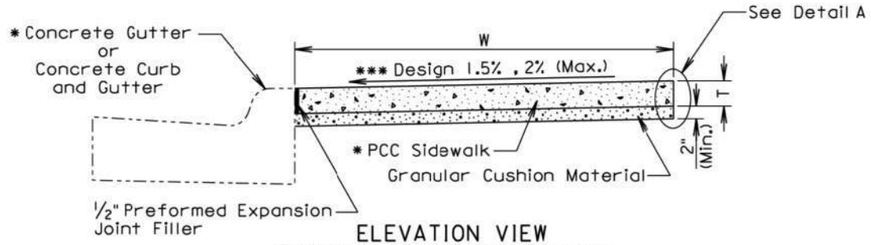

ELEVATION VIEW
(PCC Sidewalk without Boulevard)

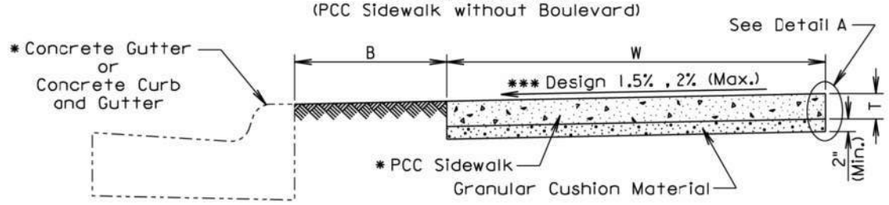

ELEVATION VIEW
(PCC Sidewalk with Boulevard)

B Width of boulevard as specified in the plans.
T Thickness of PCC sidewalk as specified in the plans.
W Width of PCC sidewalk as specified in the plans.
* Type as specified in the plans.

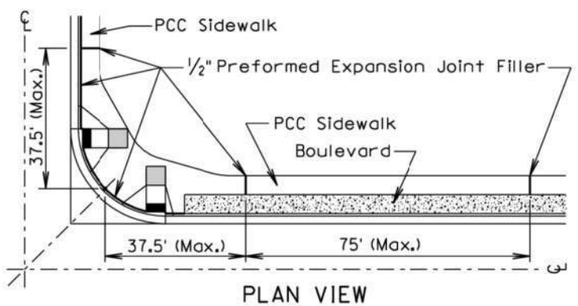

PLAN VIEW

GENERAL NOTES:

The PCC sidewalk shall be constructed in accordance with Section 651 of the Specifications.

*** The cross slope of the sidewalk is designed at 1.5% and the maximum slope allowed is 2% unless specified otherwise in the plans.

The maximum length between expansion joints in PCC sidewalk is 75 feet.

PCC sidewalk placed adjacent to intersection of roadways shall have an expansion joint placed transversely a maximum of 37.5 feet from the intersection. See PLAN VIEW.

An expansion joint in PCC sidewalk shall consist of a ½ inch thick preformed expansion joint filler material placed full depth and width of the PCC sidewalk.

** Large areas of PCC pavement adjacent to PCC sidewalk may require a different joint treatment than shown in the detail. If a different joint detail is necessary, plans will contain the joint detail and the Contractor shall construct the joint treatment in accordance with the plans.

September 6, 2015

Published Date: 1st Qtr. 2016	SDDOT	PCC SIDEWALK	PLATE NUMBER 651.75
			Sheet 1 of 2

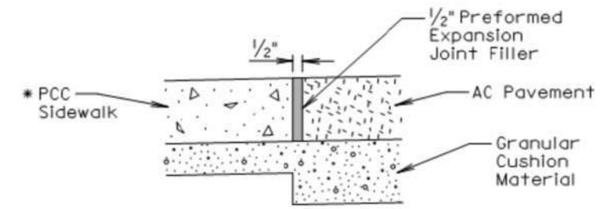

ELEVATION VIEW
(PCC sidewalk adjacent to asphalt concrete pavement)

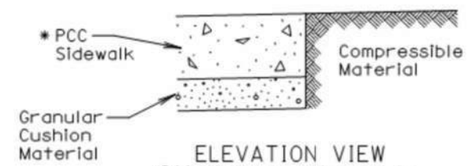

ELEVATION VIEW
(PCC sidewalk adjacent to earthen material, landscape rock, or other compressible materials)

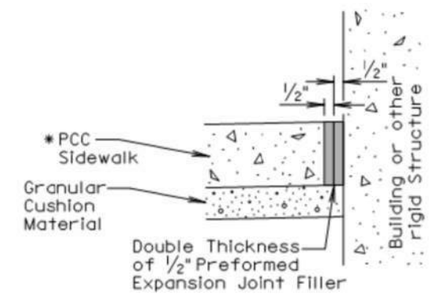

ELEVATION VIEW
(PCC sidewalk adjacent to building or other rigid structure)

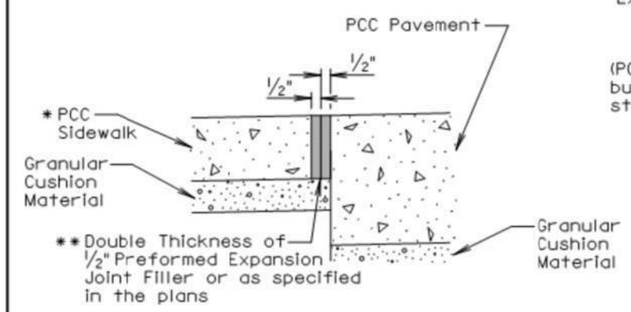

ELEVATION VIEW
(PCC sidewalk adjacent to PCC pavement)

Detail A
(Use Appropriate Detail(s))

September 6, 2015

Published Date: 1st Qtr. 2016	SDDOT	PCC SIDEWALK	PLATE NUMBER 651.75
			Sheet 2 of 2

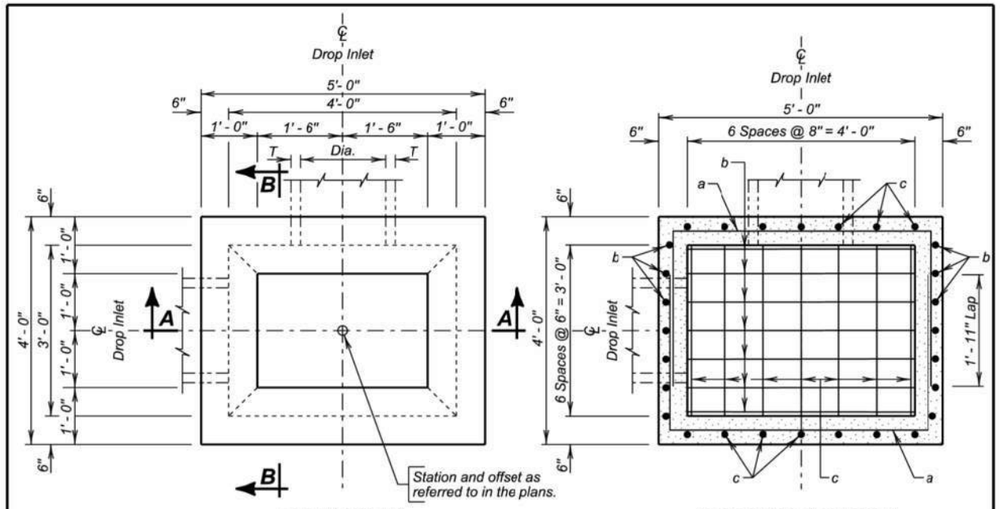

PLAN VIEW

BOTTOM SECTION

ESTIMATED QUANTITIES

ITEM	UNIT	CONSTANT QUANTITY	VARIABLE QUANTITY
✳ Class M6 Concrete	Cu. Yd.	0.72	0.30H
Reinforcing Steel	Lb.	130.93	36.54H
Frame and Grate Assembly	Each	1	———

DROP INLETS FOR 12" TO 36" DIAMETER PIPE

SPECIFICATIONS

Design Specifications: AASHTO LRFD Bridge Design Specifications, 2012 Edition.

Construction Specifications: South Dakota Standard Specifications for Roads and Bridges, Current Edition and required Provisions, Supplemental Specifications, and Special Provisions as included in the Proposal.

GENERAL NOTES:

Design Live Load: HL-93. No construction loading in excess of legal load was considered.

Reinforcing steel shall conform to ASTM A615 grade 60. The d bars shall be lapped 12 inches with the b and c bars. Cut and bend reinforcing steel as required to place pipe(s) through the drop inlet wall.

Drop inlet may be precast. If precast drop inlet details differ from this standard plate, submit a checked design done by a SD registered P.E. and shop plans to the Office of Bridge Design for approval.

✳ Reduce total quantities of concrete by the amount of concrete displaced by the pipe(s). The total quantity of concrete shall be computed to the nearest hundredth of a cubic yard. The total quantity of reinforcing steel shall be computed to the nearest pound.

Drop inlet shown may be modified by the addition or omission of connecting pipes as noted elsewhere in the plans. All pipes entering drop inlet must fit between the inside face of walls and shall not enter through the corners.

Maximum R.C.P. diameter shall not exceed 24 inches (24 inches for R. C. arch) on the 3-foot wide side and shall not exceed 36 inches (30 inches for R.C. arch) on the 4-foot wide side of the drop inlet.

The dimension of H is in feet. Maximum H is 10 feet.

PIPE DISPLACEMENT REDUCTIONS

	Diameter (Inches)	Wall T (Inches)	Class M6 Concrete (Cu. Yd.)
R.C.P.	12	2	0.03
	15	2 ¼	0.04
	18	2 ½	0.05
	24	3	0.09
	30	3 ½	0.14
	36	4	0.20
R.C. ARCH	18	2 ½	0.05
	24	3 ½	0.09
	30	4	0.14

December 16, 2015

Published Date: 1st Qtr. 2016

SDDOT

3' X 4' TYPE B
REINFORCED CONCRETE DROP INLET

PLATE NUMBER 670.02

Sheet 1 of 2

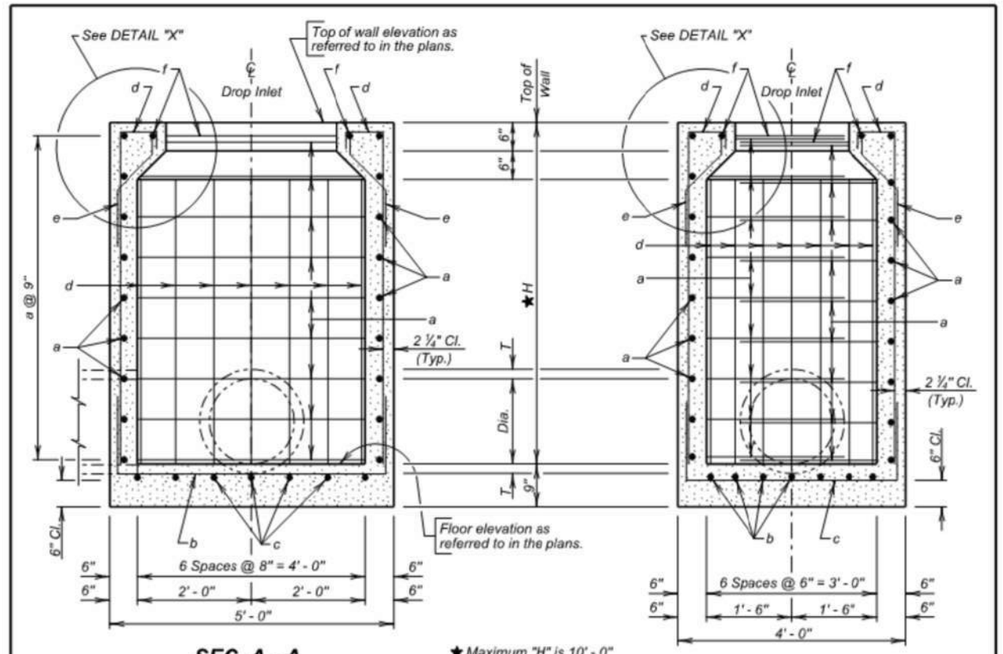

SEC. A - A

★ Maximum "H" is 10' - 0"

SEC. B - B

REINFORCING SCHEDULE

Mk.	No.	Size	Length	Type	Bending Details
a	2.67H	4	10' - 0"	17	
b	7	4	7' - 6"	17	
c	7	4	6' - 6"	17	
d	28	4	H + 9"	S17	
e	28	4	2' - 3"	S19	
f	2	4	7' - 0"	17	

NOTE:
All dimensions are out to out of bars.

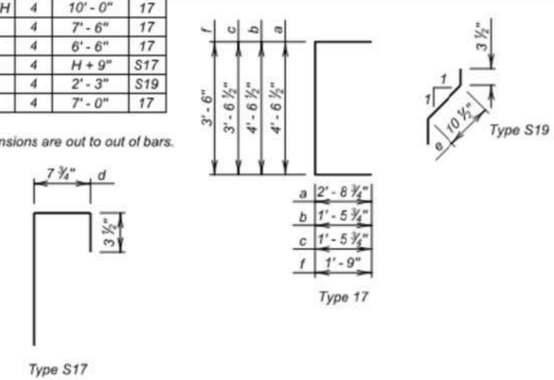

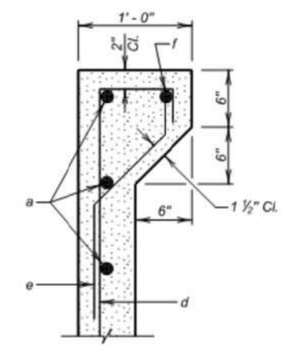

DETAIL "X"

December 16, 2015

Published Date: 1st Qtr. 2016

SDDOT

3' X 4' TYPE B
REINFORCED CONCRETE DROP INLET

PLATE NUMBER 670.02

Sheet 2 of 2

GENERAL NOTE:

Top of grate elevation shall be 0.04' below theoretical elevation of gutter.

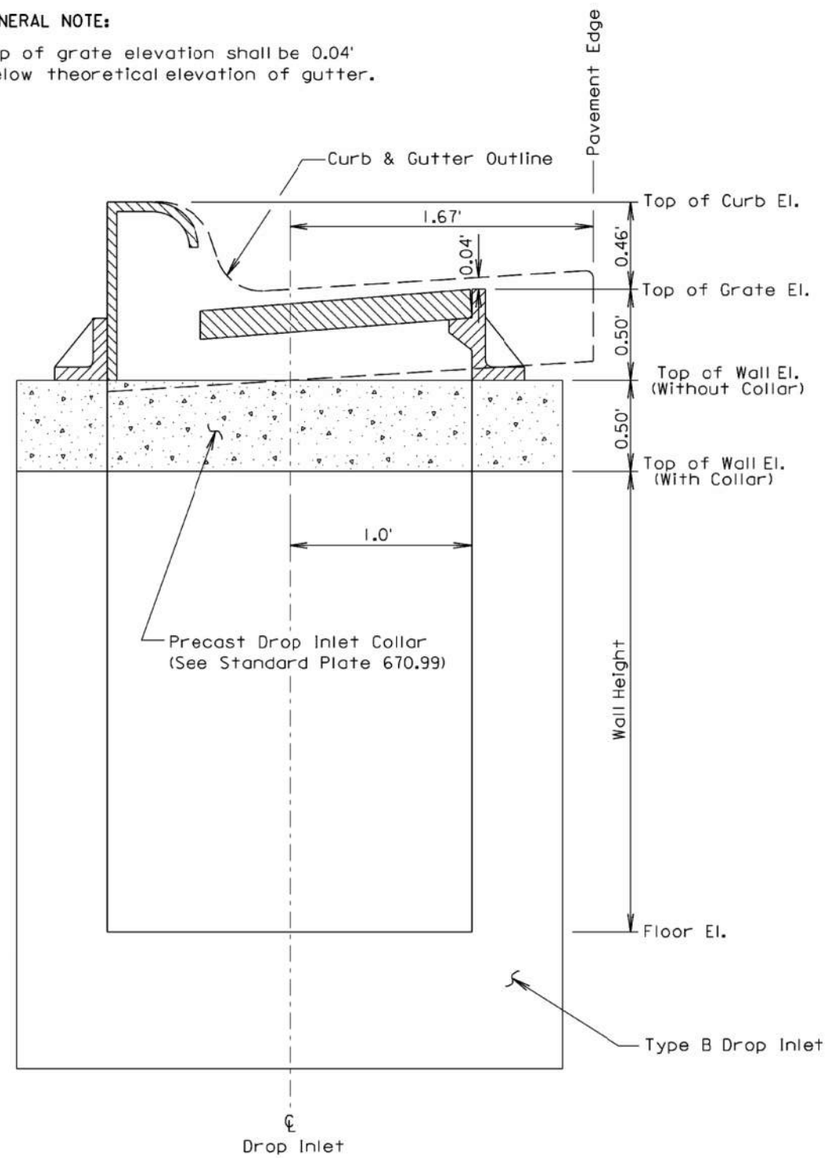

June 26, 2011

Published Date: 2nd Qtr. 2016	SDDOT	INSTALLATION OF TYPE B DROP INLET	PLATE NUMBER 670.75
			Sheet 1 of 1

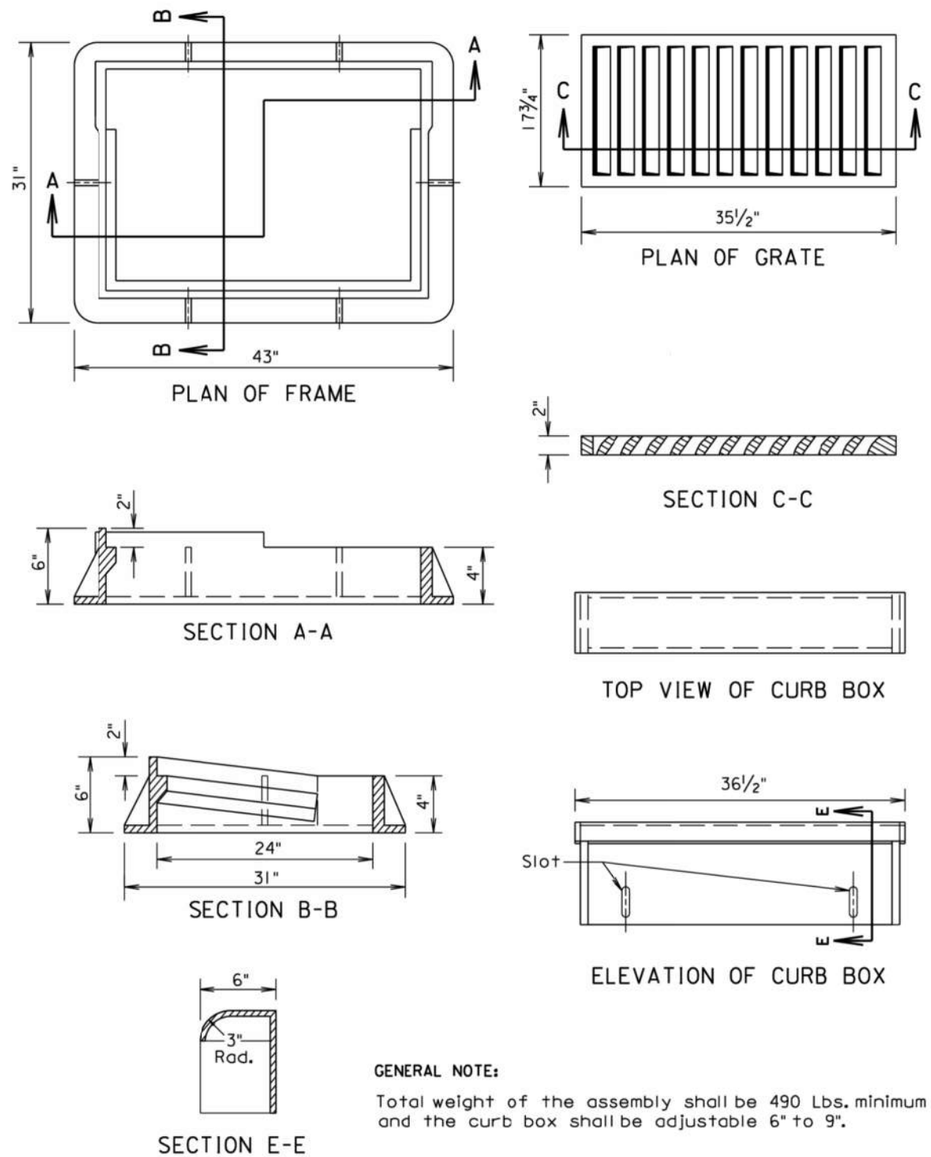

GENERAL NOTE:

Total weight of the assembly shall be 490 Lbs. minimum and the curb box shall be adjustable 6" to 9".

March 31, 2000

Published Date: 1st Qtr. 2016	SDDOT	TYPE B FRAME AND GRATE ASSEMBLY	PLATE NUMBER 670.80
			Sheet 1 of 1

FOR BIDDING PURPOSES ONLY

STATE OF SOUTH DAKOTA	PROJECT	SHEET NO.	TOTAL SHEETS
	PP 3245(08)	40	47

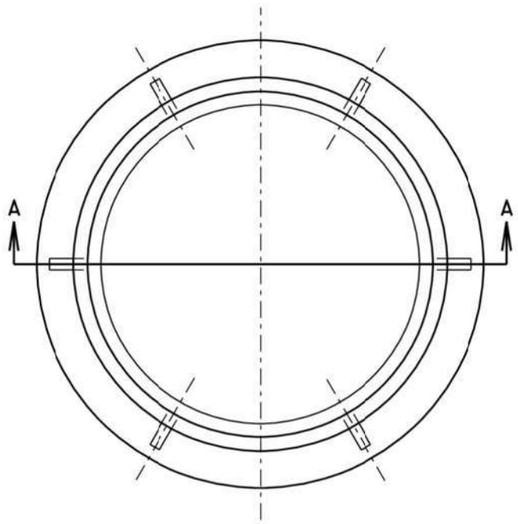

PLAN OF FRAME

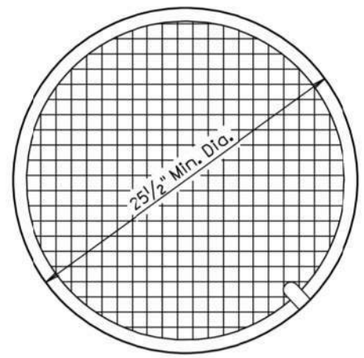

PLAN OF LID

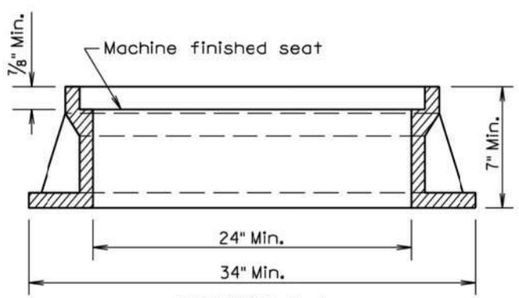

SECTION A-A

ASSEMBLED VIEW

TYPE	HEIGHT	MIN. WEIGHT
A7	7"	400Lbs.
A8	8"	440Lbs.
A9	9"	470Lbs.
A10	10"	480Lbs.

GENERAL NOTE:

Geometric pattern on top of lid other than that shown shall be approved by the Engineer.

March 31, 2000

Published Date: 1st Qtr. 2016	SDDOT	TYPE A MANHOLE FRAME AND LID	PLATE NUMBER 671.10
			Sheet 1 of 1

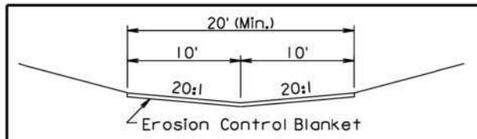

STANDARD DITCH SECTION

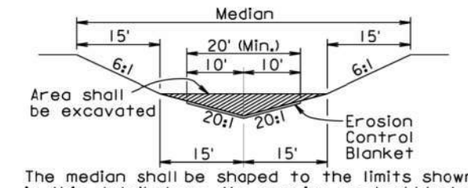

The median shall be shaped to the limits shown in this detail where the erosion control blanket will be placed.

MEDIAN SECTION

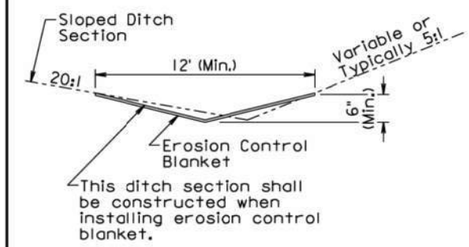

SLOPED DITCH SECTION

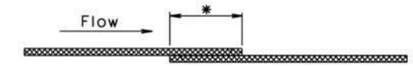

* Use a 4" (Min.) overlap wherever two widths of erosion control blanket are applied side by side.

* Use a 6" (Min.) overlap wherever one roll of erosion control blanket ends and another begins.

OVERLAP DETAIL

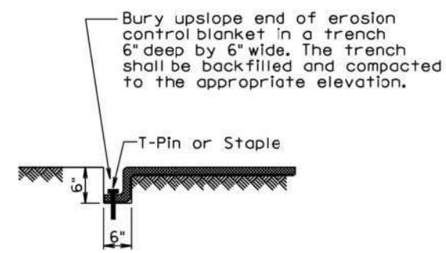

TRENCH DETAIL

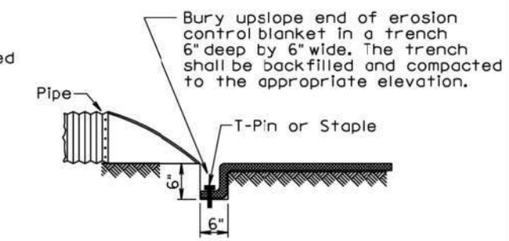

PIPE END DETAIL

GENERAL NOTES:

Prior to placement of the erosion control blanket, the areas shall be properly prepared, shaped, seeded, and fertilized.

Erosion control blanket shall be unrolled in the direction of the flow of water when placed in ditches and on slopes. The upslope end of the erosion control blanket shall be buried in a trench 6" wide by 6" deep. There shall be at least a 6" overlap wherever one roll of erosion control blanket ends and another begins, with the upslope erosion control blanket placed on top of the downslope erosion control blanket.

The erosion control blanket shall be pinned to the ground according to the manufacturer's installation recommendations.

After the placement of the erosion control blanket, the Contractor shall fine grade along all edges of the blanket to maintain a uniform slope adjacent to the blanket and level any low spots which might prevent uniform and unrestricted flow of side drainage directly onto the erosion control blanket.

All ditch sections shall be shaped when installing the erosion control blanket. All costs for shaping the ditches shall be incidental to the contract unit price per foot for "Shaping for Erosion Control Blanket".

December 23, 2004

Published Date: 1st Qtr. 2016	SDDOT	EROSION CONTROL BLANKET	PLATE NUMBER 734.01
			Sheet 1 of 1

MANUAL HIGH FLOW SILT FENCE INSTALLATION

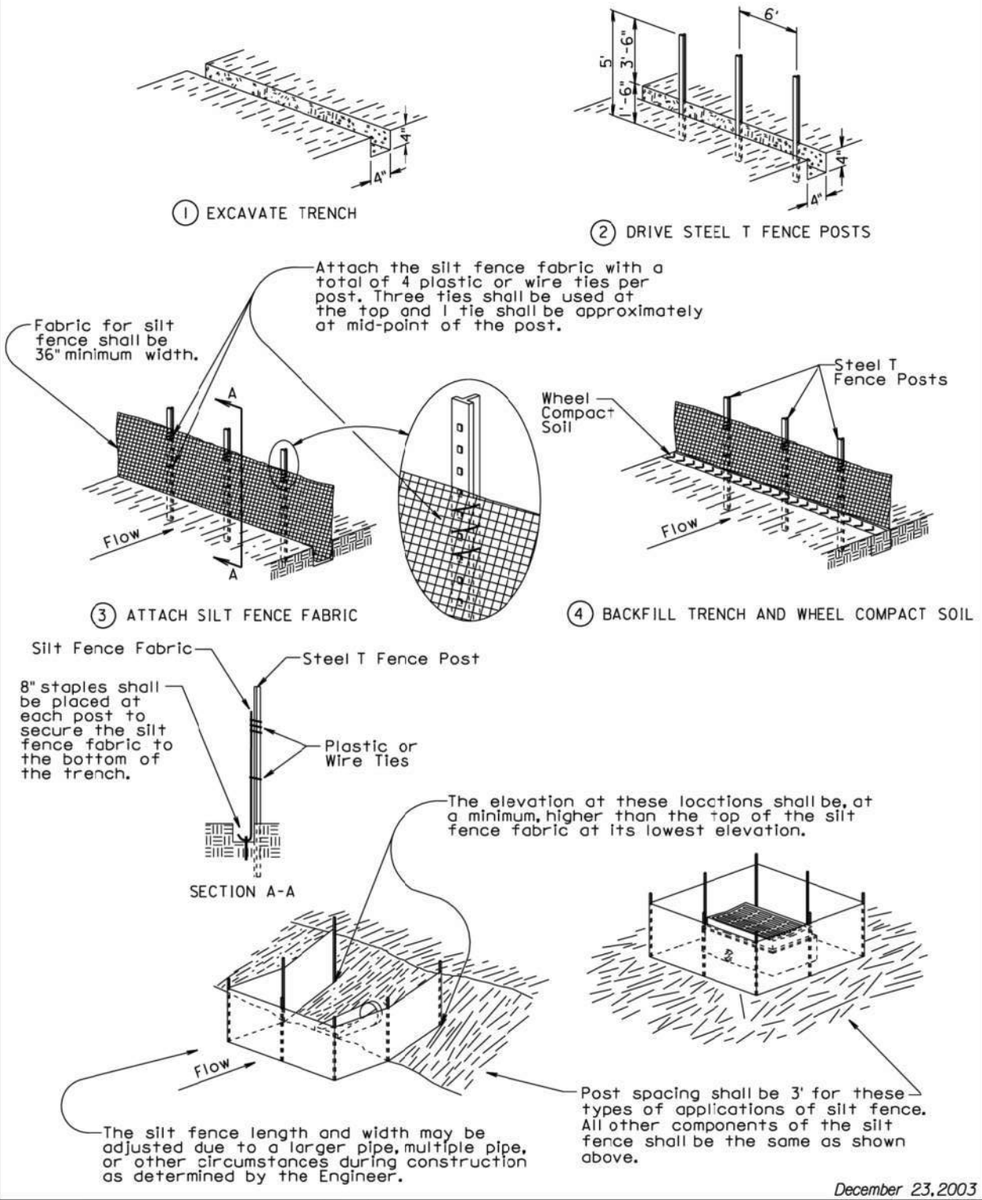

December 23, 2003

Published Date: 1st Qtr. 2016	SDDOT	HIGH FLOW SILT FENCE	PLATE NUMBER 734.05
			Sheet 1 of 2

MACHINE SLICED HIGH FLOW SILT FENCE INSTALLATION

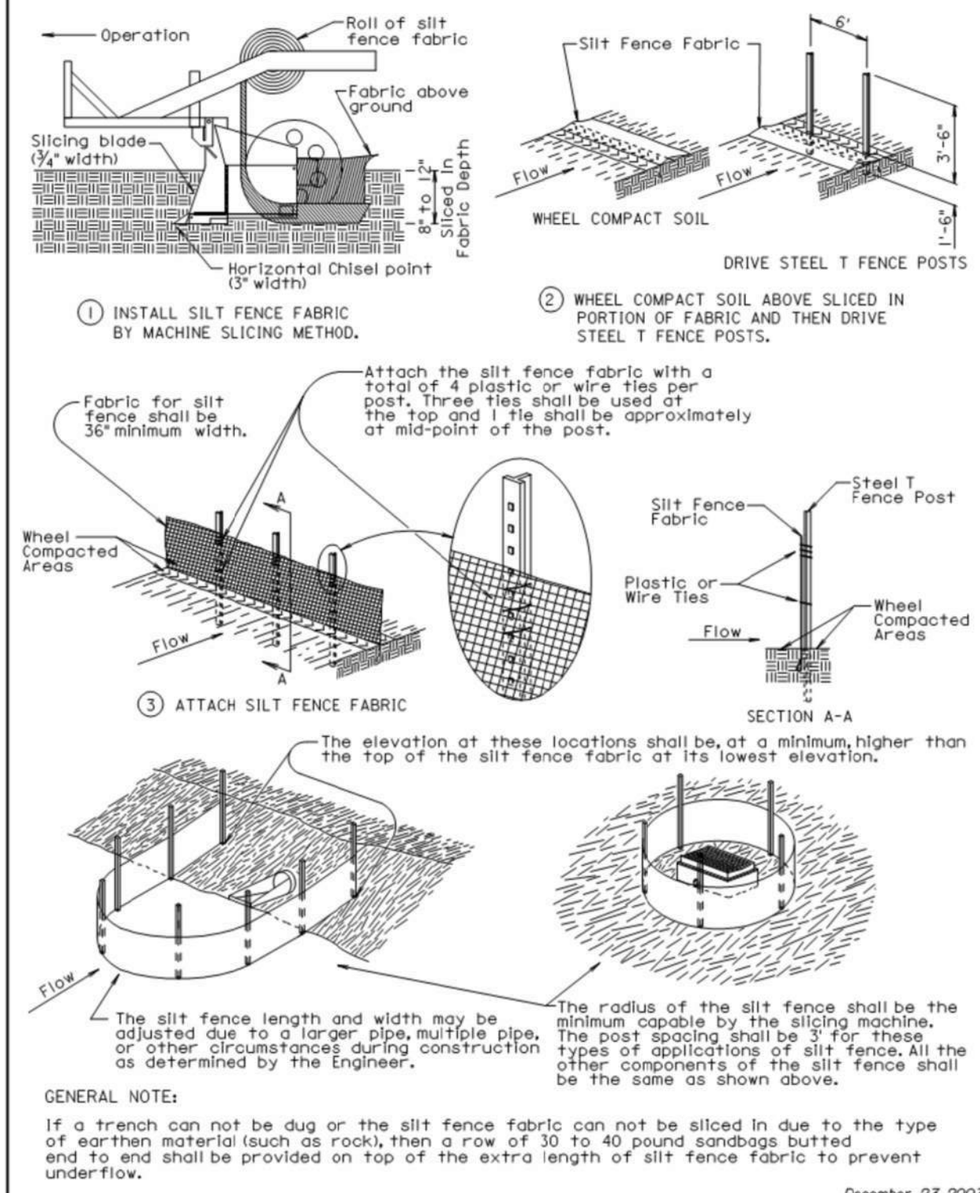

GENERAL NOTE:

If a trench can not be dug or the silt fence fabric can not be sliced in due to the type of earthen material (such as rock), then a row of 30 to 40 pound sandbags butted end to end shall be provided on top of the extra length of silt fence fabric to prevent underflow.

December 23, 2003

Published Date: 1st Qtr. 2016	SDDOT	HIGH FLOW SILT FENCE	PLATE NUMBER 734.05
			Sheet 2 of 2

FOR BIDDING PURPOSES ONLY

STATE OF SOUTH DAKOTA	PROJECT	SHEET NO.	TOTAL SHEETS
	PP 3245(08)	42	47

L = Length of Grate
W = Width of Grate

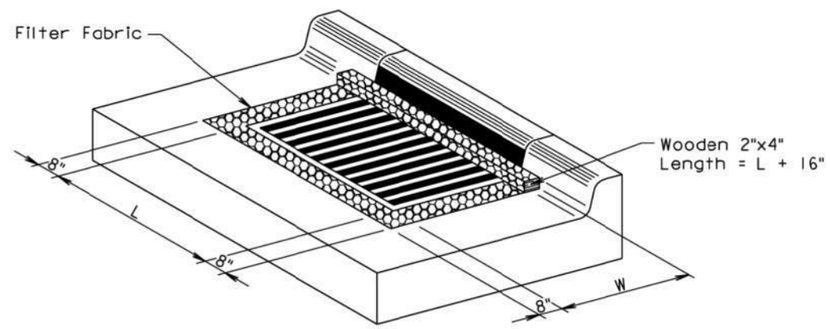

ISOMETRIC VIEW

GENERAL NOTES:

The grate and curb and gutter shown are for illustrative purposes only.

The sediment control at inlet with frame and grate shall be placed at locations stated in the plans or at locations determined by the Engineer.

The filter fabric shall be the type specified in the plans.

The filter fabric shall be placed in the inlet opening prior to placing the grate. Approximately 18 inches of excess filter fabric shall be wrapped around the 2"x4" and stapled securely to the 2"x4" after the grate has been placed.

The Contractor shall inspect and maintain the sediment control device once every week and within 24 hours after every rainfall event. The Contractor shall maintain the sediment control device by removing accumulated sediment and replacing torn filter fabric with new filter fabric.

The removed sediment shall be placed at a location away from the drop inlet where the sediment will not be washed back into the drop inlet or other storm sewer system.

All costs for furnishing, installing, inspecting, maintaining, removing, and replacing the sediment control device at the inlet including labor, equipment, and materials shall be incidental to the contract unit price per each for "Sediment Control at Inlet with Frame and Grate".

September 14, 2005

Published Date: 1st Qtr. 2016	SDDOT	SEDIMENT CONTROL AT INLETS WITH FRAMES AND GRATES	PLATE NUMBER 734.10
			Sheet 1 of 1

SPECIAL DETAILS

FOR BIDDING PURPOSES ONLY

STATE OF SOUTH DAKOTA	PROJECT	SHEET NO.	TOTAL SHEETS
	PP 3245(08)	43	47

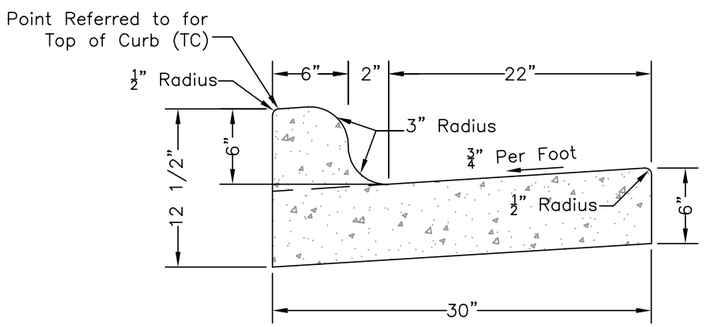

Curb and Gutter (Standard)

Scale: 1" = 1'–0"

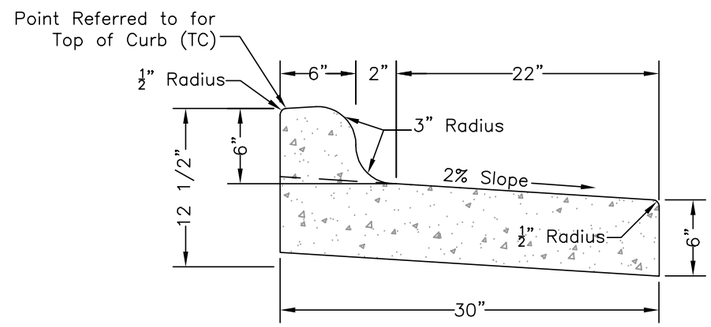

Curb and Gutter (Standard Tipout)

Scale: 1" = 1'–0"

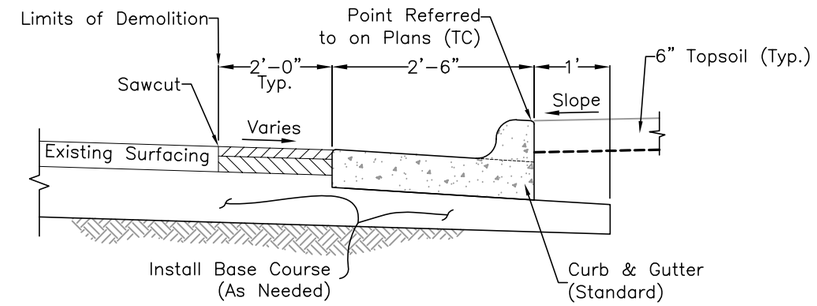

Notes: Base course shall be placed and compacted as needed for the curb and gutter installation. The existing asphalt surfacing shall be sawcut neat and straight prior to patching. Asphalt depth shall match the in–place surfacing. Asphalt Patching will be paid at the contract unit price and will include sawcutting, recompaction of base course, and asphalt concrete. Base course will be paid at the contract unit price for base course.

Street Patching Detail

½" = 1'–0"

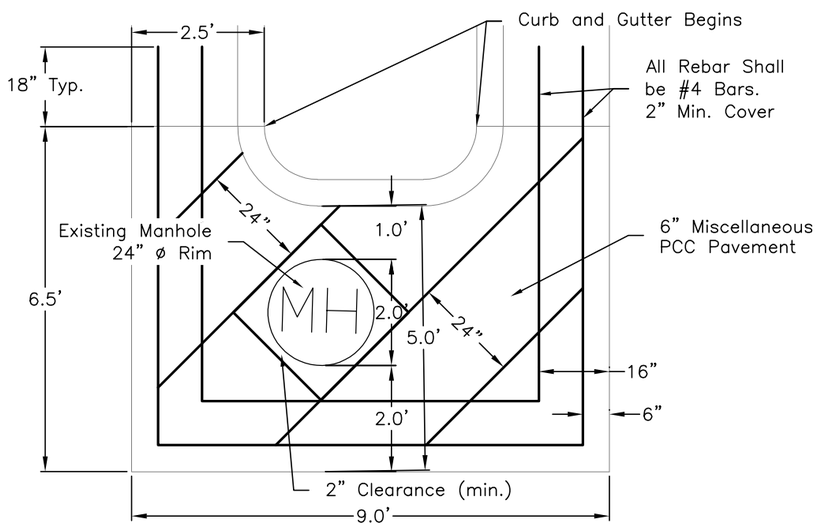

Detail A

Scale: None

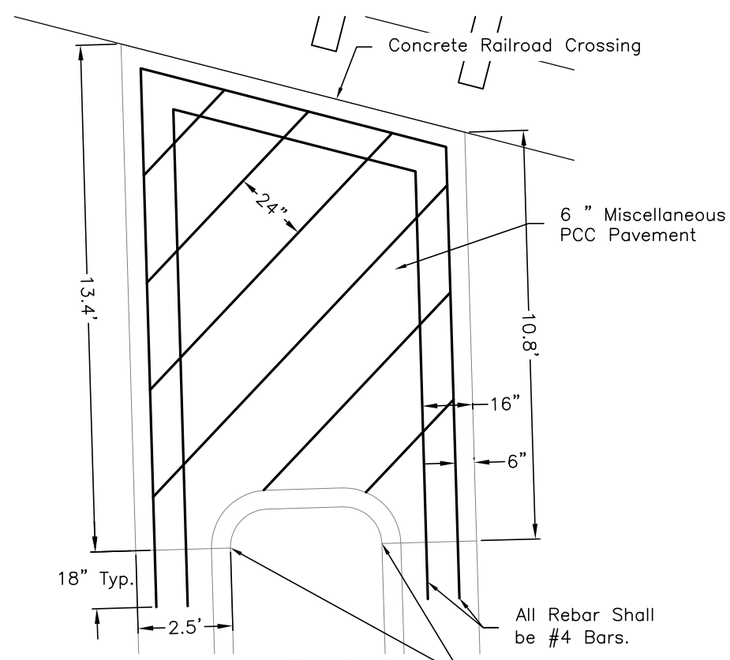

Detail B

Scale: None

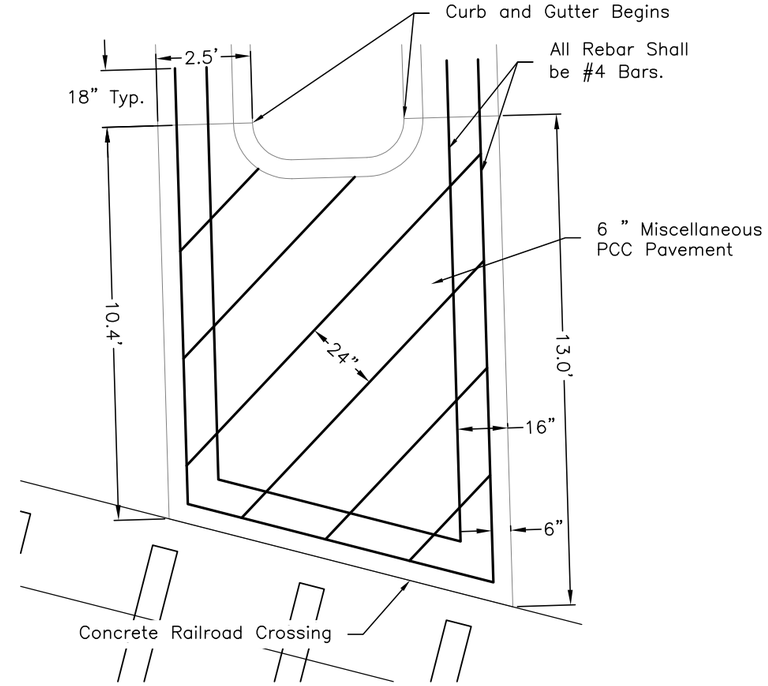

Detail C

Scale: None

NOTE REFERENCING DETAIL A, B, & C:
Curb shall be included in the 6" Miscellaneous PCC Pavement installation.

REGISTERED PROFESSIONAL ENGINEER
REG. NO.
11315
JEFFREY J. COOLEY
SOUTH DAKOTA

5-2-16

SPECIAL DETAILS

FOR BIDDING PURPOSES ONLY

STATE OF SOUTH DAKOTA	PROJECT	SHEET NO.	TOTAL SHEETS
	PP 3245(08)	44	47

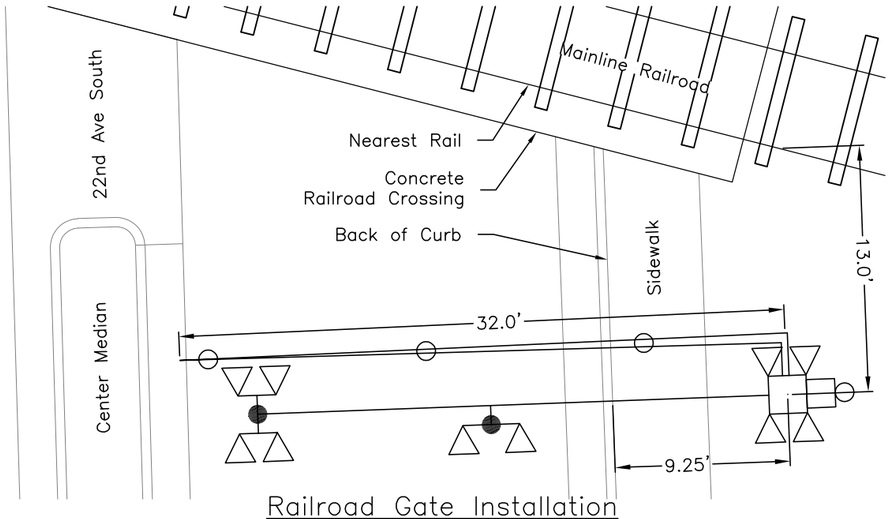

Railroad Gate Installation
Scale: None
(Installation by Railroad)

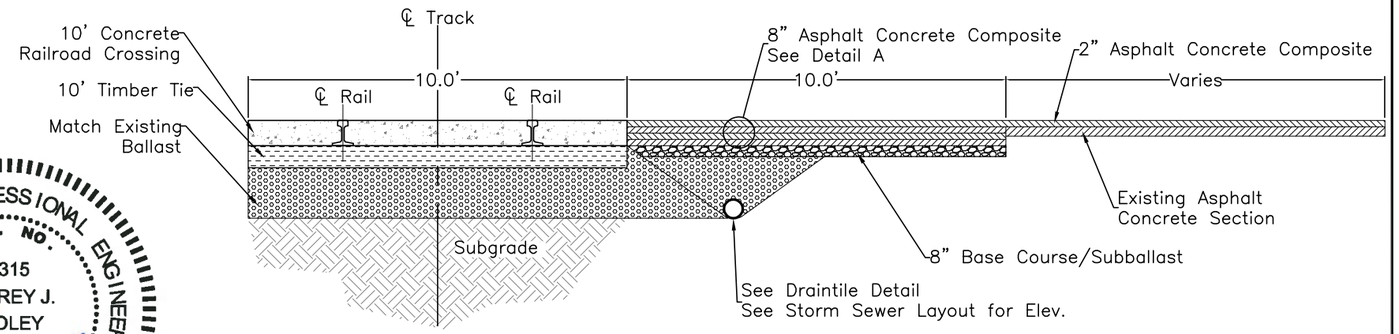

Railroad Crossing Detail
Scale: None

REGISTERED PROFESSIONAL ENGINEER
REG. NO. 11315
JEFFREY J. COOLEY
SOUTH DAKOTA
5-2-16

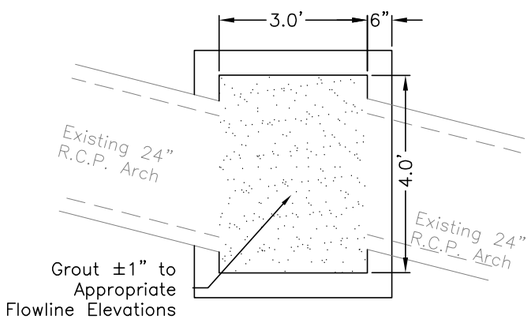

Plan View
Scale: None

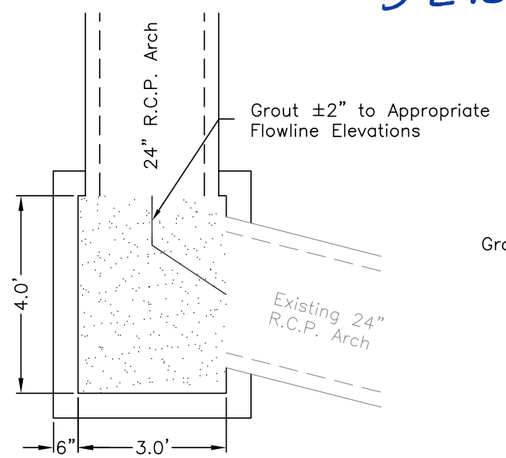

Plan View
Scale: None

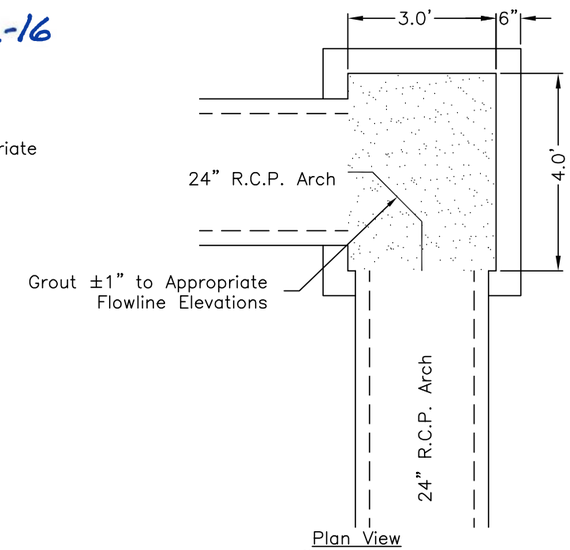

Plan View
Scale: None

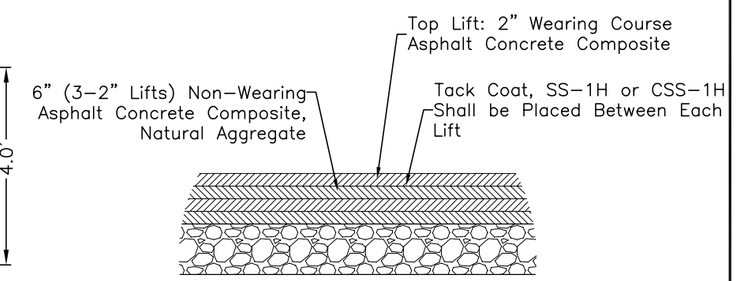

Detail A
Scale: None

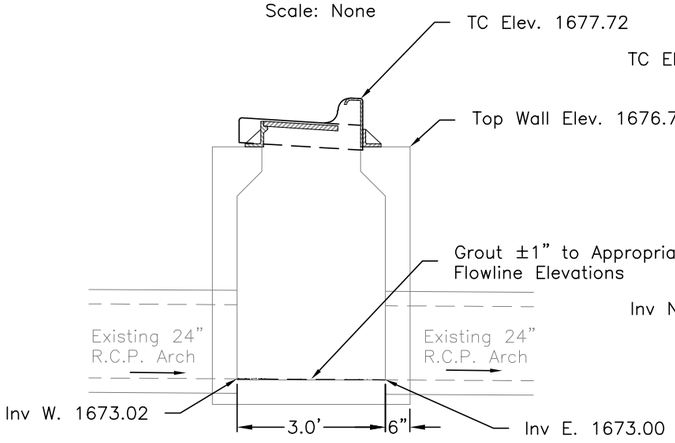

8+17.89-25.64'R - Drop Inlet Detail
Scale: None

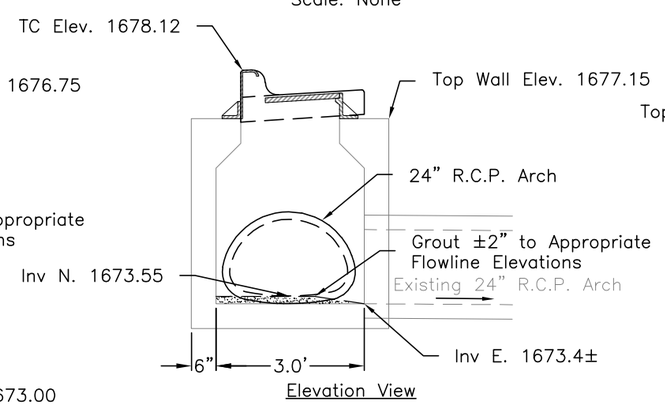

Elevation View

8+32.77-25.66'L - Drop Inlet Detail
Scale: None

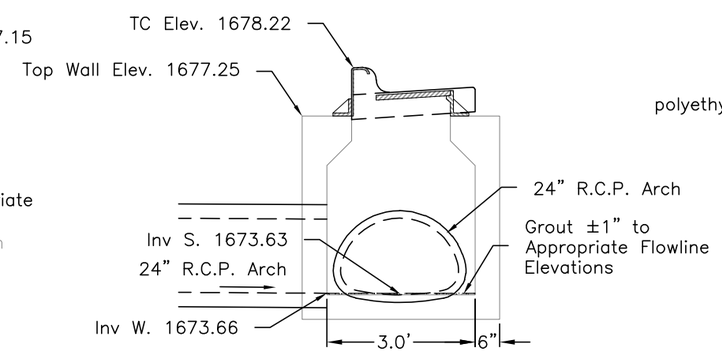

8+47.88-25.66'L - Drop Inlet Detail
Scale: None

Note: All items shown and backfilling shall be included in the per foot unit bid price for draintile.

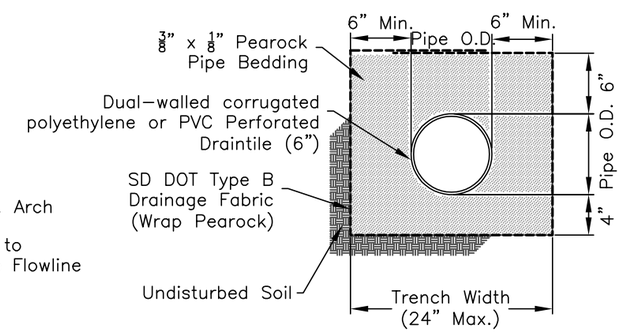

Draintile Detail
Scale: None

CROSS SECTIONS

FOR BIDDING PURPOSES ONLY

STATE OF SOUTH DAKOTA	PROJECT	SHEET NO.	TOTAL SHEETS
	PP 3245(08)	45	47

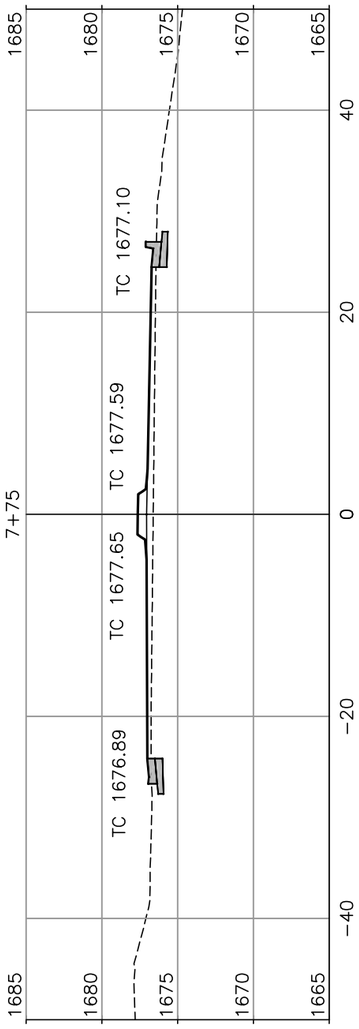

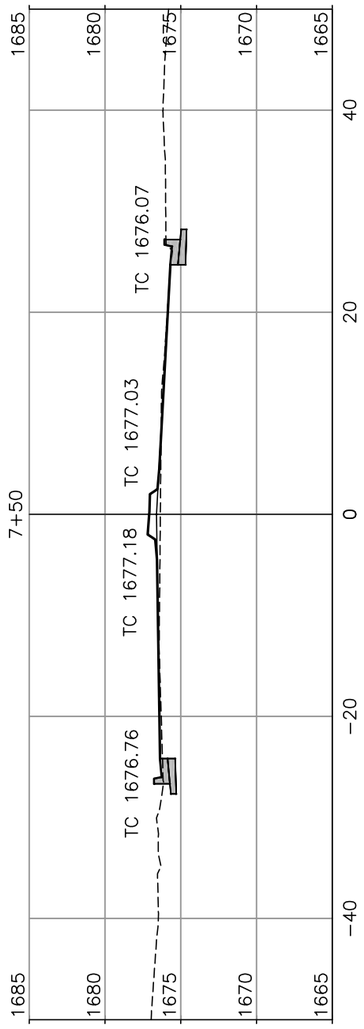

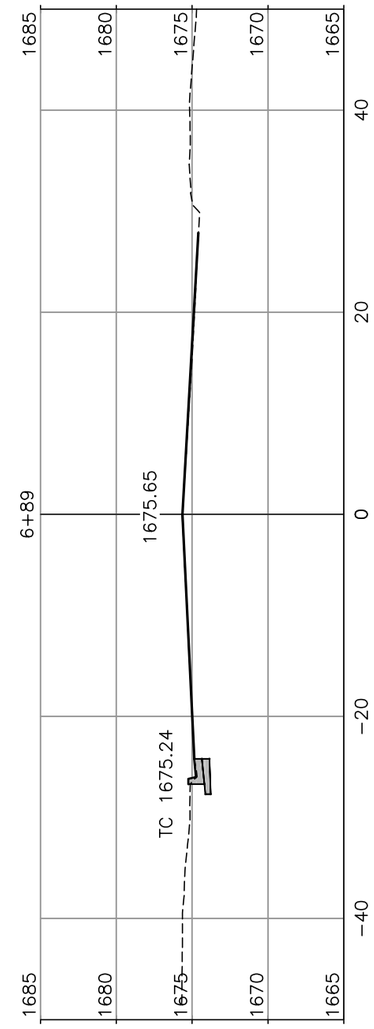

H: 1" = 15'
V: 1" = 10'

REGISTERED PROFESSIONAL ENGINEER
REG. NO.
11315
JEFFREY J.
COOLEY
SOUTH DAKOTA

5-2-16

CROSS SECTIONS

FOR BIDDING PURPOSES ONLY

STATE OF SOUTH DAKOTA	PROJECT	SHEET NO.	TOTAL SHEETS
	PP 3245(08)	46	47

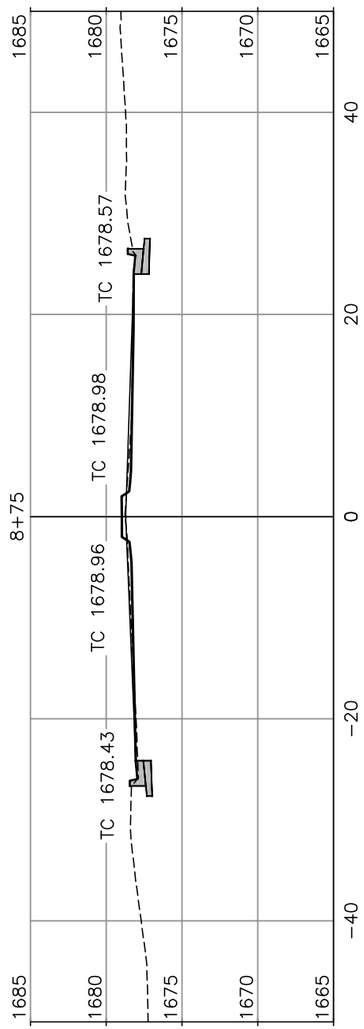

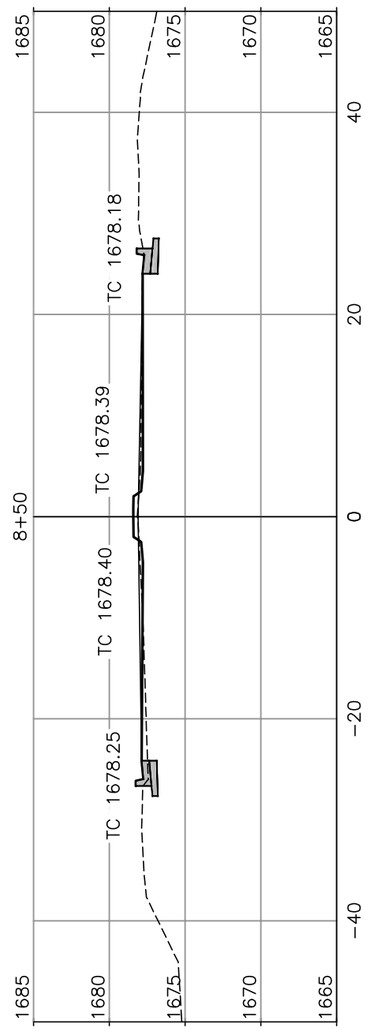

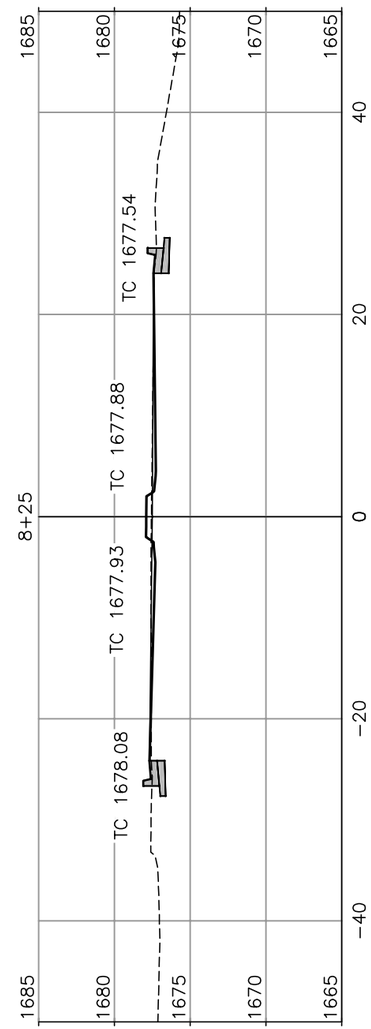

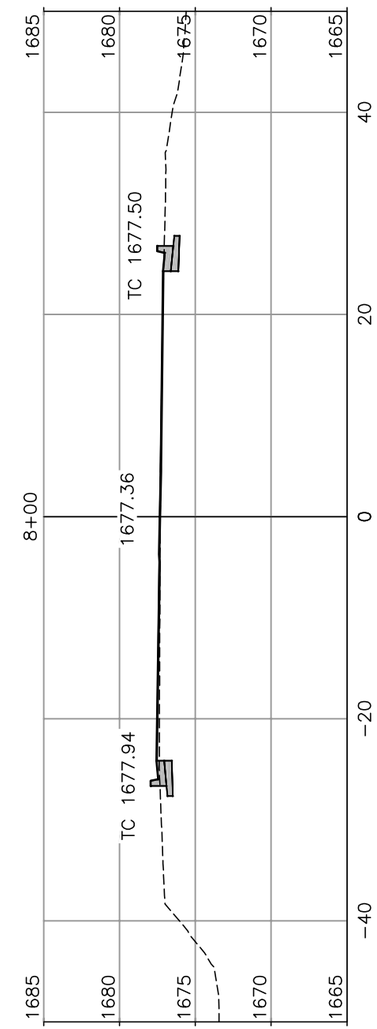

H: 1" = 15'
V: 1" = 10'

REGISTERED PROFESSIONAL ENGINEER
REG. NO.
11315
JEFFREY J.
COOLEY
SOUTH DAKOTA

5-2-16

CROSS SECTIONS

FOR BIDDING PURPOSES ONLY

STATE OF SOUTH DAKOTA	PROJECT	SHEET NO.	TOTAL SHEETS
	PP 3245(08)	47	47

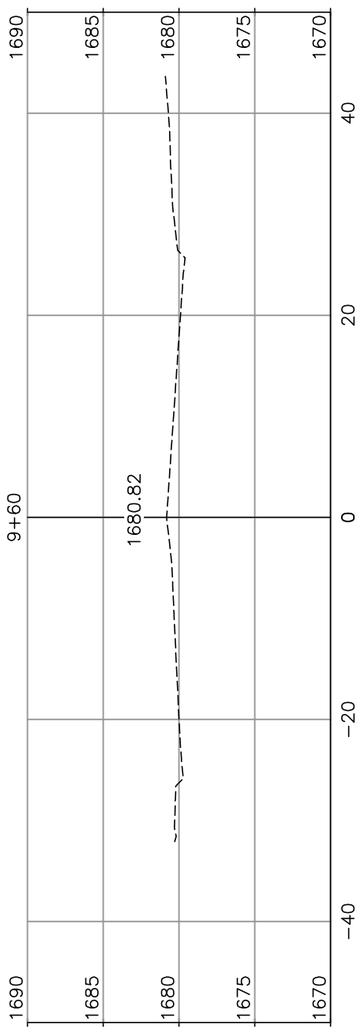

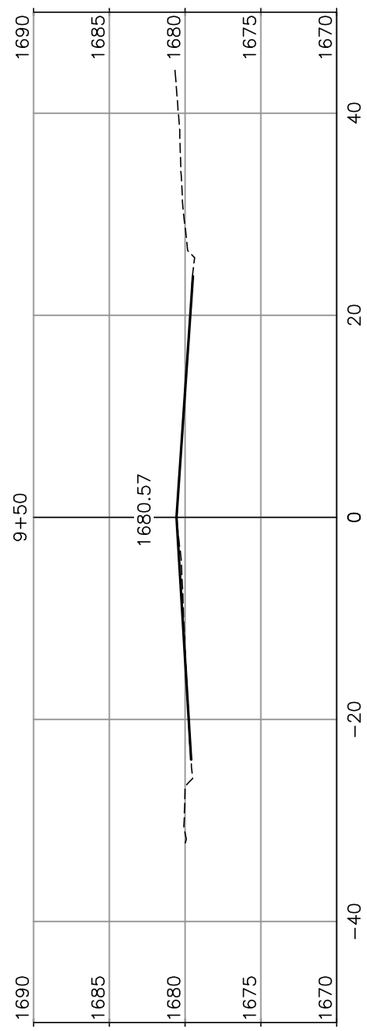

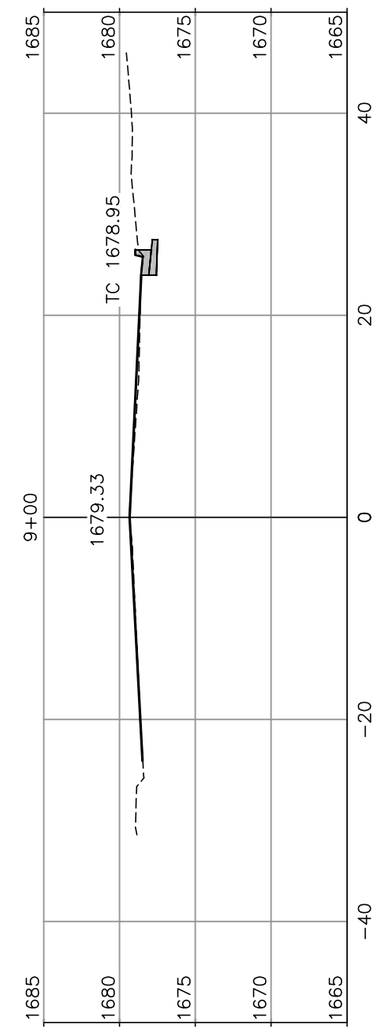

H: 1" = 15'
V: 1" = 10'

REGISTERED PROFESSIONAL ENGINEER
REG. NO.
11315
JEFFREY J.
COOLEY
SOUTH DAKOTA

5-2-16