FOR BIDDING PURPOSES ONLY

STATE OF SOUTH DAKOTA	PROJECT	SHEET	TOTAL SHEETS
	NH0016(84)67	B1	B136

PLOTTING DATE: 07-29-16

SECTION B - GRADING PLANS

INDEX OF SHEETS

B1:	General Layout with Index
B2-B27:	Estimate of Quantities, General Notes and Tables
B28-B31:	Typical Sections
B32-B33:	Horizontal Alignment Data
B34:	Control Data
B35:	Legend
B36-B41:	Right of Way Layout Sheets
B42-B67:	Plan and Profile Sheets
B68-B73:	Pavement Removal Layout Sheets
B74-B86:	Curb and Gutter Sheets
B87-B96:	Curb Ramp Details
B97-B105:	Retaining Wall Details
B106-B107:	Special Details
B108-B136:	Standard Plates

BEGIN NH 0016(84)67
Mt. Rushmore Rd.
Station 34+10.44

END NH 0016(84)67
Mt. Rushmore Rd.
Station 66+91.79

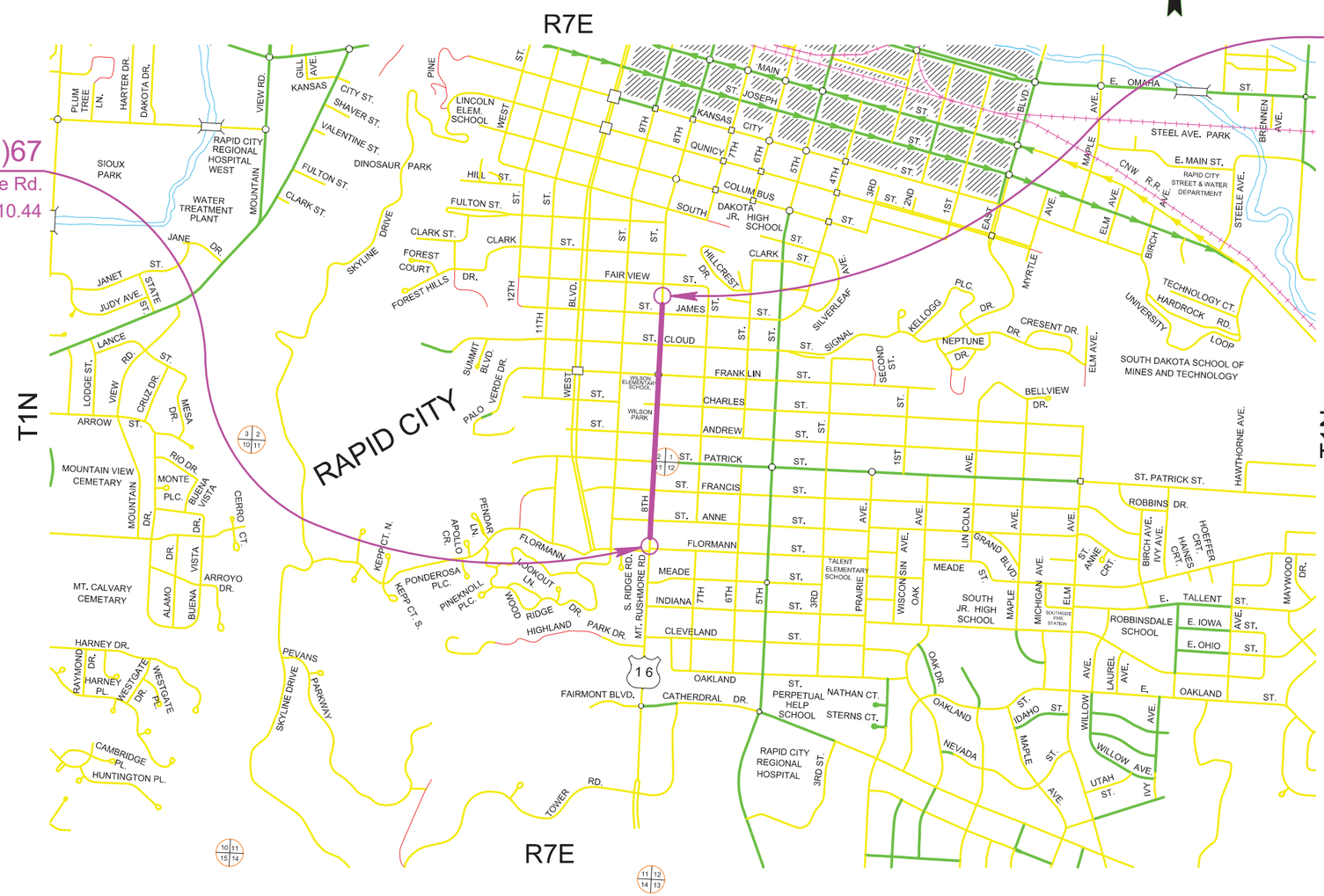

REGISTERED PROFESSIONAL ENGINEER
REG. NO. 8019
JOHN RAYMOND VAN BEEK
SOUTH DAKOTA
8/7/16

Ferber Engineering Company, Inc.
Civil Engineering • Water Resources • Transportation • Land Surveying • GIS
729 East Watertown St, Rapid City, SD 57701 ~ www.ferberengineering.com
Phone: (605) 343-3311 ~ Fax: (605) 343-3399

07-29-16 P:\12-117\AutoCAD\PlanSheets\049F\Section B\049F-GRAD-PP TITLE.dwg

REV 09-09-16 ARK

SECTION B ESTIMATE OF QUANTITIES

BID ITEM NUMBER	ITEM	QUANTITY	UNIT
009E0010	Mobilization	Lump Sum	LS
009E3230	Grade Staking	3.223	Mile
009E3250	Miscellaneous Staking	0.852	Mile
009E3280	Slope Staking	0.852	Mile
009E3290	Structure Staking	13	Each
009E3300	Three Man Survey Crew	100.0	Hour
009E4300	Construction Schedule, Category III	Lump Sum	LS
009E4330	Project Management, Category III	Lump Sum	LS
100E0020	Clear and Grub Tree	8	Each
100E0100	Clearing	Lump Sum	LS
110E0300	Remove Concrete Curb and/or Gutter	3,353	Ft
110E0340	Remove Asphalt Concrete Curb	226	Ft
110E0400	Remove Drop Inlet	37	Each
110E0460	Remove Manhole	18	Each
110E1010	Remove Asphalt Concrete Pavement	8,537.7	SqYd
110E1100	Remove Concrete Pavement	21,812.0	SqYd
110E1130	Remove Concrete Driveway Pavement	1,915.8	SqYd
110E1140	Remove Concrete Sidewalk	4,989.9	SqYd
110E1300	Remove Concrete Retaining Wall	261.2	Ft
120E0010	Unclassified Excavation	12,912	CuYd
120E0600	Contractor Furnished Borrow Excavation	805	CuYd
120E0900	Contaminated Material Excavation	100	CuYd
* 120E2000	Undercutting	58	CuYd
120E2000	Undercutting	10,194	CuYd
120E6100	Water for Embankment	138.0	MGal
205E0010	Dust Control Chloride	500	Lb
250E0020	Incidental Work, Grading	Lump Sum	LS
270E0020	Salvage and Stockpile Asphalt Mix Material	2,991.0	Ton
380E3540	8" PCC Approach Pavement	1,663.1	SqYd
380E3542	8" Fast Track Concrete Approach Pavement	577.8	SqYd
380E4010	6" PCC Fillet Section	13.0	SqYd
380E4090	10" PCC Fillet Section	685.5	SqYd
420E0300	Structure Excavation, Retaining Wall	100	CuYd
421E0100	Pipe Culvert Undercut	100	CuYd
450E0123	18" RCP Class 3, Furnish	2,666	Ft
450E0130	18" RCP, Install	2,666	Ft
450E0143	24" RCP Class 3, Furnish	1,186	Ft
450E0150	24" RCP, Install	1,186	Ft
450E0162	30" RCP Class 2, Furnish	926	Ft
450E0170	30" RCP, Install	926	Ft
450E0182	36" RCP Class 2, Furnish	252	Ft
450E0190	36" RCP, Install	252	Ft
450E0192	42" RCP Class 2, Furnish	70	Ft
450E0200	42" RCP, Install	70	Ft

BID ITEM NUMBER	ITEM	QUANTITY	UNIT
450E0202	48" RCP Class 2, Furnish	112	Ft
450E0210	48" RCP, Install	112	Ft
450E0408	18" RCP Bend, Furnish	4	Each
450E0409	18" RCP Bend, Install	4	Each
450E0428	36" RCP Bend, Furnish	2	Each
450E0429	36" RCP Bend, Install	2	Each
450E0700	RCP Tee, Furnish	11	Each
450E0701	RCP Tee, Install	11	Each
450E0900	RCP Cross, Furnish	2	Each
450E0901	RCP Cross, Install	2	Each
450E1400	RCP Reducer, Furnish	1	Each
450E1401	RCP Reducer, Install	1	Each
450E2400	RCP Arch to Round Transition Furnish	1	Each
450E2401	RCP Arch to Round Transition Install	1	Each
450E3042	42" RCP Arch Class 2, Furnish	266	Ft
450E3050	42" RCP Arch, Install	266	Ft
450E8450	Storm Sewer Video Inspection	3,840	Ft
451E0514	4" PVC Pipe	6	Ft
451E0516	6" PVC Pipe	24	Ft
451E0522	12" PVC Pipe	38	Ft
462E0100	Class M6 Concrete	153.2	CuYd
464E0100	Controlled Density Fill	50.0	CuYd
470E0020	Pipe Handrail	162.0	Ft
470E0040	Steel Pedestrian Railing	135.0	Ft
480E0100	Reinforcing Steel	27,866	Lb
480E0200	Epoxy Coated Reinforcing Steel	100	Lb
530E0310	Special Type C Concrete Retaining Wall	2,014	SqFt
600E0200	Type II Field Laboratory	1	Each
* 650E0060	Type B66 Concrete Curb and Gutter	26	Ft
650E0060	Type B66 Concrete Curb and Gutter	3,034	Ft
650E0100	Type B610 Concrete Curb and Gutter	7,011	Ft
650E1100	Type F610 Concrete Curb and Gutter	52	Ft
650E2100	Special Concrete Curb and Gutter	457	Ft
* 650E4660	Type P6 Concrete Gutter	72	Ft
650E4660	Type P6 Concrete Gutter	543	Ft
650E4700	Type P10 Concrete Gutter	408	Ft
650E6280	8" Concrete Valley Gutter	49.2	SqYd
651E0040	4" Concrete Sidewalk	37,293	SqFt
651E0160	6" Reinforced Concrete Sidewalk	751	SqFt
651E0540	4" Colored Concrete Sidewalk	20,988	SqFt
651E0760	6" Reinforced Colored Concrete Sidewalk	438	SqFt
651E7000	Type 1 Detectable Warnings	630	SqFt
670E1200	Type B Frame and Grate Assembly	97	Each
670E3300	Type E Frame and Grate	4	Each

BID ITEM NUMBER	ITEM	QUANTITY	UNIT
670E5340	4' x 11' Precast Concrete Type S Drop Inlet Lid	3	Each
670E5342	4' x 6' Precast Concrete Type S Drop Inlet Lid	1	Each
670E5400	Precast Drop Inlet Collar	101	Each
671E5502	2" Adjusting Ring for Manhole	3	Each
671E6010	Type A10 Manhole Frame and Lid	1	Each
680E0040	4" Underdrain Pipe	240	Ft
680E2500	Porous Backfill	16.5	Ton
900E0900	Curb Stop	12	Each
900E5145	Bollard	4	Each
900E5410	Modify Sprinkler System	Lump Sum	LS

*** - Denotes Non-Participating**

RESTRICTED WORK AREA

The Contractor work limits are confined to the area within the existing right of way adjacent to the parcels noted in the table below. The Engineer will notify the Contractor of the date and time when work outside of the existing right of way may proceed. It is anticipated possession of Parcel 7 will be secured by November 2016. It is anticipated possession of Parcel A8 and Parcel 10 will be secured by February 2017.

Parcel No.	Station	to	Station	L/R
7	41+49		44+48	R
A8	50+31		51+71	R
10	54+11		55+51	L

The Contractor shall install orange plastic safety fence along the existing Right of Way line until such time that Right of Way is secured. In addition, the landowner shall be notified no less than 7 days prior to removing existing irrigation heads and capping lines in the existing Right of Way. All costs associated with this work shall be incidental to various contract items.

REGISTERED PROFESSIONAL ENGINEER
REG. NO. 8019
JOHN RAYMOND VAN BEEK
SOUTH DAKOTA
9/9/16

GRADING OPERATIONS

Water for Embankment is estimated at the rate of 10 gallons of water per cubic yard of Embankment minus Waste.

Special sections of the roadway different than the typical sections shall be constructed to the limits shown on the cross sections. If significant changes to the cross sections are necessary during construction, the Engineer shall contact the Designer for the proposed change.

A disk designed and constructed for construction purposes shall be in use as per Section 120.3 of the Specifications.

A copy of the Soils Report is available for review at the Rapid City Region and Rapid City Area offices.

TYPE II FIELD LABORATORY

The lab shall be equipped with an internet connection such as DSL, cable modem, or other approved service. The internet connection shall be provided with a multi-port wireless router. The internet connection shall be a minimum speed of 512 Kb unless limited by job location and approved by the DOT. Prior to installing the wireless router the Contractor shall submit the wireless router's technical data to the Area Office to check for compatibility with the state's computer equipment. The internet connection is intended for state personnel usage only. The Contractor's personnel are prohibited from using the internet connection unless pre-approved by the Project Engineer.

The Contractor shall submit a copy of each monthly bill for calls charged to this phone at the end of each month. The Project Engineer will then audit the bills to ensure all calls are legitimate and then initiate a Construction Change Order (CCO) to reimburse the Contractor for the actual phone calls made, including local and long distance calls. Reimbursement will not be made for fees associated with the purchase, installation, disconnection, monthly line charges, and incidentals involved in the installation, maintenance, and disconnection of the phone (including attachments). These items shall be incidental to the contract unit price per each for "Type II Field Laboratory".

UTILITIES

The Contractor shall be aware that the existing utilities shown in the plans were surveyed prior to the design of this project and might have been relocated or replaced by a new utility facility prior to construction of this project, might be relocated or replaced by a new utility facility during the construction of this project, or might not require adjustment and may remain in its current location. The Contractor shall contact each utility owner and confirm the status of all existing and new utility facilities. The utility contact information is provided elsewhere in the plans or bidding documents.

Black Hills Power
The Company's OH facilities will be relocated prior to construction. Removal of existing Company owned street lights will be accomplished by BHP during construction and the sequencing of removal shall be coordinated between the Contractor and the Company as to keep the highway illuminated during construction.

UTILITIES CONTINUED

Century Link
The Company has buried concrete vaults (12'x6'x7') at approximate stations 42+95-30'L, 45+10-45'L, 57+95-38'L, and 61+78-37'L and connecting 18"x18" concrete duct. The vaults will be removed by Century Link in coordination with the highway construction. The Contractor shall notify Century Link at least 7 days prior to the date that any vault needs to be removed and coordinate backfilling of vault voids with Century Link. Or the highway contractor may have the option to remove the manholes as approved by and coordinated with CenturyLink directly. The Company will be installing all or a portion of their new facilities off of US16, however, they will have some fiber cables and service drops along and crossing in US16 in multiple locations. The Contractor shall coordinate with the Utility Company to determine what existing facility has been abandoned and what adjustments to main or service lines, if any, are to be sequenced during construction. As the Company's facilities are within existing public Right-of-Way any adjustments/relocations shall be performed at no cost to the State.

Montana Dakota Utilities
The Company's facilities will be adjusted during construction.

City of Rapid City
The City will be replacing water and sanitary sewer facilities under Project Number 12-2051 / CIP #50867 / PCN X02P.

Utility Contact Information:
Black Hills Power
PO Box 1400
Rapid City SD 57709
Rob Usera – 605-721-2618

Century Link
612 Mt. Rushmore Road
Rapid City, SD 57701
Keith Nelson - 605-394-4720

Montana Dakota Utilities
PO Box 1060
Rapid City SD 57709
Kristopher James – 605-355-4021
Cell: 605-757-8124

MidContinent Communications
1624 Concourse Ct.
Rapid City, SD 57703
Terry Hofer - 605-791-7123

VAST
809 Deadwood Ave
Rapid City SD 57702
Julie Burckhard – 605-415-0692

SDN Communications
1089 Rand Rd
Rapid City SD 57702
Paul Lowe – 605-390-3502

City of Rapid City - Engineering Services
300 Sixth St.
Rapid City, SD 57701
Todd Peckosh - 605-394-4154

City of Rapid City - Utility Maintenance
605 Steele Ave.
Rapid City, SD 57701
Chip Petrik – 605-394-4163

CLEARING

Before clearing activities begin, the Contractor shall contact the Engineer to determine the limits of clearing for the project. If any trees, shrubs, landscaping, etc. that are supposed to remain within the limits of work are damaged or destroyed by the Contractor, the Contractor shall replace them with the same size and type at the Contractor's expense.

MAINTENANCE OF DRAINAGE ON THE PROJECT SITE

All earthwork and pipe installation shall be completed in such a manner that drainage is maintained throughout the project. This work may involve installation of temporary tie-ins, dikes, pumping of water, plugging inlets, and temporary diversion of water utilizing pipes.

The Contractor shall coordinate embankment operations and pipe installations so that drainage is continuous, but does not damage new or existing grading sections. If necessary, temporary pipe, temporary connections, plugs, and channels may be used to avoid damage to new or existing grade or partial omission of permanent drainage features may be required. In addition, permanent drainage features may need to be installed in phases to match sequencing. The cost to install, maintain, and remove temporary items and any incidentals necessary for partial installations of permanent drainage features shall be incidental to the various pipe bid items.

MAINTENANCE OF LANDSCAPING

Vegetation that has been damaged or disturbed by the Contractor outside the easement area, ROW or grading limits shown on the plans shall be replaced at no cost to the State.

Landowners adjacent to the work areas may have irrigation systems with trunk lines running through the removal limits. The Contractor shall coordinate with landowners to ensure that areas no longer served due to the severed trunk lines remain irrigated. When grading work is complete and prior to placement of surfacing, the Contractor shall reattach all severed irrigation lines. All material, labor and incidentals required to modify irrigation systems along the project corridor shall be paid for under the lump sum bid item for "Modify Sprinkler System."

EXISTING SURVEY INFORMATION

The design survey for this phase of Mt. Rushmore Road was completed prior to the roadway reconstruction at either end of the project. The pre-construction survey information, along with the design graphics are both shown at Flormann Street and at St. James Street.

REGISTERED PROFESSIONAL ENGINEER
REG. NO. 8019
JOHN RAYMOND VAN BEEK
SOUTH DAKOTA
8/17/16

BUS STOPS

There are existing bus stops at Station 34+70 L, 35+70 R, 40+35 L, 40+60 R, 50+40 L, 50+85 R, 54+90 L, 54+90 R, and 63+10 R. The bus stops at 35+70 R, 40+60 R, 50+40 L and 54+90 L also have associated benches. The bus stops are administered by the City of Rapid City's Rapid Transit System (phone number 605-394-6631). The Contractor shall provide the City a minimum of one week's notice to remove any benches within the project site. The Contractor will be responsible for removing and resetting the existing bus stop signs – see Section S for additional information.

Each bus stop location shall have an alighting area with a minimum dimension of 8' perpendicular to the curb and 5' parallel to the curb. The parallel grade shall be the same as the street while the perpendicular grade shall not be steeper than two percent. The alighting areas are to be constructed with 4" concrete sidewalk. The locations of the alighting areas are shown on the curb and gutter layout sheets. Adjustment of the locations of the alighting areas will be allowed only with the approval of the Rapid Transit System.

SHRINKAGE FACTOR: Undercut +20%
Embankment +50%

TABLE OF EXCAVATION QUANTITIES

Station	Station	Excavation (CuYd)	*Undercut (CuYd)	*Contractor Furnished Borrow Exc. (CuYd)	Total Exc. (CuYd)
34+10	63+12	2660	10252	805	13717

*The quantities for these items are in the Estimate of Quantities under their respective bid items.

"Unclassified Excavation" and "Undercutting" will be paid for based on the quantities shown in the "Estimate of Quantities". No field measurement will be taken. If a change is necessary during construction which affects these quantities, the area in which the change was made will be measured and the affected quantities will be adjusted accordingly.

The Table of Excavation Quantities includes all earthwork to be completed for the mainline alignment and for all side streets.

TABLE OF UNCLASSIFIED EXCAVATION

Excavation (CuYd)	2660
Undercut (CuYd)	10252
Total	12912

PROCEDURES FOR DETERMINING UNCLASSIFIED EXCAVATION QUANTITY

When plan quantities are used for payment, the Unclassified Excavation quantity shall be used for final payment.

The Excavation quantities and the Table of Unclassified Excavation have been reduced by the volume of in place surfacing that will be removed and/or salvaged.

The volume of in place Concrete Surfacing removed will NOT be paid for as Unclassified Excavation.

UNDERCUTTING

In all cut sections the earthen subgrade shall be undercut 1 foot below the earthen subgrade surface. The undercut material or other suitable material, as directed by the Engineer, shall then be replaced and compacted to the density specified for the section being constructed.

Shallow embankment sections, fills less than 1 foot in height measured at the finished subgrade shoulders, shall be undercut to ensure a minimum 1 foot height of earth embankment for the entire width of roadbed as shown on the typical sections. The upper 6 inches of undercut material that consists of topsoil with a high humus content shall be used as topsoil, placed in the areas to be seeded, or wasted offsite. The remaining undercut soil and soil obtained from adjacent excavation (excluding the upper 6 inches) shall then be replaced and compacted to the density specified for the section being constructed.

Where storm sewer pipe is located in the area to be undercut, the Contractor shall ensure that the undercut operations do not damage or disturb the storm sewer pipe.

The plan shown quantity will be the basis of payment. However, if there are additional areas of undercut other than what is shown in the plans, the Engineer shall direct removal of these areas and the additional areas will be measured according to the Engineer.

TABLE OF UNDERCUTTING

Station	to	Station	Quantity (CuYd)
34+10		63+12	10,252
		Total:	10,252

SALVAGE AND STOCKPILE ASPHALT MIX MATERIAL

The existing mainline pavement section from approximately Station 35+10 to Station 62+50 consists of 2.5" of asphalt overlay on concrete pavement. Asphalt concrete removal above the existing concrete pavement shall be paid for at the contract unit price per ton for "Salvage and Stockpile Asphalt Mix Material".

The asphalt overlay shall be salvaged and used as temporary material for the maintenance of vehicular accesses during construction. An estimated 2991 tons (1582 Cubic Yards) of asphalt mix shall be salvaged from approximately Station 35+10 to Station 62+50 and stockpiled at a site furnished by the Contractor and satisfactory to the Engineer. The quantity of salvage asphalt mix may vary from the plans. No adjustment will be made to the contract unit price for variations of the quantity of "Salvage and Stockpile Asphalt Mix Material."

This temporary material shall be maintained and replaced as necessary by the Contractor and remain in place until preparation for final pavement surfacing begins. The salvaged asphalt mix shall then become the property of the Contractor and removed from the site at no cost to the State. The costs for hauling, placing, compacting, maintaining, removing, and disposing of temporary material for accesses shall be incidental to the contract lump sum price for "Traffic Control, Miscellaneous".

WATER LEVELS

(For informational purposes only)

Station	Offset	Boring Depth (Ft)	Initial Depth (Ft)	Final Depth (Ft)	Time Between Readings (Hrs)
38+20	23.0 R	14.5	Dry/Caved 13.3	11.0/Caved 12.6	24
42+50	21.5 L	14.5	Dry/Caved 13.5	11.0/Caved 13.3	19
51+30	28.5 R	14.5	Dry/Caved 13.3	11.1/Caved 11.9	24
59+00	22.5 L	14.5	Dry/Caved 14.0	5.0/Caved 9.5	20

The water levels listed are as recorded at these specific locations during exploration of existing soil conditions.

REGISTERED PROFESSIONAL ENGINEER
REG. NO. 8019
JOHN RAYMOND VAN BEEK
SOUTH DAKOTA
8/17/16

UNSTABLE SUBGRADE

Some areas of unstable subgrade may be exposed after the removal of the existing pavement. These areas should be excavated and recompacted using the existing soil or replacement soil. If, in the opinion of the Engineer, the area will not stabilize by this method, reinforcement fabric (MSE) and granular material may be used. Stabilization will be accomplished by undercutting the subgrade and placing a layer of reinforcement fabric (MSE) at the bottom of the undercut. The undercut will then be backfilled with granular material and compacted. Contact the Geotechnical Engineering Activity (605-773-3725) for assistance should the use of geotextile become necessary.

5,324 sq. yds of reinforcement fabric (MSE) have been included in the Section F quantities for bidding purposes. This quantity is assumed to cover 4,630 sq. yds. (83.34' x 500') of subgrade. The bid quantity has been increased by 15% to account for overlaps. 2917 tons of granular material have been included in Gravel Cushion bid item for use as backfill. Refer to Section F for bid item quantities and specifications. These quantities can be adjusted or eliminated by CCO, depending on field conditions.

The top of the subgrade shall be prepared by smoothing the surface of the subgrade to minimize any ruts, ridges, and depressions. Any rocks or other protrusions that might damage the reinforcement fabric will be removed. The reinforcement fabric will be unrolled perpendicular to the centerline and overlapped a minimum of 2 feet.

The reinforcement fabric will be placed as taut as possible with minimal wrinkles. Placement will be done so that subsequent granular cover material does not shove, wrinkle or distort the in place reinforcement fabric. The overlaps will be shingled in a manner that assures granular material will not be forced under the reinforcement fabric during backfilling operations. The geotextile may be held in place with small piles of granular material or staples. No traffic will be allowed on the uncovered reinforcement fabric.

Granular material will be dumped at least 20 feet behind the leading edge of the backfill and pushed into place with a loader or dozer from the covered areas to the uncovered areas. No traffic will be allowed on the uncovered geotextile. The granular material will be placed in 8 inch lifts or as directed by the Engineer. The granular material will be compacted to 95% maximum dry density as determined by the Specified Density Method.

STORM SEWER PIPE TRENCHES

Back to back Type B inlets located in the medians and adjacent to the left turn lanes will be difficult to backfill with conventional methods. The area between the Type B inlets and connecting pipe shall be backfilled with Controlled Density Fill. A quantity of 50 cubic yards of Controlled Density Fill has been included in the estimate for use at these areas and additional areas identified by the Engineer.

In pipe trenches where the bottom of the trench is saturated and unstable, 1 foot of material may be removed from the bottom of the trench and replaced and recompacted with granular backfill material. The Engineer shall determine which pipe will be undercut. The granular material will conform to Section 421.2 A of the Specifications. Note that in accordance with the Specifications, the furnishing and placement of the backfill material is incidental to the contract unit price per cubic yard for "Pipe Culvert Undercut". A quantity of 100 cubic yards of Pipe Culvert Undercut has been included in the estimate for use as directed by the Engineer.

In areas where high groundwater is encountered, the length of trench excavations should be limited and backfilled immediately upon completion of the pipe installation. Sumps and dewatering equipment may be required.

The below table contains the rate of pipe culvert undercut per foot of pipe length and should be used as an aid in determining the actual amount of undercut to be performed during construction. The table is derived from the drawing below and conforms to the Specifications. When calculating pipe culvert undercut, the length of pipe ends should be included in the overall pipe length.

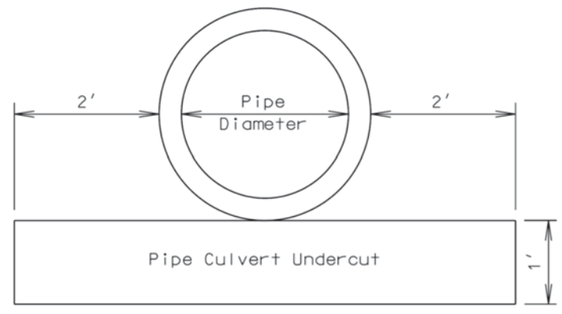

Pipe Diameter (In)	Round Pipe Undercut Rate for 1' Depth (CuYd/Ft)	Arch Pipe Undercut Rate for 1' Depth (CuYd/Ft)
24	0.2407	0.2577
30	0.2623	0.2847
36	0.2840	0.3110
42	0.3056	0.3337
48	0.3272	0.3596
54	0.3488	0.3827
60	0.3704	0.4105
66	0.3920	---

INCIDENTAL WORK GRADING

Station	to Station	L/R	Remarks
Mainline			
34+09	35+26	L	Remove and reset landscaping
34+20-29'	34+39-18'	L	Take out 22'-30" RCP
35+55	36+80	L	Remove and reset landscaping
36+83-28'	37+05-39'	L	Take out 22'-15" RCP
36+97	37+06	L	Remove and reset landscaping
37+04-45'	36+98-48'	L	Take out 6'-6" PVC
37+04-45'	37+05-39'	L	Take out 4'-15" PVC
37+05-18'	41+33-19'	L	Take out 424'-36" RCP
37+05-39'	37+05-18'	L	Take out 18'-15" PVC
37+54	37+71	L	Remove landscaping
39+01	39+39	L	Remove and reset landscaping
40+59-37'	40+64-28'	L	Take out 8'-15" RCP
40+64-28'	41+21-40'	L	Take out 54'-15" RCP
40+71-43'		R	Take Out Sign Footing
41+21-40'	41+23-45'	L	Take out 2'-15" PVC
41+21-40'	41+25-40'	L	Take out 4'-8" PVC
41+21-40'	41+33-19'	L	Take out 20'-24" RCP
41+23-45'	41+41-40'	L	Take out 18'-15" RCP
41+24	41+33	L	Remove and reset landscaping
41+31	41+41	L	Remove and reset landscaping
41+31-48'	41+29-193'	R	Take out 146'-36" RCP
41+31-48'	41+37-48'	R	Take out 6'-18" PVC
41+33-19'	41+31-48'	L/R	Take out 66'-36" RCP
41+33-19'	41+43-29'	L	Take out 10'-18" RCP
42+59	42+74	L	Remove and reset landscaping
43+04	43+39	L	Remove and reset landscaping
45+01	45+22	L	Remove and reset landscaping
45+16	46+31	L	Remove and reset landscaping
46+61-54'		R	Take out concrete Sign footing
47+83-36'	47+97-33'	R	Take out 8'-10" PVC
47+85-34'	47+96-33'	L	Take out 8'-10" PVC
47+96-33'	51+61-33'	L	Take out 364' 12" RCP
47+97-33'	47+96-33'	L/R	Take out 66'-12" RCP
48+48	48+65	R	Remove and reset landscaping
51+65-33'	51+75-34'	L	Take out 8'-10" PVC
51+67-34'	51+79-33'	R	Take out 12'-10" PVC
51+75-34'	52+26-34'	L	Take out 50'-12" RCP
51+79-33'	51+75-34'	L/R	Take out 68'-12" RCP
51+95-4'	51+84-4'	L	Take out 10'-12" RCP
51+95-4'	55+78-8'	L	Take out 380'-12" RCP
51+96-28'	51+95-4'	L/R	Take out 30'-12" RCP
51+96-51'	51+96-28'	R	Take out 22'-12" RCP
51+96-59'	51+88-46'	L	Take out 14'-8" PVC
51+96-59'	51+96-33'	L	Take out 26'-8" PVC
52+26-34'	55+42-34'	L	Take out 316'-12" RCP
52+26-52'	51+96-28'	R	Take out 38'-12" RCP
52+26-57'	52+26-34'	L	Take out 22'-12" RCP
55+41-61'	55+76-52'	L	Take out 36'-12" PVC
55+45-34'	55+55-33	L	Take out 8'-12" RCP
55+45-70	55+76-53'	R	Take out 32'-12" RCP
55+48-34'	55+58-34'	R	Take out 8'-12" PVC
55+55-33'	59+25-33'	L	Take out 368'-18" RCP
52+56-56'		R	Remove concrete Sign footing

INCIDENTAL WORK, GRADING (CONTINUED)

54+10.6	55+51.6	R	Remove irrigation system and landscaping
55+58-34'	55+55-33'	L/R	Take out 66'-12" RCP
55+64	55+74	R	Remove and reset landscaping
55+76-35'	55+78-8'	L/R	Take out 42'-12" RCP
55+76-52'	55+79-47'	L	Take out 4'-12" RCP
55+76-53'	55+76-35'	R	Take out 18'-12" RCP
55+76-432'	55+81-432'	L	Take out 4'-12" RCP
55+78-8'	59+61-9'	L	Take out 382'-18" RCP
55+79-37'	55+78-8'	L	Take out 28'-12" RCP
55+79-47'	55+79-37'	L	Take out 10'-12" RCP
55+81-432'	55+79-47'	L	Take out 382'-12" RCP
55+81-432'	55+81-442'	L	Take out 8'-12" RCP
56+07-52'	55+79-37'	L	Take out 32'-12" PVC
56+07-56'	55+78-8'	L/R	Take out 68'-10" PVC
56+09-431'	55+81-432'	L	Take out 24'-12" RCP
57+90.8	50+30.3	R	Remove irrigation system
57+96	58+32	L	Remove and reset landscaping
59+24-37'	59+39-37'	R	Take out 10'-12" PVC
59+24-74'	59+24-37'	R	Take out 36'-12" RCP
59+29-33'	59+38-32'	L	Take out 6'-18" RCP
59+38-32'	59+58-31'	L	Take out 18'-24" RCP
59+39-37'	59+38-32'	L/R	Take out 68'-12" RCP
59+55-52'	59+39-37'	R	Take out 20'-8" PVC
59+56-55'	59+58-31'	L	Take out 22'-12" RCP
59+58-31'	59+61-9'	L	Take out 22'-18" PVC
59+58-31'	62+85-33'	L	Take out 326'-24" RCP
59+61-9'	59+61-4'	L/R	Take out 14'-12" RCP
59+61-9'	59+66-4'	L	Take out 8'-12" RCP
59+61-9'	59+66-14'	L	Take out 6'-12" RCP
60+09.3	6+20.0	R	Remove irrigation system
61+70	62+05	R	Remove and reset landscaping
62+65-7'	62+70-7'	L	Take out 4'-24" RCP
62+70-7'	62+93-29'	L	Take out 32'-24" RCP
62+93-29'	62+93-33'	L	Take out 4'-24" RCP
63+07-34'	63+14-34'	R	Take out 4'-10" PVC
63+14-34'	63+42-6'	L/R	Take out 46'-12" RCP
63+17-33'	63+41-31'	L	Take out20'-24" RCP
63+41-31'	63+42-6'	L	Take out 22'-12" RCP
St Anne Street			
2+81	3+62	R	Remove and reset landscaping
St Francis Street			
2+82	3+22	L	Remove and reset landscaping
3+46	3+84	L	Remove and reset landscaping
4+80	5+57	L	Remove and reset landscaping
St Patrick Street			
2+87	3+36	L	Remove and reset landscaping
St Andrew Street			
5+47	6+48	L	Remove and reset landscaping
Franklin Street			
5+63	6+00	R	Remove and reset landscaping
St Cloud			
5+48.3	6+00	L	Remove landscaping and irrigation system.

TABLE OF CLEAR AND GRUB TREE

Station	Offset	Quantity (Ea)
Mainline		
48+00	60L	1
St Francis Street		
3+58	26' R	1
3+63	25' L	1
5+37	24' L	1
5+57	21' L	1
St Andrew Street		
4+41	30' R	1
St Charles Street		
3+49	26' R	1
St Cloud Street		
5+66	28'R	1
	Total:	8

REMOVAL OF EXISTING CONCRETE PAVEMENT

Existing asphalt concrete and/or existing asphalt concrete patch work that was placed above the existing concrete pavement is included in the quantity for "Salvage and Stockpile Asphalt Mix Material". The Contractor shall dispose of the concrete pavement at a site approved by the Engineer.

The existing mainline pavement section from approximately Station 35+10 to Station 62+50 consists of 2.5" of asphalt on 9" of concrete pavement. The existing 9-inch P.C.C. pavement from 35+10 to 41+10 is typically 48 feet wide and the pavement from 44+80 to 62+50 is typically 64 feet wide. The existing pavement width transitions from 48 feet to 64 feet between 41+10 and 44+80. The existing 9-inch P.C.C. pavement is reinforced with welded wire fabric. The welded wire fabric weighs not less than 60 pounds per 100 square feet. The longitudinal wires are No. 1 gauge and are spaced 6 inches center to center and the transverse wires are No. 4 gauge and are spaced 12 inches center to center. Longitudinal joints are reinforced with No. 5x30" deformed tie bars spaced 48" center to center. Transverse joints are reinforced with 1-¼" steel dowel bars spaced 12" center to center. This information is from Underlying Plans and actual pavement thicknesses may vary.

See Section F – Reclaimed Concrete Aggregate for additional information on use of existing concrete pavement in lieu of gravel cushion.

TABLE OF CONCRETE PAVEMENT REMOVAL

Station	to	Station	Description	Quantity (SqYd)
34+10		62+50	Mainline	21,812.0
			Total:	21,812.0

TABLE OF IN-PLACE SURFACING

(For informational purposes only)

Station	Offset (Ft)	Width (Ft)	EXISTING THICKNESSES* AC (In)	PCC (In)	Granular Base (In)
38+20	19.5 R	48	2.5	8.5	9.5
42+50	21.5 L	51.4	2.5	8.25	10.5
51+30	24.0 R	64	2.5	7.0	10.5
59+00	17.0 L	64	2.75	8.5	9.5

*The thicknesses listed are as recorded at these specific locations during exploration of existing soil conditions. See REMOVAL OF EXISTING CONCRETE PAVEMENT for general pavement thickness and composition.

TABLE OF ASPHALT CONCRETE PAVEMENT REMOVAL

Station	to	Station	L/R	Quantity (SqYd)
Mainline				
34+08.57		37+09.46	R	326.6
35+19.35		35+62.20	L	118.6
37+60.41		38+38.56	L	166.3
38+59.23		39+18.94	L	179.0
39+25.70		39+74.25	R	123.8
39+41.42		40+58.14	L	201.6
41+38.45		42+62.53	L	119.4
42+71.50		42+90.38	L	54.4
46+30.63		47+76.12	R	105.7
46+33.52		46+74.77	L	75.5
48+69.63		49+33.62	R	27.1
49+46.87		50+11.16	R	26.4
50+32.70		51+71.66	R	54.0
52+49.85		52+74.35	L	23.3
52+54.34		54+38.76	L	373.2
53+83.37		54+10.65	R	11.0
54+99.80		55+42.09	L	37.9
56+85.43		57+02.32	L	37.1
57+68.48		57+92.16	L	56.2
58+31.44		59+31.79	L	49.6
60+74.30		60+82.53	L	2.8
60+81.80		61+52.59	L	58.0
61+47.79		61+70.43	R	49.7
61+50.52		62+23.05	L	108.1
61+71.26		62+23.31	L	48.7
62+49.91		63+11.70	R/L	434.4
St Anne Street				
2+44.08		3+91.40	L/R	530.2
2+49.87		2+70.99	L	12.7
2+52.03		2+69.69	R	14.4
4+71.48		5+73.43	R	107.1
4+73.26		5+73.43	R	48.7
4+73.26		5+73.43	R	107.1
4+73.76		5+73.43	L/R	358.2
St Francis Street				
2+80.39		3+93.52	L	193.5
2+80.39		3+94.38	L/R	452.1
2+85.32		3+13.02	R	26.2
4+72.78		5+56.25	L/R	307.2
St Patrick Street				
2+03.70		3+65.08	L/R	497.6
2+92.32		3+03.24	R	10.3
St Andrew Street				
3+51.59		4+53.10	L/R	315.2
5+47.83		6+93.98	L/R	453.1

TABLE OF ASPHALT CONCRETE PAVEMENT REMOVAL (CONTINUED)

St Charles Street			
3+18.92	3+30.61	L	19.1
3+19.39	4+51.58	L/R	483.7
3+20.54	3+95.34	L	33.0
3+55.55	3+90.53	L	61.0
4+15.47	4+52.01	L	69.2
5+49.60	6+66.77	L/R	364.0
5+51.17	6+11.54	R	44.5
6+02.73	6+38.78	L	29.3
Franklin Street			
3+92.60	4+52.22	L/R	185.3
5+46.96	5+99.94	L/R	167.0
St Cloud Street			
3+93.40	4+52.40	L/R	496.7
3+93.41	4+52.87	L	113.5
5+50.05	5+99.43	L/R	152.0
5+75.83	5+96.84	L	17.4
		Total:	8537.7

TABLE OF ASPHALT CURB REMOVAL

Station	to Station	L/R	Quantity (Ft)
Mainline			
41+39.73	42+57.22	L	117.5
50+31.70	50+32.98	R	4.2
53+77.8	53+87.8	R	27.7
St Francis Street			
2+80.42	3+15.18	L	34.8
3+54.35	3+97.61	L	41.9
		Total:	226.1

TABLE OF CONCRETE CURB AND/OR GUTTER REMOVAL

Station	to Station	L/R	Quantity (Ft)
Mainline			
35+18.54	35+23.90	L	28.8
35+57.53	35+63.02	L	28.6
39+39.40	39+57.80	L	42.2
39+81.78	40+59.08	L	87.1
39+81.80	40+59.10	L	87.0
42+59.92	42+73.88	L	53.8
49+34.01	49+46.63	R	20.4
52+62.4	53+77.8	R	109.5
54+99.24	55+01.29	L	9.3
56+66.17	56+71.25	L	6.3
57+01.12	57+03.27	L	7.3
57+20.55	57+21.24	L	4.6
60+81.80	61+52.60	L	71.4
62+49.60	63+11.71	L	65.5
62+49.61	63+11.52	R	61.9
St Anne Street			
2+44.24	3+89.92	R	148.1
2+43.97	3+93.00	L	149.0
4+74.08	5+73.39	R	98.8
4+74.21	5+73.44	L	99.0
St Francis Street			
2+80.39	2+84.96	R	4.6
2+80.39	3+14.39	L	34.0
2+84.96	3+19.54	R	34.6
2+85.16	2+91.52	R	13.1
3+13.99	3+16.60	R	11.1
3+14.39	3+49.62	L	34.9
3+19.54	3+92.94	R	74.7
3+49.62	3+95.41	L	44.9
4+72.70	5+20.55	R	46.9
4+73.80	5+56.21	L	112.5
5+20.55	5+56.25	R	35.7
St Patrick Street			
2+03.71	2+23.01	L	19.3
2+03.73	2+11.56	R	7.8
2+11.56	2+51.41	R	39.9
2+22.89	2+27.65	L	14.0
2+23.01	2+87.63	L	64.6
2+51.41	2+89.07	R	37.7
2+87.63	3+64.24	L	76.6
2+89.07	3+17.58	R	28.5
3+17.58	3+65.09	R	47.5
St Andrew Street			
3+51.57	4+52.95	L	101.4
3+51.73	4+53.11	R	101.4
3+62.66	3+62.69	R	8.1
5+47.82	6+49.48	L	101.7
5+48.29	6+05.13	R	56.8
6+37.79	6+74.18	R	36.4
6+76.02	6+94.09	L	18.1
St Charles Street			
3+22.44	4+51.56	R	142.9
3+23.83	3+28.70	L	5.0
3+28.70	3+55.87	L	27.2
3+55.87	3+87.20	L	31.6
3+87.20	4+15.64	L	28.4
4+15.64	4+51.72	L	36.3
5+49.42	5+55.90	R	6.5
5+49.61	5+69.07	L	19.5

TABLE OF CONCRETE CURB AND/OR GUTTER REMOVAL (CONTINUED)

5+58.68	5+69.13	L	29.2
5+99.86	6+66.78	R	66.9
6+03.38	6+44.62	L	41.2
6+44.62	6+61.12	L	16.5
6+43.98	6+44.85	L	12.8
6+61.12	6+66.78	L	5.7
Franklin Street			
3+09.32	3+45.32	R	36.0
3+92.50	4+52.47	L	60.0
3+92.61	4+52.24	R	59.6
5+46.87	5+99.90	R	53.0
5+47.00	5+82.08	L	35.1
5+82.08	5+99.89	L	17.8
St Cloud Street			
3+93.39	4+52.85	L	59.5
3+93.40	4+15.90	R	22.5
4+15.90	4+39.90	R	24.0
4+39.90	4+52.39	R	12.5
5+49.92	5+99.43	R	49.5
5+50.04	5+69.89	L	19.9
5+69.89	6+03.85	L	34.0
5+73.36	5+75.83	L	7.5
5+96.84	5+99.53	L	7.4
		Total:	3353.4

TABLE OF CONCRETE DRIVEWAY PAVEMENT REMOVAL

Station	to Station	L/R	Quantity (SqYd)
Mainline			
38+28.34	38+57.19	L	54.7
39+13.30	39+38.40	R	23.2
45+12.89	46+30.67	R	149.6
45+13.77	46+30.59	R	99.5
46+47.48	46+53.44	L	10.6
46+72.49	46+83.99	L	4.4
52+74.35	53+74.59	L	94.8
53+90.98	54+20.54	L	28.1
55+01.48	55+36.82	L	31.9
56+66.65	57+03.32	L	71.2
57+08.13	57+22.04	R	10.1
57+10.14	57+19.70	R	6.1
57+20.56	57+71.09	L	60.9
57+36.52	57+91.05	L	49.2
58+32.24	58+63.39	L	27.7
59+88.52	60+37.45	L	38.4
60+09.56	60+90.42	L	47.7
60+51.26	60+89.97	L	29.0
61+52.60	61+71.59	L	18.0
62+01.03	62+22.62	R	15.2
62+04.55	62+19.96	R	33.7
62+23.05	62+41.00	L	8.0
62+23.12	62+41.27	L	17.0

REGISTERED PROFESSIONAL ENGINEER
REG. NO. 8019
JOHN RAYMOND VAN BEEK
SOUTH DAKOTA
8/17/16

TABLE OF CONCRETE DRIVEWAY PAVEMENT REMOVAL (CONTINUED)

St Francis Street			
2+85.01	3+19.51	R	43.9
3+14.43	3+49.60	L	33.4
4+81.79	5+56.19	R	77.7
5+20.60	5+56.19	R	13.0
St Patrick Street			
2+11.15	2+52.71	R	35.1
2+14.12	2+31.09	R	8.1
2+22.93	2+50.02	L	28.2
2+49.55	2+87.60	L	39.1
2+52.52	2+87.76	L	20.6
2+89.17	3+17.60	R	25.7
3+03.24	3+13.33	R	9.7
4+64.72	5+59.23	L	74.0
4+77.55	5+53.85	L	61.2
St Andrew Street			
6+05.17	6+37.74	R	47.5
6+49.48	6+76.06	L	46.6
6+74.15	6+94.09	R	13.3
St Charles Street			
3+28.63	3+57.43	L	47.7
3+86.45	4+17.32	L	49.5
3+95.34	4+52.18	L	26.9
5+55.84	5+99.87	R	82.4
5+58.68	6+03.10	L	94.4
6+43.82	6+60.85	L	27.6
St Cloud Street			
4+15.83	4+39.71	R	34.6
5+69.81	6+03.78	L	45.9
		Total:	1915.8

TABLE OF SIDEWALK REMOVAL

Station	to Station	L/R	Quantity (SqYd)
Mainline			
34+09.22	37+02.64	L	185.8
34+09.48	37+22.88	R	213.3
37+40.24	39+56.51	L	149.3
37+61.89	39+18.69	R	94.4
39+38.94	40+92.67	R	267.1
39+83.04	40+82.92	L	70.9
41+24.66	44+64.79	L	232.5
41+35.94	44+61.27	R	211.9
44+98.24	48+15.25	L	202.2
45+02.11	48+13.17	R	184.4
48+47.51	51+94.16	R	297.3
48+47.76	52+02.38	L	205.3
52+27.35	55+74.41	L	376.8
52+27.59	55+74.22	R	282.6
56+07.79	59+54.48	L	235.4
56+08.07	59+54.75	R	215.4
59+87.48	63+12.05	L	189.4
59+08.58	63+11.72	R	213.6
St Anne Street			
2+43.87	3+93.57	L	75.8
2+44.29	3+87.61	R	77.3
4+73.08	5+73.24	R	54.8
4+75.85	5+12.8	L	20.5
St Francis Street			
2+80.39	2+90.14	R	6.5
2+80.42	3+97.77	L	51.6
3+15.46	3+89.59	R	44.2
4+88.55	5+56.25	L	54.6
Saint Patrick Street			
2+03.70	3+65.22	R	91.6
2+03.76	3+64.22	L	99.2
4+64.86	5+53.84	L	48.2
4+71.77	5+53.77	R	46.7
St Andrew Street			
3+53.38	4+52.30	L	54.4
3+85.79	3+85.98	R	5.4
3+92.20	4+52.55	R	34.5
5+47.17	5+51.08	L	2.1
5+47.44	5+63.54	R	8.2
St Charles Street			
3+19.36	4+52.00	R	79.2
3+19.38	4+52.20	L	73.4
5+46.73	6+66.79	L	76.7
5+47.02	6+66.80	R	69.6
Franklin Street			
3+15.32	3+39.32	R	15.2
4+35.17	4+52.59	R	10.2
4+41.26	4+52.30	L	5.8
5+46.62	5+62.94	R	9.0
5+47.07	5+65.96	L	10.4
St Cloud Street			
4+40.54	4+48.75	L	4.5
4+48.87	4+52.48	R	2.0
5+48.18	5+52.36	R	2.2
5+48.33	5+99.94	L	28.5
		Total:	4989.9

TABLE OF RETAINING WALL REMOVAL

This table includes the removal of all railings located above retaining walls.

Station	to Station	L/R	Quantity (Ft)
Mainline			
43+39.60	43+39.60	L	10.7
43+40.38	43+40.58	L	3.0
44+44.16	44+50.74	L	6.5
45+10.83	46+19.96	L	120.5
Franklin Street			
3+15.32	3+39.32	R	24.0
4+43.83	4+52.29	R	9.5
St Patrick Street			
3+21.74	3+69.95	L	48.2
3+42.10	3+81.15	R	38.8
		Total:	261.2

The removal of all storm sewer manholes and junction boxes shall be paid per each at the contract unit price for “Remove Manhole”.

TABLE OF MANHOLE REMOVAL

Station	L/R	Quantity (Each)
37+05-18’	L	1
41+33-19’	L	1
47+96-33’	L	1
47+97-33’	R	1
51+75-34’	L	1
51+95-4’	L	1
55+55-33’	L	1
55+58-34’	R	1
55+78-8’	L	1
55+79-47’	L	1
59+38-32’	L	1
59+39-37’	R	1
59+58-31’	L	1
59+61-9’	L	1
63+14-34’	R	1
63+17-33’	L	1
63+41-31’	L	1
63+42-6’	L	1
	Total:	18

TEMPORARY DROP INLET COVER (STEEL PLATE) REMOVAL

The drop inlets installed with project NH0016(79)67, PCN 027C at stations 66+83.8 – 3.2’ LT and 66+83.8 – 7.8’ LT were installed temporarily without the 6-inch concrete collar and Type B frame and grate. The Contractor shall remove the 1-inch thick Grade A-36 Steel Plates that were placed over these inlets and install the concrete collars and frames and grates. The Steel Plates are secured to the top of boxes using a minimum of four half-inch diameter, three-inch long concrete anchor bolts. No separate payment will be made for the removal of the steel plates, all work required for the proper removal and disposal of the steel plates shall be considered incidental to the various bid items associated to the drop inlet installation.

TABLE OF DROP INLET REMOVAL

All costs for removal of the frame and grate assembly shall be incidental to the contract unit price per each for “Remove Drop Inlet”.

Station	L/R	Quantity (Each)
36+83-28’	L	1
37+04-45’	L	1
37+05-39’	L	1
40+58-37’	L	1
40+64-28’	L	1
41+21-40’	L	1
41+23-45’	L	1
41+31-39’	R	1
41+37-48’	R	1
41+41-40’	L	1
41+43-29’	L	1
47+82-34’	L	1
47+83-36’	R	1
47+85-34’	L	1
51+61-33’	L	1
51+63-34’	R	1
51+65-34’	L	1
51+67-34’	R	1
51+95-51’	R	1
51+96-59’	L	1
52+26-52’	R	1
52+26-56’	L	1
55+42-34’	L	1
55+44-34’	R	1
55+45-34’	L	1
55+48-34’	R	1
55+76-52’	L	1
55+76-53’	R	1
56+07-52’	L	1
56+07-56’	R	1
59+24-37’	R	1
59+25-33’	L	1
59+29-33’	L	1
59+56-51’	R	1
59+56-55’	L	1
63+04-34’	R	1
63+07-34’	R	1
	Total:	37

CONCRETE PIPE CONNECTIONS

Pipe connections to existing pipes, manholes, junction boxes, and drop inlets shall be done by breaking a hole into the existing structure and inserting the pipe. A concrete collar shall then be poured around the pipe in the area of the connection.

When it is not possible to use a normal pipe joint (male-female ends), connections to existing pipe shall be made by placing a 2’ wide by 6" thick M6 concrete collar around the outside of the connection. The concrete collar shall be reinforced with 6x6 W2.9 x W2.9 wire mesh.

All costs for constructing the concrete collars including materials and labor shall be incidental to the contract unit price per foot for the corresponding pipe bid item.

STORM SEWER

Reinforced concrete pipe may be bell and spigot. The pipe sections shall be adjoined such that the ends are fully entered and the inner surfaces are reasonably flush and even.

Lift holes in the reinforced concrete pipe shall be plugged with grout. Lift holes shall not be provided in the pipe sections to be gasketed.

Watertight joints are required for reinforced concrete pipe, drop inlets, manholes, and junction boxes where storm sewers run parallel to and within 10 feet horizontally from existing or proposed water mains.

Watertight joints are required where reinforced concrete pipes, drop inlets, manholes, or junction boxes cross water mains and are separated a distance of 18 inches or less, above or below, the water main.

If watertight joints are required then the watertight joints shall extend for a distance of 10 feet beyond the water main. This measurement shall be from the sealed concrete joint to the outer most surface of the water main.

Watertight joint seals shall conform to the following requirements:

1. Reinforced Concrete Pipe (Circular): Gasketed pipe shall conform to the requirements of ASTM C443 and the gasket shall be in conformance with Section 990 of the Specifications. Non-gasketed concrete pipe shall be sealed with a mastic joint seal conforming to the requirements of ASTM C990 and encased with a minimum 2’ wide by 6” thick M6 concrete collar reinforced with 6x6 W2.9 x W2.9 wire mesh.

2. Reinforced Concrete Pipe (Arch): Gasketed pipe shall conform to the requirements of ASTM C443 and the gasket shall be in conformance with Section 990 of the Specifications. Non-gasketed concrete pipe joints shall be sealed with a hydrophilic flexible water stop seal and wrapped with a 1-foot wide strip of fabric above the cradle. The fabric shall conform to the requirements of Section 831 of the Specifications for Type A Drainage Fabric. The hydrophilic flexible water stop shall be from the list below.

3. Drop Inlets, Manholes, and Junction Boxes: Joints shall be sealed with one of the following methods:

    a. A flexible strip seal placed in the joints conforming to the requirements of ASTM C990 and the perimeter encased with a minimum 2’ wide by 6” thick M6 concrete collar reinforced with 6x6 W2.9 x W2.9 wire mesh.

STORM SEWER (CONTINUED)

    b. A hydrophilic flexible water stop seal placed in the joints and a 1-foot wide strip of fabric wrapped around the perimeter of the pipe. The fabric shall conform to the requirements of Section 831 of the Specifications for Type A Drainage Fabric. The hydrophilic flexible water stop shall be from the list below.

    c. A self-adhesive external joint seal wrap. The seal wrap shall be from the list below.

Approved List of Self-adhesive Joint Wrap

Product	Manufacturer
Mar Mac Seal Wrap	Mar Mac Construction Products McBee, SD 843-335-5814 http://www.marmac.com/
ConWrap CS-217	Concrete Sealants, Inc. Tipp City, OH 800-332-7325 http://conseal.com/

Approved List of Hydrophilic Flexible Water Stop Seal:

Product	Manufacturer
Waterstop RX	Cetco Hoffman Estates, IL 800-527-9949 http://www.cetco.com/
Conseal CS-231	Concrete Sealants, Inc. Tipp City, OH 800-332-7325 http://conseal.com/

Gaskets and seals (mastic, waterstop, and seal wraps) shall be installed in accordance with the manufacturer’s recommendations.

REGISTERED PROFESSIONAL ENGINEER
REG. NO. 8019
JOHN RAYMOND VAN BEEK
SOUTH DAKOTA
8/17/16

STORM SEWER (CONTINUED)

The cost for furnishing and installing all gaskets, mastic joint seal, waterstop seal, seal wrap, concrete collars, and for plugging the lift holes shall be incidental to the contract unit price per foot for the corresponding pipe bid item.

Install length for all storm sewer pipes are called out by the measurement taken from the inside wall of junction boxes/inlets, the center of tees and the PI's of bends and rounded up to the nearest even number increment (2, 4, 6, etc).

The laying length of tees, reducers and bends has been removed in the Pipe Table so only the required length of pipe is quantified. The length called out in the table of storm sewer pipe is the length called out in the Estimate of Quantities. For estimating purposes it is assumed that each leg of all tees, reducers and bends will be four feet.

Pipes are designed linearly from center of junction box/inlet to center of junction box/inlet which, in some cases, causes the pipes to graphically appear to enter the corner of a junction box or inlet. In cases where the pipe is not perpendicular to the junction box wall, the Contractor shall match center of pipe to the horizontal center of the junction box wall.

Storm Sewer pipe shall always be greater than two feet in length. 4-foot or 6-foot sections of RCP may be needed at or near inlets or junction boxes to ensure all pipe lengths are greater than 2 feet to avoid the shifting of structures in the field during construction.

STORM SEWER VIDEO INSPECTION

All newly installed pipe culverts and storm sewer pipe 24" in diameter and smaller, shall pass a video inspection. The video inspection shall consist of viewing the inside of all pipe culverts and storm sewer installed to determine proper alignment, grade, joining, etc.

Straight alignment shall be checked either by lamping or by laser beam. Lamping shall be conducted by viewing the pipe from inside a drop inlet or storm sewer manhole to determine proper alignment. It is the Contractor's responsibility to notify the Engineer that the pipe culverts and storm sewers have been inspected and shall provide the Engineer with a video recording of each length of pipe inspected, including documented location, in feet, of each run of pipe inspected by video. Video inspections shall be completed after all grading operations are complete and prior to surfacing. No surfacing, including gravel cushion will be allowed until the Engineer has received and viewed the video, presented findings to the Contractor, and directed corrective actions, if necessary.

Video inspection shall be completed unless specified otherwise.

All costs to video inspect the various pipe bid items shall be incidental to the contract unit price per foot of "Storm Sewer Video Inspection." If defective workmanship of material or construction is noted, the Contractor, at no expense to the State, shall correct the deficiency. The Contractor shall perform additional video inspections to review if the repairs were made properly and in accordance with the specifications. The expense of any additional video inspections will be borne entirely by the Contractor. The Contractor shall be responsible for all related costs, including concrete or asphalt resurfacing if the street has been surfaced. The Contractor shall be required to repair all deficiencies. The State may cause to take any actions necessary for any items not completed or repaired in a timely manner.

DROP INLETS

The plan shown quantities of the drop inlet components such as Class M6 Concrete, Reinforcing Steel, Type B Frame and Grate Assembly, Type E Frame and Grate, Precast Drop Inlet Collar, and Precast Concrete Type S Drop Inlet Lid will be the basis of payment for these items.

If additions or reductions to the number of drop inlets are ordered by the Engineer, payment for the components required to construct the drop inlets will be made at the contract unit prices for the components of the drop inlets.

TABLE OF DROP INLETS AND QUANTITIES

Station	L / R	Drop Inlet Size	Drop Inlet Type	Class M6 Concrete (CuYd)	Reinf. Steel (Lb)	Precast Drop Inlet Collar (Each)	Frame and Grate/Lid Type
Mainline							
*35+14.1	R	2'X3'	B	0.91	176	1	B
35+14.1	L	4'X4'	B	2.31	409	1	B
*36+83.8	R	2'X3'	B	0.70	147	1	B
36+83.8	L	4'X4'	B	1.93	365	1	B
37+80.5	L	5.5'X3'	B	2.09	367	1	B
*38+68.2	R	2'X3'	B	0.87	170	1	B
38+68.2	L	5.5'X3'	B	2.07	376	1	B
40+58.2	L	2'X3'	B	1.11	201	1	B
*40+60.1	R	4'X11'	S	4.09	687	0	S
40+60.1	L	4'X11'	S	3.91	733	0	S
41+53.6	L	3'X4'	B	3.91	296	1	B
41+53.7	L	2'X3'	B	1.14	206	1	B
*41+55.0	R	2'X3'	B	0.92	176	1	B
41+67.6	L	3'X4'	B	1.64	265	1	B
42+62.3	L	3'X4'	B	1.67	269	1	B
44+33.7	L	3'X4'	B	1.58	252	1	B
47+82.8	L	2'X3'	B	1.01	188	1	B
*47+82.8	R	2'X3'	B	0.89	172	1	B
*48+74.1	R	2'X3'	B	0.96	188	1	B
*48+74.1	L	3'X4'	B	1.89	296	1	B
49+61.8	R	2'X3'	B	1.03	191	1	B
*49+61.8	L	3'X4'	B	1.88	300	1	B
*50+82.7	R	2'X3'	B	0.90	174	1	B
51+60.6	L	2'X3'	B	1.10	200	1	B
51+60.6	L	2'X3'	B	1.05	200	1	B
*51+60.6	R	2'X3'	B	0.85	174	1	B
51+68.1	L	3'X4'	B	1.80	297	1	B
*52+56.7	R	2'X3'	B	0.93	185	1	B
52+56.7	L	3'X4'	B	1.87	299	1	B
*53+55.4	R	2'X3'	B	0.99	186	1	B
53+55.4	L	3'X4'	B	1.95	309	1	B
54+05.5	L	2'X3'	B	1.22	216	1	E
54+21.2	L	4'X4'	B	2.42	401	1	B
*54+28.9	R	2'X3'	B	1.27	222	1	B
54+94.4	L	4'X4'	B	2.33	396	1	B
55+40.6	L	2'X3'	B	1.05	200	1	B
55+40.6	L	2'X3'	B	1.05	200	1	B
*55+40.6	R	2'X3'	B	0.98	191	1	B
56+34.5	L	4'X4'	B	2.29	391	1	B
*58+13.2	R	2'X3'	B	0.87	169	1	B

TABLE OF DROP INLETS AND QUANTITIES (CONTINUED)

58+13.2	L	4'X4'	B	2.25	386	1	B
*58+67.2	R	2'X3'	B	0.85	174	1	B
59+21.1	L	2'X3'	B	1.04	193	1	B
59+21.1	L	2'X3'	B	0.99	193	1	B
*59+21.1	R	3'X4'	B	1.53	252	1	B
59+21.1	L	4'X4'	B	2.14	377	1	B
*60+17.9	R	3'X4'	B	1.66	267	1	B
*60+17.9	L	4'X4'	B	2.13	382	1	B
*61+32.2	R	2'X3'	B	0.81	162	1	B
*61+32.3	L	4'X4'	B	2.44	411	1	B
*61+83.5	R	2'X3'	B	0.82	170	1	B
*62+01.9	L	4'X4'	B	2.33	397	1	B
*62+42.0	R	2'X3'	B	0.98	191	1	B
62+98.7	L	2'X3'	B	0.84	166	1	B
62+98.7	L	2'X3'	B	0.80	167	1	B
*62+98.7	L	4'X4'	B	1.88	352	1	B
*63+00.5	R	3'X4'	B	1.56	251	1	B
66+83.8	L	2'X3'	B	-	-	1	B
66+83.8	L	2'X3'	B	-	-	1	B
St. Anne Street							
*2+96.4	L	2'X3'	B	0.91	181	1	B
2+96.4	R	2'X3'	B	0.90	173	1	B
3+70.5	R	2'X3'	B	0.88	171	1	B
3+70.5	L	3'X4'	B	1.51	250	1	B
St. Francis Street							
2+82.6	R	2'X3'	B	1.02	190	1	B
*2+82.6	L	2'X3'	B	1.09	198	1	B
*3+12.3	L	2'X3'	B	1.04	199	1	B
3+22.8	R	2'X3'	B	0.89	180	1	B
3+47.8	R	3'X4'	B	1.56	250	1	B
*3+52.8	L	3'X4'	B	1.85	286	1	B
3+72.0	R	3'X4'	B	1.49	247	1	B
*3+74.6	L	3'X4'	B	1.73	287	1	B
5+31.4	L	7'X11'	S	8.54	2254	0	S
St. Patrick Street							
3+25.0	L	2'X3'	B	1.01	188	1	B
3+25.0	R	2'X3'	B	1.09	199	1	B
3+60.8	L	2'X3'	B	0.81	169	1	B
3+60.8	R	2'X3'	B	0.90	187	1	B

REGISTERED PROFESSIONAL ENGINEER
REG. NO. 8019
JOHN RAYMOND VAN BEEK
SOUTH DAKOTA
8/17/16

TABLE OF DROP INLETS AND QUANTITIES (CONTINUED)

St. Andrew Street							
3+59.9	L	2'X3'	B	1.41	182	1	E
3+59.9	R	2'X3'	B	0.69	147	1	B
4+36.6	L	2'X3'	B	0.67	157	1	B
4+36.6	R	2'X3'	B	0.81	162	1	B
5+63.1	L	2'X3'	B	0.81	175	1	B
5+63.1	R	2'X3'	B	0.94	179	1	B
5+81.0	L	2'X3'	B	0.86	175	1	B
5+98.9	L	2'X3'	B	0.92	176	1	B
St. Charles Street							
3+80.9	L	2'X3'	B	0.95	181	1	B
4+04.8	R	2'X3'	B	0.76	156	1	B
4+23.9	L	4'X6'	S	2.70	473	0	S
4+40.5	L	3'X4'	B	1.65	266	1	B
5+58.0	L	2'X3'	B	0.83	177	1	B
5+58.0	R	2'X3'	B	0.93	177	1	B
6+07.5	L	2'X3'	B	0.86	168	1	B
Franklin Street							
3+95.8	L	2'X3'	B	0.81	169	1	B
3+95.8	R	2'X3'	B	0.96	195	1	B
*4+02.6	L	2'X3'	B	0.81	162	1	B
4+41.6	R	2'X3'	B	0.98	197	1	B
5+60.6	R	2'X3'	B	1.15	219	1	B
*5+87.5	L	2'X3'	B	0.85	167	1	B
*5+96.0	L	2'X3'	B	0.85	174	1	B
5+96.0	R	2'X3'	B	1.03	198	1	B
St. Cloud Street							
3+95.4	R	2'X3'	B	1.09	198	1	B
4+07.1	L	2'X3'	B	1.77	221	1	E
4+07.1	R	2'X3'	B	1.10	206	1	B
4+41.4	L	2'X3'	B	1.69	212	1	E
*5+66.6	L	2'X3'	B	0.87	171	1	B
5+88.2	R	2'X3'	B	0.98	185	1	B
			Totals:	146.41	26565	101	

Total Type B Frame and Grate Assembly	97
Total Type E Frame and Grate	4
Total 4'x6' Precast Concrete Type S Drop Inlet Lid	1
Total 4'x11' Precast Concrete Type S Drop Inlet Lid	3

* Drop inlet requires watertight joints in accordance with the STORM SEWER notes.

REGISTERED PROFESSIONAL ENGINEER
REG. NO. 8019
JOHN RAYMOND VAN BEEK
SOUTH DAKOTA
8/17/16

TABLE OF JUNCTION BOXES AND QUANTITIES

Station	L/R	Size L'xW'xH'	Frame and Lid (Type)	Class M6 Concrete (CuYd)	Reinforcing Steel (Lb)	2" Adjusting Ring for Manhole (Ea)
41+32.9	L	6'x6'x6.5'	A10	5.5	1301	3
			Totals:	5.5	1301	3

Total Type A10 Manhole Frame and Lid 1

TABLE OF PARKING CURB STOPS

Station	to	Station	L/R	Quantity (Ea)
46+64.5		47+69.4	R	12
			Total:	12

6" CONCRETE BOLLARDS

All labor, material and equipment necessary to furnish and install 6" concrete bollards as shown on the detail included in these plans shall be included in the contract unit price per each for "Bollard".

TABLE OF 6" CONCRETE BOLLARDS

Station	L/R	Quantity (Ea)
55+64.7	L	1
55+71.7	L	1
56+09.5	R	1
56+16.6	R	1
	Total:	4

PCC FILLET SECTIONS

Payment for "6" PCC Fillet Section" and "10" PCC Fillet Section" shall be based on plans quantity. If additions or reductions to the area of PCC fillet sections are ordered by the Engineer, payment will be made in accordance with the contract unit price per square yard for "6" PCC Fillet Section" and "10" PCC Fillet Section."

8" FAST TRACK CONCRETE APPROACH PAVEMENT

See the Table of Pavement, Curb and Gutter, and Sidewalk Quantities for locations and quantities of 8" Fast Track Concrete Approach Pavement. Fast track concrete required for approaches shall be paid for under the contract unit price per square yard for "8" Fast Track Concrete Approach Pavement." For additional information refer to the note titled "Fast Track Concrete" in Section F of these plans.

COLORED CONCRETE SIDEWALK

The Colored Concrete Sidewalk shall have the integral color Kailua (#677) by Davis Colors at a rate of 4 lbs per 94 lbs of cement, or approved equal. The colored concrete shall be cured with an acrylic sealer according to manufacturer's recommendations for the integral color. No white pigmented cure shall be used. All costs for coloring shall be incidental to the contract unit price per square foot for the various colored concrete sidewalk.

CONCRETE SIDEWALK

The concrete sidewalk shall be constructed in accordance with Section 651 of the Specifications. The sidewalk standard plates in this plan set are typical of this project with the exception of all sidewalk cross slopes should be constructed as shown on the typical sections, the sidewalk widths, boulevard widths, and other special details are shown on the Curb and Gutter Layout sheets.

Thickened-edge sidewalk shall be installed in all locations where railing is to be installed into the sidewalk. Payment for thickened-edge sidewalk shall be incidental to the contract unit price per square foot for "4" Concrete Sidewalk".

All reinforced sidewalk shall have rebar placed as shown in Detail A on Standard Plate 651.70.

RETAINING WALLS

See the Special Provision for Patterning Special Type C Retaining Wall for information on the patterning and coloring of retaining walls. It is the intent for the walls to match, to the extent practical, what was recently installed with Project NH0016(78)67, PCN 01TH at 2202, 2305, 2315 and 2501 Mt. Rushmore Road.

The concrete to be used for the form-lined walls shall conform to section 462 (M6) with the following exceptions: The maximum Water/Cementitious ratio of the concrete shall be 0.43, the concrete mix shall contain a High Range Water Reducer, and the slump at time of placement shall be between 4 and 7 inches.

Payment for the patterning and the coloring of the walls shall be Incidental to the contract unit price per square foot for Special Type C Retaining Wall.

SLIP RESISTANT COATING FOR CONCRETE STAIRWAY

Curing compounds shall not be utilized on concrete stairway treads during the concrete curing process. Curing shall be accomplished with a double layer of burlap mats and polyethylene sheeting.

The Contractor shall apply a 2" wide slip resistant coating at the front of each stairway tread for the full width of the tread.

The slip resistant coating shall be a red, tile red, or brick red color. The coating shall be a single component epoxy and have a minimum coefficient of friction value of 0.9 for dry and 0.9 for wet as determined by ASTM F 609.

The slip resistant coating shall be applied in accordance with the manufacturer's recommendations.

All cost for furnishing and applying the slip resistant epoxy coating including equipment, labor, and materials shall be incidental to various contract items.

TYPE 1 DETECTABLE WARNINGS

Detectable warnings shall be in compliance with the Americans with Disabilities Act regulations.

The detectable warnings shall be installed according to the manufacturer's installation instructions.

A concrete thickness equal to the adjacent concrete sidewalk thickness and 2 inches of granular cushion material shall be placed below the Type 1 Detectable Warnings. When concrete is placed below the detectable warnings then the concrete thickness shall be transitioned at the rate of 1" per foot to match the adjacent concrete sidewalk thickness.

The detectable warnings shall be a yellow color for application in concrete curb ramps.

When Type 1 Detectable Warnings are specified, the Contractor shall furnish and install only one of the products listed in the Type 1 Detectable Warnings table.

Type 1 Detectable Warnings

Product	Manufacturer
Alertcast Composite Replaceable Cast in Place	Cape Fear Systems, III, LLC 215 South Water Street, Suite 103 Wilmington, NC 28401 877-232-6287 http://www.alerttile.com/
Detectable Warning Tile Composite Replaceable Wet-Set	ADA Solutions, Inc. North Billerica, MA 01862 800-372-0519 http://www.adatile.com
Access Tile Composite Replaceable Cast in Place	Access Products Inc. 241 Main Street, Suite 100 Buffalo, NY 14203 888-679-4022 http://www.accesstile.com/
Armorcast Detectable Warning Tile Composite Replaceable Wet-Set	Armorcast Products Company 13230 Saticoy Street North Hollywood, CA 91605 818-982-3600 http://www.armorcastprod.com/

TABLE OF SPECIAL TYPE C RETAINING WALL

Station	to	Station	L/R	Quantity (SqFt)
38+28		38+59	L	41.8
39+01		39+39	L	105.0
39+87		40+61	L	88.1
43+40		44+50	L	294.5
45+27		46+20	L	250.4
47+19		47+92	L	107.3
52+55		53+90	R	416.6
61+14		61+40	L	26.3
61+38		61+51	L	59.4
61+76		63+12	L	401.5
St. Patrick Street				
2+87		3+70	L	148.0
3+15		3+58	R	75.2
			Total	2014.1

RAILING

Railing shall be installed on the proposed retaining walls and at stairways at the locations listed below. The railing system shall be as detailed within these plans. Contractor shall submit detailed shop plans prior to beginning fabrication of the railing system for the Bridge Construction Engineer's approval in accordance with the Specifications. All costs associated with furnishing and installing railing shall be incidental to the contract unit price per foot for "Pipe Handrail" or "Steel Pedestrian Railing".

TABLE OF PIPE HANDRAIL

Location	L/R	Quantity (Ft)
61+38 to 61+40	L	6.0
61+38 to 61+40	L	6.0
47+17 to 47+92	L	75.0
47+17 to 47+92	L	75.0
	Total:	162.0

TABLE OF STEEL PEDESTRIAN RAILING

Location	L/R	Quantity (Ft)
52+55 to 53+90	R	135.0
	Total:	135.0

TABLE CONCRETE STAIRWAYS

Sta.	L / R	Top Land. Elev.	Bottom Landing Elev.	No. of Steps (w)	Class M6 Conc. (CuYd)	Epoxy Coated Reinf. Steel (Lb)	* Struct. Exc. (CuYd)
61+40	L	3294.81	3293.05	2	1.33	100	2.97
				Totals:	1.33	100	2.97

*The quantities for structure excavation are for informational purposes only. Payment for all work necessary for structure excavation shall be incidental to the various contract unit prices for the items listed in the above table.

UNDERDRAIN

An underdrain system shall be installed on both sides of St. Patrick Street from Sta. 2+04 to Sta. 3+24 and outlet in the proposed storm sewer inlets.

The underdrain system will consist of 4 inch slotted corrugated polyethylene tubing placed in the bottom of a 1-foot wide by 1-foot deep trench. The trench will then be backfilled with 1 foot of porous backfill. The last 10 feet of underdrain attached to the inlets shall be 4 inch corrugated polyethylene tubing and shall be backfilled with typical embankment material. Payment for the porous backfill material shall be paid for at the contract price per ton for "Porous Backfill." All other materials, labor and incidentals required for the installation of the underdrain system shall be paid for at the contract price per foot for "4" Underdrain Pipe."

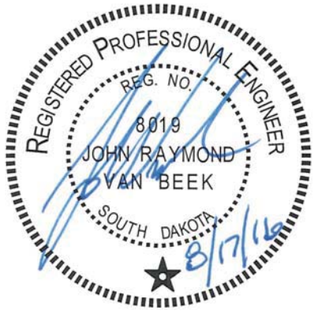

TABLE OF CONSTRUCTION STAKING

(See Special Provision for Contractor Staking)

Roadway and Description	Begin Station	End Station	Number of Lanes	Length (Ft)	Length (Mile)	Lane Factor	*Sets of Stakes	**Grade Staking Quantity (Mile)	Miscellaneous Staking Quantity (Mile)	Slope Staking Quantity (Mile)	Structure Staking Quantity (Each)
							Grade Staking				
US 16 (5 Lanes PCCP)	34+10.40	35+10.50	5	100.1	0.019	2.5	2	0.095	0.019	0.019	
US 16 (Transition from 5 Lanes PCCP to 4 Lanes PCCP)	35+10.50	35+43.80	5	33.3	0.006	2.5	2	0.032	0.006	0.006	
US 16 (4 Lanes PCCP)	35+43.80	35+79.50	4	35.7	0.007	2	2	0.027	0.007	0.007	
US 16 (Transition from 4 Lanes PCCP to 5 Lanes PCCP)	35+79.50	36+44.90	5	65.4	0.012	2.5	2	0.062	0.012	0.012	
US 16 (5 Lanes PCCP)	36+44.90	38+74.40	5	229.5	0.043	2.5	2	0.217	0.043	0.043	
US 16 Special Type C Retaining Wall	38+28.34	38+59.26									1
US 16 (Transition from 5 Lanes PCCP to 4 Lanes PCCP)	38+74.40	39+03.30	5	28.9	0.005	2.5	2	0.027	0.005	0.005	
US 16 Special Type C Retaining Wall	39+00.65	39+52.82									1
US 16 (4 Lanes PCCP)	39+03.30	39+61.80	4	58.5	0.011	2	2	0.044	0.011	0.011	
US 16 (Transition from 4 Lanes PCCP to 5 Lanes PCCP)	39+61.80	40+21.80	5	60.0	0.011	2.5	2	0.057	0.011	0.011	
US 16 Special Type C Retaining Wall	39+86.82	40+60.81									1
US 16 (5 Lanes PCCP)	40+21.80	49+36.30	5	914.5	0.173	2.5	2	0.866	0.173	0.173	
US 16 Concrete Retaining Wall	41+54.96	42+37.44									1
US 16 Special Type C Retaining Wall	43+40.43	44+50.23									1
US 16 Special Type C Retaining Wall	45+27.30	46+31.30									1
US 16 Special Type C Retaining Wall	47+19.47	47+92.20									1
US 16 (Transition from 5 Lanes PCCP to 4 Lanes PCCP)	49+36.30	49+96.00	5	59.7	0.011	2.5	2	0.057	0.011	0.011	
US 16 (4 Lanes PCCP)	49+96.00	50+18.40	4	22.4	0.004	2	2	0.017	0.004	0.004	
US 16 (Transition from 4 Lanes PCCP to 5 Lanes PCCP)	50+18.40	50+54.40	5	36.0	0.007	2.5	2	0.034	0.007	0.007	
US 16 Concrete Retaining Wall	50+32.60	50+74.60									1
US 16 (5 Lanes PCCP)	50+54.40	54+97.10	5	442.7	0.084	2.5	2	0.419	0.084	0.084	
US 16 Special Type C Retaining Wall	52+55.00	53+90.00									1
US 16 (Transition from 5 Lanes PCCP to 6 Lanes PCCP)	54+97.10	55+41.40	6	44.3	0.008	3	2	0.050	0.008	0.008	
US 16 (6 Lanes PCCP)	55+41.40	55+76.90	6	35.5	0.007	3	2	0.040	0.007	0.007	
US 16 (Transition from 6 Lanes PCCP to 5 Lanes PCCP)	55+76.90	56+05.00	6	28.1	0.005	3	2	0.032	0.005	0.005	
US 16 (5 Lanes PCCP)	56+05.00	63+11.60	5	706.6	0.134	2.5	2	0.669	0.134	0.134	
US 16 Special Type C Retaining Wall	61+14.03	61+51.19									1
US 16 Special Type C Retaining Wall	61+76.12	63+11.73									1
St. Anne Street (2 Lanes AC Pavement)	2+81.47	3+77.73	2	96.3	0.018	1	1	0.018	0.018	0.018	
St. Anne Street (2 Lanes PCCP)	3+77.73	4+06.93	2	29.2	0.006	1	2	0.011	0.006	0.006	
St. Anne Street (2 Lanes PCCP)	4+62.07	4+88.96	2	26.9	0.005	1	2	0.010	0.005	0.005	
St. Anne Street (2 Lanes AC Pavement)	4+88.96	5+73.43	2	84.5	0.016	1	1	0.016	0.016	0.016	
St. Francis Street (3 Lanes AC Pavement)	2+80.39	3+77.96	3	97.6	0.018	1.5	1	0.028	0.018	0.018	
St. Francis Street (3 Lanes PCCP)	3+77.96	4+06.81	3	28.9	0.005	1.5	2	0.016	0.005	0.005	
St. Francis Street (3 Lanes PCCP)	4+61.80	4+88.55	3	26.8	0.005	1.5	2	0.015	0.005	0.005	
St. Francis Street (3 Lanes AC Pavement)	4+88.55	5+56.25	3	67.7	0.013	1.5	1	0.019	0.013	0.013	
St. Patrick Street (Transition from 2 Lanes AC Pavement to 3 Lanes AC Pavement)	2+03.71	2+52.84	3	49.1	0.009	1.5	1	0.014	0.009	0.009	
St. Patrick Street (3 Lanes AC Pavement)	2+52.84	3+63.47	3	110.6	0.021	1.5	1	0.031	0.021	0.021	
St. Patrick Street Spcial Type C Retaining Wall	2+87.14	3+70.05									1
St. Patrick Street (3 Lanes PCCP)	3+63.47	3+89.28	3	25.8	0.005	1.5	2	0.015	0.005	0.005	
St. Patrick Street (3 Lanes PCCP)	4+44.44	5+53.75	3	109.3	0.021	1.5	2	0.062	0.021	0.021	
St. Andrew Street (3 Lanes AC Pavement)	3+51.74	4+28.41	3	76.7	0.015	1.5	1	0.022	0.015	0.015	
St. Andrew Street (2 Lanes AC Pavement)	4+28.41	4+43.41	2	15.0	0.003	1	1	0.003	0.003	0.003	
St. Andrew Street (2 Lanes PCCP)	4+43.41	4+68.45	2	25.0	0.005	1	2	0.009	0.005	0.005	
St. Andrew Street (2 Lanes PCCP)	5+31.45	5+56.41	2	25.0	0.005	1	2	0.009	0.005	0.005	
St. Andrew Street (2 Lanes AC Pavement)	5+56.41	6+94.09	2	137.7	0.026	1	1	0.026	0.026	0.026	

REGISTERED PROFESSIONAL ENGINEER
REG. NO. 8019
JOHN RAYMOND VAN BEEK
SOUTH DAKOTA
8/17/16

TABLE OF CONSTRUCTION STAKING (CONTINUED)

							Grade Staking				
Roadway and Description	Begin Station	End Station	Number of Lanes	Length (Ft)	Length (Mile)	Lane Factor	*Sets of Stakes	**Grade Staking Quantity (Mile)	Miscellaneous Staking Quantity (Mile)	Slope Staking Quantity (Mile)	Structure Staking Quantity (Each)
St. Charles Street (3 Lanes AC Pavement)	3+23.83	4+38.14	3	114.3	0.022	1.5	1	0.032	0.022	0.022	
St. Charles Street (2 Lanes AC Pavement)	4+38.14	4+43.48	2	5.3	0.001	1	1	0.001	0.001	0.001	
St. Charles Street (2 Lanes PCCP)	4+43.48	4+68.51	2	25.0	0.005	1	2	0.009	0.005	0.005	
St. Charles Street (2 Lanes PCCP)	5+31.51	5+56.52	2	25.0	0.005	1	2	0.009	0.005	0.005	
St. Charles Street (2 Lanes AC Pavement)	5+56.52	6+66.80	2	110.3	0.021	1	1	0.021	0.021	0.021	
Franklin Street (2 Lanes AC Pavement)	3+92.62	4+43.46	2	50.8	0.010	1	1	0.010	0.010	0.010	
Franklin Street Special Type C Retaining Wall	4+13.55	4+48.62									1
Franklin Street (2 Lanes PCCP)	4+43.46	4+68.43	2	25.0	0.005	1	2	0.009	0.005	0.005	
Franklin Street (2 Lanes PCCP)	5+31.53	5+56.60	2	25.1	0.005	1	2	0.009	0.005	0.005	
Franklin Street (2 Lanes AC Pavement)	5+56.60	5+99.92	2	43.3	0.008	1	1	0.008	0.008	0.008	
St. Cloud Street (3 Lanes AC Pavement)	3+93.41	4+43.57	3	50.2	0.009	1.5	1	0.014	0.009	0.009	
St. Cloud Street (2 Lanes PCCP)	4+43.57	4+68.47	2	24.9	0.005	1	2	0.009	0.005	0.005	
St. Cloud Street (2 Lanes PCCP)	5+31.47	5+57.09	2	25.6	0.005	1	2	0.010	0.005	0.005	
St. Cloud Street (2 Lanes AC Pavement)	5+57.09	5+99.43	2	42.3	0.008	1	1	0.008	0.008	0.008	
							Totals	3.223	0.852	0.852	13

* 1 = Blue Top Stakes Only (Asphalt Concrete Pavement)
2 = Blue Top and Paving Hub Stakes (PCC Pavement)

** Grade Staking Quantity = (Length) x (Lane Factor) x (Sets of Stakes)

REGISTERED PROFESSIONAL ENGINEER
REG. NO. 8019
JOHN RAYMOND VAN BEEK
SOUTH DAKOTA
8/17/16

PIPE QUANTITIES

FOR BIDDING PURPOSES ONLY

STATE OF SOUTH DAKOTA	PROJECT	SHEET	TOTAL SHEETS
	NH0016(84)67	B15	B136

PLOTTING DATE: 08-17-16 REV 08-17-16 ARK

Alignment	Station - Offset (L/R)	18" RCP Cl 3	24" RCP Cl 3	30" RCP Cl 2	36" RCP CL 2	42" RCP Cl 2	48" RCP Cl 2	Arch 42" RCP Cl 2	Tee 18" x 18"	Tee 24" x 18"	Tee 30" x 18"	Tee 24" x 24"	Tee 36" x 24"	Cross 30" x 18"	Cross 42" x 24"	Bend 18" 45°	Bend 36" 45°	Transition 42" Arch x 42" Round	Reducer 48" x 36"	PVC Circular 4"	PVC Circular 6"	PVC Circular 12"	PVC Bend** 6" 45°	PVC Bend** 12" 45°
		Ft	Ft	Ft	Ft	Ft	Ft	Ft	Each	Each	Each	Each	Each	Each	Each	Each	Each	Each	Each	Ft	Ft	Ft	Each	Each
Mainline NH0016(84)67																								
	34+19.93 - 29.2 LT TO 35+14.14 - 29.2 LT			94																				
	35+14.14 - 29.2 RT TO 35-14.14 - 29.2 LT*	56																						
	35+14.14 - 29.2 LT TO 36+83.76 - 29.2 LT				166																			
	36+83.76 - 29.2 RT TO 36-83.76 - 29.2 LT*	56																						
	36+83.76 - 29.2 LT TO 37+47.54 - 29.2 LT				62																			
	37+47.54 - 29.2 LT		-4		-8								1											
	37+47.54 - 29.2 LT TO 37+80.53 - 29.2 LT				32																			
	37+80.53 - 29.2 LT TO 38+68.15 - 29.2 LT							86																
	38+68.15 - 29.2 RT TO 38-68.15 - 29.2 LT*	56																						
	38+68.15 - 29.2 LT TO 40+51.81 - 24.1 LT							184																
	40+51.81 - 24.1 LT					-4		-4										1						
	40+51.81 - 24.1 LT TO 40+59.81 - 23.9 LT					10																		
	40+58.20 - 38.5 LT TO 40+60.06 - 32.2 LT	4																						
	40+59.81 - 23.9 LT		-8			-8									1									
	40+59.81 - 23.9 LT TO 40+60.06 - 32.2 LT		8																					
	40+59.81 - 23.9 LT TO 41+32.90 - 22 LT					72																		
	40+60.06 - 32.2 RT TO 40-59.81 - 23.9 LT		56																					
	41+32.90 - 22 LT TO 41+53.56 - 29.2 LT		18																					
	41+32.90 - 22 LT TO 41+35.45 - 97.7 RT						112																	
	41+53.56 - 29.2 LT TO 41+53.73 - 40.9 LT	10																						
	41+53.56 - 29.2 LT TO 41+54.96 - 29.2 RT*	56																						
	41+53.56 - 29.2 LT TO 41+67.56 - 29.2 LT		12																					
	41+67.56 - 29.2 LT TO 42+62.32 - 29.2 LT		92																					
	42+62.32 - 29.2 LT TO 44+33.66 - 29.2 LT		168																					
	47+82.78 - 33.2 RT TO 48-46.78 - 33.3 RT*	64																						
	47+82.78 - 33.2 LT TO 48+47.29 - 33 LT	64																						
	48+46.78 - 33.3 RT	-12							1															
	48+46.78 - 33.3 RT TO 48-74.12 - 33.2 RT*	26																						
	48+47.29 - 33 LT	-12							1															
	48+47.29 - 33 LT TO 48+74.12 - 33.2 LT	26																						
	48+74.12 - 33.2 RT TO 48-74.12 - 33.2 LT	64																						
	48+74.12 - 33.2 LT TO 49+61.78 - 33.2 LT		84																					
	49+61.78 - 33.2 RT TO 49-61.78 - 33.2 LT*	64																						
	49+61.78 - 33.2 LT TO 51+68.06 - 33.2 LT		204																					
	50+85.66 - 33.2 RT TO 51-60.60 - 33.2 RT	72																						
	51+60.60 - 3.2 LT TO 51+60.60 - 7.8 LT	4																						
	51+60.60 - 7.8 LT TO 51+68.06 - 33.2 LT	24																						
	51+60.60 - 33.2 RT TO 52-26.16 - 33.2 RT*	66																						
	51+68.06 - 33.2 LT TO 51+68.06 - 71.7 LT																					38		
	51+68.06 - 33.2 LT TO 52+26.11 - 33.2 LT		58																					
	52+26.11 - 33.2 LT		-12									1												
	52+26.11 - 33.2 LT TO 52+56.72 - 33.2 LT		30																					
	52+26.16 - 33.2 RT*	-12							1															
	52+26.16 - 33.2 RT TO 52-56.72 - 33.2 RT*	30																						
	52+56.72 - 33.2 RT TO 52-56.72 - 33.2 LT*	64																						
	52+56.72 - 33.2 LT TO 53+55.35 - 33.2 LT		96																					
	53+55.35 - 33.2 RT TO 53-55.35 - 33.2 LT*	64																						
	53+55.35 - 33.2 LT TO 54+05.50 - 33.2 LT		50																					
	SUBTOTAL	834	852	94	252	70	112	266	3	0	0	1	1	0	1	0	0	1	0	0	0	38	0	0

REGISTERED PROFESSIONAL ENGINEER
REG. NO. 8019
JOHN RAYMOND VAN BEEK
SOUTH DAKOTA
8/17/16

08-17-16 P:\12-117\AutoCAD\PlanSheets\049F\Section B\049F-TABLE OF PIPE QUANTITIES.dwg

PIPE QUANTITIES

FOR BIDDING PURPOSES ONLY

STATE OF SOUTH DAKOTA	PROJECT	SHEET	TOTAL SHEETS
	NH0016(84)67	B16	B136

PLOTTING DATE: 08-17-16 REV 08-17-16 ARK

Alignment	Station - Offset (L/R)	18" RCP Cl 3	24" RCP Cl 3	30" RCP Cl 2	36" RCP CL 2	42" RCP Cl 2	48" RCP Cl 2	42" RCP Cl 2	Arch	Tee 18" x 18"	Tee 24" x 18"	Tee 30" x 18"	Tee 24" x 24"	Tee 36" x 24"	Cross 30" x 18"	Cross 42" x 24"	Bend 18" 45°	Bend 36" 45°	Transition 42" Arch x 42" Round	Reducer 48" x 36"	PVC Circular 4"	PVC Circular 6"	PVC Circular 12"	PVC Bend** 6" 45°	PVC Bend** 12" 45°
		Ft	Ft	Ft	Ft	Ft	Ft	Ft		Each	Each	Each	Each	Each	Each	Each	Each	Each	Each	Each	Ft	Ft	Ft	Each	Each
	54+05.50 - 33.2 LT	-4	-8								1														
	54+05.50 - 33.2 LT TO 54+05.50 - 66.3 LT	32																							
	54+05.50 - 33.2 LT TO 54+21.21 - 33.2 LT		14																						
	54+21.21 - 33.2 LT TO 54+94.42 - 33.2 LT			70																					
	54+28.90 - 33.2 RT TO 55+40.61 - 33.2 RT	110																							
	54+94.42 - 33.2 LT TO 55+40.57 - 33.2 LT*			46																					
	55+40.57 - 33.2 LT*	-4		-8								1													
	55+40.57 - 33.2 LT TO 55+75.11 - 33.2 LT*			36																					
	55+40.61 - 33.2 RT TO 55+40.61 - 3.2 LT*	36																							
	55+40.61 - 3.2 LT TO 55+40.61 - 7.8 LT	4																							
	55+40.61 - 7.8 LT TO 55+40.57 - 33.2 LT	26																							
	55+75.11 - 33.2 LT*	-8		-8											1										
	55+75.11 - 33.2 LT TO 56+34.48 - 33.2 LT*			58																					
	56+34.48 - 33.2 LT TO 58+13.23 - 33.2 LT			176																					
	58+13.23 - 33.2 RT TO 58+67.18 - 33.2 RT	52																							
	58+13.23 - 33.2 LT TO 59+21.12 - 33.2 LT			104																					
	58+67.18 - 33.2 RT TO 59+21.12 - 33.2 RT	52																							
	59+21.12 - 3.2 LT TO 59+21.12 - 7.8 LT	4																							
	59+21.12 - 7.8 LT TO 59+21.12 - 33.2 LT	24																							
	59+21.12 - 33.2 RT TO 59+23.77 - 48.9 RT	16																							
	59+21.12 - 33.2 RT TO 59+55.49 - 33.2 RT		34																						
	59+21.12 - 33.2 LT TO 59+86.84 - 33.1 LT*			64																					
	59+55.49 - 33.2 RT	-4	-8								1														
	59+55.49 - 33.2 RT TO 59+86.96 - 33.2 RT		32																						
	59+86.84 - 33.1 LT*	-4		-8								1													
	59+86.84 - 33.1 LT TO 60+17.90 - 33.2 LT*			30																					
	59+86.96 - 33.2 RT*	-4	-8								1														
	59+86.96 - 33.2 RT TO 60+17.90 - 33.2 RT*		30																						
	60+17.90 - 33.2 RT TO 60+17.90 - 33.2 LT*		64																						
	60+17.90 - 33.2 LT TO 61+32.25 - 33.2 LT			112																					
	61+32.24 - 33.2 RT TO 61+83.49 - 33.2 RT*	50																							
	61+32.25 - 33.2 LT TO 62+01.91 - 33.2 LT*			66																					
	61+83.49 - 33.2 RT TO 62+42.00 - 33.2 RT*	56																							
	62+01.91 - 33.2 LT TO 62+98.70 - 33.2 LT*			94																					
	62+42.00 - 33.2 RT TO 63+00.50 - 33.2 RT*	56																							
	62+98.70 - 3.2 LT TO 62+98.70 - 7.8 LT	4																							
	62+98.70 - 7.8 LT TO 62+98.70 - 33.2 LT*	24																							
Saint Anne Street																									
	2+96.43 - 17.7 LT TO 3+70.48 - 17.7 LT*	72																							
	2+96.43 - 17.7 RT TO 2+96.43 - 17.7 LT*	34																							
	3+70.48 - 17.7 RT TO 3+70.88 - 20.9 RT																					4			
	3+70.48 - 17.7 RT TO 3+70.48 - 17.7 LT*	34																							
	3+70.48 - 17.7 LT TO 4+05.20 - 15.3 LT		34																						
	3+70.88 - 20.9 RT																						1		
	3+70.88 - 20.9 RT TO 3+82.01 - 29.6 RT																					16			
	3+82.01 - 29.6 RT TO 3+82.38 - 32.6 RT																					4			
	3+82.01 - 29.6 RT																						1		
	3+82.40 - 32.6 RT																						1		
	SUBTOTAL	658	184	832	0	0	0	0	0	3	2	0	0	1	0	0	0	0	0	0	24	0	3	0	

REGISTERED PROFESSIONAL ENGINEER
REG. NO. 8019
JOHN RAYMOND VAN BEEK
SOUTH DAKOTA
8/17/16

08-17-16 P:\12-117\AutoCAD\PlanSheets\049F\Section B\049F-TABLE OF PIPE QUANTITIES.dwg

PIPE QUANTITIES

FOR BIDDING PURPOSES ONLY

STATE OF SOUTH DAKOTA	PROJECT	SHEET	TOTAL SHEETS
	NH0016(84)67	B17	B136

PLOTTING DATE: 08-17-16 REV 08-17-16 ARK

Alignment	Station - Offset (L/R)	18" RCP Cl 3	24" RCP Cl 3	30" RCP Cl 2	36" RCP Cl 2	42" RCP Cl 2	48" RCP Cl 2	Arch 42" RCP Cl 2	Tee 18" x 18"	Tee 24" x 18"	Tee 30" x 18"	Tee 24" x 24"	Tee 36" x 24"	Cross 30" x 18"	Cross 42" x 24"	Bend 18" 45°	Bend 36" 45°	Transition 42" Arch x 42" Round	Reducer 48" x 36"	PVC Circular 4"	PVC Circular 6"	PVC Circular 12"	PVC Bend** 6" 45°	PVC Bend** 12" 45°
		Ft	Ft	Ft	Ft	Ft	Ft	Ft	Each	Each	Each	Each	Each	Each	Each	Each	Each	Each	Each	Ft	Ft	Ft	Each	Each
Saint Francis Street																								
	2-78.99 - 21.2 LT TO 2+77.80 - 21.2 LT																			2				
	2-82.61 - 19.7 LT TO 2+78.99 - 21.2 LT																			2				
	2-82.61 - 19.7 LT TO 3+12.29 - 19.7 LT*	28																						
	2-82.61 - 19.7 RT TO 3+22.83 - 19.7 RT	38																						
	3-12.29 - 19.7 LT TO 3+52.78 - 19.7 LT*	38																						
	3-22.83 - 19.7 RT TO 3+47.83 - 19.7 RT	22																						
	3-47.83 - 19.7 RT TO 3+71.98 - 19.7 RT		22																					
	3-52.78 - 19.7 LT TO 3+74.60 - 19.7 LT*		18																					
	3-71.98 - 19.7 RT TO 3+74.60 - 19.7 LT*		38																					
	3-74.60 - 19.7 LT TO 4+12.87 - 26 LT*		34																					
	5-31.37 - 21.6 LT TO 5+40.87 - 21.6 LT						4																	
	5-40.87 - 21.6 LT				-4		-4												1					
	5-40.87 - 21.6 LT TO 5+44.87 - 21.6 LT				4																			
	5-44.87 - 21.6 LT				-8												1							
	5-44.87 - 21.6 LT TO 5+49.98 - 16.2 LT				8																			
	5-49.98 - 16.2 LT				-8												1							
	5-49.98 - 16.2 LT TO 5+56.25 - 16 LT				8																			
Saint Patrick Street																								
	3-25.00 - 19.7 LT TO 3+60.78 - 19.7 LT	34																						
	3-25.00 - 19.7 RT TO 3+60.78 - 19.7 RT	34																						
	3-60.78 - 19.7 RT TO 3+71.89 - 19.7 RT	10																						
	3-60.78 - 19.7 RT TO 3+60.78 - 19.7 LT*	38																						
	3-71.89 - 19.7 RT	-8														1								
	3-71.89 - 19.7 RT TO 3+87.83 - 35.6 RT	24																						
	3-87.8 - 35.6 RT	-8														1								
Saint Andrew Street																								
	3-59.91 - 15.3 LT TO 4+36.59 - 15.7 LT	74																						
	3-59.91 - 15.7 RT TO 3+59.91 - 15.3 LT	30																						
	4-36.59 - 15.7 LT TO 4+66.91 - 15.9 LT	30																						
	4-36.59 - 15.7 RT TO 4+36.59 - 15.7 LT	30																						
	5-33.26 - 15.5 LT TO 5+63.11 - 15.7 LT	30																						
	5-63.11 - 15.7 LT TO 5+81.02 - 15.7 LT	16																						
	5-63.11 - 15.7 RT TO 5+63.11 - 15.7 LT	30																						
	5-81.02 - 15.7 LT TO 5+98.93 - 15.7 LT	16																						
Saint Charles Street																								
	3-80.88 - 15.7 LT TO 4+03.69 - 16.2 LT	22																						
	4-03.69 - 16.2 LT	-12							1															
	4-03.69 - 16.2 LT TO 4+23.88 - 16.7 LT	18																						
	4-03.69 - 16.2 LT TO 4+04.81 - 32 RT	48																						
	4-23.88 - 16.7 LT TO 4+40.52 - 15.7 LT		12																					
	4-28.3 - 42.4 RT																							1
	4-40.52 - 15.7 LT TO 4+66.84 - 15.7 LT		26																					
	5-33.18 - 15.7 LT TO 5+58.01 - 15.7 LT	24																						
	5-57.99 - 15.7 RT TO 5+58.01 - 15.7 LT	30																						
	5-58.01 - 15.7 LT TO 6+07.50 - 15.7 LT	48																						
	SUBTOTAL	684	150	0	0	0	0	0	1	0	0	0	0	0	0	2	2	0	1	6	0	0	0	1

REGISTERED PROFESSIONAL ENGINEER
REG. NO. 8019
JOHN RAYMOND VAN BEEK
SOUTH DAKOTA
8/17/16

08-17-16 P:\12-117\AutoCAD\PlanSheets\049F\Section_B\049F-TABLE_OF_PIPE_QUANTITIES.dwg

PIPE QUANTITIES

FOR BIDDING PURPOSES ONLY

STATE OF SOUTH DAKOTA	PROJECT	SHEET	TOTAL SHEETS
	NH0016(84)67	B18	B136

PLOTTING DATE: 08-17-16 REV 08-17-16 ARK

Alignment	Station - Offset (L/R)	18" RCP Cl 3	24" RCP Cl 3	30" RCP Cl 2	36" RCP CL 2	42" RCP Cl 2	48" RCP Cl 2	Arch 42" RCP Cl 2	Tee 18" x 18"	Tee 24" x 18"	Tee 30" x 18"	Tee 24" x 24"	Tee 36" x 24"	Cross 30" x 18"	Cross 42" x 24"	Bend 18" 45°	Bend 36" 45°	Transition 42" Arch x 42" Round	Reducer 48" x 36"	PVC Circular 4"	PVC Circular 6"	PVC Circular 12"	PVC Bend** 6" 45°	PVC Bend** 12" 45°
		Ft	Ft	Ft	Ft	Ft	Ft	Ft	Each	Each	Each	Each	Each	Each	Each	Each	Each	Each	Each	Ft	Ft	Ft	Each	Each
Franklin Street																								
	3+83.08 - 11.9 RT TO 3+85.76 - 11.9 RT	4																						
	3+85.76 - 11.9 RT	-8														1								
	3+85.76 - 11.9 RT TO 3+89.53 - 15.7 RT	6																						
	3+87.81 - 48.0 RT TO 3+87.83 - 35.6 RT	12																						
	3+89.53 - 15.7 RT	-8														1								
	3+89.53 - 15.7 RT TO 3+95.82 - 15.7 RT	6																						
	3+95.82 - 15.7 RT TO 4+41.58 - 15.7 RT*	44																						
	3+95.82 - 15.7 LT TO 3+95.82 - 15.7 RT	30																						
	3+95.82 - 15.7 LT TO 4+02.64 - 15.7 LT	4																						
	4+41.58 - 15.7 RT TO 4+66.83 - 15.8 RT	24																						
	4+41.58 - 15.7 RT TO 4+43.61 - 32.4 RT	16																						
	4+66.83 - 15.8 RT TO 5+60.62 - 15.7 RT	94																						
	5+60.62 - 15.7 RT TO 5+96.03 - 15.7 RT	34																						
	5+60.62 - 15.7 RT TO 5+60.89 - 29.3 RT	14																						
	5+87.55 - 15.6 LT TO 5+96.03 - 15.6 LT	6																						
	5+96.03 - 15.7 RT TO 5+96.03 - 15.6 LT	30																						
Saint Cloud Street																								
	3+95.41 - 15.7 RT TO 4+07.14 - 15.7 RT	10																						
	4+07.14 - 15.7 LT TO 4+41.42 - 15.7 LT*	32																						
	4+07.14 - 15.7 RT TO 4+07.14 - 15.7 LT*	30																						
	4+41.42 - 15.7 LT TO 4+66.85 - 15.4 LT*	24																						
	5+33.20 - 15.7 LT TO 5+66.62 - 15.7 LT	32																						
	5+33.32 - 15.7 RT TO 5+88.19 - 15.7 RT	54																						
	SUBTOTAL	490	0	0	0	0	0	0	0	0	0	0	0	0	0	2	0	0	0	0	0	0	0	0
	TOTAL	2666	1186	926	252	70	112	266	4	3	2	1	1	1	1	4	2	1	1	6	24	38	3	1

* The entire length or a portion of the pipe requires watertight joints according to the Storm Sewer Notes and Table of Watertight Storm Joint Locations

** The quantity of PVC fittings is for information only. PVC fittings will be considered incidental to the cooresponding pipe bid item. No separate payment will be made.

REGISTERED PROFESSIONAL ENGINEER
REG. NO. 8019
JOHN RAYMOND VAN BEEK
SOUTH DAKOTA
8/17/16

08-17-16 P:\12-117\AutoCAD\PlanSheets\049F\Section B\049F-TABLE OF PIPE QUANTITIES.dwg

TABLE OF PAVEMENT, CURB AND GUTTER, AND SIDEWALK QUANTITIES

FOR BIDDING PURPOSES ONLY

STATE OF SOUTH DAKOTA	PROJECT	SHEET	TOTAL SHEETS
	NH0016(84)67	B19	B136

PLOTTING DATE: 08-25-16 REV 08-25-16 ARK

			CONCRETE CURB AND GUTTER				CONCRETE GUTTER			PCC FILLET SECTION		PCC APPROACH PAVEMENT				CONCRETE SIDEWALK		COLORED CONCRETE SIDEWALK		DETECTABLE WARNINGS
			TYPE B			TYPE F	TYPE P		VALLEY			TYPE A	TYPE B	TYPE A FAST TRACK	SPECIAL					TYPE 1
			610	66	Special	610	6	10		10'	6"	6"	6'	8'	8'	4"	6" REINFORCED	4"	6" REINFORCED	
Station to Station		L/R	Ft	Ft	Ft	Ft	Ft	Ft	Sq Yd	SqYd	SqYd	SqYd	SqYd	SqYd	SqYd	SqFt	SqFt	SqFt	SqFt	
Mainline																				
34+10.4	35+28.7	L	118.3																	
34+10.4	35+28.7	R	118.3																	
34+10.4	35+22.7	L														560.6				
34+10.4	35+22.7	R														598.1				
34+10.4	34+25.4	R																35.0		
34+10.4	35+22.7	L																261.9		
34+35.4	35+22.7	R																203.2		
35+10.5	36+18.2	L/R			107.7															
35+10.5	36+18.2	L/R			107.7															
35+28.7	35+52.7	L						24.0												
35+28.7	35+52.7	R						24.0												
35+28.7	35+19.3	L		24.1																
35+40.7		L													29.3					
35+40.7		R													29.3					
35+52.7	36+89.5	L	136.9																	
35+52.7	36+97.1	R	144.4																	
35+52.7	35+62.1	L		23.8																
35+58.7	37+19.4	R														1030.7				
35+58.7	37+11.8	L														1018.6				
35+58.7	35+89.8	R																335.6		
35+58.7	36+91.1	L																307.1		
36+89.5	37+16.3	L								29.1										
36+97.1	37+20.3	R								23.1										
36+98.3		L																		10.0
36+98.3		R																		10.0
37+48.4	37+71.7	L								23.1										
37+49.4	37+92.3	L														280.0				
37+52.4	37+79.3	R								29.2										
37+57.4	38+15.4	R														918.0				
37+70.3		L																		10.0
37+70.4		R																		10.0
37+71.7	37+98.3	L	26.6																	
37+72.9	38+97.4	R																288.1		
37+78.8	37+92.3	L																31.6		
37+79.3	38+21.4	R	142.1																	
37+98.3	38+22.3	L						**												
38+10.3		L												36.4						
38+22.3	38+77.2	L	54.9																	
38+59.3	38+71.2	L														59.4				
38+28.3	38+71.2	L																99.6		
38+74.4	38+95.1	L/R			120.7															
38+74.4	38+95.1	L/R			120.7															
38+77.2	38+01.2	L						24.0												
38+89.2		L													29.3					
39+01.2	38+57.8	L	56.6																	
39+05.9		R																		10.0
39+05.9		R																		10.0
39+07.2	38+17.4	L																23.8		
39+38.8	38+52.8	L														70.3				
39+13.3	38+21.0	R									4.4									
39+21.0	38+21.0	R		4.3																
39+21.4	38+37.4	R						16.0												
39+25.9		L																		10.0
SUBTOTAL			798.0	798	456.8	0	0.0	88.0	0.0	104.5	4.4	0.0	0.0	36.4	87.9	4503.9	0	1556.1	0	70.0

REGISTERED PROFESSIONAL ENGINEER
REG. NO. 8019
JOHN RAYMOND VAN BEEK
SOUTH DAKOTA
8/25/16

08-25-16 P:\12-117\AutoCAD\PlanSheets\049F\Section_B\049F_TABLE_OF_PAVEMENT_QUANTITIES.dwg

TABLE OF PAVEMENT, CURB AND GUTTER, AND SIDEWALK QUANTITIES

FOR BIDDING PURPOSES ONLY

STATE OF SOUTH DAKOTA	PROJECT	SHEET	TOTAL SHEETS
	NH0016(84)67	B20	B136

PLOTTING DATE: 08-25-16 REV 08-25-16 ARK

			CONCRETE CURB AND GUTTER				CONCRETE GUTTER			PCC FILLET SECTION		PCC APPROACH PAVEMENT				CONCRETE SIDEWALK		COLORED CONCRETE SIDEWALK		DETECTABLE WARNINGS
			TYPE B			TYPE F	TYPE P		VALLEY			TYPE A	TYPE B	TYPE A FAST TRACK	SPECIAL					TYPE 1
			810	66	Special	810	6	10		10"	6"	8"	8"	8"	8"	4"	6" REINFORCED	4"	6" REINFORCED	
Station to Station		L/R	Ft	Ft	Ft	Ft	Ft	Ft	Sq Yd	SqYd	SqYd	SqYd	SqYd	SqYd	SqYd	SqFt	SqFt	SqFt	SqFt	
39+25.9		L																		10.0
39+29.4		R													22.8					
39+34.4	39+52.8	L																43.0		
39+37.4	40+70.4	R	133.0																	
39+41.4	39+52.8	L		30.3																
39+43.4	40+49.0	R														562.5				
39+43.4	39+55.5	R																28.3		
39+57.8	39+81.8	L																		
39+65.5	40+49.0	R																194.5		
39+69.8		L												34.8						
39+81.8	40+62.1	L	80.3																	
39+88.8	40+49.0	L														0.0				
39+88.8	40+58.1	L		80.3																
39+88.8	40+49.0	L																144.8		
40+49.0	40+72.2	L															237.4			
40+49.0	40+72.2	R															135.3			
40+49.0	40+67.0	L																	40.4	
40+49.0	40+67.3	R																	40.8	
40+62.1	40+88.6	L								28.6										
40+68.9	40+84.2	L														253.0				
40+70.4	40+93.9	R								23.5										
40+72.2	40+92.7	R														337.3				
40+74.7		R																		10.0
40+74.7		L																		10.0
41+24.5	41+47.9	L								23.3										
41+25.2	42+68.4	L														1237.2				
41+25.2	41+53.0	R								28.9										
41+30.6	44+61.4	R														2047.5				
41+42.3		L																		10.0
41+43.3		R																		10.0
41+47.8	42+74.4	L	126.6																	
41+49.1	42+57.4	L		113.9																
41+49.4	42+68.4	L																275.6		
41+50.6	44+39.9	R																671.0		
41+53.0	44+39.3	R	286.3																	
42+57.4	42+61.2	L									3.2									
42+63.2	42+76.2	L									5.4									
42+61.2	42+63.2	L		2.8																
42+74.4	42+98.4	L																		
42+76.2	42+76.2	L		15.9																
42+88.4		L												36.3						
42+98.4	44+38.7	L	140.3																	
44+32.8	44+61.0	L														297.9				
43+04.4	44+39.5	L																279.7		
44+37.3	44+64.1	R								25.5										
44+38.7	44+63.7	L								26.0										
44+48.8		L																		10.0
44+48.8		R																		10.0
44+99.6	45+24.8	R								26.3										
45+00.2	45+26.0	L								27.3										
45+02.4	45+33.1	R														307.9				
45+03.8	46+29.3	L														801.4				
45+13.9		R																		10.0
SUBTOTAL			766.5	243.1	0	0	0.0	0.0	0.0	239.4	8.6	0.0	0.0	71.1	22.8	5844.6	432.7	1636.9	81.2	80.0

REGISTERED PROFESSIONAL ENGINEER
REG. NO. 8019
JOHN RAYMOND VAN BEEK
SOUTH DAKOTA
8/25/16

08-25-16 P:\12-117\AutoCAD\PlanSheets\049F\Section_B\049F-TABLE OF PAVEMENT QUANTITIES.dwg

TABLE OF PAVEMENT, CURB AND GUTTER, AND SIDEWALK QUANTITIES

FOR BIDDING PURPOSES ONLY

STATE OF SOUTH DAKOTA	PROJECT	SHEET	TOTAL SHEETS
	NH0016(84)67	B21	B136

PLOTTING DATE: 08-25-16 REV 08-25-16 ARK

			CONCRETE CURB AND GUTTER				CONCRETE GUTTER			POC FILLET SECTION		POC APPROACH PAVEMENT				CONCRETE SIDEWALK		COLORED CONCRETE SIDEWALK		DETECTABLE WARNINGS
			TYPE B			TYPE F	TYPE P VALLEY					TYPE A	TYPE B	TYPE A FAST TRACK	SPECIAL					TYPE 1
			6"0	66	Specia	610	6	10		10"	6"	8"	8"	8"	8"	4"	6" REINFORCED	4"	6" REINFORCED	
Station to Station		LR	Ft	Ft	Ft	Ft	Ft	Ft	Sq Yd	SqYd	SqYd	SqYd	SqYd	SqYd	SqYd	SqFt	SqFt	SqFt	SqFt	
45+17.9		L																		10.0
45+19.2	45+41.6	R																176.6		
45+20.5	46+25.5	L																926.2		
45+24.6	45+40.6	R	15.8																	
45+28.0	46+29.5	L	103.5																	
45+34.1	45+41.8	R	10.8																	
45+40.6	45+49.3	R								3.4										
45+53.8	45+59.2	R	7.7																	
45+57.4	46+10.7	R														286.6				
45+57.5	46+04.8	R																399		
45+61.0		R												35.6						
45+68.0	45+75.6	R								3.4										
45+75.6	46+11.0	R	35.4																	
46+11.0	46+61.0	R						50.0												
46+29.5	46+53.5	L						**												
46+38.0		R										91.3								
46+41.5		L												60.6						
46+53.2	48+13.4	L														561.5				
46+53.5	47+93.0	L	139.5																	
46+59.3	47+91.8	L																1244.6		
46+60.7	48+13.1	R														888.4				
46+61.0	47+91.7	R	130.7																	
46+68.8	47+90.7	R																1073.6		
47+91.7	48+17.0	R								26.4										
47+93.0	48+17.7	L								25.5										
47+94.2		L																		10.0
47+95.2		R																		10.0
48+45.3	48+70.3	R								25.9										
48+45.4	48+70.5	L								26.0										
48+49.0	48+93.3	R														351.4				
48+49.0	48+93.3	R														349.1				
48+49.2	51+92.8	L														2154.3				
48+69.6	48+88.3	R																152.5		
48+70.3	48+93.3	R	23.0																	
48+70.5	51+71.4	L	300.9																	
48+75.2	51+66.5	LR	291.3																	
48+75.2	51+66.5	LR	291.3																	
48+93.3	49+13.3	R						20.0												
49+03.3		R										39.9								
49+13.3	49+69.3	R	56.0																	
49+13.3	49+69.3	R														279.9				
49+18.3	49+64.3	R																394.7		
49+69.3	49+89.3	R						20.0												
49+79.3		R										39.6								
49+89.3	50+10.6	R	21.3																	
49+89.3	50+10.6	R														194.9				
49+98.8	50+16.0	LR														281.8				
49+99.3		R																		10.0
49+99.3		R																		10.0
50+10.6	50+30.6	R						20.0												
50+13.5		L																		10.0
50+13.5		L																		10.0
50+16.0	50+53.6	L																154.3		
SUBTOTAL			1427.2	0	0	0	0.0	110.0	0.0	113.6	0.0	170.7	0.0	96.2	0.0	5307.9	0	4521.5	0	70.0

REGISTERED PROFESSIONAL ENGINEER
REG. NO. 8019
JOHN RAYMOND VAN BEEK
SOUTH DAKOTA
8/25/16

08-25-16 P:\12-117\AutoCAD\PlanSheets\049F\Section B\049F-TABLE OF PAVEMENT QUANTITIES.dwg

TABLE OF PAVEMENT, CURB AND GUTTER, AND SIDEWALK QUANTITIES

FOR BIDDING PURPOSES ONLY

STATE OF SOUTH DAKOTA	PROJECT	SHEET	TOTAL SHEETS
	NH0016(84)67	B22	B136

PLOTTING DATE: 08-25-16 REV 08-25-16 ARK

			CONCRETE CURB AND GUTTER				CONCRETE GUTTER			PCC FILLET SECTION		PCC APPROACH PAVEMENT				CONCRETE SIDEWALK		COLORED CONCRETE SIDEWALK		DETECTABLE WARNINGS
			TYPE B			TYPE F	TYPE P		VALLEY			TYPE A	TYPE B	TYPE A FAST TRACK	SPECIAL					TYPE 1
			610	66	Special	610	6	10		10"	6"	8"	9"	8"	8"	4"	6" REINFORCED	4"	6" REINFORCED	
Station to Station		L-R	Ft	Ft	Ft	Ft	Ft	Ft	Sq Yd	Sq Yd	Sq Yd	Sq Yd	Sq Yd	Sq Yd	Sq Yd	Sq Ft	Sq Ft	Sq Ft	Sq Ft	
50+20.6		R										41.4								
50+30.6	50+48.7	R	18.1																	
50+30.6	50+48.7	R														90.2				
50+38.6	50+43.7	R																59.8		
50+48.7	50+74.7	R						**												
50+61.7		R												56.0						
50+74.7	51+23.3	R	48.6																	
50+74.7	51+23.3	R														243.1				
50+79.7	50+94.7	R																126.8		
51+04.9	51+72.5	L																304.2		
51+04.7	51+18.3	R																114.9		
51+23.3	51.53.3	R					30.0													
51+38.3		R										54.0								
51+53.3	51+71.5	R	18.2																	
51+53.3	51+92.7	R														301.2				
51+58.3	51+71.2	R																		
51+71.4	51+96.5	L								25.0										
51+71.5	51+96.5	R								25.9										
51+73.7		R																		10.0
51+76.6		L																		10.0
52+24.5	52+49.5	L								25.9										
52+24.5	52+49.5	R								25.0										
52+27.9	53+10.6	L														542.7				
52+28.3	52+55.0	R														229.5				
52+46.6		L																		10.0
52+46.7		R																		10.0
52+48.1	53+05.6	L																517.1		
52+48.2	53+84.6	R																1073.5		
52+48.4	53+10.6	L	61.2																	
52+48.5	53+90.6	R	141.1																	
52+54.4	55+47.0	L-R	292.6																	
52+54.4	55+47.0	L-R	292.6																	
53+10.5	53+34.6	L						24.0												
53+22.6		L										47.9								
53+34.6	53+71.4	L	36.8																	
53+34.6	53+71.0	L														182.3				
53+38.6	53+66.0	L																238.9		
53+71.0	54+11.0	L						**												
53+90.6	54+10.6	R						**												
53+91.0		L												84.7						
54+00.6		R												46.4						
54+04.9	54+12.2	L							38.8											
54+10.6	55+51.7	R	141.1																	
54+10.6	55+72.3	R														978.4				
54+11.0	55+62.0	L	151.0																	
54+11.1	55+74.3	L														1255.1				
54+16.6	54+85.0	R																578.2		
54+17.0	54+85.0	L																594.1		
54+95.0	55+62.7	L																272.4		
54+95.0	55+60.2	R																549.5		
55+51.7	55+76.7	R								25.0										
55+62.0	55+76.9	L								11.7										
55+67.4		R																		10.0
SUBTOTAL			1201.3	0	0	0	30.0	24.0	38.8	141.5	0.0	143.3	0.0	187.1	0.0	3822.5	0	4428.4	0	50.0

REGISTERED PROFESSIONAL ENGINEER
REG. NO. 8019
JOHN RAYMOND VAN BEEK
SOUTH DAKOTA
8/25/16

08-25-16 P:\12-117\AutoCAD\PlanSheets\049F\Section_B\049F-TABLE OF PAVEMENT QUANTITIES.dwg

TABLE OF PAVEMENT, CURB AND GUTTER, AND SIDEWALK QUANTITIES

FOR BIDDING PURPOSES ONLY

STATE OF SOUTH DAKOTA	PROJECT	SHEET	TOTAL SHEETS
	NH0016(84)67	B23	B136

PLOTTING DATE: 08-25-16 REV 08-25-16 ARK

			CONCRETE CURB AND GUTTER				CONCRETE GUTTER			PCC FILLET SECTION		PCC APPROACH PAVEMENT				CONCRETE SIDEWALK		COLORED CONCRETE SIDEWALK		DETECTABLE WARNINGS
			TYPE B			TYPE F	TYPE P		VALLEY			TYPE A	TYPE B	TYPE A FAST TRACK	SPECIAL					TYPE 1
			610	66	Special	610	6	10		10"	8"	8'	8'	8"	8"	4"	6" REINFORCED	4"	6" REINFORCED	
Station to Station		L-R	Ft	Ft	Ft	Ft	Ft	Ft	Sq Yd	SqYd	SqYd	SqYd	SqYd	SqYd	SqYd	SqFt	SqFt	SqFt	SqFt	
55+70.5		L																		10.0
56+04.6	56+19.5	R								11.5										
56+05.0	56+30.1	L								28.1										
56+07.2	57+10.1	R														643.4				
56+09.5	56+68.2	L														424.2				
56+11.0		R																		10.0
56+14.4		L																		10.0
56+18.6	57+00.9	R																401.5		
56+19.5	57+06.9	R	87.4																	
56+21.4	56+68.2	L																345.8		
56+30.1	56+68.2	L	38.1																	
56+34.5	59+27.7	L-R	293.2																	
56+34.5	59+27.7	L-R	293.2																	
56+68.2	56+98.2	L						30.0												
56+83.2		L										54.5								
56+98.2	57+50.6	L															262.2			
56+98.2	57+50.6	L				52.4														
57+03.2	57+45.6	L																	356.3	
57+08.9	57+22.9	R						16.0												
57+14.9		R										32.6								
57+18.9	57+71.1	R														263.6				
57+22.9	57+70.9	R	48.0																	
57+28.9	57+64.9	R																317.5		
57+50.6	57+90.6	L						**												
57+50.6	59+53.7	L														1143.7				
57+70.6		L												80.8						
57+70.9	57+90.9	R						20.0												
57+80.9		R										42.9								
57+90.6	58+35.8	L	45.2																	
57+90.6	58+35.8	L														228.0				
57+90.6	59+53.6	R														978.1				
57+90.9	59+32.0	R	141.1																	
57+98.6	58+29.8	L																270.1		
57+98.9	59+31.6	R																1226.2		
58+35.8	58+59.8	L						**												
58+47.8		L												52.6						
58+59.8	59+32.7	L	72.9																	
58+59.8	59+53.7	L														595.8				
58+65.8	59+31.9	L																513.1		
59+32.0	59+57.2	R								26.2										
59+32.7	59+57.5	L								25.7										
59+34.1		R																		10.0
59+34.4		L																		10.0
59+85.3	60+10.9	R								27.0										
59+85.4	60+10.5	L																		
59+88.5	61+45.5	R														919.6				
59+89.8	60+58.6	L														419.8				
60+08.9		R																		10.0
60+07.0		L																		10.0
60+09.4	61+39.5	R																1286.5		
60+09.5	60+52.6	L																295.4		
60+10.5	60+58.6	L	48.1																	
60+10.9	61+45.5	R	134.6																	
SUBTOTAL			1201.8	0	0	52.4	0.0	66.0	0.0	116.5	0.0	130.0	0.0	133.4	0.0	5612.2	262.2	4656.1	356.3	70.0

REGISTERED PROFESSIONAL ENGINEER
REG. NO. 8019
JOHN RAYMOND VAN BEEK
SOUTH DAKOTA
8/25/16

08-25-16 P:\12-117\AutoCAD\PlanSheets\049F\Section_B\049F-TABLE_OF_PAVEMENT_QUANTITIES.dwg

TABLE OF PAVEMENT, CURB AND GUTTER, AND SIDEWALK QUANTITIES

FOR BIDDING PURPOSES ONLY

STATE OF SOUTH DAKOTA	PROJECT	SHEET	TOTAL SHEETS
	NH0016(84)67	B24	B136

PLOTTING DATE: 08-25-16 REV 08-25-16 ARK

			CONCRETE CURB AND GUTTER				CONCRETE GUTTER			PCC FILLET SECTION		PCC APPROACH PAVEMENT				CONCRETE SIDEWALK		COLORED CONCRETE SIDEWALK		DETECTABLE WARNINGS
			TYPE B			TYPE F	TYPE P		VALLEY			TYPE A	TYPE B	TYPE A FAST TRACK	SPECIAL					TYPE 1
			610	66	Special	610	6	10		10"	6"	8"	8"	8"	8"	4"	6" REINFORCED	4"	6" REINFORCED	
Station to Station		L/R	Ft	Ft	Ft	Ft	Ft	Ft	Sq Yd	SqYd	SqYd	SqYd	SqYd	SqYd	SqYd	SqFt	SqFt	SqFt	SqFt	
60+15.1	63+00.7	L/R	285.6																	
60+15.1	63+00.7	L/R	285.6																	
60+58.6	60+82.6	L						24.0												
60+70.6		L										42.0								
60+82.6	61+50.1	L	67.5																	
60+82.6	61+50.1	L														416.2				
60+88.6	61+09.0	L																149.2		
61+45.5	61+75.5	R						30.0												
61+50.1	61+76.1	L						**												
61+60.0		R										60.5								
61+63.1		L												53.6						
61+75.5	62+04.5	R	29.0																	
61+75.5	62+04.8	R														327.4				
61+76.1	63+11.7	L	135.6																	
61+76.1	63+11.7	L														732.5				
61+82.1	62+07.4	L																186.9		
61+87.4	62+12.4	L/R														277.4				
61+89.9		R																		10.0
61+89.9		R																		10.0
62+04.5	62+20.5	R						16.0												
62+09.9		L																		10.0
62+09.9		L																		10.0
62+12.4	63+11.7	L																786.8		
62+12.5		R										34.7								
62+20.0	63+11.5	R														542.4				
62+20.5	63+11.5	R	91.0																	
62+25.5	63+01.5	R																658.7		
63+94.5	66+91.8	L/R	297.3																	
63+94.5	66+91.8	L/R	297.3																	
St Anne Street																				
2+44.0	2+49.9	L		5.7																
2+44.2	2+50.2	R		6.0																
2+49.9	2+71.3	L					21.4													
2+50.2	2+69.0	R					18.8													
2+58.9		L											29.2							
2+62.5		R											30.0							
2+69.0	3+77.7	R		108.7																
2+71.3	5+73.4	L		112.4																
2+74.8	3+79.2	R														594.9				
2+77.3	3+82.9	L														528.3				
3+82.3		R																		10.0
3+85.1		L																		10.0
4+75.7		R																		10.0
4+78.9		L																		10.0
4+81.9	5+12.1	L														152.9				
4+83.0	5+73.4	R		90.4																
4+83.3	5+73.4	R														450.5				
4+89.0	5+73.4	L		90.4																
SUBTOTAL			1488.9	413.6	0	0	40.2	70.0	0.0	0.0	0.0	137.2	59.2	53.6	0.0	4022.5	0	1781.6	0	80.0

REGISTERED PROFESSIONAL ENGINEER
REG. NO. 8019
JOHN RAYMOND VAN BEEK
SOUTH DAKOTA
9/25/16

08-25-16 P:\12-117\AutoCAD\PlanSheets\049F\Section_B\049F_TABLE_OF_PAVEMENT_QUANTITIES.dwg

TABLE OF PAVEMENT, CURB AND GUTTER, AND SIDEWALK QUANTITIES

FOR BIDDING PURPOSES ONLY

STATE OF SOUTH DAKOTA	PROJECT	SHEET	TOTAL SHEETS
	NH0016(84)67	B25	B136

PLOTTING DATE: 08-25-16

REV 08-25-16 ARK

Station to Station		L/R	CONCRETE CURB AND GUTTER TYPE B 610 Ft	TYPE B 66 Ft	TYPE B Special Ft	TYPE F 610 Ft	CONCRETE GUTTER TYPE P VALLEY 6 Ft	10 Ft	Sq Yd	POC FILLET SECTION 10" SqYd	6" SqYd	POC APPROACH PAVEMENT TYPE A 8" SqYd	TYPE B 8" SqYd	TYPE A FAST TRACK 8" SqYd	SPECIAL 8" SqYd	CONCRETE SIDEWALK 4" SqFt	6" REINFORCED SqFt	COLORED CONCRETE SIDEWALK 4" SqFt	6" REINFORCED SqFt	DETECTABLE WARNINGS TYPE 1
St. Francis Street																				
2+80.4	2+90.8	R		10.4												52.2				
2+80.4	3+20.3	L		39.9																
2+80.4	3+20.3	L														197.1				
2+85.3	2+92.5	R		11.5																
2+90.8	3+14.8	R					24.0													
3+02.8		R										43.2								
3+14.8	3+78.0	R		63.2																
3+14.8	3+78.0	R														319.0				
3+20.3	3+44.3	L					24.0													
3+32.3		L										44.0								
3+44.3	3+83.5	L		39.2																
3+44.3	3+84.1	L														189.8				
3+83.4		R																		10.0
3+86.2		L																		10.0
4+76.8		R																		10.0
4+79.1		L																		10.0
4+82.0	5+56.3	L														378.8				
4+83.2	5+26.7	R														202.0				
4+83.2	5+21.7	R																162.7		
4+83.3	5+26.7	R		43.4																
4+86.7	5+55.7	R														337.4				
4+88.6	5+56.3	L		67.7																
5+26.7	5+50.7	R					24.0													
5+38.7		R										44.6								
5+50.7	5+56.3	R		5.6																
5+50.7	5+55.7	R														25.0				
St. Patrick Street																				
2+03.7	3+58.7	L														278.6				
2+03.7	2+14.1	R		10.4																
2+03.7	2+58.7	L		55.0																
2+03.7	2+14.1	R														51.7				
2+14.1	2+51.6	R					37.5													
2+32.8		R										54.4								
2+51.6	2+91.3	R														198.8				
2+51.6	2+91.3	R		39.7																
2+58.7	2+82.7	L					24.0													
2+70.7		L										36.3								
2+82.7	2+87.1	L														22.2				
2+82.7	3+63.5	L		80.8																
2+91.3	3+15.3	R					24.0													
3+03.3		R										36.7								
3+59.6	3+69.0	R														308.3				
3+15.3	3+64.5	R		49.2																
3+71.3		L																		10.0
3+71.5		R																		10.0
4+61.7		L																		10.0
4+61.7		R																		10.0
4+64.2	4+98.8	L																217.3		
4+67.7	5+53.8	L														424.8				
4+69.7	5+52.8	R	83.1																	
4+69.7	5+03.8	L	34.1																	
4+70.3	5+42.7	R														362.4				
5+03.8	5+53.8	L						50.0												
5+28.4		L										89.2								
5+53.8	5+63.8	L	10.0																	
SUBTOTAL			127.2	516	0	0	157.5	50.0	0.0	0.0	0.0	330.4	0.0	0.0	0.0	3348.1	0	380.0	0	80.0

REGISTERED PROFESSIONAL ENGINEER
REG. NO. 8019
JOHN RAYMOND VAN BEEK
SOUTH DAKOTA
8/25/16

08-25-16 P:\12-117\AutoCAD\PlanSheets\049F\Section_B\049F-TABLE_OF_PAVEMENT_QUANTITIES.dwg

TABLE OF PAVEMENT, CURB AND GUTTER, AND SIDEWALK QUANTITIES

FOR BIDDING PURPOSES ONLY

STATE OF SOUTH DAKOTA	PROJECT	SHEET	TOTAL SHEETS
	NH0016(84)67	B26	B136

PLOTTING DATE: 08-25-16 REV 08-25-16 ARK

			CONCRETE CURB AND GUTTER				CONCRETE GUTTER			PCC FILLET SECTION		PCC APPROACH PAVEMENT				CONCRETE SIDEWALK		COLORED CONCRETE SIDEWALK		DETECTABLE WARNINGS
			TYPE B			TYPE F	TYPE P		VALLEY			TYPE A	TYPE B	TYPE A FAST TRACK	SPECIAL					TYPE 1
			6'0	66	Special	610	6	10		10"	6"	8'	8'	8'	8'	4"	6" REINFORCED	4'	6" REINFORCED	
Station to Station		L/R	Ft	Ft	Ft	Ft	Ft	Ft	Sq Yd	ScYd	ScYd	ScYd	SqYd	SqYd	SqYd	SqFt	SqFt	SqFt	ScFt	
St. Andrew Street																				
3+51.7	3+56.4	L		4.7																
3+51.7	4+43.9	R		92.2																
3+54.4	4+30.4 *	L					72.0													
3+56.4	3+56.4 *	L		13.1																
3+56.4	4+28.4	L		72.0																
4+28.4	4+28.4 *	L		13.1																
3+53.7	4+52.2	L														574.8				
3+62.0	3+63.4	R							10.4											
3+83.8	3+87.8	R														48.3				
3+92.2	4+20.0	R														138.8				
4+28.4	4+43.4	L		15.0																
4+31.1	4+52.2	L																333.3		
4+54.8		L																		10.0
4+55.4		R																		10.0
5+45.3		L																		10.0
5+45.9		R																		10.0
5+48.4	5+63.4	R														73.8				
5+56.4	5+48.4	L		92.0																
5+56.9	5+21.3	R		64.4																
6+21.3	5+61.3	R					40.0													
6+41.3		R										85.0								
6+48.4	5+72.4	L					24.0													
6+60.4		L										49.8								
6+61.3	5+94.1	R		32.8																
6+72.4	5+94.1	L		21.7																
6+73.1	5+89.1	R					16.0													
St. Charles Street																				
2+83.3	3+96.2	R														618.8				
3+21.1	3+96.2	R														375.5				
3+23.6	3+30.6	L		6.8																
3+23.6	4+38.1	R		141.9																
3+25.5	3+30.6	L														25.0				
3+25.5	4+51.5	L														629.2				
3+37.0		R																		10.0
3+30.5	3+55.6	L					25.0													
3+43.1		L										66.7								
3+55.5	3+89.9	L														171.3				
3+55.5	3+89.9	L		34.3																
3+89.9	4+13.9	L					24.0													
3+96.2	4+13.4	R															85.6			
4+01.9		L										65.3								
4+13.4	4+52.0	R														193.1				
4+13.9	4+43.5	L		29.6																
4+13.9	4+51.5	L														187.8				
4+38.1	4+43.5	L		5.4																
4+40.6	4+52.0	R																167.4		
4+53.9		L																		10.0
4+54.5		R																		10.0
5+44.4		L																		10.0
5+45.0		R																		10.0
5+46.9	5+65.5	L																266.2		
5+47.0	5+65.5	L														92.8				
5+47.5	5+60.8	R														566.4				
SUBTOTAL			0.0	657	0.0	0.0	201.0	0.0	10.4	0.0	0.0	266.8	0.0	0.0	0.0	3695.6	85.6	766.9	0	90.0

REGISTERED PROFESSIONAL ENGINEER
REG. NO. 8019
JOHN RAYMOND VAN BEEK
SOUTH DAKOTA
8/25/16

08-25-16 P:\12-117\AutoCAD\PlanSheets\049F\Section_B\049F-TABLE_OF_PAVEMENT_QUANTITIES.dwg

TABLE OF PAVEMENT, CURB AND GUTTER, AND SIDEWALK QUANTITIES

FOR BIDDING PURPOSES ONLY

STATE OF SOUTH DAKOTA	PROJECT	SHEET	TOTAL SHEETS
	NH0016(84)67	B27	B136

PLOTTING DATE: 08-25-16 REV 08-25-16 ARK

			CONCRETE CURB AND GUTTER				CONCRETE GUTTER			PCC FILLET SECTION		PCC APPROACH PAVEMENT				CONCRETE SIDEWALK		COLORED CONCRETE SIDEWALK		DETECTABLE WARNINGS
			TYPE B			TYPE F	TYPE P		VALLEY			TYPE A	TYPE B	TYPE A FAST TRACK	SPECIAL					TYPE 1
			610	66	Special	610	8	10		10"	6"	8"	8'	8'	8'	4"	6" REINFORCED	4'	6' REINFORCED	
Station to Station		L/R	Ft	Ft	Ft	Ft	Ft	Ft	Sq Yd	SqYd	SqYd	SqYd	SqYd	SqYd	SqYd	SqFt	SqFt	SqFt	SqFt	
5-56.5	5+65.5	L		9.0																
5-56.5	5+65.5	R		9.0																
5-89.5	6+38.3	L														260.2				
5-89.5	6+60.8	R														356.5				
5-65.5	5+89.5	L					24.0													
5-65.5	5+89.5	R					24.0													
5-77.5		L										64.9								
5-89.5	6+37.3	L																419.5		
5-89.5	6+44.3	L		54.8																
5-89.5	6+66.8	R		77.3																
6-44.3	6+60.8	L					16.5													
6-52.5		L											15.8							
6-60.8	6+66.8	L		6.0																
Franklin Street																				
3-09.3	3+45.3	R										68.1								
3-27.3		R										60.0								
3-09.3	3+15.3	R		6.0																
3-15.3	3+39.3	R					24.0													
3-39.3	3+45.3	R		6.0																
3-92.6	4+43.3	L		50.7																
3-92.6	4+43.6	R		51.0																
4-25.5	4+44.4	R																259.7		
4-25.5	4+48.6	R														152.0				
4-41.5	4+52.0	L														52.7				
4-41.5	4+52.0	L																125.5		
5-48.1	5+62.9	R														70.6				
5-48.3	5+62.9	R																191.8		
5-55.5	5+65.7	L																111.7		
5-56.1	5+65.7	L														51.9				
5-56.3	5+99.9	L		43.7																
6-56.6	5+99.9	R		43.3																
St. Cloud Street																				
3-93.4	4+43.4	L					50.0													
3-93.4	4+15.9	R		22.5																
4-15.9	4+39.9	R					24.0													
4-27.9		R										42.7								
4-39.9	4+43.7	R		3.8																
4-40.8	4+53.9	L														65.5				
4-43.4	4+53.9	L																151.8		
4-55.7		R																		10.0
4-56.4		L																		10.0
5-46.2		R																		10.0
5-46.9		L																		10.0
5-49.3	5+74.6	L														128.5				
5-56.7	5+99.4	R		42.7																
5-56.4	5+74.6	L		18.2																
5-74.6	5+98.6	L					24.0													
5-86.6		L										63.4								
5-98.6	6+34.6	L		6.0																
Total: Grand			7310.9	3059.7	456.8	52.4	615.2	408.0	49.2	885.5	13.0	1477.4	75.0	577.8	110.7	37293.4	750.7	20988.5	437.5	630.0

* Denotes Non-Participating.

**Denotes that this quantity of Type P Concrete Gutter is included in the area of the adjacent Type A Fast Track PCC Approach. No Additional Payment will be made.

REGISTERED PROFESSIONAL ENGINEER
REG. NO. 8019
JOHN RAYMOND VAN BEEK
SOUTH DAKOTA
8/25/16

08-25-16 P:\12-117\AutoCAD\PlanSheets\049F\Section_B\049F-TABLE_OF_PAVEMENT_QUANTITIES.dwg

FOR BIDDING PURPOSES ONLY

TYPICAL GRADING SECTIONS

34+10 To 35+11
36+18 To 38+74
39+95 To 44+64
45+00 To 47+50

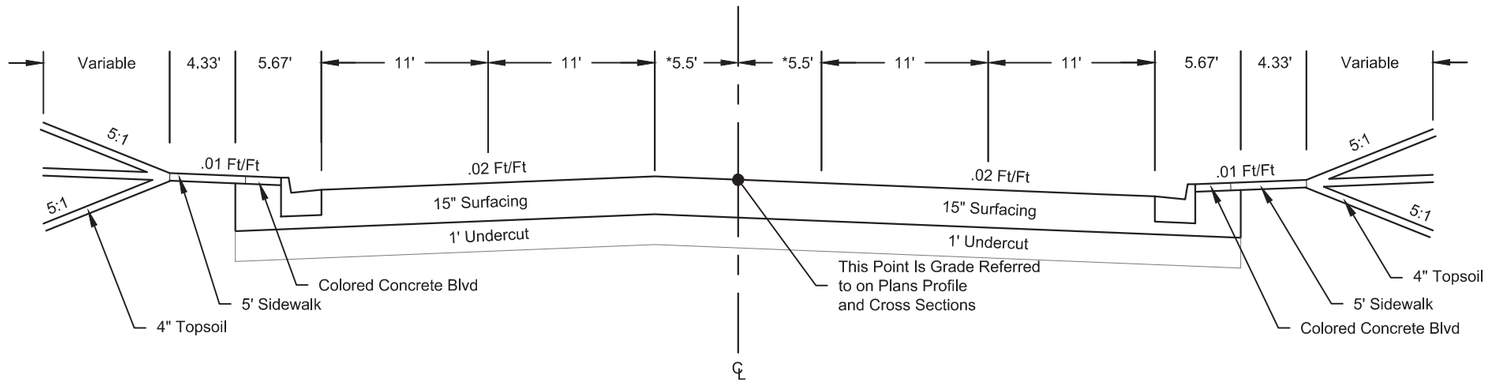

Transitions:
*45+00 To 47+50 - Transitions From 5.5' To 9.5'

45+00 To 45+92 - Crown Transitions From 5.5' LT to 9.5' RT

35+11 To 36+18
38+74 To 39+95

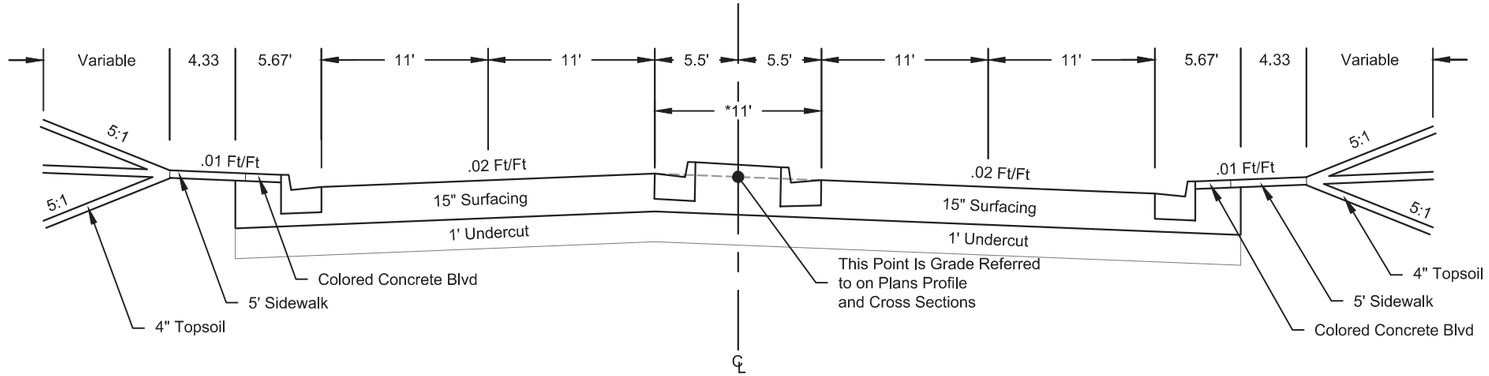

Transitions:
**35+11 To 35+44 - Transitions From 4.9' To 11'
**35+79 To 36+18 - Transitions From 11' To 4.9'
**38+74 To 39+03 - Transitions From 5.7' To 11'
**39+62 To 39+95 - Transitions From 11' To 4.9'

44+64 To 45+00
(Saint Patrick Street Intersection)

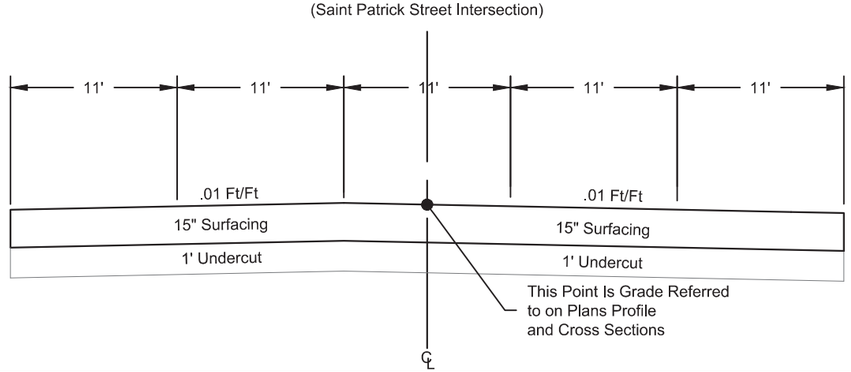

Table of Cross Slopes - Mt. Rushmore Road

Station	# Slope LT of CL	# Slope RT of CL
34+10.44	-2.00%	-2.00%
44+05.66	-2.00%	-2.00%
44+38.66	-1.00%	-1.00%
45+25.95	-1.00%	-1.00%
45+58.95	-2.00%	-2.00%
63+11.61	-2.00%	-2.00%

07-29-16 P:\12-117\AutoCAD\PlanSheets\049F\Section B\049F-TYPSEC.dwg

STATE OF SOUTH DAKOTA	PROJECT	SHEET	TOTAL SHEETS
	NH0016(84)67	B29	B136

PLOTTING DATE: 07-29-16

FOR BIDDING PURPOSES ONLY

TYPICAL GRADING SECTIONS

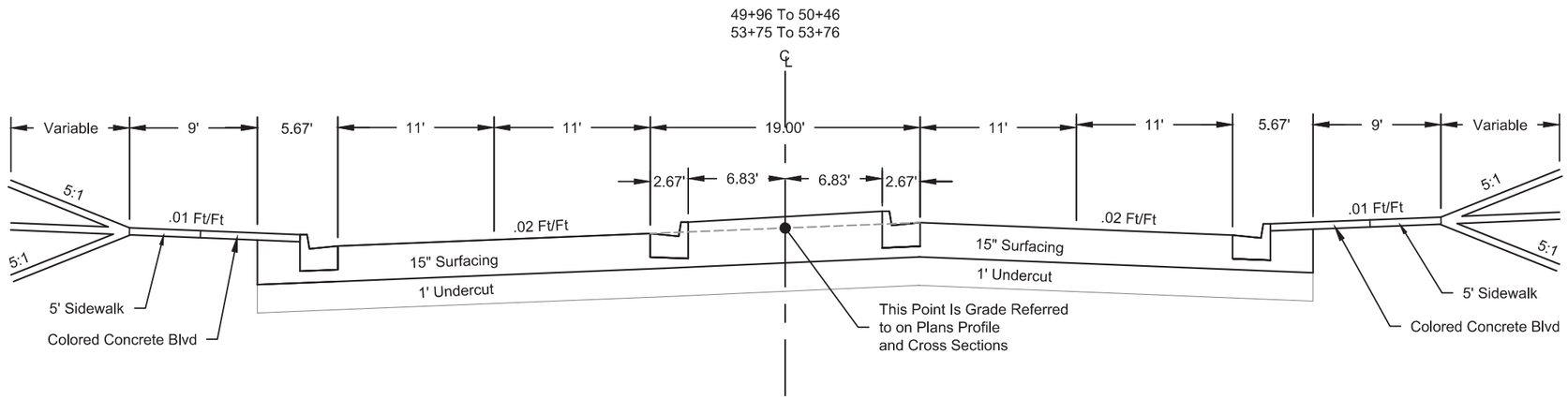

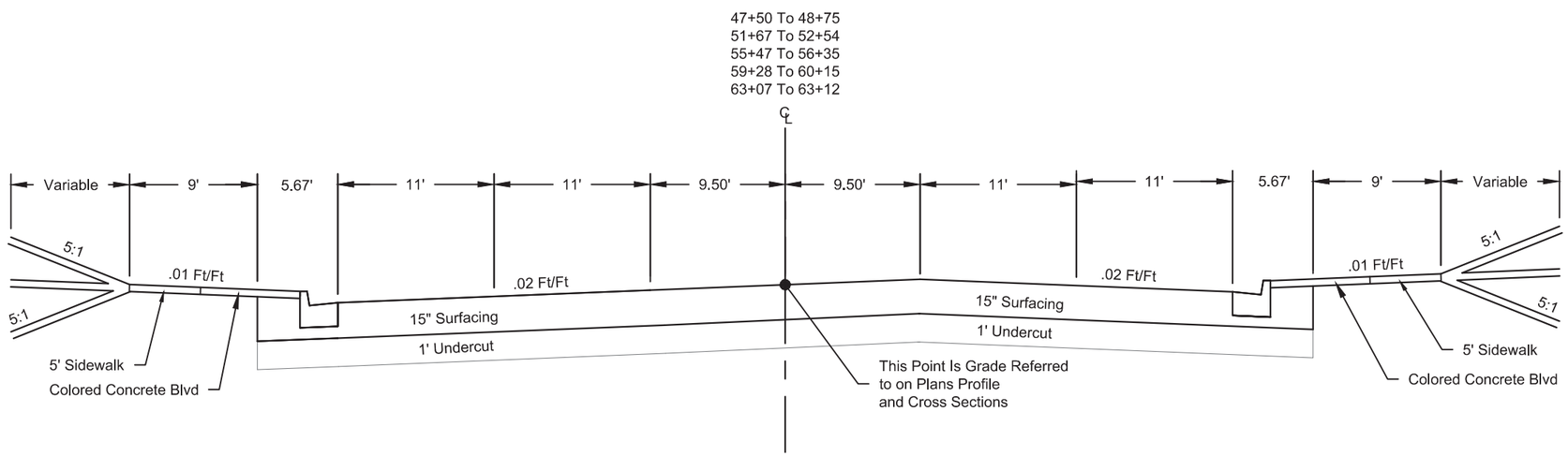

07-29-16 P:\12-117\AutoCAD\PlanSheets\049F\Section B\049F-TYPSEC.dwg

STATE OF SOUTH DAKOTA	PROJECT	SHEET	TOTAL SHEETS
	NH0016(84)67	B30	B136

PLOTTING DATE: 07-29-16

FOR BIDDING PURPOSES ONLY

TYPICAL GRADING SECTIONS

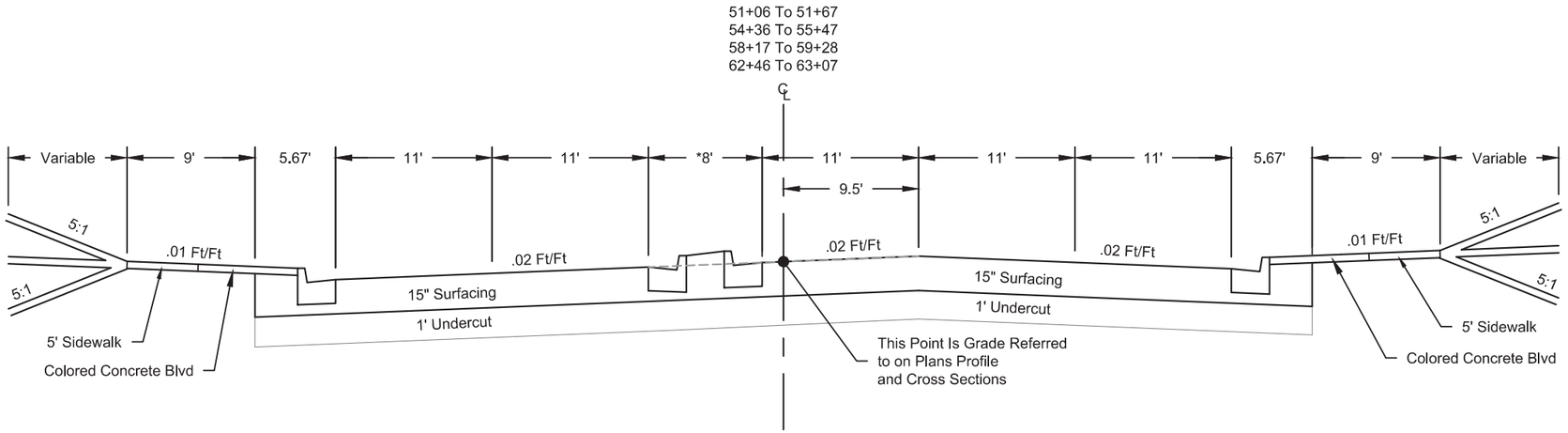

Transitions:
*50+46 To 51+06 - Transitions From 19' To 8'
*53+76 To 54+36 - Transitions From 19' To 8'
*57+57 To 58+17 - Transitions From 19' To 8'
*61+86 To 62+46 - Transitions From 19' To 8'

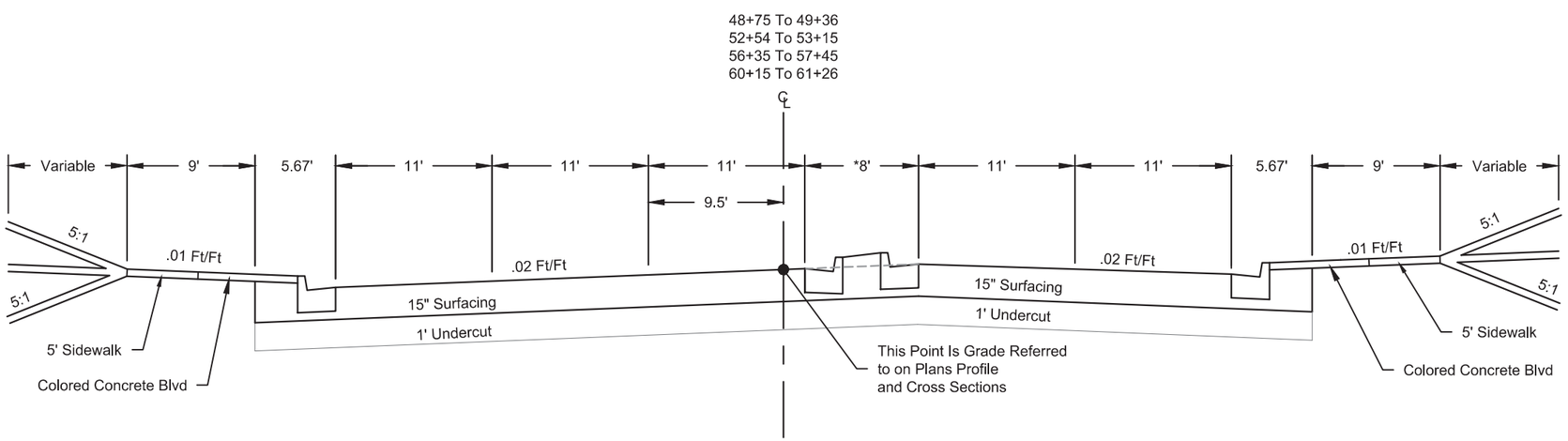

Transitions:
*49+36 To 49+96 - Transitions From 8' To 19'
*53+15 To 53+75 - Transitions From 8' To 19'
*57+45 To 57+05 - Transitions From 8' To 19'
*61+26 To 61+86 - Transitions From 8' To 19'

REGISTERED PROFESSIONAL ENGINEER
REG. NO. 8019
JOHN RAYMOND VAN BEEK
SOUTH DAKOTA
8/17/16

07-29-16 P:\12-117\AutoCAD\PlanSheets\049F\Section B\049F-TYPSEC.dwg

STATE OF SOUTH DAKOTA	PROJECT	SHEET	TOTAL SHEETS
	NH0016(84)67	B31	B136

PLOTTING DATE: 08-17-16 REV 08-17-16 ARK

FOR BIDDING PURPOSES ONLY

TYPICAL GRADING SECTIONS

Table of Cross Slopes -St. Andrew Street

Station	Slope LT of CL	Slope RT of CL
3+51.74	-3.51%	0.00%
3+61.74	-2.00%	-2.00%
4+43.41	-2.67%	2.67%
5+56.94	-2.67%	2.67%
6+44.35	-2.00%	-2.00%
6+84.09	-2.00%	-2.00%
6+94.09	-5.01%	-4.19%

Table of Cross Slopes - St. Charles Street

Station	Slope LT of CL	Slope RT of CL
3+23.83	-5.26%	-2.91%
4+38.14	-1.80%	1.80%
5+56.52	-1.80%	1.80%
6+66.80	-3.73%	-3.58%

Table of Cross Slopes - St Anne Street

Station	Slope LT of CL	Slope RT of CL
2+44.08	-6.74%	-0.57%
2+73.06	-2.00%	-2.00%
3+77.73	-2.53%	2.53%
4+88.96	-2.53%	2.53%
5+63.43	-2.00%	-2.00%
5+73.43	-3.73%	-3.06%

Table of Cross Slopes - St. Francis Street

Station	Slope LT of CL	Slope RT of CL
2+80.39	-0.97%	-3.10%
2+90.39	-2.00%	-2.00%
3+77.96	0.80%	-0.80%
4+88.55	0.80%	-0.80%
5+46.25	-2.00%	-2.00%
5+56.25	-4.16%	-1.51%

Table of Cross Slopes - St. Patrick Street

Station	Slope LT of CL	Slope RT of CL
2+03.71	-0.93%	-4.77%
2+13.71	-2.00%	-2.00%
3+16.88	-2.00%	-2.00%
3+63.88	-0.28%	0.28%
4+69.87	-0.28%	0.28%
5+16.87	-2.00%	-2.00%
5+43.75	-2.00%	-2.00%
5+53.75	-1.66%	-1.55%

3+52 To 6+94 (St. Andrew Street)
3+24 To 6+67 (St. Charles Street)
3+93 To 6+00 (Franklin Street)
3+93 To 5+99 (St. Cloud Street)

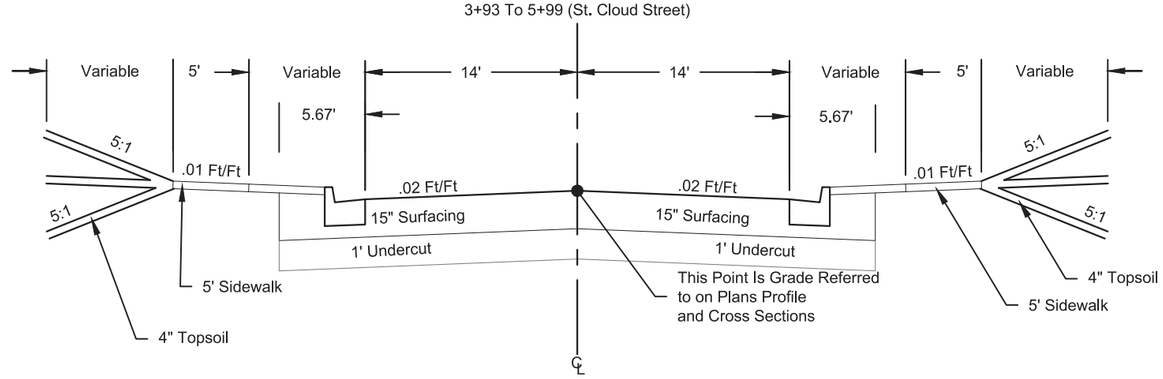

Table of Cross Slopes - Franklin Street

Station	Slope LT of CL	Slope RT of CL
3+92.62	-1.92%	2.60%
4+43.31	-2.19%	2.19%
5+56.60	-2.19%	2.19%
5+89.91	-2.00%	-2.00%
5+99.91	-5.69%	-0.81%

Table of Cross Slopes - St. Cloud Street

Station	Slope LT of CL	Slope RT of CL
3+93.40	-3.78%	3.78%
4+43.72	-2.19%	2.19%
5+57.09	-2.19%	2.19%
5+89.09	-2.00%	-2.00%
5+99.43	-4.95%	-1.28%

2+44 To 5+73 (St. Anne Street)
2+80 To 5+56 (St. Francis Street)

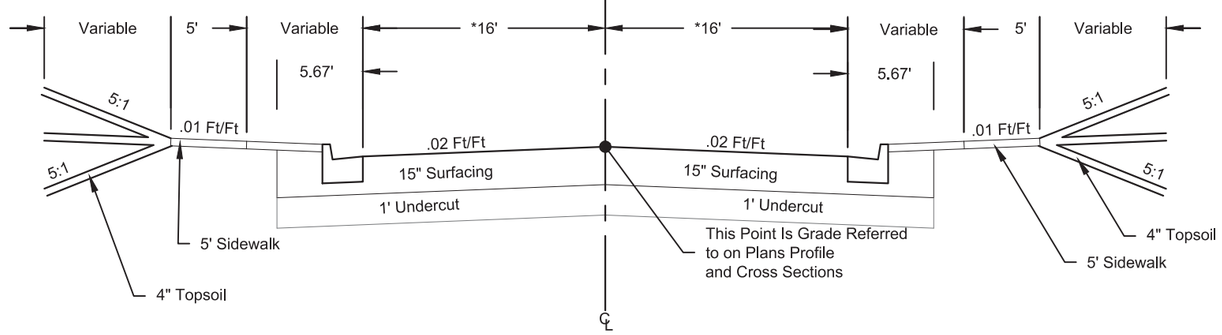

St. Francis Street:
*2+80 To 4+06 - 18'
*4+60 To 5+56 - 16'

Transition (St. Francis Street):
*4+06 To 4+61 - Transitions From 18' To 16'

REGISTERED PROFESSIONAL ENGINEER
REG. NO. 8019
JOHN RAYMOND VAN BEEK
SOUTH DAKOTA
8/17/16

2+03 to 5+54 (St. Patrick Street)

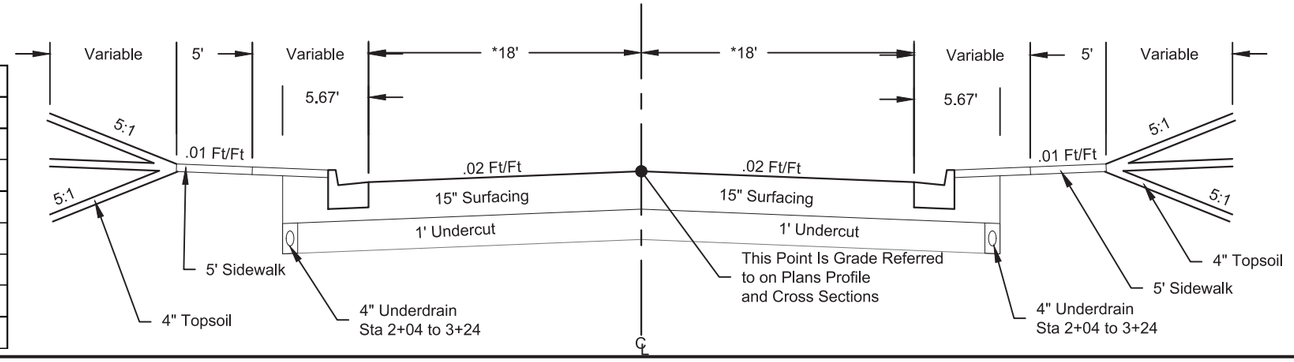

St. Patrick Street:
*2+03 - 14'
*2+52 To 5+54 - 18'

Transition (St. Patrick Street):
*2+03 To 2+56 - Transitions From 14' To 18'

2+03 To 2+52 - Crown Transitions From 6.3' LT to 0' LT

08-17-16 P:\12-117\AutoCAD\PlanSheets\049F\Section B\049F-TYPSEC.dwg

HORIZONTAL ALIGNMENT DATA

FOR BIDDING PURPOSES ONLY

STATE OF SOUTH DAKOTA	PROJECT	SHEET	TOTAL SHEETS
	NH0016(84)67	B32	B136

PLOTTING DATE: 07-29-16

MAINLINE

Type	Station			Northing	Easting
POB	0+00			640899.18	1206543.78
		TL = 1700.00'	N 1°54'45" E		
PI	17+00.00			642598.24	1206600.51
		TL = 244.33'	N 1°40'42" E		
PC	19+44.33			642842.46	1206607.67
PI	19+99.96	R = 5000.00	Delta = 1°16'29"	642898.06	1206609.30
PT	20+55.58			642953.61	1206612.17
		TL = 243.78'	N 2°57'12" E		
PC	22+99.36			643197.07	1206624.73
PI	24+00.01	R = 5000.00	Delta = 2°18'23"	643297.59	1206629.91
PT	25+00.63			643398.23	1206631.05
		TL = 133.57'	N 0°38'49" E		
PI	26+34.20			643531.79	1206632.56
		TL = 310.33'	N 2°01'20" E		
PI	29+44.53			643841.93	1206643.51
		TL = 412.55'	N 2°02'46" E		
PI	33+57.08			644254.21	1206658.24
		TL = 376.45'	N 2°00'12" E		
PI	37+33.53			644630.43	1206671.40
		TL = 375.48'	N 2°01'29" E		
PI	41+09.01			645005.68	1206684.66
		TL = 372.81'	N 2°26'51" E		
PI	44+81.81			645378.14	1206700.58
		TL = 351.88'	N 1°26'23" E		
PI	48+33.69			645729.91	1206709.42
		TL = 757.57'	N 1°59'08" E		
PI	55+91.26			646487.03	1206735.67
		TL = 380.66'	N 1°51'12" E		
PI	59+71.92			646867.48	1206747.98
		TL = 378.64'	N 2°03'46" E		
PI	63+50.56			647245.88	1206761.61
		TL = 1228.34'	N 2°00'28" E		
PC	75+78.91			648473.47	1206804.64
PI	76+35.41	R = 511.00	Delta = 12°37'11"	648529.94	1206806.62
PT	76+91.46			648584.61	1206820.89
		TL = 2685.21'	N 14°37'38" E		
POE	103+76.67			651182.80	1207498.99

The coordinates shown on this sheet are based on the South Dakota State Plane Coordinate System.
South Zone (NAD 83/96); epoch 2002.00; Geoid 03; SF = 0.999769814
The elevations shown on this sheet are based on NAVD 88.

REGISTERED PROFESSIONAL ENGINEER
REG. NO. 8019
JOHN RAYMOND VAN BEEK
SOUTH DAKOTA
8/17/16

07-29-16 P:\12-117\AutoCAD\PlanSheets\049F\Section B\049F-HORIZALIGN.dwg

HORIZONTAL ALIGNMENT DATA

FOR BIDDING PURPOSES ONLY

STATE OF SOUTH DAKOTA	PROJECT	SHEET	TOTAL SHEETS
	NH0016(84)67	B33	B136

PLOTTING DATE: 07-29-16

SAINT ANNE STREET

Type	Station			Northing	Easting
POB	0+00.00			644635.47	1206238.42
		TL = 254.77'	S 87°41'38" E		
PC	2+54.77			644625.21	1206492.99
PI	2+62.52	R = 200.00	Delta = 4°26'25"	644624.90	1206500.73
PT	2+70.27			644625.19	1206525.19
		TL = 290.23'	N 87°51'57" E		
PC	5+60.50			644636.00	1206798.51
PI	5+66.96	R = 200.00	Delta = 3°42'05"	644636.24	1206804.97
PT	5+73.42			644636.06	1206811.43
		TL = 382.25'	S 88°25'58" E		
POE	9+55.67			644625.61	1207193.54

SAINT FRANCIS STREET

Type	Station			Northing	Easting
POB	0+00.00			645016.88	1206251.77
		TL = 344.29'	S 87°46'08" E		
PC	3+44.29			645003.47	1206595.79
PI	3+55.48	R = 350.00	Delta = 3°39'48"	645003.04	1206606.98
PT	3+66.67			645003.31	1206618.17
		TL = 134.69'	N 88°34'04" E		
PC	5+01.36			645006.68	1206752.82
PI	5+10.80	R = 350.00	Delta = 3°05'23"	645006.92	1206762.25
PT	5+20.23			645006.64	1206771.69
		TL = 431.03'	S 88°20'33" E		
POE	9+51.26			644994.18	1207202.54

SAINT PATRICK STREET

Type	Station			Northing	Easting
POB	0+00.00			645395.13	1206283.86
		TL = 417.07'	S 87°39'27" E		
PI	4+17.07			645378.09	1206700.58
		TL = 513.55'	S 88°10'04" E		
POE	9+30.61			645361.67	1207213.86

SAINT ANDREW STREET

Type	Station			Northing	Easting
POB	0+00.00			645745.79	1206209.70
		TL = 1000.00'	S 87°54'50" E		
POE	10+00.00			645709.39	1207209.03

SAINT CHARLES STREET

Type	Station			Northing	Easting
POB	0+00.00			646123.50	1206222.77
		TL = 1000.00'	S 88°02'46" E		
POE	10+00.00			646089.41	1207222.19

FRANKLIN STREET

Type	Station			Northing	Easting
POB	0+00.00			646505.14	1206236.00
		TL = 1000.00'	S 87°52'22" E		
POE	10+00.00			646468.02	1207235.31

SAINT CLOUD STREET

Type	Station			Northing	Easting
POB	0+00.00			646885.90	1206248.32
		TL = 1000.00'	S 87°49'26" E		
POE	10+00.00			646847.93	1207247.60

The coordinates shown on this sheet are based on the South Dakota State Plane Coordinate System.
South Zone (NAD 83/96); epoch 2002.00; Geoid 03; SF = 0.999769814
The elevations shown on this sheet are based on NAVD 88.

REGISTERED PROFESSIONAL ENGINEER
REG. NO. 8019
JOHN RAYMOND VAN BEEK
SOUTH DAKOTA
8/17/16

07-29-16 P:\12-117\AutoCAD\PlanSheets\049F\Section B\049F-HORIZALIGN.dwg

CONTROL DATA

FOR BIDDING PURPOSES ONLY

STATE OF SOUTH DAKOTA	PROJECT	SHEET	TOTAL SHEETS
	NH0016(84)67	B34	B136

PLOTTING DATE: 07-29-16

HORIZONTAL AND VERTICAL CONTROL POINTS						
Point	Station	Offset	Description	Northing	Easting	Elevation
CP1	44+35.20	37.77 RT	SE CORNER 8TH ST/ST PATRICK ST UNDER WALGREEN SIGN BACK SW	645329.96	1206736.32	3328.23
CP2	35+04.76	32.79 LT	W SIDE 8TH ST N OF PAPA T'S SIGN BACK SW	644402.96	1206630.63	3335.11
CP3	29+04.64	32.49 RT	SE CORNER 8TH ST/MEADE ST 10' N OF SONIC DRIVEWAY BACK SW	643800.91	1206674.57	3357.13
CP1002	67+69.21	42.13 LT	NW QUAD 8TH ST/FAIRVIEW ST	647665.75	1206734.17	3285.22
CP1003	67+09.92	54.51 RT	SE QUAD 8TH ST/FAIRVIEW ST	647603.11	1206828.68	3287.52
CP1004	59+50.52	51.96 LT	SW QUAD 8TH ST/ST CLOUD ST	646847.78	1206695.35	3298.47
CP1005	60+02.54	53.55 RT	NE QUAD 8TH ST/ST CLOUD ST	646896.16	1206802.60	3295.86
CP1012	50+05.20	52.99 RT	HUNAN RESTAURANT E OF 8TH ST	645899.48	1206768.32	3318.44
CP9431	53+81.13	40.48 LT	W SIDE 8TH ST NE CORNER OF LOAF N JUG	646278.42	1206687.93	3309.35

The coordinates shown on this sheet are based on the South Dakota State Plane Coordinate System.
South Zone (NAD 83/96); epoch 2002.00; Geoid 03; SF = 0.999769814
The elevations shown on this sheet are based on NAVD 88.

REGISTERED PROFESSIONAL ENGINEER
REG. NO. 8019
JOHN RAYMOND VAN BEEK
SOUTH DAKOTA
8/17/16

07-29-16 P:\12-117\AutoCAD\PlanSheets\049F\Section B\049F-CTRLDATA.dwg

FOR BIDDING PURPOSES ONLY

STATE OF SOUTH DAKOTA	PROJECT	SHEET	TOTAL SHEETS
	NH0016(84)67	B35	B136

PLOTTING DATE: 07-29-16

LEGEND

Anchor
Antenna
Approach
Assumed Corner
Azimuth Marker
BBQ Grill/ Fireplace
Bearing Tree
Bench Mark
Box Culvert
Bridge
Brush
Buildings
Bulk Tank
Cattle Guard
Cemetery
Centerline
Cistern
Clothes Line
Commercial Sign Double Face
Commercial Sign One Post
Commercial Sign Overhead
Commercial Sign Two Post
Concrete Symbol
Creek Edge
Curb/Gutter
Curb
Dam Grade/Dike/Levee
Deck Edge
Ditch Block
Doorway Threshold
Drainage Profile
Drop Inlet
Edge Of Asphalt
Edge Of Concrete
Edge Of Gravel
Edge Of Other
Edge Of Shoulder
Elec. Trans./Power Jct. Box
Environmental Sensitive Site —ESS—
Fence Barbwire
Fence Chainlink
Fence Electric
Fence Misc.
Fence Rock
Fence Snow
Fence Wood
Fence Woven
Fire Hydrant
Flag Pole
Flower Bed
Gas Valve Or Meter
Gas Pump Island
Grain Bin
Guardrail
Guide Sign One Post
Guide Sign Two Post
Gutter
Guy Pole
Haystack

Hedge
Highway R.O.W. Marker
Interstate Close Gate
Iron Pin
Irrigation Ditch
Lake Edge
Lawn Sprinkler
Mailbox
Manhole Electric
Manhole Gas
Manhole Misc
Manhole Sanitary Sewer
Manhole Storm Sewer
Manhole Telephone
Manhole Water
Merry-Go-Round
Microwave Radio Tower
Misc. Line
Misc. Property Corner
Misc. Post
Overhang Or Encroachment
Overhead Utility Line — OH —
Parking Meter
Pipe With End Section
Pipe With Headwall
Pipe Without End Section
Playground Slide
Playground Swing
Power And Light Pole
Power And Telephone Pole
Power Meter
Power Pole
Power Pole And Transformer
Power Tower Structure
Propane Tank
Property Pipe
Property Pipe With Cap
Property Stone
Public Telephone
Railroad Crossing Signal
Railroad Milepost Marker
Railroad Profile
Railroad R.O.W. Marker
Railroad Signs
Railroad Switch
Railroad Track
Railroad Trestle
Rebar
Rebar With Cap
Reference Mark
Regulatory Sign One Post
Regulatory Sign Two Post
Retaining Wall
Riprap
River Edge
Rock And Wire Baskets
Rockpiles
Satellite Dish
Septic Tank

Shrub Tree
Sidewalk
Sign Face
Sign Post
Slough Or Marsh
Spring
Stream Gauge
Street Marker
Subsurface Utility Exploration Test Hole
Telephone Fiber Optics — T/F —
Telephone Junction Box
Telephone Pole
Television Cable Jct Box
Television Tower
Test Wells/Bore Holes
Traffic Signal
Trash Barrel
Tree Belt
Tree Coniferous
Tree Deciduous
Tree Stumps
Triangulation Station
Underground Electric Line — P —
Underground Gas Line — G —
Underground High Pressure Gas Line — HG —
Underground Sanitary Sewer — S —
Underground Storm Sewer = S =
Underground Tank
Underground Telephone Line — T —
Underground Television Cable — TV —
Underground Water Line — W —
Warning Sign One Post
Warning Sign Two Post
Water Fountain
Water Hydrant
Water Meter
Water Tower
Water Valve
Water Well
Weir Rock
Windmill
Wingwall
Witness Corner

State and National Line
County Line
Section Line
Quarter Line
Sixteenth Line
Property Line
Construction Line
R. O. W. Line
New R. O. W. Line
Cut and Fill Limits
Control of Access
New Control of Access
Proposed ROW
(After Property Disposal)

Drainage Arrow

Remove Concrete Pavement
Remove Concrete Driveway Pavement
Remove Asphalt Concrete Pavement
Remove Concrete Sidewalk
Remove Concrete Approach Pavement
Remove Concrete Median Pavement
Remove Concrete Curb
Remove Concrete Curb and Gutter
Remove Concrete Gutter

Detectable Warning
Pedestrian Push Button Pole
and 30" x 48" Clear Space
with 1.5% slope

REGISTERED PROFESSIONAL ENGINEER
REG. NO. 8019
JOHN RAYMOND VAN BEEK
SOUTH DAKOTA
8/17/16

07-29-16 P:\12-117\AutoCAD\PlanSheets\049F\Section_B\049F-TOPOG_SYMB & LEGEND.dwg

ROW LAYOUT

FOR BIDDING PURPOSES ONLY

STATE OF SOUTH DAKOTA	PROJECT	SHEET	TOTAL SHEETS
	NH0016(84)67	B36	B136

PLOTTING DATE: 07-29-16

REGISTERED PROFESSIONAL ENGINEER
REG. NO. 8019
JOHN RAYMOND VAN BEEK
SOUTH DAKOTA
8/17/16

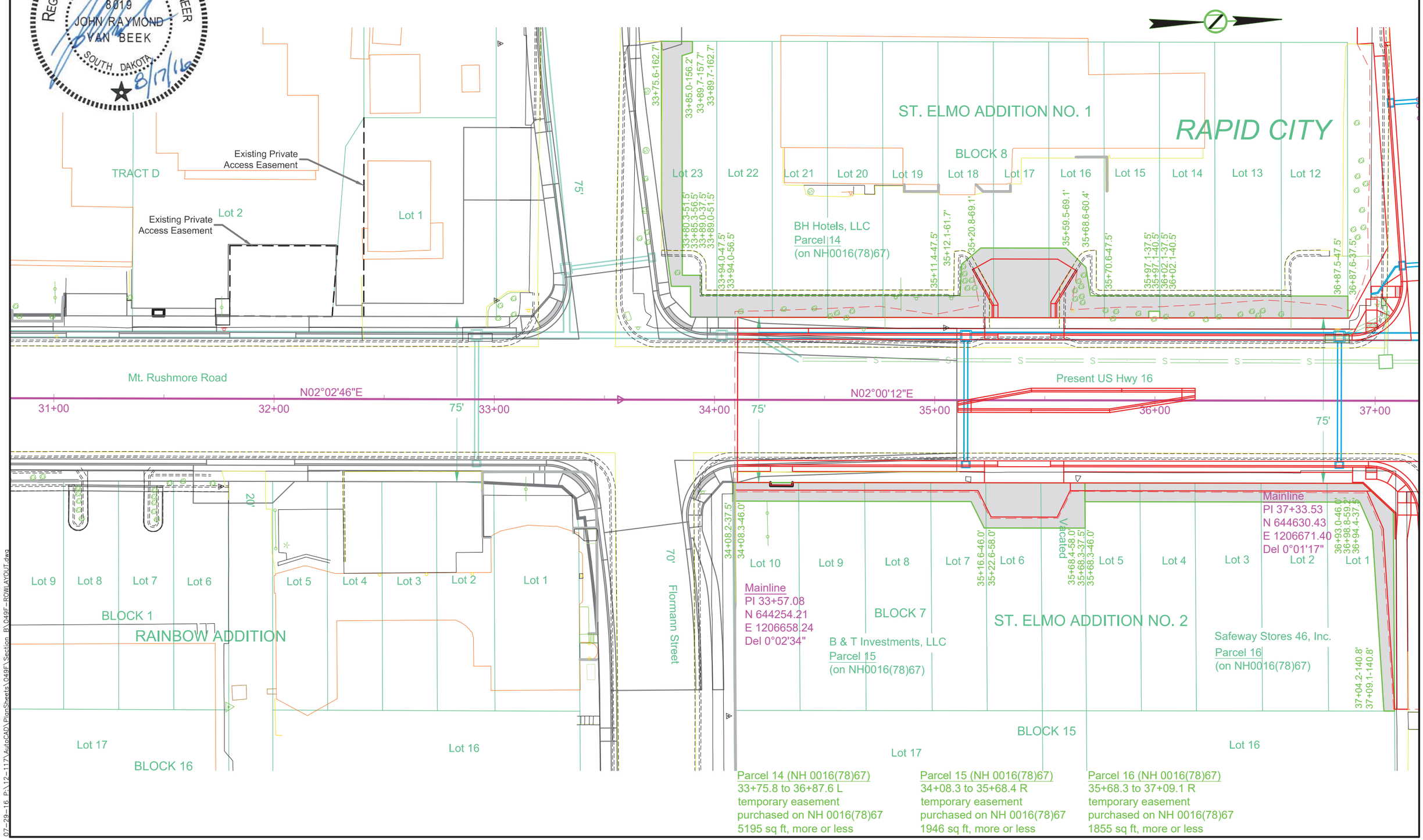

Parcel 14 (NH 0016(78)67)
33+75.8 to 36+87.6 L
temporary easement
purchased on NH 0016(78)67
5195 sq ft, more or less

Parcel 15 (NH 0016(78)67)
34+08.3 to 35+68.4 R
temporary easement
purchased on NH 0016(78)67
1946 sq ft, more or less

Parcel 16 (NH 0016(78)67)
35+68.3 to 37+09.1 R
temporary easement
purchased on NH 0016(78)67
1855 sq ft, more or less

07-29-16 P:\12-117\AutoCAD\PlanSheets\049F\Section B\049F-ROWLAYOUT.dwg

ROW LAYOUT

FOR BIDDING PURPOSES ONLY

STATE OF SOUTH DAKOTA	PROJECT	SHEET	TOTAL SHEETS
	NH0016(84)67	B37	B136

PLOTTING DATE: 07-29-16

REGISTERED PROFESSIONAL ENGINEER
REG. NO. 8019
JOHN RAYMOND VAN BEEK
SOUTH DAKOTA
8/17/16

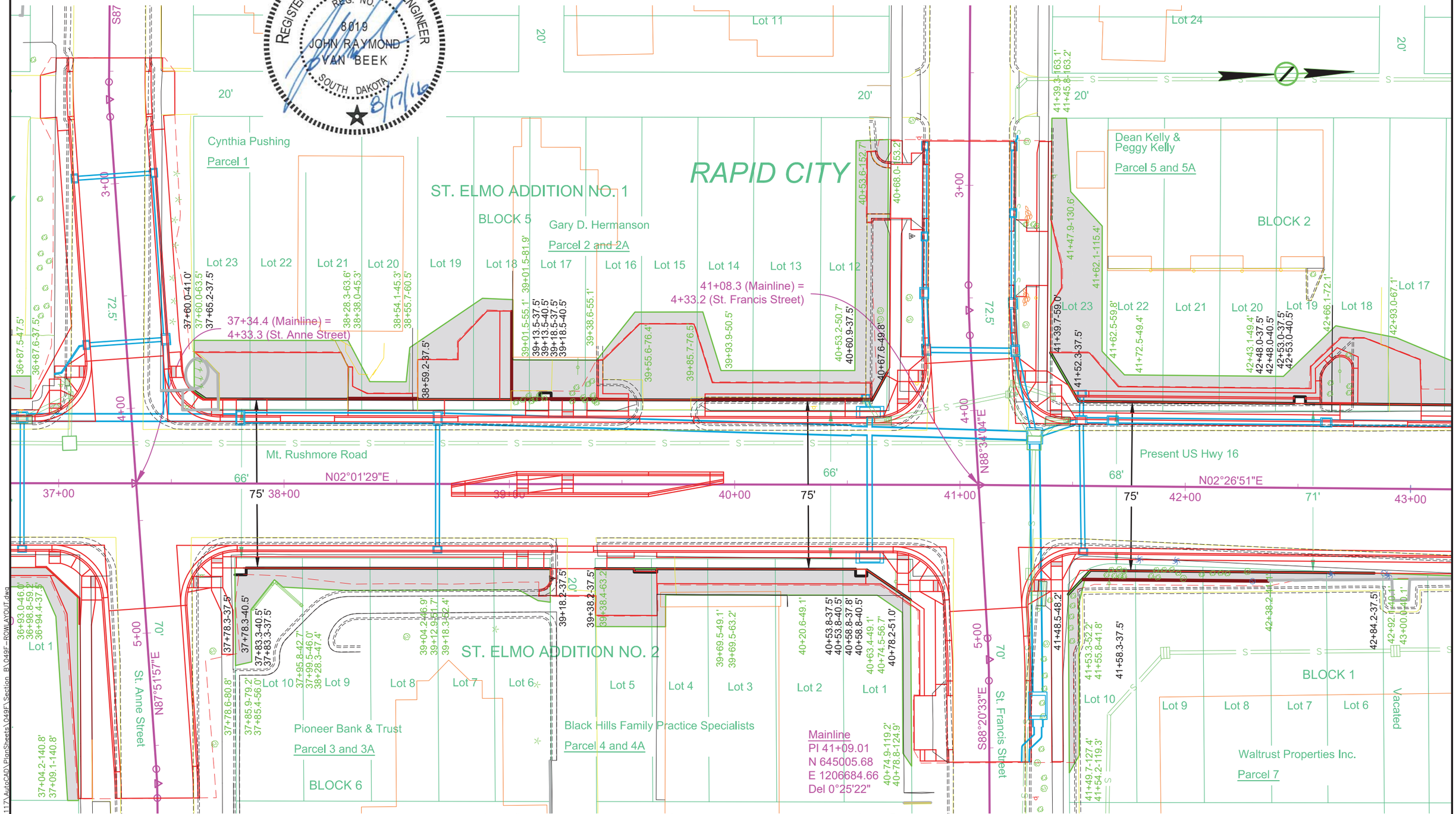

Parcel 1
37+60.0 to 38+59.2 L
Temporary easement for cut and drive
containing 2168 sq ft, more or less

Parcel 2
38+59.2 to 40+68.0 L
Temporary easement for cut and drive
containing 6526 sq ft, more or less

Parcel 3
37+78.3 to 39+18.3 R
Temporary easement for cut and drive
containing 1615 sq ft, more or less

Parcel 4
39+38.2 to 40+78.8 R
Temporary easement for cut and drive
containing 2224 sq ft, more or less

Parcel 5
41+39.3 to 43+39.7 L
Temporary easement for cut and drive
containing 5468 sq ft, more or less

Parcel 7
41+49.7 to 43+43.7 R
Temporary easement for cut and retaining wall
containing 941 sq ft, more or less

07-29-16 P:\12-117\AutoCAD\PlanSheets\049F\Section B\049F-ROWLAYOUT.dwg

ROW LAYOUT

FOR BIDDING PURPOSES ONLY

STATE OF SOUTH DAKOTA	PROJECT	SHEET	TOTAL SHEETS
	NH0016(84)67	B38	B136

PLOTTING DATE: 07-29-16

REGISTERED PROFESSIONAL ENGINEER
REG. NO. 8019
JOHN RAYMOND VAN BEEK
SOUTH DAKOTA
8/17/16

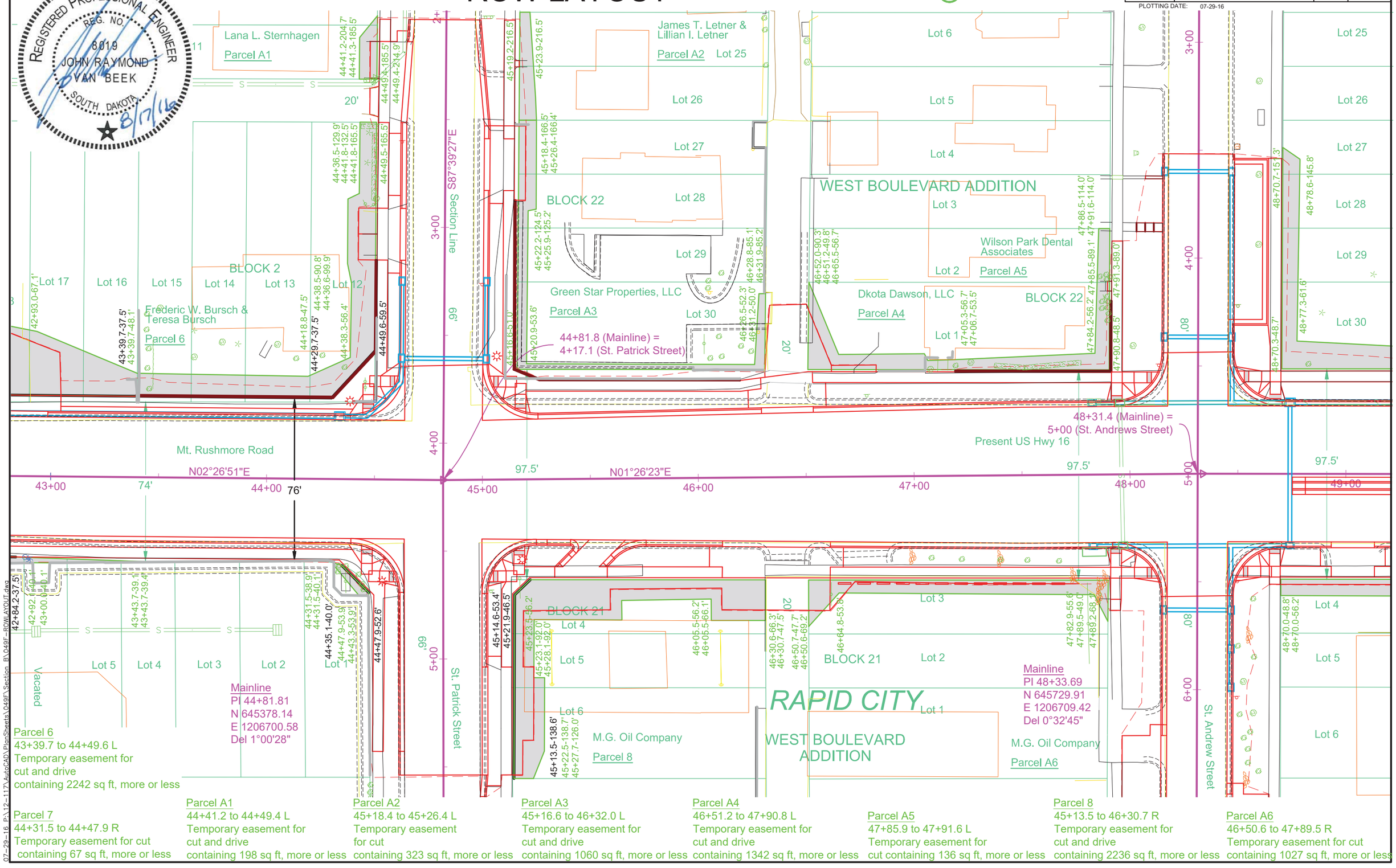

Parcel 6
43+39.7 to 44+49.6 L
Temporary easement for cut and drive
containing 2242 sq ft, more or less

Parcel 7
44+31.5 to 44+47.9 R
Temporary easement for cut
containing 67 sq ft, more or less

Parcel A1
44+41.2 to 44+49.4 L
Temporary easement for cut and drive
containing 198 sq ft, more or less

Parcel A2
45+18.4 to 45+26.4 L
Temporary easement for cut
containing 323 sq ft, more or less

Parcel A3
45+16.6 to 46+32.0 L
Temporary easement for cut and drive
containing 1060 sq ft, more or less

Parcel A4
46+51.2 to 47+90.8 L
Temporary easement for cut and drive
containing 1342 sq ft, more or less

Parcel A5
47+85.9 to 47+91.6 L
Temporary easement for cut containing 136 sq ft, more or less

Parcel 8
45+13.5 to 46+30.7 R
Temporary easement for cut and drive
containing 2236 sq ft, more or less

Parcel A6
46+50.6 to 47+89.5 R
Temporary easement for cut containing 1027 sq ft, more or less

07-29-16 P:\12-117\AutoCAD\PlanSheets\049F\Section B\049F-ROWLAYOUT.dwg

ROW LAYOUT

FOR BIDDING PURPOSES ONLY

STATE OF SOUTH DAKOTA	PROJECT	SHEET	TOTAL SHEETS
	NH0016(84)67	B39	B136

PLOTTING DATE: 07-29-16 REV 07-29-16 ARK

REGISTERED PROFESSIONAL ENGINEER
REG. NO. 8019
JOHN RAYMOND VAN BEEK
SOUTH DAKOTA
8/17/16

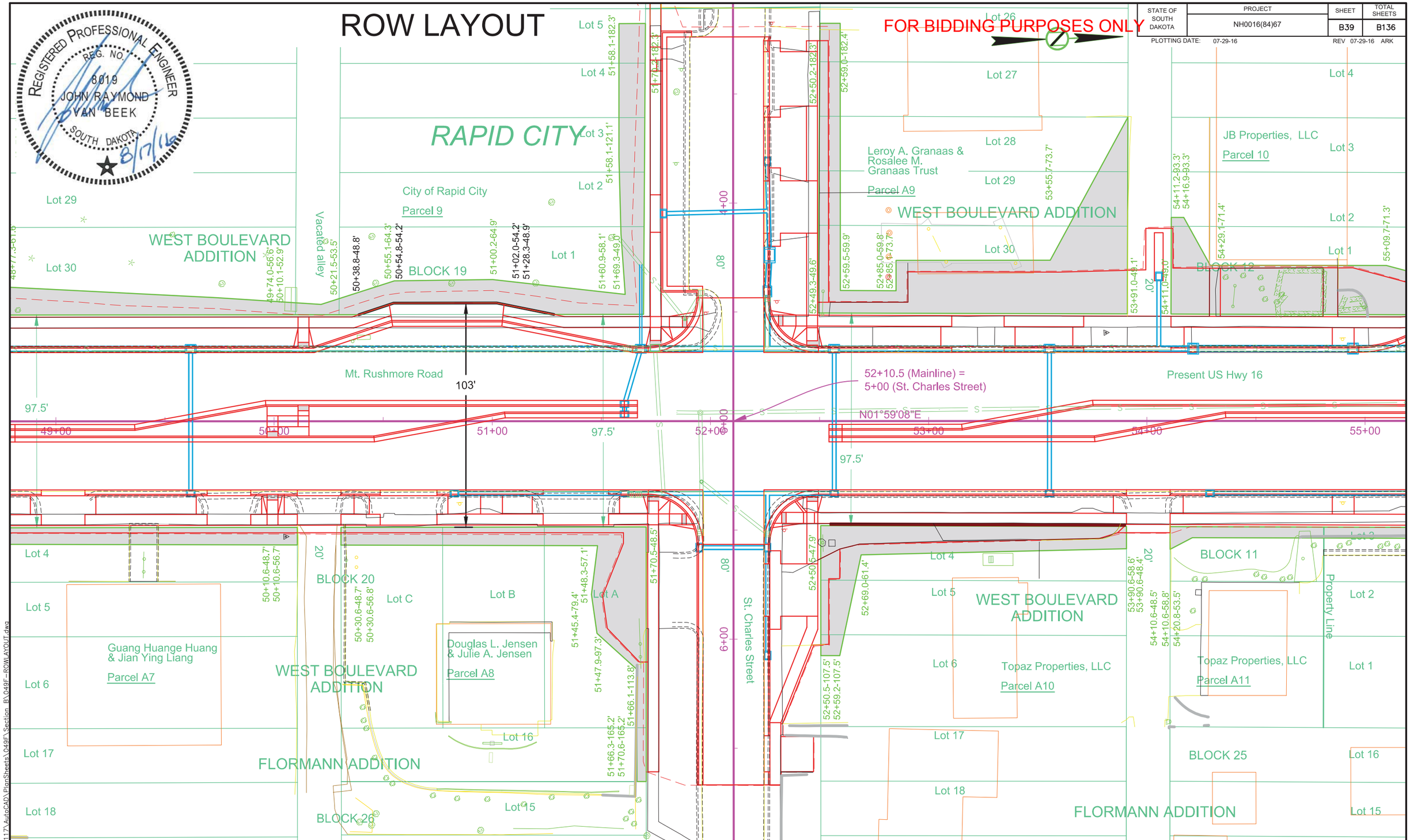

Parcel 9
48+70.3 to 51.70.2 L
Temporary easement for
cut containing 5303 sq ft, more or less

Parcel A7
48+67.1 to 50+10.8 R
Temporary easement for
cut and drive
containing 1099 sq ft, more or less

Parcel A8
50+30.6 to 51+70.6 R
Temporary easement for
cut and drive
containing 2569 sq ft, more or less

Parcel A9
52+49.3 to 53+91.1 L
Temporary easement for
cut and drive
containing 5303 sq ft, more or less

Parcel 10
54+11.0 to 55+51.4 L
Temporary easement for
cut and drive
containing 3222 sq ft, more or less

Parcel A10
52+50.5 to 53+90.6 R
Temporary easement for
cut and drive
containing 2307 sq ft, more or less

Parcel A11
54+10.6 to 55+51.6 R
Temporary easement for
cut containing
763 sq ft, more or less

07-29-16 P:\12-117\AutoCAD\PlanSheets\049F\Section B\049F-ROWLAYOUT.dwg

ROW LAYOUT

FOR BIDDING PURPOSES ONLY

STATE OF SOUTH DAKOTA	PROJECT	SHEET	TOTAL SHEETS
	NH0016(84)67	B40	B136

PLOTTING DATE: 08-17-16 REV 08-17-16 ARK

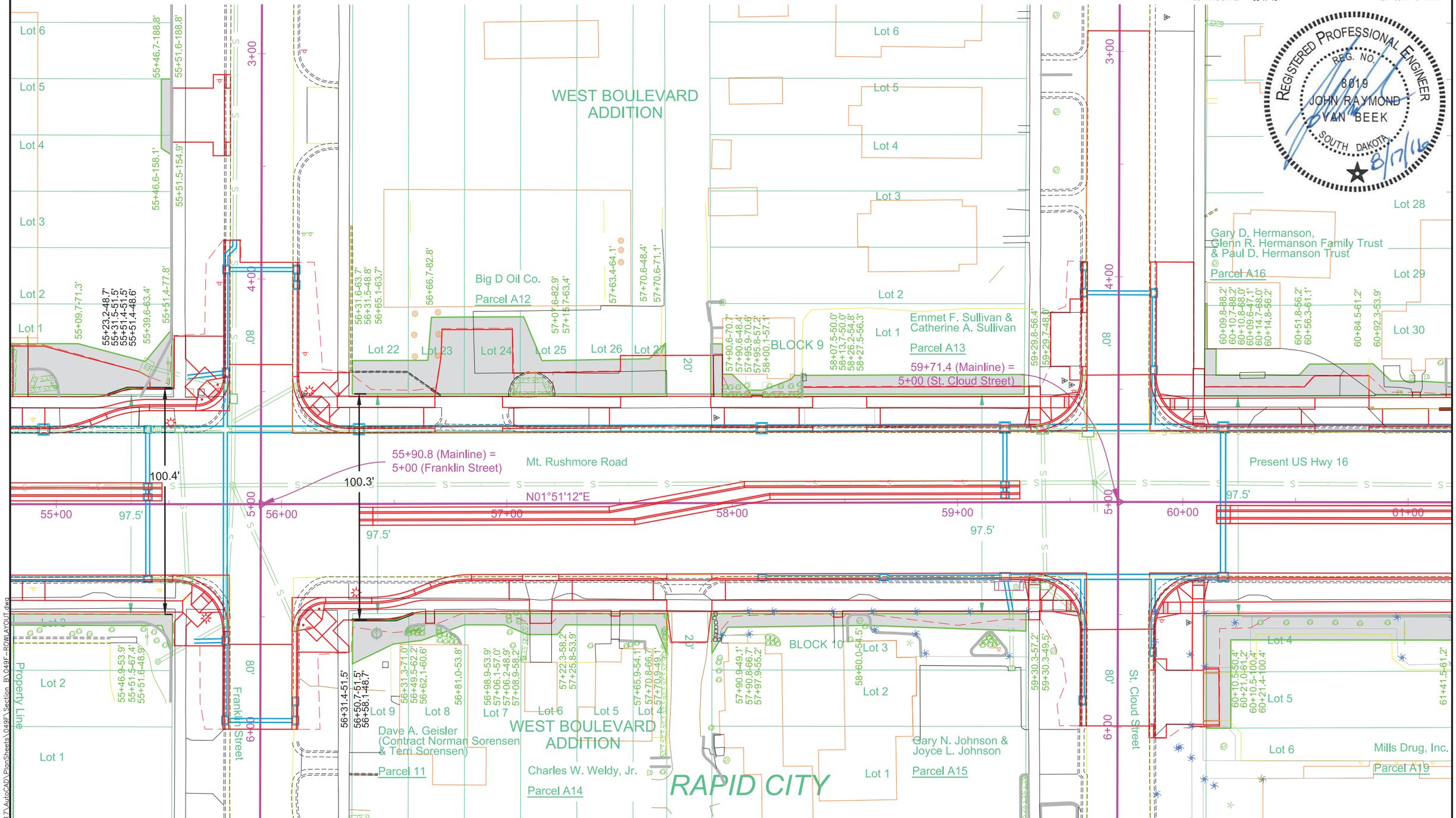

Parcel 10
55+46.6 to 55+51.6 L
Temporary easement for cut and drive
containing 158 sq ft, more or less

Parcel A12
56+31.5 to 57+70.6 L
Temporary easement for cut and drive
containing 3000 sq ft, more or less

Parcel A13
57+90.6 to 59+29.8 L
Temporary easement for cut and drive
containing 1139 sq ft, more or less

Parcel 11
56+31.4 to 57+06.2 R
Temporary easement for cut
containing 717 sq ft, more or less

Parcel A14
57+06.1 to 57+70.9 R
Temporary easement for cut and drive
containing 431 sq ft, more or less

Parcel A15
57+90.8 to 59+30.3 R
Temporary easement for cut
containing 881 sq ft, more or less

Parcel A16
60+09.6 to 61+51.1 L
Temporary easement for cut and drive
containing 1199 sq ft, more or less

Parcel A19
60+10.5 to 61+50.5 R
Temporary easement for cut and drive
containing 2038 sq ft, more or less

08-17-16 P:\12-117\AutoCAD\PlanSheets\049F\Section_B\049F-ROWLAYOUT.dwg

ROW LAYOUT

FOR BIDDING PURPOSES ONLY

STATE OF SOUTH DAKOTA	PROJECT	SHEET	TOTAL SHEETS
	NH0016(84)67	B41	B136

PLOTTING DATE: 07-29-16

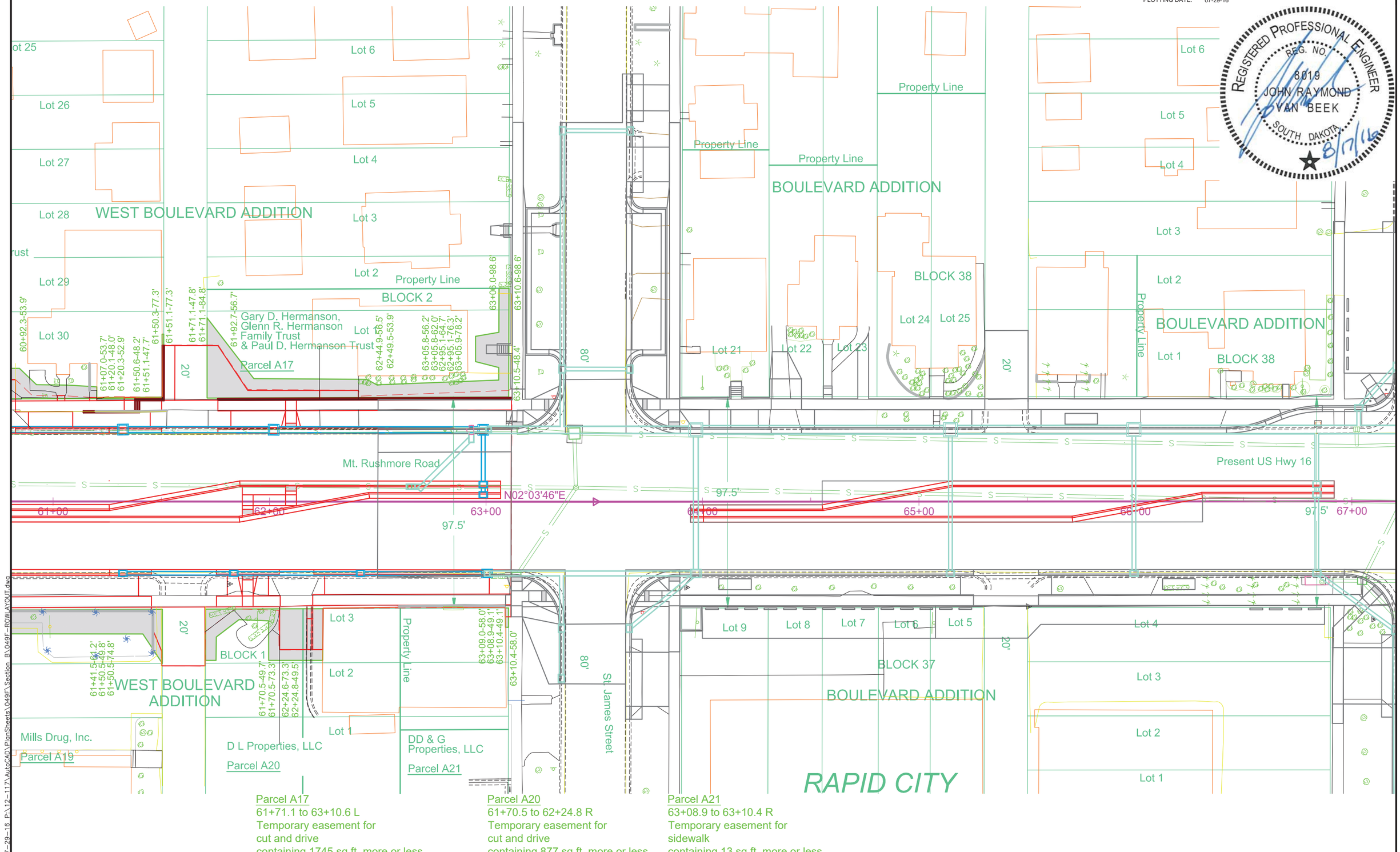

Parcel A17
61+71.1 to 63+10.6 L
Temporary easement for
cut and drive
containing 1745 sq ft, more or less

Parcel A20
61+70.5 to 62+24.8 R
Temporary easement for
cut and drive
containing 877 sq ft, more or less

Parcel A21
63+08.9 to 63+10.4 R
Temporary easement for
sidewalk
containing 13 sq ft, more or less

07-29-16 P:\12-117\AutoCAD\PlanSheets\049F\Section_B\049F-ROWLAYOUT.dwg

STATE OF SOUTH DAKOTA	PROJECT	SHEET	TOTAL SHEETS
	NH0016(84)67	B42	B136

PLOTTING DATE: 07-29-16 REV 07-29-16 ARK

FOR BIDDING PURPOSES ONLY

34+20-29' L to 34+39-18' L
Take Out 22'-30" RCP
(Incidental Work, Grading)

34+40-18' L to 37+05-18' L
Take Out 264'-30" RCP
(Incidental Work, Grading)

36+83-28' L to 37+05-39' L
Take Out 22'-15" RCP
(Incidental Work, Grading)

Take Out Drop Inlets
With Frame and Grate
at the Following Locations:
36+83-28'L

34+19.93 - 29.17' L to
35+14.14 - 29.17' L
Install 30" - 94' RCP
(Between Connect to
Existing & Drop Inlet)

35+14.14 - 29.17' L to
36+83.76 - 29.17' L
Install 36" - 166' RCP
(Between Drop Inlets)

35+14.14 - 29.17' R to
35+14.14 - 29.17' L
Install 18" - 56' RCP
(Between Drop Inlets)

36+83.76 - 29.17' L to
37+47.54 - 29.16' L
Install 36" - 62' RCP
(Between Drop Inlet
& RC Tee)

36+83.76 - 29.17' R to
36+83.76 - 29.17' L
Install 18" - 56' RCP
(Between Drop Inlets)

Install 2'x3' Type B Drop
Inlet with 6" Concrete Collar
and Type B Frame and Grate
at the Following Locations:

35+14.14-29.17' R
36+83.76-29.17' R

Install 4'x4' Type B Drop
Inlet With 6" Concrete Collar
And Type B Frame and Grate
At The Following Locations:

35+14.14-29.17' L
36+83.76-29.17' L

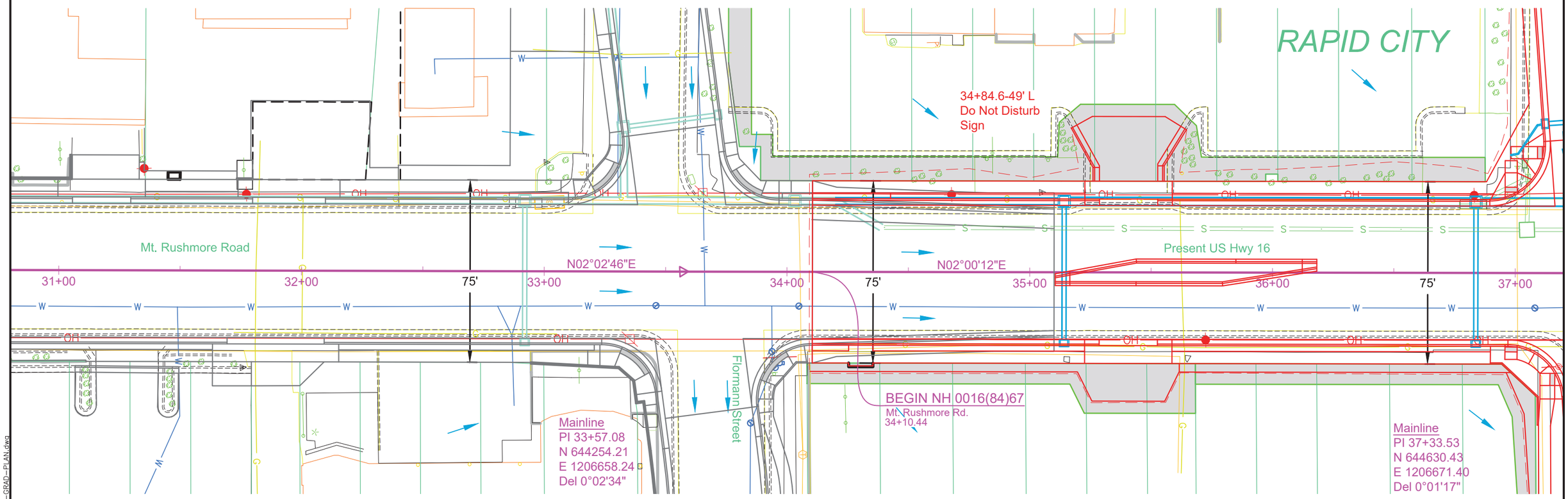

REGISTERED PROFESSIONAL ENGINEER
REG. NO.
8019
JOHN RAYMOND
VAN BEEK
SOUTH DAKOTA
8/17/16

07-29-16 P:\12-117\AutoCAD\PlanSheets\049F\Section B\049F-GRAD-PLAN.dwg

STATE OF SOUTH DAKOTA	PROJECT	SHEET	TOTAL SHEETS
	NH0016(84)67	B43	B136
PLOTTING DATE: 07-29-16			

FOR BIDDING PURPOSES ONLY

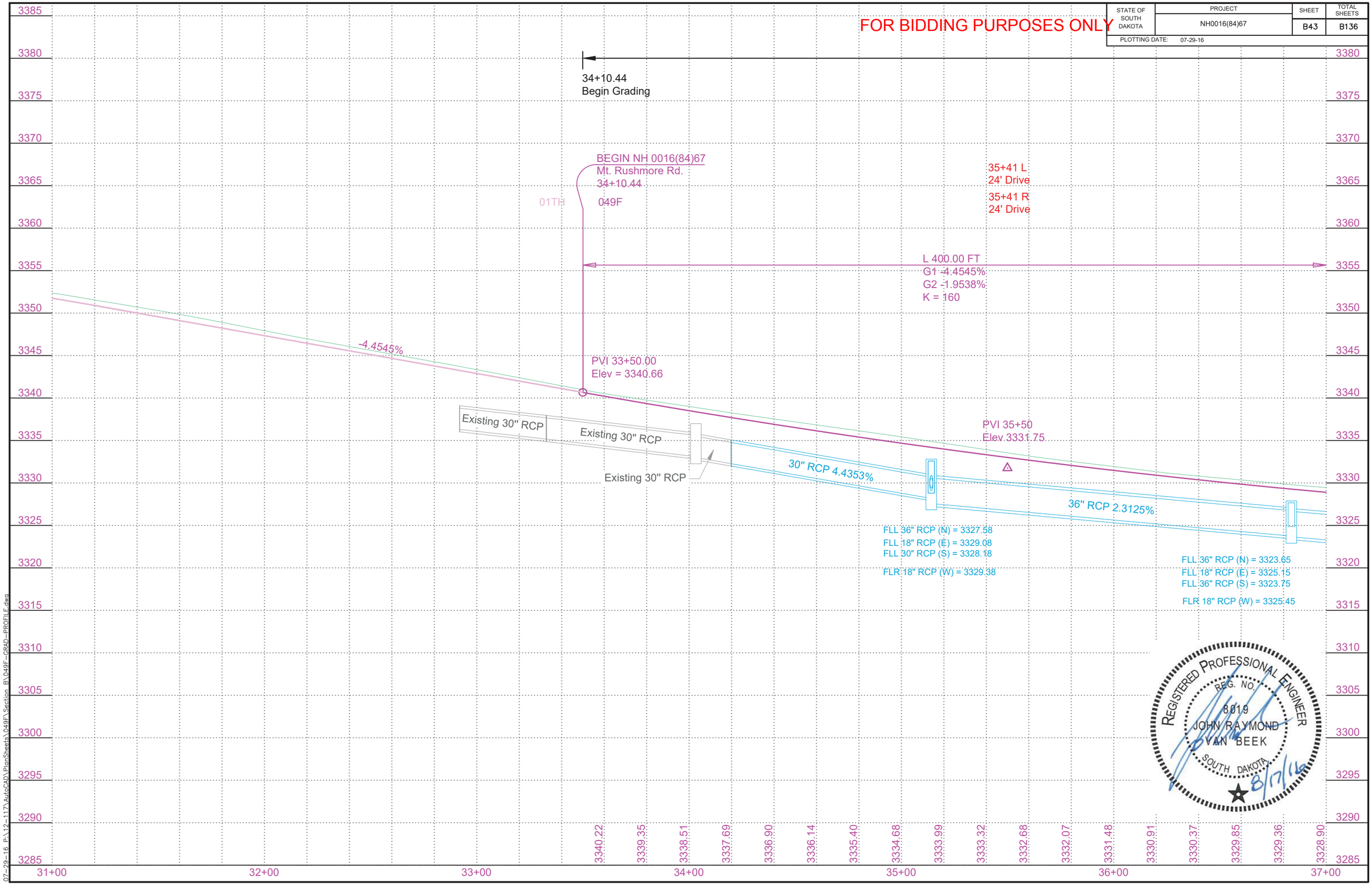

07-29-16 P:\12-117\AutoCAD\PlanSheets\049F\Section B\049F-GRAD-PROFILE.dwg

STATE OF SOUTH DAKOTA	PROJECT	SHEET	TOTAL SHEETS
	NH0016(84)67	B44	B136

PLOTTING DATE: 07-29-16 REV 07-29-16 ARK

FOR BIDDING PURPOSES ONLY

37+47.54 - 29.16' L to
37+80.53 - 29.17' L
Install 36" - 32' RCP
(Between RC Tee
& Drop Inlet)

37+80.53 - 29.17' L to
38+68.15 - 29.17' L
Install 42" - 86' ARCH
RCP
(Between Drop Inlets)

38+68.15 - 29.17' L to
40+51.81 - 24.08' L
Install 42" - 184' ARCH
RCP
(Between Drop Inlet
& RC Transition)

38+68.15 - 29.17' R to
38+68.15 - 29.17' L
Install 18" - 56' RCP
(Between Drop Inlets)

40+51.81 - 24.08' L to
40+59.81 - 23.85' L
Install 42" - 10' RCP
(Between RC Transition
& RC Cross)

40+58.20 - 38.50' L to
40+60.06 - 32.17' L
Install 18" - 4' RCP
(Between Drop Inlets)

40+59.81 - 23.85' L to
40+60.06 - 32.17' L
Install 24" - 8' RCP
(Between Drop Inlet
& RC Cross)

40+59.81 - 23.85' L to
41+32.90 - 22.00' L
Install 42" - 72' RCP
(Between RC Cross
& JBox)

40+60.06 - 32.17' R to
40+59.81 - 23.85' L
Install 24" - 56' RCP
(Between Drop Inlet
& RC Cross)

41+32.90 - 22.00' L to
41+35.45 - 97.74' R
Install 48" - 112' RCP
(Between JBox
& Drop Inlet)

41+32.90 - 22.00' L to
41+53.56 - 29.17' L
Install 24" - 18' RCP
(Between JBox
& Drop Inlet)

41+53.56 - 29.17' L to
41+53.73 - 40.90' L
Install 18" - 10' RCP
(Between Drop Inlets)

41+53.56 - 29.17' L to
41+54.96 - 29.17' R
Install 18" - 56' RCP
(Between Drop Inlets)

41+53.56 - 29.17' L to
41+67.56 - 29.17' L
Install 24" - 12' RCP
(Between Drop Inlets)

41+67.56 - 29.17' L to
42+62.32 - 29.17' L
Install 24" - 92' RCP
(Between Drop Inlets)

42+62.32 - 29.17' L to
44+33.66 - 29.17' L
Install 24" - 168' RCP
(Between Drop Inlets)

Install 3'x4' Type B Drop
Inlet With 6" Concrete Collar
And Type B Frame And Grate
At The Following Locations:

41+53.56-29.17' L
41+67.56-29.17' L
42+62.32-29.17' L

41+32.90-22.00' L
Install 6'x6' Junction Box
With Frame And Grate

Install 5.5'x3' Type B Drop
Inlet With 6" Concrete Collar
And Type B Frame and Grate
At The Following Locations:

37+80.53-29.17' L
38+68.15-29.17' L

Install 4'X11' Type S Inlet
Base and Type S Precast Lid
At The Following Locations:

40+60.06-32.17' L
40+60.06-32.17' R

Install Pipe Fittings
at the Following Locations:

37+47.54-29.16' L
40+51.81-24.08' L
40+59.81-23.85' L

36"x24" RC Tee
42" ARCH to 42" RCP Transition
42"x24" RCP Cross

Install 2'x3' Type B Drop
Inlet with 6" Concrete Collar
and Type B Frame and Grate
at the Following Locations:

38+68.15-29.17' R
40+58.20-38.50' L
41+53.73-40.90' L
41+54.96-29.17' R

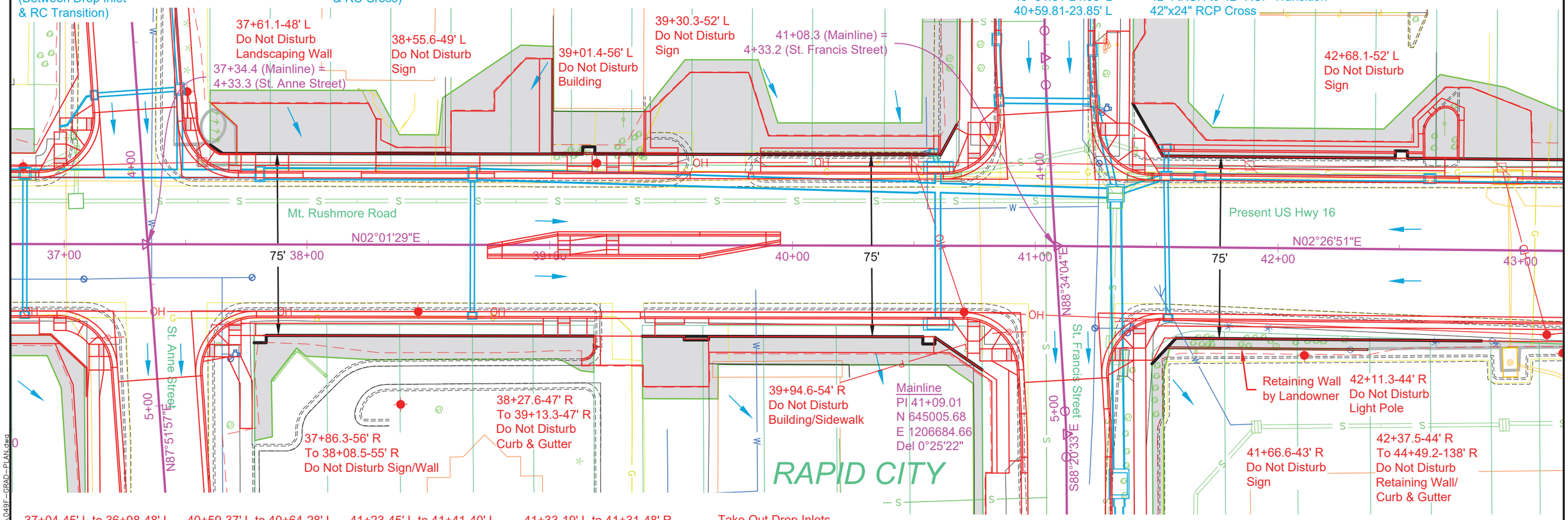

37+04-45' L to 36+98-48' L
Take Out 6'-6" PVC
(Incidental Work, Grading)

37+04-45' L to 37+05-39' L
Take Out 4'-15" PVC
(Incidental Work, Grading)

37+05-18' L to 41+33-19' L
Take Out 424'-36" RCP
(Incidental Work, Grading)

37+05-39' L to 37+05-18' L
Take Out 18'-15" PVC
(Incidental Work, Grading)

40+59-37' L to 40+64-28' L
Take Out 8'-15" RCP
(Incidental Work, Grading)

40+64-28' L to 41+21-40' L
Take Out 54'-15" RCP
(Incidental Work, Grading)

41+21-40' L to 41+23-45' L
Take Out 2'-15" PVC
(Incidental Work, Grading)

41+21-40' L to 41+33-19' L
Take Out 20'-24" RCP
(Incidental Work, Grading)

41+23-45' L to 41+41-40' L
Take Out 18'-15" RCP
(Incidental Work, Grading)

41+25-40' L to 41+21-40' L
Take Out 4'-4" PVC
(Incidental Work, Grading)

41+31-48' R to 41+29-193' R
Take Out 146'-36" RCP
(Incidental Work, Grading)

41+31-48' R to 41+37-48' R
Take Out 6'-18" PVC
(Incidental Work, Grading)

41+33-19' L to 41+31-48' R
Take Out 66'-36" RCP
(Incidental Work, Grading)

41+33-19' L to 41+43-29' L
Take Out 10'-18" RCP
(Incidental Work, Grading)

Take Out Drop Inlets
With Frame and Grate
at the Following Locations:

37+04-45'L
37+05-39'L
40+58-37'L
40+64-28'L
41+21-40'L
41+23-45'L
41+31-39'R
41+37-48'R
41+41-40'L
41+43-29'L

Take Out Junction Box
With Frame and Grate
at the Following Locations:

37+05-18'L
41+33-19'L

REGISTERED PROFESSIONAL ENGINEER
REG. NO.
8019
JOHN RAYMOND
VAN BEEK
SOUTH DAKOTA
8/17/16

07-29-16 P:\12-117\AutoCAD\PlanSheets\049F\Section B\049F-GRAD-PLAN.dwg

STATE OF SOUTH DAKOTA	PROJECT	SHEET	TOTAL SHEETS
	NH0016(84)67	B45	B136
	PLOTTING DATE: 07-29-16		

FOR BIDDING PURPOSES ONLY

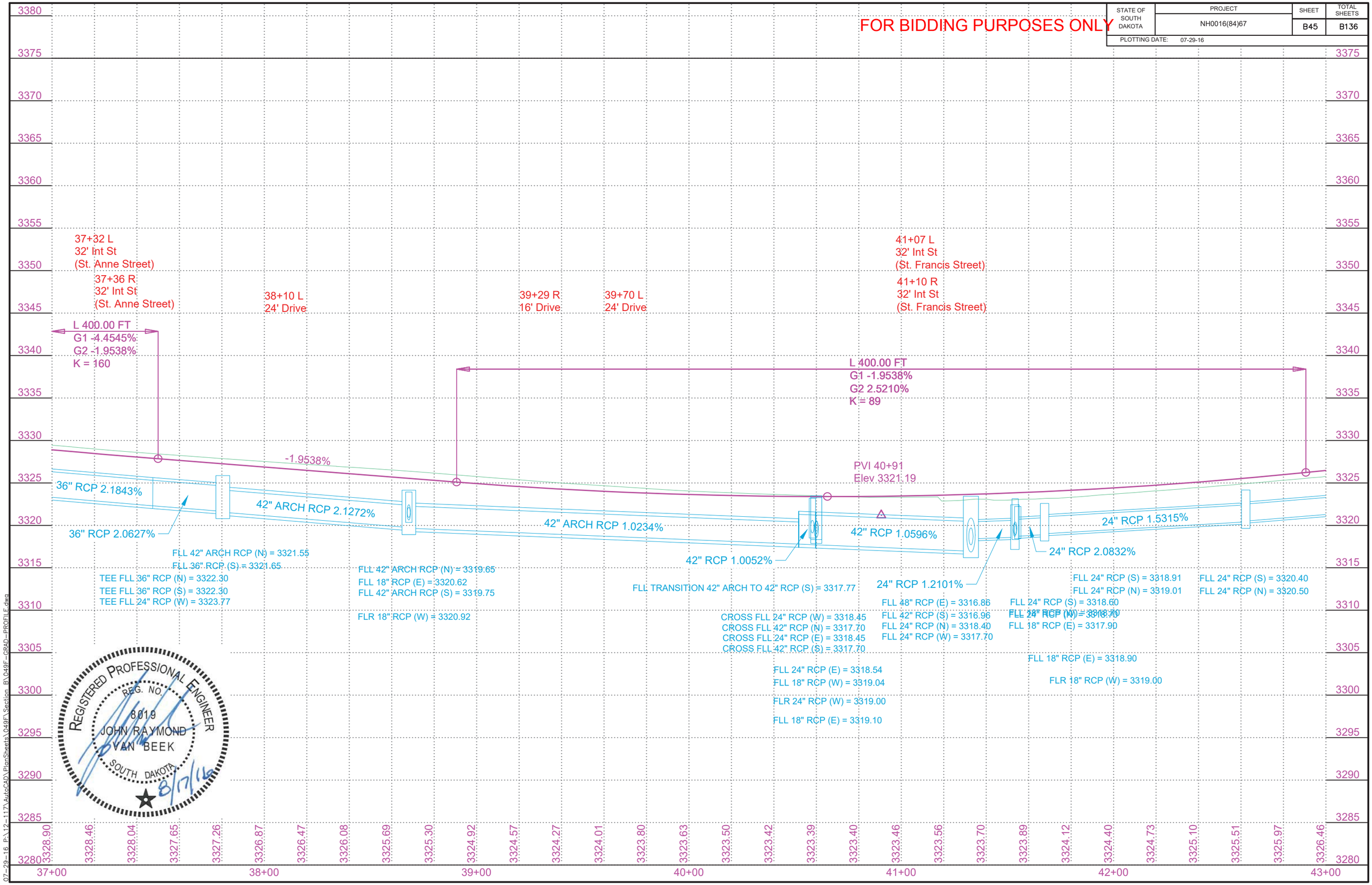

REGISTERED PROFESSIONAL ENGINEER
REG. NO.
8019
JOHN RAYMOND
VAN BEEK
SOUTH DAKOTA
8/17/16

07-29-16 P:\12-117\AutoCAD\PlanSheets\049F\Section B\049F-GRAD-PROFILE.dwg

STATE OF SOUTH DAKOTA	PROJECT	SHEET	TOTAL SHEETS
	NH0016(84)67	B46	B136

PLOTTING DATE: 07-29-16

FOR BIDDING PURPOSES ONLY

46+61.2 - 54' R Take Out Concrete Sign Footing

Take Out Junction Box With Frame and Grate at the Following Locations:
47+96-33'L
47+97-33'R

Take Out Drop Inlets With Frame and Grate at the Following Locations:
47+82-34'L
47+83-36'R
47+85-34'L

47+83-36' R to 47+97-33' R
Take Out 8'-10" PVC
(Incidental Work, Grading)

47+85-34' L to 47+96-33' L
Take Out 8'-10" PVC
(Incidental Work, Grading)

47+96-33' L to 51+61-33' L
Take Out 364'-12" RCP
(Incidental Work, Grading)

47+97-33' R to 47+96-33' L
Take Out 66'-12" RCP
(Incidental Work, Grading)

47+82.78 - 33.17' L to 48+47.29 - 33.04' L
Install 18" - 64' RCP
(Between Drop Inlet & RC Tee)

47+82.78 - 33.17' R to 48+46.78 - 33.31' R
Install 18" - 64' RCP
(Between Drop Inlet & RC Tee)

48+46.78 - 33.31' R to 48+74.12 - 33.17' R
Install 18" - 26' RCP
(Between RC Tee & Drop Inlet)

48+47.29 - 33.04' L to 48+74.12 - 33.17' L
Install 18" - 26' RCP
(Between RC Tee & Drop Inlet)

48+74.12 - 33.17' L to 49+61.78 - 33.17' L
Install 24" - 84' RCP
(Between Drop Inlets)

48+74.12 - 33.17' R to 48+74.12 - 33.17' L
Install 18" - 64' RCP
(Between Drop Inlets)

Install 2'x3' Type B Drop Inlet with 6" Concrete Collar and Type B Frame and Grate at the Following Locations:

47+82.78-33.17' R
47+82.78-33.17' L
48+74.12-33.17' R

Install Pipe Fittings at the Following Locations:

48+46.78-33.31' R 18"x18" RC Tee
48+47.29-33.04' L 18"x18" RC Tee

Install 3'x4' Type B Drop Inlet With 6" Concrete Collar And Type B Frame And Grate At The Following Locations:

44+33.66-29.17' L
48+74.12-33.17' L

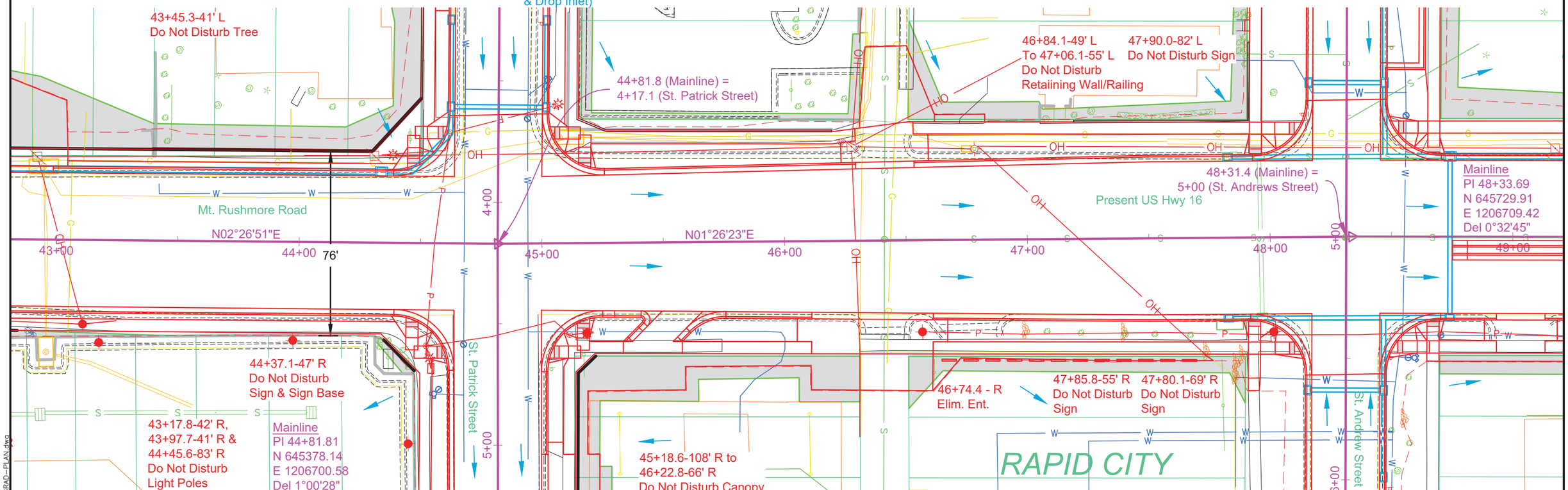

REGISTERED PROFESSIONAL ENGINEER
REG. NO. 8019
JOHN RAYMOND VAN BEEK
SOUTH DAKOTA
8/17/16

07-29-16 P:\12-117\AutoCAD\PlanSheets\049F\Section_B\049F-GRAD-PLAN.dwg

STATE OF SOUTH DAKOTA	PROJECT	SHEET	TOTAL SHEETS
	NH0016(84)67	B47	B136
	PLOTTING DATE: 07-29-16		

FOR BIDDING PURPOSES ONLY

Exc	2660	Emb	943	
Undercut	10252	50%	472	1415
Contractor Furnished Borrow	805	Undercut	10252	
	13717	20%	2050	12300
		Total		13717

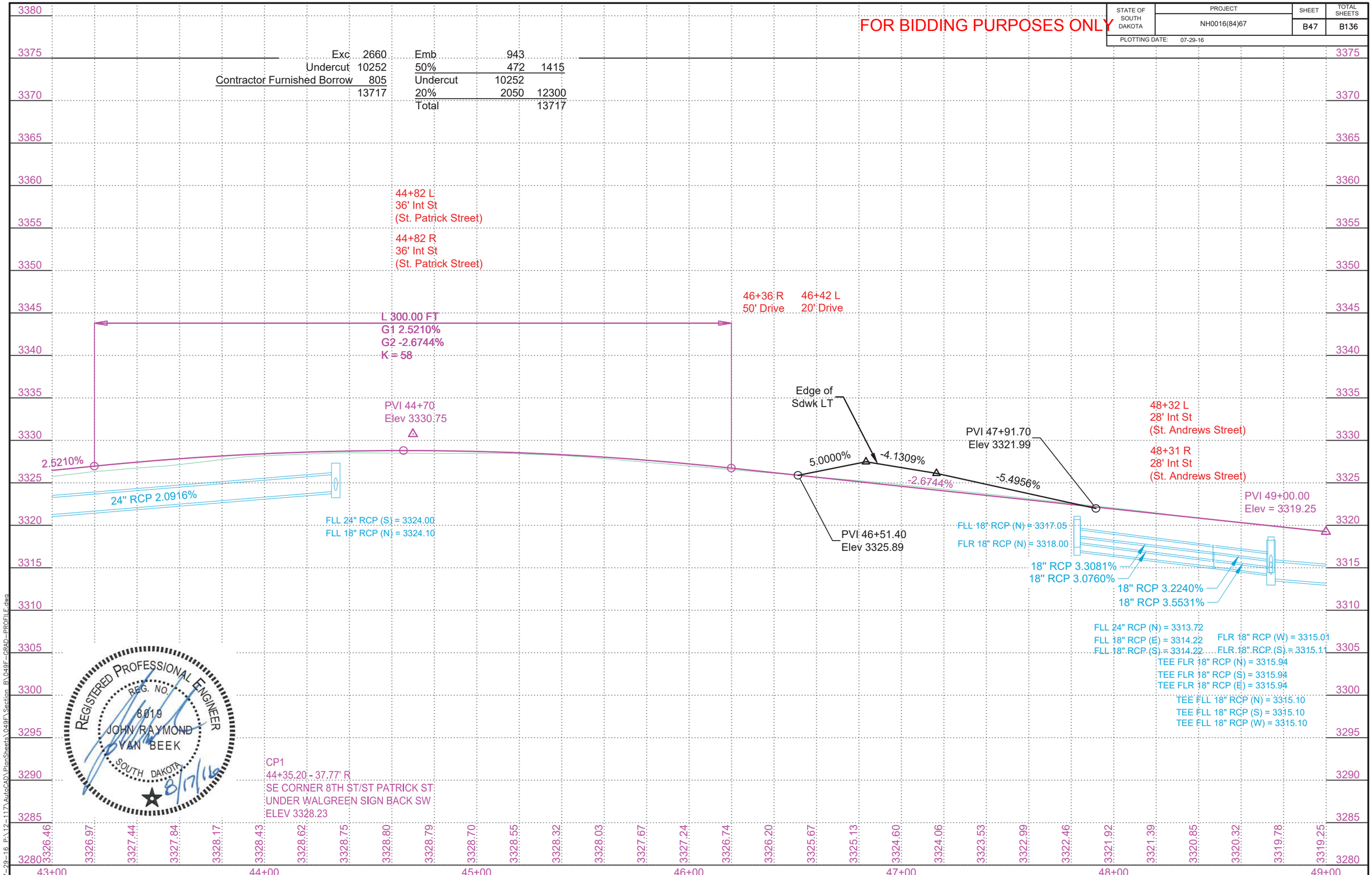

REGISTERED PROFESSIONAL ENGINEER
REG. NO. 8019
JOHN RAYMOND VAN BEEK
SOUTH DAKOTA
8/17/16

CP1
44+35.20 - 37.77' R
SE CORNER 8TH ST/ST PATRICK ST
UNDER WALGREEN SIGN BACK SW
ELEV 3328.23

07-29-16 P:\12-117\AutoCAD\PlanSheets\049F\Section B\049F-GRAD-PROFILE.dwg

STATE OF SOUTH DAKOTA	PROJECT	SHEET	TOTAL SHEETS
	NH0016(84)67	B48	B136

PLOTTING DATE: 08-17-16 REV 08-17-16 ARK

FOR BIDDING PURPOSES ONLY

49+61.78 - 33.17' L to 51+68.06 - 33.17' L
Install 24" - 204' RCP
(Between Drop Inlets)

49+61.78 - 33.17' R to 49+61.78 - 33.17' L
Install 18" - 64' RCP
(Between Drop Inlets)

50+85.66 - 33.17' R to 51+60.60 - 33.17' R
Install 18" - 72' RCP
(Between Drop Inlets)

51+60.60 - 3.17' L to 51+60.60 - 7.83' L
Install 18" - 4' RCP
(Between Drop Inlets)

51+60.60 - 7.83' L to 51+68.06 - 33.17' L
Install 18" - 24' RCP
(Between Drop Inlets)

51+60.60 - 33.17' R to 52+26.16 - 33.17' R
Install 18" - 66' RCP
(Between Drop Inlet & RC Tee)

51+68.06 - 33.17' L to 51+68.06 - 71.69' L
Install 12" - 38' PVC
(Between Connect to Existing & Drop Inlet)

51+68.06 - 33.17' L to 52+26.11 - 33.17' L
Install 24" - 58' RCP
(Between Drop Inlet & RC Tee)

52+26.11 - 33.17' L to 52+56.72 - 33.17' L
Install 24" - 30' RCP
(Between RC Tee & Drop Inlet)

52+26.16 - 33.17' R to 52+56.72 - 33.17' R
Install 18" - 30' RCP
(Between RCP Tee & Drop Inlet)

52+56.72 - 33.17' L to 53+55.35 - 33.18' L
Install 24" - 96' RCP
(Between Drop Inlets)

52+56.72 - 33.17' R to 52+56.72 - 33.17' L
Install 18" - 64' RCP
(Between Drop Inlets)

53+55.35 - 33.17' R to 53+55.35 - 33.18' L
Install 18" - 64' RCP
(Between Drop Inlets)

53+55.35 - 33.18' L to 54+05.50 - 33.17' L
Install 30" - 50' RCP
RCP

54+05.50 - 33.17' L to 54+05.50 - 66.30' L
Install 18" - 32' RCP
(Between Drop and RC Tee)

54+05.50 - 33.17' L to 54+21.21 - 33.17' L
Install 30" - 14' RCP
RCP

54+21.21 - 33.17' L to 54+94.42 - 33.17' L
Install 30" - 70' RCP
(Between Drop Inlets)

54+28.90 - 33.17' R to 55+40.61 - 33.17' R
Install 18" - 110' RCP
(Between Drop Inlets)

54+94.42 - 33.17' L to 55+40.61 - 33.17' L
Install 30" - 46' RCP
(Between Drop Inlet & RCP Tee)

Install 2'x3' Type B Drop Inlet with 6" Concrete Collar and Type B Frame and Grate at the Following Locations:
49+61.78-33.17' R
50+82.66-33.17' R
51+60.60-3.17' L
51+60.60-7.83' L
51+60.60-33.17' R
52+56.72-33.17' R
53+55.35-33.17' R
54+28.90-33.17' R

Install 2'x4' Type B Drop Inlet With 6" Concrete Collar And Type B Frame And Grate At The Following Locations:
49+61.78-33.17' L
51+68.06-33.17' L
52+56.72-33.17' L
53+55.35-33.18' L

Install 4'x4' Type B Drop Inlet With 6" Concrete Collar And Type B Frame and Grate At The Following Locations:
54+21.21-33.17' L
54+94.42-33.17' L

Install Pipe Fittings at the Following Locations:
52+26.11-33.17' L 24"x24" RC Tee
52+26.16-33.17' R 18"x18" RC Tee
54+05.50-33.17' L 24"x18" RC Tee

54+05.50-66.30' L
Install 2'x3' Type B Drop Inlet With 6" Concrete Collar And Type E Frame And Grate

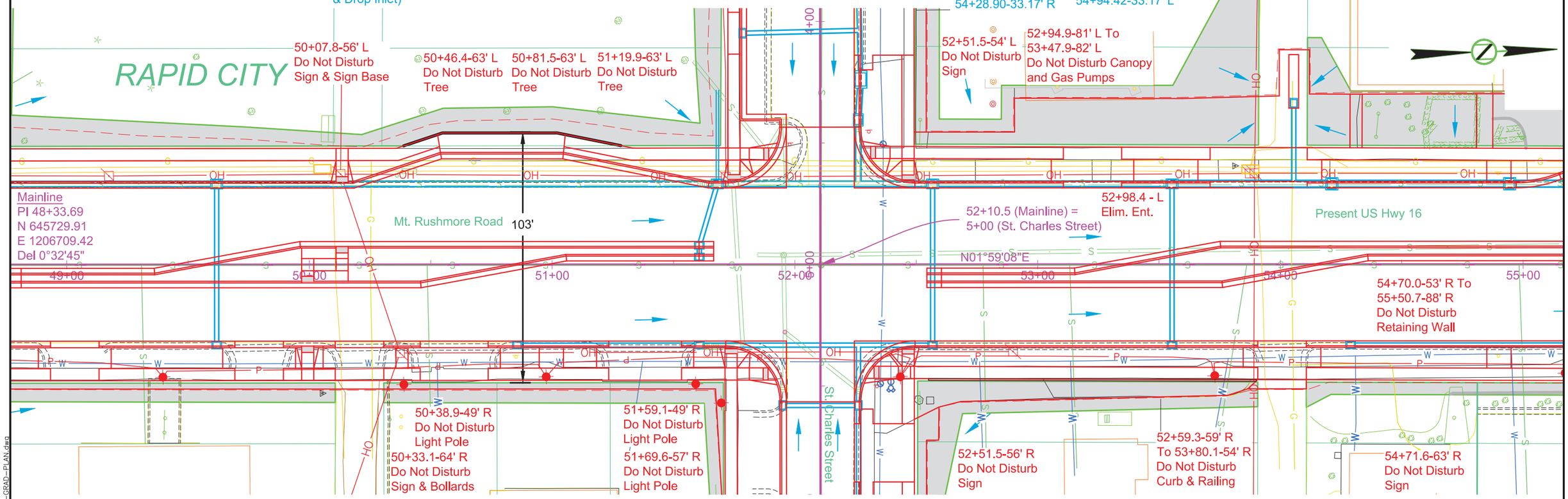

51+65-33' L to 51+75-34' L
Take Out 8'-10" PVC
(Incidental Work, Grading)

51+67-34' R to 51+79-33' R
Take Out 12'-10" RCP
(Incidental Work, Grading)

51+75-34' L to 52+26-34' L
Take Out 50'-12" RCP
(Incidental Work, Grading)

51+79-33' R to 51+75-34' L
Take Out 68'-12" RCP
(Incidental Work, Grading)

51+95-4' L to 51+84-4' L
Take Out 10'-12" RCP
(Incidental Work, Grading)

51+95-4' L to 55+78-8' L
Take Out 380'-12" RCP
(Incidental Work, Grading)

51+96-28' R to 51+95-4' L
Take Out 30'-12" RCP
(Incidental Work, Grading)

51+96-51' R to 51+96-28' R
Take Out 22'-12" RCP
(Incidental Work, Grading)

51+96-59' L to 51+88-46' L
Take Out 14'-8" PVC
(Incidental Work, Grading)

51+96-59' L to 51+96-33' L
Take Out 26'-8" PVC
(Incidental Work, Grading)

52+26-34' L to 55+42-34' L
Take Out 316'-12" RCP
(Incidental Work, Grading)

52+26-52' R to 51+96-28' R
Take Out 38'-12" RCP
(Incidental Work, Grading)

52+26-57' L to 52+26-34' L
Take Out 22'-12" RCP
(Incidental Work, Grading)

Take Out Drop Inlets
With Frame and Grate
at the Following Locations:
51+61-33'L
51+63-34'R
51+65-34'L
51+67-34'R
51+95-51'R
51+96-59'L
52+26-52'R
52+26-56'L

Take Out Junction Box
With Frame and Grate
at the Following Locations:
51+75-34'L

Take Out Manholes
at the Following Locations:
51+95-4'L

Take Out Concrete Sign Footing
at the Following Location:
52+56-56'R

REGISTERED PROFESSIONAL ENGINEER
REG. NO. 8019
JOHN RAYMOND VAN BEEK
SOUTH DAKOTA
8/17/16

08-17-16 P:\12-117\AutoCAD\PlanSheets\049F\Section B\049F-GRAD-PLAN.dwg

STATE OF SOUTH DAKOTA	PROJECT	SHEET	TOTAL SHEETS
	NH0016(84)67	B49	B136
PLOTTING DATE: 07-29-16		REV 07-29-16 ARK	

FOR BIDDING PURPOSES ONLY

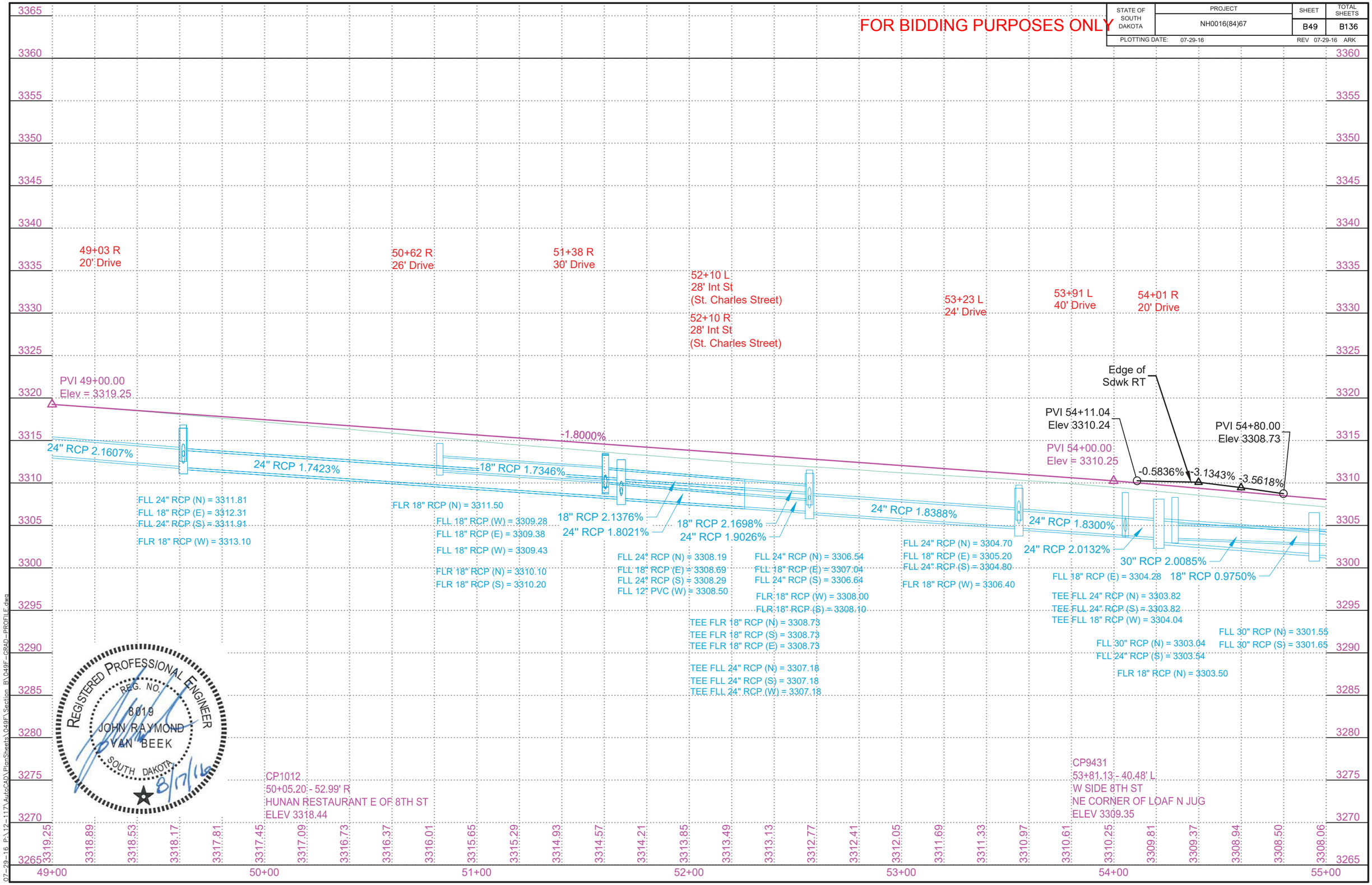

07-29-16 P:\12-117\AutoCAD\PlanSheets\049F\Section B\049F-GRAD-PROFILE.dwg

STATE OF SOUTH DAKOTA	PROJECT	SHEET	TOTAL SHEETS
	NH0016(84)67	B50	B136

PLOTTING DATE: 08-17-16 REV 08-17-16 ARK

FOR BIDDING PURPOSES ONLY

55+40.57 - 33.20' L to 55+75.11 - 33.21' L
Install 30" - 36' RCP (Between RC Tee & RC Cross)

55+40.61 - 3.18' L to 55+40.61 - 7.83' L
Install 18" - 4' RCP (Between Drop Inlets)

55+40.61 - 7.83' L to 55+40.57 - 33.20' L
Install 18" - 26' RCP (Between Drop Inlet & RC Tee)

55+40.61 - 33.17' R to 55+40.61 - 3.18' L
Install 18" - 36' RCP (Between Drop Inlets)

55+75.11 - 33.21' L to 56+34.48 - 33.17' L
Install 30" - 58' RCP (Between RC Cross & Drop Inlet)

56+34.48 - 33.17' L to 58+13.23 - 33.17' L
Install 30" - 176' RCP (Between Drop Inlets)

58+13.23 - 33.17' L to 59+21.12 - 33.17' L
Install 30" - 104' RCP (Between Drop Inlets)

58+13.23 - 33.17' R to 58+67.18 - 33.17' R
Install 18" - 52' RCP (Between Drop Inlets)

58+67.18 - 33.17' R to 59+21.12 - 33.17' R
Install 18" - 52' RCP (Between Drop Inlets)

59+21.12 - 3.17' L to 59+21.12 - 7.83' L
Install 18" - 4' RCP (Between Drop Inlets)

59+21.12 - 7.83' L to 59+21.12 - 33.17' L
Install 18" - 24' RCP (Between Drop Inlets)

59+21.12 - 33.17' L to 59+86.84 - 33.11' L
Install 30" - 64' RCP (Between Drop Inlet & RC Tee)

59+21.12 - 33.17' R to 59+23.77 - 48.89' R
Install 18" - 16' RCP (Between Connect to Existing & Drop Inlet)

59+21.12 - 33.17' R to 59+55.49 - 33.23' R
Install 24" - 34' RCP (Between Drop Inlet & RC Tee)

59+55.49 - 33.23' R to 59+86.96 - 33.23' R
Install 24" - 32' RCP (Between RC Tees)

59+86.84 - 33.11' L to 60+17.90 - 33.17' L
Install 30" - 30' RCP (Between RC Tee & Drop Inlet)

59+86.96 - 33.23' R to 60+17.90 - 33.17' R
Install 24" - 30' RCP (Between RC Tee & Drop Inlet)

60+17.90 - 33.17' L to 61+32.25 - 33.18' L
Install 30" - 112' RCP (Between Drop Inlets)

60+17.90 - 33.17' R to 60+17.90 - 33.17' L
Install 24" - 64' RCP (Between Drop Inlets)

Install 3'x4' Type B Drop Inlet With 6" Concrete Collar And Type B Frame And Grate At The Following Locations:
59+21.12-33.17' R
60+17.90-33.17' R

Install 2'x3' Type B Drop Inlet With 6" Concrete Collar And Type B Frame and Grate At The Following Locations:
55+40.61-3.18' L
55+40.61-7.83' L
55+40.61-33.17' R
58+13.23-33.17' R
58+67.18-33.17' R
59+21.12-3.17' L
59+21.12-7.83' L

Install Pipe Fittings at the Following Locations:
55+40.57-33.20' L 30"x18" RC Tee
55+75.11-33.21' L 30"x18" RC Cross
59+55.49-33.23' R 24"x18" RC Tee
59+86.84-33.11' L 30"x18" RC Tee
59+86.96-33.23' R 24"x18" RC Tee

Install 4'x4' Type B Drop Inlet With 6" Concrete Collar And Type B Frame and Grate At The Following Locations:
56+34.48-33.17' L
58+13.23-33.17' L
59+21.12-33.17' L
60+17.90-33.17' L

REGISTERED PROFESSIONAL ENGINEER
REG. NO. 8019
JOHN RAYMOND VAN BEEK
SOUTH DAKOTA
8/17/16

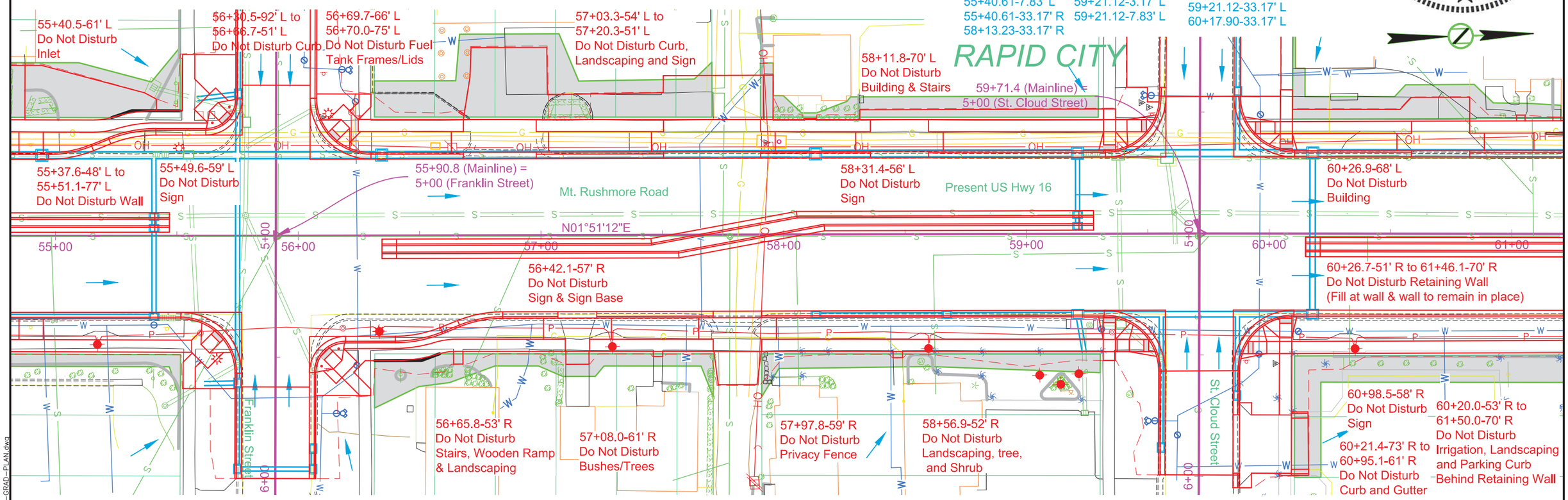

55+41-61' L to 55+76-52' L
Take Out 36'-12" PVC (Incidental Work, Grading)

55+45-34' L to 55+55-33' L
Take Out 8'-12" RCP (Incidental Work, Grading)

55+45-70' R to 55+76-53' R
Take Out 32'-12" RCP (Incidental Work, Grading)

55+48-34' R to 55+58-34' R
Take Out 8'-12" PVC (Incidental Work, Grading)

55+55-33' L to 59+25-33' L
Take Out 368'-18" RCP (Incidental Work, Grading)

55+58-34' R to 55+55-33' L
Take Out 66'-12" RCP (Incidental Work, Grading)

55+76-35' R to 55+78-8' L
Take Out 42'-12" RCP (Incidental Work, Grading)

55+76-52' L to 55+79-47' L
Take Out 4'-12" RCP (Incidental Work, Grading)

55+76-53' R to 55+76-35' R
Take Out 18'-12" RCP (Incidental Work, Grading)

55+76-432' L to 55+81-432' L
Take Out 4'-12" RCP (Incidental Work, Grading)

55+78-8' L to 59+61-9' L
Take Out 382'-18" RCP (Incidental Work, Grading)

55+79-37' L to 55+78-8' L
Take Out 28'-12" RCP (Incidental Work, Grading)

55+79-47' L to 55+79-37' L
Take Out 10'-12" RCP (Incidental Work, Grading)

55+81-432' L to 55+79-47' L
Take Out 382'-12" RCP (Incidental Work, Grading)

55+81-432' L to 55+81-442' L
Take Out 8'-12" RCP (Incidental Work, Grading)

56+07-52' L to 55+79-37' L
Take Out 32'-12" PVC (Incidental Work, Grading)

56+07-56' R to 55+78-8' L
Take Out 68'-10" PVC (Incidental Work, Grading)

56+09-431' L to 55+81-432' L
Take Out 24'-12" RCP (Incidental Work, Grading)

59+24-37' R to 59+39-37' R
Take Out 10'-12" PVC (Incidental Work, Grading)

59+24-74' R to 59+24-37' R
Take Out 36'-12" RCP (Incidental Work, Grading)

59+29-33' L to 59+38-32' L
Take Out 6'-18" RCP (Incidental Work, Grading)

59+38-32' L to 59+58-31' L
Take Out 18'-24" RCP (Incidental Work, Grading)

59+39-37' R to 59+38-32' L
Take Out 68'-12" RCP (Incidental Work, Grading)

59+55-52' R to 59+39-37' R
Take Out 20'-8" PVC (Incidental Work, Grading)

59+56-55' L to 59+58-31' L
Take Out 22'-12" RCP (Incidental Work, Grading)

59+58-31' L to 59+61-9' L
Take Out 22'-18" PVC (Incidental Work, Grading)

59+58-31' L to 62+85-33' L
Take Out 326'-24" RCP (Incidental Work, Grading)

59+61-9' L to 59+14' R
Take Out 14'-12" RCP (Incidental Work, Grading)

59+61-9' L to 59+66-4' L
Take Out 8'-12" RCP (Incidental Work, Grading)

59+61-9' L to 59+66-14' L
Take Out 6'-12" RCP (Incidental Work, Grading)

Take Out Junction Box With Frame and Grate at the Following Locations:
55+55-33'L
55+58-34'R
55+79-47'L
59+38-32'L
59+39-37'R
59+58-31'L

Take Out Drop Inlets With Frame and Grate at the Following Locations:
55+42-34'L
55+44-34'R
55+45-34'L
55+48-34'R
55+76-52'L
55+76-53'R
56+07-52'L
56+07-56'R
59+24-37'R
59+25-33'L
59+29-33'L
59+56-51'R
59+56-55'L

Take Out Manholes at the Following Locations:
55+78-8'L
59+61-9'L

08-17-16 P:\12-117\AutoCAD\PlanSheets\049F\Section B\049F-GRAD-PLAN.dwg

STATE OF SOUTH DAKOTA	PROJECT	SHEET	TOTAL SHEETS
	NH0016(84)67	B51	B136
PLOTTING DATE: 08-17-16		REV 08-17-13 ARK	

FOR BIDDING PURPOSES ONLY

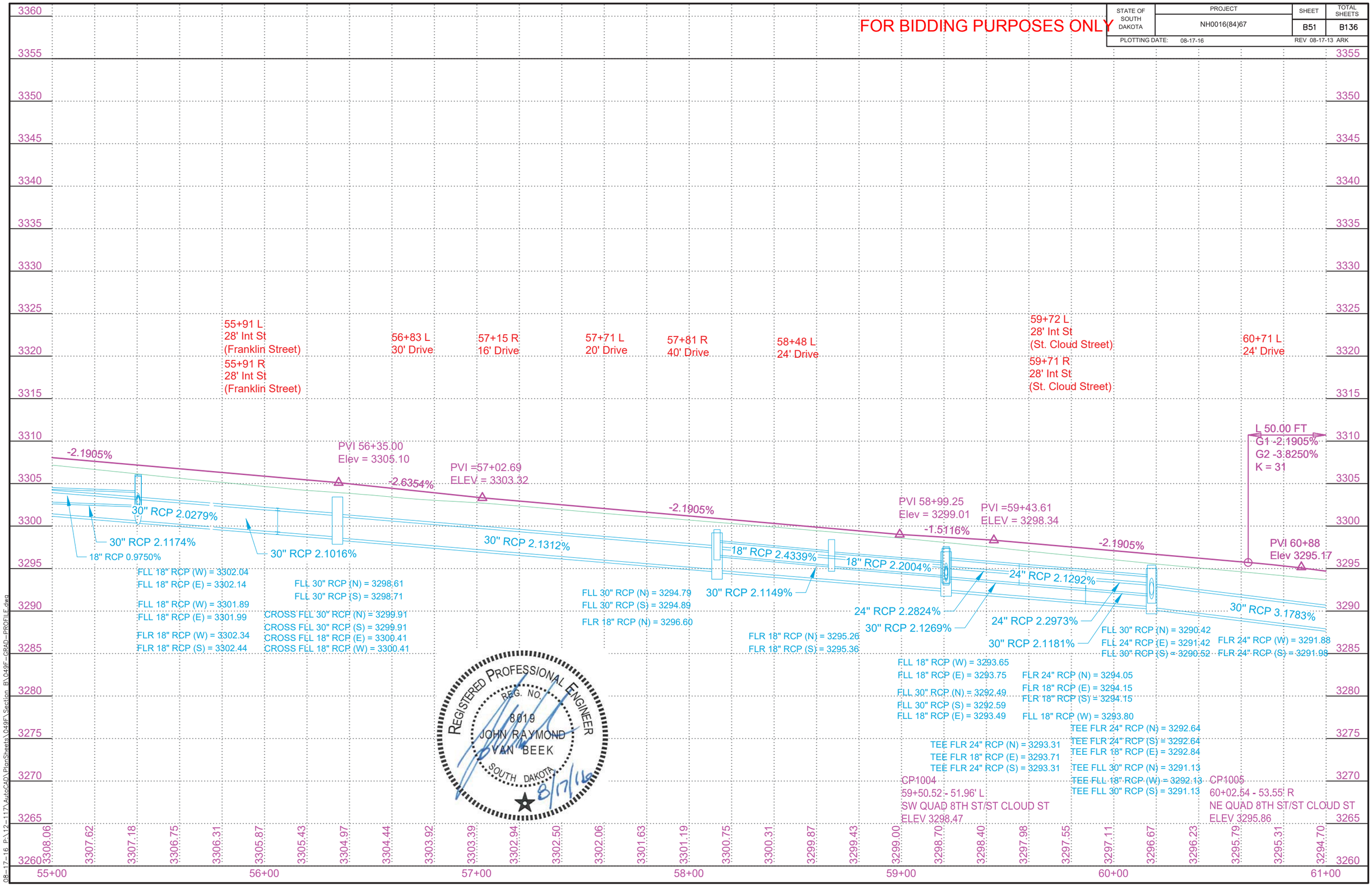

08-17-16 P:\12-117\AutoCAD\PlanSheets\049F\Section_B\049F-GRAD-PROFILE.dwg

STATE OF SOUTH DAKOTA	PROJECT	SHEET	TOTAL SHEETS
	NH0016(84)67	B52	B136

PLOTTING DATE: 07-29-16

FOR BIDDING PURPOSES ONLY

61+32.24 - 33.17' R to
61+83.49 - 33.17' R
Install 18" - 50' RCP
(Between Drop Inlets)

61+32.25 - 33.18' L to
62+01.91 - 33.17' L
Install 30" - 66' RCP
(Between Drop Inlets)

61+83.49 - 33.17' R to
62+42.00 - 33.17' R
Install 18" - 56' RCP
(Between Drop Inlets)

62+01.91 - 33.17' L to
62+98.70 - 33.17' L
Install 30" - 94' RCP
(Between Drop Inlets)

62+42.00 - 33.17' R to
63+00.50 - 33.17' R
Install 18" - 56' RCP
(Between Drop Inlets)

62+98.70 - 3.17' L to
62+98.70 - 7.83' L
Install 18" - 4' RCP
(Between Drop Inlets)

62+98.70 - 7.83' L to
62+98.70 - 33.17' L
Install 18" - 24' RCP
(Between Drop Inlets)

63+00.50-33.17' R
Install 3'x4' Type B Drop
Inlet With 6" Concrete Collar
And Type B Frame And Grate

Install 4'x4' Type B Drop
Inlet With 6" Concrete Collar
And Type B Frame and Grate
At The Following Locations:

61+32.25-33.18' L
62+01.91-33.17' L
62+98.70-33.17' L

Install 2'x3' Type B Drop
Inlet with 6" Concrete Collar
and Type B Frame and Grate
at the Following Locations:

61+32.24-33.17' R
61+83.49-33.17' R
62+42.00-33.17' R
62+98.70-3.17' L
62+98.70-7.83' L

Install 6" Concrete Collar
and Type B Frame and Grate
at the Following Locations:

66+83.79-7.83' L
66+83.79-3.17' L

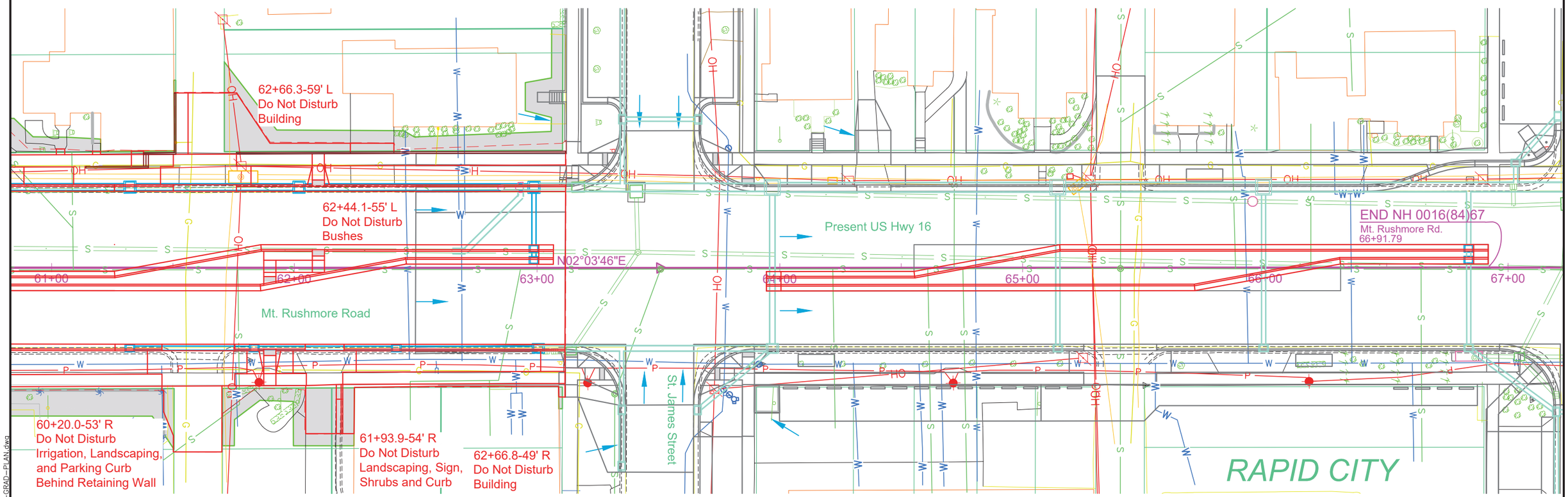

62+65-7' L to 62+70-7' L
Take Out 4'-24" RCP
(Incidental Work, Grading)

62+70-7' L to 62+93-29' L
Take Out 32'-24" RCP
(Incidental Work, Grading)

62+93-29' L to 62+93-33' L
Take Out 4'-24" RCP
(Incidental Work, Grading)

63+07-34' R to 63+14-34' R
Take Out 4'-10" PVC
(Incidental Work, Grading)

63+14-34' R to 63+42-6' L
Take Out 46'-12" RCP
(Incidental Work, Grading)

63+17-33' L to 63+41-31' L
Take Out 20'-24" RCP
(Incidental Work, Grading)

63+41-31' L to 63+42-6' L
Take Out 22'-12" RCP
(Incidental Work, Grading)

Take Out Manholes
at the Following Locations:
63+42-6'L

Take Out Junction Box
With Frame and Grate
at the Following Locations:
63+14-34'R
63+17-33'L
63+41-31'L

Take Out Drop Inlets
With Frame and Grate
at the Following Locations:
63+04-34'R
63+07-34'R

REGISTERED PROFESSIONAL ENGINEER
REG. NO.
8019
JOHN RAYMOND
VAN BEEK
SOUTH DAKOTA
8/17/16

07-29-16 P:\12-117\AutoCAD\PlanSheets\049F\Section B\049F-GRAD-PLAN.dwg

STATE OF SOUTH DAKOTA	PROJECT	SHEET	TOTAL SHEETS
	NH0016(84)67	B53	B136
PLOTTING DATE: 07-29-16			

FOR BIDDING PURPOSES ONLY

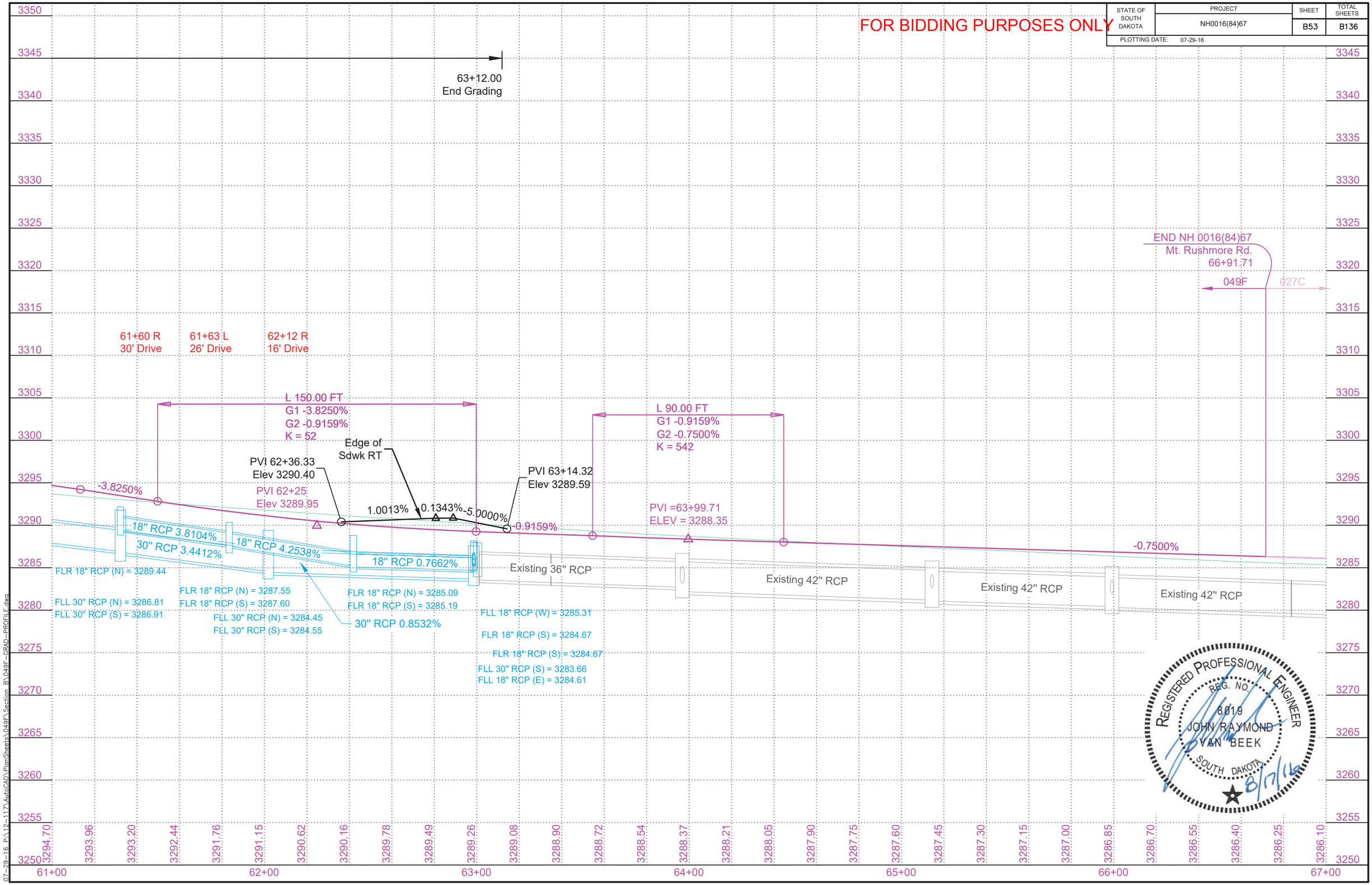

07-29-16 P:\12-117\AutoCAD\PlanSheets\049F\Section B\049F-GRAD-PROFILE.dwg

ST. ANNE STREET PLAN

FOR BIDDING PURPOSES ONLY

STATE OF SOUTH DAKOTA	PROJECT	SHEET	TOTAL SHEETS
	NH0016(84)67	B54	B136

PLOTTING DATE: 07-29-16

2+96.43 - 17.67' L to
3+70.48 - 17.67' L
Install 18" - 72' RCP
(Between Drop Inlets)

2+96.43 - 17.67' R to
2+96.43 - 17.67' L
Install 18" - 34' RCP
(Between Drop Inlets)

3+70.48 - 17.67' L to
4+05.20 - 15.26' L
Install 24" - 34' RCP
(Between Drop Inlet & RC Tee)

3+70.48 - 17.67' R to
3+70.48 - 17.67' L
Install 18" - 34' RCP
(Between Drop Inlets)

3+70.48 - 17.67' R to
3+70.88 - 20.87' R
Install 6" - 4' PVC
Between Drop Inlet and PVC Bend

3+70.88 - 20.87' R to
3+82.01 - 29.57' R
Install 6" - 16' PVC
Between PVC Bends

3+82.01 - 29.57' R to
3+82.38 - 32.60' R
Install 6" - 4' PVC
Between PVC Bends

Install 2'x3' Type B Drop Inlet
With 6" Concrete Collar And
Type B Frame and Grate At
The Following Locations:
2+96.44-17.67' L
2+96.44-17.67' R
3+70.49-17.67' R

3+70.49-17.67' L
Install 3'x4' Type B Drop Inlet
With 6" Concrete Collar And
Type B Frame And Grate

Install Pipe Fittings at the Following Locations:

3+70.88-20.87' R	6" PVC 45 Deg Bend
3+82.01-29.57' R	6" PVC 45 Deg Bend
3+82.38-32.60' R	6" PVC 45 Deg Bend

REGISTERED PROFESSIONAL ENGINEER
REG. NO. 8019
JOHN RAYMOND VAN BEEK
SOUTH DAKOTA
8/17/16

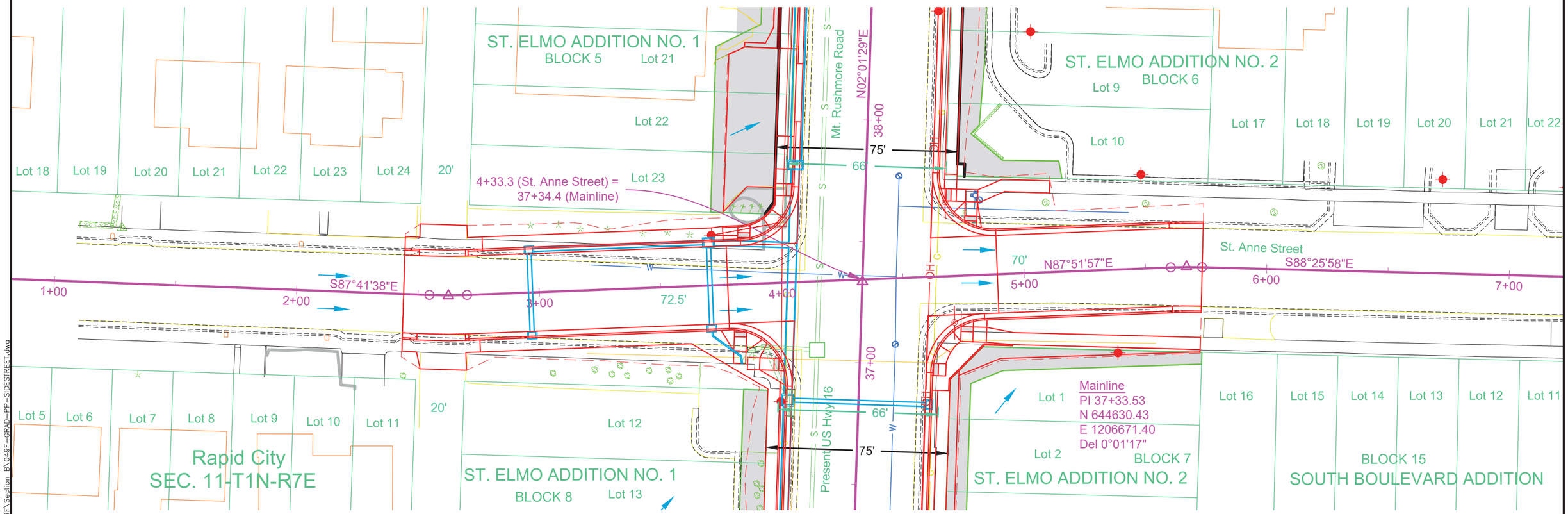

07-29-16 P:\12-117\AutoCAD\PlanSheets\049F\Section B\049F-GRAD-PP-SIDESTREET.dwg

STATE OF SOUTH DAKOTA	PROJECT	SHEET	TOTAL SHEETS
	NH0016(84)67	B55	B136

PLOTTING DATE: 07-29-16

ST. ANNE STREET PROFILE

FOR BIDDING PURPOSES ONLY

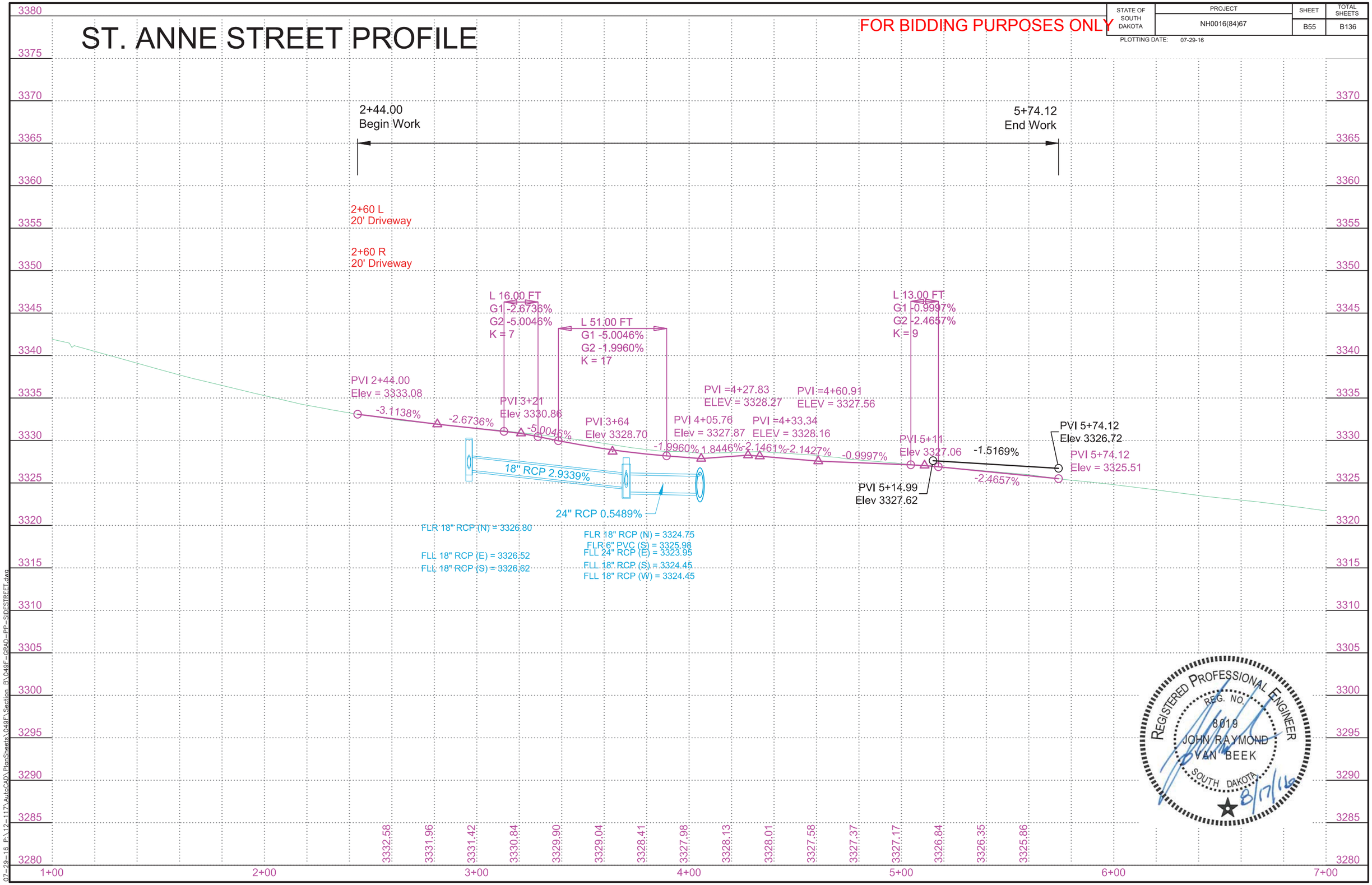

REGISTERED PROFESSIONAL ENGINEER
REG. NO. 8019
JOHN RAYMOND VAN BEEK
SOUTH DAKOTA
8/17/16

07-29-16 P:\12-117\AutoCAD\PlanSheets\049F\Section B\049F-GRAD-PP-SIDESTREET.dwg

ST. FRANCIS STREET PLAN

FOR BIDDING PURPOSES ONLY

STATE OF SOUTH DAKOTA	PROJECT	SHEET	TOTAL SHEETS
	NH0016(84)67	B56	B136

PLOTTING DATE: 07-29-16

2+78.99 - 21.24' L to
2+77.80 - 21.24' L
Install 4" - 2' PVC
Between Connect to
Existing &
PVC Bend

2+82.61 - 19.67' L to
2+78.99 - 21.24' L
Install 4" - 4' PVC
Between PVC Bend &
Drop Inlet

2+82.61 - 19.67' L to
3+12.29 - 19.67' L
Install 18" - 28' RCP
(Between Drop Inlets)

2+82.61 - 19.67' R to
3+22.83 - 19.67' R
Install 18" - 38' RCP
(Between Drop Inlets)

3+12.29 - 19.67' L to
3+52.78 - 19.66' L
Install 18" - 38' RCP
(Between Drop Inlets)

3+22.83 - 19.67' R to
3+47.83 - 19.67' R
Install 18" - 22' RCP
(Between Drop Inlets)

3+47.83 - 19.67' R to
3+71.98 - 19.67' R
Install 24" - 22' RCP
(Between Drop Inlets)

3+52.78 - 19.66' L to
3+74.60 - 19.67' L
Install 24" - 18' RCP
(Between Drop Inlets)

3+71.98 - 19.67' R to
3+74.60 - 19.67' L
Install 24" - 38' RCP
(Between Drop Inlets)

3+74.60 - 19.67' L to
4+12.87 - 26.03' L
Install 24" - 34' RCP
(Between Drop Inlet &
JBox)

5+31.37 - 21.61' L to
5+40.87 - 21.61' L
Install 48" - 4' RCP
(Between Drop Inlet & RC
Reducer)

5+40.87 - 21.61' L to
5+44.87 - 21.61' L
Install 36" - 4' RCP
(Between RC Reducer &
RC Bend)

5+44.87 - 21.61' L to
5+49.98 - 16.20' L
Install 36" - 8' RCP
(Between RC Bends)

5+49.98 - 16.20' L to
5+56.25 - 16.03' L
Install 36" - 8' RCP
(Between RC Bend &
Connect to Existing)

Install 2'x3' Type B Drop Inlet
With 6" Concrete Collar And
Type B Frame and Grate At
The Following Locations:
2+82.61-19.67' L
2+82.61-19.67' R
3+12.29-19.67' L
3+22.83-19.67' R

5+31.40-21.61' L
Install 7'x11' Type S Drop Inlet
Base and Precast Concrete
Type S Drop Inlet Lid

Install 3'x4' Type B Drop Inlet
With 6" Concrete Collar And
Type B Frame And Grate At
The Following Locations:
3+47.83-19.67' R
3+52.78-19.66' L
3+71.98-19.67' R
3+74.60-19.67' L

Install Pipe Fittings at the Following Locations:

5+40.87-21.61' L	48"x36" RC Reducer
5+44.87-21.61' L	36" RC 45 Deg Bend
5+49.98-16.20' L	36" RC 45 Deg Bend

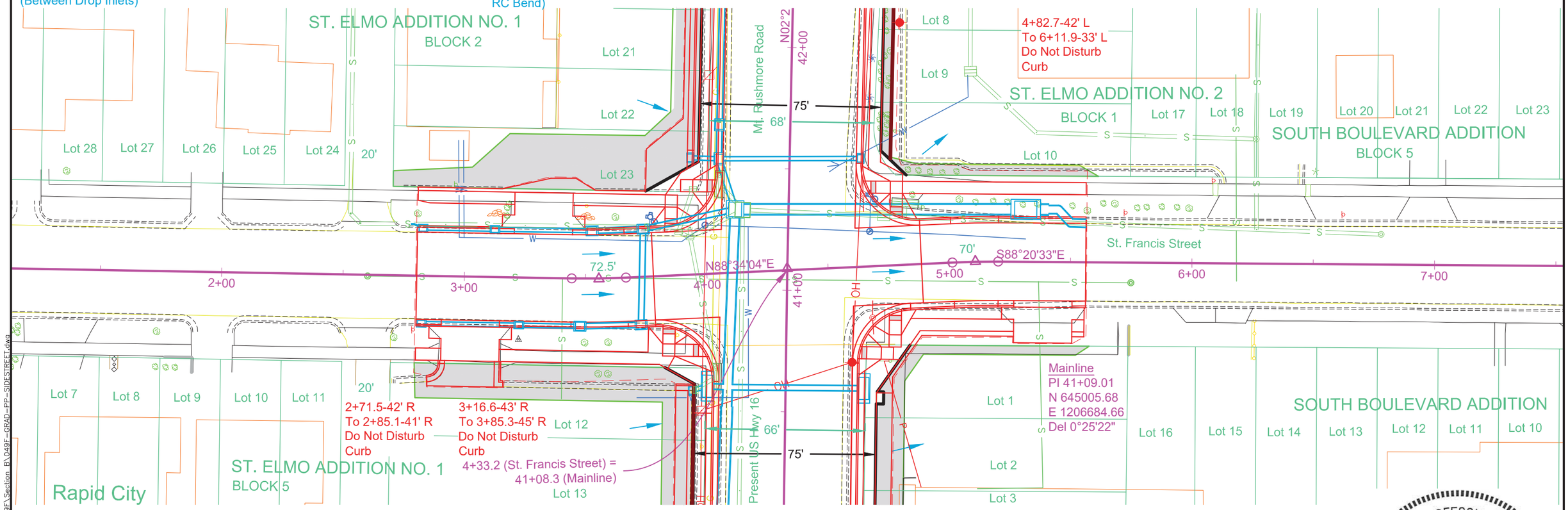

REGISTERED PROFESSIONAL ENGINEER
REG. NO.
8019
JOHN RAYMOND
VAN BEEK
SOUTH DAKOTA
8/17/16

07-29-16 P:\12-117\AutoCAD\PlanSheets\049F\Section B\049F-GRAD-PP-SIDESTREET.dwg

STATE OF SOUTH DAKOTA	PROJECT	SHEET	TOTAL SHEETS
	NH0016(84)67	B57	B136

PLOTTING DATE: 07-29-16

ST. FRANCIS STREET PROFILE

FOR BIDDING PURPOSES ONLY

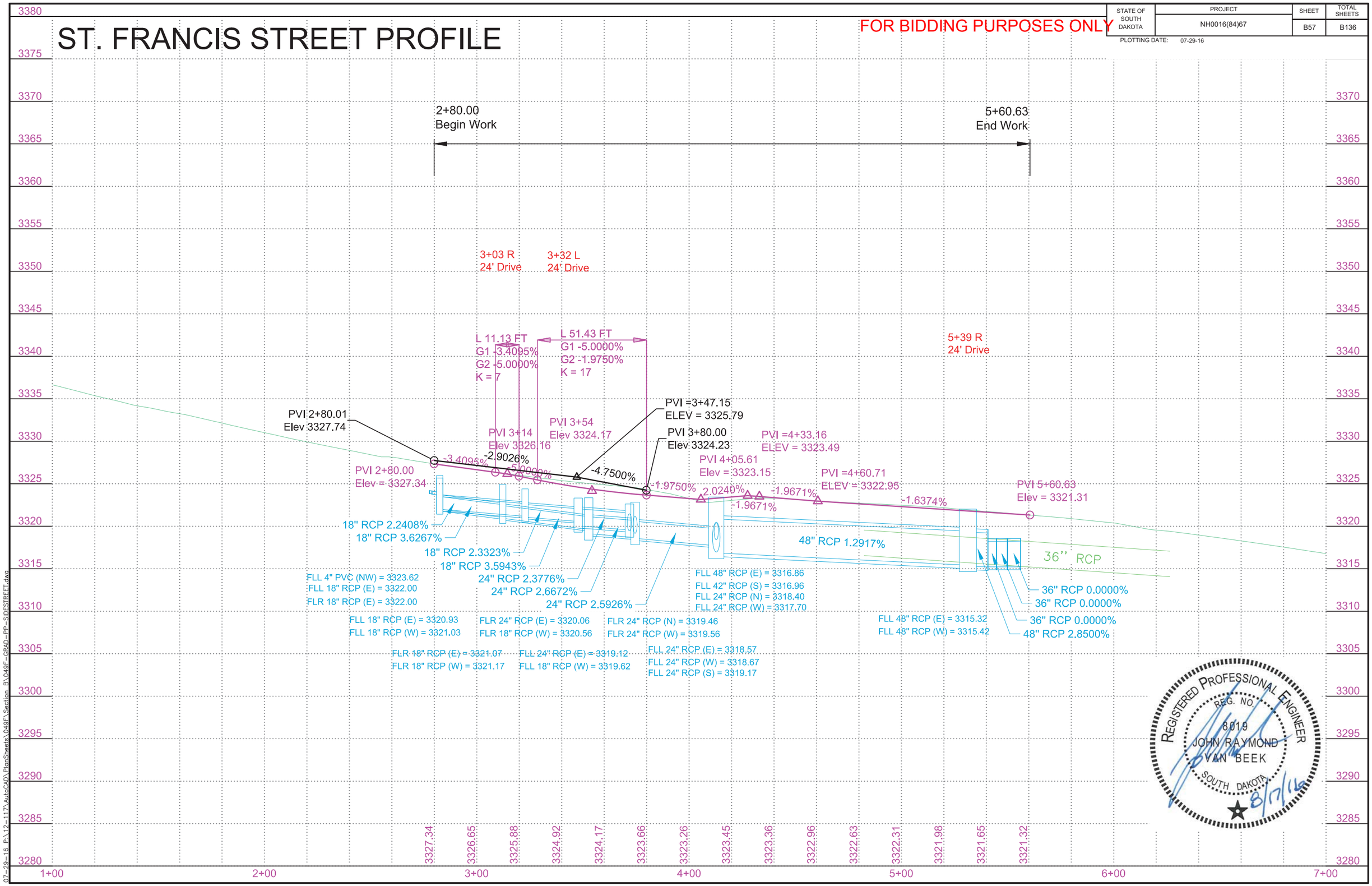

07-29-16 P:\12-117\AutoCAD\PlanSheets\049F\Section_B\049F-GRAD-PP-SIDESTREET.dwg

ST. PATRICK STREET PLAN

FOR BIDDING PURPOSES ONLY

STATE OF SOUTH DAKOTA	PROJECT	SHEET	TOTAL SHEETS
	NH0016(84)67	B58	B136

PLOTTING DATE: 07-29-16

2+04.00 - 18.56' L to
3+24.00 - 23.17' L
Install 4" - 120' HDPE

2+04.00 - 19.94' R to
3+24.00 - 23.17' R
Install 4" - 120' HDPE

3+25.00 - 19.67' L to
3+60.78 - 19.67' L
Install 18" - 34' RCP
(Between Drop Inlets)

3+25.00 - 19.67' R to
3+60.78 - 19.67' R
Install 18" - 34' RCP
(Between Drop Inlets)

3+60.78 - 19.67' R to
3+60.78 - 19.67' L
Install 18" - 38' RCP
(Between Drop Inlets)

3+60.78 - 19.67' R to
3+71.89 - 19.67' R
Install 18" - 10' RCP
(Between Drop Inlet& RC Bend)

3+71.89 - 19.67' R to
3+87.83 - 35.61' R
Install 18" - 24' RCP
(Between RC Bends)

3+87.81 - 48.04' R to
3+87.83 - 35.61' R
Install 18" - 12' RCP
(Between Drop Inlet & RC Bend)

Install 2'x3' Type B Drop Inlet
With 6" Concrete Collar And
Type B Frame and Grate At
The Following Locations:
3+25.00-19.67' L
3+25.00-19.67' R
3+60.78-19.67' L
3+60.78-19.67' R

Install Pipe Fittings at the Following Locations:

3+71.89-19.67' R	18" RC 45 Deg Bend
3+87.83-35.61' R	18" RC 45 Deg Bend

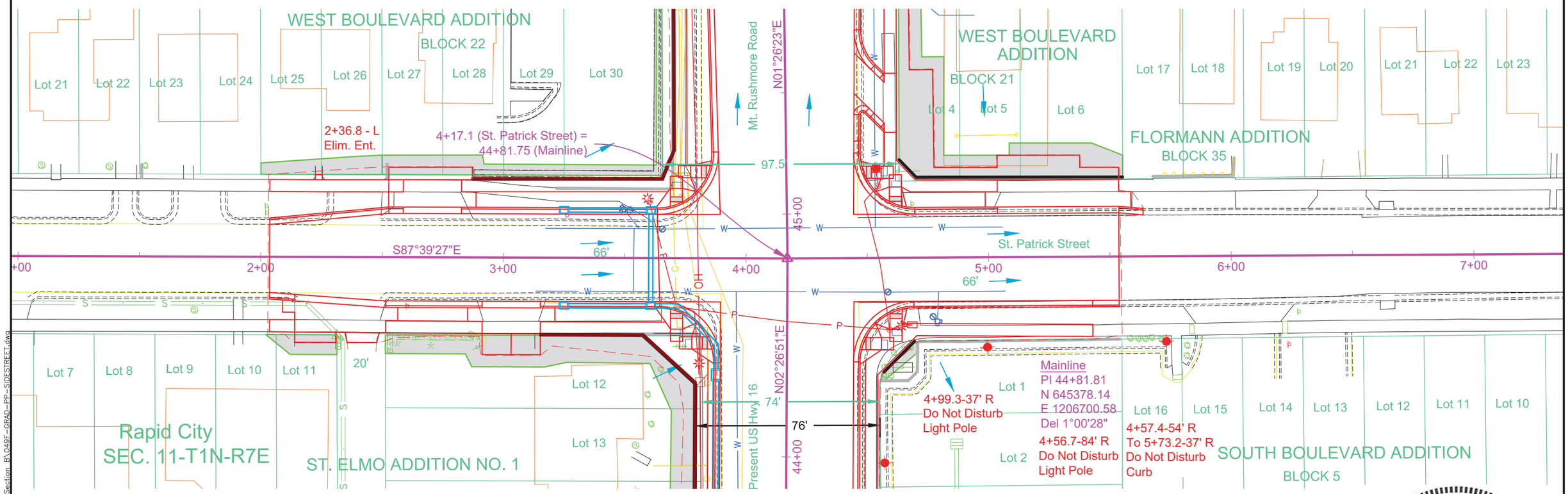

REGISTERED PROFESSIONAL ENGINEER
REG. NO.
8019
JOHN RAYMOND
VAN BEEK
SOUTH DAKOTA
8/17/16

07-29-16 P:\12-117\AutoCAD\PlanSheets\049F\Section_B\049F-GRAD-PP-SIDESTREET.dwg

ST. PATRICK STREET PROFILE

FOR BIDDING PURPOSES ONLY

STATE OF SOUTH DAKOTA	PROJECT	SHEET	TOTAL SHEETS
	NH0016(84)67	B59	B136

PLOTTING DATE: 07-29-16

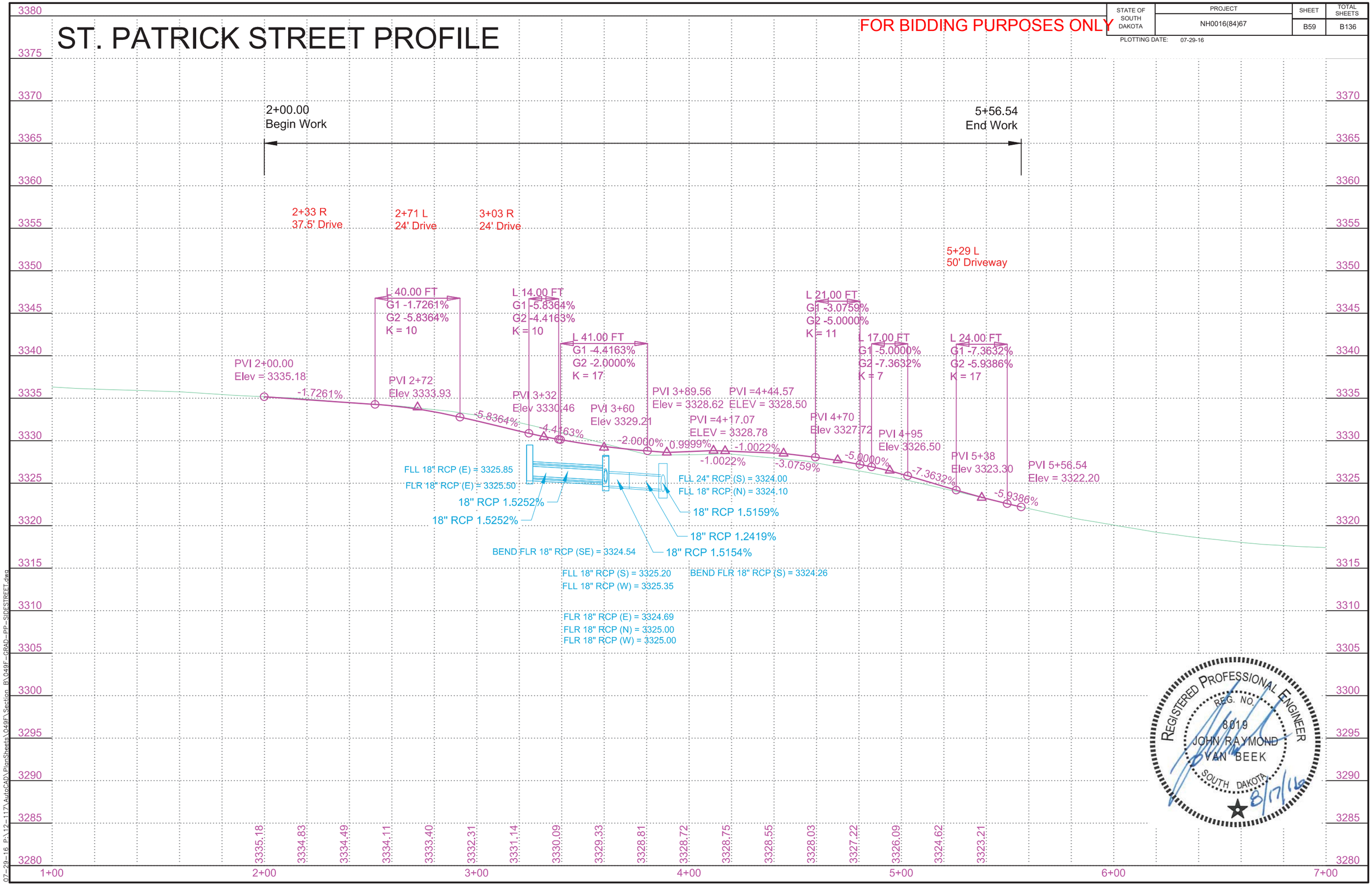

REGISTERED PROFESSIONAL ENGINEER
REG. NO. 8019
JOHN RAYMOND VAN BEEK
SOUTH DAKOTA
8/17/16

07-29-16 P:\12-117\AutoCAD\PlanSheets\049F\Section B\049F-GRAD-PP-SIDESTREET.dwg

STATE OF SOUTH DAKOTA	PROJECT	SHEET	TOTAL SHEETS
	NH0016(84)67	B60	B136

PLOTTING DATE: 07-29-16

ST. ANDREW STREET PLAN

FOR BIDDING PURPOSES ONLY

REGISTERED PROFESSIONAL ENGINEER
REG. NO. 8019
JOHN RAYMOND VAN BEEK
SOUTH DAKOTA
8/17/16

3+59.91 - 15.33' L to
4+36.59 - 15.67' L
Install 18" - 74' RCP
(Between Drop Inlets)

3+59.91 - 15.67' R to
3+59.91 - 15.33' L
Install 18" - 30' RCP
(Between Drop Inlets)

4+36.59 - 15.67' L to
4+66.91 - 15.86' L
Install 18" - 30' RCP
(Between Drop Inlet & RC Tee)

4+36.59 - 15.67' R to
4+36.59 - 15.67' L
Install 18" - 30' RCP
(Between Drop Inlets)

5+33.26 - 15.47' L to
5+63.11 - 15.67' L
Install 18" - 30' RCP
(Between Drop Inlet & RC Tee)

5+63.11 - 15.67' L to
5+81.02 - 15.67' L
Install 18" - 16' RCP
(Between Drop Inlets)

5+63.11 - 15.67' R to
5+63.11 - 15.67' L
Install 18" - 30' RCP
(Between Drop Inlets)

5+81.02 - 15.67' L to
5+98.93 - 15.67' L
Install 18" - 16' RCP
(Between Drop Inlets)

Install 2'x3' Type B Drop Inlet
With 6" Concrete Collar And
Type B Frame and Grate At
The Following Locations:
3+59.91-15.67' R
4+36.59-15.67' L
4+36.59-15.67' R
5+63.11-15.67' L
5+63.11-15.67' R
5+81.02-15.67' L
5+98.93-15.67' L

3+59.90-15.33' L
Install 2'x3' Type B Drop Inlet
With 6" Concrete Collar And
Type E Frame And Grate

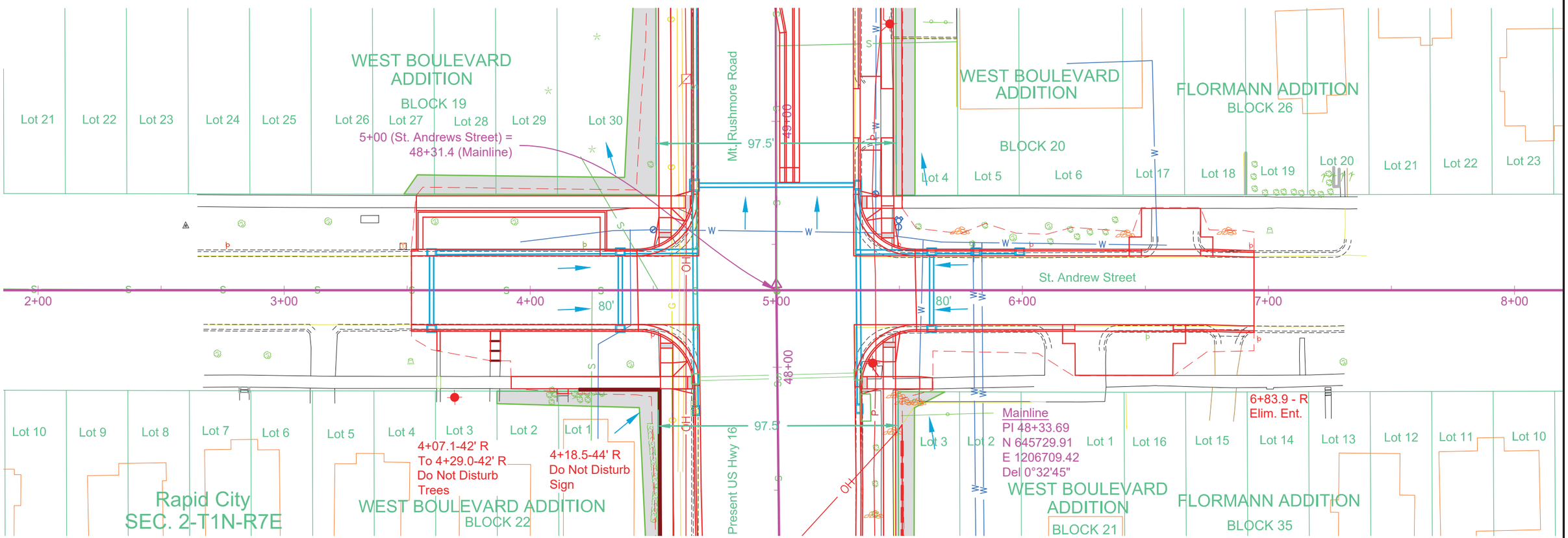

07-29-16 P:\12-117\AutoCAD\PlanSheets\049F\Section B\049F-GRAD-PP-SIDESTREET.dwg

STATE OF SOUTH DAKOTA	PROJECT	SHEET	TOTAL SHEETS
	NH0016(84)67	B61	B136

PLOTTING DATE: 07-29-16

ST. ANDREW STREET PROFILE

FOR BIDDING PURPOSES ONLY

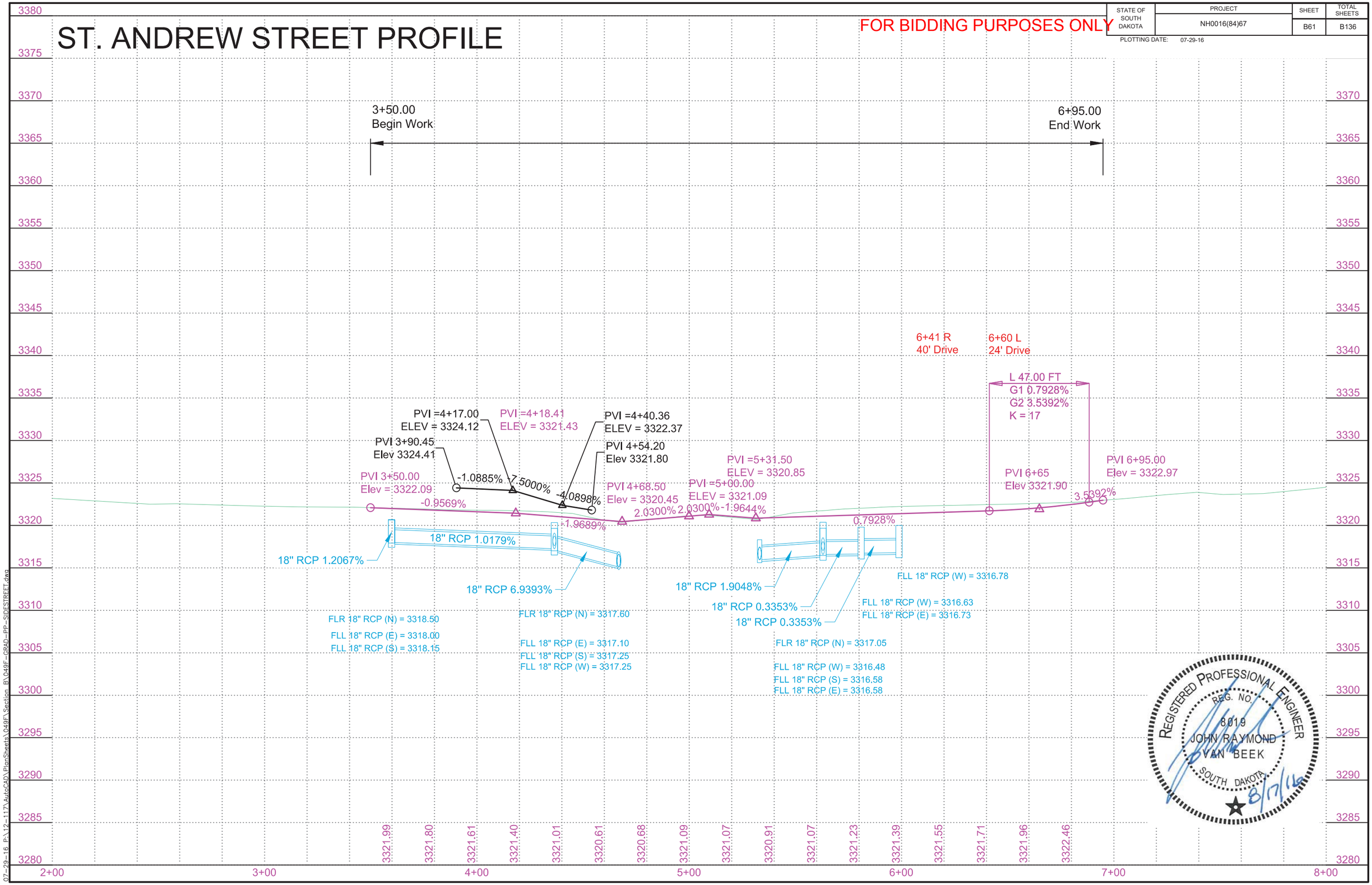

REGISTERED PROFESSIONAL ENGINEER
REG. NO. 8019
JOHN RAYMOND VAN BEEK
SOUTH DAKOTA
8/17/16

07-29-16 P:\12-117\AutoCAD\PlanSheets\049F\Section B\049F-GRAD-PP-SIDESTREET.dwg

ST. CHARLES STREET PLAN

FOR BIDDING PURPOSES ONLY

STATE OF SOUTH DAKOTA	PROJECT	SHEET	TOTAL SHEETS
	NH0016(84)67	B62	B136

PLOTTING DATE: 07-29-16 REV 07-29-16 ARK

3+80.88 - 15.67' L to
4+03.69 - 16.20' L
Install 18" - 22' RCP
(Between Drop Inlet & RC Tee)

4+03.69 - 16.20' L to
4+04.81 - 31.99' R
Install 18" - 48' RCP
(Between Drop Inlet & RC Tee)

4+03.69 - 16.20' L to
4+23.88 - 16.67' L
Install 18" - 18' RCP
(Between RC Tee & Drop Inlet)

4+23.88 - 16.67' L to
4+40.52 - 15.67' L
Install 24" - 12' RCP
(Between Drop Inlets)

4+40.52 - 15.67' L to
4+66.84 - 15.67' L
Install 24" - 26' RCP
(Between Drop Inlet & RC Tee)

5+33.18 - 15.68' L to
5+58.01 - 15.67' L
Install 18" - 24' RCP
(Between Drop Inlet & RC Tee)

5+57.99 - 15.67' R to
5+58.01 - 15.67' L
Install 18" - 30' RCP
(Between Drop Inlets)

5+58.01 - 15.67' L to
6+07.50 - 15.67' L
Install 18" - 48' RCP
(Between Drop Inlets)

Install 2'x3' Type B Drop Inlet
With 6" Concrete Collar And
Type B Frame and Grate At
The Following Locations:
3+80.88-15.67' L
4+04.81-34.99'R
5+57.99-15.67' R
5+58.01-15.67' L
6+07.50-15.67' L

4+40.52-15.67' L
Install 3'x4' Type B Drop Inlet
With 6" Concrete Collar And
Type B Frame And Grate

4+23.88-16.67' L
Install 4'X6' Type S Inlet
Base and Type S Precast Lid

Install Pipe Fittings At
The Following Locations:
4+03.69-16.20 L — 18" x18" Tee
4+28.29-42.36' R — 6" PVC 45 Deg Bend
(Connect to Existing PVC Drain)

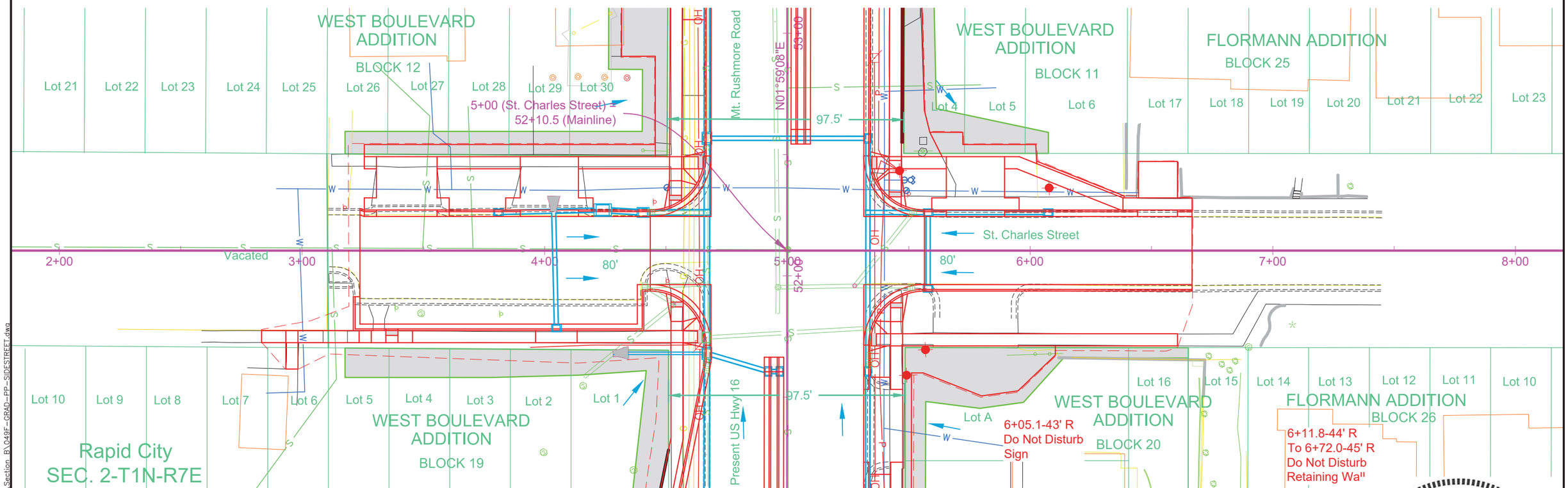

REGISTERED PROFESSIONAL ENGINEER
REG. NO. 8019
JOHN RAYMOND VAN BEEK
SOUTH DAKOTA
8/17/16

07-29-16 P:\12-117\AutoCAD\PlanSheets\049F\Section B\049F-GRAD-PP-SIDESTREET.dwg

ST. CHARLES STREET PROFILE

FOR BIDDING PURPOSES ONLY

STATE OF SOUTH DAKOTA	PROJECT	SHEET	TOTAL SHEETS
	NH0016(84)67	B63	B136

PLOTTING DATE: 07-29-16 REV 07-29-16 ARK

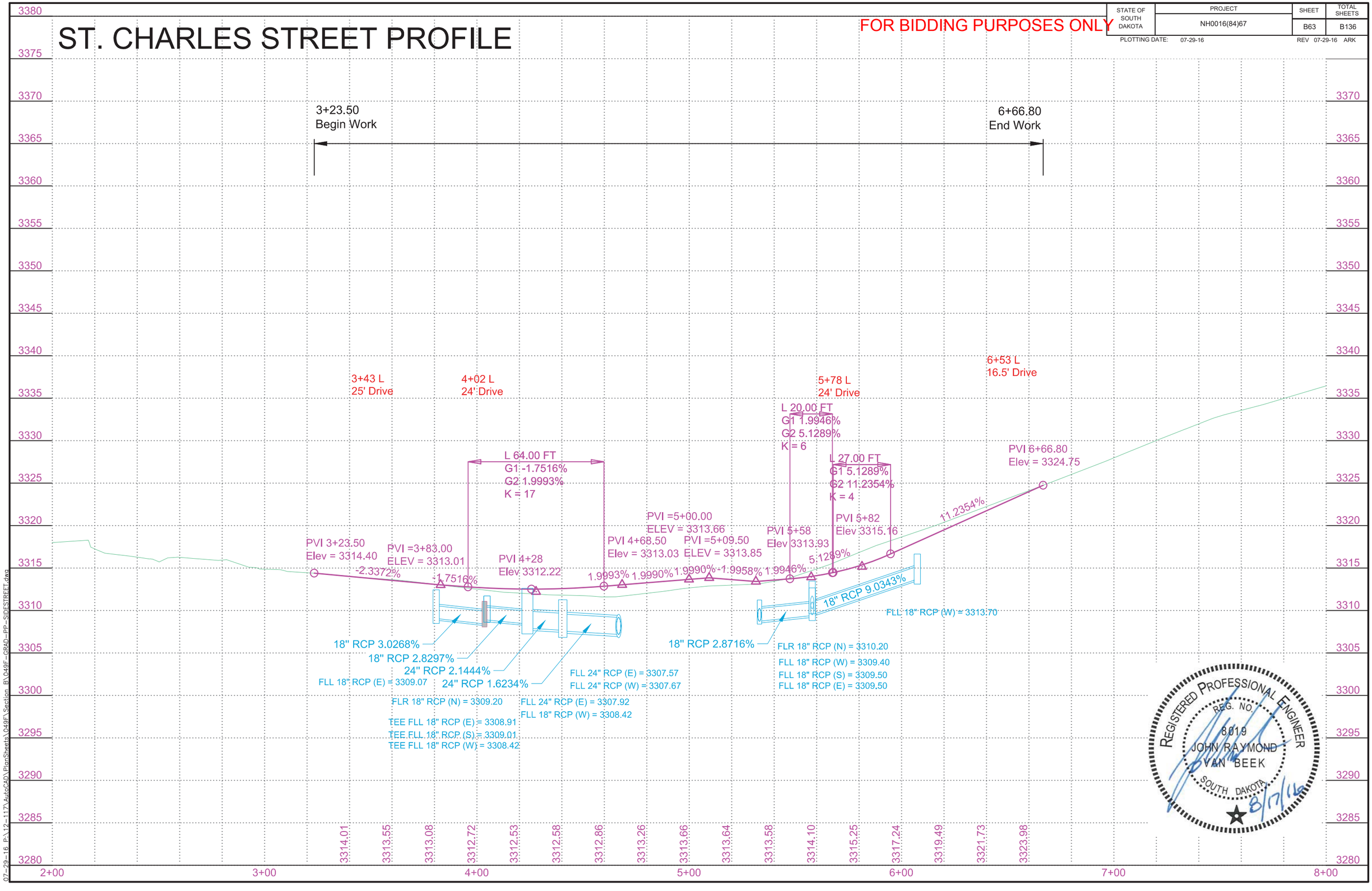

REGISTERED PROFESSIONAL ENGINEER
REG. NO. 8019
JOHN RAYMOND VAN BEEK
SOUTH DAKOTA
8/17/16

07-29-16 P:\12-117\AutoCAD\PlanSheets\049F\Section B\049F-GRAD-PP-SIDESTREET.dwg

FRANKLIN STREET PLAN

FOR BIDDING PURPOSES ONLY

STATE OF SOUTH DAKOTA	PROJECT	SHEET	TOTAL SHEETS
	NH0016(84)67	B64	B136

PLOTTING DATE: 07-29-16

3+83.08 - 11.87' R to
3+85.76 - 11.87' R
Install 18" - 4' RCP
(Between Connect to Existing
& RC Bend)

3+85.76 - 11.87' R to
3+89.53 - 15.67' R
Install 18" - 6' RCP
(Between RC Bends)

3+89.53 - 15.67' R to
3+95.82 - 15.67' R
Install 18" - 6' RCP
(Between RC Bend &
Drop Inlet)

3+95.82 - 15.67' L to
3+95.82 - 15.67' R
Install 18" - 30' RCP
(Between Drop Inlets)

3+95.82 - 15.67' L to
4+02.64 - 15.67' L
Install 18" - 4' RCP
(Between Drop Inlets)

3+95.82 - 15.67' R to
4+41.58 - 15.67' R
Install 18" - 44' RCP
(Between Drop Inlets)

4+41.58 - 15.67' R to
4+43.61 - 32.36' R
Install 18" - 16' RCP
(Between Connect to
Existing & Drop Inlet)

4+41.58 - 15.67' R to
4+66.83 - 15.78' R
Install 18" - 24' RCP
(Between Drop Inlet
& RCP Cross)

4+66.83 - 15.78' R to
5+60.62 - 15.67' R
Install 18" - 94' RCP
(Between Drop Inlet
& RC Cross)

5+60.62 - 15.67' R to
5+60.89 - 29.33' R
Install 18" - 14' RCP
(Between Connect to
Existing & Drop Inlet)

5+60.62 - 15.67' R to
5+96.03 - 15.67' R
Install 18" - 34' RCP
(Between Drop Inlets)

5+87.55 - 15.60' L to
5+96.03 - 15.60' L
Install 18" - 6' RCP
(Between Drop Inlets)

5+96.03 - 15.67' R to
5+96.03 - 15.60' L
Install 18" - 30' RCP
(Between Drop Inlets)

Install 2'x3' Type B Drop Inlet
With 6" Concrete Collar And
Type B Frame and Grate At
The Following Locations:
3+95.82-15.67' L
3+95.82-15.67' R
4+02.64-15.67' L
4+41.58-15.67' R
5+60.62-15.67' R
5+87.55-15.60' L
5+96.03-15.60' L
5+96.03-15.67' R

Install Pipe Fittings At
The Following Locations:

3+85.76-11.87' R	18" RC 45 Deg Bend
3+89.53-15.67' R	18" RC 45 Deg Bend

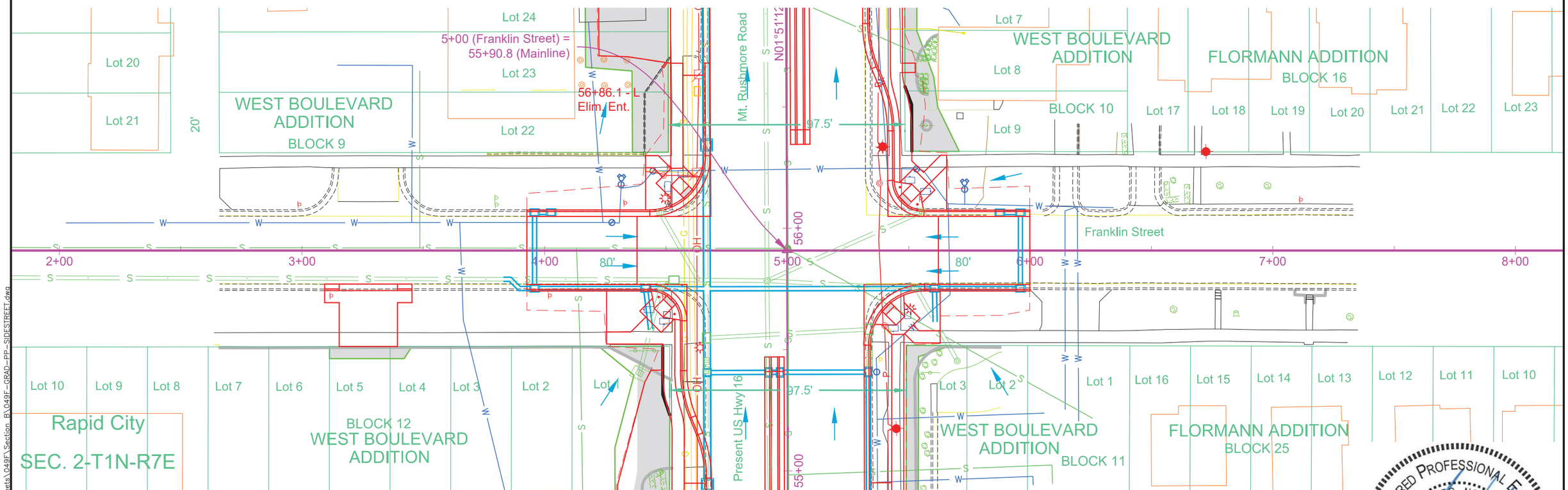

REGISTERED PROFESSIONAL ENGINEER
REG. NO. 8019
JOHN RAYMOND VAN BEEK
SOUTH DAKOTA
8/17/16

07-29-16 P:\12-117\AutoCAD\PlanSheets\049F\Section B\049F-GRAD-PP-SIDESTREET.dwg

STATE OF SOUTH DAKOTA	PROJECT	SHEET	TOTAL SHEETS
	NH0016(84)67	B65	B136

PLOTTING DATE: 07-29-16

FRANKLIN STREET PROFILE

FOR BIDDING PURPOSES ONLY

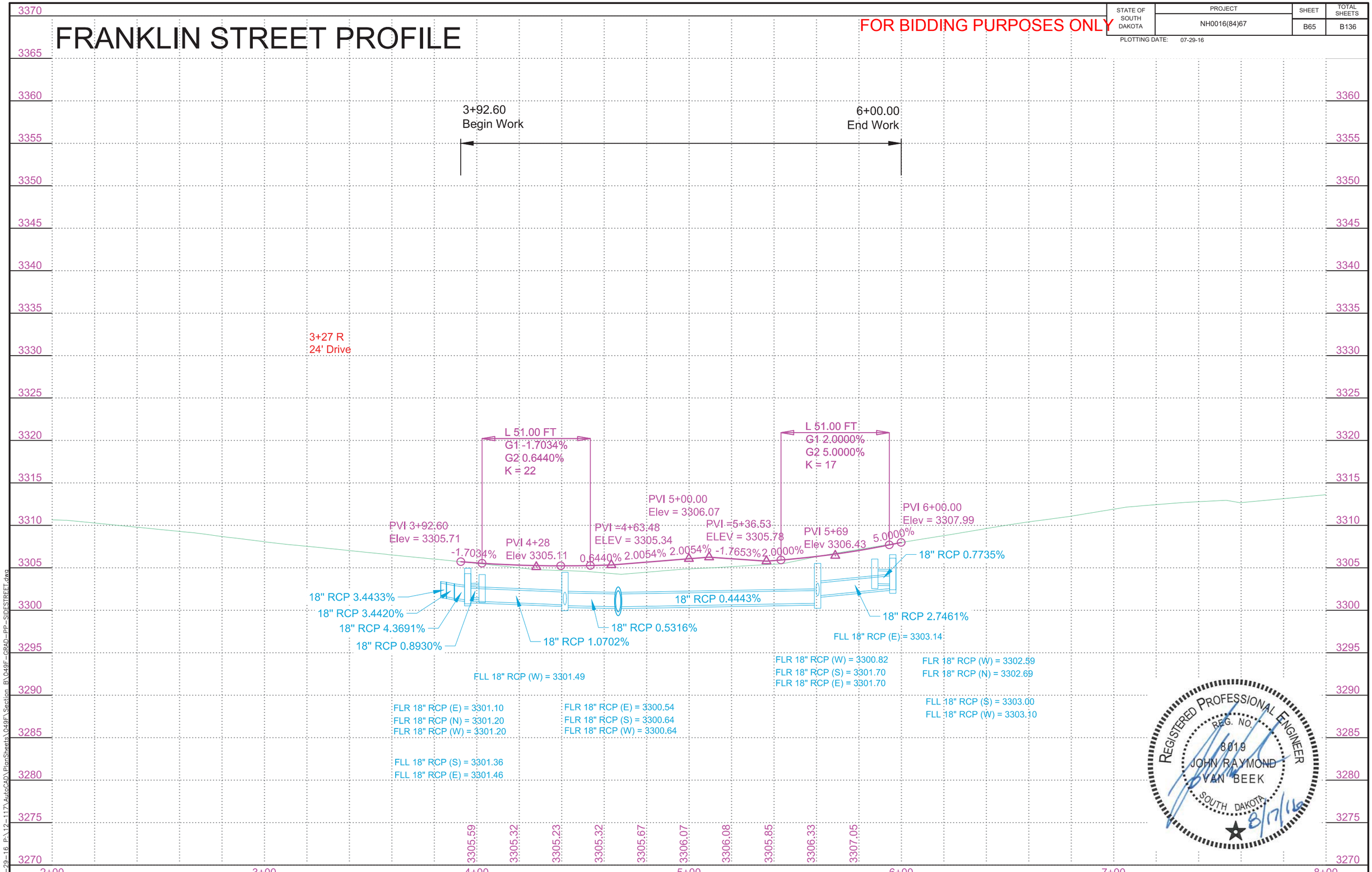

REGISTERED PROFESSIONAL ENGINEER
REG. NO.
8019
JOHN RAYMOND
VAN BEEK
SOUTH DAKOTA
8/17/16

07-29-16 P:\12-117\AutoCAD\PlanSheets\049F\Section B\049F-GRAD-PP-SIDESTREET.dwg

ST. CLOUD STREET PLAN

FOR BIDDING PURPOSES ONLY

STATE OF SOUTH DAKOTA	PROJECT	SHEET	TOTAL SHEETS
	NH0016(84)67	B66	B136

PLOTTING DATE: 08-17-16 REV 08-17-16 ARK

3+95.41 - 15.67' R to
4+07.14 - 15.67' R
Install 18" - 10' RCP
(Between Drop Inlets)

4+07.14 - 15.67' L to
4+41.42 - 15.67' L
Install 18" - 32' RCP
(Between Drop Inlets)

4+07.14 - 15.67' R to
4+07.14 - 15.67' L
Install 18" - 30' RCP
(Between Drop Inlets)

4+41.42 - 15.67' L to
4+66.85 - 15.43' L
Install 18" - 24' RCP
(Between Drop Inlet
& RC Tee)

5+33.20 - 15.67' L to
5+66.62 - 15.67' L
Install 18" - 32' RCP
(Between Drop Inlet
& RC Tee)

5+33.32 - 15.67' R to
5+88.19 - 15.67' R
Install 18" - 54' RCP
(Between Drop Inlet
& RC Tee)

Install 2'x3' Type B Drop Inlet
With 6" Concrete Collar And
Type B Frame and Grate At
The Following Locations:
3+95.41-15.67' R
4+07.14-15.67' R
5+66.62-15.67' L
5+88.19-15.67' R

Install 2'x3' Type B Drop Inlet
With 6" Concrete Collar And
Type E Frame And Grate At
The Following Locations:
4+07.14-15.67' L
4+41.42-15.67' L

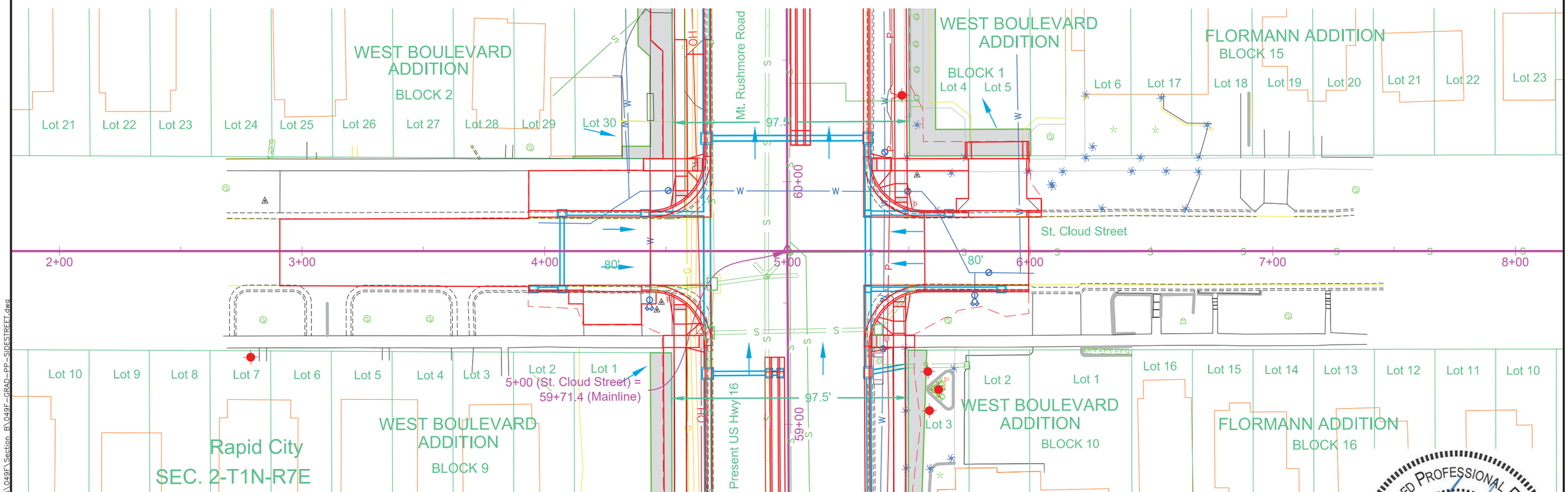

REGISTERED PROFESSIONAL ENGINEER
REG. NO.
8019
JOHN RAYMOND
VAN BEEK
SOUTH DAKOTA
8/17/16

08-17-16 P:\12-117\AutoCAD\PlanSheets\049F\Section B\049F-GRAD-PP-SIDESTREET.dwg

STATE OF SOUTH DAKOTA	PROJECT	SHEET	TOTAL SHEETS
	NH0016(84)67	B67	B136

PLOTTING DATE: 08-17-16 REV 08-17-16 ARK

ST. CLOUD STREET PROFILE

FOR BIDDING PURPOSES ONLY

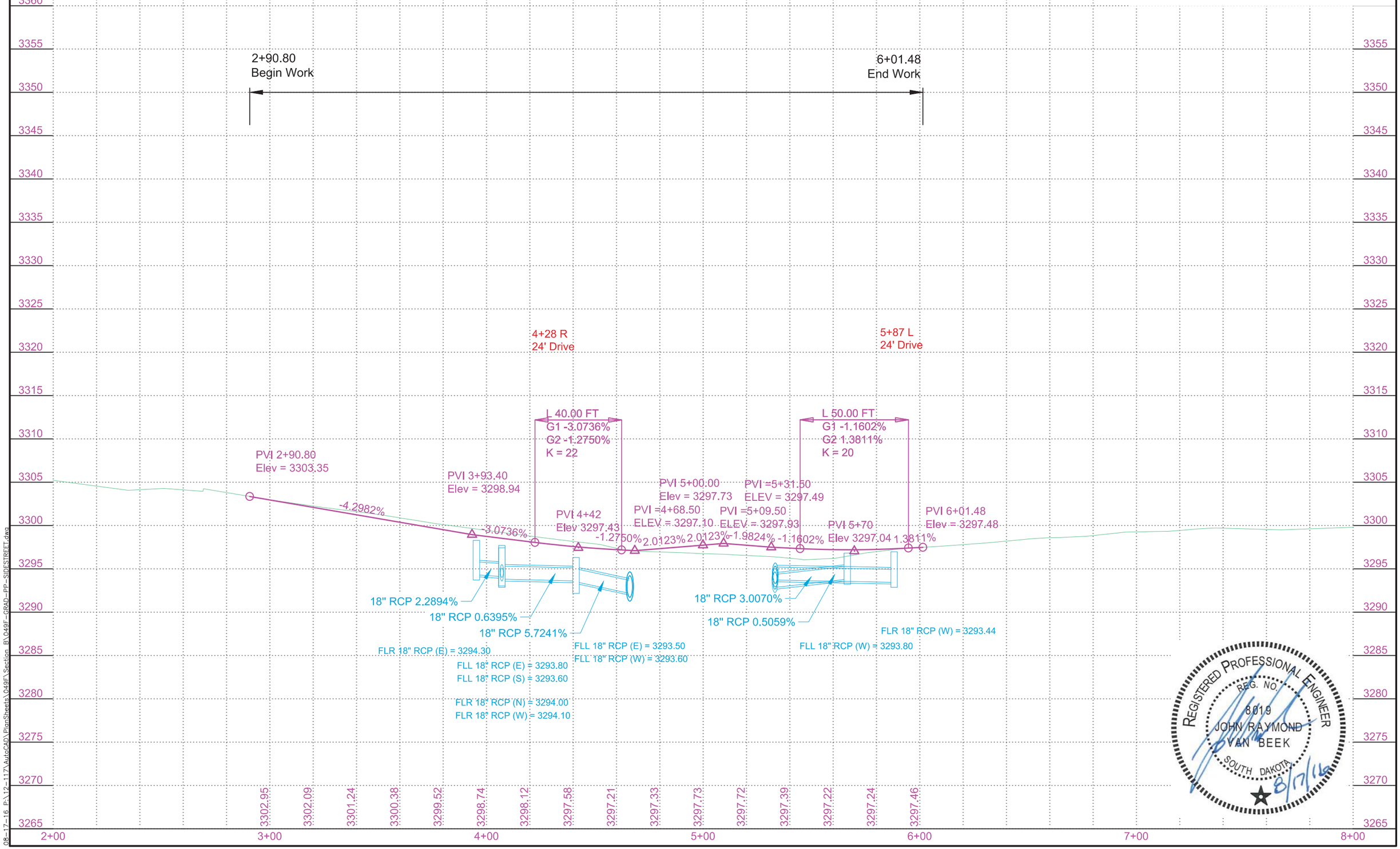

REGISTERED PROFESSIONAL ENGINEER
REG. NO. 8019
JOHN RAYMOND VAN BEEK
SOUTH DAKOTA
8/17/16

08-17-16 P:\12-117\AutoCAD\PlanSheets\049F\Section B\049F-GRAD-PP-SIDESTREET.dwg

PAVEMENT REMOVAL LAYOUT

FOR BIDDING PURPOSES ONLY

STATE OF SOUTH DAKOTA	PROJECT	SHEET	TOTAL SHEETS
	NH0016(84)67	B68	B136

PLOTTING DATE: 07-29-16

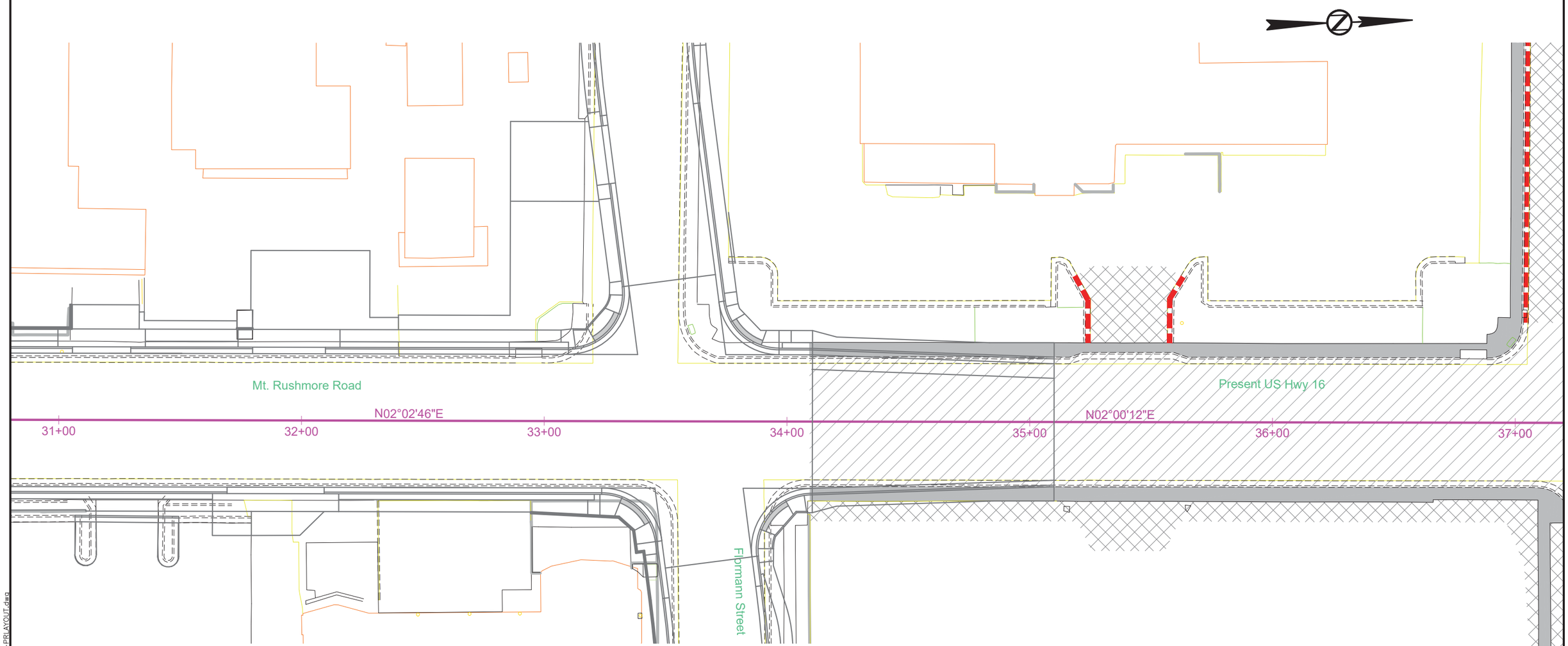

REMOVE CONCRETE PAVEMENT

REMOVE CONCRETE DRIVEWAY PAVEMENT

REMOVE ASPHALT CONCRETE PAVEMENT

REMOVE CONCRETE SIDEWALK/STAIRS

REMOVE CONCRETE APPROACH PAVEMENT

REMOVE CONCRETE MEDIAN PAVEMENT

REMOVE ASPHALT CURB

REMOVE CONCRETE CURB

REMOVE CONCRETE CURB AND GUTTER

REMOVE CONCRETE GUTTER

REMOVE RETAINING WALL

REGISTERED PROFESSIONAL ENGINEER
REG. NO. 8019
JOHN RAYMOND VAN BEEK
SOUTH DAKOTA
8/17/16

07-29-16 P:\12-117\AutoCAD\PlanSheets\049F\Section B\049F-PRLAYOUT.dwg

PAVEMENT REMOVAL LAYOUT

FOR BIDDING PURPOSES ONLY

STATE OF SOUTH DAKOTA	PROJECT	SHEET	TOTAL SHEETS
	NH0016(84)67	B69	B136

PLOTTING DATE: 07-29-16

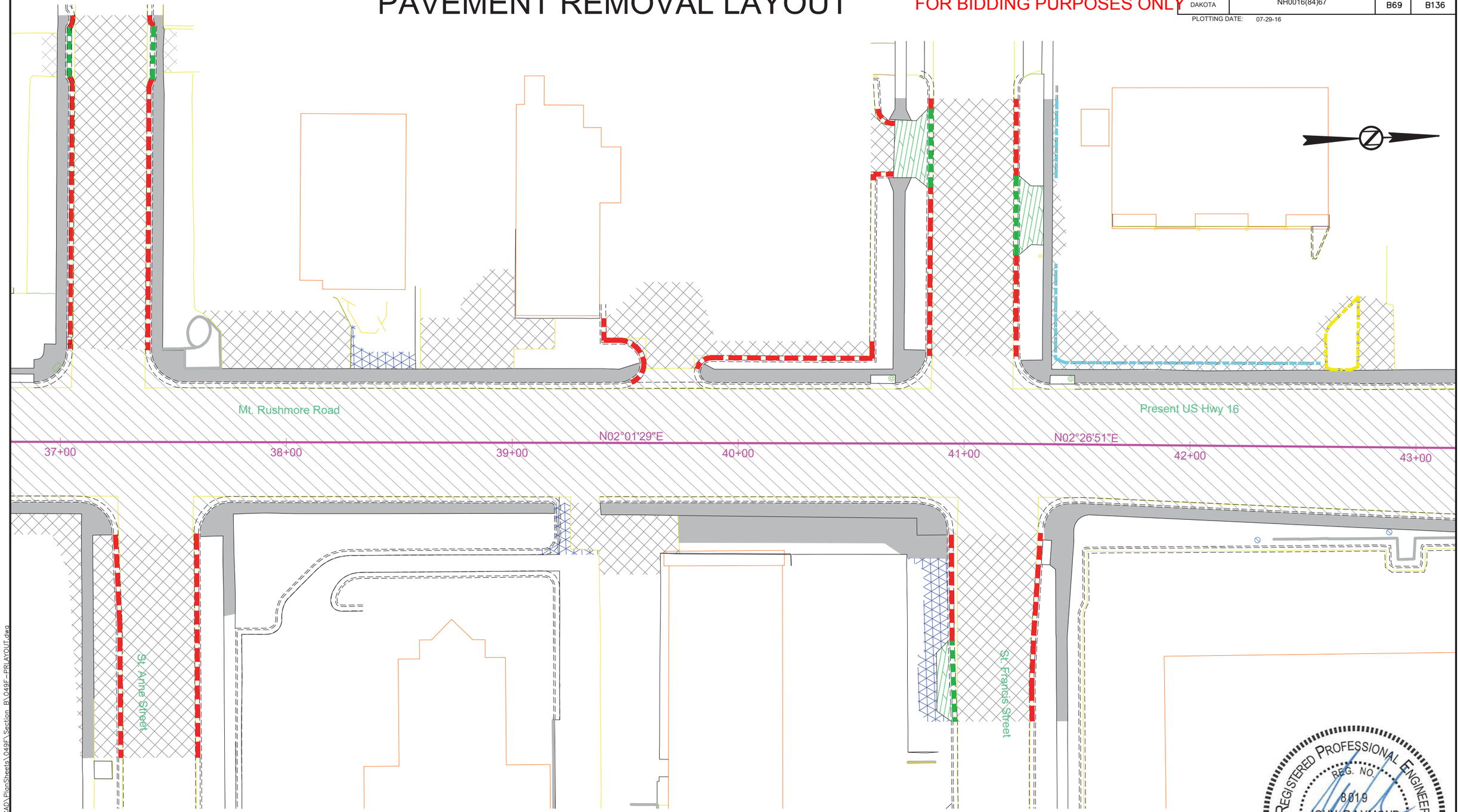

REGISTERED PROFESSIONAL ENGINEER
REG. NO.
8019
JOHN RAYMOND
VAN BEEK
SOUTH DAKOTA
8/17/16

07-29-16 P:\12-117\AutoCAD\PlanSheets\049F\Section B\049F-PRLAYOUT.dwg

PAVEMENT REMOVAL LAYOUT

FOR BIDDING PURPOSES ONLY

STATE OF SOUTH DAKOTA	PROJECT	SHEET	TOTAL SHEETS
	NH0016(84)67	B70	B136

PLOTTING DATE: 07-29-16

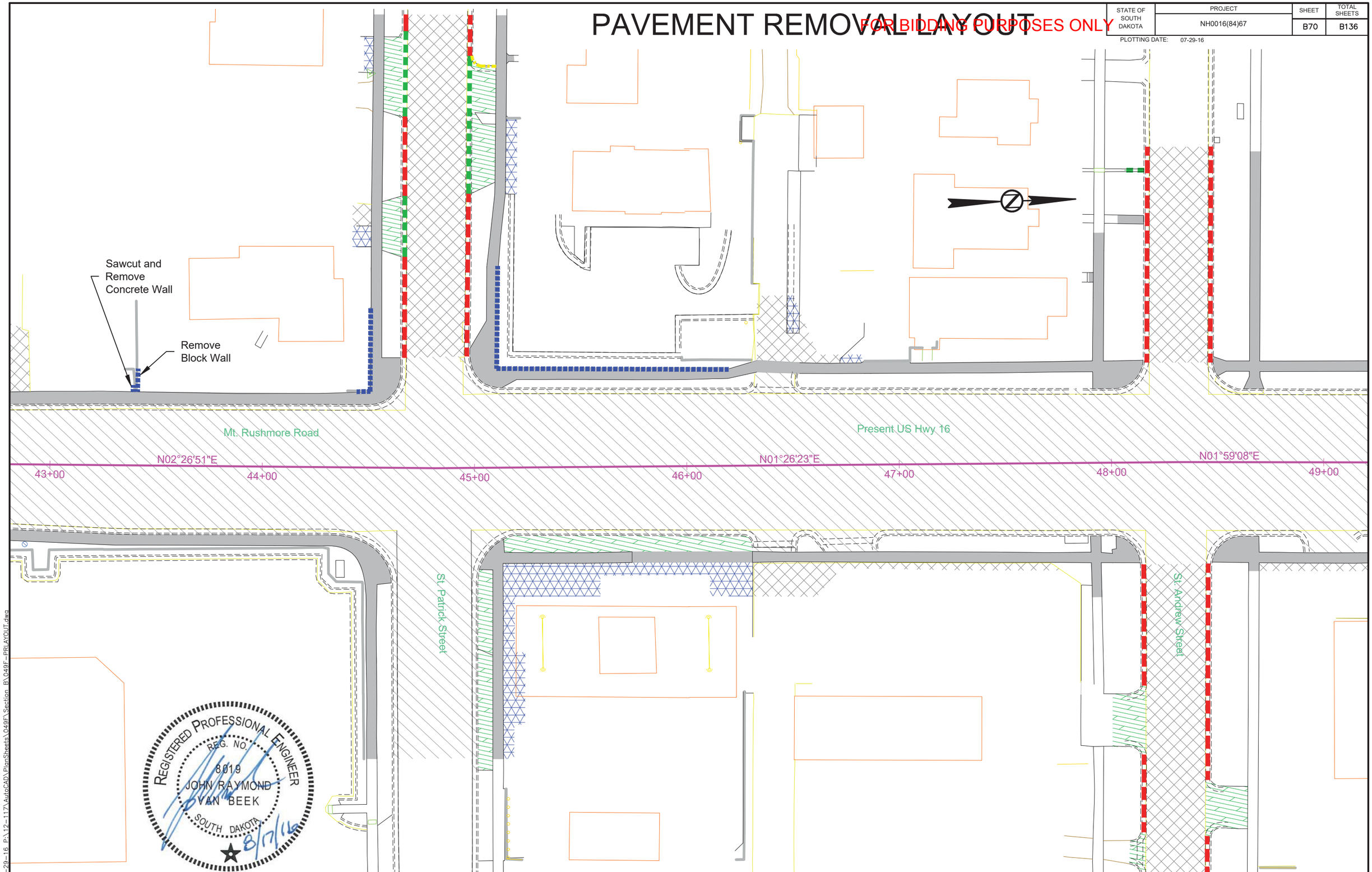

07-29-16 P:\12-117\AutoCAD\PlanSheets\049F\Section_B\049F-PRLAYOUT.dwg

PAVEMENT REMOVAL LAYOUT

FOR BIDDING PURPOSES ONLY

STATE OF SOUTH DAKOTA	PROJECT	SHEET	TOTAL SHEETS
	NH0016(84)67	B71	B136

PLOTTING DATE: 07-29-16

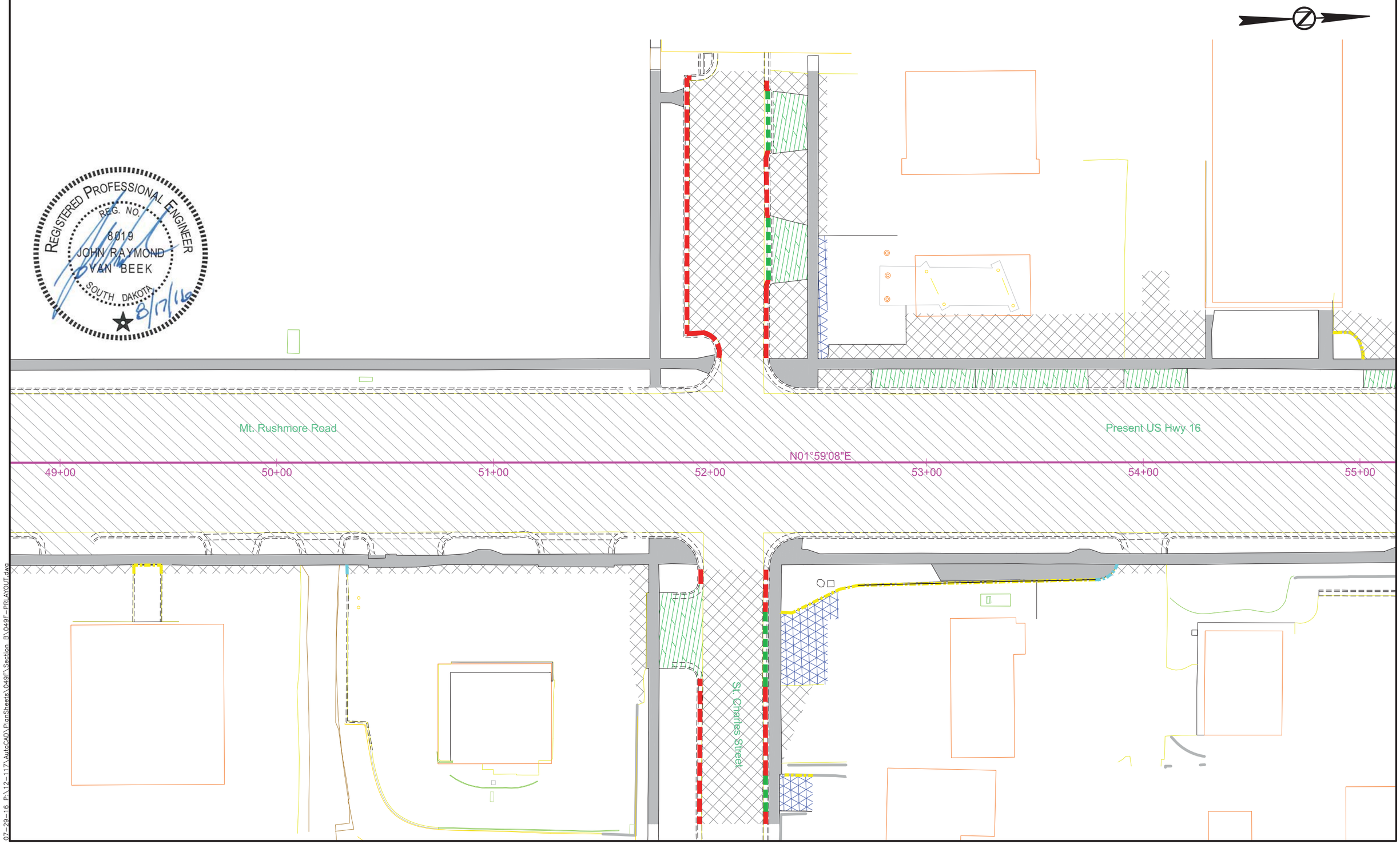

07-29-16 P:\12-117\AutoCAD\PlanSheets\049F\Section B\049F-PRLAYOUT.dwg

PAVEMENT REMOVAL LAYOUT

FOR BIDDING PURPOSES ONLY

STATE OF SOUTH DAKOTA	PROJECT	SHEET	TOTAL SHEETS
	NH0016(84)67	B72	B136

PLOTTING DATE: 08-17-16

REV 08-17-16 ARK

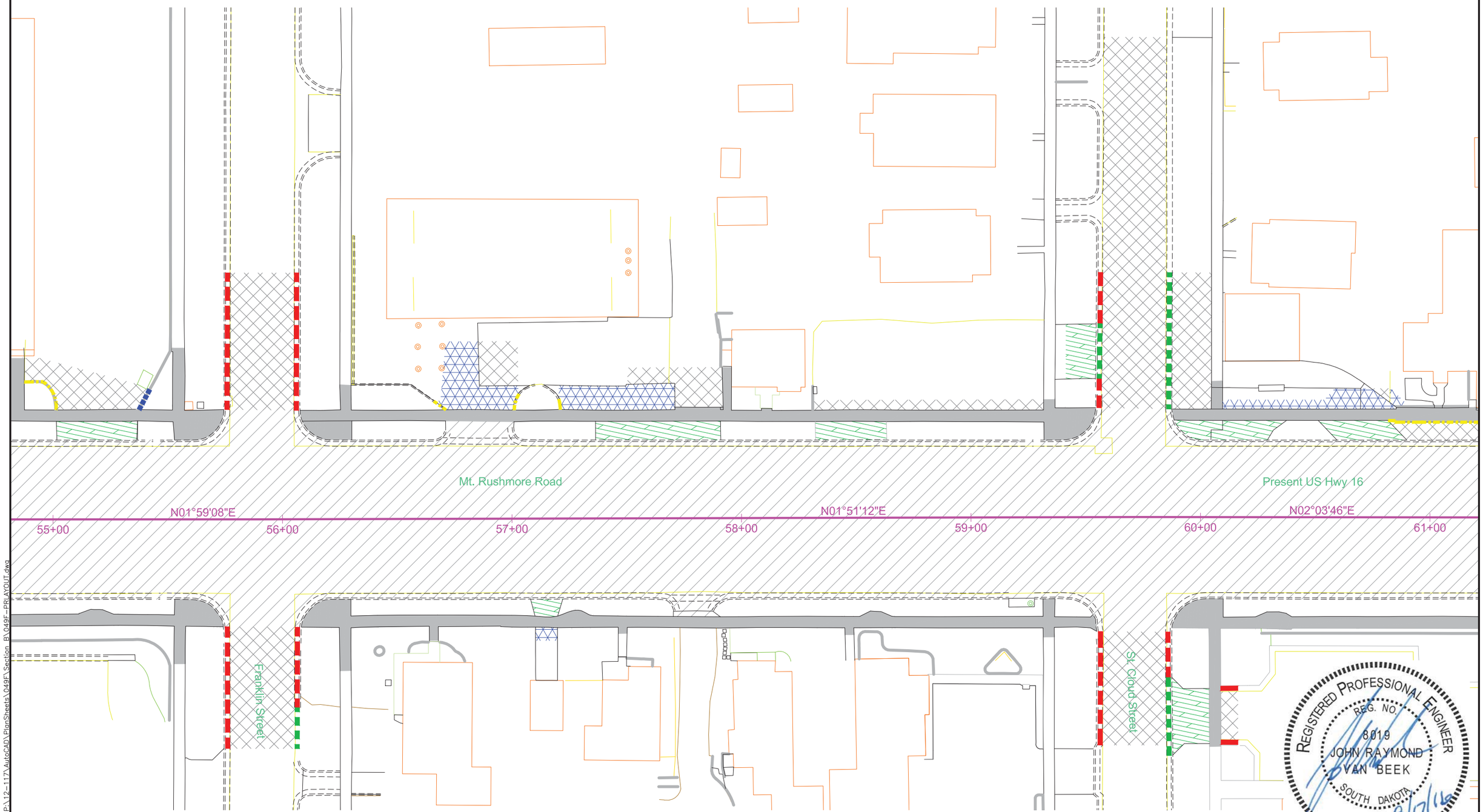

REGISTERED PROFESSIONAL ENGINEER
REG. NO. 8019
JOHN RAYMOND VAN BEEK
SOUTH DAKOTA
8/17/16

08-17-16 P:\12-117\AutoCAD\PlanSheets\049F\Section B\049F-PRLAYOUT.dwg

PAVEMENT REMOVAL LAYOUT

FOR BIDDING PURPOSES ONLY

STATE OF SOUTH DAKOTA	PROJECT	SHEET	TOTAL SHEETS
	NH0016(84)67	B73	B136

PLOTTING DATE: 07-29-16

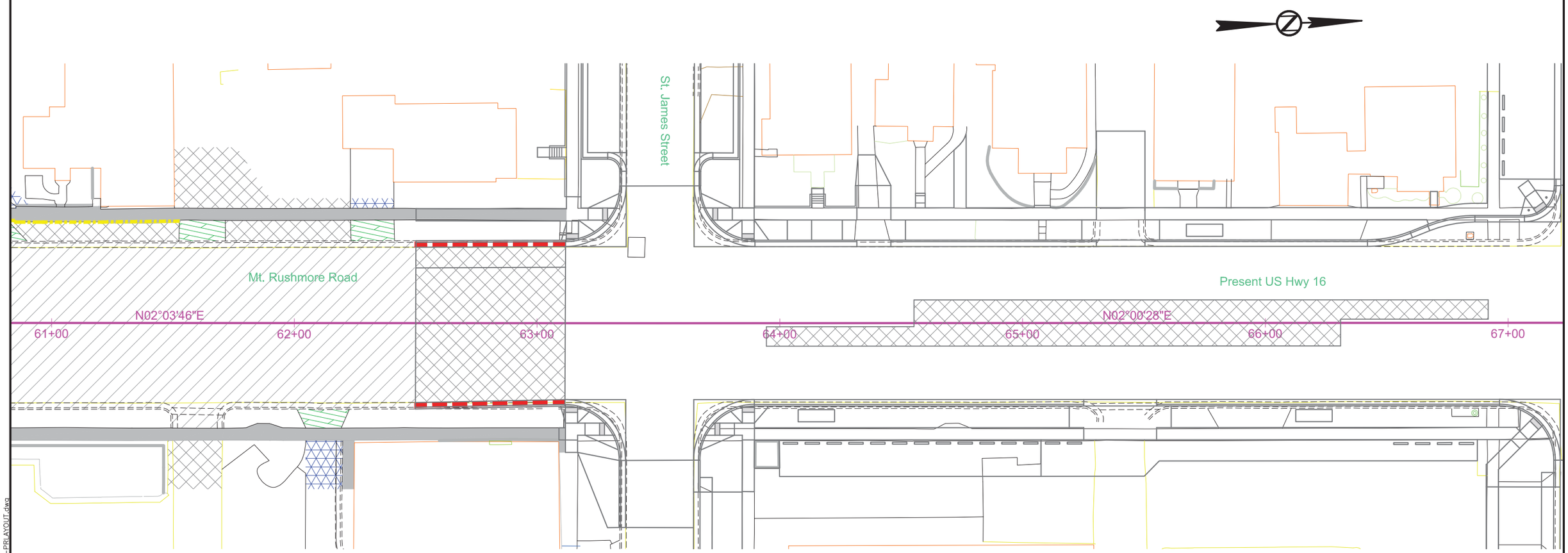

REGISTERED PROFESSIONAL ENGINEER
REG. NO.
8019
JOHN RAYMOND
VAN BEEK
SOUTH DAKOTA
8/17/16

07-29-16 P:\12-117\AutoCAD\PlanSheets\049F\Section_B\049F-PRLAYOUT.dwg

STATE OF SOUTH DAKOTA	PROJECT	SHEET	TOTAL SHEETS
	NH0016(84)67	B74	B136

PLOTTING DATE: 08-17-16 REV 08-17-16 ARK

FOR BIDDING PURPOSES ONLY

CURB & GUTTER LAYOUT

1
34+10.44 - 27.50' L
Begin Str Type B610 C & G
TC El 3338.15

2
35+28.65 - 27.50' L
End Str Type B610 C & G
Begin Type P10 Gutter
Theor TC El 3333.77

3
35+52.65 - 27.50' L
End Type P10 Gutter
Begin Str Type B610 C & G
Theor TC El 3332.99

4
36+89.45 - 27.50' L
End Str Type B610 C & G
Begin 25' Rad Fillet
TC El 3329.21

5
37+14.39 - 54.30' L
End 25' Rad Fillet
Begin Str Type B66 C & G
TC El 3329.27

6
37+46.71 - 50.69' L
End Str Type B66 & G
Begin 25' Rad Fillet
TC El 3328.31

7
37+71.65 - 27.50' L
End 25' Rad Fillet
Begin Str Type B610 C & G
TC El 3327.49

8
34+10.44 - 27.50' R
Begin Str Type B610 C & G
TC El 3337.93

9
35+28.65 - 27.50' R
End Str Type B610 C & G
Begin Type P10 Gutter
Theor TC El 3333.55

10
35+52.65 - 27.50' R
End Type P10 Gutter
Begin Str Type B610 C & G
Theor TC El 3332.77

11
36+97.05 - 27.50' R
End Str Type B610 C & G
Begin 25' Rad Fillet
TC El 3328.81

12
37+21.98 - 50.70' R
End 25' Rad Fillet
Begin Type B66 C & G
TC El 3328.15

13
37+54.35 - 54.31' R
End Str Type B66 C & G
Begin 25' Rad Fillet
TC El 3327.28

14
37+79.28 - 27.50' R
End 25' Rad Fillet
Begin Str Type B610 C & G
TC El 3327.12

15
35+10.52 - 0.60' R
Begin Curb Taper
Theor TC El 3334.70

16
35+16.52 - 0.50' L
End Curb Taper
Begin Str Special
Concrete C & G
TC El 3334.52

17
35+43.82 - 5.50' L
End Str Special
Concrete C & G
Begin Str Special
Concrete C & G
TC El 3333.71

18
35+84.94 - 5.50' L
End Str Special
Concrete C & G
Begin Str Special
Concrete C & G
TC El 3332.43

19
36+12.24 - 5.50' L
End Str Special
Concrete C & G
Begin Curb Taper
TC El 3331.64

20
36+18.24 - 5.50' L
End Curb Taper
Theor TC El 3331.47

21
35+10.52 - 5.50' R
Begin Curb Taper
Theor TC El 3334.60

22
35+16.52 - 5.50' R
End Curb Taper
Begin Str Special
Concrete C & G
TC El 3334.40

23
35+43.82 - 5.50' R
End Str Special
Concrete C & G
Begin Str Special
Concrete C & G
TC El 3333.49

24
35+79.48 - 5.50' R
End Str Special
Concrete C & G
Begin Str Special
Concrete C & G
TC El 3332.37

25
36+12.24 - 0.50' R
End Str Special
Concrete C & G
Begin Curb Taper
TC El 3331.52

26
36+18.24 - 0.60' L
End Curb Taper
Theor TC El 3331.37

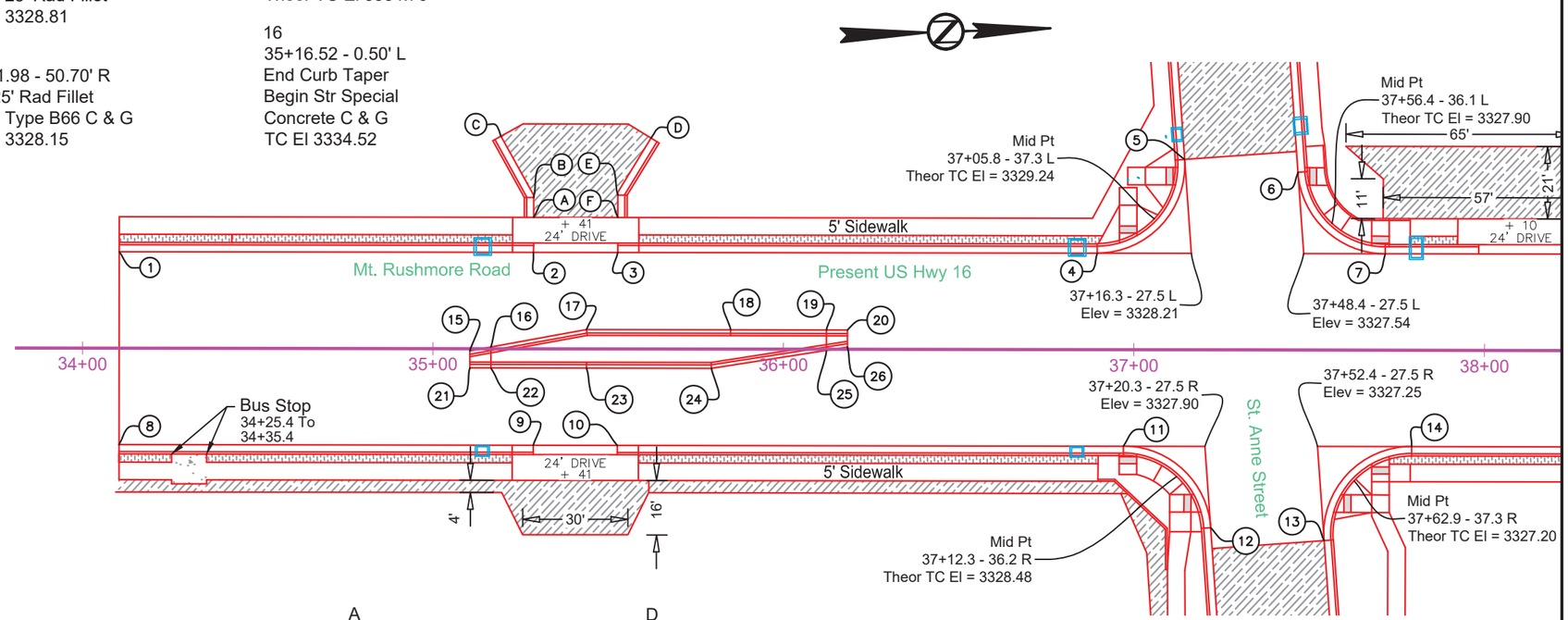

A
35+28.65 - 37.50' L
Bottom of Taper
Begin Str Type B66 C & G
El 3333.61

B
35+28.65 - 43.12' L
Top of Taper
End Str Type B66 C & G
Begin Str Type B66 C & G
El 3334.05

C
35+19.33 - 60.59' L
End Str Type B66 C & G
Match Existing
El 3335.20

D
35+62.13 - 60.15' L
Begin Str Type B66 C & G
El 3333.60

E
35+52.65 - 43.88' L
Top of Taper
End Str Type B66 C & G
Begin Str Type B66 C & G
El 3333.70

F
35+52.65 - 37.50' L
Bottom of Taper
End Str Type B66 C & G
El 3332.83

ASPHALT

CONCRETE

COLORED CONCRETE BOULEVARD

REINFORCED CONCRETE SIDEWALK

GRAVEL

REINFORCED COLORED CONCRETE SIDEWALK

REGISTERED PROFESSIONAL ENGINEER
REG. NO. 8019
JOHN RAYMOND VAN BEEK
SOUTH DAKOTA
8/17/16

08-17-16 P:\12-117\AutoCAD\PlanSheets\049F\Section B\049F-CURB.dwg

CURB & GUTTER LAYOUT

FOR BIDDING PURPOSES ONLY

STATE OF SOUTH DAKOTA	PROJECT	SHEET	TOTAL SHEETS
	NH0016(84)67	B75	B136

PLOTTING DATE: 08-17-16 REV 08-17-16 ARK

1
37+98.34 - 27.50' L
End Str Type B610 C & G
Begin Type P10 Gutter
Theor TC El 3326.97

2
38+22.34 - 27.50' L
End Str Type P10 Gutter
Begin Str Type B610 C & G
TC El 3326.50

3
38+77.15 - 27.50' L
End Str Type B610 C & G
Begin Type P10 Gutter
Theor TC El 3325.43

4
39+01.15 - 27.50' L
End Type P10 Gutter
Begin Str Type B610 C & G
Theor TC El 3324.97

5
39+57.82 - 27.50' L
End Str Type B610 C & G
Begin Type P10 Gutter
Theor TC El 3324.10

6
39+81.82 - 27.50' L
End Type P10 Gutter
Begin Str Type B610 C & G
Theor TC El 3323.85

7
40+62.05 - 27.50' L
End Str Type B610 C & G
Begin 25' Rad Fillet
TC El 3323.46

8
40+87.01 - 54.01' L
End 25' Rad Fillet
Begin Str Type B66 C & G
TC El 3323.96

9
41+22.90 - 50.81' L
End Str Type B66 C & G
Begin 25' Rad Fillet
TC El 3324.11

10
41+47.84 - 27.50' L
End 25' Rad Fillet
Begin Str Type B610 C & G
TC El 3323.84

11
42+74.42 - 27.50' L
End Str Type B610 C & G
Begin Type P10 Gutter
Theor TC El 3325.90

12
42+98.42 - 27.50' L
End Type P10 Gutter
Begin Str Type B610 C & G
TC El 3326.49

13
39+21.38 - 27.50' R
End Str Type B610 C & G
Begin Type P10 Gutter
Theor TC El 3324.40

14
39+37.38 - 27.50' R
End Type P10 Gutter
Begin Str Type B610 C & G
TC El 3324.15

15
40+70.40 - 27.50' R
End Str Type B610 C & G
Begin 25' Rad Fillet
TC El 3323.24

16
40+95.36 - 50.99' R
End 25' Rad Fillet
Begin Str Type B66 C & G
TC El 3322.84

17
41+28.02 - 54.19' R
End Str Type B66 C & G
Begin 25' Rad Fillet
TC El 3323.02

18
41+52.96 - 27.50' R
End 25' Rad Fillet
Begin Str Type B610 C & G
TC El 3323.67

19
38+74.37 - 0.21' L
Begin Curb Taper
Theor TC El 3325.82

20
38+80.37 - 1.31' L
End Curb Taper
Begin Str Special
Concrete C & G
TC El 3325.72

21
39+03.25 - 5.50' L
End Str Special
Concrete C & G
Begin Str Special
Concrete C & G
TC El 3325.37

22
39+61.77 - 5.50' L
End Str Special
Concrete C & G
Begin Str Special
Concrete C & G
TC El 3324.50

23
39+89.07 - 5.50' L
End Str Special
Concrete C & G
Begin Curb Taper
TC El 3324.22

24
39+95.07 - 5.50' L
End Curb Taper
Theor TC El 3324.17

25
38+74.37 - 5.50' R
Begin Curb Taper
Theor TC El 3325.70

26
38+80.37 - 5.50' R
End Curb Taper
Begin Str Special
Concrete C & G
TC El 3325.59

27
39+03.25 - 5.50' R
End Str Special
Concrete C & G
Begin Str Special
Concrete C & G
TC El 3325.15

28
39+61.77 - 5.50' R
End Str Special
Concrete C & G
Begin Str Special
Concrete C & G
TC El 3324.28

29
39+89.07 - 0.50' R
End Str Special
Concrete C & G
Begin Curb Taper
TC El 3324.10

30
39+95.07 - 0.61' L
End Curb Taper
Theor TC El 3324.08

REGISTERED PROFESSIONAL ENGINEER
REG. NO. 8019
JOHN RAYMOND VAN BEEK
SOUTH DAKOTA
8/17/16

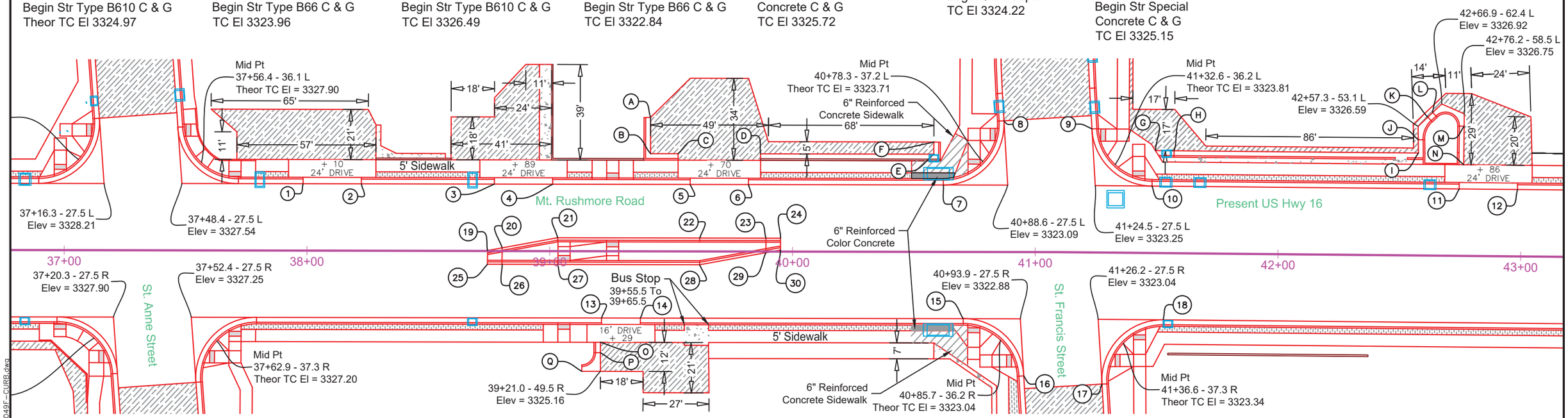

A
39+41.42 - 55.09' L
Begin Str Type B66 C & G
TC El 3327.62

B
39+41.42 - 40.17' L
End Str Type B66 C & G
Begin Str Type B66 C & G
TC El 3324.90

C
39+52.82 - 40.17' L
End Str Type B66 C & G
TC El 3324.75

D
39+86.82 - 40.17' L
Begin Str Type B66 C & G
TC El 3324.59

E
40+58.14 - 40.17' L
End Str Type B66 C & G
Begin Str Type B66 C & G
TC El 3324.65

F
40+58.14 - 45.16' L
End Str Type B66 C & G
TC El 3324.78

G
41+49.12 - 42.17' L
Begin Str Type B66 C & G
TC El 3324.43

H
41+56.83 - 42.17' L
End Str Type B66 C & G
Begin Str Type B66 C & G
TC El 3324.58

I
42+57.47 - 42.17' L
End Str Type B66 C & G
Begin Str Type B66 C & G
TC El 3326.36

J
42+57.37 - 47.61' L
End Str Type B66 C & G
Begin 10' Rad
TC El 3326.64

K
42+61.22 - 56.95' L
End 10' Rad
Begin Str Type B66 C & G
TC El 3327.10

L
42+63.21 - 58.88' L
End Str Type B66 C & G
Begin 5' Rad
TC El 3327.17

M
42+76.21 - 53.37' L
End 5' Rad
Begin Str Type B66 C & G
TC El 3326.91

N
42+76.21 - 37.50' L
End Str Type B66 C & G
TC El 3326.19

O
39+20.97 - 37.50' R
Begin Str Type B66 C & G
TC El 3324.72

P
39+20.97 - 41.79' R
End Str Type B66 C & G
Begin 5' Rad Fillet
TC El 3325.49

Q
39+13.30 - 49.46' R
End 5' Rad Fillet
TC El 3325.72

08-17-16 P:\12-117\AutoCAD\PlanSheets\049F\Section B\049F-CURB.dwg

STATE OF SOUTH DAKOTA	PROJECT	SHEET	TOTAL SHEETS
	NH0016(84)67	B76	B136

PLOTTING DATE: 08-17-16 REV 08-17-16 ARK

CURB & GUTTER LAYOUT

FOR BIDDING PURPOSES ONLY

1
44+38.66 - 27.50' L
End Str Type B610 C & G
Begin 25' Rad Fillet
TC El 3328.98

2
44+63.66 - 52.55' L
End 25' Rad Fillet
Begin Str Type B66 C & G
TC El 3329.64

3
45+00.60 - 53.30' L
End Str Type B66 C & G
Begin 25' Rad Fillet
TC El 3329.57

4
45+25.99 - 27.91' L
End 25' Rad Fillet
Begin Str Type B610 C & G
TC El 3328.64

5
46+29.54 - 29.57' L
End Str Type B610 C & G
Begin Type P10 Gutter
Theor TC El 3326.29

6
46+53.54 - 29.96' L
End Type P10 Gutter
Begin Str Type B610 C & G
Theor TC El 3325.64

7
47+93.00 - 31.50' L
End Str Type B610 C & G
Begin 25' Rad Fillet
TC El 3321.88

8
48+18.00 - 56.22' L
End 25' Rad Fillet
Begin Str Type B66 C & G
TC El 3321.70

9
48+45.47 - 56.54' L
End Str Type B66 C & G
Begin 25' Rad Fillet
TC El 3320.97

10
48+70.47 - 31.50' L
End 25' Rad Fillet
Begin Str Type B610 C & G
TC El 3319.81

11
44+39.31 - 27.50' R
End Str Type B610 C & G
Begin 25' Rad Fillet
TC El 3328.87

12
44+64.31 - 52.23' R
End 25' Rad Fillet
Begin Str Type B610 C & G
TC El 3328.16

13
44+99.39 - 52.73' R
End Str Type B610 C & g
Begin 25' Rad Fillet
TC El 3328.04

14
45+24.79 - 27.90' R
End 25' Rad Fillet
Begin Str Type B610 C & G
TC El 3328.62

15
45+29.75 - 27.98' R
End Str Type B610 C & G
Begin Str Type B610 C & G
TC El 3328.54

16
45+40.64 - 28.16' R
End Str Type B610 C & G
Begin 3.7' Rad Fillet
TC El 3328.35

17
45+43.18 - 34.42' R
End 3.67' Rad Fillet
Begin Str Type B610 C & G
TC El 3328.26

18
45+36.93 - 40.67' R
End Str Type B610 C & G
TC El 3328.69

19
45+55.60 - 38.97' R
Begin Str Type B610 C & G
TC El 3328.43

20
45+59.22 - 35.35' R
End Str Type B610 C & G
Begin 22.7' Rad Fillet
TC El 3328.38

21
45+75.61 - 28.71' R
End 22.7' Rad Fillet
Begin Str Type B6 C & G
TC El 3327.85

22
46+11.01 - 29.28' R
End Str Type B610 C & G
Begin Type P10 Gutter
Theor TC El 3327.17

23
46+61.01 - 30.08' R
End Type P10 Gutter
Begin Str Type B610 C & G
Theor TC El 3325.82

24
47+91.73 - 31.50' R
End Str Type B610 C & G
Begin 25' Rad Fillet
TC El 3322.30

REGISTERED PROFESSIONAL ENGINEER
REG. NO. 8019
JOHN RAYMOND VAN BEEK
SOUTH DAKOTA
8/17/16

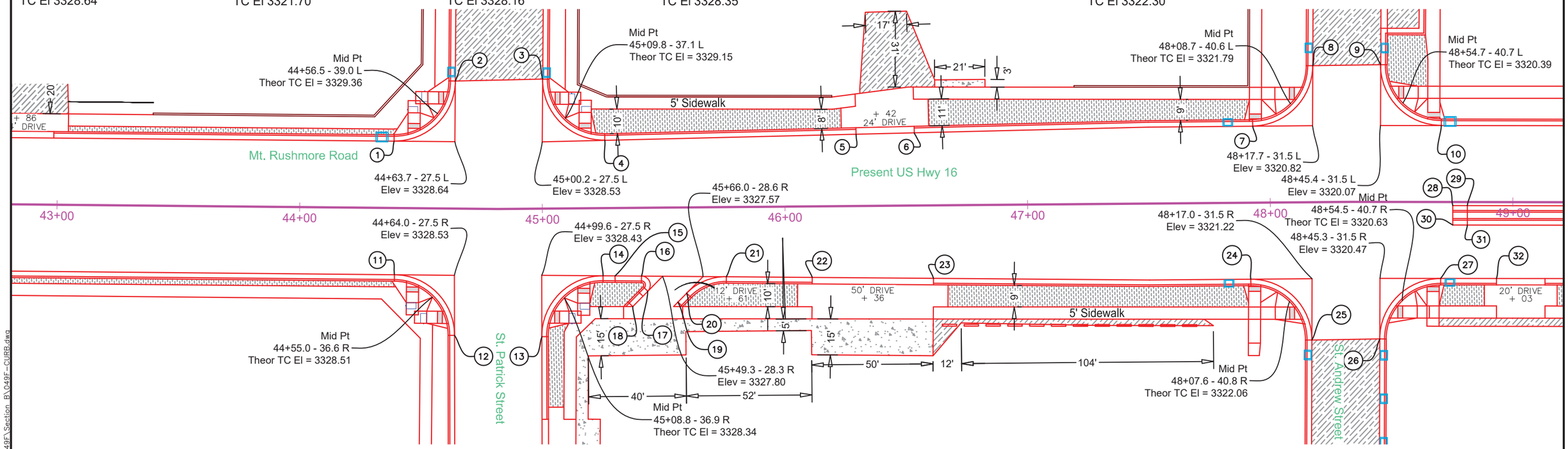

25
48+16.73 - 56.78' R
End 25' Rad Fillet
Begin Str Type B66 C & G
TC El 3321.82

26
48+45.27 - 56.46' R
End Str Type B66 C & G
Begin 25' Rad Fillet
TC El 3321.07

27
48+70.27 - 31.50' R
End 25' Rad Fillet
Begin Str Type B610 C & G
TC El 3320.20

28
48+75.23 - 1.50' R
Begin Curb Taper
Theor TC El 3320.34

29
48+81.23 - 1.50' R
End Curb Taper
Begin Str Type B610 C & G
TC El 3320.18

30
48+75.23 - 9.50' R
Begin Curb Taper
Theor TC El 3320.50

31
48+81.23 - 9.50' R
End Curb Taper
Begin Str Type B610 C & G
TC El 3320.34

32
48+93.30 - 31.50' R
End Str Type B610 C & G
Begin Type P10 Gutter
Theor TC El 3319.58

08-17-16 P:\12-117\AutoCAD\PlanSheets\049F\Section_B\049F-CURB.dwg

CURB & GUTTER LAYOUT

FOR BIDDING PURPOSES ONLY

STATE OF SOUTH DAKOTA	PROJECT	SHEET	TOTAL SHEETS
	NH0016(84)67	B77	B136

PLOTTING DATE: 08-17-16 REV 08-17-16 ARK

1
50+18.41 - 31.50' L
End Str Type B610 C & G
Begin Str Type B610 C & g
TC El 3316.89

2
50+54.41 - 43.50' L
End Str Type B610 C & G
Begin Str Type B610 C & G
TC El 3315.98

3
51+04.41 - 43.50' L
End Str Type B610 C & G
Begin Str Type B610 C & G
TC El 3315.09

4
51+64.15 - 31.55' L
End Str Type B610 C & G
Begin Str Type B610 C & G
TC El 3314.26

5
51+71.43 - 31.50' L
End Str Type B610 C & G
Begin 25' Rad Fillet
TC El 3314.13

6
51+96.43 - 56.51' L
End 25' Rad Fillet
Begin Str Type B66 C & G
TC El 3313.26

7
52+24.43 - 56.49' L
End Str Type B66 C & G
Begin 25' Rad Fillet
TC El 3312.76

8
52+49.43 - 31.50' L
End 25' Rad Fillet
Begin Str Type B610 C & G
TC El 3312.73

9
53+10.59 - 31.50' L
End Str Type B610 C & G
Begin Type P10 Gutter
Theor TC El 3311.63

10
53+34.59 - 31.50' L
End Type P10 Gutter
Begin Str Type B610 C & G
Theor TC El 3311.20

11
53+71.04 - 31.57' L
End Str Type B610 C & G
Begin Type P10 Gutter
Theor TC El 3310.54

12
54+11.04 - 31.50' L
End Type P10 Gutter
Begin Str Type B610 C & G
TC El 3309.78

13
54+97.14 - 31.50' L
End Str Type B610 C & G
Begin 50' Rad
Type B610 C & G
TC El 3307.89

14
49+13.30 - 31.50' R
End Type P10 Gutter
Begin Str Type B610 C & G
Theor TC El 3319.16

15
49+69.28 - 31.50' R
End Str Type B610 C & G
Begin Type P10 Gutter
Theor TC El 3318.15

16
49+89.28 - 31.50' R
End Type P10 Gutter
Begin Str Type B610 C & G
Theor TC El 3317.79

17
50+10.62 - 31.50' R
End Str Type B610 C & G
Begin Type P10 Gutter
Theor TC El 3317.41

18
50+30.62 - 31.50' R
End Type P10 Gutter
Begin Str Type B610 C & G
Theor TC El 3317.05

19
50+45.62 - 31.51' R
End Str Type B610 C & G
Begin Type P10 Gutter
Theor TC El 3316.78

20
50+73.62 - 31.50' R
End Type P10 Gutter
Begin Str Type B610 C & G
Theor TC El 3316.27

21
51+23.28 - 31.50' R
End Type B610 C&G
Begin Type P10 Gutter
Theor TC El 3315.38

22
51+53.28 - 31.50' R
End type P10 Gutter
Begin type B610 C&G
Theor TC El 3314.84

23
51+71.49 - 31.50' R
End Str Type B610 C & G
Begin 25' Rad Fillet
TC El 3314.51

24
51+96.49 - 56.49' R
End 25' Rad Fillet
Begin Str Type B66 C & G
TC El 3314.63

25
52+24.49 - 56.51' R
End Str Type B66 C & G
Begin 25' Rad Fillet
TC El 3314.12

26
52+49.49 - 31.50' R
End 25' Rad Fillet
Begin Str Type B610 C & G
TC El 3313.11

27
53+90.63 - 31.50' R
End Str Type B610 C & G
Begin Type P10 Gutter
Theor TC El 3310.57

28
54+10.63 - 31.50' R
End Type P10 Gutter
Begin Str Type B610 C & G
Theor TC El 3310.17

29
49+36.03 - 1.50' R
End Str Type B610 C & G
Begin Str Type B610 C & G
TC El 3319.00

30
49+96.03 - 9.50' L
End Str Type B610 C & G
Begin Str Type B610 C & G
TC El 3317.73

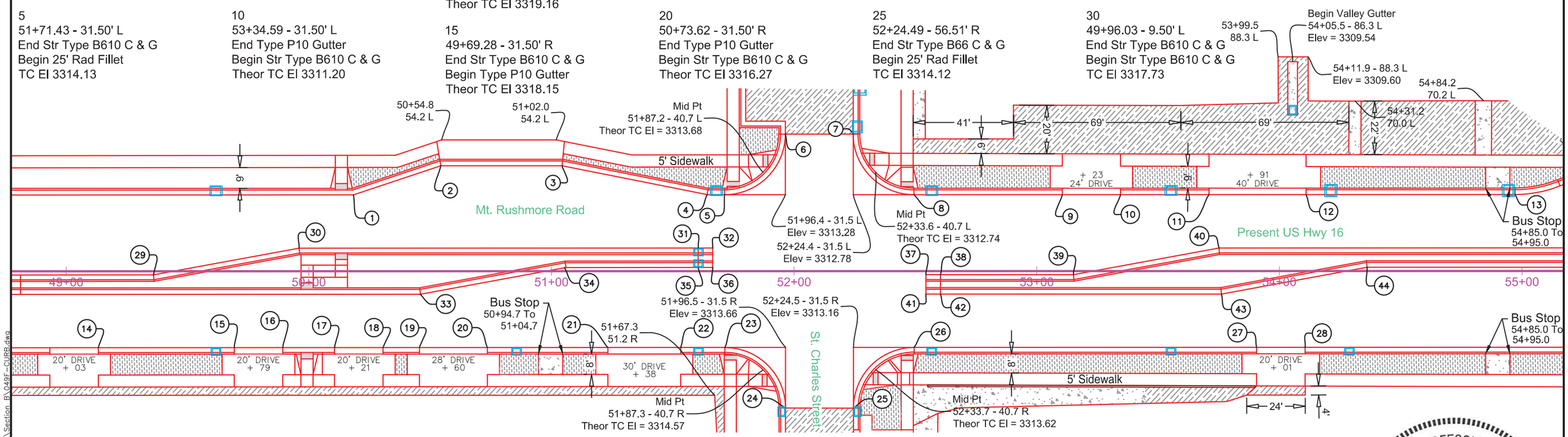

31
51+60.52 - 9.50' L
End Str Type B610 C & G
Begin Curb Taper
TC El 3314.77

32
51+66.52 - 9.50' L
End Curb Taper
Theor TC El 3314.66

33
50+45.99 - 9.50' R
End Str Type B610 C & G
Begin Str Type B610 C & G
TC El 3317.21

34
51+05.46 - 1.43' L
End Str Type B610 C & G
Begin Str Type B610 C & G
TC El 3315.91

35
51+60.52 - 1.50' L
End Str Type B610 C & G
Begin Curb Taper
TC El 3314.93

36
51+66.52 - 1.50' L
End Curb Taper
Theor TC El 3314.82

37
52+54.35 - 1.50' R
Begin Curb Taper
Theor TC El 3313.30

38
52+60.35 - 1.50' R
End Curb Taper
Begin Str Type B610 C & G
TC El 3313.19

39
53+15.15 - 1.50' R
End Str Type B610 C & G
Begin Str Type B610 C & G
TC El 3312.21

40
53+75.15 - 9.50' L
End Str Type B610 C & G
Begin Str Type B610 C & G
TC El 3310.91

41
52+54.35 - 9.50' R
Begin Curb Taper
Theor TC El 3313.46

42
52+60.35 - 9.50' R
End Curb Taper
Begin Str Type B610 C & G
TC El 3313.35

43
53+76.16 - 9.50' R
End Str Type B610 C & G
Begin Str Type B610 C & G
TC El 3311.27

44
54+36.16 - 1.50' L
End Str Type B610 C & G
Begin Str Type B610 C & G
TC El 3309.82

REGISTERED PROFESSIONAL ENGINEER
REG. NO. 8019
JOHN RAYMOND VAN BEEK
SOUTH DAKOTA
8/17/16

08-17-16 P:\12-117\AutoCAD\PlanSheets\049F\Section_B\049F_CURB.dwg

CURB & GUTTER LAYOUT

FOR BIDDING PURPOSES ONLY

STATE OF SOUTH DAKOTA	PROJECT	SHEET	TOTAL SHEETS
	NH0016(84)67	B78	B136

PLOTTING DATE: 08-17-16 REV 08-17-16 ARK

1
55+15.71 - 35.08' L
End 50' Rad Type B610 C & G
Begin Str Type B610 C & G
TC El 3307.41

2
55+22.83 - 37.92' L
End Str Type B610 C & G
Begin 50' Rad Type B610 C & G
TC El 3307.20

3
55+41.40 - 41.50' L
End 50' Rad Type B610 C & G
Begin Str Type B610 C & G
TC El 3306.72

4
55+61.95 - 41.50' L
End Str Type B610 C & G
Begin 15' Rad Fillet
TC El 3306.27

5
55+76.95 - 56.44' L
End 15' Rad Fillet
Begin Str Type B66 C & G
TC El 3305.94

6
56+05.08 - 56.62' L
End Str Type B66 C & G
Begin 25' Rad Fillet
TC El 3305.33

7
56+30.08 - 31.50' L
End 25' Rad Fillet
Begin Str Type B610 C & G
TC El 3304.98

8
56+68.20 - 31.50' L
End Str Type B610 C & G
Begin Type P10 Gutter
Theor TC El 3304.00

9
56+98.20 - 31.50' L
End Type P10 Gutter
Begin Str Type F C & G
Theor TC El 3303.21

10
57+50.63 - 31.50' L
End Str Type F C & G
Begin Type P10 Gutter
Theor TC El 3302.04

11
57+90.63 - 31.50' L
End Type P10 Gutter
Begin Str Type B6109 C & G
Theor TC El 3301.16

12
58+35.83 - 31.50' L
End Str Type B610 C & G
Begin Type P10 Gutter
Theor TC El 3300.17

13
58+59.83 - 31.50' L
End Type P10 Gutter
Begin Str Type B610 C & G
Theor TC El 3299.65

14
55+51.67 - 31.50' R
End Str Type B610 C & G
Begin 25' Rad Fillet
TC El 3307.08

15
55+76.67 - 56.56' R
End 25' Rad Fillet
Begin Str Type B66 C & G
TC El 3306.94

16
56+04.54 - 56.38' R
End Str Type B66 C & G
Begin 14.89' Rad Fillet
TC El 3306.32

17
56+19.47 - 41.50' R
End 14.89' Rad Fillet
Begin Str Type B610 C & G
TC El 3305.51

18
56+39.92 - 41.50' R
End Str Type B610 C & G
Begin 50' Rad
TC El 3304.92

19
56+58.49 - 37.92' R
End 50' Rad
Begin Str Type B610 C & G
TC El 3304.50

20
56+65.61 - 35.08' R
End Str Type B610 C & G
Begin 50' Rad
TC El 3304.37

21
56+84.18 - 31.50' R
End 50' Rad
Begin Str Type B610 C & G
TC El 3303.96

22
57+06.92 - 31.50' R
End Str Type B610 C & G
Begin Type P10 Gutter
Theor TC El 3303.38

23
57+22.92 - 31.50' R
End Type P10 Gutter
Begin Str Type B610 C & G
Theor TC El 3303.03

24
57+70.90 - 31.50' R
End Str Type B610 C & G
Begin Type P10 Gutter
Theor TC El 3301.97

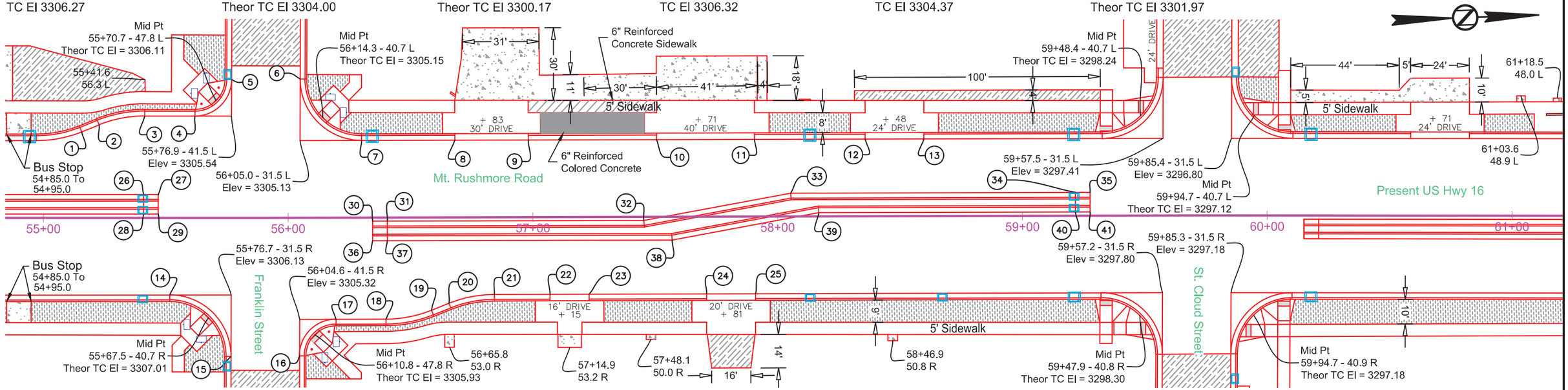

25
57+90.90 - 31.50' R
End Type P10 C & G
Begin Str Type B610 C & G
Theor TC El 3301.54

26
55+40.96 - 9.50' L
End Str Type B610 C & G
Begin Curb Taper
TC El 3307.37

27
55+46.96 - 9.50' L
End Curb Taper
Theor TC El 3307.24

28
55+40.96 - 1.50' L
End Str Type B610 C & G
Begin Curb Taper
TC El 3307.53

29
55+46.96 - 1.50' L
End Curb Taper
Theor TC El 3307.40

30
56+34.53 - 1.50' R
Begiln Curb Taper
Theor TC El 3305.54

31
56+40.53 - 1.50' R
End Curb Taper
Begin Str Type B610 C & G
TC El 3305.39

32
57+45.33 - 1.50' R
End Str Type B610 C & G
Begin Str Type B610 C & G
TC El 3302.78

33
58+05.33 - 9.50' L
End Str Type B610 C & G
Begin Str Type B610 C & G
TC El 3301.28

34
59+21.68 - 9.50' L
End Str Type B610 C & G
Begin Curb Taper
TC El 3298.88

35
59+27.68 - 9.50' L
End Curb Taper
Theor TC El 3298.79

36
56+34.53 - 9.50' R
Begin Curb Taper
Theor TC El 3305.70

37
56+40.53 - 9.50' R
End Curb Taper
Begin Str Type B610 C & G
TC El 3305.55

38
57+56.89 - 9.50' R
End Str Type B610 C & G
Begin Str Type B610 C & G
TC El 3302.72

39
58+16.89 - 1.50' L
End Str Type B610 C & G
Begin Str Type B610 C & G
TC El 3301.18

40
59+21.68 - 1.50' L
End Str Type B610 C & G
Begin Curb Taper
TC El 3299.04

41
59+27.68 - 1.50' L
End Curb Taper
Theor TC El 3298.95

REGISTERED PROFESSIONAL ENGINEER
REG. NO. 8019
JOHN RAYMOND VAN BEEK
SOUTH DAKOTA
8/17/16

08-17-16 P:\12-117\AutoCAD\PlanSheets\049F\Section_B\049F-CURB.dwg

STATE OF SOUTH DAKOTA	PROJECT	SHEET	TOTAL SHEETS
	NH0016(84)67	B79	B136

PLOTTING DATE: 08-17-16 REV 08-17-16 ARK

FOR BIDDING PURPOSES ONLY

1
59+32.67 - 31.50' L
End Str Type B610 C & G
Begin 25' Rad Fillet
TC El 3298.28

2
59+57.67 - 56.36' L
End 25' Rad Fillet
Begin Str Type B66 C & G
TC El 3298.20

3
59+85.46 - 56.55' L
End Str Type B66 C & G
Begin 25' Rad Fillet
TC El 3297.60

4
60+10.46 - 31.50' L
End 25' Rad Fillet
Begin Str Type B610 C & G
TC El 3296.65

5
60+58.61 - 31.50' L
End Str Type B610 C & G
Begin Type P10 Gutter
Tc El 3295.59

6
60+82.61 - 31.50' L
End Type P10 Gutter
Begin Str Type B610 C & G
TC El 3295.00

7
61+50.12 - 31.50' L
End Str Type B610 C & G
Begin Type P10 Gutter
TC El 3292.58

8
61+76.12 - 31.50' L
End Type P10 Gutter
Begin Str Type B610 C & G
TC El 3291.66

9
63+11.70 - 31.50' L
End Str Type B610 C & G
TC El 3288.93

10
59+32.03 - 31.50' R
End Str Type B610 C & G
Begin 25' Rad Fillet
TC El 3298.67

11
59+57.03 - 56.64' R
End 25' Rad Fillet
Begin Str Type B66 C & G
TC El 3297.94

12
59+85.24 - 57.12' R
End Str Type B66 C & G
Begin 25' Rad Fillet
TC El 3297.32

13
60+10.91 - 31.50' R
End 25' Rad Fillet
Begin Str Type B610 C & G
TC El 3297.02

14
61+45.47 - 31.50' R
End Str Type B610 C & G
Begin Type P10 Gutter
Theor TC El 3293.14

15
61+75.47 - 31.50' R
End Type P10 Gutter
Begin Str Type B610 C & G
TC El 3292.06

16
62+04.47 - 31.50' R
End Str Type B610 C & G
Begin Type P10 Gutter
Theor TC El 3291.17

17
62+20.47 - 31.50' R
End Type P10 Gutter
Begin Str Type B610 C & G
Theor TC El 3290.75

18
63+11.52 - 31.50' R
End Str Type B610 C & G
TC El 3289.31

19
60+15.06 - 1.50' R
Begin Curb Taper
Theor TC El 3297.21

20
60+21.06 - 1.50' R
End Curb Taper
Begin Str Type B610 C & G
TC El 3297.08

21
61+25.85 - 1.50' R
End Str Type B610 C & G
Begin Str Type B610 C & G
TC El 3294.14

22
61+86.18 - 9.50' L
End Str Type B610 C & G
Begin Str Type B610 C & G
TC El 3291.77

23
63+00.70 - 9.50' L
End Str Type B610 C & G
Begin Curb Taper
TC El 3289.47

24
63+06.70 - 9.50' L
End Curb Taper
Theor TC El 3289.41

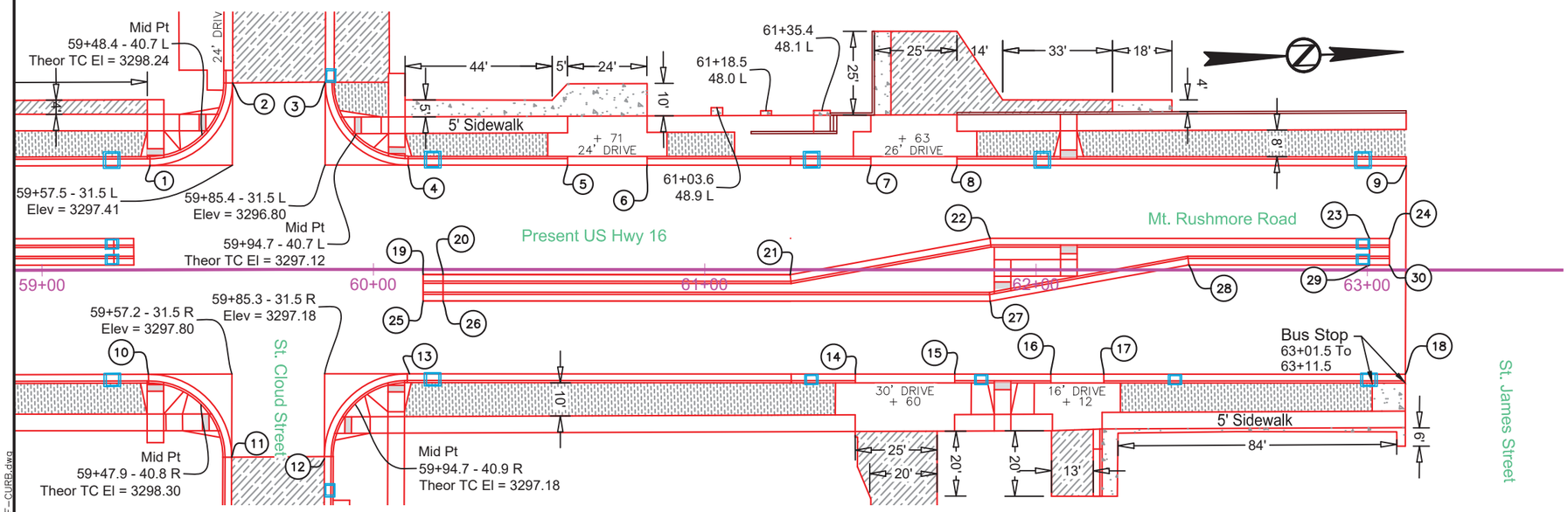

25
60+15.06 - 9.50' R
Begin Curb Taper
Theor TC 3296.97

26
60+21.06 - 9.50' R
End Curb Taper
Begin Str Type B610 C & G
TC 3296.84

27
61+86.18 - 9.50' R
End Str Type B610 C & G
Begin Str Type B610 C & G
TC 3291.75

28
62+46.18 - 1.50' L
End Str Type B610 C & G
Begin Str Type B610 C & G
TC 3290.01

29
63+00.70 - 1.50' L
End Str Type B610 C & G
Begin Curb Taper
TC 3289.23

30
63+06.70 - 1.50' L
End Curb Taper
Theor TC 3289.17

31
63+94.46 - 1.60' R
Begin Curb Taper
Theor TC 3288.44

32
64+00.46 - 1.60' R
End Curb Taper
Begin Str Type B610 C & G
TC 3288.39

33
64+55.26 - 1.50' R
End Str Type B610 C & G
Begin Str Type B610 C & G
TC 3287.96

34
65+15.26 - 9.50' L
End Str Type B610 C & G
Begin Str Type B610 C & G
TC 3287.29

35
66+85.79 - 9.50' L
End Str Type B610 C & G
Begin Curb Taper
TC 3286.02

36
66+91.79 - 9.50' L
End Curb Taper
Theor TC 3285.97

38
63+94.46 - 9.50' R
Begin Curb Taper
Theor TC 3288.60

39
64+00.46 - 9.50' R
End Curb Taper
Begin Str Type B610 C & G
TC 3288.55

40
65+70.99 - 9.50' R
End Str Type B610 C & G
Begin Str Type B610 C & G
TC 3287.26

41
66+30.99 - 1.50' L
End Str Type B610 C & G
Begin Str Type B610 C & G
TC 3286.59

42
66+85.79 - 1.50' L
End Str Type B610 C & G
Begin Curb Taper
TC 3286.18

43
66+91.79 - 1.50' L
End Curb Taper
Theor TC 3286.13

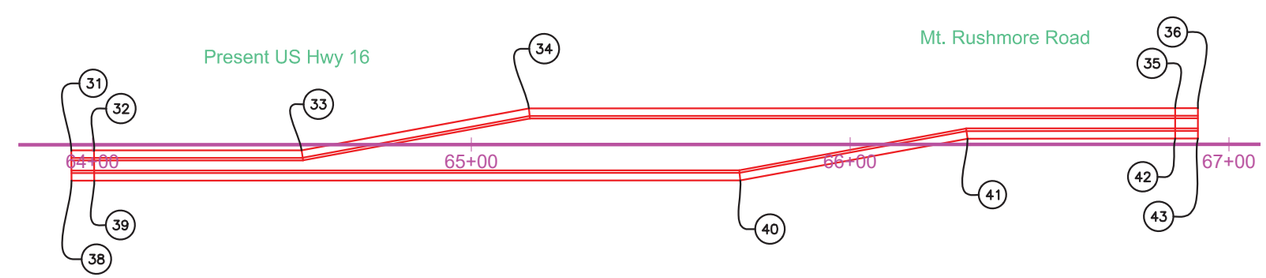

08-17-16 P:\12-117\AutoCAD\PlanSheets\049F\Section B\049F-CURB.dwg

ST. ANNE STREET CURB & GUTTER LAYOUT

FOR BIDDING PURPOSES ONLY

STATE OF SOUTH DAKOTA	PROJECT	SHEET	TOTAL SHEETS
	NH0016(84)67	B80	B136

PLOTTING DATE: 07-29-16 REV 01-21-16 JRV

1
2+44.02 - 16.00' L
Match Existing
Begin Str Type B66 C & G
TC El 3332.40

2
2+49.94 - 16.00' L
End Str Type B66 C & G
Begin Type P6 Gutter
Theor TC El 3332.37

3
2+54.77 - 16.00' L
End Str Type P6 Gutter
Begin 184' Rad
Type P6 Gutter
Theor TC El 3332.34

4
2+70.27 - 16.00' L
End 184' Rad
Type P10 Gutter
Begin Str Type P10 Gutter
Theor TC El 3332.27

5
2+71.32 - 16.00' L
End Type P10 Gutter
Begin Str Type B66 C & G
Theor TC El 3332.26

6
5+60.50 - 16.00' L
End Str Type B66 C & G
Begin 216' Rad
TC El 3325.92

7
5+73.42 - 16.00' L
End 216' Rad
Match Existing
TC El 3325.33

8
2+44.23 - 16.00' R
Match Existing
Begin Str Type B66 C & G
TC El 3333.37

9
2+50.23 - 16.00' R
End Str Type B66 C & G
Begin Type P6 Gutter
Theor TC El 3333.14

10
2+54.77 - 16.00' R
End Str Type P6 Gutter
Begin 216' Rad
Type P6 Gutter
Theor TC El 3332.97

11
2+68.97 - 16.00' R
End 216' Rad
Type P6 Gutter
Begin 216' Rad
Type B66 C & G
Theor TC El 3332.41

12
2+70.27 - 16.00' R
End 216' Rad
Begin Str Type B66 C & G
TC El 3332.36

13
5+60.50 - 16.00' R
End Str Type B66 C & G
Begin 184' Rad
TC El 3325.95

14
5+73.42 - 16.00' R
End 184' Rad
Match Existing
TC El 3325.44

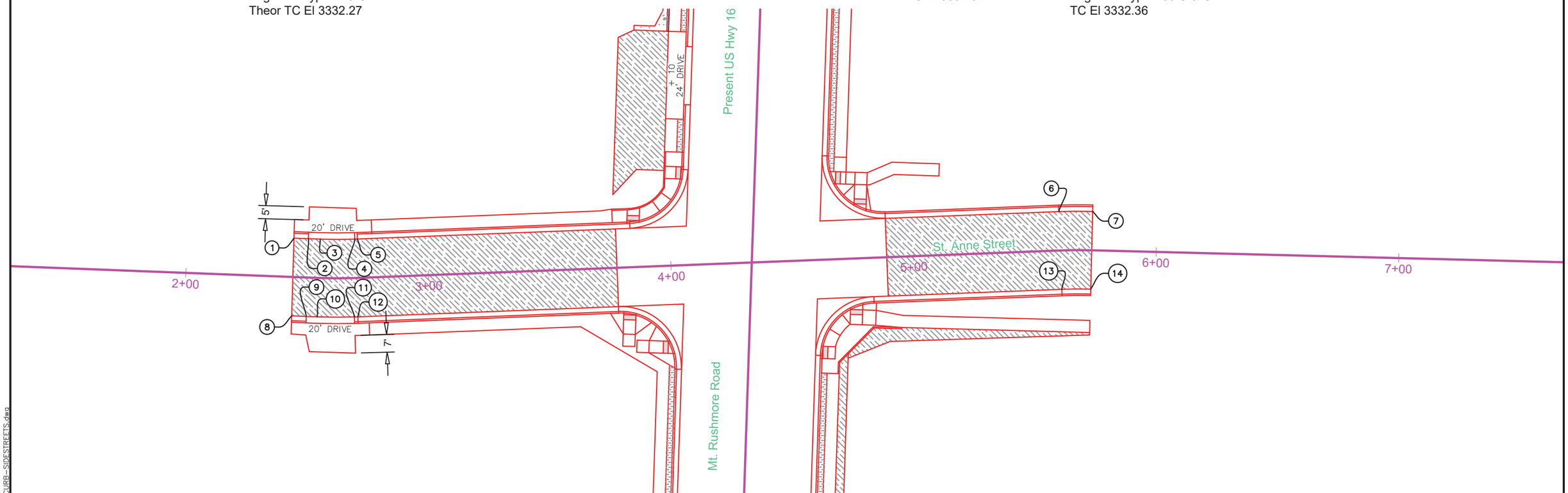

07-29-16 P:\12-117\AutoCAD\PlanSheets\049F\Section B\049F-CURB-SIDESTREETS.dwg

ST. FRANCIS STREET CURB & GUTTER LAYOUT

FOR BIDDING PURPOSES ONLY

STATE OF SOUTH DAKOTA	PROJECT	SHEET	TOTAL SHEETS
	NH0016(84)67	B81	B136

PLOTTING DATE: 07-29-16 REV 01-21-16 JRV

1
2+80.39 - 18.00' L
Match Existing
Begin Str Type B66 C & G
TC El 3327.55

2
3+20.29 - 18.00' L
End Str Type B66 C & G
Begin Type P6 Gutter
Theor TC El 3326.08

3
3+44.29 - 18.00' L
End Type P6 Gutter
Begin 332' Rad
Theor TC El 3325.09

4
3+66.67 - 18.00' L
End 332' Rad
Begin Str Type B66 C & G
TC El 3324.45

5
2+80.39 - 18.00' R
Match Existing
Begin Str Type B66 C & G
TC El 3327.16

6
2+90.83 - 18.00' R
End Str Type B66 C & G
Begin Type P6 Gutter
Theor TC El 3327.01

7
3+14.83 - 18.00' R
End Type P6 Gutter
Begin Str Type B66 C & G
Theor TC El 3326.22

8
3+44.29 - 18.00' R
End Str Type B66 C & G
Begin 368' Rad
TC El 3324.91

9
3+66.67 - 18.00' R
End 368' Rad
Begin Str Type B66 C & G
TC El 3324.20

10
2+92.48 - 34.75' R
Bottom of Taper
Theor TC El 3327.87

11
2+92.48 - 35.97' R
End Str Type B66 C & G
Begin 5' Rad
TC El 3327.92

12
2+85.32 - 43.62' R
End 5' Rad
Match Existing
TC El 3328.43

13
3+16.63 - 45.28' R
Begin Str Type B66 C & G
Match Existing
TC El 3327.52

14
3+12.96 - 45.28' R
End Str Type B66 C & G
Begin Str Type B66 C & G
TC El 3327.65

15
3+12.96 - 34.75' R
Bottom of Taper
Theor TC El 3327.21

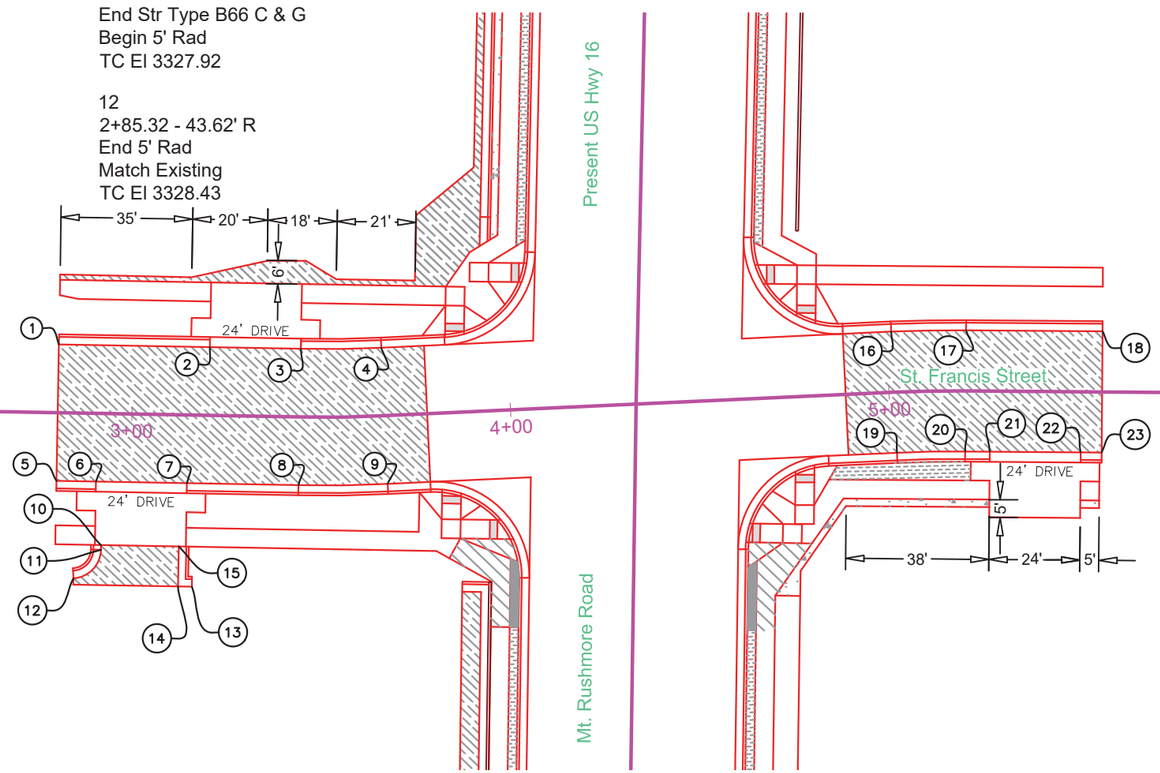

16
5+01.36 - 16.00' L
End Str Type B66 C & G
Begin 366' Rad
TC El 3322.71

17
5+20.23 - 16.00' L
End 366' Rad
Begin Str Type B66 C & G
TC El 3322.26

18
5+56.25 - 16.00' L
End Str Type B66 C & G
Match Existing
TC El 3321.12

19
5+01.36 - 16.00' R
End Str Type B66 C & G
Begin 334' Rad
TC El 3322.51

20
5+20.23 - 16.00' R
End 334' Rad
Top of Taper
Type B66 C & G
TC El 3322.14

21
5+26.72 - 16.00' R
End Type B66 C & G
Bottom of Taper
Begin Type P6 Gutter
Theor TC El 3322.01

22
5+50.72 - 16.00' R
End Type P6 Gutter
Bottom of Taper
Type B66 C & G
TC El 3321.59

23
5+56.25 - 16.00' R
Top of Taper
Type B66 C & G
Match Existing
TC El 3321.54

REGISTERED PROFESSIONAL ENGINEER
REG. NO.
8019
JOHN RAYMOND
VAN BEEK
SOUTH DAKOTA
8/17/16

07-29-16 P:\12-117\AutoCAD\PlanSheets\049F\Section B\049F-CURB-SIDESTREETS.dwg

ST. PATRICK STREET CURB & GUTTER LAYOUT

FOR BIDDING PURPOSES ONLY

STATE OF SOUTH DAKOTA	PROJECT	SHEET	TOTAL SHEETS
	NH0016(84)67	B82	B136

PLOTTING DATE: 07-29-16

1
2+03.71 - 13.34' L
Match Existing
Begin Str Type B66 C & G
TC El 3335.39

2
2+52.71 - 18.00' L
End Str Type B66 C & G
Begin Str Type B66 C & G
TC El 3334.30

3
2+58.71 - 18.00' L
End Str Type B66 C & G
Begin Type P6 Gutter
Theor TC El 3334.18

4
2+82.71 - 18.00' L
End Type P6 Gutter
Begin Str Type B66 C & G
Theor TC El 3333.31

5
2+03.71 - 14.73' R
Match Existing
Begin Str Type B66 C & G
TC El 3334.81

6
2+14.06 - 15.44' R
End Str Type B66 C & G
Begin Type P6 Gutter
THeor TC El 3335.00

7
2+51.56 - 18.00' R
End Type P6 Gutter
Begin Str Type B66 C & G
Theor TC El 3334.32

8
2+91.32 - 18.00' R
End Str Type B66 C & G
Begin Type P6 Gutter
Theor TC El 3332.85

9
3+15.32 - 18.00' R
End Type P6 Gutter
Begin Str Type B66 C & G
Theor TC El 3331.45

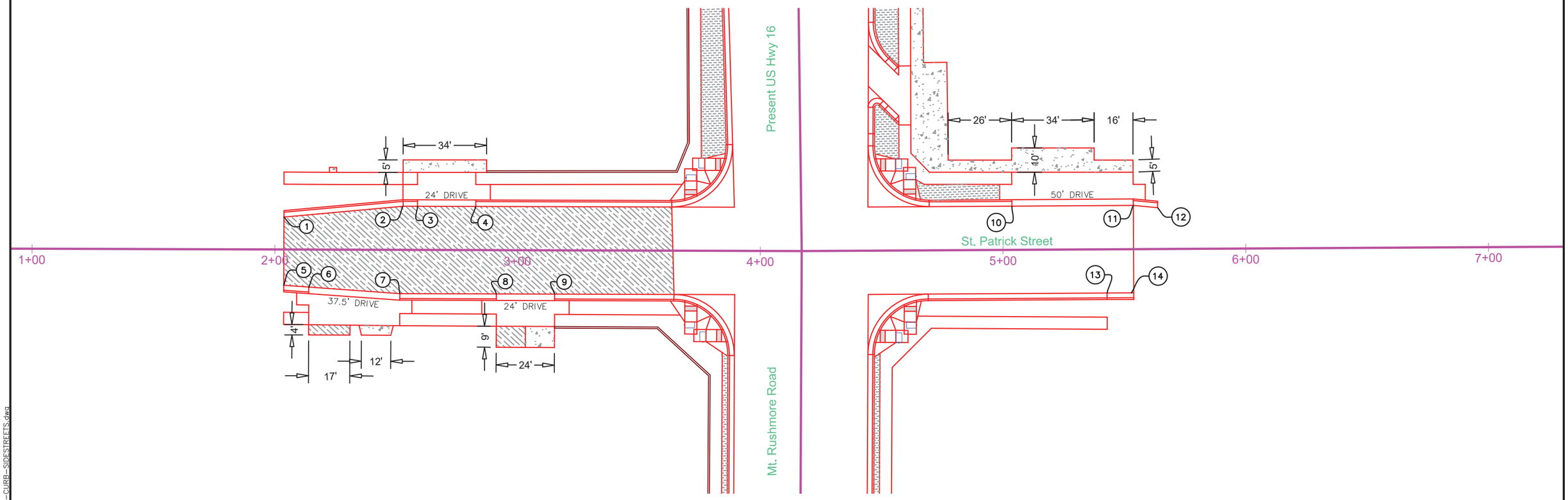

10
5+03.75 - 18.05' L
End Str Type B610 C & G
Begin Type P10 Gutter
Theor TC El 3325.94

11
5+53.75 - 18.00' L
End Type P10 Gutter
Begin Str Type B610 C & G
Theor TC El 3322.46

12
5+63.75 - 17.07' L
End Str Type B610 C & G
Match Existing
TC El 3322.00

13
5+42.75 - 18.00' R
End Str Type B610 C & G
Begin Str Type B610 C & G
TC El 3323.07

14
5+52.75 - 18.00' R
End Str Type B610 C & G
Match Existing
TC El 3322.54

REGISTERED PROFESSIONAL ENGINEER
REG. NO. 8019
JOHN RAYMOND VAN BEEK
SOUTH DAKOTA
8/17/16

07-29-16 P:\12-117\AutoCAD\PlanSheets\049F\Section B\049F-CURB-SIDESTREETS.dwg

ST. ANDREW STREET CURB & GUTTER LAYOUT

FOR BIDDING PURPOSES ONLY

STATE OF SOUTH DAKOTA	PROJECT	SHEET	TOTAL SHEETS
	NH0016(84)67	B83	B136

PLOTTING DATE: 07-29-16

1
3+51.74 - 14.00' L
Match Existing
Begin Str Type B66 C & G
TC El 3321.98

2
3+56.41 - 16.67' L
End Str Type B66 C & G
Begin Str Type B66 C & G
Begin Type P6 Gutter
TC El 3321.99

3
3+56.41 - 29.74' L
End Str Type B66 C & G
Begin Str Type B66 C & G
TC El 3322.64

4
4+28.41 - 29.74' L
End Str Type B66 C & G
Begin Str Type B66 C & G
TC El 3321.87

5
4+28.41 - 16.67' L
End Type P6 Gutter
Begin Str Type B66 C & G
Begin Str Type B66 C & G
TC El 3321.23

6
3+51.74 - 14.00' R
Match Existing
Begin Str Type B66 C & G
TC El 3322.47

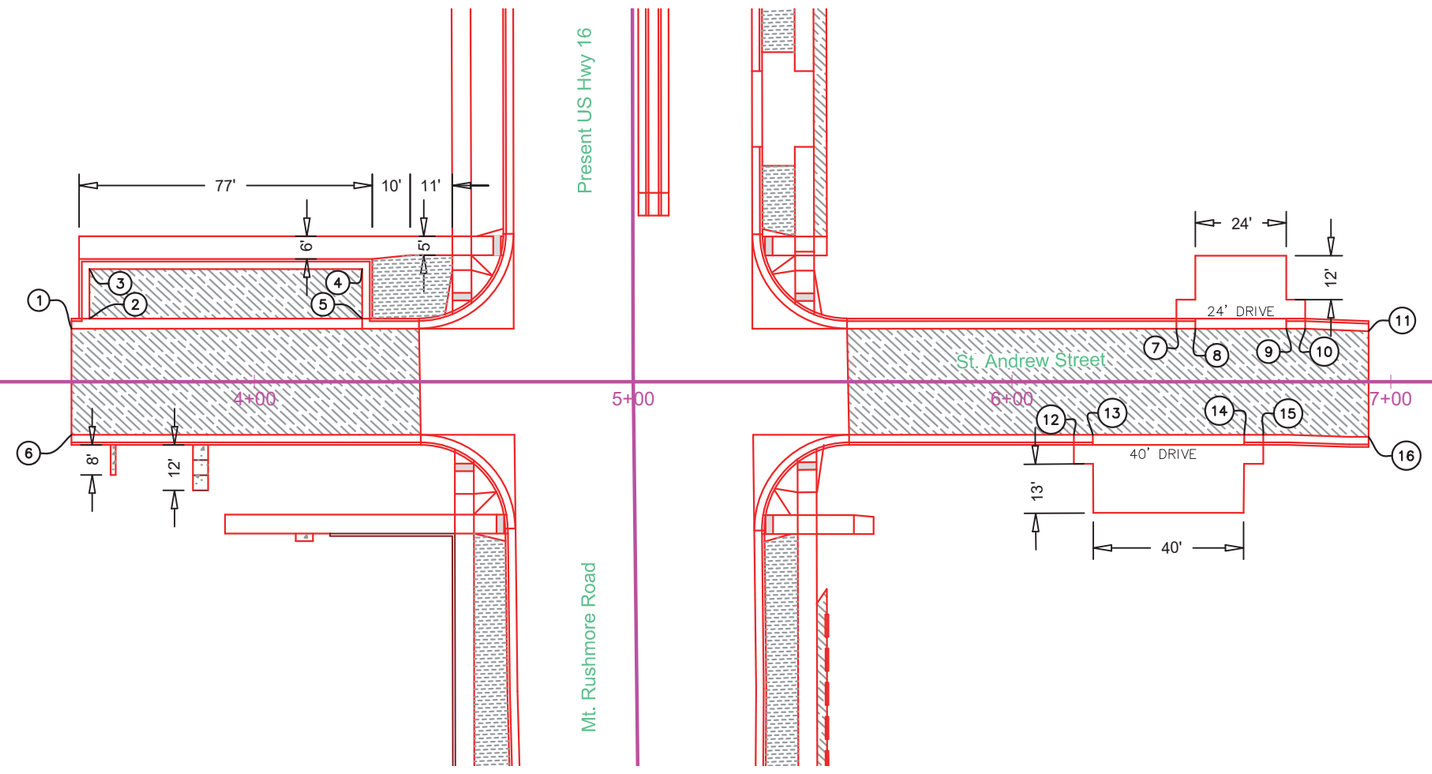

7
6+43.38 - 14.00' L
Top of Taper
Type B66 C & G
TC El 3321.85

8
6+48.38 - 14.00' L
End Type B66 C & G
Bottom of Taper
Begin Type P6 Gutter
Theor TC El 3321.91

9
6+72.38 - 14.00' L
End Type P6 Gutter
Bottom of Taper
Type B66 C & G
Theor TC El 3322.36

10
6+77.38 - 14.00' L
Top of Taper
Type B66 C & G
TC El 3322.50

11
6+94.09 - 13.36' L
End Str Type B66 C & G
Match Existing
TC El 3322.63

12
6+16.29 - 14.00' R
End Str Type B66 C & G
Top of Taper
TC El 3321.85

13
6+21.29 - 14.00' R
Bottom of Taper
Begin Type P6 Gutter
Theor TC El 3321.85

14
6+61.29 - 14.00' R
End Type P6 Gutter
Bottom of Taper
Type B66 C & G
Theor TC El 3322.11

15
6+66.29 - 14.00' R
Top of Taper
Begin Str Type B66 C & G
TC El 3322.22

16
6+94.09 - 14.50' R
End Str Type B66 C & G
Match Existing
TC El 3322.74

REGISTERED PROFESSIONAL ENGINEER
REG. NO. 8019
JOHN RAYMOND VAN BEEK
SOUTH DAKOTA
8/17/16

07-29-16 P:\12-117\AutoCAD\PlanSheets\049F\Section B\049F-CURB-SIDESTREETS.dwg

ST. CHARLES STREET CURB & GUTTER LAYOUT

FOR BIDDING PURPOSES ONLY

STATE OF SOUTH DAKOTA	PROJECT	SHEET	TOTAL SHEETS
	NH0016(84)67	B84	B136

PLOTTING DATE: 07-29-16 REV 07-29-16 ARK

1
3+23.83 - 14.62' L
Match Existing
Begin Str Type B66 C & G
TC El 3314.20

2
3+25.61 - 14.00' L
End Str Type B66 C & G
Begin Str Type B66 C & G
TC El 3314.02

3
3+30.61 - 14.00' L
End Str Type B66 C & G
Begin Type P6 Gutter
Theor TC El 3313.93

4
3+55.61 - 14.00' L
End Type P6 C & G
Begin Str Type B66 C & G
Theor TC El 3313.45

5
3+60.61 - 14.00' L
End Str Type B66 C & G
Begin Str Type B66 C & G
TC El 3313.35

6
3+89.88 - 14.00' L
End Str Type B66 C & G
Begin Type P6 Gutter
Theor TC El 3312.83

7
4+13.88 - 14.00' L
End Type P6 Gutter
Begin Str Type B66 C & G
Theor TC El 3312.61

8
3+23.83 - 19.02' R
Match Existing
Begin Str Type B66 C & G
TC El 3314.24

9
3+23.83 - 30.32' R
End Str Type B66 C & G
Begin Str Type B66 C & G
TC El 3313.91

10
4+38.14 - 30.32' R
End Str Type B66 C & G
Begin Str Type B66 C & G
TC El 3313.52

11
4+38.14 - 14.00' R
End Str Type B66 C & G
Begin Str Type B66 C & G
TC El 3313.22

12
5+65.50 - 14.00' L
End Str Type B66 C & G
Begin Type P6 Gutter
Theor TC El 3314.47

13
5+89.50 - 14.00' L
End Type P6 Gutter
Begin Str Type B66 C & G
Theor TC El 3316.16

14
6+44.30 - 14.00' L
End Str Type B66 C & G
Begin Type P6 Gutter
Theor TC El 3322.15

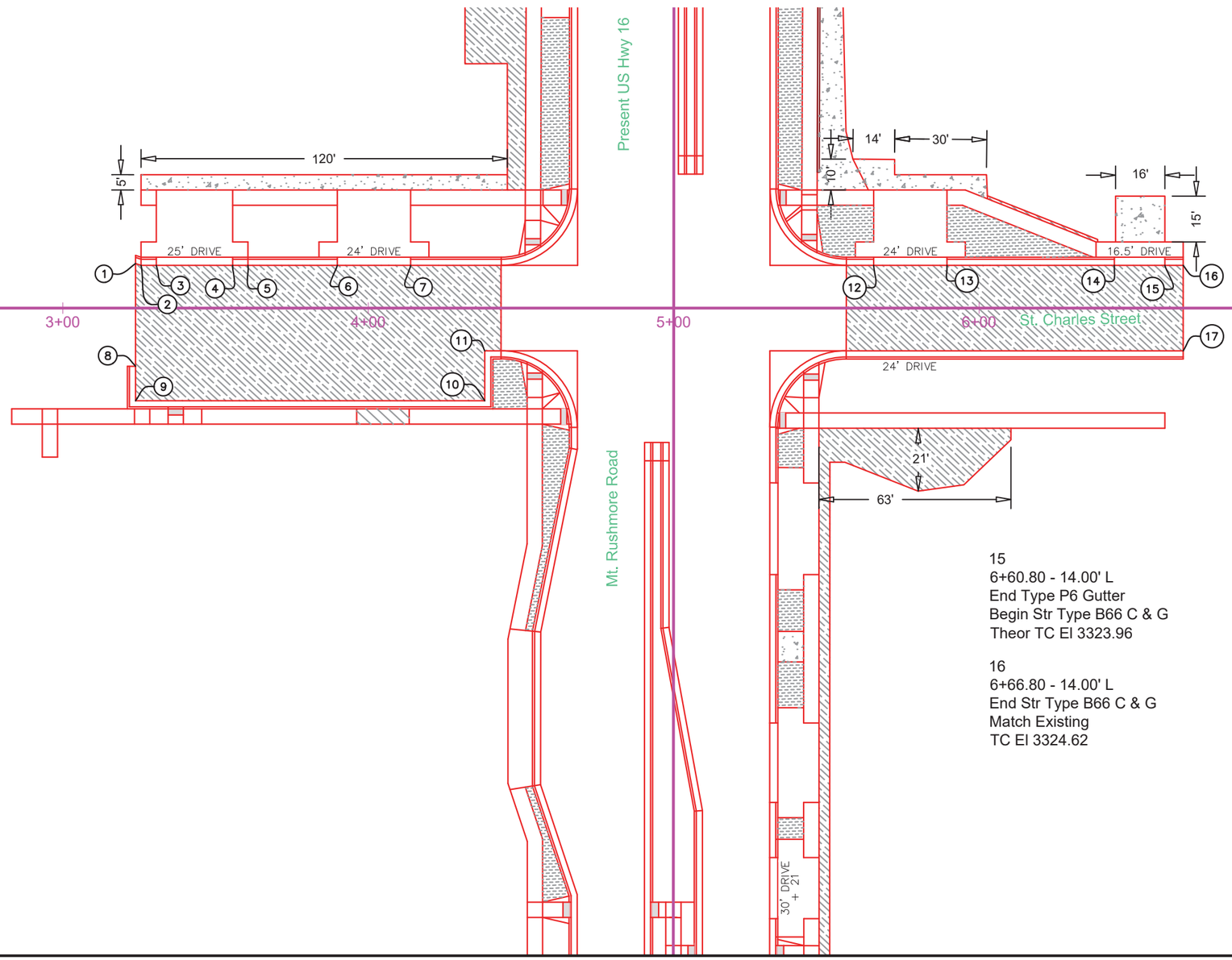

15
6+60.80 - 14.00' L
End Type P6 Gutter
Begin Str Type B66 C & G
Theor TC El 3323.96

16
6+66.80 - 14.00' L
End Str Type B66 C & G
Match Existing
TC El 3324.62

17
6+66.80 - 14.00' R
End Str Type B66 C & G
Match Existing
TC El 3324.64

REGISTERED PROFESSIONAL ENGINEER
REG. NO. 8019
JOHN RAYMOND VAN BEEK
SOUTH DAKOTA
8/17/16

07-29-16 P:\12-117\AutoCAD\PlanSheets\049F\Section B\049F-CURB-SIDESTREETS.dwg

FRANKLIN STREET CURB & GUTTER LAYOUT

FOR BIDDING PURPOSES ONLY

STATE OF SOUTH DAKOTA	PROJECT	SHEET	TOTAL SHEETS
	NH0016(84)67	B85	B136

PLOTTING DATE: 07-29-16

1
3+92.62 - 14.00' L
Match Existing
Begin Str Type B66 C & G
TC El 3305.85

2
3+09.32 - 14.00' R
Match Existing
Top of Taper
Type B66 C & G
TC El 3308.61

3
3+15.32 - 13.84' R
End Type B66 C & G
Bottom of Taper
Begin Type P6 Gutter
Theor TC El 3308.44

4
3+39.32 - 13.84' R
End Type P6 Gutter
Bottom of Taper
Type B66 C & G
Theor TC El 3307.87

5
3+45.32 - 13.84' R
Top of Taper
Type B66 C & G
Match Existing
TC El 3307.71

6
3+92.62 - 14.00' R
Match Existing
Begin Str Type B66 C & G
TC El 3306.48

7
5+99.92 - 14.00' L
End Str Type B66 C & G
Match Existing
TC El 3307.59

8
5+99.92 - 14.00' R
End Str Type B66 C & G
Match Existing
TC El 3308.21

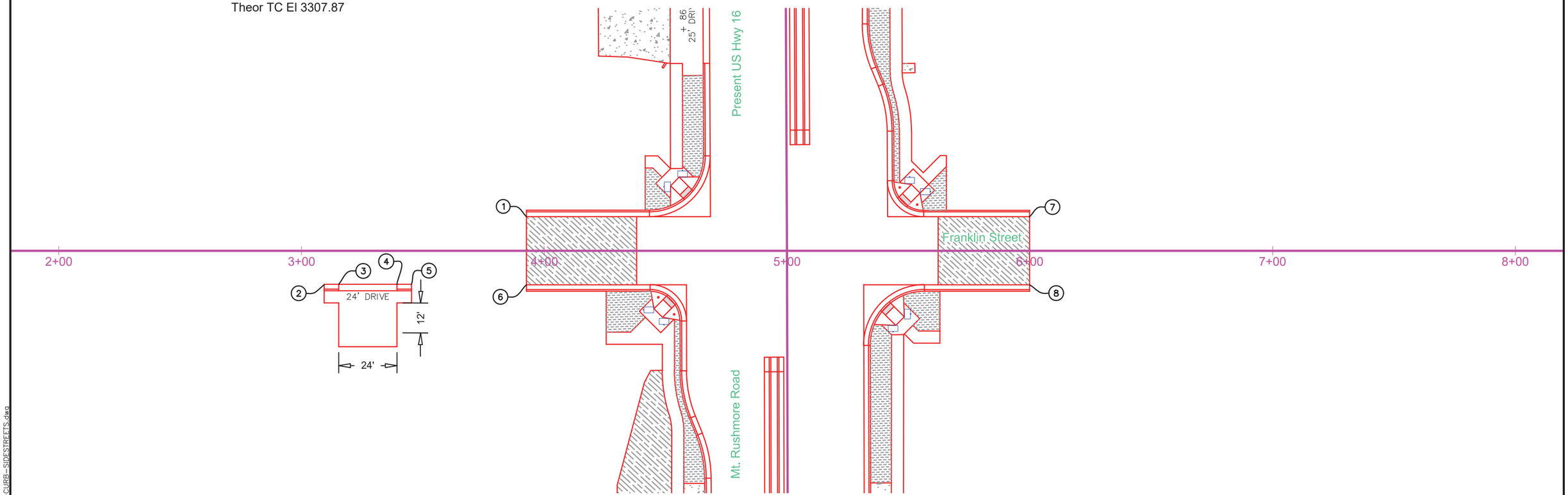

REGISTERED PROFESSIONAL ENGINEER
REG. NO. 8019
JOHN RAYMOND VAN BEEK
SOUTH DAKOTA
8/17/16

07-29-16 P:\12-117\AutoCAD\PlanSheets\049F\Section B\049F-CURB-SIDESTREETS.dwg

ST. CLOUD STREET CURB & GUTTER LAYOUT

FOR BIDDING PURPOSES ONLY

STATE OF SOUTH DAKOTA	PROJECT	SHEET	TOTAL SHEETS
	NH0016(84)67	B86	B136

PLOTTING DATE: 08-17-16 REV 08-17-16 ARK

1
3+93.41 - 14.00' L
Match Existing
Begin Type P6 Gutter
Theor TC El 3298.81

2
3+93.41 - 14.00' R
Match Existing
Begin Str Type B66 C & G
TC El 3299.87

3
4+15.90 - 14.00' R
End Str Type B66 C & G
Begin Type P6 Gutter
Theor TC El 3299.08

4
4+39.90 - 14.00' R
End Type P6 Gutter
Begin Str Type B66 C & G
Theor TC El 3298.30

5
5+74.62 - 14.00' L
End Str Type B66 C & G
Begin Type P6 Gutter
Theor TC El 3297.32

6
5+98.62 - 14.00' L
End Type P6 Gutter
Begin Str Type B66 C & G
Theor TC El 3297.18

7
6+04.62 - 14.00' L
End StrType B66 C & G
Match Existing
TC El 3297.30

8
5+99.43 - 14.00' R
End Str Type B66 C & G
Match Existing
TC El 3297.67

9
5+75.89 - 38.13' L
Bottom of Taper
Theor TC El 3297.73

10
5+75.80 - 44.91' L
End Str Type B66 C & G
Match Existing
TC El 3297.08

11
5+96.95 - 45.17' L
Begin Str Type B66
Match Existing
TC El 3297.30

12
5+97.03 - 38.13' L
Bottom of Taper
Theor TC El 3297.72

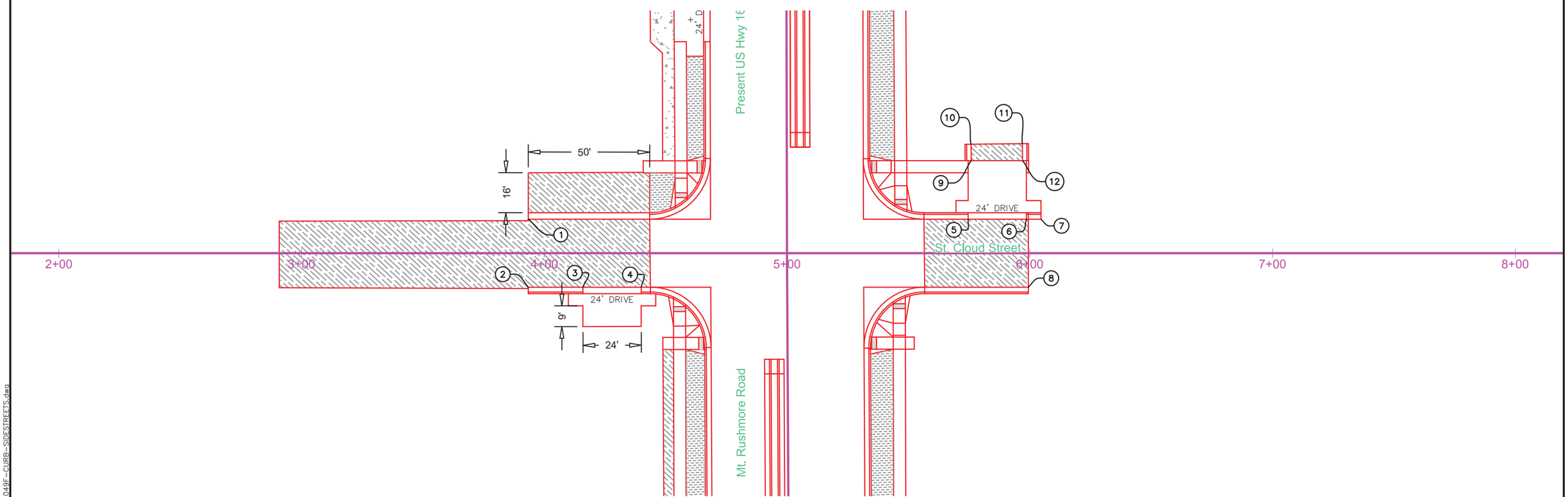

REGISTERED PROFESSIONAL ENGINEER
REG. NO.
8019
JOHN RAYMOND
VAN BEEK
SOUTH DAKOTA
8/17/16

08-17-16 P:\12-117\AutoCAD\PlanSheets\049F\Section B\049F-CURB-SIDESTREETS.dwg

CURB RAMP LAYOUT

(INTERSECTION OF MT. RUSHMORE RD & ST. ANNE ST.)

FOR BIDDING PURPOSES ONLY

STATE OF SOUTH DAKOTA	PROJECT	SHEET	TOTAL SHEETS
	NH0016(84)67	B87	B136

PLOTTING DATE: 07-29-16

1
36+95.81 - 31.09' LT
Bottom of Taper
Theor TC

2
36+98.31 - 33.27' LT
Begin Detectable Warning
and Ramp Slope

3
36+98.31 - 41.19' LT
End Ramp Slope

4
37+00.81 - 33.27' LT
Bottom of Taper
Theor TC

5
37+11.09 - 47.00' LT
Bottom of Taper
Theor TC

6
37+11.10 - 49.50' LT
Begin Detectable Warning
And Ramp Slope

7
37+03.18 - 49.50' LT
End Ramp Slope

8
37+11.78 - 52.00' LT
Bottom of Taper
Theor TC

9
37+51.35 - 58.18' LT
Begin Ramp Slope

10
37+51.80 - 52.00' LT
End Ramp Slope

11
37+49.30 - 52.00' LT
Bottom of Taper
Theor TC

12
37+50.01 - 49.50' LT
Begin Detectable Warning
and Landing

13
37+54.58 - 49.50' LT
End Landing

14
37+50.01 - 47.00' LT
Bottom of Taper
Theor TC

15
37+52.61 - 47.00' LT
Begin Ramp Slope

16
37+56.12 - 40.17' LT
End Ramp Slope

17
37+60.39 - 36.18' LT
Begin Ramp Slope

18
37+67.76 - 33.76' LT
End Ramp Slope

19
37+67.76 - 30.51' LT
Bottom of Taper
Theor TC

20
37+70.26 - 30.51' LT
Begin Detectable Warning
and Landing

21
37+70.26 - 37.00' LT
End Landing

22
37+72.76 - 30.17' LT
Bottom of Taper
Theor TC

23
37+72.76 - 33.76' LT
Begin Ramp Slope

24
37+78.76 - 33.58' LT
End Ramp Slope

25
36+89.81 - 33.58' RT
Begin Ramp Slope

26
36+95.81 - 32.88' RT
End Ramp Slope

27
36+95.81 - 30.17' RT
Bottom of Taper
Theor TC

28
36+98.31 - 30.49' RT
Begin Detectable Warning
and Landing

29
36+98.31 - 35.58' RT
End Landing

30
37+00.81 - 30.49' RT
Bottom of Taper
Theor TC

31
37+00.81 - 33.04' RT
Begin Ramp Slope

32
37+06.77 - 35.22' RT
End Ramp Slope
Begin Ramp Slope

33
37+13.30 - 41.27' RT
End Ramp Slope

34
37+16.35 - 41.27' RT
Bottom of Taper
Theor TC

35
37+16.35 - 43.77' RT
Begin Detectable Warning
and Landing

36
37+10.25 - 43.77' RT
End Landing

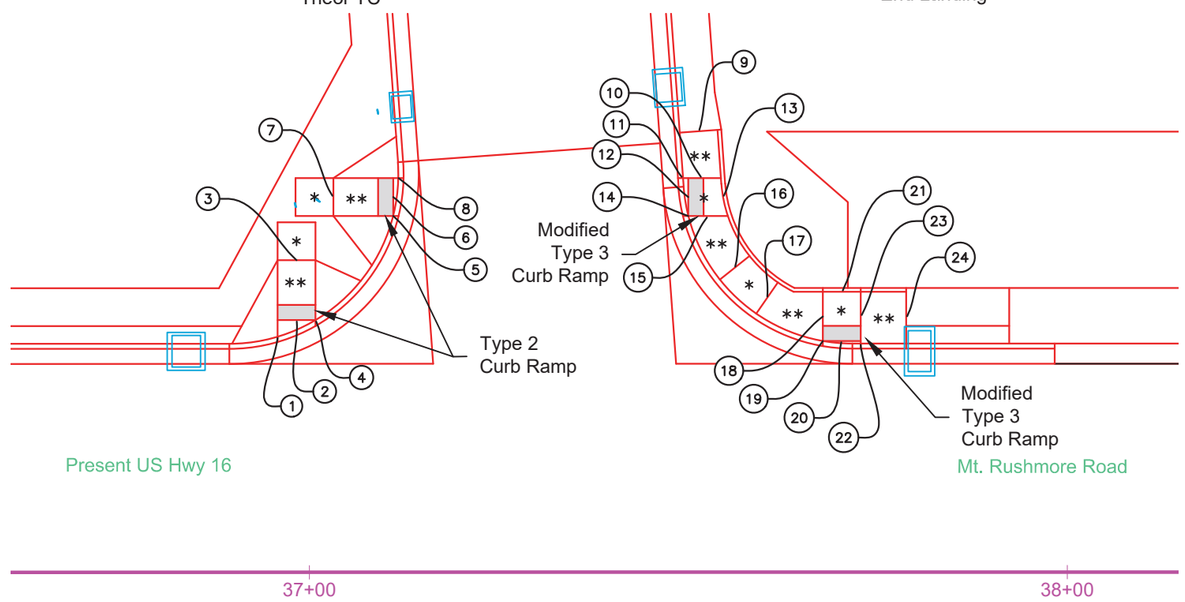

37
37+16.35 - 46.27' RT
Bottom of Taper
Theor TC

38
37+13.30 - 46.27' RT
Begin Ramp Slope

39
37+13.30 - 51.85' RT
End Ramp Slope

40
37+57.84 - 46.27' RT
Bottom of Taper
Theor TC

41
37+59.98 - 43.77' RT
Begin Detectable Warning
and Ramp Slope

42
37+67.90 - 43.77' RT
End Ramp Slope

43
37+59.98 - 41.27' RT
Bottom of Taper
Theor TC

44
37+67.90 - 33.29' RT
Bottom of Taper
Theor TC

45
37+70.40 - 33.29' RT
Begin Detectable Warning
and Landing

46
37+70.40 - 37.50' RT
Begin Ramp Slope

47
37+70.40 - 41.27' RT
End Ramp Slope

48
37+72.90 - 31.10' RT
Bottom of Taper
Theor TC

49
37+72.90 - 35.00' RT
Begin Ramp Slope

50
37+78.90 - 35.00' RT
End Ramp Slope

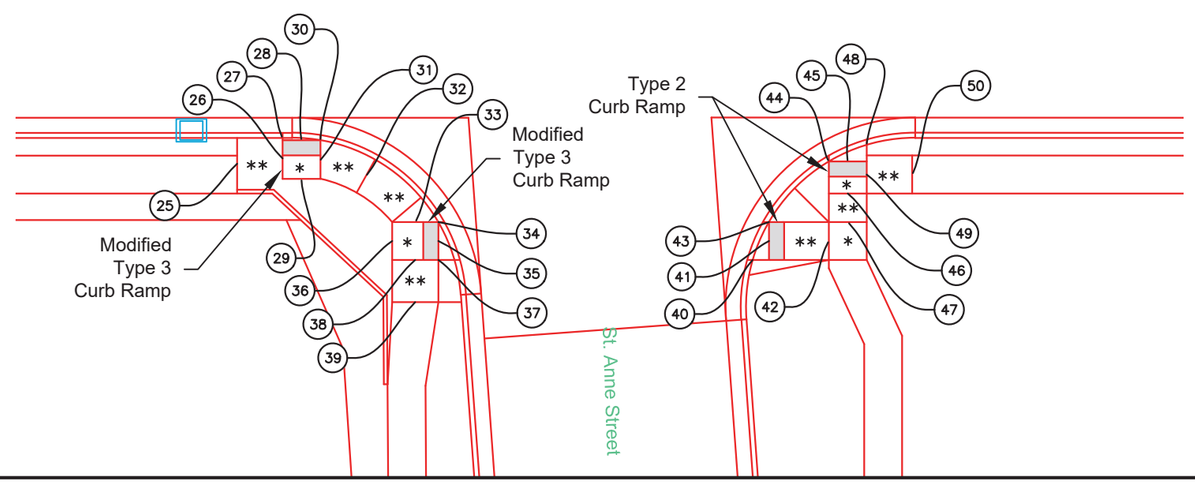

LEGEND:

* Turning Space with 1.5% Max Slope

** Curb Ramp with 7.5% Max Slope and 1.5% Max Cross Slope

Detectable Warning

REGISTERED PROFESSIONAL ENGINEER
REG. NO. 8019
JOHN RAYMOND VAN BEEK
SOUTH DAKOTA
8/17/16

07-29-16 P:\12-117\AutoCAD\PlanSheets\049F\Section B\049F-CURB-RAMP.dwg

CURB RAMP LAYOUT

(Median Crosswalk)

FOR BIDDING PURPOSES ONLY

STATE OF SOUTH DAKOTA	PROJECT	SHEET	TOTAL SHEETS
	NH0016(84)67	B88	B136

PLOTTING DATE: 07-29-16

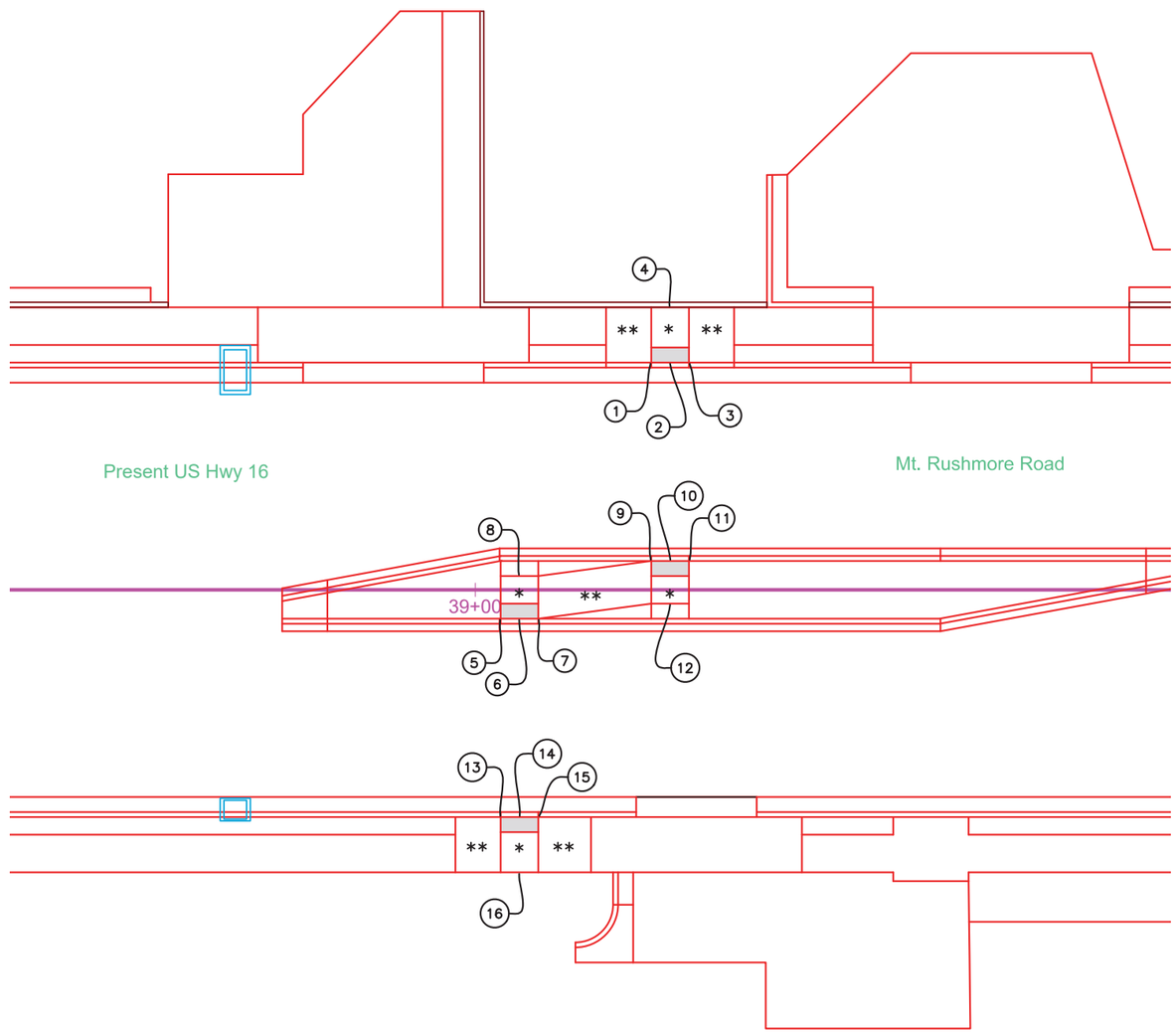

1
39+23.38 - 30.17' LT
Bottom of Taper
Theor TC

2
39+25.88 - 30.17' LT
Begin Detectable Warning
and Landing

3
39+28.38 - 30.17' LT
Bottom of Taper
Theor TC

4
39+25.88 - 37.50' LT
End Landing

5
39+03.38 - 3.83' RT
Bottom of Taper
Theor TC

6
39+05.88 - 3.83' RT
Begin Detectable Warning
and Landing

7
39+08.38 - 3.83' RT
Bottom of Taper
Theor TC

8
39+05.88 - 1.84' LT
End Landing

9
39+23.38 - 3.83' LT
Bottom of Taper
Theor TC

10
39+25.88 - 3.83' LT
Begin Detectable Warning
and Landing

11
39+28.38 - 3.83' LT
Bottom of Taper
Theor TC

12
39+25.88 - 1.84' RT
End Landing

13
39+03.38 - 30.17' RT
Bottom of Taper
Theor TC

14
39+05.88 - 30.17' RT
Begin Detectable Warning
and Landing

15
39+08.38 - 30.17' RT
Bottom of Taper
Theor TC

16
39+05.88 - 37.50' RT
End Landing

LEGEND:

* Turning Space with 1.5% Max Slope

** Curb Ramp with 7.5% Max Slope and 1.5% Max Cross Slope

Detectable Warning

07-29-16 P:\12-117\AutoCAD\PlanSheets\049F\Section B\049F-CURB-RAMP.dwg

CURB RAMP LAYOUT

(INTERSECTION OF MT. RUSHMORE RD & ST. FRANCIS ST.)

FOR BIDDING PURPOSES ONLY

STATE OF SOUTH DAKOTA	PROJECT	SHEET	TOTAL SHEETS
	NH0016(84)67	B89	B136

PLOTTING DATE: 07-29-16

1
40+72.24 - 32.63' LT
Bottom of Taper
Theor TC

2
40+74.74 - 36.13' LT
Begin Detectable Warning
and Ramp Slope

3
40+74.74 - 45.86' LT
End Ramp Slope

4
40+77.24 - 36.13' LT
Bottom of Taper
Theor TC

5
40+83.37 - 45.83' LT
Bottom of Taper
Theor TC

6
40+83.37 - 48.33' LT
Begin Detectable Warning
and Ramp Slope

7
40+77.24 - 48.35' LT
End Ramp Slope

8
40+84.32 - 50.83' LT
Bottom of Taper
Theor TC

9
41+25.58 - 50.82' LT
Bottom of Taper
Theor TC

10
41+26.52 - 48.32' LT
Begin Detectable Warning
and Ramp Slope

11
41+33.24 - 48.35' LT
End Ramp Slope

12
41+26.53 - 45.82' LT
Bottom of Taper
Theor TC

13
41+39.86 - 31.64' LT
Bottom of Taper
Theor TC

14
41+42.36 - 31.68' LT
Begin Detectable Warning
and Ramp Slope

15
41+42.25 - 39.68' LT
End Ramp Slope

16
41+44.88 - 30.37' LT
Bottom of Taper
Theor TC

17
40+72.25 - 30.25' RT
Bottom of Taper
Theor TC

18
40+74.75 - 31.24' RT
Begin Detectable Warning
and Ramp Slope

19
40+74.72 - 39.24' RT
End Ramp Slope

20
40+77.25 - 31.25' RT
Bottom of Taper
Theor TC

21
40+90.29 - 42.35' RT
Bottom of Taper
Theor TC

22
40+90.31 - 44.85' RT
Begin Detectable Warning
and Ramp Slope

23
40+82.31 - 44.90' RT
End Ramp Slope

24
40+92.13 - 47.34' RT
Bottom of Taper
Theor TC

25
41+31.34 - 46.92' RT
Bottom of Tape
Theor TC

26
41+33.34 - 44.40' RT
Begin Detectable Warning
and Ramp Slope

27
41+40.91 - 44.29' RT
End Ramp Slope

28
41+33.31 - 41.90' RT
Bottom of Taper
Theor TC

29
41+40.76 - 33.79' RT
Bottom of Taper
Theor TC

30
41+43.26 - 33.76' RT
Begin Detectable Warning
and Ramp Slope

31
41+43.38 - 41.76' RT
End Ramp Slope

32
41+45.73 - 31.37' RT
Bottom of Taper
Theor TC

REGISTERED PROFESSIONAL ENGINEER
REG. NO. 8019
JOHN RAYMOND VAN BEEK
SOUTH DAKOTA
8/17/16

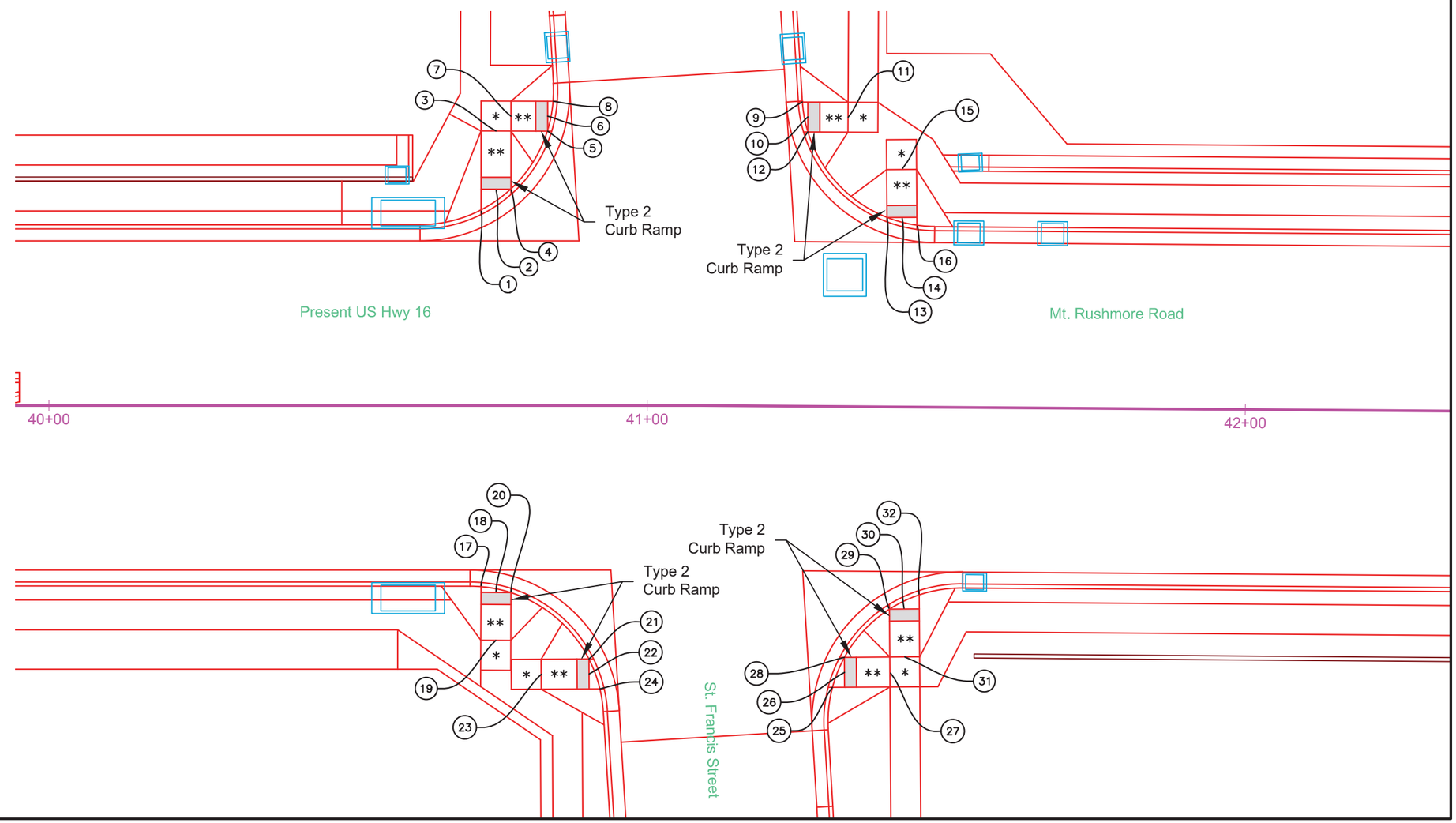

LEGEND:

* Turning Space with 1.5% Max Slope

** Curb Ramp with 7.5% Max Slope and 1.5% Max Cross Slope

Detectable Warning

07-29-16 P:\12-117\AutoCAD\PlanSheets\049F\Section B\049F-CURB-RAMP.dwg

CURB RAMP LAYOUT

(INTERSECTION OF MT. RUSHMORE RD & ST. PATRICK ST.)

FOR BIDDING PURPOSES ONLY

STATE OF SOUTH DAKOTA	PROJECT	SHEET	TOTAL SHEETS
	NH0016(84)67	B90	B136

PLOTTING DATE: 07-29-16

1
44+44.31 - 30.90' LT
Bottom of Taper
Theor TC

2
44+46.81 - 32.88' LT
Begin Detectable Warning
and Ramp Slope

3
44+46.81 - 39.28' LT
End Ramp Slope

4
44+49.31 - 32.88' LT
Bottom of Taper
Theor TC

5
44+58.88 - 43.04' LT
Bottom of Taper
Theor TC

6
44+58.88 - 45.54' LT
Begin Detectable Warning
and Ramp Slope

7
44+52.38 - 45.53' LT
End Ramp Slope

8
44+60.54 - 48.04' LT
Bottom of Taper
Theor TC

9
45+03.82 - 47.94' LT
Bottom of Taper
Theor TC

10
45+05.65 - 45.42' LT
Begin Detectable Warning
and Ramp Slope

11
45+11.21 - 45.35' LT
End Ramp Slope

12
45+05.62 - 42.92' LT
Bottom of Taper
Theor TC

13
45+15.40 - 33.04' LT
Bottom of Taper
Theor TC

14
45+17.90 - 33.00' LT
Begin Detectable Warning
and Ramp Slope

15
45+18.01 - 39.46' LT
End Ramp Slope

16
45+20.38 - 31.20' LT
Bottom of Taper
Theor TC

17
44+44.31 - 30.74' RT
Bottom of Taper
Theor TC

18
44+46.81 - 32.53' RT
Begin Detectable Warning
and Ramp Slope

19
44+46.81 - 38.95' RT
End Ramp Slope

20
44+49.31 - 32.53' RT
Bottom of Taper
Theor TC

21
44+59.22 - 42.38' RT
Bottom of Taper
Theor TC

22
44+59.22 - 44.88' RT
Begin Detectable Warning
and Ramp Slope

23
44+52.76 - 44.86' RT
End Ramp Slope

24
44+61.05 - 47.38' RT
Bottom of Taper
Theor TC

25
45+02.78 - 47.28' RT
Bottom of Taper
Theor TC

26
45+04.73 - 44.79' RT
Begin Detectable Warning
and Ramp Slope

27
45+10.63 - 44.83' RT
End Ramp Slope

28
45+04.74 - 42.29' RT
Bottom of Taper
Theor TC

29
45+14.35 - 32.96' RT
Bottom of Taper
Theor TC

30
45+16.85 - 33.00' RT
Begin Detectable Warning
and Ramp Slope

31
45+16.74 - 39.09' RT
End Ramp Slope

32
45+19.38 - 31.14' RT
Bottom of Taper
Theor TC

REGISTERED PROFESSIONAL ENGINEER
REG. NO. 8019
JOHN RAYMOND VAN BEEK
SOUTH DAKOTA
8/17/16

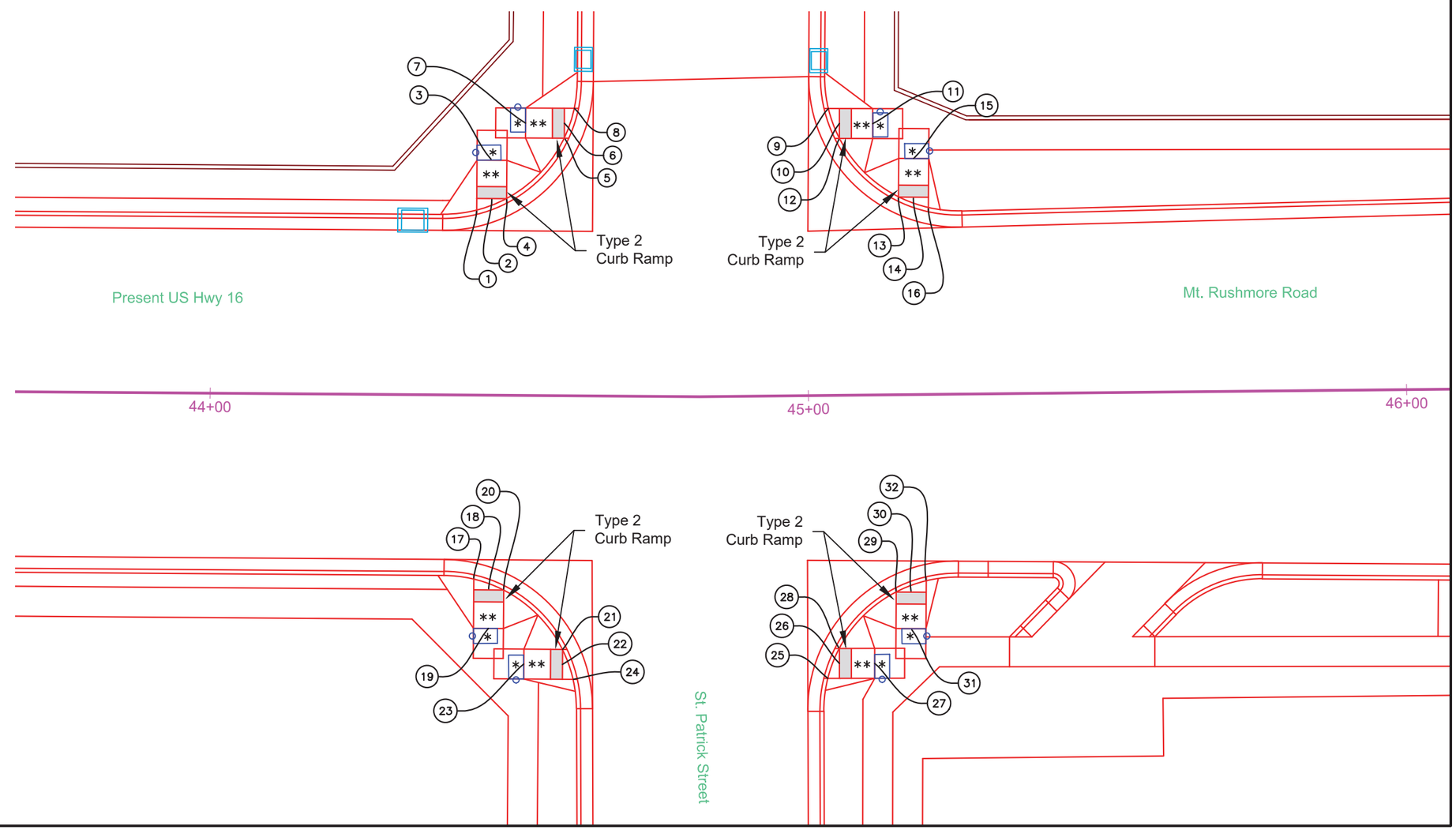

LEGEND:

- * Turning Space with 1.5% Max Slope
- ** Curb Ramp with 7.5% Max Slope and 1.5% Max Cross Slope
- Detectable Warning
- Pedestrian Push Button Pole and 30" x 48" Clear Space with 1.5% Slope

07-29-16 P:\12-117\AutoCAD\PlanSheets\049F\Section B\049F-CURB-RAMP.dwg

CURB RAMP LAYOUT

(Median Crosswalk)

FOR BIDDING PURPOSES ONLY

STATE OF SOUTH DAKOTA	PROJECT	SHEET	TOTAL SHEETS
	NH0016(84)67	B91	B136

PLOTTING DATE: 07-29-16

REGISTERED PROFESSIONAL ENGINEER
REG. NO. 8019
JOHN RAYMOND VAN BEEK
SOUTH DAKOTA
8/17/16

1
50+10.97 - 34.17' LT
Bottom of Taper
Theor TC

2
50+13.47 - 34.17' LT
Begin Detectable Warning
and Ramp Slope

3
50+15.97 - 34.17' LT
Bottom of Taper
Theor TC

4
50+13.47 - 42.81' LT
End Ramp Slope

5
49+96.79 - 6.83' RT
Bottom of Taper
Theor TC

6
49+99.29 - 6.83' RT
Begin Detectable Warning
and Ramp Slope

7
50+01.79 - 6.83' RT
Bottom of Taper
Theor TC

8
49+99.29 - 2.50' RT
End Ramp Slope

9
50+10.96 - 6.83' LT
Bottom of Taper
Theor TC

10
50+13.46 - 6.83' LT
Begin Detectable Warning
and Ramp Slope

11
50+15.96 - 6.83' LT
Bottom of Taper
Theor TC

12
50+13.46 - 2.50' LT
End Ramp Slope

13
49+96.78 - 34.17' RT
Bottom of Taper
Theor TC

14
49+99.28 - 34.17' RT
Begin Detectable Warning
and Ramp Slope

15
50+01.78 - 34.17' RT
Bottom of Taper
Theor TC

16
49+99.28 - 42.70' RT
End Ramp Slope

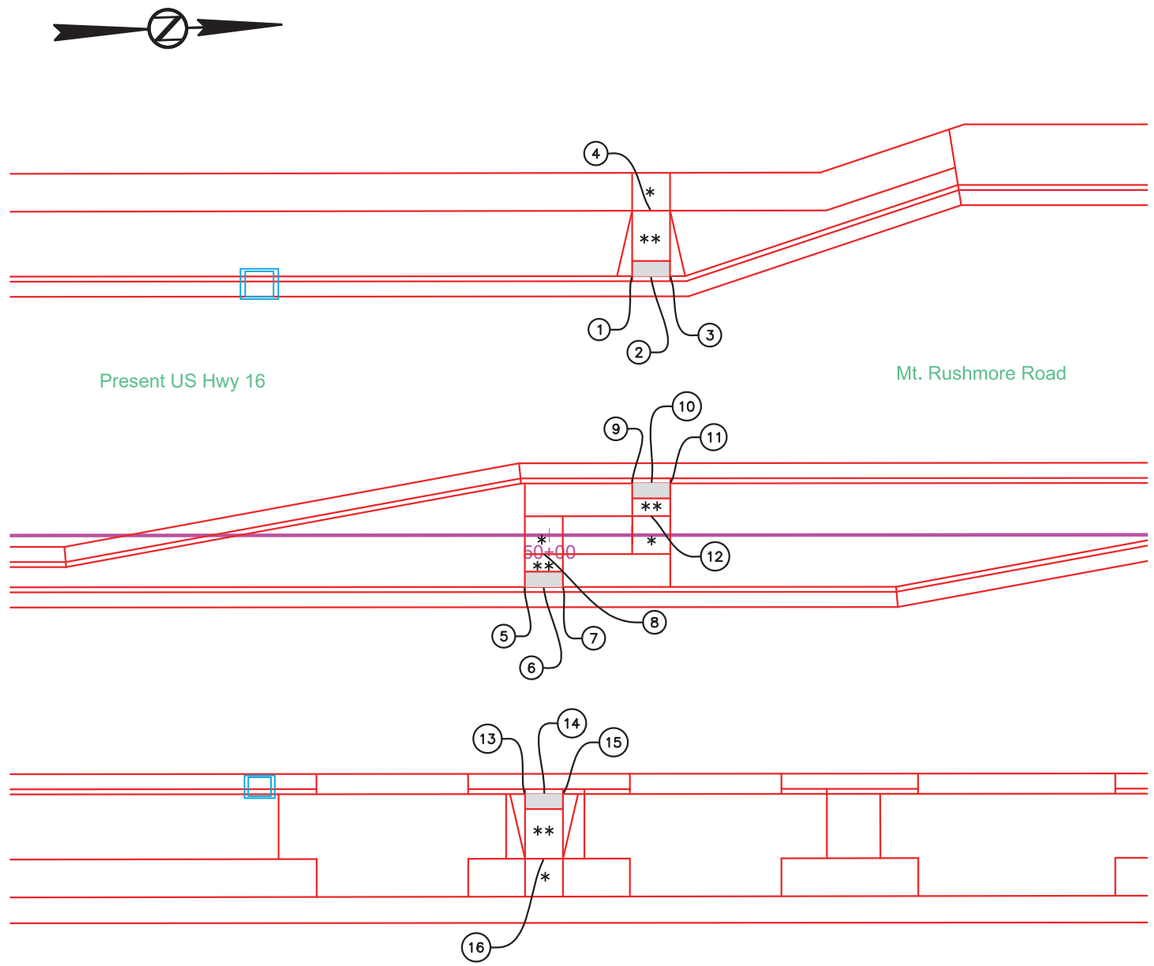

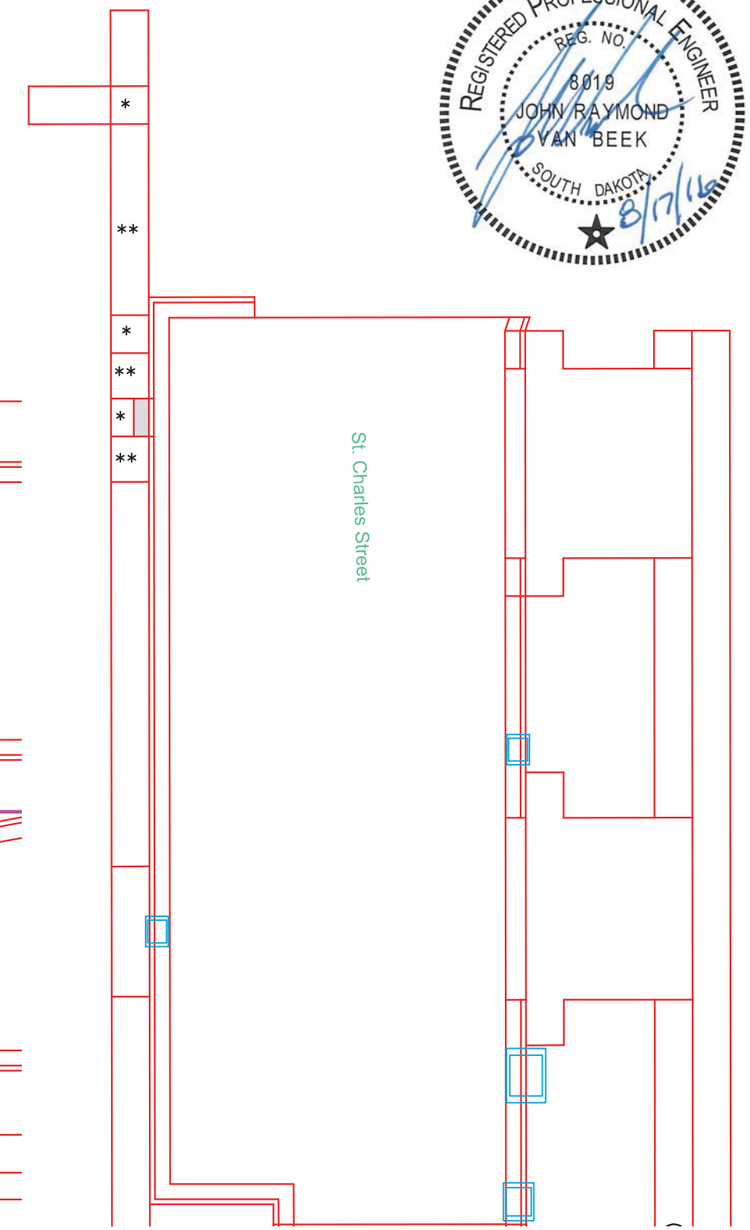

LEGEND:

* Turning Space with 1.5% Max Slope

** Curb Ramp with 7.5% Max Slope and 1.5% Max Cross Slope

Detectable Warning

07-29-16 P:\12-117\AutoCAD\PlanSheets\049F\Section B\049F-CURB-RAMP.dwg

CURB RAMP LAYOUT

(INTERSECTION OF MT. RUSHMORE RD & ST. ANDREWS ST.)

FOR BIDDING PURPOSES ONLY

STATE OF SOUTH DAKOTA	PROJECT	SHEET	TOTAL SHEETS
	NH0016(84)67	B92	B136

PLOTTING DATE: 07-29-16

1
47+91.67 - 34.17' LT
Bottom of Taper
Theor TC

2
47+94.18 - 34.50' LT
Begin Detectable Warning
and Ramp Slope

3
47+94.27 - 42.49' LT
End Ramp Slope

4
47+96.68 - 34.47' LT
Bottom of Taper
Theor TC

5
48+10.28 - 42.35' LT
Bottom of Taper
Theor TC

6
48+10.30 - 44.85' LT
Begin Detectable Warning
and Ramp Slope

7
48+02.30 - 44.92' LT
End Ramp Slope

8
48+13.36 - 47.32' LT
Bottom of Taper
Theor TC

9
48+49.96 - 47.66' LT
Bottom of Taper
Theor TC

10
48+52.94 - 45.16' LT
Begin Detectable Warning
and Ramp Slope

11
48+60.92 - 45.17' LT
End Ramp Slope

12
48+52.94 - 42.66' LT
Bottom of Taper
Theor TC

13
48+64.84 - 34.89' LT
Bottom of Taper
Theor TC

14
48+67.34 - 34.89' LT
Begin Detectable Warning
and Ramp Slope

15
48+67.35 - 42.68' LT
End Ramp Slope

16
48+69.84 - 34.18' LT
Bottom of Taper
Theor TC

17
47+90.79 - 34.17' RT
Bottom of Taper
Theor TC

18
47+93.29 - 34.51' RT
Begin Detectable Warning
and Ramp Slope

19
47+93.19 - 43.00' RT
End Ramp Slope

20
47+95.79 - 34.54' RT
Bottom of Taper
Theor TC

21
48+09.63 - 43.15' RT
Bottom of Taper
Theor TC

22
48+09.63 - 45.65' RT
Begin Detectable Warning
and Ramp Slope

23
48+01.71 - 45.61' RT
End Ramp Slope

24
48+12.45 - 48.18' RT
Bottom of Taper
Theor TC

25
48+49.69 - 47.84' RT
Bottom of Taper
Theor TC

26
48+52.61 - 45.34' RT
Begin Detectable Warning
and Ramp Slope

27
48+60.61 - 45.33' RT
End Ramp Slope

28
48+52.61 - 42.84' RT
Bottom of Taper
Theor TC

29
48+64.65 - 34.89' RT
Bottom of Taper
Theor TC

30
48+67.15 - 34.89' RT
Begin Detectable Warning
and Ramp Slope

31
48+67.14 - 42.82' RT
End Ramp Slope

32
48+69.66 - 34.18' RT
Bottom of Taper
Theor TC

REGISTERED PROFESSIONAL ENGINEER
REG. NO. 8019
JOHN RAYMOND VAN BEEK
SOUTH DAKOTA
8/17/16

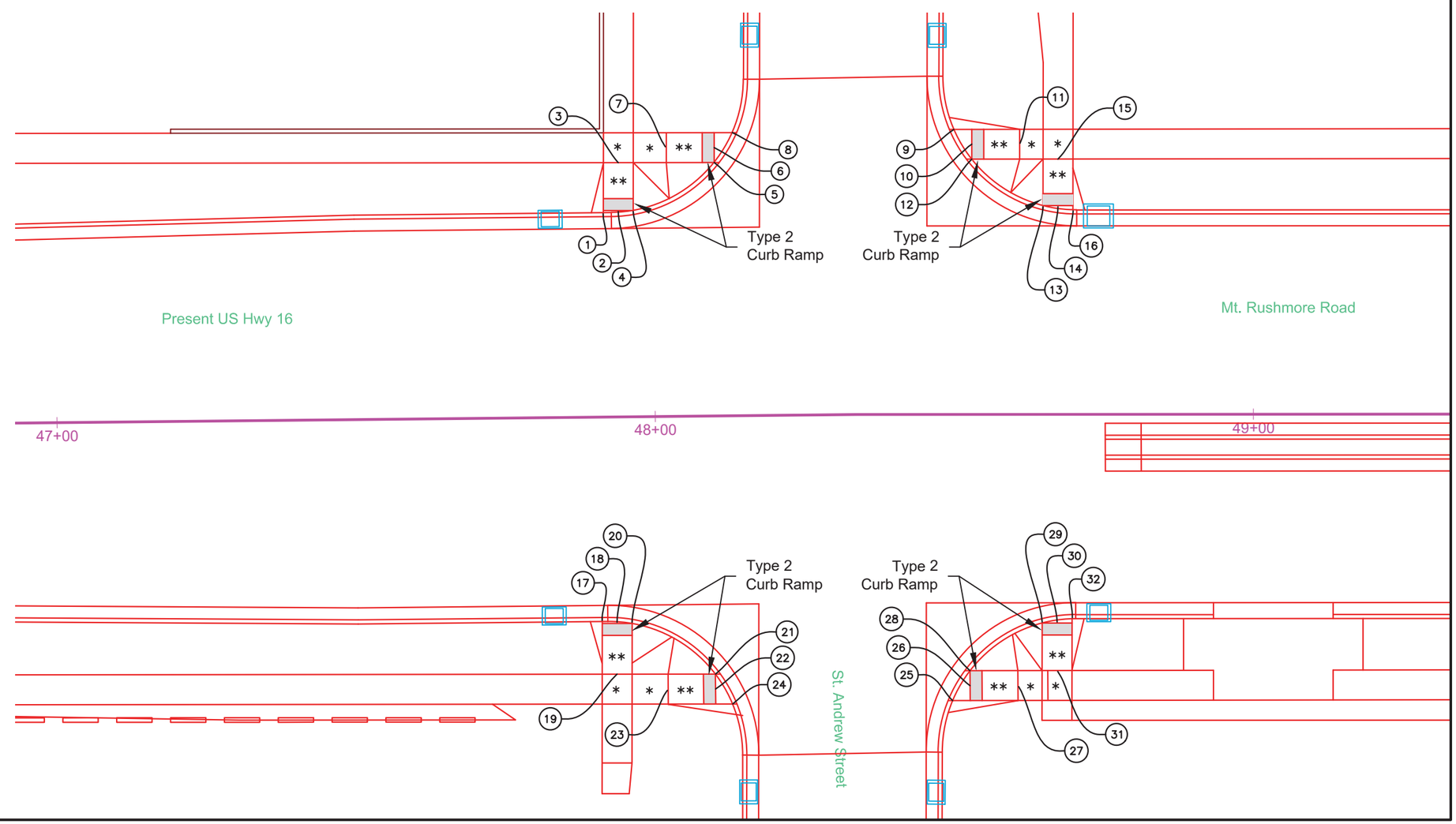

LEGEND:

* Turning Space with 1.5% Max Slope

** Curb Ramp with 7.5% Max Slope and 1.5% Max Cross Slope

Detectable Warning

07-29-16 P:\12-117\AutoCAD\PlanSheets\049F\Section B\049F-CURB-RAMP.dwg

CURB RAMP LAYOUT

(INTERSECTION OF MT. RUSHMORE RD & ST. CHARLES ST.)

FOR BIDDING PURPOSES ONLY

STATE OF SOUTH DAKOTA	PROJECT	SHEET	TOTAL SHEETS
	NH0016(84)67	B93	B136

PLOTTING DATE: 07-29-16

1
51+72.46 - 34.19' LT
Bottom of Taper
Theor TC

2
51+74.96 - 35.00' LT
Begin Detectable Warning
and Ramp Slope

3
51+74.95 - 42.97' LT
End Ramp Slope

4
51+77.46 - 35.00' LT
Bottom of Taper
Theor TC

5
51+89.20 - 42.98' LT
Bottom of Taper
Theor TC

6
51+89.20 - 45.48' LT
Begin Detectable Warning
and Ramp Slope

7
51+81.20 - 45.48' LT
End Ramp Slope

8
51+92.07 - 47.98' LT
Bottom of Taper
Theor TC

9
52+28.53 - 48.64' LT
Bottom of Taper
Theor TC

10
52+31.18 - 46.13' LT
Begin Detectable Warning
and Ramp Slope

11
52+39.18 - 46.13' LT
End Ramp Slope

12
52+31.18 - 43.63' LT
Bottom of Taper
Theor TC

13
52+44.11 - 34.81' LT
Bottom of Taper
Theor TC

14
52+46.61 - 34.81' LT
Begin Detectable Warning
and Ramp Slope

15
52+46.61 - 42.81' LT
End Ramp Slope

16
52+49.11 - 34.17' LT
Bottom of Taper
Theor TC

17
51+71.19 - 34.17' RT
Bottom of Taper
Theor TC

18
51+73.69 - 34.67' RT
Begin Detectable Warning
and Ramp Slope

19
51+73.70 - 42.54' RT
End Ramp Slope

20
51+76.19 - 34.67' RT
Bottom of Taper
Theor TC

21
51+88.91 - 42.52' RT
Bottom of Taper
Theor TC

22
51+88.91 - 45.02' RT
Begin Detectable Warning
and Ramp Slope

23
51+81.20 - 45.03' RT
End Ramp Slope

24
51+91.94 - 47.52' RT
Bottom of Taper
Theor TC

25
52+29.35 - 46.86' RT
Bottom of Taper
Theor TC

26
52+32.62 - 44.38' RT
Begin Detectable Warning
and Ramp Slope

27
52+42.62 - 44.38' RT
End Ramp Slope

28
52+32.62 - 41.88' RT
Bottom of Taper
Theor TC

29
52+44.15 - 34.82' RT
Bottom of Taper
Theor TC

30
52+46.65 - 34.82' RT
Begin Detectable Warning
and Ramp Slope

31
52+46.66 - 41.92' RT
End Ramp Slope

32
52+49.15 - 34.17' RT
Bottom of Taper
Theor TC

REGISTERED PROFESSIONAL ENGINEER
REG. NO. 8019
JOHN RAYMOND VAN BEEK
SOUTH DAKOTA
8/17/16

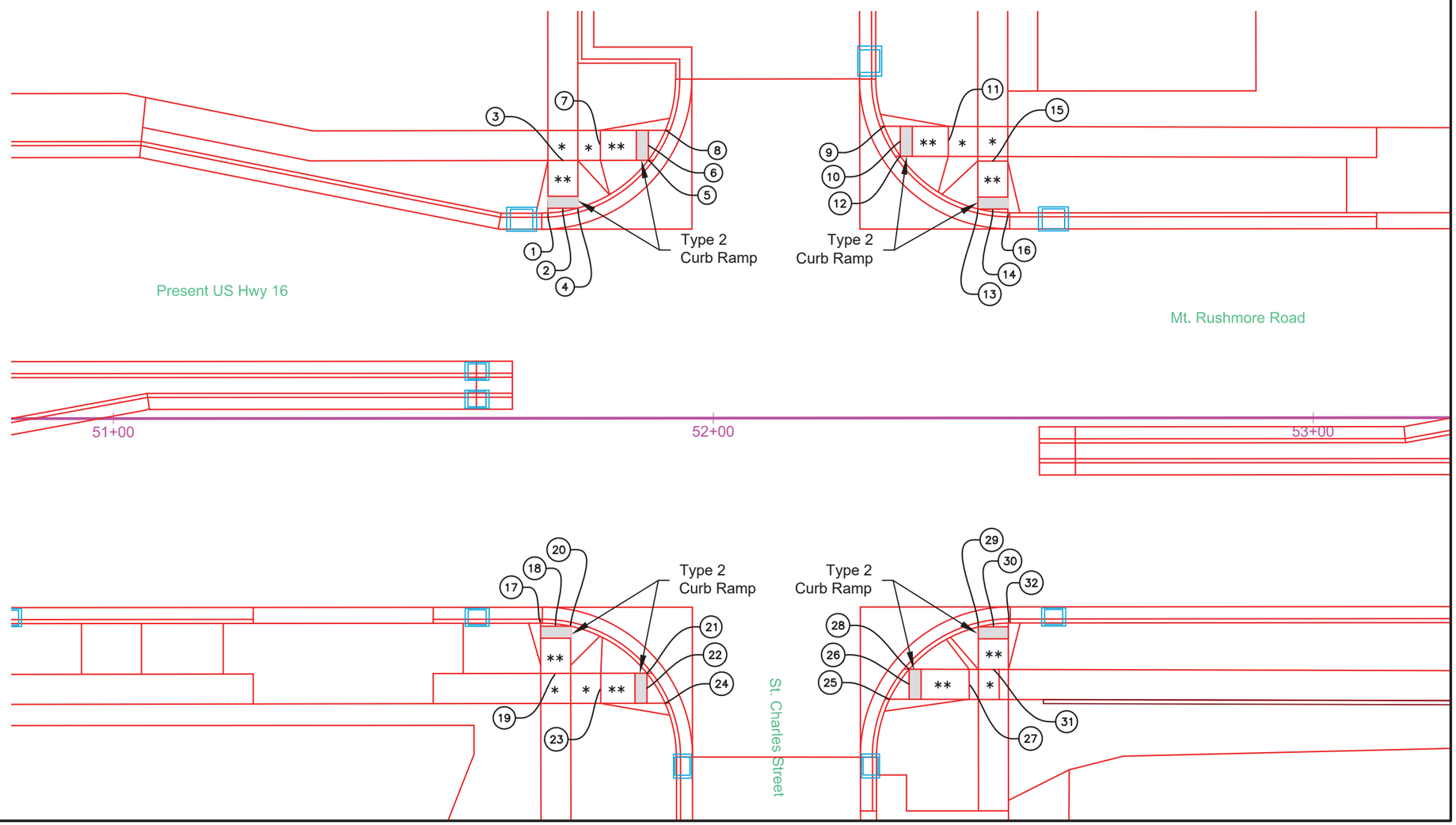

LEGEND:

* Turning Space with 1.5% Max Slope

** Curb Ramp with 7.5% Max Slope and 1.5% Max Cross Slope

Detectable Warning

07-29-16 P:\12-117\AutoCAD\PlanSheets\049F\Section B\049F-CURB-RAMP.dwg

CURB RAMP LAYOUT

(INTERSECTION OF MT. RUSHMORE RD & FRANKLIN ST.)

FOR BIDDING PURPOSES ONLY

STATE OF SOUTH DAKOTA	PROJECT	SHEET	TOTAL SHEETS
	NH0016(84)67	B94	B136

PLOTTING DATE: 07-29-16

1
55+68.70 - 46.18' LT
Bottom of Taper
Theor TC

2
55+70.47 - 47.94' LT
Begin Detectable Warning
and Ramp Slope

3
55+65.30 - 53.14' LT
End Ramp Slope

4
55+72.24 - 49.71' LT
Bottom of Taper
Theor TC

5
56+12.59 - 42.62' LT
Bottom of Taper
Theor TC

6
56+14.35 - 40.85' LT
Begin Detectable Warning
and Ramp Slope

7
56+19.60 - 46.07' LT
End Ramp Slope

8
56+16.12 - 39.08' LT
Bottom of Taper
Theor TC

9
55+65.62 - 39.06' RT
Bottom of Taper
Theor TC

10
55+67.38 - 40.83' RT
Begin Detectable Warning
and Ramp Slope

11
55+61.72 - 46.48' RT
End Ramp Slope

12
55+69.15 - 42.60' RT
Bottom of Taper
Theor TC

13
56+09.18 - 49.71' RT
Bottom of Taper
Theor TC

14
56+10.95 - 47.94' RT
Begin Detectable Warning
and Ramp Slope

15
56+16.12 - 53.14' RT
End Ramp Slope

16
56+12.73 - 46.18' RT
Bottom of Taper
Theor TC

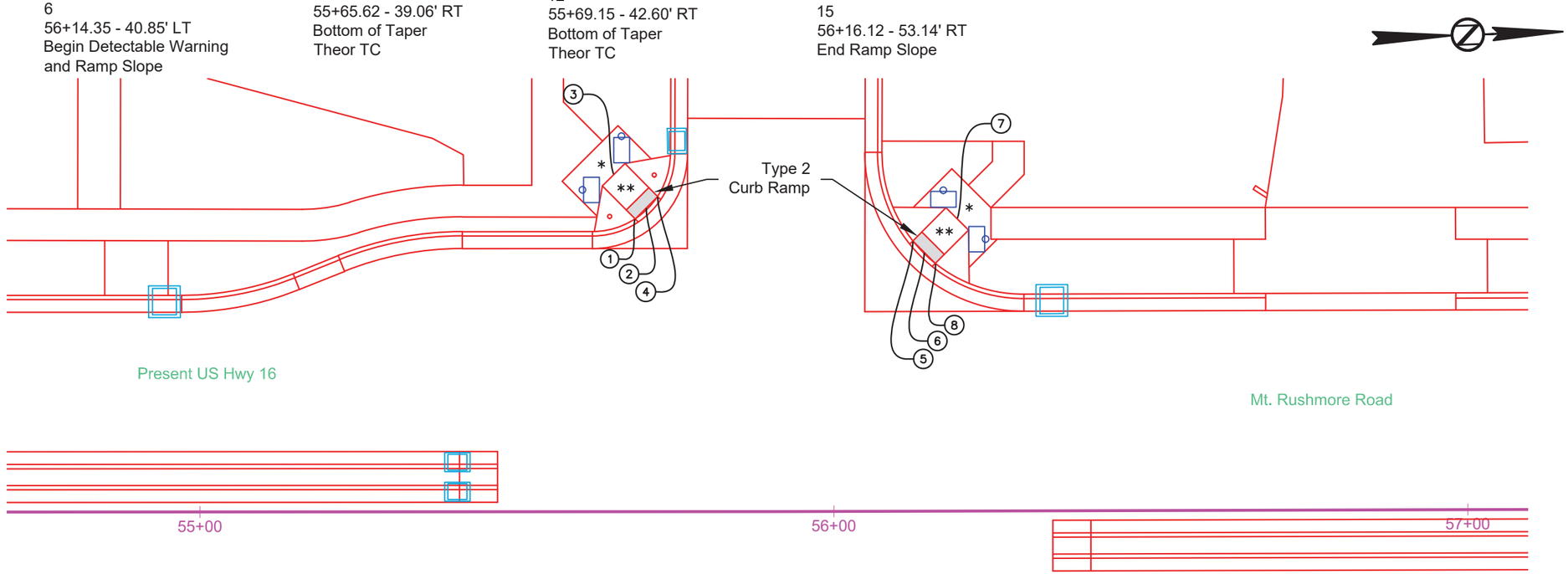

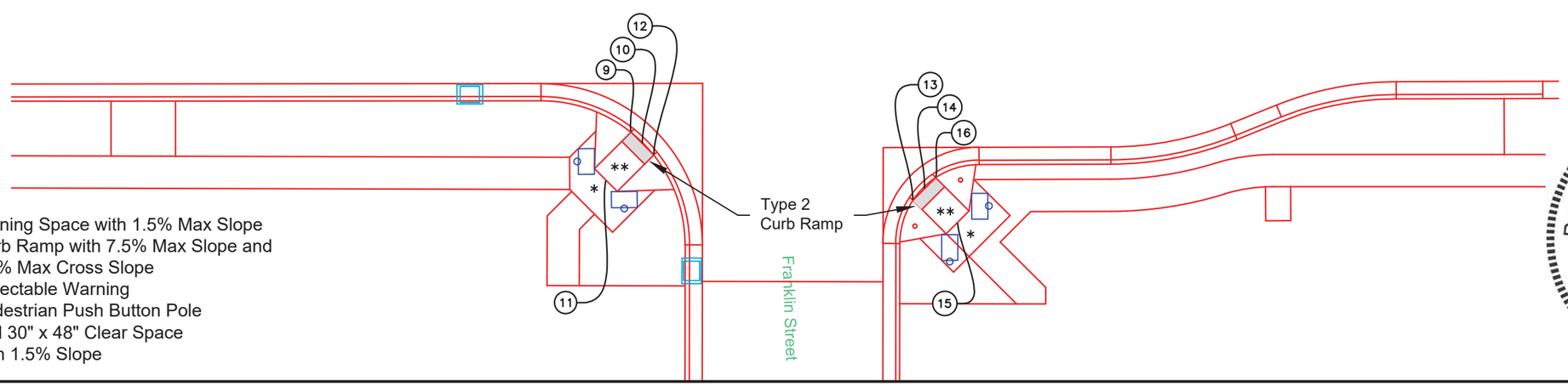

LEGEND:

* Turning Space with 1.5% Max Slope

** Curb Ramp with 7.5% Max Slope and 1.5% Max Cross Slope

Detectable Warning

Pedestrian Push Button Pole and 30" x 48" Clear Space with 1.5% Slope

REGISTERED PROFESSIONAL ENGINEER
REG. NO. 8019
JOHN RAYMOND VAN BEEK
SOUTH DAKOTA
8/17/16

07-29-16 P:\12-117\AutoCAD\PlanSheets\049F\Section B\049F-CURB-RAMP.dwg

CURB RAMP LAYOUT

(INTERSECTION OF MT. RUSHMORE RD & ST. CLOUD ST.)

FOR BIDDING PURPOSES ONLY

STATE OF SOUTH DAKOTA	PROJECT	SHEET	TOTAL SHEETS
	NH0016(84)67	B95	B136

PLOTTING DATE: 07-29-16

1
59+31.85 - 34.17' LT
Bottom of Taper
Theor TC

2
59+34.36 - 34.58' LT
Begin Detectable Warning
and Ramp Slope

3
59+34.40 - 41.95' LT
End Ramp Slope

4
59+36.86 - 34.57' LT
Bottom of Taper
Theor TC

5
59+49.57 - 41.91' LT
Bottom of Taper
Theor TC

6
59+49.57 - 44.41' LT
Begin Detectable Warning
and Ramp Slope

7
59+41.57 - 44.42' LT
End Ramp Slope

8
59+52.83 - 46.90' LT
Bottom of Taper
Theor TC

9
59+90.75 - 46.02' LT
Bottom of Taper
Theor TC

10
59+94.36 - 43.53' LT
Begin Detectable Warning
and Ramp Slope

11
60+02.36 - 43.55' LT
End Ramp Slope

12
59+94.36 - 41.03' LT
Bottom of Taper
Theor TC

13
60+04.52 - 34.98' LT
Bottom of Taper
Theor TC

14
60+07.02 - 34.97' LT
Begin Detectable Warning
and Ramp Slope

15
60+07.03 - 41.08' LT
End Ramp Slope

16
60+09.52 - 34.19' LT
Bottom of Taper
Theor TC

17
59+31.62 - 34.17' RT
Bottom of Taper
Theor TC

18
59+34.12 - 34.63' RT
Begin Detectable Warning
and Ramp Slope

19
59+34.07 - 43.55' RT
End Ramp Slope

20
59+36.62 - 34.65' RT
Bottom of Taper
Theor TC

21
59+50.26 - 43.59' RT
Bottom of Taper
Theor TC

22
59+50.26 - 46.09' RT
Begin Detectable Warning
and Ramp Slope

23
59+42.26 - 46.07' RT
End Ramp Slope

24
59+52.92 - 48.60' RT
Bottom of Taper
Theor TC

25
59+89.23 - 49.49' RT
Bottom of Taper
Theor TC

26
59+91.73 - 46.98' RT
Begin Detectable Warning
and Ramp Slope

27
59+99.39 - 46.94' RT
End Ramp Slope

28
59+91.73 - 44.48' RT
Bottom of Taper
Theor TC

29
60+04.42 - 35.11' RT
Bottom of Taper
Theor TC

30
60+06.92 - 35.11' RT
Begin Detectable Warning
and Ramp Slope

31
60+06.90 - 43.11' RT
End Ramp Slope

32
60+09.42 - 34.22' RT
Bottom of Taper
Theor TC

REGISTERED PROFESSIONAL ENGINEER
REG. NO. 8019
JOHN RAYMOND VAN BEEK
SOUTH DAKOTA
8/17/16

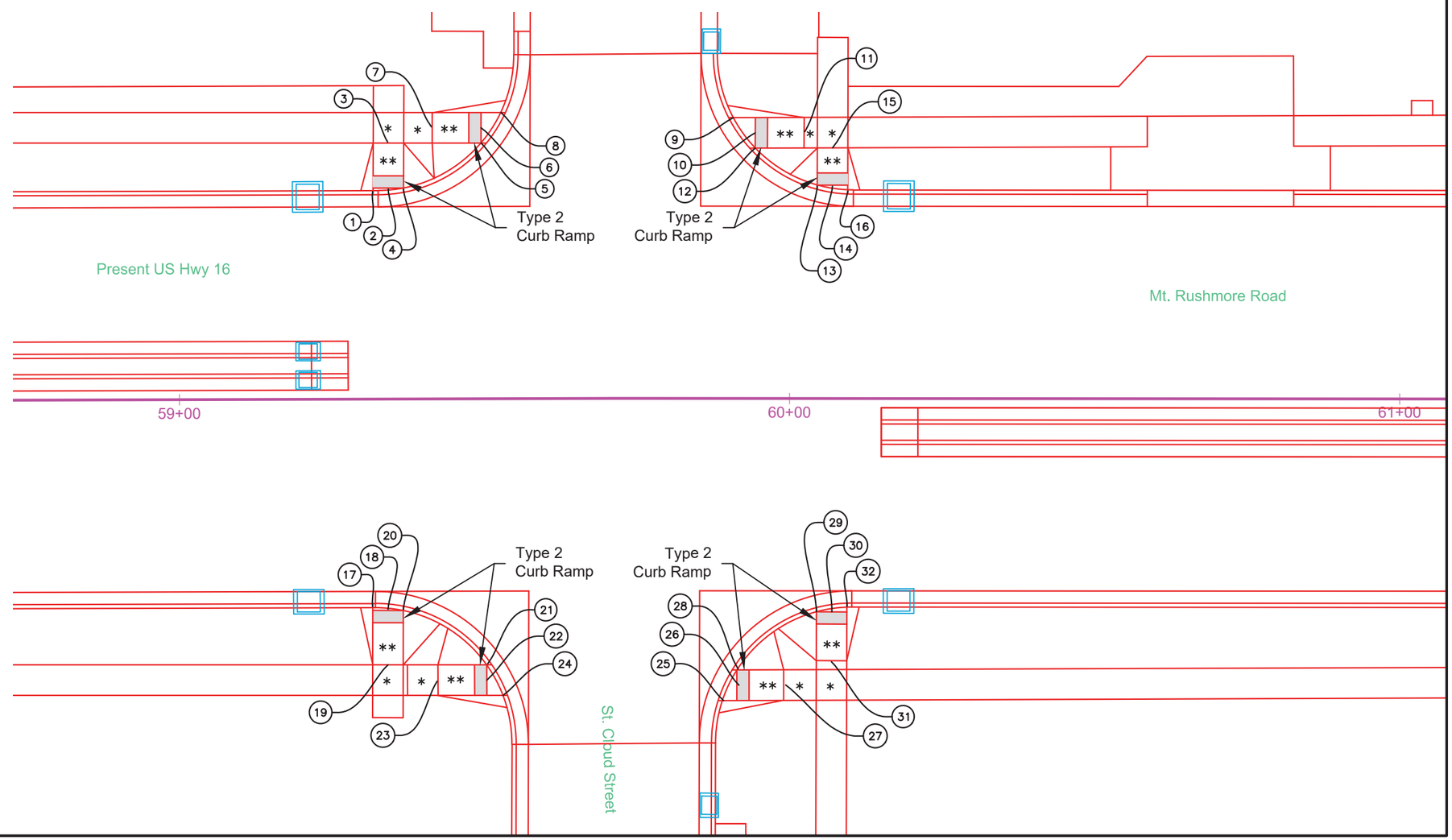

LEGEND:

* Turning Space with 1.5% Max Slope

** Curb Ramp with 7.5% Max Slope and 1.5% Max Cross Slope

Detectable Warning

07-29-16 P:\12-117\AutoCAD\PlanSheets\049F\Section B\049F-CURB-RAMP.dwg

CURB RAMP LAYOUT

(Median Crosswalk)

FOR BIDDING PURPOSES ONLY

STATE OF SOUTH DAKOTA	PROJECT	SHEET	TOTAL SHEETS
	NH0016(84)67	B96	B136

PLOTTING DATE: 07-29-16

REGISTERED PROFESSIONAL ENGINEER
REG. NO. 8019
JOHN RAYMOND VAN BEEK
SOUTH DAKOTA
8/17/16

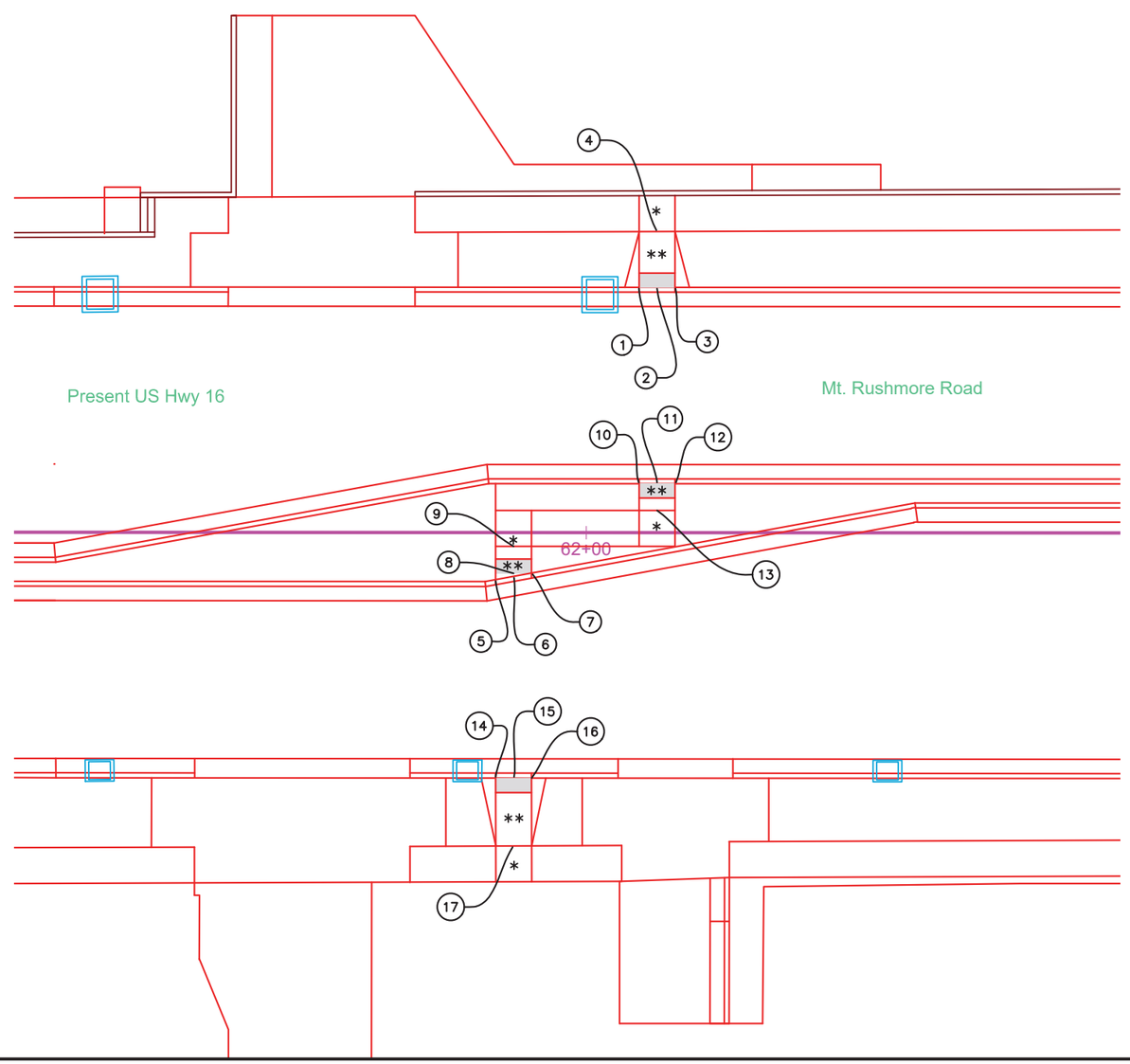

1
62+07.36 - 34.17' LT
Bottom of Taper
Theor TC

2
62+09.86 - 34.17' LT
Begin Detectable Warning
and Ramp Slope

3
62+12.36 - 34.17' LT
Bottom of Taper
Theor TC

4
62+09.85 - 41.95' LT
End Ramp Slope

5
61+87.40 - 6.56' RT
Bottom of Taper
Theor TC

6
61+89.90 - 6.10' RT
Begin Ramp Slope

7
61+92.39 - 5.64' RT
Bottom of Taper
Theor TC

8
61+89.89 - 5.67' RT
Begin Detectable Warning

9
61+89.89 - 1.93' RT
End Ramp Slope

10
62+07.38 - 6.83' LT
Bottom of Taper
Theor TC

11
62+09.88 - 6.83' LT
Begin Detectable Warning
and Ramp Slope

12
62+12.38 - 6.83' LT
Bottom of Taper
Theor TC

13
62+09.89 - 3.09' LT
End Ramp Slope

14
61+87.42 - 34.17' RT
Bottom of Taper
Theor TC

15
61+89.92 - 34.17' RT
Begin Detectable Warning
and Ramp Slope

16
61+92.42 - 34.17' RT
Bottom of Tape
Theor TC

17
61+89.93 - 43.64' RT
End Ramp Slope

LEGEND:

* Turning Space with 1.5% Max Slope

** Curb Ramp with 7.5% Max Slope and 1.5% Max Cross Slope

Detectable Warning

07-29-16 P:\12-117\AutoCAD\PlanSheets\049F\Section B\049F-CURB-RAMP.dwg

SPECIAL TYPE C CONCRETE RETAINING WALL DETAIL

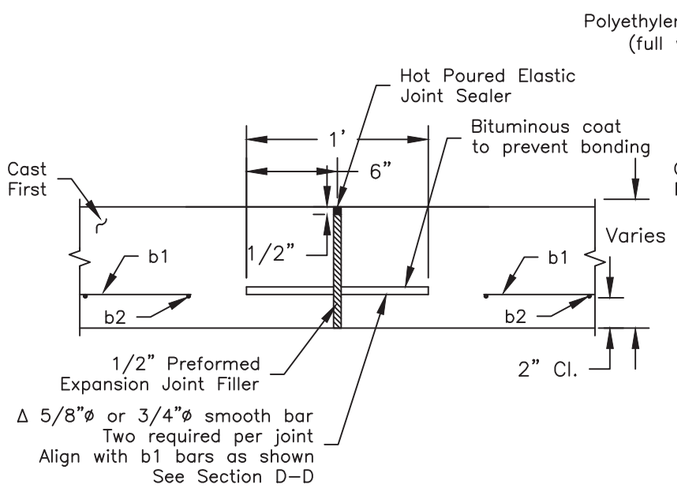

ELEVATION VIEW
EXPANSION JOINT FOR FOOTING

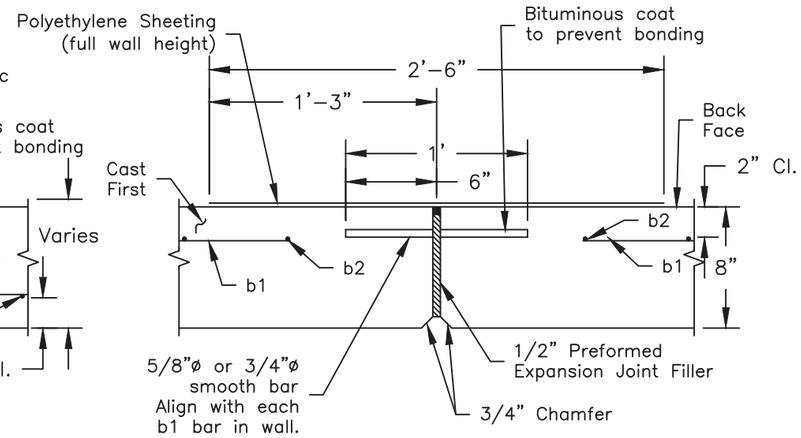

DETAIL A
PLAN VIEW
EXPANSION JOINT FOR WALL

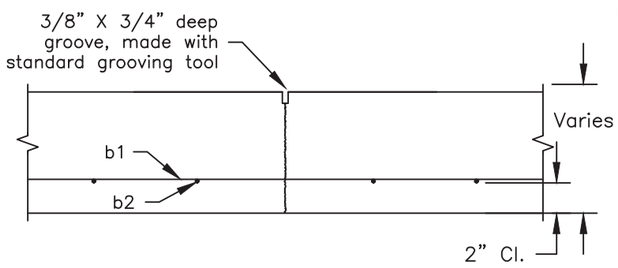

ELEVATION VIEW
CONTRACTION JOINT FOR FOOTING

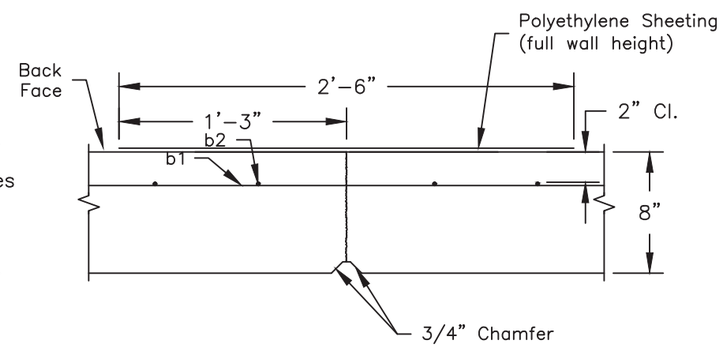

PLAN VIEW
CONTRACTION JOINT FOR WALL

GENERAL NOTES:

The Special Type C Concrete Retaining Wall shall be placed adjacent to pavement or curb and gutter as show in section D–D.
* The sidewalk width of the Special Type C Concrete Retaining Wall shall not be wider than 8 feel or narrower than 5 feet. See plans for specified width.

In the areas where the retaining wall footing is to be placed, a 2 inch thickness of cushion material shall be placed and compacted. The cushion material shall conform to section 651.2 C. of the Specifications.

All rebar shall be #4, epoxy coated and conform to Sections 480 and 1010 of the Specifications.

All concrete shall be Class M6 and conform to Section 462 of the Specifications.

For variable height walls, the top b1 bar shall be placed parallel to the top of the wall.

The b1 bars shall be lapped a minimum of 12 inches.

A 3/4 inch chamfer shall be provided on all exposed retaining wall edges.

Use Detail B for constructing corners in the retaining wall.

The maximum expansion joint spacing shall be 90 feet and the maximum contraction joint spacing shall be 30 feet. The contraction and expansion joints shall be placed to match pavement or curb joints where possible.

The exposed retaining wall surfaces shall receive a finish in accordance with Special Provisions. The exposed surface of the retaining wall footing, when used as a sidewalk, shall receive a broom finish.

The Special Type C Concrete Retaining Wall shall be measured to the nearest square foot of the front face area.

All costs for excavation, furnishing and placing backfill and cushion material, labor, equipment, preformed expansion joint filler, all reinforcing steel including the smooth bars, and all concrete except in the areas of PCC driveway and approach pavement, shall be incidental to the contract unit price per square foot for "Special Type C Concrete Retaining Wall".

The concrete used for the retaining wall footing that extends into the approach and/or driveway pavement shall be paid for at the contract unit price per square yard for the corresponding "PCC Approach Pavement" and/or "PCC Driveway Pavement" bid items.

07-29-16 P:\12-117\AutoCAD\PlanSheets\049F\Section B\049F_WALL_SPECIAL DTL.dwg

FOR BIDDING PURPOSES ONLY

SPECIAL TYPE C CONCRETE RETAINING WALL DETAIL

Use No. 4 bars for all reinforcing steel unless specified otherwise.

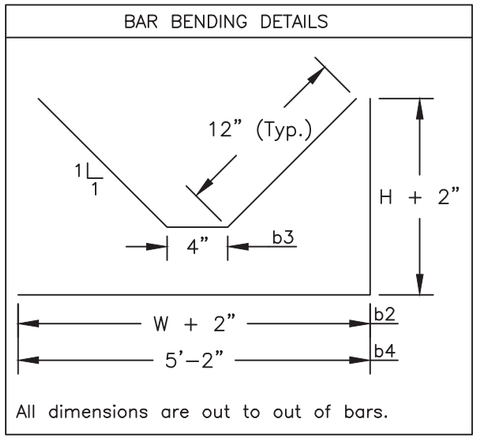

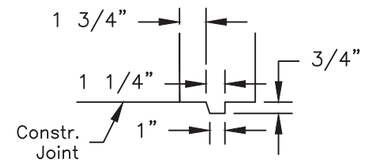

DETAIL C
SECTION OF KEYWAY SHOWING CONSTRUCTION JOINT BETWEEN WALL AND FOOTING

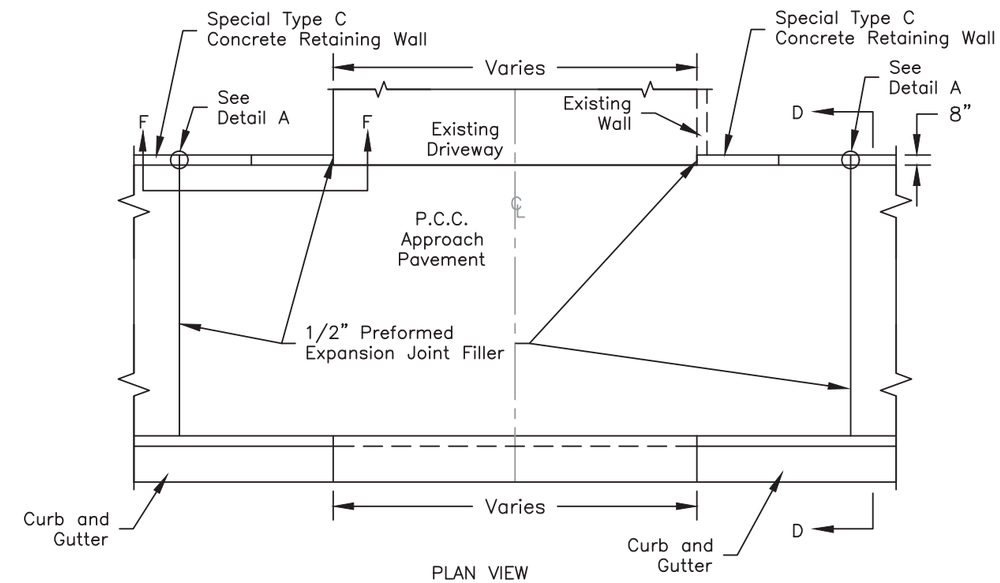

PLAN VIEW
SPECIAL TYPE C CONCRETE RETAINING WALL ON P.C.C. APPROACH PAVEMENT

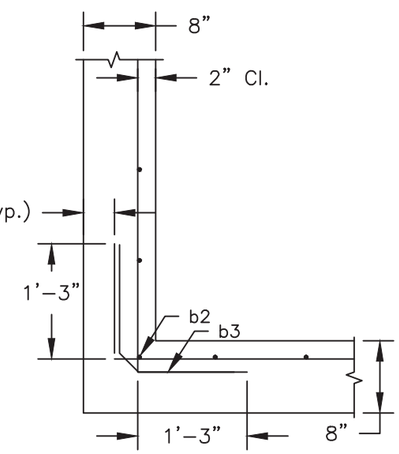

DETAIL B
PLAN VIEW OF WALL CORNER DETAIL

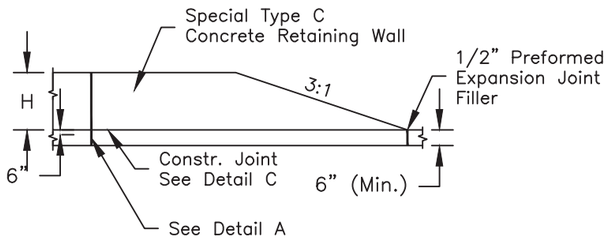

VIEW F-F

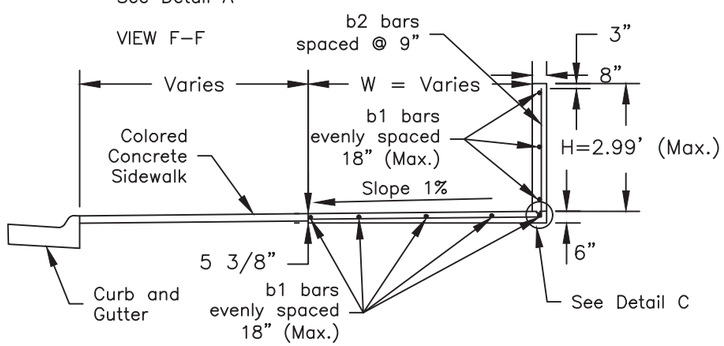

SECTION D-D

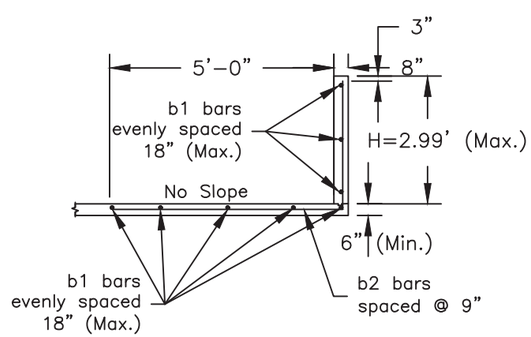

SECTION E-E

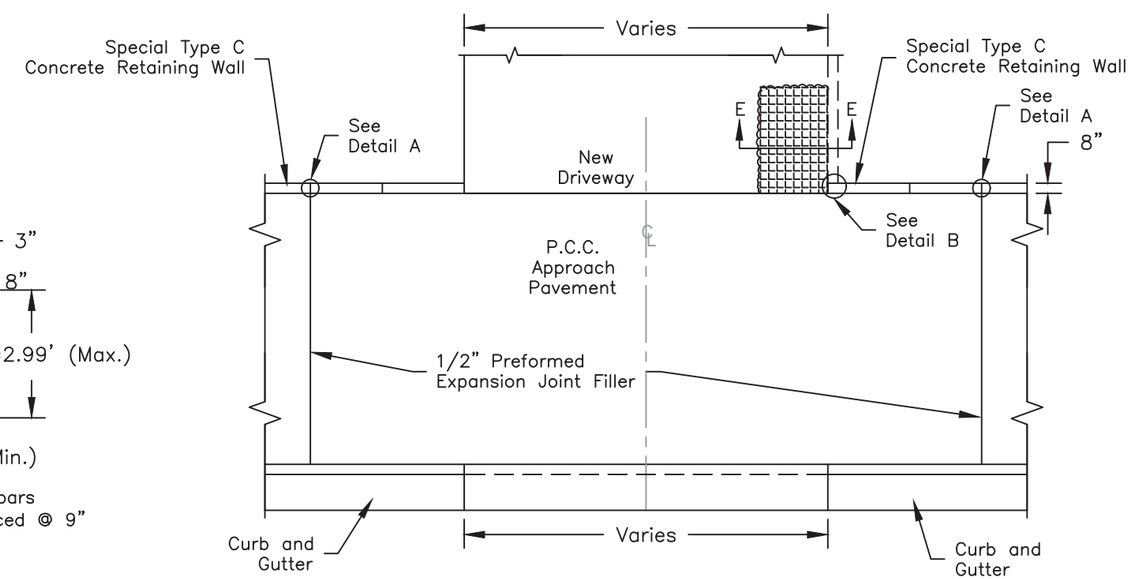

PLAN VIEW
SPECIAL TYPE C CONCRETE RETAINING WALL ON P.C.C. DRIVEWAY AND APPROACH PAVEMENT

07-29-16 P:\12-117\AutoCAD\PlanSheets\049F\Section B\049F-WALL-SPECIAL DTL.dwg

FOR BIDDING PURPOSES ONLY

SPECIAL TYPE C CONCRETE RETAINING WALL WITH SHEAR KEY FOOTING DETAIL

St. Patrick Street
Sta 3+15 to Sta 3+58 R
Sta to 2+87 to Sta 3+66 L

St. Andrew Street
Sta 4+20 to Sta 4+53 R

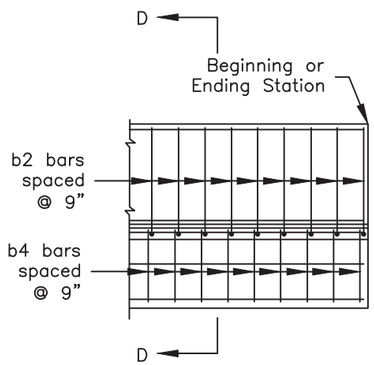

ELEVATION VIEW SPECIAL TYPE C CONCRETE RETAINING WALL

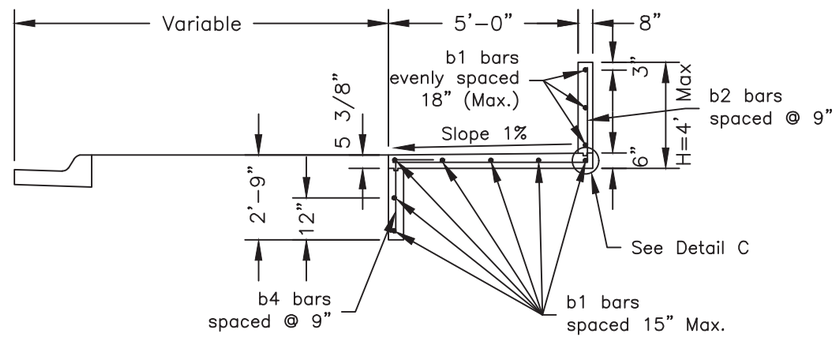

SECTION D-D

Use No. 4 bars for all reinforcement steel unless specified otherwise.

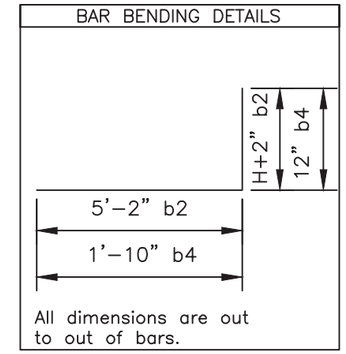

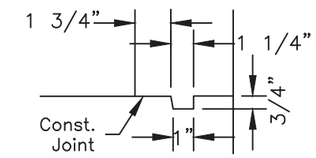

DETAIL "C"
SECTION OF KEYWAY SHOWING CONSTRUCTION JOINT BETWEEN WALL AND FOOTING

GENERAL NOTES:

In the areas where the retaining wall footing is to be placed, a 2 inch thickness of cushion material shall be placed and compacted. The cushion material shall conform to Section 651.2 C. of the Specifications.

All concrete shall be Class M6 and conform to Section 462 of the Specifications.

All rebar shall be #4, epoxy coated and conform to Sections 480 and 1010 of the Specifications.

For variable height walls, the top b1 bar shall be placed parallel to the top of the wall.

The b1 bars shall be lapped a minimum of 12 inches.

A 3/4 inch chamfer shall be provided on all exposed retaining wall edges.

The maximum expansion joint spacing shall be 90 feet and the maximum contraction joint spacing shall be 30 feet. The contraction and expansion joints shall be placed to match pavement or curb joints where possible.

The exposed retaining wall surfaces shall receive a finish in accordance with Special Provisions. The exposed surface of the retaining wall footing, when used as a sidewalk, shall receive a broom finish.

The Special Type C Concrete Retaining Wall shall be measured to the nearest square foot of front face area.

All costs for excavation, furnishing and placing backfill and cushion material, labor, equipment, preformed expansion joint filler, all reinforcing steel including the No. 5 smooth bars, and all concrete, shall be incidental to the contract unit price per square foot for "Special Type C Concrete Retaining Wall".

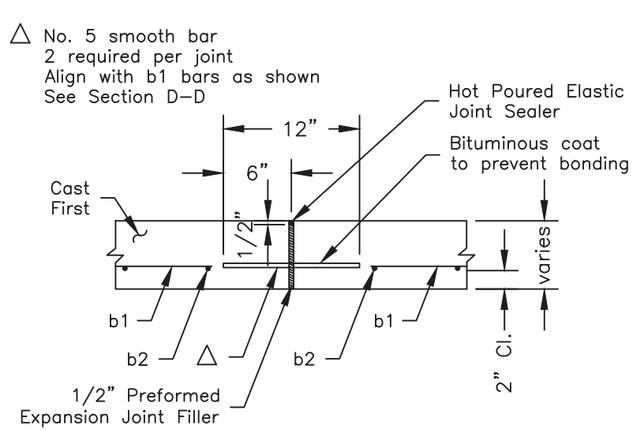

ELEVATION VIEW
EXPANSION JOINT FOR FOOTING

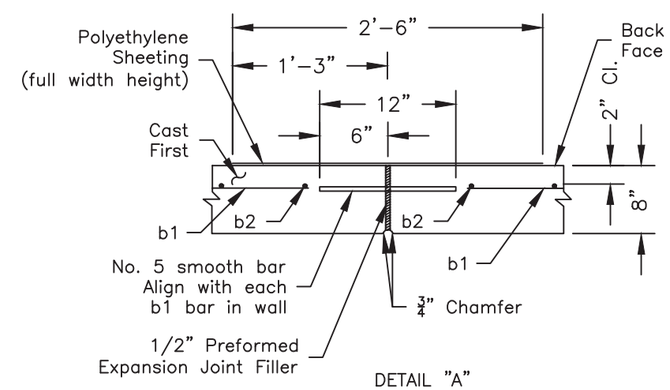

DETAIL "A"
PLAN VIEW
EXPANSION JOINT FOR WALL

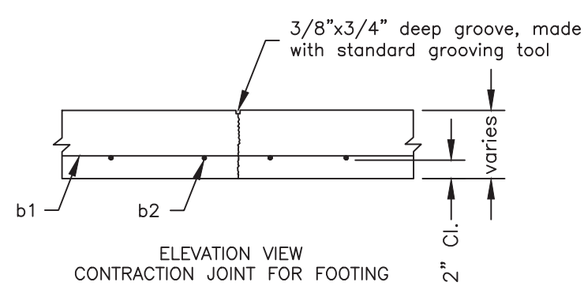

ELEVATION VIEW
CONTRACTION JOINT FOR FOOTING

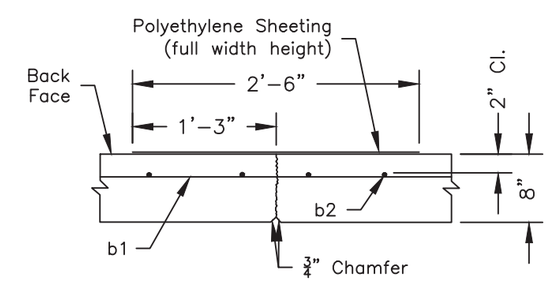

PLAN VIEW
CONTRACTION JOINT FOR WALL

07-29-16 P:\12-117\AutoCAD\PlanSheets\049F\Section B\049F-WALL-SPECIAL DTL.dwg

FOR BIDDING PURPOSES ONLY

STATE OF SOUTH DAKOTA	PROJECT	SHEET	TOTAL SHEETS
	NH0016(84)67	B100	B136

PLOTTING DATE: 07-29-16

Note: Stations And Offsets Are To Front Face Of Wall Unless Otherwise Noted.

RETAINING WALL LAYOUT

(SPECIAL TYPE C WALLS)

SCALE: 1" = 20'

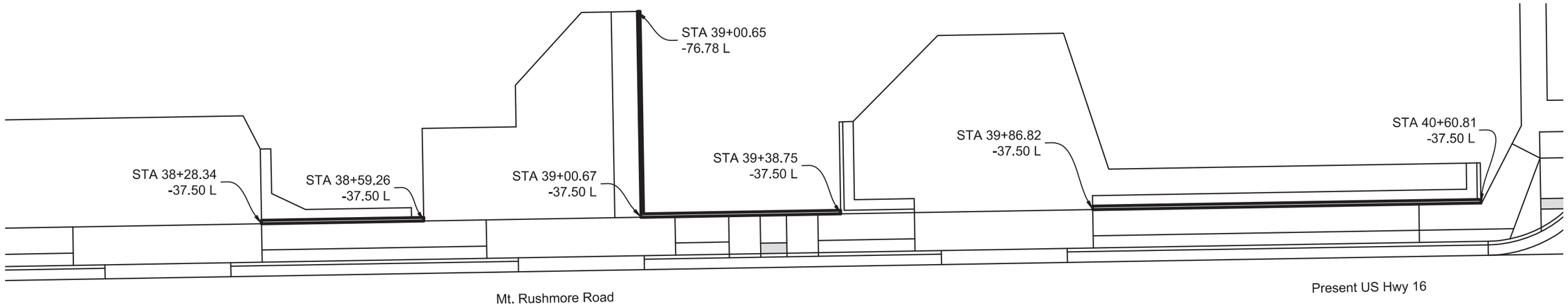

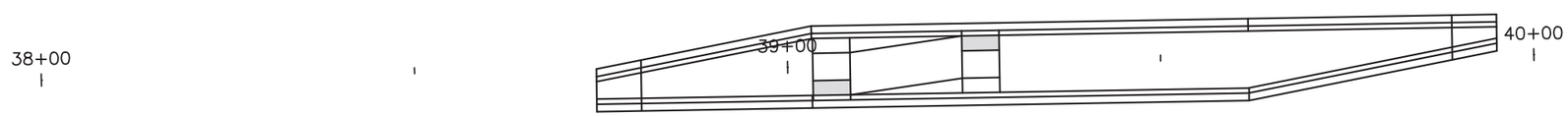

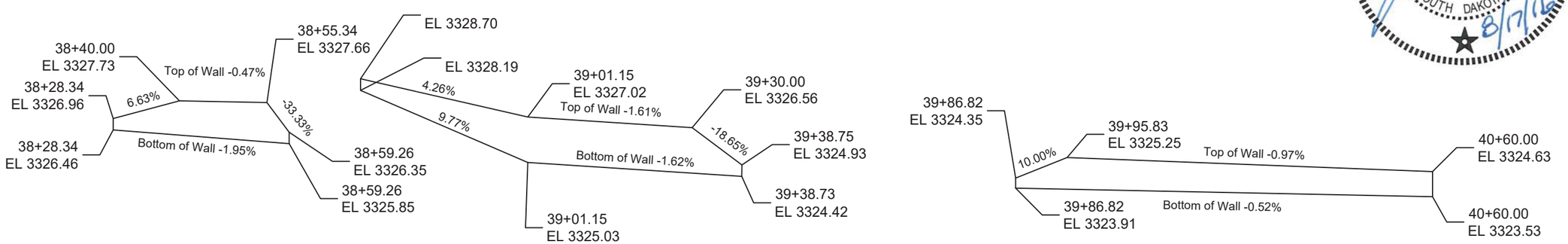

See Special Provision for Patterning Special Type C Retaining Walls

07-29-16 P:\12-117\AutoCAD\PlanSheets\049F\Section B\049F_WALL.dwg

STATE OF SOUTH DAKOTA	PROJECT	SHEET	TOTAL SHEETS
	NH0016(84)67	B101	B136

PLOTTING DATE: 07-29-16

FOR BIDDING PURPOSES ONLY

Note: Stations And Offsets Are To Front Face Of Wall Unless Otherwise Noted.

RETAINING WALL LAYOUT

(SPECIAL TYPE C WALLS)

SCALE: 1" = 20'

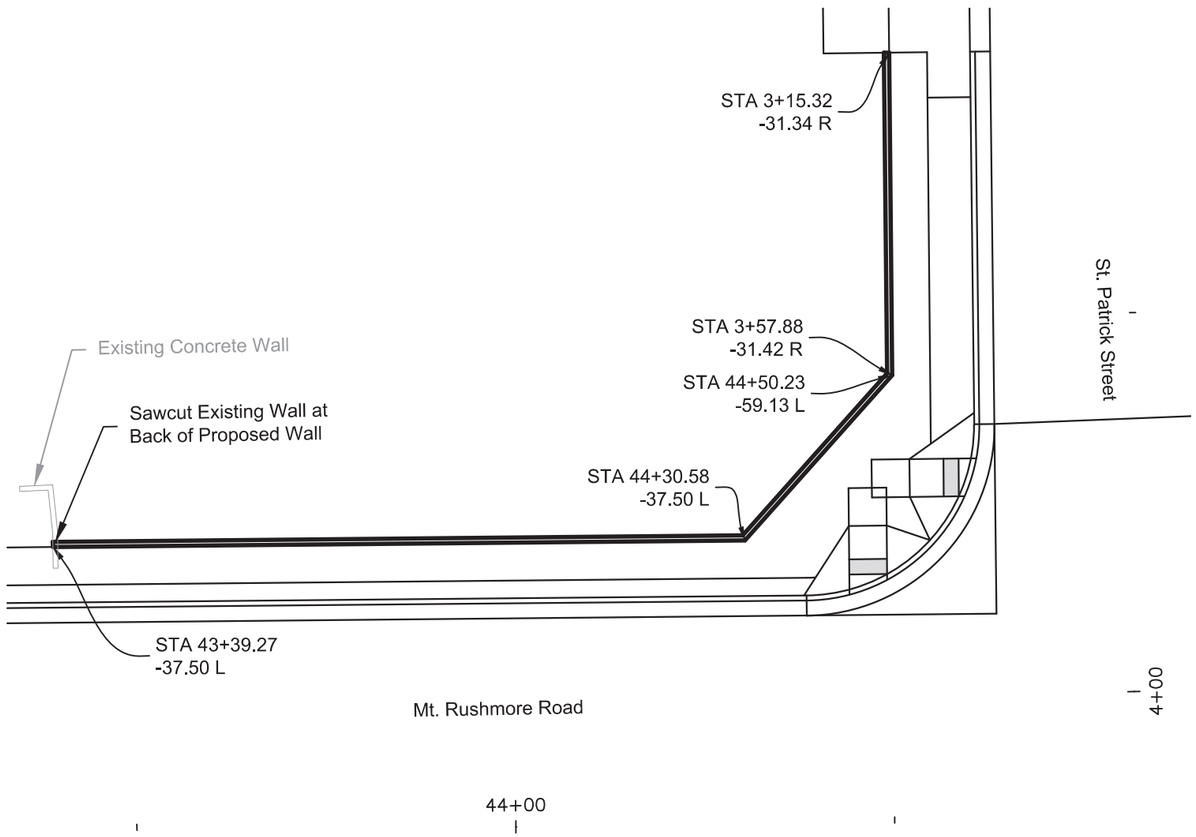

SCALE: 1" = 20'

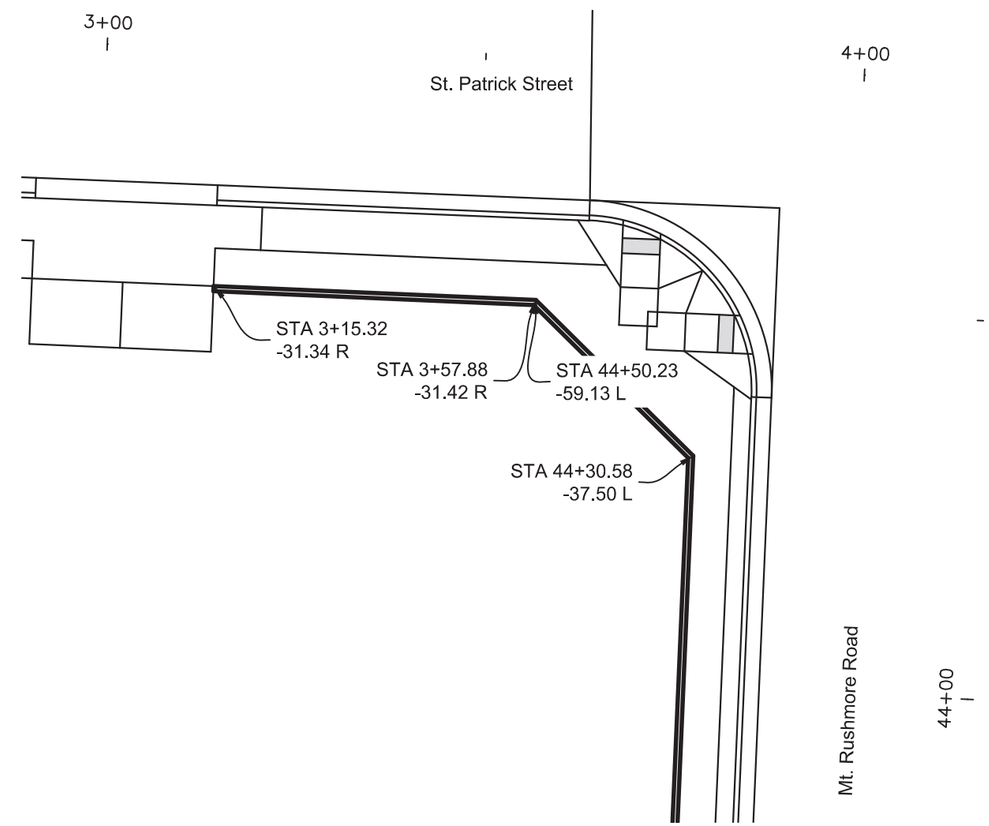

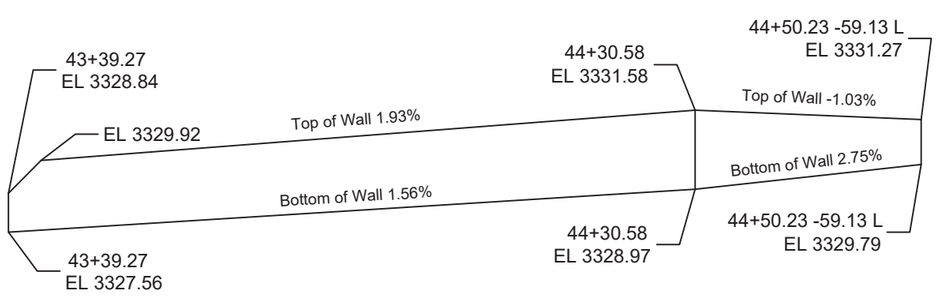

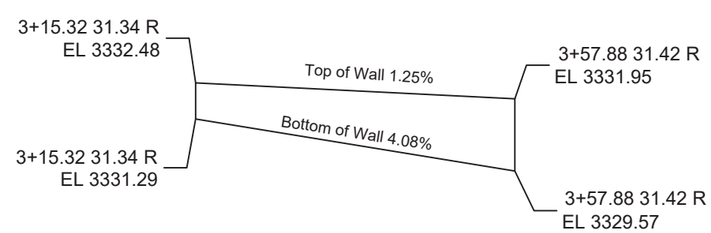

See Special Provision for Patterning Special Type C Retaining Walls

07-29-16 P:\12-117\AutoCAD\PlanSheets\049F\Section B\049F-WALL.dwg

STATE OF SOUTH DAKOTA	PROJECT	SHEET	TOTAL SHEETS
	NH0016(84)67	B102	B136

PLOTTING DATE: 07-29-16

FOR BIDDING PURPOSES ONLY

RETAINING WALL LAYOUT

(SPECIAL TYPE C WALLS)

Note: Stations And Offsets Are To Front Face Of Wall Unless Otherwise Noted.

SCALE: 1" = 20'

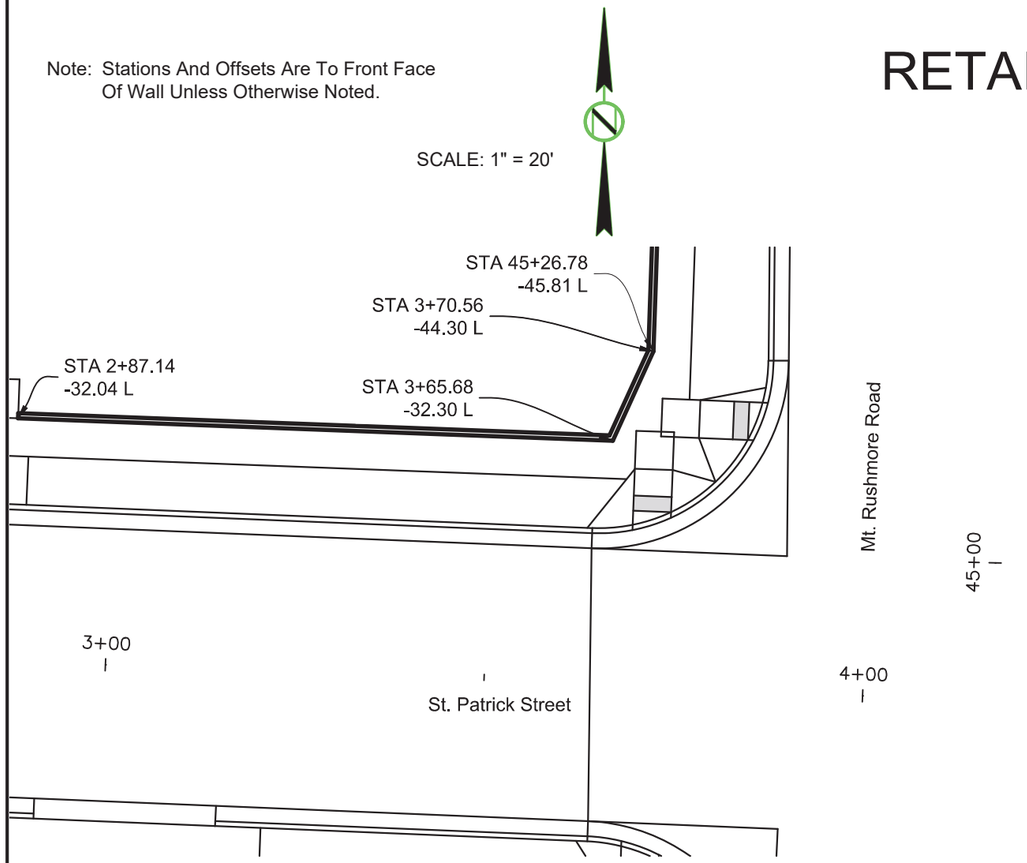

SCALE: 1" = 20'

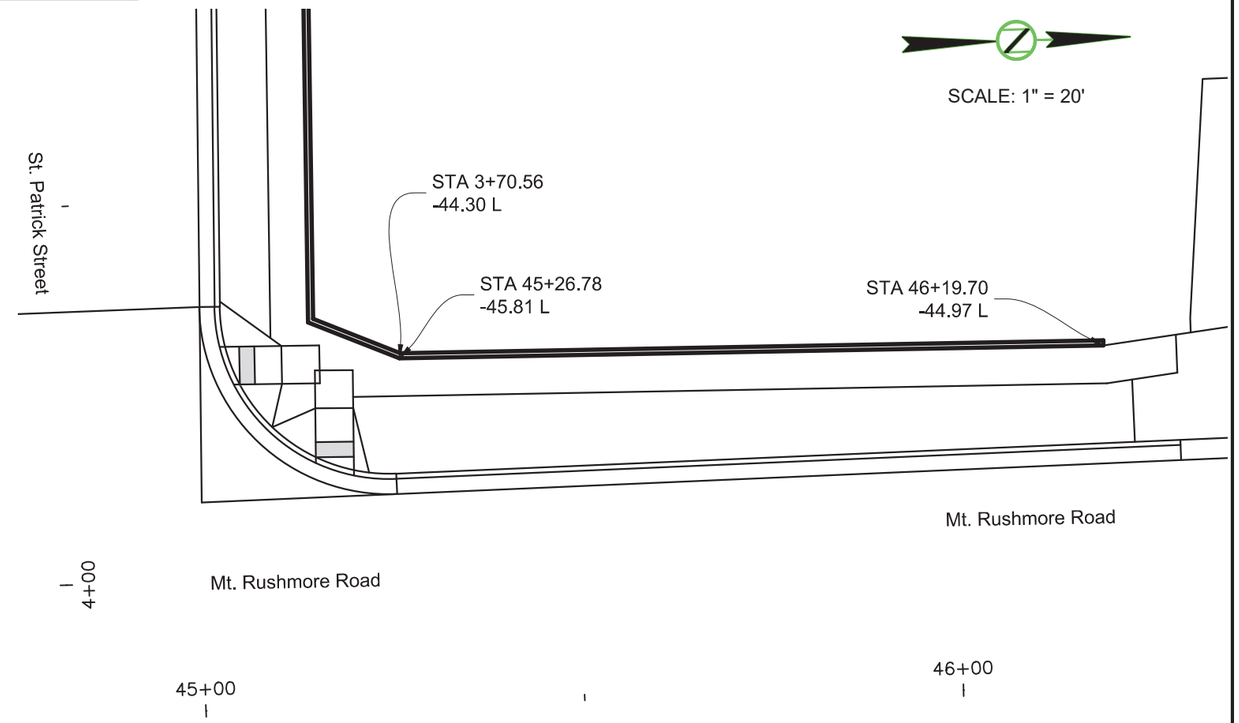

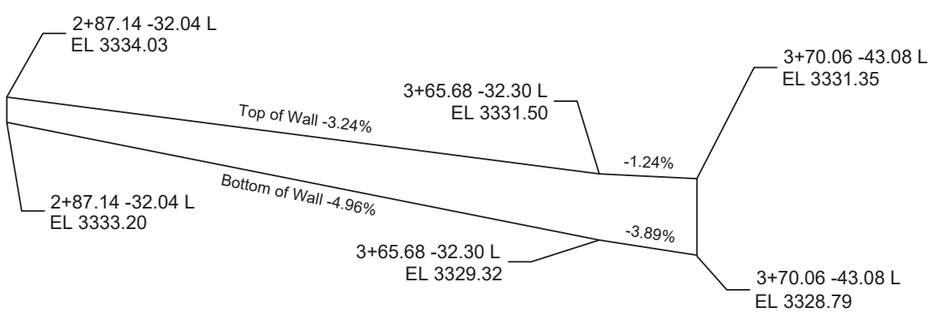

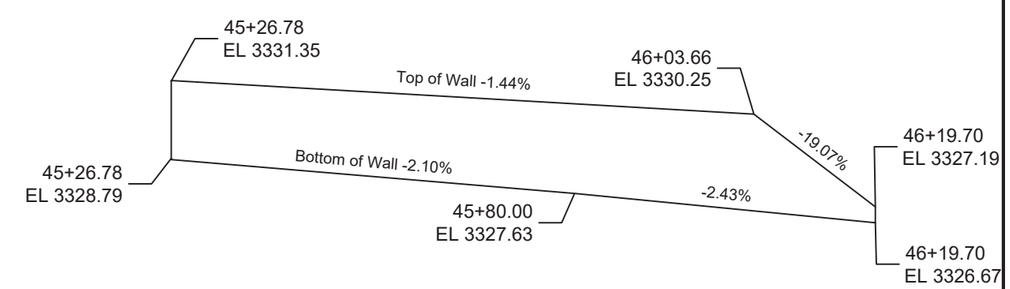

See Special Provision for Patterning Special Type C Retaining Walls

07-29-16 P:\12-117\AutoCAD\PlanSheets\049F\Section B\049F_WALL.dwg

FOR BIDDING PURPOSES ONLY

Note: Stations And Offsets Are To Front Face Of Wall Unless Otherwise Noted.

RETAINING WALL LAYOUT

(SPECIAL TYPE C WALLS)

SCALE: 1" = 20'

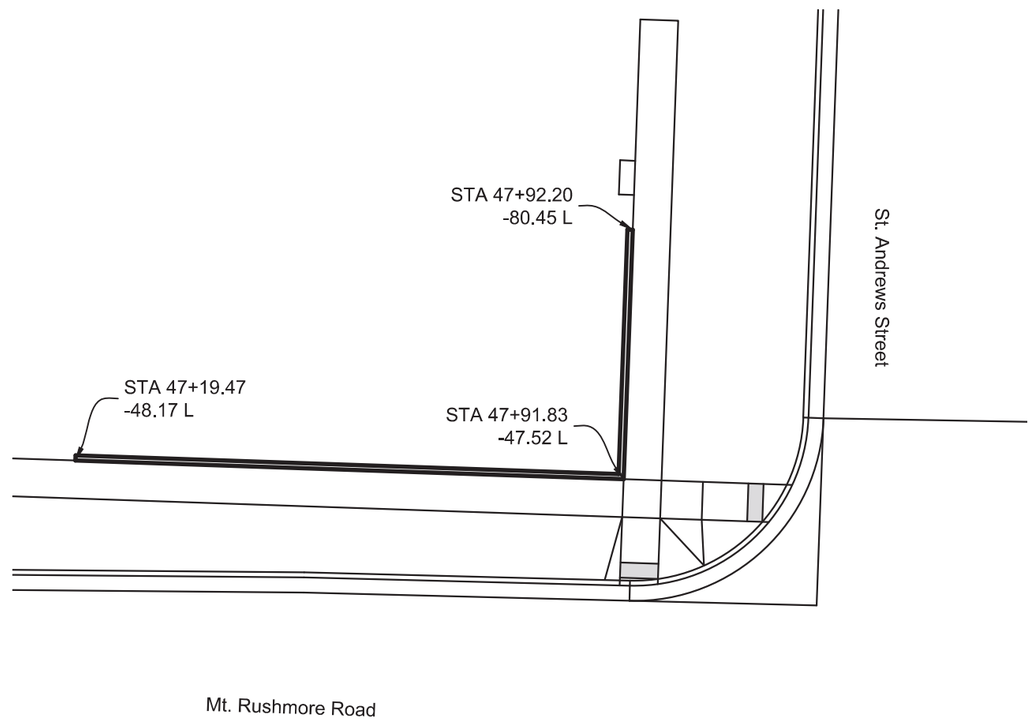

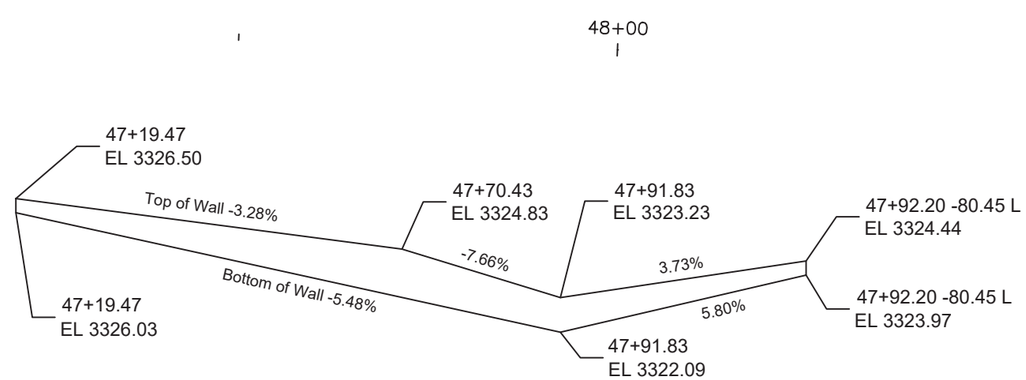

See Special Provision for Patterning Special Type C Retaining Walls

07-29-16 P:\12-117\AutoCAD\PlanSheets\049F\Section B\049F_WALL.dwg

FOR BIDDING PURPOSES ONLY

STATE OF SOUTH DAKOTA	PROJECT	SHEET	TOTAL SHEETS
	NH0016(84)67	B104	B136

PLOTTING DATE: 07-29-16

Note: Stations And Offsets Are To Front Face Of Wall Unless Otherwise Noted.

RETAINING WALL LAYOUT

(SPECIAL TYPE C WALLS)

SCALE: 1" = 20'

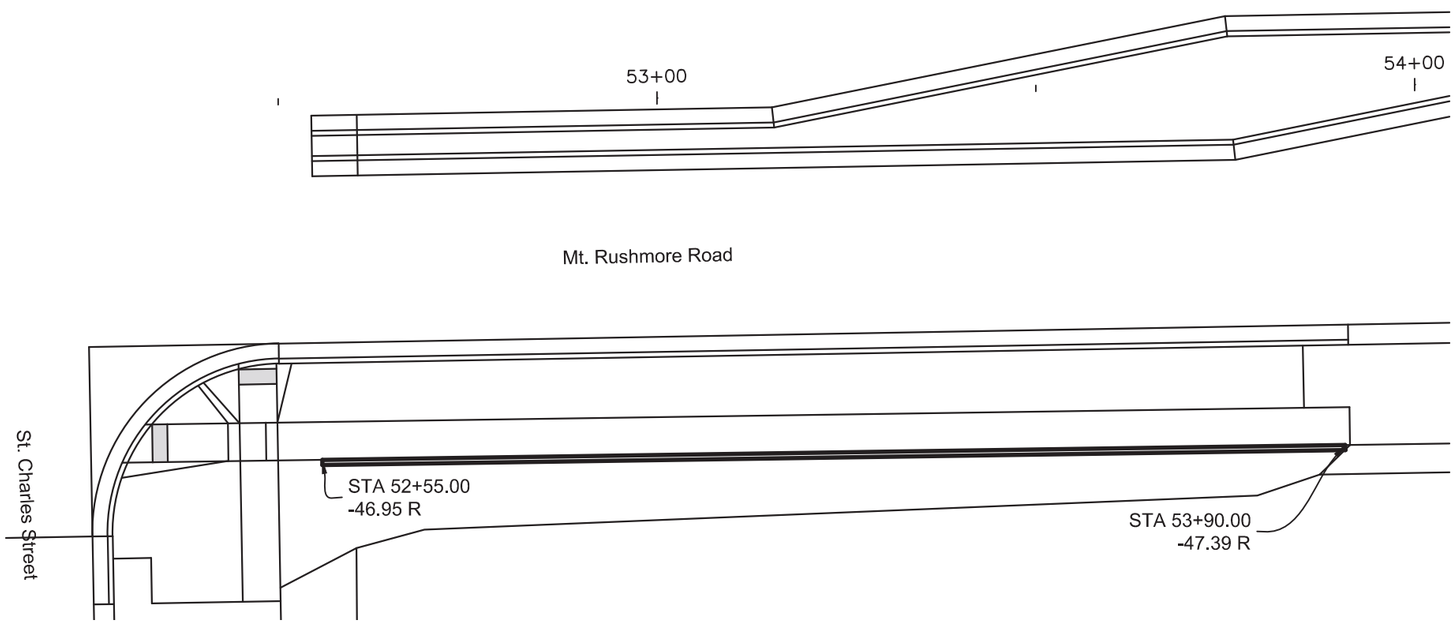

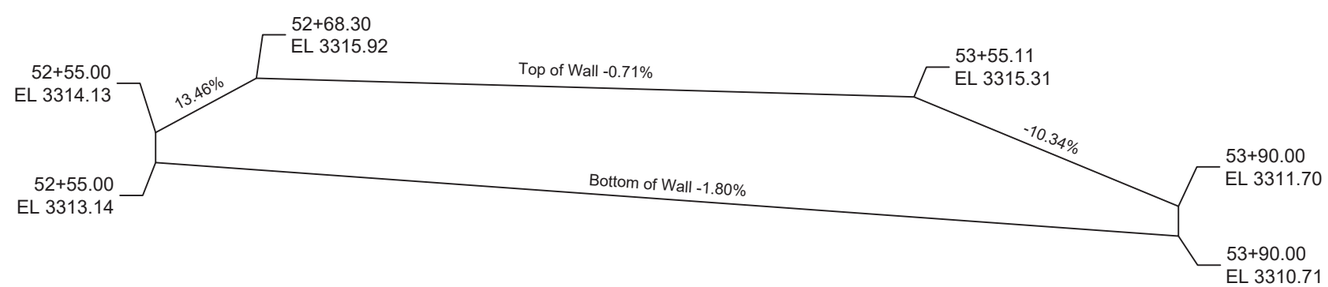

REGISTERED PROFESSIONAL ENGINEER
REG. NO. 8019
JOHN RAYMOND VAN BEEK
SOUTH DAKOTA
8/17/16

See Special Provision for Patterning Special Type C Retaining Walls

07-29-16 P:\12-117\AutoCAD\PlanSheets\049F\Section_B\049F-WALL.dwg

FOR BIDDING PURPOSES ONLY

STATE OF SOUTH DAKOTA	PROJECT	SHEET	TOTAL SHEETS
	NH0016(84)67	B105	B136

PLOTTING DATE: 07-29-16

Note: Stations And Offsets Are To Front Face Of Wall Unless Otherwise Noted.

RETAINING WALL LAYOUT

(SPECIAL TYPE C WALLS)

SCALE: 1" = 20'

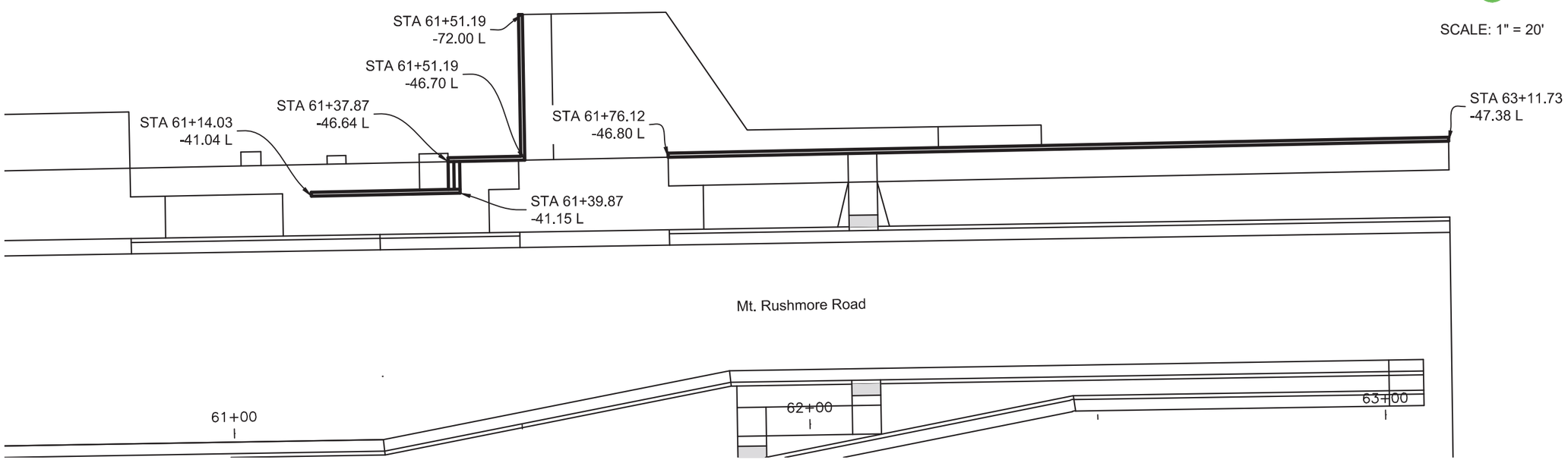

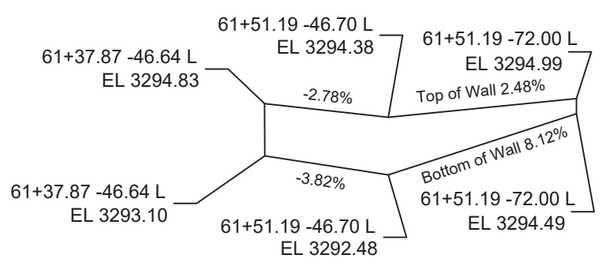

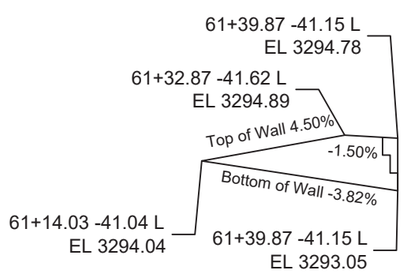

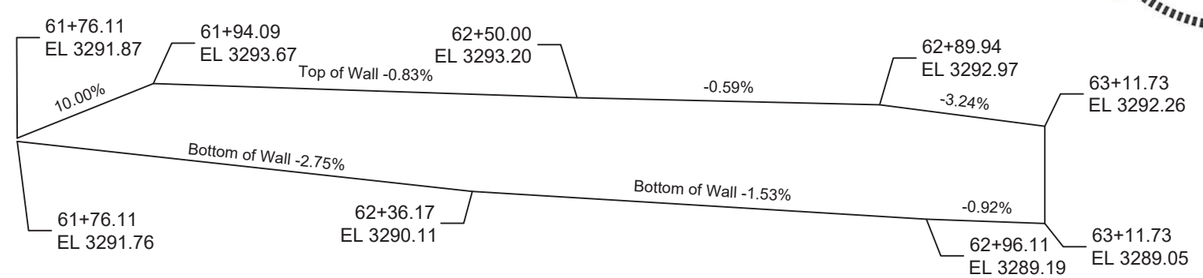

See Special Provision for Patterning Special Type C Retaining Walls

07-29-16 P:\12-117\AutoCAD\PlanSheets\049F\Section B\049F_WALL.dwg

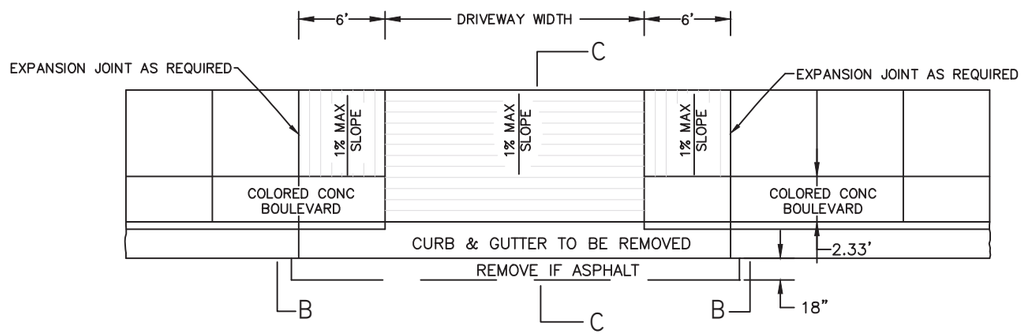

PLAN VIEW

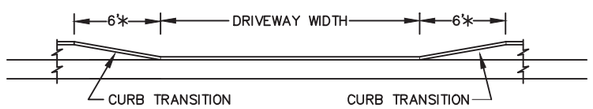

SECTION VIEW B-B

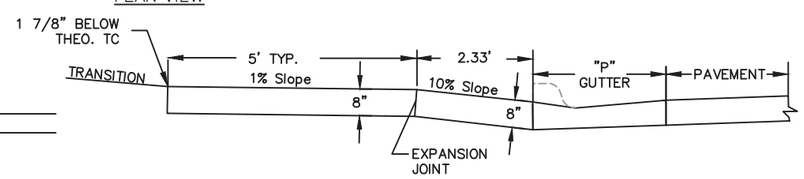

SECTION VIEW C-C

* REQUIREMENT: IT WILL BE NECCESSARY TO EXTEND THE CURB TRANSITION LENGTH ACCORDING TO THE TABLE TO ACHIEVE THE 8.33% MAXIMUM RUNNING SLOPE ON THE SIDEWALK RAMP ADACENT TO THE CURB. THE TRANSITION LENGTH WILL BE LIMITED TO 15' IN LENGTH.

	TRANSITION LENGTH 8.33% MAX SLOPE	
STREET GRADE	LOW SIDE	HIGH SIDE
1%	6'-0"	6'-0"
2%	6'-0"	6'-0"
3%	6'-0"	6'-0"
4%	6'-0"	6'-0"
5%	6'-0"	7'-0"
6%	6'-0"	10'-0"
7% +	6'-0"	15'-0"

SPECIAL APPROACH DETAIL

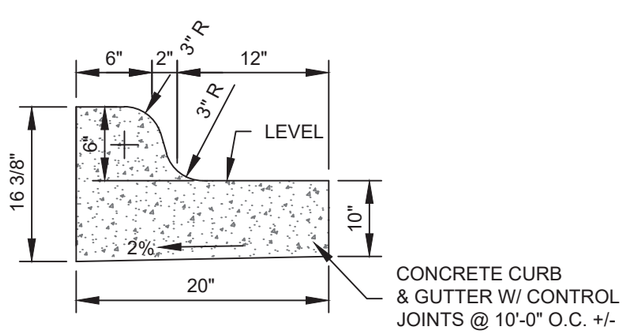

SPECIAL CONCRETE CURB AND GUTTER

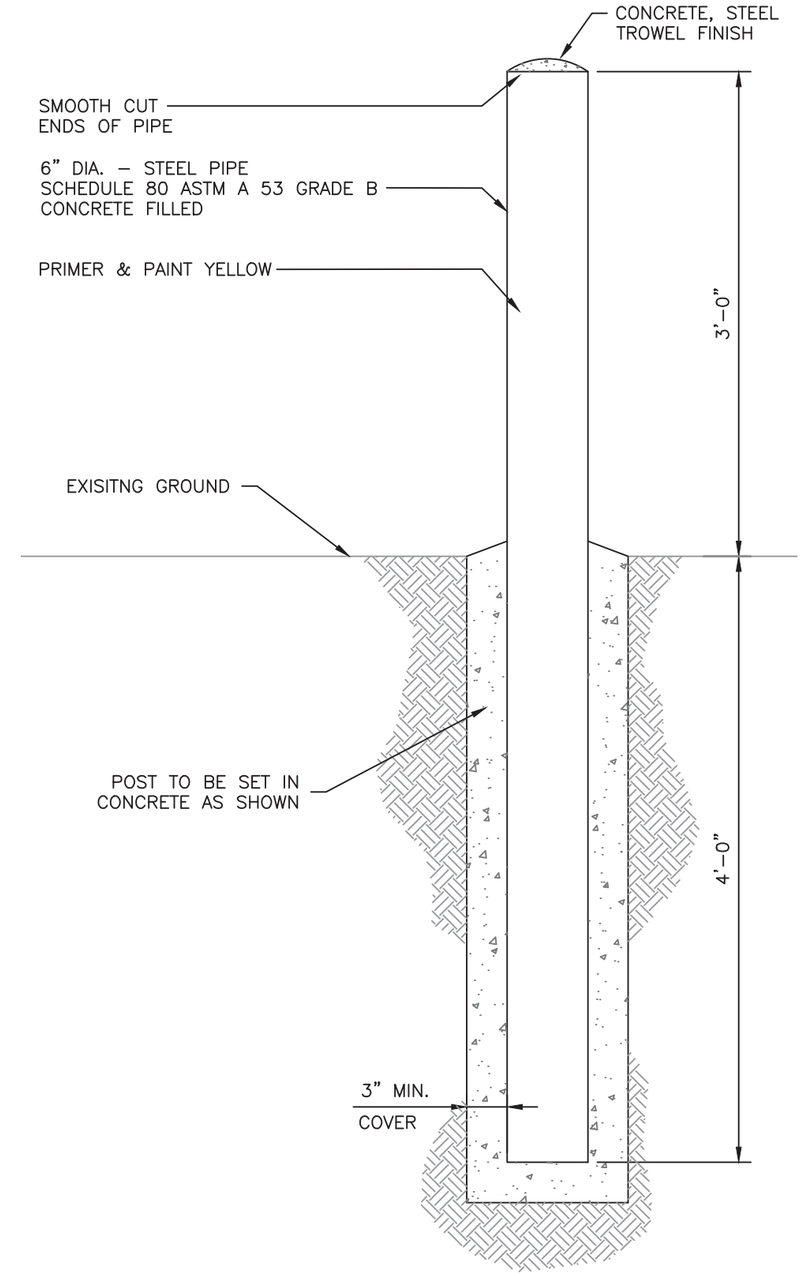

6" CONCRETE BOLLARD DETAIL DETAIL

07-29-16 P:\12-117\AutoCAD\PlanSheets\049F\Section B\049F-DETL-SPECIAL.dwg

STATE OF SOUTH DAKOTA	PROJECT	SHEET	TOTAL SHEETS
	NH0016(84)67	B107	B136

PLOTTING DATE: 07-29-16

FOR BIDDING PURPOSES ONLY

STEEL RAIL DETAILS

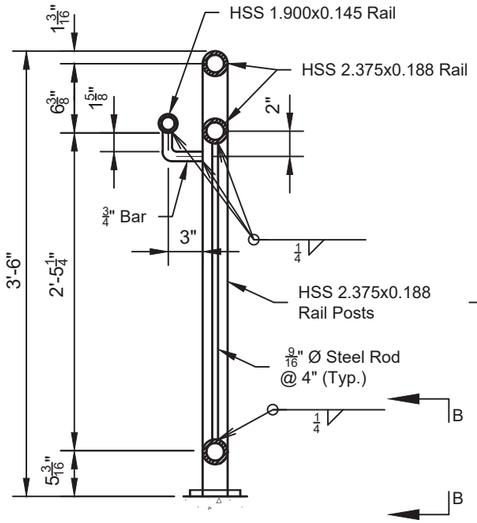

TYPICAL SECTION WITH HANDRAIL

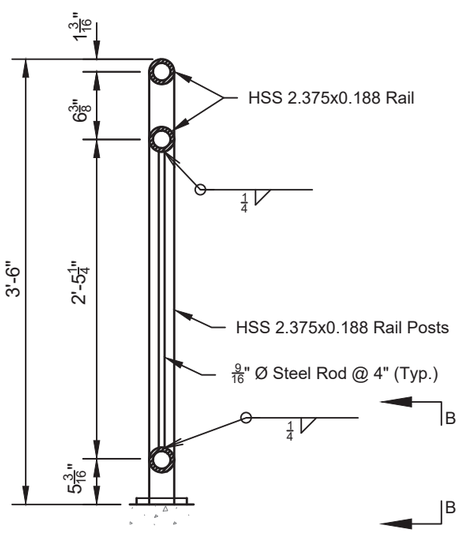

TYPICAL SECTION WITHOUT HANDRAIL

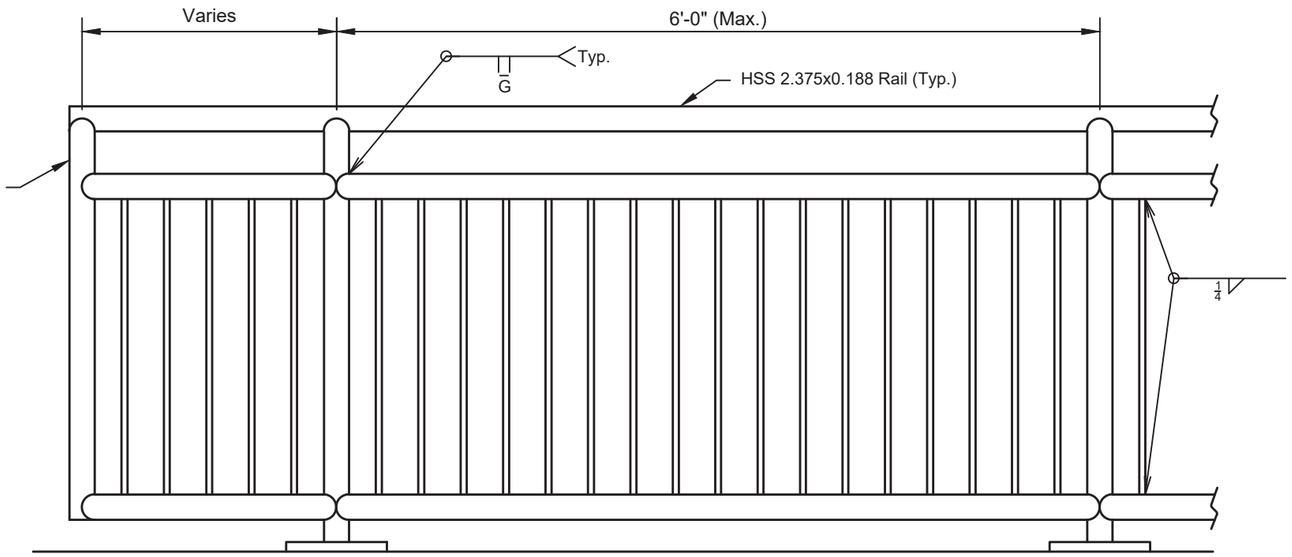

ELEVATION

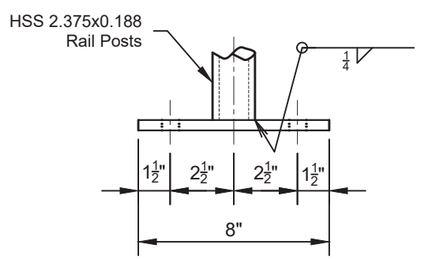

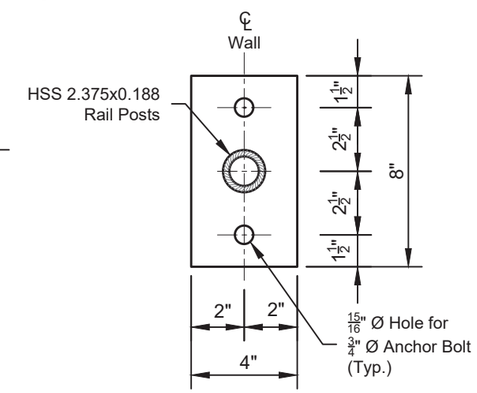

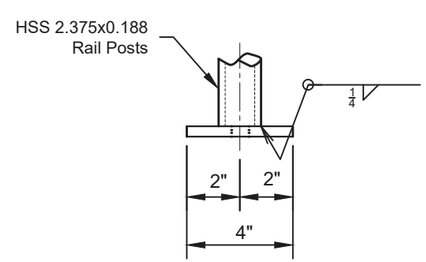

BASE PLATE DETAILS

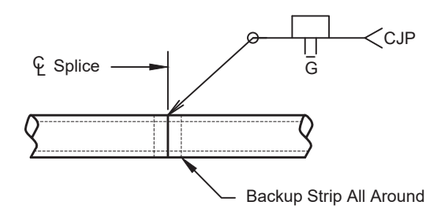

RAIL SPLICE DETAILS
(PEDESTRIAN RAIL AND HANDRAIL)

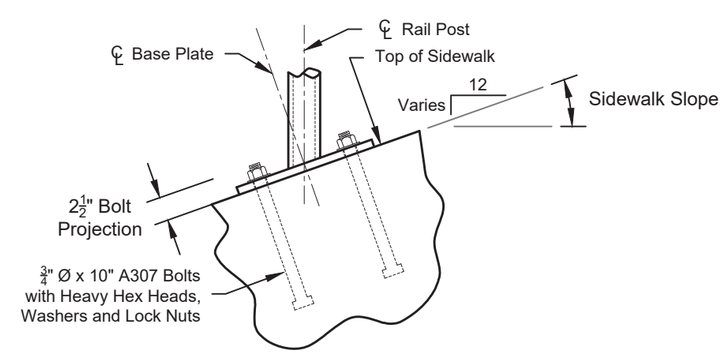

VIEW B-B

STEEL PEDESTRIAN RAIL

1. The Contractor shall provide shop drawings to the Engineer prior to the fabrication of the railing.
2. All rail posts shall be built vertical.
3. Steel pipe for railing shall conform to ASTM specification A500, Grade B. Railpost base plates shall conform to ASTM A709, Grade 36.
4. Anchor bolts and nuts shall conform to ASTM A307. Washers shall be in accordance with ASTM F436. Hardware shall be galvanized in accordance with ASTM A153. The bolts shall be hex head "Structural" type with heavy hex lock nuts and round washers.
5. All anchor bolts shall be tightened to a Torque of 120 ft/lbs (approximated without the use of a calibrated torque wrench).
6. Painting of steel railing shall be done in accordance with section 411 of the Specifications. The finish color shall be an approved black.
7. Welding and weld inspection shall be done in accordance with the current edition of AWS D1.1 Structural Welding Code.
8. The cost of structural steel, anchor bolts, painting, galvanizing, welding and weld inspection and that which is incidental to the fabrication of the steel pedestrian railing shall be included in the contract unit price per foot for Steel Pedestrian Railing.

07-29-16 P:\12-117\AutoCAD\PlanSheets\049F\Section B\049F-DETL-SPECIAL.dwg

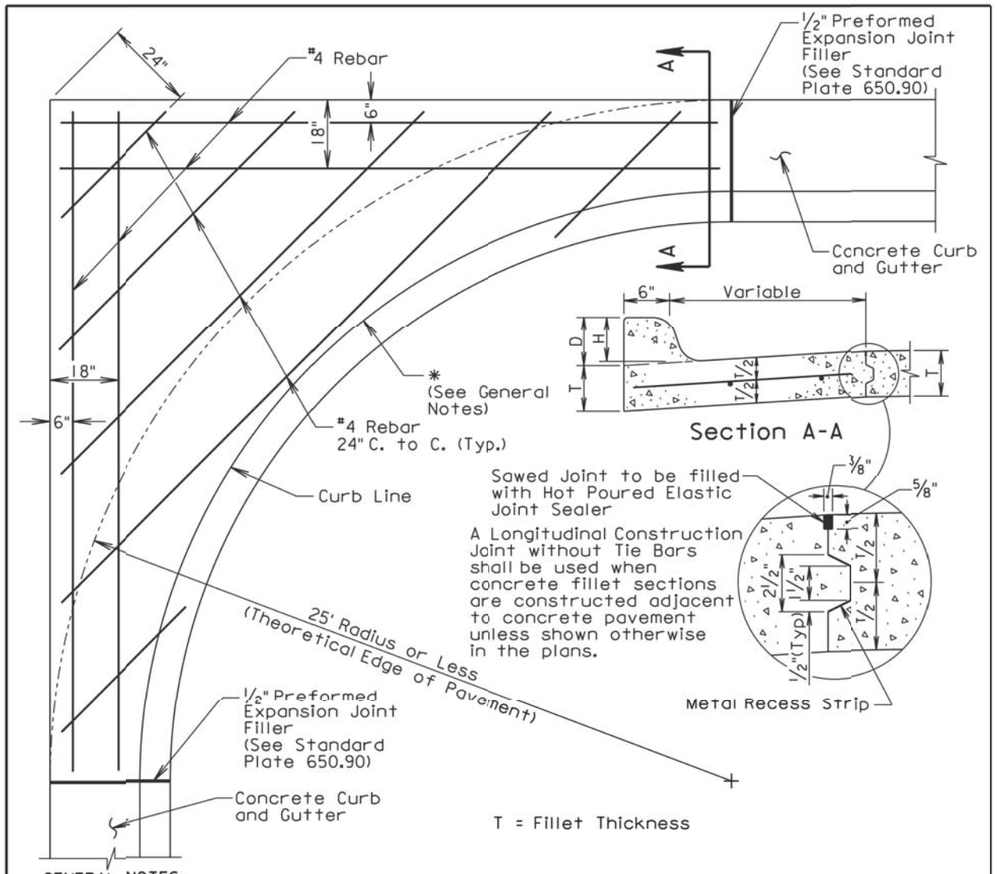

GENERAL NOTES:

* If a curb ramp is constructed adjacent to a PCC fillet section, the curb will need to be modified. Refer to the corresponding curb ramp standard plate or other special details in the plans for modification of the PCC fillet section.

Dimensions D, H, and T shall conform to those shown on the appropriate curb and gutter standard plate.

All rebar shall be in conformance with Sections 480 and 1010 of the Specifications. All rebar shall have a minimum of 3" clear cover.

Class M6 Concrete shall be used in construction of the fillets.

The concrete curb shall be monolithic with the concrete fillet. No separate payment for this curb will be made as the curb is considered a part of the fillet.

Joints shall be constructed at 10' intervals except when fillets are constructed adjacent to PCC Pavement. If there is adjacent PCC Pavement the joints shall be extended from edge of pavement through the fillet section as directed by the Engineer.

The cost for all materials, labor, and incidentals necessary to construct the PCC fillet section with curb and gutter shall be incidental to the contract unit price per square yard for the corresponding PCC fillet section bid item.

June 26, 2015

Published Date: 2nd Qtr. 2016	SDDOT	PCC FILLET SECTION WITH TYPE B CURB AND GUTTER	PLATE NUMBER 380.16 Sheet 1 of 1

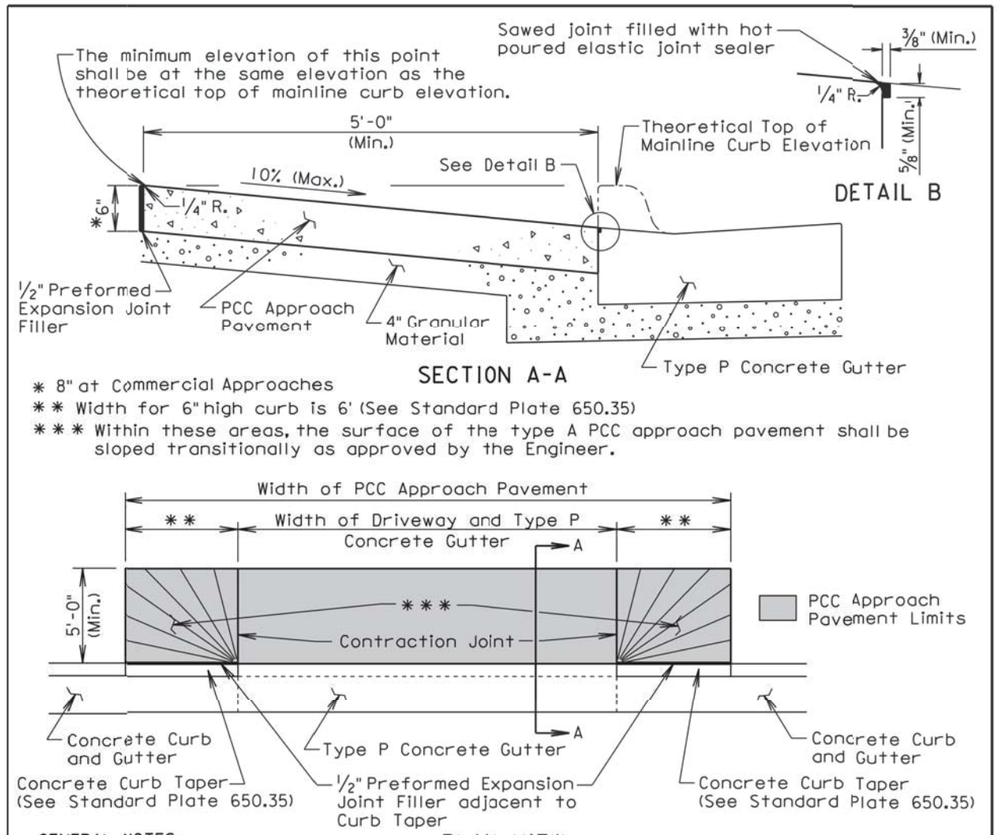

* 8" at Commercial Approaches

** Width for 6" high curb is 6' (See Standard Plate 650.35)

*** Within these areas, the surface of the type A PCC approach pavement shall be sloped transitionally as approved by the Engineer.

GENERAL NOTES:

The concrete for the type A PCC approach pavement and adjacent driveway shall comply with the requirements of the Specifications for class M6 concrete unless otherwise stated in the plans.

Contraction joints in the type A PCC approach pavement shall be 1½ inches deep if formed in the fresh concrete using a suitable grooving tool. If a saw is used to cut the contraction joints, then the depth of the joint shall be at least ¼ the thickness of the approach pavement. Additional contraction joints not shown in the Plan View shall be spaced as follows:

One joint at the center of the approach for driveways 16' to 24' wide.
Two joints spaced at equal intervals for driveways greater than 24' to 40' wide.

All costs for furnishing and placing the type A PCC approach pavement and constructing the expansion and contraction joints including labor, equipment, and materials including the earthen backfill shall be incidental to the contract unit price per square yard for the corresponding PCC Approach Pavement bid item.

All costs for excavation required for placing the type A PCC approach pavement and granular material shall be incidental to the contract unit price per cubic yard for "Unclassified Excavation". All costs for furnishing and placing the granular material shall be incidental to the contract unit price per ton for the corresponding granular material bid item.

June 26, 2015

Published Date: 2nd Qtr. 2016	SDDOT	TYPE A PCC APPROACH PAVEMENT	PLATE NUMBER 380.40 Sheet 1 of 1

07-29-16 P:\12-117\AutoCAD\PlanSheets\049F\Section B\049F-DETL-STANDARD.dwg

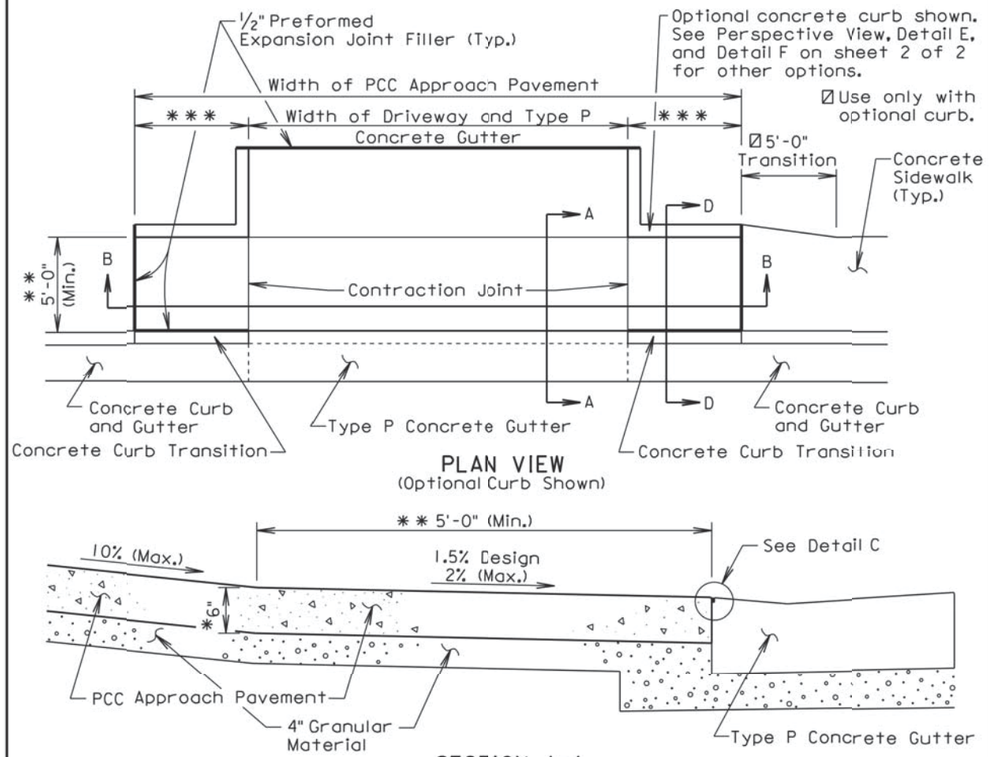

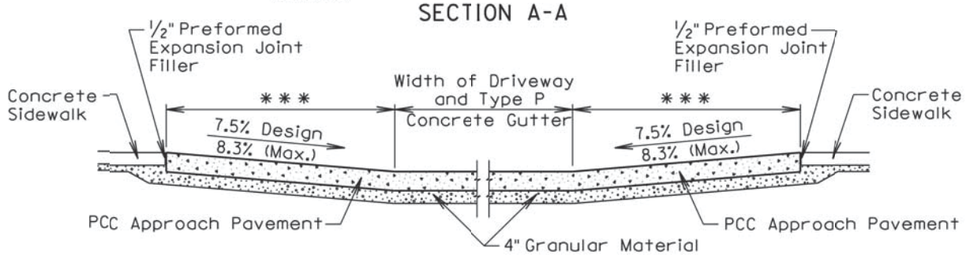

* 8" at Commercial Approaches

** Sidewalk width is 5' unless specified otherwise in the plans. The cross slope of the sidewalk is designed at 1.5% and shall not be steeper than 2% unless specified otherwise in the plans.

*** The slope of the type B PCC approach pavement in these areas shall match the slope of the concrete curb transition and the length shall not be longer than 15'. The slope is designed at 7.5% and shall not be steeper than 8.3% unless specified otherwise in the plans.

September 6, 2015

Published Date: 2nd Qtr. 2016	SDDOT	TYPE B PCC APPROACH PAVEMENT	PLATE NUMBER 380.41
			Sheet 1 of 2

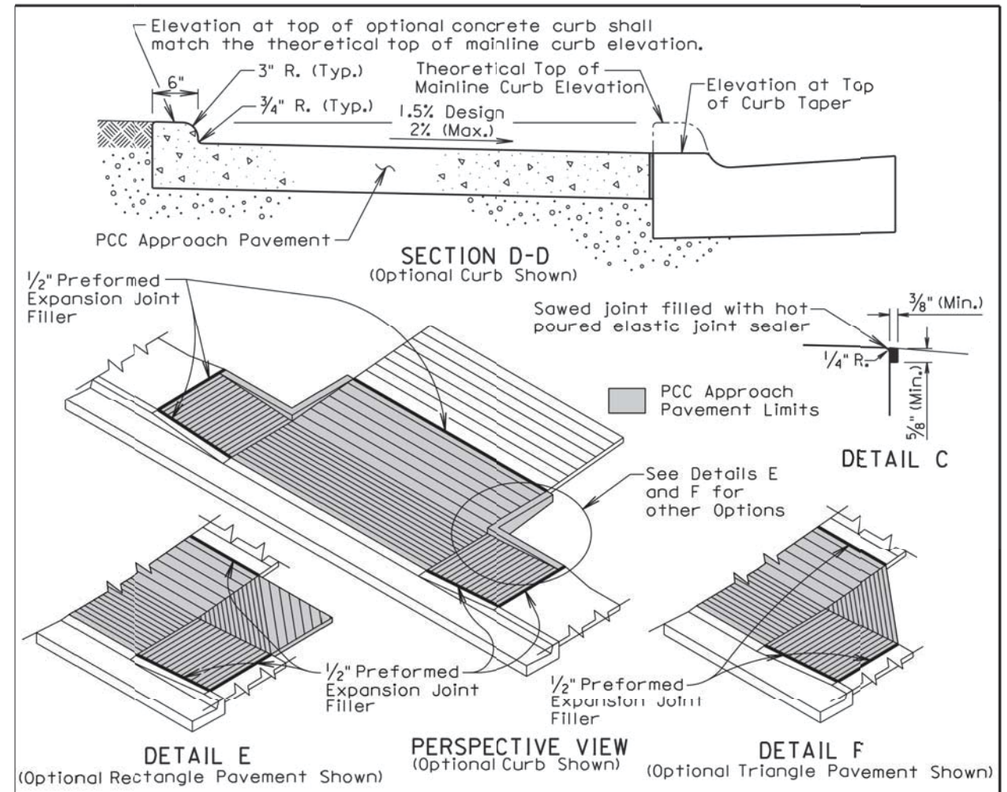

GENERAL NOTES:

Use the plan specified option for the pavement adjacent to the driveway and sidewalk. The options are shown above in the Perspective View, Detail E, and Detail F.

The concrete for the type B PCC approach pavement and adjacent driveway shall comply with the requirements of the Specifications for class M6 concrete unless otherwise stated in the plans.

Contraction joints in the type B PCC approach pavement shall be 1½ inches deep if formed in the fresh concrete using a suitable grooving tool. If a saw is used to cut the contraction joints, then the depth of the joint shall be at least ¼ the thickness of the approach pavement. Additional contraction joints not shown in the Plan View shall be spaced as follows:

One joint at the center of the approach for driveways 16' to 24' wide.
Two joints spaced at equal intervals for driveways greater than 24' to 40' wide.

All costs for furnishing and placing the type B PCC approach pavement and constructing the expansion and contraction joints including labor, equipment, and materials including the earthen backfill shall be incidental to the contract unit price per square yard for the corresponding PCC Approach Pavement bid item.

All costs for excavation required for placing the type B PCC approach pavement and granular material shall be incidental to the contract unit price per cubic yard for "Unclassified Excavation". All costs for furnishing and placing the granular material shall be incidental to the contract unit price per ton for the corresponding granular material bid item.

September 6, 2015

Published Date: 2nd Qtr. 2016	SDDOT	TYPE B PCC APPROACH PAVEMENT	PLATE NUMBER 380.41
			Sheet 2 of 2

07-29-16 P:\12-117\AutoCAD\PlanSheets\049F\Section B\049F-DETL-STANDARD.dwg

TOLERANCES IN DIMENSIONS

Diameter: ±1.5% for 24" Dia. or less and ±1% or 3/8" whichever is more for 27" Dia. or greater.
Diameters at joints: ± 3/16" for 30" Dia. or less and ± 1/4" for 36" or greater.
Length of joint (j): ± 1/4".
Wall thickness (T): not less than design T by more than 5% or 3/16", whichever is greater.
Laying length: shall not underrun by more than 1/2".

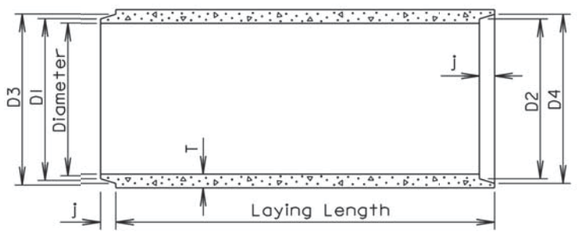

LONGITUDINAL SECTION

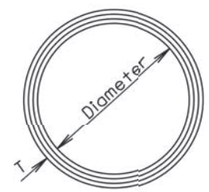

END VIEW

GENERAL NOTES:

Construction of R. C. P. shall conform to the requirements of Section 990 of the Specifications.

Not more than 2 four-foot sections shall be permitted near the ends of any culvert. Four-foot lengths shall be used only to secure the required length of culvert.

Diam. (in.)	Approx. Wt. /Ft. (lb.)	T (in.)	J (in.)	D1 (in.)	D2 (in.)	D3 (in.)	D4 (in.)
12	92	2	1 3/4	13 1/4	13 5/8	13 7/8	14 1/4
15	127	2 1/4	2	16 1/2	16 7/8	17 1/4	17 5/8
18	168	2 1/2	2 1/4	19 5/8	20	20 3/8	20 3/4
21	214	2 3/4	2 1/2	22 7/8	23 1/4	23 3/4	24 1/8
24	265	3	2 3/4	26	26 3/8	27	27 3/8
27	322	3 1/4	3	29 1/4	29 5/8	30 1/4	30 5/8
30	384	3 1/2	3 1/4	32 3/8	32 3/4	33 1/2	33 7/8
36	524	4	3 3/4	38 3/4	39 1/4	40	40 1/2
42	685	4 1/2	4	45 1/8	45 5/8	46 1/2	47
48	867	5	4 1/2	51 1/2	52	53	53 1/2
54	1070	5 1/2	4 1/2	57 7/8	58 3/8	59 3/8	59 7/8
60	1296	6	5	64 1/4	64 3/4	66	66 1/2
66	1542	6 1/2	5 1/2	70 5/8	71 1/8	72 1/2	73
72	1810	7	6	77	77 1/2	79	79 1/2
78	2098	7 1/2	6 1/2	83 3/8	83 7/8	85 5/8	86 1/8
84	2410	8	7	89 3/4	90 1/4	92 1/8	92 5/8
90	2740	8 1/2	7	95 3/4	96 1/4	98 1/8	98 5/8
96	2950	9	7	102 1/8	102 5/8	104 1/2	105
102	3075	9 1/2	7 1/2	109	109 1/2	111 1/2	112
108	3870	10	7 1/2	115 1/2	116	118	118 1/2

June 26, 2015

Published Date: 2nd Qtr. 2016

SDDOT

REINFORCED CONCRETE PIPE

PLATE NUMBER 450.01

Sheet 1 of 1

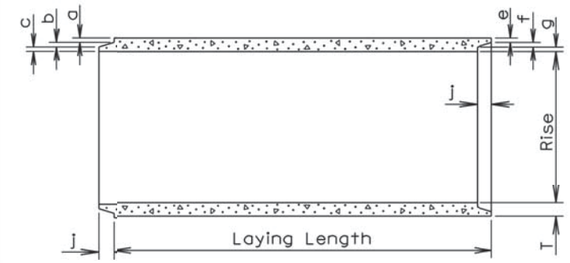

LONGITUDINAL SECTION

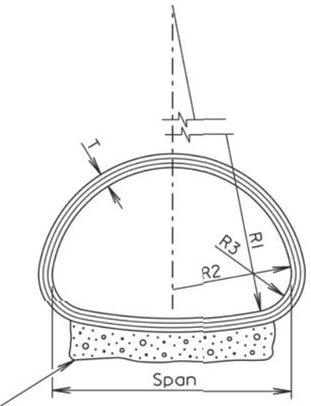

END VIEW

TOLERANCES IN DIMENSIONS

Radial dimensions at joints: ± 1/8" for 65" span or less and ± 1/4" for longer spans.
Rise and Span: ±2% of tabular values.
Length of Joint (J): ± 1/4".
Wall thickness (T): not less than design T by more than 5% or 3/16", whichever is greater.
Laying length: shall not underrun by more than 1/2".

Gravel Bedding Material shall be supplied for 102" to 169" spans. It shall be placed to a thickness of 6" (Min.) x 85% of the Span x Length of culvert and shall conform to the gradation requirements for gravel surfacing except material may be screened or may be plan provided material.

* Size (in.)	Approx. Wt./Ft. (lb.)	Rise (in.)	Span (in.)	T (in.)	a (in.)	b (in.)	c (in.)	j (in.)	e (in.)	f (in.)	g (in.)	R1 (in.)	R2 (in.)	R3 (in.)
18	170	13 1/2	22	2 1/2	1 3/8	3/8	3/4	2	1 1/8	3/8	1	27 1/2	13 3/4	5 1/4
24	320	18	28 1/2	3 1/2	1 5/8	1/2	1 3/8	3	1 3/8	1/2	1 5/8	40 11/16	14 3/4	4 5/8
30	450	22 1/2	36 1/4	4	1 13/16	5/8	1 9/16	3 1/2	1 9/16	5/8	1 13/16	51	18 3/4	6 1/8
36	600	26 5/8	43 3/4	4 1/2	2	3/4	1 3/4	4	1 3/4	3/4	2	62	22 1/2	6 1/2
42	740	31 5/16	51 1/8	4 1/2	2	3/4	1 3/4	4	1 3/4	3/4	2	73	26 1/4	7 3/4
48	890	36	58 1/2	5	2 1/4	3/4	2	5	2	3/4	2 1/4	84	30	8 7/8
54	1100	40	65	5 1/2	2 1/2	3/4	2 1/4	5	2 1/4	3/4	2 1/2	92 1/2	33 3/8	10
60	1400	45	73 1/2	6	3 5/16	3/4	1 15/16	5	2 3/4	3/4	2 1/2	105	37 1/2	11
72	1900	54	88	7	3 13/16	1	2 3/16	6	3 1/4	1	2 3/4	126	45	13 5/16
84	2500	62	102	8	4 1/8	1	2 7/8	6	3 1/2	1	3 1/2	162 1/2	52	14 1/2
96	3300	78	122 3/8	9	4 1/2	1	3 1/2	7	4	1	4	218	62	20
108	4200	88	138 1/2	10	5	1	4	7	4 1/2	1	4 1/2	269	70	22
120	5100	96 7/8	154	11	5 1/2	1	4 1/2	7	5	1	5	301 3/8	78	24
132	5100	106 1/2	168 3/4	10		1	4	7	4 1/2	1	4 1/2	329	85 5/8	26 7/8

* Equivalent Diameter of Circular R. C. P.

GENERAL NOTES:

Construction of R.C.P. Arch shall conform to the requirements of Section 990 of the Specifications. Not more than 2 four-foot sections shall be permitted near the ends of any culvert. Four-foot lengths shall be used only to secure the required length of culvert.

June 26, 2015

Published Date: 2nd Qtr. 2016

SDDOT

REINFORCED CONCRETE PIPE ARCH

PLATE NUMBER 450.02

Sheet 1 of 1

07-29-16 P:\12-117\AutoCAD\PlanSheets\049F\Section B\049F_DETL-STANDARD.dwg

GENERAL NOTES:

1. All concrete shall be Class M6 in accordance with Section 462.
2. All reinforcing steel shall be epoxy coated and shall conform to ASTM A615, Grade 60. Epoxy coating shall conform to ASTM A775.
3. Use 2 inch clear cover on all reinforcing steel except as shown.
4. All concrete shall be thoroughly tamped and spaded against forms to leave a smooth surface without honeycomb. Finish of step treads to be steel troweled and then brush finished with brush strokes on treads at right angles to width. All exposed edges shall be chamfered 3/4 inch except as shown.
5. Place concrete on undisturbed soil. If backfilling is necessary, compact with mechanical tampers to the satisfaction of the Engineer.
6. The concrete sidewalk shall be constructed in accordance with Section 651.
7. Cost of the double thickness of ½ inch Preformed Expansion Joint Filler shall be incidental to the contract unit price per cubic yard for "Class M6 Concrete".

SPECIAL NOTE:

Details for construction of the concrete stairway and handrails shown on sheet 2 of 2 are typical only, and are not intended to depict specific installations. Adjust the length of the stairway as required to fit specific site requirements. Use the formulas given on this sheet to adjust the unit price bid quantities to the required length of the stairway. Refer to project plans for requirements of individual locations. Alternate design details may be submitted through proper channels to the Office of Bridge Design for approval, including aluminum handrail installation.

REINFORCING SCHEDULE

Mk.	△No.	Size	△ Length	Type
b1	★	4	2h + 5	Str.
b2	6	4	h + 1.67	17A
b3	⌖	4	h + 4.67	17A
e	7	4	5' - 8"	S12
g1	7	4	1.12w + 2.0	19B
g2	2	4	1.12w + 3.7	19B
p	2w + 7	4	6' - 2"	Str.

Bending Details

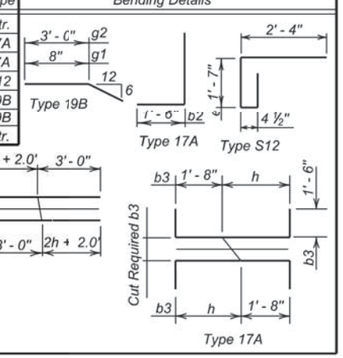

★2 bars for h = 0 - 2.0'
3 bars for h = 2.1' - 3.5'
4 bars for h = 3.6' - 5.0'

⌖2.67h - 3.33

ESTIMATED QUANTITIES

ITEM	UNIT	△QUANTITY
Class M6 Concrete	Cu. Yd.	$0.87 + 0.23w + 0.04h^2$
Structure Excavation, Miscellaneous	Cu. Yd.	$1.79 + 0.59w + 0.15h^2$
Epoxy Coated Reinforcing Steel	Lb.	⌖
Pipe Handrail	Ft.	6.22 + 2.24w
Sidewalk	Sq. Ft.	33

⌖ $72.62 + 14.97w + 1.78h^2 + 12.78h$ for h = 0 - 2.0'
$75.96 + 14.97w + 1.78h^2 + 14.12h$ for h = 2.1' - 3.5'
$79.30 + 14.97w + 1.78h^2 + 15.46h$ for h = 3.6' - 5.0'

△ w = Number of steps NOT including landings (i. e. w = 9 in Sec. A - A).

August 8, 2014

Published Date: 2nd Qtr. 2016

SDDOT

CONCRETE STAIRWAY FOR TYPE C CONCRETE RETAINING WALL

PLATE NUMBER 460.20

Sheet 1 of 2

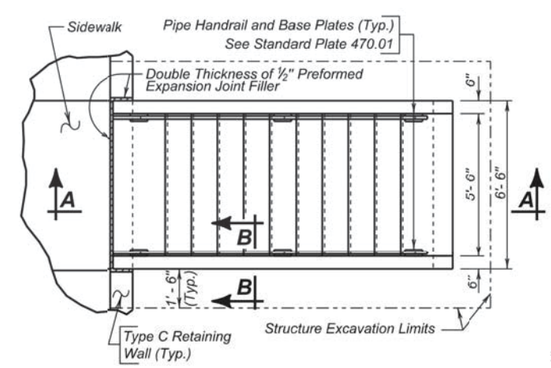

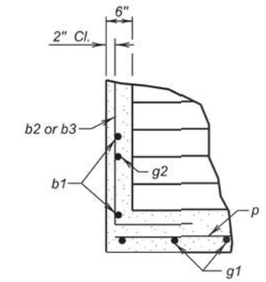

SEC. B - B

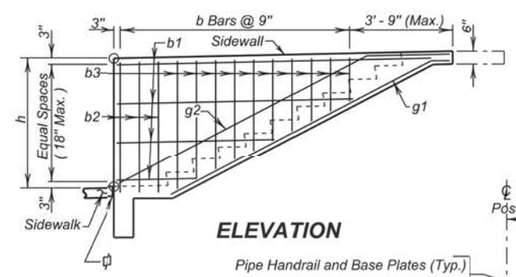

ELEVATION

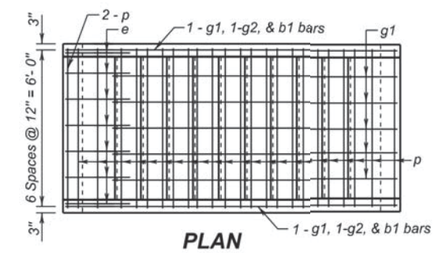

PLAN

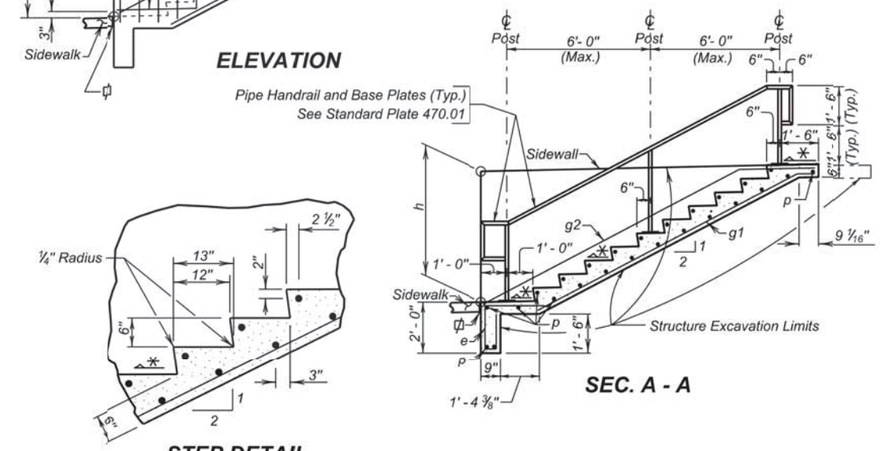

SEC. A - A

STEP DETAIL

⌖ Double Thickness of ½" Preformed Expansion Joint Filler
✳ Slope ¼" per foot.

August 8, 2014

Published Date: 2nd Qtr. 2016

SDDOT

CONCRETE STAIRWAY FOR TYPE C CONCRETE RETAINING WALL

PLATE NUMBER 460.20

Sheet 2 of 2

07-29-16 P:\12-117\AutoCAD\PlanSheets\049F\Section B\049F_DETL_STANDARD.dwg

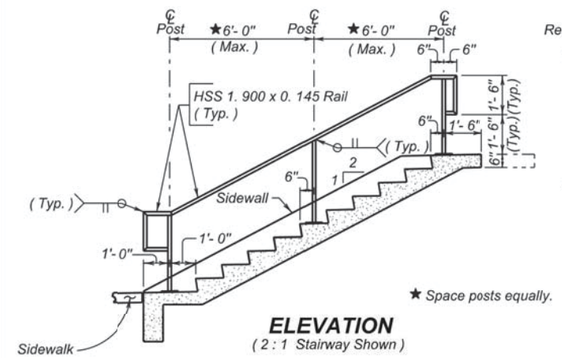

ELEVATION
(2 : 1 Stairway Shown)

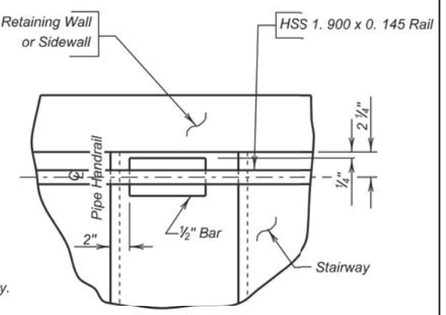

VIEW F - F

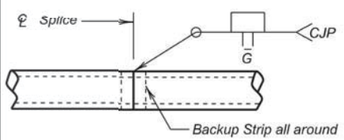

RAIL SPLICE DETAILS

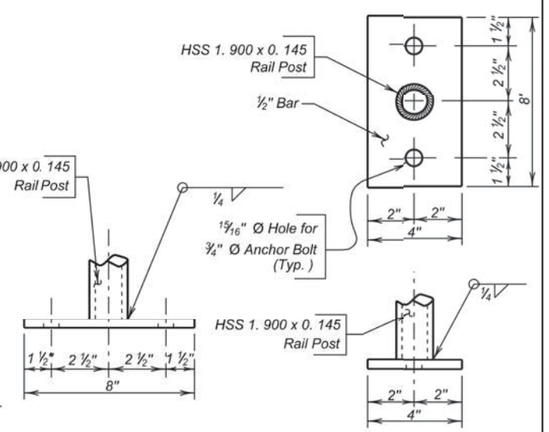

BASE PLATE DETAILS

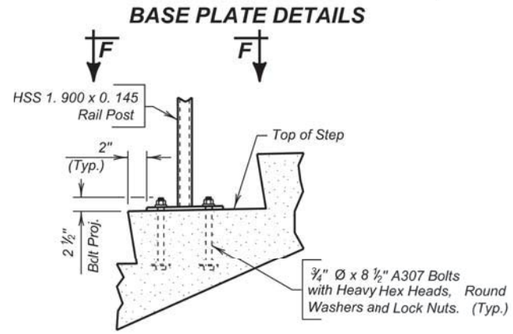

ANCHOR BOLT DETAIL

GENERAL NOTES:

1. All rail posts shall be built vertical.
2. Steel pipe for railing and posts shall conform to ASTM A500, Grade B. Railpost base plates shall conform to ASTM A709, Grade 36.
3. Anchor Bolts and nuts shall conform to ASTM A307. Washers shall be in accordance with ASTM F436. Hardware shall be galvanized in accordance with ASTM F2329. Bolts shall be hex head Structural type with heavy hex lock nuts and round washers.
4. All anchor bolts shall be tightened to a Torque of 120 ft-lbs (approximated without the use of a calibrated torque wrench).
5. Painting of steel railing shall be done in accordance with Section 411 of the Specifications. The finish color shall be Federal Standard 595B, color 27038 (semi-gloss black) unless stated otherwise in the plans.
6. Welding and weld inspection shall be done in accordance with AWS D1. 1-(Current Year) Structural Welding Code - Steel.
7. The cost of structural steel, anchor bolts, painting, galvanizing, fabrication and installation of the Pipe Handrail shall be incidental to welding, weld inspection and that which is incidental to the the contract unit price per foot for "Pipe Handrail".
8. Alternate rail designs, including aluminum rail, may be submitted through proper channels to the Office of Bridge Design for approval.

SHOP PLANS

The fabricator shall submit shop drawings in accordance with the Specifications.

June 26, 2015

Published Date: 2nd Qtr. 2016	SDDOT	STAIRWAY HANDRAIL	PLATE NUMBER 470.01 Sheet 1 of 1

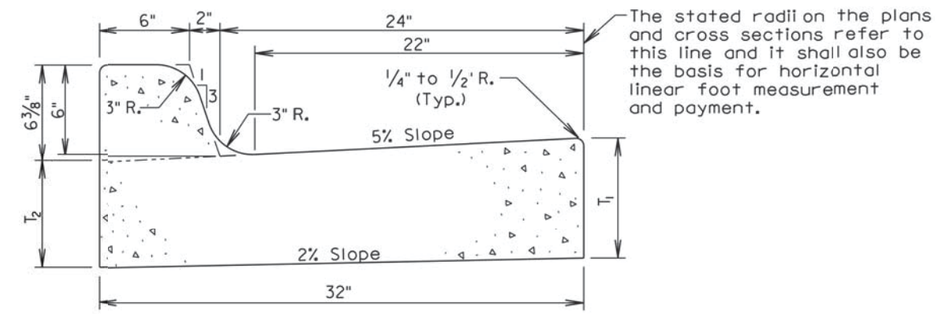

Type	T_1 (Inches)	T_2 (Inches)	Cu. Yd. Per Lin. Ft.	Lin. Ft. Per Cu. Yd.
B66	6	5 1/16	0.057	17.7
B67	7	6 1/16	0.065	15.4
B68	8	7 1/16	0.073	13.7
B68.5	8.5	7 9/16	0.077	13.0
B69	9	8 1/16	0.081	12.3
B69.5	9.5	8 9/16	0.085	11.7
B610	10	9 1/16	0.090	11.2
B610.5	10.5	9 9/16	0.094	10.7
B611	11	10 1/16	0.098	10.2
B611.5	11.5	10 9/16	0.102	9.8
B612	12	11 1/16	0.106	9.4

GENERAL NOTES:

When concrete curb and gutter longitudinally adjoins new concrete pavement, the method of attachment shall be by one of the methods shown on Standard Plate 380.11.

See Standard Plate 650.90 for expansion and contraction joints in the curb and gutter.

September 6, 2008

Published Date: 2nd Qtr. 2016	SDDOT	TYPE B CONCRETE CURB AND GUTTER	PLATE NUMBER 650.01 Sheet 1 of 1

07-29-16 P:\12-117\AutoCAD\PlanSheets\049F\Section B\049F-DETL-STANDARD.dwg

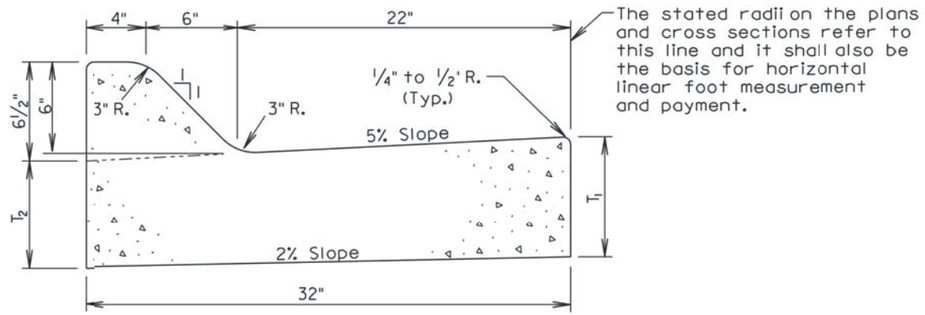

The stated radii on the plans and cross sections refer to this line and it shall also be the basis for horizontal linear foot measurement and payment.

Type	T_1 (Inches)	T_2 (Inches)	Cu. Yd. Per Lin. Ft.	Lin. Ft. Per Cu. Yd.
F66	6	5 1/16	0.057	17.6
F67	7	6 1/16	0.065	15.4
F68	8	7 1/16	0.073	13.6
F68.5	8.5	7 9/16	0.077	12.9
F69	9	8 1/16	0.082	12.3
F69.5	9.5	8 9/16	0.086	11.7
F610	10	9 1/16	0.090	11.1
F610.5	10.5	9 9/16	0.094	10.7
F611	11	10 1/16	0.098	10.2
F611.5	11.5	10 9/16	0.102	9.8
F612	12	11 1/16	0.106	9.4

GENERAL NOTES:

When concrete curb and gutter longitudinally adjoins new concrete pavement, the method of attachment shall be by one of the methods shown on Standard Plate 380.11.

See Standard Plate 650.90 for expansion and contraction joints in the curb and gutter.

September 6, 2008

Published Date: 2nd Qtr. 2016 | SDDOT | TYPE F CONCRETE CURB AND GUTTER | PLATE NUMBER 650.20 | Sheet 1 of 1

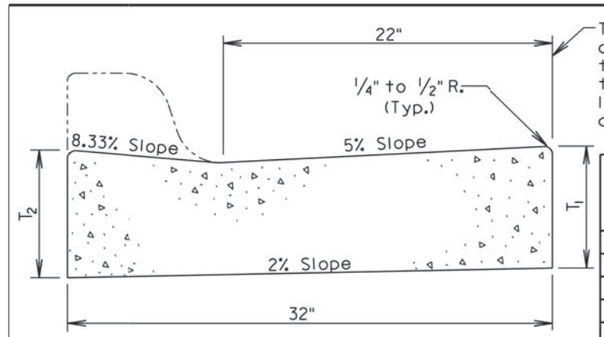

The stated radii on the plans and cross sections refer to this line and it shall also be the basis for horizontal linear foot measurement and payment.

TRANSVERSE SECTION

Type	T_1 (Inches)	T_2 (Inches)	Cu. Yd. Per Lin. Ft.	Lin. Ft. Per Cu. Yd.
P6	6	6 3/8	0.047	21.2
P7	7	7 3/8	0.055	18.1
P8	8	8 3/8	0.064	15.7
P8.5	8.5	8 7/8	0.068	14.8
P9	9	9 3/8	0.072	13.9
P9.5	9.5	9 7/8	0.076	13.2
P10	10	10 3/8	0.080	12.5
P10.5	10.5	10 7/8	0.084	11.9
P11	11	11 3/8	0.088	11.3
P11.5	11.5	11 7/8	0.092	10.8
P12	12	12 3/8	0.096	10.4

Type P Concrete Gutter Limits

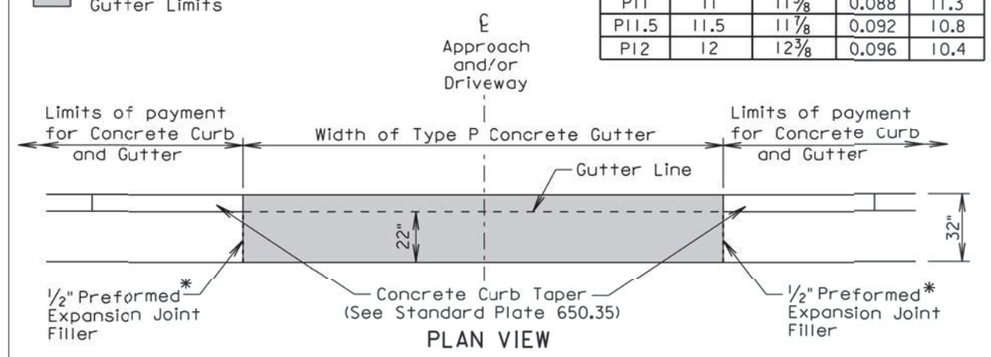

PLAN VIEW

* Joint will not be needed if concrete curb and gutter and type P concrete gutter is placed at the same time. If the ½" Preformed Expansion Joint Filler is provided, then the joint shall be sealed in accordance with Standard Plate 650.90.

GENERAL NOTES:

The concrete for the Type P Concrete Gutter shall comply with the requirements of the Specifications for Class M6 Concrete.

When concrete gutter longitudinally adjoins new concrete pavement, the method of attachment shall be by one of the methods shown on Standard Plate 380.11.

Transverse contraction joints shall be constructed at 10' intervals in the concrete gutter except when concrete gutter is constructed adjacent to mainline PCC pavement. When concrete gutter is constructed adjacent to mainline PCC pavement, a transverse contraction joint shall be constructed in the concrete gutter at each mainline PCC pavement transverse contraction joint location.

When concrete gutter is placed monolithically with mainline PCC pavement, the transverse contraction joints in the concrete gutter shall be sawed and sealed the same as the transverse contraction joints in the mainline PCC pavement.

When concrete gutter is not placed monolithically with the mainline PCC pavement and when the adjacent mainline surfacing is not PCC concrete, the transverse contraction joints in the concrete gutter shall be 1½ inches deep if formed in the fresh concrete using a suitable grooving tool. If a saw is used to cut the contraction joints, then the depth of the joint shall be at least ¼ the thickness of the concrete.

June 26, 2015

Published Date: 2nd Qtr. 2016 | SDDOT | TYPE P CONCRETE GUTTER | PLATE NUMBER 650.30 | Sheet 1 of 1

07-29-16, P:\12-117\AutoCAD\PlanSheets\049F\Section B\049F-DETL-STANDARD.dwg

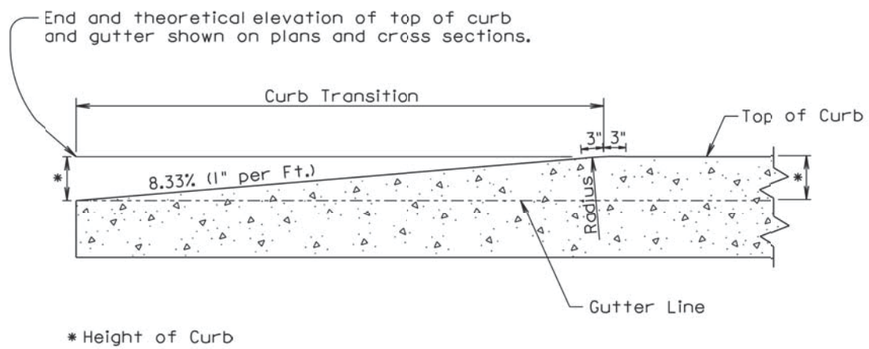

LONGITUDINAL SECTION OF CONCRETE CURB TAPER

September 14, 2005

Published Date: 2nd Qtr. 2016	SDDOT	CONCRETE CURB TAPER	PLATE NUMBER 650.35
			Sheet 1 of 1

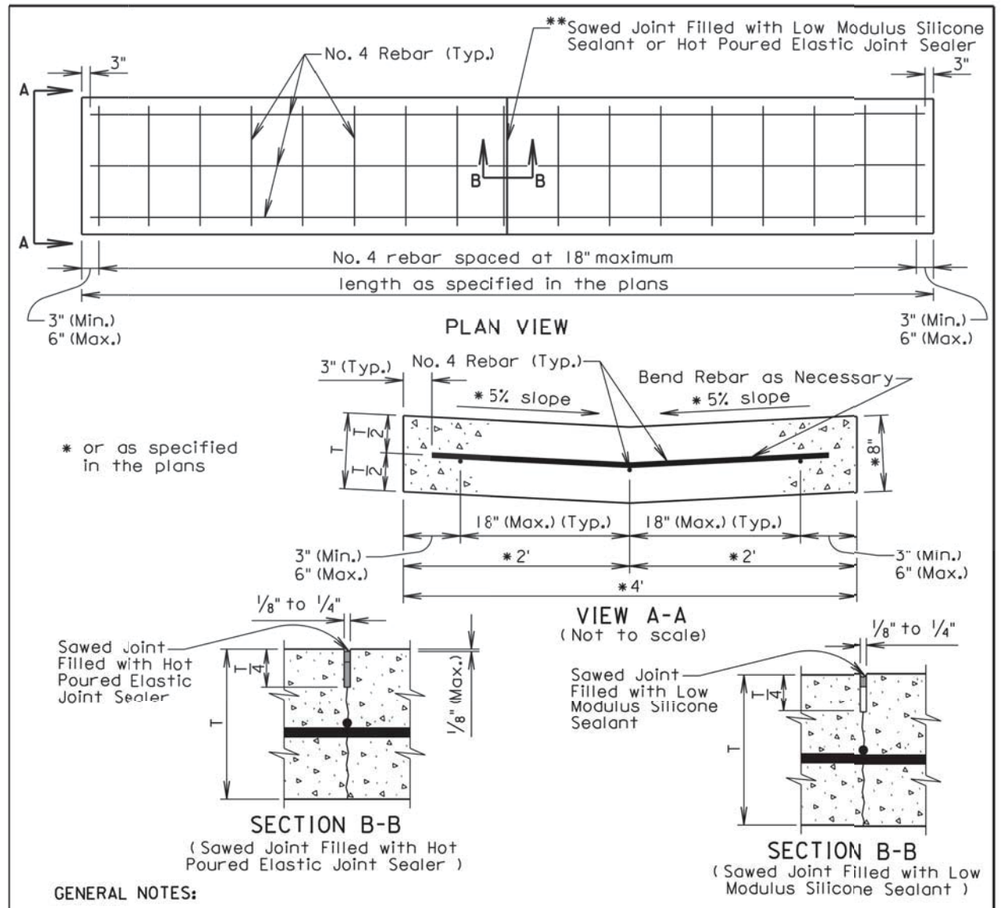

GENERAL NOTES:

The concrete shall comply with the Specifications for Class M6 concrete.

The reinforcing steel shall comply with the requirements of the Specification Sections 480 and 1010.

If a lap splice is provided the No. 4 rebar shall be lapped a minimum of 12".

** The sawed joints shall be spaced at 12'; however, when the length of the valley gutter is 12' to 24' there shall be a joint at the midpoint of the length. The saw cut to control cracking shall be a minimum of 1/4 the thickness of the pavement.

All hot poured elastic joint sealer material spilled on the surface of the concrete pavement shall be removed as soon as the material has cooled. The extent of removal of material shall be to the satisfaction of the Engineer. All costs for removal of the spilled joint sealer material shall be borne by the Contractor.

The silicone sealant shall be be bonded to the sides of a clean joint to completely seal the joint as approved by the Engineer.

All costs for furnishing and installing the valley gutter including materials, equipment, labor, and incidentals shall be included in the contract unit price per square yard for the corresponding Valley Gutter bid item.

February 10, 2014

Published Date: 2nd Qtr. 2016	SDDOT	VALLEY GUTTER	PLATE NUMBER 650.40
			Sheet 1 of 1

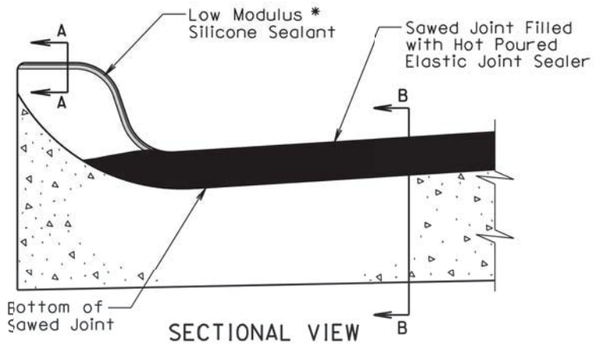

SECTIONAL VIEW

(Curb and Gutter Placed Monolithic with Adjacent Mainline PCC Pavement)

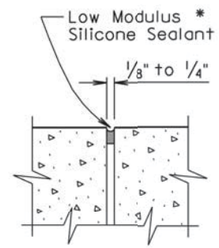

SECTION A-A

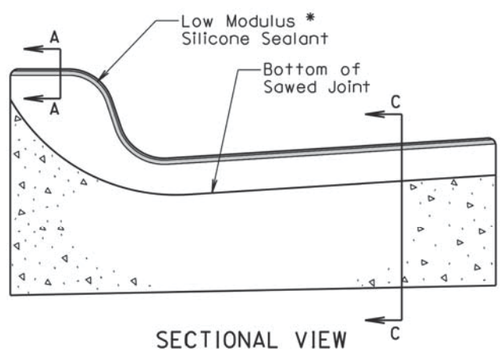

SECTIONAL VIEW

(Curb and Gutter not Placed Monolithic with Adjacent Mainline PCC Pavement or Mainline Surfacing is not PCC Pavement)

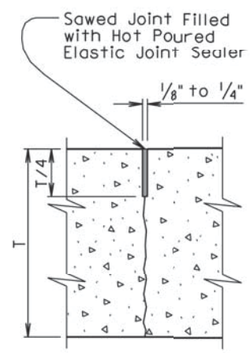

SECTION B-B

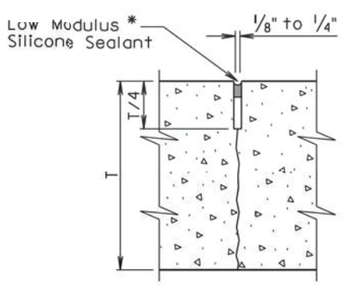

SECTION C-C

* The silicone sealant shall be placed such that it completely seals the joint and is bonded to the sides of the clean joint as approved by the Engineer.

September 6, 2013

Published Date: 2nd Qtr. 2016	SDDOT	JOINTS IN CONCRETE CURB AND GUTTER	PLATE NUMBER 650.90
			Sheet 1 of 2

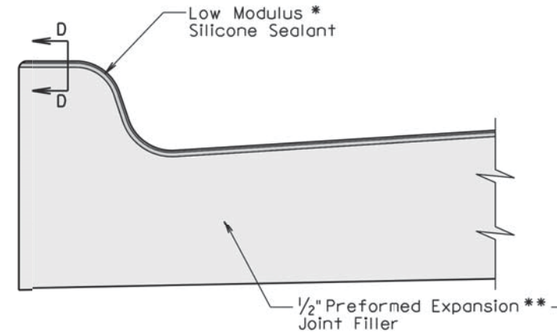

SECTIONAL VIEW

(Curb and Gutter at 1/2" Preformed Expansion Joint Filler Location)

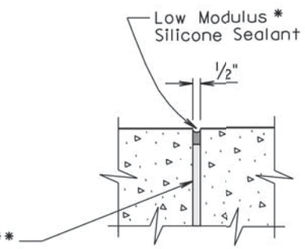

SECTION D-D

* The silicone sealant shall be placed such that it completely seals the joint and is bonded to the sides of the clean joint as approved by the Engineer.

GENERAL NOTES:

For illustrative reason, only the type B curb and gutter is shown.

** A 1/2" preformed expansion joint filler shall be placed transversely in the curb and gutter at the following locations:

1. At each junction between the radius return of curb and gutter and curb and gutter which is parallel to the project centerline.
2. At each junction between new curb and gutter and existing curb and gutter.

Transverse contraction joints shall be constructed at 10' intervals in the concrete curb and gutter except when the concrete curb and gutter is constructed adjacent to mainline PCC pavement. When concrete curb and gutter is constructed adjacent to mainline PCC pavement, a transverse contraction joint shall be constructed in the concrete curb and gutter at each mainline PCC pavement transverse contraction joint location.

When concrete curb and gutter is not placed monolithically with the mainline PCC pavement or when the adjacent mainline surfacing is not PCC concrete, the transverse contraction joints in the concrete curb and gutter shal be 1 1/2 inches deep if formed in the fresh concrete using a suitable grooving tool. If a saw is used to cut the contraction joints, then the depth of the joint shall be at least 1/4 the thickness of the concrete and the joint shall be sealed in accordance with the details shown above.

September 6, 2013

Published Date: 2nd Qtr. 2016	SDDOT	JOINTS IN CONCRETE CURB AND GUTTER	PLATE NUMBER 650.90
			Sheet 2 of 2

07-29-16 P:\12-117\AutoCAD\PlanSheets\049F\Section B\049F-DETL-STANDARD.dwg

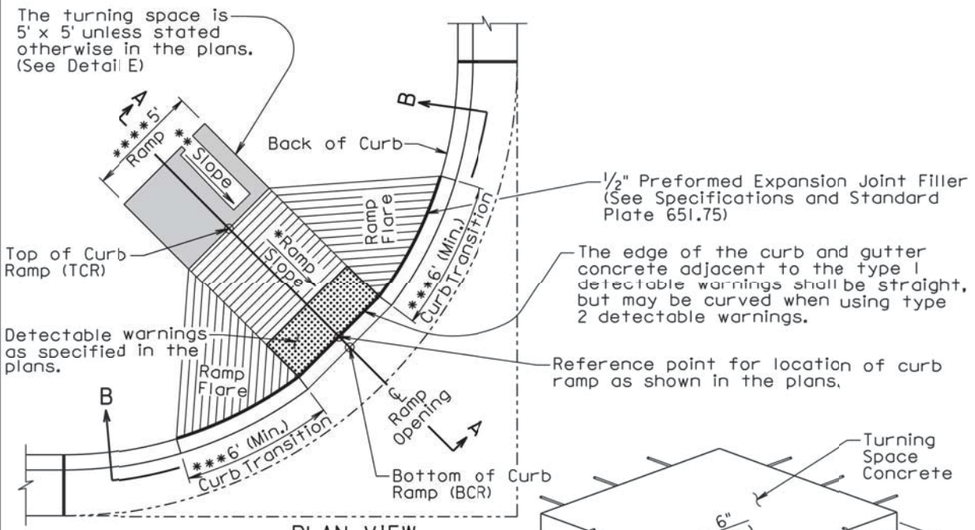

PLAN VIEW
(With 6'+ Curb Transition)

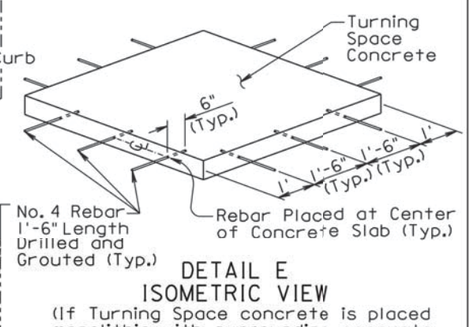

DETAIL E
ISOMETRIC VIEW
(If Turning Space concrete is placed monolithic with surrounding concrete, then this detail is not necessary.)

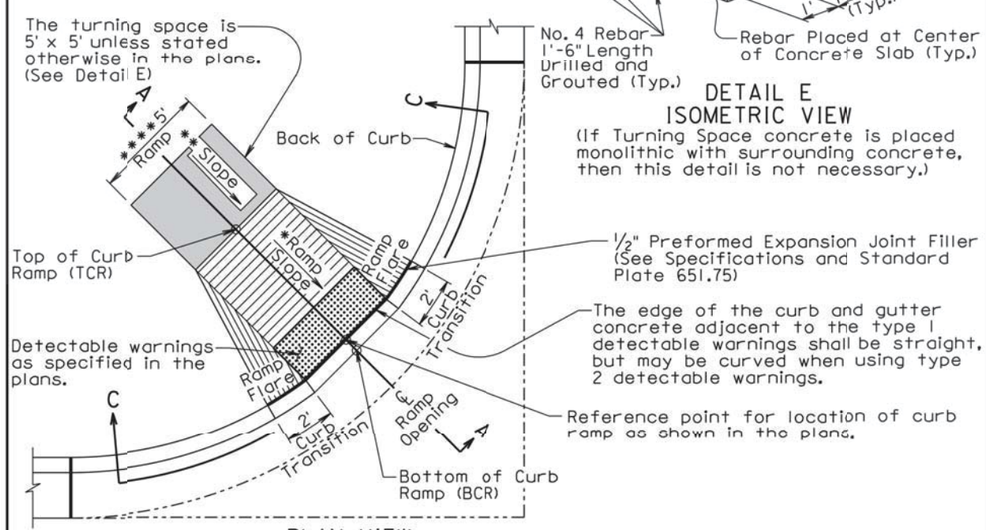

PLAN VIEW
(With 2' Curb Transition)

September 6, 2015

Published Date: 2nd Qtr. 2016	SDDOT	TYPE 1 CURB RAMP (PERPENDICULAR CURB RAMP)	PLATE NUMBER 651.01
			Sheet 1 of 3

Curb ramp slopes are designed at 7.5% unless stated otherwise in the plans. The curb ramp may have a maximum slope of 8.3% and shall not exceed 15' in length unless stated otherwise in the plans.

* The curb ramp length may be computed based on the intersection of a continuous 1.5% theoretical slope from theoretical top of curb (TTOC) with the curb ramp using a continuous 7.5% curb ramp slope. The elevation of point TCR shall always be higher than the elevation of point TTOC unless specified otherwise in the plans. The curb ramp length dimension as shown in the plans shall be adjusted as necessary to meet all slope and length requirements based on field geometrics.

The cross slope of the ramp shall not be steeper than 2%. Plans are designed using a 1.5% slope unless stated otherwise in the plans.

** The slope in the turning space shall not be steeper than 2% in any direction of pedestrian travel. Plans are designed using a 1.5% slope unless stated otherwise in the plans.

*** The curb transition shall be a minimum of 6' long, a maximum of 10' long, and the curb transition slope shall not be steeper than 10% unless stated otherwise in the plans. The curb transition length shall be adjusted as necessary to meet slope and length requirements based on field geometrics.

**** The ramp width is 5' unless stated otherwise in the plans.

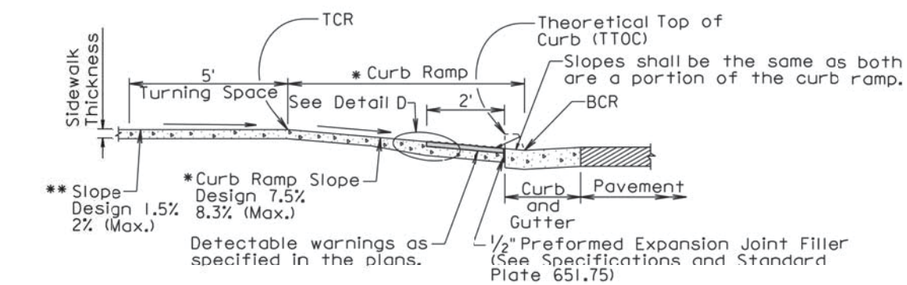

SECTION A-A

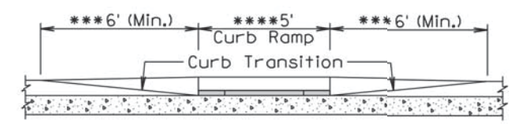

SECTIONAL VIEW B-B

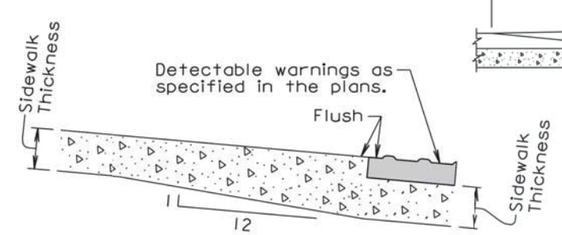

DETAIL D

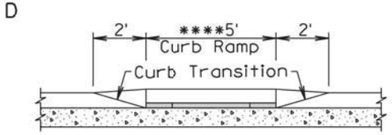

SECTIONAL VIEW C-C

September 6, 2015

Published Date: 2nd Qtr. 2016	SDDOT	TYPE 1 CURB RAMP (PERPENDICULAR CURB RAMP)	PLATE NUMBER 651.01
			Sheet 2 of 3

07-29-16, P:\12-117\AutoCAD\PlanSheets\049F\Section B\049F-DETL-STANDARD.dwg

GENERAL NOTES:

For illustrative purpose only, type 1 detectable warnings are shown in the drawings.

For illustrative purpose only, PCC fillet sections are shown in the drawings. The curb ramp depicted on this standard plate may be used with a PCC fillet section or curb and gutter.

For illustrative purpose only, the curb ramp location is shown at the center of a PCC fillet section. The curb ramp shall be placed at the location stated in the plans.

Sidewalk shall not be placed adjacent to the curb ramp flares when a 2' curb transition is used unless shown otherwise in the plans.

* Care shall be taken to ensure a uniform grade on the curb ramp, free of sags and short grade changes.

Surface texture of the curb ramp shall be obtained by coarse brooming transverse to the slope of the curb ramp.

The normal gutter line profile shall be maintained through the area of the ramp opening.

Joints shall be sawed or tooled into the concrete adjacent to the detectable warnings to alleviate possible corner cracking.

Care shall be taken to ensure that the surface of the detectable warnings are clean and maintains a uniform color.

The detectable warnings shall be cut as necessary to fit the plan specified limits of the detectable warnings. Cost for cutting the detectable warnings shall be incidental to the corresponding detectable warning bid item.

There will be no separate payment for curb ramps. The curb ramp shall be measured and paid for at the contract unit price per square foot for the corresponding concrete sidewalk bid item. The square foot area of the detectable warnings shall be included in the measured and paid for quantity of sidewalk.

If rebar is placed in the Turning Space as depicted in DETAIL E, the cost of the materials, labor, and equipment to furnish and install the rebar shall be incidental to the contract unit price per square foot for the corresponding concrete sidewalk bid item.

The curb transitions and ramp opening shall be measured and paid for at the contract unit price per foot for the corresponding curb and gutter bid item when curb and gutter is used. The curb transitions and ramp opening shall be measured and paid for at the contract unit price per square yard for the corresponding PCC fillet section bid item when a PCC fillet section is used.

The type 1 detectable warnings shall be measured to the nearest square foot. All costs for furnishing and installing the type 1 detectable warnings including labor, equipment, materials, and incidentals shall be paid for at the contract unit price per square foot for "Type 1 Detectable Warnings".

The type 2 detectable warnings shall be measured to the nearest square foot. All costs for furnishing and installing the type 2 detectable warnings including labor, equipment, and materials, including adhesive, necessary sealant or grout, and necessary grinding shall be paid for at the contract unit price per square foot for "Type 2 Detectable Warnings".

September 6, 2015

Published Date: 2nd Qtr. 2016	SDDOT	TYPE 1 CURB RAMP (PERPENDICULAR CURB RAMP)	PLATE NUMBER 651.01
			Sheet 3 of 3

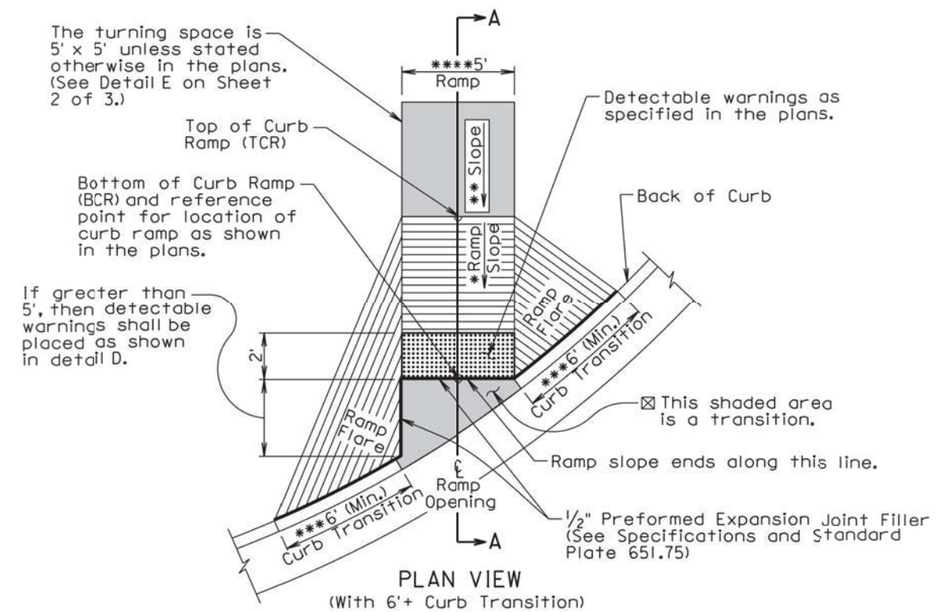

PLAN VIEW
(With 6'+ Curb Transition)

⊠ The slope within the transition area shall not be steeper than 5%. The concrete within the transition shall be placed monolithic with the curb and gutter or fillet section concrete. The concrete thickness within the transition shall be the same as the curb and gutter or fillet section concrete thickness.

*** The curb transition shall be a minimum of 6' long, a maximum of 10' long, and the curb transition slope shall not be steeper than 10% unless stated otherwise in the plans. The curb transition length shall be adjusted as necessary to meet slope and length requirements based on field geometrics.

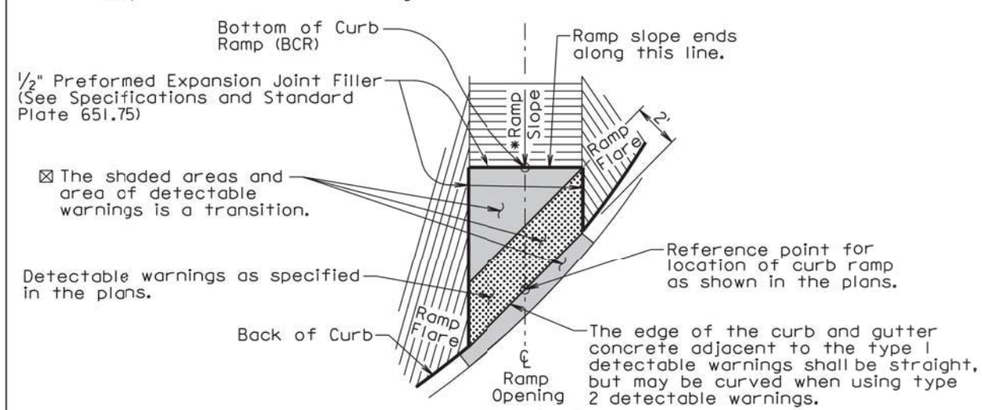

DETAIL D

September 6, 2015

Published Date: 2nd Qtr. 2016	SDDOT	TYPE 2 CURB RAMP (DIRECTIONAL CURB RAMP)	PLATE NUMBER 651.02
			Sheet 1 of 3

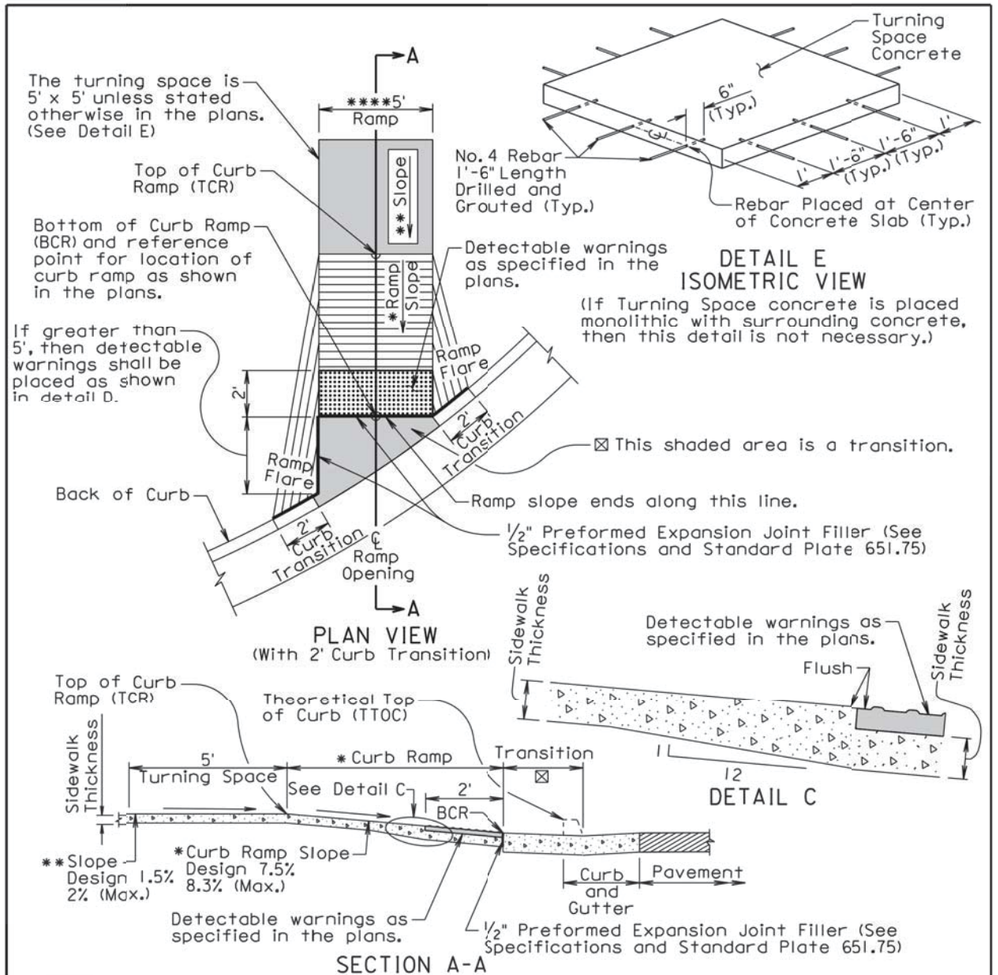

Curb ramp slopes are designed at 7.5% unless stated otherwise in the plans. The curb ramp may have a maximum slope of 8.3% and shall not exceed 15' in length unless stated otherwise in the plans.

* The elevation of point TCR shall always be higher than the elevation of point TTOC unless specified otherwise in the plans. The curb ramp length dimension as shown in the plans shall be adjusted as necessary to meet all slope and length requirements based on field geometrics.

The cross slope of the ramp shall not be steeper than 2%. Plans are designed using a 1.5% slope unless stated otherwise in the plans.

** The slope in the turning space shall not be steeper than 2% in any direction of pedestrian travel. Plans are designed using a 1.5% slope unless stated otherwise in the plans.

**** The ramp width is 5' unless stated otherwise in the plans.

September 6, 2015

Published Date: 2nd Qtr. 2016	SDDOT	TYPE 2 CURB RAMP (DIRECTIONAL CURB RAMP)	PLATE NUMBER 651.02
			Sheet 2 of 3

GENERAL NOTES:

For illustrative purpose only, type 1 detectable warnings are shown in the drawings.

The curb ramp depicted on this standard plate may be used with a PCC fillet section or curb and gutter. The curb ramp shall be placed at the location stated in the plans.

Sidewalk shall not be placed adjacent to the curb ramp flares when a 2' curb transition is used unless shown otherwise in the plans.

* Care shall be taken to ensure a uniform grade on the curb ramp, free of sags and short grade changes.

Surface texture of the curb ramp shall be obtained by coarse brooming transverse to the slope of the curb ramp.

The normal gutter line profile shall be maintained through the area of the ramp opening.

Joints shall be sawed or tooled into the concrete adjacent to the detectable warnings to alleviate possible corner cracking.

Care shall be taken to ensure that the surface of the detectable warnings are clean and maintains a uniform color.

The detectable warnings shall be cut as necessary to fit the plan specified limits of the detectable warnings. Cost for cutting the detectable warnings shall be incidental to the corresponding detectable warning bid item.

There will be no separate payment for curb ramps. The curb ramp shall be measured and paid for at the contract unit price per square foot for the corresponding concrete sidewalk bid item. The square foot area of the detectable warnings shall be included in the measured and paid for quantity of sidewalk.

If rebar is placed in the Turning Space as depicted in DETAIL E, the cost of the materials, labor, and equipment to furnish and install the rebar shall be incidental to the contract unit price per square foot for the corresponding concrete sidewalk bid item.

The curb transitions and ramp opening shall be measured and paid for at the contract unit price per foot for the corresponding curb and gutter bid item when curb and gutter is used. The curb transitions and ramp opening shall be measured and paid for at the contract unit price per square yard for the corresponding PCC fillet section bid item when a PCC fillet section is used.

All costs for furnishing and installing the transition area at the base of the curb ramp shall be incidental to the contract unit price per foot for the corresponding curb and gutter bid item when curb and gutter is used and shall be incidental to the contract unit price per square yard for the corresponding PCC fillet section bid item when a PCC fillet section is used.

The type 1 detectable warnings shall be measured to the nearest square foot. All costs for furnishing and installing the type 1 detectable warnings including labor, equipment, materials, and incidentals shall be paid for at the contract unit price per square foot for "Type 1 Detectable Warnings".

The type 2 detectable warnings shall be measured to the nearest square foot. All costs for furnishing and installing the type 2 detectable warnings including labor, equipment, and materials, including adhesive, necessary sealant or grout, and necessary grinding shall be paid for at the contract unit price per square foot for "Type 2 Detectable Warnings".

September 6, 2015

Published Date: 2nd Qtr. 2016	SDDOT	TYPE 2 CURB RAMP (DIRECTIONAL CURB RAMP)	PLATE NUMBER 651.02
			Sheet 3 of 3

07-29-16 P:\12-117\AutoCAD\PlanSheets\049F\Section B\049F_DETL_STANDARD.dwg

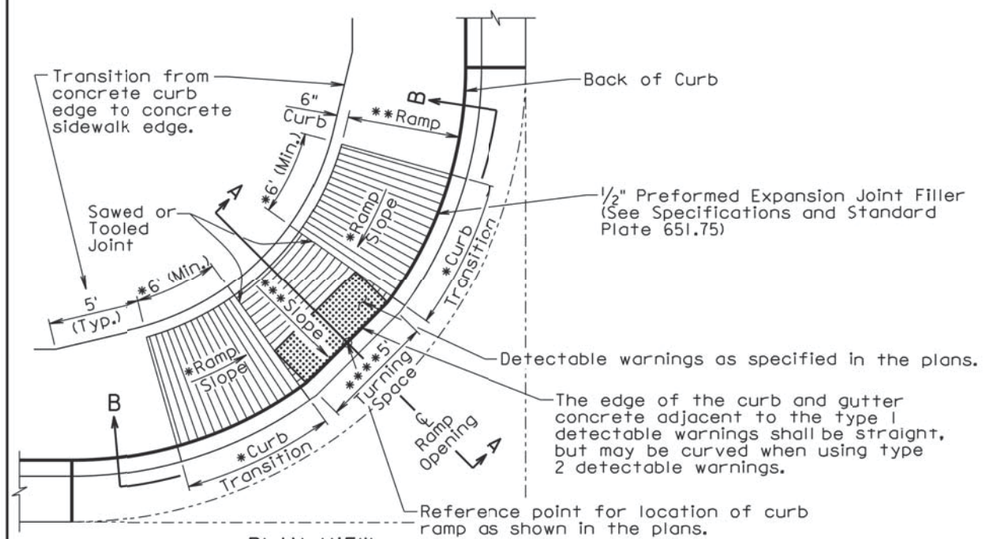

PLAN VIEW
(With Curved Curb and Gutter)

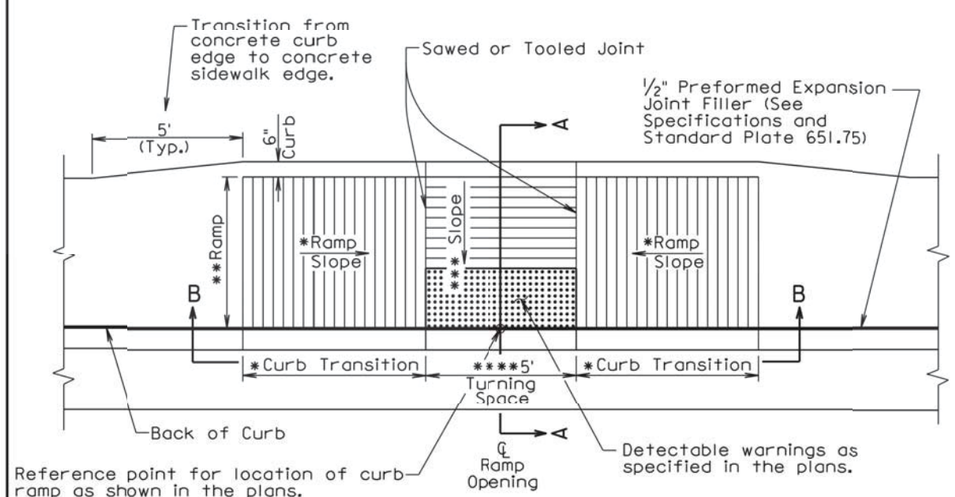

PLAN VIEW
(With Straight Curb and Gutter)

September 6, 2015

Published Date: 2nd Qtr. 2016	SDDOT	TYPE 3 CURB RAMP (PARALLEL CURB RAMP)	PLATE NUMBER 651.03
			Sheet 1 of 3

* The curb transition slope shall match the curb ramp slope. Curb ramp slopes are designed at 7.5% unless stated otherwise in the plans. The curb ramp may have a maximum slope of 8.3% at any location of the curb ramp and shall not exceed 15' in length unless stated otherwise in the plans. The curb transitions and curb ramp lengths shall be adjusted as necessary to meet all slope and length requirements based on field geometrics.

** The cross slope of the ramp shall not be steeper than 2% and the ramp width is 5' unless stated otherwise in the plans. Plans are designed using a 1.5% cross slope for the ramp unless stated otherwise in the plans.

*** The slope in the turning space shall not be steeper than 2% in any direction of pedestrian travel. Plans are designed using a 1.5% slope unless stated otherwise in the plans.

**** The turning space is 5' x 5' unless stated otherwise in the plans.

☒ The curb height shall be 6" unless stated otherwise in the plans.

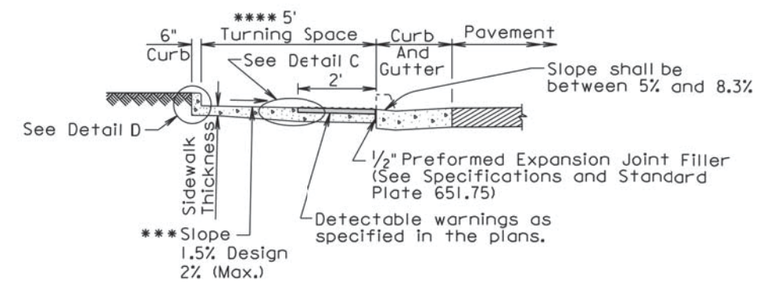

SECTION A-A

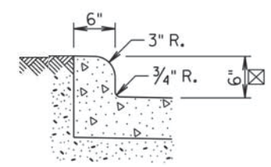

DETAIL D

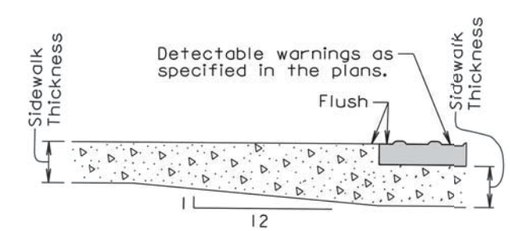

DETAIL C

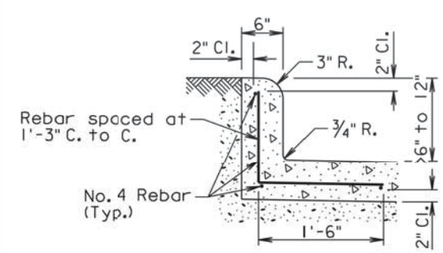

DETAIL D
(Use this detail when the curb height is greater than 6" and less than 12")

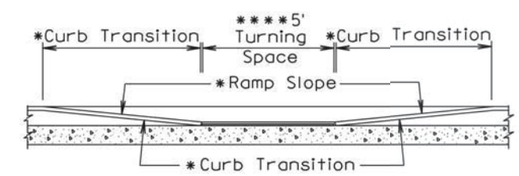

SECTIONAL VIEW B-B

September 6, 2015

Published Date: 2nd Qtr. 2016	SDDOT	TYPE 3 CURB RAMP (PARALLEL CURB RAMP)	PLATE NUMBER 651.03
			Sheet 2 of 3

GENERAL NOTES:

For illustrative purpose only, type 1 detectable warnings are shown in the drawings.

For illustrative purpose only, a PCC fillet section is shown in one of the drawings. The curb ramp depicted on this standard plate may be used with a PCC fillet section or with curb and gutter.

The curb ramp shall be placed at the location stated in the plans.

Sidewalk adjacent to the curb ramp shall be as shown in the plans.

Care shall be taken to ensure a uniform grade on the curb ramp, free of sags and short grade changes.

Surface texture of the curb ramp shall be obtained by coarse brooming transverse to the slope of the curb ramp.

The normal gutter line profile shall be maintained through the area of the ramp opening.

Joints shall be sawed or tooled into the concrete adjacent to the detectable warnings to alleviate possible corner cracking (see plan view for joint location).

Care shall be taken to ensure that the surface of the detectable warnings are clean and maintains a uniform color.

The detectable warnings shall be cut as necessary to fit the plan specified limits of the detectable warnings. Cost for cutting the detectable warnings shall be incidental to the corresponding detectable warning bid item.

When curb height is greater than 6" and less than 12", reinforcing steel is required in accordance with the detail on sheet 2 of 3. The reinforcing steel shall conform to ASTM A615, Grade 60. Cost for furnishing and installing the reinforcing steel shall be incidental to the contract unit price per square foot for the corresponding concrete sidewalk bid item.

There will be no separate payment for curb ramps. The curb ramp shall be measured and paid for at the contract unit price per square foot for the corresponding concrete sidewalk bid item. The square foot area of the detectable warnings and the curb along the short radius shall be included in the measured and paid for quantity of sidewalk.

The curb transitions and ramp opening shall be measured and paid for at the contract unit price per foot for the corresponding curb and gutter bid item when curb and gutter is used. The curb transitions and ramp opening shall be measured and paid for at the contract unit price per square yard for the corresponding PCC fillet section bid item when a PCC fillet section is used.

The type 1 detectable warnings shall be measured to the nearest square foot. All costs for furnishing and installing the type 1 detectable warnings including labor, equipment, materials, and incidentals shall be paid for at the contract unit price per square foot for "Type 1 Detectable Warnings".

The type 2 detectable warnings shall be measured to the nearest square foot. All costs for furnishing and installing the type 2 detectable warnings including labor, equipment, and materials, including adhesive, necessary sealant or grout, and necessary grinding shall be paid for at the contract unit price per square foot for "Type 2 Detectable Warnings".

September 6, 2015

Published Date: 2nd Qtr. 2016	SDDOT	TYPE 3 CURB RAMP (PARALLEL CURB RAMP)	PLATE NUMBER 651.03 Sheet 3 of 3

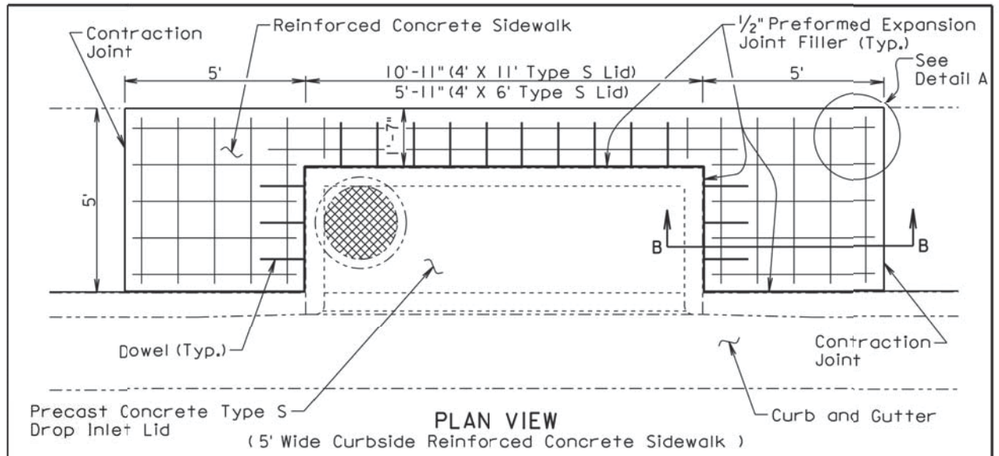

PLAN VIEW
(5' Wide Curbside Reinforced Concrete Sidewalk)

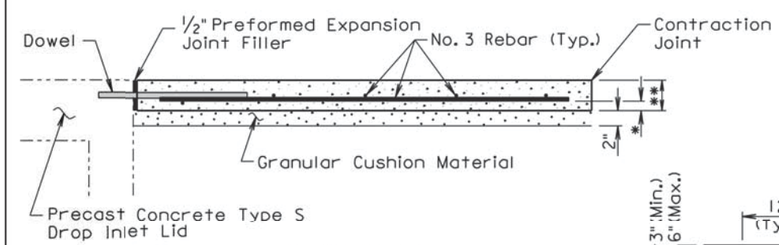

SECTION B-B

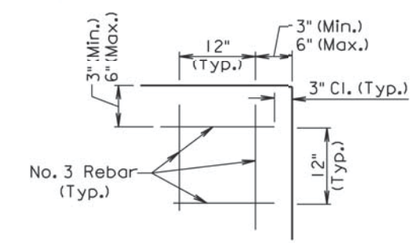

DETAIL A

** 4", 5", or 6" as specified elsewhere in the plans.

* 1⅝" for 4" sidewalk, 2⅛" for 5" sidewalk, and 2⅝" for 6" sidewalk.

GENERAL NOTES:

The precast concrete Type S lids shown are 4' X 11' for illustrative purpose.

The cross slope of the sidewalk and precast concrete type S drop inlet lid shall be as specified elsewhere in the plans.

The reinforcing steel shall conform to Section 1010 of the Specifications. The Contractor shall be in conformance with the construction requirements of Section 480.3 of the Specifications.

When lapping of reinforcing steel is necessary, the No. 3 rebar shall be lapped 12".

The reinforced concrete sidewalk shall conform to the requirements of Section 651 of the Specifications.

All costs for constructing the reinforced concrete sidewalk including labor, equipment, tools, backfilling, furnishing and placing materials, including granular cushion, reinforcing steel, preformed expansion joint filler, and incidentals shall be included in the contract unit price per square foot for the corresponding reinforced concrete sidewalk bid item.

June 26, 2015

Published Date: 2nd Qtr. 2016	SDDOT	REINFORCED CONCRETE SIDEWALK ADJACENT TO PRECAST CONCRETE TYPE S DROP INLET LID	PLATE NUMBER 651.70 Sheet 1 of 2

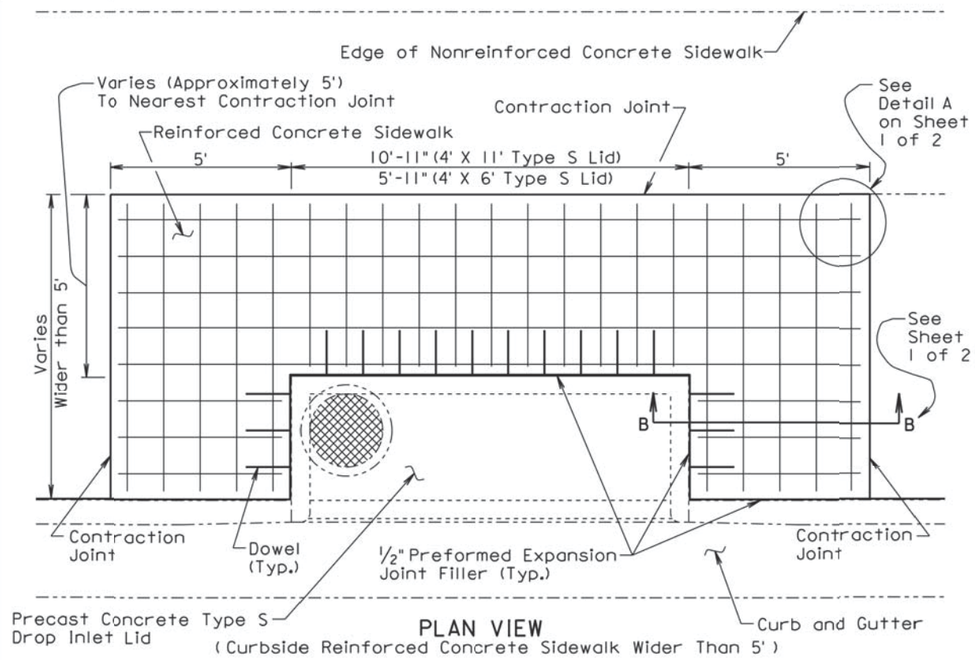

PLAN VIEW
(Curbside Reinforced Concrete Sidewalk Wider Than 5')

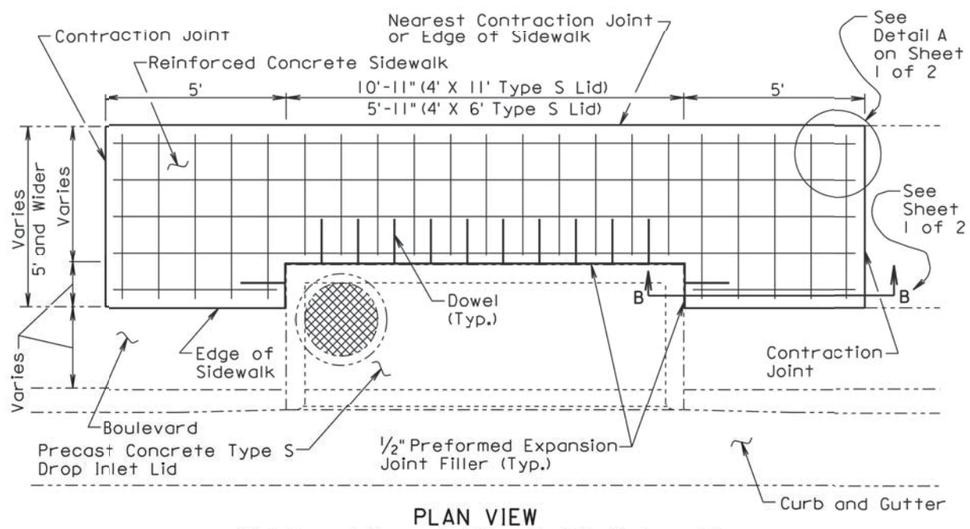

PLAN VIEW
(Reinforced Concrete Sidewalk With Boulevard)

June 26, 2015

Published Date: 2nd Qtr. 2016	SDDOT	REINFORCED CONCRETE SIDEWALK ADJACENT TO PRECAST CONCRETE TYPE S DROP INLET LID	PLATE NUMBER 651.70 Sheet 2 of 2

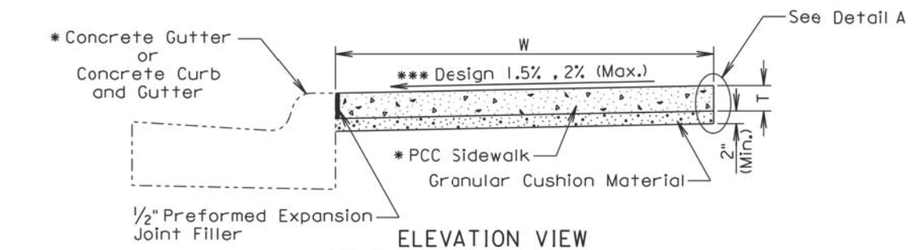

ELEVATION VIEW
(PCC Sidewalk without Boulevard)

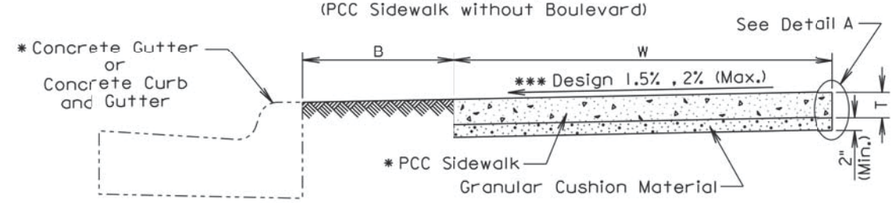

ELEVATION VIEW
(PCC Sidewalk with Boulevard)

B Width of boulevard as specified in the plans.
T Thickness of PCC sidewalk as specified in the plans.
W Width of PCC sidewalk as specified in the plans.
* Type as specified in the plans.

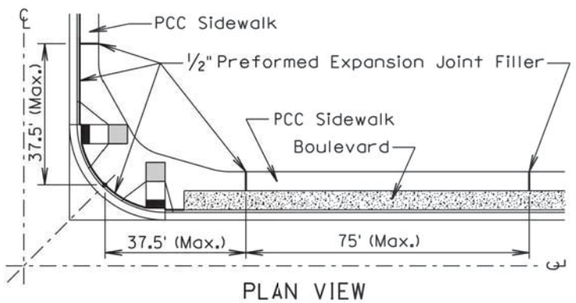

PLAN VIEW

GENERAL NOTES:

The PCC sidewalk shall be constructed in accordance with Section 651 of the Specifications.

*** The cross slope of the sidewalk is designed at 1.5% and the maximum slope allowed is 2% unless specified otherwise in the plans.

The maximum length between expansion joints in PCC sidewalk is 75 feet.

PCC sidewalk placed adjacent to intersection of roadways shall have an expansion joint placed transversely a maximum of 37.5 feet from the intersection. See PLAN VIEW.

An expansion joint in PCC sidewalk shall consist of a 1/2 inch thick preformed expansion joint filler material placed full depth and width of the PCC sidewalk.

** Large areas of PCC pavement adjacent to PCC sidewalk may require a different joint treatment than shown in the detail. If a different joint detail is necessary, plans will contain the joint detail and the Contractor shall construct the joint treatment in accordance with the plans.

September 6, 2015

Published Date: 2nd Qtr. 2016	SDDOT	PCC SIDEWALK	PLATE NUMBER 651.75 Sheet 1 of 2

07-29-16 P:\12-117\AutoCAD\PlanSheets\049F\Section B\049F-DETL-STANDARD.dwg

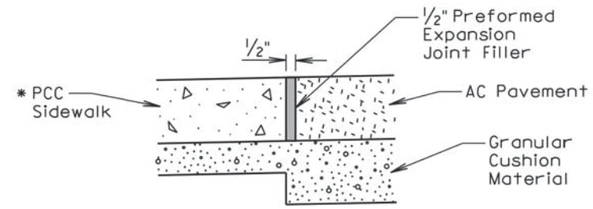

ELEVATION VIEW
(PCC sidewalk adjacent to asphalt concrete pavement)

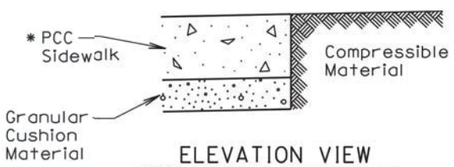

ELEVATION VIEW
(PCC sidewalk adjacent to earthen material, landscape rock, or other compressible materials)

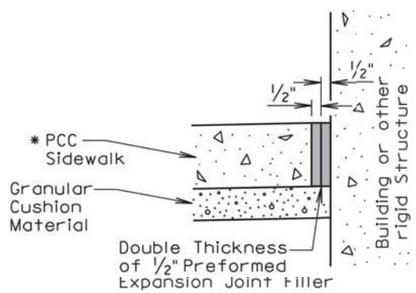

ELEVATION VIEW
(PCC sidewalk adjacent to building or other rigid structure)

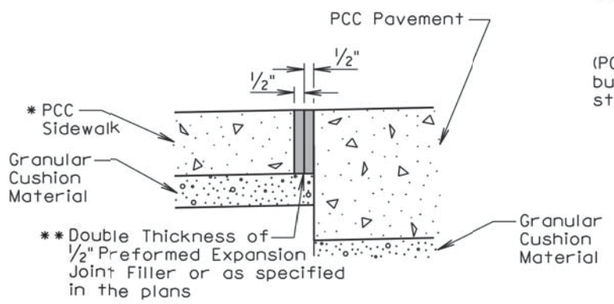

ELEVATION VIEW
(PCC sidewalk adjacent to PCC pavement)

Detail A
(Use Appropriate Detail(s))

September 6, 2015

Published Date: 2nd Qtr. 2016 | SDDOT | PCC SIDEWALK | PLATE NUMBER 651.75 | Sheet 2 of 2

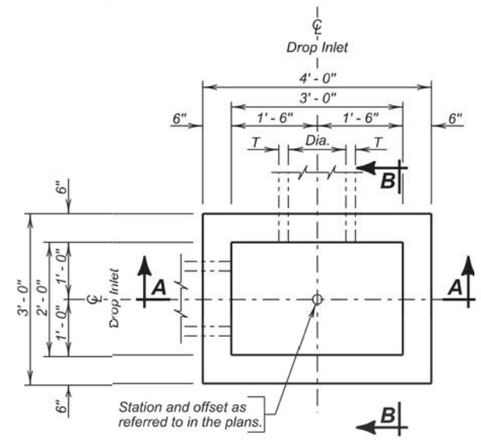

PLAN VIEW

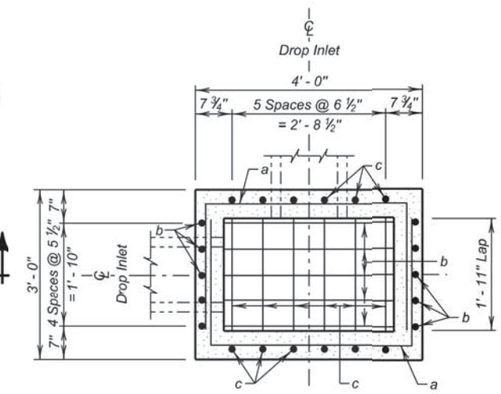

BOTTOM SECTION

ESTIMATED QUANTITIES

ITEM	UNIT	CONSTANT QUANTITY	VARIABLE QUANTITY
✳ Class M6 Concrete	Cu. Yd.	0.26	0.22H
Reinforcing Steel	Lb.	83.03	28.97H
Frame and Grate Assembly	Each	1	———

DROP INLETS FOR 12" TO 24" DIAMETER PIPE

SPECIFICATIONS

Design Specifications: AASHTO LRFD Bridge Design Specifications, 2012 Edition.

Construction Specifications: South Dakota Standard Specifications for Roads and Bridges, Current Edition and required Provisions, Supplemental Specifications, and Special Provisions as included in the Proposal.

GENERAL NOTES:

Design Live Load: HL-93. No construction loading in excess of legal load was considered.

Reinforcing steel shall conform to ASTM A615 grade 60. The d bars shall be lapped 12 inches with the b and c bars. Cut and bend reinforcing steel as required to place pipe(s) through the drop inlet wall.

Drop inlet may be precast. If precast drop inlet details differ from this standard plate, submit a checked design done by a SD registered P.E. and shop plans to the Office of Bridge Design for approval.

✳ Reduce total quantities of concrete by the amount of concrete displaced by the pipe(s). The total quantity of concrete shall be computed to the nearest hundredth of a cubic yard. The total quantity of reinforcing steel shall be computed to the nearest pound.

Drop inlet shown may be modified by the addition or omission of connecting pipes as noted elsewhere in the plans. All pipes entering drop inlet must fit between the inside face of walls and shall not enter through the corners.

Maximum R.C.P. diameter shall not exceed 18 inches on the 2-foot wide side and shall not exceed 24 inches (24 inches for R.C. arch) on the 3-foot wide side of the drop inlet.

The dimension of H is in feet. Maximum H is 10 feet.

PIPE DISPLACEMENT REDUCTIONS

	Diameter (Inches)	Wall T (Inches)	Class M6 Concrete (Cu. Yd.)
R.C.P.	12	2	0.03
	15	2 1/4	0.04
	18	2 1/2	0.05
	24	3	0.09
R.C. ARCH	18	2 1/2	0.05
	24	3 1/2	0.09

December 16, 2015

Published Date: 2nd Qtr. 2016 | SDDOT | 2' X 3' TYPE B REINFORCED CONCRETE DROP INLET | PLATE NUMBER 670.01 | Sheet 1 of 2

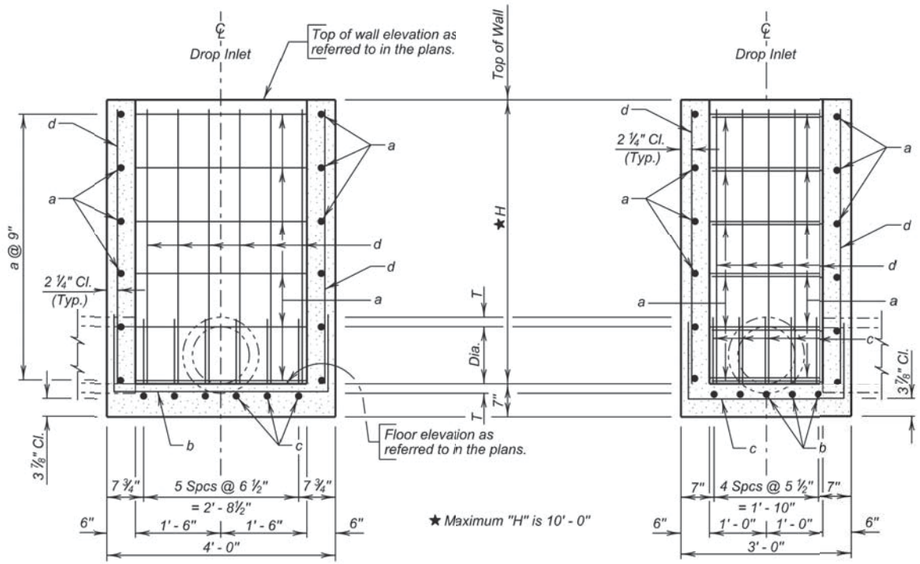

SEC. A - A

SEC. B - B

REINFORCING SCHEDULE

Mk.	No.	Size	Length	Type
a	2.67H	4	8' - 0"	17
b	5	5	6' - 3"	17
c	6	4	5' - 3"	17
d	22	4	H - 2"	Str.

Bending Details

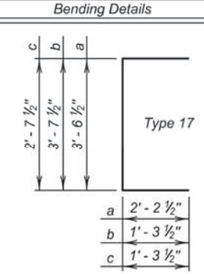

NOTE:
All dimensions are out to out of bars.

December 16, 2015

Published Date: 2nd Qtr. 2016

SDDOT

2' X 3' TYPE B
REINFORCED CONCRETE DROP INLET

PLATE NUMBER
670.01

Sheet 2 of 2

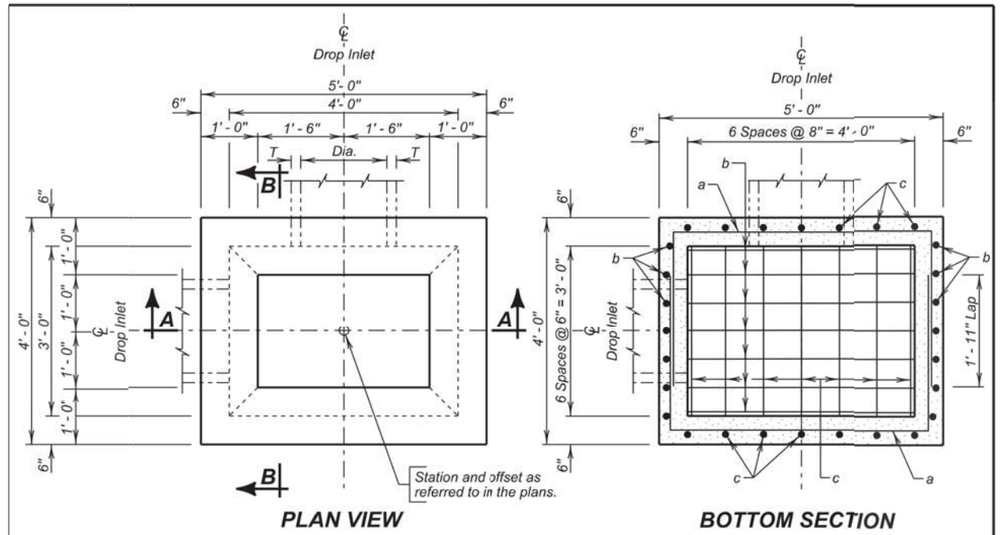

PLAN VIEW

BOTTOM SECTION

ESTIMATED QUANTITIES

ITEM	UNIT	CONSTANT QUANTITY	VARIABLE QUANTITY
✳ Class M6 Concrete	Cu. Yd.	0.72	0.30H
Reinforcing Steel	Lb.	130.93	36.54H
Frame and Grate Assembly	Each	1	———

DROP INLETS FOR 12" TO 36" DIAMETER PIPE

SPECIFICATIONS

Design Specifications: AASHTO LRFD Bridge Design Specifications, 2012 Edition.

Construction Specifications: South Dakota Standard Specifications for Roads and Bridges, Current Edition and required Provisions, Supplemental Specifications, and Special Provisions as included in the Proposal.

GENERAL NOTES:

Design Live Load: HL-93. No construction loading in excess of legal load was considered.

Reinforcing steel shall conform to ASTM A615 grade 60. The d bars shall be lapped 12 inches with the b and c bars. Cut and bend reinforcing steel as required to place pipe(s) through the drop inlet wall.

Drop inlet may be precast. If precast drop inlet details differ from this standard plate, submit a checked design done by a SD registered P.E. and shop plans to the Office of Bridge Design for approval.

✳ Reduce total quantities of concrete by the amount of concrete displaced by the pipe(s). The total quantity of concrete shall be computed to the nearest hundredth of a cubic yard. The total quantity of reinforcing steel shall be computed to the nearest pound.

Drop inlet shown may be modified by the addition or omission of connecting pipes as noted elsewhere in the plans. All pipes entering drop inlet must fit between the inside face of walls and shall not enter through the corners.

Maximum R.C.P. diameter shall not exceed 24 inches (24 inches for R. C. arch) on the 3-foot wide side and shall not exceed 36 inches (30 inches for R.C. arch) on the 4-foot wide side of the drop inlet.

The dimension of H is in feet. Maximum H is 10 feet.

PIPE DISPLACEMENT REDUCTIONS

	Diameter (Inches)	Wall T (Inches)	Class M6 Concrete (Cu. Yd.)
R.C.P.	12	2	0.03
	15	2 ¼	0.04
	18	2 ½	0.05
	24	3	0.09
	30	3 ½	0.14
	36	4	0.20
R.C. ARCH	18	2 ½	0.05
	24	3 ½	0.09
	30	4	0.14

December 16, 2015

Published Date: 2nd Qtr. 2016

SDDOT

3' X 4' TYPE B
REINFORCED CONCRETE DROP INLET

PLATE NUMBER
670.02

Sheet 1 of 2

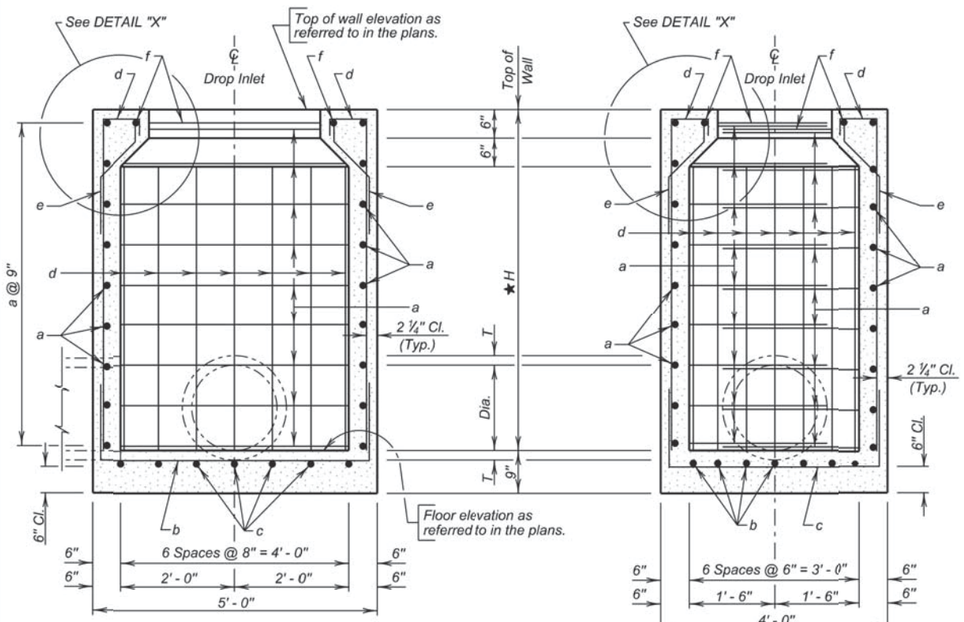

SEC. A - A

★ Maximum "H" is 10' - 0"

SEC. B - B

REINFORCING SCHEDULE

Mk.	No.	Size	Length	Type
a	2.67H	4	10' - 0"	17
b	7	4	7' - 6"	17
c	7	4	6' - 6"	17
d	28	4	H + 9"	S17
e	28	4	2' - 3"	S19
f	2	4	7' - 0"	17

Bending Details

NOTE:
All dimensions are out to out of bars.

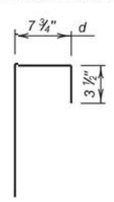

Type S17

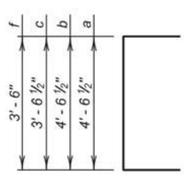

a	2' - 8 ¾"
b	1' - 5 ¾"
c	1' - 5 ¾"
f	1' - 9"

Type 17

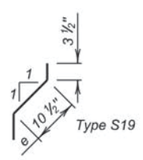

Type S19

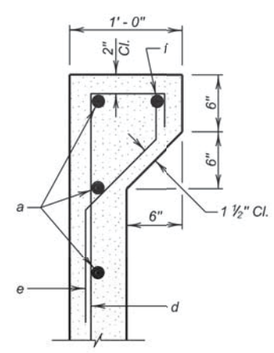

DETAIL "X"

December 16, 2015

Published Date: 2nd Qtr. 2016

SDDOT

3' X 4' TYPE B
REINFORCED CONCRETE DROP INLET

PLATE NUMBER
670.02

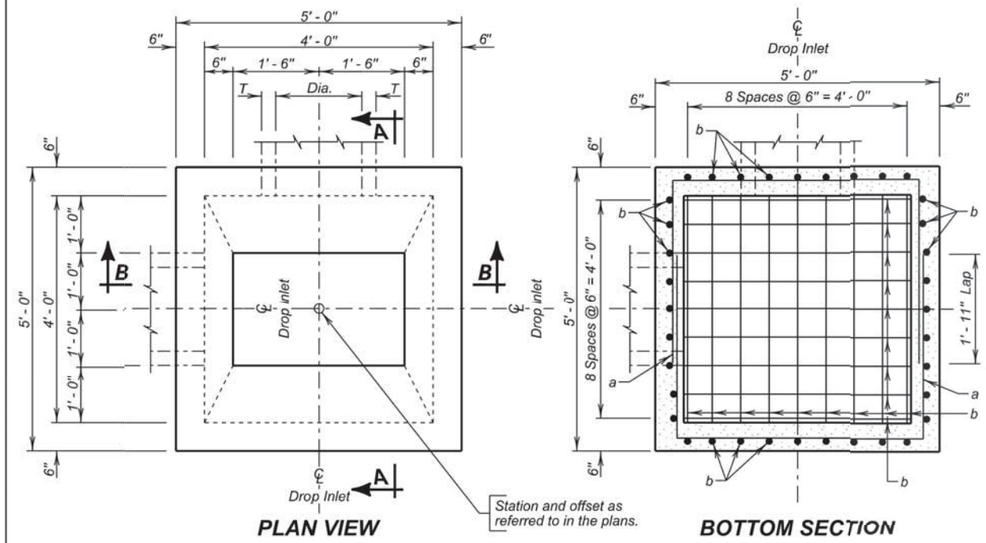

PLAN VIEW

BOTTOM SECTION

ESTIMATED QUANTITIES

ITEM	UNIT	CONSTANT QUANTITY	VARIABLE QUANTITY
✳ Class M6 Concrete	Cu. Yd.	0.98	0.33H
Reinforcing Steel	Lb.	190.60	43.67H
Frame and Grate Assembly	Each	1	——

DROP INLETS FOR 12" TO 36" DIAMETER PIPE

SPECIFICATIONS

Design Specifications: AASHTO LRFD Bridge Design Specifications, 2012 Edition.

Construction Specifications: South Dakota Standard Specifications for Roads and Bridges, Current Edition and required Provisions, Supplemental Specifications, and Special Provisions as included in the Proposal.

GENERAL NOTES:

Design Live Load: HL-93. No construction loading in excess of legal load was considered.

Reinforcing steel shall conform to ASTM A615 grade 60. The d bars shall be lapped 12 inches with the b and c bars. Cut and bend reinforcing steel as required to place pipe(s) through the drop inlet wall.

Drop inlet may be precast. If precast drop inlet details differ from this standard plate, submit a checked design done by a SD registered P.E. and shop plans to the Office of Bridge Design for approval.

✳ Reduce total quantities of concrete by the amount of concrete displaced by the pipe(s). The total quantity of concrete shall be computed to the nearest hundredth of a cubic yard. The total quantity of reinforcing steel shall be computed to the nearest pound.

Drop inlet shown may be modified by the addition or omission of connecting pipes as noted elsewhere in the plans. All pipes entering drop inlet must fit between the inside face of walls and shall not enter through the corners.

Maximum R.C.P. diameter shall not exceed 36 inches (30 inches for R. C. arch) on the 4-foot wide side of the drop inlet.

The dimension of H is in feet. Maximum H is 10 feet.

PIPE DISPLACEMENT REDUCTIONS

	Diameter (Inches)	Wall T (Inches)	Class M6 Concrete (Cu. Yd.)
R.C.P.	12	2	0.03
	15	2 ¼	0.04
	18	2 ½	0.05
	24	3	0.09
	30	3 ½	0.14
	36	4	0.20
R.C. ARCH	18	2 ½	0.05
	24	3 ½	0.09
	30	4	0.14

December 16, 2015

Published Date: 2nd Qtr. 2016

SDDOT

4' X 4' TYPE B
REINFORCED CONCRETE DROP INLET

PLATE NUMBER
670.04

07-29-16, P:\12-117\AutoCAD\PlanSheets\049F\Section_B\049F-DETL-STANDARD.dwg

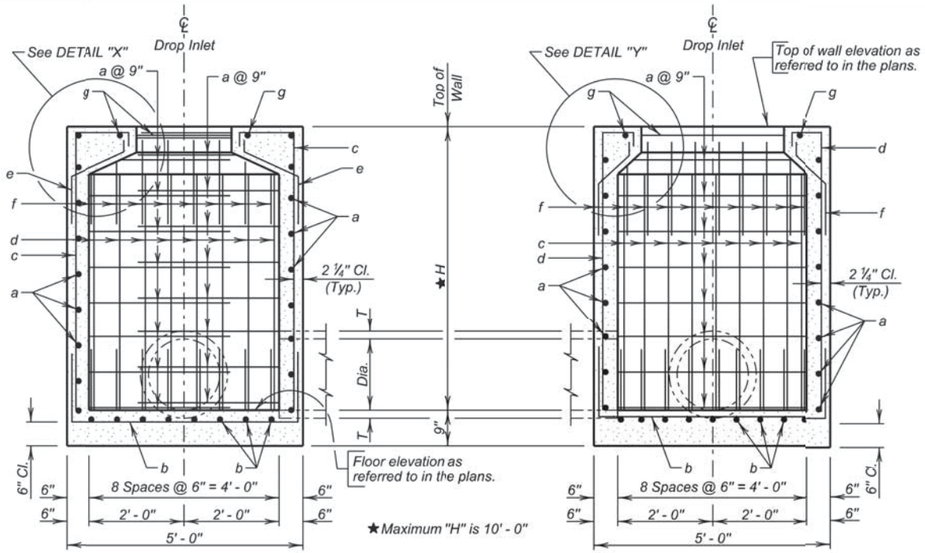

SEC. A - A

SEC. B - B

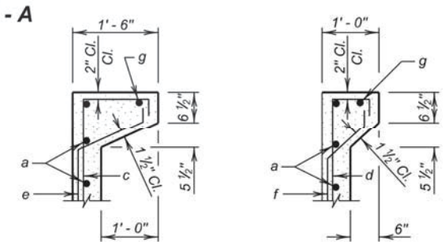

DETAIL "X"

DETAIL "Y"

REINFORCING SCHEDULE

Mk.	No.	Size	Length	Type
a	2.67H	4	11' - 0"	17
b	18	4	7' - 6"	17
c	18	4	H + 15"	S17
d	18	4	H + 9"	S17
e	18	4	2' - 6"	S19
f	18	4	2' - 3"	S19
g	2	4	7' - 0"	17

NOTE:
All dimensions are out to out of bars.

Bending Details

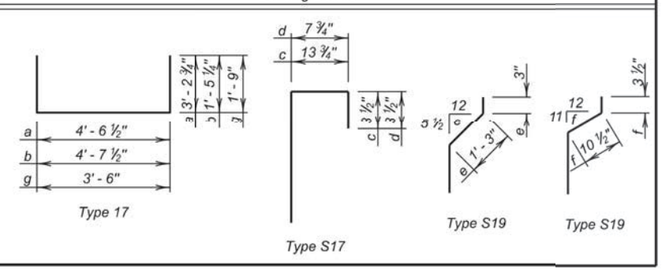

December 16, 2015

Published Date: 2nd Qtr. 2016

SDDOT

4' X 4' TYPE B
REINFORCED CONCRETE DROP INLET

PLATE NUMBER 670.04

Sheet 2 of 2

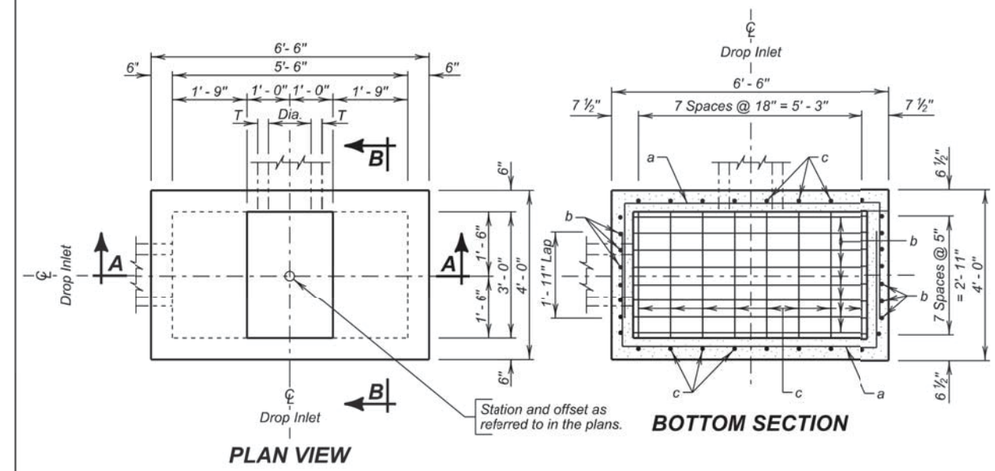

PLAN VIEW

BOTTOM SECTION

ESTIMATED QUANTITIES

ITEM	UNIT	CONSTANT QUANTITY	VARIABLE QUANTITY
✳ Class M6 Concrete	Cu. Yd.	1.03	0.35H
Reinforcing Steel	Lb.	161.19	47.89H
Grate Assembly	Each	1	———

DROP INLETS FOR 12" TO 54" DIAMETER PIPE

SPECIFICATIONS

Design Specifications: AASHTO LRFD Bridge Design Specifications, 2012 Edition.

Construction Specifications: South Dakota Standard Specifications for Roads and Bridges, Current Edition and required Provisions, Supplemental Specifications, and Special Provisions as included in the Proposal.

GENERAL NOTES:

Design Live Load: HL-93. No construction loading in excess of legal load was considered.

Reinforcing steel shall conform to ASTM A615 grade 60. The d bars shall be lapped 12 inches with the b and c bars. Cut and bend reinforcing steel as required to place pipe(s) through the drop inlet wall.

Drop inlet may be precast. If precast drop inlet details differ from this standard plate, submit a checked design done by a SD registered P.E. and shop plans to the Office of Bridge Design for approval.

✳ Reduce total quantities of concrete by the amount of concrete displaced by the pipe(s). The total quantity of concrete shall be computed to the nearest hundredth of a cubic yard. The total quantity of reinforcing steel shall be computed to the nearest pound.

Drop inlet shown may be modified by the addition or omission of connecting pipes as noted elsewhere in the plans. All pipes entering drop inlet must fit between the inside face of walls and shall not enter through the corners.

Maximum R.C.P. diameter shall not exceed 54 inches (42 inches for R. C. arch) on the 5.5-foot wide side and shall not exceed 24 inches (24 inches for R. C. arch) on the 3-foot wide side of the drop inlet.

The dimension of H is in feet. Maximum H is 10 feet.

PIPE DISPLACEMENT REDUCTIONS

	Diameter (Inches)	Wall T (Inches)	Class M6 Concrete (Cu. Yd.)
R.C.P.	12	2	0.03
	15	2 ¼	0.04
	18	2 ½	0.05
	24	3	0.09
	30	3 ½	0.14
	36	4	0.20
	42	4 ½	0.26
	48	5	0.34
	54	5 ½	0.43
R.C. ARCH	18	2 ½	0.05
	24	3 ½	0.09
	30	4	0.14
	36	4 ½	0.19
	42	4 ½	0.24

December 16, 2015

Published Date: 2nd Qtr. 2016

SDDOT

5.5' X 3' TYPE B
REINFORCED CONCRETE DROP INLET

PLATE NUMBER 670.05

Sheet 1 of 2

07-29-16 P:\12-117\AutoCAD\PlanSheets\049F\Section B\049F_DETL_STANDARD.dwg

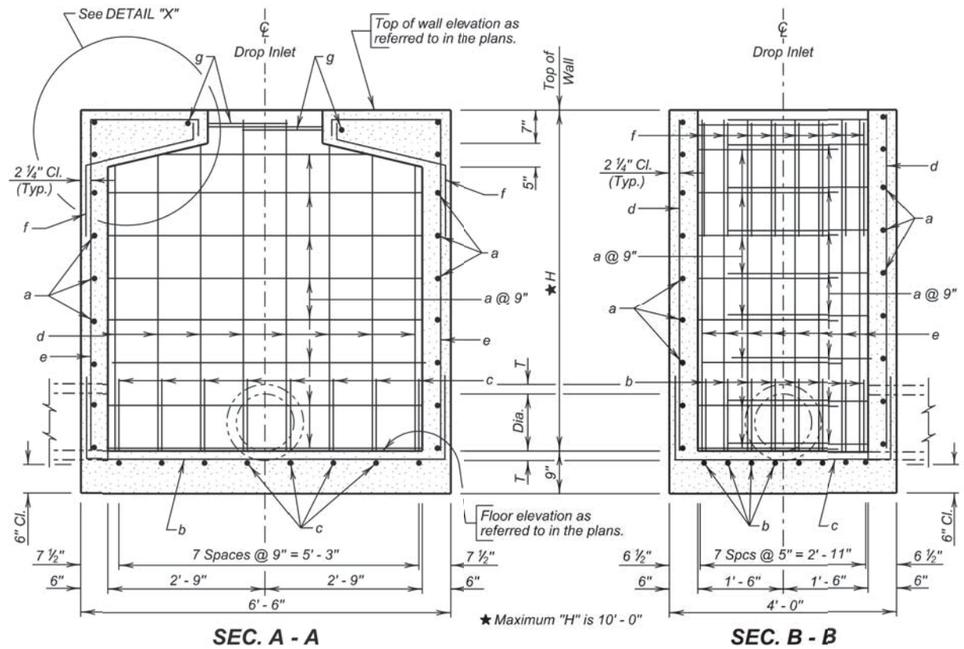

SEC. A - A

SEC. B - B

REINFORCING SCHEDULE

Mk.	No.	Size	Length	Type	Bending Details
a	2.67H	4	11' - 6"	17	
b	8	4	9' - 0"	17	
c	8	4	6' - 6"	17	
d	16	4	H - 2"	Str.	
e	16	5	H + 24"	S17	
f	16	4	3' - 6"	S19	
g	2	4	7' - 0"	17	

NOTE:
All dimensions are out to out of bars.

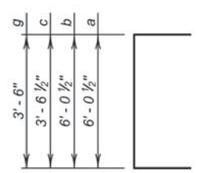

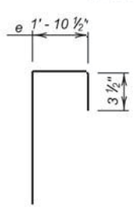

Type S17

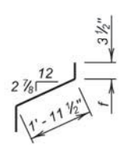

Type S19

a	2' - 8 ¾"
b	1' - 5 ¾"
c	1' - 5 ¾"
g	1' - 9"

Type 17

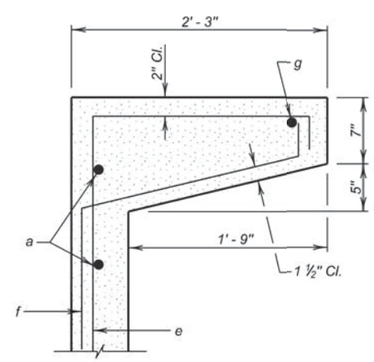

DETAIL "X"

December 16, 2015

Published Date: 2nd Qtr. 2016

SDDOT

5.5' X 3' TYPE B
REINFORCED CONCRETE DROP INLET

PLATE NUMBER
670.05

Sheet 2 of 2

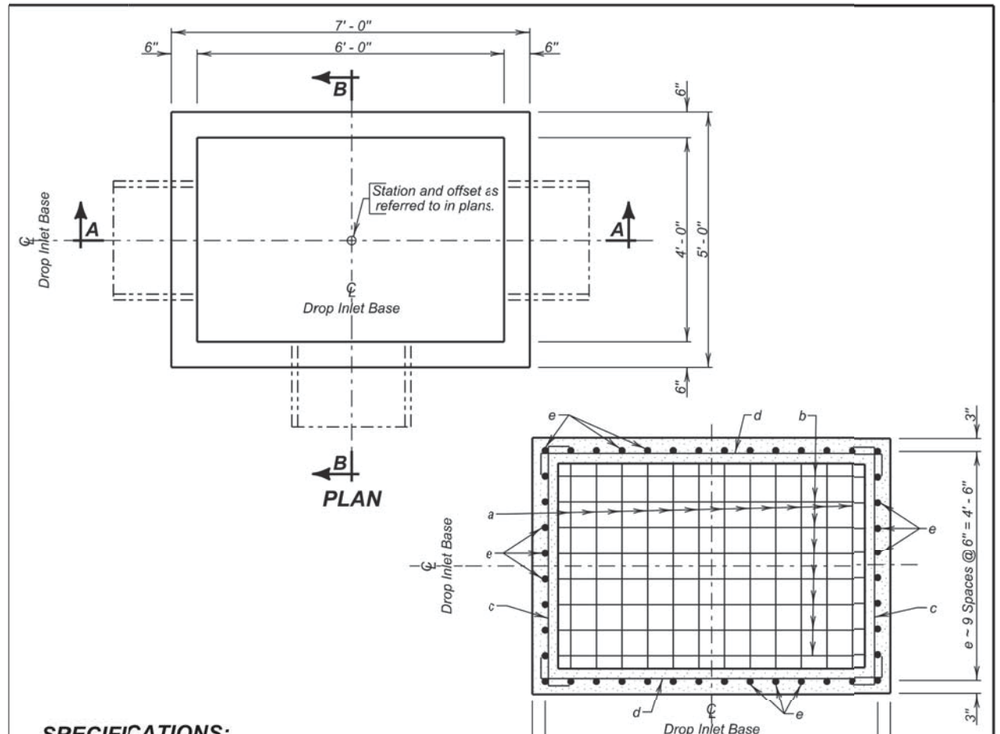

PLAN
(Bottom Steel)
(Pipe Not Shown)

SPECIFICATIONS:

1. Design Specifications: AASHTO LRFD Bridge Design Specifications 2012 Edition.
2. Construction Specifications: South Dakota Standard Specifications for Roads and Bridges, Current Edition and required Provisions, Supplemental Specifications, and Special Provisions as included in the Proposal.

GENERAL NOTES:

1. Design Live Load: HL-93 loading. No construction loading in excess of legal load was considered.
2. Base is intended for use with a Precast Concrete Type S Drop Inlet Lid, Standard Plate 670.38. Base may be precast. If precast base used, and details differ from that shown, the precast base must be on the current approved list. The current approved list is available through proper channels from the SDDOT Office of Bridge Design.
3. To qualify for addition to the approved list, submit a checked design, by South Dakota Registered Professional Engineers and shop plans to the Office of Bridge Design for approval. Design shall be in accordance with the current edition of the AASHTO LRFD Bridge Design Specifications.
4. ✳ Reduce total quantities of concrete by the amount of concrete displaced by the pipe. The total quantity of concrete shall be computed to the nearest hundredth of a cubic yard. The total quantity of reinforcing steel shall be computed to the nearest pound.
5. Inlets shown may be modified by the addition or omission of connecting pipes as shown on the layouts. Connecting pipes shall not enter the inlet through the corners.
6. Maximum R.C.P. diameter shall not exceed 36 inches (30 inches for R.C. Arch) on the 4-foot wide side and shall not exceed 54 inches (48 inches for R.C. Arch) on the 6-foot wide side of the Drop Inlet.
7. Reinforcing steel shall conform to ASTM A615 Grade 60. Cut and bend reinforcing steel as required to place pipe(s) through the inlet wall.
8. Use 1 inch clear cover on all reinforcing steel unless otherwise noted.
9. The dimension of H is in feet. Maximum H is 8 feet.

June 26, 2015

Published Date: 2nd Qtr. 2016

SDDOT

4' X 6' TYPE S DROP INLET BASE

PLATE NUMBER
670.30

Sheet 1 of 2

07-29-16 P:\12-117\AutoCAD\PlanSheets\049F\Section B\049F-DETL-STANDARD.dwg

PIPE DISPLACEMENT REDUCTIONS

	Diameter (Inches)	Wall T (Inches)	Class M6 Concrete (Cu. Yd.)
R.C.P.	12	2	0.03
	15	2 ¼	0.04
	18	2 ½	0.05
	24	3	0.09
	30	3 ½	0.14
	36	4	0.20
	42	4 ½	0.26
	48	5	0.34
	54	5 ½	0.43
R.C. ARCH	18	2 ½	0.05
	24	3 ½	0.09
	30	4	0.14
	36	4 ½	0.19
	42	4 ½	0.24
	48	5	0.32

REINFORCING SCHEDULE

Mk.	No.	Size	Length	Type
a	14	5	9' - 6"	17
b	10	5	11' - 6"	17
c	2H	4	5' - 6"	17
d	2H	4	7' - 6"	17
e	44	4	H - 2"	Str.

Bending Details

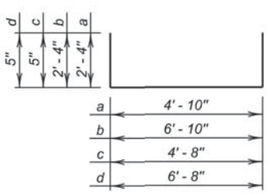

NOTE:
All dimensions are out to out of bars

ESTIMATED QUANTITIES

ITEM	UNIT	CONSTANT QUANTITY	VARIABLE QUANTITY
✳ Class M6 Concrete	Cu.Yd.	0.97	0.41H
Reinforcing Steel	Lb.	253.77	46.75H

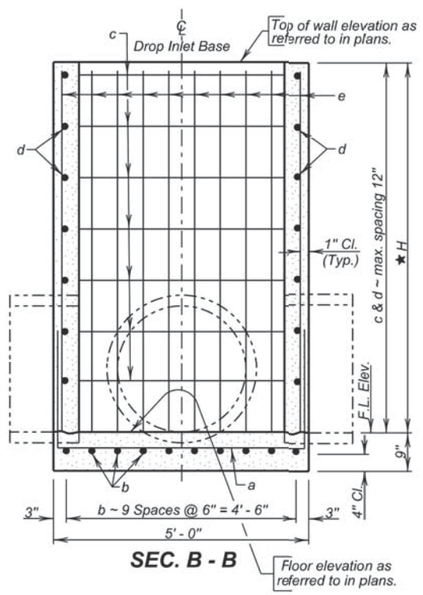

SEC. B - B

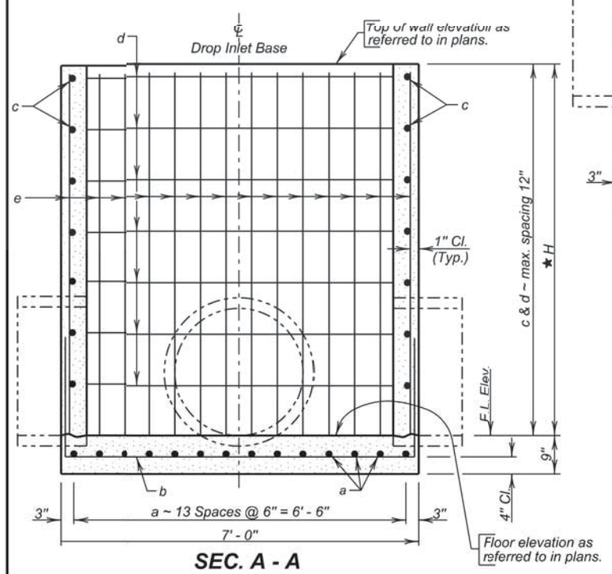

SEC. A - A

★ Maximum H is 8' - 0"

June 26, 2015

Published Date: 2nd Qtr. 2016	SDDOT	4' X 6' TYPE S DROP INLET BASE	PLATE NUMBER 670.30
			Sheet 2 of 2

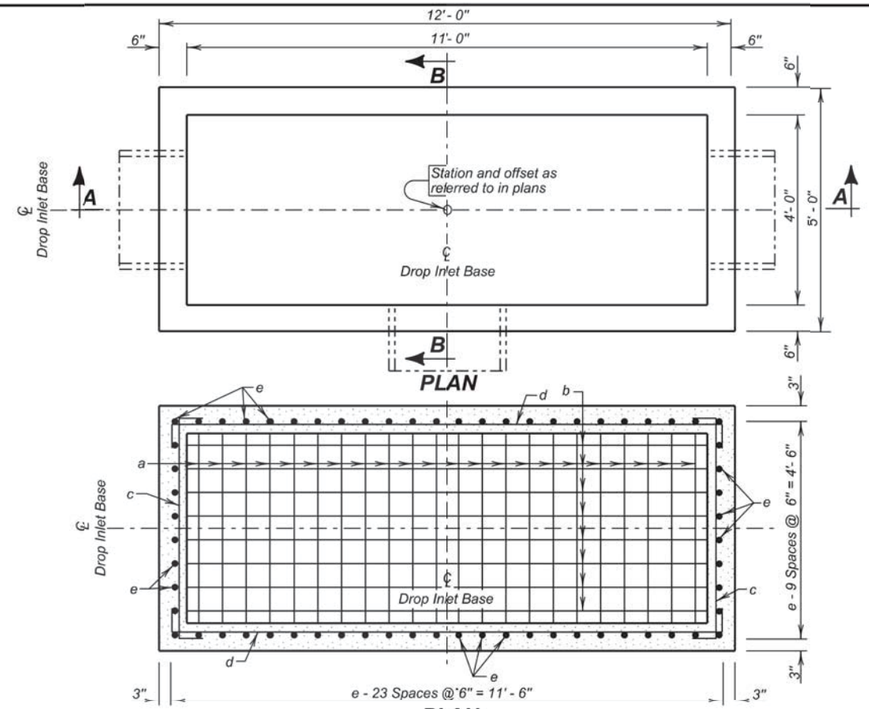

PLAN
(Bottom Steel)
(Pipe Not Shown)

SPECIFICATIONS:

1. Design Specifications: AASHTO LRFD Bridge Design Specifications 2012 Edition.
2. Construction Specifications: South Dakota Standard Specifications for Roads and Bridges, Current Edition and required Provisions, Supplemental Specifications, and Special Provisions as included in the Proposal.

GENERAL NOTES:

1. Design Live Load: HL-93 loading. No construction loading in excess of legal load was considered.
2. Base is intended for use with a Precast Concrete Type S Drop Inlet Lid, Standard Plate 670.40. Base may be precast. If precast base used and details differ from that shown, the precast base must be on the current approved list. The current approved list is available through proper channels from the SDDOT Office of Bridge Design.
3. To qualify for addition to the approved list, submit a checked design, by South Dakota Registered Professional Engineers and shop plans to the Office of Bridge Design for approval. Design shall be in accordance with the current edition of the AASHTO LRFD Bridge Design Specifications.
4. ✳ Reduce total quantities of concrete by the amount of concrete displaced by the pipe. The total quantity of concrete shall be computed to the nearest hundredth of a cubic yard. The total quantity of reinforcing steel shall be computed to the nearest pound.
5. Inlets shown may be modified by the addition or omission of connecting pipes as shown on the layouts. Connecting pipes shall not enter the inlet through the corners.
6. Maximum R.C.P. diameter shall not exceed 36 inches (30 inches for R.C. Arch) on the 4-foot wide side of the Drop Inlet.
7. Reinforcing steel shall conform to ASTM A615 Grade 60. Cut and bend reinforcing steel as required to place pipe(s) through the inlet wall.
8. Use 1 inch clear cover on all reinforcing steel unless otherwise noted.
9. The dimension of H is in feet. Maximum H is 8 feet.

June 26, 2015

Published Date: 2nd Qtr. 2016	SDDOT	4' X 11' TYPE S DROP INLET BASE	PLATE NUMBER 670.32
			Sheet 1 of 2

PIPE DISPLACEMENT REDUCTIONS

	Diameter (Inches)	Wall T (Inches)	Class M6 Concrete (Cu. Yd.)
R.C.P.	12	2	0.03
	15	2 ¼	0.04
	18	2 ½	0.05
	24	3	0.09
	30	3 ½	0.14
	36	4	0.20
	42	4 ½	0.26
	48	5	0.34
	54	5 ½	0.43
	60	6	0.52
R.C. ARCH	18	2 ½	0.05
	24	3 ½	0.09
	30	4	0.14
	36	4 ½	0.19
	42	4 ½	0.24
	48	5	0.32
	54	5 ½	0.39
	60	6	0.49
	72	7	0.70
	84	8	0.93

REINFORCING SCHEDULE

Mk.	No.	Size	Length	Type
a	24	5	9' - 6"	17
b	10	5	16' - 6"	17
c	2H	4	5' - 6"	17
d	2H	4	12' - 6"	17
e	64	4	H - 2"	Str.

Bending Details

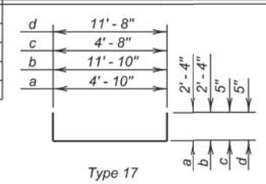

NOTE:
All dimensions are out to out of bars.

ESTIMATED QUANTITIES

ITEM	UNIT	CONSTANT QUANTITY	VARIABLE QUANTITY
✱ Class M6 Concrete	Cu. Yd.	1.67	0.59H
Reinforcing Steel	Lb.	402.77	66.80H

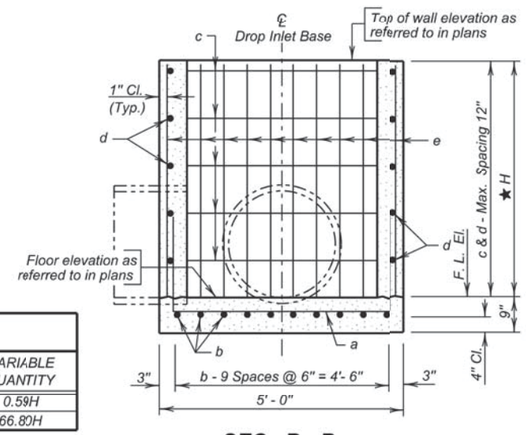

SEC. B - B

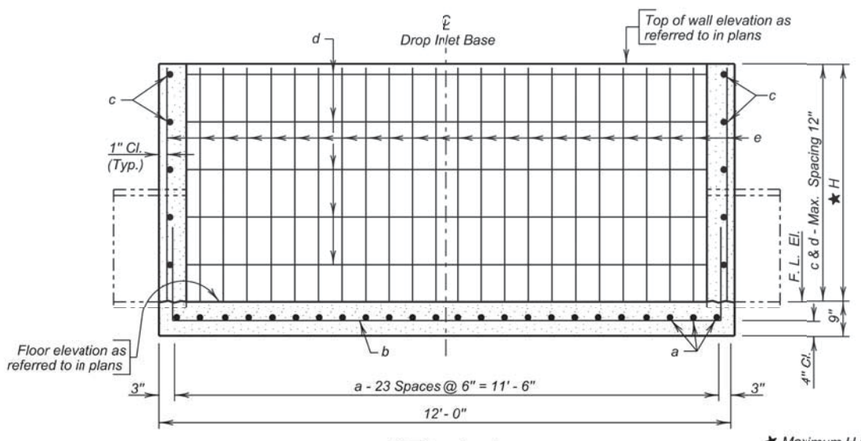

SEC. A - A

✱ Maximum H is 8' - 0"

June 26, 2015

Published Date: 2nd Qtr. 2016 | SDDOT | 4' X 11' TYPE S DROP INLET BASE | PLATE NUMBER 670.32 | Sheet 2 of 2

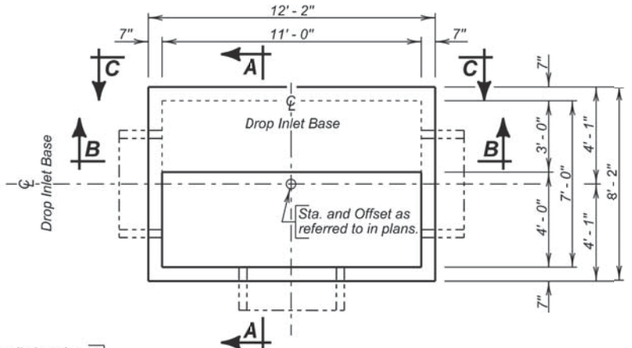

PLAN

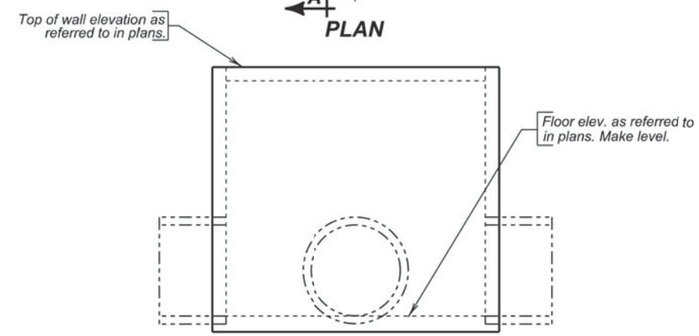

ELEVATION

SPECIFICATIONS:

1. Design Specifications: AASHTO LRFD Bridge Design Specifications, 2012 Edition.
2. Construction Specifications: South Dakota Standard Specifications for Roads and Bridges, Current Edition and required Provisions, Supplemental Specifications, and Special Provisions as included in the Proposal.

GENERAL NOTES:

1. Design Live Load: HL-93 loading. No construction loading in excess of legal load was considered.
2. Base is intended for use with a Precast Concrete Type S Drop Inlet Lid, Standard Plate 670.40. Base may be precast. If precast base used, and details differ from that shown, the precast base must be on the current approved list. The current approved list is available through proper channels from the SDDOT Office of Bridge Design.
3. To qualify for addition to the approved list, submit a checked design, by South Dakota Registered Professional Engineers and shop plans to the Office of Bridge Design for approval. Design shall be in accordance with the current edition of the AASHTO LRFD Bridge Design Specifications.
4. ✱ Reduce total quantities of concrete by the amount of concrete displaced by the pipe. The total quantity of concrete shall be computed to the nearest hundredth of a cubic yard. The total quantity of reinforcing steel shall be computed to the nearest pound.
5. Inlets shown may be modified by the addition or omission of connecting pipes as shown on the layouts. Connecting pipes shall not enter the inlet through the corners.
6. Maximum R.C.P. diameter shall not exceed 66 inches (54 inches for R.C. Arch) on the 7-foot wide side of the Drop Inlet.
7. Reinforcing steel shall conform to ASTM A615 Grade 60. Cut and bend reinforcing steel as required to place pipe(s) through the inlet wall.
8. Use 1 inch clear cover on all reinforcing steel unless otherwise noted.
9. The dimension of H is in feet. Maximum H is 10 feet.

June 26, 2015

Published Date: 2nd Qtr. 2016 | SDDOT | 7' X 11' TYPE S DROP INLET BASE | PLATE NUMBER 670.34 | Sheet 1 of 4

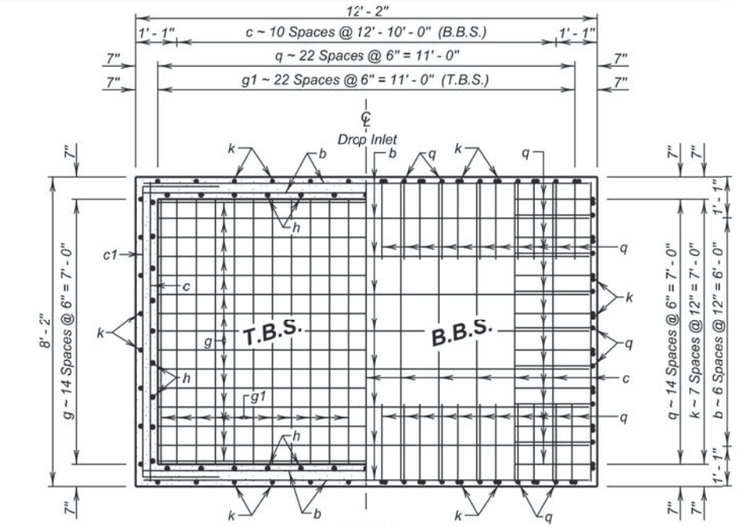

PLAN
(Bottom Slab)
(Pipe Not Shown)

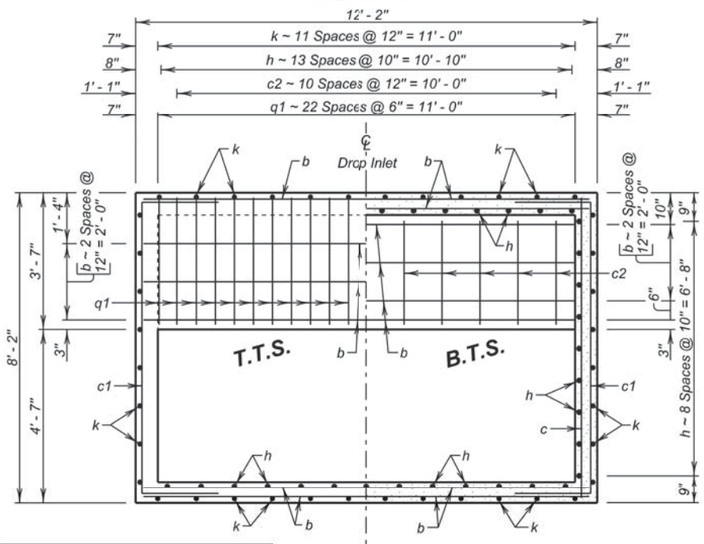

PLAN
(Top Slab)
(Pipe Not Shown)

LEGEND FOR PLACING RE-STEEL
T.T.S. - Top of Top Slab
B.T.S. - Bottom of Top Slab
T.B.S. - Top of Bottom Slab
B.B.S. - Bottom of Bottom Slab

June 26, 2015

Published Date: 2nd Qtr. 2016 | SDDOT | 7' X 11' TYPE S DROP INLET BASE | PLATE NUMBER 670.34 | Sheet 2 of 4

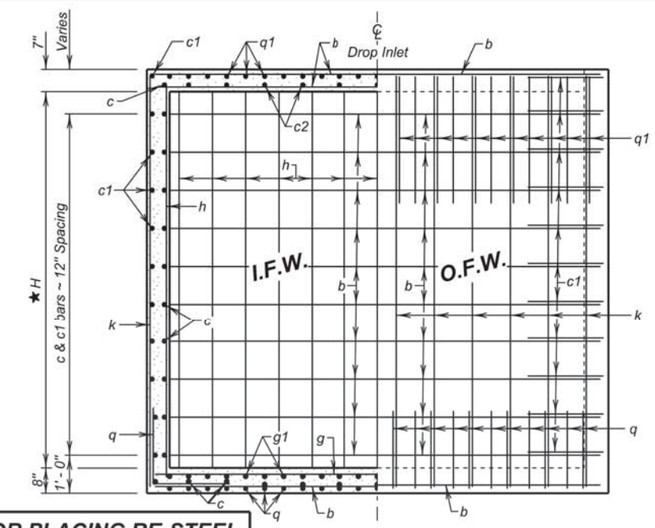

LEGEND FOR PLACING RE-STEEL
O.F.W. - Outside Face of Wall
I.F.W. - Inside Face of Wall

VIEW C - C
(Pipe Not Shown)

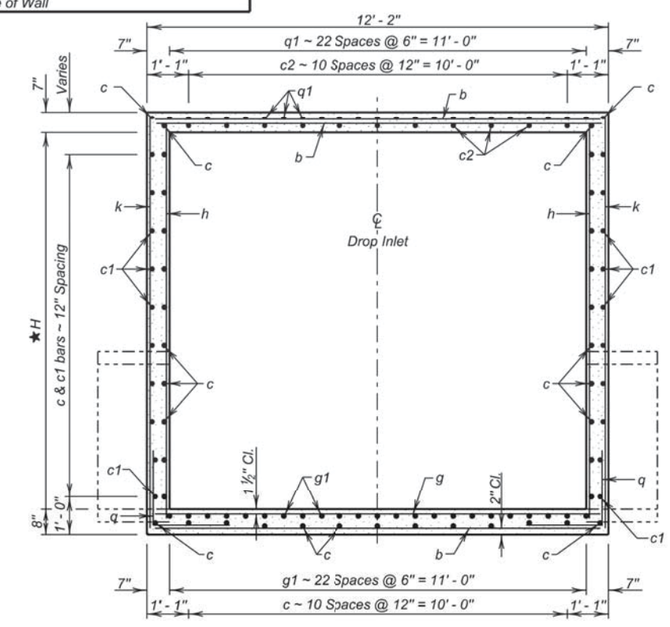

SEC. B - B

★ Maximum H is 10' - 0"

June 26, 2015

Published Date: 2nd Qtr. 2016 | SDDOT | 7' X 11' TYPE S DROP INLET BASE | PLATE NUMBER 670.34 | Sheet 3 of 4

07-29-16, P:\12-117\AutoCAD\PlanSheets\049F\Section_B\049F-DETL-STANDARD.dwg

REINFORCING SCHEDULE

Mk.	No.	Size	Length	Type
b	19 + 4H	4	11' - 9"	Str.
c	15 + 2H	4	7' - 9"	Str.
c1	2 + 2H	4	11' - 10"	17
c2	11	4	2' - 10"	Str.
g	15	5	11' - 9"	Str.
g1	23	5	7' - 9"	Str.
h	46	5	H + 5"	Str.
k	40	5	H + 5"	Str.
q	76	5	5' - 6"	17A
q1	23	5	6' - 8"	17A

Bending Details

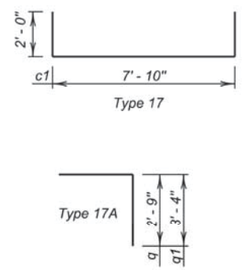

NOTE:
All dimensions are out to out of bars

ESTIMATED QUANTITIES

ITEM	UNIT	CONSTANT QUANTITY	VARIABLE QUANTITY
*Class M6 Concrete	Cu.Yd.	3.65	0.83H
Reinforcing Steel	Lb.	1266	147.26H

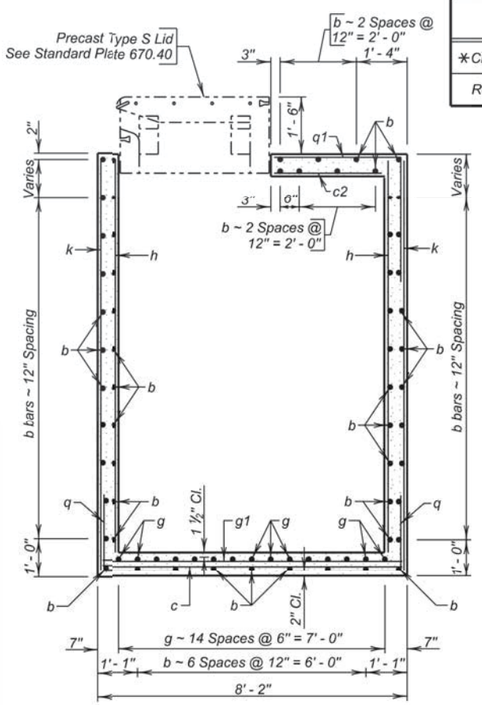

SEC. A - A
(Pipe Not Shown)

PIPE DISPLACEMENT REDUCTIONS

	Diameter (Inches)	Wall T (Inches)	Class M6 Concrete (Cu. Yd.)
R.C.P.	12	2	0.03
	15	2 ¼	0.04
	18	2 ½	0.06
	24	3	0.11
	30	3 ½	0.16
	36	4	0.23
	42	4 ½	0.31
	48	5	0.40
	54	5 ½	0.50
	60	6	0.61
R.C. ARCH	18	2 ½	0.06
	24	3 ½	0.11
	30	4	0.16
	36	4 ½	0.22
	42	4 ½	0.29
	48	5	0.37
	54	5 ½	0.46
	60	6	0.57
	72	7	0.82
	84	8	1.09

June 26, 2015

Published Date: 2nd Qtr. 2016 | SDDOT | 7' X 11' TYPE S DROP INLET BASE | PLATE NUMBER 670.34 | Sheet 4 of 4

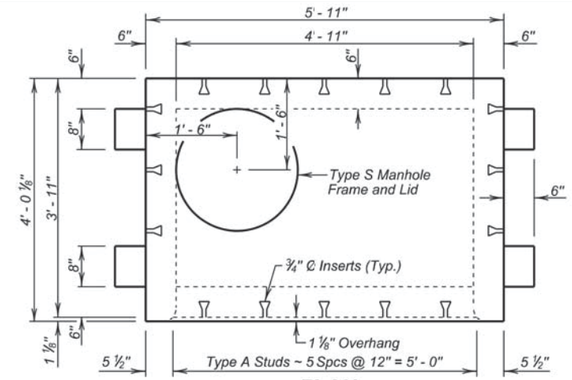

PLAN

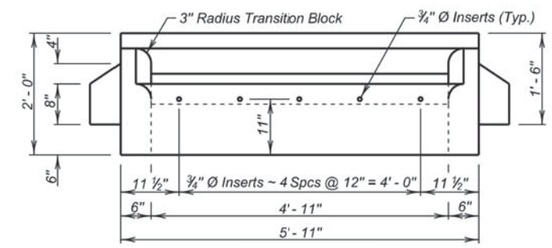

ELEVATION

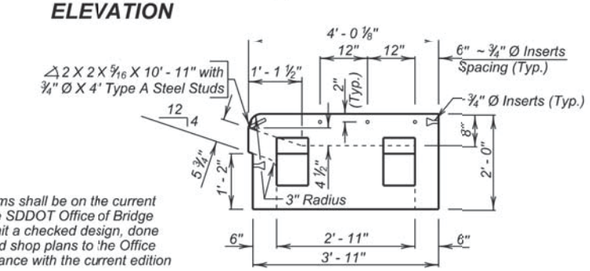

SIDE VIEW
(With Sidewalk Inserts)

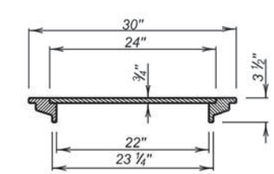

TYPICAL SECTION THROUGH TYPE S MANHOLE FRAME AND LID
(Weight 140 Lbs.)

GENERAL NOTES:

1. The Precast Concrete Type S Drop Inlet Lid and the shims shall be on the current approved list available through proper channels from the SDDOT Office of Bridge Design. To qualify for addition to the approved list, submit a checked design, done by South Dakota Registered Professional Engineers, and shop plans to the Office of Bridge Design for approval. Design shall be in accordance with the current edition of the AASHTO LRFD Bridge Design Specifications.
2. Design Live Load shall be HL - 93.
3. Concrete mix shall be as per fabricators design, however, minimum compressive strength shall not be less than 4500 psi. Type II Cement is required.
4. The Type S Manhole Frame and Lid shall conform to AASHTO M105, Class 30.
5. Structural Steel shall conform to ASTM A36. The ¾ inch diameter Headed Type A Steel Studs shall comform to Section 7 of the current edition of AWS D1.1 Structural Steel Welding Code.
6. The ¾ inch diameter Concrete Inserts shall be galvanized or made of a corrosion resistant material. Provide ¾ inch diameter x 1' - 6" long dowels conforming to ASTM A615, Gr. 60 threaded to fit Inserts with each lid.
7. All costs associated with furnishing and installing the Precast Concrete Type S Drop Inlet Lid including the type S manhole frame and lid, shims, inserts, and dowels shall be included in the contract unit price per each for " 4' x 6' Precast Concrete Type S Drop Inlet Lid ".

December 23, 2012

Published Date: 2nd Qtr. 2016 | SDDOT | 4' X 6' PRECAST CONCRETE TYPE S DROP INLET LID | PLATE NUMBER 670.38 | Sheet 1 of 1

07-29-16 P:\12-117\AutoCAD\PlanSheets\049F\Section B\049F-DETL-STANDARD.dwg

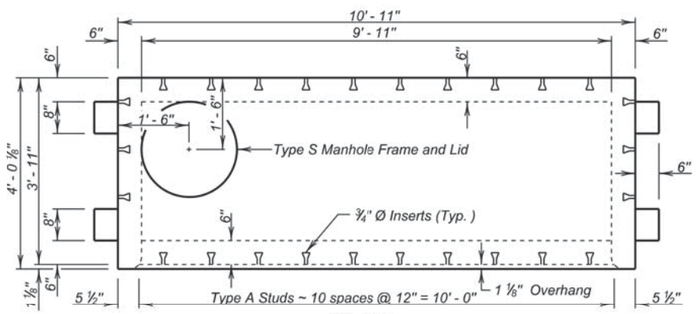

PLAN

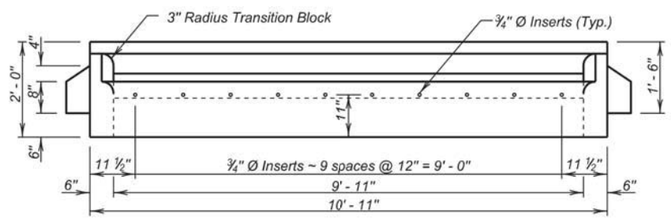

ELEVATION

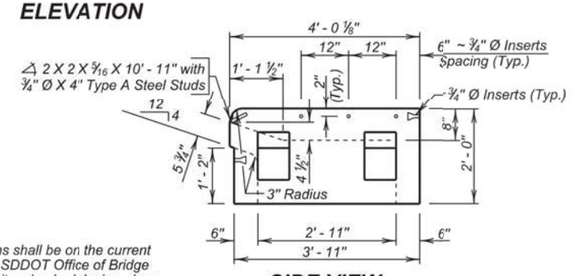

SIDE VIEW
(With Sidewalk Inserts)

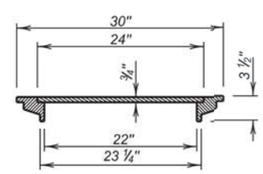

TYPICAL SECTION THROUGH TYPE S MANHOLE FRAME AND LID
(Weight 140 Lbs.)

GENERAL NOTES:

1. The Precast Concrete Type S Drop Inlet Lid and the shims shall be on the current approved list available through proper channels from the SDDOT Office of Bridge Design. To qualify for addition to the approved list, submit a checked design, done by South Dakota Registered Professional Engineers, and shop plans to the Office of Bridge Design for approval. Design shall be in accordance with the current edition of the AASHTO LRFD Bridge Design Specifications.
2. Design Live Load shall be HL - 93.
3. Concrete mix shall be as per fabricators design, however, minimum compressive strength shall not be less than 4500 psi. Type II Cement is required.
4. The Type S Manhole Frame and Lid shall conform to AASHTO M105, Class 30.
5. Structural Steel shall conform to ASTM A36. The ¾ inch diameter Headed Type A Steel Studs shall conform to Section 7 of the current edition of AWS D1. 1 Structural Steel Welding Code.
6. The ¾ inch diameter Concrete Inserts shall be galvanized or made of a corrosion resistant material. Provide ¾ inch diameter x 1' - 6" long dowels conforming to ASTM A615, Gr. 60 threaded to fit inserts with each lid.
7. All costs associated with furnishing and installing the Precast Concrete Type S Drop Inlet Lid including the type S manhole frame and lid, shims, inserts, and dowels shall be included in the contract unit price per each for " 4' x 11' Precast Concrete Type S Drop Inlet Lid ".

December 23, 2012

Published Date: 2nd Qtr. 2016	SDDOT	4' X 11' PRECAST CONCRETE TYPE S DROP INLET LID	PLATE NUMBER 670.40
			Sheet 1 of 1

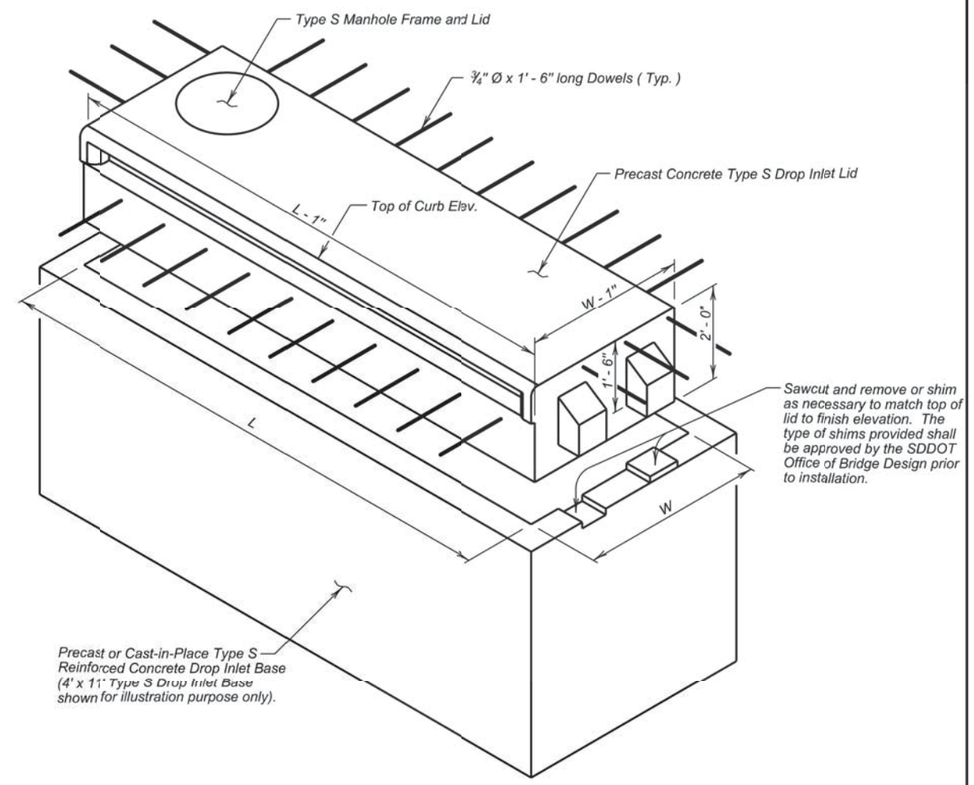

TYPE S DROP INLET

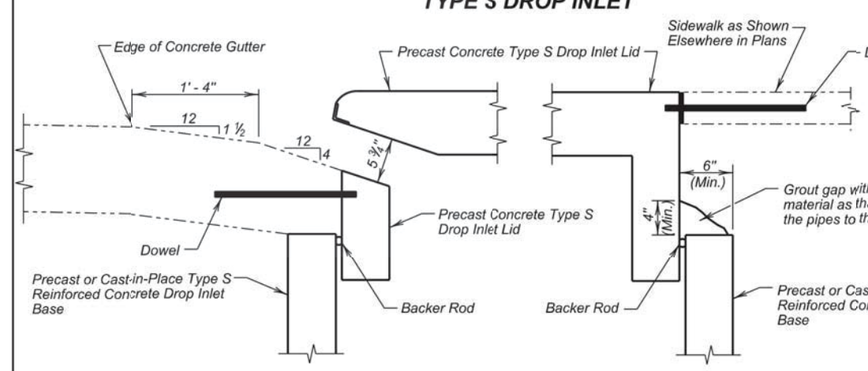

CONCRETE GUTTER DETAIL **GROUTING DETAIL**
(Sides and Back, Adjacent to Sidewalk)

December 23, 2012

Published Date: 2nd Qtr. 2016	SDDOT	INSTALLATION DETAILS FOR PRECAST CONCRETE TYPE S DROP INLET LID	PLATE NUMBER 670.45
			Sheet 1 of 2

07-29-16 P:\12-117\AutoCAD\PlanSheets\049F\Section B\049F-DETL-STANDARD.dwg

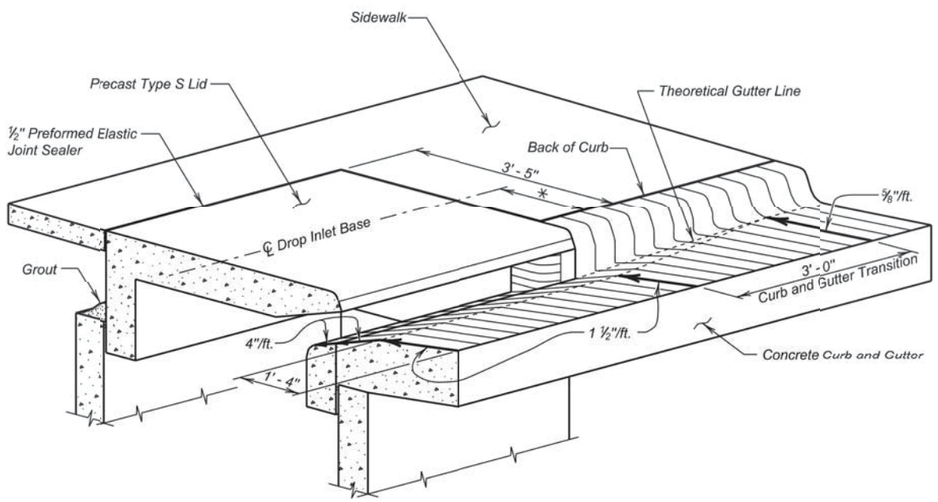

CURB AND GUTTER TRANSITION DETAILS

Drop Inlet Base Unit Size	* Distance
4' x 6'	1' - 5 ½"
4' x 11'	1' - 5 ½"
7' x 11'	2' - 11 ½"

GENERAL NOTES:

1. Dowels shall be used to anchor the precast concrete Type S drop inlet lid to the concrete gutter. See Standard Plate 670.38 or 670.40 as applicable. If there is sidewalk adjacent dowels shall be used to anchor the precast concrete Type S drop inlet lid to the sidewalk. If there is sidewalk adjacent to the drop inlet, the precast lid shall match the finish elevations and cross slopes of the sidewalk.
2. The sidewalk shall be steel reinforced when the sidewalk adjoins the precast lid. Refer to Standard Plate 651.70 for reinforced concrete sidewalk details.

December 23, 2012

Published Date: 2nd Qtr. 2016	SDDOT	INSTALLATION DETAILS FOR PRECAST CONCRETE TYPE S DROP INLET LID	PLATE NUMBER 670.45 Sheet 2 of 2

GENERAL NOTE:

Top of grate elevation shall be 0.04' below theoretical elevation of gutter.

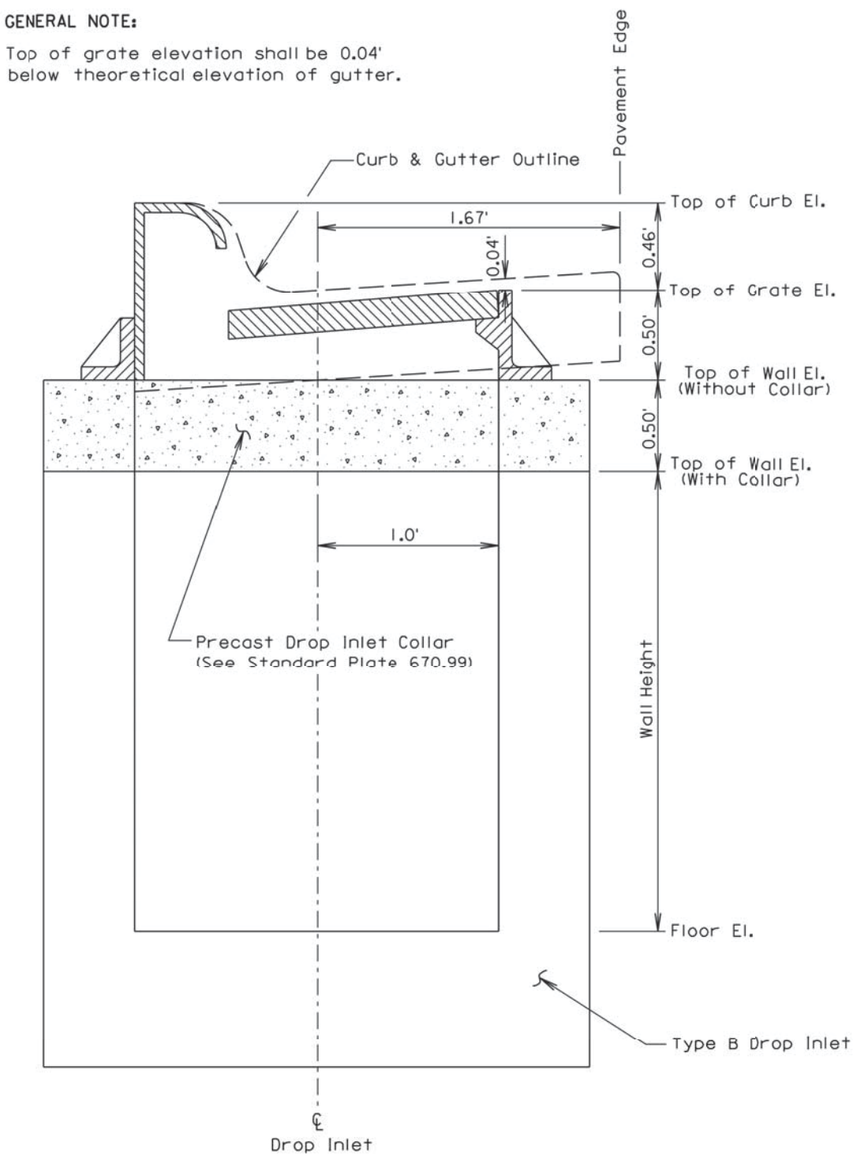

June 26, 2011

Published Date: 2nd Qtr. 2016	SDDOT	INSTALLATION OF TYPE B DROP INLET	PLATE NUMBER 670.75 Sheet 1 of 1

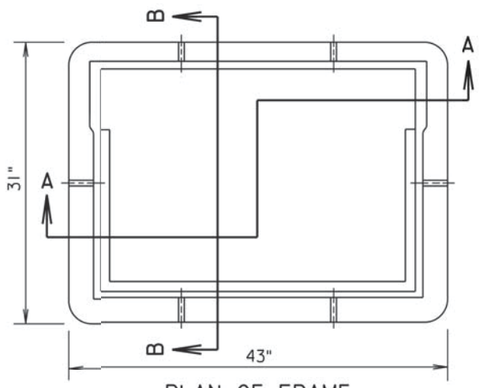

PLAN OF FRAME

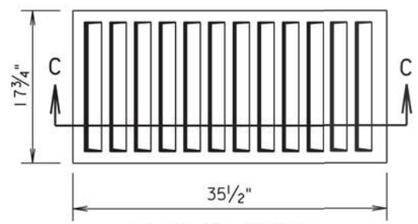

PLAN OF GRATE

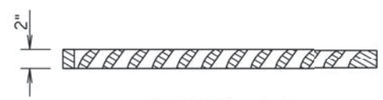

SECTION C-C

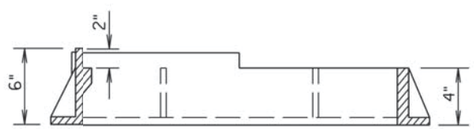

SECTION A-A

TOP VIEW OF CURB BOX

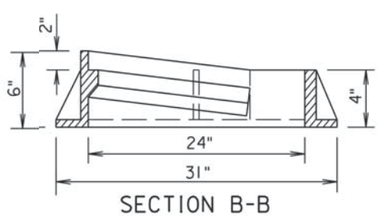

SECTION B-B

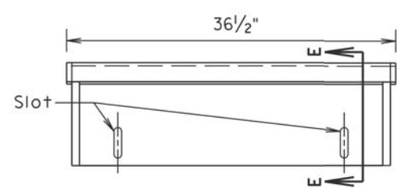

ELEVATION OF CURB BOX

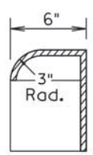

SECTION E-E

GENERAL NOTE:

Total weight of the assembly shall be 490 Lbs. minimum and the curb box shall be adjustable 6" to 9".

March 31, 2000

Published Date: 2nd Qtr. 2016	SDDOT	TYPE B FRAME AND GRATE ASSEMBLY	PLATE NUMBER 670.80 Sheet 1 of 1

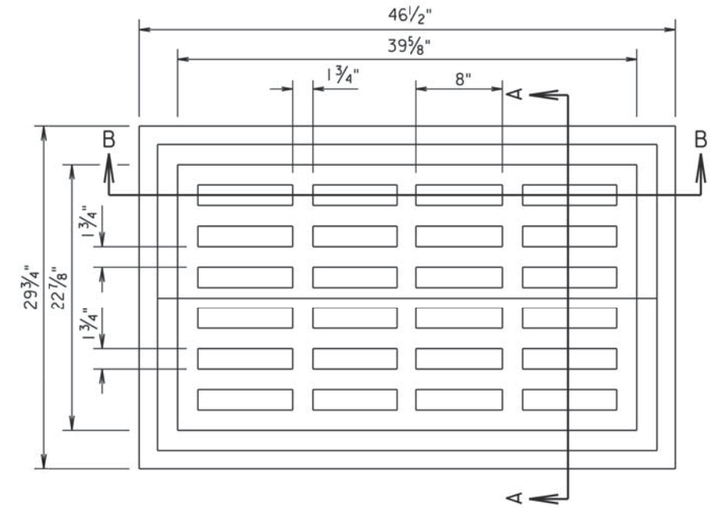

PLAN VIEW

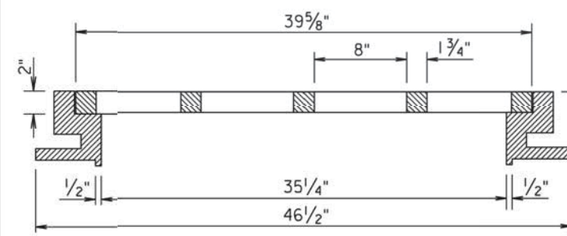

SECTION B-B

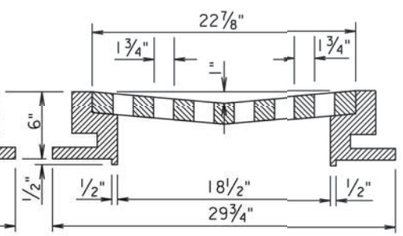

SECTION A-A

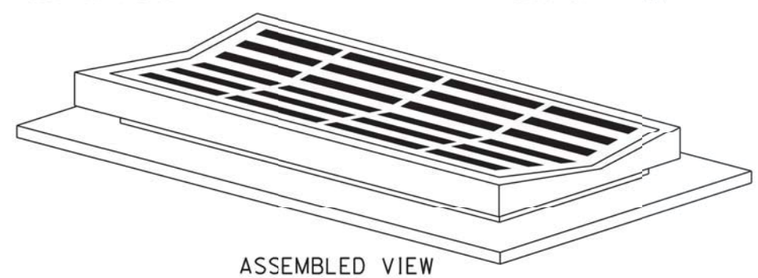

ASSEMBLED VIEW

GENERAL NOTES:

The total weight of frame and grate shall be 810 pounds minimum.
The Type E frame and grate is used typically with valley gutter.

April 9, 2006

Published Date: 2nd Qtr. 2016	SDDOT	TYPE E FRAME AND GRATE	PLATE NUMBER 670.86 Sheet 1 of 1

07-29-16 P:\12-117\AutoCAD\PlanSheets\049F\Section B\049F-DETL-STANDARD.dwg

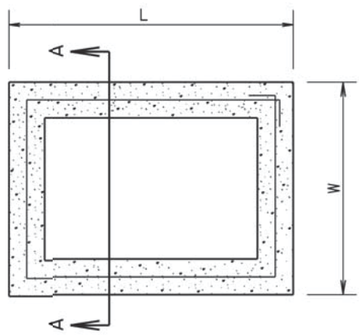

PLAN VIEW

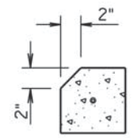

For Type D Drop Inlets only:
Use Precast Drop Inlet Collar with 2" chamfer on L sides only.

DETAIL B

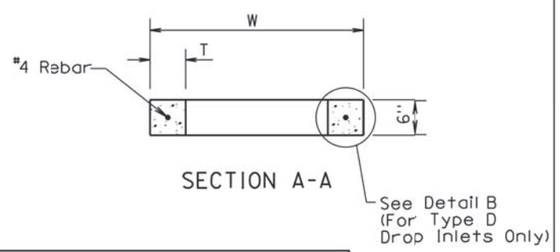

SECTION A-A

INFORMATIONAL QUANTITIES					
FRAME AND GRATE TYPE	L Ft In	W Ft In	T In	CLASS M6 CONCRETE CuYd	REINFORCING STEEL Lb
TYPE B	4'-0"	3'-0"	6	0.11	9
TYPE C	5'-0"	4'-0"	6	0.15	11
TYPE D	4'-0"	2'-6"	6	0.10	8

GENERAL NOTES:

All reinforcing steel shall conform to ASTM A615, Grade 60.

The ½" diameter bar shall lap 6"± and shall be centered in the concrete.

The cost of furnishing and installing Precast Drop Inlet Collars, including labor, materials, and incidentals shall be incidental to the contract unit price per Each for "Precast Drop Inlet Collar".

March 31, 2000

Published Date: 2nd Qtr. 2016 | SDDOT | PRECAST DROP INLET COLLAR | PLATE NUMBER 670.99 | Sheet 1 of 1

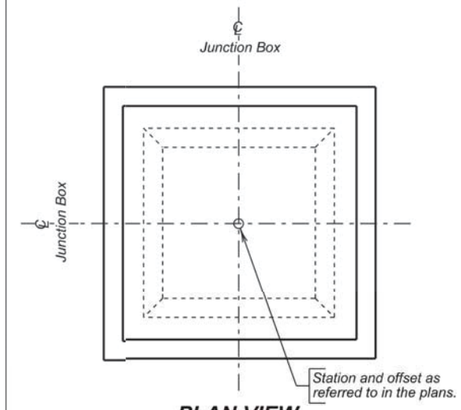

PLAN VIEW

SPECIFICATIONS

Design Specifications: AASHTO LRFD Bridge Design Specifications, 2012 Edition.

Construction Specifications: South Dakota Standard Specifications for Roads and Bridges, Current Edition and required Provisions, Supplemental Specifications, and Special Provisions as included in the Proposal.

GENERAL NOTES

Design Live Load: HL-93. No construction loading in excess of legal load was considered.

The design of the junction box is based on a maximum fill over the junction box of 5 feet and minimum fill over the junction box of 2 feet.

Reinforcing steel shall conform to ASTM A615 Grade 60. Cut and bend reinforcing steel as required to place pipe(s) through junction box wall.

Junction box may be precast. If precast junction box details differ from this standard plate, submit a checked design done by a SD registered P.E. and shop plans to the Office of Bridge Design for approval.

Use 1 inch clear cover on all reinforcing steel unless otherwise noted.

All exposed edges shall be chamfered ¾ inch.

Junction box shown may be modified by the addition or omission of connecting pipes as noted elsewhere in the plans. All pipes entering junction box must fit between the inside face of walls and shall not enter through the corners.

The cost of furnishing and installing the manhole steps shall be incidental to the contract unit price per pound for "Reinforcing Steel".

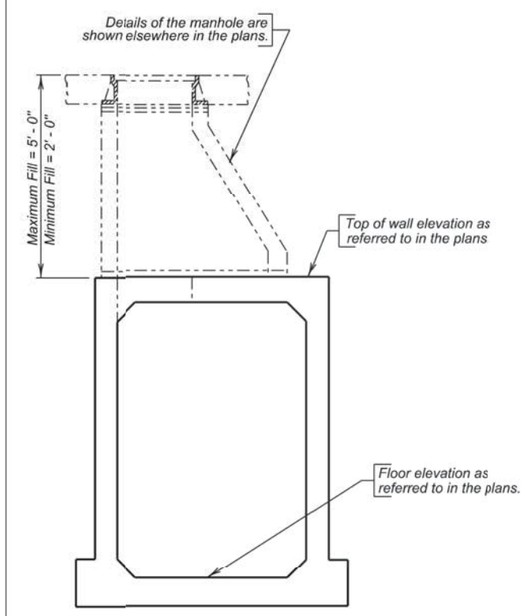

ELEVATION VIEW

PIPE DISPLACEMENT REDUCTIONS			
	Diameter (Inches)	Wall T (Inches)	Class M6 Concrete (Cu. Yd.)
R.C.P.	12	2	0.03
	15	2 ¼	0.04
	18	2 ½	0.05
	24	3	0.09
	30	3 ½	0.14
	36	4	0.20
	42	4 ½	0.26
	48	5	0.34
	54	5 ½	0.43

ESTIMATED QUANTITIES		
ITEM	✳ Class M6 Concrete	Reinforcing Steel
UNIT	Cu. Yd.	Lb.
H = 4' - 0"	4.37	821
H = 4' - 6"	4.61	846
H = 5' - 0"	4.85	908
H = 5' - 6"	5.10	933
H = 6' - 0"	5.34	958
H = 6' - 6"	5.58	1020
H = 7' - 0"	5.82	1045
H = 7' - 6"	6.06	1071
H = 8' - 0"	6.30	1132

✳ Reduce total quantities of concrete by the amount of concrete displaced by the pipe(s). Quantity shown includes reduction for a 24-inch diameter manhole opening. The total quantity of concrete shall be computed to the nearest hundredth of a cubic yard.

December 16, 2015

Published Date: 2nd Qtr. 2016 | SDDOT | 5'X 5' JUNCTION BOX | PLATE NUMBER 671.01 | Sheet 1 of 3

07-29-16 P:\12-117\AutoCAD\PlanSheets\049F\Section B\049F-DETL-STANDARD.dwg

REINFORCING SCHEDULE

	Mk.	No.	Size	Length	Type
H = 4' - 0"	⌀ a1	1	6	9' - 0"	T3
	▼ a2	4	–	——	—
	h3	28	4	5' - 9"	17A
	k3	48	4	8' - 6"	17
	m1	18	5	6' - 9"	Str.
	n1	18	5	5' - 9"	Str.
	p1	52	4	5' - 0"	Str.
	q1	8	4	3' - 6"	17A
H = 4' - 6"	⌀ a1	1	6	9' - 0"	T3
	▼ a2	4	–	——	—
	h4	28	4	6' - 3"	17A
	k4	48	4	9' - 0"	17
	m1	18	5	6' - 9"	Str.
	n1	18	5	5' - 9"	Str.
	p1	52	4	5' - 0"	Str.
	q1	8	4	3' - 6"	17A
H = 5' - 0"	⌀ a1	1	6	9' - 0"	T3
	▼ a2	5	–	——	—
	h5	28	4	6' - 9"	17A
	k5	48	4	9' - 6"	17
	m1	18	5	6' - 9"	Str.
	n1	18	5	5' - 9"	Str.
	p1	52	4	5' - 0"	Str.
	q1	8	4	3' - 6"	17A
H = 5' - 6"	⌀ a1	1	6	9' - 0"	T3
	▼ a2	5	–	——	—
	h6	28	4	7' - 3"	17A
	k6	48	4	10' - 0"	17
	m1	18	5	6' - 9"	Str.
	n1	18	5	5' - 9"	Str.
	p1	60	4	5' - 0"	Str.
	q1	12	4	3' - 6"	17A
H = 6' - 0"	⌀ a1	1	6	9' - 0"	T3
	▼ a2	6	–	——	—
	h7	28	4	7' - 9"	17A
	k7	48	4	10' - 6"	17
	m1	18	5	6' - 9"	Str.
	n1	18	5	5' - 9"	Str.
	p1	60	4	5' - 0"	Str.
	q1	12	4	3' - 6"	17A
H = 6' - 6"	⌀ a1	1	6	9' - 0"	T3
	▼ a2	6	–	——	—
	h8	28	4	8' - 3"	17A
	k8	48	4	11' - 0"	17
	m1	18	5	6' - 9"	Str.
	n1	18	5	5' - 9"	Str.
	p1	68	4	5' - 0"	Str.
	q1	16	4	3' - 6"	17A
H = 7' - 0"	⌀ a1	1	6	9' - 0"	T3
	▼ a2	7	–	——	—
	h9	28	4	8' - 9"	17A
	k9	48	4	11' - 6"	17
	m1	18	5	6' - 9"	Str.
	n1	18	5	5' - 9"	Str.
	p1	68	4	5' - 0"	Str.
	q1	16	4	3' - 6"	17A

Bending Details

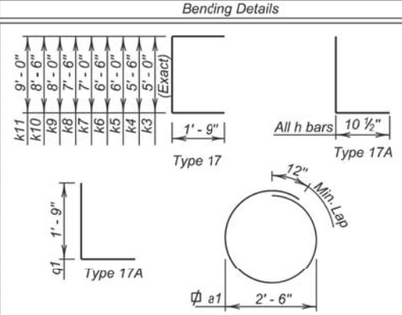

	Mk.	No.	Size	Length	Type
H = 7' - 6"	⌀ a1	1	6	9' - 0"	T3
	▼ a2	7	–	——	—
	h10	28	4	9' - 3"	17A
	k10	48	4	12' - 0"	17
	m1	18	5	6' - 9"	Str.
	n1	18	5	5' - 9"	Str.
	p1	68	4	5' - 0"	Str.
	q1	16	4	3' - 6"	17A
H = 8' - 0"	⌀ a1	1	6	9' - 0"	T3
	▼ a2	8	–	——	—
	h11	28	4	9' - 9"	17A
	k11	48	4	12' - 6"	17
	m1	18	5	6' - 9"	Str.
	n1	18	5	5' - 9"	Str.
	p1	76	4	5' - 0"	Str.
	q1	20	4	3' - 6"	17A

LEGEND FOR PLACING RE-STEEL

T. B. S.	- Top of Bottom Slab
B. B. S.	- Bottom of Bottom Slab

▼ Cast iron Manhole Steps (R - 1980 - C) from Neenah Foundry or equivalant.

⌀ Locate in center of top slab with 3" clearance at manhole opening.

All dimensions are out to out of bars.

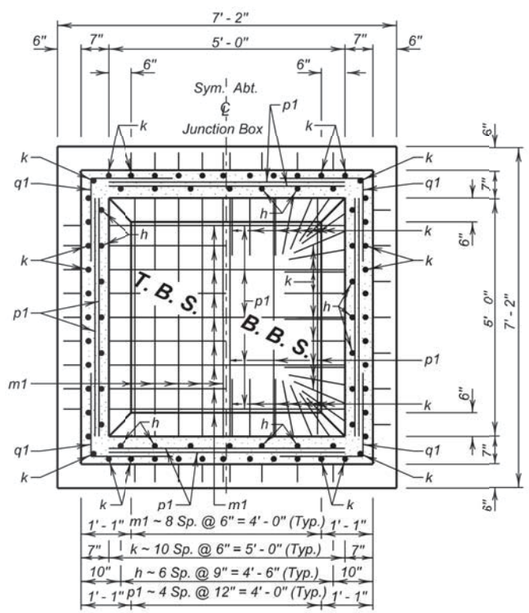

SEC. A - A

December 16, 2015

Published Date: 2nd Qtr. 2016

SDDOT

5'X 5' JUNCTION BOX

PLATE NUMBER 671.01

Sheet 2 of 3

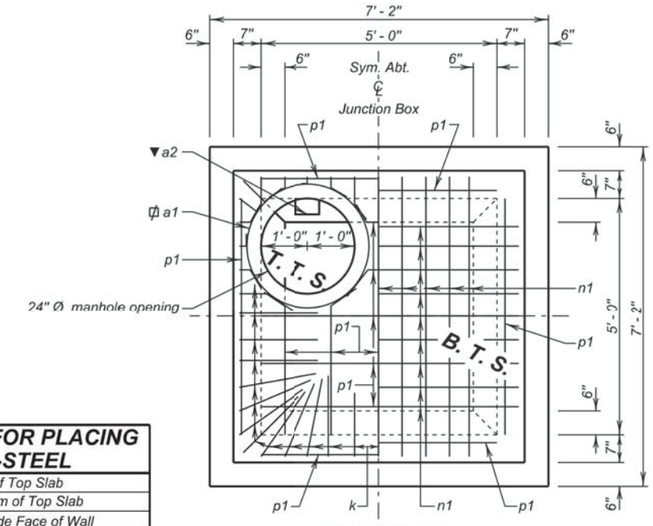

LEGEND FOR PLACING RE-STEEL

T. T. S.	- Top of Top Slab
B. T. S.	- Bottom of Top Slab
O. F. W.	- Outside Face of Wall
I. F. W.	- Inside Face of Wall

PLAN VIEW

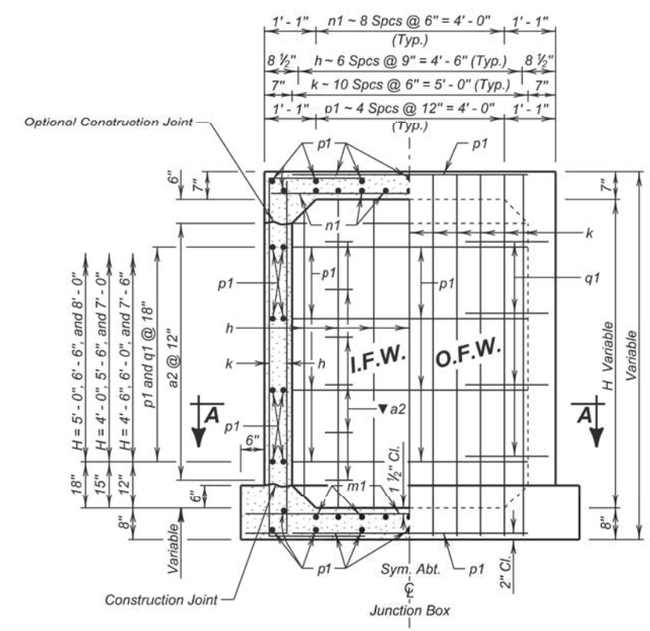

ELEVATION VIEW

December 16, 2015

Published Date: 2nd Qtr. 2016

SDDOT

5'X 5' JUNCTION BOX

PLATE NUMBER 671.01

Sheet 3 of 3

07-29-16 P:\12-117\AutoCAD\PlanSheets\049F\Section B\049F-DETL-STANDARD.dwg

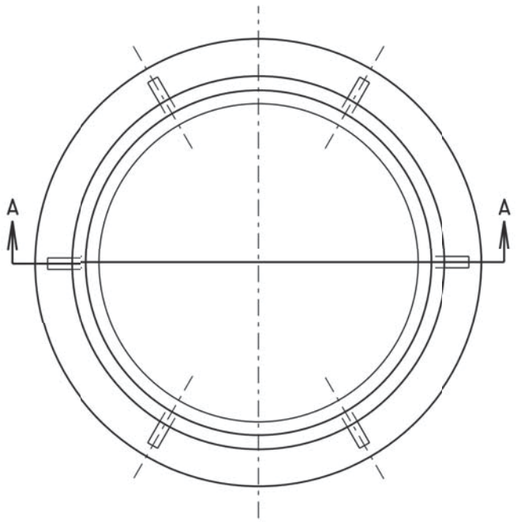

PLAN OF FRAME

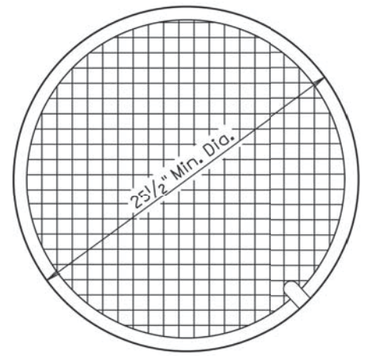

PLAN OF LID

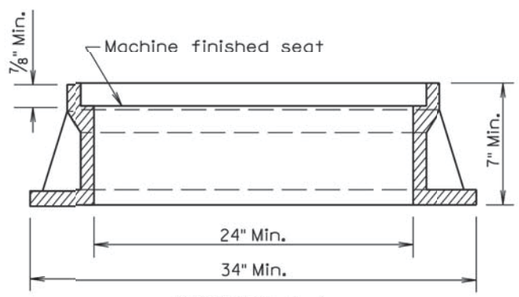

SECTION A-A

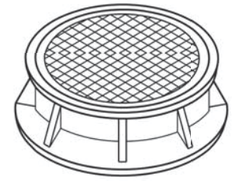

ASSEMBLED VIEW

TYPE	HEIGHT	MIN. WEIGHT
A7	7"	400Lbs.
A8	8"	440Lbs.
A9	9"	470Lbs.
A10	10"	480Lbs.

GENERAL NOTE:

Geometric pattern on top of lid other than that shown shall be approved by the Engineer.

March 31, 2000

Published Date: 2nd Qtr. 2016	SDDOT	TYPE A MANHOLE FRAME AND LID	PLATE NUMBER 671.10
			Sheet 1 of 1

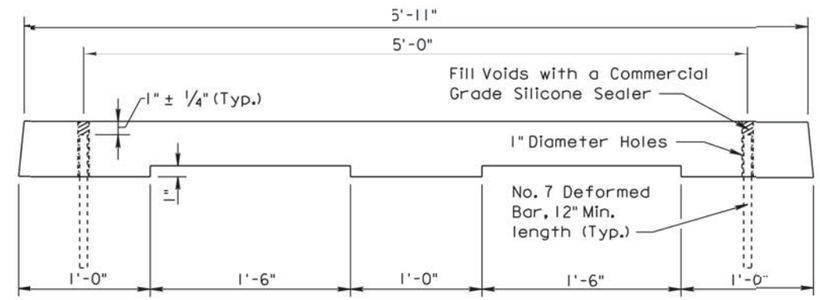

SIDE VIEW

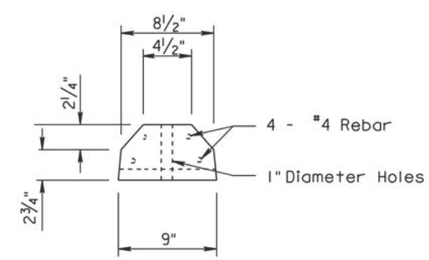

END VIEW

GENERAL NOTES:

Concrete shall be Class M6.

Reinforcing Steel shall conform to ASTM AG615, Grade 60.

Maintain 1" clearance on reinforcing steel.

The weight of the Curb Stop shall be 220 lbs. ±10 lbs.

March 31, 2000

Published Date: 2nd Qtr. 2016	SDDOT	PRECAST CONCRETE CURB STOP	PLATE NUMBER 900.10
			Sheet 1 of 1

07-29-16 P:\12-117\AutoCAD\PlanSheets\049F\Section B\049F-DETL-STANDARD.dwg