FOR BIDDING PURPOSES ONLY

STATE OF SOUTH DAKOTA	PROJECT	SHEET	TOTAL SHEETS
	NH0016(84)67	L1	L38

PLOTTING DATE: 8-19-16

WPE WEST PLAINS ENGINEERING, INC.
1750 RAND ROAD ■ RAPID CITY, SD 57702
PHONE: (605) 348-7455 ■ FAX: (605) 348-9445
www.westplainsengineering.com
RAPID CITY, SD ■ SIOUX FALLS, SD ■ CASPER, WY ■ CEDAR RAPIDS, IA
WPE #BR13033

SECTION L - SIGNAL & LIGHTING PLANS

INDEX OF SHEETS

L1:	General Layout with Index
L2-L8:	Estimate of Quantities and General Notes
L9-L12:	Existing Signal and Signal Layouts
L13-L25:	Conduit Layout
L26-L27:	Signal Timing
L28-L31:	Wiring Diagrams
L32-L38:	Standard Plates and Details

END NH 0016(84)67
Mt. Rushmore Rd.
Station 66+91.97 = 1311+35.9 on U017-1(03)
Approximately 279 feet North of intersection
of St. Cloud Street and US Hwy 16
MRM = 68.19 + .053

BEGIN NH 0016(84)67
Mt. Rushmore Rd.
Station 34+10.44 = 1276+42.6 on U017-1(03)
Approximately 1116 feet South
and 198 feet West of the Southeast corner
of Section 2, Township 1 North - Range 7 East
of the Black Hills Meridian
MRM = 67.63 + 0.0071

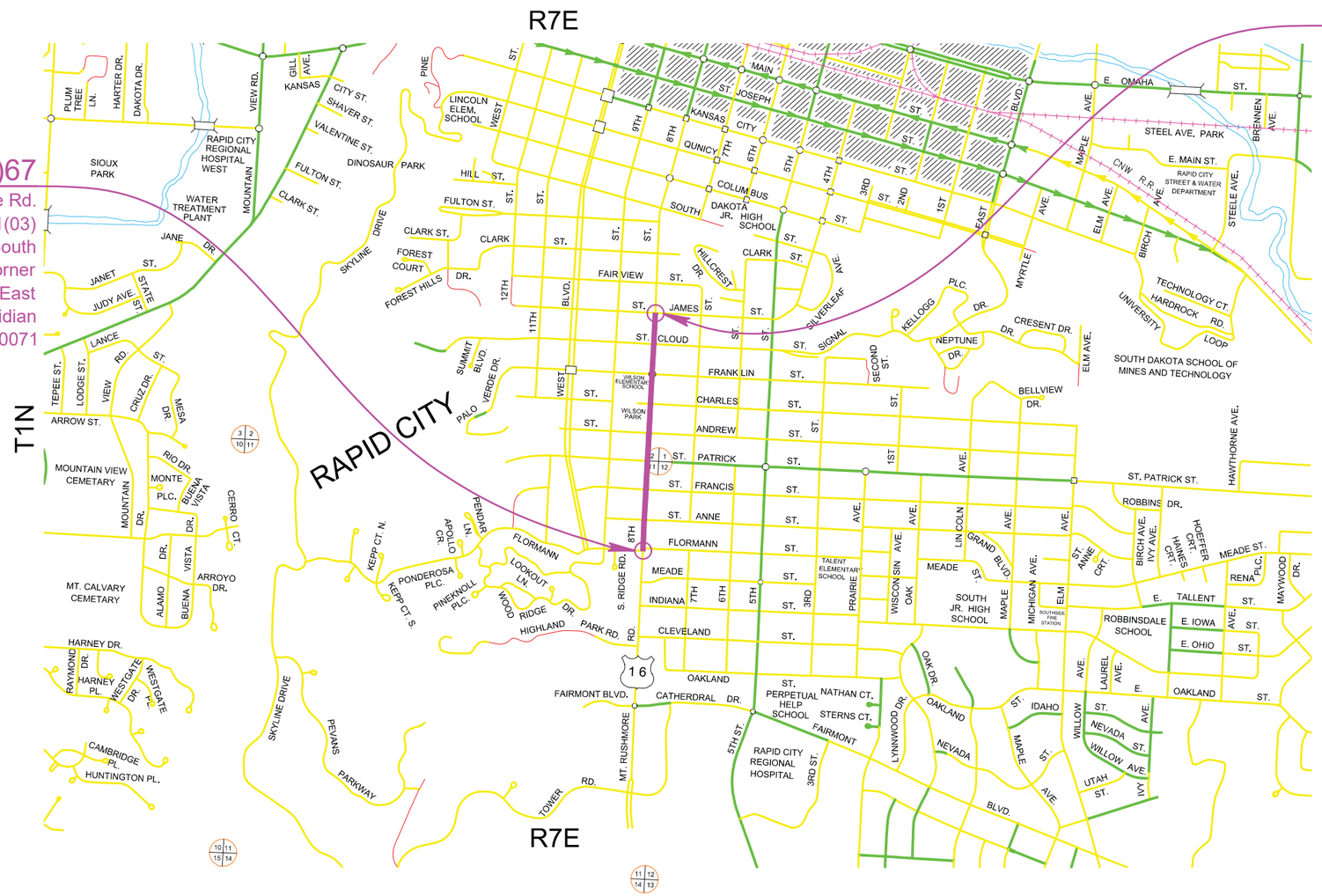

REGISTERED PROFESSIONAL ENGINEER
REG. NO. 9162
DAREN WAYNE BECKLOFF
SOUTH DAKOTA
8/22/16

08-22-16 P:\12-117\Background Data\FromWESTPLAINS\2016-07-28\BR13033E 6-21-2016 (SIGNAL MOVEMENT).dwg

SECTION L ESTIMATE OF QUANTITIES

Section L - Signal & Lighting

	BID ITEM NUMBER	ITEM	QUANTITY	UNIT
	110E1520	Remove Signal Equipment	Lump Sum	LS
	110E1530	Remove Signal Pole Footing	10	Each
	110E1540	Remove Luminaire Pole Footing	11	Each
	110E1570	Remove Pedestrian Push Button Pole	2	Each
	110E5100	Salvage Luminaire Pole	11	Each
	110E5110	Salvage Signal Equipment	Lump Sum	LS
	250E0010	Incidental Work	Lump Sum	LS
*	635E0770	Fixed Base Luminaire Pole with Top Mount, 20' Mounting Height	1	Each
	635E0900	Decorative Luminaire Pole	14	Each
	635E0910	Decorative Luminaire Arm	14	Each
	635E2360	Decorative Signal Pole with 15' Mast Arm and Luminaire Arm	2	Each
	635E2364	Decorative Signal Pole with 25' Mast Arm and Luminaire Arm	2	Each
	635E2368	Decorative Signal Pole with 40' Mast Arm and Luminaire Arm	2	Each
	635E2372	Decorative Signal Pole with 50' Mast Arm and Luminaire Arm	2	Each
*	635E3383	Post Top Luminaire, 250 Watt with Photoelectric Cell	1	Each
	635E3450	Decorative Luminaire, 150 Watt with Photoelectric Cell	14	Each
	635E3460	Decorative Luminaire, 400 Watt with Photoelectric Cell	22	Each
	635E4030	3 Section Vehicle Signal Head	26	Each
	635E4040	4 Section Vehicle Signal Head	4	Each
*	635E5020	2' Diameter Footing	6.0	Ft
	635E5020	2' Diameter Footing	112.0	Ft
	635E5030	3' Diameter Footing	94.0	Ft
*	635E5301	Type 1 Electrical Junction Box	1	Each
	635E5302	Type 2 Electrical Junction Box	30	Each
	635E5303	Type 3 Electrical Junction Box	8	Each
	635E5304	Type 4 Electrical Junction Box	5	Each
	635E5400	Electrical Service Cabinet	4	Each
*	635E5400	Electrical Service Cabinet	3	Each
	635E5430	Traffic Signal Controller	2	Each
	635E5515	Signal Head Battery Backup and Flash System	2	Each
	635E5530	Preformed Detector Loop	30	Each
	635E5550	Detector Unit	10	Each
	635E5562	Siren Emergency Vehicle Preemption System	2	Each
	635E5900	Pedestrian Push Button	16	Each
	635E5910	Pedestrian Push Button Pole	16	Each
	635E5922	Pedestrian Signal Head with Countdown Timer	16	Each
	635E5930	Pedestrian Crossing Sign	16	Each
	635E6200	Miscellaneous, Electrical	Lump Sum	LS
*	635E8120	2" Rigid Conduit, Schedule 40	535	Ft
	635E8120	2" Rigid Conduit, Schedule 40	8625	Ft

Section L - Signal & Lighting

	635E8140	4" Rigid Conduit, Schedule 40	50	Ft
	635E8220	2" Rigid Conduit, Schedule 80	1,255	Ft
	635E8230	3" Rigid Conduit, Schedule 80	760	Ft
	635E9012	1/C #2 AWG Copper Wire	2,700	Ft
*	635E9012	1/C #2 AWG Copper Wire	1,365	Ft
	635E9014	1/C #4 AWG Copper Wire	380	Ft
	635E9016	1/C #6 AWG Copper Wire	19,220	Ft
*	635E9016	1/C #6 AWG Copper Wire	2,940	Ft
*	635E9018	1/C #8 AWG Copper Wire	13,955	Ft
	635E9020	1/C #10 AWG Copper Wire	11,950	Ft
*	635E9020	1/C #10 AWG Copper Wire	605	Ft
	635E9504	4/C #14 AWG Copper Tray Cable, K2	3,735	Ft
	635E9507	7/C #14 AWG Copper Tray Cable, K2	890	Ft
	635E9524	24/C #14 AWG Copper Tray Cable, K2	1,260	Ft
	635E9600	#16 AWG Copper Twisted Shielded Pair	1,665	Ft
	635E9710	2/C #10 AWG Copper Pole and Bracket Cable	1,235	Ft
*	635E9710	2/C #10 AWG Copper Pole and Bracket Cable	25	Ft
	635E9948	48 Strand Fiber Optic Cable	5535	Ft

*** -Denotes Non-Participating**

SHOP DRAWING AND CATALOG CUTS SUBMITTALS

The Contractor shall submit shop drawings and catalog cuts in accordance with Section 985 of the Specifications or in Adobe PDF format.

Adobe PDF submittals shall be sent to the following email addresses:

John.Less@state.sd.us
Pete.Longman@state.sd.us

REMOVE SIGNAL EQUIPMENT

Contractor to remove and signal poles, signal heads, crossing signs, etc. at St.Patrick and Franklin streets. The Contractor shall remove the signal controller at Franklin street. All removed signal equipment shall become the property of the Contractor.

All costs for work involved in the removal of existing signal equipment shall be incidental to the contract lump sum price for "Remove Signal Equipment".

SALVAGE SIGNAL EQUIPMENT

Contractor to salvage existing signal controller and cabinet at St. Patrick street. Salvaged equipment shall be delivered to the City.

Remaining salvaged signal equipment shall be delivered to the City of Rapid City by the Contractor. The Contractor shall notify the City 5 days before the delivery of the salvaged signal equipment. The City contact is Traffic Operations at (605)394-4118.

All costs for work involved in the salvage and delivery of the existing signal equipment shall be incidental to the contract lump sum price for "Salvage Signal Equipment".

REMOVE SIGNAL POLE FOOTING

The footings of existing signal poles ED1-ED4 & EE1-EE4 shall be removed by the Contractor. Restoration of the disturbed area shall be to the satisfaction of the Engineer.

All costs for removing the footings of the existing signal poles shall be incidental to the contract unit price per each for "Remove Signal Pole Footing".

SALVAGE LUMINAIRE POLE

Existing luminaire poles, bases, and light fixtures EL1-EL11 shall be salvaged and delivered to the City of Rapid City by the Contractor. The Contractor shall notify the City 5 days before the delivery of the salvaged luminaire poles. The City contact is Traffic Operations at (605)394-4118.

All costs for work involved in the salvage and delivery of the existing luminaire poles shall be incidental to the contract unit price per each for "Salvage Luminaire Pole".

REMOVE LUMINAIRE POLE FOOTING

The footings of existing luminaire poles EL1-EL11 shall be removed by the Contractor to a minimum of 2' below the ground surface. Restoration of the disturbed area shall be to the satisfaction of the Engineer.

All costs for removing the footings of the existing luminaire poles shall be incidental to the contract unit price per each for "Remove Luminaire Pole Footing."

TABLE OF FOOTING DATA

Site Designation	Footing Diameter	* Footing Depth	**Spiral Diameter	**Spiral Length	Vertical Reinforcement
L22-L35	2' - 0"	8' - 0"	1' - 8"	54' - 9"	8-#7 x 7' - 6"
L36	2' - 0"	6' - 0"	1' - 8"	44' - 4"	8-#7 x 5' - 6"
E1&E3	3' - 0"	13' - 0"	2' - 8"	129' - 3"	14-#8 x 12' - 6"
D2,D4,E2,E4	3' - 0"	11' - 0"	2' - 8"	112' - 6"	14-#8 x 10' - 6"
D1&D3	3' - 0"	12' - 0"	2' - 8"	120' - 3"	14-#8 x 11' - 6"

* Footing depth shall be below ground level.
** The size of all spirals shall be #3.

FOOTING DATA

The subsurface conditions within the project limits along US16/Mt. Rushmore Road through Rapid City consist of brown silt-clay with sand over gray to brown silt-clay (weathered shale).

A subsurface investigation at the intersection of US16/Mt. Rushmore Road and St. Patrick Street was conducted in 1977. At the time of investigation, the existing subsurface conditions consisted of 4.5 feet of brown silt-clay overlying gray to brown silt-clay (weathered shale) to 20 feet below the surface. The weathered shale had evidence of gypsum and a concretion approximately 9.5 feet below the surface. No groundwater or depth to caving was noted at the time of investigation.

A subsurface investigation at the intersection of US16/Mt. Rushmore Road and Franklin Street was conducted in 1979. At the time of investigation, the existing subsurface conditions at the west corners consisted of brown silt-clay with sand to 19 feet below the surface. The subsurface conditions at the east corners consisted of 2 feet of brown silt-clay with sand over gray to brown silt-clay (weathered shale). No groundwater or depth to caving was noted at the time of investigation.

Concrete placement operations should closely follow excavation procedures during construction. The longer the excavations are left open the more likely caving may occur.

Concrete shall not be dropped through standing water. If water is present in the excavation it shall be removed prior to concrete placement or the concrete shall be tremied.

The boring logs and laboratory tests are available for review at the Central Office in Pierre.

If the location, mounting height and/or mast arm length is changed for the traffic signals or luminaires, these recommendations may become invalid. Any questions about these recommendations may be directed to the Geotechnical Engineering Activity in Pierre at 605.773.3401.

POLE LOCATIONS

Signal poles and luminaire poles shall be located as indicated on plan sheets. Pole footings shall have a 5' horizontal clearance from utility lines where possible. A vertical distance of 18' shall be maintained from all overhead utility lines where possible. The Contractor shall contact the Project Engineer before moving specified signal pole and luminaire pole locations.

FIXED BASE LUMINAIRE POLE – WILSON PARK

All work involved for installing luminaire pole at Wilson Park to be included under "Fixed Base Luminaire Pole with Top Mount, 20' Mounting Height" non-participating. Luminaire Pole L36 shall be 20' fluted aluminum pole with clamshell fixed 17" base and bronze finish. Luminaire shall be top mounted to pole and decorative postlite acorn style with cast aluminum finial. Lamp shall be 250W HPS with Type V distribution reflector. Include under "Post Top Luminaire, 250W with Photoelectric Cell".

Pole: Holophane NYA-20-L5J-17-P07-ABG-Z
Luminaire: Holophane WA-250HP-MC-Z5-Z4-PR

DECORATIVE LUMINAIRE POLES

Decorative Luminaire Poles L22-L35 shall be 40' fluted tapered steel poles with banner arms, clamshell base, and duplex festoon receptacle (20 amp, 3 wire) suitable for outdoor use with in use cover. The decorative luminaire poles shall have a bronze finish.

The following poles **or equivalent** meets the requirements:

a.) Holophane: Pole Model Number RFD125859
Arm Model Number BHC72
Clamshell Model Number AT22CSBCABZ

b.) Sternberg: Pole Model Number SRTF9300
Arm Model Number CAS6
Clamshell Model Number 9201SS

DECORATIVE SIGNAL POLES

Decorative Signal Poles D1-D4 & E1-E4 shall be 50' fluted tapered steel poles with smooth rotatable mast arms and clamshell base. The decorative signal poles shall have a bronze finish. Luminaire extension(s) shall have a 50 Ft. mounting height with 6 Ft. arm. Poles may require two fluted mounting brackets for signal heads to properly fit the shaft.

The following pole **or equivalent** meets the requirements:

Valmont: Pole Model Number CB16
Clamshell Model Number HNxx-AC

LUMINAIRES

The accepted design for the roadway luminaires L22-L35 shall provide 1.2 and greater average maintained foot-candles and a uniformity ratio (average maintained to minimum maintained foot-candles) of 3:1 and less using the following parameters:

Setback:	3 Ft.
Lamp Loss Factor (LLF):	0.7
Width of Lighted Area:	65 Ft.
Spacing:	180 Ft.
Configuration:	Staggered
Mounting Height:	40 Ft. & 16 Ft.
Lamp:	400W HPS & 150W HPS

The following luminaires meet the design requirements for the roadway luminaires and the luminaire extensions on the signal poles:

a.) Holophane: Test No. ESU400HP00X4.IES High Pressure Sodium, Short, Cutoff, Type III

b.) Holophane: Test No. GV15AHP00XX.IES High Pressure Sodium, Short, Non-cutoff, Type III

c.) Sternberg: Test No. 1-1914A-CCA6-240V-400HPS-HPS400/MOG/ED18/R1/FHD-BK
High Pressure Sodium, Short, Cutoff, Type III

d.) Sternberg: Test No. 1-A850A-B7-6236PM-240V-150HPS-HPS150/MED-BK
High Pressure Sodium, Short, Non-cutoff, Type III

Three copies of the isofootcandle charts and utilization curves shall be furnished to the Engineer for approval. The Contractor must get approval from the Engineer prior to installation of the luminaires.

The approved isofootcandle data for each case shall be used to determine the correct socket position at each site. Each luminaire shall be installed with its lamp socket in the proper position and in a level attitude.

Luminaire arms for the 150W luminaires shall be incidental to the "Decorative Luminaire, 150 Watt with Photoelectric Cell" bid item.

CONDUIT INSTALLATION

The Contractor shall install conduit behind fire hydrants and in front of sanitary cleanouts where possible.

TRAFFIC SIGNAL METER SOCKETS

The meter sockets provided for traffic signals by the Contractor shall be a 200 amp, positive by-pass.

SIGNAL AIMING

Signals shall be aimed and trees shall be trimmed such that all the signals for each approach shall be continuously visible for the minimum distance listed in the table in Section 4D.12 of the MUTCD.

SIGNAL BACKPLATES

Signal backplates shall extend not less than 5 inches at the top, bottom, and sides. The bottom of the backplate on vehicle signal faces mounted directly above pedestrian signal indications shall be sized to permit the separate adjustment of the vehicle and pedestrian signal indication and may be less than 4 inches. All backplates shall have a dull black finish.

Signal backplates shall be polycarbonate. Signal backplates for 5-section heads shall be louvered.

TRAFFIC SIGNAL CONTROLLER

Vehicle detectors E16-E21, N10-N15, S13-S18 & W16-W21 shall operate in the presence (non-locking) mode and shall have call delay timing capability. The call delay feature shall be inhibited by the controller. Set these detectors to 3 seconds delay.

The Contractor is responsible for programming the controller with the signal timings provided in these plans.

All costs for constructing the concrete pad and footing, materials, labor, and furnishing and installing the controller cabinet shall be incidental to the contract unit price per each for "Traffic Signal Controller".

CONTROLLER PROGRAMMING

The Contractor shall furnish the Road Design Office with a copy of the data programmed into all controllers prior to the full operation of the controller for approval. The address is as follows:

Pete Longman
Traffic Design Engineer
Office of Road Design
700 East Broadway
Pierre, SD 57501

TRAFFIC SIGNAL INTERCONNECTION

The Contractor shall install managed Gigabit Ethernet communication for the traffic signal controllers at the US16/Mount Rushmore Rd & St. Patrick St intersection and at the US16/Mount Rushmore Rd & Franklin St intersection. The new controller shall be programmed with coordination plans provided.

All costs for programming and establishing managed Gigabit Ethernet communication for the traffic signal controller shall be incidental to the contract unit price per each for “Traffic Signal Controller”.

TRAFFIC SIGNAL CONTROL CABLE LABELS

Traffic signal cable shall be identified in hand holes, junction boxes, pedestal bases, electrical service cabinets, and controller cabinets as indicated on the Wiring Diagram. Labels shall be wrapped around traffic signal cable to indicate the signal pole and signal head that it is connected to. Labels shall be self-adhesive vinyl cloth with a preprinted legend. Traffic signal control cables to the poles shall be marked with a legend and shall be color coded as follows; northwest (blue), northeast (red), southeast (green), and southwest (orange).

BATTERY HOUSING AND FLASH SYSTEM

The Contractor shall supply a cabinet with concrete pad and footing for housing the battery backup at the traffic signal controller. The cabinet shall be aluminum NEMA 3R type. The cabinet shall be securely attached to the footing underneath it and to the side wall of the controller cabinet.

All work involved in supplying and installing the riser units shall be incidental to the contract unit price per each for “Signal Head Battery Backup and Flash System”.

FIBER OPTIC CABLE

The fiber optic cable shall be a 48 strand singlemode fiber optic cable with each buffer containing six fibers. The buffer tubes shall be color coded according to EIA/TIA specifications.

Fiber optic cable provided on this project shall meet the latest applicable EIA/TIA Specifications for multimode and REA PE-90 Specifications for single mode. All fiber optic cable shall be rated for outdoor use.

Singlemode optical cable shall have the following optical and physical characteristics:

1. Cladding diameter of 125µm +/- 2µm.
2. Zero dispersion slope shall be 0.092 ps/ (nm^2●km) or less.
3. Zero dispersion wavelength, 1300 to 1322 nm.
4. Cutoff wavelength, less than 1250 nm.
5. Maximum attenuation at 1310 nm shall be 0.4 dB per Kilometer.
6. The outside diameter shall be less than 22.1 nm.
7. One factory fusion splice per kilometer per fiber shall be allowed.

The fiber optic cable shall have a seven-core configuration, dielectric central strength member, and thermoplastic tubes. The minimum bending radii of the cable shall be 209.5 mm under a static load and 419.1 mm during installation. The installation tensile load rating shall be 2.7 kPa.

The cable core interstices shall be filled with water blocking material. If a gel compound is used, the gel compound shall be readily removable with a nontoxic solvent.

Fiber optic cable shall be terminated in the controller cabinet with a wall mounted distribution enclosure. The distribution enclosure shall be dust and moisture resistant. The size of the distribution enclosure shall be adequate for the number of fibers to be used. The distribution enclosure shall be mounted in the controller cabinet where it does not interfere with normal cabinet maintenance. The fiber optic cable shall be prepared in accordance with the manufacturer’s recommendations and have sufficient length to reach the interface panel. Only fibers needed to operate the equipment plus two spare shall be terminated with LC connectors with less than 0.4 dB loss for singlemode. The connector loss after 1000 matings shall be less than 0.2 dB. The connector return loss shall not be greater than 45 dB for singlemode. All other fibers shall be capped and sealed in accordance with the manufacturer’s recommendations.

The fiber optic cable shall be installed in accordance with the manufacturer’s recommendations and the NEC. Slack cable shall be left in each controller and junction box. All junction boxes except for the junction box at the controller shall have 20’ of slack. Controller cabinets shall have 5’ of slack. Slack cable shall be coiled and tied in a minimum of three places around the coil. No splices shall be allowed in the fiber optic cable except in the controllers. Splices shall be of the epoxy/polish type.

The contractor shall test the fiber optic cable after the installation to verify the integrity of the fiber.

The supplier of the fiber optic cable shall supervise the installation and testing of the fiber optic cable. The supplier of the fiber optic cable shall provide training to personnel of the City in the installation and maintenance of the fiber optic cable.

FIBER OPTIC CABLE CONNECTION

New fiber optic cable to be routed and terminated in existing signal controllers at Flormann and Columbus streets. Cable will be routed through existing conduit and pull boxes south of Flormann and north of St. James. Include all work associated with routing of new fiber under “48 Strand Fiber Optic Cable”.

WILSON PARK SERVICE

All work involved for installing city Service P at Wilson Park to be included under “Electrical Service Cabinet” non-participating. New service to include removal of existing service, wood pole, and light fixture. Connect new service to existing underground BHE feeder. Provide new receptacle panel with (4) receptacles type Midwest Electric U014C010 in lockable NEMA 3R enclosure. Provide connection to new irrigation panel and mount next to service panels.

DETECTOR LOOP WIRE SPLICING

Detector loop wire splices shall be made using wire nuts over soldered connections, and then sealed in 3M™ Scotchcast™ 3570G-N connector sealing packs or approved equivalent.

WIRE SPLICING FOR LIGHTING

All lighting splices shall be made using TE Connectivity™ GTAP™ connectors, nsi Industries© Polaris Blue™ connectors, or approved equivalent.

TREE TRIMMING FOR ROADWAY LIGHTING

Tree trimming may be necessary between station 48+00 and 60+00. Refer to Standard Plate 635.99 for additional information.

ON-SITE INSPECTION

An on-site inspection of the traffic signal shall be conducted before acceptance of the project, once the traffic signal is completed and operational. The on-site inspection shall be conducted by the Contractor, Region Traffic Engineer, City of Rapid City Traffic Engineer, Project Engineer, and the Traffic Design Engineer.

SUPPLYING AS BUILT PLANS

If the traffic signal systems or roadway lighting systems are constructed differently than what is stated in the plans, the Contractor shall supply as built plans to the Engineer and a copy shall be sent to the Traffic Design Engineer and to the City of Rapid City Traffic Operations Office. The as built plans may include conduit layouts, wiring diagrams, or other drawings depicting the changes from the original plans.

TABLE OF CONDUIT AND CABLE QUANTITIES

FOR BIDDING PURPOSES ONLY

STATE OF SOUTH DAKOTA	PROJECT	SHEET	TOTAL SHEETS
	NH 0016(84)67	L5	L38

PLOTTING DATE: 9-8-16

REVISION DATE: 9-8-16

Location to Location		Rigid Conduit							Copper Wire								Copper Tray Cable, K2			Twisted Shielded Pair		Pole and Bracket Cable		Preemption Cable (NABI)		Fiber Optic Cable	
		Schedule 40			Schedule 80												#14 AWG										
		2"	2"	4"	2"	2"	3"	4"	1/C #2 AWG	1/C #2 AWG	1/C #4 AWG	1/C #6 AWG	1/C #6 AWG	1/C #8 AWG	1/C #10 AWG	1/C #10 AWG	4/C	7/C	24/C	#16 AWG		2/C #10 AWG		PC		48 Strand	
		P	NP	P	P	NP	P	P	P	NP	P	P	NP	NP	P	NP	P	P	P	P		P		P		P	
		Ft	Ft	Ft	Ft	Ft	Ft	Ft	Ft	Ft	Ft	Ft	Ft	Ft	Ft	Ft	Ft	Ft	Ft	Ft		Ft		Ft		Ft	
FIBER																											
EXIST CNTLR C	EXIST JF5A																									20	
EXIST JF5A	JL33																									15	
JL33	JL34																									100	
JL34	EXIST JF5																									15	
EXIST JF5	JF6	435			105										550											560	
JF6	JF7	500			70										580											580	
JF7	CONTROLLER D	20													30											60	
JF7	JF8	475			105										590											600	
JF8	JF9	550			40										600											610	
JF9	JF10	400			75										485											495	
JF9	CONTROLLER E	30													40											80	
JF10	EXIST JF12	305													315											325	
EXIST JF12	EXIST JF13																									230	
EXIST JF13	EXIST JF14																									530	
EXIST JF14	EXIST JF15																									585	
EXIST JF15	EXISTJF17																									555	
EXIST JF17	EXIST JF16																									150	
EXIST JF16	EXIST CNTLR G																									25	
LIGHTING & RECEPTACLES																											
L22	JL35	5										30	30		10												
JL35	JL37	265			60							1005	1005		335												
JL37	L24	5										30	30		10												
JL37	JL39	285			60							1065	1065		355												
JL39	L26	5										30	30		10												
JL39	JL40	200										630	630		210												
JL40	SERVICE CABINET LD	40										300			50												
JL40	SERVICE CABINET RD		40										150	150		50											
L23	JL36	5										30		30	10												
JL36	JL38	290										900		900	300												
JL38	L25	5										30		30	10												
JL38	JL41	375			55							1320		1320	440												
JL41	JL40				110							360		360	120												
JL41	JL42				80							270		270	90												
JL42	JL44	190										600		600	200												
JL44	L27	5										30		30	10												
JL40	JL43				80							270		270	90												
JL43	JL45	335			55							1200		1200	400												
JL45	L28	5										30		30	10												
L30	JL47	5										30		30	10												
JL47	JL49	375			40							1275		1275	425												
L29	JL46	5										30		30	10												
JL46	JL48	330			40							1140		1140	380												
JL48	L31	5										30		30	10												
JL48	JL50	230										720		720	240												
JL50	JL49				130							420		420	140												
JL49	SERVICE CABINET LE	20										180			30												
JL49	SERVICE CABINET RE		20											180		30											
JL49	JL52				70							240		240	80												
JL52	JL54	330										1020		1020	340												
JL54	L33	5										30		30	10												
JL54	JL56	335			40							1155		1155	385												
J56	L35	5										30		30	10												
	Subtotal:	6,375	60	0	1,215	0	0	0	0	0	0	14,430	2,940	11,490	7,920	80	0	0	0	0	0	0	0	5,535			

P=Participating
NP=Non-Participating

TABLE OF CONDUIT AND CABLE QUANTITIES

FOR BIDDING PURPOSES ONLY

STATE OF SOUTH DAKOTA	PROJECT	SHEET	TOTAL SHEETS
	NH 0016(84)67	L6	L38

PLOTTING DATE: 7-29-16

REVISION DATE: 8-19-16

P=Participating
NP=Non-Participating

Location to Location		Rigid Conduit							Copper Wire								Copper Tray Cable, K2			Twisted Shielded Pair		Pole and Bracket Cable		Preemption Cable (NABI)		Fiber Optic Cable	
		Schedule 40			Schedule 80												#14 AWG										
		2"	2"	4"	2"	2"	3"	4"	1/C #2 AWG	1/C #2 AWG	1/C #4 AWG	1/C #6 AWG	1/C #6 AWG	1/C #8 AWG	1/C #10 AWG	1/C #10 AWG	4/C	7/C	24/C	#16 AWG		2/C #10 AWG	2/C #10 AWG	PC		48 Strand	
		P	NP	P	P	NP	P	P	P	NP	P	P	NP	NP	P	NP	P	P	P	P		P	NP	P		P	
		Ft	Ft	Ft	Ft	Ft	Ft	Ft	Ft	Ft	Ft	Ft	Ft	Ft	Ft	Ft	Ft	Ft	Ft	Ft		Ft	Ft	Ft		Ft	
LIGHTING & RECEPTACLES CONTINUED																											
JL50	JL51	230										720		720	240												
JL51	JL53	190										600		600	200												
JL53	L32	5										30		30	10												
JL53	JL55	285			40							1005		1005	335												
JL55	L34	5										30		30	10												
BHP TRANSFORMER	METER LE	410							1260						420												
BHP TRANSFORMER	METER SE		410							1260						420											
BHP TRANSFORMER	METER RE	410							1260						420												
METER LE	SERVICE CABINET LE	5							15																		
METER RE	SERVICE CABINET RE	5							15																		
METER SE	SERVICE CABINET SE		5							15																	
BHP PEDESTAL	METER LD	15							60						20												
BHP PEDESTAL	METER RD		15							60						20											
BHP PEDESTAL	METER SD	15							60						20												
METER LD	SERVICE CABINET LD	5							15																		
METER RD	SERVICE CABINET RD		5							15																	
METER SD	SERVICE CABINET SD	5							15																		
METER P	SERVICE CABINET P		5							15																	
SERVICE CABINET P	RECEPT PANEL		5													20											
SERVICE CABINET P	IRRIG PANEL		10													35											
SERVICE CABINET P	J16		10											40		15											
J16	L36		10											40		15											
LUMINAIRE POLES																											
LUMINAIRE	L22																					55					
LUMINAIRE	L23																					55					
LUMINAIRE	L24																					55					
LUMINAIRE	L26																					55					
LUMINAIRE	L27																					55					
LUMINAIRE	L28																					55					
LUMINAIRE	L29																					55					
LUMINAIRE	L30																					55					
LUMINAIRE	L31																					55					
LUMINAIRE	L32																					55					
LUMINAIRE	L33																					55					
LUMINAIRE	L34																					55					
LUMINAIRE	L35																					55					
LUMINAIRE	L36																						25				
RECEPTACLE	R22														45												
RECEPTACLE	R23														45												
RECEPTACLE	R24														45												
RECEPTACLE	R26														45												
RECEPTACLE	R27														45												
RECEPTACLE	R28														45												
RECEPTACLE	R29														45												
RECEPTACLE	R30														45												
RECEPTACLE	R31														45												
RECEPTACLE	R32														45												
RECEPTACLE	R33														45												
RECEPTACLE	R34														45												
RECEPTACLE	R35														45												
Subtotal:		1,585	475	0	40	0	0	0	2,700	1,365	0	2,385	0	2,465	2,260	525	0	0	0	0		715	25	0		0	

TABLE OF CONDUIT AND CABLE QUANTITIES

FOR BIDDING PURPOSES ONLY

STATE OF SOUTH DAKOTA	PROJECT	SHEET	TOTAL SHEETS
	NH 0016(84)67	L7	L38

PLOTTING DATE: 7-29-16

REVISION DATE: 8-19-16

P=Participating
NP=Non-Participating

		Rigid Conduit							Copper Wire								Copper Tray Cable, K2			Twisted Shielded Pair		Pole and Bracket Cable		Preemption Cable (NABI)		Fiber Optic Cable	
		Schedule 40			Schedule 80												#14 AWG										
		2"	2"	4"	2"	2"	3"	4"	1/C #2 AWG	1/C #2 AWG	1/C #4 AWG	1/C #6 AWG	1/C #6 AWG	1/C #8 AWG	1/C #10 AWG	1/C #10 AWG	4/C	7/C	24/C	#16 AWG		2/C #10 AWG		PC		48 Strand	
		P	NP	P	P	NP	P	P	P	NP	P	P	NP	NP	P	NP	P	P	P	P		P		P		P	
Location to Location		Ft	Ft	Ft	Ft	Ft	Ft	Ft	Ft	Ft	Ft	Ft	Ft	Ft	Ft	Ft	Ft	Ft	Ft	Ft		Ft		Ft		Ft	
MT. RUSHMORE RD & ST PATRICK ST																											
SERVICE CABINET SD	JD2	30									115	115			35												
JD2	CONTROLLER D			30							115				35			280	70	140		140				280	
JD2	SIGNAL POLE D1	40										135			45					45						90	
JD2	PED PBP PD1	30													35			35									
JD2	PED PBP PD2	15													20			20									
JD2	JD1	10													15							30					
JD2	JD8						60					195			70			140		70		70				70	
JD2	JD4						130					405			140			560	140	280		420				560	
JD4	SIGNAL POLE D2	10										45			15					15						30	
JD4	PED PBP PD5	30													35			35									
JD4	PED PBP PD6	20													25			25									
JD4	JD3	45													50							50					
JD4	JD6						75					255			85			170	85	85		170				170	
JD6	SIGNAL POLE D3	10										45			15					15						30	
JD6	PED PBP PD7	10													30			30									
JD6	PED PBP PD8	10													30			30									
JD6	JD5	35													40							80					
JD8	SIGNAL POLE D4	10										45			15					15						30	
JD8	PED PBP PD3	25													30			30									
JD8	PED PBP PD4	15													20			20									
JD8	JD7	35													40							40					
JD8	JD6						105								115												
PED PB	PD1																	10									
PED PB	PD2																	10									
PED PB	PD3																	10									
PED PB	PD4																	10									
PED PB	PD5																	10									
PED PB	PD6																	10									
PED PB	PD7																	10									
PED PB	PD8																	10									
SIGNAL HEADS	D1																	150	60					65		120	
SIGNAL HEADS	D2																	90	15					65		80	
SIGNAL HEADS	D3																	150	60					65		120	
SIGNAL HEADS	D4																	90	15					65		80	
	Subtotal:	380	0	30	0	0	370	0	0	0	230	1,240	0	0	940	0		1,935	445	665		1,000		260		1,660	0

TABLE OF CONDUIT AND CABLE QUANTITIES

FOR BIDDING PURPOSES ONLY

STATE OF SOUTH DAKOTA	PROJECT	SHEET	TOTAL SHEETS
	NH 0016(84)67	L8	L38

PLOTTING DATE: 7-29-16
REVISION DATE: 8-19-16

Location to Location		Rigid Conduit							Copper Wire								Copper Tray Cable, K2			Twisted Shielded Pair		Pole and Bracket Cable		Preemption Cable (NABI)		Fiber Optic Cable	
		Schedule 40			Schedule 80												#14 AWG										
		2"	2"	4"	2"	2"	3"	4"	1/C #2 AWG	1/C #2 AWG	1/C #4 AWG	1/C #6 AWG	1/C #6 AWG	1/C #8 AWG	1/C #10 AWG	1/C #10 AWG	4/C	7/C	24/C	#16 AWG		2/C #10 AWG	2/C #10 AWG	PC		48 Strand	
		P	NP	P	P	NP	P	P	P	NP	P	P	NP	NP	P	NP	P	P	P	P		P	NP	P		P	
		Ft	Ft	Ft	Ft	Ft	Ft	Ft	Ft	Ft	Ft	Ft	Ft	Ft	Ft	Ft	Ft	Ft	Ft	Ft		Ft	Ft	Ft		Ft	
MT. RUSHMORE RD & FRANKLIN ST																											
SERVICE CABINET SE	JE2	20									75	75			25												
JE2	CONTROLLER E			20							75				25		200	50	100	100				200			
JE2	SIGNAL POLE E1	15										55			20				20					40			
JE2	PED PBP PE1	15													20		20										
JE2	PED PBP PE2	10													15		15										
JE2	JE1	25													30					30							
JE2	JE8						75					255			85		170		85	85				170			
JE2	JE4						120					390			130		520	130	260	260				520			
JE4	SIGNAL POLE E2	10										45			15				15					30			
JE4	PED PBP PE6	10													15		15										
JE4	PED PBP PE5	20													25		25										
JE4	JE3	30													40					40							
JE4	JE6						75					255			85		170	85	85	85				170			
JE6	SIGNAL POLE E3	10										45			15				15					30			
JE6	PED PBP PE7	15													20		20										
JE6	PED PBP PE8	10													15		15										
JE6	JE5	25													30					30							
JE8	SIGNAL POLE E4	10										45			15				15					30			
JE8	PED PBP PE3	10													15		15										
JE8	PED PBP PE4	20													25		25										
JE8	JE7	30													35					35							
JE8	JE6						120								130												
PED PB	PE1																10										
PED PB	PE2																10										
PED PB	PE3																10										
PED PB	PE4																10										
PED PB	PE5																10										
PED PB	PE6																10										
PED PB	PE7																10										
PED PB	PE8																10										
SIGNAL HEADS	E1																170	80				65		140			
SIGNAL HEADS	E2																85	10				65		75			
SIGNAL HEADS	E3																170	80				65		140			
SIGNAL HEADS	E4																85	10				65		75			
	Subtotal:	285	0	20	0	0	390	0	0	0	150	1,165	0	0	830	0	1,800	445	595	665		260		1,620		0	
	TOTAL:	8,625	535	50	1,255	0	760	0	0	2,700	1,365	380	19,220	2,940	13,955	11,950	605	0	3,735	890	1,260	0	1,665	0	0	1,235	25	0	3,280	0	0	5,535	0

P=Participating
NP=Non-Participating

STATE OF SOUTH DAKOTA	PROJECT	SHEET	TOTAL SHEETS
	NH0016(84)67	L9	L38

PLOTTING DATE: 8-19-16

WPE WEST PLAINS ENGINEERING, INC.
1750 RAND ROAD ■ RAPID CITY, SD 57702
PHONE: (605) 348-7455 ■ FAX: (605) 348-9445
www.westplainsengineering.com
RAPID CITY, SD ■ SIOUX FALLS, SD ■ CASPER, WY ■ CEDAR RAPIDS, IA

WPE #BR13033

FOR BIDDING PURPOSES ONLY

EXISTING SIGNAL LAYOUT

MT. RUSHMORE ROAD & ST. PATRICK ST.

REMOVE SIGNAL EQUIPMENT	
KEY	ITEM
	PEDESTRIAN SIGNAL HEAD (9–16)

SALVAGE EQUIPMENT	
KEY	ITEM
	SIGNAL POLE W/ MAST ARM & LUMINAIRE EXT. (ED1–ED4)
	ROADWAY LUMINAIRE, 400W WITH P.E. (ED1–ED4)
	3 SECTION VEHICLE SIGNAL HEAD (3–8)
	5 SECTION VEHICLE SIGNAL HEAD (12)

ESTIMATE OF QUANTITIES			
KEY	ITEM	EST. QUANT.	UNIT
	REMOVE SIGNAL EQUIPMENT	LUMP SUM	LS
	REMOVE SIGNAL POLE FOOTING (ED1–ED4)	4	EACH
	SALVAGE SIGNAL EQUIPMENT	LUMP SUM	LS

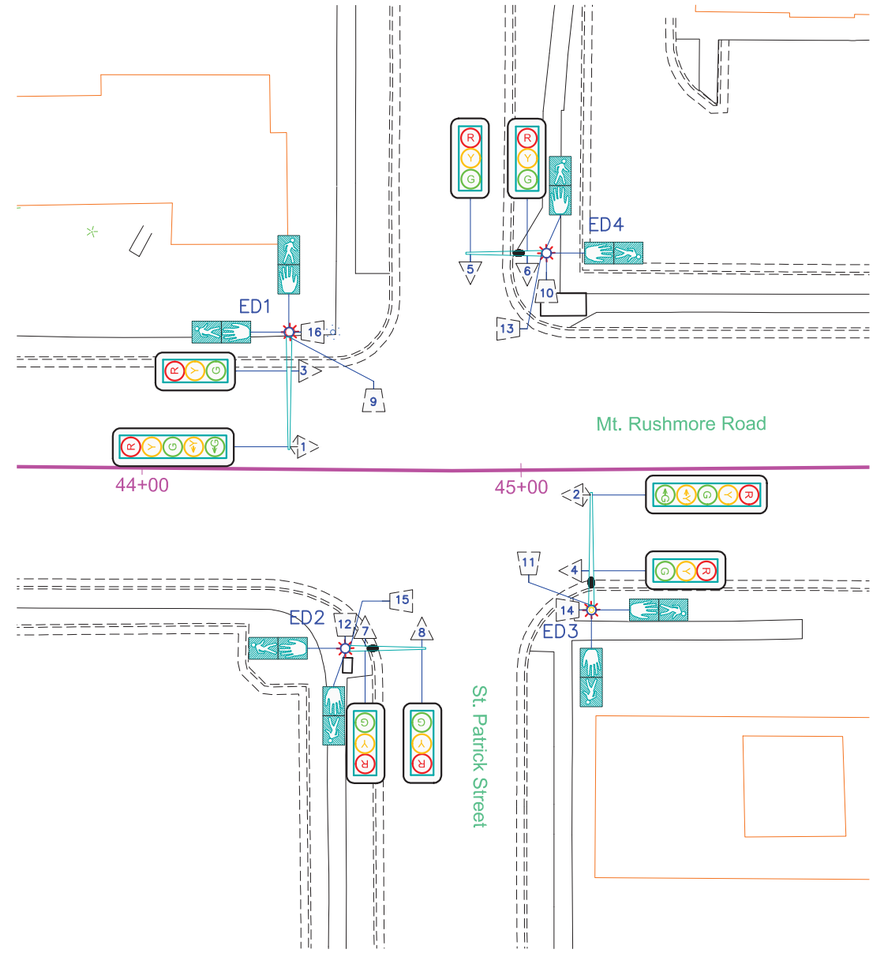

SCALE:
1" = 40'

REGISTERED PROFESSIONAL ENGINEER
REG. NO. 9162
DAREN WAYNE BECKLOFF
SOUTH DAKOTA
8/22/16

08-22-16 P:\12-117\Background Data\FromWESTPLAINS\2016-07-28\BR13033E_6-21-2016 (SIGNAL MOVEMENT).dwg

STATE OF SOUTH DAKOTA	PROJECT	SHEET	TOTAL SHEETS
	NH0016(84)67	L10	L38

PLOTTING DATE: 8-19-16

FOR BIDDING PURPOSES ONLY

WPE WEST PLAINS ENGINEERING, INC.
1750 RAND ROAD ■ RAPID CITY, SD 57702
PHONE: (605) 348-7455 ■ FAX: (605) 348-9445
www.westplainsengineering.com
RAPID CITY, SD ■ SIOUX FALLS, SD ■ CASPER, WY ■ CEDAR RAPIDS, IA

WPE #BR13033

SIGNAL LAYOUT

MT. RUSHMORE ROAD & ST. PATRICK ST.

ESTIMATE OF QUANTITIES

KEY	ITEM	QTY	UNIT
	SIGNAL POLE W/ 25' MAST ARM & LUMIN EXT W/6' ARM & 50' MT HT (D2, D4)	2	EACH
	SIGNAL POLE W/ 40' MAST ARM & LUMIN EXT W/6' ARM AND 50' MT HT (D1, D3)	2	EACH
	ROADWAY LUMINAIRE, 400W WITH P.E. (D1–D4)	4	EACH
	3 SECTION VEHICLE SIGNAL HEAD (2–7) (10–15)	12	EACH
	4 SECTION VEHICLE SIGNAL HEAD (1,8,9,16)	4	EACH
	SIGNAL HEAD BATTERY BACKUP AND FLASH SYSTEM	1	EACH
	SIREN EMERGENCY VEHICLE PREEMPTION SYSTEM (4–CHANNEL)	1	EACH
	SIREN DETECTOR (NOT A BID ITEM)	4	EACH
PB	PEDESTRIAN PUSH BUTTON	8	EACH
	PEDESTRIAN PUSH BUTTON POLE (PD1–PD8)	8	EACH
	PEDESTRIAN SIGNAL HEAD WITH COUNTDOWN TIMER (17–24)	8	EACH
	PEDESTRIAN CROSSING SIGN (R10–3e) (LEFT–4/RIGHT–4)	8	EACH

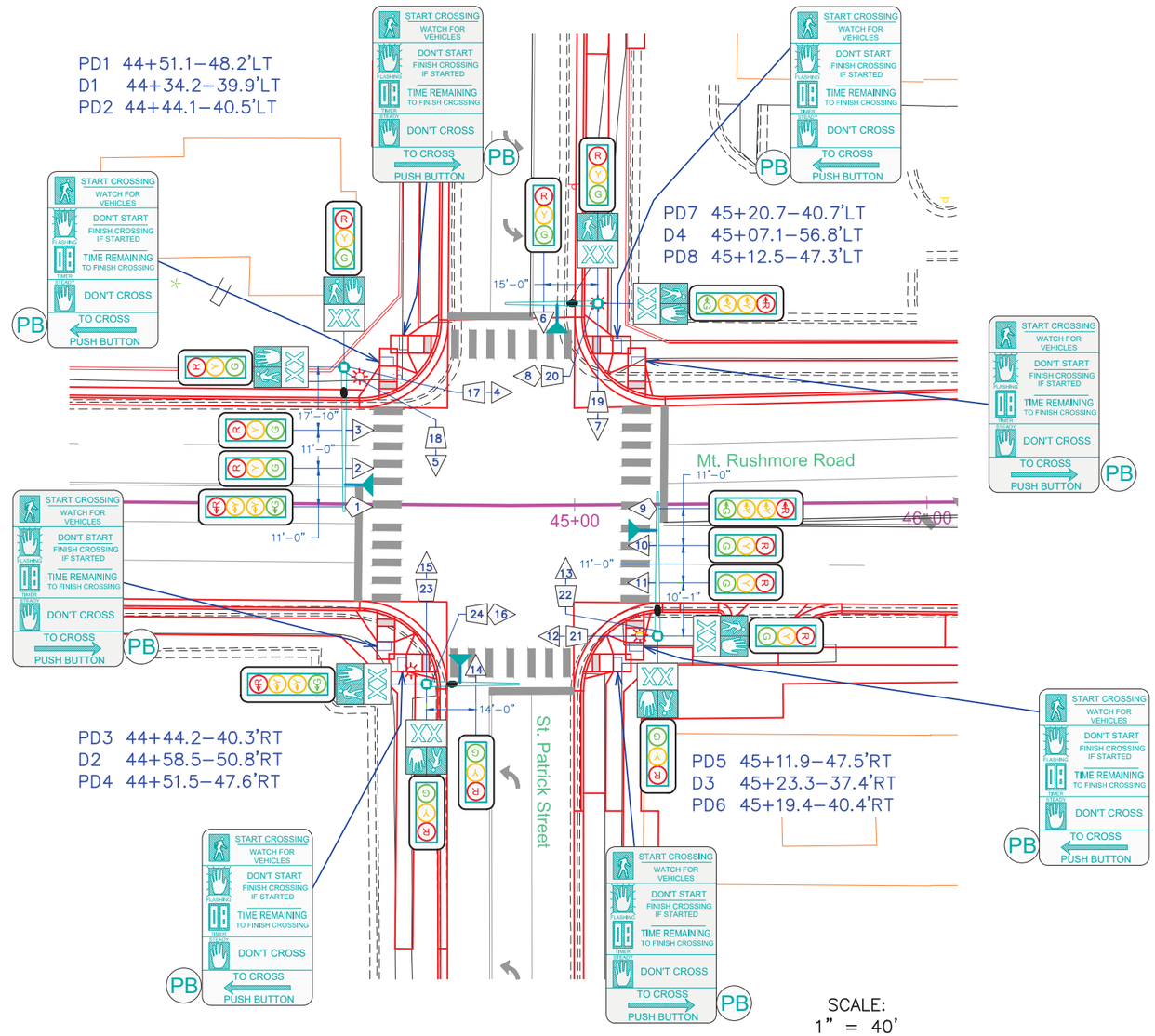

SCALE:
1" = 40'

NOTE:

ALL CONDUITS ARE 2", SCHEDULE 40, UNLESS NOTED OTHERWISE.

CAREFULLY COORDINATE TRENCHING WITH SEWER, WATER AND IRRIGATION LINES. HAND DIG WHERE NECESSARY, ADJUST JUNCTION BOXES AND FOOTING OFFSETS TOWARD CURB IF REQUIRED.

REGISTERED PROFESSIONAL ENGINEER
REG. NO. 9162
DAREN WAYNE BECKLOFF
SOUTH DAKOTA
8/22/16

08-22-16 P:\12-117\Background Data\From\WESTPLAINS\2016-07-28\BR13033E 6-21-2016 (SIGNAL MOVEMENT).dwg

EXISTING SIGNAL LAYOUT

FOR BIDDING PURPOSES ONLY

MT. RUSHMORE ROAD & FRANKLIN ST.

STATE OF SOUTH DAKOTA	PROJECT	SHEET	TOTAL SHEETS
	NH0016(84)67	L11	L38

PLOTTING DATE: 8-19-16

WPE WEST PLAINS ENGINEERING, INC.
1750 RAND ROAD ■ RAPID CITY, SD 57702
PHONE: (605) 348-7455 ■ FAX: (605) 348-9445
www.westplainsengineering.com
RAPID CITY, SD ■ SIOUX FALLS, SD ■ CASPER, WY ■ CEDAR RAPIDS, IA

WPE #BR13033

REMOVE SIGNAL EQUIPMENT

KEY	ITEM
	PEDESTRIAN SIGNAL HEAD (11–18)
PB	PEDESTRIAN PUSH BUTTON
	PEDESTRIAN CROSSING SIGN

SALVAGE EQUIPMENT

KEY	ITEM
	SIGNAL POLE W/ MAST ARM & LUMINAIRE EXT. (EE1–EE4)
	ROADWAY LUMINAIRE, 400W WITH P.E. (EE1–EE4)
	3 SECTION VEHICLE SIGNAL HEAD (1–10)

ESTIMATE OF QUANTITIES

KEY	ITEM	EST. QUANT.	UNIT
	REMOVE SIGNAL EQUIPMENT	LUMP SUM	LS
	REMOVE SIGNAL POLE FOOTING (EE1–EE4)	4	EACH
	SALVAGE SIGNAL EQUIPMENT	LUMP SUM	LS
	REMOVE PEDESTRIAN PUSH BUTTON POLE (EPE1–EPE2)	2	EACH

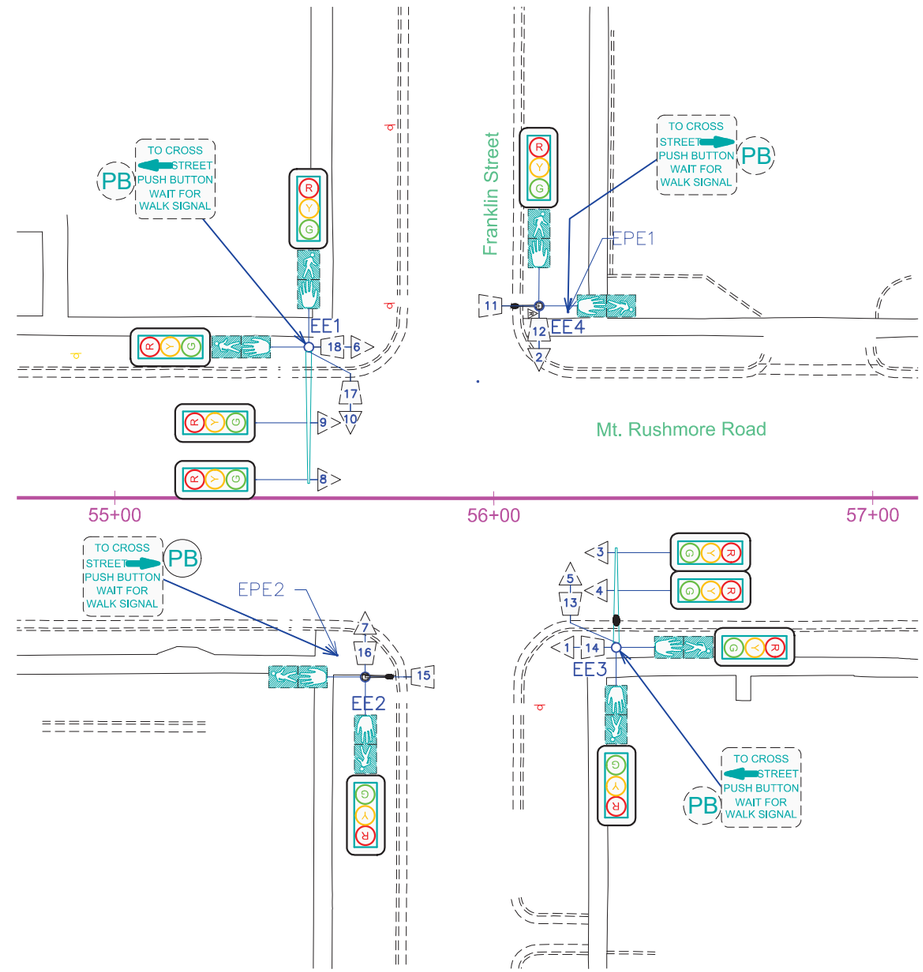

SCALE:
1" = 40'

REGISTERED PROFESSIONAL ENGINEER
REG. NO. 9162
DAREN WAYNE BECKLOFF
SOUTH DAKOTA
8/22/16

08-22-16 P:\12-117\Background Data\FromWESTPLAINS\2016-07-28\BR13033E_6-21-2016 (SIGNAL MOVEMENT).dwg

STATE OF SOUTH DAKOTA	PROJECT	SHEET	TOTAL SHEETS
	NH0016(84)67	L12	L38

PLOTTING DATE: 8-19-16

FOR BIDDING PURPOSES ONLY

WPE WEST PLAINS ENGINEERING, INC.
1750 RAND ROAD ■ RAPID CITY, SD 57702
PHONE: (605) 348-7455 ■ FAX: (605) 348-9445
www.westplainsengineering.com
RAPID CITY, SD ■ SIOUX FALLS, SD ■ CASPER, WY ■ CEDAR RAPIDS, IA

WPE #BR13033

SIGNAL LAYOUT

MT. RUSHMORE ROAD & FRANKLIN ST.

ESTIMATE OF QUANTITIES

KEY	ITEM	QTY	UNIT
	SIGNAL POLE W/ 15' MAST ARM & LUMIN EXT W/ 6' ARM & 50' MT HT (E2, E4)	2	EACH
	SIGNAL POLE W/ 50' MAST ARM & LUMIN EXT W/6' ARM AND 50' MT HT (E1, E3)	2	EACH
	ROADWAY LUMINAIRE, 400W WITH P.E. (E1–E4)	4	EACH
	3 SECTION VEHICLE SIGNAL HEAD (1–14)	14	EACH
	SIGNAL HEAD BATTERY BACKUP AND FLASH SYSTEM	1	EACH
	SIREN EMERGENCY VEHICLE PREEMPTION SYSTEM (4–CHANNEL)	4	EACH
	SIREN DETECTOR (NOT A BID ITEM)	4	EACH
PB	PEDESTRIAN PUSH BUTTON	8	EACH
	PEDESTRIAN PUSH BUTTON POLE (PE1–PE8)	8	EACH
	PEDESTRIAN SIGNAL HEAD WITH COUNTDOWN TIMER (15–22)	8	EACH
	PEDESTRIAN CROSSING SIGN (R10–3e) (LEFT–4/RIGHT–4)	8	EACH

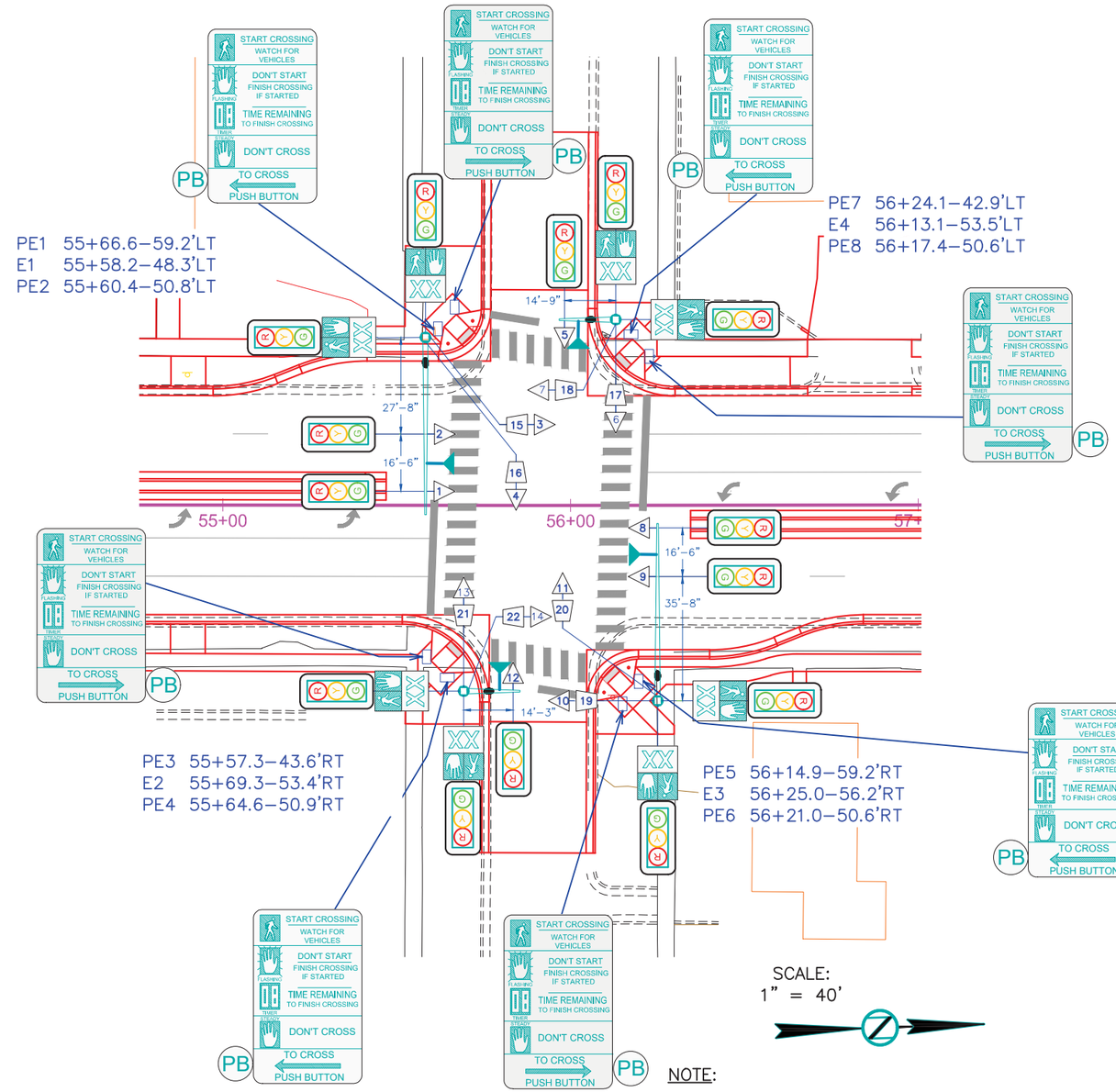

SCALE:
1" = 40'

NOTE:

ALL CONDUITS ARE 2", SCHEDULE 40, UNLESS NOTED OTHERWISE.

CAREFULLY COORDINATE TRENCHING WITH SEWER, WATER AND IRRIGATION LINES. HAND DIG WHERE NECESSARY, ADJUST JUNCTION BOXES AND FOOTING OFFSETS TOWARD CURB IF REQUIRED.

REGISTERED PROFESSIONAL ENGINEER
REG. NO. 9162
DAREN WAYNE BECKLOFF
SOUTH DAKOTA
8/22/16

08-22-16 P:\12-117\Background Data\FromWESTPLAINS\2016-07-28\BR13033E_6-21-2016 (SIGNAL MOVEMENT).dwg

STATE OF SOUTH DAKOTA	PROJECT	SHEET	TOTAL SHEETS
	NH0016(84)67	L13	L38

PLOTTING DATE: 9-9-16
REVISION DATE: 9-9-16

WPE WEST PLAINS ENGINEERING, INC.
1750 RAND ROAD ■ RAPID CITY, SD 57702
PHONE: (605) 348-7455 ■ FAX: (605) 348-9445
www.westplainsengineering.com
RAPID CITY, SD ■ SIOUX FALLS, SD ■ CASPER, WY ■ CEDAR RAPIDS, IA

WPE #BR13033

FOR BIDDING PURPOSES ONLY

CONDUIT LAYOUT

MT. RUSHMORE ROAD

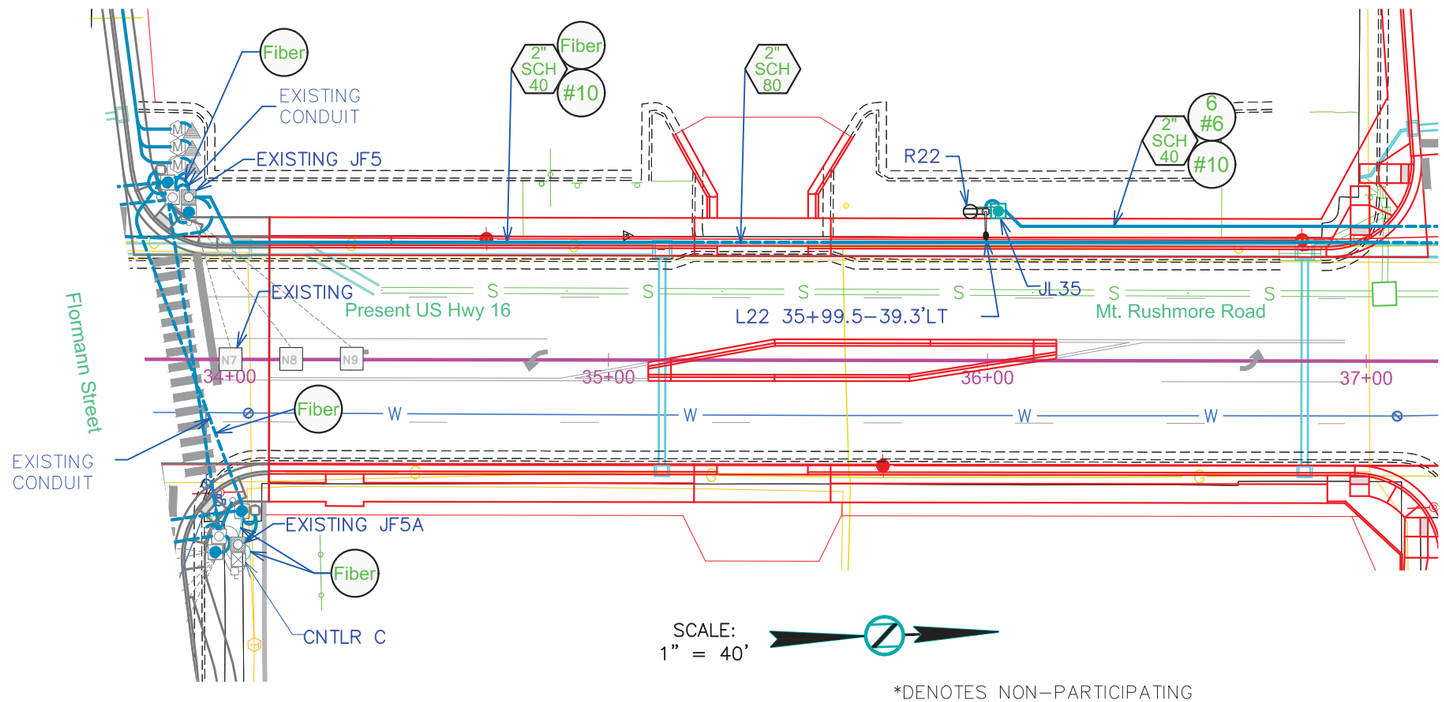

*DENOTES NON–PARTICIPATING

ESTIMATE OF QUANTITIES (FIBER & ROADWAY LIGHTING)			
KEY	ITEM	QTY	UNIT
	DECORATIVE LUMINAIRE 250W WITH P.E.– 20FT MOUNTING HEIGHT (L36)	1	EA
	20' FIXED BASE LUMINAIRE POLE	1	EA
	REMOVE SIGNAL EQUIPMENT (ES1–ES10)	LUMP SUM	LS
	SALVAGE SIGNAL EQUIPMENT (ES1–ES10)	LUMP SUM	LS
	REMOVE SIGNAL POLE FOOTING (ES1–ES10)	10	EACH
	SALVAGE LUMINAIRE POLE (EL1–EL11)	11	EACH
	REMOVE LUMINAIRE POLE FOOTING (EL1–EL11)	11	EACH
	DECORATIVE LUMINAIRE POLE (L22–L35)	14	EACH
	DECORATIVE LUMINAIRE ARM (L22–L35)	14	EACH
	DECORATIVE LUMINAIRE 400W WITH P.E.– 40FT MOUNTING HEIGHT (L22–L35)	14	EACH
	DECORATIVE LUMINAIRE 150W WITH P.E.– 16FT MOUNTING HEIGHT (L22–L35)	14	EACH
	2' DIAMETER FOOTING (L22–L35)	112	FT
	TYPE 2 ELECTRICAL JUNCTION BOX(JL35–JL56, JL49–JL52,JD1,JD3,JD5,JD7,JE1,JE3,JE5,JE7)	30	EACH
	TYPE 4 ELECTRICAL JUNCTION BOX (JF6–JF10)	5	EACH
	ELECTRICAL SERVICE CABINET	2	EACH
2" SCH 40	2" RIGID CONDUIT, SCHEDULE 40	7960	FT
2" SCH 80	2" RIDID CONDUIT, SCHEDULE 80	1255	FT
#2	1/C #2 AWG COPPER WIRE	2700	FT
#6	1/C #6 AWG COPPER WIRE	16815	FT
#10	1/C #10 AWG COPPER WIRE	10150	FT
	2/C #10 AWG COPPER POLE & BRACKET CABLE	715	FT
Fiber	48 STRAND FIBER OPTIC CABLE	5535	FT

ESTIMATE OF QUANTITIES (FIBER & ROADWAY LIGHTING)							
KEY	ITEM	QTY	UNIT	KEY	ITEM	QTY	UNIT
	*RECEPTACLE (NOT A BID ITEM R22–R35)	14	EACH	#6	*1/C #6 AWG COPPER WIRE	2940	FT
	*TYPE 1 ELECTRICAL JUNCTION BOX (J16)	1	EACH	#8	*1/C #8 AWG COPPER WIRE	13955	FT
	*ELECTICAL SERVICE CABINET	3	EACH	#10	*1/C #10 AWG COPPER WIRE	605	FT
2" SCH 40	*2" RIGID CONDUIT, SCHEDULE 40	535	FT		*2/C #10 AWG COPPER POLE BRACKET CABLE	25	FT
#2	*1/C #2 AWG COPPER WIRE	1365	FT		*2' DIAMETER FOOTING (L36)	6	FT

NOTE:

ALL CONDUITS ARE 2", SCHEDULE 40, UNLESS NOTED OTHERWISE.

CAREFULLY COORDINATE TRENCHING WITH SEWER, WATER AND IRRIGATION LINES. HAND DIG WHERE NECESSARY, ADJUST JUNCTION BOXES AND FOOTING OFFSETS TOWARD CURB IF REQUIRED.

REGISTERED PROFESSIONAL ENGINEER
REG. NO. 12077
MATTHEW KENNETH VONHAGEN
SOUTH DAKOTA
9/9/16

09-9-16

CONDUIT LAYOUT

MT. RUSHMORE ROAD

FOR BIDDING PURPOSES ONLY

STATE OF SOUTH DAKOTA	PROJECT	SHEET	TOTAL SHEETS
	NH0016(84)67	L14	L38

PLOTTING DATE: 8-19-16

WPE WEST PLAINS ENGINEERING, INC.
1750 RAND ROAD ■ RAPID CITY, SD 57702
PHONE: (605) 348-7455 ■ FAX: (605) 348-9445
www.westplainsengineering.com
RAPID CITY, SD ■ SIOUX FALLS, SD ■ CASPER, WY ■ CEDAR RAPIDS, IA

WPE #BR13033

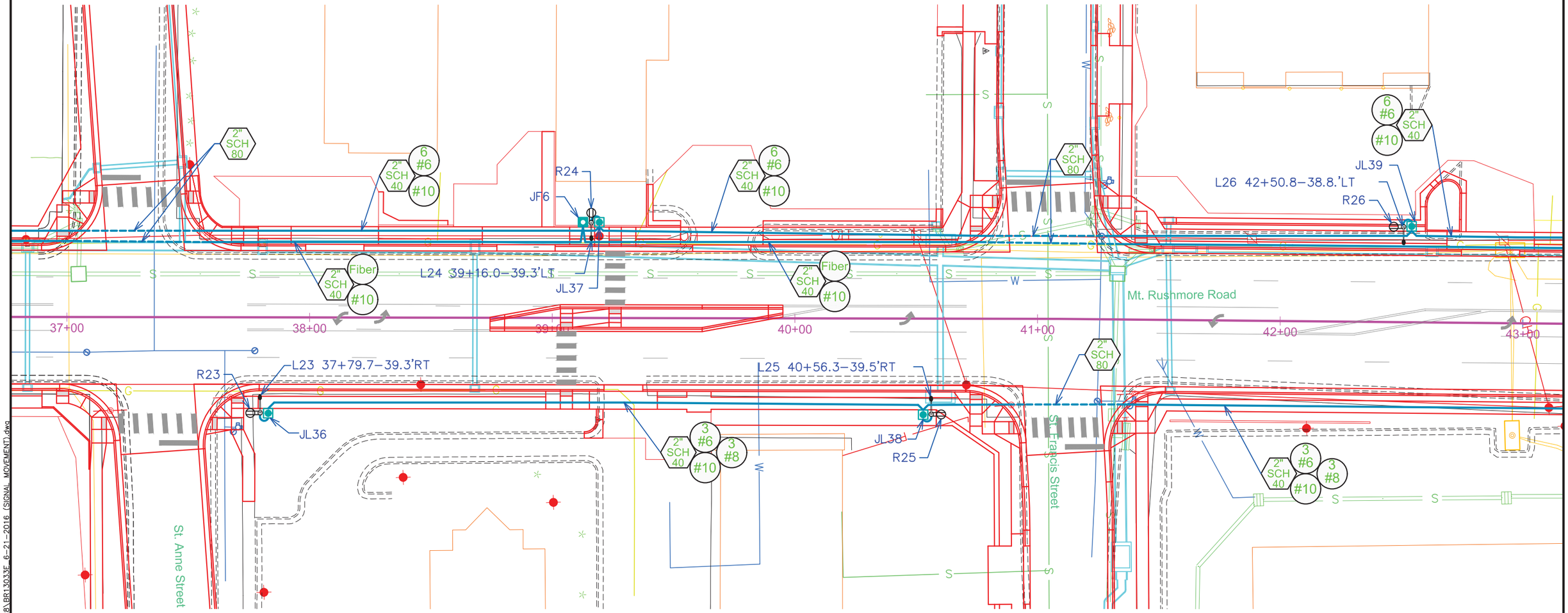

SCALE:
1" = 40'

NOTE:

ALL CONDUITS ARE 2", SCHEDULE 40, UNLESS NOTED OTHERWISE.

CAREFULLY COORDINATE TRENCHING WITH SEWER, WATER AND IRRIGATION LINES. HAND DIG WHERE NECESSARY, ADJUST JUNCTION BOXES AND FOOTING OFFSETS TOWARD CURB IF REQUIRED.

REGISTERED PROFESSIONAL ENGINEER
REG. NO. 9162
DAREN WAYNE BECKLOFF
SOUTH DAKOTA
8/22/16

08-22-16 P:\12-117\Background Data\FromWESTPLAINS\2016-07-28\BR13033E_6-21-2016 (SIGNAL MOVEMENT).dwg

STATE OF SOUTH DAKOTA	PROJECT	SHEET	TOTAL SHEETS
	NH0016(84)67	L15	L38

PLOTTING DATE: 8-19-16

FOR BIDDING PURPOSES ONLY

CONDUIT LAYOUT

MT. RUSHMORE ROAD

WPE WEST PLAINS ENGINEERING, INC.
1750 RAND ROAD ■ RAPID CITY, SD 57702
PHONE: (605) 348-7455 ■ FAX: (605) 348-9445
www.westplainsengineering.com
RAPID CITY, SD ■ SIOUX FALLS, SD ■ CASPER, WY ■ CEDAR RAPIDS, IA

WPE #BR13033

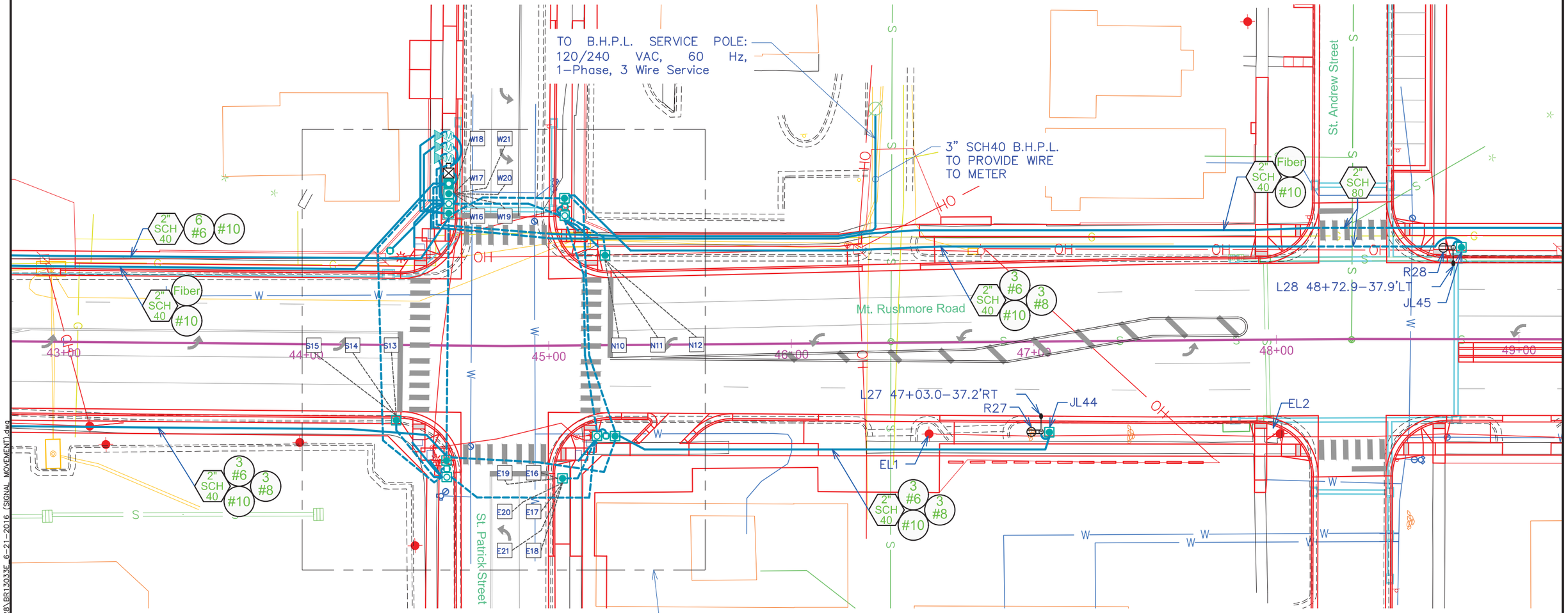

SCALE:
1" = 40'

NOTE:

ALL CONDUITS ARE 2", SCHEDULE 40, UNLESS NOTED OTHERWISE.

CAREFULLY COORDINATE TRENCHING WITH SEWER, WATER AND IRRIGATION LINES. HAND DIG WHERE NECESSARY, ADJUST JUNCTION BOXES AND FOOTING OFFSETS TOWARD CURB IF REQUIRED.

REGISTERED PROFESSIONAL ENGINEER
REG. NO. 9162
DAREN WAYNE BECKLOFF
SOUTH DAKOTA
8/22/16

08-22-16 P:\12-117\Background Data\FromWESTPLAINS\2016-07-28\BR13033E_6-21-2016 (SIGNAL MOVEMENT).dwg

STATE OF SOUTH DAKOTA	PROJECT	SHEET	TOTAL SHEETS
	NH0016(84)67	L16	L38

PLOTTING DATE: 8-19-16

WPE WEST PLAINS ENGINEERING, INC.
1750 RAND ROAD ■ RAPID CITY, SD 57702
PHONE: (605) 348-7455 ■ FAX: (605) 348-9445
www.westplainsengineering.com
RAPID CITY, SD ■ SIOUX FALLS, SD ■ CASPER, WY ■ CEDAR RAPIDS, IA

WPE #BR13033

FOR BIDDING PURPOSES ONLY

CONDUIT LAYOUT

MT. RUSHMORE ROAD

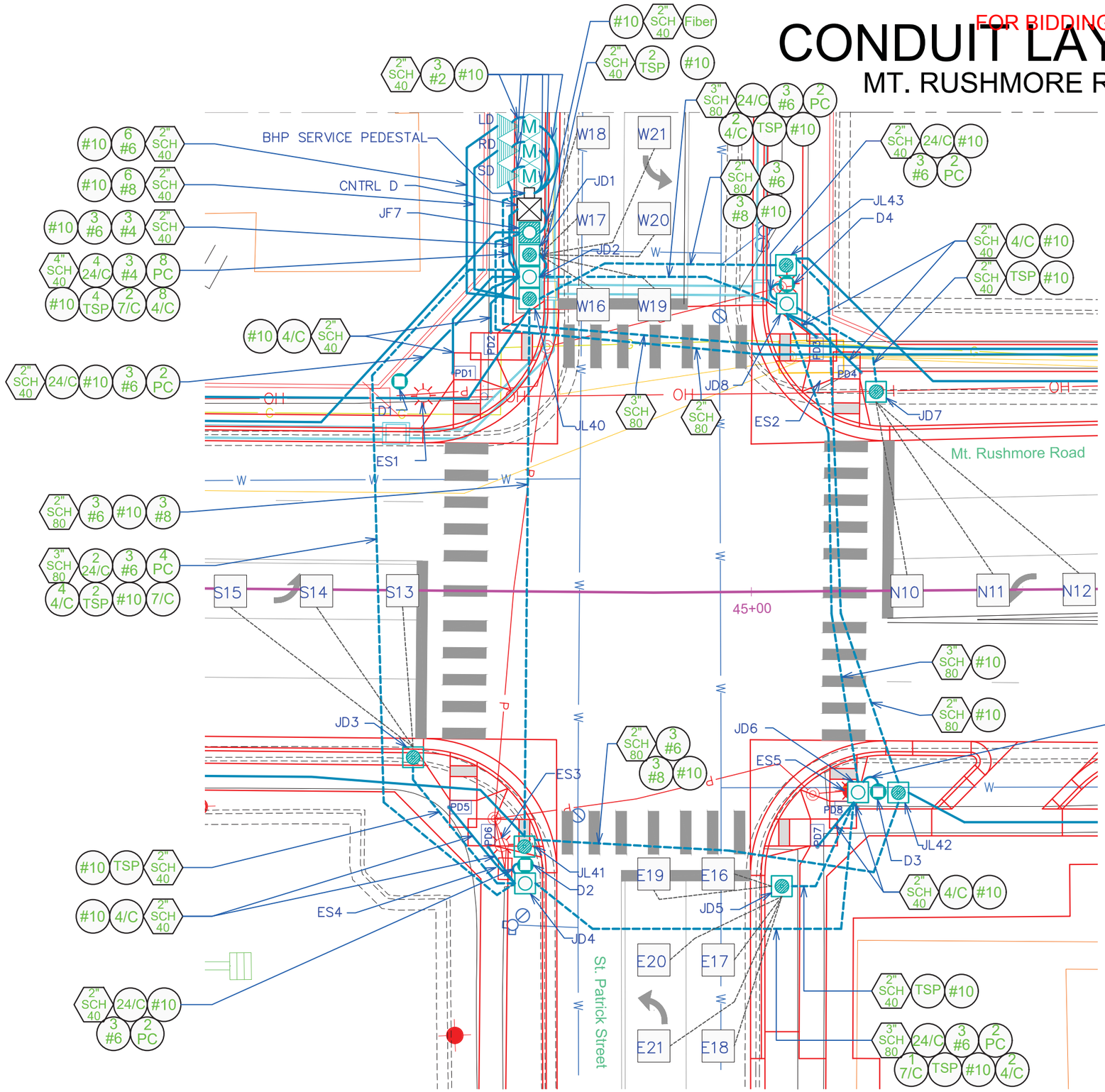

SCALE:
1" = 20'

NOTE:

ALL CONDUITS ARE 2", SCHEDULE 40, UNLESS NOTED OTHERWISE.

CAREFULLY COORDINATE TRENCHING WITH SEWER, WATER AND IRRIGATION LINES. HAND DIG WHERE NECESSARY, ADJUST JUNCTION BOXES AND FOOTING OFFSETS TOWARD CURB IF REQUIRED.

REGISTERED PROFESSIONAL ENGINEER
REG. NO. 9162
DAREN WAYNE BECKLOFF
SOUTH DAKOTA
8/22/16

08-22-16 P:\12-117\Background Data\FromWESTPLAINS\2016-07-28\BR13033E 6-21-2016 (SIGNAL MOVEMENT).dwg

CONDUIT LAYOUT

MT. RUSHMORE ROAD & ST. PATRICK ST.

FOR BIDDING PURPOSES ONLY

STATE OF SOUTH DAKOTA	PROJECT	SHEET	TOTAL SHEETS
	NH0016(84)67	L17	L38

PLOTTING DATE: 8-19-16

WPE WEST PLAINS ENGINEERING, INC.
1750 RAND ROAD ■ RAPID CITY, SD 57702
PHONE: (605) 348-7455 ■ FAX: (605) 348-9445
www.westplainsengineering.com
RAPID CITY, SD ■ SIOUX FALLS, SD ■ CASPER, WY ■ CEDAR RAPIDS, IA

WPE #BR13033

ESTIMATE OF QUANTITIES (TRAFFIC AND SIGNAL)

KEY	ITEM	QTY	UNIT	KEY	ITEM	QTY	UNIT
	3' DIAMETER FOOTING (D1–D4)	46	FT	#4	1/C #4 AWG COPPER CABLE	230	FT
	TYPE 2 ELECTRICAL JUNCTION BOX (JD1,JD3,JD5,JD7)	4	EACH	#6	1/C #6 AWG COPPER WIRE	1240	FT
	TYPE 3 ELECTRICAL JUNCTION BOX (JD2,JD4,JD6,JD8)	4	EACH	#10	1/C #10 AWG COPPER WIRE	940	FT
	ELECTRICAL SERVICE CABINET	1	EACH	4/C	4/C #14 AWG COPPER CABLE	1935	FT
	TRAFFIC SIGNAL CONTROLLER	1	EACH	7/C	7/C #14 AWG COPPER CABLE	445	FT
	PREFORMED DETECTOR LOOP (N10–N12,S13–S15,E16–E21,W16–W21)	18	EACH	24/C	24/C #14 AWG COPPER CABLE	665	FT
	DETECTOR UNIT	6	EACH	TSP	#16 AWG COPPER TWISTED SHIELDED PAIR	1000	FT
2" SCH 40	2" RIGID CONDUIT, SCHEDULE 40	380	FT		2/C #10 AWG COPPER POLE & BRACKET CABLE	260	FT
4" SCH 40	4" RIGID CONDUIT, SCHEDULE 40	30	FT	PC	PREEMPTION CABLE (NOT A BID ITEM)	1660	FT
3" SCH 80	3" RIGID CONDUIT, SCHEDULE 80	370	FT				

REGISTERED PROFESSIONAL ENGINEER
REG. NO. 9162
DAREN WAYNE BECKLOFF
SOUTH DAKOTA
8/22/16

08-22-16 P:\12-117\Background Data\FromWESTPLAINS\2016-07-28\BR13033E_6-21-2016 (SIGNAL MOVEMENT).dwg

CONDUIT LAYOUT

MT. RUSHMORE ROAD

FOR BIDDING PURPOSES ONLY

STATE OF SOUTH DAKOTA	PROJECT	SHEET	TOTAL SHEETS
	NH0016(84)67	L18	L38

PLOTTING DATE: 8-19-16

WPE WEST PLAINS ENGINEERING, INC.
1750 RAND ROAD ■ RAPID CITY, SD 57702
PHONE: (605) 348-7455 ■ FAX: (605) 348-9445
www.westplainsengineering.com
RAPID CITY, SD ■ SIOUX FALLS, SD ■ CASPER, WY ■ CEDAR RAPIDS, IA

WPE #BR13033

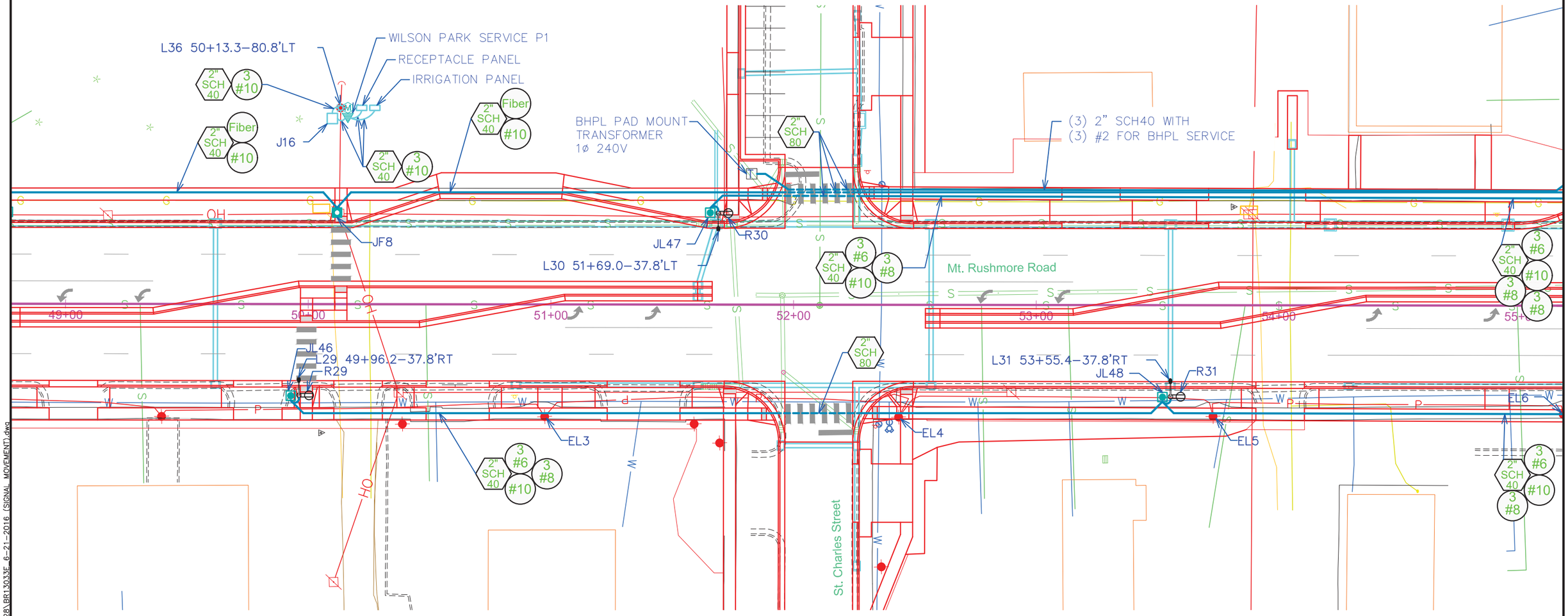

SCALE:
1" = 40'

NOTE:

ALL CONDUITS ARE 2", SCHEDULE 40, UNLESS NOTED OTHERWISE.

CAREFULLY COORDINATE TRENCHING WITH SEWER, WATER AND IRRIGATION LINES. HAND DIG WHERE NECESSARY, ADJUST JUNCTION BOXES AND FOOTING OFFSETS TOWARD CURB IF REQUIRED.

REGISTERED PROFESSIONAL ENGINEER
REG. NO. 9162
DAREN WAYNE BECKLOFF
SOUTH DAKOTA
8/22/16

08-22-16 P:\12-117\Background Data\FromWESTPLAINS\2016-07-28\BR13033F 6-21-2016 (SIGNAL MOVEMENT).dwg

CONDUIT LAYOUT

MT. RUSHMORE ROAD

FOR BIDDING PURPOSES ONLY

STATE OF SOUTH DAKOTA	PROJECT	SHEET	TOTAL SHEETS
	NH0016(84)67	L19	L38

PLOTTING DATE: 8-19-16

WPE WEST PLAINS ENGINEERING, INC.
1750 RAND ROAD ■ RAPID CITY, SD 57702
PHONE: (605) 348-7455 ■ FAX: (605) 348-9445
www.westplainsengineering.com
RAPID CITY, SD ■ SIOUX FALLS, SD ■ CASPER, WY ■ CEDAR RAPIDS, IA

WPE #BR13033

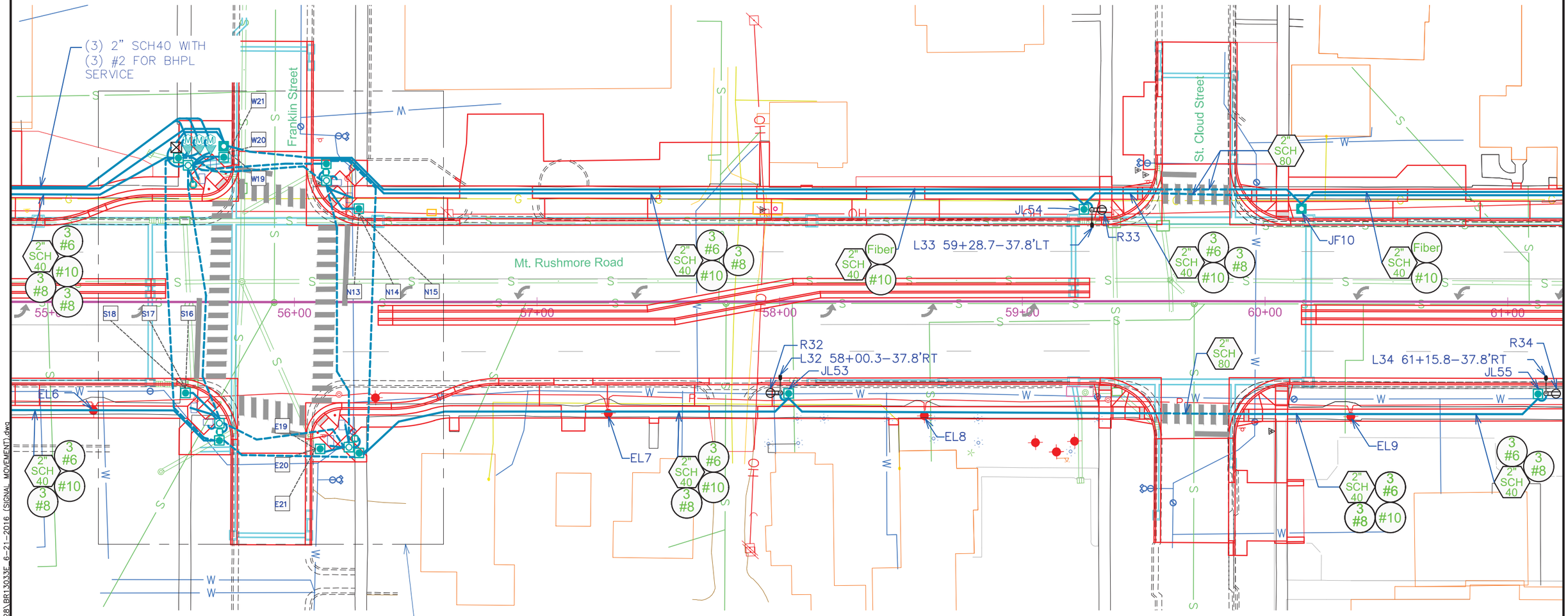

SCALE:
1" = 40'

NOTE:

ALL CONDUITS ARE 2", SCHEDULE 40, UNLESS NOTED OTHERWISE.

CAREFULLY COORDINATE TRENCHING WITH SEWER, WATER AND IRRIGATION LINES. HAND DIG WHERE NECESSARY, ADJUST JUNCTION BOXES AND FOOTING OFFSETS TOWARD CURB IF REQUIRED.

REGISTERED PROFESSIONAL ENGINEER
REG. NO.
9162
DAREN WAYNE
BECKLOFF
SOUTH DAKOTA
8/22/16

08-22-16 P:\12-117\Background Data\FromWESTPLAINS\2016-07-28\BR13033E_6-21-2016 (SIGNAL MOVEMENT).dwg

CONDUIT LAYOUT

MT. RUSHMORE ROAD

FOR BIDDING PURPOSES ONLY

STATE OF SOUTH DAKOTA	PROJECT	SHEET	TOTAL SHEETS
	NH0016(84)67	L20	L38

PLOTTING DATE: 8-19-16

WPE WEST PLAINS ENGINEERING, INC.
1750 RAND ROAD ■ RAPID CITY, SD 57702
PHONE: (605) 348-7455 ■ FAX: (605) 348-9445
www.westplainsengineering.com
RAPID CITY, SD ■ SIOUX FALLS, SD ■ CASPER, WY ■ CEDAR RAPIDS, IA

WPE #BR13033

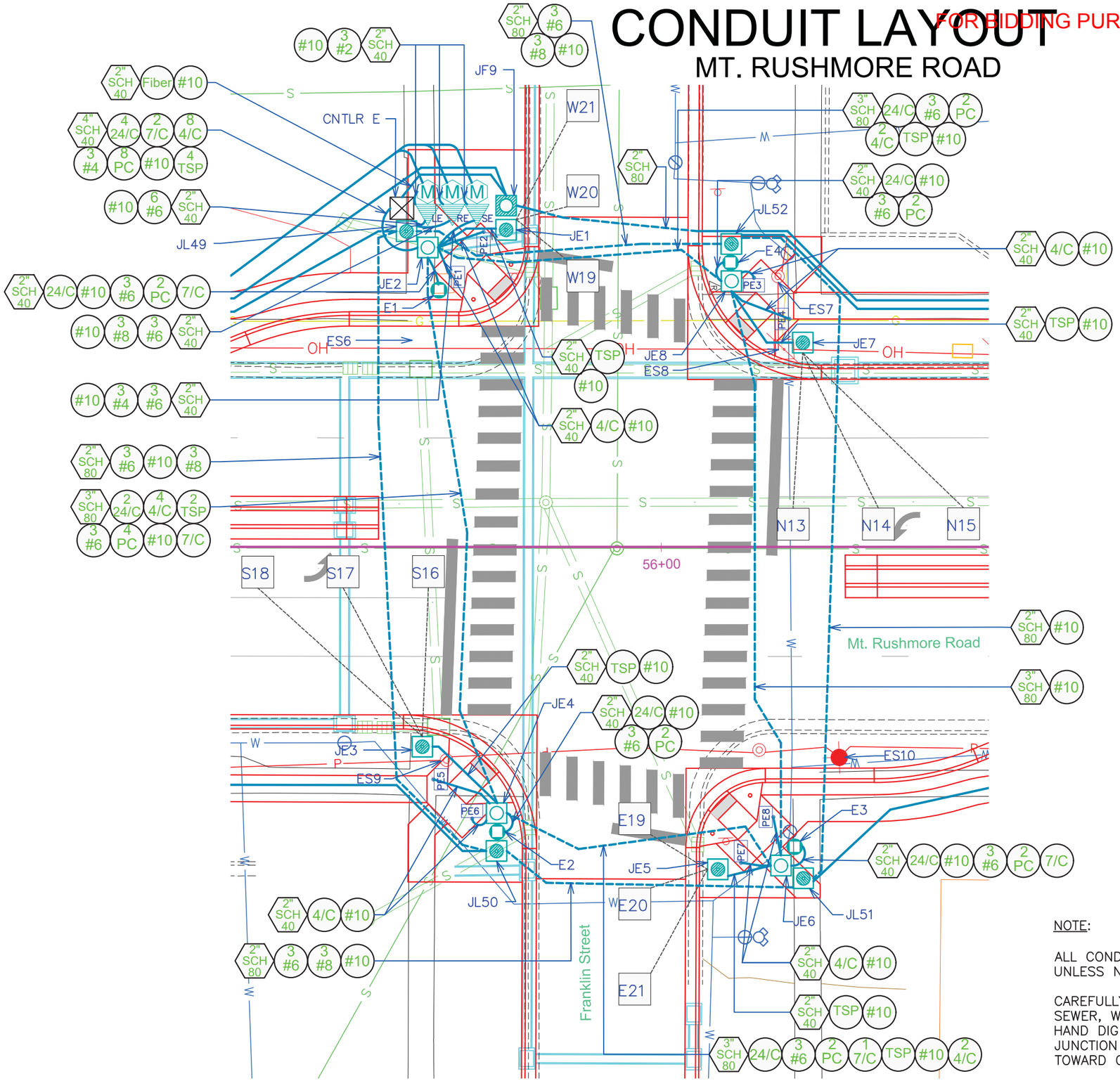

SCALE:
1" = 20'

NOTE:

ALL CONDUITS ARE 2", SCHEDULE 40, UNLESS NOTED OTHERWISE.

CAREFULLY COORDINATE TRENCHING WITH SEWER, WATER AND IRRIGATION LINES. HAND DIG WHERE NECESSARY, ADJUST JUNCTION BOXES AND FOOTING OFFSETS TOWARD CURB IF REQUIRED.

REGISTERED PROFESSIONAL ENGINEER
REG. NO. 9162
DAREN WAYNE BECKLOFF
SOUTH DAKOTA
8/22/16

P:\12-117\Background Data\FromWESTPLAINS\2016-07-28\BR13033E_6-21-2016 (SIGNAL MOVEMENT).dwg

CONDUIT LAYOUT

MT. RUSHMORE ROAD & FRANKLIN ST.

FOR BIDDING PURPOSES ONLY

STATE OF SOUTH DAKOTA	PROJECT	SHEET	TOTAL SHEETS
	NH0016(84)67	L21	L38

PLOTTING DATE: 8-19-16

WPE WEST PLAINS ENGINEERING, INC.
1750 RAND ROAD ■ RAPID CITY, SD 57702
PHONE: (605) 348-7455 ■ FAX: (605) 348-9445
www.westplainsengineering.com
RAPID CITY, SD ■ SIOUX FALLS, SD ■ CASPER, WY ■ CEDAR RAPIDS, IA

WPE #BR13033

ESTIMATE OF QUANTITIES (TRAFFIC AND SIGNAL)

KEY	ITEM	QTY	UNIT	KEY	ITEM	QTY	UNIT
	3' DIAMETER FOOTING (E1–E4)	48	FT	#4	1/C #4 AWG COPPER CABLE	150	FT
	TYPE 2 ELECTRICAL JUNCTION BOX (JE1,JE3,JE5,JE7)	4	EACH	#6	1/C #6 AWG COPPER WIRE	1165	FT
	TYPE 3 ELECTRICAL JUNCTION BOX (JE2,JE4,JE6,JE8)	4	EACH	#10	1/C #10 AWG COPPER WIRE	830	FT
	ELECTRICAL SERVICE CABINET	1	EACH	4/C	4/C #14 AWG COPPER CABLE	1800	FT
	TRAFFIC SIGNAL CONTROLLER	1	EACH	7/C	7/C #14 AWG COPPER CABLE	445	FT
	PREFORMED DETECTOR LOOP (N13–N15,S16–S18,E19–E21,W19–W21	12	EACH	24/C	24/C #14 AWG COPPER CABLE	595	FT
	DETECTOR UNIT	4	EACH	TSP	#16 AWG COPPER TWISTED SHIELDED PAIR	665	FT
2" SCH 40	2" RIGID CONDUIT, SCHEDULE 40	285	FT		2/C #10 AWG COPPER POLE & BRACKET CABLE	260	FT
4" SCH 40	4" RIGID CONDUIT, SCHEDULE 40	20	FT	PC	PREEMPTION CABLE (NOT A BID ITEM)	1620	FT
3" SCH 80	3" RIGID CONDUIT, SCHEDULE 80	390	FT				

REGISTERED PROFESSIONAL ENGINEER
REG. NO. 9162
DAREN WAYNE BECKLOFF
SOUTH DAKOTA
8/22/16

08-22-16 P:\12-117\Background Data\FromWESTPLAINS\2016-07-28\BR13033E 6-21-2016 (SIGNAL MOVEMENT).dwg

CONDUIT LAYOUT

MT. RUSHMORE ROAD

FOR BIDDING PURPOSES ONLY

STATE OF SOUTH DAKOTA	PROJECT	SHEET	TOTAL SHEETS
	NH0016(84)67	L22	L38

PLOTTING DATE: 9-9-16
REVISION DATE: 9-9-16

WPE WEST PLAINS ENGINEERING, INC.
1750 RAND ROAD ■ RAPID CITY, SD 57702
PHONE: (605) 348-7455 ■ FAX: (605) 348-9445
www.westplainsengineering.com
RAPID CITY, SD ■ SIOUX FALLS, SD ■ CASPER, WY ■ CEDAR RAPIDS, IA

WPE #BR13033

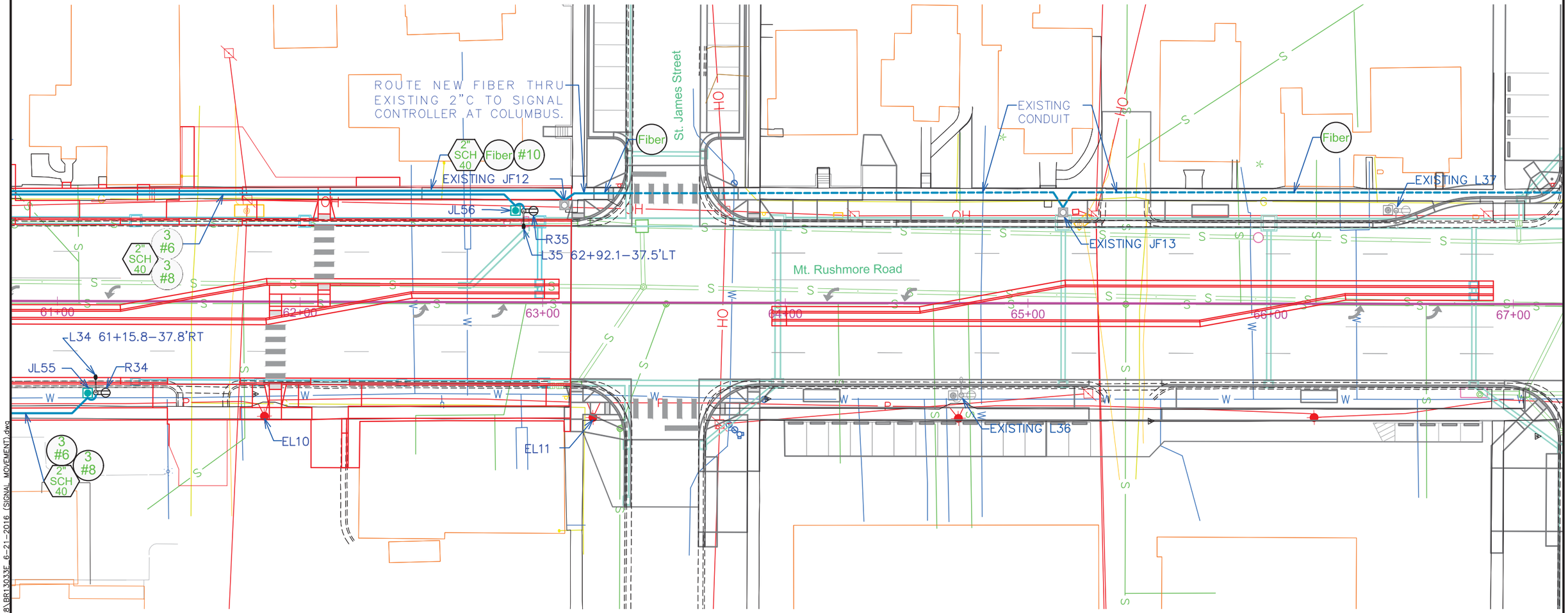

SCALE:
1" = 40'

NOTE:

ALL CONDUITS ARE 2", SCHEDULE 40, UNLESS NOTED OTHERWISE.

CAREFULLY COORDINATE TRENCHING WITH SEWER, WATER AND IRRIGATION LINES. HAND DIG WHERE NECESSARY, ADJUST JUNCTION BOXES AND FOOTING OFFSETS TOWARD CURB IF REQUIRED.

REGISTERED PROFESSIONAL ENGINEER
REG. NO. 12077
MATTHEW KENNETH VONHAEDEN
SOUTH DAKOTA
9/9/16

09-9-16 P:\12-117\Background Data\FromWESTPLAINS\2016-07-28\BR13033E 6-21-2016 (SIGNAL MOVEMENT).dwg

CONDUIT LAYOUT

MT. RUSHMORE ROAD

FOR BIDDING PURPOSES ONLY

STATE OF SOUTH DAKOTA	PROJECT	SHEET	TOTAL SHEETS
	NH0016(84)67	L23	L38

PLOTTING DATE: 8-19-16

WPE WEST PLAINS ENGINEERING, INC.
1750 RAND ROAD ■ RAPID CITY, SD 57702
PHONE: (605) 348-7455 ■ FAX: (605) 348-9445
www.westplainsengineering.com
RAPID CITY, SD ■ SIOUX FALLS, SD ■ CASPER, WY ■ CEDAR RAPIDS, IA

WPE #BR13033

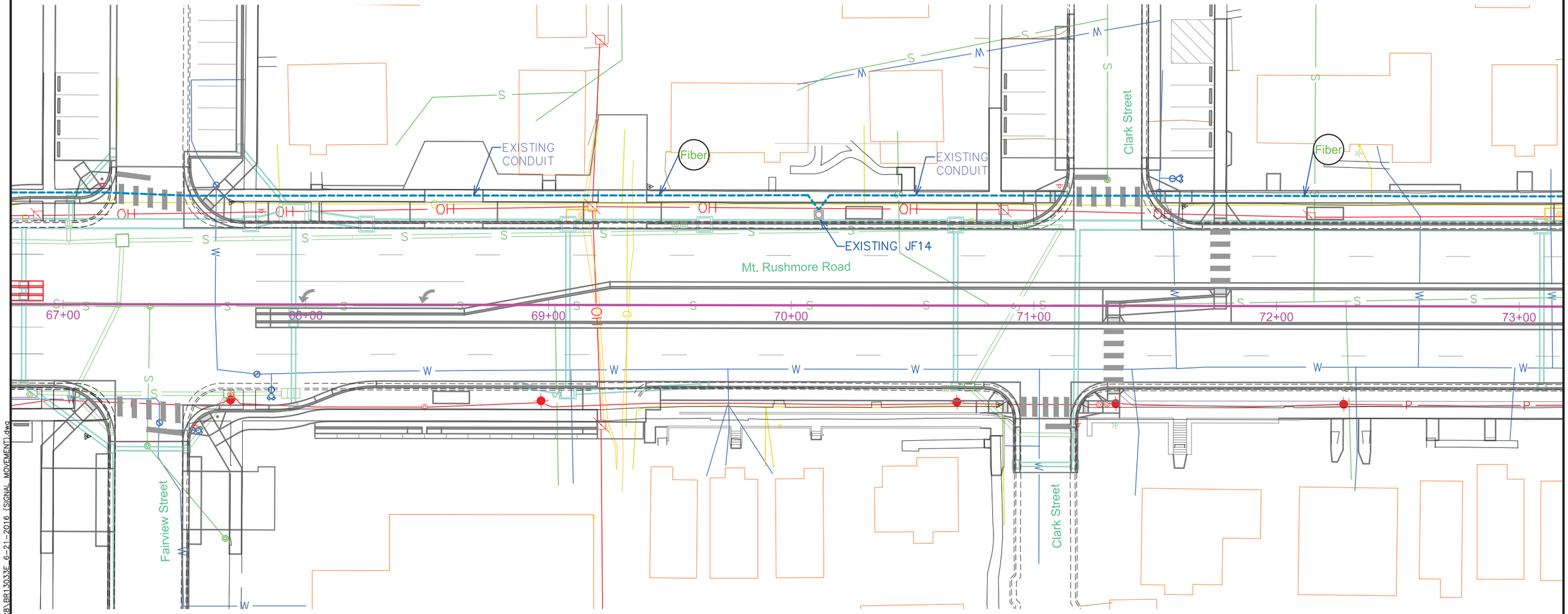

SCALE:
1" = 40'

NOTE:

ALL CONDUITS ARE 2", SCHEDULE 40, UNLESS NOTED OTHERWISE.

CAREFULLY COORDINATE TRENCHING WITH SEWER, WATER AND IRRIGATION LINES. HAND DIG WHERE NECESSARY, ADJUST JUNCTION BOXES AND FOOTING OFFSETS TOWARD CURB IF REQUIRED.

REGISTERED PROFESSIONAL ENGINEER
REG. NO. 9162
DAREN WAYNE BECKLOFF
SOUTH DAKOTA
8/22/16

08-22-16 P:\12-117\Background Data\FromWESTPLAINS\2016-07-28\BR13033E 6-21-2016 (SIGNAL MOVEMENT).dwg

CONDUIT LAYOUT

MT. RUSHMORE ROAD

FOR BIDDING PURPOSES ONLY

STATE OF SOUTH DAKOTA	PROJECT	SHEET	TOTAL SHEETS
	NH0016(84)67	L24	L38

PLOTTING DATE: 8-19-16

WPE WEST PLAINS ENGINEERING, INC.
1750 RAND ROAD ■ RAPID CITY, SD 57702
PHONE: (605) 348-7455 ■ FAX: (605) 348-9445
www.westplainsengineering.com
RAPID CITY, SD ■ SIOUX FALLS, SD ■ CASPER, WY ■ CEDAR RAPIDS, IA

WPE #BR13033

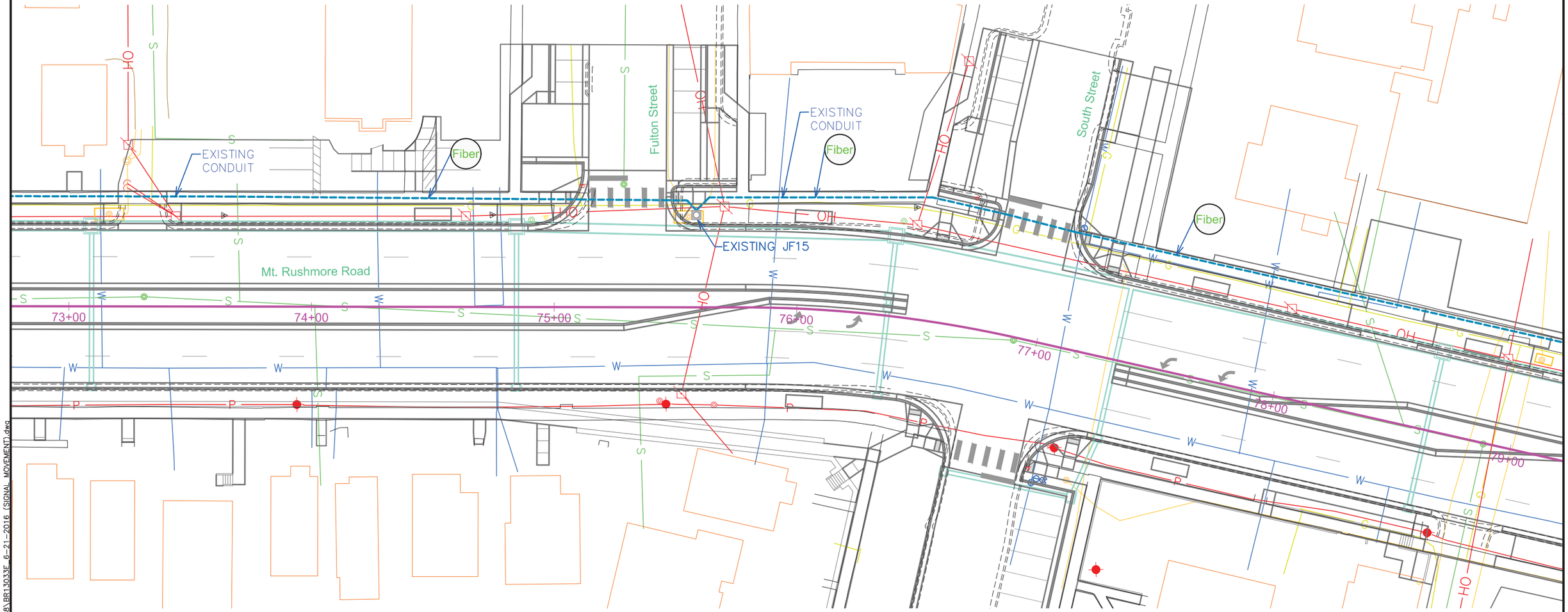

SCALE:
1" = 40'

NOTE:

ALL CONDUITS ARE 2", SCHEDULE 40, UNLESS NOTED OTHERWISE.

CAREFULLY COORDINATE TRENCHING WITH SEWER, WATER AND IRRIGATION LINES. HAND DIG WHERE NECESSARY, ADJUST JUNCTION BOXES AND FOOTING OFFSETS TOWARD CURB IF REQUIRED.

REGISTERED PROFESSIONAL ENGINEER
REG. NO.
9162
DAREN WAYNE
BECKLOFF
SOUTH DAKOTA
8/22/16

08-22-16 P:\12-117\Background Data\FromWESTPLAINS\2016-07-28\BR13033E 6-21-2016 (SIGNAL MOVEMENT).dwg

CONDUIT LAYOUT

MT. RUSHMORE ROAD

FOR BIDDING PURPOSES ONLY

STATE OF SOUTH DAKOTA	PROJECT	SHEET	TOTAL SHEETS
	NH0016(84)67	L25	L38

PLOTTING DATE: 8-19-16

WPE WEST PLAINS ENGINEERING, INC.
1750 RAND ROAD ■ RAPID CITY, SD 57702
PHONE: (605) 348-7455 ■ FAX: (605) 348-9445
www.westplainsengineering.com
RAPID CITY, SD ■ SIOUX FALLS, SD ■ CASPER, WY ■ CEDAR RAPIDS, IA

WPE #BR13033

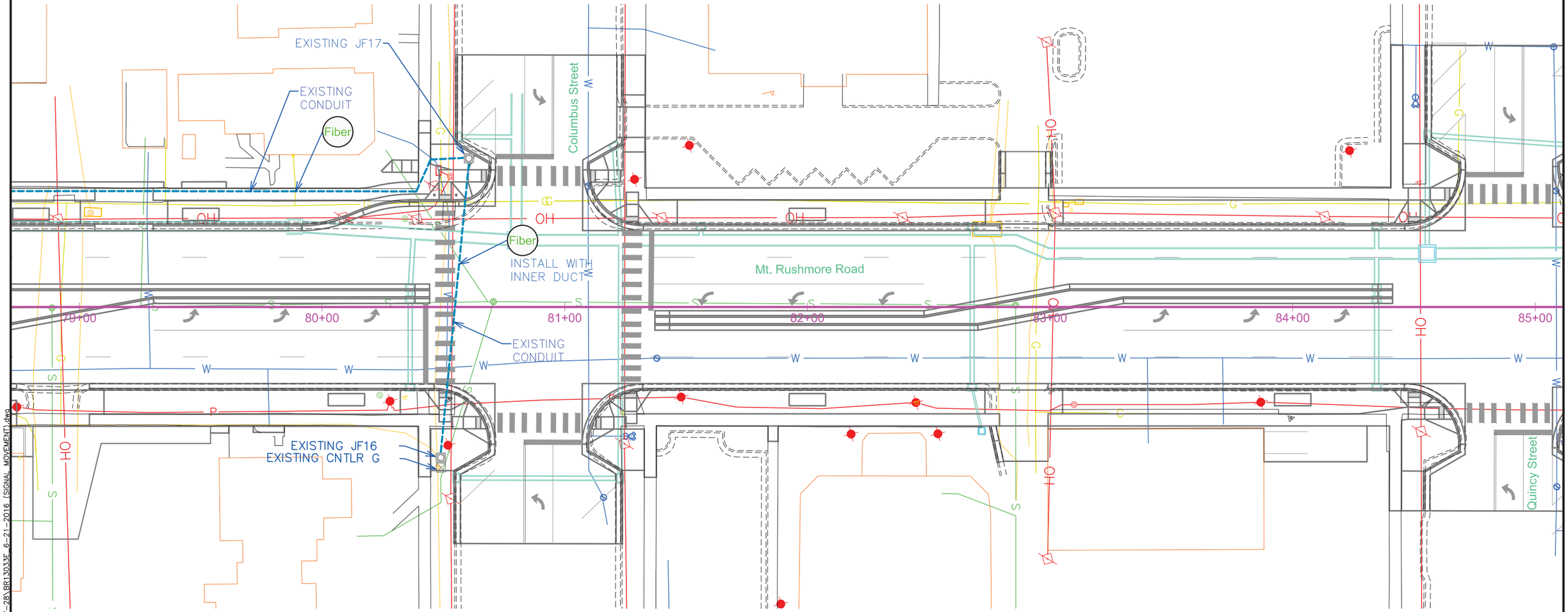

SCALE:
1" = 40'

NOTE:

ALL CONDUITS ARE 2", SCHEDULE 40, UNLESS NOTED OTHERWISE.

CAREFULLY COORDINATE TRENCHING WITH SEWER, WATER AND IRRIGATION LINES. HAND DIG WHERE NECESSARY, ADJUST JUNCTION BOXES AND FOOTING OFFSETS TOWARD CURB IF REQUIRED.

REGISTERED PROFESSIONAL ENGINEER
REG. NO. 9162
DAREN WAYNE BECKLOFF
SOUTH DAKOTA
8/22/16

08-22-16 P:\12-117\Background Data\FromWESTPLAINS\2016-07-28\BR13033E 6-21-2016 (SIGNAL MOVEMENT).dwg

SIGNAL TIMING

FRANKLIN STREET & MT. RUSHMORE ROAD

FOR BIDDING PURPOSES ONLY

STATE OF SOUTH DAKOTA	PROJECT	SHEET	TOTAL SHEETS
	NH0016(84)67	L26	L38

PLOTTING DATE: 7-29-16
REVISION DATE: 8-19-16

WEST PLAINS ENGINEERING, INC.
1750 RAND ROAD ■ RAPID CITY, SD 57702
PHONE: (605) 348-7455 ■ FAX: (605) 348-9445
www.westplainsengineering.com
RAPID CITY, SD ■ SIOUX FALLS, SD ■ CASPER, WY ■ CEDAR RAPIDS, IA

WPE #BR13033

PHASING AND SEQUENCING															
INTERVAL / SIGNAL HEAD	1	2	3	4	5	6	7	14	15	16	17	18	19	20	FLASH DISPLAY
NB: 7,8,9,10								G	Y		G	G	Y		Y
SB: 1,2,3,14								G	Y		G	G	Y		Y
EB: 11,12,13	G	Y		G	G	Y									R
WB: 4,5,6	G	Y		G	G	Y									R
NB & SB: 15,18,19,22	DW	DW	DW	DW	DW	DW	DW	DW	DW	DW	W	F DW	DW	DW	NO DISPLAY
EB & WB: 16,17,20,21	DW	DW	DW	W	F DW	DW	DW	DW	DW	DW	DW	DW	DW	DW	NO DISPLAY
MOVEMENTS	4&8			4&8 W/PED				2&6			2&6 W/PED				
PHASES	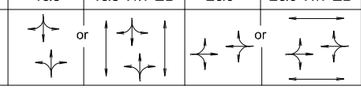														

CONTROLLER TIMINGS (FREE OPERATION)								
MOVEMENT	1	2	3	4	5	6	7	8
PHASE								
MIN GREEN		12		7		12		7
ADDED INITIAL								
MAX INITIAL								
PASSAGE TIME		3		4		3		4
MAXIMUM 1		30		20		30		20
MAXIMUM 2		40		25		40		25
TIME BEFORE								
TIME TO REDUCE								
MINIMUM GAP								
YELLOW CHANGE		4		4		4		4
RED CLEARANCE		2		1.5		2		1.5
WALK		7		7		7		7
PED CLEARANCE		9		15		9		15

TIMING PLAN 1	
TIME OF DAY (TOD)	PATTERN (C/S/O)
6:00 - 7:00	1/1/1
7:00 - 9:00	2/1/1
9:00 - 16:00	1/1/1
16:00 - 18:30	3/1/1
18:30 - 23:00	1/1/1
23:30 - 6:00	FLASH

TIMING PLAN 2	
TIME OF DAY (TOD)	PATTERN (C/S/O)
6:00 - 21:00	FREE
21:00 - 6:00	FLASH

WEEKLY PROGRAM							
	SUN	MON	TUE	WED	THU	FRI	SAT
TIMING PLAN	2	1	1	1	1	1	2

COORDINATION TIMING								
CYCLE 1 = 70 SEC								
MOVEMENT	1	2	3	4	5	6	7	8
PHASE								
TIME - SPLIT 1		51		19		51		19
COORDINATED PHASE		X				X		
OFFSET 1 = 47 SEC								

COORDINATION TIMING								
CYCLE 2 = 70 SEC								
MOVEMENT	1	2	3	4	5	6	7	8
PHASE								
TIME - SPLIT 1		48		22		48		22
COORDINATED PHASE		X				X		
OFFSET 1 = 53 SEC								

COORDINATION TIMING								
CYCLE 3 = 70 SEC								
MOVEMENT	1	2	3	4	5	6	7	8
PHASE								
TIME - SPLIT 1		54		16		54		16
COORDINATED PHASE		X				X		
OFFSET 1 = 45 SEC								

DETECTOR SETTINGS								
DETECTOR LABEL	AMPLIFIED CHANNEL DETECTOR	DETECTOR TYPE	DETECTOR OPERATION			LOCKING CALL	MOVEMENT CALLED	MOVEMENT EXTENDED
			CALLS & EXTENDS	CALLS ONLY	EXTENDS ONLY			
E19,E20,E21	1	PREFORMED	X				8	4&8
W19,W20,W21	2	PREFORMED	X				4	4&8

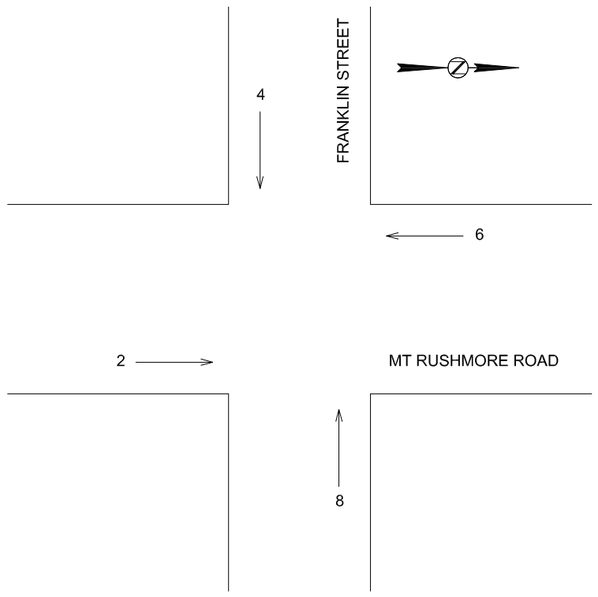

REGISTERED PROFESSIONAL ENGINEER
REG. NO. 9162
DAREN WAYNE BECKLOFF
SOUTH DAKOTA
8/22/16

08-22-16 K:\2013\BR13033 - Mt. Rushmore Road - Phase II\BR13033F 6-21-2016 (SIGNAL MOVEMENT).dwg

SIGNAL TIMING

ST. PATRICK STREET & MT. RUSHMORE ROAD

FOR BIDDING PURPOSES ONLY

STATE OF SOUTH DAKOTA	PROJECT	SHEET	TOTAL SHEETS
	NH0016(84)67	L27	L38

PLOTTING DATE: 7-29-16

WPE WEST PLAINS ENGINEERING, INC.
1750 RAND ROAD ■ RAPID CITY, SD 57702
PHONE: (605) 348-7455 ■ FAX: (605) 348-9445
www.westplainsengineering.com
RAPID CITY, SD ■ SIOUX FALLS, SD ■ CASPER, WY ■ CEDAR RAPIDS, IA

WPE #BR13033

PHASING AND SEQUENCING

INTERVAL / SIGNAL HEAD	1	2	3	4	5	6	7	8	9	10	11	12	13	14	15	16	17	18	19	20	FLASH DISPLAY
NB LEFT: 8,9								<G	<Y	<G	<Y			F <Y	<Y		F <Y	F <Y	<Y		Y
NB: 10,11,12										G	G			G	Y		G	G	Y		Y
SB LEFT: 1,16								<G	<Y			<G	<Y	F <Y	<Y		F <Y	F <Y	<Y		Y
SB: 2,3,4												G	G	G	Y		G	G	Y		Y
EB: 13,14,15	G	Y		G	G	Y															R
WB: 5,6,7	G	Y		G	G	Y															R
NB & SB: 17,20,21,24	DW	DW	DW	DW	DW	DW	DW	DW	DW	DW	DW	DW	DW	DW	DW	DW	W	F DW	DW	DW	NO DISPLAY
EB & WB: 18,19,22,23	DW	DW	DW	W	F DW	DW	DW	DW	DW	DW	DW	DW	DW	DW	DW	DW	DW	DW	DW	DW	NO DISPLAY
MOVEMENTS	4&8			4&8 W/PED				1&5		2&5		1&6		2&6			2&6 W/PED				
PHASES	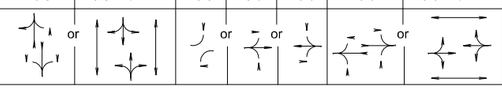																				

CONTROLLER TIMINGS (FREE OPERATION)

MOVEMENT	1	2	3	4	5	6	7	8
PHASE								
MIN GREEN	7	12		7	7	12		7
ADDED INITIAL								
MAX INITIAL								
PASSAGE TIME	3	3		4	3	3		4
MAXIMUM 1	10	30		20	10	30		20
MAXIMUM 2	15	40		25	15	40		25
TIME BEFORE								
TIME TO REDUCE								
MINIMUM GAP								
YELLOW CHANGE	4	4		4	4	4		4
RED CLEARANCE	2	2		1.5	2	2		1.5
WALK		7		7		7		7
PED CLEARANCE		9		15		9		15

TIMING PLAN 1

TIME OF DAY (TOD)	PATTERN (C/S/O)
6:00 - 7:00	1/1/1
7:00 - 9:00	2/1/1
9:00 - 16:00	1/1/1
16:00 - 18:30	3/1/1
18:30 - 23:00	1/1/1
23:30 - 6:00	FLASH

TIMING PLAN 2

TIME OF DAY (TOD)	PATTERN (C/S/O)
6:00 - 21:00	FREE
21:00 - 6:00	FLASH

WEEKLY PROGRAM

	SUN	MON	TUE	WED	THU	FRI	SAT
TIMING PLAN	2	1	1	1	1	1	2

COORDINATION TIMING

CYCLE 1 = 70 SEC

MOVEMENT	1	2	3	4	5	6	7	8
PHASE								
TIME - SPLIT 1	12	35		23	11	36		23
COORDINATED PHASE		X				X		

OFFSET 1 = 18 SEC

COORDINATION TIMING

CYCLE 2 = 70 SEC

MOVEMENT	1	2	3	4	5	6	7	8
PHASE								
TIME - SPLIT 1	12	35		23	11	36		23
COORDINATED PHASE		X				X		

OFFSET 1 = 30 SEC

COORDINATION TIMING

CYCLE 3 = 70 SEC

MOVEMENT	1	2	3	4	5	6	7	8
PHASE								
TIME - SPLIT 1	12	35		23	11	36		23
COORDINATED PHASE		X				X		

OFFSET 1 = 18 SEC

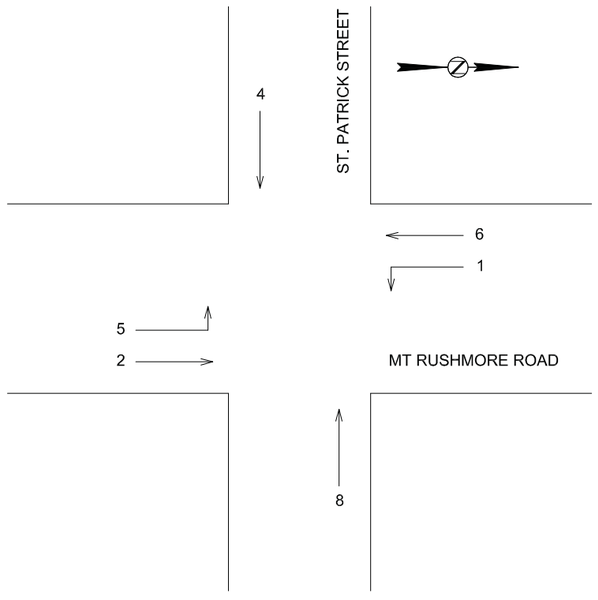

DETECTOR SETTINGS

DETECTOR LABEL	AMPLIFIED CHANNEL DETECTOR	DETECTOR TYPE	DETECTOR OPERATION: CALLS & EXTENDS	CALLS ONLY	EXTENDS ONLY	LOCKING CALL	MOVEMENT CALLED	MOVEMENT EXTENDED
N10,N11,N12	1	PREFORMED	X				1	1
E16,E17,E18	2	PREFORMED	X				8	4&8
E28,E29,E30	3	PREFORMED	X				8	4&8
S13,S14,S15	4	PREFORMED	X				5	5
W16,W17,W18	5	PREFORMED	X				4	4&8
W28,W29,W30	6	PREFORMED	X				4	4&8

REGISTERED PROFESSIONAL ENGINEER
REG. NO. 9162
DAREN WAYNE BECKLOFF
SOUTH DAKOTA
8/22/16

08-22-16 K:\2013\BR13033 - Mt. Rushmore Road - Phase II\BR13033E 6-21-2016 (SIGNAL MOVEMENT).dwg

WIRING DIAGRAM

FOR BIDDING PURPOSES ONLY

MT. RUSHMORE ROAD & ST. PATRICK STREET

STATE OF SOUTH DAKOTA	PROJECT	SHEET	TOTAL SHEETS
	NH0016(84)67	L28	L38

PLOTTING DATE: 7-29-16

WPE WEST PLAINS ENGINEERING, INC.
1750 RAND ROAD ● RAPID CITY, SD 57702
PHONE: (605) 348-7455 ● FAX: (605) 348-9445
www.westplainsengineering.com
RAPID CITY, SD ● SIOUX FALLS, SD ● CASPER, WY ● CEDAR RAPIDS, IA

WPE #BR13033

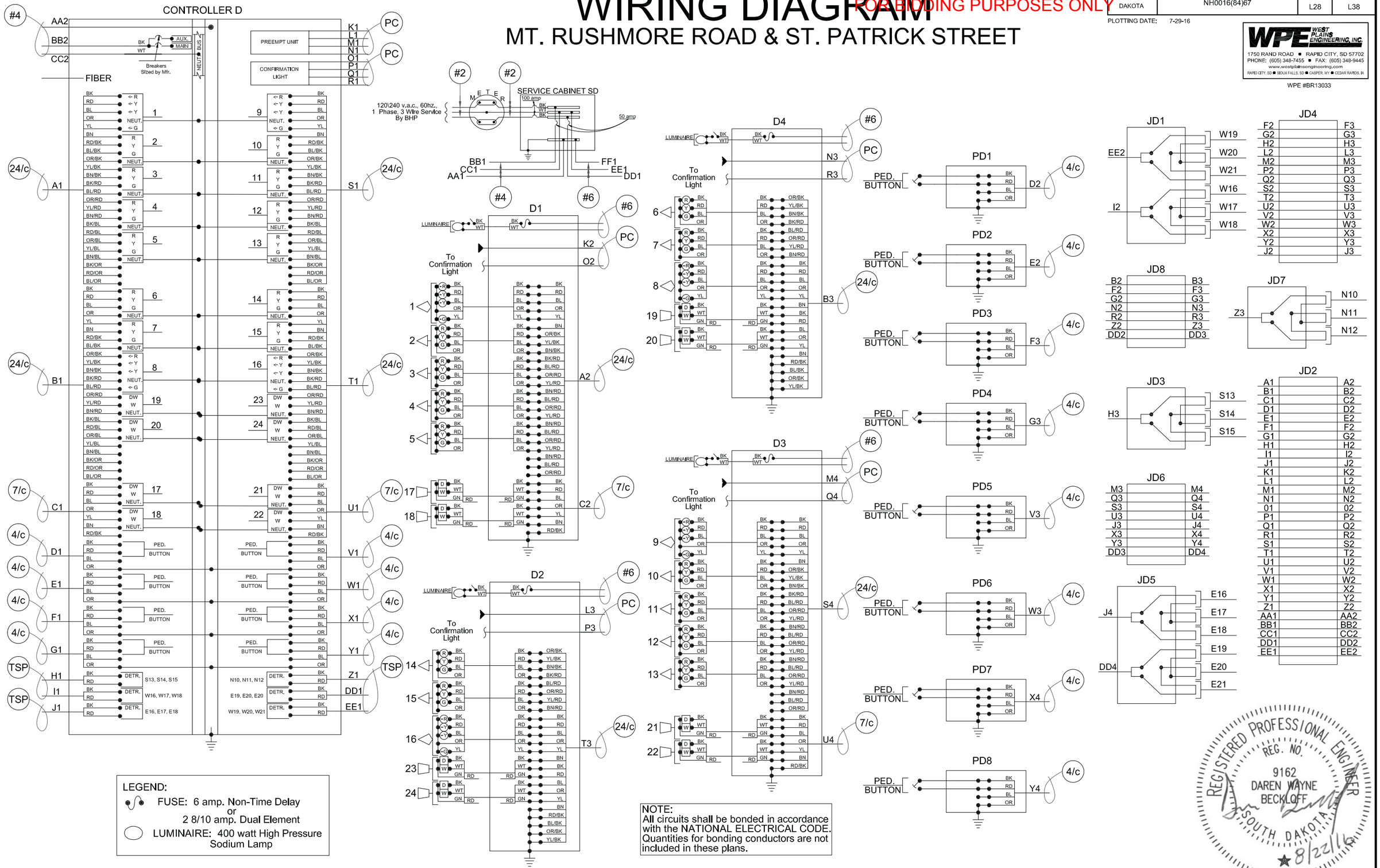

REGISTERED PROFESSIONAL ENGINEER
REG. NO. 9162
DAREN WAYNE BECKLOFF
SOUTH DAKOTA
8/22/16

08-22-16 K:\2013\BR13033 - Mt. Rushmore Road - Phase II\BR13033E 6-21-2016 (SIGNAL MOVEMENT).dwg

STATE OF SOUTH DAKOTA	PROJECT	SHEET	TOTAL SHEETS
	NH0016(84)67	L29	L38

FOR BIDDING PURPOSES ONLY

PLOTTING DATE: 7-29-16
REVISION DATE: 8-19-16

WIRING DIAGRAM

MT. RUSHMORE ROAD & FRANKLIN STREET

WPE WEST PLAINS ENGINEERING, INC.
1750 RAND ROAD ■ RAPID CITY, SD 57702
PHONE: (605) 348-7455 ■ FAX: (605) 348-9445
www.westplainsengineering.com
RAPID CITY, SD ■ SIOUX FALLS, SD ■ CASPER, WY ■ CEDAR RAPIDS, IA

WPE #BR13033

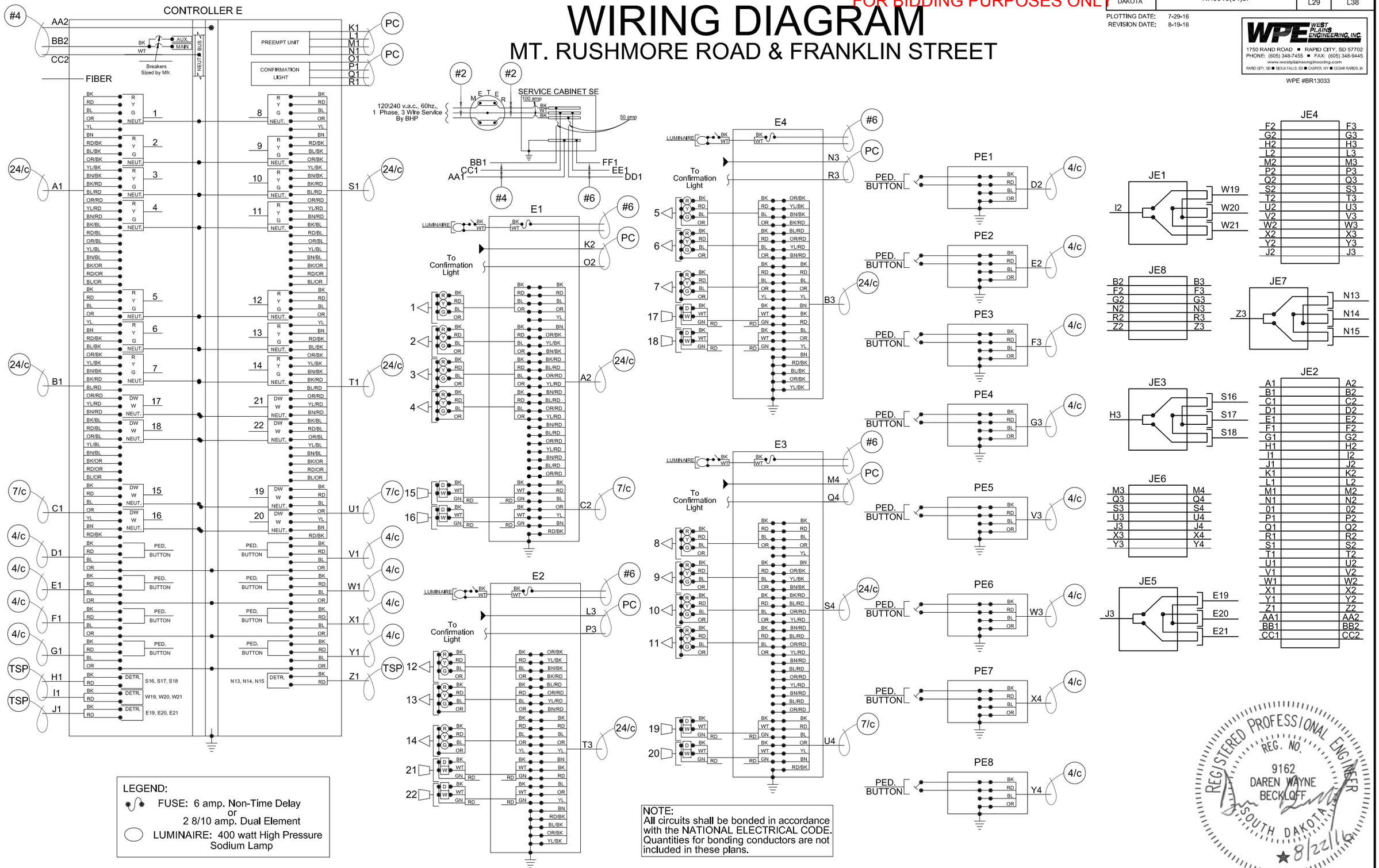

LEGEND:

FUSE: 6 amp. Non-Time Delay or 2 8/10 amp. Dual Element

LUMINAIRE: 400 watt High Pressure Sodium Lamp

NOTE:
All circuits shall be bonded in accordance with the NATIONAL ELECTRICAL CODE. Quantities for bonding conductors are not included in these plans.

REGISTERED PROFESSIONAL ENGINEER
REG. NO. 9162
DAREN WAYNE BECKLOFF
SOUTH DAKOTA
8/22/16

08-22-16 K:\2013\BR13033 - Mt. Rushmore Road - Phase II\BR13033E 6-21-2016 (SIGNAL MOVEMENT).dwg

FOR BIDDING PURPOSES ONLY

STATE OF SOUTH DAKOTA	PROJECT	SHEET	TOTAL SHEETS
	NH0016(84)67	L30	L38

PLOTTING DATE: 7-29-16
REVISION DATE: 8-19-16

WPE WEST PLAINS ENGINEERING, INC.
1750 RAND ROAD ■ RAPID CITY, SD 57702
PHONE: (605) 348-7455 ■ FAX: (605) 348-9445
www.westplainsengineering.com
RAPID CITY, SD ■ SIOUX FALLS, SD ■ CASPER, WY ■ CEDAR RAPIDS, IA

WPE #BR13033

WIRING DIAGRAM
MT. RUSHMORE ROAD

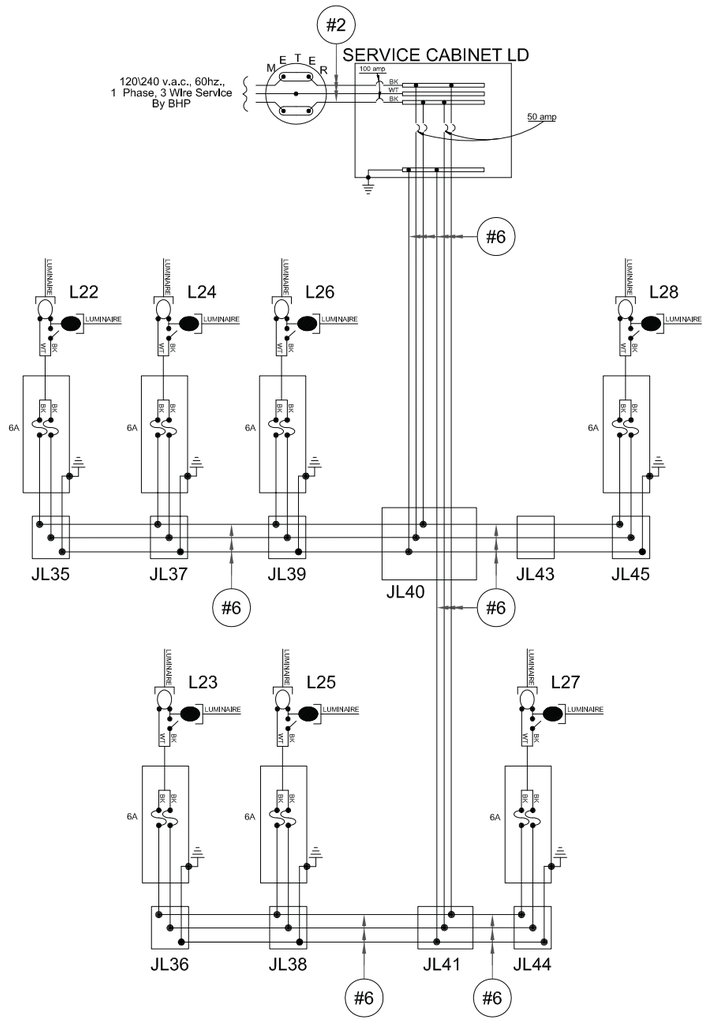

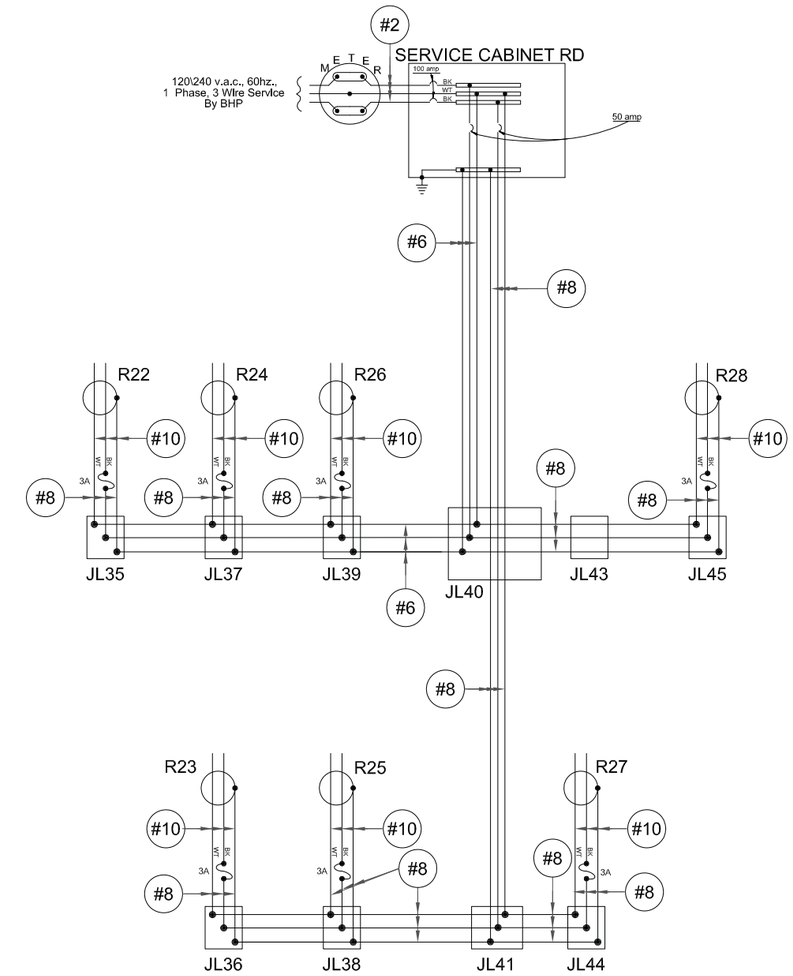

LEGEND

- LUMINAIRE: 400W HPS LAMP
- LUMINAIRE: 150W HPS LAMP
- 20A NEMA 5-20R GFI DUPLEX RECEPTACLE

REGISTERED PROFESSIONAL ENGINEER
REG. NO. 9162
DAREN WAYNE BECKLOFF
SOUTH DAKOTA
8/22/16

08-22-16 K:\2013\BR13033 - Mt. Rushmore Road - Phase II\BR13033E 6-21-2016 (SIGNAL MOVEMENT).dwg

FOR BIDDING PURPOSES ONLY

STATE OF SOUTH DAKOTA	PROJECT	SHEET	TOTAL SHEETS
	NH0016(84)67	L31	L38

PLOTTING DATE: 7-29-16
REVISION DATE: 8-19-16

WPE WEST PLAINS ENGINEERING, INC.
1750 RAND ROAD ■ RAPID CITY, SD 57702
PHONE: (605) 348-7455 ■ FAX: (605) 348-9445
www.westplainsengineering.com
RAPID CITY, SD ■ SIOUX FALLS, SD ■ CASPER, WY ■ CEDAR RAPIDS, IA

WPE #BR13033

WIRING DIAGRAM
MT. RUSHMORE ROAD

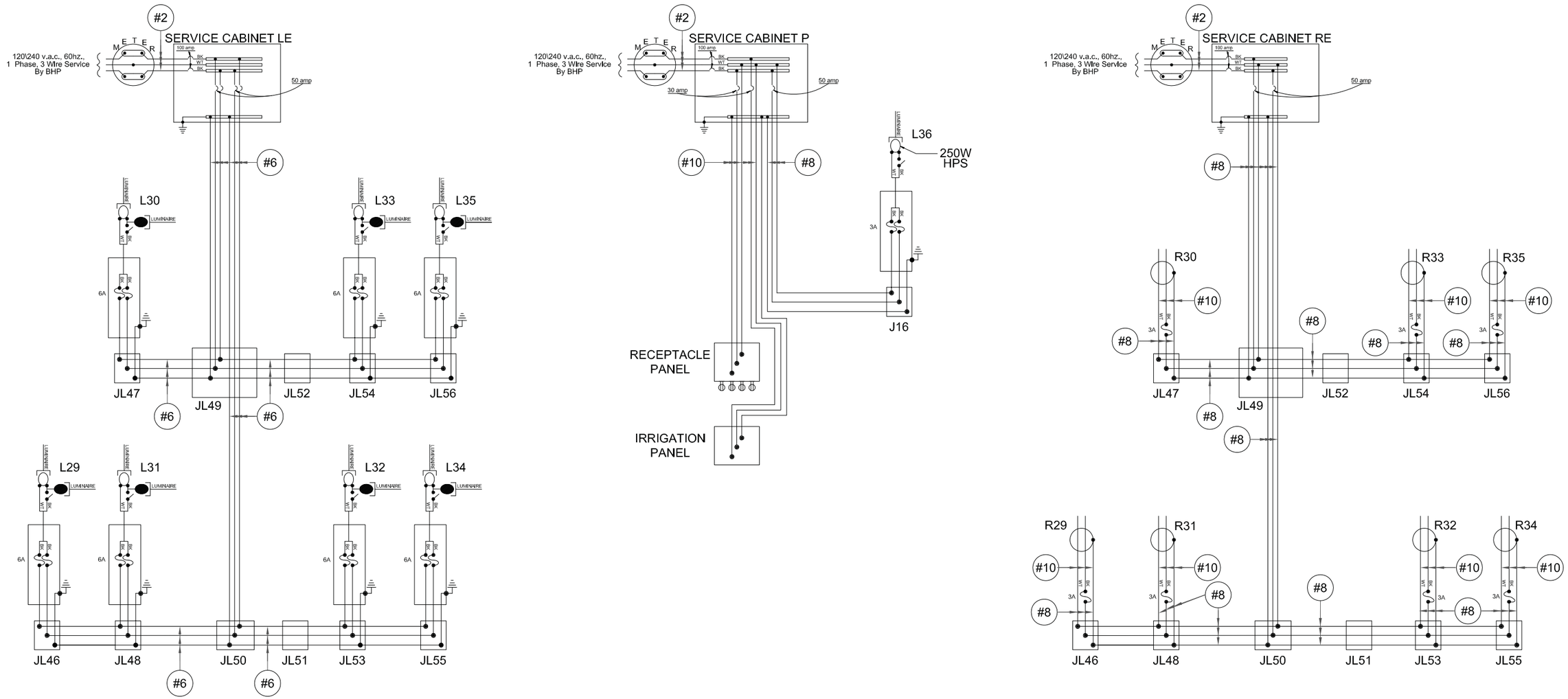

LEGEND

- LUMINAIRE: 400W HPS LAMP
- LUMINAIRE: 150W HPS LAMP
- 20A NEMA 5-20R GFI DUPLEX RECEPTACLE

REGISTERED PROFESSIONAL ENGINEER
REG. NO. 9162
DAREN WAYNE BECKLOFF
SOUTH DAKOTA
8/22/16

08-22-16 K:\2013\BR13033 - Mt. Rushmore Road - Phase II\BR13033E 6-21-2016 (SIGNAL MOVEMENT).dwg

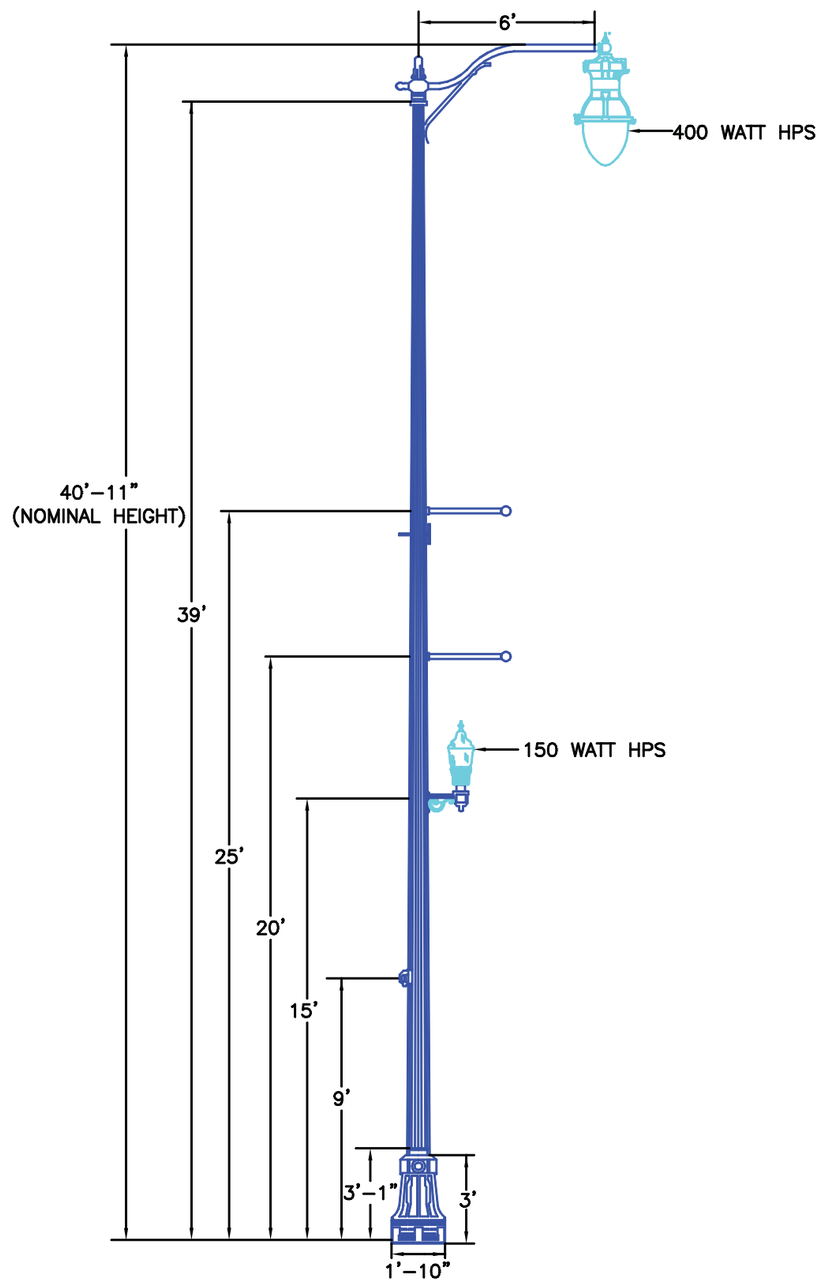

DECORATIVE LIGHT POLE

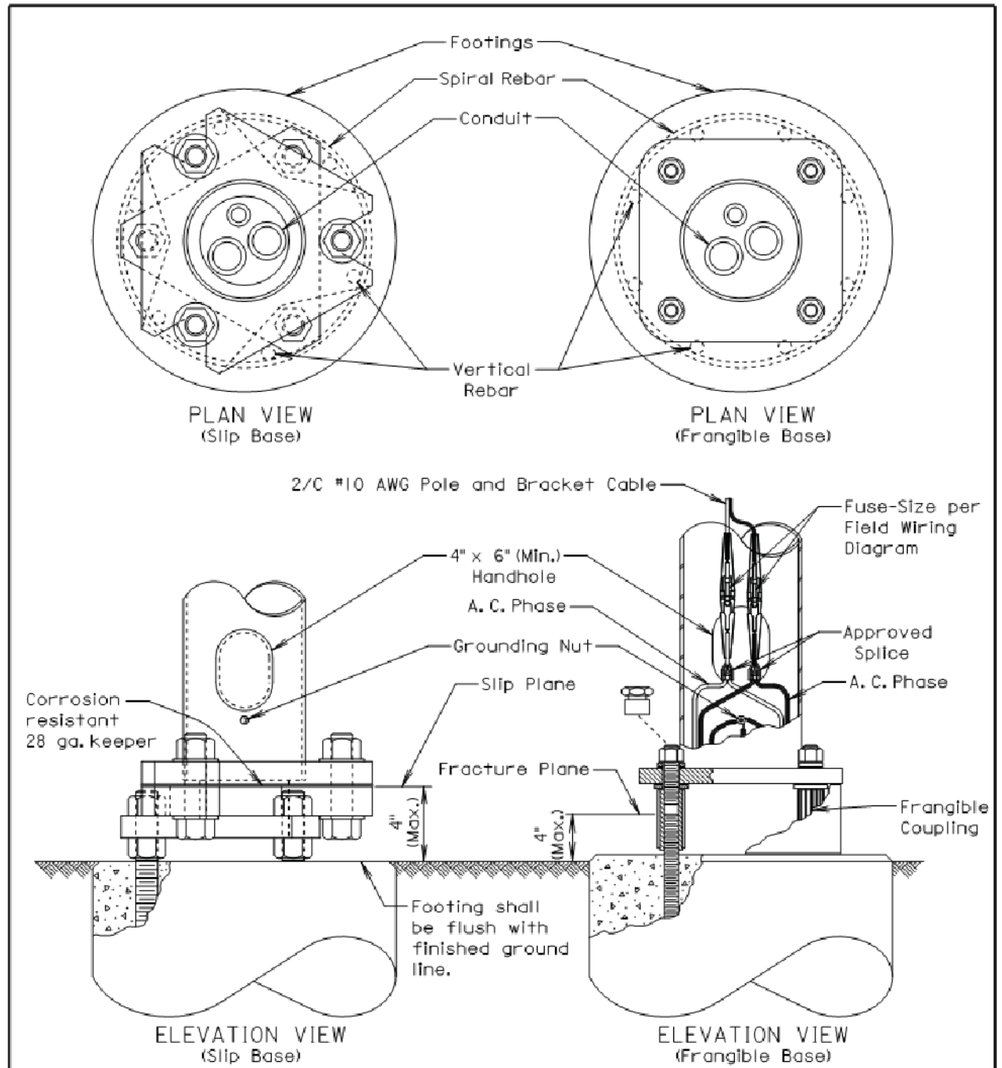

GENERAL NOTES:

The Contractor has the option of using either the Slip Base, Transformer Base, or Frangible Base.

Base details are provided for example only and are not intended to be a complete design.

Connectors shall be breakaway type.

June 26, 2013

Published Date: 2nd Qtr. 2016	SDDOT	ROADWAY LUMINAIRE POLE BREAKAWAY BASE	PLATE NUMBER 635.11
			Sheet 1 of 1

08-22-16 K:\2013\BR13033 - Mt. Rushmore Road - Phase II\BR13033E 6-21-2016 (SIGNAL MOVEMENT).dwg

FOR BIDDING PURPOSES ONLY

STATE OF SOUTH DAKOTA	PROJECT	SHEET	TOTAL SHEETS
	NH0016(84)67	L33	L38

PLOTTING DATE: 7-29-16
REVISION DATE: 8-19-16

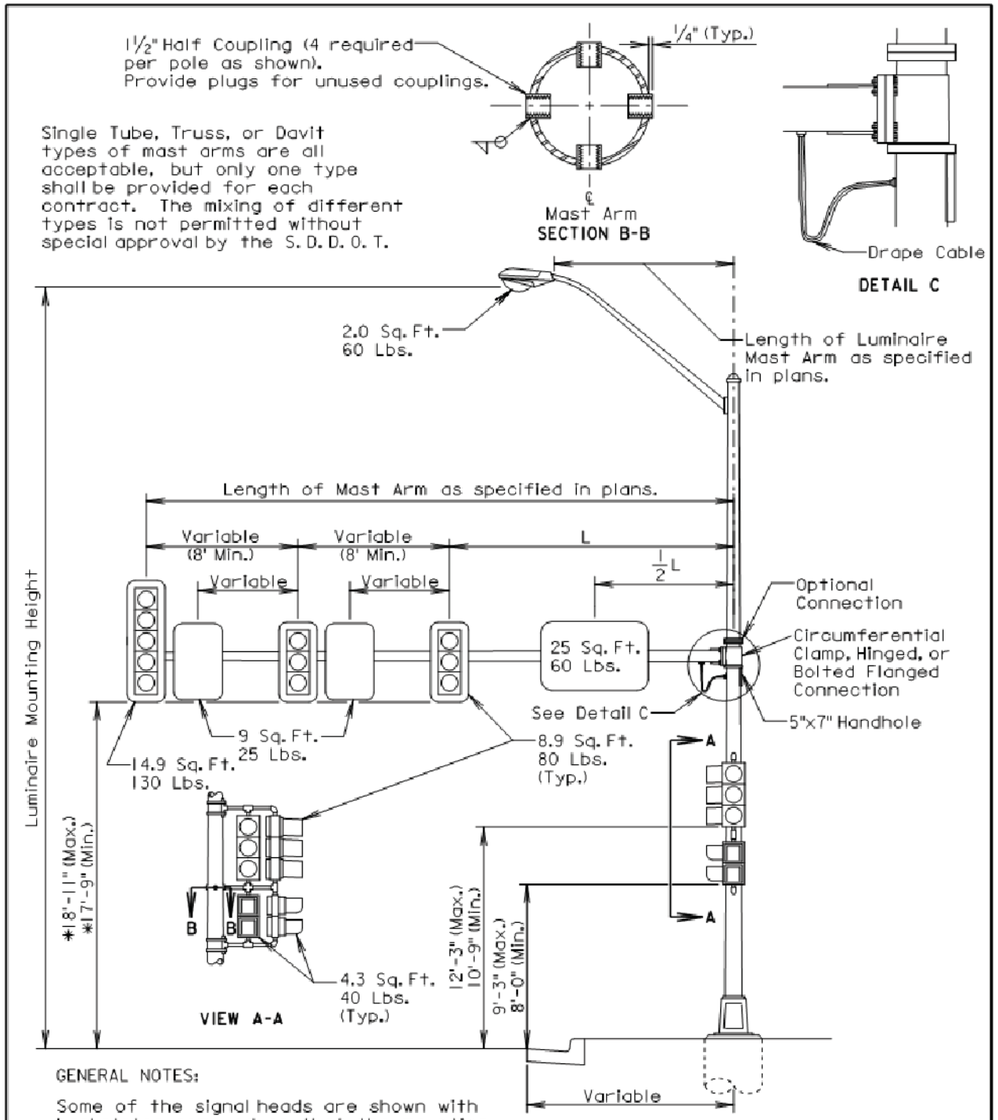

GENERAL NOTES:

Some of the signal heads are shown with backplates removed so that the mounting hardware is visible.

* The signal height allowances shown above are based on a horizontal distance greater than 53' between the signals and stop line. For horizontal distance of 53' and less between the signals and the stop line, the height allowances shall be as specified in Section 4D.15 of the MUTCD.

December 23, 2008

Published Date: 2nd Qtr. 2016	SDDOT	SIGNAL POLE (WITH MAST ARM AND LUMINAIRE EXTENSION)	PLATE NUMBER 635.32 Sheet 1 of 1

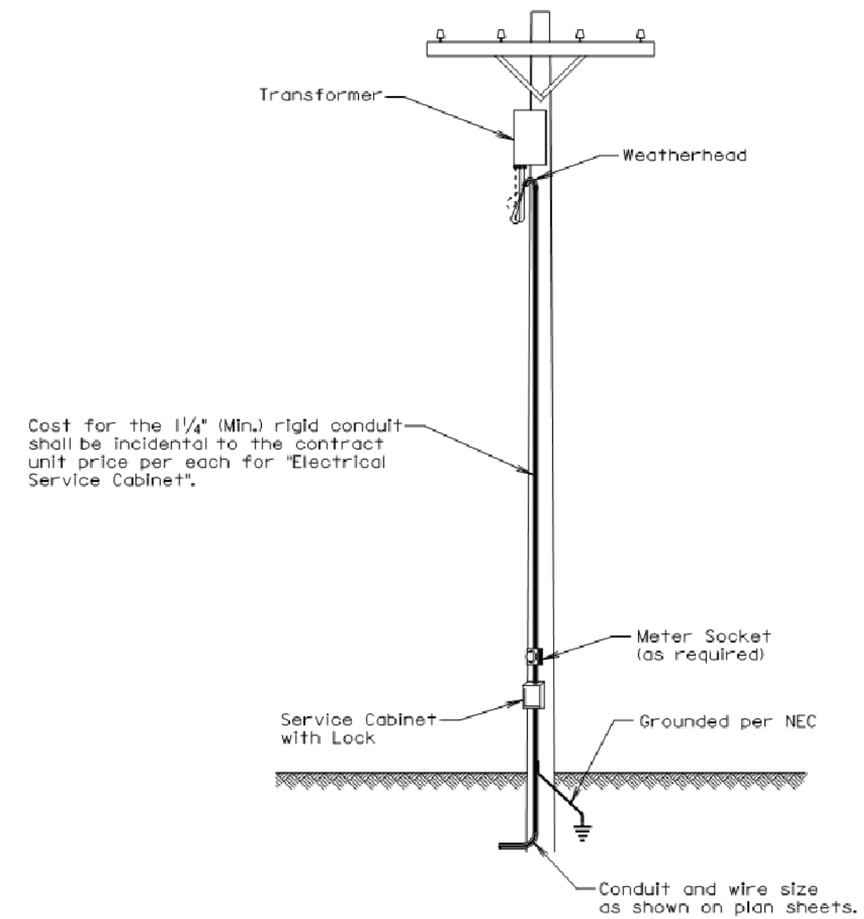

ELEVATION VIEW

GENERAL NOTE:

The service cabinet shall include an externally mounted 15A receptacle outlet. The receptacle shall be housed in a lockable NEMA 3R enclosure. The Contractor shall furnish a lock and keys to the Engineer as directed.

All costs for furnishing and installing all materials from the electrical service cabinet to the transformer including labor, wire, equipment, hookup fees, all items within the cabinet, lockable enclosure with receptacle outlet, lock and keys, meter socket if required, conduit and incidentals shall be incidental to the contract unit price per each for "Electrical Service Cabinet."

June 26, 2016

Published Date: 3rd Qtr. 2016	SDDOT	SERVICE CABINET ON OVERHEAD UTILITY POLE	PLATE NUMBER 635.40 Sheet 1 of 1

08-22-16, K:\2013\BR130033 - Mt. Rushmore Road - Phase II\BR130335_6-21-2016 (SIGNAL MOVEMENT).dwg

FOR BIDDING PURPOSES ONLY

STATE OF SOUTH DAKOTA	PROJECT	SHEET	TOTAL SHEETS
	NH0016(84)67	L34	L38

PLOTTING DATE: 7-29-16
REVISION DATE: 8-19-16

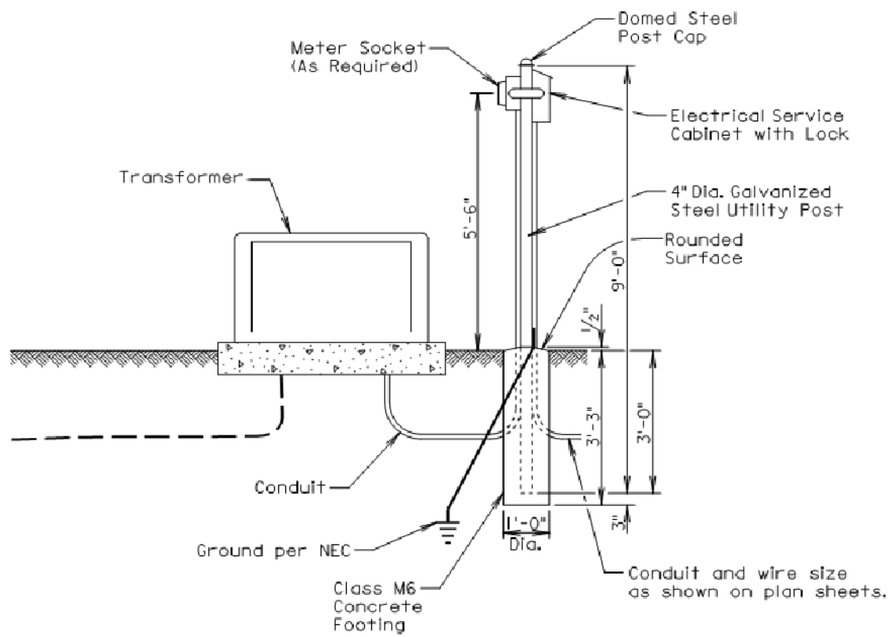

ELEVATION VIEW

GENERAL NOTES:

The service cabinet shall include an externally mounted 15A receptacle outlet. The receptacle shall be housed in a lockable NEMA 3R enclosure. The Contractor shall furnish a lock and keys to the Engineer as directed.

The concrete for the post footing shall be class M6 concrete.

The 4" diameter galvanized steel utility post shall be 9' long and shall be in conformance with AASHTO Standard Specifications M181. The post shall be Type 1 and either Grade 1 or Grade 2. The domed steel post cap shall be in conformance with AASHTO Standard Specifications M181 and shall be Type 1.

The Contractor shall contact and coordinate his/her work with the Utility Companies regarding hookup requirements, fees, materials, and equipment necessary.

All costs for furnishing and installing all materials from the electrical service cabinet to the transformer including labor, equipment, hookup fees, all items within the cabinet, lockable enclosure with receptacle outlet, lock and keys, post, concrete footing, post cap, meter socket if required, conduit, and incidentals shall be incidental to the contract unit price per each for "Electrical Service Cabinet".

June 26, 2016

Published Date: 3rd Qtr. 2016	SDDOT	SERVICE FROM PAD MOUNTED TRANSFORMER WITH METER ON A GALVANIZED STEEL UTILITY POST	PLATE NUMBER 635.41
			Sheet 1 of 1

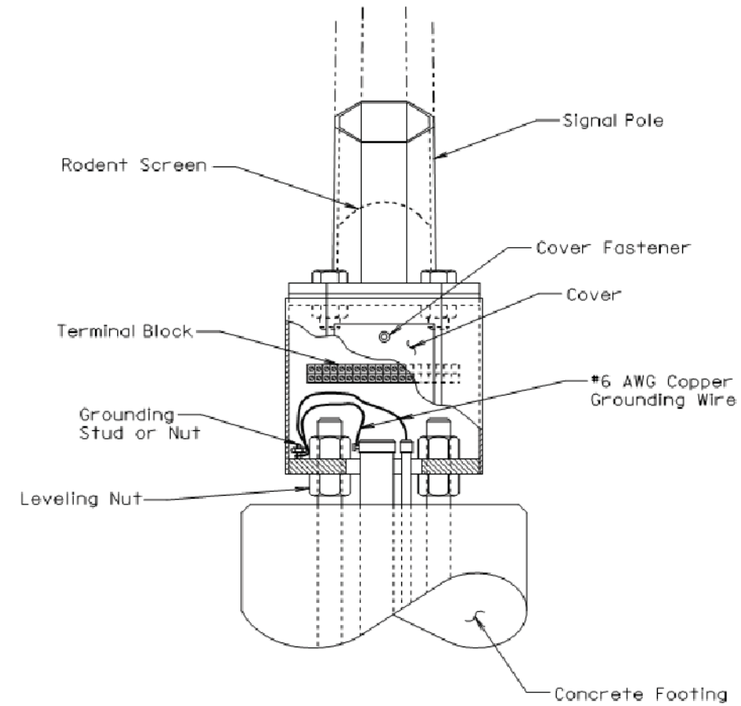

GENERAL NOTES:

Base details are provided for example only and are not intended to be a complete design.

The Contractor shall furnish and install a rodent screen in the signal pole above the tranformer base. The rodent screen shall be a galvanized steel mesh with a maximum opening size of 1/4 inch. The rodent screen shall be friction fitted or installed by other methods approved by the Engineer.

All costs for furnishing and installing the rodent screen including labor, equipment, and materials shall be incidental to the contract unit price per each for the corresponding signal pole bid item.

December 23, 2008

Published Date: 2nd Qtr. 2016	SDDOT	TRANSFORMER SIGNAL POLE BASE	PLATE NUMBER 635.50
			Sheet 1 of 1

08-22-16 K:\2013\BR13033 - Mt. Rushmore Road - Phase II\BR130335E 6-21-2016 (SIGNAL MOVEMENT).dwg

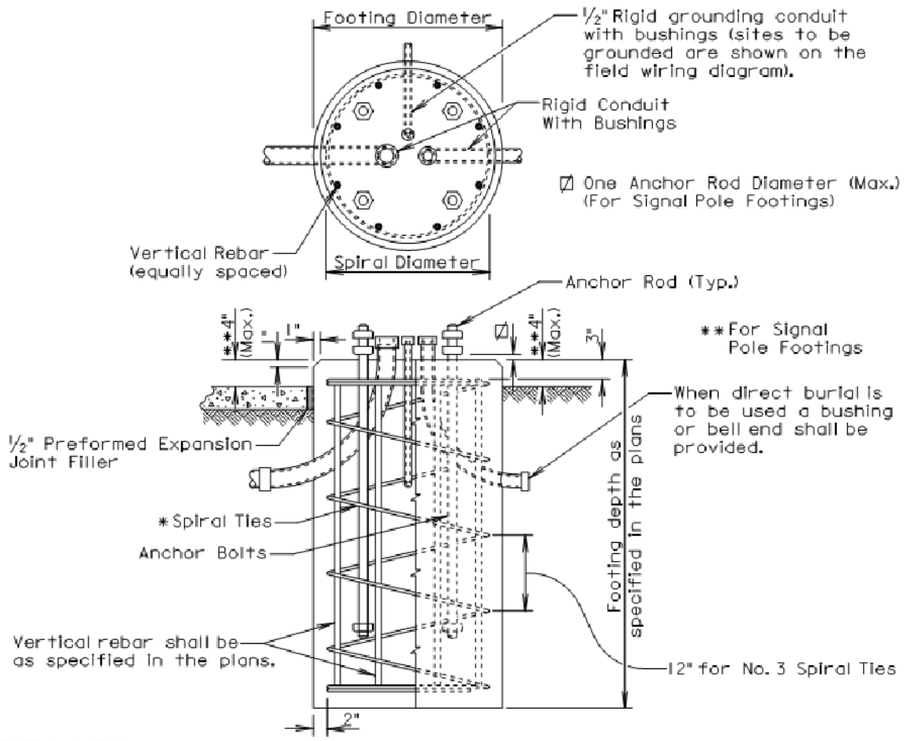

GENERAL NOTES:

* Circular ties may be used in lieu of the spiral ties. The No. 3 ties shall be spaced 12 inches apart except for the top two which shall be spaced 6 inches apart. The ties shall be lapped 18 inches and the laps shall be staggered around the cage.

Spiral ties shall have 1-1/2 extra turns at each end.

See Section 985 of the Specifications for footing materials.

Conduits and bushings may project 2½ inches to 6 inches above footing for fixed base poles but shall not project above the slip plane or fracture plane for breakaway poles.

Conduits shall be sealed water-tight during all phases of construction until poles are in place.

The anchor rods shall fit inside the reinforcing steel cage. If the anchor rods designed by the Pole Manufacturer do not fit, contact the Office of Bridge Design for footing redesign. No additional payment will be made for the redesigned footing.

Costs of conduit and conduit bushings shown on footing detail shall be incidental to the footing bid item(s).

The pole shall not be installed until the concrete has attained design strength (4000 psi).

The contour of the area surrounding the breakaway pole shall be flat, though not necessarily level for a distance of 5 feet in all directions. The Contractor may be required to provide finish grading at some breakaway pole locations.

June 26, 2015

Published Date: 2nd Qtr. 2016	SDDOT	POLE FOOTING	PLATE NUMBER 635.55
			Sheet 1 of 1

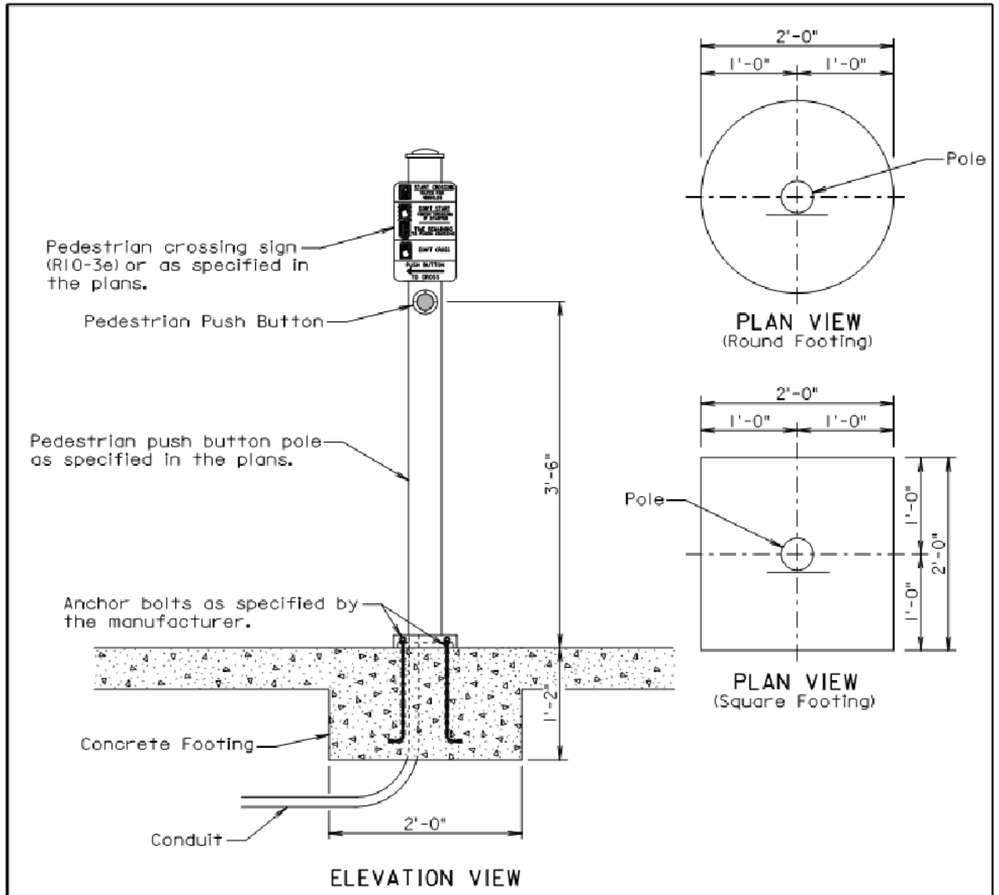

GENERAL NOTES:

The pedestrian push button pole shall be as specified in the plans.

The Contractor shall install either the round or the square concrete footing. For informational purpose, the quantity of concrete for one footing is 0.14 cubic yards for the round footing and 0.17 cubic yards for the square footing.

The concrete for the footing shall be class M6 concrete.

All costs for furnishing and installing the concrete footing shall be incidental to the contract unit price per square foot for the corresponding concrete sidewalk bid item.

All costs for furnishing and installing the pedestrian push button pole including labor, equipment, and materials including the pole, cap, and the conduit in the footing shall be incidental to the contract unit price per each for "Pedestrian Push Button Pole".

March 21, 2016

Published Date: 2nd Qtr. 2016	SDDOT	PEDESTRIAN PUSH BUTTON POLE	PLATE NUMBER 635.57
			Sheet 1 of 1

08-22-16 K:\2013\BR13033 - Mt. Rushmore Road - Phase II\BR130335E 6-21-2016 (SIGNAL MOVEMENT).dwg

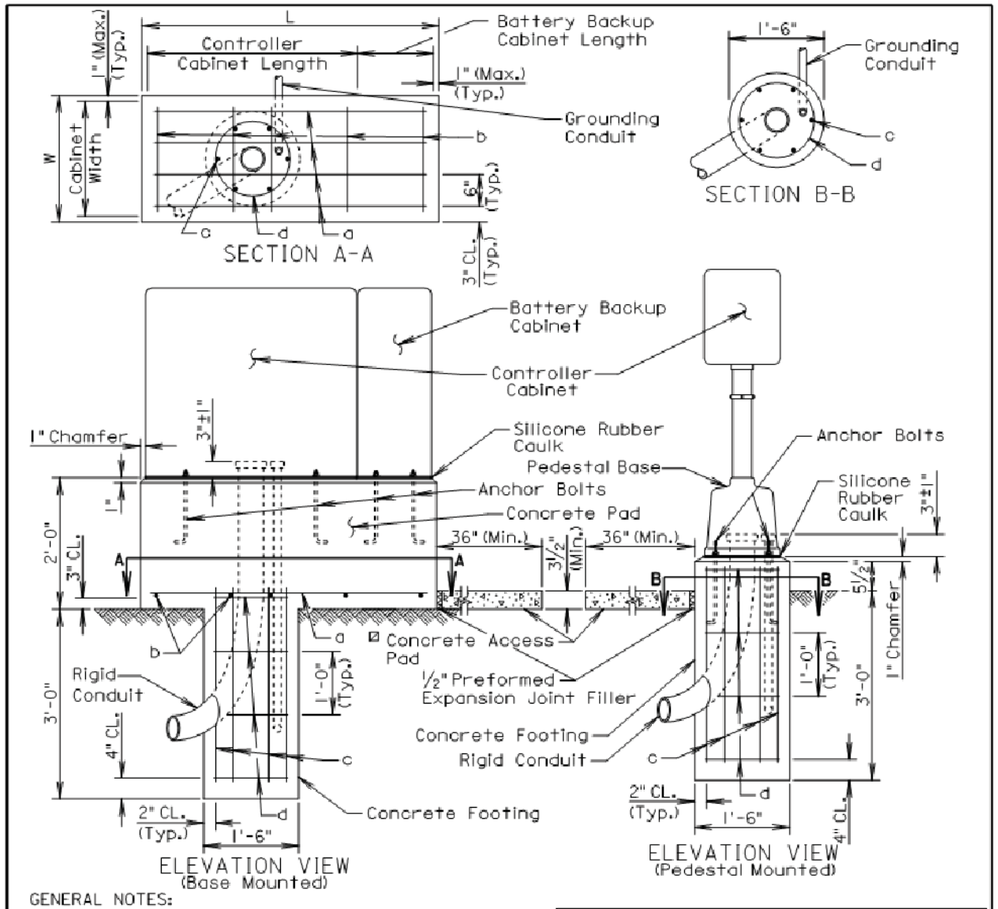

GENERAL NOTES:

The concrete pad shall conform to the base of the controller and battery backup cabinets to the satisfaction of the Engineer.

Conduits shall be sealed water-tight until the conductor cables are installed.

⊠ If the controller and battery backup concrete pad and footing is not located within or adjacent to an existing sidewalk, the Contractor shall provide a concrete access pad as directed by the Engineer.

Anchor bolts and related hardware shall conform to the controller and battery backup cabinets manufacturer's specifications.

A continuous bead of silicone rubber caulk shall provide a weather-tight seal between the concrete pad or footing, and the cabinet or base.

REINFORCING SCHEDULE (for one footing)

Mk.	No.	Size	Length	Type	Bending Detail
a	*	3	L - 4"	Str.	
b	*	3	W - 4"	Str.	
c	6	6	3'-0"	Str.	
d	4	3	4'-0"	T3	Type T3

Note: Dimensions are out to out of bar
* Vary number of bars as required by footing size.

March 21, 2016

Published Date: 2nd Qtr. 2016 | SDDOT | CONTROLLER CABINET AND FOOTING | PLATE NUMBER 635.60 | Sheet 1 of 1

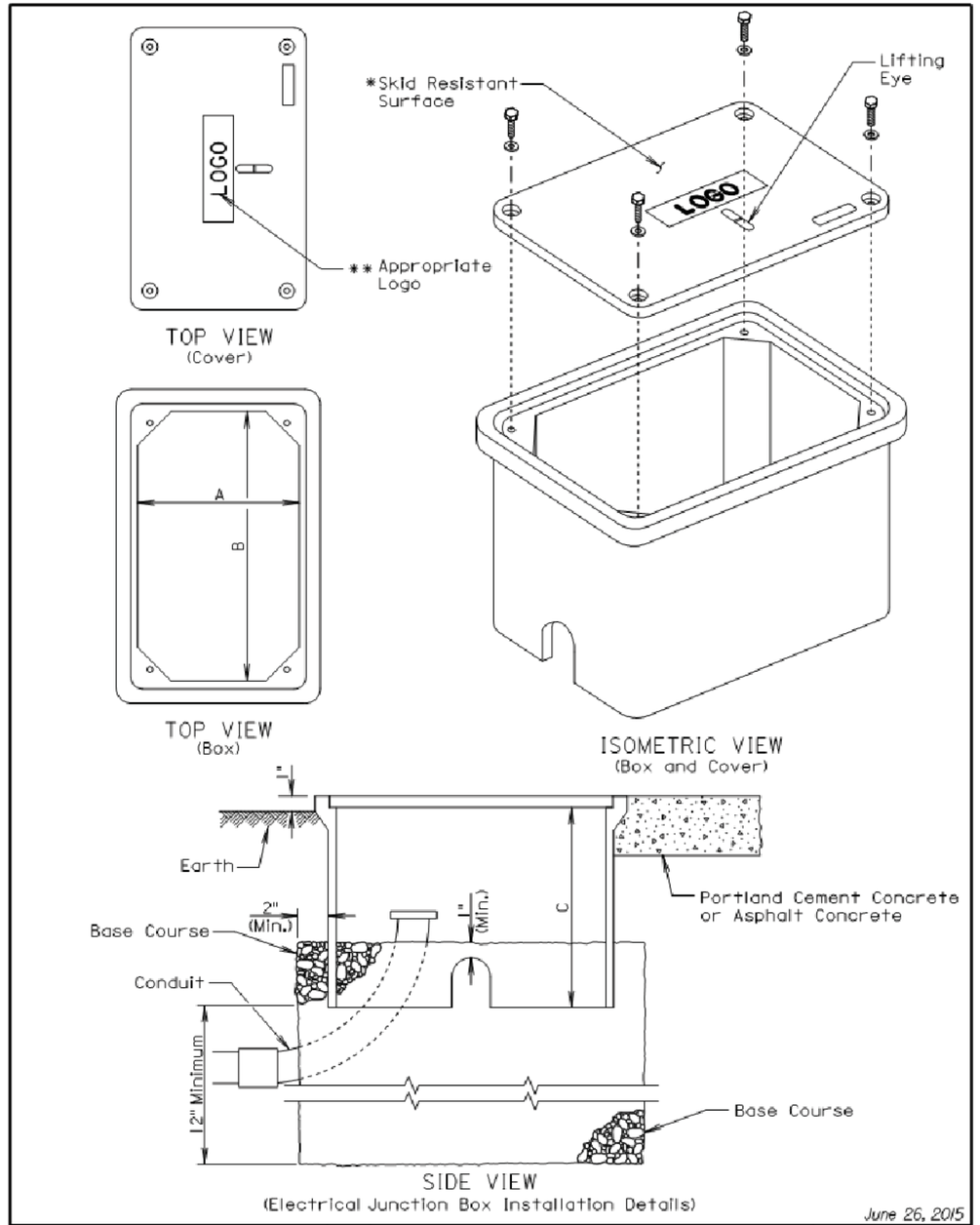

June 26, 2015

Published Date: 2nd Qtr. 2016 | SDDOT | ELECTRICAL JUNCTION BOXES TYPE 1 THROUGH TYPE 4 | PLATE NUMBER 635.65 | Sheet 1 of 2

08-22-16 K:\2013\BR13033 - Mt. Rushmore Road - Phase II\BR13033F 6-21-2016 (SIGNAL MOVEMENT).dwg

ELECTRICAL JUNCTION BOX

TYPE	DESCRIPTION	DIMENSIONS		
		A	B	C
1	Open Bottom with Gasket	11"-15"	18"-21"	18" (Min.)
2	Open Bottom with Gasket	13"-18"	23"-28"	18" (Min.)
3	Open Bottom with Gasket	17"-22"	24"-30"	18" (Min.)
4	Open Bottom with Gasket	28"-33"	36"-48"	24" (Min.)

GENERAL NOTES:

The cover shall be gasketed with a minimum of two stainless steel bolts and washers.

The cover shall have a lifting eye.

* The surface of the cover shall have a minimum wet and dry coefficient of friction value of 0.5 as determined by ASTM F 609.

** The cover of the junction box shall have the appropriate logo in one inch size letters and shall be recessed. When the junction box contains cables or wires for a traffic signal then the logo shall be "Signal". When the junction box contains lighting conductors then the logo shall be "Lighting".

The electrical junction boxes shall comply with the American National Standards Institute (ANSI)/Society of Cable Telecommunications Engineers (SCTE) 77 2007 Specification for Underground Enclosure Integrity. The loading requirement for all the electrical junction boxes shall be Tier 8 of ANSI/SCTE 77 2007.

The electrical junction boxes shall be UL listed.

June 26, 2015

Published Date: 2nd Qtr. 2016	SDDOT	ELECTRICAL JUNCTION BOXES TYPE 1 THROUGH TYPE 4	PLATE NUMBER 635.65
			Sheet 2 of 2

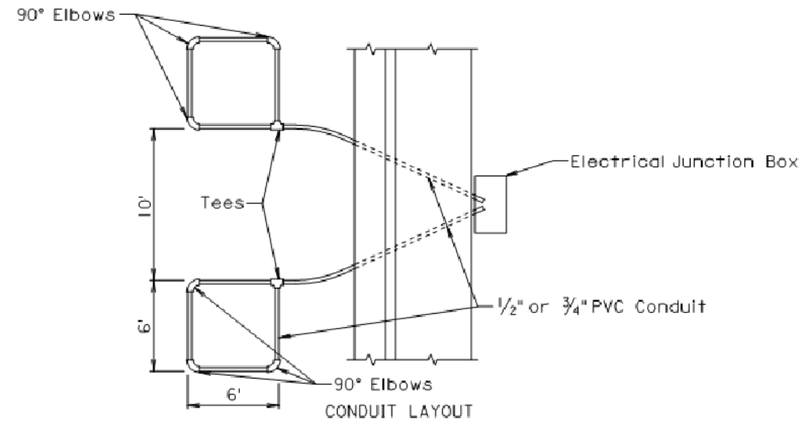

CONDUIT LAYOUT

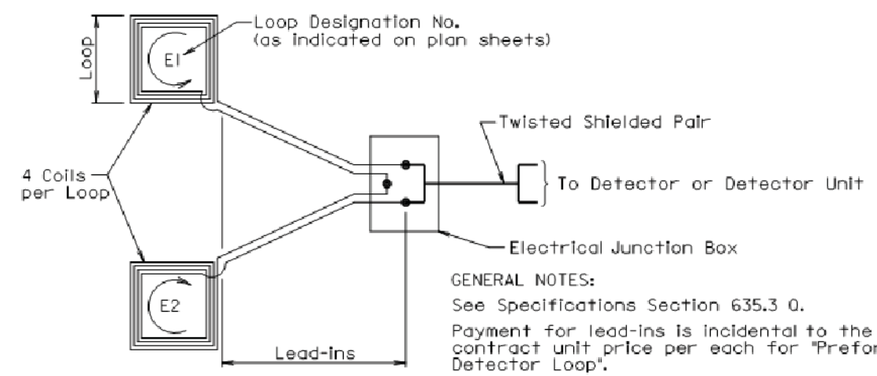

GENERAL NOTES:

See Specifications Section 635.3 O.

Payment for lead-ins is incidental to the contract unit price per each for "Preformed Detector Loop".

WIRING DIAGRAM

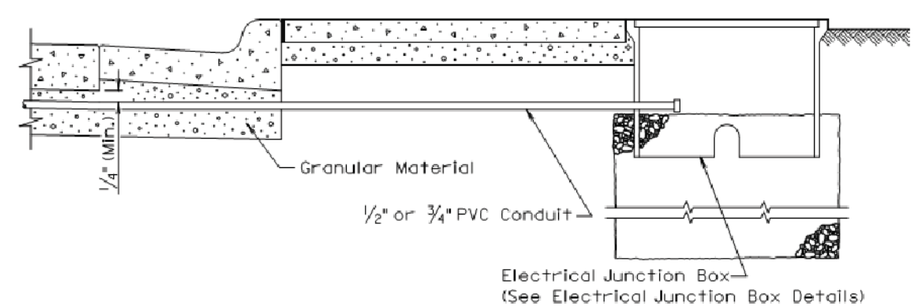

LEAD-IN DETAIL

June 26, 2015

Published Date: 2nd Qtr. 2016	SDDOT	PREFORMED DETECTOR LOOP	PLATE NUMBER 635.70
			Sheet 1 of 1

08-22-16 K:\2013\BR13033 - Mt. Rushmore Road - Phase II\BR13033E 6-21-2016 (SIGNAL MOVEMENT).dwg

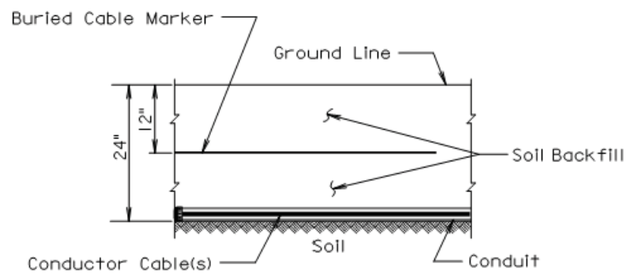

SECTION VIEW

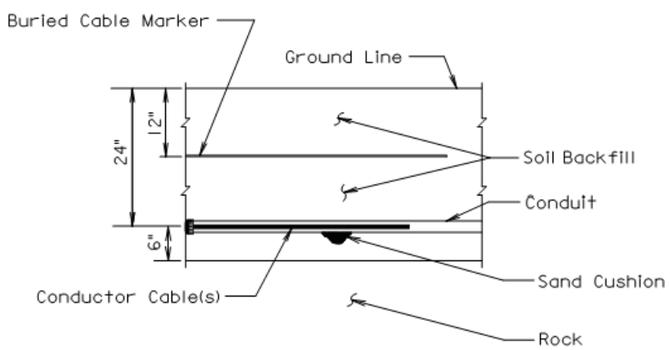

SECTION VIEW

GENERAL NOTE:

The Buried Cable Marker shall be plastic, approximately 6" wide, and shall be capable of sustaining a minimum of a 350% tolerance of elongation without tearing. The Buried Cable Marker shall have a life expectancy approximately equal to that of the conductor(s) beneath it. A phrase indicating the presence of a buried electric circuit below shall be printed in a contrasting color on the cable marker. The Buried Cable Marker shall be subject to approval by the Engineer. All costs associated with furnishing and installing the Buried Cable Marker shall be incidental to the contract unit price per Foot for the bid item used for the electrical conductor.

March 31, 2000

Published Date: 2nd Qtr. 2016	SDDOT	CONDUIT INSTALLATION	PLATE NUMBER 635.76
			Sheet 1 of 1

08-22-16 K:\2013\BR13033 - Mt. Rushmore Road - Phase II\BR13033F 6-21-2016 (SIGNAL MOVEMENT).dwg