Meade County
P 7668(05)
PCN 04AE

A Pre-Bid meeting will be held in Sturgis at the Sturgis Fire Hall (1901 Ballpark Road) from 10:00am to 12:00pm MT on Thursday, February 18, 2016. All interested parties are strongly encouraged to attend.

SECTION L: LIGHTING PLANS

FOR BIDDING PURPOSES ONLY

STATE OF SOUTH DAKOTA	PROJECT	SHEET	TOTAL SHEETS
	P 7668 (05)	L1	L27

Plotting Date: 11/24/2015

INDEX OF SHEETS

L1	General Layout w/ Index
L2 - L8	Estimate w/ General Notes & Tables
L9 - L18	Conduit Layouts
L19 - L20	Wiring Diagrams
L21 - L22	Informational Sheets
L23 - L27	Standard Plates

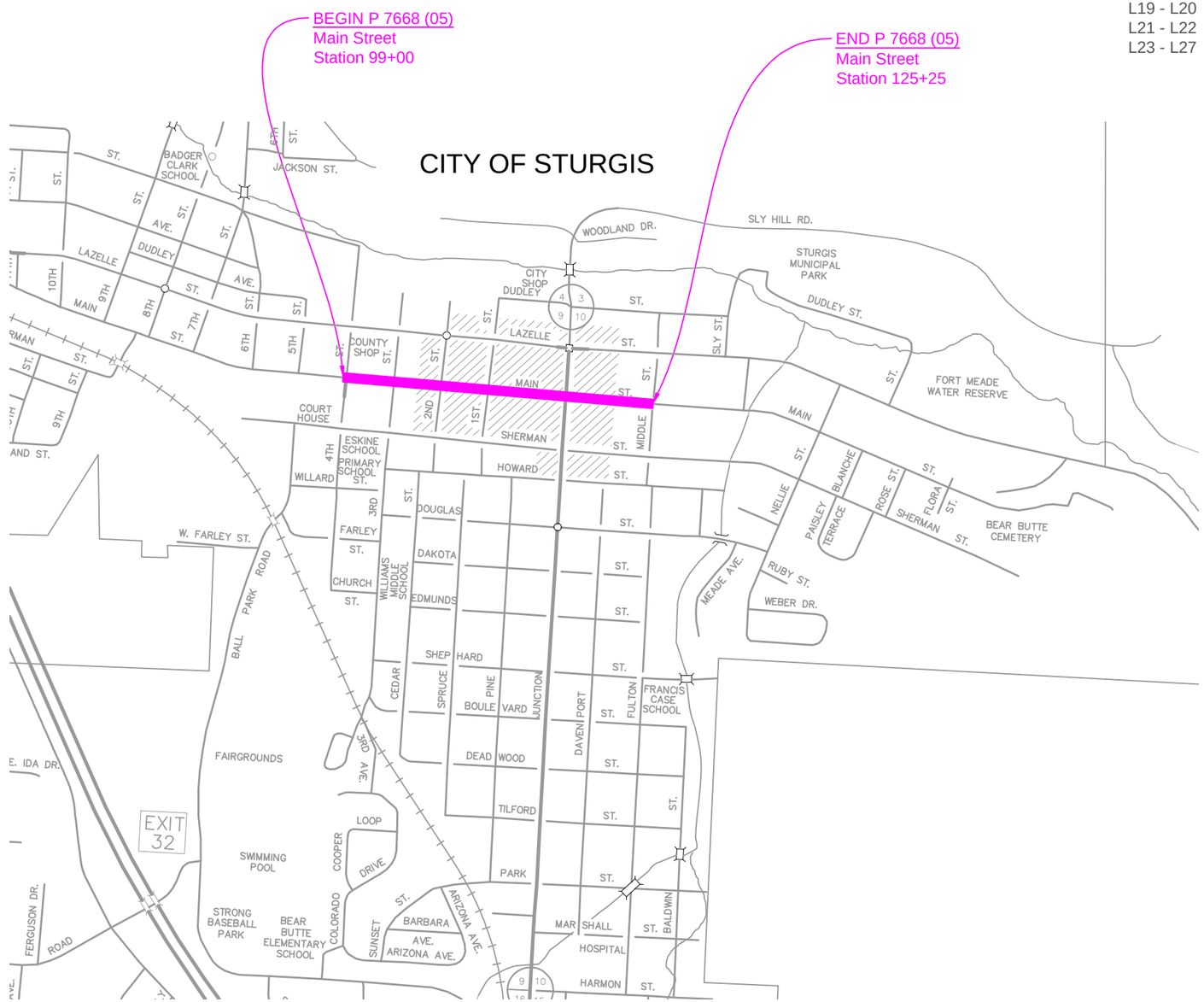

L:\14-2030 Sturgis Main St Reconst\Drawings\Eng\Sheet Files\Section L\14-2030 SECTION L LIGHTING PLANS.dwg 11/24/2015 1:14:51 PM

SECTION L ESTIMATE OF QUANTITIES

BID ITEM NUMBER	ITEM	QUANTITY	UNIT
110E1540	Remove Luminaire Pole Footing	24	Each
110E5100	Salvage Luminaire Pole	25	Each
635E0050	Breakaway Base Luminaire Pole with Arm, 50' Mounting Height	9	Each
635E0900	Decorative Luminaire Pole	36	Each
635E3700	Roadway Luminaire, LED with Photoelectric Cell	9	Each
635E3810	Decorative Luminaire, LED	36	Each
635E5020	2' Diameter Footing	261.0	Ft
635E5302	Type 2 Electrical Junction Box	11	Each
635E5303	Type 3 Electrical Junction Box	4	Each
635E5304	Type 4 Electrical Junction Box	8	Each
635E6200	Miscellaneous, Electrical	Lump Sum	LS
635E8120	2" Rigid Conduit, Schedule 40	6,470	Ft
635E8220	2" Rigid Conduit, Schedule 80	620	Ft
635E8230	3" Rigid Conduit, Schedule 80	220	Ft
635E9014	1/C #4 AWG Copper Wire	26,745	Ft
635E9020	1/C #10 AWG Copper Wire	4,585	Ft
635E9024	1/C #14 AWG Copper Wire	2,480	Ft
635E9710	2/C #10 AWG Copper Pole and Bracket Cable	1,385	Ft
635E9924	24 Strand Fiber Optic Cable	4,670	Ft

SUPPLYING AS BUILT PLANS

If the fiber optic system or roadway lighting systems are constructed differently than what is stated in the plans, the Contractor shall supply as built plans to the Engineer and a copy shall be sent to the Rapid City Region. The as built plans may include conduit layouts, wiring diagrams, or other drawings depicting the changes from the original plans.

SHOP DRAWING AND CATALOG CUTS SUBMITTALS

The Contractor shall submit shop drawings and catalog cuts in accordance with Section 985 of the Specifications or in Adobe PDF format.

Adobe PDF submittals shall be sent to the following email addresses:

Stacy.Bartlett@state.sd.us

ON-SITE INSPECTION

An on-site inspection of the fiber optic system and roadway lighting systems shall be conducted before acceptance of the project, once the systems are completed and operational. The on-site inspection shall be conducted by the Project Engineer with the Contractor and the City Public Works present.

SALVAGE LUMINAIRE POLE

Existing luminaire poles EDL1-EDL24 shall be salvaged and delivered to the City of Sturgis by the Contractor.

The existing luminaire arm EBH1 shall be removed by Black Hills Power (BHP). The BHP contact is Dean Sigman 605.720.3304.

The Contractor shall coordinate the removal of existing luminaire poles, the existing luminaire arm with the construction of new sidewalk and installation of new luminaire poles. The Contractor shall notify the City 5 days before the delivery of the salvaged luminaire poles. The City contact is Rick Bush 605.347.3916.

All costs for work involved in the salvage and delivery of the existing luminaire poles, luminaire arm and luminaires shall be incidental to the contract unit price per each for “Salvage Luminaire Pole”.

REMOVE LUMINAIRE POLE FOOTING

The footings of existing luminaire poles EDL1-EDL24 shall be removed by the Contractor to a minimum of 2’ below the ground surface. Restoration of the disturbed area shall be to the satisfaction of the Engineer.

All costs for removing the footings of the existing luminaire poles shall be incidental to the contract unit price per each for “Remove Luminaire Pole Footing”.

TABLE OF FOOTING DATA

Site Designation	Footing Diameter	* Footing Depth	**Spiral Diameter	**Spiral Length	Vertical Reinforcement
DL1-DL36	2’ - 0”	5’ - 0”	1’ - 8”	39’ - 0”	8-#7 x 4’ - 6”
L1-L9	2’ - 0”	9’ - 0”	1’ - 8”	60’ - 0”	8-#7 x 8’ - 6”

* Footing depth shall be below ground level.
** The size of all spirals shall be #3.

FOOTING DATA

Subsurface conditions within the project consist of 4 to 7 ft. of brown silt-sand to clay-silt over brown sand and gravel to a depth of 15 ft. below the surface. Groundwater was not encountered at the time of the investigation in July 2013 and the borings remained open to 15 ft. below the surface.

During construction of the cylindrical footings, concrete placement operations should closely follow excavation procedures. The longer the excavations are left open the more likely caving may occur. If caving soils are encountered during excavation, casing may be required to construct the cylindrical footings.

Concrete shall not be dropped through standing water. If water is present in the excavation it shall be removed prior to concrete placement or the concrete shall be tremied. If caving occurs during dewatering the concrete shall be placed through a tremie or by means of a casing.

The boring logs and laboratory tests are available for review at the Central Office in Pierre. If questions arise or additional information is needed concerning the cylindrical footings contact the Geotechnical Engineering Activity in Pierre 605.773.3401.

POLE LOCATIONS

Luminaire poles shall be located as indicated on plan sheets. Pole footings shall have a 5’ horizontal clearance from utility lines where possible. Hand trenching may be necessary to avoid disturbing utilities in areas where the horizontal clearance cannot be met. A vertical distance of 18’ shall be maintained from all overhead utility lines where possible. The Contractor shall contact the Project Engineer before adjusting specified luminaire pole locations.

BREAKAWAY BASES

A statement is required, signed by a Professional Engineer registered in the State of South Dakota, certifying that the breakaway base devices meet the design requirements, including breakaway and structural adequacy, of the "AASHTO Specifications for Structural Supports for Highway Signs, Luminaires, and Traffic Signals". The physical testing procedures outlined in Section 8 of the Fifth Edition of the Aluminum Association's "Specifications for Aluminum Structures" may be used to establish service limits for structural adequacy certification of aluminum breakaway transformer bases and frangible couplings. If requested, test data of production samples to support the certification shall be provided. Luminaire poles L1-L9 shall have breakaway bases.

BREAKAWAY BASE POLE

Luminaire poles L1-L9 shall have a convenience duplex festoon outlet receptacle (15 amp, 3 wire) suitable for outdoor use. The outlet receptacle shall not be connected to the luminaire photocell.

Luminaire poles L1-L9 shall have mounts for decorative flags and support decorative banner attachment brackets.

DECORATIVE LUMINAIRE POLE

Decorative luminaire poles DL1-DL36 shall be 16’ cast aluminum shaft with a 5” fluted outside diameter, 17” round base.

The decorative luminaire poles shall have a convenience duplex festoon outlet receptacle (15 amp, 3 wire) suitable for outdoor use. The outlet receptacle shall not be connected to the luminaire photocell.

Decorative luminaire poles DL1-DL36 shall have mounts for decorative flags and support decorative banner attachment brackets.

Decorative luminaire poles shall have identical color, and match the appearance of existing decorative luminaire poles EDL1-EDL24. The following luminaire pole or **equivalent** meets the requirements for this design:

Holophane: North Yorkshire Aluminum Pole,
Model Number NYA16

LUMINAIRES

The accepted design for the roadway luminaires L1-L9 shall provide 1.2 and greater average maintained foot-candles and a uniformity ratio (average maintained to minimum maintained foot-candles) of 3:1 and less using the following parameters:

Setback:	2 Ft.
Lamp Loss Factor (LLF):	0.7
Width of Lighted Area:	50 Ft.
Spacing:	280 Ft. (140 Ft one-sided)
Configuration:	Staggered
Mounting Height:	50 Ft.
Lamp:	LED

The following luminaire or equivalent meets the requirements for this design:

American Electric: Test No. ATB2 80B LED E10 R2 5K LED, Medium, cutoff

The accepted design for the roadway luminaires DL1-DL36 shall provide 1.2 and greater average maintained foot-candles and a uniformity ratio (average maintained to minimum maintained foot-candles) of 3:1 and less using the following parameters:

Setback:	4 Ft.
Lamp Loss Factor (LLF):	0.7
Width of Lighted Area:	50 Ft.
Spacing:	85 Ft.
Configuration:	Opposite
Mounting Height:	16 Ft.
Lamp:	LED

The decorative luminaires shall match the 8-sided octagonal lantern with top and bottom spurs and finial spike appearance of existing decorative luminaires EDL1-EDL24. The following decorative luminaire or **equivalent** meets the requirements for this design:

Holophane: Test No. JFUE 100 5K G3 B S

Three copies of the isofootcandle charts and utilization curves shall be furnished to the Engineer for approval. The Contractor must get approval from the Engineer prior to installation of the luminaires.

LED SIGN

The Contractor shall install new 1/C #10 AWG copper wires from the electrical service cabinet to the LED sign on Span Pole ES6 at station 110+73. The Contractor shall remove the existing wires that power the LED sign.

The Contractor shall coordinate the installation of the new wire for the LED sign with the construction of new sidewalk and installation of new luminaire poles. The Contractor shall notify the City 5 days before installing the new wire to the LED sign. The City contact is Rick Bush 605.347.3916.

All costs for work involved in the removing and installing wire to the LED sign and making the LED sign operational shall be incidental to the contract price per foot for “1/C #10 AWG Copper Wire”.

FIBER OPTIC CABLE INTERCONNECTION

The Contractor shall install fiber optic cable to allow the existing camera fiber network to transmit video imagery from cameras 12, 18, 19, 21, 22, 25 & 26 to the SDDOT Sturgis Maintenance Shop on a single mode fiber optic cable pair. Daisy chained single mode fiber cable links shall connect various locations of cameras by managed multiport Ethernet switches with fiber optic uplink ports.

Camera IP schemes shall be devised and programmed by SDBIT. The Contractor shall install programmed fiber switches on luminaire poles L4, L5, L8 & L9 and in the electrical service cabinet at the intersection on Junction Ave and the Alley between Main St & Sherman St. The 3-port fiber switch residing in the electrical service at the intersection on Junction Ave and the Alley between Main St & Sherman St will be replaced with a 5-port fiber switch. The 5-port fiber switch shall be supplied to the Contractor by SDDOT. The Contractor shall deliver the 3-port fiber switch to SDDOT.

The Contractor shall install the new 24 single mode fiber optic cable from luminaire pole L9 to the electrical service at the intersection on Junction Ave and the Alley between Main St & Sherman St and terminate 12 of the new 24 single mode fiber optic cables in a patch panel in the electrical service cabinet.

The Contractor shall terminate fiber optic cable in cabinets located on luminaire poles L4, L5, L8 & L9 and install CAT5 cable to cameras 12, 18, 19, 21, 22, 25 & 26.

The Contractor shall coordinate the installation new fiber optic with the City. The City contact is Rick Bush 605.347.3916.

All costs for materials and equipment to connect new fiber optic cable to existing fiber optic cable, install fiber switches. coordinating installs, labor, and testing required to and transmit video imagery from camera 12, 18, 19, 21, 22, 25 & 26 to the SDDOT Sturgis Maintenance Shop on fiber optic cable shall be incidental to the contract unit price per each for “24 Strand Fiber Optic Cable”.

MAIN ST BETWEEN JUNCTION AVE & MIDDLE ST

The Contractor shall remove existing decorative luminaire pole footings EDL19 – EDL24 without damaging the existing lighting conduit. The Contractor shall install new conduit with necessary fittings to intercept the existing lighting conduit and form a seamless linear connection to the new luminaire poles and existing conduit. If sidewalk removal and sidewalk replacement is determined necessary by the Project Engineer, sidewalk removal and sidewalk replacement shall be paid at contract prices.

The Contractor shall use the existing roadway lighting electrical service cabinet in the NE quadrant of the intersection of Main St & Middle St. The existing electrical service cabinet will retain the roadway lighting circuit breaker.

The Contractor shall install new 1/C #4 AWG copper wires from the electrical service cabinet to decorative luminaire pole DL27 & DL29-DL36 in existing conduit. The Contractor shall remove the existing wires and may use the existing wires to pull/install the 1/C #4 AWG copper wires.

The Contractor shall install fiber optic cable in the existing conduit from luminaire pole L9 to the electrical service at the intersection on Junction Ave and the Alley between Main St & Sherman St to transmit video imagery from camera 12 to the SDDOT Sturgis Maintenance Shop. The Contractor shall terminate 12 of the new 24 single mode fiber optic cables in a patch panel in the electrical service cabinet.

The Contractor shall install CAT5 cable from the fiber switch to camera 12.

All costs for labor and materials required to intercept the existing conduit and connect to new conduit shall be incidental to the contract price per foot for “2” Rigid Conduit, Schedule 40”.

All costs for materials and equipment to connect new fiber optic cable to existing fiber optic cable, terminate the fiber ends, labor, and testing required to transmit video imagery to the SDDOT Sturgis Maintenance Shop on fiber optic cable shall be incidental to the contract unit price per each for “24 Strand Fiber Optic Cable”.

JUNCTION AVE FROM MAIN ST SOUTH TO ALLEY

The Contractor shall install fiber optic cable in conduit from junction boxes JS2 to JF6. The Contractor shall remove two sidewalk panels at the work limits of the project on Junction Ave and 2 panels of sidewalk at luminaire pole EL37 and bore conduit. Sidewalk panel removal and replacement is included in the sidewalk tables and estimate of quantities.

The Contractor shall install junction box JF6 to intercept existing conduit from EL37 to EJL2. The Contractor shall pull the fiber optic cable from JF6 to JF and into the electrical service cabinet.

The Contractor shall terminate 12 of the new 24 single mode fiber optic cable in the electrical service cabinet. The fiber pair used for video imagery transmission to the SDDOT Sturgis Maintenance Shop and remaining fibers in the tube shall be terminated at the patch panel in the electrical service cabinet. The terminated fiber pairs shall have adequate length for connection to the 5-port fiber switch that will replace the 3-port fiber switch in electrical service cabinet.

All costs for materials and equipment to connect new fiber optic cable to existing fiber optic cable, terminate the fiber ends, labor, and testing required to transmit video imagery to the SDDOT Sturgis Maintenance Shop on fiber optic cable shall be incidental to the contract unit price per each for “24 Strand Fiber Optic Cable”.

MISCELLANEOUS ELECTRICAL - FIBER SWITCHES

The Contractor shall supply and install 4 managed Ethernet switches with Gigabit fiber optic uplink ports at relocated Camera 12, 18 & 19, 21 & 22 and 25 & 26. The fiber switches shall be managed by Milestone video management software.

The fiber switches shall be housed in a weatherproof cabinet enclosure. The fiber switch size shall not exceed 7.5”x3”x5.5”. The fiber switch shall meet or exceed the following specifications; IEEE 1613 (electric utility substations), IEC 61850-3 (electric utility substations), IEC 61800-3 (variable speed drive systems), IEC 61000-6-2 (generic industrial), NEMA TS-2 (traffic control equipment) and IEEE 802.1p. The fiber switch shall have Hazardous Location Certification Class 1, Division 2

The fiber switches shall have 2 Gigabit fiber optic Ethernet ports and 4 fast Ethernet copper ports or greater. The fiber switch shall have connector type LC. The fiber switch shall operate at -40 degrees Celsius to 85 degrees Celsius. The fiber switch shall support Gigabit distances to 70km. The fiber switch shall have 128-bit encryption.

The integrated fiber switch power supply shall have a universal high voltage range: 88-300VDC or 85-264VACpower supply. The fiber switch shall have dual low voltage DC inputs: 24VDC (10-36VDC) or 48VDC (36-72VDC).

The following fiber switch or **equivalent** meets the requirements for this design:

RUGGEDCOM RS900G-HI-P-2LC-10

The Contractor shall submit the fiber switches to SDDOT for programming 4 weeks prior to removing media converters. SDDOT will return programmed fiber switches to the Contractor for installation. The SDDOT contact is Stacy Bartlett 605.773.2268

The Contractor shall install a fiber switch on luminaire pole L9 for camera 12. The Contractor shall install a fiber switch on luminaire pole L8 for cameras 18 & 19. The Contractor shall install a fiber switch on luminaire pole L5 for cameras 21 & 22. The Contractor shall install a fiber switch on luminaire pole L4 for cameras 25 & 26.

SDDOT will supply the Contractor with a programmed 5-port fiber switch to replace the existing 3-port fiber switch in the electrical service cabinet at the intersection on Junction Ave and the Alley between Main St & Sherman St.

All costs for supplying, installing, materials and equipment to connect fiber optic cable to the fiber switch, fiber switch housing, coordinating installs and labor shall be incidental to the contract lump sum price for “Miscellaneous Electrical”.

MISCELLANEOUS ELECTRICAL – RELOCATE CAMERAS & MEDIA CONVERTER REMOVAL

The Contractor shall receive permission from the landowner before removing cameras, cables, media converters from private property. The Contractor shall contact Rick Bush 605.347.3916 for landowner information.

Cameras 18 & 19 reside on a building in the NE quadrant of 1st St & Main St. Media Converter B installed in cabinet on BHP pole 6, in the NE quadrant of 1st St & the alley between SD34/Lazelle St and Main St is connected to Cameras 18 & 19 with CAT5 cable;

The Contractor shall remove Media Converter B from BHP pole 6. The Contractor shall remove copper cables and power cable from Media Converter B on BHP pole 6 to cameras 18 & 19. Media Converter B shall be given to the City of Sturgis Public Works Manager. Cameras 18 & 19 shall be relocated by the Contractor to luminaire pole L8. Cameras 18 & 19 shall connect to the fiber switch with CAT5 cable.

Cameras 21 & 22 reside on a sign in the SW quadrant of 2nd St & Main St. Fiber Switch E installed in cabinet on BHP pole 24B in the NW quadrant of the intersection of 1st St and the alley between Main St & Sherman St is connected to Cameras 21, 22 & 23 with CAT5 cable;

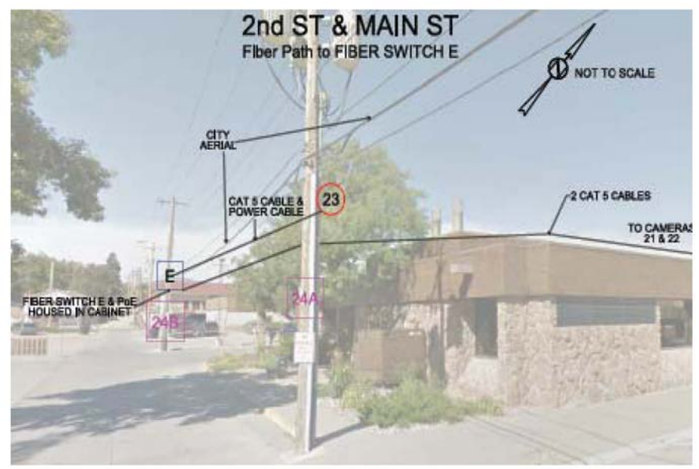

The Contractor shall remove copper cables from Fiber Switch E to Cameras 21 & 22. Cameras 21 & 22 shall be relocated by the Contractor to luminaire pole L5. Cameras 21 & 22 shall connect to the fiber switch with CAT5 cable.

The Contractor shall not disturb Camera 23 and cables from Fiber Switch E to Camera 23.

Cameras 25 & 26 reside on a building in the NE quadrant of 3rd St & Main St. Media Converter D installed in cabinet on BHP pole 13 in the alley between SD34/Lazelle St and Main St is connected to Cameras 25 & 26 with CAT5 cable;

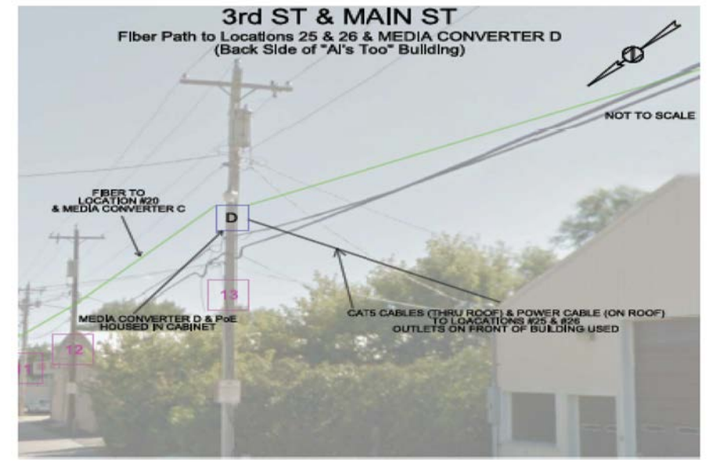

The Contractor shall remove Media Converter D from BHP pole 13. Media Converter B shall be given to the City of Sturgis Public Works Manager. Cameras 25 & 26 shall be relocated by the Contractor to luminaire pole L4. Cameras 25 & 26 shall connect to the fiber switch with CAT5 cable.

Camera 12 resides on BHP pole 28 in the NE quadrant of Middle St & Main St;

Camera 12 shall be relocated by the Contractor to luminaire pole L9. Camera 12 shall connect to the fiber switch with CAT5 cable. All camera hardware on BHP pole 28 shall be delivered to Rick Bush

All costs for relocating cameras, removing cables and media converters, coordinating removals and installs, CAT5 cable and labor shall be incidental to the contract lump sum price for “Miscellaneous Electrical”.

FIBER OPTIC CABLE

The fiber optic cable shall be 24 single mode strand fiber optic cable with each buffer containing twelve fibers. The buffer tubes shall be color coded according to EIA/TIA specifications.

Fiber optic cable shall meet the latest applicable EIA/TIA Specifications and REA PE-90 Specifications for single mode. The fiber optic cable shall be rated for outdoor use.

Singlemode optical cable shall have the following optical and physical characteristics:

1. Cladding diameter of 125µm +/- 2µm.
2. Zero dispersion slope shall be 0.092 ps/ (nm2●km) or less.
3. Zero dispersion wavelength, 1300 to 1322 nm.
4. Cutoff wavelength, less than 1250 nm.
5. Maximum attenuation at 1310 nm shall be 0.4 dB per Kilometer.
6. The outside diameter shall be less than 22.1 nm.
7. One factory fusion splice per kilometer per fiber shall be allowed.

The fiber optic cable shall have a seven-core configuration, dielectric central strength member, and thermoplastic tubes. The minimum bending radii of the cable shall be 209.5 mm under a static load and 419.1 mm during installation. The installation tensile load rating shall be 2.7 kPa.

The cable core interstices shall be filled with water blocking material. If a gel compound is used, the gel compound shall be readily removable with a nontoxic solvent.

The fiber optic cable shall be installed in accordance with the manufacturer's recommendations and the NEC. 15' of slack cable shall be left in each cabinet enclosure and junction box. All junction boxes shall have 50' of slack. Slack cable shall be coiled and tied in a minimum of three places around the coil.

The Contractor shall test the fiber optic cable after the installation to verify the integrity of the fiber.

The Contractor shall coordinate the installation of the fiber with the City. The City contact is Rick Bush 605.347.3916.

All costs for supplying, installing, materials and equipment to connect new fiber optic cable to existing fiber optic cable, splice fiber optic cable, coordinating installs, labor, and testing required to and transmit video imagery shall be incidental to the contract unit price per foot for "24 Strand Fiber Optic Cable".

FIBER OPTIC CABLE TERMINATION

The Contractor shall terminate 12 of the new 24 single mode fiber optic cables in a patch panel in the cabinets mounted on luminaire poles L4, L5, L8 & L9 with LC single mode connectors. The Contractor shall terminate all fibers in the open tube used for connection of cameras 12, 18, 19, 21, 22, 25 & 26 with LC single mode connectors in the electrical service cabinet at the at the intersection on Junction Ave and the Alley between Main St & Sherman St.

Fiber optic cable shall be terminated in weatherproof cabinet enclosures with a wall mounted distribution enclosure. The distribution enclosure shall be dust and moisture resistant. The size of the distribution enclosure shall be adequate for the number of fibers to be used. The distribution enclosure shall be mounted in the cabinet enclosures where it does not interfere with normal cabinet maintenance. The fiber optic cable shall be prepared in accordance with the manufacture's recommendations and have sufficient length to reach the interface panel. Fibers shall be terminated with LC single mode connectors.

All costs for materials and equipment to terminate connections of the fiber optic strands shall be incidental to the contract unit price per foot for "24 Strand Fiber Optic Cable".

CABLE LABELS

Fiber optic cable and Cat-5 cable shall be identified in fiber switches and pole bases. Labels shall be wrapped around cable to indicate the camera that it is connected to. Labels shall be self-adhesive vinyl cloth with a preprinted legend.

CONDUIT INSTALLATION

Coarse granular soil may prevent boring operations for conduit from Junction Ave to Middle St. If soils prohibitive of boring are encountered and the Contractor resorts to trenching methods in the sidewalk, the entire sidewalk panel shall be replaced by the Contractor under the direction of the Project Engineer.

TABLE OF CONDUIT AND CABLE QUANTITIES

FOR BIDDING PURPOSES ONLY

STATE OF SOUTH DAKOTA	PROJECT	SHEET	TOTAL SHEETS
	P 7668(05)	L6	L27

Plotting Date: 11/09/2015

		Rigid Conduit				Copper Wire		Copper Tray Cable, K2	Pole and Bracket Cable	Fiber Optic Cable
		Schedule 40		Schedule 80				#14		
		2"	2"	3"		1/C #4 AWG	1/C #10 AWG	1/C	2/C #10 AWG	24 Strand
Location to Location		Ft	Ft	Ft		Ft	Ft	Ft	Ft	Ft
MAIN STREET (FOURTH STREET to JUNCTION AVENUE)										
North Side of Main Street										
L2	JL1	25				80				
JL1	DL1	90				280				
DL1	DL3	95				395				
DL3	JL2	130				540				
JL2	L3	35				110				
JL2	DL5	150	35			765				
DL5	DL7	90				375				
DL7	JL4	140				580				
JL4	L5	40				125				
JL4	JL5			70		580	220			
JL4	SERVICE CABINET					2,915	550			
JL4	DL9	130	70			825				
DL9	DL11	95				395				
DL11	JL7	80				330				
JL7	L7	35				110				
JL7	DL13	185	55			990				
DL13	DL15	105				435				
DL15	DL17	95				395				
DL17	DL19	95				395				
DL19	DL21	95				395				
DL21	DL23	90				280				
South Side of Main Street										
L1	DL2	135	50			575				
DL2	DL4	95				395				
DL4	JL3	135	35			705				
JL3	L4	40				125				
JL3	DL6	135				560				
DL6	DL8	90				375				
DL8	JL5	140				580				
JL5	JL6			50		210	155			
JL6	L6	40				125				
JL6	DL10	130				540	430			
DL10	JX1	105				435	325			
JX1	DL12	15				50				
JX1	ES6	15					50			
JX1	JL8	140	50			790				
JL8	L8	40				125				
JL8	DL14	135				560				
DL14	DL16	105				435				
DL16	DL18	95				395				
DL18	DL20	95				395				
DL20	DL22	90				375				
DL22	DL24	90				280				
JS1	JS2			100			110			
Subtotal:		3,665	295	220		19,325	1,840	0	0	0

Plot Scale - 1:200

Plotted From - trpr14286

File - ...\Sturgis LGA\TableConduit.dgn

TABLE OF CONDUIT AND CABLE QUANTITIES

FOR BIDDING PURPOSES ONLY

STATE OF SOUTH DAKOTA	PROJECT	SHEET	TOTAL SHEETS
	P 7668(05)	L7	L27

Plotting Date: 11/09/2015

Location to Location		Rigid Conduit Schedule 40 2" Ft	Rigid Conduit Schedule 80 2" Ft	Rigid Conduit Schedule 80 3" Ft	Copper Wire 1/C #4 AWG Ft	Copper Wire 1/C #10 AWG Ft	Copper Tray Cable, K2 #14 1/C Ft	Pole and Bracket Cable 2/C #10 AWG Ft	Fiber Optic Cable 24 Strand Ft
MAIN STREET (JUNCTION AVENUE to MIDDLE STREET)									
North Side of Main Street									
EJF4	JF7	35				40			110
JF7	DL25	15			65				
JF7	DL27	110			340				135
DL27	DL29	20			555				125
DL29	DL31	20			565				125
DL31	JL11				455				135
JL11	DL33	15			50				
JL11	DL35	20			615				140
DL35	JF8	20			480				120
JF8	L9	35			145				85
JF8	EJL				190				
EJL	SERVICE CABINET				660				
South Side of Main Street									
DL26	DL28	100			310				
DL28	JL9	100			375				
JL9	DL30	15			50				
JL9	DL32	20			500				
DL32	JL10	20			605				
JL10	DL34	15			50				
JL10	DL36	20			560				
DL36	JL21	20			540				
JL21	EJL				310				
L1							80	65	
L2							80	65	
L3							80	65	
L4							80	65	
L5							80	65	
L6							80	65	
L7							80	65	
L8							80	65	
L9							80	65	
DL1							55	25	
DL2							55	25	
DL3							55	25	
DL4							55	25	
DL5							55	25	
DL6							55	25	
DL7							55	25	
DL8							55	25	
DL9							55	25	
DL10							55	25	
DL11							55	25	
DL12							55	25	
DL13							55	25	
DL14							55	25	
DL15							55	25	
DL16							55	25	
DL17							55	25	
DL18							55	25	
DL19							55	25	
DL20							55	25	
DL21							55	25	
	Subtotal:	600	0	0	7420	40	1875	1110	975

Plot Scale - 1:200

Plotted From - tnpr14286

File - ...\Sturgis LGA\TableConduit.dgn

TABLE OF CONDUIT AND CABLE QUANTITIES

FOR BIDDING PURPOSES ONLY

STATE OF SOUTH DAKOTA	PROJECT	SHEET	TOTAL SHEETS
	P 7668(05)	L8	L27

Plotting Date: 11/09/2015

Location to Location		Rigid Conduit Schedule 40 2" Ft		Rigid Conduit Schedule 80 2" Ft	Rigid Conduit Schedule 80 3" Ft			Copper Wire 1/C #4 AWG Ft	Copper Wire 1/C #10 AWG Ft			Copper Tray Cable, K2 #14 1/C Ft				Pole and Bracket Cable 2/C #10 AWG Ft			Fiber Optic Cable 24 Strand Ft	
MAIN STREET (JUNCTION AVENUE to MIDDLE STREET) Cont.																				
DL22												55				25				
DL23												55				25				
DL24												55				25				
DL25												55				25				
DL26												55				25				
DL27												55				25				
DL28												55				25				
DL29												55				25				
DL30												55				25				
DL31												55				25				
DL32												55				25				
ES6									80											
FIBER																				
JF5	JF4	350		120					485										615	
JF4	L4	50							55										100	
JF4	JF2	280							290										360	
JF2	JF1			80					85										160	
JF1	L5	50							55										100	
JF1	JL4	45							50										70	
JL4	ALLEY TO NORTH	200							210										235	
JF2	JF3	380		125					525										545	
JF3	L8	50							55										100	
JF3	JS2	535							540										560	
JS2	JF6	250							255										325	
JF6	EL37	15							20										40	
EL37	EJL2																		85	
EJL2	JF																		100	
JF	SERVICE CABINET																		300	
Subtotal:		2,205		325	0			0	2,705			605				275			3,695	
Total:		6,470		620	220			26,745	4,585			2,480				1,385			4,670	

Plot Scale - 1:200

Plotted From - tnpr14286

File - ...\Sturgis LGA\TableConduit.dgn

STATE OF SOUTH DAKOTA	PROJECT	SHEET	TOTAL SHEETS
	P 7668(05)	L9	L27

Plotting Date: 11/09/2015

CONDUIT LAYOUT

FOR BIDDING PURPOSES ONLY

MAIN STREET & FOURTH STREET

ESTIMATE OF QUANTITIES

KEY	ITEM	EST QUANT	UNIT
	16' DECORATIVE LUMINAIRE POLE (DL1-DL36)	36	EACH
	DECORATIVE LED LUMINAIRE (DL1-DL36)	36	EACH
	50' BREAKAWAY BASE LUMINAIRE POLE W/ 6' ARM (L1-L9)	9	EACH
	ROADWAY LUMINAIRE, LED (L1-L9)	9	EACH
	SALVAGE LUMINAIRE POLE (EDL1-EDL24 & LUMINAIRE ARM ON EBH1)	25	EACH
	REMOVE LUMINAIRE POLE FOOTING (EDL1-EDL24)	24	EACH
	2' DIAMETER FOOTING (L1-L9, DL1-DL36)	261	FT
	TYPE 2 ELECTRICAL JUNCTION BOX (JL1-JL3, JL6-JL12, JX1)	11	EACH
	TYPE 3 ELECTRICAL JUNCTION BOX (JL4,JL5,JS1,JS2)	4	EACH
	TYPE 4 ELECTRICAL JUNCTION BOX (JF1-JF8)	8	EACH
2" SCH 40	2" RIGID CONDUIT, SCHEDULE 40	6,470	FT
2" SCH 80	2" RIGID CONDUIT, SCHEDULE 80	620	FT
3" SCH 80	3" RIGID CONDUIT, SCHEDULE 80	220	FT
#4	1/C #4 AWG COPPER WIRE	26,745	FT
#10	1/C #10 AWG COPPER WIRE	4,585	FT
	1/C #14 AWG COPPER TRAY CABLE, K2	2,480	FT
	2/C #10 AWG COPPER POLE & BRACKET CABLE	1,385	FT
Fiber	24 STRAND FIBER OPTIC CABLE	4,670	FT
Exist. Wire	REMOVE EXISTING LIGHTING WIRE (NOT A BID ITEM)	LS	LUMP SUM
	MISCELLANEOUS ELECTRICAL, (RELOCATE CAMERAS, REMOVE MEDIA CONVERTERS & SUPPLY 4 FIBER SWITCHES)	LS	LUMP SUM

EXISTING ITEMS

KEY	ITEM
	50' BREAKAWAY BASE LUMINAIRE POLE W/ 6' ARM (EL38 & EL39)
	SPAN POLES (ES1-ES14)
	ELECTRICAL SERVICE CABINET
	GALVANIZED STEEL UTILITY POLE NOT A BID ITEM
	METER SOCKET NOT A BID ITEM
Conduit	CONDUIT
4" SCH 40	4" RIGID CONDUIT, SCHEDULE 40
	EXISTING LIGHTING JUNCTION BOX (EJL)
#	CAMERAS

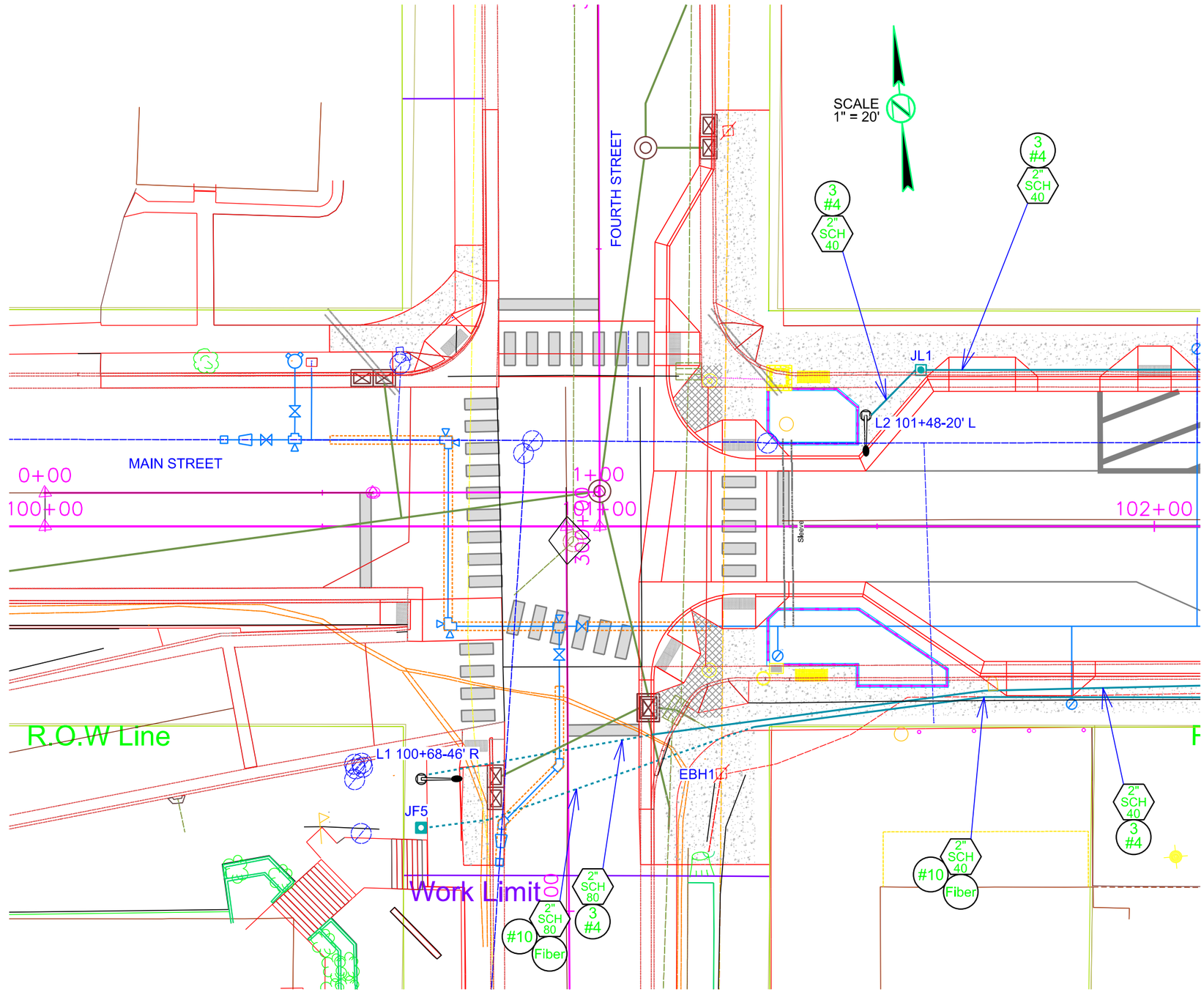

Plot Scale - 1:20

Plotted From - tmpr14286

File - ...\traffic\Sturgis LGA\100.dgn

CONDUIT LAYOUT

FOR BIDDING PURPOSES ONLY

MAIN STREET & THIRD STREET

STATE OF SOUTH DAKOTA	PROJECT	SHEET	TOTAL SHEETS
	P 7668(05)	L10	L27

Plotting Date: 11/09/2015

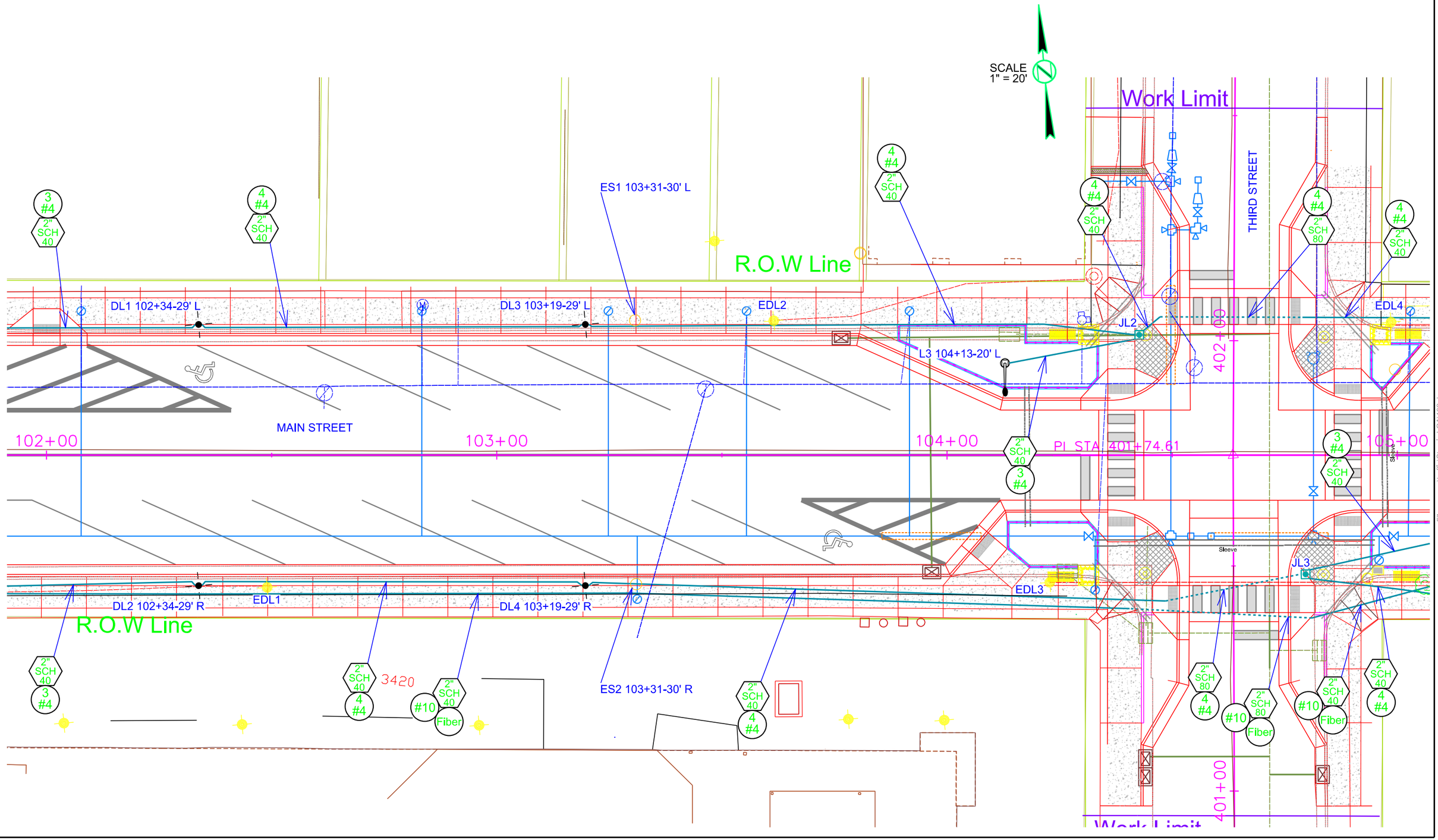

CONDUIT LAYOUT

MAIN STREET

FOR BIDDING PURPOSES ONLY

STATE OF SOUTH DAKOTA	PROJECT	SHEET	TOTAL SHEETS
	P 7668(05)	L11	L27

Plotting Date: 11/09/2015

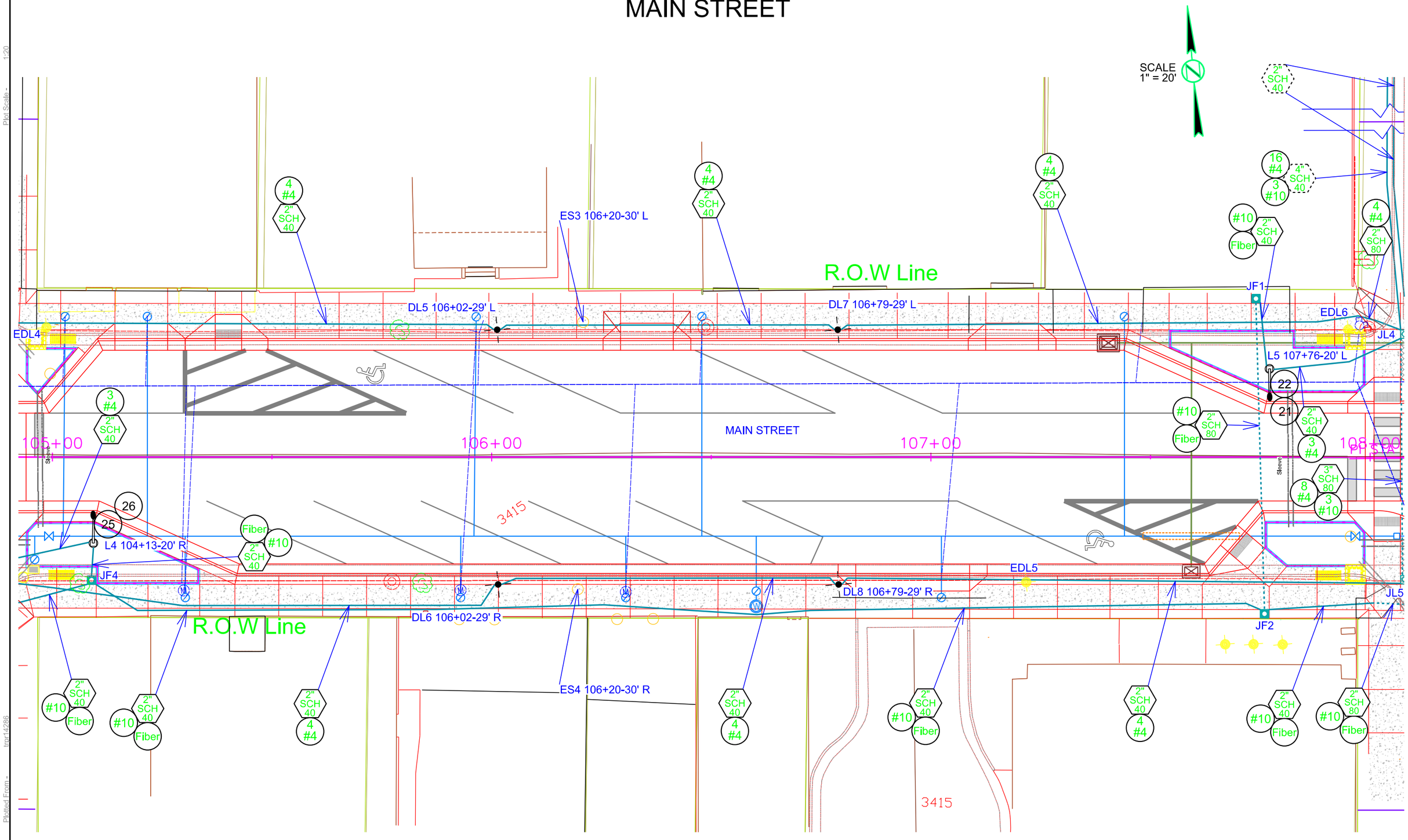

STATE OF SOUTH DAKOTA	PROJECT	SHEET	TOTAL SHEETS
	P 7668(05)	L12	L27

Plotting Date: 11/09/2015

CONDUIT LAYOUT

FOR BIDDING PURPOSES ONLY

MAIN STREET & SECOND STREET

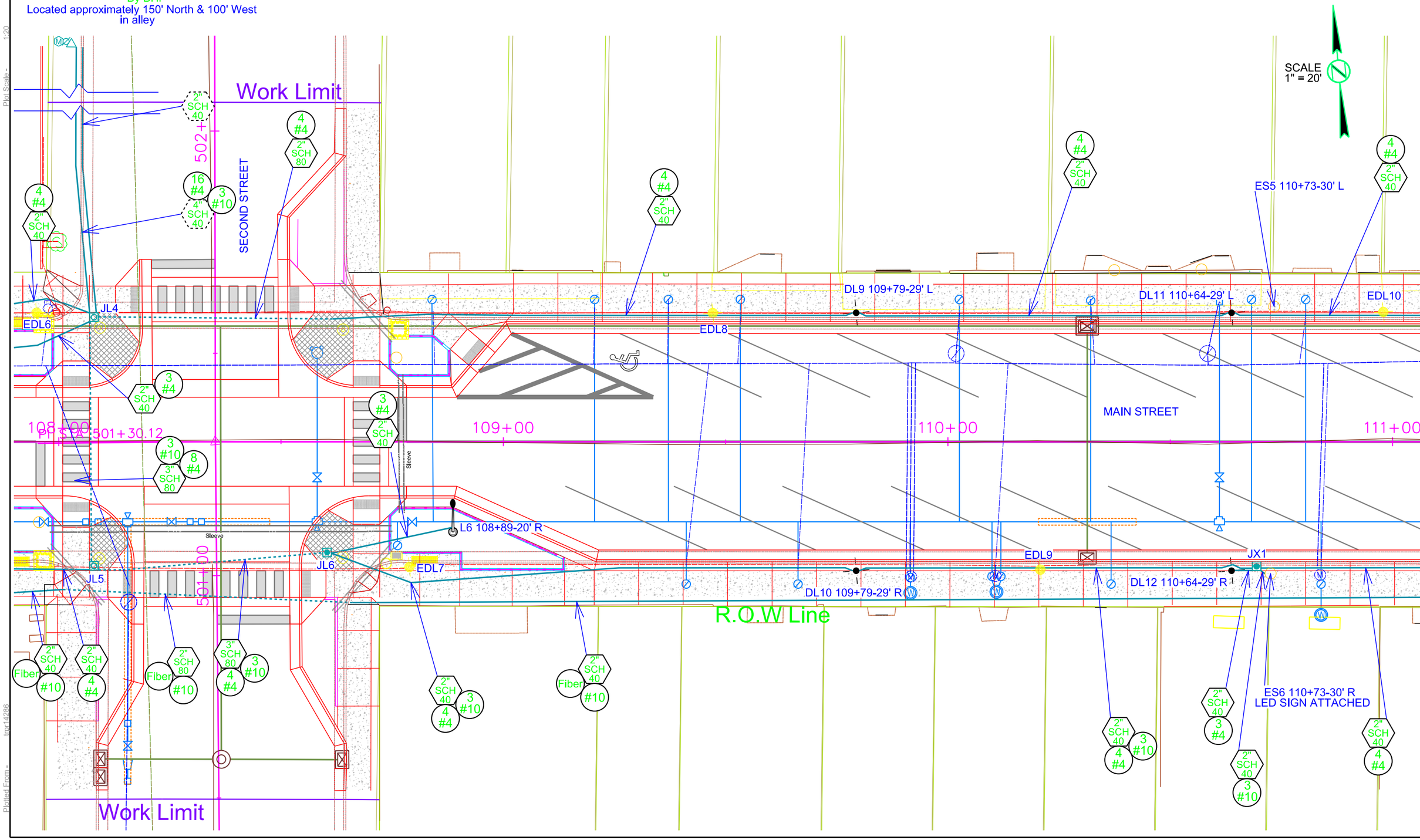

STATE OF SOUTH DAKOTA	PROJECT	SHEET	TOTAL SHEETS
	P 7668(05)	L13	L27

Plotting Date: 11/09/2015

CONDUIT LAYOUT

FOR BIDDING PURPOSES ONLY

MAIN STREET & FIRST STREET

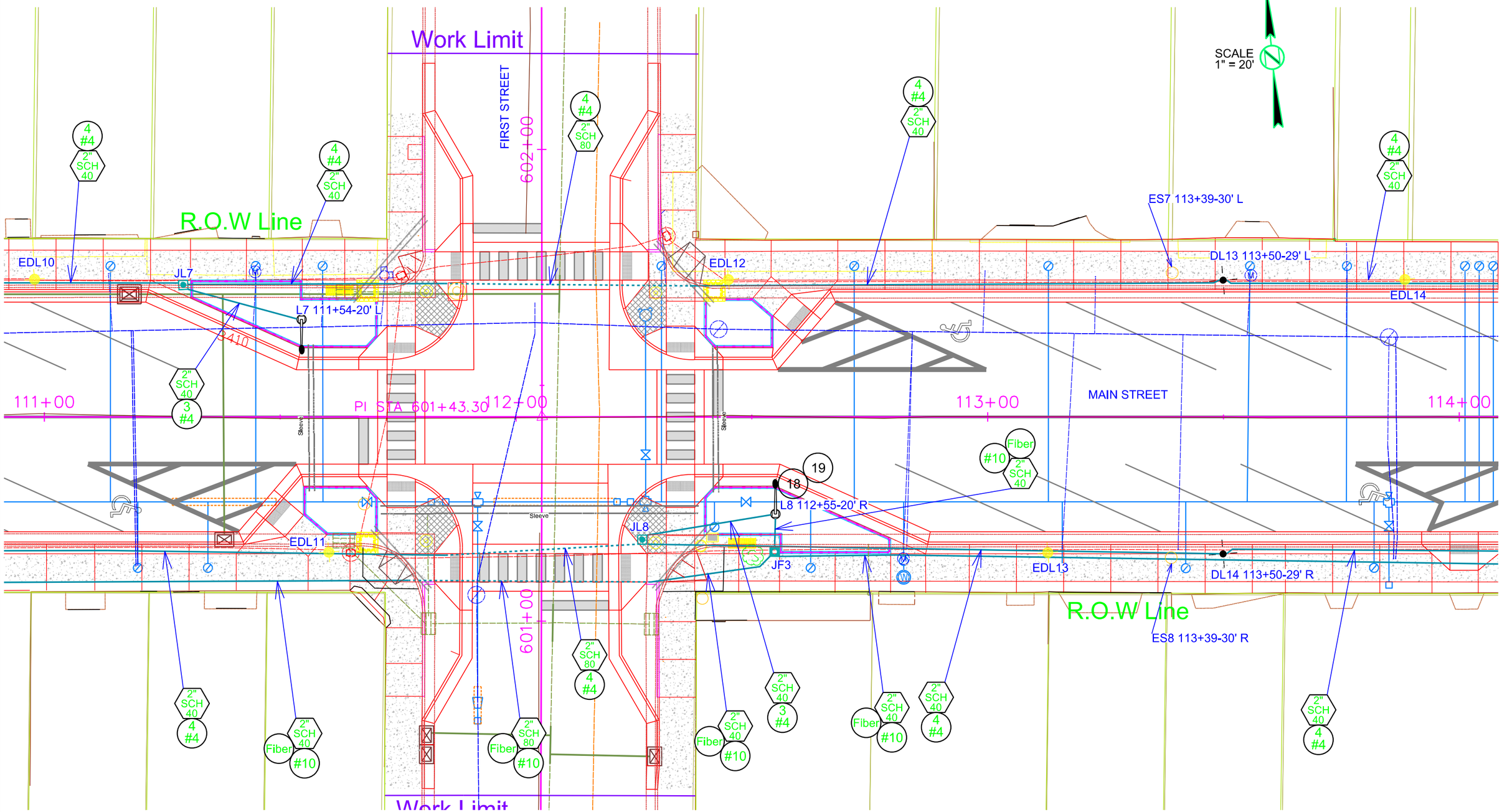

Plot Scale - 1:20

Plotted From - trpr14286

File - ...\traffic\Sturgis LGA\111.dgn

CONDUIT LAYOUT

FOR BIDDING PURPOSES ONLY

MAIN STREET

STATE OF SOUTH DAKOTA	PROJECT	SHEET	TOTAL SHEETS
	P 7668(05)	L14	L27

Plotting Date: 11/09/2015

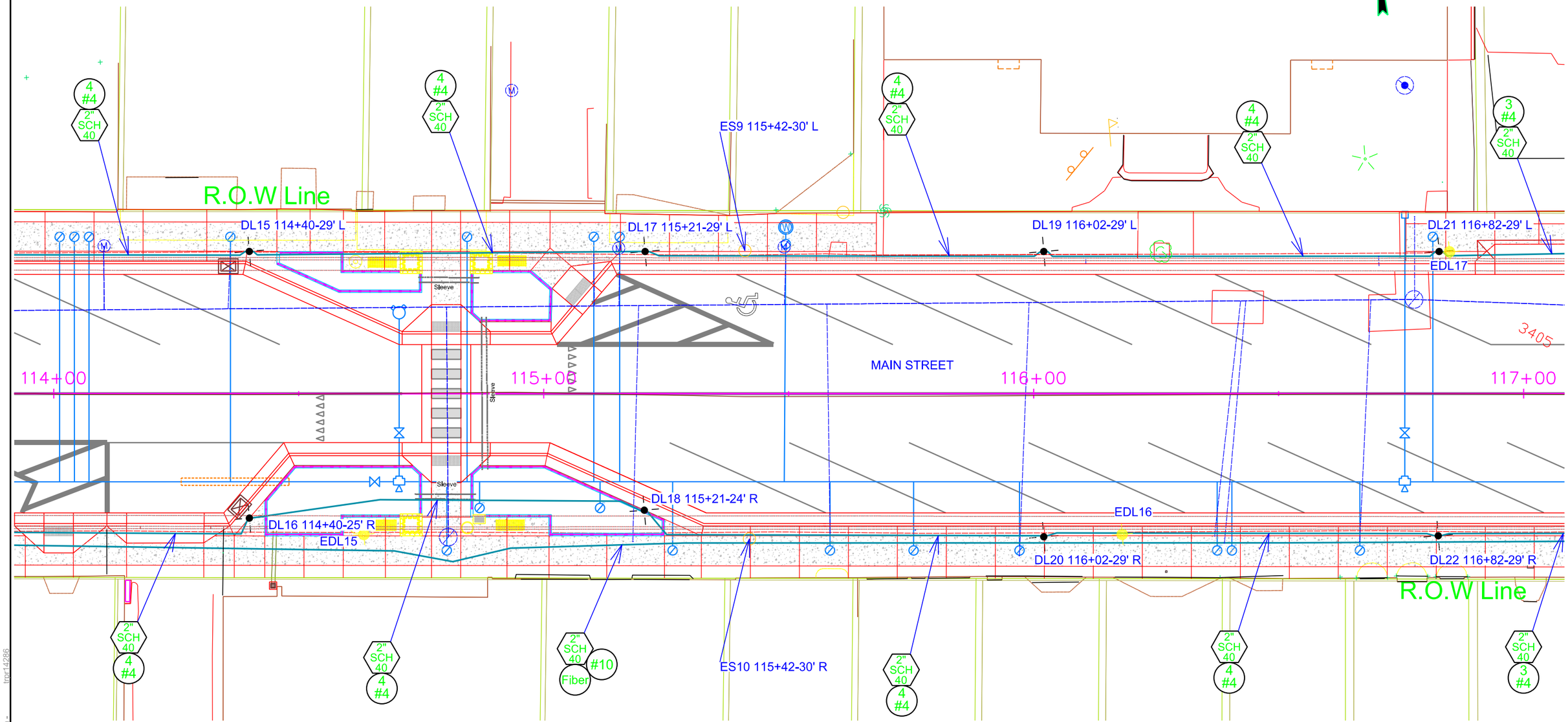

Plot Scale - 1:20

Plotted From - tpp14286

File - ...\traffic\Sturgis LGA\114.dgn

STATE OF SOUTH DAKOTA	PROJECT	SHEET	TOTAL SHEETS
	P 7668(05)	L15	L27

Plotting Date: 11/09/2015

CONDUIT LAYOUT

FOR BIDDING PURPOSES ONLY

MAIN STREET & JUNCTION AVENUE

NOTE: 40 SCALE SHEET TO SHOW CONDUIT CONNECTION AT EL39 AND POWER SOURCE

EXISTING ITEMS	
KEY	ITEM
△	ELECTRICAL SERVICE CABINET
⌀	GALVANIZED STEEL UTILITY POLE
◎	EXISTING JUNCTION BOX (EJF4)
2" SCH 40	EXISTING 2" RIGID CONDUIT, SCHEDULE 40
2" SCH 80	EXISTING 2" RIGID CONDUIT, SCHEDULE 80
2" SCH 80	2" RIGID CONDUIT, SCHEDULE 80
#6	EXISTING 1/C #6 AWG COPPER WIRE
#10	1/C #10 AWG COPPER WIRE
48 SM Fiber	48 STRAND SINGLE MODE FIBER OPTIC CABLE
12 SM Fiber	12 STRAND SINGLE MODE FIBER PAIR
CAT 5	OUTDOOR RATED CATEGORY 5 CABLE
#	CAMERA (12,15-17)
□	FIBER SWITCH (J & 3-Port)

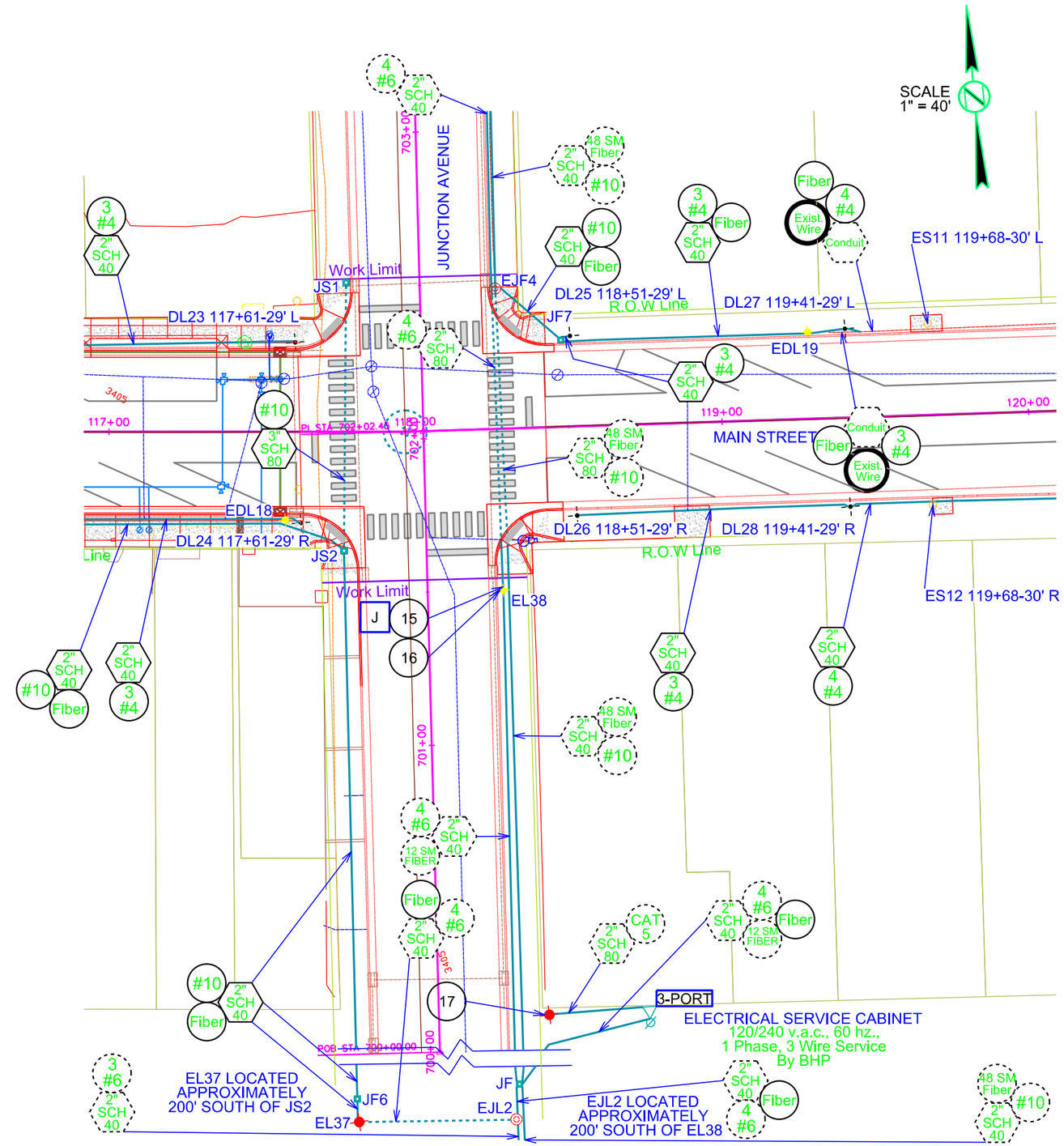

STATE OF SOUTH DAKOTA	PROJECT	SHEET	TOTAL SHEETS
	P 7668(05)	L16	L27

Plotting Date: 11/09/2015

CONDUIT LAYOUT

FOR BIDDING PURPOSES ONLY

MAIN STREET & JUNCTION AVENUE

NOTE: 20 SCALE COPY OF PREVIOUS SHEET TO SHOW DETAIL.

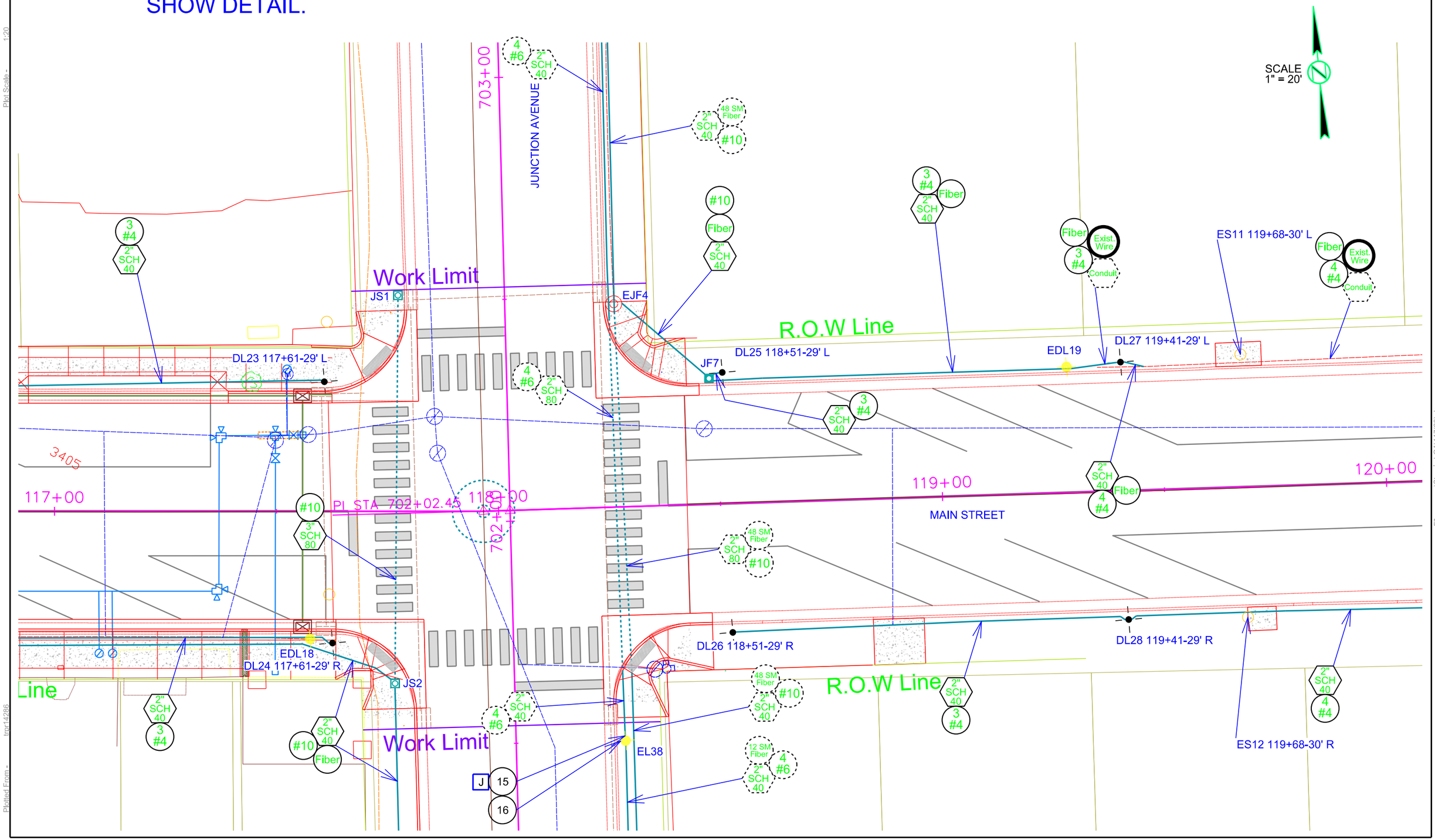

Plot Scale - 1:20

Plotted From - tpp14286

File - ...\Sturgis LGA\117(20).dgn

STATE OF SOUTH DAKOTA	PROJECT	SHEET	TOTAL SHEETS
	P 7668(05)	L17	L27

Plotting Date: 11/09/2015

CONDUIT LAYOUT

FOR BIDDING PURPOSES ONLY

MAIN STREET

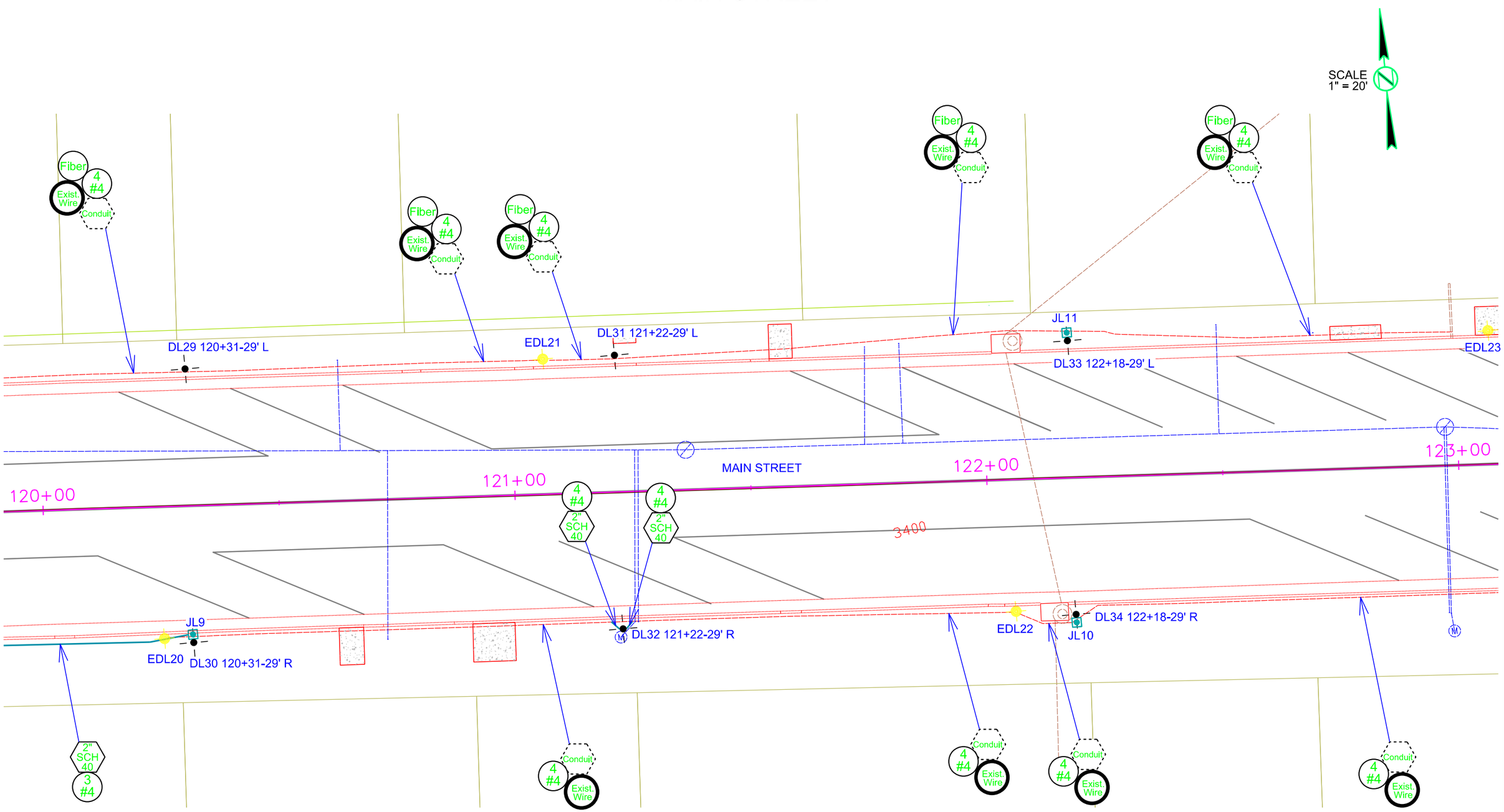

Plot Scale - 1:20

Plotted From - trpr14286

File - ...\traffic\Sturgis LGA\120.dgn

CONDUIT LAYOUT

FOR BIDDING PURPOSES ONLY

MAIN STREET & MIDDLE STREET

STATE OF SOUTH DAKOTA	PROJECT	SHEET	TOTAL SHEETS
	P 7668(05)	L18	L27

Plotting Date: 11/09/2015

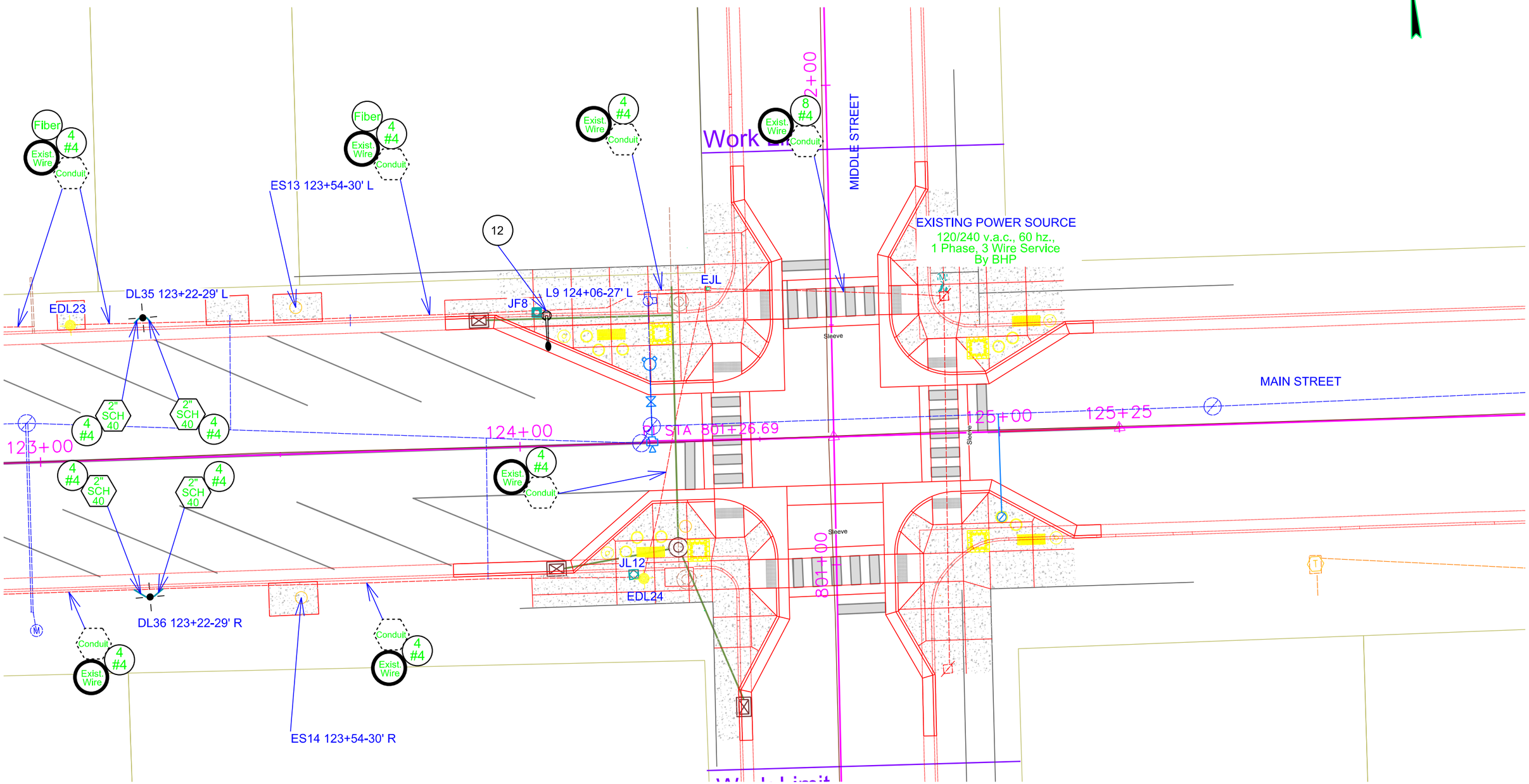

Plot Scale - 1:20

Plotted From - tmp14286

File - ...\traffic\Sturgis LGA\123.dgn

NOTE:
All circuits shall be bonded in accordance with the NATIONAL ELECTRICAL CODE. Quantities for bonding conductors are not included in these plans.

LEGEND:

FUSE: 6 amp. Non-Time Delay
or
2 8/10 amp. Dual Element

LUMINAIRE: LED Roadway

LUMINAIRE: LED Decorative

WIRING DIAGRAM

MAIN STREET

FOR BIDDING PURPOSES ONLY

STATE OF SOUTH DAKOTA	PROJECT	SHEET	TOTAL SHEETS
	P 7668(05)	L19	L27

Plotting Date: 11/09/2015

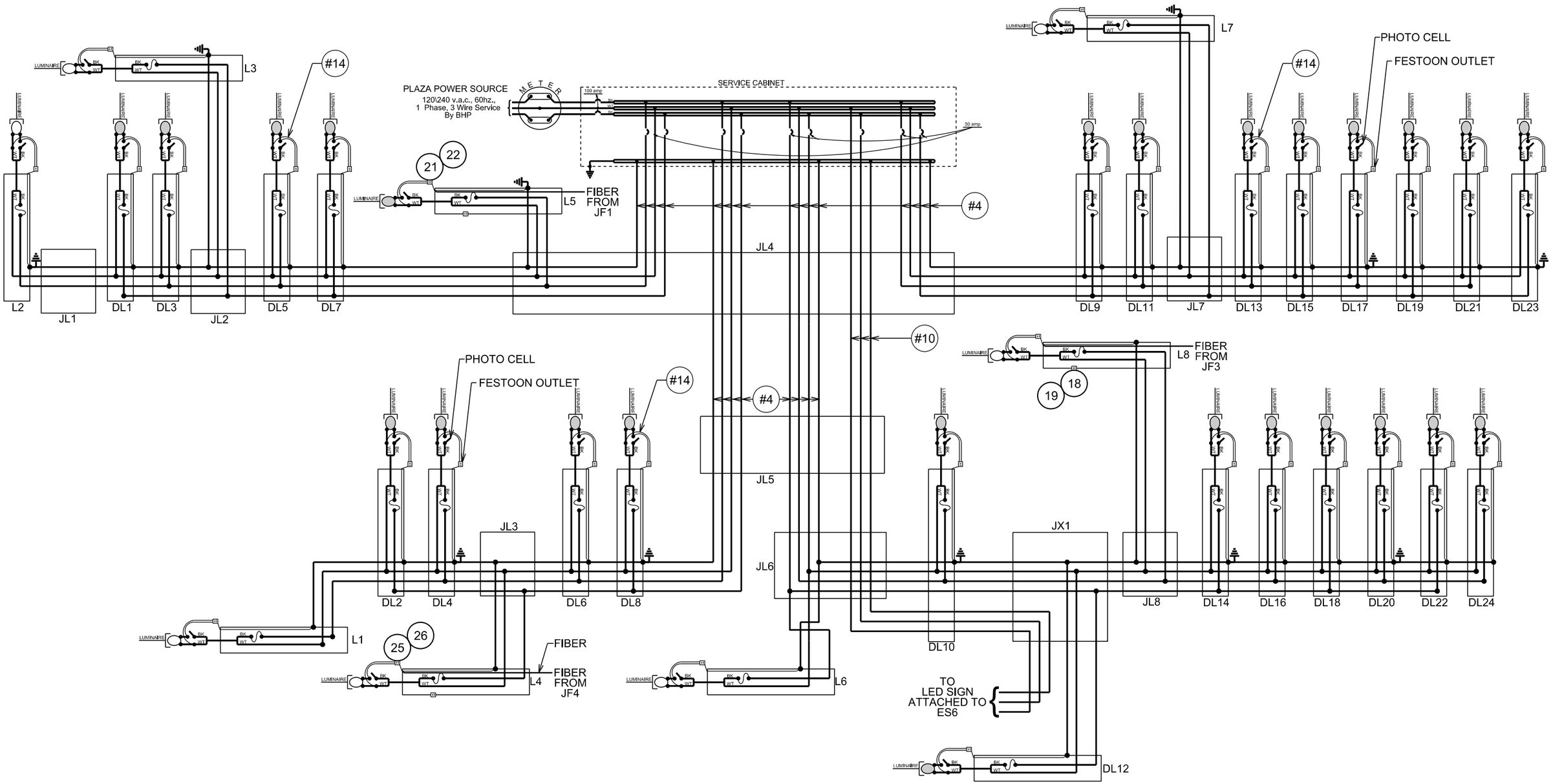

Plot Scale - 1:40

Plotted From - trpr14286

File - ...\Sturgis LGA\100117w.dgn

WIRING DIAGRAM

FOR BIDDING PURPOSES ONLY

MAIN STREET

STATE OF SOUTH DAKOTA	PROJECT	SHEET	TOTAL SHEETS
	P 7668(05)	L20	L27

Plotting Date: 11/09/2015

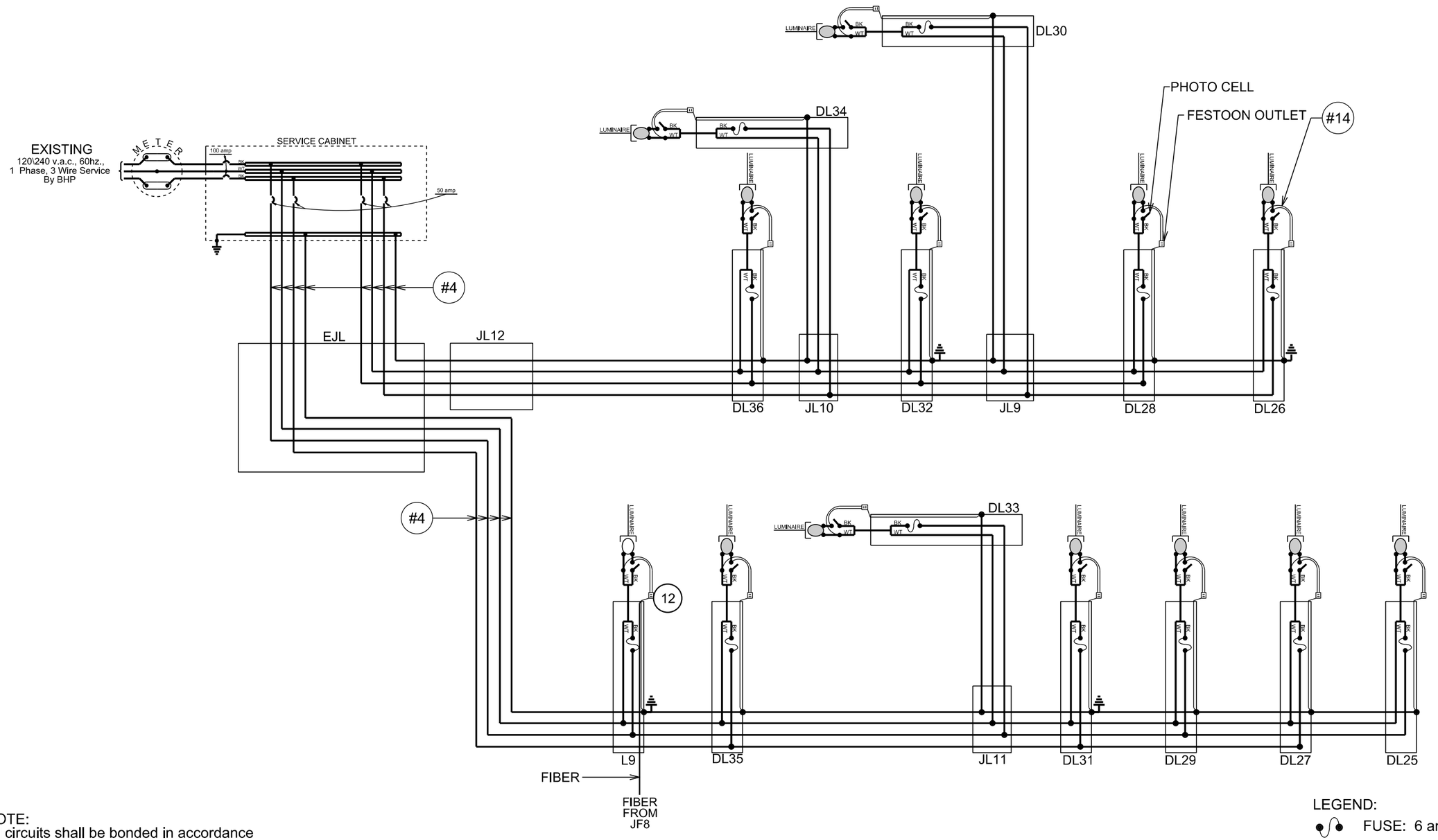

NOTE:
All circuits shall be bonded in accordance with the NATIONAL ELECTRICAL CODE. Quantities for bonding conductors are not included in these plans.

LEGEND:

FUSE: 6 amp. Non-Time Delay
or
2 8/10 amp. Dual Element

LUMINAIRE: LED Roadway

LUMINAIRE: LED Decorative

Plot Scale - 1:40

Plotted From - trpr14286

File - ...\Sturgis LGA\118125w.dgn

FIELD WIRING DIAGRAM

FOR BIDDING PURPOSES ONLY

JUNCTION AVE
(FOR INFORMATIONAL PURPOSES ONLY)

STATE OF SOUTH DAKOTA	PROJECT	SHEET	TOTAL SHEETS
	P 7668(05)	L21	L27

Plotting Date: 11/19/2015

LEGEND:

FUSE: 15 amp. Non-Time Delay
or
5 6/10 amp. Dual Element

LUMINAIRE: 400 watt High Pressure Sodium Lamp

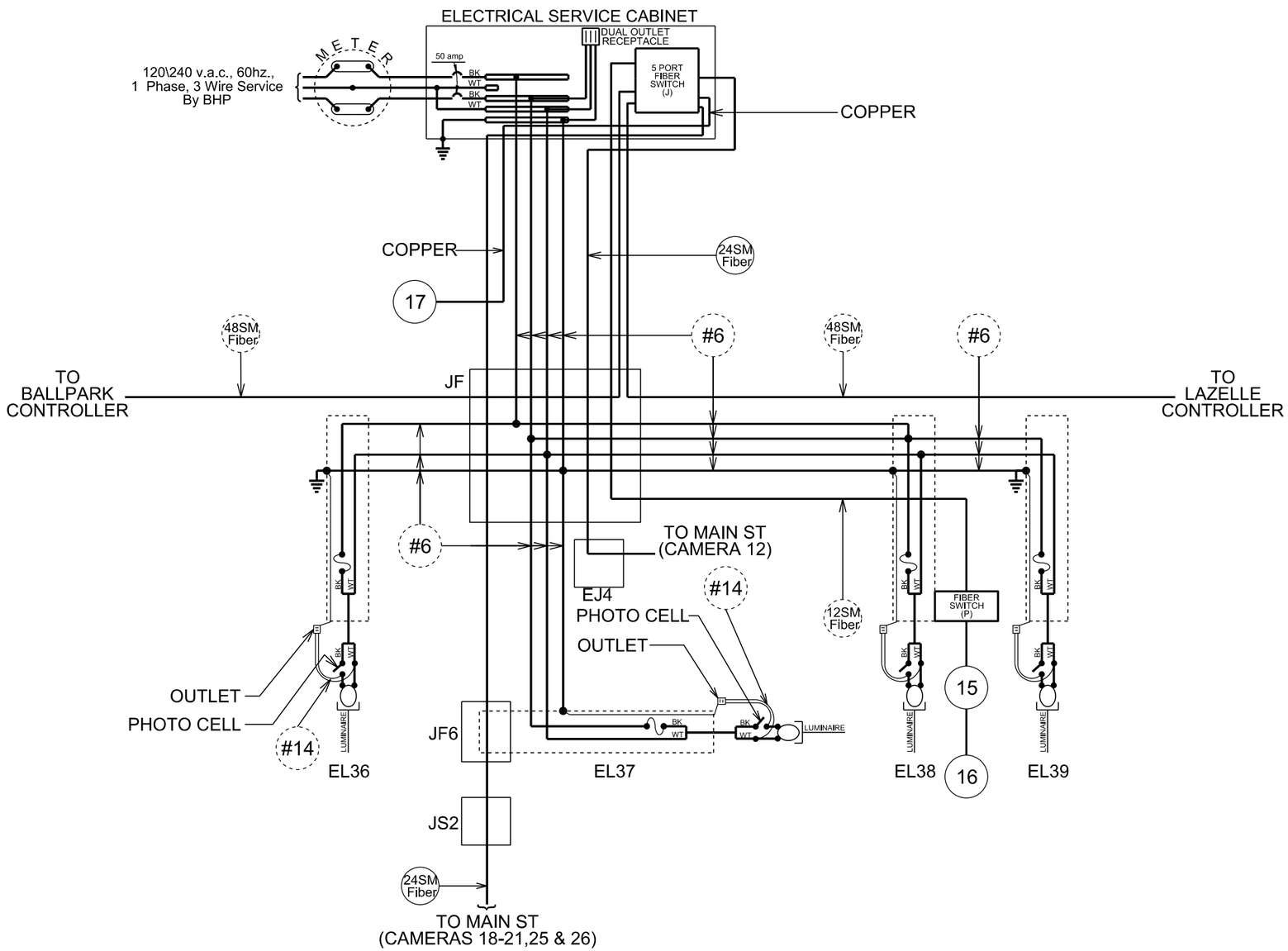

Plot Scale - 1:40

Plotted From - tnpr14286

File - ...\Sturgis LGA\el36el39w.dgn

FIBER PATH
(2016)

FOR BIDDING PURPOSES ONLY

STATE OF SOUTH DAKOTA	PROJECT	SHEET	TOTAL SHEETS
	P 7668(05)	L22	L27

Plotting Date: 11/19/2015 REVISED DATE: 11/10/2015 SB

NOT TO SCALE

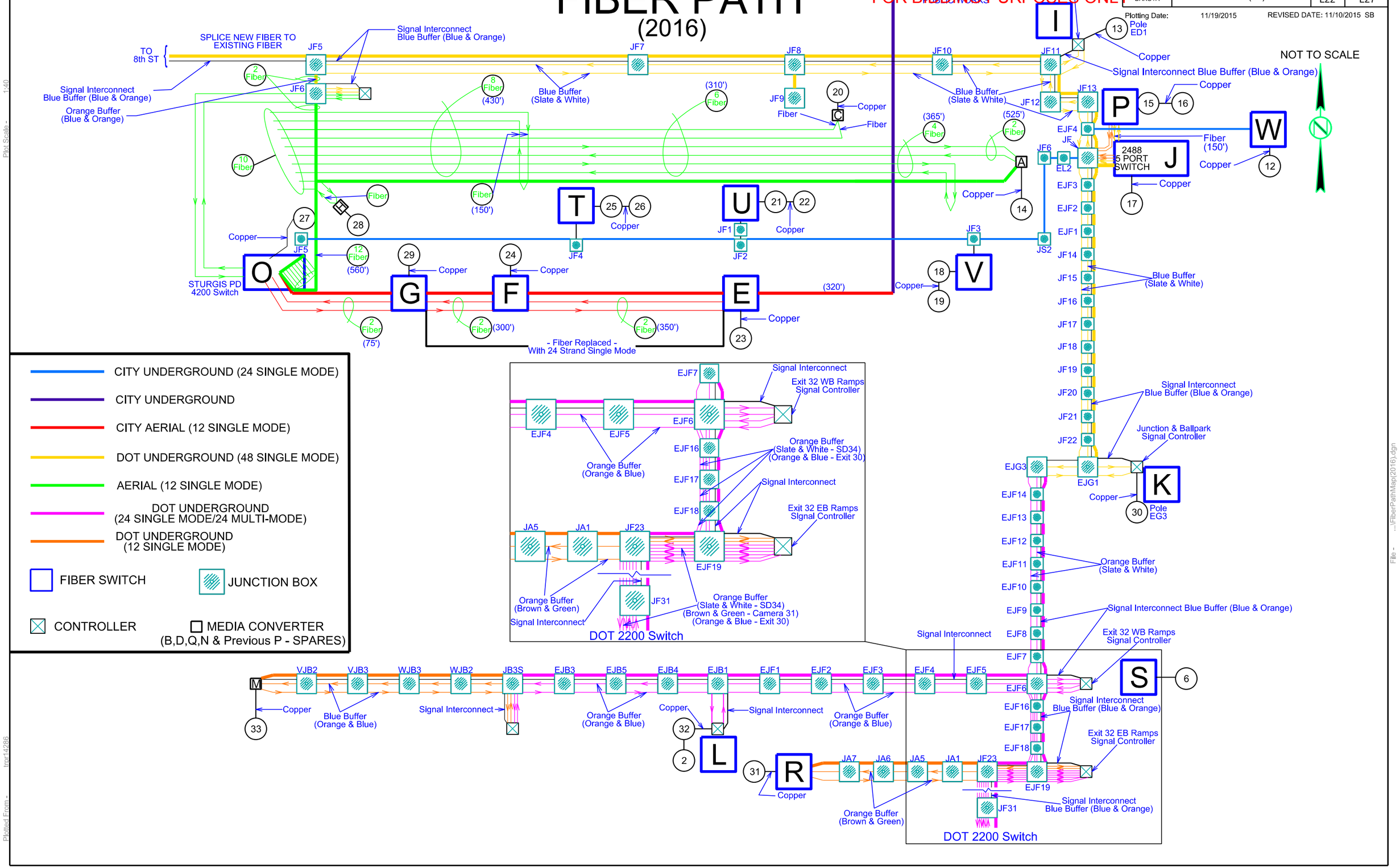

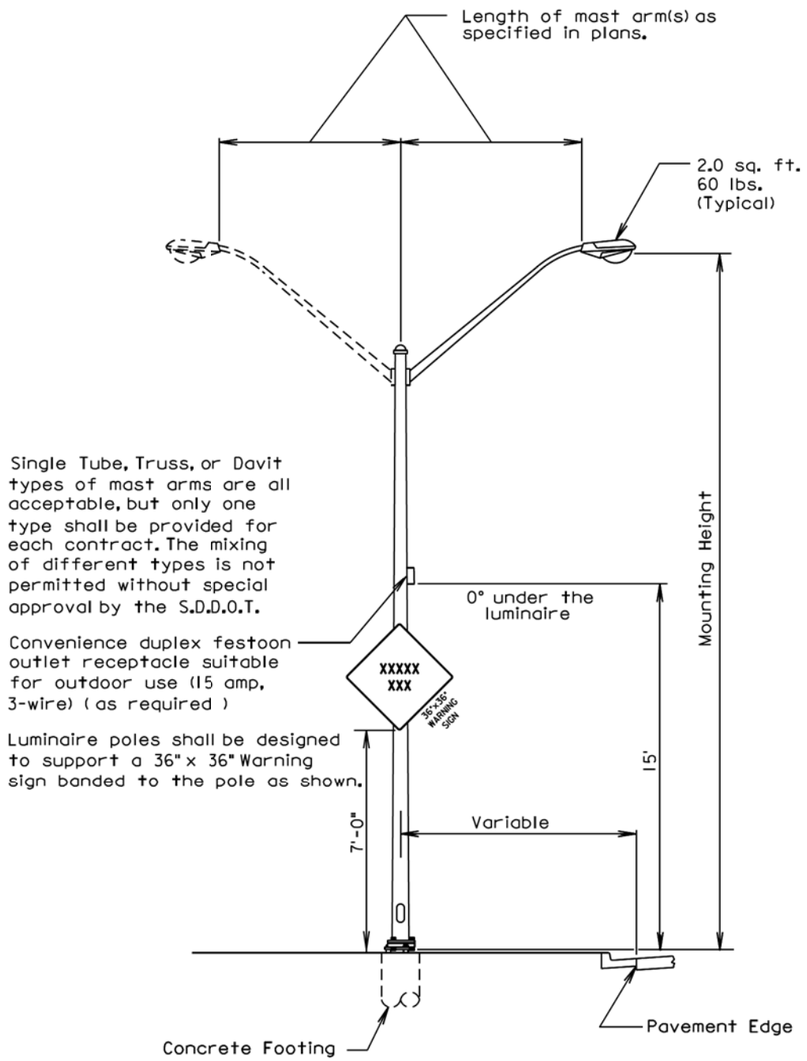

March 31, 2000

Published Date: 4th Qtr. 2015	SDDOT	STEEL ROADWAY LUMINAIRE POLE WITH MAST ARM(S)	PLATE NUMBER 635.01
			Sheet 1 of 1

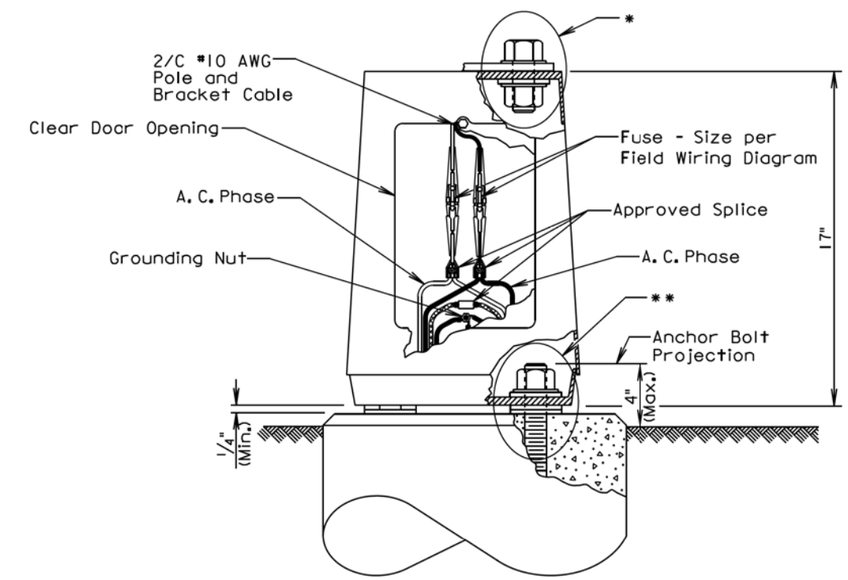

GENERAL NOTES:

Base details are provided for example only and are not intended to be a complete design.

Fused connectors shall be breakaway type.

*Hardware connecting the pole to the base shall be installed in accordance with the manufacturer's recommendation.

**Hardware connecting the base to the footing shall be installed in accordance with the manufacturer's recommendation. The Contractor shall install leveling devices in accordance with the manufacturer's recommendation if shimming is necessary to install the light poles plumb and level. The washers and shims shall be installed around the anchor bolts.

September 6, 2015

Published Date: 4th Qtr. 2015	SDDOT	ROADWAY LUMINAIRE POLE BREAKAWAY TRANSFORMER BASE	PLATE NUMBER 635.21
			Sheet 1 of 1

Plot Scale - 1:200
- Plotted From - tnp14286
File - ...\Sturgis LGA\s63501s63521.dgn

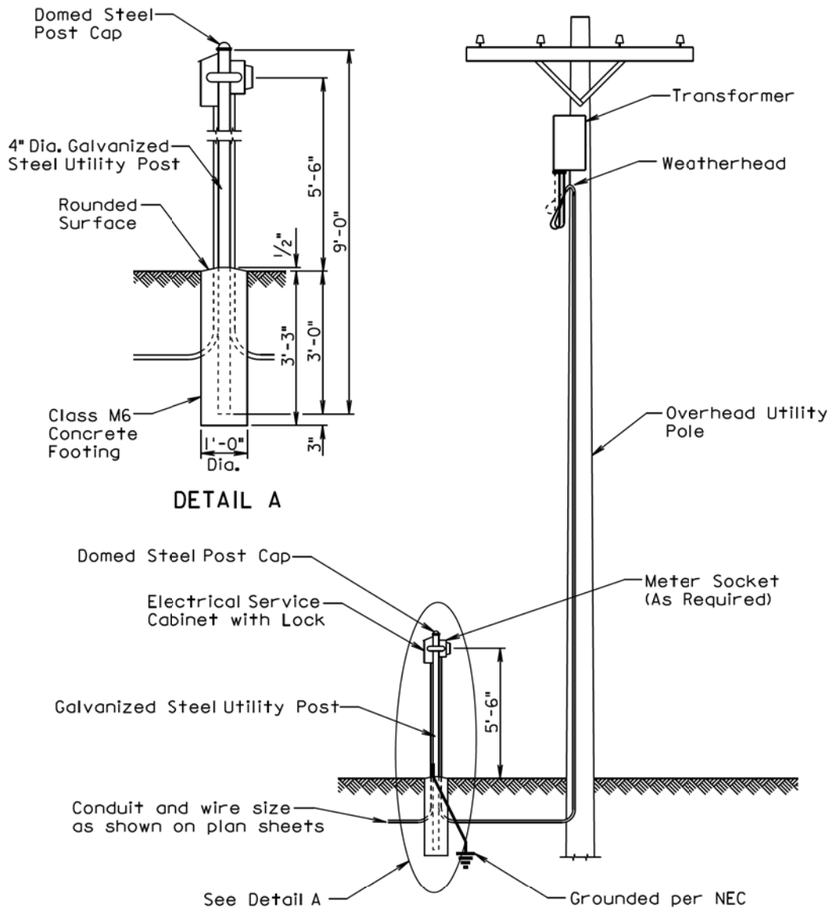

GENERAL NOTES:

The concrete for the post footing shall be class M6 concrete.

The 4" diameter galvanized steel utility post shall be 9' long and shall be in conformance with AASHTO Standard Specifications M181. The post shall be Type 1 and either Grade 1 or Grade 2. The domed steel post cap shall be in conformance with AASHTO Standard Specifications M181 and shall be Type 1.

The Contractor shall contact and coordinate his/her work with the Utility Companies regarding hookup requirements, fees, materials, and equipment necessary.

All costs for furnishing and installing all materials from the electrical service cabinet to the transformer including labor, equipment, hookup fees, all items within the cabinet, post, concrete footing, post cap, meter socket if required, conduit, and incidentals shall be incidental to the contract unit price per each for "Electrical Service Cabinet".

June 26, 2006

Published Date: 4th Qtr. 2015	SDDOT	GALVANIZED STEEL UTILITY POST WITH OVERHEAD UTILITY POLE	PLATE NUMBER 635.35 Sheet 1 of 1

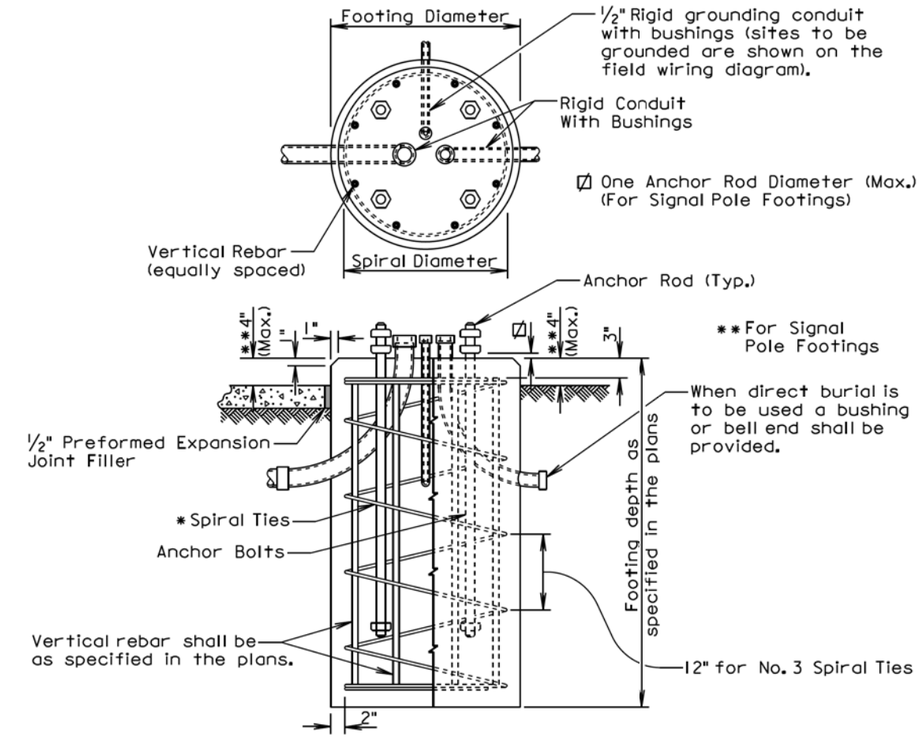

GENERAL NOTES:

* Circular ties may be used in lieu of the spiral ties. The No. 3 ties shall be spaced 12 inches apart except for the top two which shall be spaced 6 inches apart. The ties shall be lapped 18 inches and the laps shall be staggered around the cage.

Spiral ties shall have 1-1/2 extra turns at each end.

See Section 985 of the Specifications for footing materials.

Conduits and bushings may project 2½ inches to 6 inches above footing for fixed base poles but shall not project above the slip plane or fracture plane for breakaway poles.

Conduits shall be sealed water-tight during all phases of construction until poles are in place.

The anchor rods shall fit inside the reinforcing steel cage. If the anchor rods designed by the Pole Manufacturer do not fit, contact the Office of Bridge Design for footing redesign. No additional payment will be made for the redesigned footing.

Costs of conduit and conduit bushings shown on footing detail shall be incidental to the footing bid item(s).

The pole shall not be installed until the concrete has attained design strength (4000 psi).

The contour of the area surrounding the breakaway pole shall be flat, though not necessarily level for a distance of 5 feet in all directions. The Contractor may be required to provide finish grading at some breakaway pole locations.

June 26, 2015

Published Date: 4th Qtr. 2015	SDDOT	POLE FOOTING	PLATE NUMBER 635.55 Sheet 1 of 1

Plot Scale - 1:200
- Plotted From - tnpr14286
File - ...\Sturgis LGA\s63535\s63555.dgn

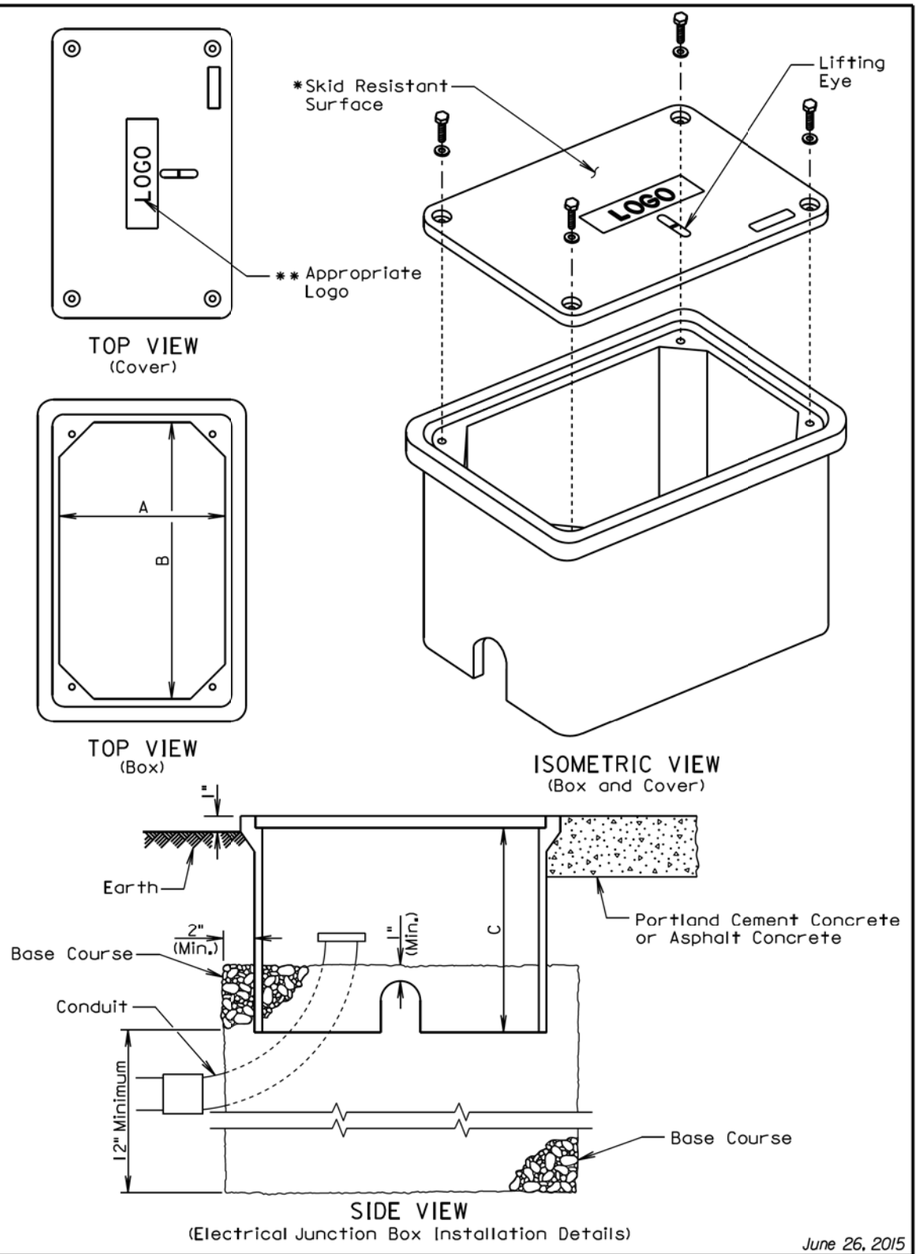

June 26, 2015

Published Date: 4th Qtr. 2015

SDDOT

ELECTRICAL JUNCTION BOXES TYPE 1 THROUGH TYPE 4

PLATE NUMBER 635.65

Sheet 1 of 2

ELECTRICAL JUNCTION BOX

TYPE	DESCRIPTION	DIMENSIONS		
		A	B	C
1	Open Bottom with Gasket	11"-15"	18"-21"	18" (Min.)
2	Open Bottom with Gasket	13"-18"	23"-28"	18" (Min.)
3	Open Bottom with Gasket	17"-22"	24"-30"	18" (Min.)
4	Open Bottom with Gasket	28"-33"	36"-48"	24" (Min.)

GENERAL NOTES:

The cover shall be gasketed with a minimum of two stainless steel bolts and washers.

The cover shall have a lifting eye.

* The surface of the cover shall have a minimum wet and dry coefficient of friction value of 0.5 as determined by ASTM F 609.

** The cover of the junction box shall have the appropriate logo in one inch size letters and shall be recessed. When the junction box contains cables or wires for a traffic signal then the logo shall be "Signal". When the junction box contains lighting conductors then the logo shall be "Lighting".

The electrical junction boxes shall comply with the American National Standards Institute (ANSI)/Society of Cable Telecommunications Engineers (SCTE) 77 2007 Specification for Underground Enclosure Integrity. The loading requirement for all the electrical junction boxes shall be Tier 8 of ANSI/SCTE 77 2007.

The electrical junction boxes shall be UL listed.

June 26, 2015

Published Date: 4th Qtr. 2015

SDDOT

ELECTRICAL JUNCTION BOXES TYPE 1 THROUGH TYPE 4

PLATE NUMBER 635.65

Sheet 2 of 2

Plot Scale - 1:200
- Plotted From - trpr14286
File - ...\s63565_1s63565_2.dgn

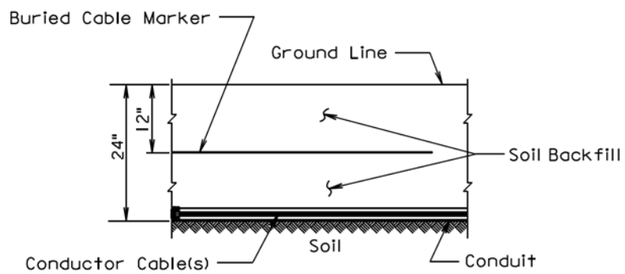

SECTION VIEW

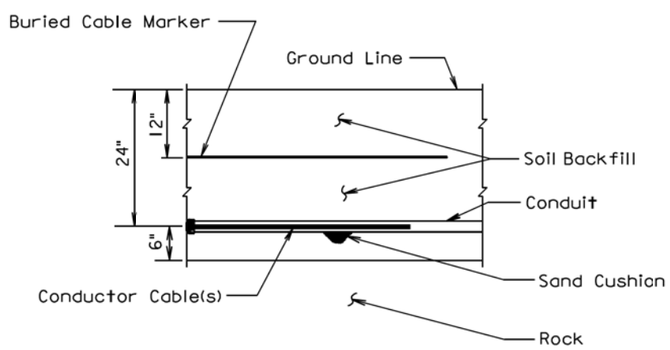

SECTION VIEW

GENERAL NOTE:

The Buried Cable Marker shall be plastic, approximately 6" wide, and shall be capable of sustaining a minimum of a 350% tolerance of elongation without tearing. The Buried Cable Marker shall have a life expectancy approximately equal to that of the conductor(s) beneath it. A phrase indicating the presence of a buried electric circuit below shall be printed in a contrasting color on the cable marker. The Buried Cable Marker shall be subject to approval by the Engineer. All costs associated with furnishing and installing the Buried Cable Marker shall be incidental to the contract unit price per Foot for the bid item used for the electrical conductor.

March 31, 2000

Published Date: 4th Qtr. 2015	SDDOT	CONDUIT INSTALLATION	PLATE NUMBER 635.76
			Sheet 1 of 1

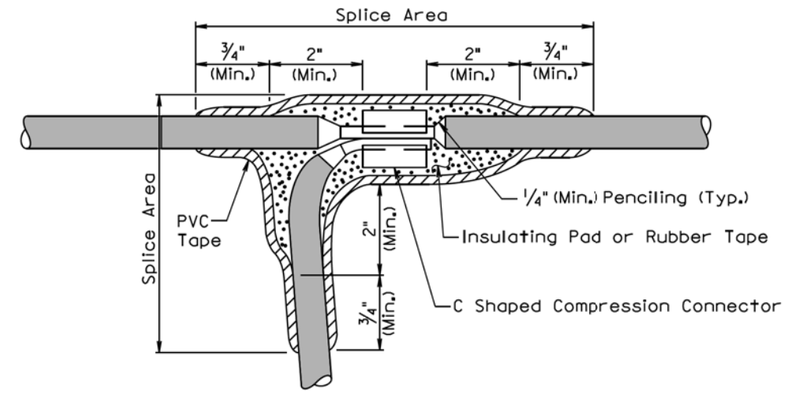

TYPE C SPLICE
(Between 1 free end and 1 through conductor)

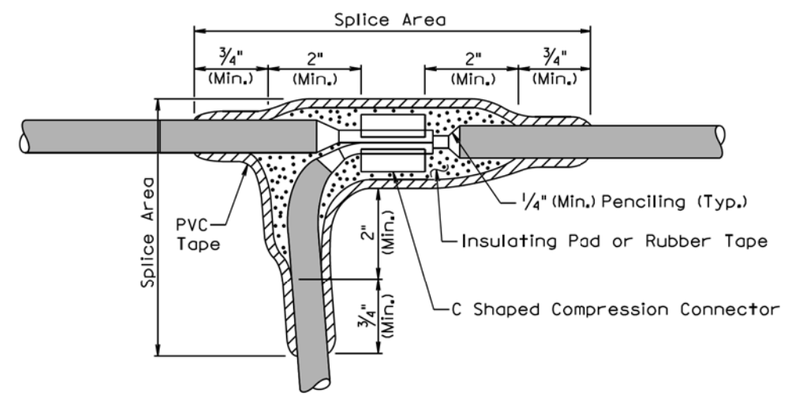

TYPE T SPLICE
(For 3 free ends)

February 14, 2010

Published Date: 4th Qtr. 2015	SDDOT	WIRE SPLICING FOR LIGHTING (LOW VOLTAGE CIRCUITS (0 to 600 V))	PLATE NUMBER 635.80
			Sheet 1 of 2

Plot Scale - 1:200
Plotted From - tnpr14286
File - ...\Sturgis LGA\s63576s63580.dgn

GENERAL NOTES:

Tree Trimming shall be done in accordance with proper tree trimming practices. The underside of each branch to be removed shall have a groove sawed through the bark (1/2" Min. depth) before any sawing is started on the top side of the branch.

Tree trimming shall be applied around each light source installed within the limits of the project.

The tree trimming limits as shown on this sheet represents the minimum amount of trimming required. Additional tree trimming required shall be as directed by the Engineer. The City shall maintain the limits of tree trimming once a year.

All foliage and branches shall be removed from the limits defined below by the Completion Date of the project.

Costs for Tree Trimming for Roadway Lighting shall be incidental to the various contract bid items.

December 23, 2009

Published Date: 4th Qtr. 2015

SDDOT

TREE TRIMMING FOR ROADWAY LIGHTING

PLATE NUMBER 635.99

Sheet 1 of 1