SECTION: F SURFACING PLANS

INDEX OF SHEETS

F1	General Layout with Index
F2-F12	Estimate with General Notes & Tables
F13-F15	Typical Sections
F16-F43	Details
F44-F51	Guardrail
F52	Special Detail
F53-F71	Standard Plates

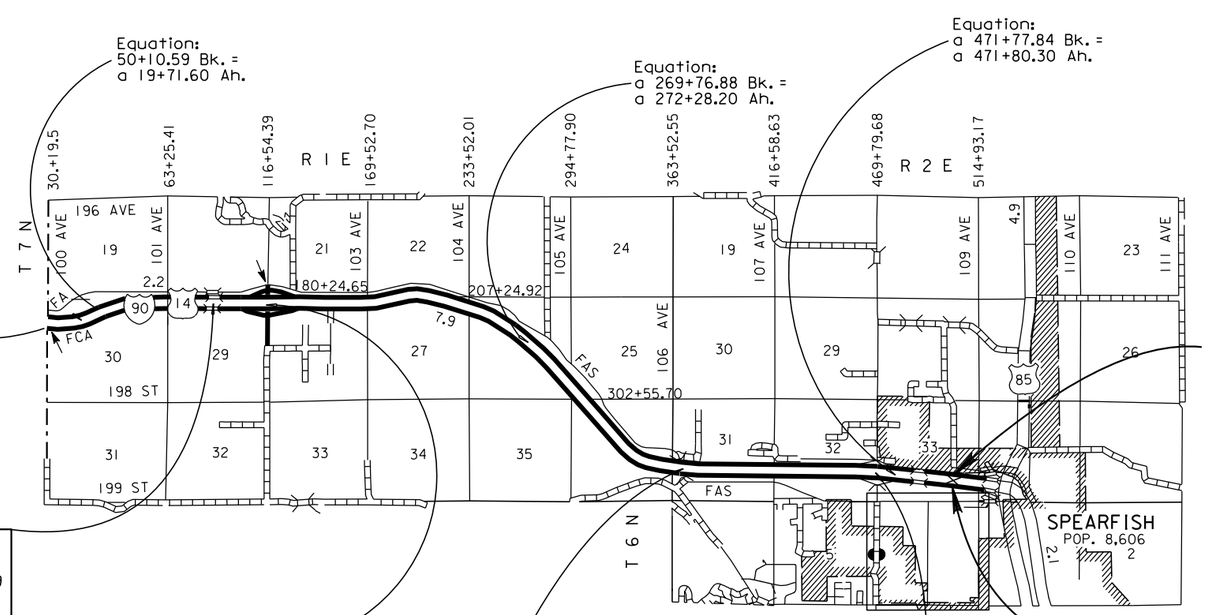

Begin IM 0901(186)0

Sta. 30+19.15 EBL & WBL
1534.84' South of Northwest
corner of Section 30-T7N-R1E ,B.H.M
MRM 0.00 +0.000

End IM 0901(186)0

Sta. a 515+41.5 WBL, Approximately 1099.4 feet
North and 759.1 feet West of the
Southeast corner of Section 33-T7N-R2E,
MRM 9.34 +0.478

End IM 0901(186)0

Sta. a 515+41.5 EBL, Approximately 1015.8 feet
North and 767.6 feet West of the
Southeast corner of Section 33-T7N-R2E,
MRM 9.34 +0.469

Exception:
Westbound MRM 1.71
Str. No. 41-015-041
Sta. a 88+06.81 to Sta. a 89+95.19

Exception:
Eastbound MRM 1.71
Str. No. 41-015-042
Sta. a 88+06.81 to Sta. a 89+95.19

Exception:
Westbound MRM 2.25
Str. No. 41-020-041
Sta. a 115+53.79 to Sta. a 117+54.99

Exception:
Eastbound MRM 2.25
Str. No. 41-020-042
Sta. a 115+53.79 to Sta. a 117+54.99

Exception:
Westbound MRM 7.02
Str. No. 41-061-056
Sta. a 365+21.5 to Sta. a 367+71.4

Exception:
Eastbound MRM 7.02
Str. No. 41-061-057
Sta. a 366+09.0 to Sta. a 368+56.0

Exception:
Westbound MRM 8.96
Str. No. 41-080-057
Sta. a 468+86.15 to Sta. a 470+69.35

Exception:
Eastbound MRM 8.96
Str. No. 41-080-058
Sta. a 468+85.01 to Sta. a 470+68.21

PLOT SCALE - 1:5280
PLOT NAME - 1
FILE - ...\LAWR04DA & 04DC\TITLE F.DGN
PLOTTED FROM - TRPR15123

SECTION F ESTIMATE OF QUANTITIES

BID ITEM NUMBER	ITEM	QUANTITY	UNIT
009E0010	Mobilization	Lump Sum	LS
009E3230	Grade Staking	4.704	Mile
009E3250	Miscellaneous Staking	2.352	Mile
009E3280	Slope Staking	2.352	Mile
009E3300	Three Man Survey Crew	100.0	Hour
009E3320	Checker	Lump Sum	LS
110E0700	Remove 3 Cable Guardrail	117	Ft
110E0740	Remove 3 Cable Guardrail Anchor Assembly	8	Each
110E0745	Remove 3 Cable Guardrail Slip Base Anchor Assembly	8	Each
110E6000	Remove 3 Cable Guardrail for Reset	4,379	Ft
110E6230	Remove W Beam Guardrail for Reset	950.0	Ft
110E6240	Remove W Beam to Thrie Beam Guardrail Transition for Reset	2	Each
110E6260	Remove W Beam Guardrail Breakaway Cable Terminal for Reset	16	Each
110E7510	Remove Pipe End Section for Reset	4	Each
120E0010	Unclassified Excavation	4,323	CuYd
120E0100	Unclassified Excavation, Digouts	478	CuYd
120E0600	Contractor Furnished Borrow Excavation	17,713	CuYd
120E4100	Reprofiling Ditch	2.5	Sta
120E6100	Water for Embankment	229.3	MGal
120E6200	Water for Granular Material	174.4	MGal
210E2000	Shoulder Shaping	1.408	Mile
250E0010	Incidental Work	Lump Sum	LS
260E1010	Base Course	10,728.0	Ton
260E1030	Base Course, Salvaged	3,795.0	Ton
270E0040	Salvage and Stockpile Asphalt Mix and Granular Base Material	3,795.0	Ton
320E1080	Class S Asphalt Concrete	24,950.6	Ton
320E1810	Asphalt Concrete Leveling Lift	7,348.9	Ton
320E3100	Stabilizing Additive for Asphalt Concrete	62.5	Ton
320E7012	Grind 12" Rumble Strip or Stripe in Asphalt Concrete	35.9	Mile
330E0010	MC-70 Asphalt for Prime	1.4	Ton
330E0100	SS-1h or CSS-1h Asphalt for Tack	336.4	Ton
330E0210	SS-1h or CSS-1h Asphalt for Flush Seal	16.9	Ton
332E0010	Cold Milling Asphalt Concrete	1,173	SqYd
380E6500	Planing PCC Pavement	7,724.0	SqYd
393E0100	Cracking and Seating PCC Pavement	265,275.6	SqYd
393E0300	Cored or Sawed Sample	44	Each
450E0182	36" RCP Class 2, Furnish	12	Ft
450E0190	36" RCP, Install	12	Ft
* 450E8900	Cleanout Pipe Culvert	7	Each
450E9001	Reset Pipe End Section	4	Each
600E0300	Type III Field Laboratory	1	Each
629E0100	3 Cable Guardrail	773	Ft
629E0200	Reset 3 Cable Guardrail	4,379	Ft
629E0300	3 Cable Guardrail Slip Base Anchor Assembly	16	Each
630E2110	Beam Guardrail Post and Block	124	Each
630E2205	Breakaway Cable Terminal End Post	32	Each
630E5160	Reset W Beam Rail	950.0	Ft
630E5180	Reset W Beam Guardrail Breakaway Cable Terminal	16	Each
630E5190	Reset W Beam to Thrie Beam Guardrail Transition	2	Each
632E2220	Guardrail Delineator	117	Each
632E2520	Type 2 Object Marker	16	Each
720E1015	Bank and Channel Protection Gabion	6.0	CuYd
900E1980	Storage Unit	1	Each

*** - Denotes Non-Particpating**

Alternate A

BID ITEM NUMBER	ITEM	QUANTITY	UNIT
320E0006	PG 64-22 Asphalt Binder	1,500.0	Ton
320E0008	PG 64-34 Asphalt Binder	5,421.6	Ton
320E1004	Class Q4 Hot Mixed Asphalt Concrete	87,956.0	Ton
320E4000	Hydrated Lime	870.7	Ton

SECTION F ESTIMATE OF QUANTITIES (Continued)

Alternate B

BID ITEM NUMBER	ITEM	QUANTITY	UNIT
320E0006	PG 64-22 Asphalt Binder	1,378.0	Ton
320E0008	PG 64-34 Asphalt Binder	4,959.7	Ton
320E1004	Class Q4 Hot Mixed Asphalt Concrete	90,276.7	Ton
320E4000	Hydrated Lime	892.6	Ton

SURFACING THICKNESS DIMENSIONS

Plans quantity will be applied though the thickness may vary from that shown on the plans.

At those locations where material must be placed to achieve a required elevation, plans quantity may be varied to achieve the required elevation.

UTILITIES

The Contractor shall contact the involved utility companies through South Dakota One Call (1-800-781-7474) prior to starting work. It shall be the responsibility of the Contractor to coordinate work with the utility owners to avoid damage to existing facilities.

Utilities are not planned to be affected on this project. If utilities are identified near the improvement area through the SD One Call Process as required by South Dakota Codified Law 49-7A and Administrative Rule Article 20:25, the Contractor shall contact the Project Engineer to determine modifications that will be necessary to avoid utility impacts.

STORAGE UNIT

The Contractor shall provide a storage unit such as a portable storage container or a semi-trailer meeting the minimum size requirements from the table below:

Project Total Asphalt Concrete Tonnage	Minimum Internal Size (Cu Ft)	Minimum External Size (L x W x H)
Less than 50,000 ton	1,166	20’ x 8’ x 8.6’ std
More than 50,000 ton	2,360	40’ x 8’ x 8.6’ std
All Gyratory Controlled QC/QA Projects	2,360	40’ x 8’ x 8.6’ std

The storage unit is intended for use only by the Engineer for the duration of the project. The QC lab personnel or the Contractor will not be allowed to use the storage container while it is on the project, without permission of the Engineer.

STORAGE UNIT (continued)

The storage unit shall be on site and operational prior to asphalt concrete production. Upon completion of asphalt concrete production, the Engineer will notify the Contractor when the storage unit can be removed from the project. The storage unit use will not exceed 30 calendar days from the completion of asphalt concrete production. The storage unit will remain the property of the Contractor.

The storage unit shall be weather proof and shall be set in a level position. The storage unit shall be able to be locked with a padlock.

The storage unit shall be placed adjacent to the QA lab, as approved by the Engineer.

The following shall apply when the storage unit provided on the project is a portable storage container:

1. The portable storage container shall be constructed of steel.
2. The portable storage container shall be set such that it is raised above the surrounding ground level to keep water from ponding under or around the storage container.

The following shall apply when the storage unit provided on the project is a semi-trailer:

1. A set of steps and hand railings shall be provided at the exterior door.
2. If the floor of the semi-trailer is 18 inches or more above the ground, a landing shall be constructed at the exterior door. The minimum dimensions for the landing shall be 4 feet by 5 feet. The top of the landing shall be level with the threshold or opening of the doorway.
3. The semi-trailer may be connected to the QA lab by a stable elevated walkway. The walkway shall be a minimum of 48 inches wide and contain handrails installed at 32 inches above the deck of the walkway. The walkway shall be constructed such that it is stable and the deck does not deform during use and allows for proper door operation. Walkway construction shall be approved by the Engineer.

All cost for furnishing, maintaining, and removing the storage unit including labor, equipment, and materials including any necessary walkways, landings, stairways, and handrails shall be included in the contract unit price per each for “Storage Unit”.

TYPE III FIELD LABORATORY

The lab shall be equipped with an internet connection such as DSL, cable modem, or other approved service. The internet connection shall be provided with a multi-port wireless router. The internet connection shall be a minimum speed of 512 Kb unless limited by job location and approved by the DOT. Prior to installing the wireless router the Contractor shall submit the wireless router's technical data to the Area Office to check for compatibility with the state's computer equipment. The internet connection is intended for state personnel usage only. The Contractor's personnel are prohibited from using the internet connection unless pre-approved by the Project Engineer.

The Contractor shall submit a copy of each monthly bill for calls charged to this phone at the end of each month. The Project Engineer will then audit the bills to ensure all calls are legitimate and then initiate a Construction Change Order (CCO) to reimburse the Contractor for the actual phone calls made, including local and long distance calls. Reimbursement will not be made for fees associated with the purchase, installation, disconnection, monthly line charges, and incidentals involved in the installation, maintenance, and disconnection of the phone (including attachments). These items shall be incidental to the contract unit price per each for "Type III Field Laboratory".

CRACKING AND SEATING PCC PAVEMENT

The transverse joints are skewed 2' in a 12' width. The transverse joints are constructed at an alternating joint spacing of 18', 12', 13', 19', 18'.

Basis of payment for CRACKING AND SEATING PCC PAVEMENT will be plans quantity unless changes are ordered and approved by the Engineer.

TABLE OF CRACKING AND SEATING PCC PAVEMENT

Station to Station	Width (Ft)	Quantity (SqYd)
I 90 E		
32+09.5 to a 86+16.81 (thru eq.)	24	22,523.5
a 91+85.19 to a 113+63.79	24	5,809.6
a 119+44.99 to a 364+19 (thru eq.)	24	64,593.8
a 370+46 to a 466+95.01	24	25,730.7
a 472+60.67 to 513+51.5	24	10,908.9
Rest Area Exit Ramp gore area	Var.	1,113.2
Rest Area On Ramp gore area	Var.	1,188.6
Exit 2 EB Exit Ramp gore area	Var.	951.6
Exit 2 EB On Ramp gore area	Var.	994.7
I 90 W		
32+09.5 to a 86+16.81 (thru eq.)	24	22,523.5
a 91+85.19 to a 113+63.79	24	5,809.6
a 119+44.99 to a 363+31.5 (thru eq.)	24	64,360.5
a 369+61.4 to a 466+96.15	24	25,959.3
a 472+61.81 to 513+51.5	24	10,905.8
Exit 2 WB On Ramp gore area	Var.	994.7
Exit 2 WB Exit Ramp gore area	Var.	907.6
Total		265,275.6

UNCLASSIFIED EXCAVATION

An estimated 4,323.0 CuYds of Unclassified Excavation shall be plans quantity and will not be adjusted according to field measurements, see Typical Sections. Unclassified Excavation is salvaged asphalt mix and granular base material and removal of waste material. The Unclassified Excavation waste material shall be disposed of as directed by the Engineer.

The salvaged material will be used as Base Course, Salvaged on this project.

TABLE OF UNCLASSIFIED EXCAVATION

Location of Removal Areas	Salvaged Asphalt Mix and Granular Base Material	Waste Material
	CuYds	CuYds
Guardrail		
Str. # 41-015-042 median shoulder	4.5	--
Str. # 41-015-042 outside shoulder	2.6	--
Str. # 41-015-041 median shoulder	4.5	--
Str. # 41-015-041 outside shoulder	2.6	--
Str. # 41-020-042 median shoulder	5.5	--
Str. # 41-020-042 outside shoulder	2.6	--
Str. # 41-020-041 median shoulder	4.5	--
Str. # 41-020-041 outside shoulder	2.6	--
Str. # 41-061-057 median shoulder	5.2	--
Str. # 41-061-057 outside shoulder	2.0	--
Str. # 41-061-056 median shoulder	4.2	--
Str. # 41-061-056 outside shoulder	2.1	--
Str. # 41-080-058 median shoulder	4.4	--
Str. # 41-080-058 outside shoulder	2.8	--
Str. # 41-080-057 median shoulder	4.7	--
Str. # 41-080-057 outside shoulder	2.6	--
Ramp acceleration /deceleration lane		
Rest Area – EB exit Ramp	193.2	190.9
Rest Area – EB on Ramp	360.4	323.9
Exit 2 – EB off Ramp	421.1	324.3
Exit 2 – EB on Ramp	426.6	344.7
Exit 2 – WB on Ramp	365.0	306.6
Exit 2 – WB off Ramp	184.3	175.6
Exit 8 – EB off Ramp		152.4
Exit 8 – EB on Ramp		203.1
Exit 8 – WB on Ramp		175.3
Exit 8 – WB off Ramp		118.2
Subtotals	2,008.0	2,315.0
TOTAL	4,323.0	

CONTRACTOR FURNISHED BORROW EXCAVATION

The Contractor shall provide a suitable site for Contractor furnished borrow material. The Contractor is responsible for obtaining all required permits and clearances for the borrow site. The borrow material shall be approved by the Engineer.

The material shall have a maximum Liquid Limit (LL) of 45 and a Plastic Index (PI) greater than 10 but less than 25. The contractor shall be responsible for one LL and PI test for each borrow source.

Restoration of the Contractor furnished borrow site shall be the responsibility of the Contractor.

The Unclassified Excavation waste material may be used as Contractor Furnished Borrow Excavation for inslope flattening and widening as required. Refer to the typical sections for additional details. The outside shoulder inslope shall be at a 6:1 or flatter except adjacent to guardrail and the median shoulder inslope shall be at a 6:1 or flatter. Outside slope flattening in high fill areas will extend at least 42' from centerline of roadway. Care shall be taken so that a minimum 4" depth of topsoil shall be placed over the entire disturbed area while proper drainage is maintained. Final acceptance of the inslopes will be at the discretion of the Engineer.

TABLE OF CONTRACTOR FURNISHED BORROW EXCAVATION

Location	Contractor Furnished Borrow	Water for Embankment
	Cu.Yds.	MGal
*Mainline Slope Flattening Outside	4,781.0	61.9
*Mainline Slope Flattening Median	4,780.7	61.9
Ramp Gore Areas Widening		
Rest Area Exit Ramp	674.1	8.7
Rest Area On Ramp	1,259.3	16.3
Exit 2 – EB off Ramp	656.8	8.5
Exit 2 – EB on Ramp	1,305.8	16.9
Exit 2 – WB on Ramp	1,257.9	16.3
Exit 2 – WB off Ramp	646.7	8.4
Exit 8 – EB off Ramp	513.4	6.6
Exit 8 – EB on Ramp	662.2	8.6
Exit 8 – WB on Ramp	580.6	7.5
Exit 8 – WB off Ramp	412.9	5.3
Slope Flattening of median crossovers & ditch blocks	100.0	1.3
Pipe and Pipe Ends, See Pipe Table	82.0	1.1
Total	17,713.4	229.3

*There will be 500 cuyd/mile of Contractor Furnished Borrow Excavation to be used by the Contractor at the discretion of the Engineer for use in slope flattening.

INCIDENTAL WORK

After the topsoil has been removed from the median and outside shoulder inslopes and the finished Asphalt Concrete shoulder has been placed, the Contractor shall shape the median and outside shoulder inslopes to provide the required slopes below. The Department anticipates the median and outside shoulder inslopes have enough existing material deposited by annual maintenance activities to achieve these required inslopes with the added surface thickness of the Asphalt Concrete.

Upon completion of shaping the median and shoulder inslopes, the Contractor shall ensure the outside shoulder inslope shall be at a 6:1 or flatter except adjacent to guardrail. In addition, the median shoulder inslope shall be at a 6:1 or flatter. The outside shoulder inslope in high fill areas will extend at least 42' from crown of respective eastbound or westbound lanes and then break to a 3:1. Care shall be taken so that a minimum 4" depth of topsoil shall be placed over the entire disturbed area to ensure proper drainage is maintained. Final acceptance of the inslopes will be determined by the Engineer.

In areas where there is not enough existing material to obtain the required slopes, the Contractor will be required to obtain Contractor Furnished Borrow Excavation to obtain the required slopes. Included in the Estimate of Quantities is 500 cuyd/mile of Contractor Furnished Borrow Excavation, to be used by the Contractor at the discretion of the Engineer, for the use in slope flattening in these areas.

The Contractor shall ensure all maintenance crossovers and median ditch blocks will have the correct inslopes, 10:1 with no culvert and 6:1 with longitudinal culvert, in accordance with Standard Plates 120.02 and 120.04. The Contractor will ensure proper drainage to all transverse culverts. The inslope for maintenance crossovers and ditch blocks with transverse culverts located adjacent to them will be 10:1. Included in the Estimate of Quantities is 100 cuyd of Contractor Furnished Borrow Excavation to be used by the Contractor at the discretion of the Engineer, for the use of slope flattening for maintenance crossovers and median ditch blocks.

Cost for this work shall be incidental to the contract lump sum price for INCIDENTAL WORK except that additional material and all work required for Contractor Furnished Borrow Excavation will be paid for at the contract unit price for yard for Contractor Furnished Borrow Excavation.

UNCLASSIFIED EXCAVATION, DIGOUTS

Included in the Estimate of Quantities are 25 cubic yards per mile of Unclassified Excavation, Digouts for the necessary removal of unstable material.

Backfill shall be Base Course or Base Course, Salvaged paid for at the contract unit price per ton.

BACKFILLING OF DIGOUTS

Included in the Estimate of Quantities are 50 tons of Base Course or Base Course, Salvaged per mile and 0.6 Mgal of Water for Granular Material per mile for backfilling of digouts of the existing at locations to be designated by the Engineer.

Compaction of the Base Course or Base Course, Salvaged for the digouts shall be to the satisfaction of the Engineer. An estimated 19.123 miles are required for the project.

SALVAGE AND STOCKPILE ASPHALT MIX AND GRANULAR BASE MATERIAL

An estimated 3,795.0 tons (2,008.0 cubic yards) of asphalt mix and granular base material shall be salvaged from the mainline shoulders of the interstate in locations where ramp acceleration/deceleration lanes are being built and where shoulders are being widened for traffic control purposes. The salvaged material shall be stockpiled at a site furnished by the Contractor and satisfactory to the Engineer.

The quantity of salvaged asphalt mix and granular base material may vary from the plans. The Contractor will be required to use all salvaged material on this project by decreasing or increasing the quantity of Base Course as necessary, or as directed by the Engineer. Plans quantity will be the basis of measurement and payment for the above mentioned work.

No adjustment in the contract unit price per ton for salvaged material will be made because of a variation in salvaged material quantities.

TABLE OF SALVAGE AND STOCKPILE ASPHALT MIX AND GRANULAR BASE MATERIAL

Location of Removal Areas	Salvage and Stockpile Asphalt Mix and Granular Base Material Tons	
Guardrail	Outside Shldr	Median Shldr
Str. # 41-015-042	4.9	8.5
Str. # 41-015-041	4.9	8.5
Str. # 41-020-042	4.8	10.3
Str. # 41-020-041	4.8	8.5
Str. # 41-061-057	3.9	9.8
Str. # 41-061-056	3.9	7.9
Str. # 41-080-058	5.3	8.3
Str. # 41-080-057	4.9	8.9
Ramp acceleration /deceleration lane		
Rest Area – EB exit Ramp	365.2	
Rest Area – EB on Ramp	681.2	
Exit 2 – EB off Ramp	795.8	
Exit 2 – EB on Ramp	806.4	
Exit 2 – WB on Ramp	689.9	
Exit 2 – WB off Ramp	348.4	
Total	3,795.0	

BASE COURSE, SALVAGED

The Base Course, Salvaged shall be obtained from the stockpile site(s) provided by the Contractor from the material salvaged on this project and may be used without further quality testing.

Base Course, Salvaged taken from stockpile sites shall be run over a 1 1/2 inch screen prior to placement.

All other requirements for Base Course, Salvaged shall apply.

PLANING PCC PAVEMENT TAPERS

In order to construct the new asphalt surfacing flush with the PCC Pavement, Planing PCC Pavement shall be done as per the Layouts for Planing PCC Pavement.

The work shall be performed only during daylight hours.

Planing PCC Pavement operations ahead of asphalt concrete laydown will be limited by particular job conditions and be subject to approval of the Engineer.

The basis for payment for Planing PCC Pavement will be plans quantity. No separate measurements will be taken.

LOCATION	NUMBER OF LOCATIONS	SIZE	SQYDS
Begin/End Project	4	110' length x 24'	1,173
Begin/End Structures	16	110' length x 24'	4,693
Rest Area Ramps	2	110' length x 26'	636
Exit 8 Ramps	4	110' length x 25'	1,222
		TOTAL	7,724

COLD MILLING ASPHALT CONCRETE

Cold Milling Asphalt Concrete operations ahead of asphalt concrete laydown will be limited by particular job conditions and be subject to approval of the Engineer.

If resurfacing as per the typical section cannot be placed immediately after cold milling at project ends, surfacing exceptions, bridge approaches, ramp terminals adjacent to ramp concrete, etc., then temporary asphalt mix ramps shall be placed as directed by the Engineer. Cost for placing and removing the temporary ramps shall be incidental to the contract unit prices for the various items.

Cold Milling Asphalt is expected to produce 85.7 tons of salvaged asphalt concrete material. The Cold Milled material on this project shall become property of the Contractor.

COLD MILLING TAPERS

In order to construct the new surfacing flush with the asphalt concrete, it will be necessary to taper the depth of milling according to the details for Cold Milling Tapers.

The surface shall be milled full roadway width.

Cost for this work shall be included in the contract unit price per square yard for Cold Milling Asphalt Concrete.

Taper depth of Cold Milling at locations shown below:

LOCATION	NUMBER OF LOCATIONS	SIZE	SQYDS
Exit 2 Ramps	4	110' length x 24'	1,173
		TOTAL	1,173

GRIND RUMBLE STRIPS IN ASPHALT CONCRETE

Asphalt Concrete Rumble Strips shall be constructed on the shoulders. Rumble Strips shall be paid for at the contract unit price per mile for Grind 12" Rumble Strip or Stripe in Asphalt Concrete. It is estimated that 35.9 miles of asphalt concrete rumble strips will be required.

Rumble Strip /Stripe installation shall be completed prior to application of the Flush Seal and Permanent Pavement Markings. In the event the Flush Seal is eliminated from the contract, the Contractor will still be required to apply a Flush Seal to the newly installed 12" Rumble Strips/Stripes at a width of 1.5' and at the same rate as specified in this plan set. No adjustment in payment will be made and SS-1h or CSS-1h will be paid at the contract unit price per ton.

TABLE OF RUMBLE STRIP LOCATIONS

Location	Length (miles)
I 90 EBL Outside	8.1
I 90 EBL Median	9.6
I 90 WBL Outside	8.6
I 90 WBL Median	9.6
Total	35.9

ASPHALT CONCRETE LEVELING LIFT

Mineral aggregate shall be furnished by the Contractor.

Mineral Aggregate for Asphalt Concrete Leveling Lift shall conform to the requirement of Class E, Type 2 except the gradation shall be as follows:

Passing 3/8" sieve	100%
Passing No. 4 sieve	75-95%
Passing No. 8 sieve	45-65%
Passing No. 16 sieve	28-48%
Passing No. 40 sieve	14-30%
Passing No. 200 sieve	4.0-10.0%

The mineral aggregate retained on the No.4 sieve shall contain at least seventy percent by dry weight of crushed pieces having two or more surfaces produced by crushing.

The portion of mineral aggregate passing the No.4 sieve shall be manufactured solely from material retained on a ¾ inch sieve except that up to thirty percent of the total mineral aggregate may be natural sand or filler necessary to meet gradation. Sand or filler shall be added to the cold feed by separate adjustable methods, which provides a constant and uniform flow.

The Asphalt Concrete Leveling Lift shall be compacted by the Specified Roller Coverage Method.

All other requirements for Asphalt Concrete Class E shall apply.

CLASS Q4 HOT MIXED ASPHALT CONCRETE

Mineral Aggregate:

Mineral Aggregate for Class Q4 Hot Mixed Asphalt Concrete - Alternate A shall conform to the requirements of Class Q4.

Mineral Aggregate for Class Q4 Hot Mixed Asphalt Concrete - Alternate B shall consist of a minimum of 80 percent crushed limestone ledgerock and shall conform to the requirements of Class Q4.

Mix Design Criteria:

Gyratory Controlled QC/QA Mix Design requirements for the Class Q4 Hot Mixed Asphalt Concrete – Alternate B shall conform to the requirements of Class Q4 except as modified by the following:

Gyratory Compactive Effort:

	$N_{initial}$	N_{design}	$N_{maximum}$
Class Q4	6	65	100

Voids in Mineral Aggregate (VMA):

	Minimum VMA (%):
Class Q4	13.0

Fine Aggregate Angularity:

	Minimum Uncompacted Void Content (%):
Class Q4	43.0

Pay Factor Attributes:

Air Voids:

	Air Voids (%):
Class Q4	3.5 ±1.0

All remaining requirements for Class Q4 shall apply

CLASS S ASPHALT CONCRETE

Mineral aggregate for the Class S shall conform to the requirements for Class S, Type 1.

ADDITIONAL QUANTITIES

Included in the Estimate of Quantities are 100 tons of Class Q4 Hot Mixed Asphalt Concrete, 1.0 ton of Hydrated Lime, and 5.8 tons of PG 64-22 Asphalt Binder per mile for Alternate A for spot leveling, strengthening, and repair of the existing surface in the resurfacing portion of the project.

Included in the Estimate of Quantities are 100 tons of Class Q4 Hot Mixed Asphalt Concrete, 1.0 ton of Hydrated Lime, and 5.0 tons of PG 64-22 Asphalt Binder per mile for Alternate B for spot leveling, strengthening, and repair of the existing surface in the resurfacing portion of the project.

ASPHALT TACK FOR TIGHT BLADING, LEVELING, AND REPAIR

Included in the estimate of quantities are 10 tons of SS-1h or CSS–1h Emulsified Asphalt for Tack for tight blading, leveling, and repair throughout the project. (Rate = 0.05 gallons per square yard.)

CHECKING SPREAD RATES

The Contractor shall be responsible for checking the Gravel Cushion spread rates and taking the weigh delivery tickets as the surfacing material arrives on the project and is placed onto the roadway.

The Contractor shall compute the required spread rates for each typical surfacing section and create a spread chart prior to the start of material delivery and placement. The Engineer will review and check the Contractor's calculations and spread charts. The station to station spread shall be written on each ticket as the surfacing material is delivered to the roadway.

At the end of each day's shift, the Contractor shall verify the following:

- All tickets are present and accounted for,
- The quantity summary for each item is calculated,
- The amount of material wasted if any,
- Each day's ticket summary is marked with the corresponding 'computed by',
- The ticket summary is initialed and certified that the delivered and placed quantity is correct.

All daily tickets and the summary by item shall be given to the Engineer no later than the following morning.

If the checker is not properly and accurately performing the required duties, the Contractor shall correct the problem or replace the checker with an individual capable of performing the duties to the satisfaction of the Engineer. Failure to do so will result in suspension of the work.

The Department will perform depth checks. The Contractor shall be responsible for placement of material to the correct depth unless otherwise directed by the Engineer. If the placed material is not within a tolerance of ±1/2 inch of the plan shown depth, the Contractor shall correct the problem at no additional cost to the Department. Excess material above the tolerance will not be paid for. Achieving the correct depth may require picking up and moving material or other action as required by the Engineer.

All costs for providing the Contractor furnished checker and performing all related duties shall be incidental to the contract lump sum price for the CHECKER. No allowances will be made to the contract lump sum price for CHECKER due to authorized quantity variations unless the quantities for the material being checked vary above or below the estimated quantities by more than 25 percent. Payment for the Checker shall then be increased or decreased by the same proportion as the placed material quantity bears to the estimated material quantity.

TABLE OF SUPERELEVATION

Station	to Station	
30+19.15	49+30.6	- 5730' Radius Left 0.0370'/' Superelevation Rate Point of Rotation 12' from roadway centerline on median side
49+30.60	a 21+31.60	- Superelevation Transition (thru eq.)
a 21+31.60	a 28+21.38	- Normal Crown Section
a 28+21.38	a 30+61.38	- Superelevation Transition
a 30+61.38	a 52+31.69	- 5730' Radius Right 0.0370'/' Superelevation Rate Point of Rotation 12' from roadway centerline on median side
a 52+31.69	a 54+71.69	- Superelevation Transition
a 54+71.69	a 159+73.80	- Normal Crown Section
a 159+73.80	a 162+13.80	- Superelevation Transition
a 162+13.80	a 179+28.14	- 7640' Radius Left 0.0300'/' Superelevation Rate Point of Rotation 12' from roadway centerline on median side
a 179+28.14	a 181+68.14	- Superelevation Transition
a 181+68.14	a 184+43.61	- Normal Crown Section
a 184+43.61	a 188+18.61	- Superelevation Transition
a 188+18.61	a 199+37.77	- 2865' Radius Right 0.0570'/' Superelevation Rate Point of Rotation 12' from roadway centerline on median side
a 199+37.77	a 203+12.77	- Superelevation Transition
a 203+12.77	a 213+98.17	- Normal Crown Section
a 213+98.17	a 216+38.17	- Superelevation Transition
a 216+38.17	a 239+05.58	- 7640' Radius Right 0.0300'/' Superelevation Rate Point of Rotation 12' from roadway centerline on median side
a 239+05.58	a 241+45.58	- Superelevation Transition
a 241+45.58	a 246+57.44	- Normal Crown Section
a 246+57.44	a 248+97.44	- Superelevation Transition
a 248+97.44	a 271+48.20	- 7640' Radius Right 0.0300'/' Superelevation Rate Point of Rotation 12' from roadway centerline on median side
a 271+48.20	a 273+88.20	- Superelevation Transition
a 273+88.20	a 330+83.57	- Normal Crown Section
a 330+83.57	a 333+23.57	- Superelevation Transition
a 333+23.57	a 349+96.69	- 2865' Radius Left 0.0570'/' Superelevation Rate Point of Rotation 12' from roadway centerline on median side
a 349+96.69	a 352+36.69	- Superelevation Transition
a 352+36.69	a 361+36.88	- Normal Crown Section
a 361+36.88	a 363+76.88	- Superelevation Transition
a 363+76.88	a 380+41.88	- 8595' Radius Left 0.0270'/' Superelevation Rate Point of Rotation 12' from roadway centerline on median side
a 380+41.88	a 382+81.88	- Superelevation Transition
a 382+81.88	a 515+41.5	- Normal Crown Section

RATES OF MATERIALS

The Estimate of Surfacing Quantities is based on the following quantities of materials per mile.

I 90 Mainline

Sta. 30+19.15 to Sta. a 88+06.81 EBL (thru eq.)
Sta. a 89+95.19 to Sta. a 115+53.79 EBL
Sta. a 117+54.99 to Sta. a 366+26.24 EBL (thru eq.)
Sta. a 368+35.47 to Sta. a 468+85.01 EBL
Sta. a 470+68.21 to Sta. a 515+41.5 EBL (thru eq.)
Sta. 30+19.15 to Sta. a 88+06.81 WBL (thru eq.)
Sta. a 89+95.19 to Sta. a 115+53.79 WBL
Sta. a 117+54.99 to Sta. a 365+43.17 WBL (thru eq.)
Sta. a 367+54.23 to Sta. a 468+86.15 WBL
Sta. a 470+69.35 to Sta. a 515+41.5 WBL (thru eq.)

ASPHALT CONCRETE LEVELING LIFT

Crushed Aggregate	375.4 Tons
PG 64-22 Asphalt Binder	23.1 Tons
Total Mix	398.5 Tons

The exact proportions of this material will be determined on construction.

SS-1h or CSS-1h Asphalt for Tack at the rate of 3.2 tons applied 26 feet wide (Rate = 0.05 gallon per square yard).

CLASS Q4 HOT MIXED ASPHALT CONCRETE – 2nd Lift

	Alternate A	Alternate B
Crushed Aggregate	1,516.4 Tons	1,570.6 Tons
PG 64-34 Asphalt Binder	93.4 Tons	82.7 Tons
Total Mix	1,609.8 Tons	1,653.3 Tons
Hydrated Lime	16.1 Tons	16.5 Tons
Total Mix with Hydrated Lime	1,625.9 Tons	1,669.8 Tons

The exact proportions of this material will be determined on construction.

SS-1h or CSS-1h Asphalt for Tack at the rate of 4.0 tons applied 32 feet wide (Rate = 0.05 gallon per square yard).

CLASS Q4 HOT MIXED ASPHALT CONCRETE – 3rd Lift

	Alternate A	Alternate B
Crushed Aggregate	1,417.1 Tons	1,467.7 Tons
PG 64-34 Asphalt Binder	87.3 Tons	77.2 Tons
Total Mix	1,504.4 Tons	1,544.9 Tons
Hydrated Lime	15.0 Tons	15.4 Tons
Total Mix with Hydrated Lime	1,519.4 Tons	1,560.3 Tons

The exact proportions of this material will be determined on construction.

SS-1h or CSS-1h Asphalt for Tack at the rate of 4.0 tons applied 32 feet wide (Rate = 0.05 gallon per square yard).

CLASS S ASPHALT CONCRETE

Crushed Aggregate	1,122.6 Tons
PG 64-34 Asphalt Binder	69.1 Tons
Stabilizing Additive	3.0 Tons
Total Mix	1,194.7 Tons

The exact proportions of this material will be determined on construction.

SS-1h or CSS-1h Asphalt for Tack at the rate of 4.2 tons applied 33.5 feet wide (Rate = 0.05 gallon per square yard).

I 90 Outside Shoulder

Sta. 30+19.15 to Sta. a 32+97.50 EBL (thru eq.)
Sta. a 43+03.80 to Sta. a 71+84.5 EBL
Sta. a 89+95.19 to Sta. a 95+87.6 EBL
Sta. a 105+15.4 to Sta. a 115+53.79 EBL
Sta. a 117+54.99 to Sta. a 128+17.8 EBL
Sta. a 144+70.2 to Sta. a 366+09 EBL (thru eq.)
Sta. a 368+56 to Sta. a 445+60.14 EBL
Sta. a 457+15.74 to Sta. a 468+85.01 EBL
Sta. a 470+68.21 to Sta. a 479+25.55 EBL (thru eq.)
Sta. a 497+70.59 to Sta. a 515+41.5 EBL

Sta. 30+19.15 to Sta. a 88+06.81 WBL (thru eq.)
Sta. a 104+91.0 to Sta. a 115+53.79 WBL
Sta. a 117+54.99 to Sta. a 128+16.3 WBL
Sta. a 137+18.6 to Sta. a 365+21.5 WBL (thru eq.)
Sta. a 367+71.4 to Sta. a 438+61.9 WBL
Sta. a 451+83.4 to Sta. a 468+86.15 WBL
Sta. a 470+69.35 to Sta. a 482+36.7 WBL (thru eq.)
Sta. a 488+19.32 to Sta. a 515+41.5 WBL

CLASS Q4 HOT MIXED ASPHALT CONCRETE – 1st Shoulder Lift

	Alternate A	Alternate B
Crushed Aggregate	504.3 Tons	522.3 Tons
PG 64-22 Asphalt Binder	31.0 Tons	27.5 Tons
Total Mix	535.3 Tons	549.8 Tons
Hydrated Lime	5.4 Tons	5.5 Tons
Total Mix with Hydrated Lime	540.7 Tons	555.3 Tons

The exact proportions of this material will be determined on construction.

SS-1h or CSS-1h Asphalt for Tack at the rate of 1.2 tons applied 10 feet wide (Rate = 0.05 gallon per square yard).

CLASS Q4 HOT MIXED ASPHALT CONCRETE – 2nd Shoulder Lift

	Alternate A	Alternate B
Crushed Aggregate	522.7 Tons	541.3 Tons
PG 64-22 Asphalt Binder	32.2 Tons	28.5 Tons
Total Mix	554.9 Tons	569.8 Tons
Hydrated Lime	5.5 Tons	5.7 Tons
Total Mix with Hydrated Lime	560.4 Tons	575.5 Tons

The exact proportions of this material will be determined on construction.

SS-1h or CSS-1h Asphalt for Tack at the rate of 1.2 tons applied 10 feet wide (Rate = 0.05 gallon per square yard).

SS-1h or CSS-1h Asphalt for Flush Seal at the rate of 1.0 ton applied 8 feet wide (Rate = 0.05 gallon per square yard).

SUMMARY OF CLASS Q4 HOT MIXED ASPHALT CONCRETE COMPACTION

Location	With Specified Compaction (2nd / 3rd Lift) ALTERNATE A	Without Specified Compaction ALTERNATE A	With Specified Compaction (2nd / 3rd Lift) ALTERNATE B	Without Specified Compaction ALTERNATE B
	Ton	Ton	Ton	Ton
Mainline – I 90 E				
Sta. 30+19.50 to a 88+06.81 (thru eq.)	2,152.7 / 2,144.0	478.9 / 395.9	2,210.6 / 2,201.8	492.1 / 406.4
Sta. a 89+95.19 to a 115+53.79	574.0 / 621.5	127.7 / 621.5	589.5 / 638.3	131.2 / 117.8
Sta. a 117+54.99 to a 366+09 (thru eq.)	6,126.8 / 5,976.4	1,363.1 / 1,103.4	6,291.7 / 6,137.7	1,400.4 / 1,132.7
Sta. a 368+56 to a 468+85.01	2,455.7 / 2,436.2	546.4 / 449.7	2,521.8 / 2,501.9	561.3 / 461.7
Sta. a 470+68.21 to 515+41.50 (thru eq.)	1,055.6 / 1,086.1	234.9 / 200.5	1,084.0 / 1,115.4	241.3 / 205.9
Mainline – I 90 W				
Sta. 30+19.50 to a 88+06.81 (thru eq.)	2,152.7 / 2,144.0	478.9 / 395.9	2,210.6 / 2,201.8	492.1 / 406.4
Sta. a 89+95.19 to a 115+53.79	574.0 / 621.5	127.7 / 114.8	589.5 / 638.3	131.2 / 117.8
Sta. a 117+54.99 to a 365+21.5 (thru eq.)	6,104.7 / 5,955.1	1,358.2 / 1,099.5	6,269.1 / 6,115.8	1,395.3 / 1,128.7
Sta. a 367+71.4 to a 468+86.15	2,477.3 / 2,457.1	551.1 / 453.6	2,543.9 / 2,523.4	566.3 / 465.7
Sta. a 470+69.35 to 515+41.50 (thru eq.)	1,055.4 / 1,085.7	234.8 / 200.4	1,083.8 / 1,115.0	241.2 / 205.8
Outside Shoulder – I 90 E				
Sta. 30+19.50 to a 32+97.5 (thru eq.)*		339.7 / 352.0		348.8 / 361.5
Sta. a 43+03.80 to a 71+84.5*		295.0 / 305.8		303.0 / 314.0
Sta. a 89+95.19 to a 95+87.6*		60.7 / 62.9		62.3 / 64.6
Sta. a 105+15.4 to a 115+53.79*		106.4 / 110.2		109.2 / 113.2
Sta. a 117+54.99 to a 128+17.8*		108.8 / 112.8		111.8 / 115.8
Sta. a 144+70.02 to a 366+09 (thru eq.)*		2,241.5 / 2,323.1		2,301.9 / 2,385.7
Sta. a 368+56 to a 445+60.14*		788.9 / 817.7		810.2 / 839.7
Sta. a 457+15.74 to a 468+85.01*		119.8 / 124.1		123.0 / 127.5
Sta. a 470+68.21 to a 479+25.55 (thru eq.)*		87.5 / 90.8		90.0 / 93.2
Sta. 497+70.59 to a 515+41.5*		181.4 / 188.0		186.2 / 193.0
Outside Shoulder – I 90 W				
Sta. 30+19.50 to a 88+06.81 (thru eq.)*		903.8 / 936.7		928.2 / 962.0
Sta. a 104+91.0 to a 115+53.79*		108.8 / 112.8		111.8 / 115.8
Sta. a 117+54.99 to a 128+16.3*		108.7 / 112.6		111.6 / 115.7
Sta. a 137+18.6 to a 365+21.5 (thru eq.)*		2,309.4 / 2,393.6		2,371.8 / 2,458.0
Sta. a 367+71.4 to a 438+61.9*		726.1 / 752.6		745.7 / 772.8
Sta. a 451+83.4 to a 468+86.15*		174.4 / 180.7		179.1 / 185.6
Sta. a 470+69.35 to a 482+36.7 (thru eq.)*		119.3 / 123.6		122.5 / 127.0
Sta. 488+19.32 to a 515+41.5*		278.8 / 288.9		286.3 / 296.7
Rest Area ramps & gore areas		493.8 / 462.3 / 492.1 / 468.3		507.1 / 474.7 / 505.3 / 481.2
Exit 2 ramps & gore areas		1,018.3 / 956.5 / 941.3 / 894.9		1,045.7 / 982.2 / 966.7 / 919.3
Exit 8 ramps & gore areas		945.2 / 899.7		971.0 / 923.8
Ramp Tapers – 10		70.1 / 397.0		72.0 / 407.8
Maintenance Crossovers		168.6		172.8
Guardrail widening		101.0		104.4
Spot leveling, strengthening, repair		1,912.3		1,912.3
TOTAL	49,256.5	38,699.5	50,583.9	39,692.8

* These quantities represent the two layers of Class Q4 Hot Mixed Asphalt Concrete below the mainline surfacing on the new shoulders in the removal & replace areas.

SUMMARY OF CLASS S ASPHALT CONCRETE

Location	Without Specified Compaction
	Ton
Mainline – I 90 E	
Sta. 30+19.50 to a 88+06.81 (thru eq.)	1,997.0
Sta. a 89+95.19 to a 115+53.79	579.0
Sta. a 117+54.99 to a 366+09 (thru eq.)	5,566.8
Sta. a 368+56 to a 468+85.01	2,269.2
Sta. a 470+68.21 to 515+41.50 (thru eq.)	1,011.6
Mainline – I 90 W	
Sta. 30+19.50 to a 88+06.81 (thru eq.)	1,997.0
Sta. a 89+95.19 to a 115+53.79	579.0
Sta. a 117+54.99 to a 365+21.5 (thru eq.)	5,547.0
Sta. a 367+71.4 to a 468+86.15	2,288.7
Sta. a 470+69.35 to 515+41.50 (thru eq.)	1,011.3
Ramp Tapers – 10	328.4
Rest Area ramps & gore areas	367.8
Exit 2 ramps & gore areas	701.8
Exit 8 ramps & gore areas	706.0
TOTAL	24,950.6

SUMMARY OF ASPHALT CONCRETE LEVELING LIFT

Location	Without Specified Compaction
	Ton
Mainline – I 90 E	
Sta. 30+19.50 to a 88+06.81 (thru eq.)	639.0
Sta. a 89+95.19 to a 115+53.79	165.9
Sta. a 117+54.99 to a 366+09 (thru eq.)	1,829.6
Sta. a 368+56 to a 468+85.01	729.8
Sta. a 470+68.21 to 515+41.50 (thru eq.)	310.3
Mainline – I 90 W	
Sta. 30+19.50 to a 88+06.81 (thru eq.)	639.0
Sta. a 89+95.19 to a 115+53.79	165.9
Sta. a 117+54.99 to a 365+21.5 (thru eq.)	1,823.0
Sta. a 367+71.4 to a 468+86.15	736.2
Sta. a 470+69.35 to 515+41.50 (thru eq.)	310.2
TOTAL	7,348.9

TABLE OF ADDITIONAL QUANTITIES – CLASS Q4 HOT MIXED ASPHALT CONCRETE

Location-Description	Water for Granular Material	Base Course or Base Course, Salvaged	CLASS Q4 Asphalt Concrete (1st / 2nd / 3rd / 4th Lift) ALTERNATE A	PG 64-34 Asphalt Binder (1st / 2nd / 3rd / 4th Lift) ALTERNATE A	Hydrated Lime (1st / 2nd / 3rd / 4th Lift) ALTERNATE A	CLASS Q4 Asphalt Concrete (1st / 2nd / 3rd / 4th Lift) ALTERNATE B	PG 64-34 Asphalt Binder (1st / 2nd / 3rd / 4th Lift) ALTERNATE B	Hydrated Lime (1st / 2nd / 3rd / 4th Lift) ALTERNATE B	SS-1h or CSS-1h Asphalt for Tack (1st / 2nd / 3rd / 4th Lift)
	Mgal	Ton	Ton	Ton	Ton	Ton	Ton	Ton	Ton
Rest Area EB Exit Ramp	15.1	1,260.9	181.4 / 169.1 / 203.0/ 193.7	10.4 / 9.7 / 11.7 / 11.1	1.8 / 1.7 / 2.0 / 1.9	186.2 / 173.6 / 208.5 / 199.1	9.2 / 8.6 / 10.3 / 9.9	1.8 / 1.7 / 2.1 / 2.0	-- / 0.3 / 0.5 / 0.5
Rest Area EB On Ramp	25.6	2,134.5	312.4 / 293.2 / 289.1 / 274.6	17.9 / 16.8 / 16.6 / 15.8	3.1 / 2.9 / 2.9 / 2.7	320.9 / 301.1 / 296.8 / 282.1	15.9 / 14.9 / 14.7 / 14.9	3.2 / 3.0 / 2.9 / 2.8	-- / 0.6 / 0.7 / 0.7
Exit 2 EB Exit Ramp	14.5	1,205.7	174.3 / 162.9 / 185.2 / 176.6	10.0 / 9.4 / 10.6 / 10.1	1.7 / 1.6 / 1.8 / 1.7	179.1 / 167.3 / 190.3 / 181.5	8.9 / 8.3 / 9.4 / 9.0	1.8 / 1.7 / 1.9 / 1.8	-- / 0.3 / 0.5 / 0.5
Exit 2 EB On Ramp	28.6	2,386.9	353.0 / 332.4 / 299.7 / 284.2	20.3 / 19.1 / 17.2 / 16.3	3.5 / 3.3 / 3.0 / 2.8	362.4 / 341.4 / 307.6 / 292.0	17.9 / 16.9 / 15.2 / 14.5	3.6 / 3.4 / 3.0 / 2.9	-- / 0.6 / 0.8 / 0.7
Exit 2 WB On Ramp	26.0	2,163.8	320.1 / 301.5 / 280.8 / 266.8	18.4 / 17.3 / 16.1 / 15.3	3.2 / 3.0 / 2.8 / 2.6	328.8 / 309.6 / 288.5 / 274.1	16.3 / 15.3 / 14.3 / 13.6	3.3 / 3.1 / 2.9 / 2.7	-- / 0.6 / 0.7 / 0.7
Exit 2 WB Exit Ramp	14.2	1,180.1	170.9 / 159.7 / 175.6 / 167.3	9.8 / 9.2 / 10.1 / 9.6	1.7 / 1.6 / 1.7 / 1.7	175.4 / 163.9 / 180.3 / 171.7	8.7 / 8.1 / 8.9 / 8.5	1.7 / 1.6 / 1.8 / 1.7	-- / 0.3 / 0.5 / 0.4
									-- / 0.3 / 0.5 / 0.4
Exit 8 EB Exit Ramp	6.0	503.0	232.8 / 222.1	13.4 / 12.8	2.3 / 2.2	239.1 / 228.1	11.8 / 11.3	2.4 / 2.3	-- / 0.6
Exit 8 EB On Ramp	8.1	671.2	284.3 / 270.1	16.3 / 15.5	2.8 / 2.7	292.1 / 277.3	14.5 / 13.7	2.9 / 2.7	-- / 0.7
Exit 8 WB On Ramp	6.9	578.8	253.0 / 240.7	14.5 / 13.8	2.5 / 2.4	260.0 / 247.1	12.9 / 12.2	2.6 / 2.4	-- / 0.6
Exit 8 WB Exit Ramp	4.7	391.3	175.1 / 166.8	10.1 / 9.6	1.7 / 1.7	179.8 / 171.3	8.9 / 8.5	1.8 / 1.7	-- / 0.4
Ramp Tapers – 10			70.1 / 397.0	4.0 / 22.8	0.7 / 3.9	72.0 / 407.8	3.6 / 20.2	0.7 / 4.0	0.1 / 0.6
TOTAL	149.7	12,476.2	8,039.5	461.6	79.6	8,256.8	409.8	81.9	14.1

TABLE OF ADDITIONAL QUANTITIES – CLASS S ASPHALT CONCRETE

Location-Description	CLASS S Asphalt Concrete	PG 64-34 Asphalt Binder	Stabilizing Additive	SS-1h or CSS-1h Asphalt for Tack
	Ton	Ton	Ton	Ton
Rest Area EB Exit Ramp	152.6	8.8	0.4	0.5
Rest Area EB On Ramp	215.2	12.5	0.5	0.7
Exit 2 EB Exit Ramp	138.9	8.0	0.3	0.4
Exit 2 EB On Ramp	222.4	12.9	0.6	0.7
Exit 2 WB On Ramp	209.2	12.1	0.5	0.7
Exit 2 WB Exit Ramp	131.3	7.6	0.3	0.4
Exit 8 EB Exit Ramp	174.7	10.1	0.4	0.5
Exit 8 EB On Ramp	211.4	12.2	0.5	0.7
Exit 8 WB On Ramp	188.9	10.9	0.5	0.6
Exit 8 WB Exit Ramp	131.0	7.6	0.3	0.4
Ramp Tapers – 10	328.4	19.0	0.8	1.0
TOTAL	2,104.0	121.7	5.1	6.6

TABLE OF ADDITIONAL QUANTITIES

Location-Description	Water for Granular Material	Base Course or Base Course, Salvaged	CLASS Q4 Asphalt Concrete ALTERNATE A	PG 64-22 Asphalt Binder ALTERNATE A	Hydrated Lime ALTERNATE A	CLASS Q4 Asphalt Concrete ALTERNATE B	PG 64-22 Asphalt Binder ALTERNATE B	Hydrated Lime ALTERNATE B	MC-70 Asphalt for Prime	SS-1h or CSS-1h Asphalt for Tack	SS-1h or CSS-1h Asphalt for Flush Seal
	Mgal	Ton	Ton	Ton	Ton	Ton	Ton	Ton	Ton	Ton	Ton
Guardrail											
Str. # 41-015-042 median shoulder	1.4	116.6	7.1	0.4	0.1	7.4	0.4	0.1	0.1	--	
Str. # 41-015-042 outside shoulder	0.1	5.9	5.3	0.3	0.1	5.4	0.3	0.1	0.1	--	
Str. # 41-015-041 median shoulder	1.4	116.6	7.1	0.4	0.1	7.4	0.4	0.1	0.1	--	
Str. # 41-015-041 outside shoulder	0.1	5.6	4.9	0.3	--	5.2	0.3	0.1	0.1	--	
Str. # 41-020-042 median shoulder	1.4	119.5	9.0	0.5	0.1	9.3	0.5	0.1	0.1	--	
Str. # 41-020-042 outside shoulder	0.1	5.8	5.2	0.3	0.1	5.4	0.3	0.1	0.1	--	
Str. # 41-020-041 median shoulder	1.4	116.6	7.1	0.4	0.1	7.4	0.4	0.1	0.1	--	
Str. # 41-020-041 outside shoulder	0.1	5.8	5.2	0.3	0.1	5.4	0.3	0.1	0.1	--	
Str. # 41-061-057 median shoulder	1.9	157.0	8.9	0.5	0.1	9.0	0.4	0.1	0.1	--	
Str. # 41-061-057 outside shoulder	0.1	4.6	4.0	0.2	--	4.2	0.2	--	--	--	
Str. # 41-061-056 median shoulder	1.8	151.4	6.7	0.4	0.1	6.8	0.3	0.1	0.1	--	
Str. # 41-061-056 outside shoulder	0.1	4.7	4.1	0.2	--	4.2	0.2	--	--	--	
Str. # 41-080-058 median shoulder	1.8	148.1	8.0	0.5	0.1	8.2	0.4	0.1	0.1	--	
Str. # 41-080-058 outside shoulder	0.1	6.3	5.6	0.3	0.1	5.8	0.3	0.1	0.1	--	
Str. # 41-080-057 median shoulder	1.4	120.2	7.5	0.4	0.1	7.8	0.4	0.1	0.1	--	
Str. # 41-080-057 outside shoulder	0.1	5.9	5.3	0.3	0.1	5.5	0.3	0.1	0.1	--	
Tack for Guardrail										*0.2	
Maintenance Crossover – 6			168.6	9.6	1.8	172.8	8.4	1.8		0.2	0.2
TOTAL	13.3	1,090.6	269.6	15.3	3.1	277.2	13.8	3.2	1.4	0.4	0.2

*Quantity of Tack for individual guardrail locations is all less than 0.1. However, totaling the small quantities together results in 0.2 tons of tack for use in the guardrail areas.

GUARDRAIL

Location	Remove 3 Cable Guardrail	Remove 3 Cable Guardrail Anchor Assembly	Remove 3 Cable Guardrail Slip Base Anchor Assembly	Remove W Beam to Thrie Beam Guardrail Transition for Reset	Remove W Beam Guardrail for Reset	Remove W Beam Guardrail Breakaway Cable Terminal for Reset	Remove 3 Cable Guardrail for Reset	3 Cable Guardrail	Reset 3 Cable Guardrail	3 Cable Guardrail Slip Base Anchor Assembly	Beam Guardrail Post and Block	Breakaway Cable Terminal End Post	Reset W Beam Rail	Reset W Beam Guardrail Breakaway Cable Terminal	Reset W Beam to Thrie Beam Guardrail Transition	Type 2 Object Marker	Guardrail Delineator
	Feet	Each	Each	Each	Feet	Each	Feet	Feet	Feet	Each	Each	Each	Feet	Each	Each	Each	Each
Str. 41-015-042, EBL MRM1.71																	
Median Shoulder			1		62.5	1	260	83	260	1	8	2	62.5	1		1	8
Outside Shoulder	23	1			62.5	1	279		279	1	8	2	62.5	1		1	6
Str. 41-015-041, WBL MRM1.71																	
Median Shoulder			1		62.5	1	260	83	260	1	8	2	62.5	1		1	8
Outside Shoulder	55	1			62.5	1	247		247	1	8	2	62.5	1		1	6
Str. 41-020-042, EBL MRM 2.25																	
Median Shoulder			1		62.5	1	260	83	260	1	8	2	62.5	1		1	8
Outside Shoulder		1			62.5	1	302	9	302	1	8	2	62.5	1		1	7
Str. 41-020-041, WBL MRM 2.25																	
Median Shoulder			1		62.5	1	260	83	260	1	8	2	62.5	1		1	8
Outside Shoulder		1			62.5	1	302	9	302	1	8	2	62.5	1		1	7
Str. 41-061-057, EBL MRM 7.02																	
Median Shoulder			1	1	62.5	1	260	131	260	1	10	2	62.5	1	1	1	9
Outside Shoulder	39	1			37.5	1	263		263	1	4	2	37.5	1		1	6
Str. 41-061-056, WBL MRM 7.02																	
Median Shoulder			1	1	62.5	1	260	115	260	1	10	2	62.5	1	1	1	8
Outside Shoulder		1			37.5	1	302	9	302	1	4	2	37.5	1		1	7
Str. 41-080-058, EBL MRM 8.96																	
Median Shoulder			1		62.5	1	260	51	260	1	8	2	62.5	1		1	7
Outside Shoulder		1			62.5	1	302	25	302	1	8	2	62.5	1		1	7
Str. 41-080-057, WBL MRM 8.96																	
Median Shoulder			1		62.5	1	260	83	260	1	8	2	62.5	1		1	8
Outside Shoulder		1			62.5	1	302	9	302	1	8	2	62.5	1		1	7
TOTAL	117	8	8	2	950.0	16	4379	773	4379	16	124	32	950.0	16	2	16	117

TABLE OF PIPE AND RELATED ITEMS

Station	Highway	Culvert	36" RCP Pipe, Class 2	Remove & Reset End Section	Contractor Furnished Borrow	Bank and Channel Protection Gabion	Reprofile Ditch	Cleanout Pipe Culvert
			Feet	Each	CuYd	CuYds	Sta.	Each
a 62+00	090 E	24" RCP & RCP, median steel grate					1	1
a 90+00	Median on East side of Structures	12" RCP with center median drain		*1				**2
a 118+00	Median on East side of Structures						1	2
a 166+00	090 E	24" RCP & 1 FE			2			1
a 224+50	090 E	36" RCP & FE			20	6.0	0.5	
a 290+00 #	090 E	36" RCP & FE	12	1	60			
a 313+45	090 W	24" RCP & 1 FE & median drain		*1				
a 385+00	090 W	24" RCP & 1 FE & median drain		*1				
a 447+50	090 E	30" RCP & 1 FE						1
		TOTAL	12	4	82	6.0	2.5	7

There is a large rock at the end of this pipe that may require excavation. The Contractor shall verify. Payment for removal of large rock, if needed, shall be incidental to various pipe items.
* Reset concrete median inlet. If any concrete placement is necessary, it shall be incidental to various pipe bid items.
** Cleaning of Drop Inlets shall be incidental to Cleanout Pipe Culvert.

TABLE OF CONSTRUCTION STAKING
(See Special Provision for Contractor Staking)

Roadway and Description	Begin Station	End Station	Number of Lanes	Length (Ft)	Grade Staking Length (Mile)	Grade Staking Lane Factor	Grade Staking *Sets of Stakes	Grade Staking **Grade Staking Quantity (Mile)	Miscellaneous Staking Quantity (Mile)	Slope Staking Quantity (Mile)
Rest Area – EB Off Ramp Gore Area	a 32+97.5	a 43+03.8	2	1,006.3	0.191	1	2	0.382	0.191	0.191
Rest Area – EB On Ramp Gore Area	a 71+81.5	a 87+06.8	2	1,525.3	0.289	1	2	0.578	0.289	0.289
Exit 2 – EB Off Ramp Gore Area	a 95+87.6	a 105+15.4	2	927.8	0.176	1	2	0.352	0.176	0.176
Exit 2 – EB On Ramp Gore Area	a 128+17.8	a 144+70.2	2	1,652.4	0.313	1	2	0.626	0.313	0.313
Exit 2 – WB On Ramp Gore Area	a 89+95.2	a 104+91	2	1,495.8	0.283	1	2	0.566	0.283	0.283
Exit 2 – WB Off Ramp Gore Area	a 128+16.3	a 137+18.6	2	902.3	0.171	1	2	0.342	0.171	0.171
Exit 8 – EB Off Ramp Gore Area	a 445+60.1	a 457+15.7	2	1,155.6	0.219	1	2	0.438	0.219	0.219
Exit 8 – EB On Ramp Gore Area	a 482+36.7	a 497+70.6	2	1,533.9	0.291	1	2	0.582	0.291	0.291
Exit 8 – WB On Ramp Gore Area	a 438+61.9	a 451+83.4	2	1,321.5	0.250	1	2	0.500	0.250	0.250
Exit 8 – WB Off Ramp Gore Area	a 479+25.6	a 488+19.3	2	893.7	0.169	1	2	0.338	0.169	0.169
							Totals:	**4.704**	**2.352**	**2.352**

* Top of Subgrade Blue Top and top of Granular Material Blue Top

** Grade Staking Quantity = (Length) x (Lane Factor) x (Sets of Stakes)

TYPICAL SURFACING SECTIONS

STATE OF SOUTH DAKOTA	PROJECT	SHEET	TOTAL SHEETS
	IM 0901(186)0	F13	F71

Plotting Date: 07/31/2015

Crack & Seat PCC Pavement

In Place Typical Section

Sta. 30+19.50 to Sta. a 32+97.50 (thru eq.) EBL
Sta. a 43+03.80 to Sta. a 71+81.50 EBL
Sta. a 89+95.19 to Sta. a 95+87.60 EBL
Sta. a 105+15.40 to Sta. a 115+53.79 EBL
Sta. a 117+54.99 to Sta. a 128+17.80 EBL
Sta. a 144+70.20 to Sta. a 366+09.00 (thru eq.)
Sta. a 368+56.00 to Sta. a 445+60.14 EBL
Sta. a 457+15.74 to Sta. a 482+36.70 (thru eq.) EBL
Sta. a 497+70.59 to Sta. a 515+41.50 EBL

In Place Typical Section

Sta. 30+19.50 to Sta. a 88+06.81 (thru eq.) WBL
Sta. a 104+91.00 to Sta. a 115+53.79 WBL
Sta. a 117+54.99 to Sta. a 128+16.30 WBL
Sta. a 137+18.60 to Sta. a 365+21.50 WBL
Sta. a 367+71.40 to Sta. a 438+61.90 WBL
Sta. a 451+83.40 to Sta. a 479+25.55 (thru eq.) WBL
Sta. a 488+19.32 to Sta. a 515+41.50 WBL

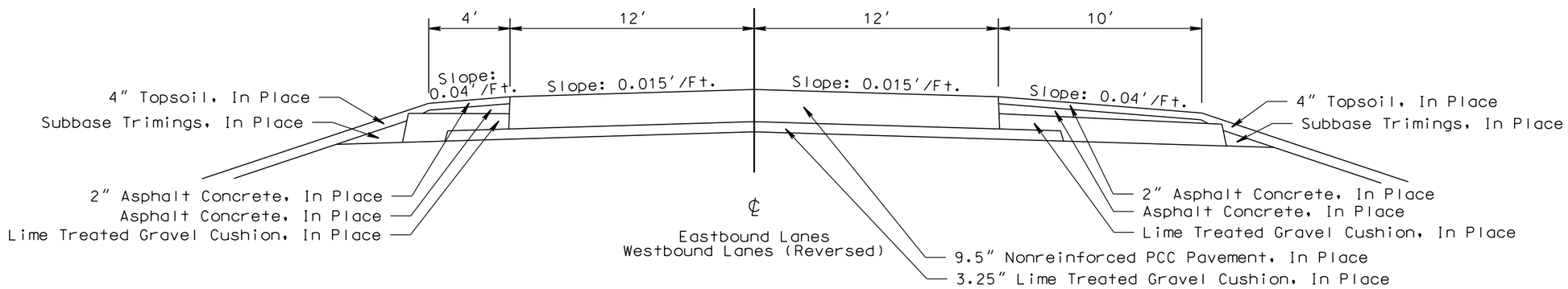

Typical Section

Sta. 30+19.50 to Sta. a 32+97.50 (thru eq.) EBL
Sta. a 43+03.80 to Sta. a 71+81.50 EBL
Sta. a 89+95.19 to Sta. a 95+87.60 EBL
Sta. a 105+15.40 to Sta. a 115+53.79 EBl
Sta. a 117+54.99 to Sta. a 128+17.80 EBL
Sta. a 144+70.20 to Sta. a 366+09.00 (thru eq.)
Sta. a 368+56.00 to Sta. a 445+60.14 EBL
Sta. a 457+15.74 to Sta. a 482+36.70 (thru eq.) EBL
Sta. a 497+70.59 to Sta. a 515+41.50 EBL

Typical Section

Sta. 30+19.50 to Sta. a 88+06.81 (thru eq.) WBL
Sta. a 104+91.00 to Sta. a 115+53.79 WBL
Sta. a 117+54.99 to Sta. a 128+16.30 WBL
Sta. a 137+18.60 to Sta. a 365+21.50 WBL
Sta. a 367+71.40 to Sta. a 438+61.90 WBL
Sta. a 451+83.40 to Sta. a 479+25.55 (thru eq.) WBL
Sta. a 488+19.32 to Sta. a 515+41.50 WBL

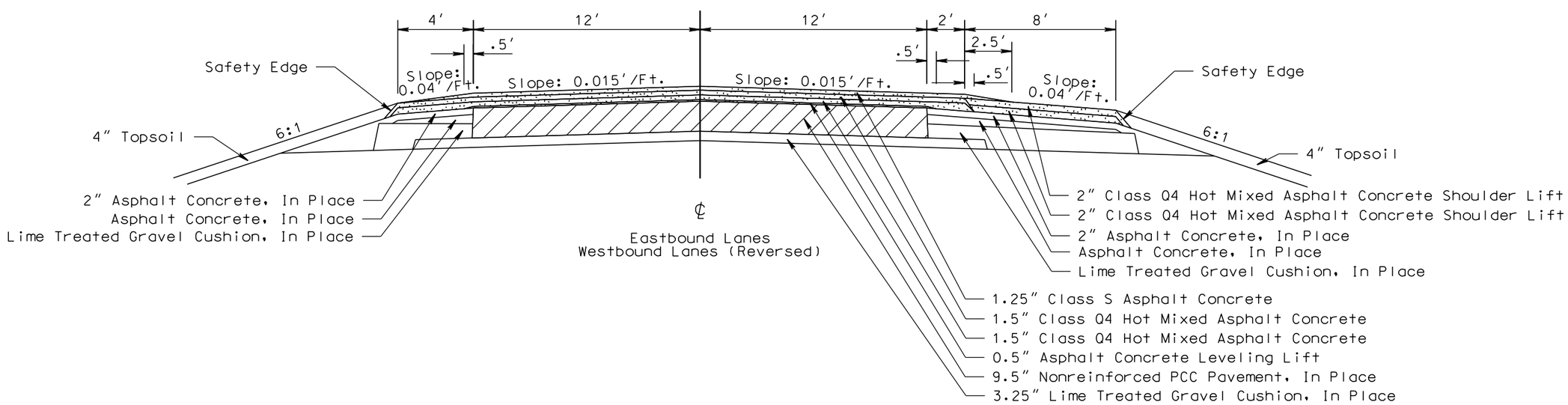

PLOT SCALE - 1:6.00001

PLOT NAME - 2

FILE -...\TYPICAL SECTION.DGN

PLOTTED FROM - TRPR15123

STATE OF SOUTH DAKOTA	PROJECT	SHEET	TOTAL SHEETS
	IM 0901(186)0	F14	F71

Plotting Date: 07/31/2015

TYPICAL SURFACING SECTIONS

Salvage & Stockpile

Unclassified Excavation

Crack & Seat PCC Pavement

2' Shoulder Shaping

In Place Typical Section

Sta. a 32+97.50 to Sta. a 43+03.80 EBL
Sta. a 71+81.50 to Sta. a 88+06.81 EBL
Sta. a 95+87.60 to Sta. a 105+15.40 EBL
Sta. a 128+17.80 to Sta. a 144+70.20 EBL

Sta. a 89+95.19 to Sta. a 104+91.00 WBL
Sta. a 128+16.30 to Sta. a 137+18.60 WBL

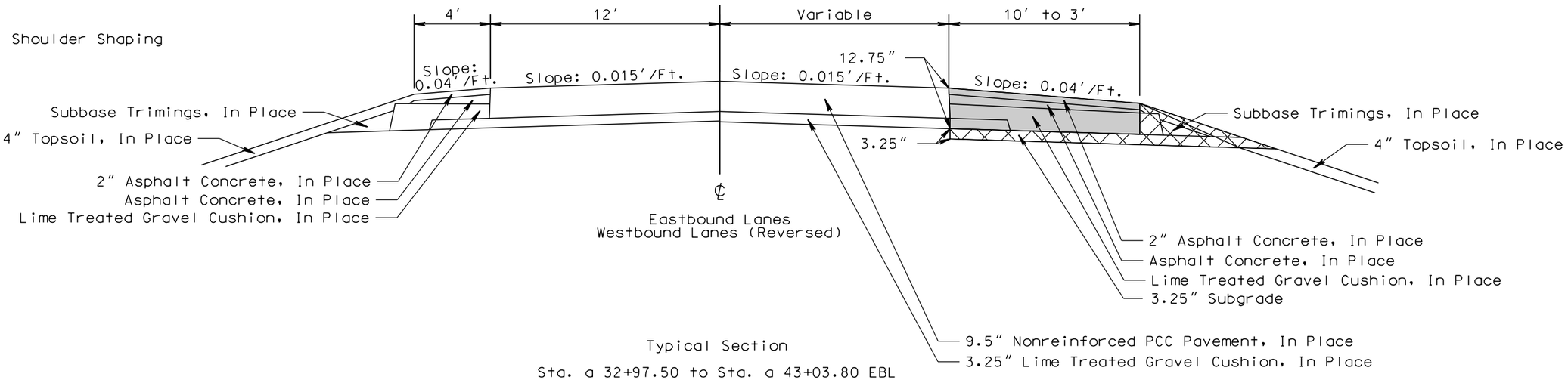

Typical Section

Sta. a 32+97.50 to Sta. a 43+03.80 EBL
Sta. a 71+81.50 to Sta. a 88+06.81 EBL
Sta. a 95+87.60 to Sta. a 105+15.40 EBL
Sta. a 128+17.80 to Sta. a 144+70.20 EBL

Sta. a 89+95.19 to Sta. a 104+91.00 WBL
Sta. a 128+16.30 to Sta. a 137+18.60 WBL

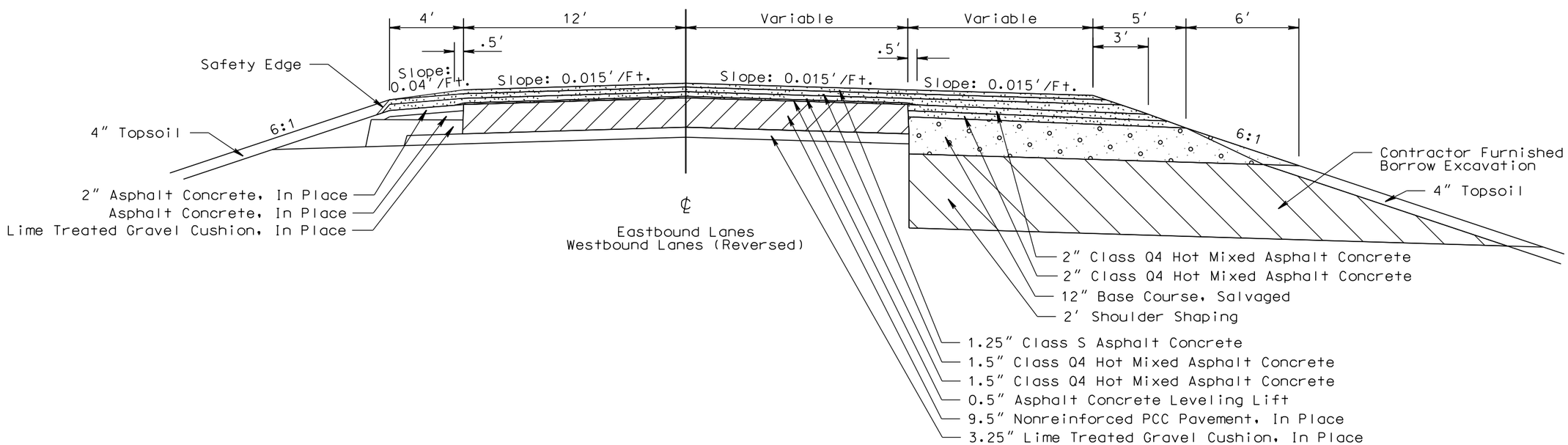

PLOT SCALE - 1:6.00001

PLOTTED FROM - TRPR15123

PLOT NAME - 3

FILE - ...\TYPICAL SECTION.DGN

TYPICAL SURFACING SECTIONS

STATE OF SOUTH DAKOTA	PROJECT	SHEET	TOTAL SHEETS
	IM 0901(186)0	F15	F71

Plotting Date: 07/31/2015

Unclassified Excavation

Crack & Seat PCC Pavement

In Place Typical Section

Sta. a 445+60.14 to Sta. a 457+15.74 EBL
Sta. a 482+36.70 to Sta. a 497+70.59 EBL

Sta. a 438+61.90 to Sta. a 451+83.40 WBL
Sta. a 479+25.55 to Sta. a 488+19.32 WBL

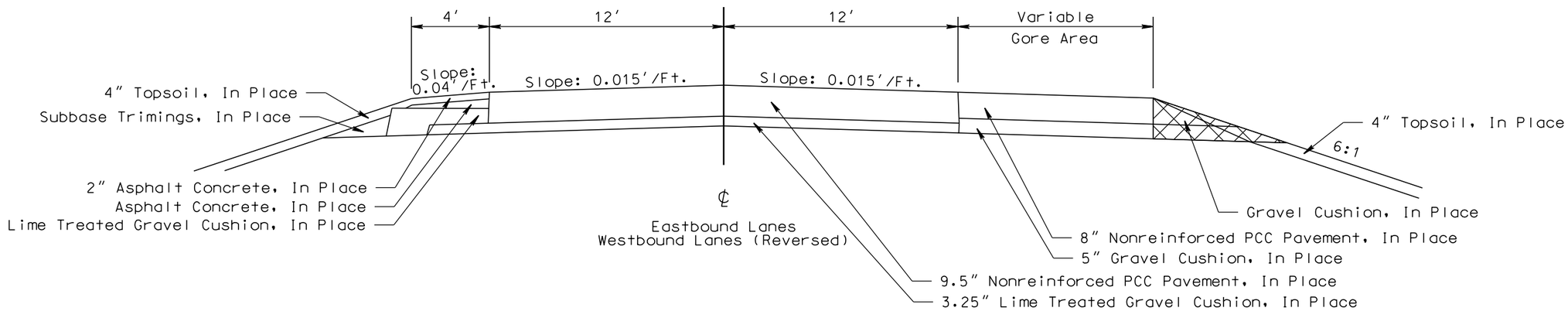

Typical Section

Sta. a 445+60.14 to Sta. a 457+15.74 EBL
Sta. a 482+36.70 to Sta. a 497+70.59 EBL

Sta. a 438+61.90 to Sta. a 451+83.40 WBL
Sta. a 479+25.55 to Sta. a 488+19.32 WBL

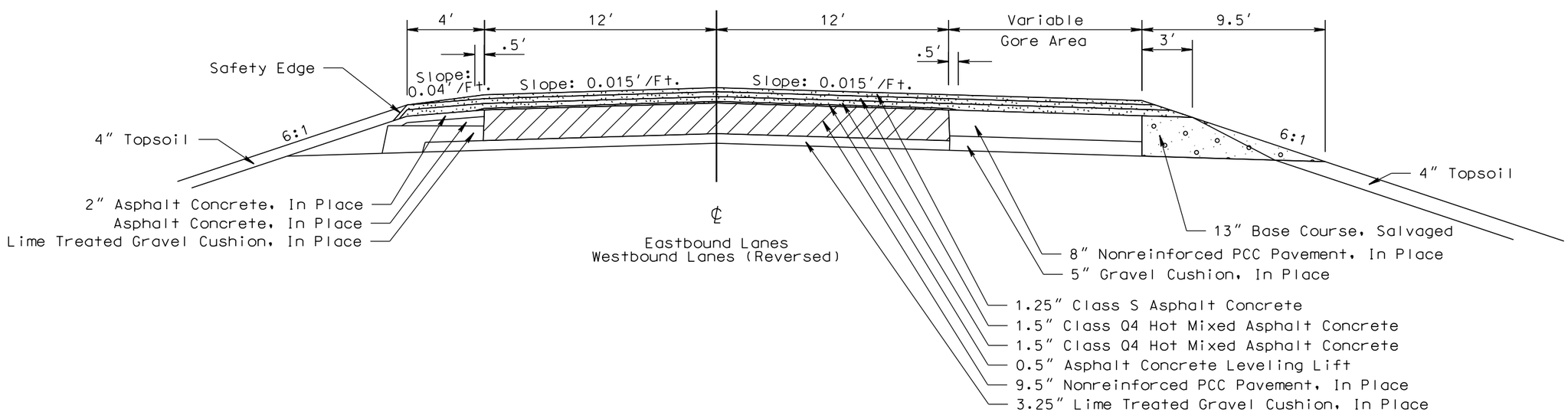

PLOT SCALE - 1:6.00001

PLOTTED FROM - TRPR15123

PLOT NAME - 4

FILE - ...\TYPICAL SECTION.DGN

PLANING PCC PAVEMENT & RESURFACING AT BEGIN OR END PROJECT AND BEFORE OR AFTER STRUCTURES

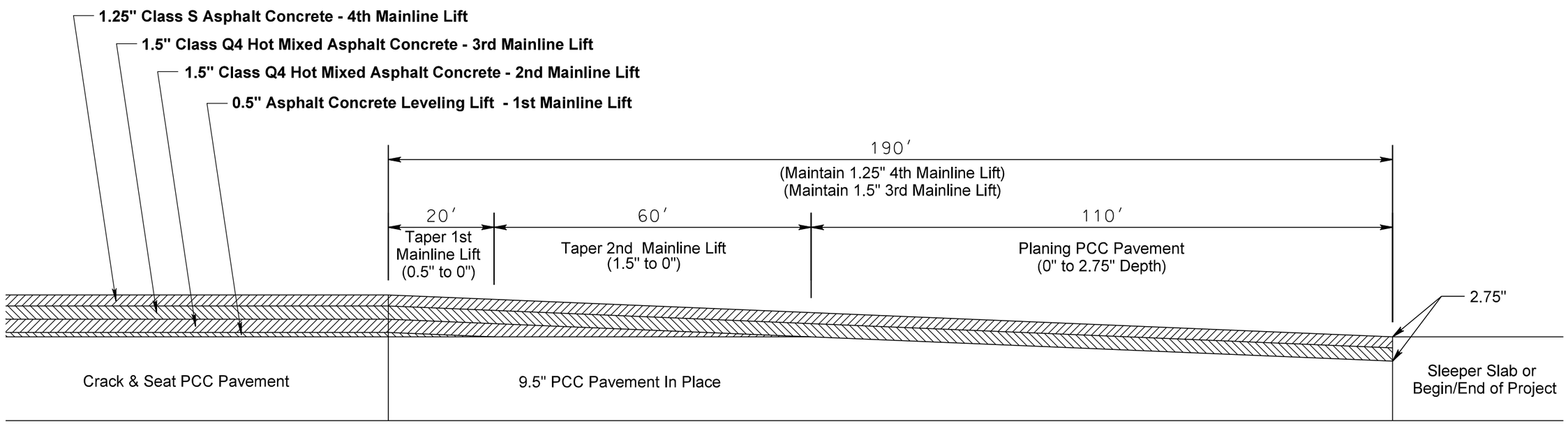

PLOT SCALE - 1:20
PLOT NAME - 5
FILE - ...\LAWR04DA & 04DC\PLANING2.DGN
PLOTTED FROM - TRPR15123

REST AREA & EXIT 8
RAMP DETAILS

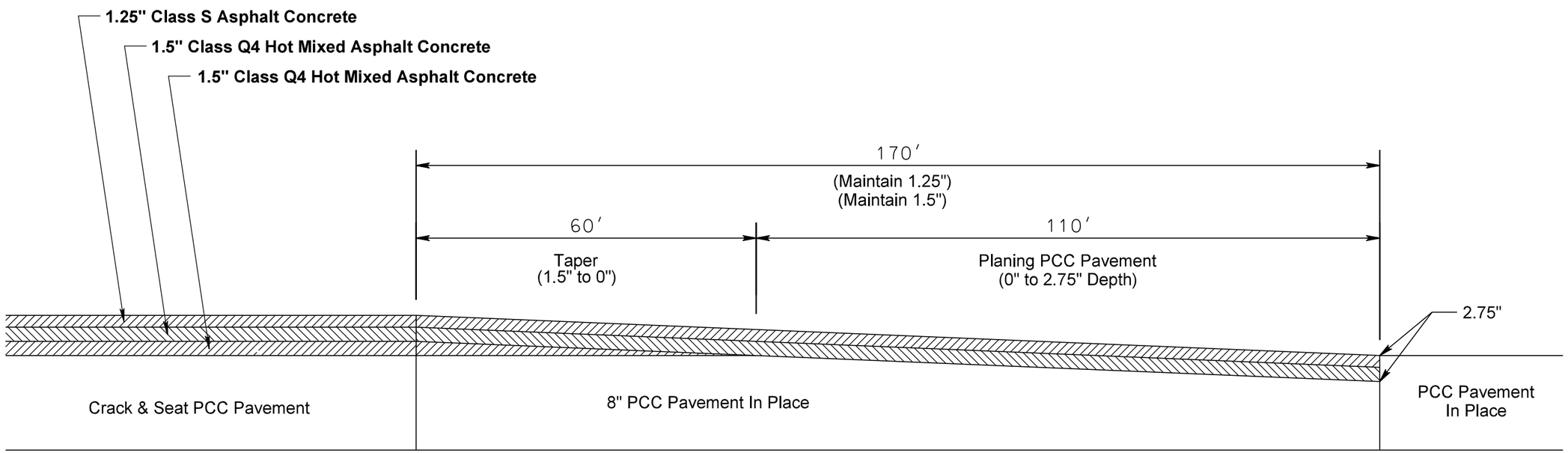

PLOT SCALE - 1:20
PLOT NAME - 6
FILE - ...\LAWR04DA & 04DC\PLANING2.DGN
PLOTTED FROM - TRPR15123

EXIT 2 RAMP DETAILS

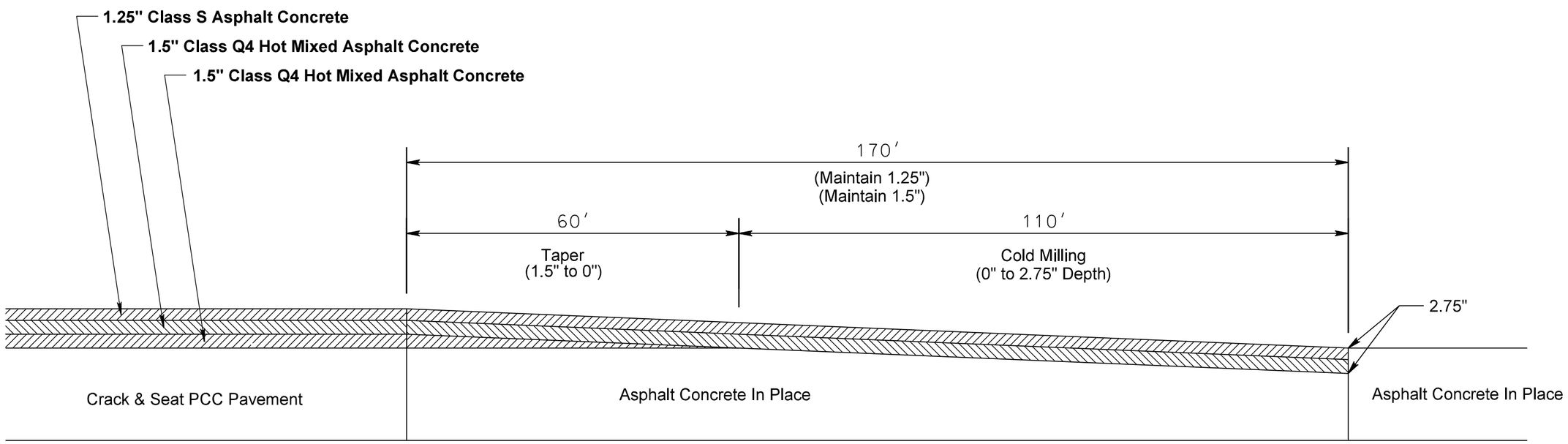

PLOT SCALE - 1:20
PLOT NAME - 7
FILE - ...\LAWR04DA & 04DC\PLANING2.DGN
PLOTTED FROM - TRPR15123

STATE OF SOUTH DAKOTA	PROJECT	SHEET	TOTAL SHEETS
	IM 0901(186)0	F19	F71

Plotting Date: 07/31/2015

Rest Area EBL Off Ramp

Removal Area

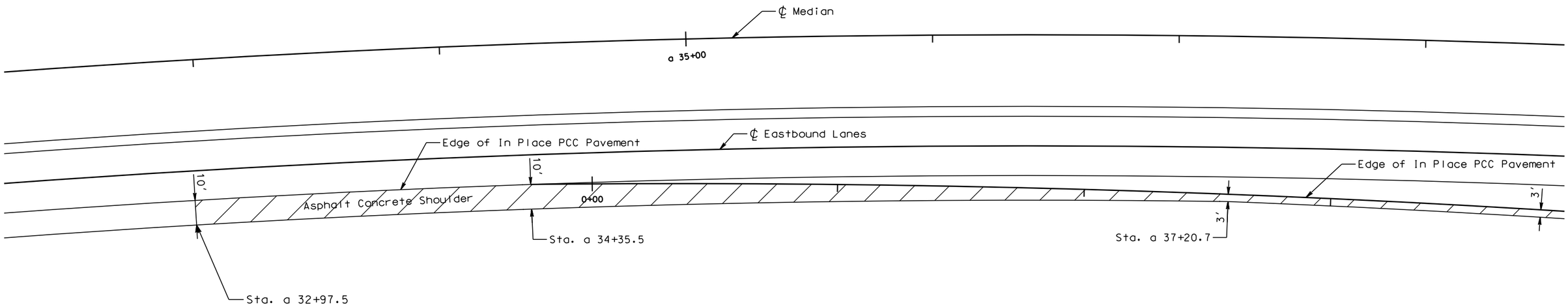

Shoulder Surfacing

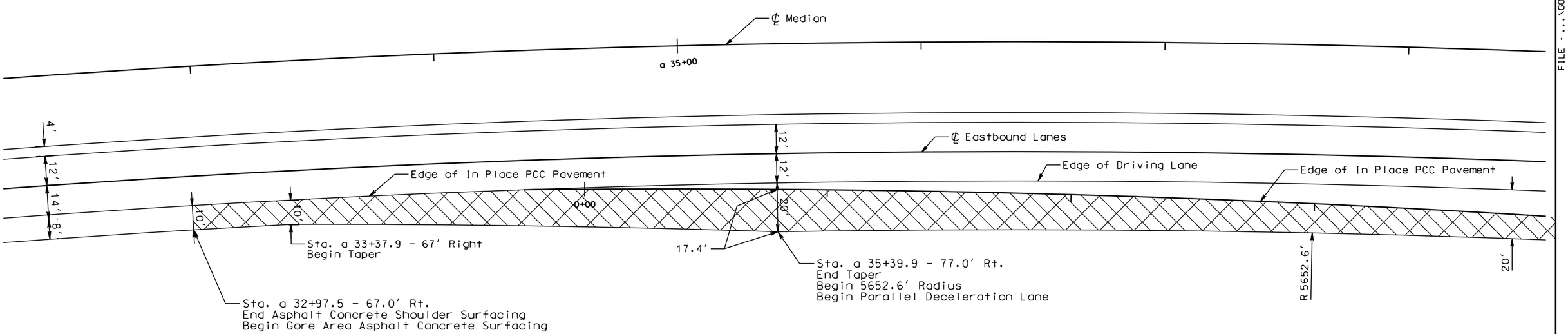

PLOT SCALE - 1:40

PLOT NAME - 8

FILE - ...\GORE REMOVAL & SURFACING.DGN

PLOTTED FROM - TRPR15123

STATE OF SOUTH DAKOTA	PROJECT	SHEET	TOTAL SHEETS
	IM 0901(186)0	F20	F71

Plotting Date: 07/31/2015

Rest Area EBL Off Ramp

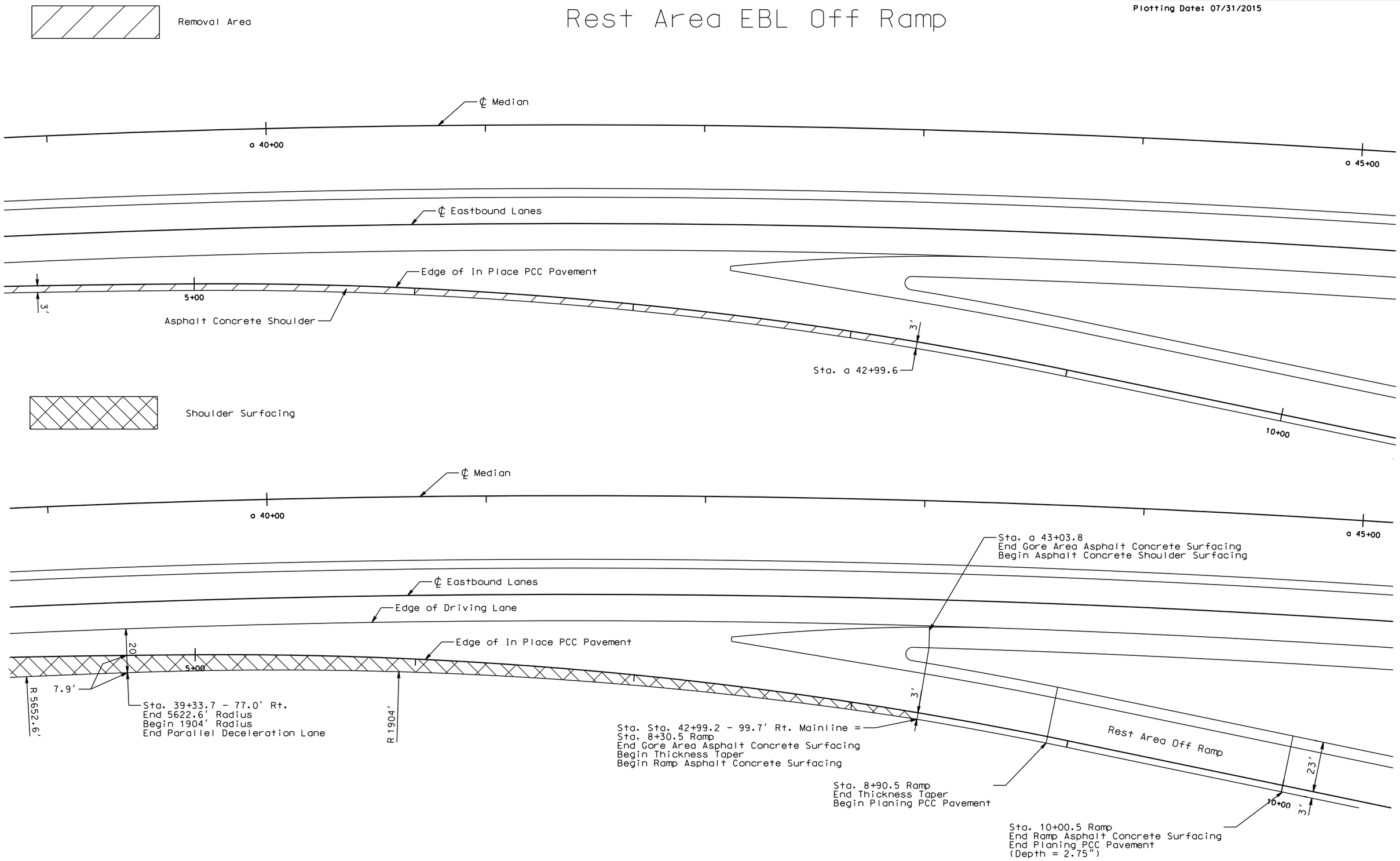

PLOT SCALE - 1:40

PLOT NAME - 9

FILE - ...\GORE REMOVAL & SURFACING.DGN

PLOTTED FROM - TRPR15123

STATE OF SOUTH DAKOTA	PROJECT	SHEET	TOTAL SHEETS
	IM 0901(186)0	F21	F71

Plotting Date: 07/31/2015

Rest Area EBL On Ramp

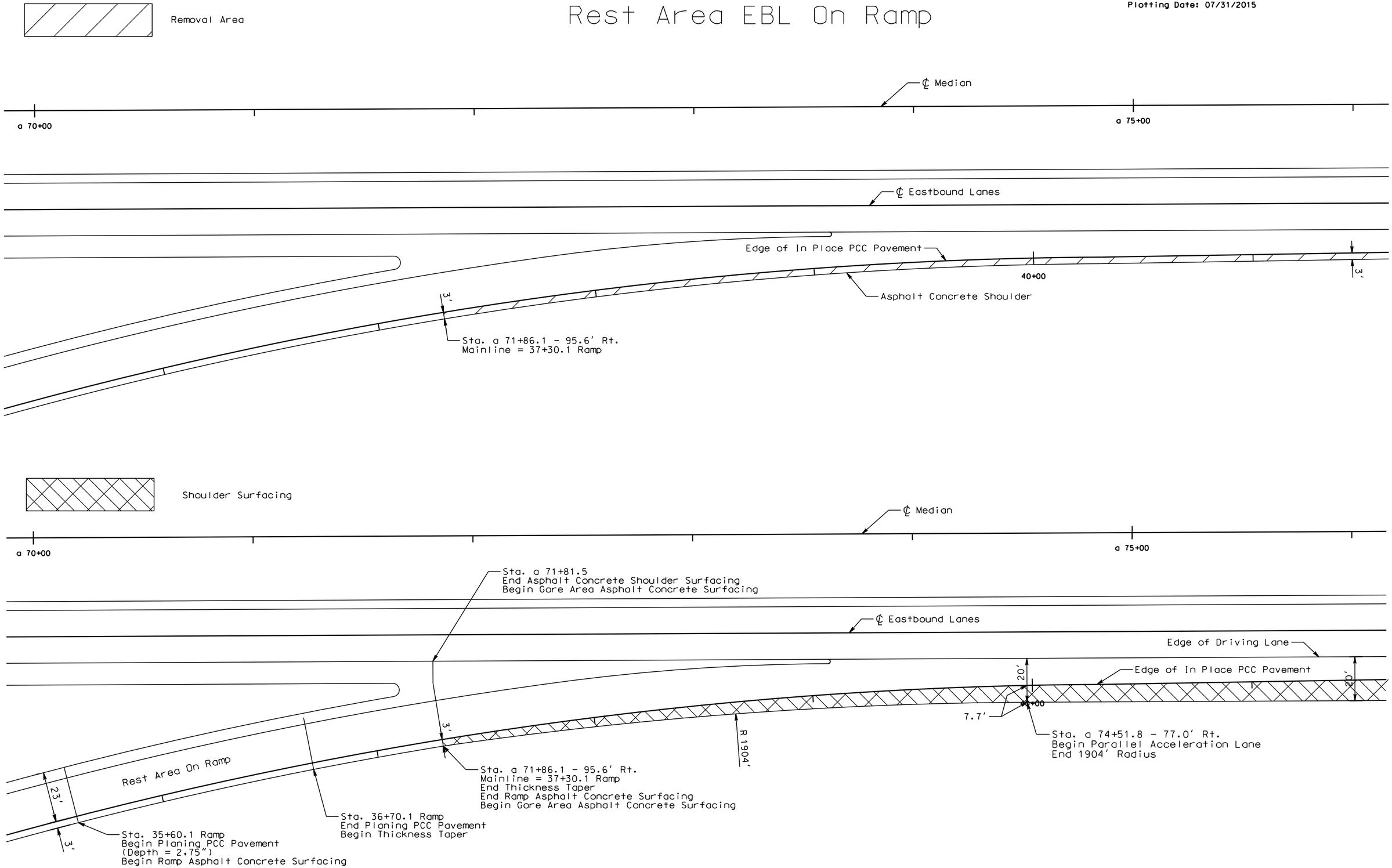

PLOT SCALE - 1:40

PLOT NAME - 10

FILE -...\GORE REMOVAL & SURFACING.DGN

PLOTTED FROM - TRPR15123

STATE OF SOUTH DAKOTA	PROJECT	SHEET	TOTAL SHEETS
	IM 0901(186)0	F22	F71

Plotting Date: 07/31/2015

Rest Area EBL On Ramp

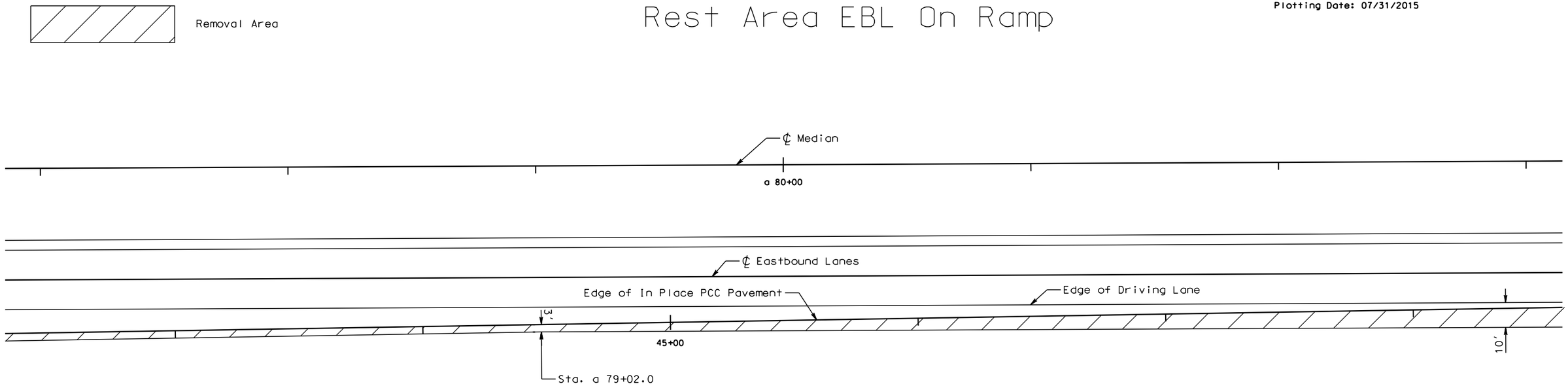

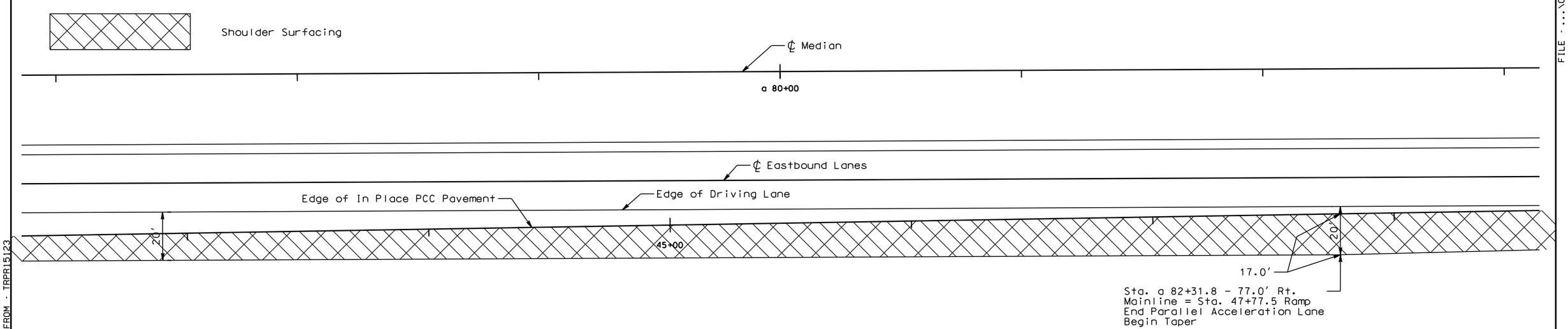

PLOT SCALE - 1:40

PLOT NAME - 11

FILE -...\GORE REMOVAL & SURFACING.DGN

PLOTTED FROM - TRPR15123

STATE OF SOUTH DAKOTA	PROJECT	SHEET	TOTAL SHEETS
	IM 0901(186)0	F23	F71

Plotting Date: 07/31/2015

Rest Area EBL On Ramp

Removal Area

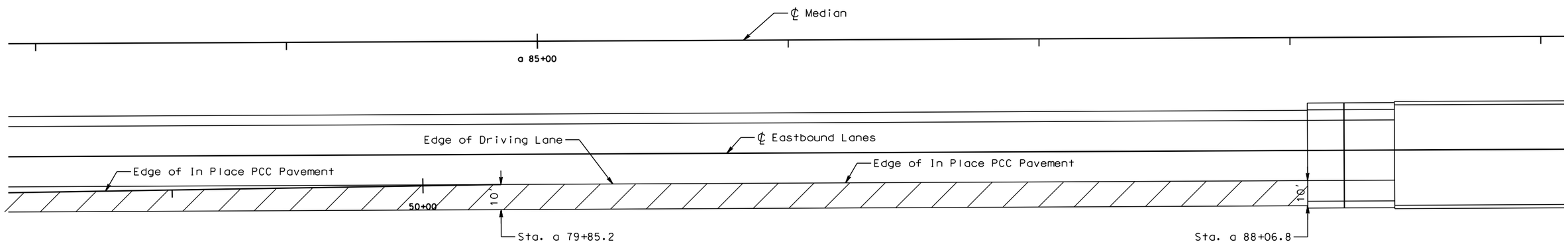

Shoulder Surfacing

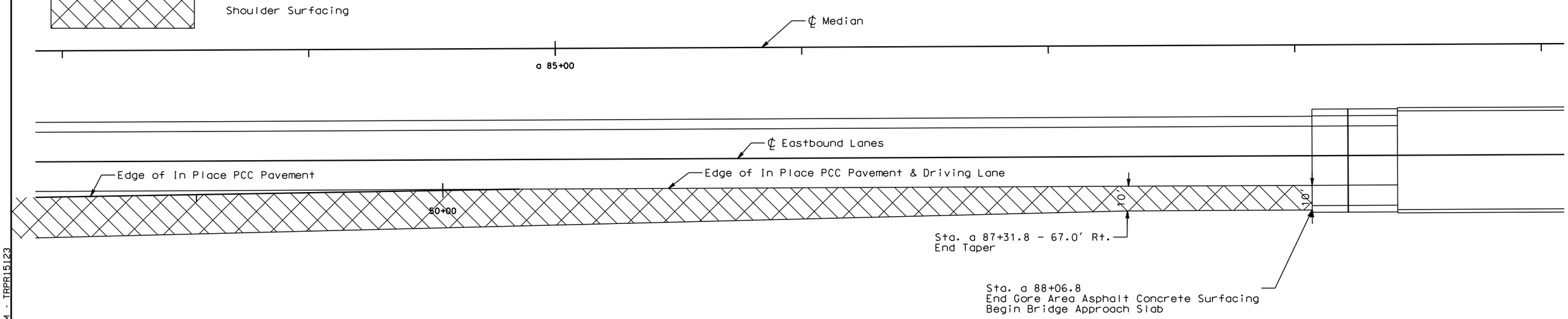

PLOT SCALE - 1:40

PLOT NAME - 12

FILE - ...\GORE REMOVAL & SURFACING.DGN

PLOTTED FROM - TRPR15123

STATE OF SOUTH DAKOTA	PROJECT	SHEET	TOTAL SHEETS
	IM 0901(186)0	F24	F71

Plotting Date: 07/31/2015

Exit 2 EBL Off Ramp

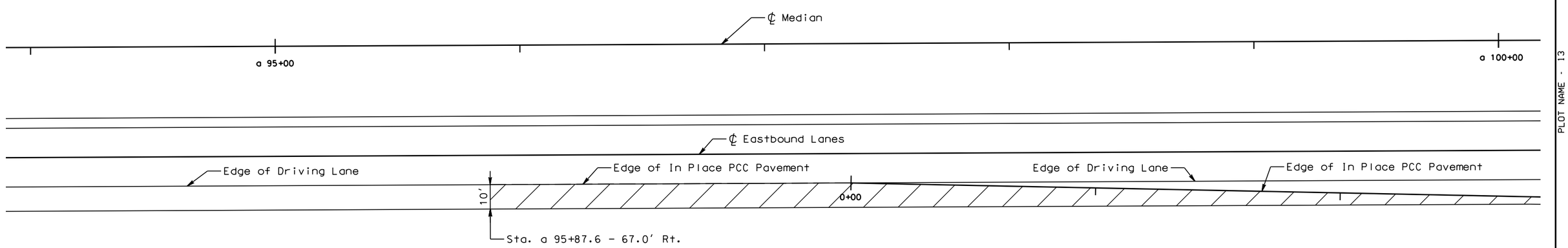

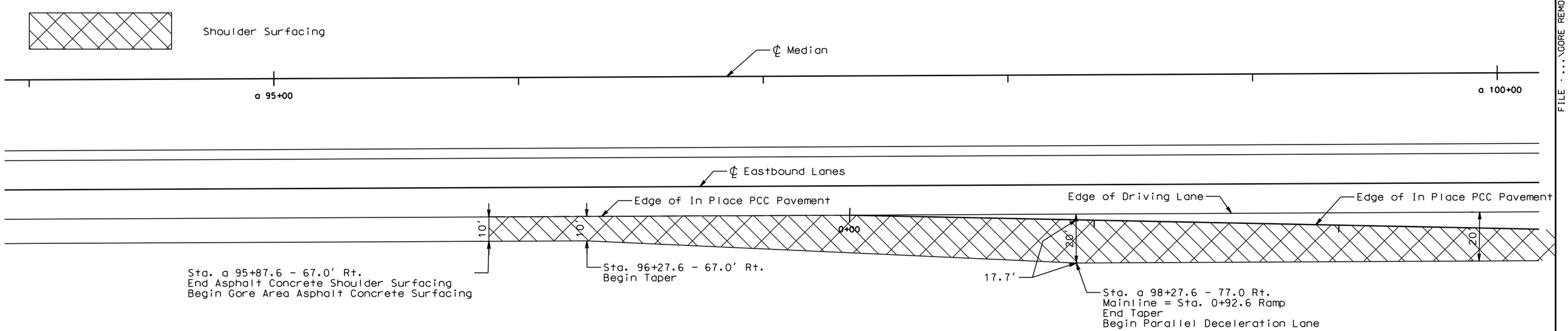

PLOT SCALE - 1:40

PLOT NAME - 13

FILE -...\GORE REMOVAL & SURFACING.DGN

PLOTTED FROM - TRPR15123

STATE OF SOUTH DAKOTA	PROJECT	SHEET	TOTAL SHEETS
	IM 0901(186)0	F25	F71

Plotting Date: 07/31/2015

Exit 2 EBL Off Ramp

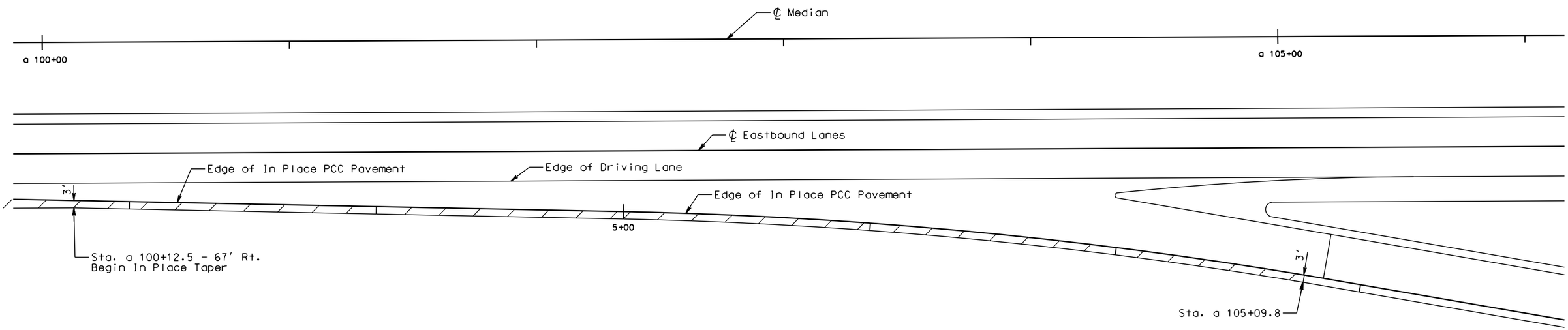

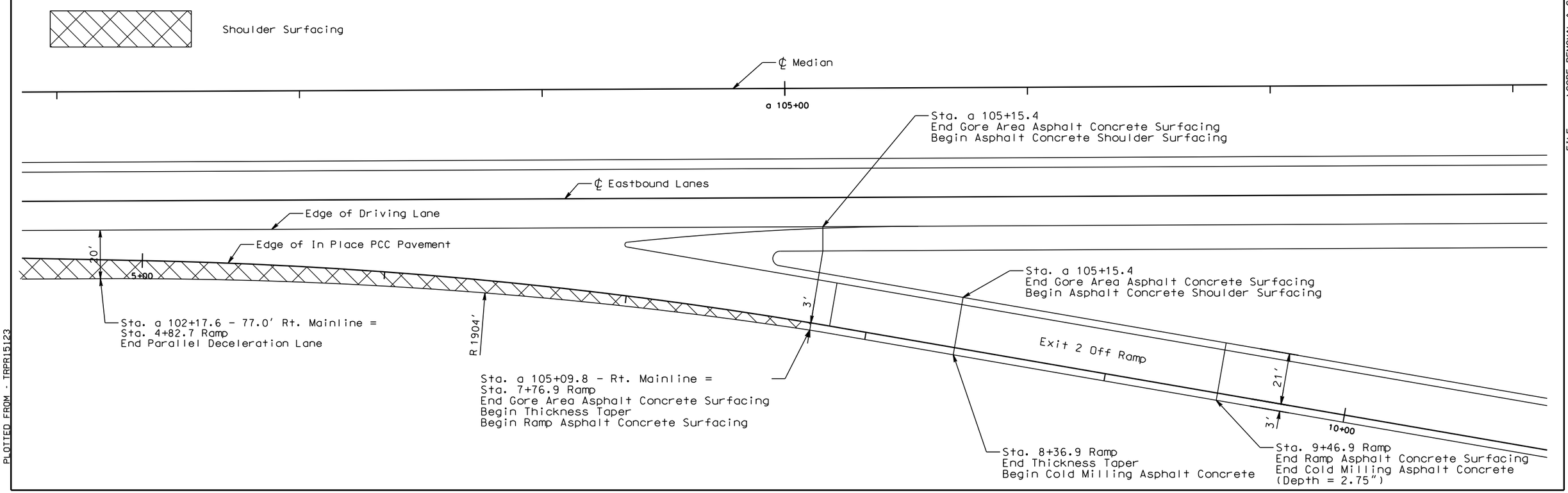

PLOT SCALE - 1:40

PLOT NAME - 14

FILE -...\GORE REMOVAL & SURFACING.DGN

PLOTTED FROM - TRPR15123

STATE OF SOUTH DAKOTA	PROJECT	SHEET	TOTAL SHEETS
	IM 0901(186)0	F26	F71

Plotting Date: 07/31/2015

Exit 2 EBL On Ramp

Removal Area

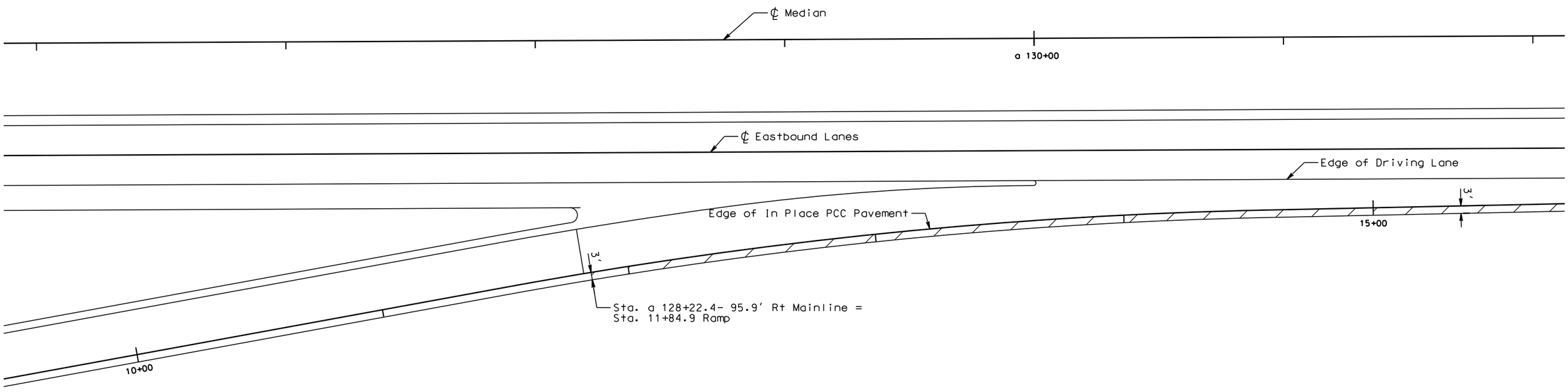

Shoulder Surfacing

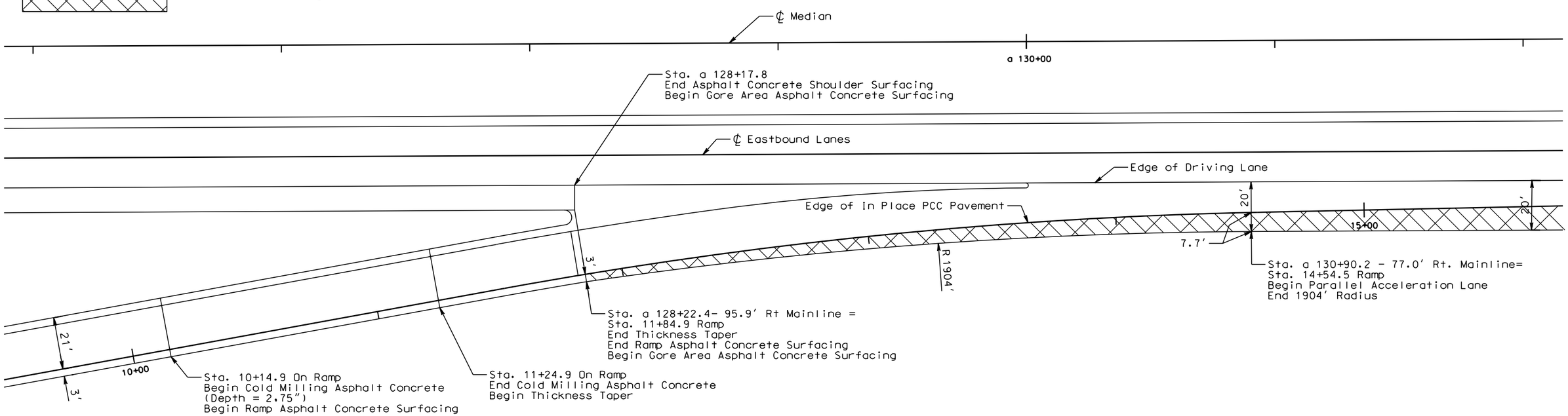

PLOT SCALE - 1:40

PLOT NAME - 15

FILE - ...\GORE REMOVAL & SURFACING.DGN

PLOTTED FROM - TRPR15123

STATE OF SOUTH DAKOTA	PROJECT	SHEET	TOTAL SHEETS
	IM 0901(186)0	F27	F71

Plotting Date: 07/31/2015

Exit 2 EBL On Ramp

Removal Area

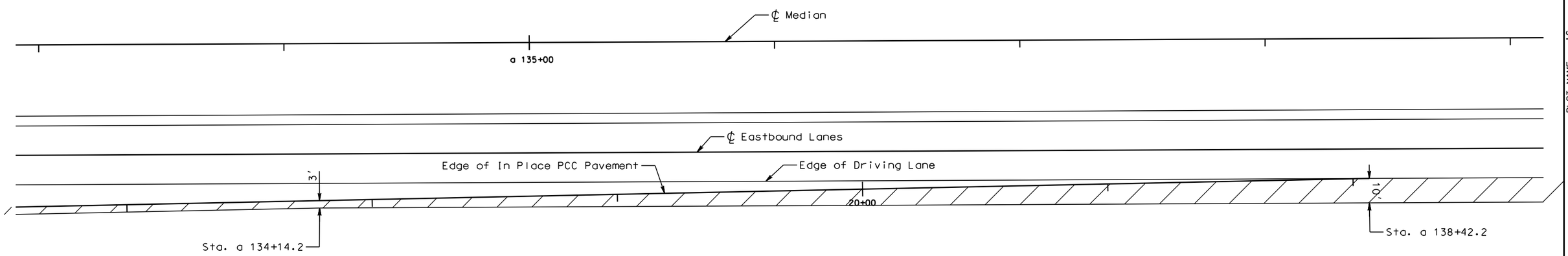

Shoulder Surfacing

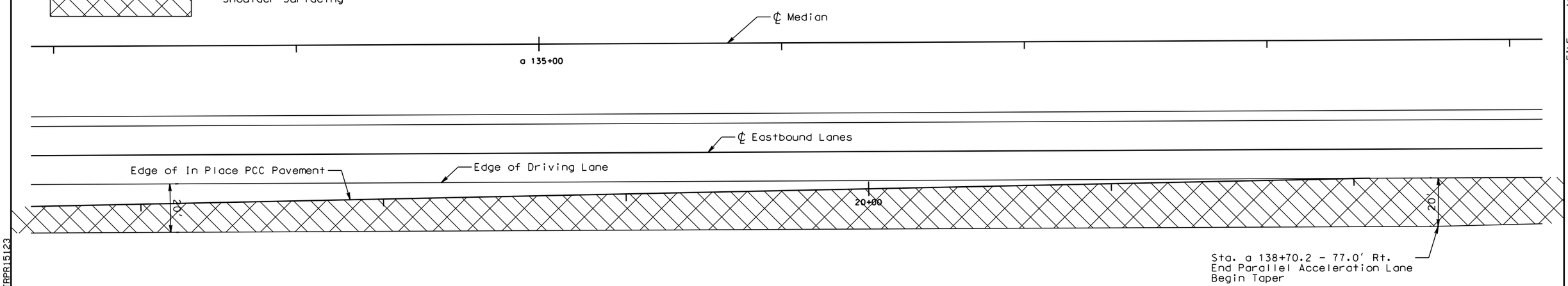

PLOT SCALE - 1:40

PLOT NAME - 16

FILE - ...\GORE REMOVAL & SURFACING.DGN

PLOTTED FROM - TRPR15123

STATE OF SOUTH DAKOTA	PROJECT	SHEET	TOTAL SHEETS
	IM 0901(186)0	F28	F71

Plotting Date: 07/31/2015

Exit 2 EBL On Ramp

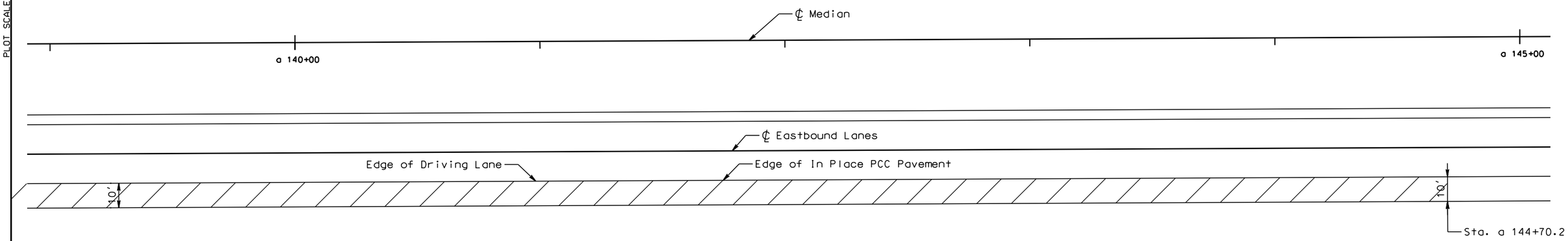

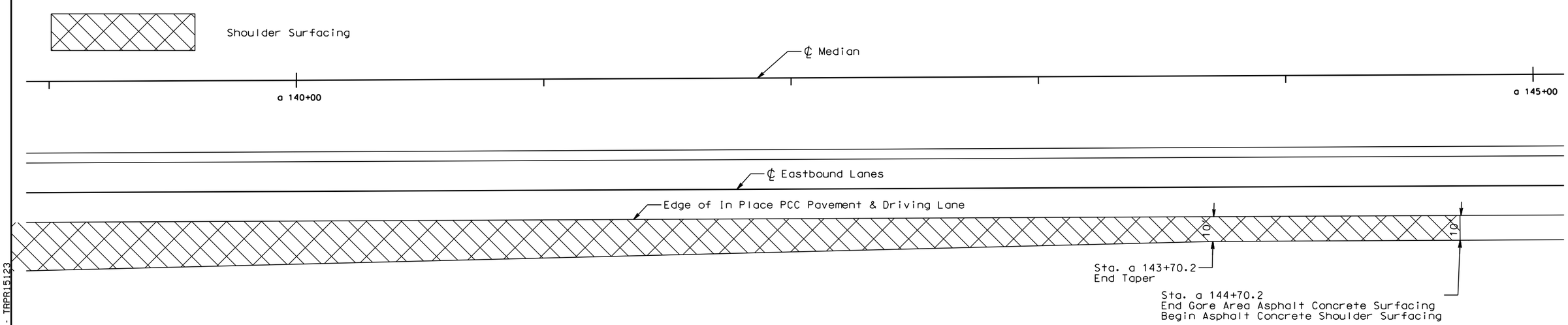

PLOT SCALE - 1:40

PLOT NAME - 17

FILE -...\GORE REMOVAL & SURFACING.DGN

PLOTTED FROM - TRPR15123

STATE OF SOUTH DAKOTA	PROJECT	SHEET	TOTAL SHEETS
	IM 0901(186)0	F29	F71

Plotting Date: 07/31/2015

Exit 8 EBL Off Ramp

Removal Area

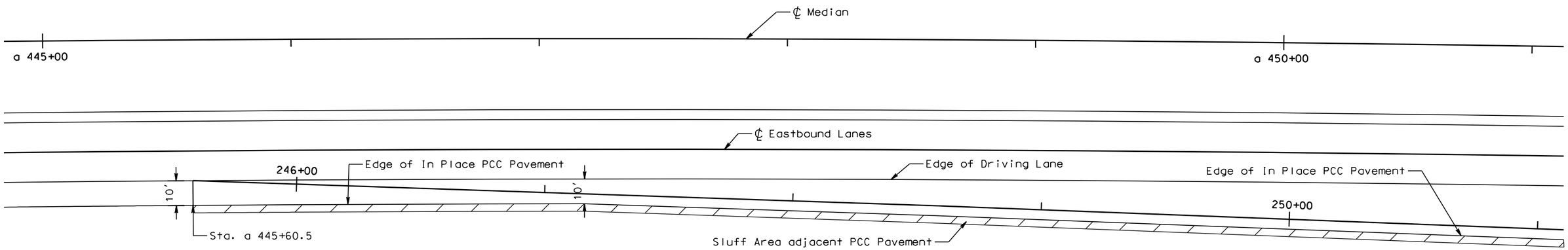

Shoulder Surfacing

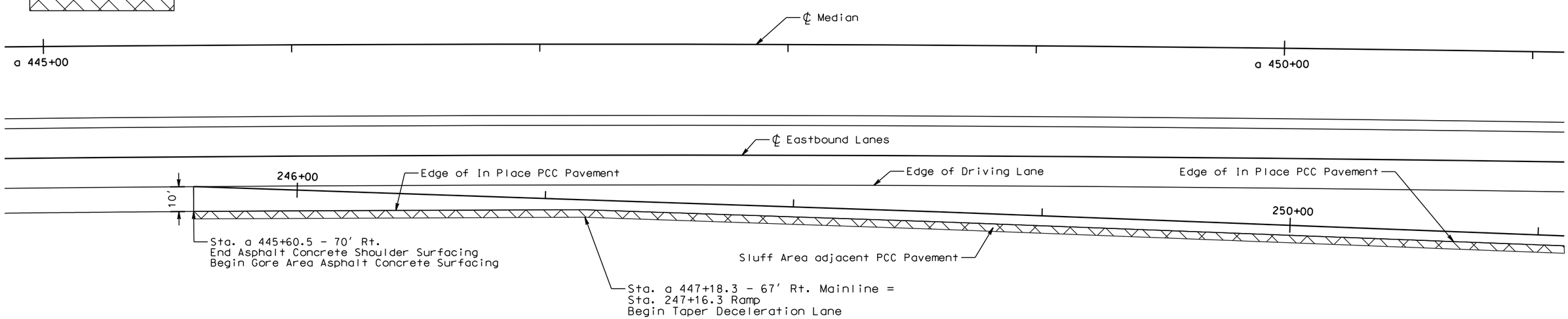

PLOT SCALE - 1:40

PLOT NAME - 18

FILE - ...\GORE REMOVAL & SURFACING.DGN

PLOTTED FROM - TRPR15123

STATE OF SOUTH DAKOTA	PROJECT	SHEET	TOTAL SHEETS
	IM 0901(186)0	F30	F71

Plotting Date: 07/31/2015

Exit 8 EBL Off Ramp

Removal Area

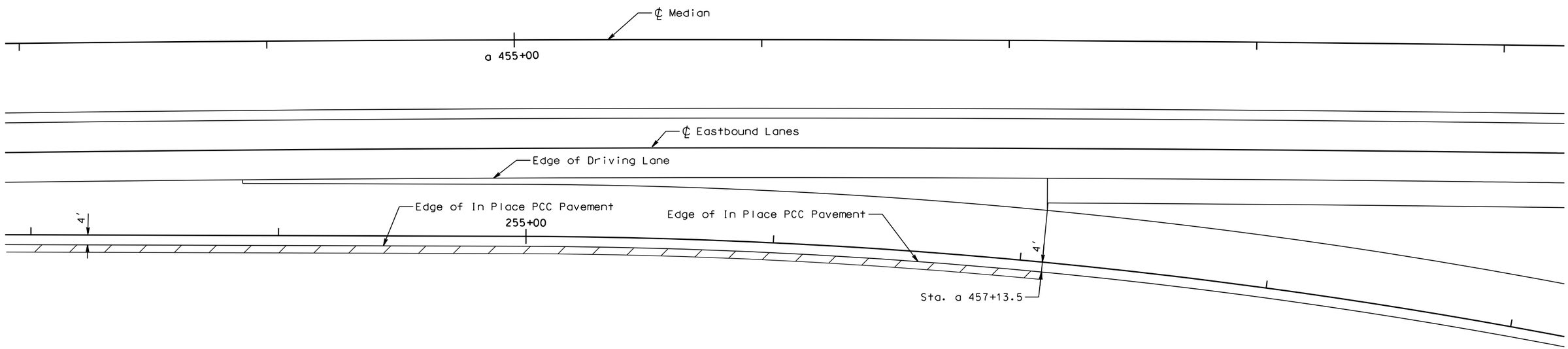

Shoulder Surfacing

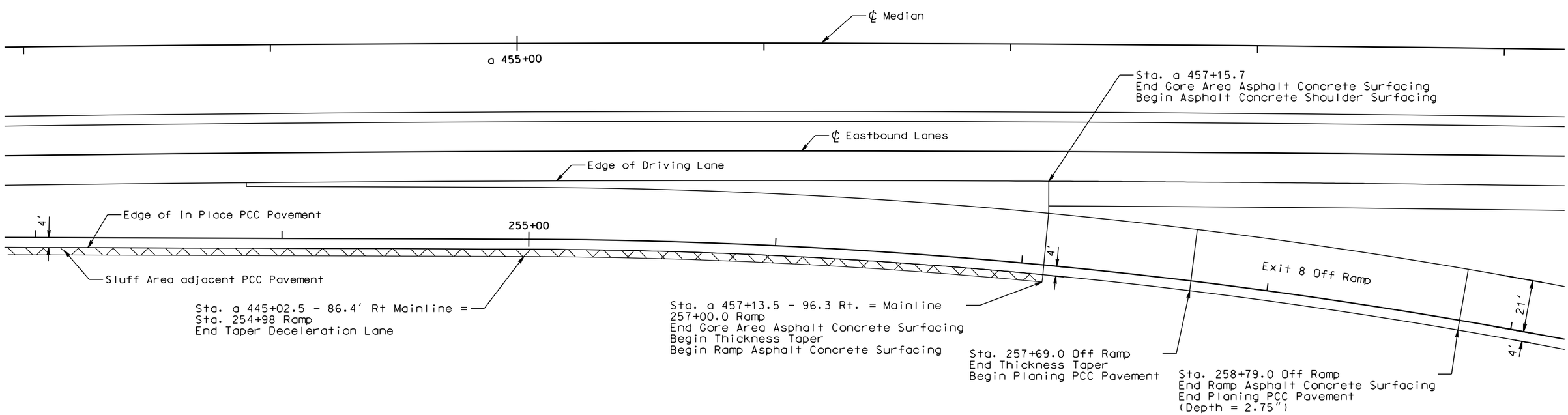

PLOT SCALE - 1:40

PLOT NAME - 19

FILE - ...\GORE REMOVAL & SURFACING.DGN

PLOTTED FROM - TRPR15123

STATE OF SOUTH DAKOTA	PROJECT	SHEET	TOTAL SHEETS
	IM 0901(186)0	F31	F71

Plotting Date: 07/31/2015

Exit 8 EBL On Ramp

Removal Area

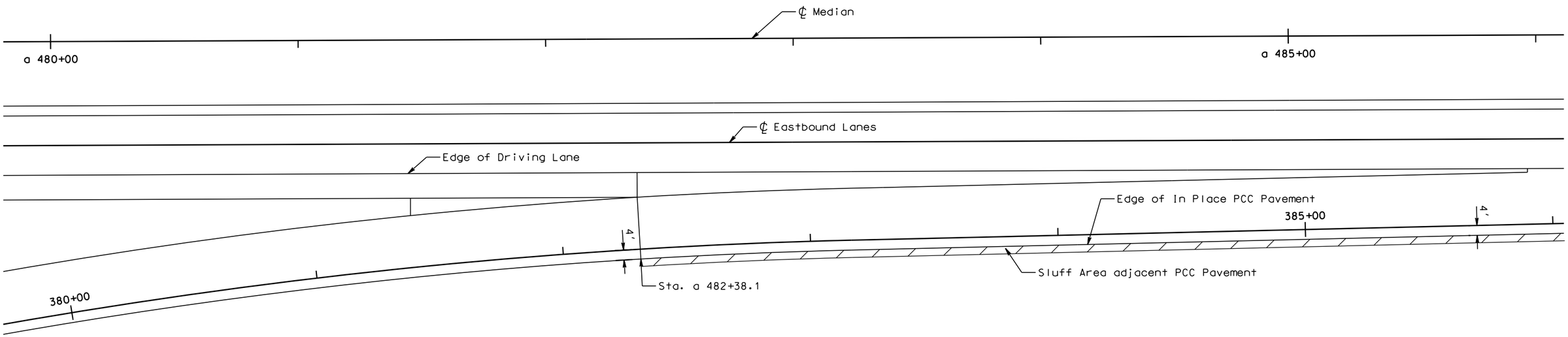

Shoulder Surfacing

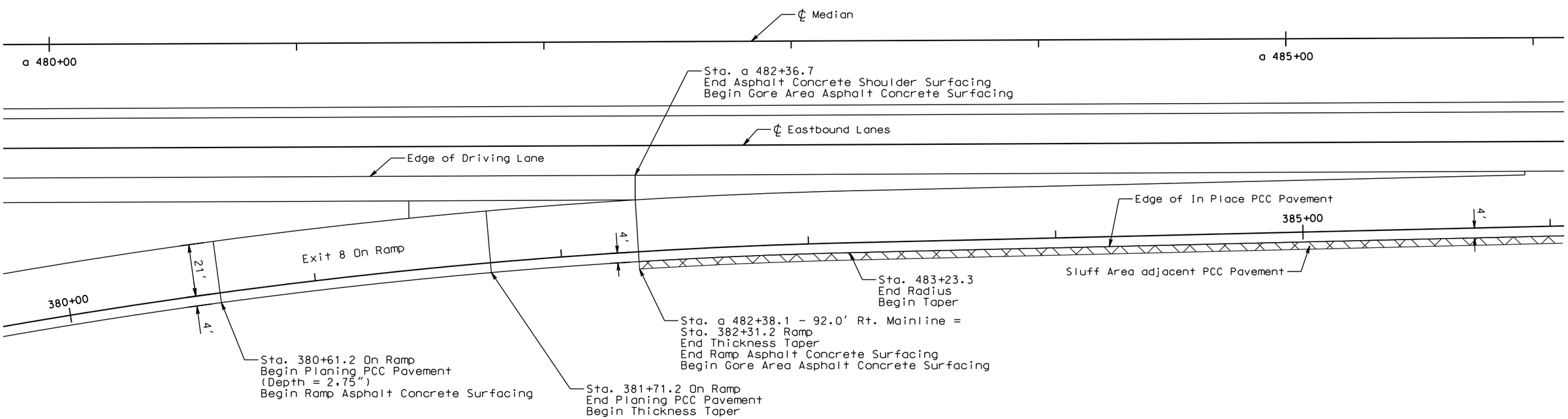

PLOT SCALE - 1:40

PLOT NAME - 20

FILE -...\GORE REMOVAL & SURFACING.DGN

PLOTTED FROM - TRPR15123

STATE OF SOUTH DAKOTA	PROJECT	SHEET	TOTAL SHEETS
	IM 0901(186)0	F32	F71

Plotting Date: 07/31/2015

Exit 8 EBL On Ramp

Removal Area

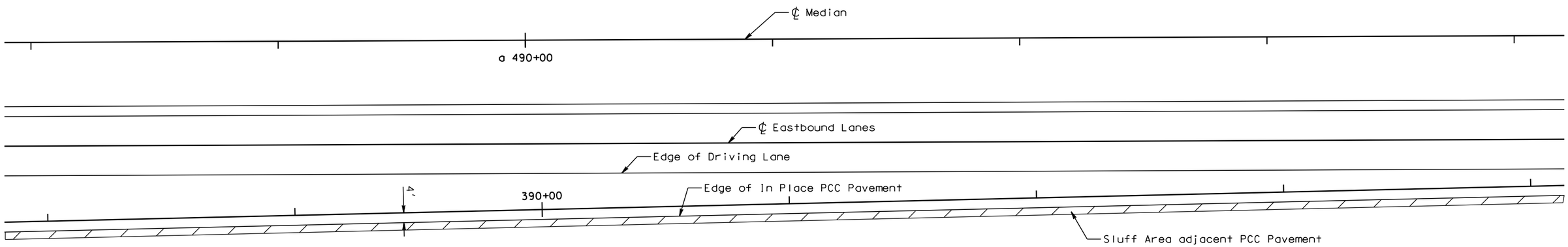

Shoulder Surfacing

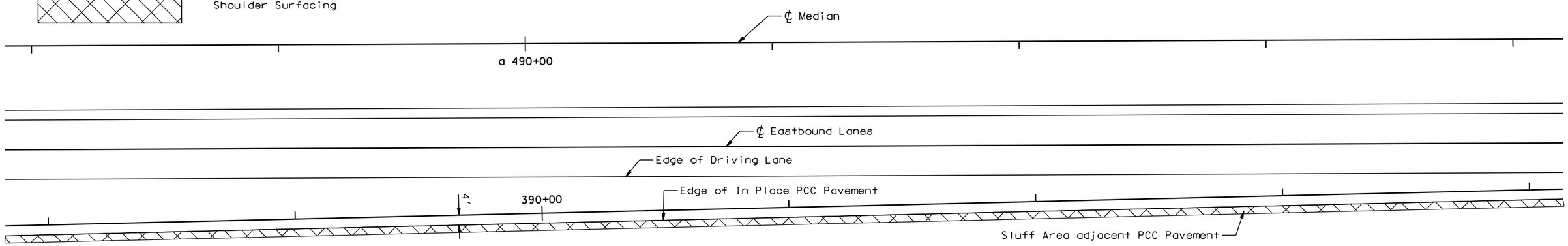

PLOT SCALE - 1:40

PLOT NAME - 21

FILE -...\GORE REMOVAL & SURFACING.DGN

PLOTTED FROM - TRPR15123

STATE OF SOUTH DAKOTA	PROJECT	SHEET	TOTAL SHEETS
	IM 0901(186)0	F33	F71

Plotting Date: 07/31/2015

Exit 8 EBL On Ramp

Removal Area

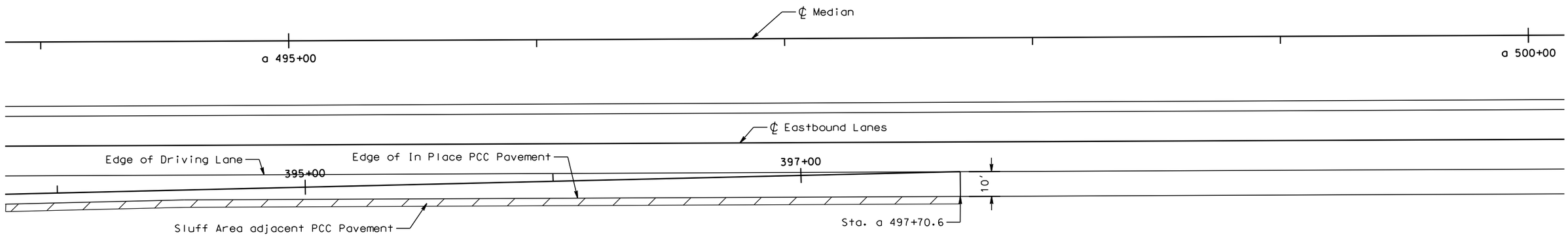

Shoulder Surfacing

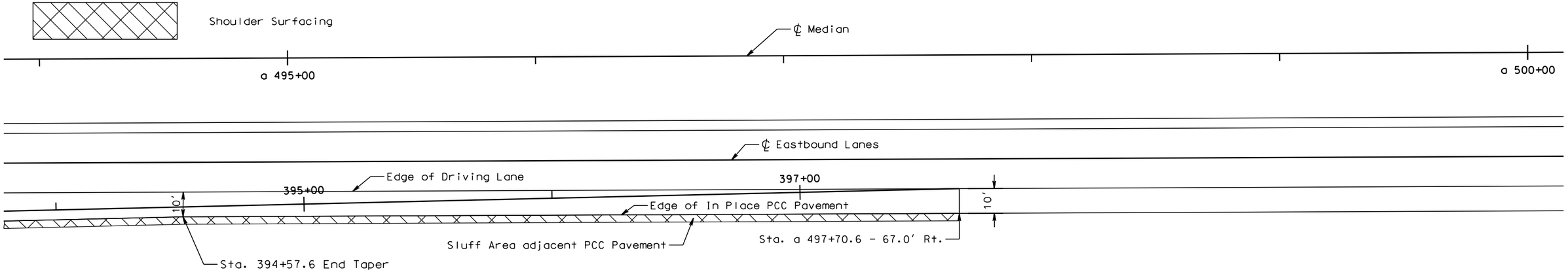

PLOT SCALE - 1:40

PLOT NAME - 22

FILE -...\GORE REMOVAL & SURFACING.DGN

PLOTTED FROM - TRPR15123

STATE OF SOUTH DAKOTA	PROJECT	SHEET	TOTAL SHEETS
	IM 0901(186)0	F34	F71

Plotting Date: 07/31/2015

Exit 2 WBL On Ramp

Removal Area

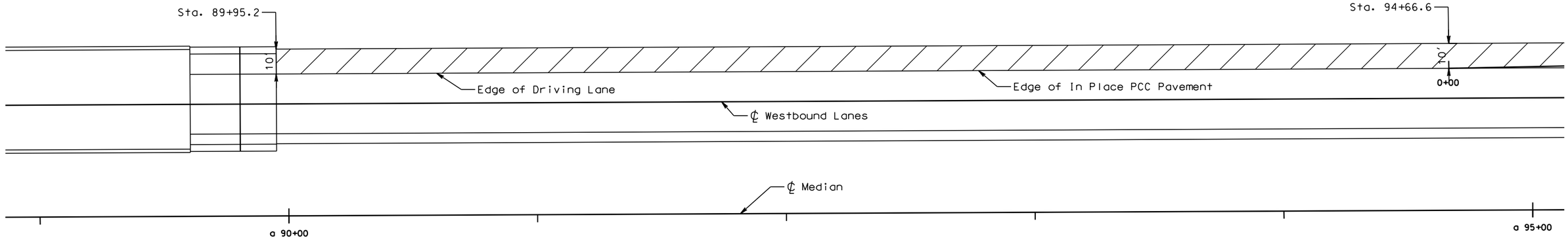

Shoulder Surfacing

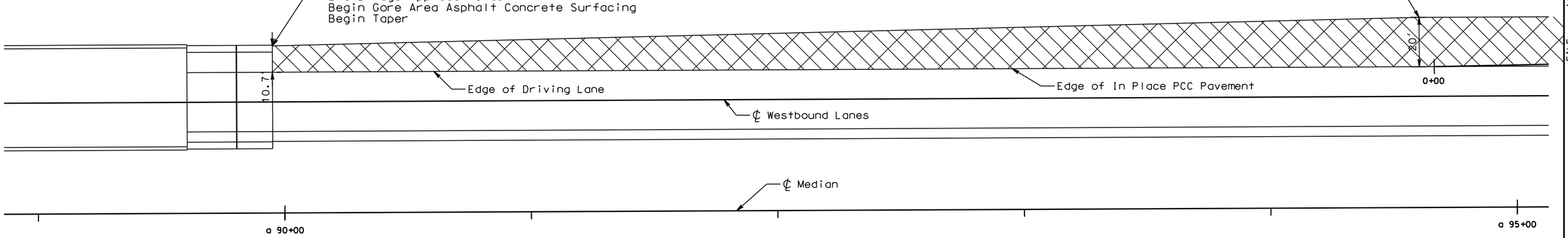

PLOT SCALE - 1:40

PLOT NAME - 23

FILE -...\GORE REMOVAL & SURFACING.DGN

PLOTTED FROM - TRPR15123

STATE OF SOUTH DAKOTA	PROJECT	SHEET	TOTAL SHEETS
	IM 0901(186)0	F35	F71

Plotting Date: 07/31/2015

Exit 2 WBL On Ramp

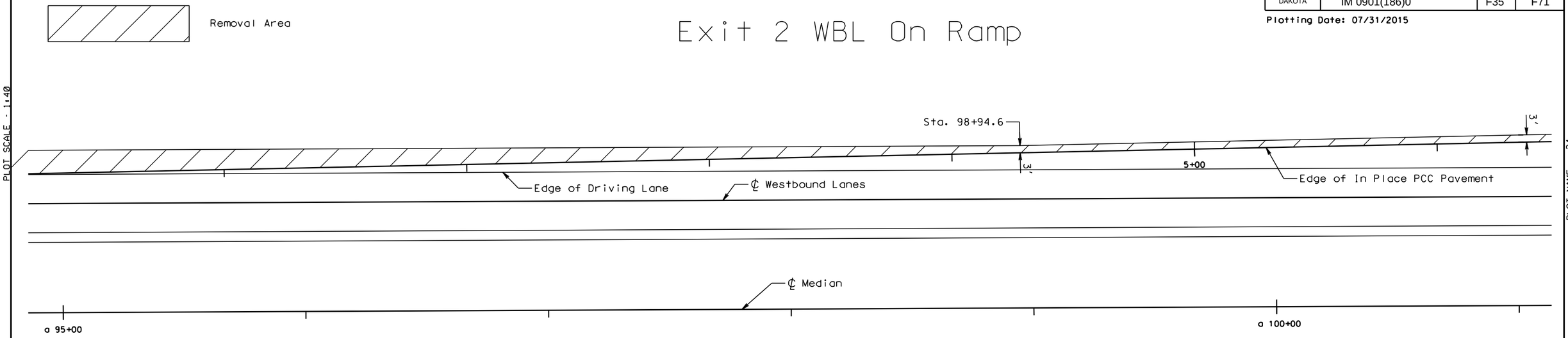

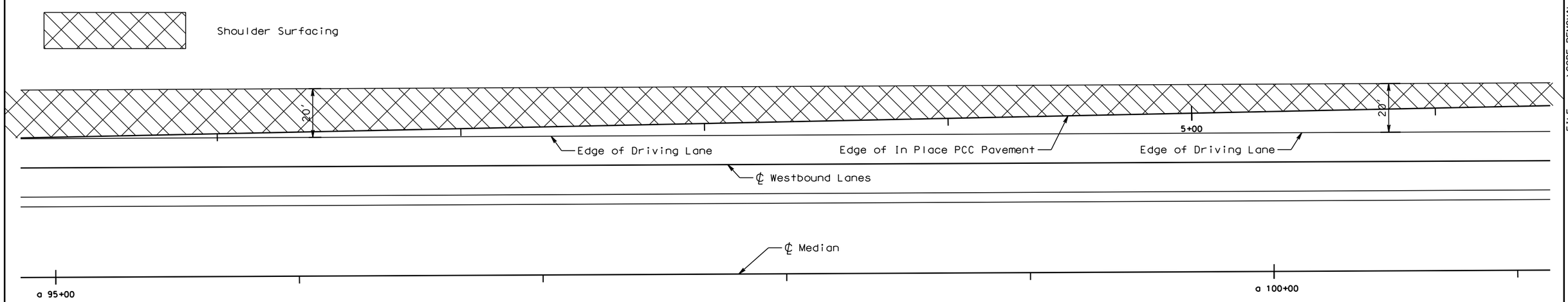

PLOT SCALE - 1:40

PLOT NAME - 24

FILE -...\GORE REMOVAL & SURFACING.DGN

PLOTTED FROM - TRPR15123

STATE OF SOUTH DAKOTA	PROJECT	SHEET	TOTAL SHEETS
	IM 0901(186)0	F36	F71

Plotting Date: 07/31/2015

Exit 2 WBL On Ramp

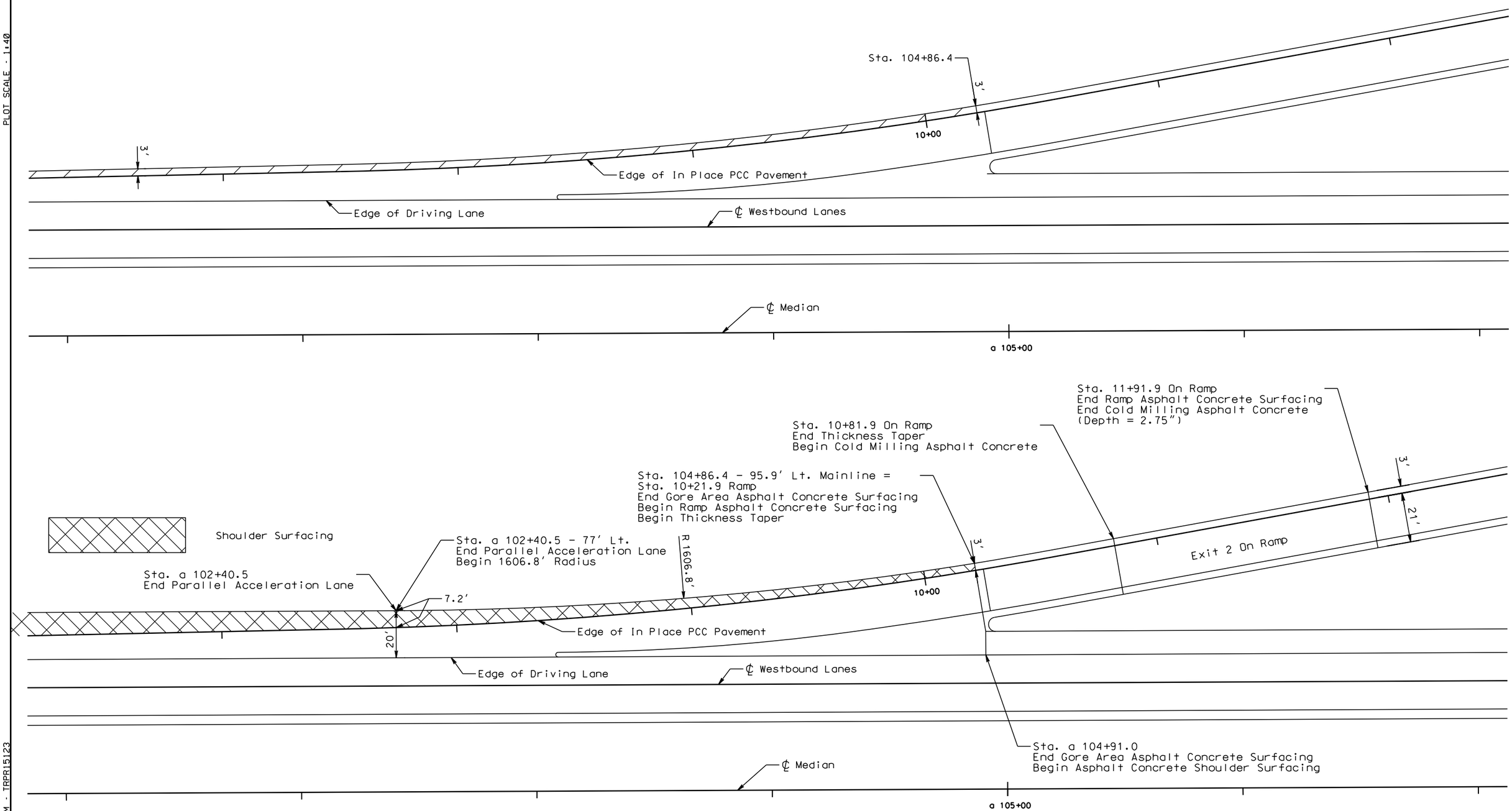

PLOT SCALE - 1:40

PLOT NAME - 25

FILE - ...\GORE REMOVAL & SURFACING.DGN

PLOTTED FROM - TRPR15123

STATE OF SOUTH DAKOTA	PROJECT	SHEET	TOTAL SHEETS
	IM 0901(186)0	F37	F71

Plotting Date: 07/31/2015

Exit 2 WBL Off Ramp

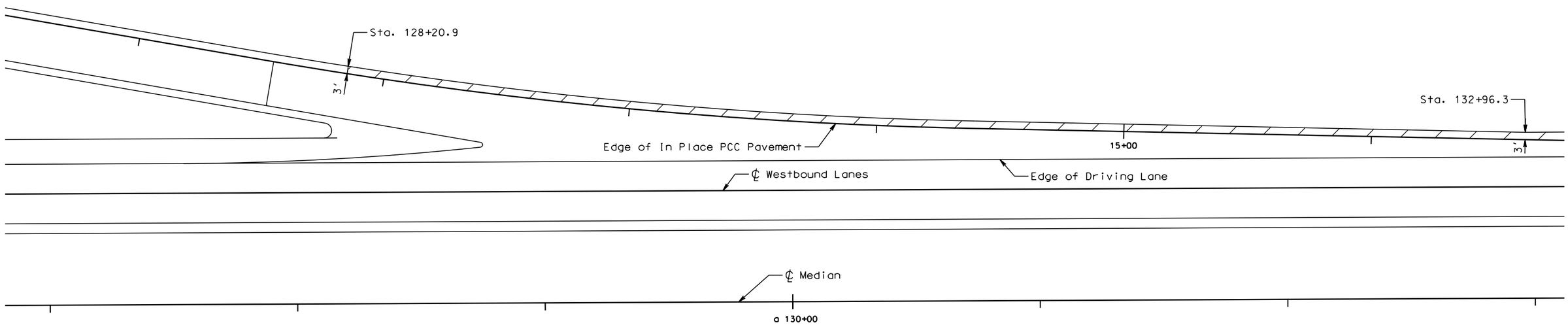

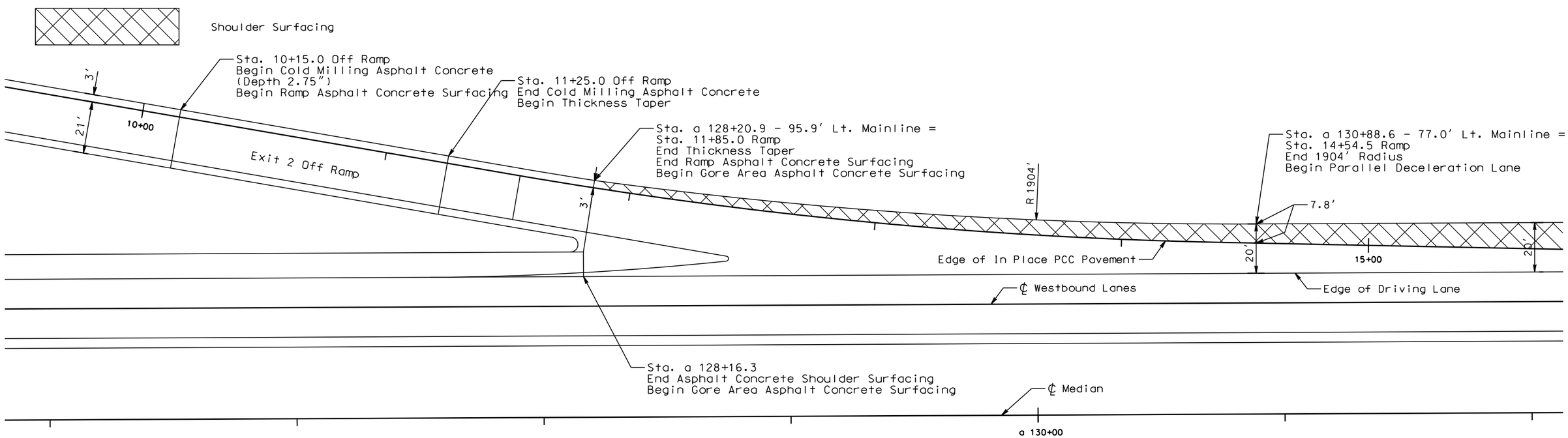

PLOT SCALE - 1:40

PLOT NAME - 26

FILE -...\GORE REMOVAL & SURFACING.DGN

PLOTTED FROM - TRPR15123

STATE OF SOUTH DAKOTA	PROJECT	SHEET	TOTAL SHEETS
	IM 0901(186)0	F38	F71

Plotting Date: 07/31/2015

Removal Area

Exit 2 WBL Off Ramp

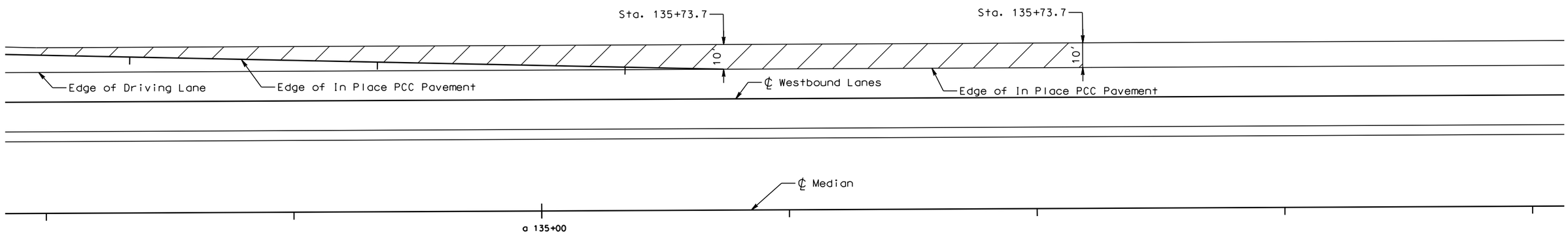

Shoulder Surfacing

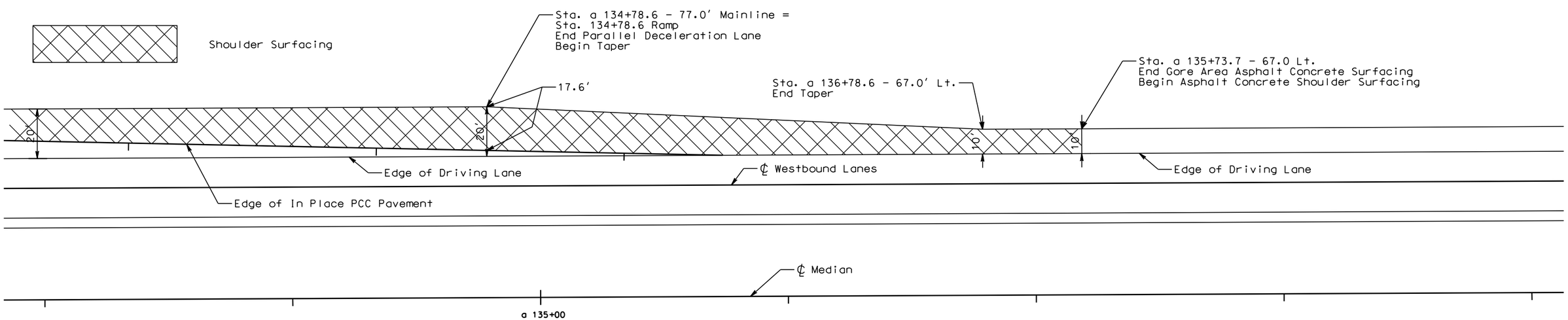

PLOT SCALE - 1:40

PLOT NAME - 27

FILE -...\GORE REMOVAL & SURFACING.DGN

PLOTTED FROM - TRPR15123

STATE OF SOUTH DAKOTA	PROJECT	SHEET	TOTAL SHEETS
	IM 0901(186)0	F39	F71

Plotting Date: 07/31/2015

Exit 8 WBL On Ramp

Removal Area

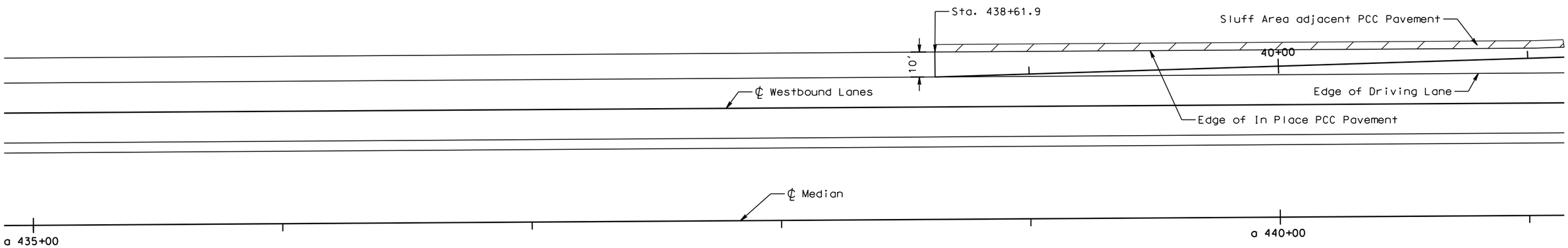

Shoulder Surfacing

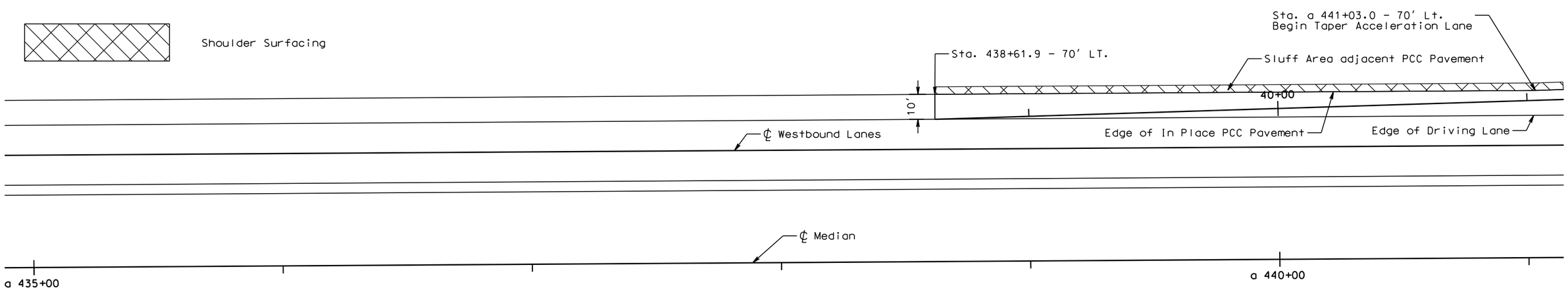

PLOT SCALE - 1:40

PLOTTED FROM - TRPR15123

PLOT NAME - 28

FILE -...\GORE REMOVAL & SURFACING.DGN

STATE OF SOUTH DAKOTA	PROJECT	SHEET	TOTAL SHEETS
	IM 0901(186)0	F40	F71

Plotting Date: 07/31/2015

Exit 8 WBL On Ramp

Removal Area

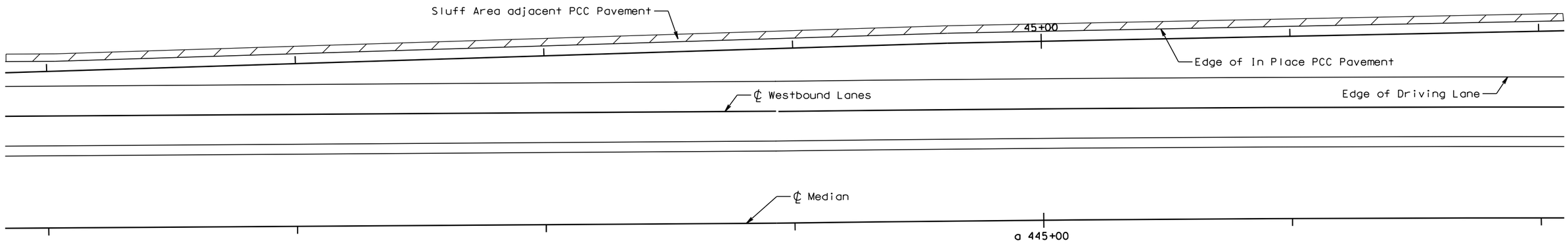

Shoulder Surfacing

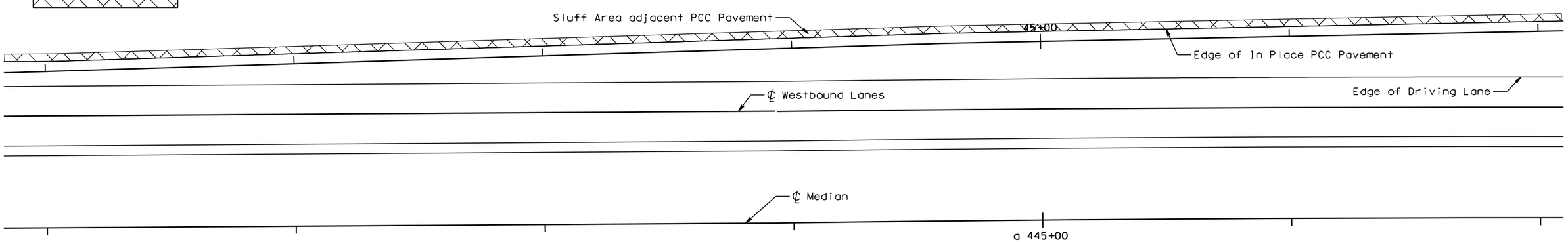

PLOT SCALE - 1:40

PLOT NAME - 29

FILE -...\GORE REMOVAL & SURFACING.DGN

PLOTTED FROM - TRPR15123

STATE OF SOUTH DAKOTA	PROJECT	SHEET	TOTAL SHEETS
	IM 0901(186)0	F41	F71

Plotting Date: 07/31/2015

Exit 8 WBL On Ramp

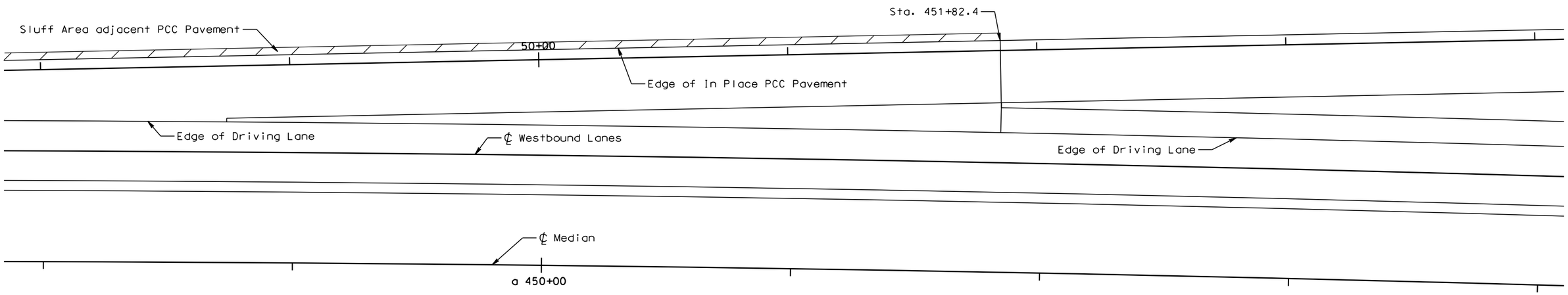

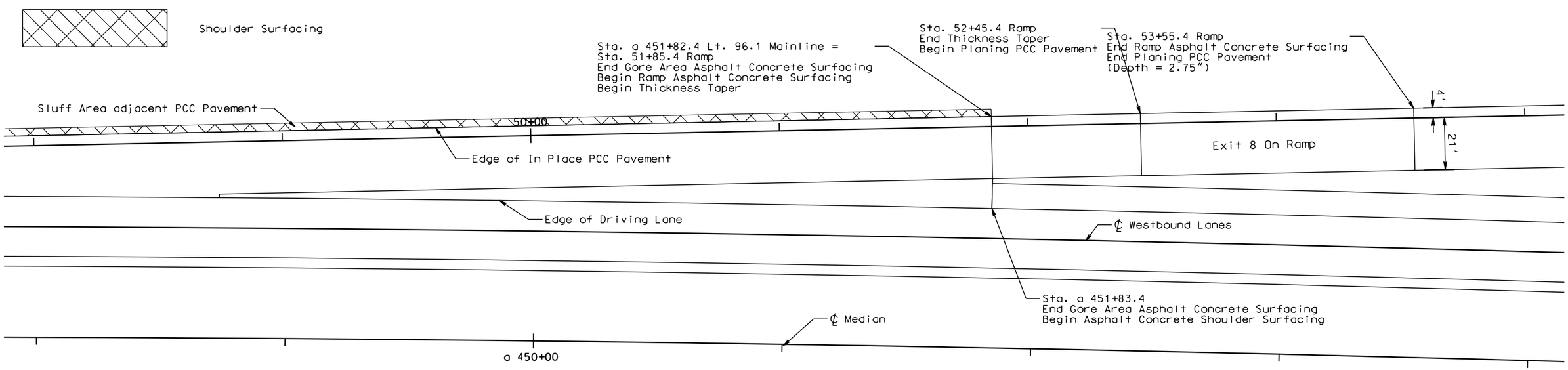

PLOT SCALE - 1:40

PLOT NAME - 30

FILE -...\GORE REMOVAL & SURFACING.DGN

PLOTTED FROM - TRPR15123

STATE OF SOUTH DAKOTA	PROJECT	SHEET	TOTAL SHEETS
	IM 0901(186)0	F42	F71

Plotting Date: 07/31/2015

Exit 8 WBL Off Ramp

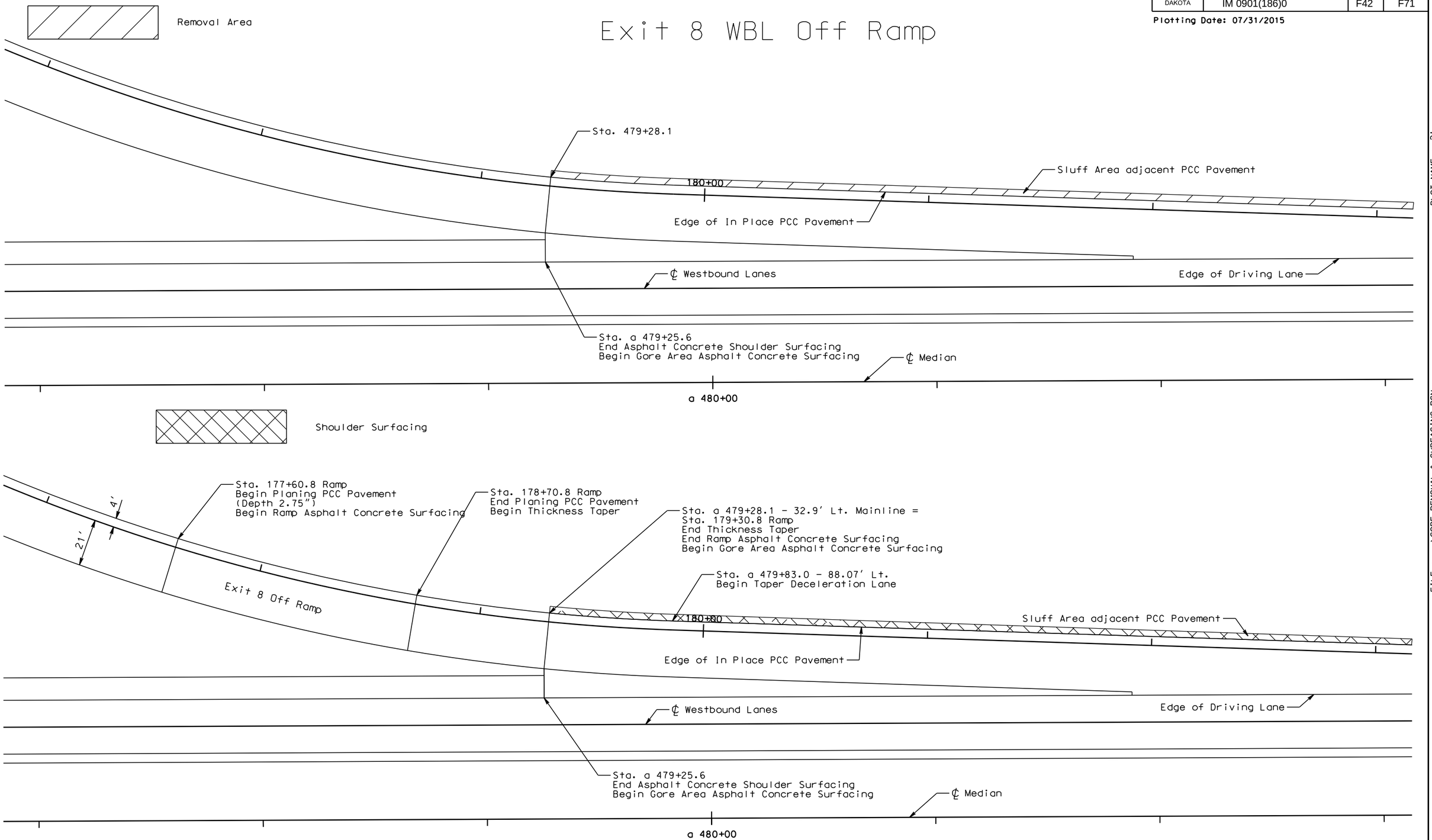

PLOT SCALE - 1:40

PLOT NAME - 31

FILE - ...\GORE REMOVAL & SURFACING.DGN

PLOTTED FROM - TRPR15123

STATE OF SOUTH DAKOTA	PROJECT	SHEET	TOTAL SHEETS
	IM 0901(186)0	F43	F71

Plotting Date: 07/31/2015

Exit 8 WBL Off Ramp

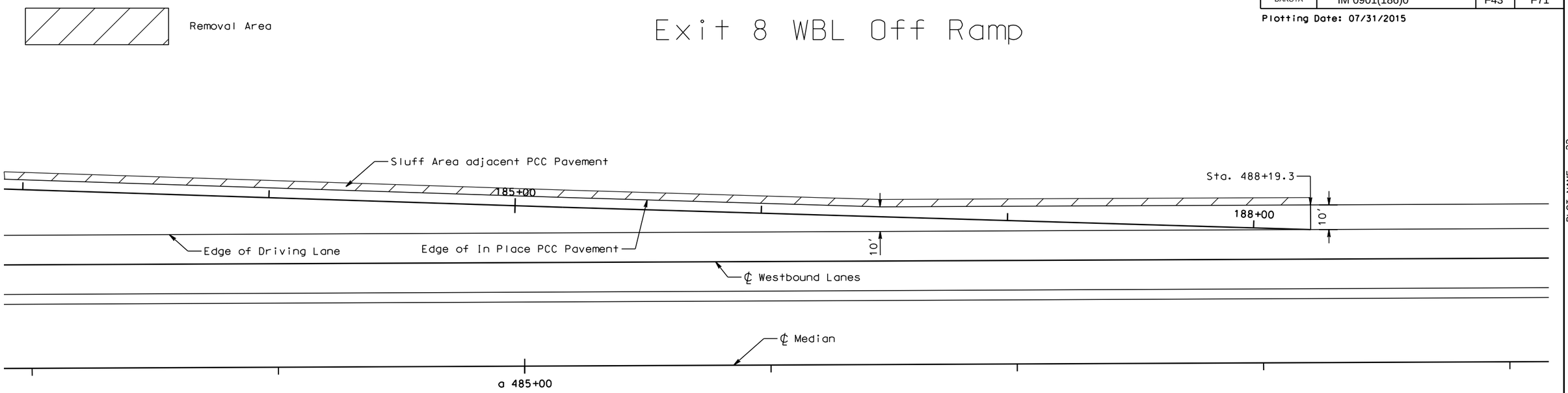

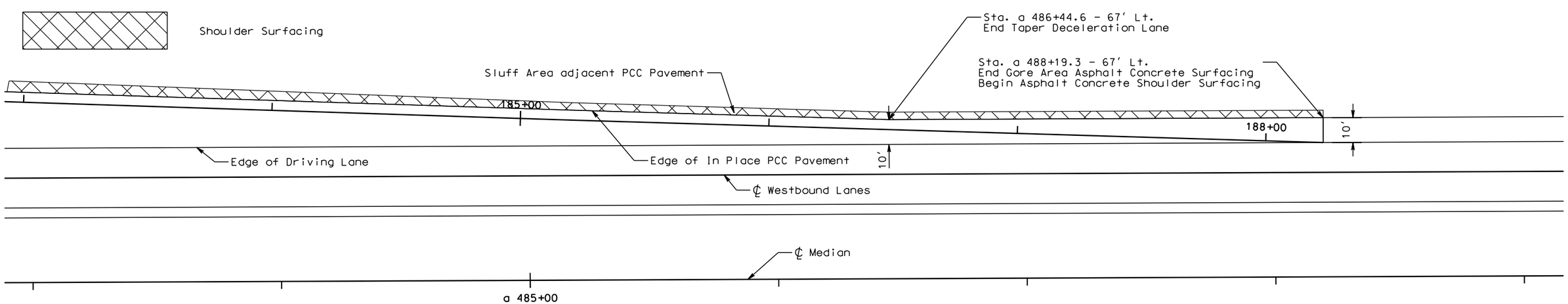

PLOT SCALE - 1:40

PLOT NAME - 32

FILE -...\GORE REMOVAL & SURFACING.DGN

PLOTTED FROM - TRPR15123

STATE OF SOUTH DAKOTA	PROJECT	SHEET	TOTAL SHEETS
	IM 0901(186)0	F44	F71

Plotting Date: 07/31/2015

GUARDRAIL LAYOUT

Scale 1 Inch = 40 Feet
Sheet 1 of 4 Sheets

(Str. # 41-015-042 & Str. # 41-015-042)
I-90, MRM 1.71

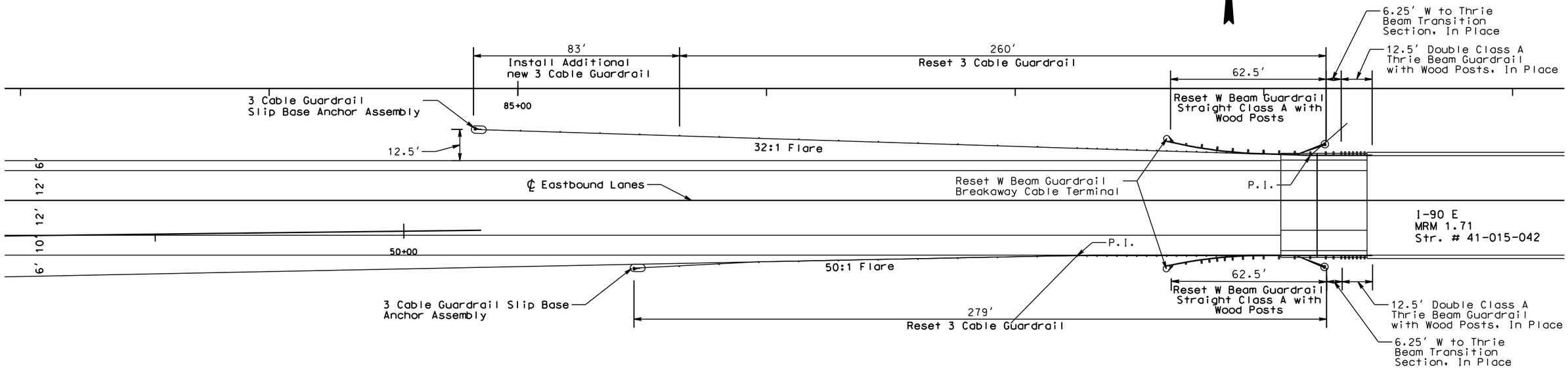

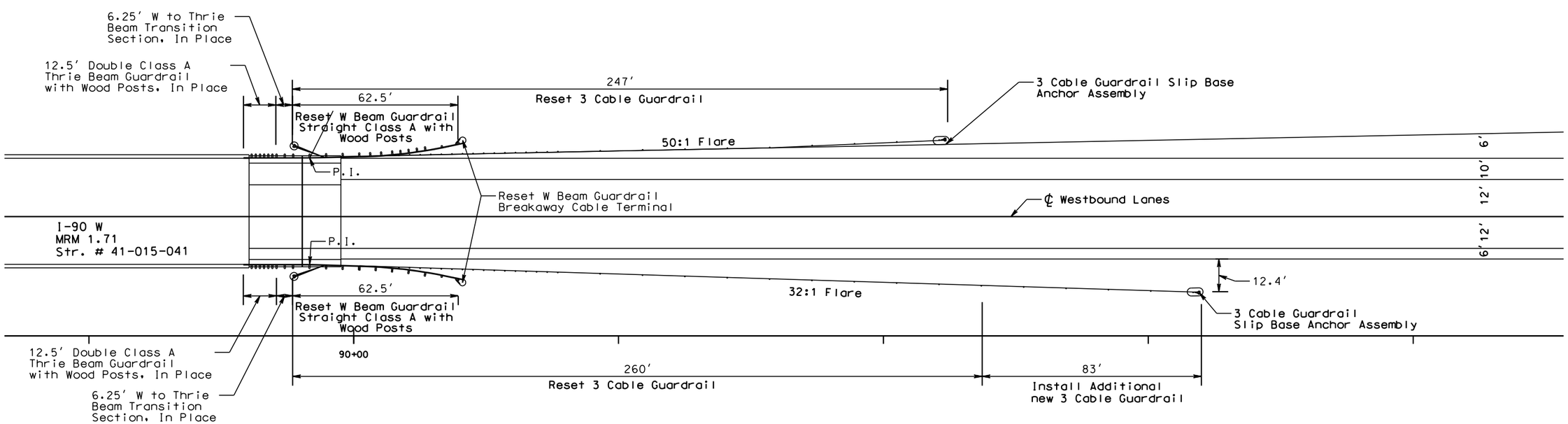

PLOT SCALE - 1:40

PLOT NAME - 33

FILE -...\GUARDRAIL LAYOUTS.DGN

PLOTTED FROM - TRPR15123

STATE OF SOUTH DAKOTA	PROJECT	SHEET	TOTAL SHEETS
	IM 0901(186)0	F45	F71

Plotting Date: 07/31/2015

GUARDRAIL LAYOUT

Scale 1 Inch = 40 Feet
Sheet 2 of 4 Sheets

(Str. # 41-020-041 & Str. # 41-020-042)
I-90, MRM 2.25

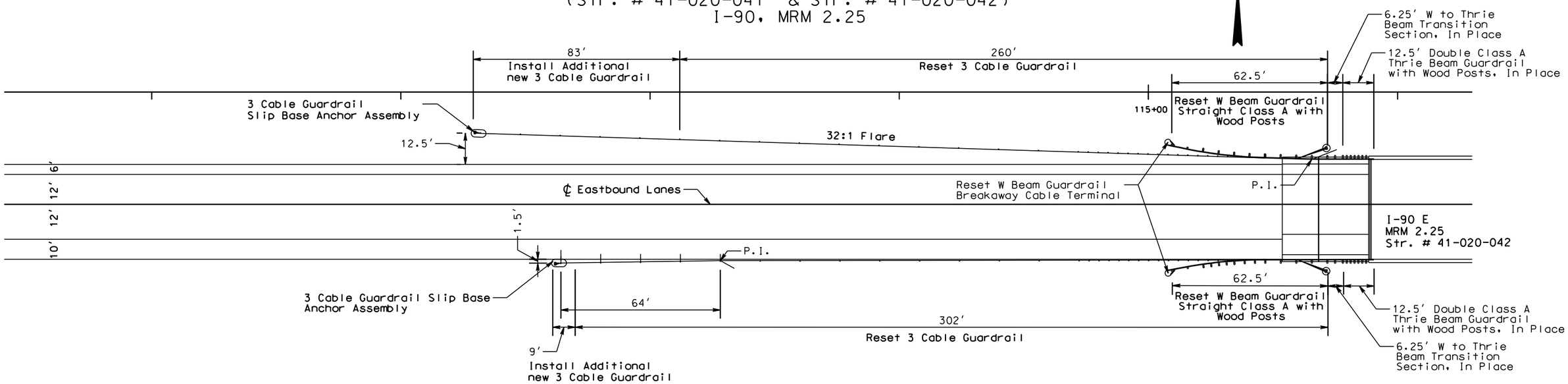

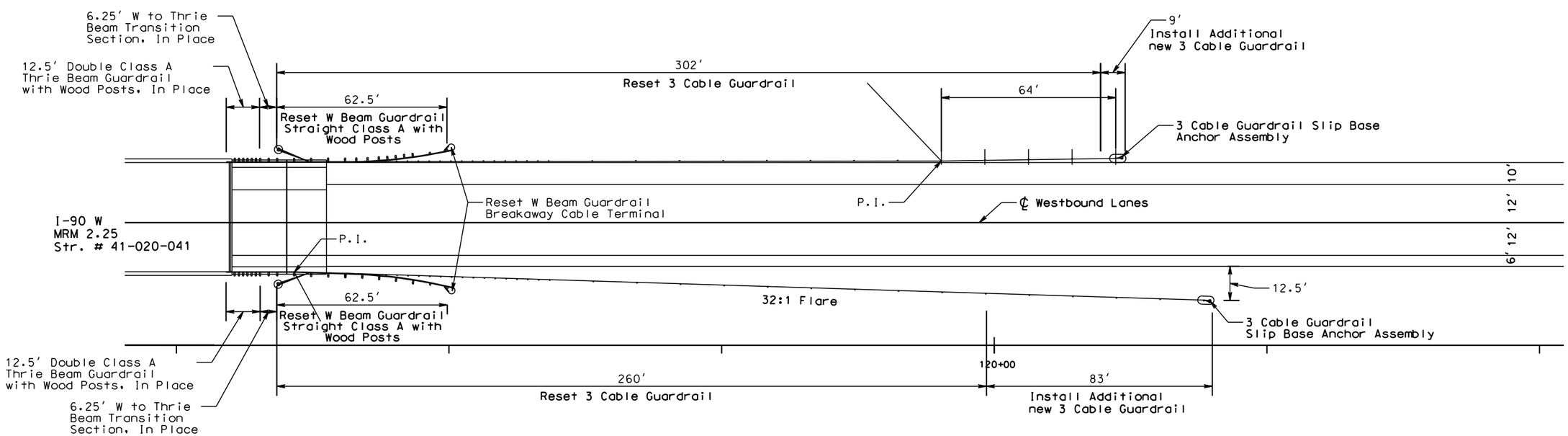

PLOT SCALE - 1:40

PLOT NAME - 34

FILE -...\GUARDRAIL LAYOUTS.DGN

PLOTTED FROM - TRPR15123

STATE OF SOUTH DAKOTA	PROJECT	SHEET	TOTAL SHEETS
	IM 0901(186)0	F46	F71

Plotting Date: 07/31/2015

GUARDRAIL LAYOUT

Scale 1 Inch = 40 Feet
Sheet 3 of 4 Sheets

(Str. # 41-061-056 & Str. # 41-061-057)
I-90, MRM 7.02

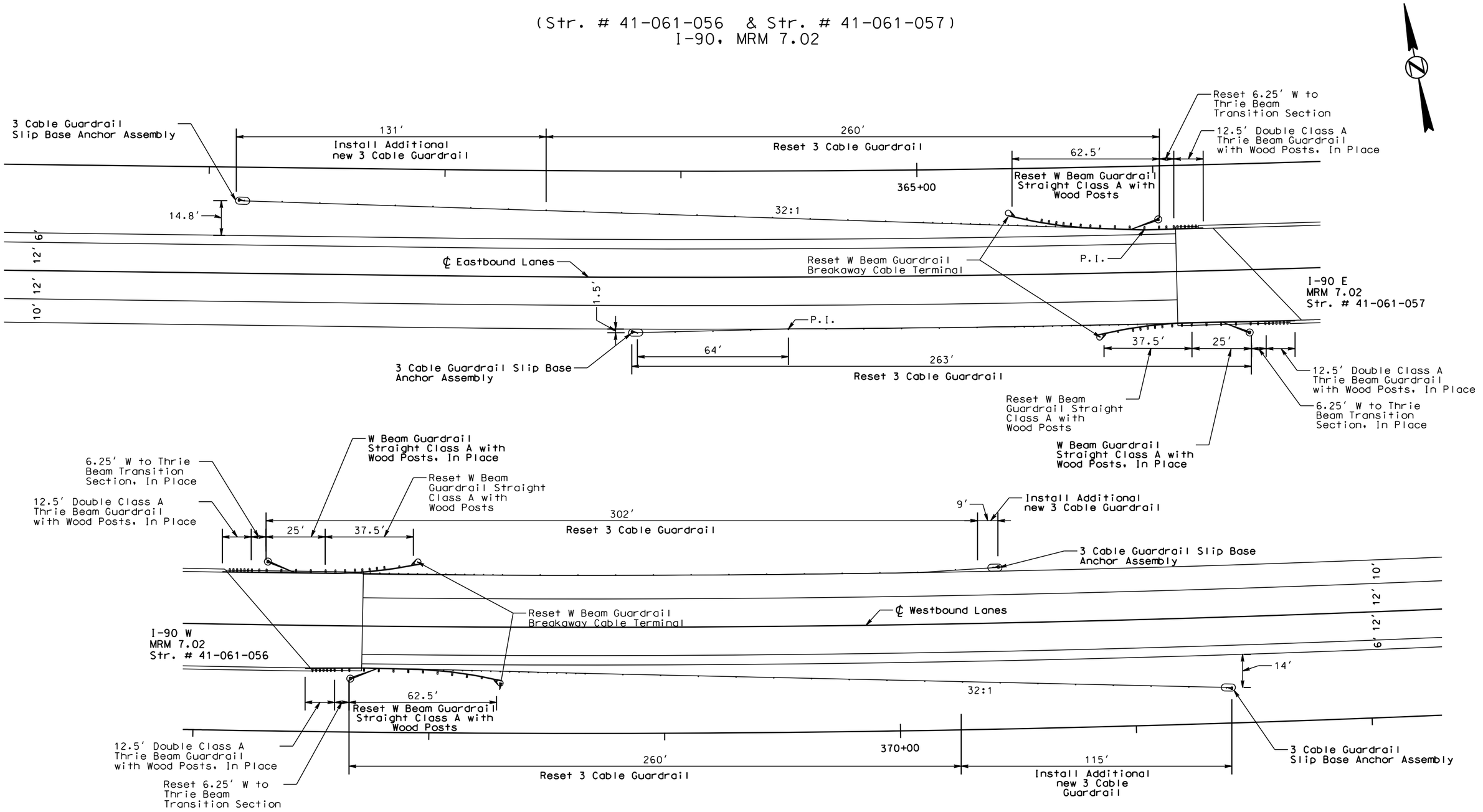

PLOT SCALE - 1:40

PLOT NAME - 35

FILE - ...\GUARDRAIL LAYOUTS.DGN

PLOTTED FROM - TRPR15123

STATE OF SOUTH DAKOTA	PROJECT	SHEET	TOTAL SHEETS
	IM 0901(186)0	F47	F71

Plotting Date: 07/31/2015

GUARDRAIL LAYOUT

Scale 1 Inch = 40 Feet
Sheet 4 of 4 Sheets

(Str. # 41-080-057 & Str. # 41-080-058)
I-90, MRM 8.96

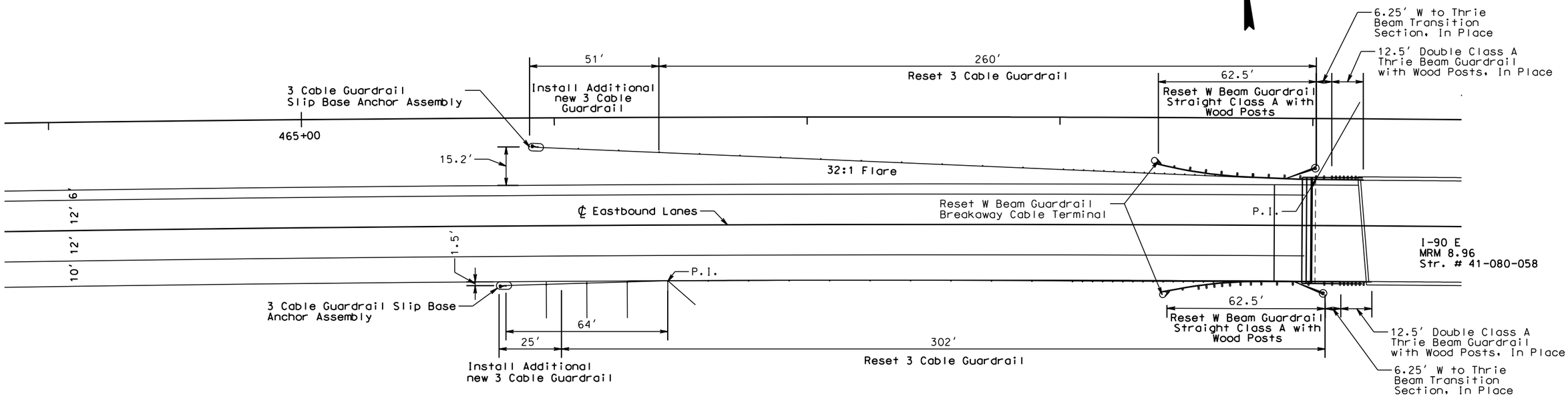

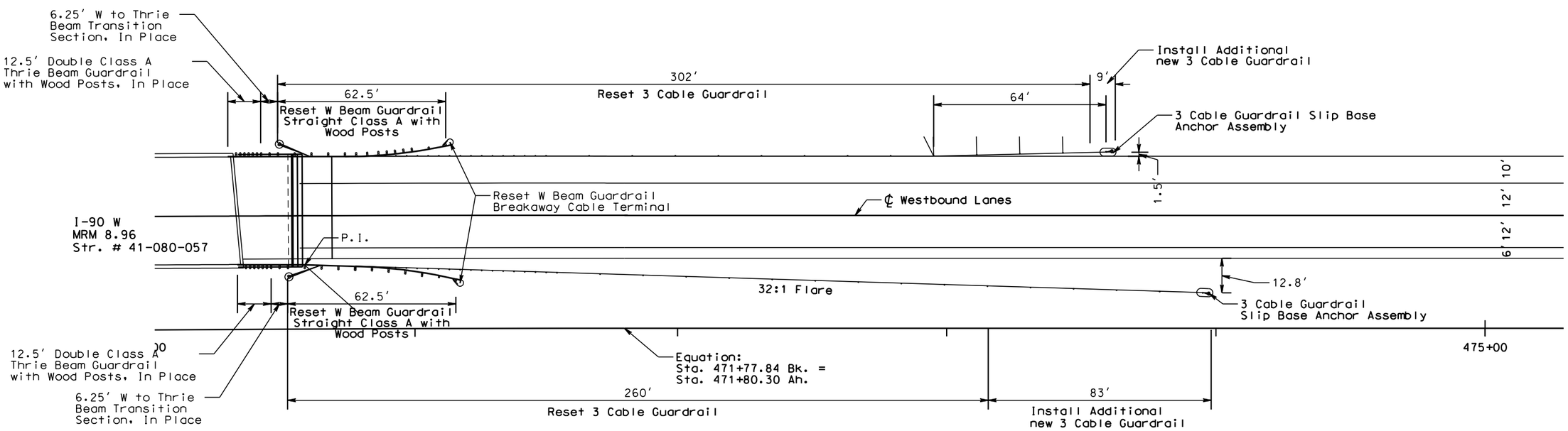

PLOT SCALE - 1:40

PLOT NAME - 36

FILE - ...\GUARDRAIL LAYOUTS.DGN

PLOTTED FROM - TRPR15123

ADDITIONAL SURFACING FOR GUARDRAIL

STATE OF SOUTH DAKOTA	PROJECT	SHEET	TOTAL SHEETS
	IM 0901(186)0	F48	F71

Plotting Date: 07/31/2015

Scale 1 Inch = 40 Feet
Sheet 1 of 4 Sheets

(Str. # 41-015-042 & Str. # 41-015-042)
I-90, MRM 1.71

2" Class Q4 Hot Mixed Asphalt Concrete and Base Course, Salvaged, Salvaged

Base Course, Salvaged, Salvaged

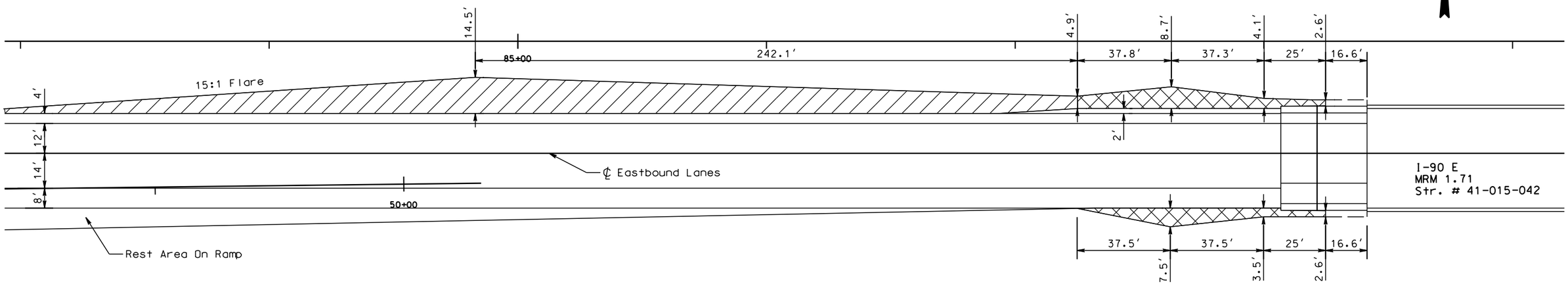

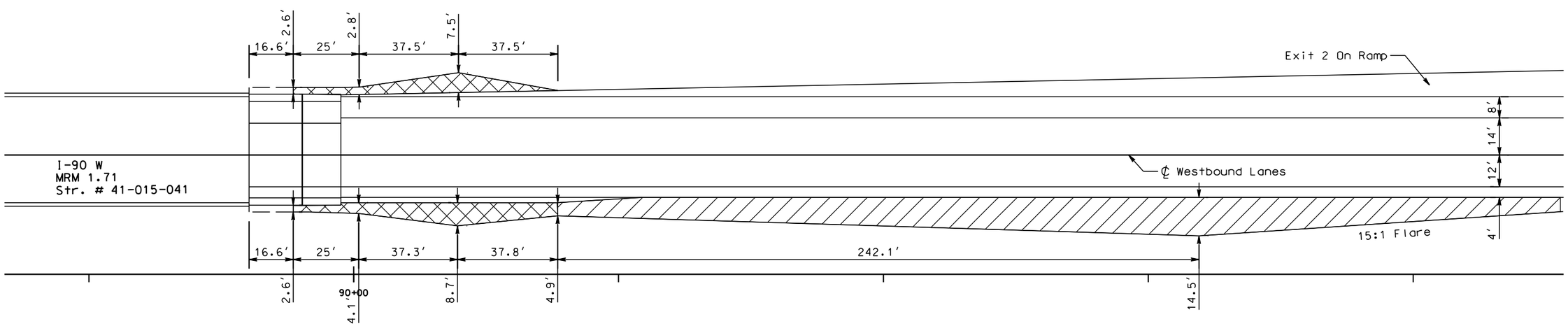

PLOT SCALE - 1:40

PLOT NAME - 37

FILE - ...\GUARDRAIL SURFACING2.DGN

PLOTTED FROM - TRPR15123

ADDITIONAL SURFACING FOR GUARDRAIL

STATE OF SOUTH DAKOTA	PROJECT	SHEET	TOTAL SHEETS
	IM 0901(186)0	F49	F71

Plotting Date: 07/31/2015

Scale 1 Inch = 40 Feet
Sheet 2 of 4 Sheets

2" Class Q4 Hot Mixed Asphalt Concrete and Base Course, Salvaged, Salvaged

Base Course, Salvaged, Salvaged

(Str. # 41-020-041 & Str. # 41-020-042)
I-90, MRM 2.25

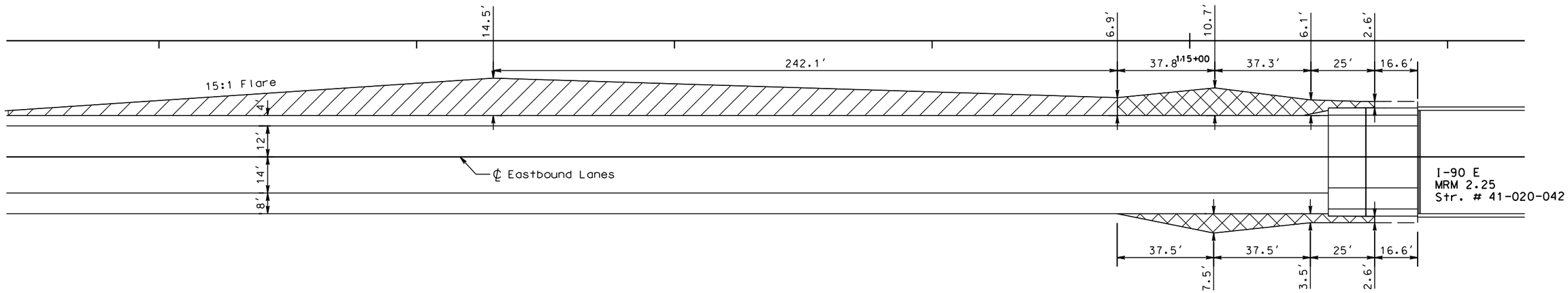

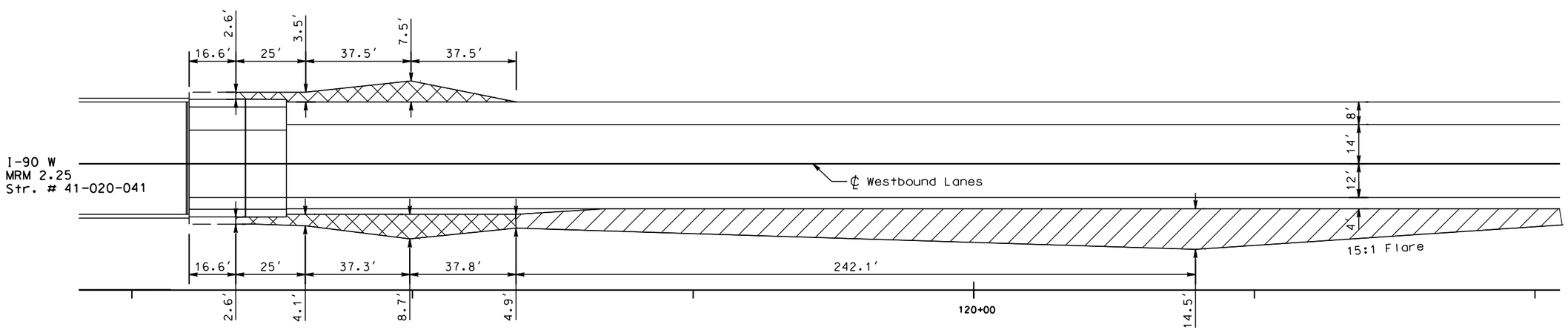

PLOT SCALE - 1:40

PLOT NAME - 38

FILE -...\GUARDRAIL SURFACING2.DGN

PLOTTED FROM - TRPR15123

ADDITIONAL SURFACING FOR GUARDRAIL

STATE OF SOUTH DAKOTA	PROJECT	SHEET	TOTAL SHEETS
	IM 0901(186)0	F50	F71

Plotting Date: 07/31/2015

Scale 1 Inch = 40 Feet
Sheet 3 of 4 Sheets

(Str. # 41-061-056 & Str. # 41-061-057)
I-90, MRM 7.02

2" Class Q4 Hot Mixed Asphalt Concrete and Base Course, Salvaged, Salvaged

Base Course, Salvaged, Salvaged

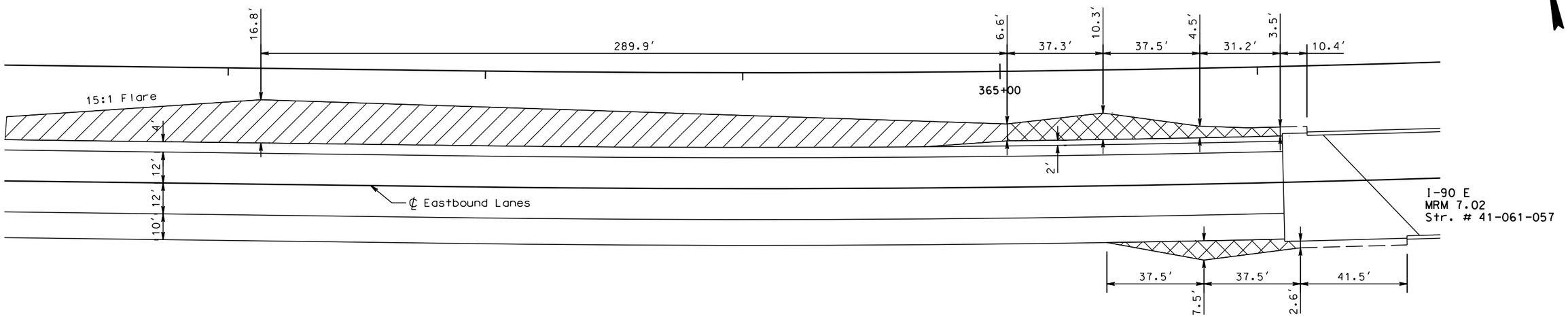

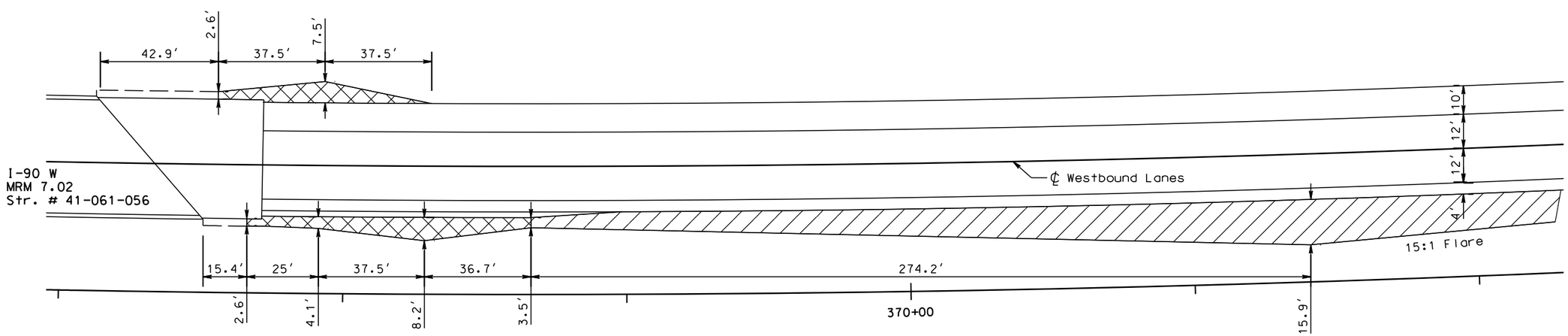

PLOT SCALE - 1:40

PLOT NAME - 39

FILE - ...\GUARDRAIL SURFACING2.DGN

PLOTTED FROM - TRPR15123

ADDITIONAL SURFACING FOR GUARDRAIL

STATE OF SOUTH DAKOTA	PROJECT	SHEET	TOTAL SHEETS
	IM 0901(186)0	F51	F71

Plotting Date: 07/31/2015

Scale 1 Inch = 40 Feet
Sheet 4 of 4 Sheets

(Str. # 41-080-057 & Str. # 41-080-058)
I-90, MRM 8.96

2" Class Q4 Hot Mixed Asphalt Concrete and Base Course, Salvaged, Salvaged

Base Course, Salvaged, Salvaged

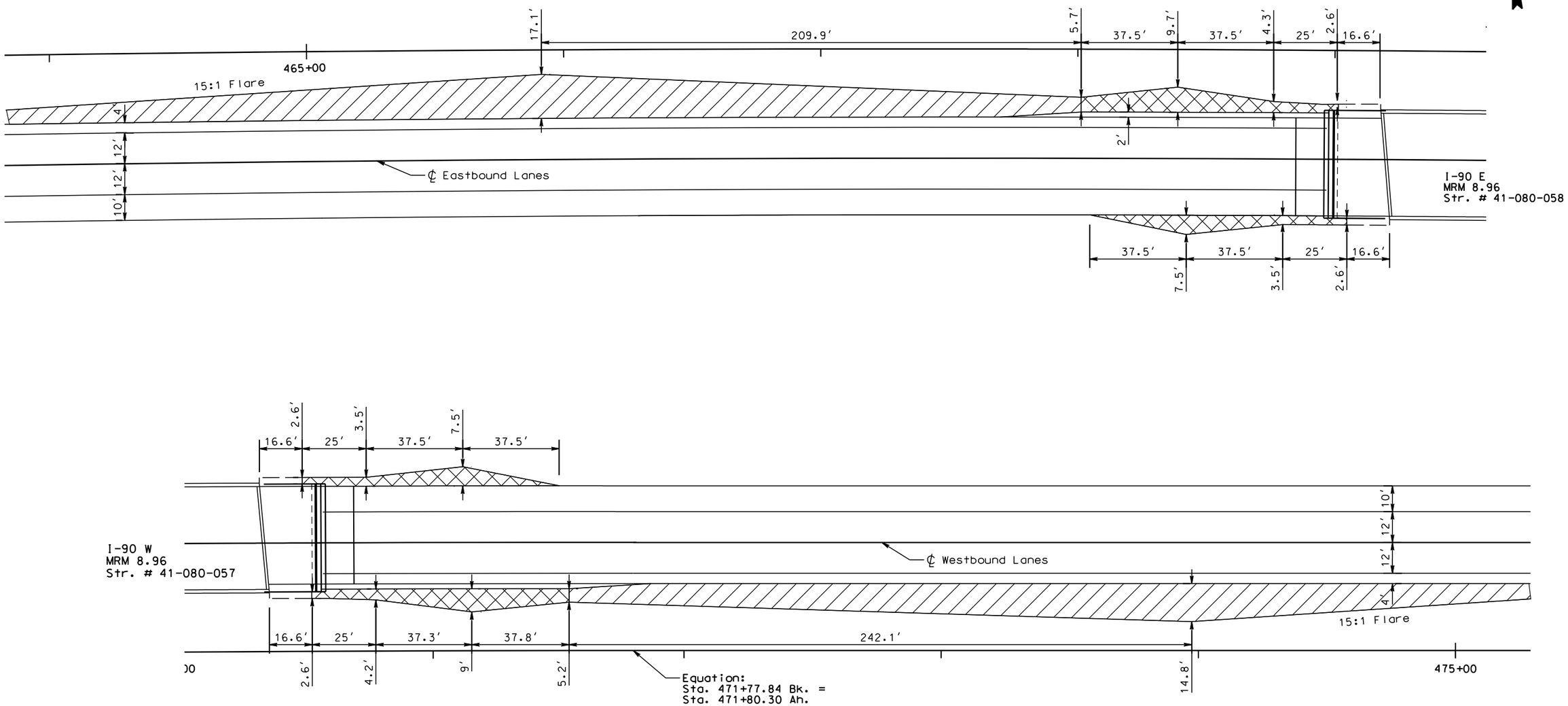

PLOT SCALE - 1:40

PLOT NAME - 40

FILE - ...\GUARDRAIL SURFACING2.DGN

PLOTTED FROM - TRPR15123

SAFETY EDGE FOR ASPHALT PAVEMENTS

SAFETY EDGE CONFIGURATION FOR ASPHALT PAVEMENTS

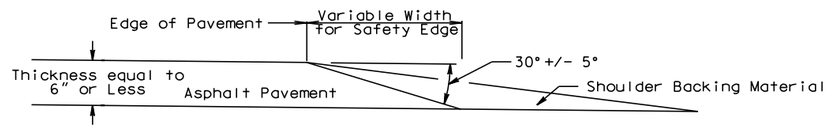

Detail 1: Safety Edge Dimension For HMA Pavements (Thickness 6" or Less)

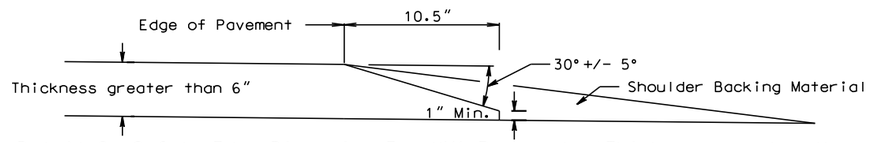

Detail 2: Safety Edge Dimension For HMA Pavements (Thickness greater than 6")

GUIDE SPECIFICATION FOR SAFETY EDGE CONSTRUCTION WITH HOT MIX ASPHALT PAVEMENTS

When specified in the plans an approved longitudinal paver wedge system shall be included to create a sloped safety edge along the outside edge of the asphalt concrete pavement. The wedge system shall be attached to the paver screed and shall compact the hot mixed asphalt pavement (HMA) to a density at least as dense as the compaction imparted to the rest of the HMA by the paving screed.

The system shall provide a sloped Safety Edge equal to 30° plus or minus 5° measured from the extended pavement surface cross slope. The safety edge must be constructed as an integral operation in the paving process and in accordance with the attached Detail.

The use of a single plate strike-off method to construct the safety edge will not be allowed.

The Engineer may allow the Contractor to use handwork for short sections or to saw cut the sloped safety edge after paving operations are complete in areas such as driveways, intersections, and interchanges.

The Contractor shall submit the proposed system for approval by the Engineer at the Preconstruction Meeting. The Engineer may require proof that the system has been used on previous projects with acceptable results or may require a test section to be constructed prior to the beginning of work to demonstrate that it can create an acceptable safety wedge and compaction. Paving shall not begin until the system is approved in writing by the Engineer. The safety edge shall be constructed on each lift of HMA specified in the plans.

The safety edge device shall be attached to the paving machine as recommended by the supplier. The device shall use a spring loaded shoe that constrains the asphalt head, thus increasing the density of the extruded profile. The shoe shall be capable of applying variable pressure to ensure some compaction of the edge during the paving operation. Currently there is a least four manufactures producing equipment that can create a Safety Edge (see list below). The Engineer may permit an approved equal.

Transtech Systems, Inc.
1594 State Street
Schenectady, NY 12304
Phone: 1-800-724-6306 or 1-518-370-5558
www.transtechsys.com

Carlson Paving Products
18425 50th Ave. E
Tacoma WA 98446
Phone: 1-253-278-9426
http://www.carlsonpavingproducts.com

Advant-Edge Paving Equipment LLC
1197 Hillside Avenue, Suite B47
Niskayuria, NY 12309
Phone: 1-518-280-6090
www.advantagepaving.com

Troxler Electronic Laboratories, Inc.
3008 E. Cornwallis Rd. • PO Box 12057
Research Triangle Park, NC 27709
Phone: 1-877-876-9537
http://www.troxlerlabs.com/products/paving.php

Separate measurement and payment will not be made; all work associated with furnishing and constructing the safety edge shall be incidental to the Asphalt Concrete Placement Bid Item.

PLOT SCALE - 1:1
PLOTTED FROM - TRPR15123
PLOT NAME - 41
FILE - ...\SAFETY EDGE.DGN

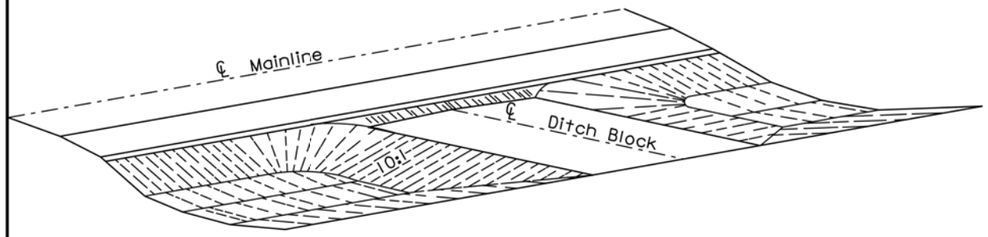

PERSPECTIVE OF DITCH BLOCK

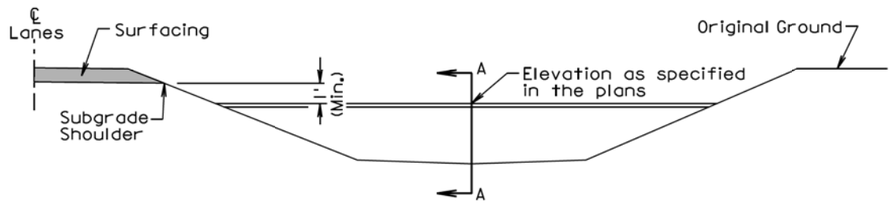

ELEVATION VIEW

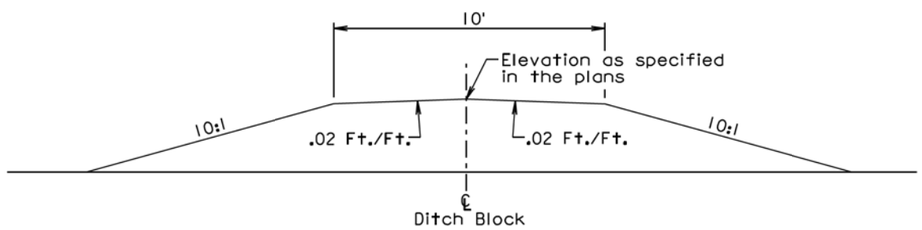

SECTION A-A

GENERAL NOTES:

The ditch section shown above in the perspective and elevation view is only for illustrative purposes.

The inslopes of the ditch block shall be 10:1 or as specified in the plans.

The transition area between the mainline inslope and the ditch block inslope shall be rounded to eliminate an abrupt transition.

February 14, 2011

Published Date: 2nd Qtr. 2015	SDDOT	DITCH BLOCK	PLATE NUMBER 120.02
			Sheet 1 of 1

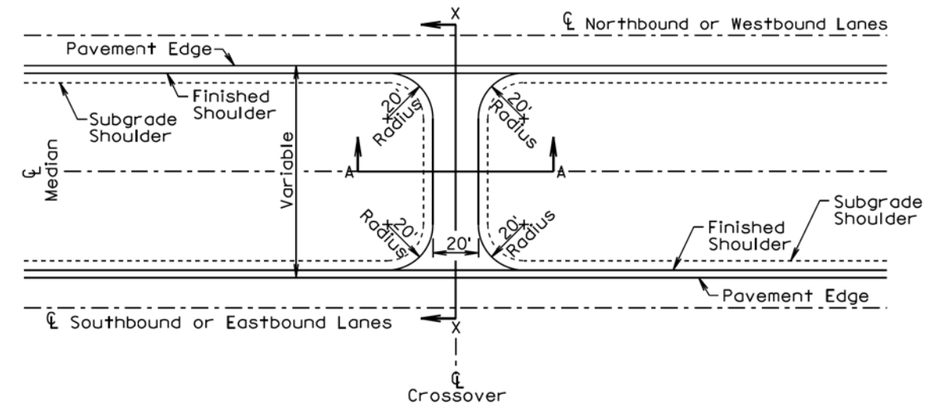

PLAN VIEW

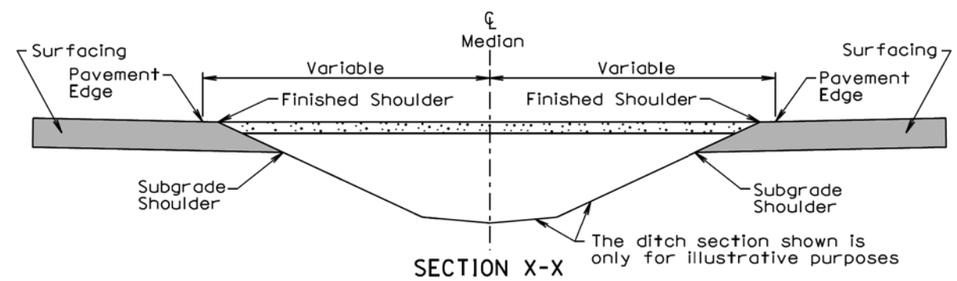

SECTION X-X

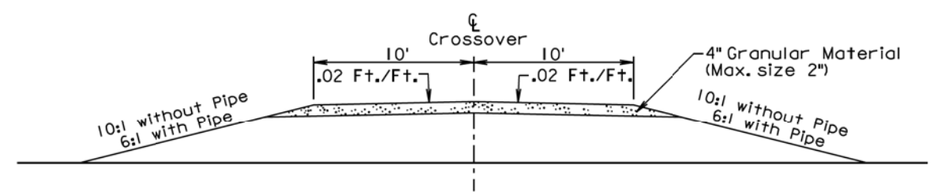

SECTION A-A

GENERAL NOTES:

The inslopes of the maintenance crossovers shall be 6:1 when there is a pipe, 10:1 without pipe, or as specified in the plans.

The quantities of materials necessary for construction of the maintenance crossovers are as provided in the plans and shall be paid for at their respective contract unit prices for the various materials used.

February 14, 2011

Published Date: 2nd Qtr. 2015	SDDOT	STANDARD MAINTENANCE CROSSOVER FOR INTERSTATE HIGHWAYS	PLATE NUMBER 120.04
			Sheet 1 of 1

PLOT SCALE - 1:200
PLOT NAME - 42
FILE - ...\120_02 120_04.DGN
PLOTTED FROM - TRPR15123

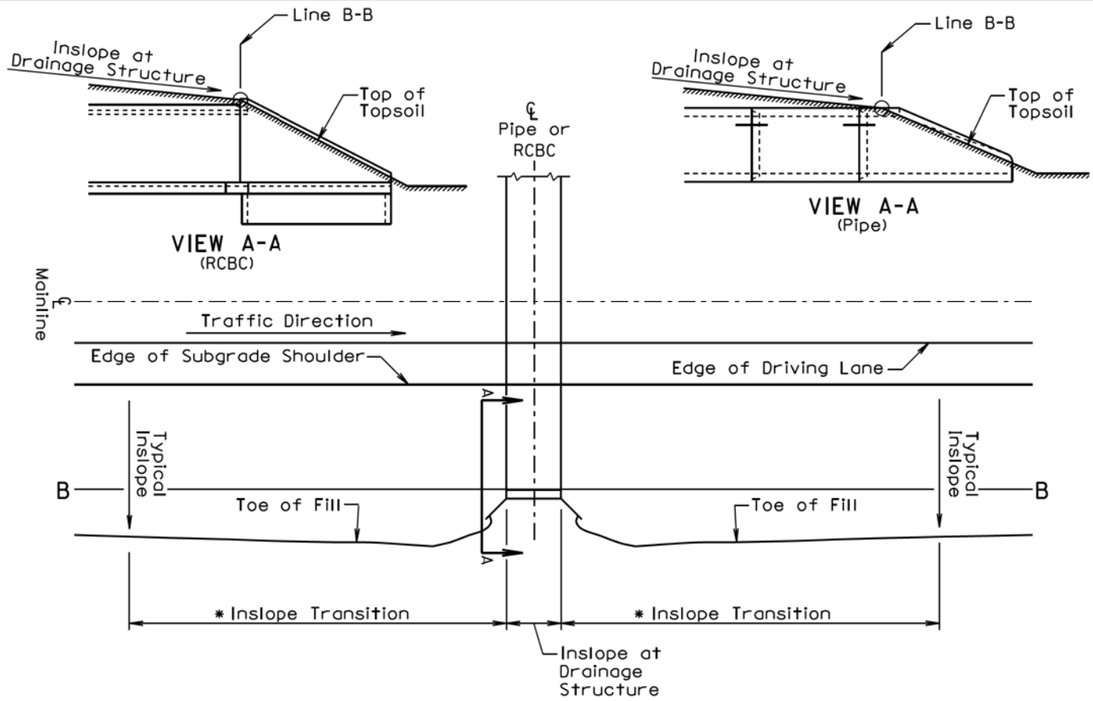

TYPE 1 INSLOPE TRANSITION

GENERAL NOTES:

This Type 1 Inslope Transition is used when the specified inslope at the drainage structure is flatter than the typical inslope and the inslope at the drainage structure is between a 4:1 slope and 6:1 slope.

Line B-B represents the clear zone line, the location where soil intercepts the parapet on an RCBC, the location where the soil intercepts the top of the pipe adjacent to the opening of the pipe end section, or may represent a change in slope.

* Transition from the typical inslope to the inslope at the drainage structure. Within the clear zone (area from edge of subgrade shoulder to line B-B) use 100' length for each 1:1 slope change. Example: transition from a 4:1 to a 6:1 would require a 200' length transition. The typical inslope outside of the clear zone shall be transitioned gradually to the slope necessary adjacent to the RCBC wing wall or pipe culvert end section within the transition length necessary for the transition within the clear zone.

Published Date: 2nd Qtr. 2015

SDDOT

INSLOPE TRANSITIONS AT PIPE CULVERTS OR REINFORCED CONCRETE BOX CULVERTS

PLATE NUMBER 120.05

Sheet 1 of 2

February 14, 2011

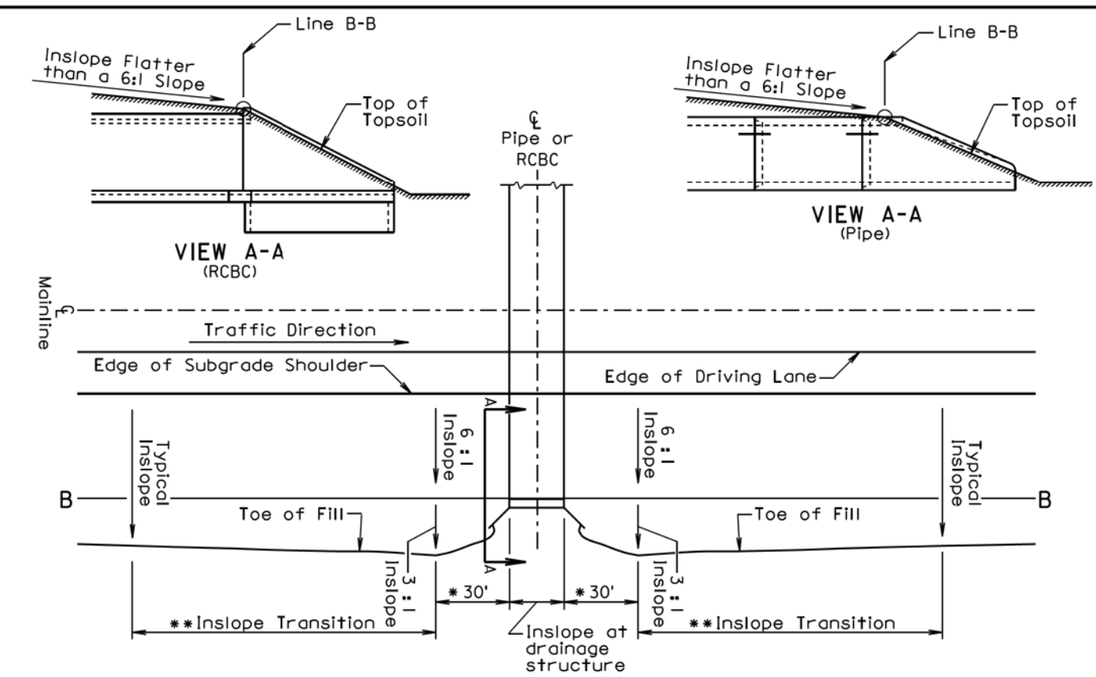

TYPE 2 INSLOPE TRANSITION

GENERAL NOTES:

This Type 2 Inslope Transition is used when the specified inslope at the pipe or RCBC is flatter than a 6:1 slope.

Line B-B represents the clear zone line, the location where soil intercepts the parapet on an RCBC, the location where the soil intercepts the top of the pipe adjacent to the opening of the pipe end section, or may represent a change in slope.

* Transition from inslope at drainage structure to a 6 :1 inslope and 3:1 inslope.

** Transition from typical inslope to the inslopes adjacent to the drainage structure. Within the clear zone (area from edge of subgrade shoulder to line B-B) use 100' length for each 1:1 slope change. Example: transition from a 4:1 to a 6:1 would require a 200' length transition. The typical inslope outside of the clear zone shall be transitioned to a 3:1 inslope within the transition length necessary for the transition within the clear zone.

Published Date: 2nd Qtr. 2015

SDDOT

INSLOPE TRANSITIONS AT PIPE CULVERTS OR REINFORCED CONCRETE BOX CULVERTS

PLATE NUMBER 120.05

Sheet 2 of 2

February 14, 2011

Plotting Date: 07/31/2015

STATE OF SOUTH DAKOTA	PROJECT	SHEET	TOTAL SHEETS
	IM 0901(186)0	F54	F71

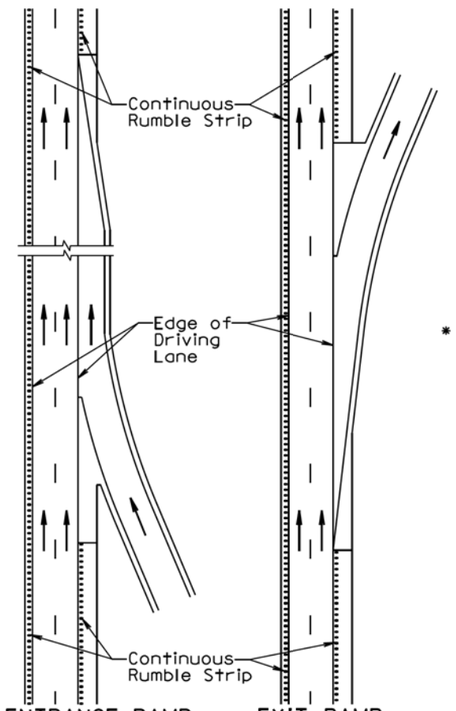

PLAN VIEW

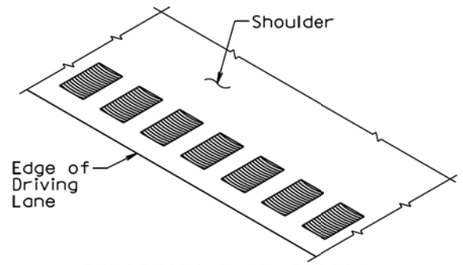

PERSPECTIVE OF TYPICAL RUMBLE STRIP IN ASPHALT CONCRETE

* When PCC pavement width from centerline to edge of pavement is 12', the rumble strip may be placed a maximum of 2' from the edge of the driving lane.

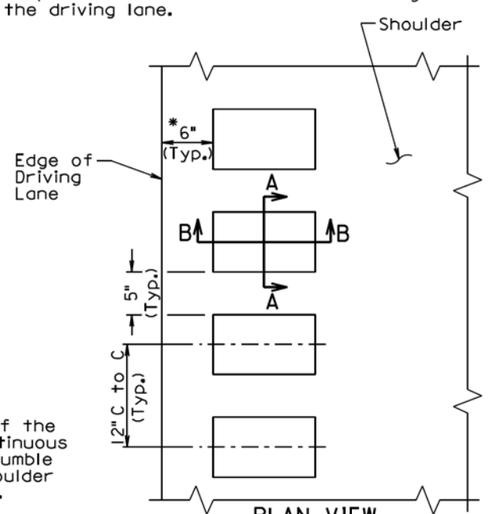

PLAN VIEW
TYPICAL RUMBLE STRIP IN ASPHALT CONCRETE

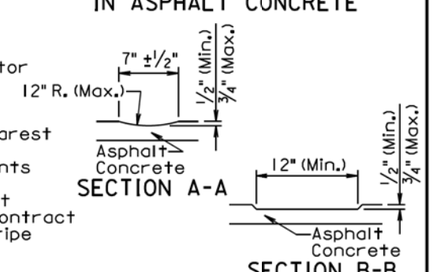

SECTION A-A

SECTION B-B

GENERAL NOTES:

A rumble strip shall be constructed on all of the asphalt concrete shoulders by grinding continuous indentations in the asphalt concrete. The rumble strip shall receive a flush seal with the shoulder flush sealing or asphalt surface treatment.

A rumble strip should be placed through median crossovers as directed by the Engineer.

A rumble strip shall not be constructed through entrance ramps, exit ramps, and gore areas.

Prior to constructing the rumble strip the Contractor shall submit to the Engineer, for approval, the proposed method of constructing the rumble strip.

Measurement of the rumble strip shall be to the nearest 0.1 of a mile for each shoulder. Measurement and payment of the rumble strip shall include the segments adjacent to median crossovers, entrance ramps, exit ramps, and gore areas without rumble strips. Payment for constructing the rumble strip shall be at the contract unit price per mile for "Grind 12" Rumble Strip or Stripe in Asphalt Concrete".

June 26, 2011

Published Date: 2nd Qtr. 2015	SDDOT	12" RUMBLE STRIP IN ASPHALT CONCRETE ON INTERSTATE SHOULDERS	PLATE NUMBER 320.32
			Sheet 1 of 1

TOLERANCES IN DIMENSIONS

Diameter: ±1.5% for 24" Dia. or less and ±1% or 3/8" whichever is more for 27" Dia. or greater.
Diameters at Joints: ±3/16" for 30" Dia. or less and ±1/4" for 36" or greater.
Length of joint (j): ±1/4".
Wall thickness (T): not less than design T by more than 5% or 3/16", whichever is greater.
Laying length: shall not underrun by more than 1/2".

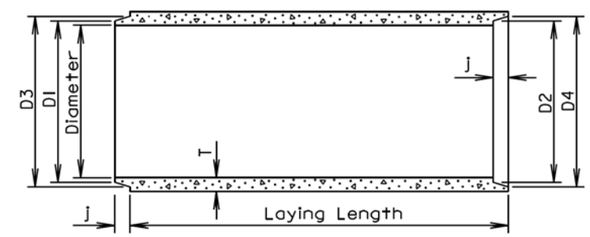

LONGITUDINAL SECTION

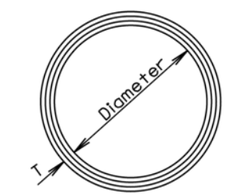

END VIEW

GENERAL NOTES:

Construction of R.C.P. shall conform to the requirements of Section 990 of the Standard Specifications for Roads and Bridges.

Not more than 2 four foot sections shall be permitted near the ends of any culvert. Four foot lengths shall be used only to secure the required length of culvert.

Diam. (in.)	Approx. Wt. /Ft. (lb.)	T (in.)	J (in.)	D1 (in.)	D2 (in.)	D3 (in.)	D4 (in.)
12	92	2	1 3/4	13 1/4	13 5/8	13 7/8	14 1/4
15	127	2 1/4	2	16 1/2	16 7/8	17 1/4	17 5/8
18	168	2 1/2	2 1/4	19 5/8	20	20 3/8	20 3/4
21	214	2 3/4	2 1/2	22 7/8	23 1/4	23 3/4	24 1/8
24	265	3	2 3/4	26	26 3/8	27	27 3/8
27	322	3 1/4	3	29 1/4	29 5/8	30 1/4	30 5/8
30	384	3 1/2	3 1/4	32 3/8	32 3/4	33 1/2	33 7/8
36	524	4	3 3/4	38 3/4	39 1/4	40	40 1/2
42	685	4 1/2	4	45 1/8	45 5/8	46 1/2	47
48	867	5	4 1/2	51 1/2	52	53	53 1/2
54	1070	5 1/2	4 1/2	57 7/8	58 3/8	59 3/8	59 7/8
60	1296	6	5	64 1/4	64 3/4	66	66 1/2
66	1542	6 1/2	5 1/2	70 5/8	71 1/8	72 1/2	73
72	1810	7	6	77	77 1/2	79	79 1/2
78	2098	7 1/2	6 1/2	83 3/8	83 7/8	85 5/8	86 1/8
84	2410	8	7	89 3/4	90 1/4	92 1/8	92 5/8
90	2740	8 1/2	7	95 3/4	96 1/4	98 1/8	98 5/8
96	2950	9	7	102 1/8	102 5/8	104 1/2	105
102	3075	9 1/2	7 1/2	109	109 1/2	111 1/2	112
108	3870	10	7 1/2	115 1/2	116	118	118 1/2

March 31, 2000

Published Date: 2nd Qtr. 2015	SDDOT	REINFORCED CONCRETE PIPE	PLATE NUMBER 450.01
			Sheet 1 of 1

PLOT SCALE - 1:200
PLOT NAME - 44
FILE - ...\320_32 450_01.DGN
-PLOTTED FROM - TRPR15123

Wall "t" (in.)	Rod Dia. (in.)	Pipe Sleeve Dia. (nominal)
≤ 3¼	⅝	¾
3½-6½	¾	1
≥ 7	1	1¼

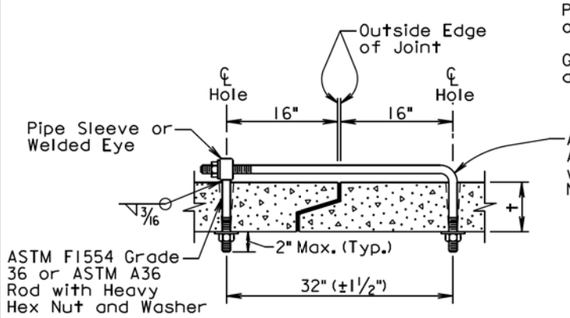

ADJUSTABLE EYE BOLT TIE

GENERAL NOTES:

Tie bolts shall conform to ASTM F1554 Grade 36 or ASTM A36. Nuts shall be heavy hex conforming to ASTM A563. Washers shall conform to ASTM F436.

Pipe Sleeve shall conform to ASTM A500 or A53, Grade B.

Galvanize adjustible eye bolt tie assembly in accordance with ASTM A153.

Pipe Dia. (in.)	"L" (in.)	Bolt Dia. (in.)
≤ 48	4	¾
> 48	6	1

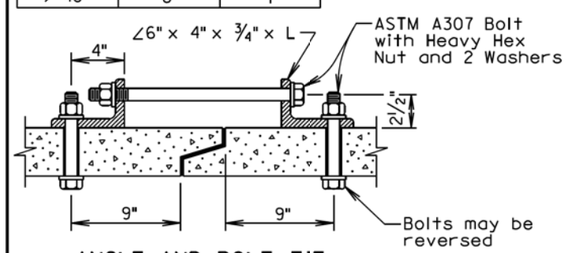

ANGLE AND BOLT TIE

GENERAL NOTES:

Angles shall conform to ASTM A36.

Bolts shall conform to ASTM A307. Nuts shall be heavy hex conforming to ASTM A563. Washers shall conform to ASTM F436.

Galvanize angles, bolts, nuts, and washers in accordance with ASTM A153.

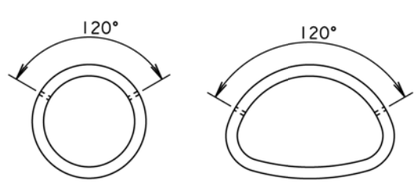

END VIEW "CIRCULAR"

END VIEW "ARCH"

GENERAL NOTES:

In lieu of the tie bolts detailed above other types of tie bolt connections may be installed as approved by the Office of Bridge Design.

All pipe sections of R.C.P. and R.C.P. Arch shall be tied with tie bolts except for pipe located between drop inlets, manholes, and junction boxes. All pipe sections of pipes that only enter or exit drop inlets, manhole, and junction boxes shall be tied with tie bolts.

There will be no separate measurement or payment for the tie bolts. The cost for furnishing and installing the tie bolts shall be incidental to the contract unit price per foot for the corresponding bid item for R.C.P. or R.C.P. Arch.

February 28, 2013

Published Date: 2nd Qtr. 2015	SDDOT	TIE BOLTS FOR R.C.P. AND R.C.P. ARCH	PLATE NUMBER 450.18
			Sheet 1 of 1

GENERAL NOTES:

Either flanged channel steel posts or S3x5.7 steel I beam posts shall be used, but post type shall be consistent thoughout the project. The S3x5.7 Steel I Beam post shall be used for the end posts.

All costs associated with furnishing and constructing the 3 cable guardrail anchor assembly including the concrete anchor, cable anchor bracket, compensating device, steel turnbuckle cable assembly, and necessary hardware shall be incidental to the contract unit price per each for "3 Cable Guardrail Anchor Assembly".

All costs associated with furnishing and constructing the 3 cable guardrail including posts, cable, cable splices, and hardware shall be incidental to the contract unit price per foot for "3 Cable Guardrail".

The following table and criteria shall apply to the arrangement of the Spring Cable End Assemblies (Compensation Devices) and Turnbuckle Cable End Assemblies:

LENGTH OF CABLE RUN	CRITERIA FOR ARRANGEMENT OF THE SPRING CABLE END ASSEMBLIES (COMPENSATION DEVICES) AND TURNBUCKLE CABLE END ASSEMBLIES
Less than 500'	Use turnbuckle on the approaching traffic end and compensating device on the other end of each individual cable, except in the W Beam to 3 Cable Transition where all compensating devices shall be provided at the bridge ends.
Greater than 500' to 1000'	Use compensating device on each end of each individual cable.
Greater than 1000'	Start new run by interlacing at last parallel post as shown on sheet 2 of 6.

All Compensating Devices shall be attached to the cable anchor bracket when one end of the run is attached to a bridge.

Compensating Devices must have a spring rate of 450 ± 50 pounds per inch and shall have a total available travel of 6 inches minimum.

The cable shall be retensioned after the initial 2 week pretension period in accordance with the following table:

CABLE TENSIONING SPECIFICATIONS														
Temperature Range (Degree F)	-20 to -11	-10 to -1	0 to 9	10 to 19	20 to 29	30 to 39	40 to 49	50 to 59	60 to 69	70 to 79	80 to 89	90 to 99	100 to 109	110 to 120
Spring Compression (Inch)	4¼	4	3¾	3½	3¼	3	2¾	2½	2¼	2	1¾	1½	1¼	1

POST SPACING FOR HORIZONTAL CURVES	
Roadway ℄ Curvature	Maximum Post Spacing (Ft)
1° and Less	16'
Greater than 1° to 8°	12'
Greater than 8° to 13°	8'
Greater than 13°	NOT ALLOWED

December 16, 2014

Published Date: 2nd Qtr. 2015	SDDOT	3 CABLE GUARDRAIL (LOW TENSION)	PLATE NUMBER 629.01
			Sheet 1 of 6

PLOT SCALE - 1:200
PLOT NAME - 45
FILE ...\450_18 629_01_1.DGN
-PLOTTED FROM - TRPR15123

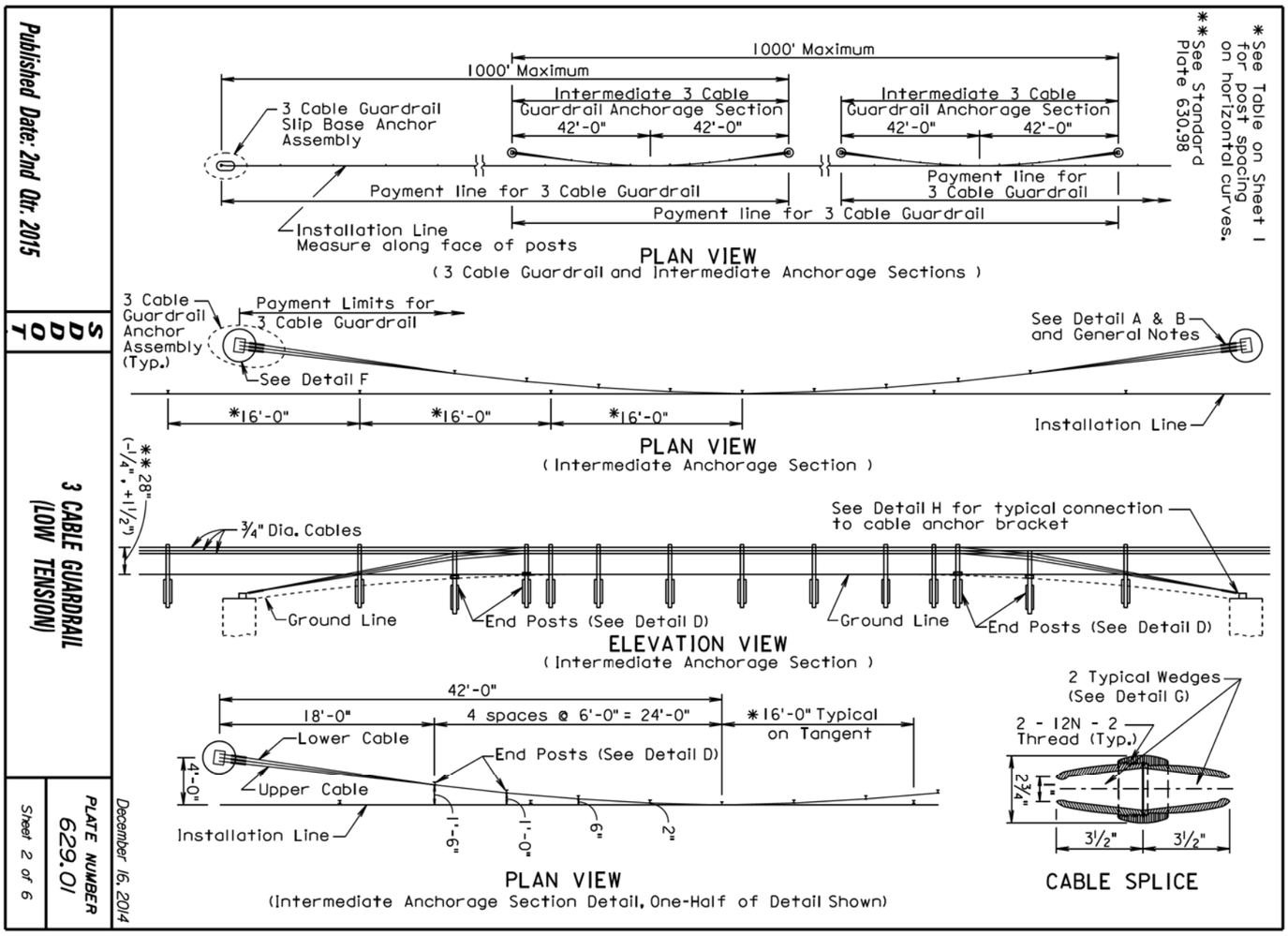

Published Date: 2nd Qtr. 2015

SDDOT

3 CABLE GUARDRAIL (LOW TENSION)

PLATE NUMBER 629.01

Sheet 2 of 6

December 16, 2014

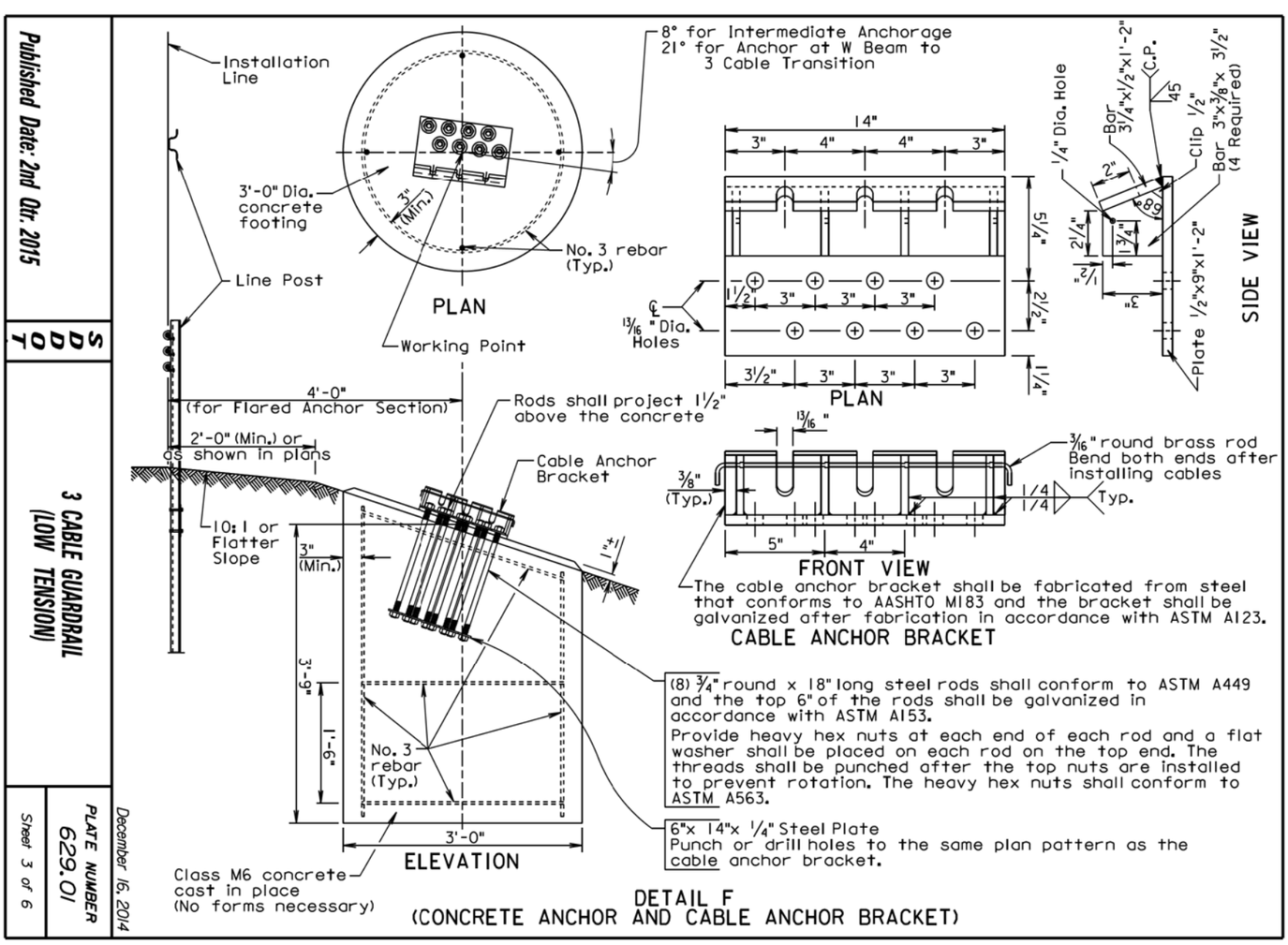

Published Date: 2nd Qtr. 2015

SDDOT

3 CABLE GUARDRAIL (LOW TENSION)

PLATE NUMBER 629.01

Sheet 3 of 6

December 16, 2014

STATE OF SOUTH DAKOTA

PROJECT IM 0901(186)0

SHEET F57

TOTAL SHEETS F71

Plotting Date: 07/31/2015

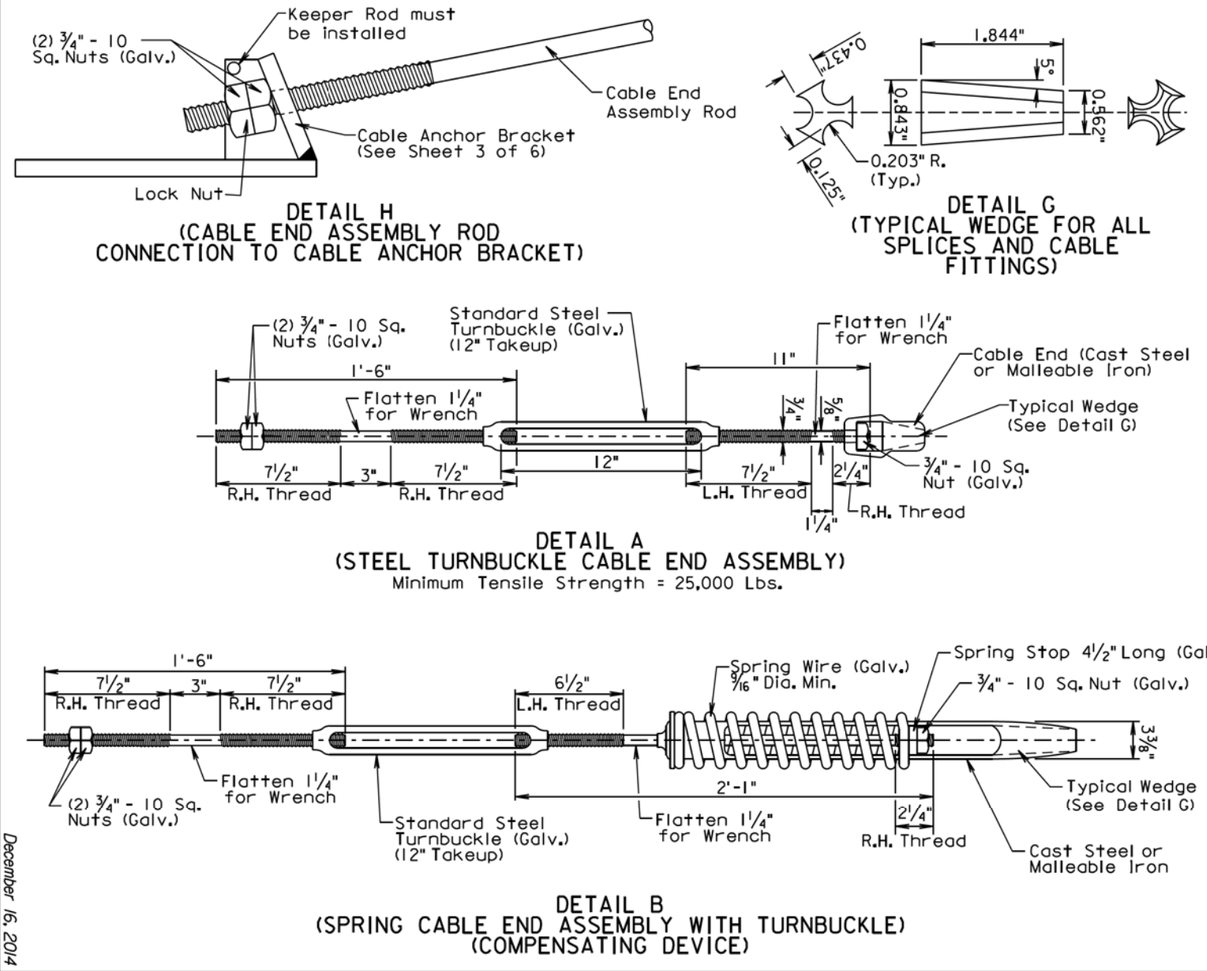

Published Date: 2nd Qtr. 2015

SDDOT

3 CABLE GUARDRAIL (LOW TENSION)

PLATE NUMBER 629.01

Sheet 4 of 6

December 16, 2014

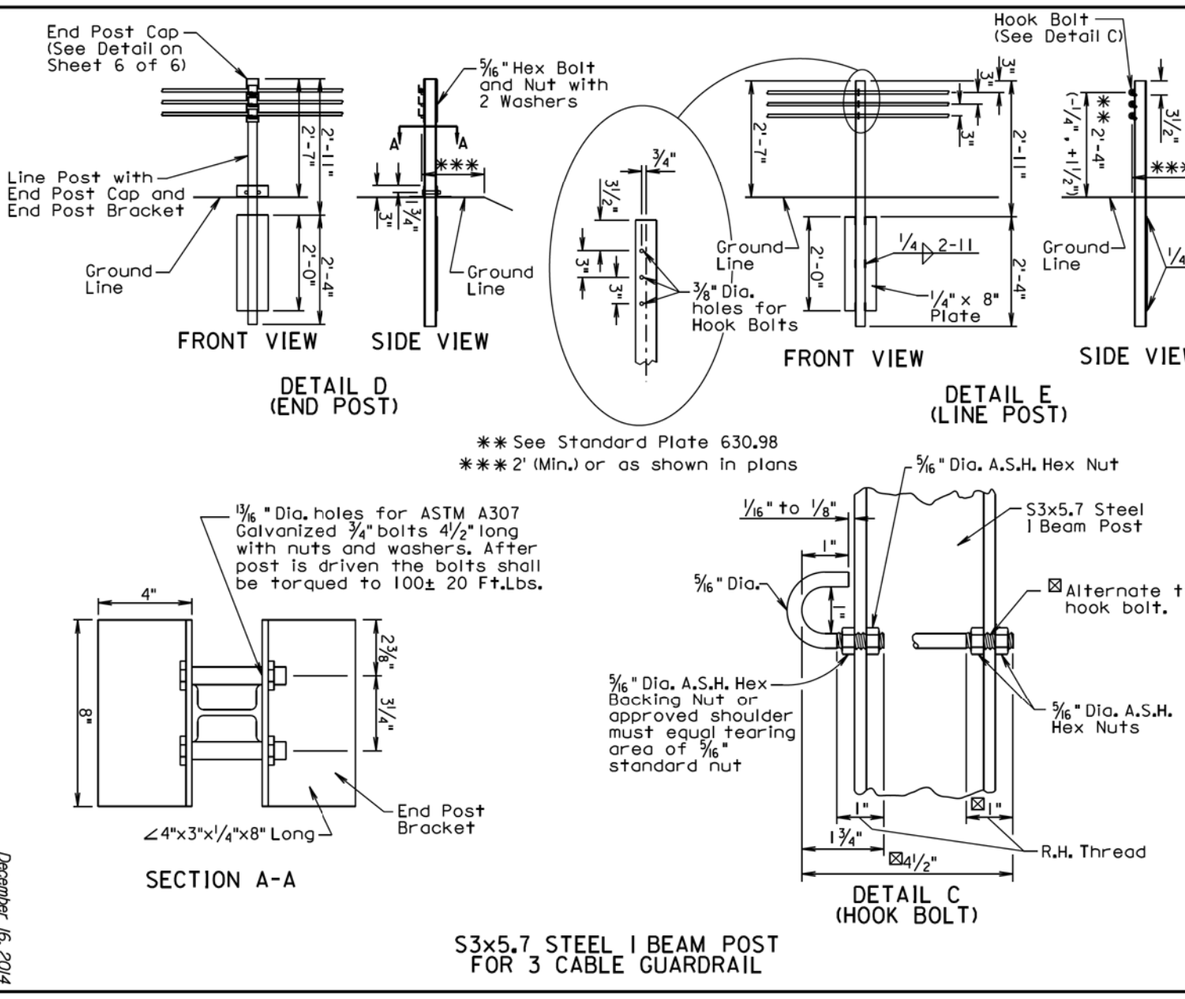

Published Date: 2nd Qtr. 2015

SDDOT

3 CABLE GUARDRAIL (LOW TENSION)

PLATE NUMBER 629.01

Sheet 5 of 6

December 16, 2014

STATE OF SOUTH DAKOTA

PROJECT IM 0901(186)0

Plotting Date: 07/31/2015

SHEET F58

TOTAL SHEETS F71

Published Date: 2nd Qtr. 2015

SDDOT

3 CABLE GUARDRAIL (LOW TENSION)

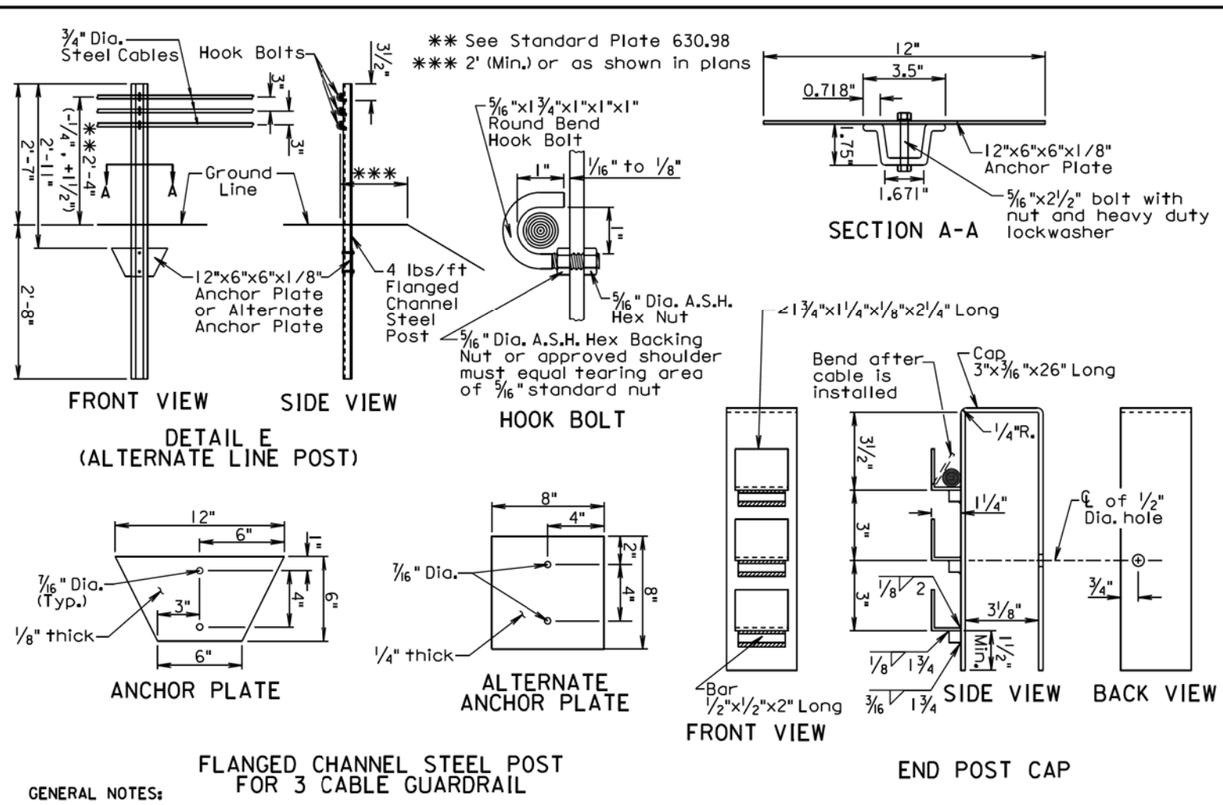

GENERAL NOTES:

Flanged channel steel posts shall be produced from high strength steel in accordance with ASTM A499 Grade 60.
Anchor plate shall be carbon steel sheet.
Alternate anchor plate shall be ASTM A36 steel.
Bolt shall be in conformance with ASTM A354 Grade BD or BC. Nut shall be in conformance with ASTM A563 Grade DH.
Bolt shall be Cadmium plated per ASTM A165-80 Type OS except using clear chromate.
Finish for the post and anchor plate shall be a high quality dark green outdoor acrylic enamel.
Alternate anchor plate may be unfinished.

PLATE NUMBER 629.01

Sheet 6 of 6

December 16, 2014

Published Date: 2nd Qtr. 2015

SDDOT

W BEAM TO 3 CABLE TRANSITION

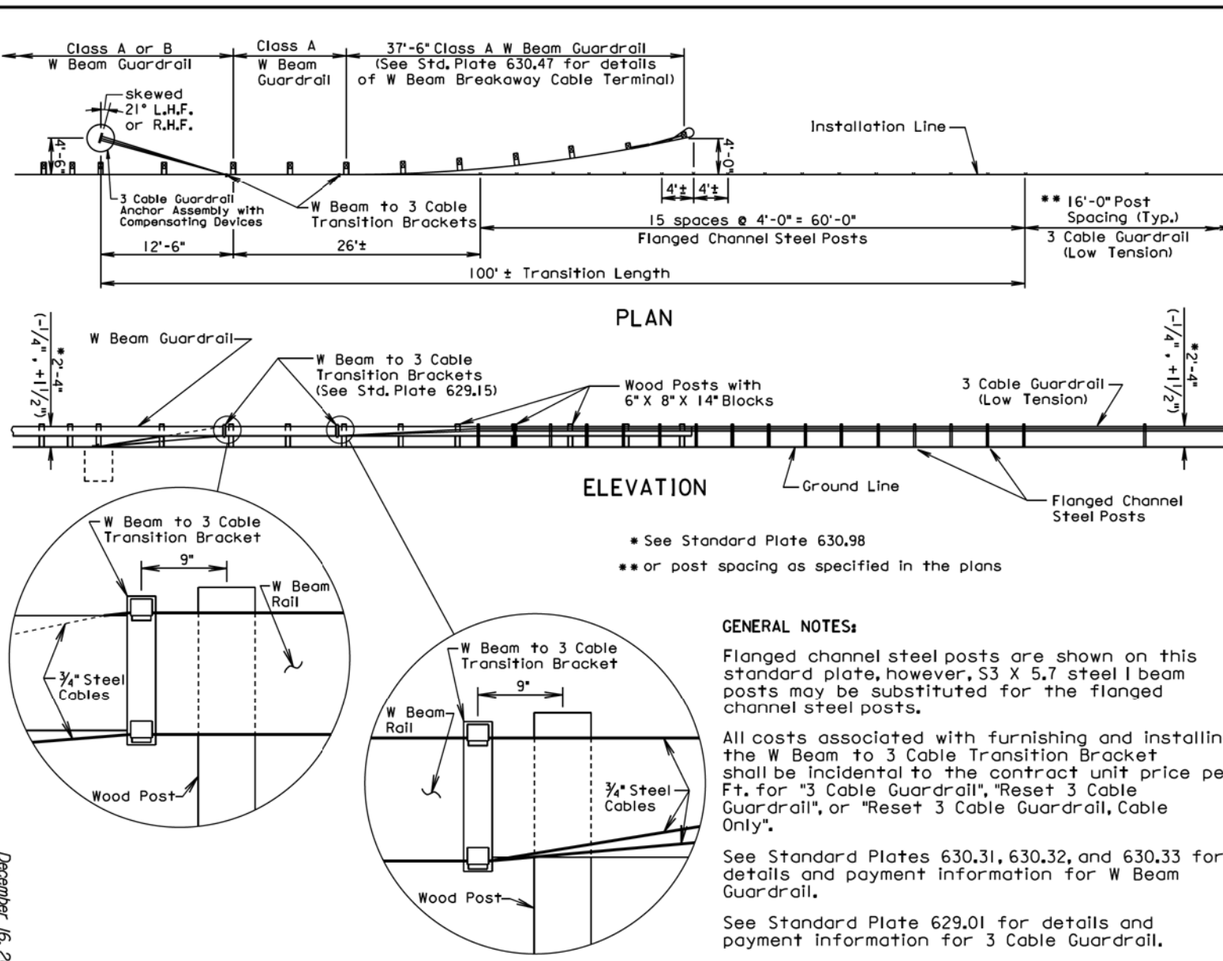

GENERAL NOTES:

Flanged channel steel posts are shown on this standard plate, however, S3 X 5.7 steel I beam posts may be substituted for the flanged channel steel posts.

All costs associated with furnishing and installing the W Beam to 3 Cable Transition Bracket shall be incidental to the contract unit price per Ft. for "3 Cable Guardrail", "Reset 3 Cable Guardrail", or "Reset 3 Cable Guardrail, Cable Only".

See Standard Plates 630.31, 630.32, and 630.33 for details and payment information for W Beam Guardrail.

See Standard Plate 629.01 for details and payment information for 3 Cable Guardrail.

PLATE NUMBER 629.05

Sheet 1 of 1

December 16, 2014

Plotting Date: 07/31/2015

STATE OF SOUTH DAKOTA	PROJECT	SHEET	TOTAL SHEETS
	IM 0901(186)0	F59	F71

Published Date: 2nd Qtr. 2015

SDDOT

3 CABLE GUARDRAIL SLIP BASE ANCHOR ASSEMBLY

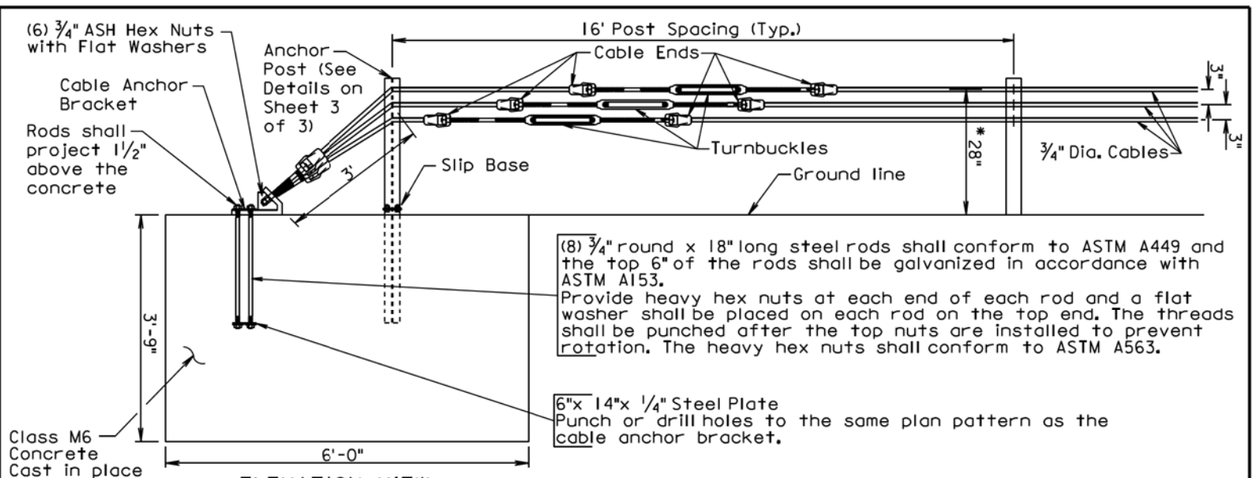

(8) ¾" round x 18" long steel rods shall conform to ASTM A449 and the top 6" of the rods shall be galvanized in accordance with ASTM A153.
Provide heavy hex nuts at each end of each rod and a flat washer shall be placed on each rod on the top end. The threads shall be punched after the top nuts are installed to prevent rotation. The heavy hex nuts shall conform to ASTM A563.

6" x 14" x ¼" Steel Plate
Punch or drill holes to the same plan pattern as the cable anchor bracket.

ELEVATION VIEW
(Anchor Assembly)

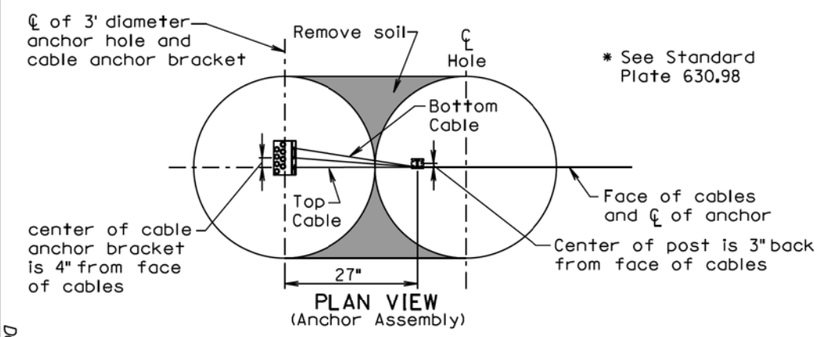

* See Standard Plate 630.98

PLAN VIEW
(Anchor Assembly)

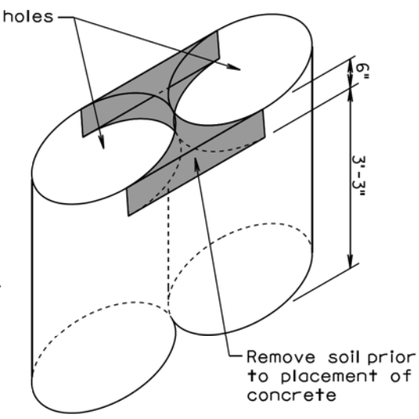

ISOMETRIC VIEW

ANCHOR CONSTRUCTION NOTES:

1. Auger two 3' diameter by 3'-9" deep holes tangent to each other.
2. Clean out the top 6 inches of soil between the holes.
3. Place concrete in holes with anchor bolts and slip base stub post in place.
4. For informational purposes the neat line concrete volume of the anchor is 1.9 cubic yards.

December 16, 2014

PLATE NUMBER 629.10

Sheet 1 of 3

Published Date: 2nd Qtr. 2015

SDDOT

3 CABLE GUARDRAIL SLIP BASE ANCHOR ASSEMBLY

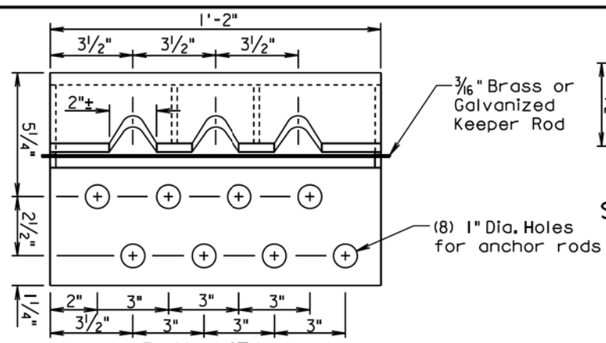

PLAN VIEW

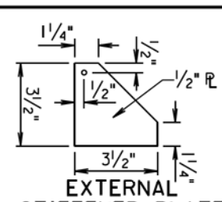

EXTERNAL STIFFENER PLATE

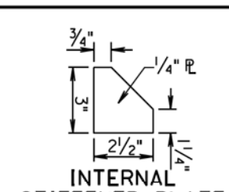

INTERNAL STIFFENER PLATE

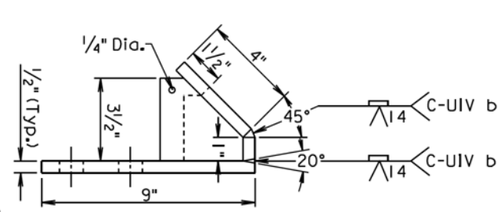

SIDE VIEW

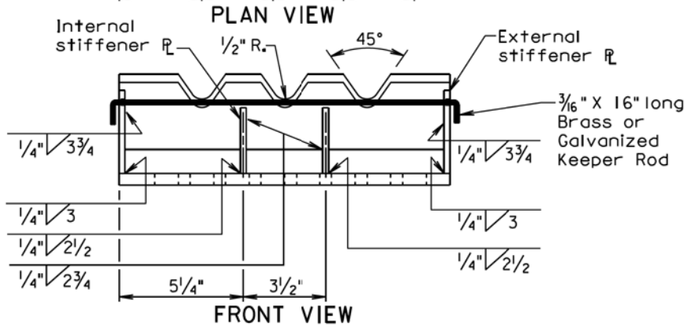

FRONT VIEW

CABLE ANCHOR BRACKET

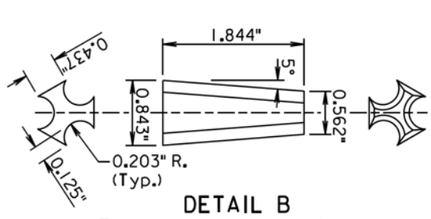

DETAIL B
(Typical Wedge for All Splices and Cable Fittings)

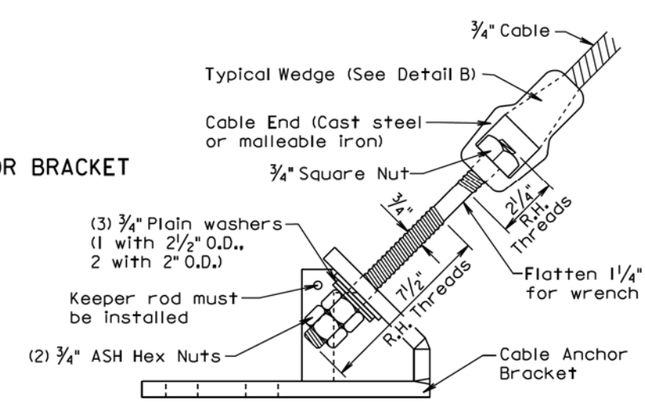

CABLE END ASSEMBLY ROD CONNECTION TO CABLE ANCHOR BRACKET

December 16, 2014

PLATE NUMBER 629.10

Sheet 2 of 3

STATE OF SOUTH DAKOTA

PROJECT IM 0901(186)0

SHEET F60

TOTAL SHEETS F71

Plotting Date: 07/31/2015

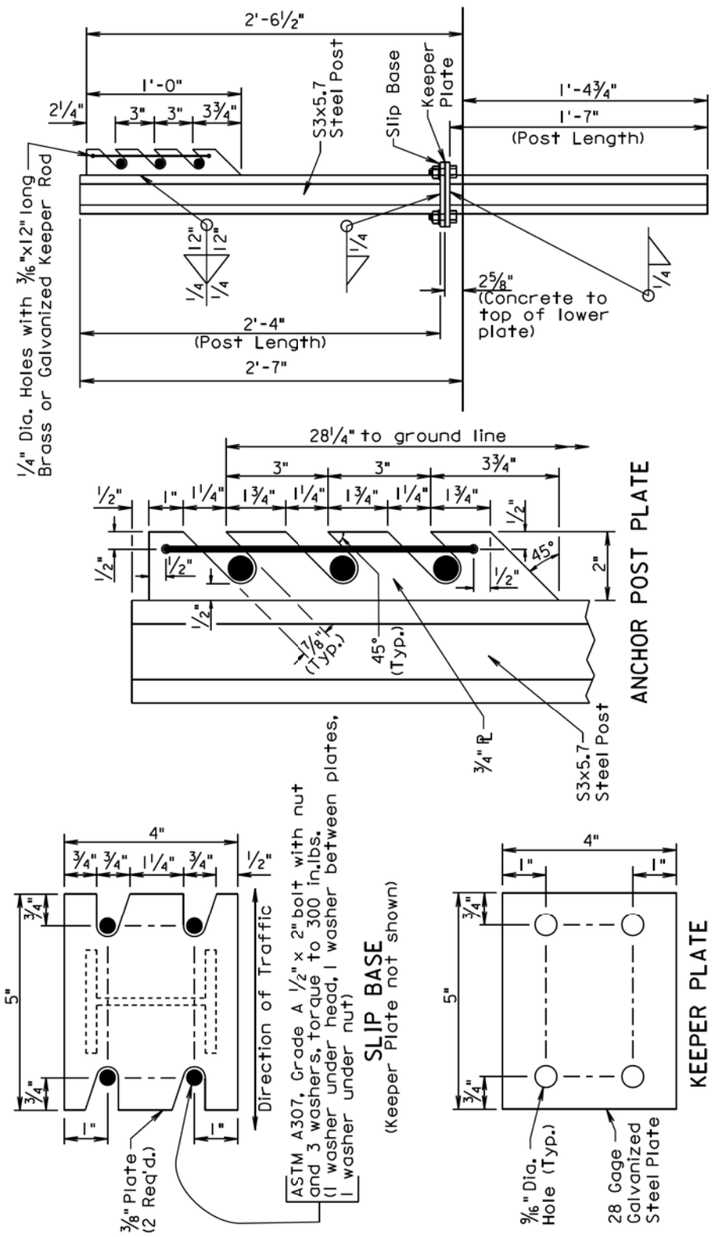

GENERAL NOTES:

Anchor post shall be a S3x5.7 rolled steel section. Post and plates shall conform to ASTM A36 and shall be galvanized in accordance with ASTM A123.

¾" round wire cable shall consist of three strands (7 wires per strand) and have a minimum tensile strength of 25,000 pounds.

Cast steel elements shall conform to AASHTO M103 (ASTM 27-73) grade U-60-30.

All costs associated with furnishing and constructing the 3 cable guardrail slip base anchor assembly including the concrete anchor, cable anchor bracket, anchor bolts, plates, slip base stub post, anchor post, steel turnbuckles, cable ends, U-bolt cable clips, and necessary hardware shall be incidental to the contract unit price per each for "3 Cable Guardrail Slip Base Anchor Assembly".

December 16, 2014

Published Date: 2nd Qtr. 2015	SDDOT	3 CABLE GUARDRAIL SLIP BASE ANCHOR ASSEMBLY	PLATE NUMBER 629.10
			Sheet 3 of 3

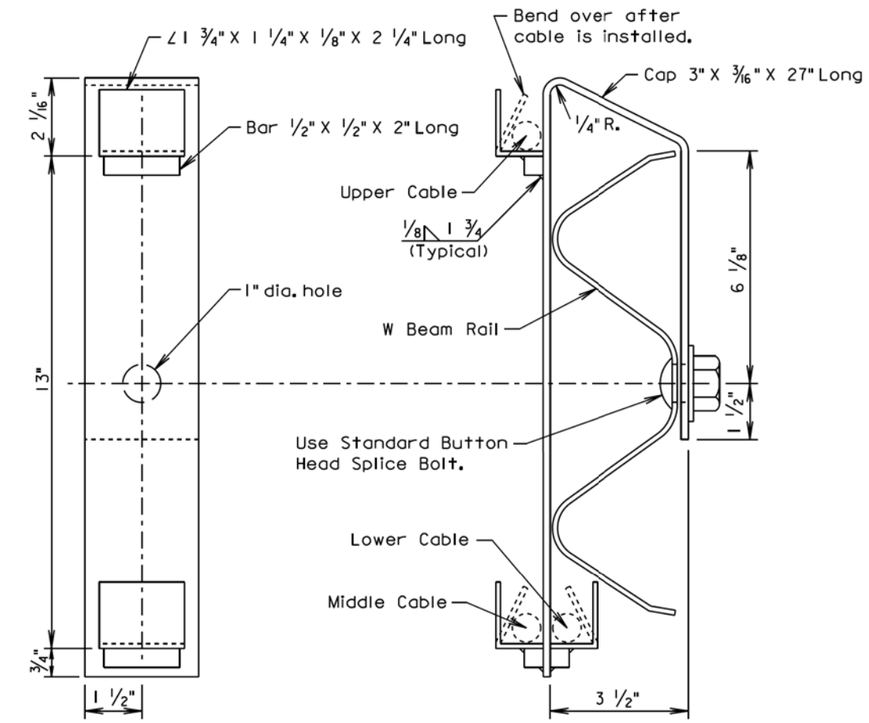

ELEVATION
(TRANSITION BRACKET)

END VIEW
(W BEAM RAIL AND TRANSITION BRACKET)

GENERAL NOTES:

Steel used in the fabrication of the bracket shall conform to ASTM A36 and the bracket shall be galvanized after fabrication in accordance with ASTM A123.

March 31, 2000

Published Date: 2nd Qtr. 2015	SDDOT	W BEAM TO 3 CABLE TRANSITION BRACKET	PLATE NUMBER 629.15
			Sheet 1 of 1

PLOT SCALE - 1:200
PLOT NAME - 50
FILE - ...\629_10_3 629_15.DGN
PLOTTED FROM - TRPR15123

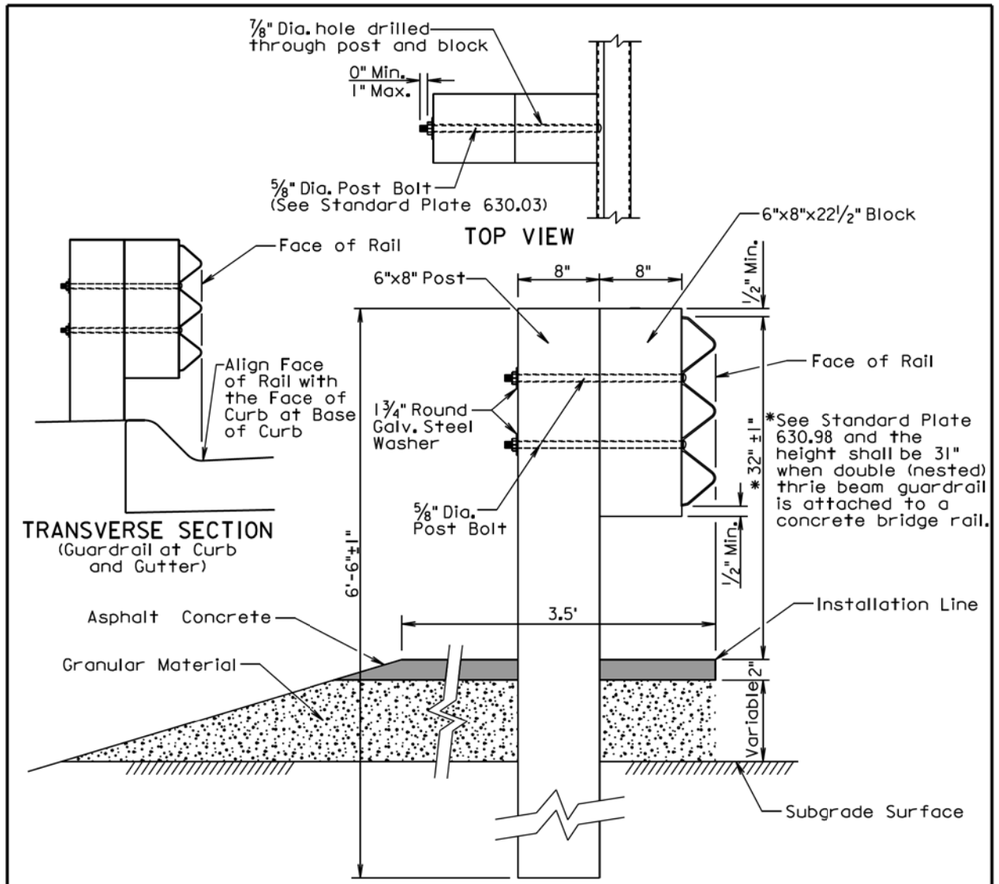

GENERAL NOTES:

Asphalt concrete shall be the same type used elsewhere on the project or shall be as specified in the plans. If asphalt concrete is not specified in the plans, the asphalt concrete shall conform to the SD Standard Specifications for "Asphalt Concrete Composite." For informational purposes, the Rate of Materials for the 3.5' wide section of asphalt concrete as shown above shall be 4.80 Tons per Station.

Granular material shall be the same type used elsewhere on the project or shall be as specified in the plans. If granular material type is not specified in the plans, the material shall conform to the SD Standard Specifications for "Base Course". The granular material shall be placed the same thickness as the mainline surfacing or as specified in the plans.

Surfacing and embankment quantities will be paid for separately and will NOT be incidental to the "Thrie Beam Guardrail" bid item.

The cross slope for the surfacing and subgrade surface shall be as specified in the plans (See Typical Sections and/or Cross Sections).

The top of posts and top of block shall have a true square cut. The top of post and top of block shall be flush.

December 23, 2010

Published Date: 2nd Qtr. 2015	SDDOT	THRIE BEAM GUARDRAIL POST INSTALLATION	PLATE NUMBER 630.01
			Sheet 1 of 1

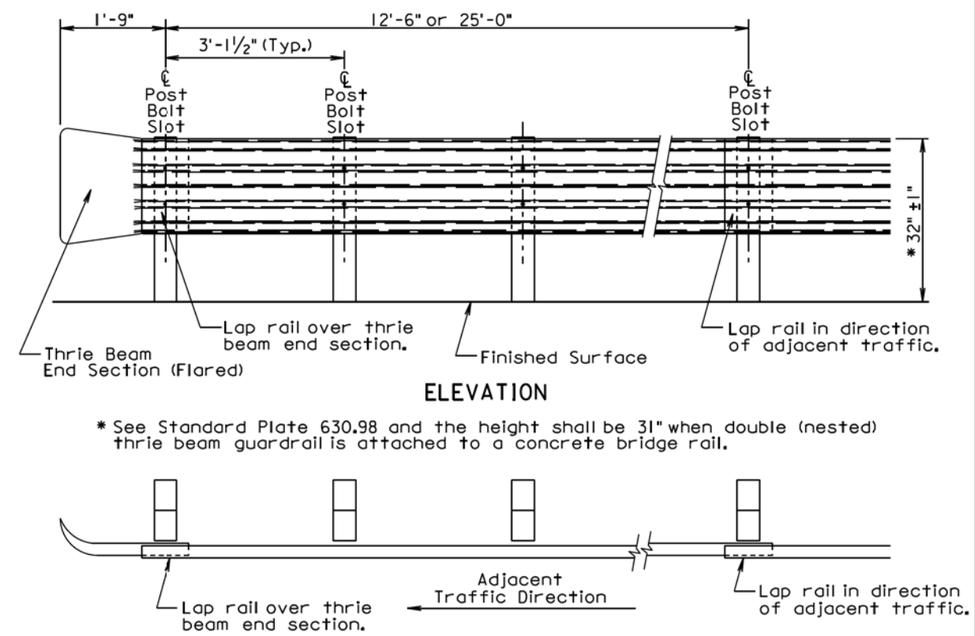

THRIE BEAM GUARDRAIL DEFLECTION CRITERIA	
POST SPACING	MAXIMUM DEFLECTION
6'-3"	2'-6"
3'-1 1/2"	1'-9"

For Informational Purposes Only

GENERAL NOTES:

All thrie beam rail shall be Type I.

There will be no separate payment for furnishing and installing Thrie Beam End Sections (Flared) and Thrie Beam Terminal Connectors. All costs for the Thrie Beam End Sections (Flared) and Thrie Beam Terminal Connectors shall be incidental to the contract unit price per foot for the respective "Thrie Beam Guardrail" bid item.

Thrie beam rail section lengths may be 12'-6" and/or 25'-0". The combination of section lengths used shall be compatible with the total length of rail per site as shown in the plans.

Thrie Beam End Sections (Flared) shall only be used in a one way traffic situation. See Standard Plate 630.80 for Thrie Beam End Section (Flared) in the Beam Guardrail Trailing End Terminal.

All costs for constructing thrie beam guardrail including labor, equipment, and materials including all posts, blocks, steel beam rail, and hardware shall be incidental to the contract unit price per foot for the respective "Thrie Beam Guardrail" bid item.

Surfacing and embankment quantities will be paid for separately and will NOT be incidental to the "Thrie Beam Guardrail" bid item.

December 23, 2010

Published Date: 2nd Qtr. 2015	SDDOT	THRIE BEAM GUARDRAIL INSTALLATION	PLATE NUMBER 630.02
			Sheet 1 of 1

PLOT SCALE - 1:200
PLOT NAME - 51
FILE - ...\630_01 630_02.DGN
PLOTTED FROM - TRPR15123

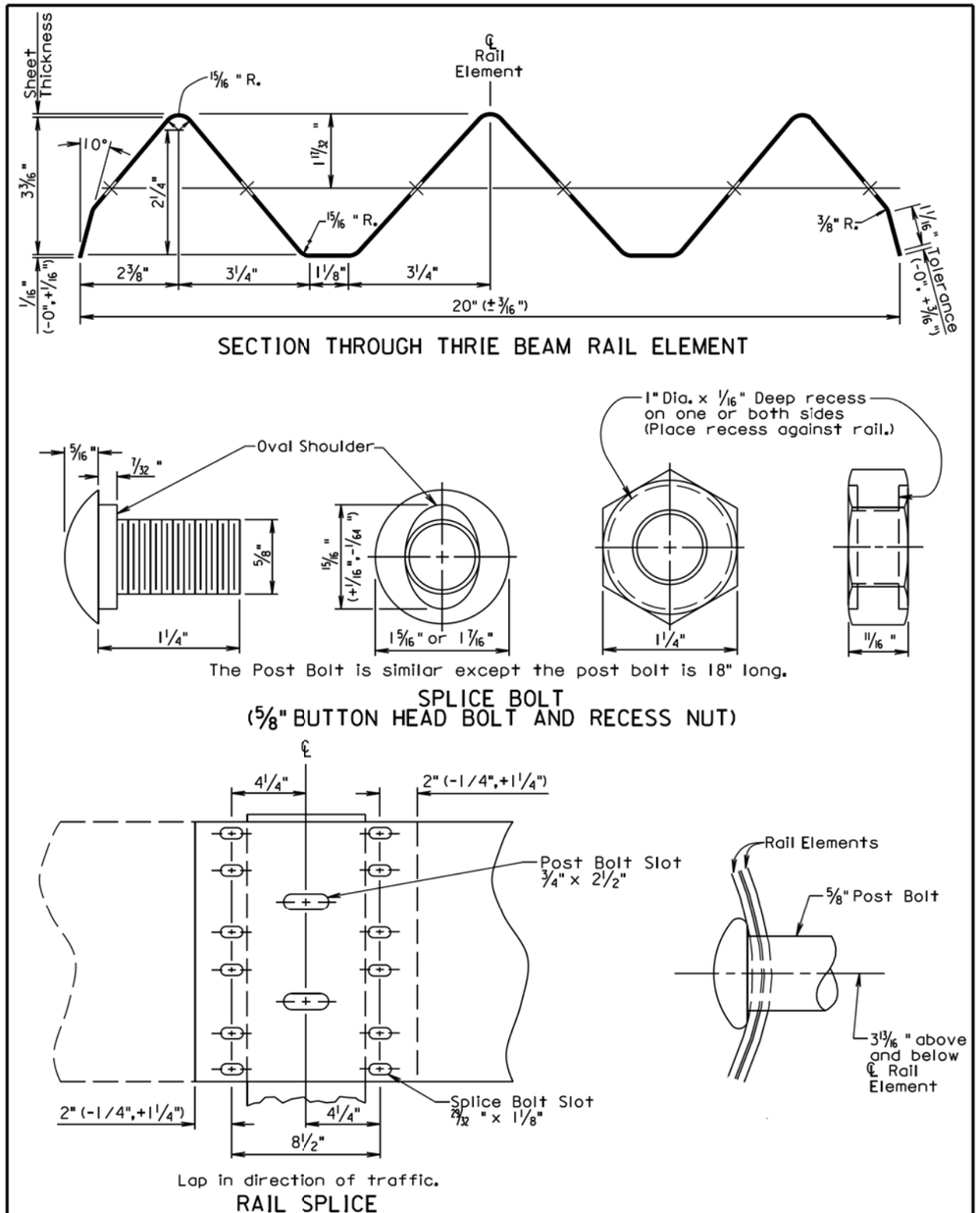

March 31, 2000

Published Date: 2nd Qtr. 2015	SDDOT	THRIE BEAM RAIL, RAIL SPLICE, AND HARDWARE	PLATE NUMBER 630.03
			Sheet 1 of 1

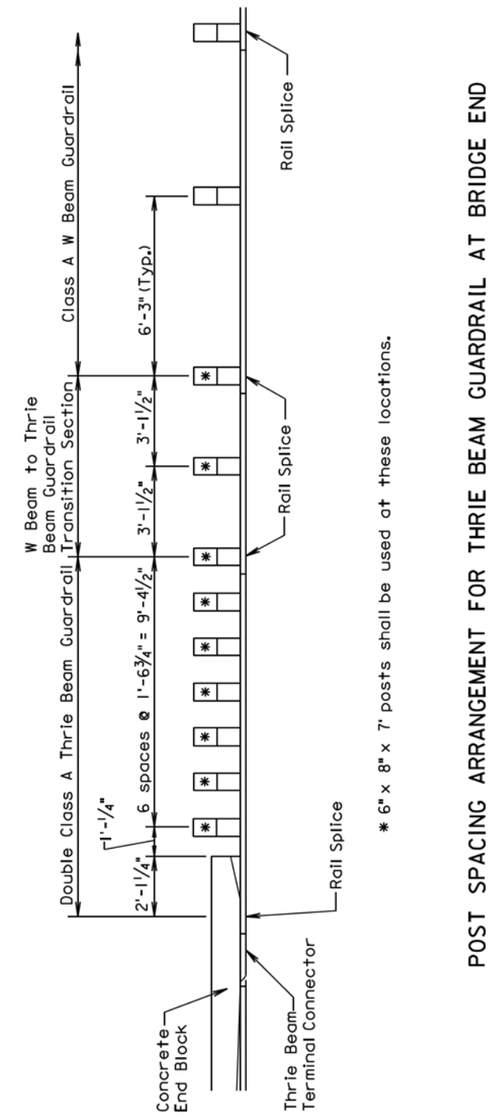

POST SPACING ARRANGEMENT FOR THRIE BEAM GUARDRAIL AT BRIDGE END

December 23, 2002

Published Date: 2nd Qtr. 2015	SDDOT	POST SPACING ARRANGEMENT FOR THRIE BEAM GUARDRAIL AT BRIDGE END	PLATE NUMBER 630.15
			Sheet 1 of 1

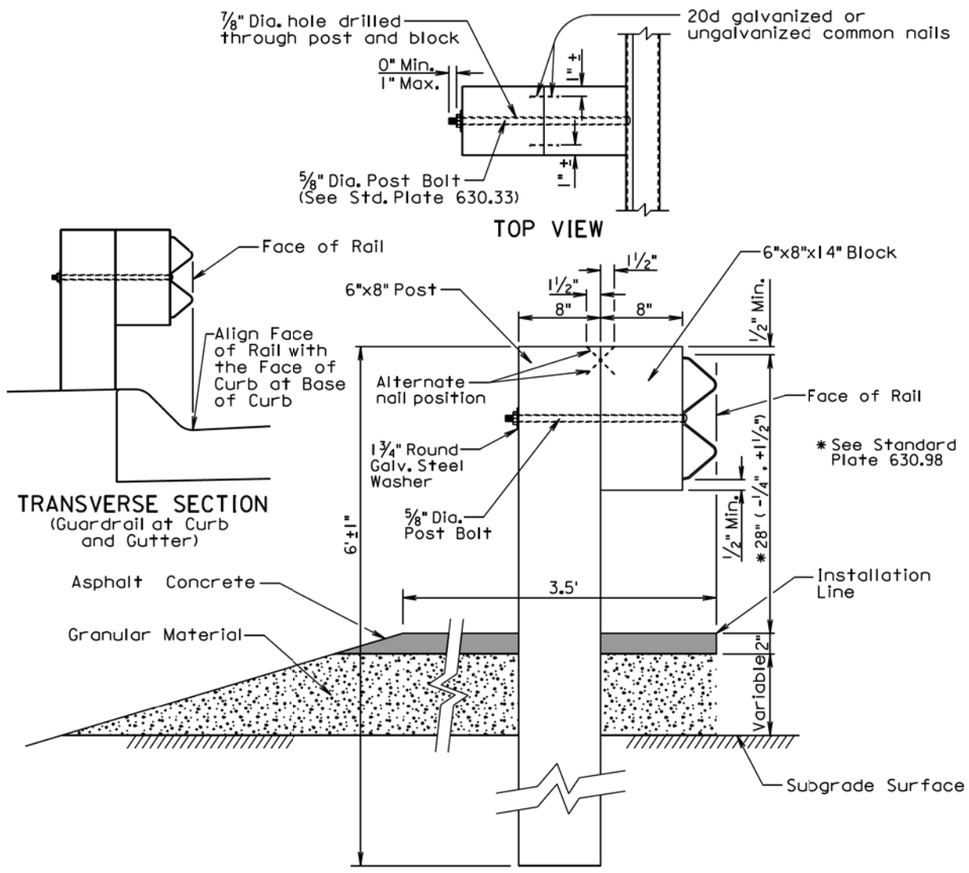

TRANSVERSE SECTION

GENERAL NOTES:

Asphalt concrete shall be the same type used elsewhere on the project or shall be as specified in the plans. If asphalt concrete is not specified in the plans, the asphalt concrete shall conform to the SD Standard Specifications for "Asphalt Concrete Composite." For informational purposes, the Rate of Materials for the 3.5' wide section of asphalt concrete as shown above shall be 4.80 Tons per Station.

Granular material shall be the same type used elsewhere on the project or shall be as specified in the plans. If granular material type is not specified in the plans, the material shall conform to the SD Standard Specifications for "Base Course". The granular material shall be placed the same thickness as the mainline surfacing or as specified in the plans.

Surfacing and embankment quantities will be paid for separately and will NOT be incidental to the "W Beam Guardrail" bid item.

The cross slope for the surfacing and subgrade surface shall be as specified in the plans (See Typical Sections and/or Cross Sections).

The top of posts and top of block shall have a true square cut. The top of post and top of block shall be flush.

December 23, 2010

Published Date: 2nd Qtr. 2015	SDDOT	W BEAM GUARDRAIL POST INSTALLATION	PLATE NUMBER 630.31 Sheet 1 of 1

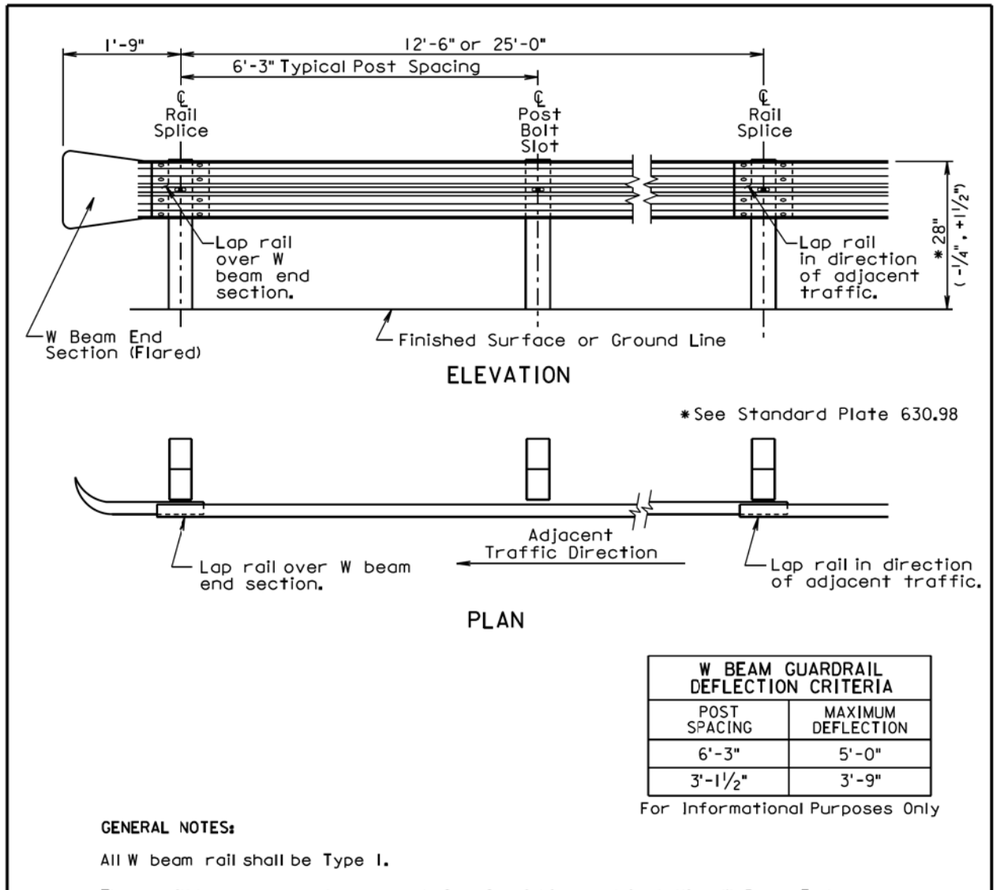

W BEAM GUARDRAIL DEFLECTION CRITERIA	
POST SPACING	MAXIMUM DEFLECTION
6'-3"	5'-0"
3'-1 1/2"	3'-9"

For Informational Purposes Only

GENERAL NOTES:

All W beam rail shall be Type I.

There will be no separate payment for furnishing and installing W Beam End Sections (Flared) and W Beam Terminal Connectors. All costs for the W Beam End Sections (Flared) and W Beam Terminal Connectors shall be incidental to the contract unit price per foot for the respective "W Beam Guardrail" bid item.

W beam rail section lengths may be 12'-6" and/or 25'-0". The combination of section lengths used shall be compatible with the total length of rail per site as shown in the plans.

W Beam End Sections (Flared) shall only be used in a one way traffic situation. See Standard Plate 630.80 for W Beam End Section (Flared) in the Beam Guardrail Trailing End Terminal.

All costs for constructing W beam guardrail including labor, equipment, and materials including all posts, blocks, steel beam rail, and hardware shall be incidental to the contract unit price per foot for the respective "W Beam Guardrail" bid item.

Surfacing and embankment quantities will be paid for separately and will NOT be incidental to the "W Beam Guardrail" bid item.

December 16, 2014

Published Date: 2nd Qtr. 2015	SDDOT	W BEAM GUARDRAIL INSTALLATION	PLATE NUMBER 630.32 Sheet 1 of 1

PLOT SCALE - 1:200
PLOT NAME - 53
FILE - ...\630_31 630_32.DGN
PLOTTED FROM - TRPR15123

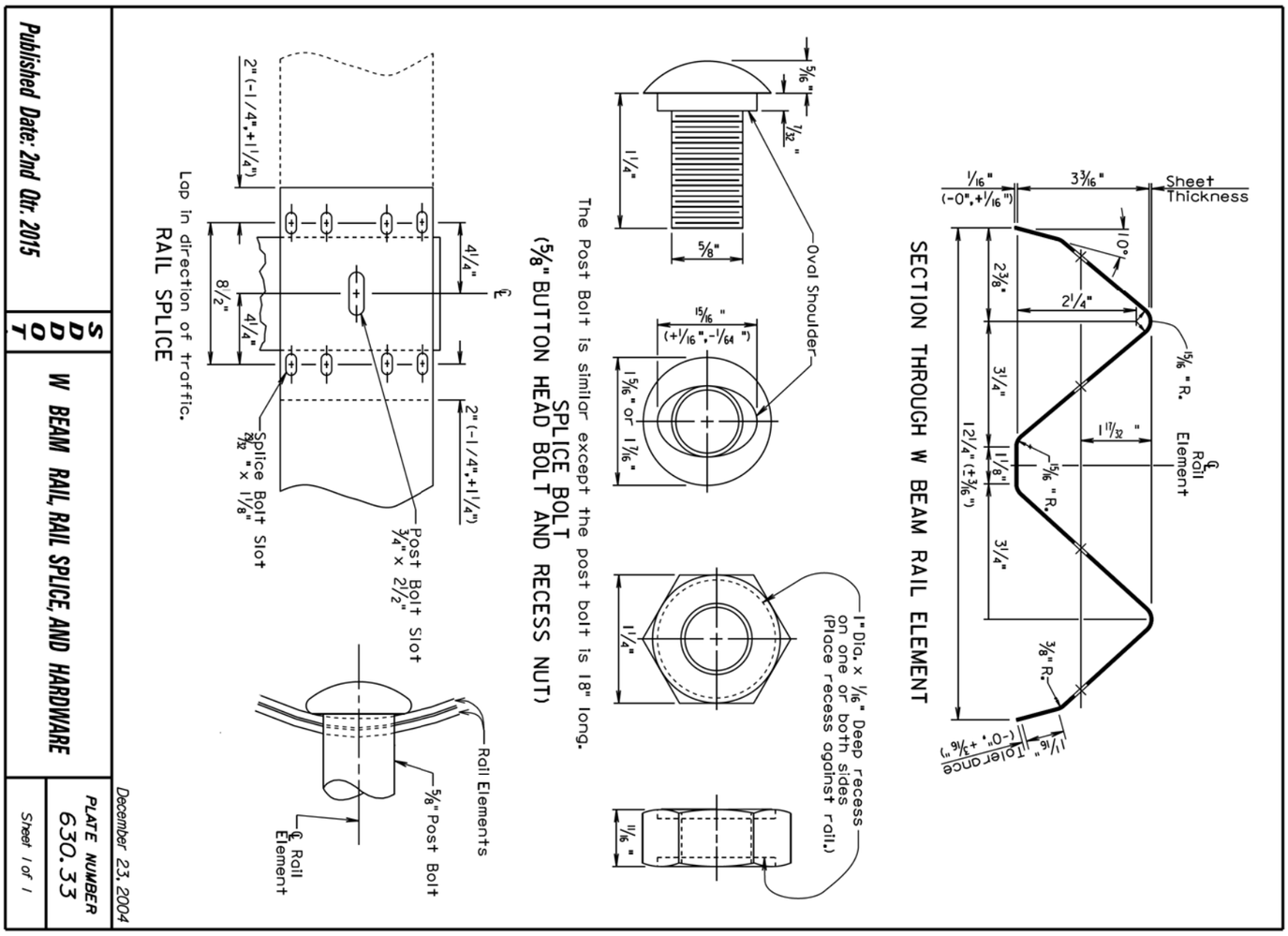

Published Date: 2nd Qtr. 2015

SDDOT

W BEAM RAIL, RAIL SPLICE, AND HARDWARE

December 23, 2004

PLATE NUMBER 630.33

Sheet 1 of 1

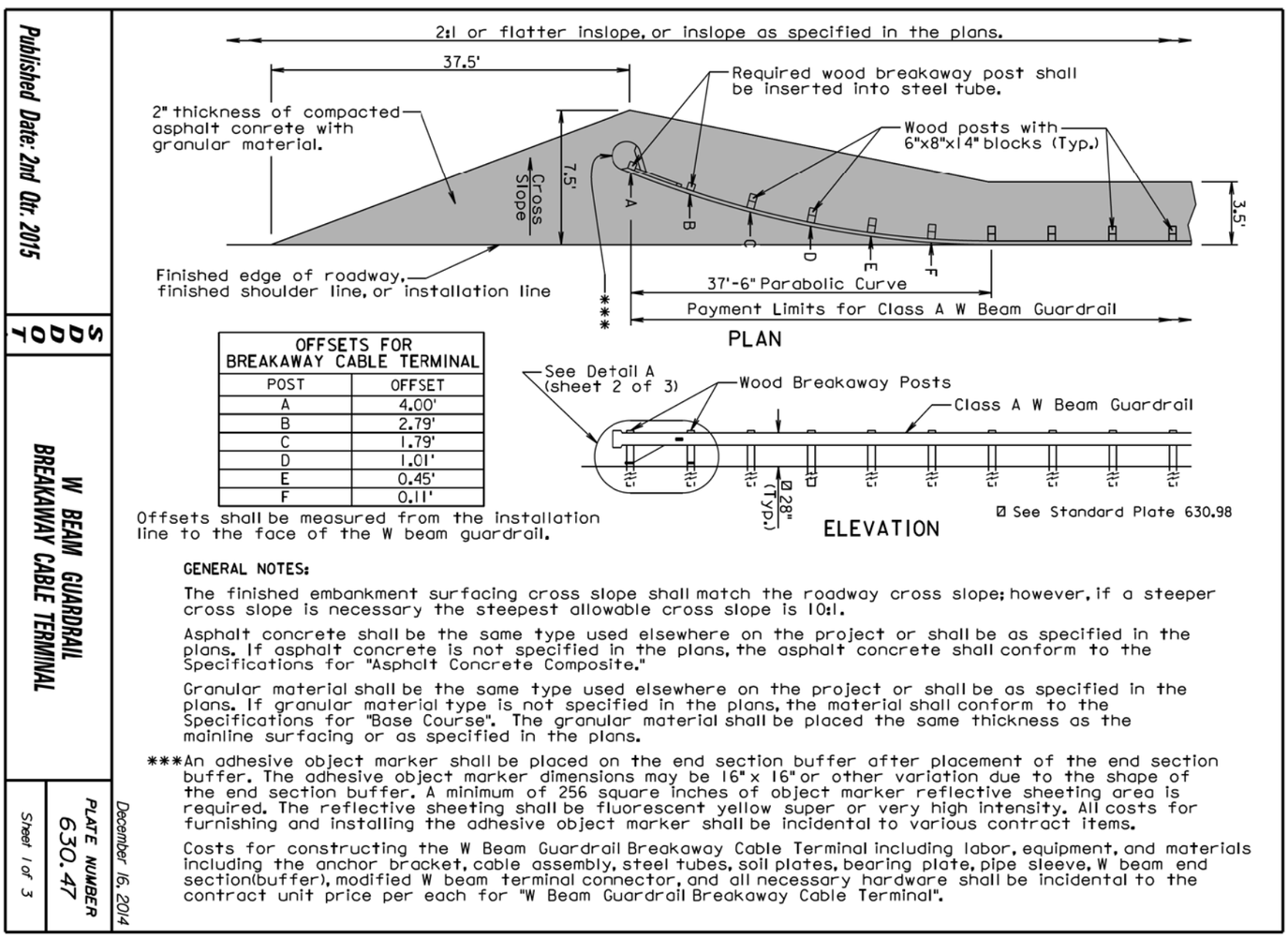

OFFSETS FOR BREAKAWAY CABLE TERMINAL	
POST	OFFSET
A	4.00'
B	2.79'
C	1.79'
D	1.01'
E	0.45'
F	0.11'

Offsets shall be measured from the installation line to the face of the W beam guardrail.

GENERAL NOTES:

The finished embankment surfacing cross slope shall match the roadway cross slope; however, if a steeper cross slope is necessary the steepest allowable cross slope is 10:1.

Asphalt concrete shall be the same type used elsewhere on the project or shall be as specified in the plans. If asphalt concrete is not specified in the plans, the asphalt concrete shall conform to the Specifications for "Asphalt Concrete Composite."

Granular material shall be the same type used elsewhere on the project or shall be as specified in the plans. If granular material type is not specified in the plans, the material shall conform to the Specifications for "Base Course". The granular material shall be placed the same thickness as the mainline surfacing or as specified in the plans.

***An adhesive object marker shall be placed on the end section buffer after placement of the end section buffer. The adhesive object marker dimensions may be 16" x 16" or other variation due to the shape of the end section buffer. A minimum of 256 square inches of object marker reflective sheeting area is required. The reflective sheeting shall be fluorescent yellow super or very high intensity. All costs for furnishing and installing the adhesive object marker shall be incidental to various contract items.

Costs for constructing the W Beam Guardrail Breakaway Cable Terminal including labor, equipment, and materials including the anchor bracket, cable assembly, steel tubes, soil plates, bearing plate, pipe sleeve, W beam end section(buffer), modified W beam terminal connector, and all necessary hardware shall be incidental to the contract unit price per each for "W Beam Guardrail Breakaway Cable Terminal".

Published Date: 2nd Qtr. 2015

SDDOT

W BEAM GUARDRAIL BREAKAWAY CABLE TERMINAL

December 16, 2014

PLATE NUMBER 630.47

Sheet 1 of 3

STATE OF SOUTH DAKOTA | PROJECT IM 0901(186)0 | SHEET F65 | TOTAL SHEETS F71

Plotting Date: 07/31/2015

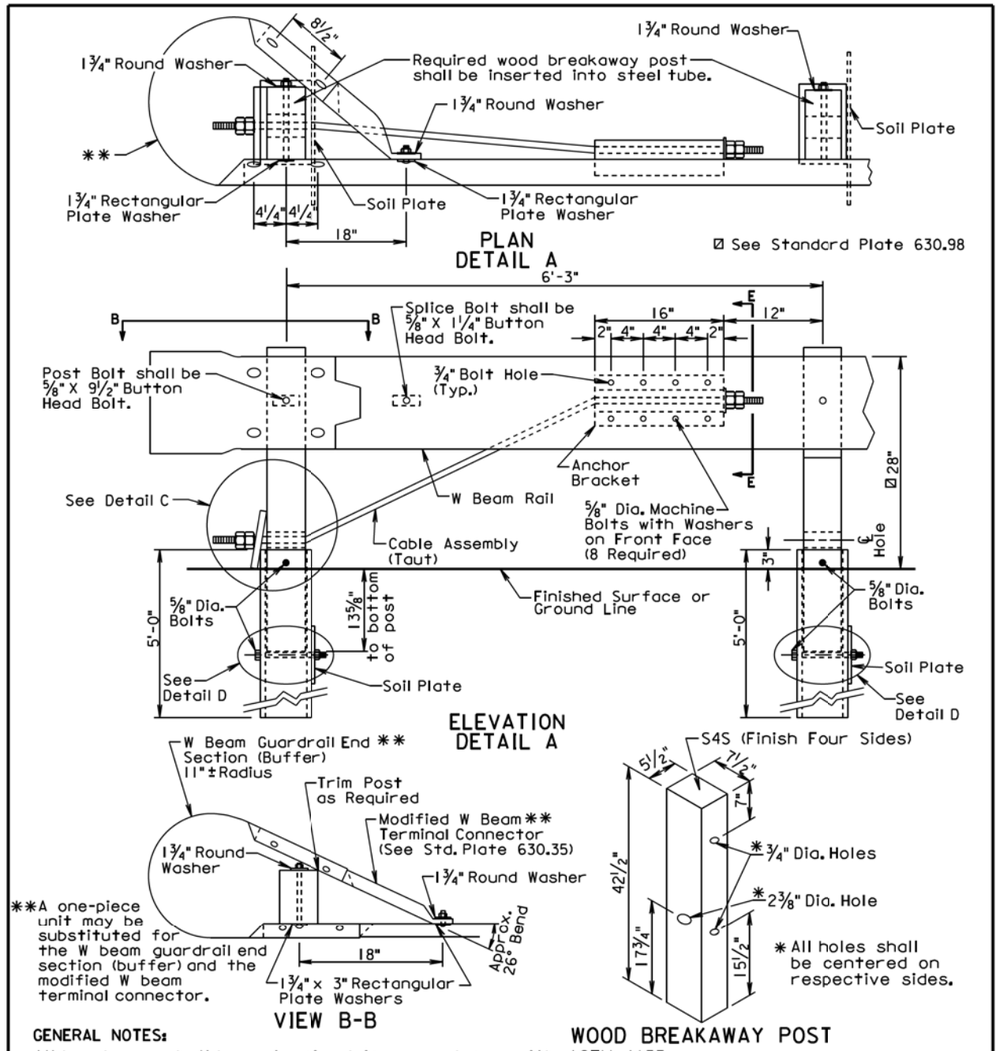

GENERAL NOTES:

All hardware shall be galvanized in accordance with ASTM A153.

The steel tubes shall meet the requirements of ASTM Specification A500, Grade B, and shall be galvanized after fabrication in accordance with the requirements of AASHTO Specification M111.

The anchor bracket, soil plate, and bearing plate shall be fabricated from steel that meets ASTM A36 Specifications. They shall be galvanized after fabrication in accordance with ASTM A123.

The W Beam End Section (Buffer) shall be 12 gage galvanized steel.

The cable shall be ¾", Type II, with Class A coating in conformance with AASHTO M30.

December 16, 2014

Published Date: 2nd Qtr. 2015	SDDOT	W BEAM GUARDRAIL BREAKAWAY CABLE TERMINAL	PLATE NUMBER 630.47
			Sheet 2 of 3

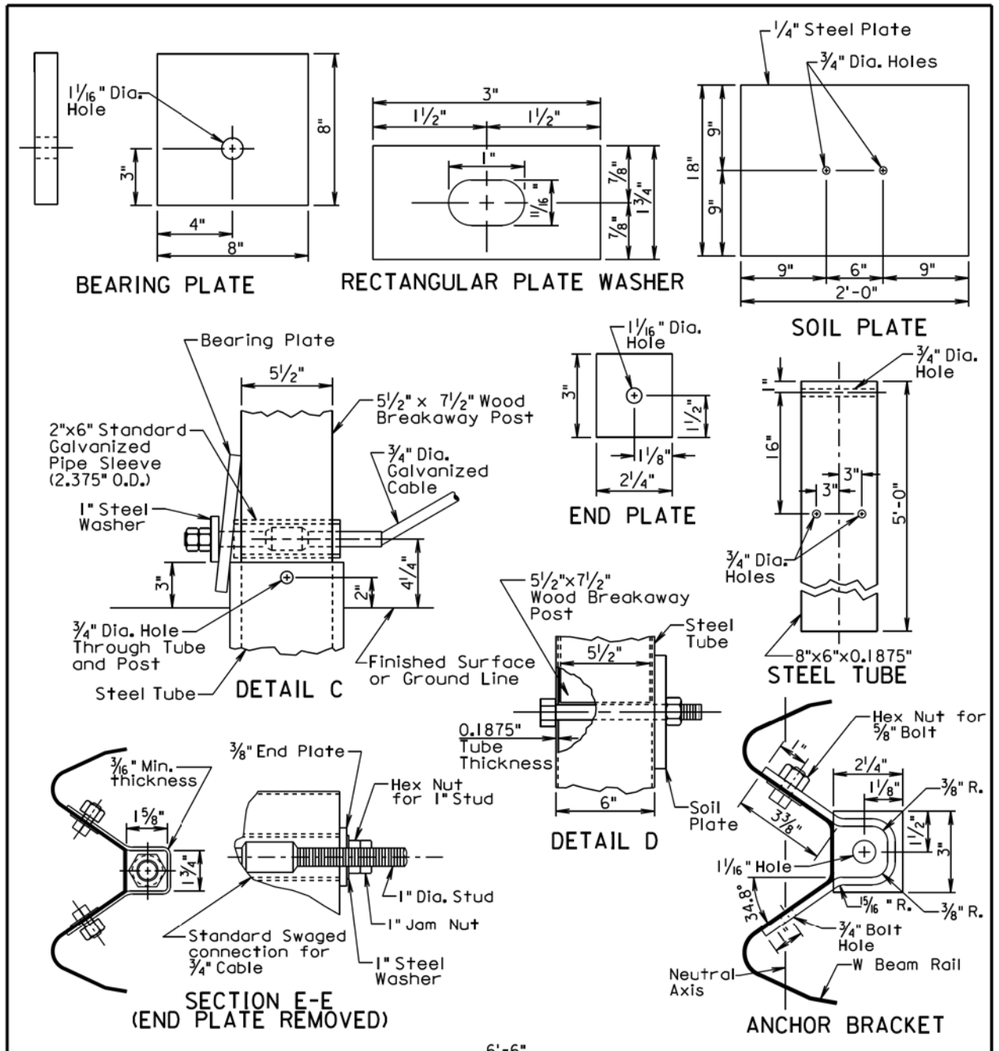

December 16, 2014

Published Date: 2nd Qtr. 2015	SDDOT	W BEAM GUARDRAIL BREAKAWAY CABLE TERMINAL	PLATE NUMBER 630.47
			Sheet 3 of 3

PLOT SCALE - 1:200
PLOT NAME - 55
FILE - ...\STANDARD PLATES\630_47_2&3.DGN
PLOTTED FROM - TRPR15123

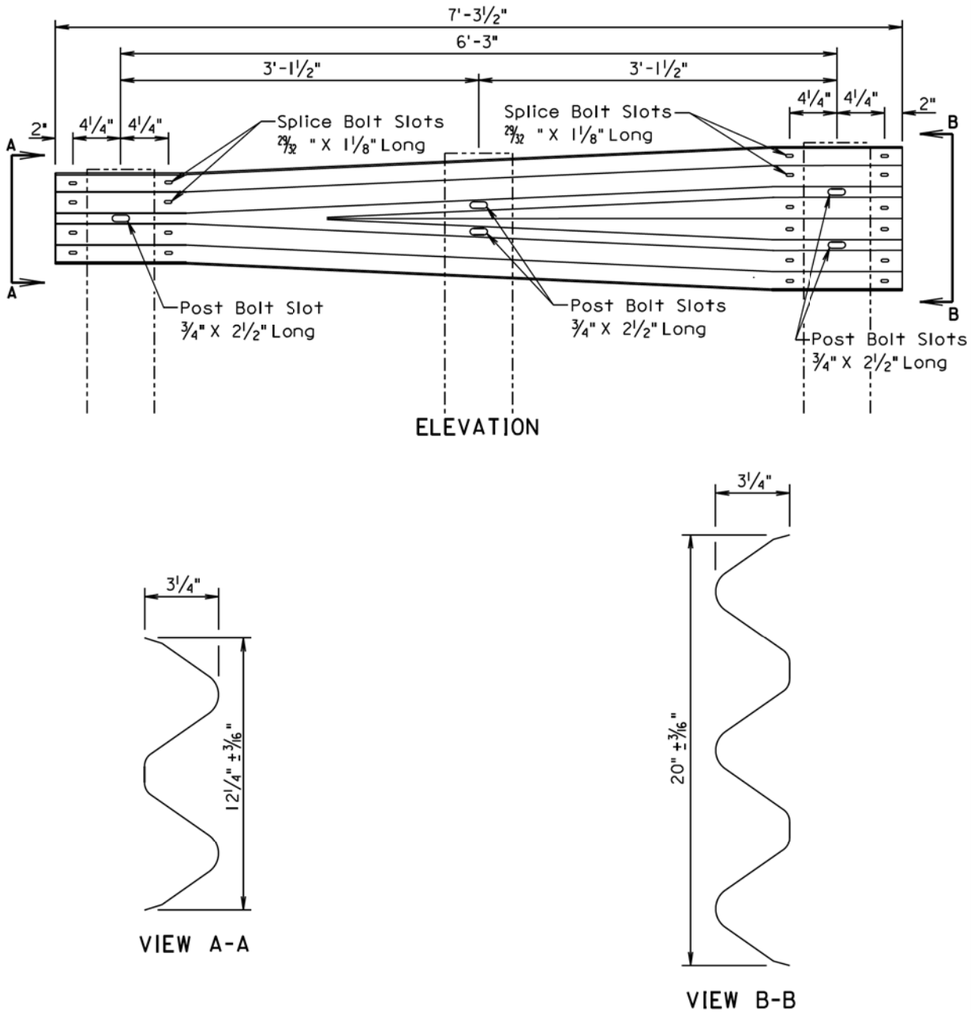

GENERAL NOTE:

All costs for constructing the W Beam to Thrie Beam Guardrail Transition including labor, equipment, and materials including two posts, two blocks, W beam to thrie beam transition section, and hardware shall be incidental to the contract unit price per each for "W Beam to Thrie Beam Guardrail Transition".

March 31, 2000

Published Date: 2nd Qtr. 2015	SDDOT	W BEAM TO THRIE BEAM GUARDRAIL TRANSITION SECTION	PLATE NUMBER 630.82
			Sheet 1 of 1

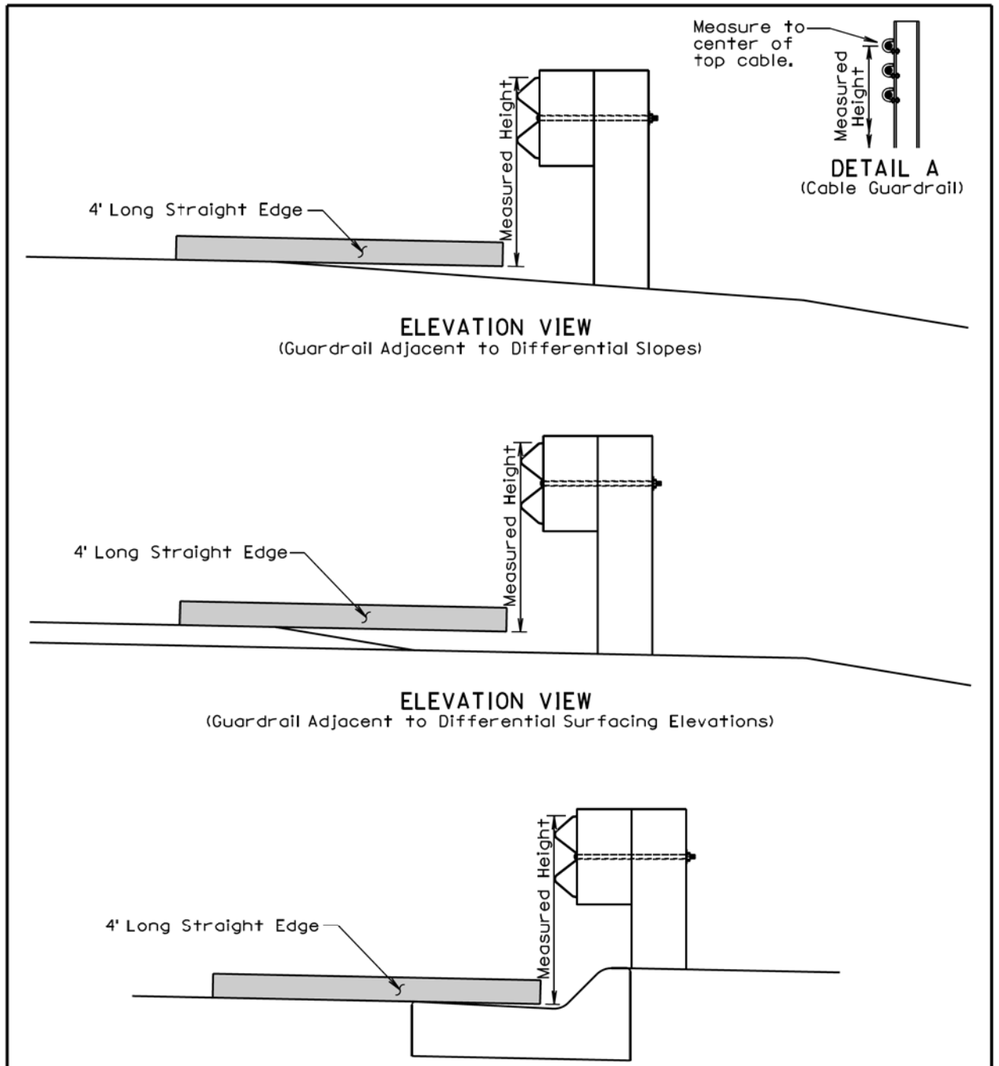

GENERAL NOTES:

The W Beam guardrail shown is for illustrative purpose. The guardrail height for all types of guardrail systems shall be measured in accordance with this standard plate.

When measuring height of cable guardrail or cable barrier the height shall be measured to the center of the top cable. See Detail A.

June 26, 2010

Published Date: 2nd Qtr. 2015	SDDOT	MEASURING GUARDRAIL HEIGHT	PLATE NUMBER 630.98
			Sheet 1 of 1

PLOT SCALE - 1:200
PLOT NAME - 56
FILE - ...\630_82 630_98.DGN
-PLOTTED FROM - TRPR15123

PLAN VIEW

1. Finished embankment surfacing cross slope shall be the same as the roadway cross slope.
2. Finished embankment surfacing cross slope transition.
3. Finished embankment surfacing cross slope shall be 10:1, however, a cross slope flatter than 10:1 may be used to obtain the 6" minimum thickness of granular material.

GENERAL NOTES:

Asphalt concrete shall be the same type used elsewhere on the project or shall be as specified in the plans. If asphalt concrete is not specified in the plans, the asphalt concrete shall conform to the Specifications for "Asphalt Concrete Composite."

Granular material shall be the same type used elsewhere on the project or shall be as specified in the plans. If granular material type is not specified in the plans, the material shall conform to the Specifications for "Base Course".

February 10, 2014

Published Date: 2nd Qtr. 2015

SDDOT

EMBANKMENT AND SURFACING FOR TYPICAL MEDIAN PROTECTION

PLATE NUMBER 630.99

Sheet 1 of 1

TYPICAL GUARDRAIL LAYOUTS

- (B) Steel Beam Guardrail Delineation
- [E] Guardrail Terminal End Object Marker
- (C) 3 Cable Guardrail Delineation
- (M) Type 2 Object Marker

* For two-way traffic, install delineation at the opposite end of structure the same as shown. Back-to-back delineation is required for two-way traffic, single-sided delineation for one-way traffic.

June 26, 2011

Published Date: 2nd Qtr. 2015

SDDOT

DELINEATION OF GUARDRAIL AT BRIDGES

PLATE NUMBER 632.40

Sheet 1 of 4

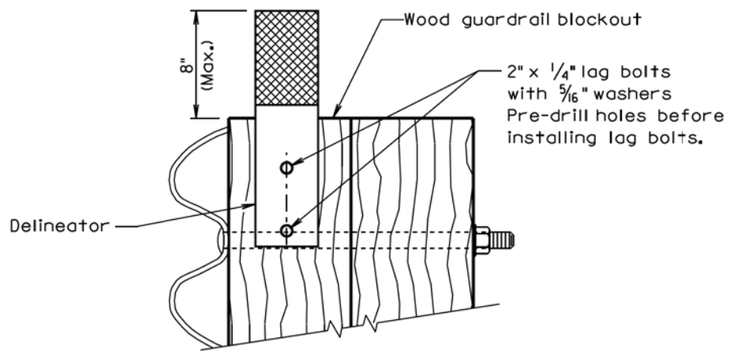

(B) STEEL BEAM GUARDRAIL DELINEATION

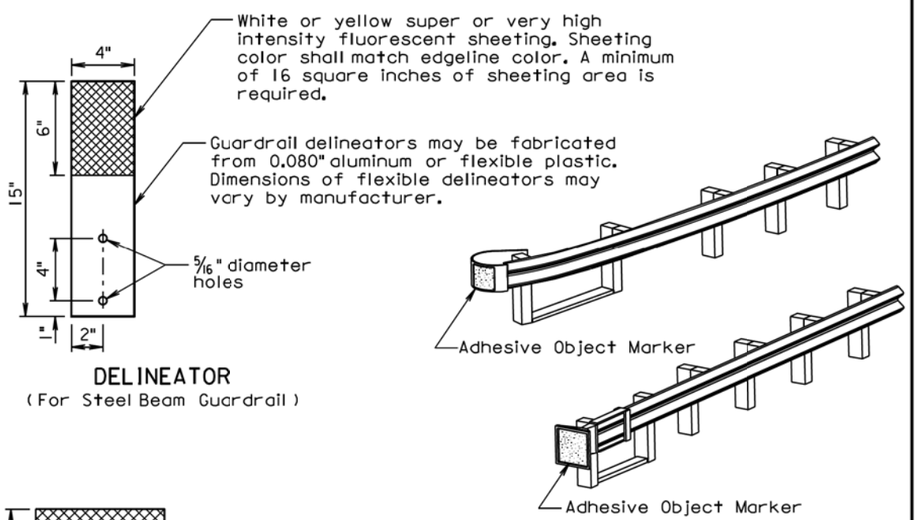

DELINEATOR
(For Steel Beam Guardrail)

(E) GUARDRAIL TERMINAL END OBJECT MARKER

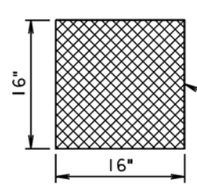

ADHESIVE OBJECT MARKER

Adhesive object marker dimensions may vary due to shape of terminal end. A minimum of 256 square inches of object marker sheeting area is required. The sheeting shall be fluorescent yellow super or very high intensity.

June 26, 2011

Published Date: 2nd Qtr. 2015	SDDOT	DELINEATION OF GUARDRAIL AT BRIDGES	PLATE NUMBER 632.40
			Sheet 2 of 4

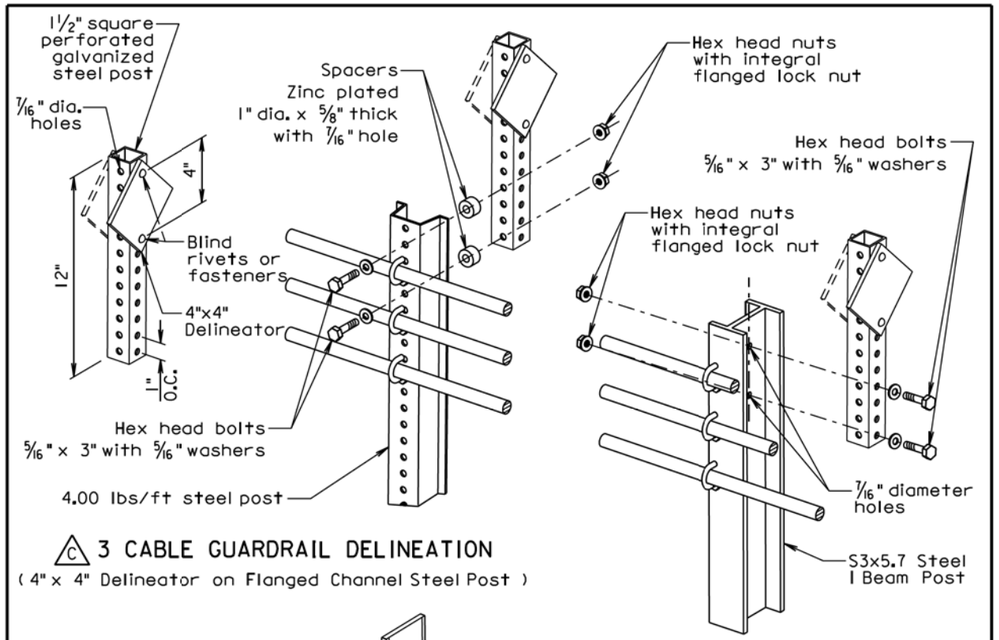

(C) 3 CABLE GUARDRAIL DELINEATION
(4" x 4" Delineator on Flanged Channel Steel Post)

(C) 3 CABLE GUARDRAIL DELINEATION
(4" x 4" Delineator on I Beam Steel Post)

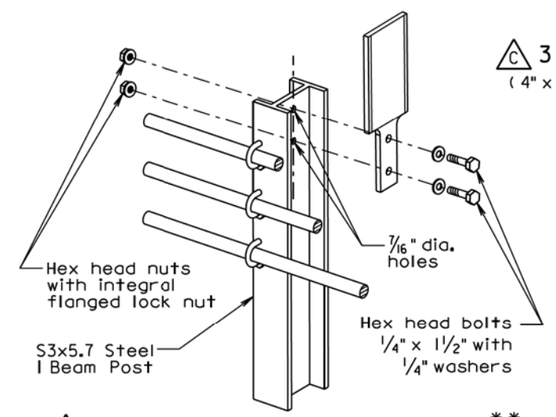

(C) 3 CABLE GUARDRAIL DELINEATION**
(Flexible 3" x 6" Delineator on I Beam Post)

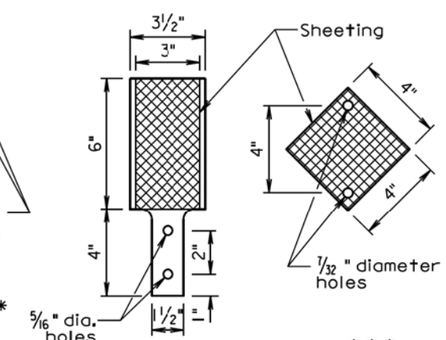

DELINEATORS***
(For 3 Cable Guardrail)

** Flexible delineators may be attached to post with manufacturer approved adhesive instead of bolts.

*** Dimensions of flexible delineators may vary by manufacturer. A minimum of 16 square inches of sheeting area is required. The sheeting shall be white or yellow super or very high intensity fluorescent sheeting. The sheeting color shall match the edgeline color.

June 26, 2011

Published Date: 2nd Qtr. 2015	SDDOT	DELINEATION OF GUARDRAIL AT BRIDGES	PLATE NUMBER 632.40
			Sheet 3 of 4

PLOT SCALE - 1:200
PLOT NAME - 58
FILE - ...\STANDARD PLATES\632_40_2&3.DGN
PLOTTED FROM - TRPR15123

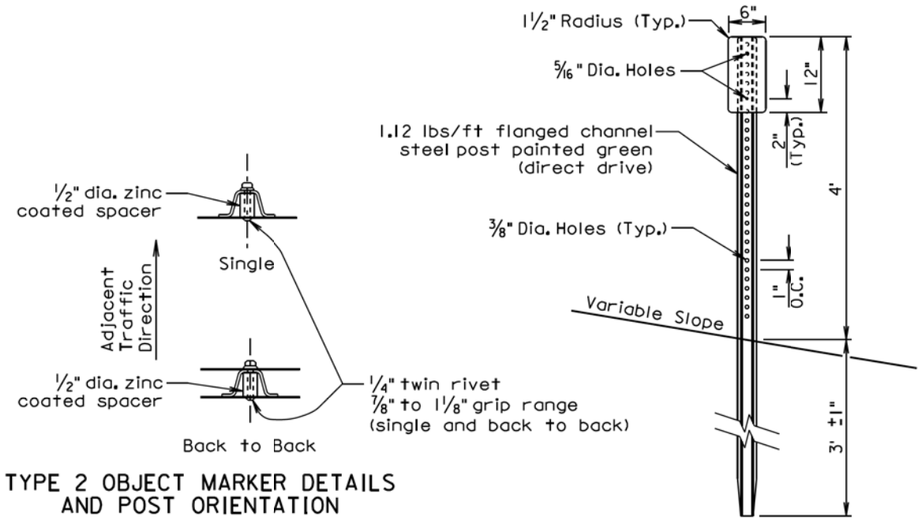

TYPE 2 OBJECT MARKER DETAILS AND POST ORIENTATION

Ⓜ TYPE 2 OBJECT MARKER
(For Marking 3 Cable Guardrail Anchor)

GENERAL NOTES:

The delineators shall be covered with a minimum of 16 square inches of reflective sheeting. The reflective sheeting shall be of either very high intensity or super high intensity material. For bridges along two-way roadways the sheeting shall be on both sides of the delineator and shall be white in color. For one-way roadways the sheeting will only be required on the side facing traffic and the color will be the same as the nearest pavement marking, yellow on the left side of the roadway and white on the right side.

The first delineator shall be attached to the post nearest the bridge with additional delineators spaced in advance of the bridge at approximately 50 foot intervals. At bridges with short lengths of guardrail, less than 200 feet, a minimum of 4 delineators shall be placed in addition to the yellow object marker. The spacing between the delineators shall be approximately one third of the length of the guardrail. This will provide for a shorter spacing. At bridges with longer lengths of guardrail, greater than 200 feet, including bridges that have cable guardrail transitioning into the steel beam guardrail, the delineators will be placed at a spacing of approximately 50 feet. Delineation shall extend throughout the length of the guardrail system.

All costs for furnishing and installing single or back to back guardrail delineation shall be included in the contract unit price per each for "Guardrail Delineator".

An adhesive object marker shall be placed on the end of the W beam guardrail end terminal. The adhesive object marker dimensions may vary due to the shape of the terminal end. A minimum of 256 square inches of object marker reflective sheeting area is required. The reflective sheeting shall be fluorescent yellow super or very high intensity. All costs for furnishing and installing the adhesive object marker shall be incidental to various contract items.

A type 2 object marker shall be placed adjacent to the 3 cable guardrail anchor at the location noted on sheet 1 of this standard plate. The type 2 object marker (6" x 12") shall have a fluorescent yellow very high or super high intensity reflective sheeting. All costs for furnishing and installing the type 2 object marker including the steel post, 6" x 12" reflective panel, and hardware shall be included in the contract unit price per each for "Type 2 Object Marker" for single-sided and "Type 2 Object Marker Back to Back" for back to back type 2 object markers.

June 26, 2011

Published Date: 2nd Qtr. 2015	SDDOT	DELINEATION OF GUARDRAIL AT BRIDGES	PLATE NUMBER 632.40
			Sheet 4 of 4

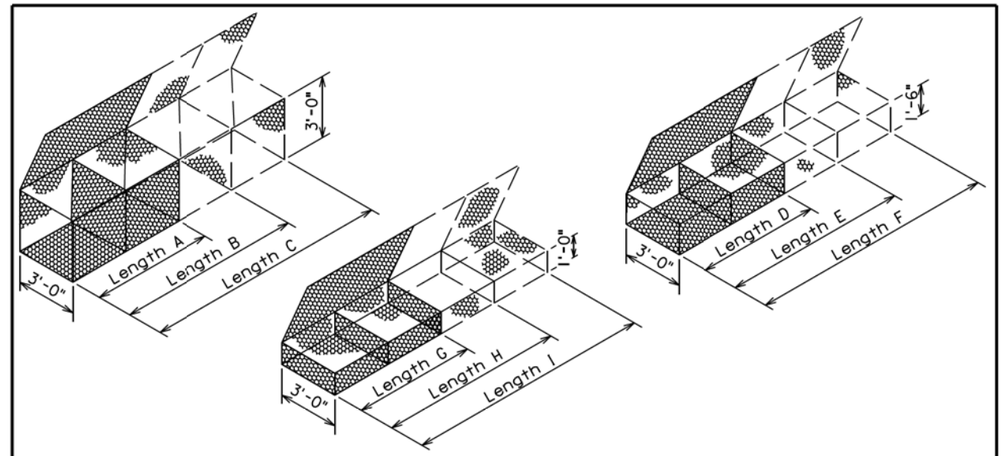

GABION DETAILS

STANDARD SIZES

SIZE	LENGTH	WIDTH	HEIGHT	NUMBER OF CELLS	CAPACITY, Cu. Yd.
A	6'-0"	3'-0"	3'-0"	2	2.0
B	9'-0"	3'-0"	3'-0"	3	3.0
C	12'-0"	3'-0"	3'-0"	4	4.0
D	6'-0"	3'-0"	1'-6"	2	1.0
E	9'-0"	3'-0"	1'-6"	3	1.5
F	12'-0"	3'-0"	1'-6"	4	2.0
G	6'-0"	3'-0"	1'-0"	2	0.7
H	9'-0"	3'-0"	1'-0"	3	1.0
I	12'-0"	3'-0"	1'-0"	4	1.3

Above Dimensions subject to mill tolerances.

GENERAL NOTES:

Lacing and internal connecting wire shall be 0.0866 inch diameter steel wire ASTM A641 Class 3 soft temper measured after galvanizing and for PVC coated gabions shall be 0.0866 inch diameter steel wire measured after galvanizing but before PVC coating.

The lacing procedure is as follows:

1. Cut a length of lacing wire approximately 1 ½ times the distance to be laced but not exceeding 5 feet.
2. Secure the wire terminal at the corner by looping and twisting.
3. Proceed lacing with alternating single and double loops at a spacing not to exceed 6 inches.
4. Securely fasten the other lacing wire terminal.

Wire lacing or interlocking type fasteners shall be used for gabion cssembly and final construction of gabion structures. Interlocking fasteners for galvanized gabions shall be high tensile 0.120 inch diameter galvanized steel wire measured after galvanizing. The galvanizing shall conform to ASTM A641-92 Class 3 coating. Fasteners shall also be in accordance with ASTM A764, Class II, Type III.

Interlocking fasteners for PVC coated gabions shall be high tensile 0.120 inch diameter stainless steel wire conforming to ASTM A313, Type 302, Class 1. The spacing of the interlocking fasteners during all phases of assembly and construction shall not exceed 6 inches.
All fasteners shall be placed where the mesh weaves around the selvage wire at the vertical and horizontal joints.

June 26, 2001

Published Date: 2nd Qtr. 2015	SDDOT	BANK AND CHANNEL PROTECTION GABIONS	PLATE NUMBER 720.01
			Sheet 1 of 1

PLOT SCALE - 1:200
PLOT NAME - 59
FILE - ...\632_40_4 720_01.DGN
PLOTTED FROM - TRPR15123

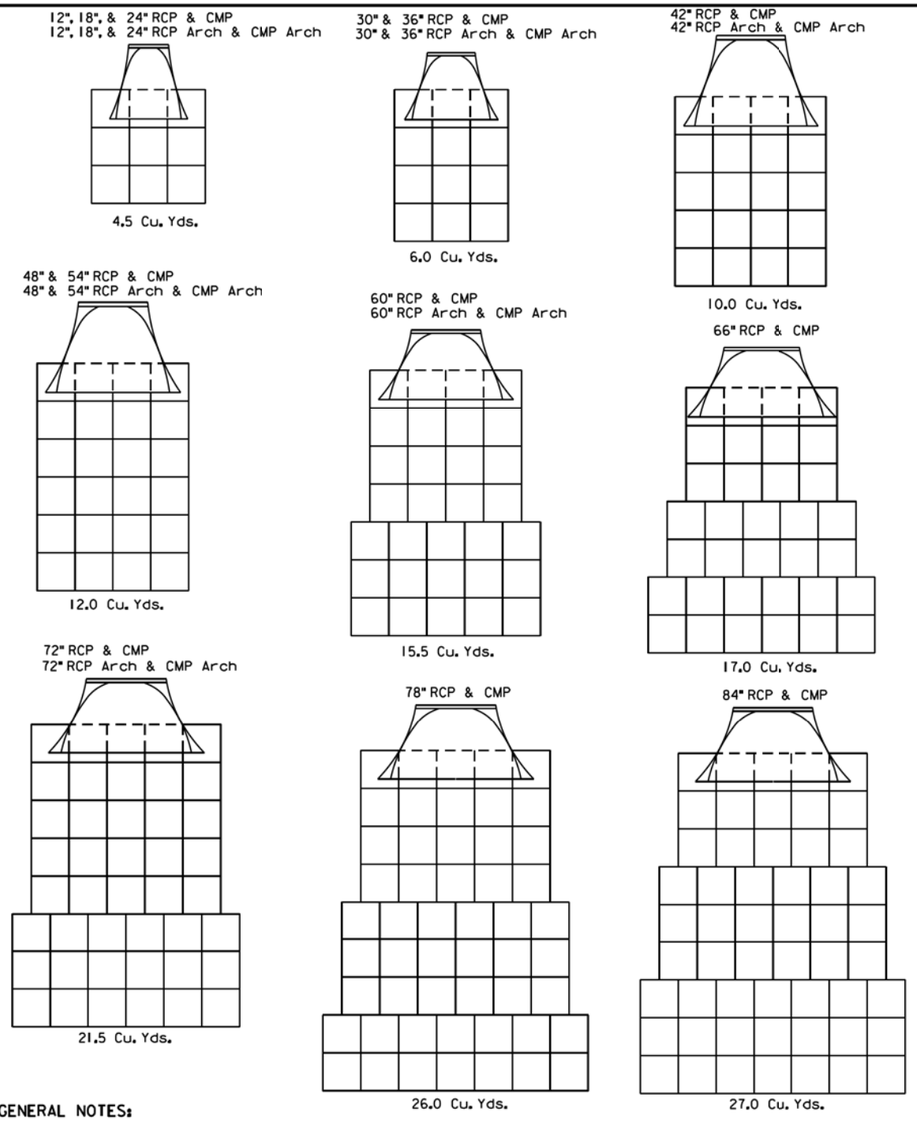

GENERAL NOTES:

Gabions at outlets of C. M. pipe and R. C. pipe shall be placed under the end section a distance of 2' from the outlet end of the section. For C. M. pipe end section installations, the upper fabric of the gabions shall be modified to accommodate the metal end section in a manner approved by the Engineer.

Quantities shown on this standard plate are based on standard gabion sizes D, E, and F (See Standard Plate 720.01).

June 26, 2001

Published Date: 2nd Qtr. 2015	**SDDOT**	***BANK AND CHANNEL PROTECTION GABION PLACEMENT UNDER PIPE END SECTIONS***	*PLATE NUMBER* 720.03
			Sheet 1 of 1

PLOT SCALE - 1:200

PLOT NAME - 60

FILE - ...\STANDARD PLATES\720_03.DGN

-PLOTTED FROM - TRPR15123