STATE OF	PROJECT	SHEET NO.	TOTAL SHEETS
S.D.	P 0073(68)0 & P 0073(65)9	E1	E24

SECTION E – STRUCTURE

INDEX OF SHEETS

Sheet No. E1	Layout Map & Index
Sheet No. E2	Estimate of Quantities
Sheet Nos. E3-E13	Str. No. 04-197-215
Sheet Nos. E14-E24	Str. No. 04-190-180

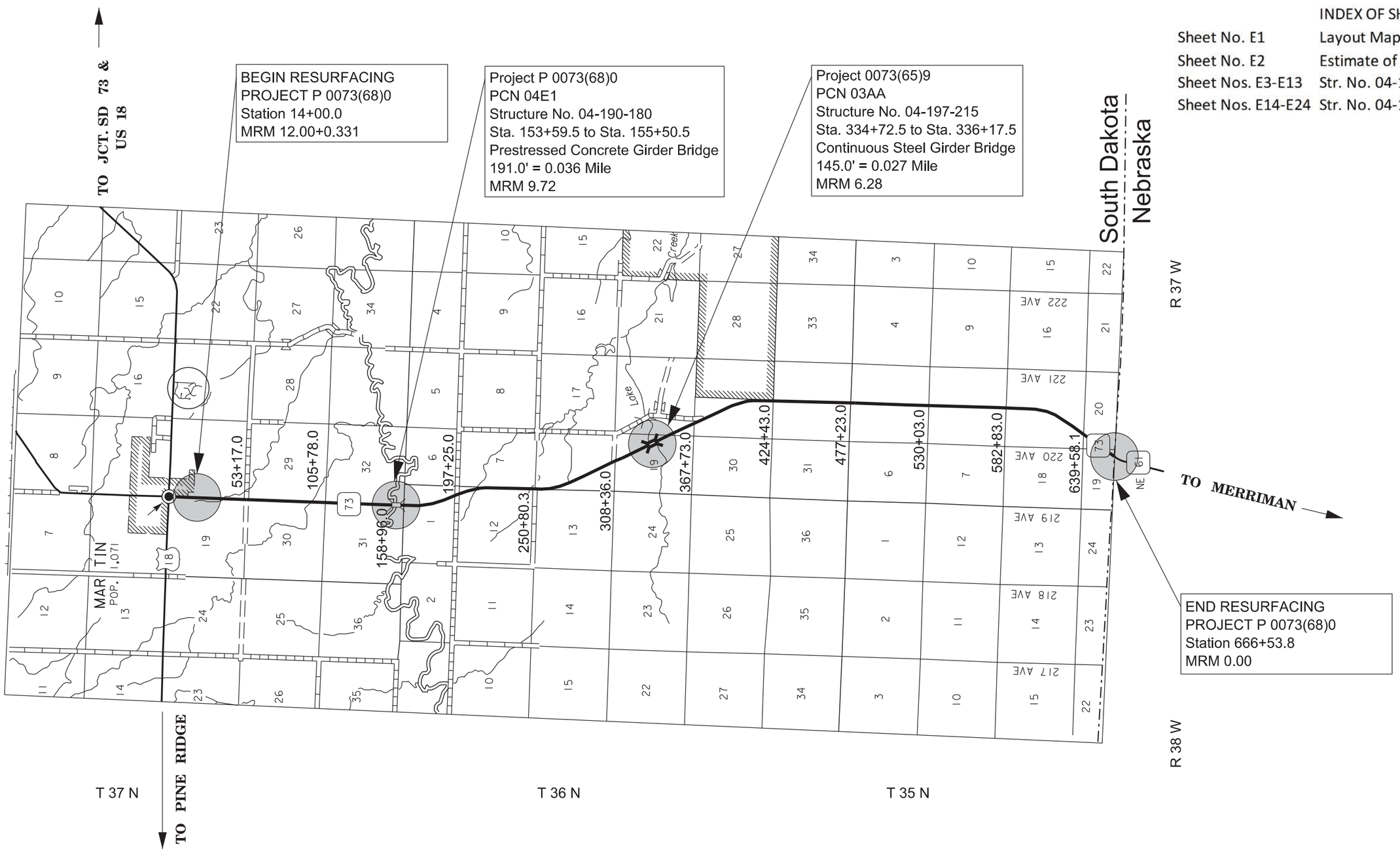

ESTIMATE OF STRUCTURE QUANTITIES

PCN 04E1 - P 0073(68)0

Bid Item Number	Item	Quantity	Unit
110E0022	Remove Thrie Beam Bridge Rail for Reset	290.0	Ft
462E0200	Controlled Density Fill	8.7	CuYd
470E0460	Reset Thrie Beam Bridge Rail	290.0	Ft

PCN 03AA - P 0073(65)9

Bid Item Number	Item	Quantity	Unit
110E0022	Remove Thrie Beam Bridge Rail for Reset	382.0	Ft
460E0172	Concrete Patching Material, Bridge Deck	26.5	CuFt
470E0460	Reset Thrie Beam Bridge Rail	382.0	Ft
491E0015	Two Coat Bridge Deck Epoxy Chip Seal	636.6	SqYd
491E0110	Abrasive Blasting of Bridge Deck	636.6	SqYd
491E0120	Bridge Deck Grinding	636.6	SqYd
491E0130	Concrete Removal, Class A	4.5	SqYd
491E0140	Concrete Removal, Class B	4.5	SqYd

STATE OF	PROJECT	SHEET NO.	TOTAL SHEETS
S.D.	P 0073(68)0	E3	E24

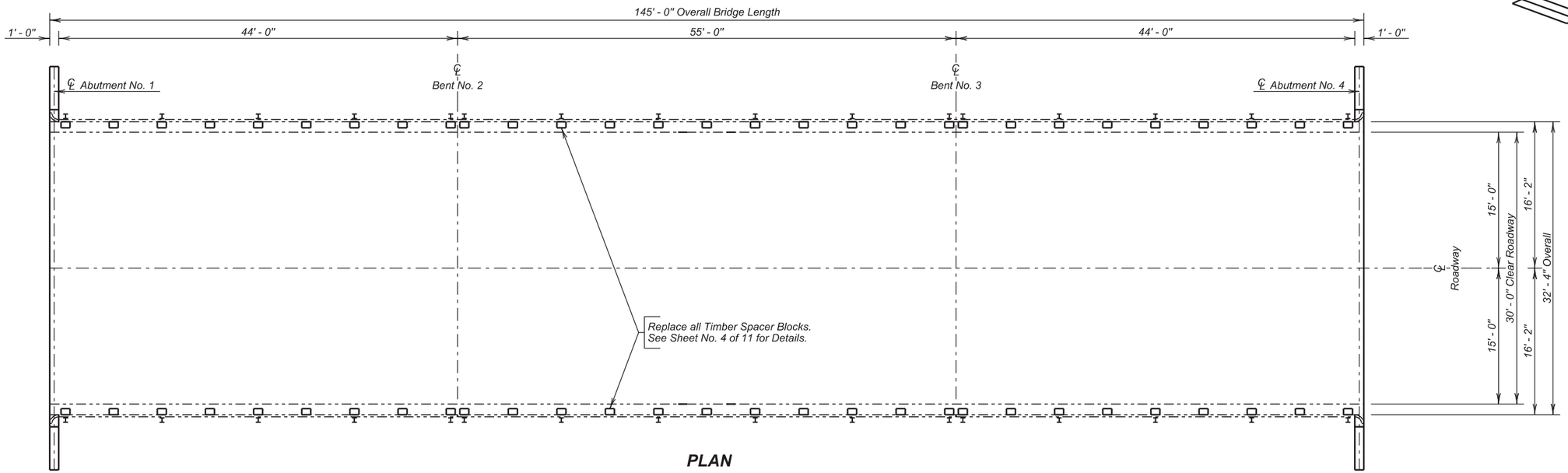

PLAN

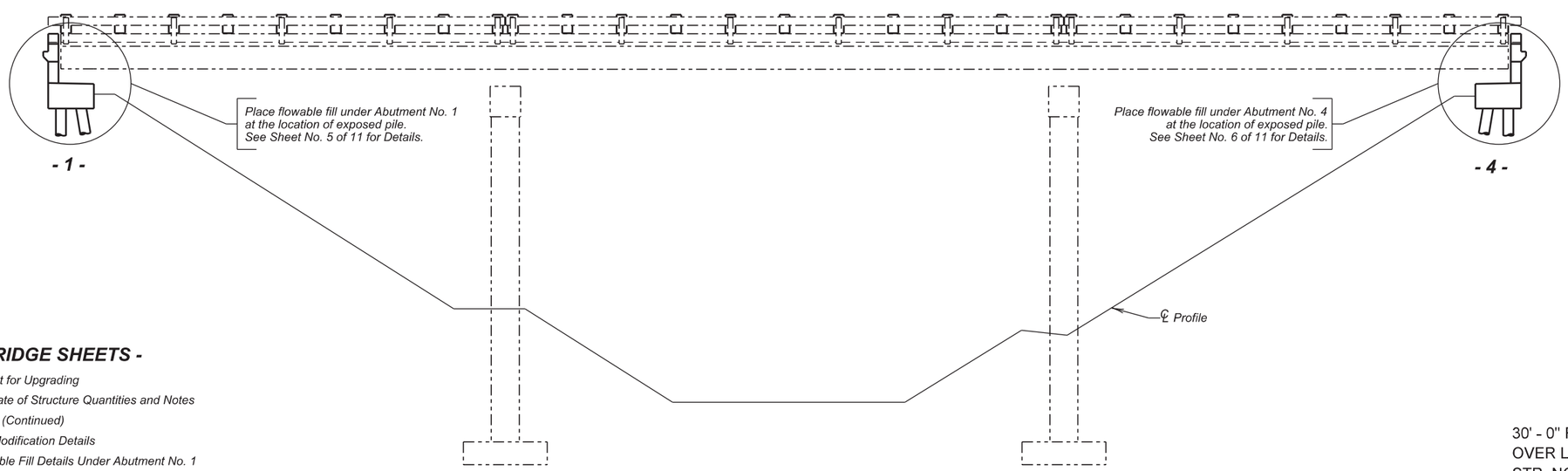

ELEVATION

INDEX OF BRIDGE SHEETS -

Sheet No. 1 - Layout for Upgrading
Sheet No. 2 - Estimate of Structure Quantities and Notes
Sheet No. 3 - Notes (Continued)
Sheet No. 4 - Rail Modification Details
Sheet No. 5 - Flowable Fill Details Under Abutment No. 1
Sheet No. 6 - Flowable Fill Details Under Abutment No. 4
Sheet Nos. 7 thru 11 - Original Construction Plans

LAYOUT FOR UPGRADING
FOR
145' - 0" I-BEAM VIADUCT

30' - 0" ROADWAY — 0° SKEW
OVER LAKE CREEK — SEC. 17-T36N-R37W
STR. NO. 04-197-215 — P 0073(68)0
PCN 04E1

BENNETT COUNTY
S. D. DEPT. OF TRANSPORTATION
JULY 2014

1 OF 11

PLANS BY :
OFFICE OF BRIDGE DESIGN, SOUTH DAKOTA DEPARTMENT OF TRANSPORTATION

DESIGNED BY	CK. DES. BY	DRAFTED BY	
KSK	KH	KR	Kevin N. Goeden
BENN04E1	04E1RB01		BRIDGE ENGINEER

ESTIMATE OF STRUCTURE QUANTITIES

ITEM NO.	DESCRIPTION	QUANTITY	UNIT
110E0022	Remove Thrie Beam Bridge Rail for Reset	290.0	Ft.
462E0200	Controlled Density Fill	8.7	Cu. Yd.
470E0460	Reset Thrie Beam Bridge Rail	290.0	Ft.

SPECIFICATIONS

1. Design Specifications: AASHTO Standard Specifications for Highway Bridges 2002 17th Edition using Working Stress Design.

2. Construction Specifications: South Dakota Standard Specifications for Roads and Bridges, 2004 Edition and Required Provisions, Supplemental Specifications and/or Special Provisions as included in the Proposal.

DETAILS AND DIMENSIONS OF EXISTING BRIDGE

All details and dimensions of the existing bridge contained in these plans, are based on the original construction plans and shop plans and are provided as information only. It is the Contractor's responsibility to inspect and verify the actual field conditions and any necessary as-built dimensions affecting the satisfactory completion of the work required for this project.

SCOPE OF BRIDGE WORK & SEQUENCE OF OPERATIONS

All work on this structure shall be accomplished with the traffic control shown in the plans. Alternate sequence of operations may be submitted by the Contractor for approval by the Engineer two weeks prior to the pre-construction meeting.

1. Remove the existing thrie beam guardrail for the first phase of construction.

2. Replace the timber spacing blocks for the first phase of construction.

3. Reset the thrie beam for the first phase of construction.

4. Switch traffic and repeat steps 1 through 3 for the second phase of construction.

5. Place Controlled Density Fill under Abutment Nos. 1 and 4.

REMOVE AND RESET BRIDGE RAIL

1. The existing wood spacer blocks will be removed and replaced. It will be necessary to disassemble the in place thrie beam guardrail in order to complete the work required by these plans. After new spacer blocks are installed, the existing thrie beam guardrail shall be replaced.

2. Wood spacer blocks shall be in conformance with Section 630.2.A of the Construction Specifications.

3. The preservative treatment of the wood spacer blocks shall be in conformance with Section 950 of the Construction Specifications. Wood spacer blocks that are trimmed, notched or cut in the field will have the cut surfaces retreated in accordance with AWPA Standard M-4.

4. All of the existing hardware used to attach the wood spacers to the steel channel rail and thrie beam shall be salvaged for use in the new construction. If any of the existing hardware cannot be salvaged for use in the new construction the Contractor shall immediately inform the Engineer and shall wait for instructions from the Engineer before proceeding.

5. Removed wood spacer blocks shall be disposed of by the Contractor. Any disposal of discarded material shall be in accordance with the Environmental Commitments.

6. Field drill holes in the existing steel rail and wood spacer blocks at locations approved by the Engineer.

7. Reassembled guardrail shall have all guardrail splices lapped in the direction of traffic.

8. No measurement shall be required from the contract payment items "Remove Thrie Beam Bridge Rail for Reset" and "Reset Thrie Beam Bridge Rail". Payment shall be based on the plan shown quantity.

9. All costs associated with disassembling the existing rail, removing existing wood spacer blocks, disposing of existing wood spacer blocks including all labor, equipment and incidentals shall be incidental to the contract price per foot for "Remove Thrie Beam Bridge Rail for Reset".

10. All costs associated with furnishing new wood spacers and notching, drilling and dapping the new wood spacers to allow for installation, including all equipment and labor, and shall be incidental to the contract price per foot for "Reset Thrie Beam Bridge Rail".

11. All costs associated with the preservative treatment of the wood spacer blocks shall be incidental to the contract price per foot for "Reset Thrie Beam Bridge Rail".

CONTROLLED DENSITY FILL

1. Controlled Density Fill shall be placed in the voids under Abutment Nos. 1 and 4.

2. Controlled Density Fill shall be a flowable mortar material. Material and mixing shall be in accordance with the Section 462 of the Standard Specifications, except as modified below. The mix shall be as follows:

Mix Design:

Material	Rate per Cubic Yard
Portland Cement, Type II	100 Lb
Fine Aggregate	2,600 Lb
Coarse Aggregate	None
Water	60 Gal
Fly Ash, Type C	300 Lb

Alternative Mix Design with Controlled Low Strength Material (CLSM):

Material	Rate per Cubic Yard
Portland Cement, Type II	200 Lb
Fine Aggregate	2,600 Lb
Coarse Aggregate	None
Water	35 Gal
W.R. Grace - Darafill (or approved equal)	1 (3 oz.)* capsule (or equivalent)

*One 3oz. Darafill capsule or equivalent CLSM performance additive (foaming admixture).

ESTIMATE OF STRUCTURE QUANTITIES AND NOTES

FOR

145' - 0" I-BEAM VIADUCT

STR. NO. 04-197-215

NOVEMBER 2014

DESIGNED BY	CK. DES. BY	DRAFTED BY	
KSK	KH	KSK	Kevin N. Goeden
BENN04E1	04E1RB02		BRIDGE ENGINEER

CONTROLLED DENSITY FILL (CONTINUED)

3. The fine aggregate shall be natural sand consisting of mineral aggregate particles conforming to the following gradation requirements:

Passing a 3/8 Inch Sieve	100%
Passing a No. 200 Sieve	0-10%

4. Either mix shown above is designed to produce a minimum compressive strength of 100 psi. The Engineer may allow adjustments to the proportion of the water at the site to provide the necessary consistency of the mix.

5. Controlled Density Fill shall be contained within the required limits with sandbags or other methods approved by the Engineer.

6. Cost for furnishing and installing the Controlled Density Fill, including sandbags, labor, material, equipment and incidentals necessary to complete the work shall be included in the contract unit price per cubic yard for Controlled Density Fill.

7. The quantity included in the plans is only an estimate. The quantity shown is based on data received in Summer of 2010. Actual field conditions may vary.

8. Do not place Controlled Density Fill during inclement weather, e.g. rain, when the subgrade is frozen, or when the subgrade contains an abnormal amount of moisture from recent rainfall as evidenced by standing water on the pavement or in the joints or cracks. Do not place Controlled Density Fill when ambient air temperature of 40˚F or less is anticipated in the 24 hour period following proposed placement. Produce and deliver the flowable fill at a minimum temperature of 50˚F. Protect flowable fill from freezing for a period of 36 hours after placement.

NOTES (CONTINUED)

FOR

145' - 0" I-BEAM VIADUCT

STR. NO. 04-197-215

NOVEMBER 2014

DESIGNED BY	CK. DES. BY	DRAFTED BY	
KSK	KH	KSK	Kevin N. Goeden
BENN04E1	04E1RB03		BRIDGE ENGINEER

STATE OF	PROJECT	SHEET NO.	TOTAL SHEETS
S.D.	P 0073(68)0	E6	E24

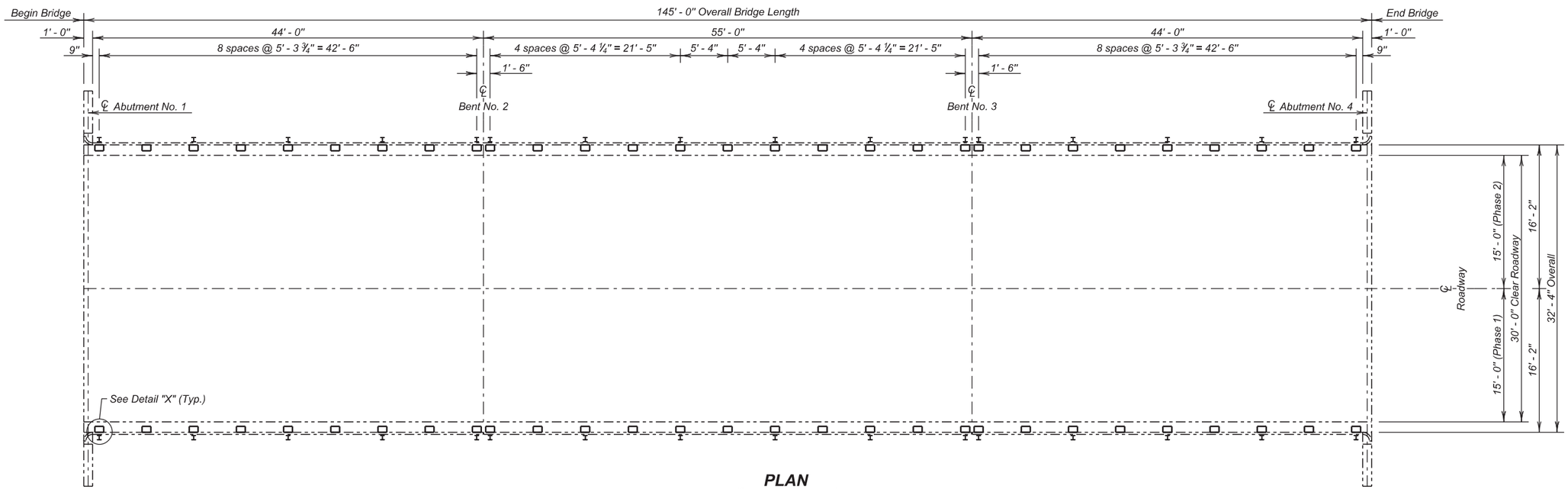

PLAN
(Spacer Block Layout)

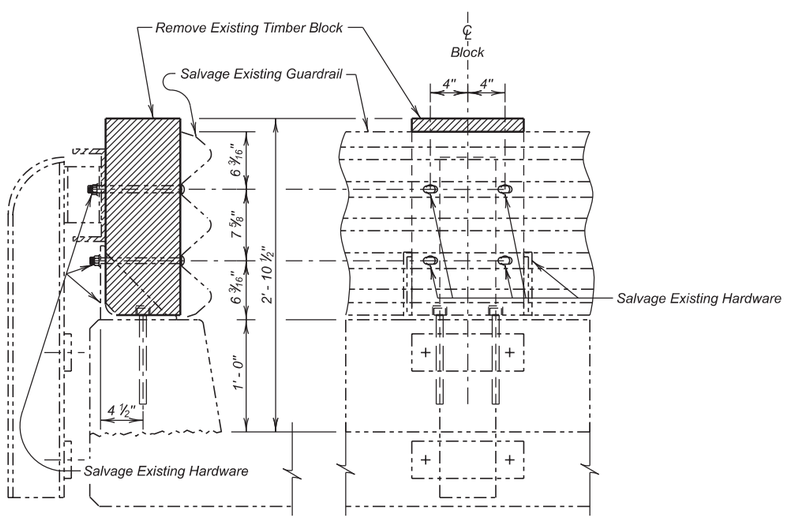

DETAIL "X"
(Existing Spacer Block Detail)

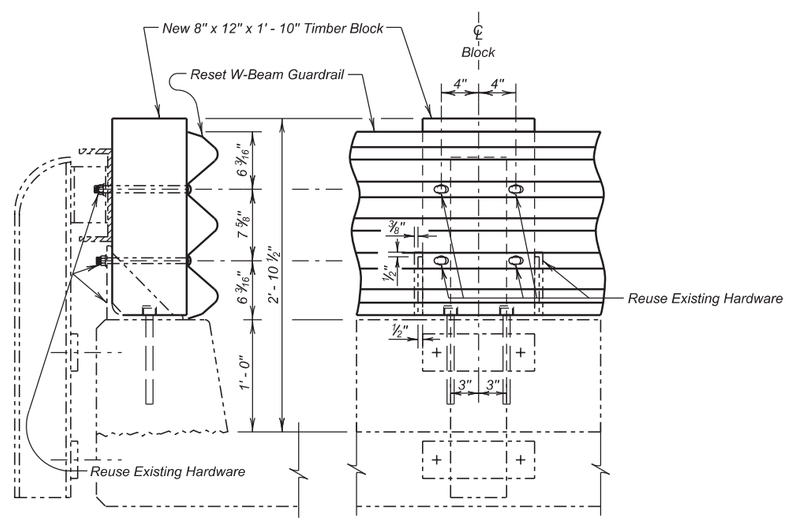

DETAIL "X"
(New Spacer Block Detail)

ESTIMATED QUANTITIES

ITEM	UNIT	QUANTITY Phase I	QUANTITY Phase 2
Remove Thrie Beam Bridge Rail for Reset	Ft.	145.0	145.0
✳ Reset Thrie Beam Bridge Rail	Ft.	145.0	145.0

✳ Includes 29 Timber Spacer Blocks both phases.

RAIL MODIFICATIONS DETAILS
FOR
145' - 0" I-BEAM VIADUCT

30' - 0" ROADWAY — 0° SKEW
OVER LAKE CREEK — SEC. 17-T36N-R37W
STR. NO. 04-197-215 — P 0073(68)0

BENNETT COUNTY
S. D. DEPT. OF TRANSPORTATION
NOVEMBER 2014

DESIGNED BY	CK. DES. BY	DRAFTED BY	
KSK	KH	KR	Kevin N. Goeden
BENN04E1	04E1RB04		BRIDGE ENGINEER

STATE OF	PROJECT	SHEET NO.	TOTAL SHEETS
S.D.	P 0073(68)0	E7	E24

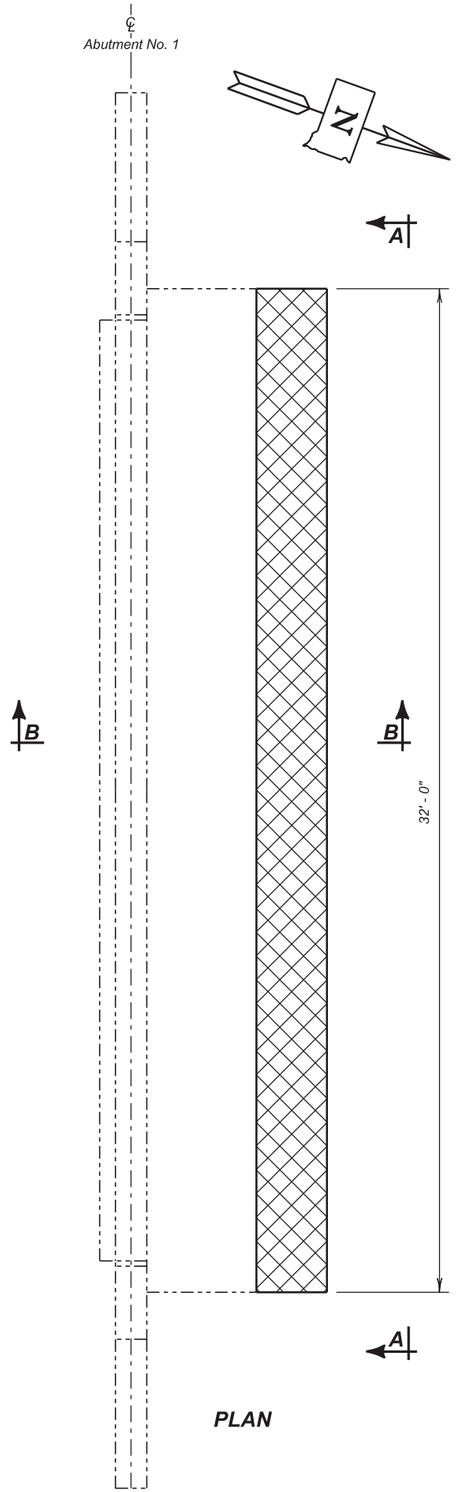

PLAN

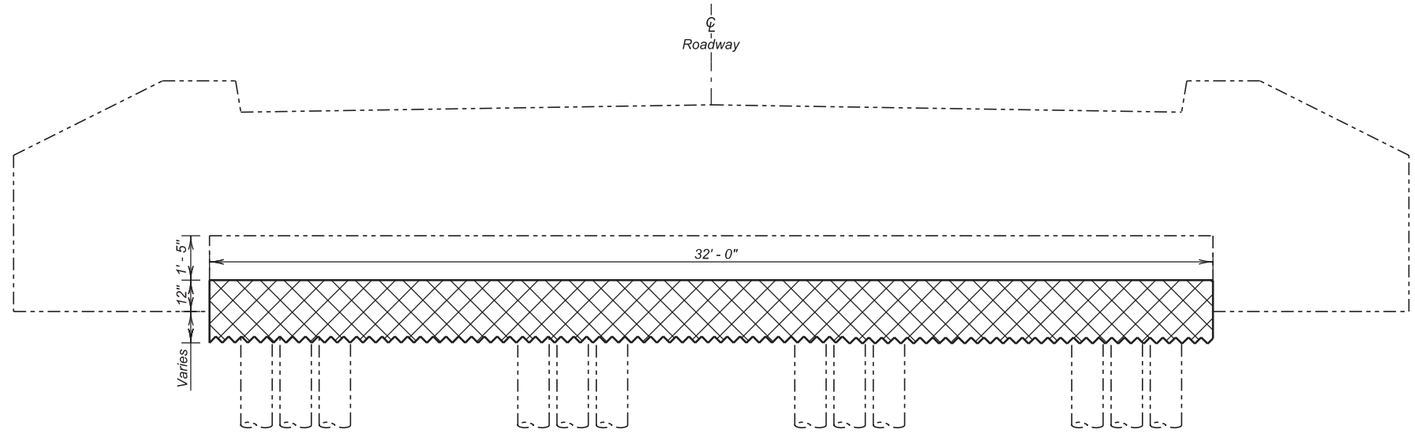

VIEW A - A

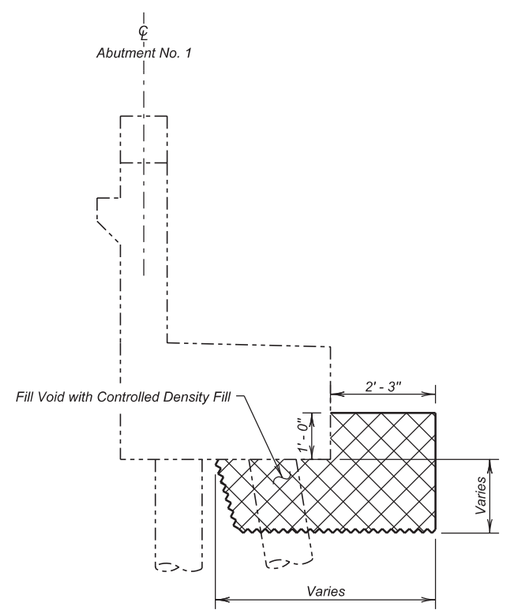

SECTION B - B

Controlled Density Fill

FLOWABLE FILL DETAILS
UNDER ABUTMENT NO. 1

FOR

145' - 0" I-BEAM VIADUCT

30' - 0" ROADWAY — 0° SKEW
OVER LAKE CREEK — SEC. 17-T36N-R37W
STR. NO. 04-197-215 — P 0073(68)0

BENNETT COUNTY

S. D. DEPT. OF TRANSPORTATION

NOVEMBER 2014

DESIGNED BY	CK. DES. BY	DRAFTED BY	
KSK	KH	KR	Kevin N. Goeden
BENN04E1	04E1RB05		BRIDGE ENGINEER

STATE OF	PROJECT	SHEET NO.	TOTAL SHEETS
S.D.	P 0073(68)0	E8	E24

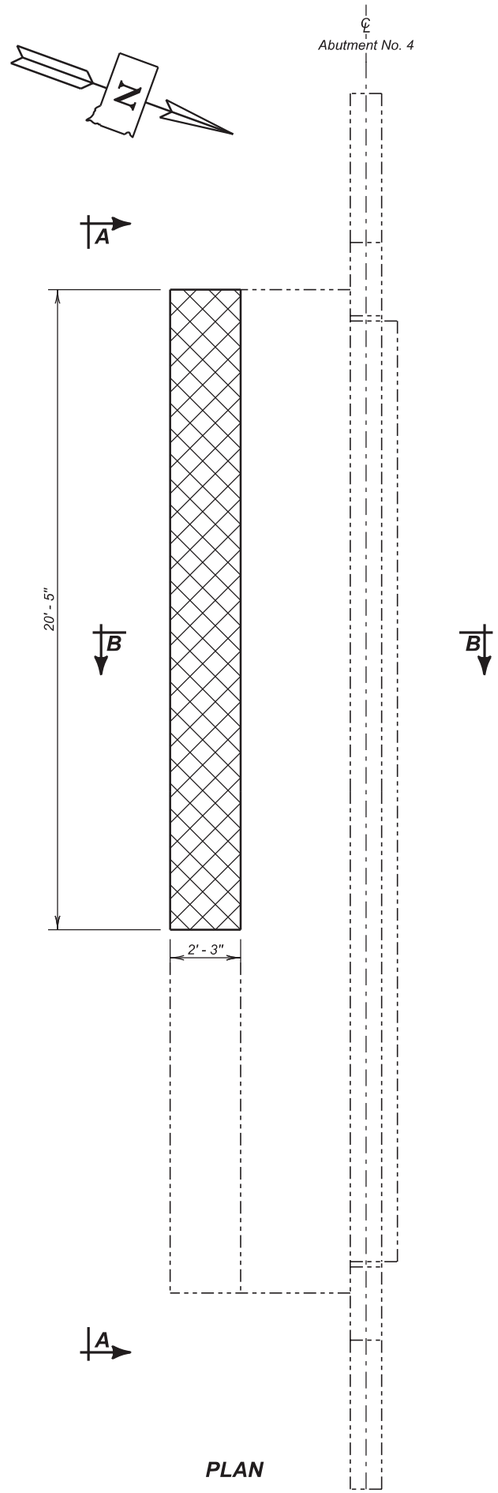

PLAN

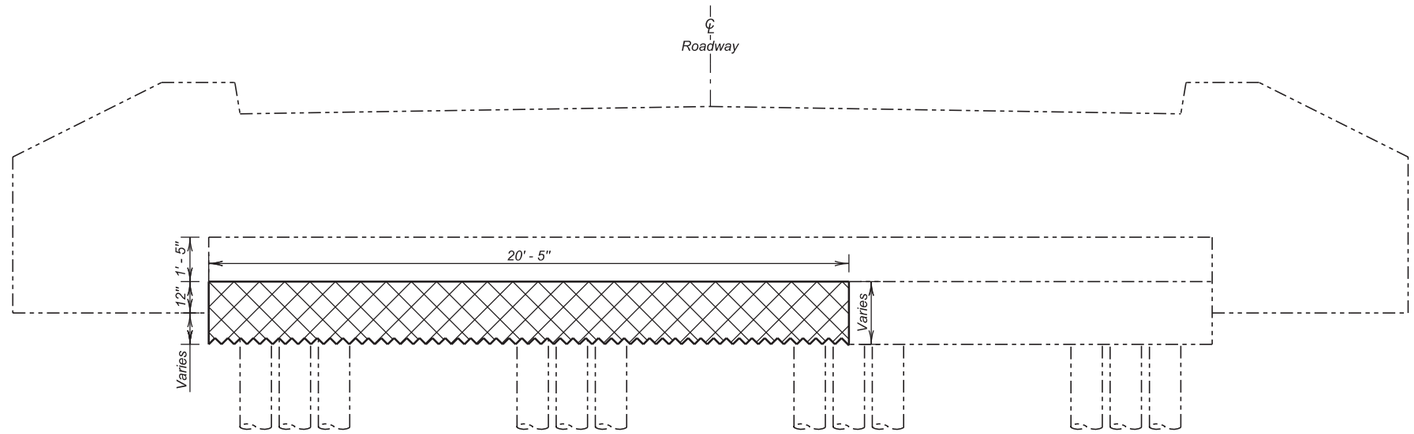

VIEW A - A

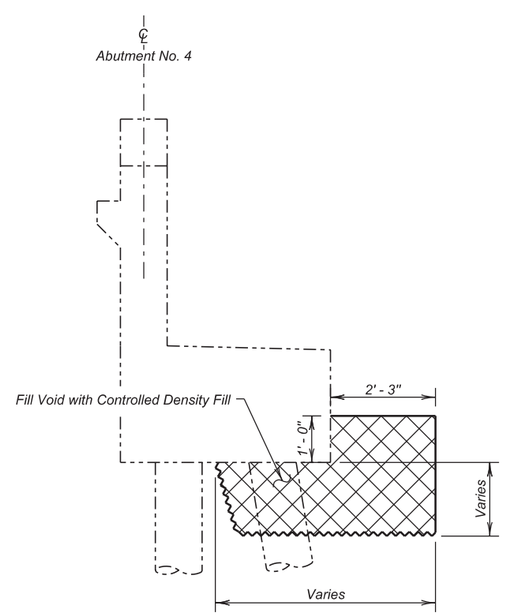

SECTION B - B

Controlled Density Fill

ESTIMATED QUANTITIES (For 2 Abutments)		
ITEM	UNIT	QUANTITY
Controlled Density Fill	Cu. Yd.	8.7

FLOWABLE FILL DETAILS UNDER ABUTMENT NO. 4

FOR

145' - 0" I-BEAM VIADUCT

30' - 0" ROADWAY — 0° SKEW
OVER LAKE CREEK — SEC. 17-T36N-R37W
STR. NO. 04-197-215 — P 0073(68)0

BENNETT COUNTY

S. D. DEPT. OF TRANSPORTATION

NOVEMBER 2014

DESIGNED BY	CK. DES. BY	DRAFTED BY	
KSK	KH	KR	Kevin N. Boeder
BENN04E1	04E1RB06		BRIDGE ENGINEER

STATE OF	PROJECT	SHEET NO.	TOTAL SHEETS
S.D.	P 0073(68)0	E9	E24

-X071-

INDEX OF BRIDGE SHEETS—

Sheet No. 1 - General Drawing and Quantities
Sheet No. 2 - Subsurface Investigations
Sheet No. 3 - Details of Standard Reinforced Concrete Sill **N3-WP-143-30**
Sheet No. 4 - Bent Details
Sheet No. 5 - Details of Superstructure
Sheet No. 6 - Details of Superstructure
Sheet No. 7 - Details of Standard Joints **NJ-30** (7-31-63)
Sheet No. 8 - Erection Data
Sheet No. 9 - Standard Railing and Drain Details **RRA-1** (5-3-63)

NOTE:—
T.S. at C. El. = Top of Slab at Curb Elevation.
T.S. at ℄ El. = Top of Slab at Centerline Elevation.

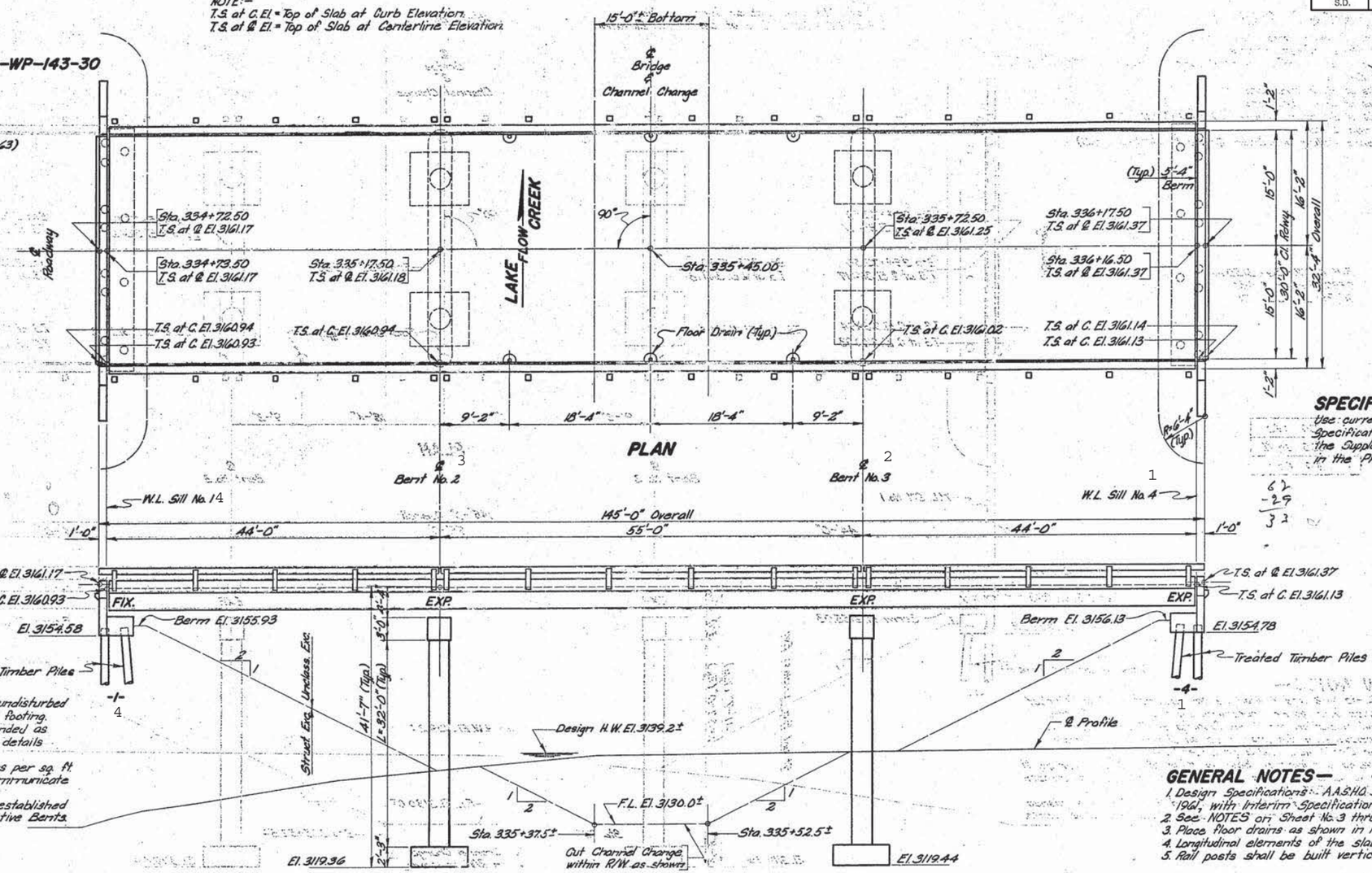

B.M. No. 32 - Elev. 3150.14
DESC.- Re-bar & Gds.
91' Rt. Sta. 335+31

B.M. No. 33 - Elev. 3149.70
DESC.- Re-bar & Gds.
145' Lt. Sta. 336+76

Q	800 c.f.s.
A	208 sq. ft.
V	3.9 f.p.s.

SPECIFICATION NOTE—

Use current South Dakota Standard Specifications for Roads and Bridges and the Supplemental Specifications as included in the Proposal.

EXCAVATION NOTES—

1. Footings for Bents No. 2 and 3 shall be cast against solid undisturbed Sand and carried into same approximately the depth of footing. Limits of Sand excavation for these footings shall be bounded as nearly as practicable by the neat lines as shown in the details of footings for Bents No. 2 and 3 on Sheet No. 4 of 9.
2. Sand shall develop a minimum bearing value of 3.50 tons per sq. ft. If the bearing value is less than 3.50 tons per sq. ft., communicate with the BRIDGE SECTION.
3. Final footing elevations for Bents No. 2 and 3 shall be established before ordering column reinforcing steel for the respective Bents.

GENERAL NOTES—

1. Design Specifications: A.A.S.H.O. Specifications for Highway Bridges, 1961, with Interim Specifications for 1961, 1962.
2. See NOTES on Sheet No. 3 thru 9.
3. Place floor drains as shown in Plan (6 Required).
4. Longitudinal elements of the slab shall conform to the vertical curve.
5. Rail posts shall be built vertical.

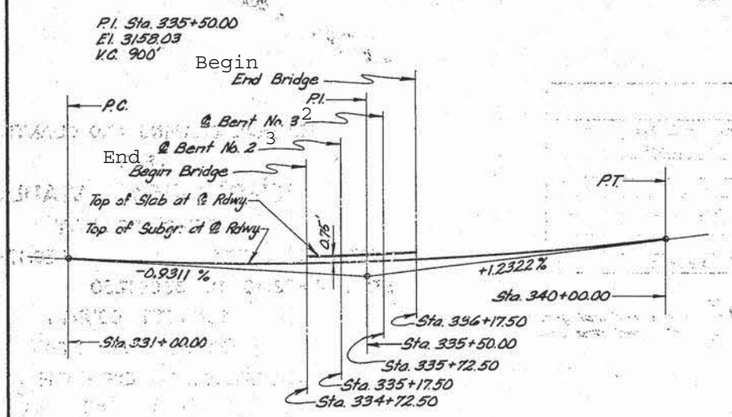

SUBGRADE CURVE DATA

ESTIMATED QUANTITIES

ITEM	Cl "A" Conc. Cu. Yds.	Steel - Lbs. Reinf.	Steel - Lbs. Struct.	Type "A" Steel Railing - Lin. Ft.	Timber Piles - Lin. Ft. Treated Timber	Timber Piles - Lin. Ft. ◊ Test	Excavation - Cu. Yds. Struct.	Excavation - Cu. Yds. △ Unclass.	10 ft. + 12 ft. Lin. Ft.
Superstructure	108.2	33,384	75,880	282.8					
Sill No. 1	21.4	2,050	480		11 @ 40' = 440	1 @ 45' = 45	16	10.4	1,235.4
Sill No. 4	21.4	2,050	1,215		11 @ 25' = 275	1 @ 30' = 30	16	15.3	1,054.2
Bent No. 2	35.8	4,963					170	149.3	
Bent No. 3	35.8	4,963					188	173.6	
Totals	212.6	57,410	77,575	282.8	715	75	690	△ 38,519	2,289.6

△ See Grading Plan for Unclassified Excavation.
◊ One Treated Timber Test Pile shall be driven at Sills No. 1 and No. 4 before remaining piles are ordered.
PILE NOTE: Piles driven at Sills No. 1 and No. 4 including Test Piles, shall obtain their full bearing (24 Tons) in the natural ground below the new embankment, elevations 3130.5± and 3139.5± respectively. Pre-bored holes through the fill are required and shall have a minimum diameter 2" larger than the nominal diameter (3" from the butt) of the pile.

F.E. 5-12-65 RBJ

ORIGINAL CONSTRUCTION PLANS

GENERAL DRAWING AND QUANTITIES
FOR
145'-0" I-BEAM VIADUCT
30'-0" ROADWAY

OVER LAKE CREEK — SEC. 17-T36N-R37W
STA. 334+72.50 TO 336+17.50 — F027-1(1)
BENNETT COUNTY
SOUTH DAKOTA — H20-S16-44

DEPARTMENT OF HIGHWAYS
STR. NO. 04-197-215 SEPT. 1963 (7) OF (11)

DESIGNED BY	DRAWN BY	CHECKED BY	APPROVED
	L.G.	O.M.C.	BRIDGE ENGINEER

P 0073(39)0
BENNETT COUNTY

STATE OF	PROJECT	SHEET NO.	TOTAL SHEETS
S.D.	P 0073(68)0	E10	E24

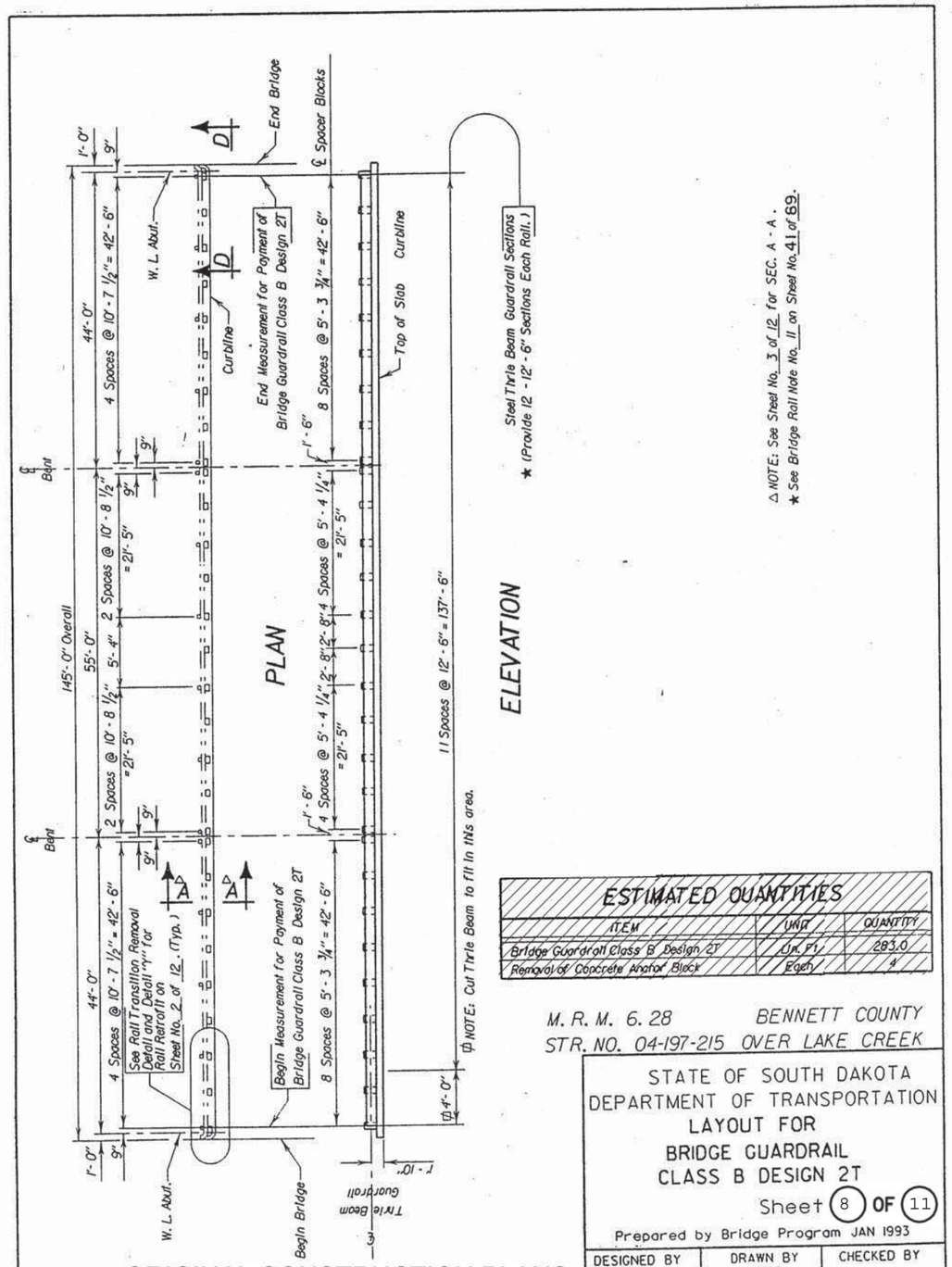

ESTIMATED QUANTITIES		
ITEM	UNIT	QUANTITY
Bridge Guardrail Class B Design 2T	Lin. Ft.	283.0
Removal of Concrete Anchor Block	Each	4

M. R. M. 6.28 BENNETT COUNTY
STR. NO. 04-197-215 OVER LAKE CREEK

STATE OF SOUTH DAKOTA
DEPARTMENT OF TRANSPORTATION
LAYOUT FOR
BRIDGE GUARDRAIL
CLASS B DESIGN 2T

Sheet 8 OF 11

Prepared by Bridge Program JAN 1993

DESIGNED BY	DRAWN BY	CHECKED BY
PDN	W.C.P.	
BENN4281	4281PA01	

ORIGINAL CONSTRUCTION PLANS

STATE OF	PROJECT	SHEET NO.	TOTAL SHEETS
S.D.	P 0073(68)0	E11	E24

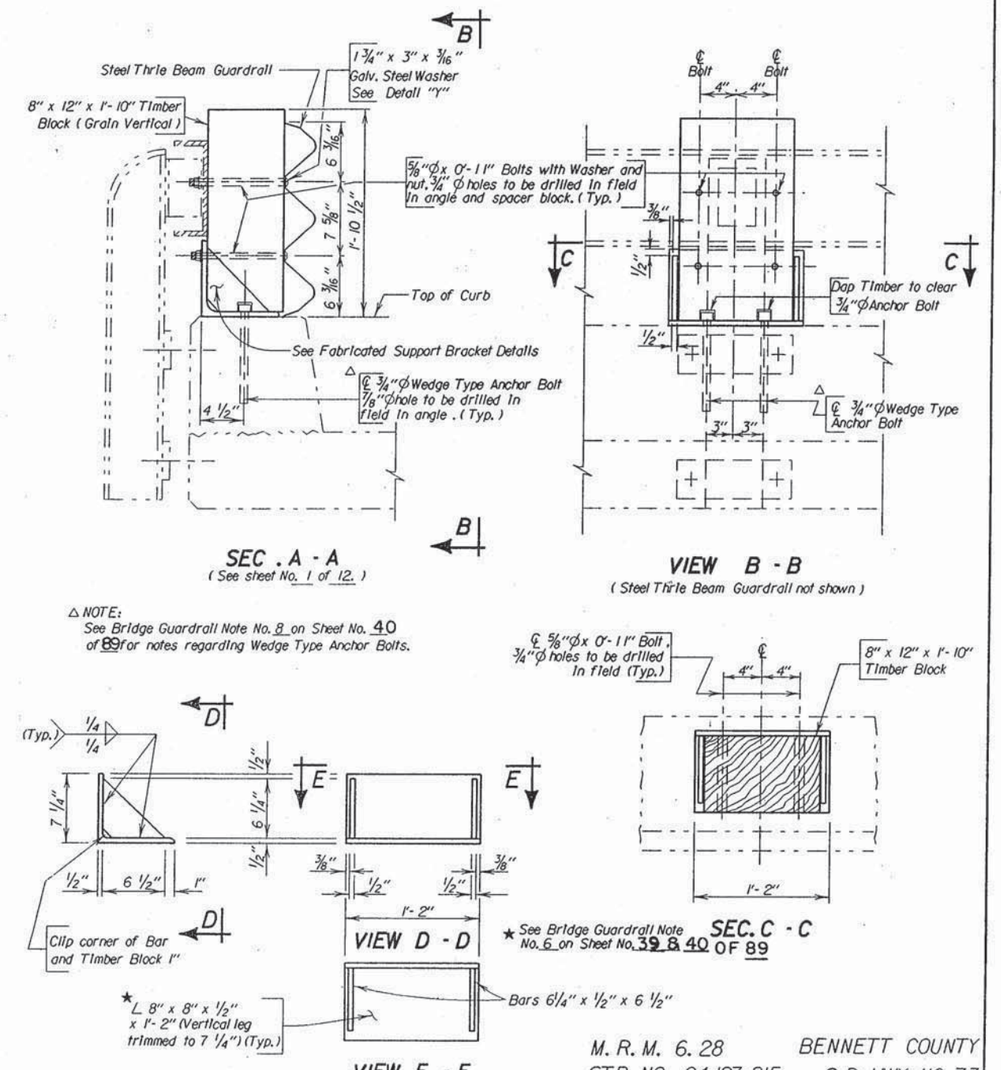

△ NOTE:
See Bridge Guardrail Note No. 8 on Sheet No. 40 of 89 for notes regarding Wedge Type Anchor Bolts.

FABRICATED SUPPORT BRACKET

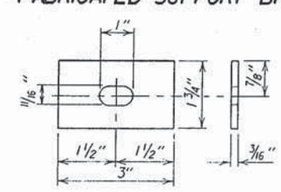

DETAIL "Y"

M. R. M. 6.28 BENNETT COUNTY
STR. NO. 04-197-215 S.D. HWY NO. 73

STATE OF SOUTH DAKOTA
DEPARTMENT OF TRANSPORTATION
DETAILS OF
CLASS B DESIGN 2T BRIDGE
GUARDRAIL FOR TYPE RA-1
RAILING

Sheet 9 OF 11

Prepared by Bridge Program JAN 1993

DESIGNED BY	DRAWN BY	CHECKED BY
PDN	W.C.P.	
BENN4281	4281PA04	

ORIGINAL CONSTRUCTION PLANS

SLOT ALIGNMENT TABLE

✳ TEMP. (°F)	"d" (In)
-30	3/4"
0	5/16"
30	1/8"
45	0"
60	1/8"
90	5/16"
120	3/4"

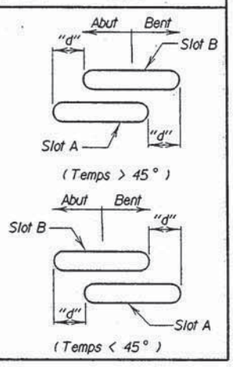

NOTE :
Place 5/8"Ø Post Bolt with 7/8" collar in slotted holes except as noted.

✳ Steel Girder Temperatures obtained early in the morning or at some time when reasonable stable temperatures are available.

Do not attach Guardrail to the last 8" x 12" Spacer Block. See Detail "V".

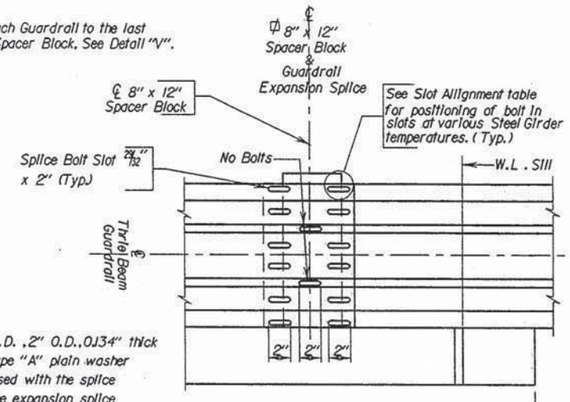

A 1 1/16" I.D. ,2" O.D.,.0134" thick narrow type "A" plain washer shall be used with the splice bolts at the expansion splice and placed in contact with the slotted holes .

See Partial Plan Details on Sheet No. 6 of 12 for slot location and lap direction.

VIEW D - D

(See Rail Retrofit Sheet No. 1 of 12.)

End Bridge

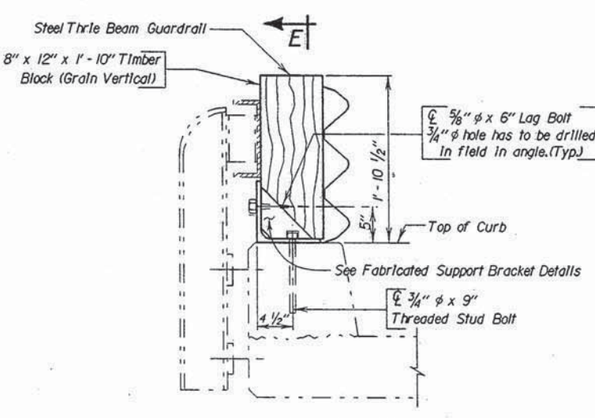

DETAIL "V"

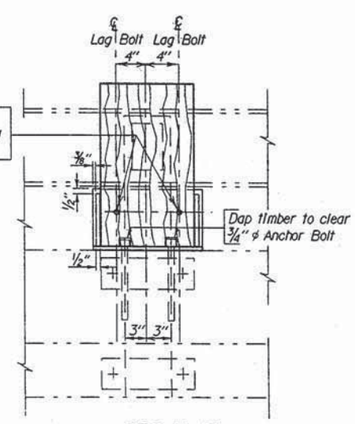

SEC. E - E

(Steel Thrie Beam Guardrail not shown)

ORIGINAL CONSTRUCTION PLANS

M. R. M. 6. 28 BENNETT COUNTY
STR. NO. 04-197-215 S. D. HWY. 73

STATE OF SOUTH DAKOTA
DEPARTMENT OF TRANSPORTATION

DETAILS OF
CLASS B DESIGN 2T BRIDGE
GUARDRAIL FOR TYPE RA-1
RAILING

Sheet 10 OF 11

Prepared by Bridge Program JAN 1993

DESIGNED BY	DRAWN BY	CHECKED BY
PDW BENN428I	W.C.P. 428IPA05	

P 0073(39)0
BENNETT COUNTY

STATE OF S.D.	PROJECT P 0074(68)0	SHEET NO. E12	TOTAL SHEETS E24

STATE OF	PROJECT	SHEET NO.	TOTAL SHEETS
S.D.	P 0073(68)0	E13	E24

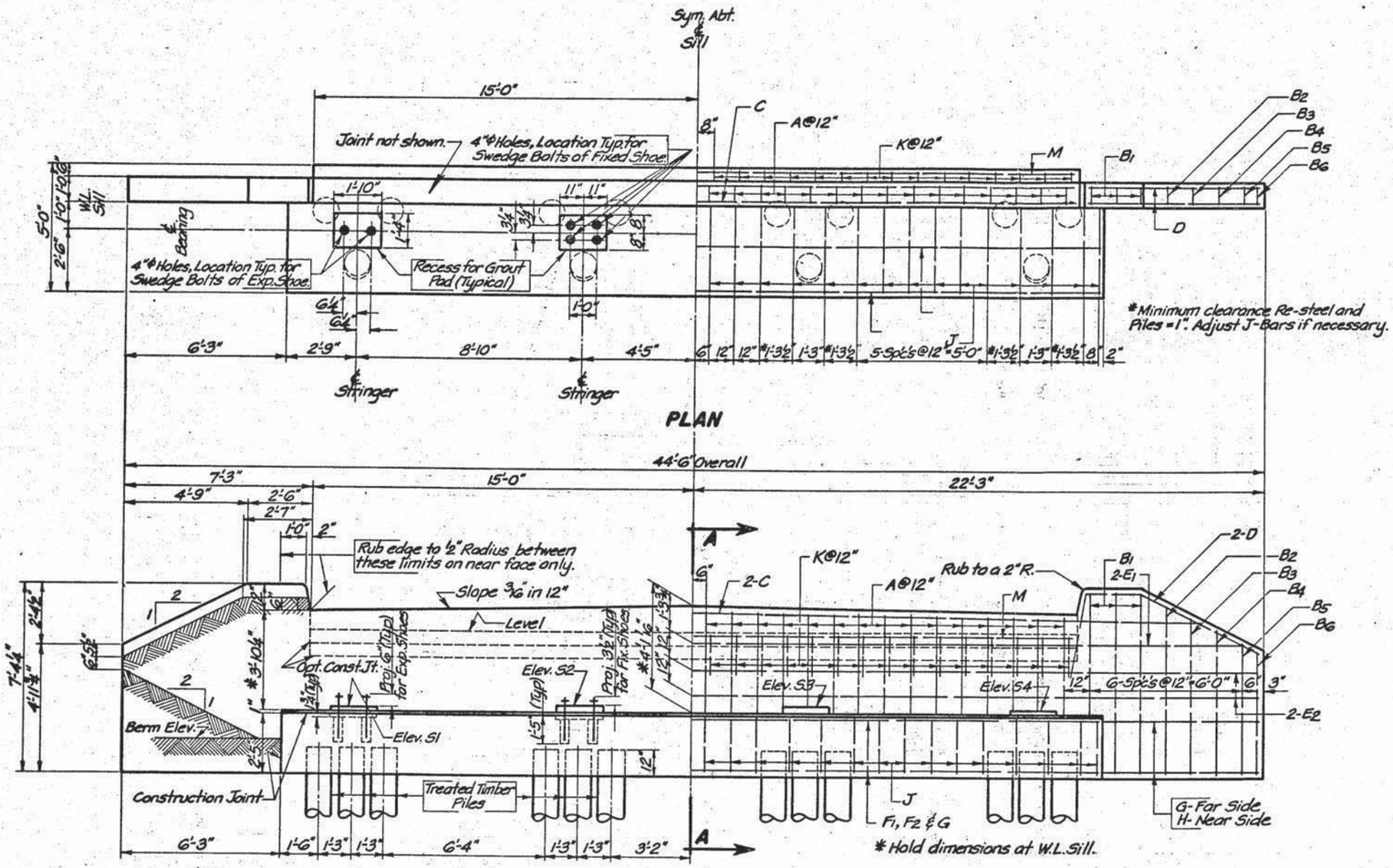

NOTE: For Grout Pad Elevations S1, S2, S3 & S4 see Table on "Erection Data."

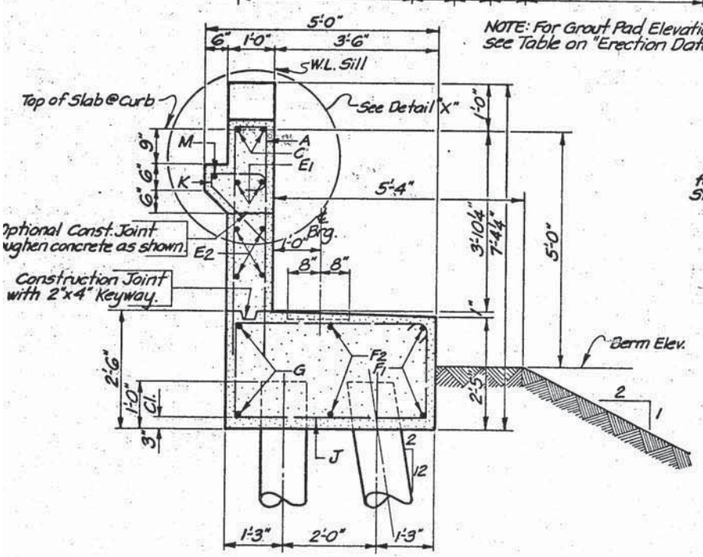

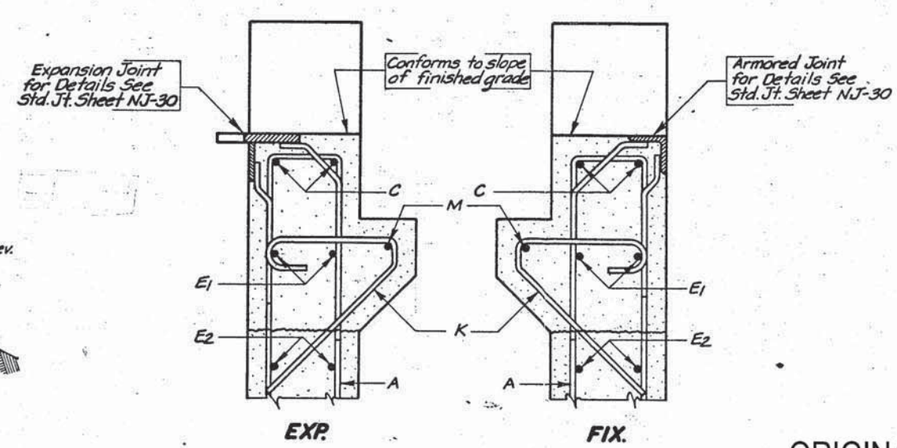

REINFORCING SCHEDULE

Mk.	No.	Size	Length	Type
A	30	4	10'-9"	S10
B1	6	4	16'-0"	T1
B2	2	4	15'-0"	T1
B3	2	4	14'-0"	T1
B4	2	4	13'-0"	T1
B5	2	4	12'-0"	T1
B6	2	4	11'-6"	T1
C	2	6	39'-6"	Str.
D	4	5	9'-9"	16A
E1	2	4	43'-0"	Str.
E2	4	4	44'-0"	Str.
F1	2	11	31'-9"	Str.
F2	2	8	31'-9"	Str.
G	2	11	44'-0"	Str.
H	4	4	7'-3"	Str.
J	30	4	13'-3"	T1
K	30	4	3'-6"	12
M	1	4	29'-6"	Str.

Bending Details

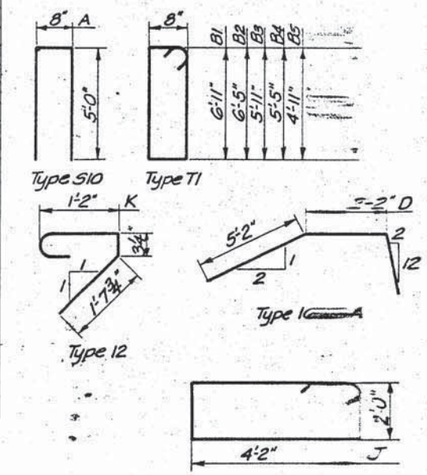

Note: All dimensions are out to out of bars.

ESTIMATED QUANTITIES

Item	Unit	Quantity
Class "A" Concrete	Cu. Yds.	φ 21.4
Reinforcing Steel	Lbs.	2260
Structural Steel	Lbs.	—
Structure Excavation	Cu. Yds.	6
Treated Timber Piles	No.	2

φ Includes 0.1 Cu. Yds. for grout.
+ For Struct. Steel Quantity see Std. Joint Sheet NJ-30.

GENERAL NOTES.—

1. Design Specifications: A.A.S.H.O. Specifications for Highway Bridges, 1961; with Interim Specifications for 1961, 1962.
2. All exposed edges shall be chamfered one inch except as shown.
3. Chamfer grout pads ½".
4. Use 2" clear cover on all reinforcing steel except as shown.
5. Specifications for grout shall be the same as for Class "A" Concrete except the maximum size of aggregate shall be reduced to ¼". The quantity of Portland Cement Grout is included in and shall be paid for as Class "A" Concrete.
6. Piling shall develop a minimum bearing value of 24 Tons per pile.
7. See General Drawing for lengths of Treated Timber Piles.
8. Design Loading: H20-S16-44 A.A.S.H.O.
9. Unit Stresses: Resteel fs = 20,000 p.s.i.
   Concrete fc = 1600 p.s.i.
10. All reinforcing steel bars shall conform to A.S.T.M. Specifications A305 and A15 Intermediate Grade.
11. All Swedge Bolts shall be 1¼"φ with Heavy Hex Nut and Cut washer. Length = 1'-[illegible] for Expansion Shoes and 1'-6" for Fixed Shoes. (Listed as structural steel in Superstructure.)

DETAILS OF

STANDARD REINFORCED CONCRETE SILL

FOR

143'-0" 3-SPAN, CONT., COMP., I-BEAM UNIT

30'-0" ROADWAY 0° SKEW

STR. NO. 04-197-215 SOUTH DAKOTA

DEPARTMENT OF HIGHWAY

AUG. 1963 H20 — 11 OF 11

ORIGINAL CONSTRUCTION PLANS

DESIGNED BY	DRAWN BY	CHECKED BY	APPROVED
	R.C.M.	C.H.J.	Chief Engineer

N3-WP-143-30

STATE OF	PROJECT	SHEET NO.	TOTAL SHEETS
S.D.	P 0073(65)9	E14	E24

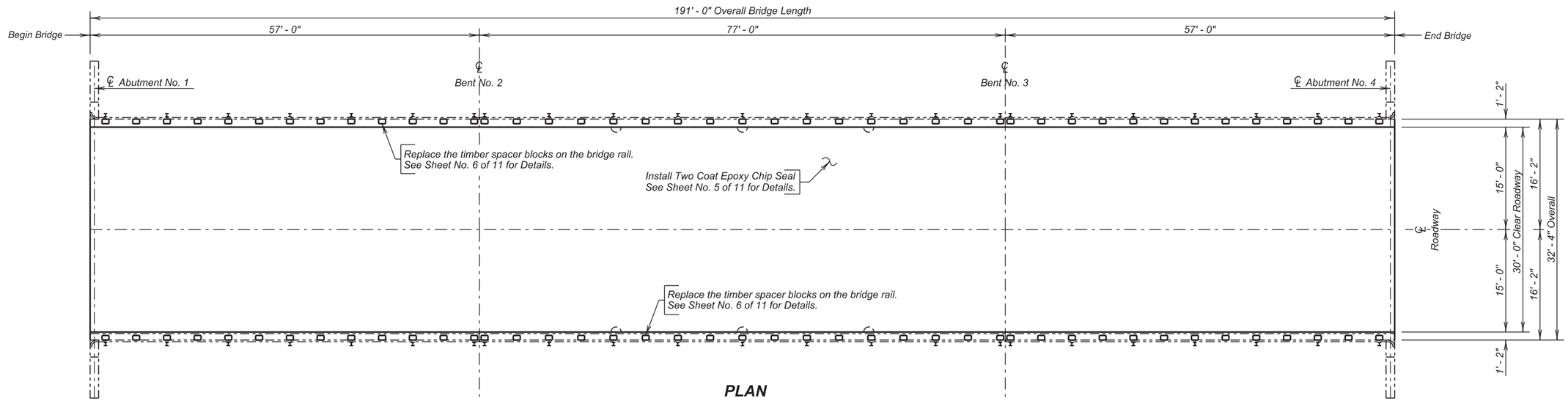

PLAN

INDEX OF BRIDGE SHEETS -

Sheet No. 1 - Layout for Upgrading
Sheet No. 2 - Estimate of Structure Quantities and Notes
Sheet No. 3 - Notes (Continued)
Sheet No. 4 - Deck Delamination Details
Sheet No. 5 - Two Coat Epoxy Chip Seal Layout
Sheet No. 6 - Rail Modification Details
Sheet No. 7 thru 11 - Original Construction Plans

LAYOUT FOR UPGRADING
FOR
191' - 0" PRESTRESSED GIRDER BRIDGE

30' - 0" ROADWAY — 0° SKEW
OVER LITTLE WHITE RIVER — SEC. 31-T37N-R37W
STR. NO. 04-190-180 — P 0073(65)9
PCN 03AA

BENNETT COUNTY
S. D. DEPT. OF TRANSPORTATION
JULY 2014

PLANS BY :
OFFICE OF BRIDGE DESIGN, SOUTH DAKOTA DEPARTMENT OF TRANSPORTATION

DESIGNED BY	CK. DES. BY	DRAFTED BY	
KSK	KH	KR	Kevin N. Goeden
BENN03AA	03AARA01		BRIDGE ENGINEER

ESTIMATE OF STRUCTURE QUANTITIES

ITEM NO.	DESCRIPTION	QUANTITY	UNIT
110E0022	Remove Thrie Beam Bridge Rail for Reset	382	Ft.
460E0172	Concrete Patching Material, Bridge Deck	26.5	Cu. Ft.
470E0460	Reset Thrie Beam Bridge Rail	382	Ft
491E0015	Two Coat Bridge Deck Epoxy Chip Seal	636.6	Sq. Yd.
491E0110	Abrasive Blasting of Bridge Deck	636.6	Sq. Yd.
491E0120	Bridge Deck Grinding	636.6	Sq. yd.
491E0130	Concrete Removal, Class A	4.5	Sq. Yd.
491E0140	Concrete Removal, Class B	4.5	Sq. Yd.

SPECIFICATIONS

1. Design Specifications: AASHTO Standard Specifications for Highway Bridges 2002 17th Edition using Working Stress Design.

2. Construction Specifications: South Dakota Standard Specifications for Roads and Bridges, 2004 Edition and Required Provisions, Supplemental Specifications and Special Provisions as included in the Proposal.

DETAILS AND DIMENSIONS OF EXISTING BRIDGE

All details and dimensions of the existing bridge contained in these plans, are based on the original construction plans and shop plans and are provided as information only. It is the Contractor's responsibility to inspect and verify the actual field conditions and any necessary as-built dimensions affecting the satisfactory completion of the work required for this project.

SCOPE OF BRIDGE WORK & SEQUENCE OF OPERATIONS

All work on this structure shall be accomplished with the traffic control shown in the plans. Alternate sequence of operations may be submitted by the Contractor for approval by the Engineer two weeks prior to the pre-construction meeting.

1. Perform bridge deck grinding on the entire bridge deck.

2. Repair the bridge deck by removing all loose and delaminated concrete from the bridge deck surface for the first phase of construction.

3. Clean the bridge deck surface with abrasive blasting for the first phase of construction.

4. Place the Two Coat Epoxy Bridge Deck Chip Seal for the first phase of construction.

5. Remove the thrie beam guardrail for the first phase of construction.

6. Replace the timber block spacers for the first phase of construction.

7. Reset the thrie beam guardrail for the first phase of construction.

8. Switch Traffic and repeat steps 2 through 7 for the second phase of construction.

GENERAL CONSTRUCTION NOTES

1. All exposed concrete edges or corners shall be chamfered ¾ inch except where noted otherwise in the plans. Match the existing chamfer if the chamfer differs.

2. Use 2" clear cover on all reinforcing steel except as shown otherwise.

REMOVE AND RESET BRIDGE RAIL

1. The existing wood spacer blocks will be removed and replaced. It will be necessary to disassemble the in place thrie beam guardrail in order to complete the work required by these plans. After new spacer blocks are installed, the existing thrie beam guardrail shall be replaced.

2. Wood spacer blocks shall be in conformance with Section 630.2A. of the Construction Specifications.

3. The preservative treatment of the wood spacer blocks shall be in conformance with Section 950 of the Construction Specifications. Wood spacer blocks that are trimmed, notched or cut in the field will have the cut surfaces retreated in accordance with AWPA Standard M-4.

4. All of the existing hardware used to attach the wood spacers to the steel channel rail and thrie beam shall be salvaged for use in the new construction. If any of the existing hardware cannot be salvaged for use in the new construction the Contractor shall immediately inform the Engineer and shall wait for instructions from the Engineer before proceeding.

5. Removed wood spacer blocks shall be disposed of by the Contractor. Any disposal of discarded material shall be in accordance with the Environmental Commitments.

6. Field drill holes in the existing steel rail and wood spacer blocks at locations approved by the Engineer.

7. Reassembled guardrail shall have all guardrail splices lapped in the direction of traffic.

8. No measurement shall be required from the contract payment items "Remove Thrie Beam Bridge Rail for Reset" and "Reset Thrie Beam Bridge Rail". Payment shall be based on the plan shown quantity.

9. All costs associated with disassembling the existing rail, removing existing wood spacer blocks, disposing of existing wood spacer blocks including all labor, equipment and incidentals shall be incidental to the contract unit price per foot for "Remove Thrie Beam Bridge Rail for Reset".

10. All costs associated with furnishing new wood spacers and notching, drilling and dapping the new wood spacers to allow for installation, including all equipment and labor, and shall be incidental to the contract unit price per foot for "Reset Thrie Beam Bridge Rail".

11. All costs associated with the preservative treatment of the wood spacer blocks shall be incidental to the contract unit price per foot for "Reset Thrie Beam Bridge Rail".

REMOVAL OF LOOSE AND DELAMINATED CONCRETE

1. This work consists of preparation of the existing bridge deck for Two Coat Epoxy Bridge Deck Chip Seal by removing and replacing the loose and delaminated concrete.

2. Concrete used to repair the deck surface shall be in accordance with the Concrete Patching Material notes in this set of plans.

3. Concrete Removal on the bridge deck shall be divided into the following two classes:

   a. Concrete Removal, Class A: Concrete Removal, Class A, shall consist of the removal of delaminated and visibly loose concrete and any bituminous patches (when present) from the top of existing bridge deck down to a depth no deeper than the top of the top mat of bridge deck reinforcing steel. Concrete removed below the top of the top mat of bridge deck reinforcing steel incidental to Class A Removal will be considered a part of Class A removal. When grinding is specified, the Concrete Removal, Class A, shall be done after the bridge deck has been ground.

   b. Concrete Removal, Class B: Concrete Removal, Class B, areas shall be determined by the Engineer after completion of the Concrete Removal, Class A has been accomplished. Concrete Removal, Class B shall consist of the removal of delaminated and visibly loose concrete that exists below the bottom limits of the Concrete Removal, Class A (below the top of the top mat of reinforcing steel).

ESTIMATE OF STRUCTURE QUANTITIES AND NOTES

FOR

191' - 0" PRESTRESSED GIRDER BRIDGE

STR. NO. 04-190-180

NOVEMBER 2014

DESIGNED BY	CK. DES. BY	DRAFTED BY	
KSK	KH	KSK	Kevin N. Goeden
BENN03AA	03AANOTA		BRIDGE ENGINEER

REMOVAL OF LOOSE AND DELAMINATED CONCRETE (CONTINUED)

4. Concrete Removal shall be by jackhammers and chipping hammers or other methods as approved by the Engineer. Jackhammers and chipping hammers shall be used as follows:

    a. Jackhammers heavier than 30 pounds will not be permitted.

    b. Chipping hammers heavier than 15 pounds will not be permitted for removing concrete below the top of the top mat of bridge deck reinforcing steel.

    c. Jackhammers and chipping hammers shall not be operated at an angle in excess of 45 degrees measured from the surface of the concrete.

    d. Extreme care shall be taken when using jackhammers and chipping hammers to assure that existing reinforcing steel is not damaged or debonded from the sound concrete.

5. Removal shall begin near the center of the loose or delaminated concrete and shall progress outwardly until the loose or delaminated concrete is removed and sound concrete is encountered such that the amount of concrete removal is minimized.

6. The edges of removed concrete shall be defined with a 3/4" deep sawcut, where practical, as approved by the Engineer. If saw cutting is not practical, the use of jackhammers or chipping hammers may be required around the edges of the removal area to attain satisfactory results.

7. Care shall be taken during concrete removal to not nick, gouge, or in any other way damage the in-place reinforcing steel. Any inadvertent damage to the in-place reinforcing steel shall be brought to the attention of the Bridge Construction Engineer and shall be repaired by the Contractor as directed by the Engineer at no additional cost to the Department.

8. Concrete Removal, Class A will be measured to the nearest 0.1 foot and the area computed to the nearest 0.1 square yard. Concrete Removal, Class A will be paid for at the contract unit price per square yard. Payment will be full compensation for all labor, equipment, materials, and all incidental work required to remove the specified concrete, concrete sawing, and disposing of removed material.

9. Concrete Removal, Class B will be measured to the nearest 0.1 foot and the area computed to the nearest 0.1 square yard. Concrete Removal, Class B will be paid for at the contract unit price per square yard. Payment will be full compensation for all labor, equipment, materials, and all incidental work required to remove the specified concrete, concrete sawing, and disposing of removed material.

CONCRETE PATCHING MATERIAL

1. Concrete patching material shall be used to repair the deck areas where loose and delaminated concrete was removed.

2. Concrete patching material shall be packaged, dry, rapid-hardening cementitious mortar or concrete material conforming to the requirements of ASTM C 928, Type R-3 and shall contain no chlorides, magnesium or phosphates.

3. Water used for the concrete patching material shall be in conformance with Section 790 of the Construction Specifications.

4. Upon completion of the concrete removal and immediately prior to placing any concrete patching material into the concrete removal areas, the removal areas shall be thoroughly cleaned of loose and foreign material by abrasive blasting. The surface profile of the area to receive the patching material shall be in accordance with the manufacturer's recommendations. The abrasive blasting shall be to the extent that all surface laitance is removed. Abrasive blasting cleaning shall expose the coarse aggregate and remove rust from any exposed reinforcing steel. After abrasive blasting, the surface shall be cleaned by the use of compressed air to the satisfaction of the Engineer. The air compressor used for cleaning shall be equipped with trap devices capable of providing moisture-free and oil-free air at a recommended pressure of 90 psi.

5. The existing surface at the time of placement of the concrete patching material shall be at least 40°F, measured by a thermometer placed against the concrete surface and covered with an insulating blanket. The concrete patching material shall be mixed and placed in accordance with the manufacturer's technical data sheet. The Contractor shall provide a manufacturer's technical data sheet to the Engineer prior to performing the work. The concrete patching material shall be maintained at or above 45°F for at least 72 hours after placement.

6. Immediately after finishing the concrete patching material, the surface of the concrete patching material shall be covered with a double layer of wet burlap. Within one hour of covering with wet burlap, polyethylene sheeting shall be placed on the wet burlap. The surface shall be wet cured for a minimum of 48 hours or in accordance with the manufacturer's recommendations, whichever is more stringent. Following the wet cure, the burlap and polyethylene sheeting shall be removed and the surface allowed to air dry for a minimum of 48 hours after removal of the burlap and polyethylene sheets before application of the epoxy chip seal is permitted.

7. Concrete Patching Material will be measured to the nearest 0.1 cubic feet as determined from the theoretical yield per bag of Concrete Patching Material. "Concrete Patching Material, Bridge Deck" will be paid for at the contract unit price per cubic foot. Payment will be full compensation for all labor, equipment, materials, and all incidental work required to abrasive blast clean the removal areas, and furnish, place and cure the concrete patching material within the removal areas.

TWO COAT BRIDGE DECK EPOXY CHIP SEAL

The Epoxy Chip Seal shall be applied in accordance with the Special Provision for "Two Coat Bridge Deck Epoxy Chip Seal".

NOTES (CONTINUED)

FOR

191' - 0" PRESTRESSED GIRDER BRIDGE

STR. NO. 04-190-180

NOVEMBER 2014

DESIGNED BY	CK. DES. BY	DRAFTED BY	
KSK	KH	KSK	Kevin N. Goeden
BENN03AA	03AANOTA		BRIDGE ENGINEER

Revised by KH, 12/16/2014

STATE OF	PROJECT	SHEET NO.	TOTAL SHEETS
S.D.	P 0073(65)9	E17	E24

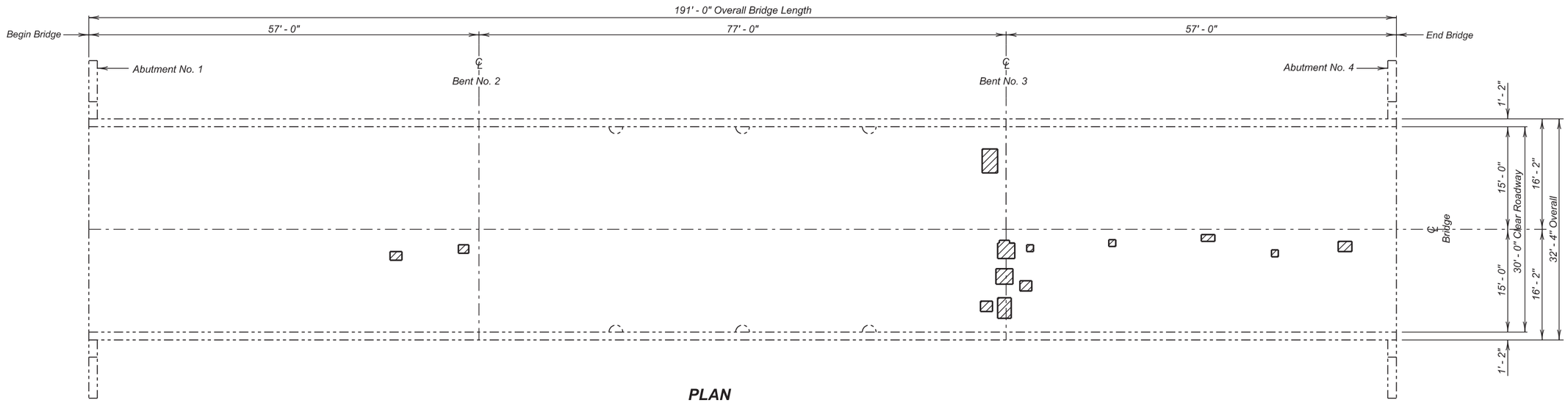

PLAN

LEGEND -

FOR INFORMATIONAL PURPOSES ONLY

Shaded areas indicate approximate location of unsound concrete requiring Concrete Removal, Class A

DECK DELAMINATION DETAILS

FOR

191' - 0" PRESTRESSED GIRDER BRIDGE

30' - 0" ROADWAY — 0° SKEW

OVER LITTLE WHITE RIVER — SEC. 31-T37N-R37W

STR. NO. 04-190-180 — P 0073(65)9

BENNETT COUNTY

S. D. DEPT. OF TRANSPORTATION

NOVEMBER 2014

DESIGNED BY	CK. DES. BY	DRAFTED BY	
KSK	KH	KSK	Kevin N. Goeden
BENN03AA	03AAKA04		BRIDGE ENGINEER

Revised by KH, 12/16/2014

STATE OF	PROJECT	SHEET NO.	TOTAL SHEETS
S.D.	P 0073(65)9	E18	E24

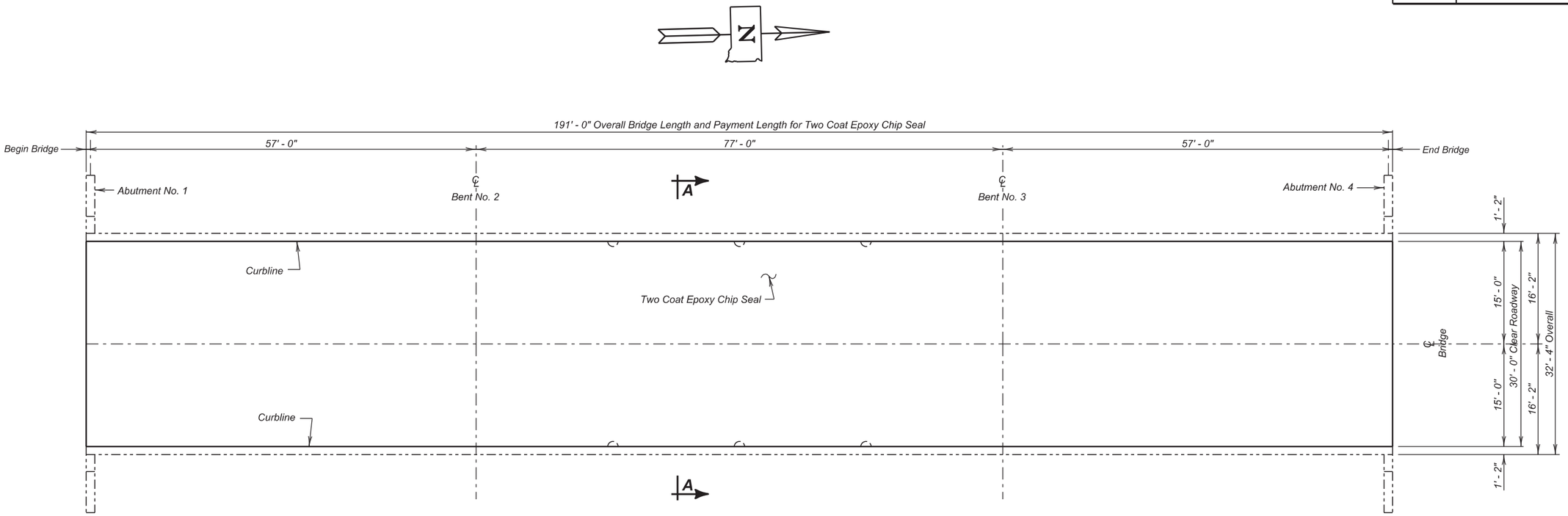

PLAN

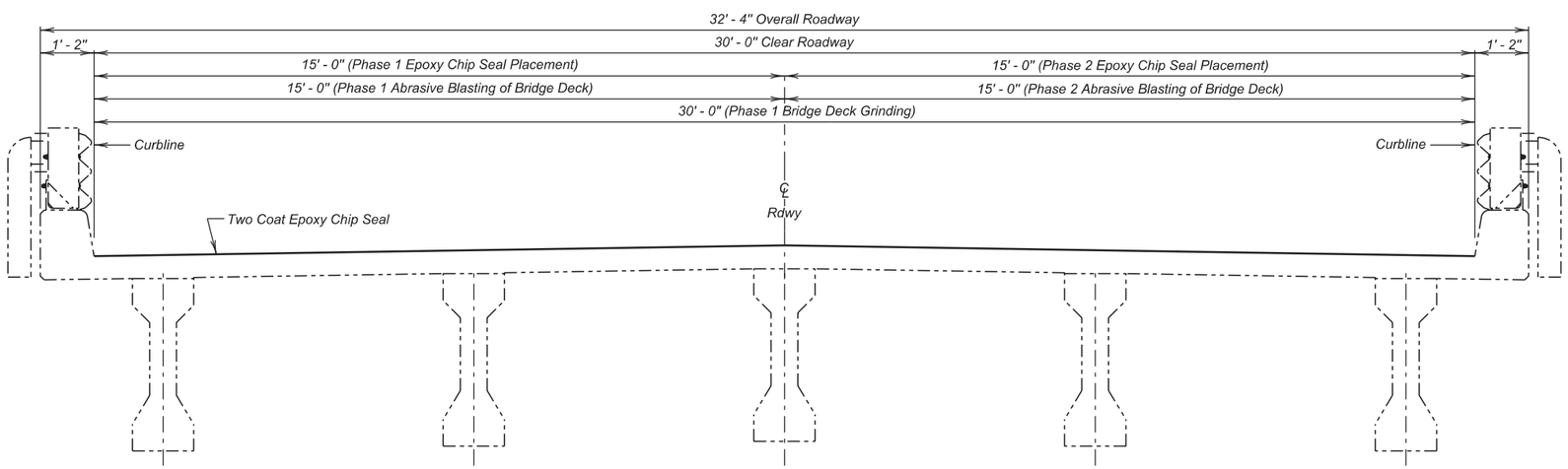

SEC. A - A

ESTIMATED QUANTITIES

	ITEM	UNIT	QUANTITY PHASE 1	QUANTITY PHASE 2
✳	Concrete Patching Material, Bridge Deck	Cu. Ft.	14.1	12.4
	Two Coat Bridge Deck Epoxy Chip Seal	Sq. Yd.	318.3	318.3
	Abrasive Blasting of Bridge Deck	Sq. Yd.	318.3	318.3
	Bridge Deck Grinding	Sq. Yd.	636.6	-
✳	Concrete Removal, Class A	Sq. Yd.	2.4	2.1
✳	Concrete Removal, Class B	Sq. Yd.	2.4	2.1

NOTE :
✳ Concrete Removal, Class A; Concrete Removal, Class B; and Concrete Patching Material may not be encountered and may be removed from the project at the direction of the Engineer.

TWO COAT EPOXY CHIP SEAL LAYOUT
FOR
191' - 0" PRESTRESSED GIRDER BRIDGE

30' - 0" ROADWAY — 0° SKEW
OVER LITTLE WHITE RIVER — SEC. 31-T37N-R37W
STR. NO. 04-190-180 — P 0073(65)9

BENNETT COUNTY
S. D. DEPT. OF TRANSPORTATION
NOVEMBER 2014

DESIGNED BY	CK. DES. BY	DRAFTED BY	
KSK	KH	KSK	Kevin N. Goeden
BENN03AA	03AALA05		BRIDGE ENGINEER

STATE OF	PROJECT	SHEET NO.	TOTAL SHEETS
S.D.	P 0073(65)9	E19	E24

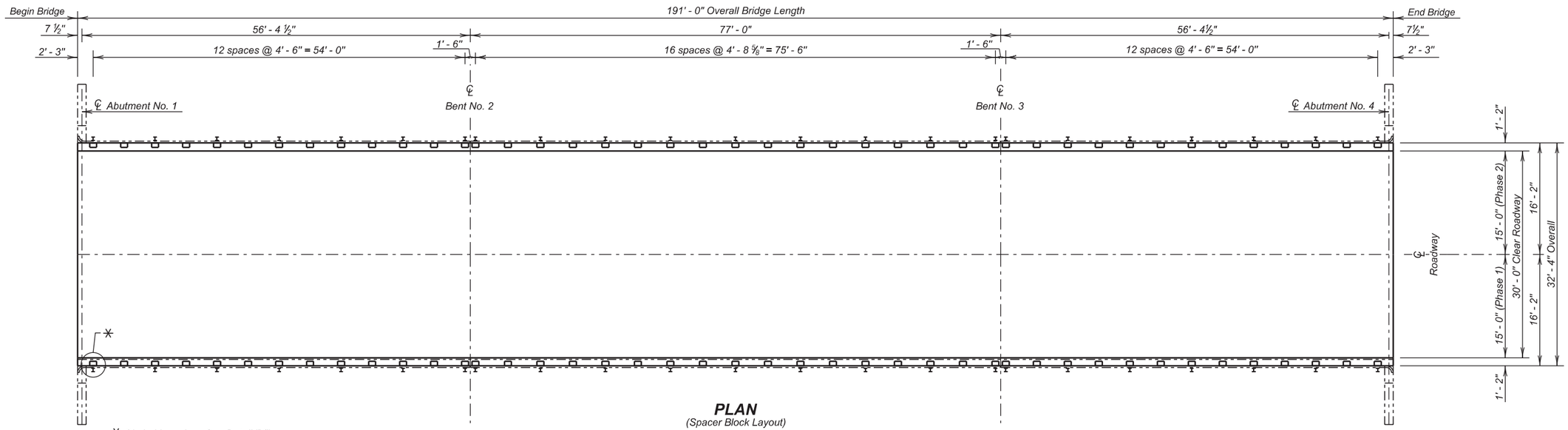

PLAN
(Spacer Block Layout)

✳ Circled Locations See Detail "X"

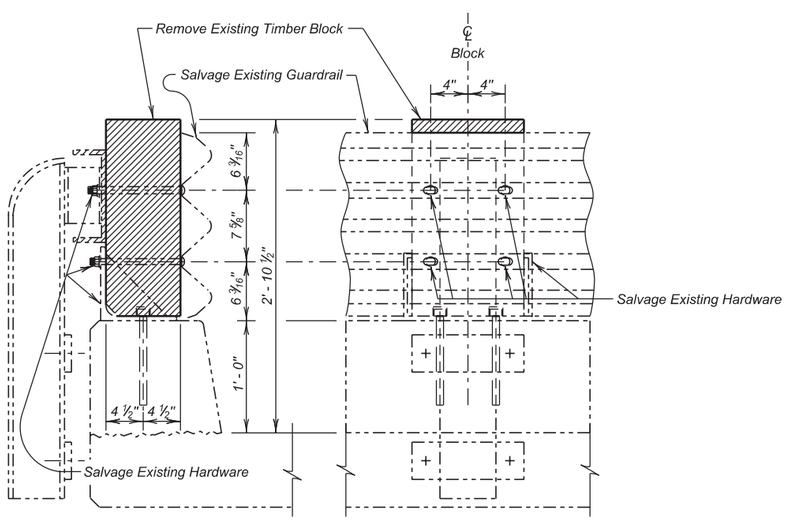

DETAIL "X"
(Existing Spacer Block Detail)

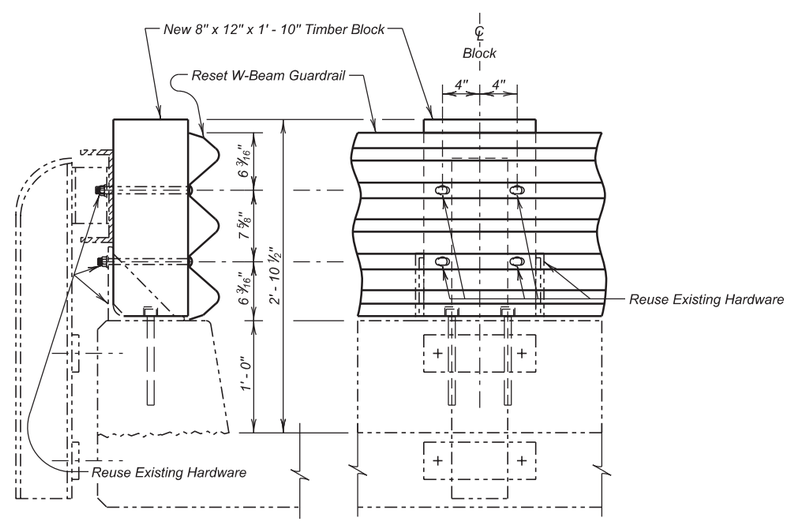

DETAIL "X"
(New Spacer Block Detail)

ESTIMATED QUANTITIES

ITEM	UNIT	QUANTITY	
		Phase I	Phase 2
Remove Thrie Beam Bridge Rail for Reset	Ft.	191.0	191.0
✳ Reset Thrie Beam Bridge Rail	Ft.	191.0	191.0

✳ Includes 43 Timber Spacer Blocks to be replaced in each phase of construction

RAIL MODIFICATION DETAILS
FOR
191' - 0" PRESTRESSED GIRDER BRIDGE
30' - 0" ROADWAY — 0° SKEW
OVER LITTLE WHITE RIVER — SEC. 31-T37N-R37W
STR. NO. 04-190-180 — P 0073(65)9

BENNETT COUNTY
S. D. DEPT. OF TRANSPORTATION
NOVEMBER 2014

DESIGNED BY	CK. DES. BY	DRAFTED BY	
KSK	KH	KR	Kevin N. Goeden
BENN03AA	03AARA06		BRIDGE ENGINEER

STATE OF	PROJECT	SHEET NO.	TOTAL SHEETS
S.D.	P 0073(65)9	E20	E24

-X081-

INDEX OF BRIDGE SHEETS—

Sheet No. 1 - General Drawing and Quantities.
Sheet No. 2 - Subsurface Investigations.
Sheet No. 3 - Abutment Details.
Sheet No. 4 - Bent Details.
Sheet No. 5 - Beam Details.
Sheet No. 6 - Superstructure and Diaphragm Details.
Sheet No. 7 - Superstructure Details.
Sheet No. 8 - Erection Data.
Sheet No. 9 - Type "A" Steel Railing and Drain Details.

EXCAVATION NOTES—

1. Footings for Bents No. 2 and 3 shall be cast against solid undistrubed Limey Sand and carried into same approximately the depth of footings. Limits of Limey Sand excavation for these footings shall be bounded as nearly as practicable by the neat lines as shown in the details of footings for Bents No. 2 and 3 on sheet No. 4 of 9.
2. Limey Sand shall develop a minimum bearing value of 3.5 tons per sq. ft. If the bearing value is less than 3.5 tons per sq. ft., communicate with the BRIDGE SECTION.
3. Final footing elevations for Bents No. 2 and 3 shall be estibished before ordering column reinforcing steel for the respective Bents.

N

B.M. No. 18 - El. 3141.95
Re-bar & Gds.
150' Lt. - Sta. 156+00.

NOTE:
T.S.@℄ El. = Top Slab at Centerline Elevation.
T.S.@C. El. = Top Slab at Curb Elevation.

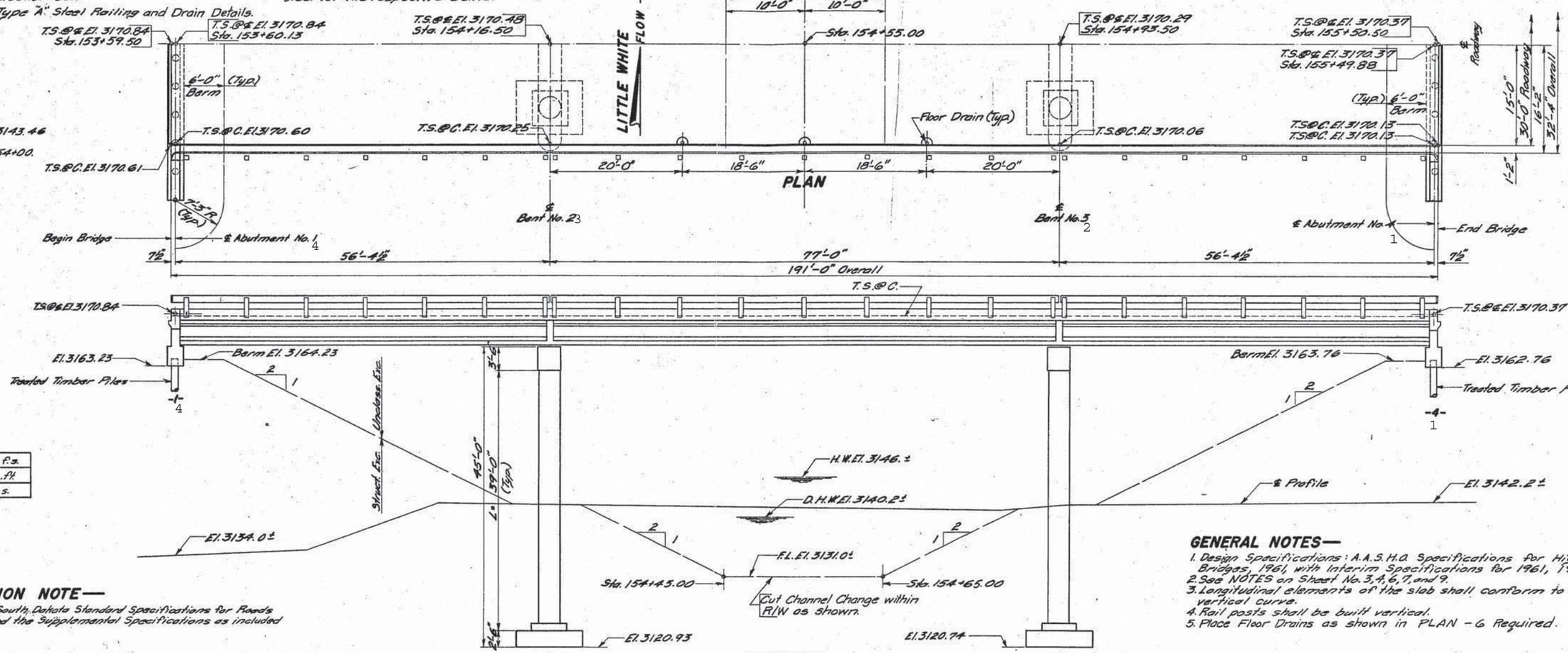

ELEVATION

Q	1600 c.f.s.
A	351.1 Sq. ft.
V	4.7 f.p.s.

GENERAL NOTES—

1. Design Specifications: A.A.S.H.O. Specifications for Highway Bridges, 1961, with Interim Specifications for 1961, 1962.
2. See NOTES on Sheet No. 3, 4, 6, 7, and 9.
3. Longitudinal elements of the slab shall conform to the vertical curve.
4. Rail posts shall be built vertical.
5. Place Floor Drains as shown in PLAN - 6 Required.

SPECIFICATION NOTE—

Use current South Dakota Standard Specifications for Roads and Bridges and the Supplemental Specifications as included in the Proposal.

ESTIMATED QUANTITIES

ITEM	Cl. "A" Conc. Cu. Yds.	Steel - Lbs. Reinf.	Steel - Lbs. Struct.	Type "A" Steel Railing - Lin. Ft.	Timber Piles - Lin. Ft. Treated Timber	Φ Test	Excavation - Cu. Yds. Struct.	△ Unclass.	Prestr. Conc. Beams 55'-10"	Prestr. Conc. Beams 76'-3"
Superstructure	146.1	14,895	45	384.3					10	5
Abutment No. 1	82.8	8,565			9 @ 55 = 495	1 @ 60 = 60	10			
Bent No. 2	58.2	17,795					255			
Bent No. 3	58.2	17,795					255			
Abutment No. 4	82.8	8,565			9 @ 55 = 495	1 @ 60 = 60	10			
Totals	308.1	87,615	45	384.3	990	Φ 1120	530	△ 4,532	10	5

Φ One Treated Timber Test Pile shall be driven at Abuts. No. 1 and No. 4 before remaining piles are ordered.
△ See Grading Plans for Unclassified Excavation.
PILE NOTE: Piles driven at Abuts. No. 1 and No. 4 including Test Piles, shall obtain their full bearing (24 Tons) in the natural ground below the new embankment elevations 3134.0± and 3142.2± respectively. Pre-bored holes through the fill are required and shall have a minimum diameter 2" larger than the nominal diameter (3' from the butt) of the pile.

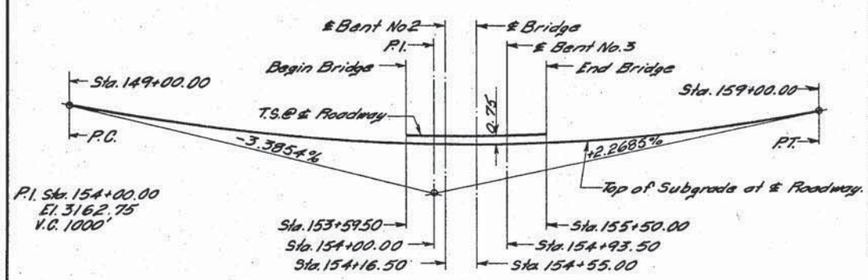

SUBGRADE CURVE DATA

ORIGINAL CONSTRUCTION PLANS

GENERAL DRAWING AND QUANTITIES
FOR
191'-0" PRESTR. CONC. GIRDER VIADUCT
30'-0" ROADWAY
OVER LITTLE WHITE RIVER SEC. 31-T37N-R37W
STA. 153+59.50 TO 155+50.50 FO 27-1(1)
STR. NO. 04-190-180 BENNETT COUNTY
SOUTH DAKOTA H20-S16-44
DEPARTMENT OF HIGHWAYS
-X081- SEPT. 1963 7 OF 11

DESIGNED BY	DRAWN BY	CHECKED BY	APPROVED
		F.M.	BRIDGE ENGINEER

04-13

STATE OF	PROJECT	SHEET NO.	TOTAL SHEETS
S.D.	P 0073(65)9	E21	E24

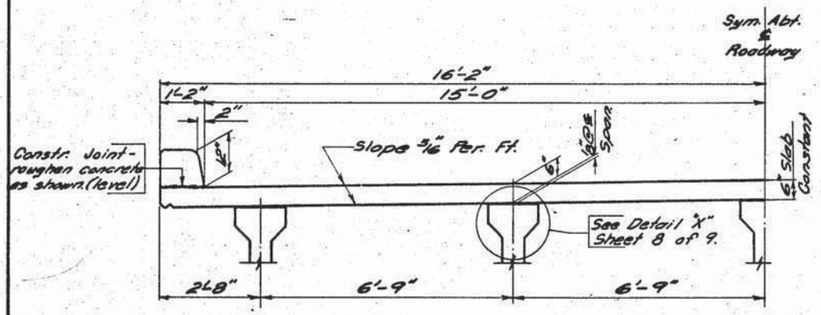

HALF SLAB SECTION

Showing Dimensions

* dimensions will increase toward end of Span.

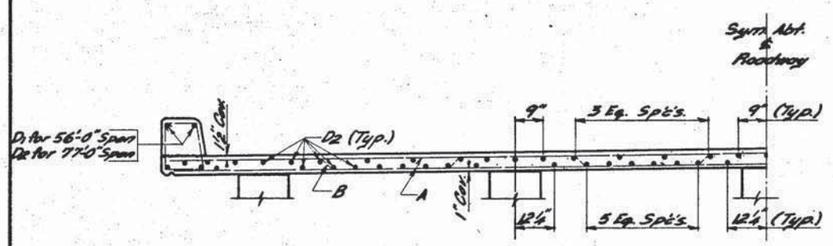

HALF SLAB SECTION

Showing reinforcing at center of Spans and over Abutment.

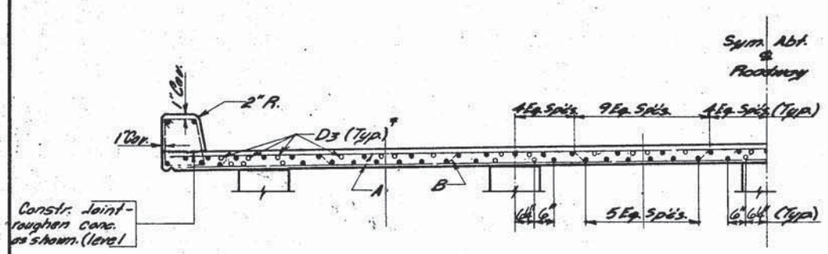

HALF SLAB SECTION

* Clear distance between the parallel bars shall not be less than 1½".
Showing reinforcing steel on Bent No. 2 and No. 3.

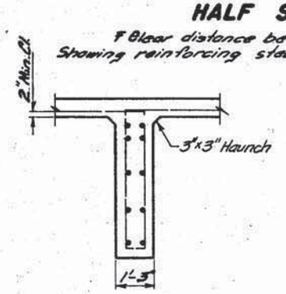

SEC. A—A

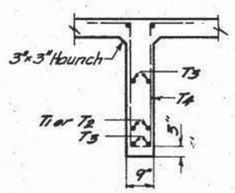

SEC. B—B

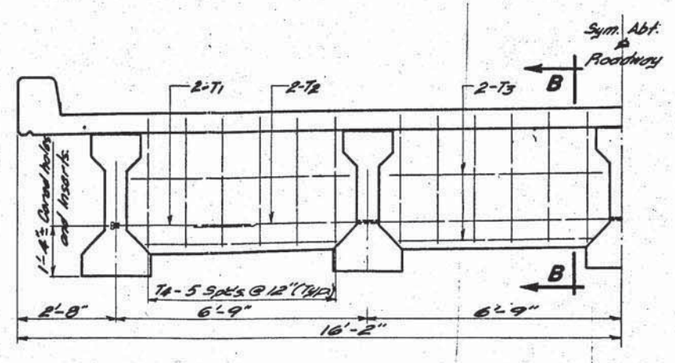

INTERMEDIATE DIAPHRAGM ELEVATION

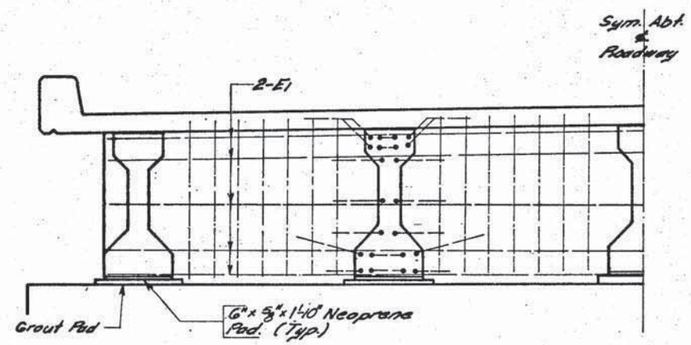

BENT DIAPHRAGM - ELEVATION

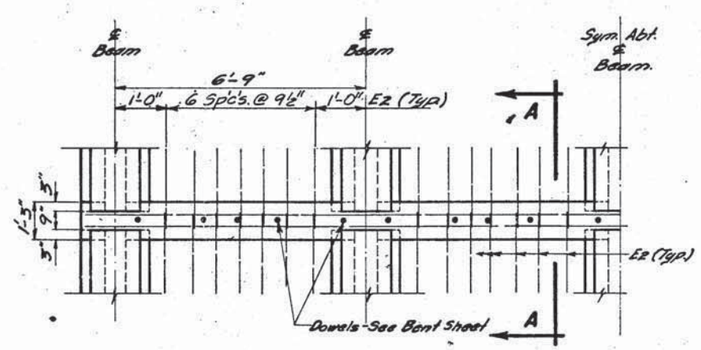

BENT DIAPHRAGM - PLAN

REINFORCING SCHEDULE

Mk.	No.	Size	Length	Type
A	452	5	32'-0"	Str.
B	228	5	33'-0"	15
C	384	4	5'-3"	T1
D1	16	5	28'-6"	Str.
D2	378	5	39'-3"	Str.
D3	80	5	26'-0"	Str.
E1	20	5	28'-6"	Str.
E2	56	4	13'-6"	T5
T1	16	8	4'-0"	Str.
T2	8	7	26'-0"	Str.
T3	64	4	5'-3"	Str.
T4	96	4	9'-0"	S4

Bending Details

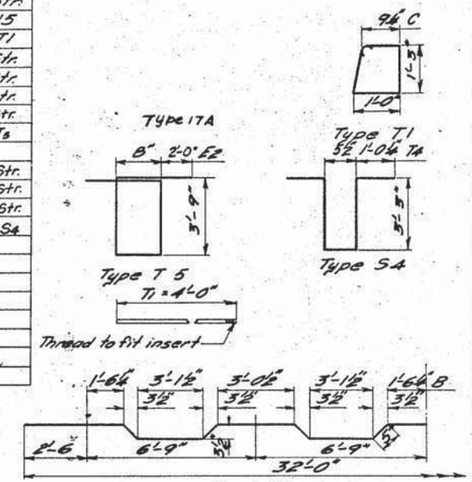

NOTE: All dimensions are out to out of bars.

ESTIMATED QUANTITIES

ITEM	UNIT	QUANTITY
Class "A" Concrete	Cu. Yds.	146.7
Reinforcing Steel	Lbs.	44,895
Structural Steel	Lbs.	45
76'-3" Prestr. Conc. Beams	No.	5
55'-10" Prestr. Conc. Beams	No.	10
Type "A" Steel Railing	Lin. Ft.	384.3

GENERAL NOTES—

1. Use Class "A" Concrete (fc = 4,000 p.s.i.) for diaphragms.
2. Insert Te Bars before placing outer beams.
3. Holes and inserts to accommodate the diaphragm bars shall be provided in the beams at locations as shown on sheet 5 of 9 and 7 of 9.
4. Holes which are left when the form supports are removed shall be filled with mortar.
5. All exposed concrete edges shall be chamfered 1" unless otherwise noted.

ORIGINAL CONSTRUCTION PLANS

SUPERSTRUCTURE AND DIAPHRAGM DETAILS
FOR
191'—0" PRESTR. CONC. GIRDER VIADUCT
30'—0" ROADWAY
OVER LITTLE WHITE RIVER **SEC. 31-T37N-R37W**
STA. 153+59.50 TO 155+50.50 **FO 27-1(1)**
STR. NO. 04-190-180 **BENNETT COUNTY**
SOUTH DAKOTA H20-S16-44
DEPARTMENT OF HIGHWAYS
SEPT. 1963 8 OF 11

DESIGNED BY	DRAWN BY	CHECKED BY	APPROVED
	E.T.J.	P.W.	R.E. Schuett BRIDGE ENGINEER

STATE OF	PROJECT	SHEET NO.	TOTAL SHEETS
S.D.	P 0073(65)9	E22	E24

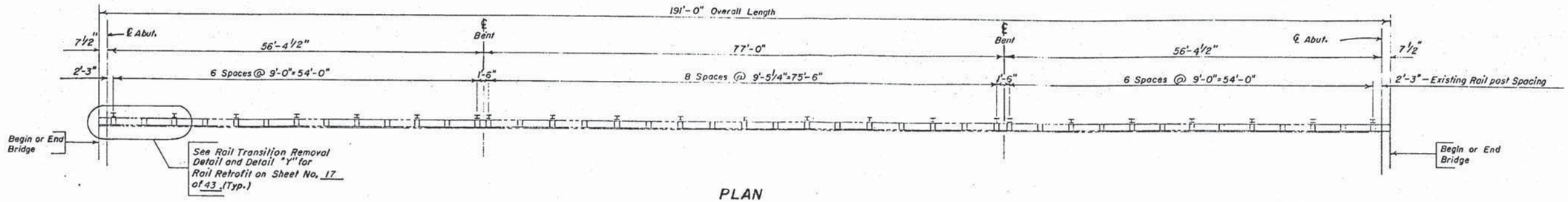

PLAN

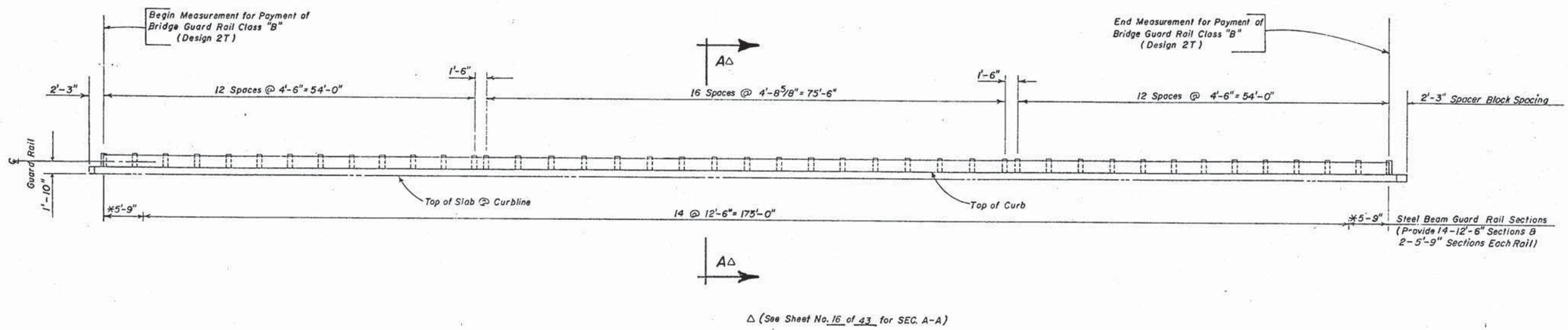

ELEVATION

ESTIMATED QUANTITIES		
ITEM	UNIT	QUANTITY
Bridge Guard Rail Class "B" (Design 2T)	Lin. Ft.	373.0

LAYOUT OF CLASS "B" (DESIGN 2T)
BRIDGE GUARD RAIL FOR
191'-0" PRESTR. CONC. GIRDER **BRIDGE**
30'-0" ROADWAY
OVER LITTLE WHITE RIVER SEC. 31-T37N-R37W
STA. 153+59.50 TO 155+50.50
STR. NO. 04-190-180 F0073(24)9

BENNETT COUNTY
S.D. DEPT. OF TRANSPORTATION
JULY 1990

9 OF 11

ORIGINAL CONSTRUCTION PLANS

DESIGNED BY	DRAWN BY	CHECKED BY	APPROVED
E.J.A. & T.J.O.	T.J.O.		BRIDGE ENGINEER

STATE OF	PROJECT	SHEET NO.	TOTAL SHEETS
S.D.	P 0073(65)9	E23	E24

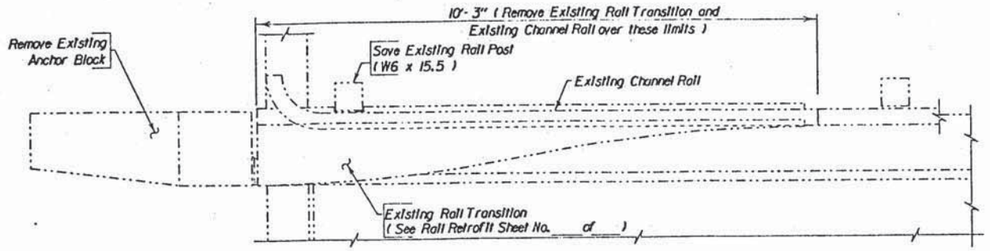

RAIL TRANSITION REMOVAL DETAIL
(See Rail Retrofit Sheet No. 15 of 43)

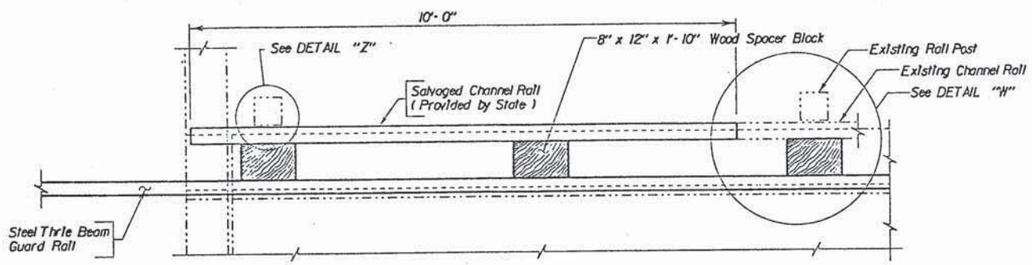

DETAIL "Y"
(See Rail Retrofit Sheet No. 15 of 43)

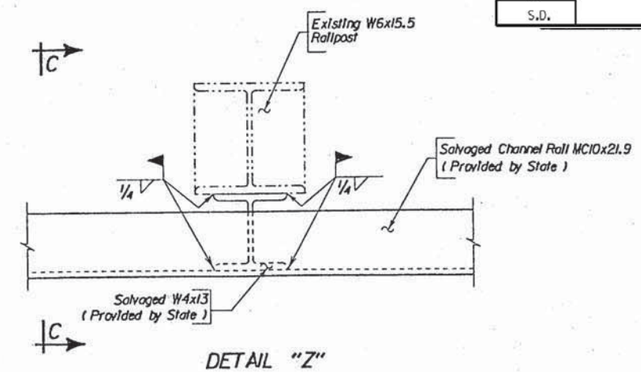

DETAIL "Z"

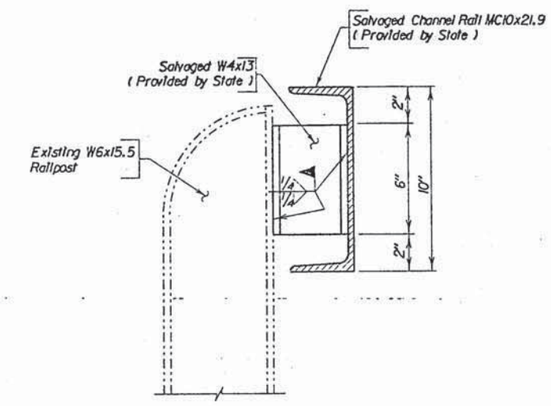

SEC. C - C

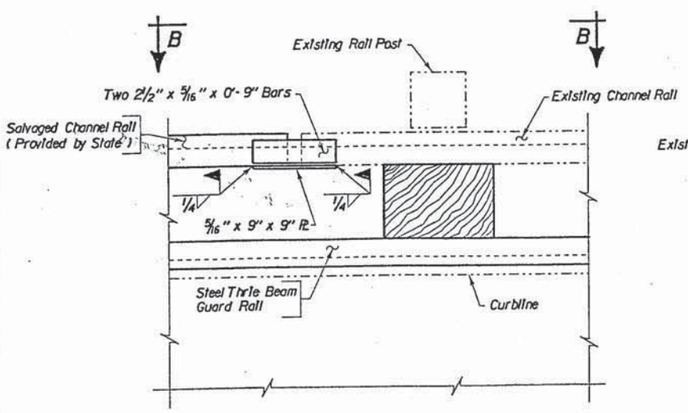

DETAIL "W"

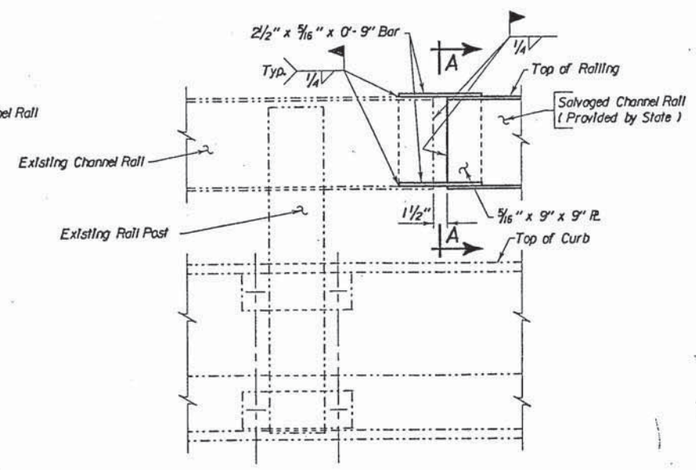

VIEW B - B
(Steel Thrie Beam Guard Rail Not Shown)

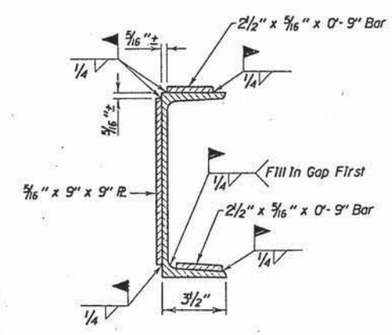

SEC. A - A

ORIGINAL CONSTRUCTION PLANS

THRIE BEAM RAIL RETROFIT
FOR
191'-0" PRESTR. CONC. GIRDER BRIDGE
30'-0" ROADWAY
OVER LITTLE WHITE RIVER
STA. 153+59.50 TO 155+50.50
STR. NO. 04-190-180

SEC. 31-T37N-R37W
F 0073(24)9

BENNETT COUNTY

S. D. DEPT. OF TRANSPORTATION
DEC. 1990

10 OF 11

ORIGINAL CONSTRUCTION PLANS

DESIGNED BY	DRAWN BY	CHECKED BY	APPROVED
EJA	D.A.H. EJA	CD	BRIDGE ENGINEER
BRFNN0774	B0774EA04		
STANDARD	BRSTDPLA5		

STATE OF	PROJECT	SHEET NO.	TOTAL SHEETS
S.D.	P 0073(65)9	E24	E24

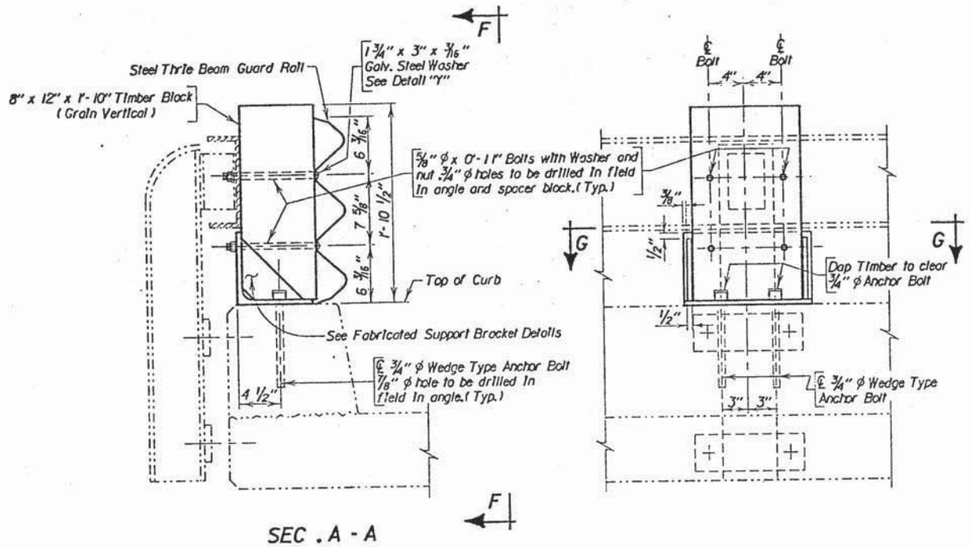

SEC. A - A

(See Sheet No. 15 of 43.)

VIEW F - F

(Steel Thrie Beam Guard Rail not shown)

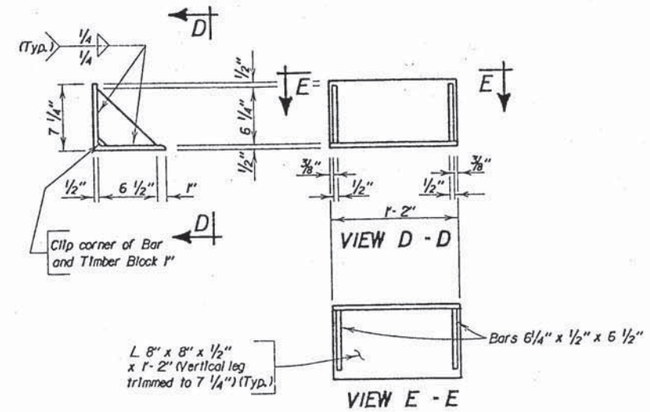

FABRICATED SUPPORT BRACKET

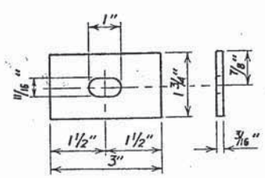

DETAIL "Y"

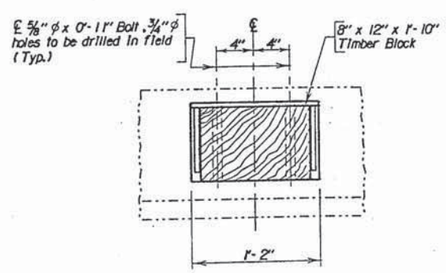

SEC. G - G

DETAILS OF CLASS "B" (DESIGN 2T)
BRIDGE GUARD RAIL FOR

191'-0" PRESTR. CONC. GIRDER BRIDGE

30'-0" ROADWAY

OVER LITTLE WHITE RIVER — SEC. 31-T37N-R37W
STA. 153+59.50 TO 155+50.50 — F 0073(24)9
STR. NO. 04-190-180

BENNETT COUNTY

S. D. DEPT. OF TRANSPORTATION

DEC. 1990 — 11 OF 11

ORIGINAL CONSTRUCTION PLANS

DESIGNED BY	DRAWN BY	CHECKED BY	APPROVED
EJA	EJA	CD	BRIDGE ENGINEER
BBFNN0774	B0774EA01		