STATE OF SOUTH DAKOTA	PROJECT	SHEET	TOTAL SHEETS
	P 1804(43)115	B1	B27

Plotting Date: 10/02/2015

Section B: Grading Plans

INDEX OF SHEETS

B1 General Layout with Index
B2-B5 Estimate With General Notes & Tables
B6 Table of Pipe Quantities
B7 Table of Fence Quantities
B8 Typical Grading Sections
B9 Horizontal Alignment Data
B10 Control Data
B11 Existing Topography Symbology and Legend
B12-B15 Plan and Profile Sheets
B16-B27 Standard Plates

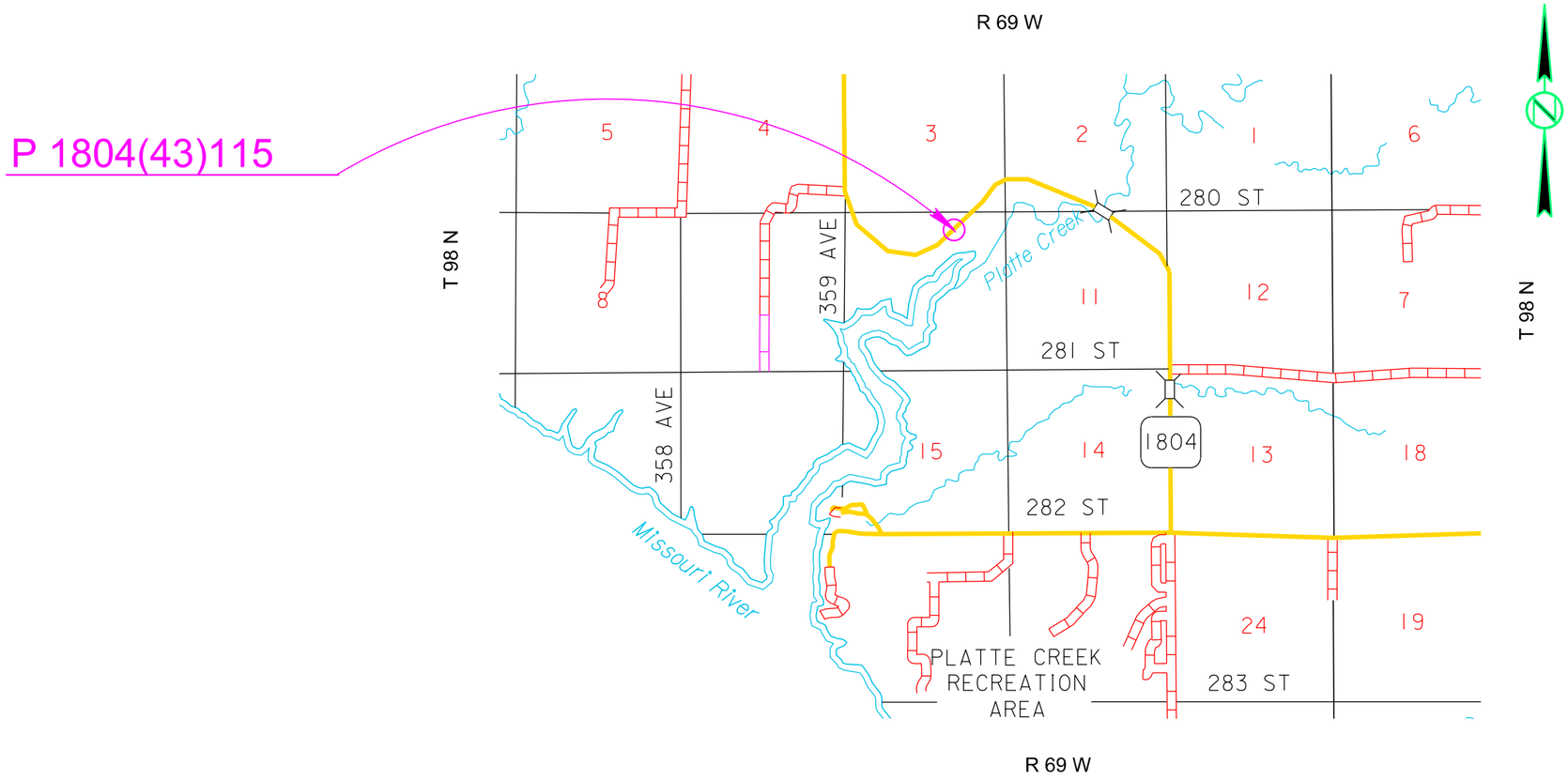

Plot Scale - 1:200
Plotted From - tqpr15896
File - U:\rdpn\cmix04F8\titleb.dgn

SECTION B ESTIMATE OF QUANTITIES

BID ITEM NUMBER	ITEM	QUANTITY	UNIT
004E0030	Maintenance of Traffic Diversion(s)	Lump Sum	LS
004E0050	Remove Traffic Diversion(s)	Lump Sum	LS
009E0010	Mobilization	Lump Sum	LS
100E0100	Clearing	Lump Sum	LS
110E0600	Remove Fence	1,092	Ft
110E0730	Remove Beam Guardrail	262.0	Ft
110E7802	Remove Fence for Reset	205	Ft
120E0010	Unclassified Excavation	44,409	CuYd
120E2000	Undercutting	4,198	CuYd
120E6100	Water for Embankment	239.0	MGal
250E0020	Incidental Work, Grading	Lump Sum	LS
270E0040	Salvage and Stockpile Asphalt Mix and Granular Base Material	1,177.5	Ton
421E0100	Pipe Culvert Undercut	184	CuYd
450E0162	30" RCP Class 2, Furnish	180	Ft
450E0164	30" RCP Class 4, Furnish	240	Ft
450E0170	30" RCP, Install	420	Ft
450E2024	30" RCP Flared End, Furnish	2	Each
450E2025	30" RCP Flared End, Install	2	Each
450E4758	18" CMP 14 Gauge, Furnish	294	Ft
450E4760	18" CMP, Install	294	Ft
450E4778	30" CMP 14 Gauge, Furnish	240	Ft
450E4780	30" CMP, Install	240	Ft
450E5010	18" CMP Elbow, Furnish	4	Each
450E5011	18" CMP Elbow, Install	4	Each
450E5020	30" CMP Elbow, Furnish	4	Each
450E5021	30" CMP Elbow, Install	4	Each
450E5211	18" CMP Flared End, Furnish	2	Each
450E5212	18" CMP Flared End, Install	2	Each
450E5314	30" CMP Sloped End, Furnish	2	Each
450E5315	30" CMP Sloped End, Install	2	Each
450E5406	18" CMP Safety End, Furnish	2	Each
450E5407	18" CMP Safety End, Install	2	Each
450E8019	30" RCP to CMP Transition, Furnish	2	Each
450E8020	30" Pipe Transition, Install	2	Each
464E0100	Controlled Density Fill	64.1	CuYd
600E0200	Type II Field Laboratory	1	Each
620E0020	Type 2 Right-of-Way Fence	1,040	Ft
620E0515	Type 1A Temporary Fence	1,058	Ft

SECTION B ESTIMATE OF QUANTITIES (CONTINUED)

BID ITEM NUMBER	ITEM	QUANTITY	UNIT
620E1020	2 Post Panel	14	Each
620E1030	3 Post Panel	2	Each
620E4100	Reset Fence	205	Ft
700E0210	Class B Riprap	20.0	Ton
720E1010	PVC Coated Bank and Channel Protection Gabion	21.0	CuYd
831E0110	Type B Drainage Fabric	63	SqYd
900E0012	Refurbish Double Mailbox	1	Each

GRADING OPERATIONS

Water for Embankment is estimated at the rate of 10 gallons of water per cubic yard of Embankment minus Waste.

The estimated cubic yards of excavation and/or embankment required to construct outlet ditches, ditch blocks, and approaches are included in the earthwork balance notes on the profile sheets.

Special ditch grades and other sections of the roadway different than the typical section(s) shall be constructed to the limits shown on the cross sections. If significant changes to the cross sections are necessary during construction, the Engineer shall contact the Designer for the proposed change.

Generally, all shallow inlet and outlet ditches as noted on the plan sheets shall be cut with a 10-foot wide bottom with 5:1 backslopes. However, the Engineer may direct the Contractor to adjust the ditch width for proper alignment with the drainage structure.

Temporary fence and/or permanent fence shall be placed ahead of the grading operation unless otherwise directed by the Engineer.

UTILITIES

The Contractor shall be aware that the existing utilities shown in the plans were surveyed prior to the design of this project and might have been relocated or replaced by a new utility facility prior to construction of this project, might be relocated or replaced by a new utility facility during the construction of this project, or might not require adjustment and may remain in its current location. The Contractor shall contact each utility owner and confirm the status of all existing and new utility facilities. The utility contact information is provided elsewhere in the plans or bidding documents.

SIGNING AND PAVEMENT MARKINGS

The SDDOT will be responsible for the permanent signing and pavement markings upon project completion.

TRAFFIC DIVERSION

The traffic diversion is located at Sta. 242+00. The traffic diversion shall be constructed according to Section 4.5 A. of the Specifications. Installation and removal of the traffic diversion shall meet all requirements as set forth in the South Dakota Surface Water Quality Standards.

The traffic diversion located at Station 242+00 shall be constructed in accordance with the geometric layout shown in the plans with a temporary drainage structure size adequate to reduce the potential for upstream flooding. The Contractor will be responsible for sizing the temporary drainage structure for these crossings.

Costs to provide temporary drainage structures shall be incidental to the contract lump sum price for “Maintenance of Traffic Diversion(s)”.

The traffic diversion in the waterway shall be constructed such that a 2 ft thick layer of class B riprap should be placed on the upstream side of the diversion below the ordinary high water elevation (estimated as elevation 1397.1 at Sta. 242+79- L). The quantity of riprap used in the traffic diversion is included in the quantity for “Class B Riprap”. The quantity of riprap used for the traffic diversion shall be reused as riprap at the inlet of the downspouts at station 241+32-99’ L and 241+40-99’ L. All costs incurred to place and remove the riprap at the traffic diversion and subsequently place the riprap at the inlet of the downspouts shall be incidental to the contract unit price per ton for “Class B Riprap”. The traffic diversions shall be built in close conformity to the plan gradeline. Unless otherwise shown in the plans, the traffic diversions shall be removed such that the original ground surface is restored and the hydraulic capacity of the waterway is maintained. The removal shall be done in such a manner that there is minimal disturbance to the channel.

The removed traffic diversion embankment shall be used in the mainline embankment unless otherwise approved by the Engineer. The base course material removed from the traffic diversion will become property of the contractor.

Traffic Diversion Excavation as shown on the plans profile sheets is the excavation required to construct the traffic diversion portion that is located inside the mainline cross section work limits. The Traffic Diversion Excavation quantity is included in the mainline excavation quantity in the Table of Excavation Quantities by Balances and in the Table of Unclassified Excavation.

Added Traffic Diversion Excavation as shown on the plans profile sheets is the excavation required to construct the traffic diversion portion that is located outside the mainline cross section work limits. The Added Traffic Diversion Excavation quantity is added to the unclassified excavation quantity in the Table of Unclassified Excavation.

Plot Scale - 1:200

Plotted From - trgr17192

File - ...\prj\cmix04F8\NotesSectionB.dgn

SHRINKAGE FACTOR: Embankment +20%

TABLE OF EXCAVATION QUANTITIES BY BALANCES

Station to	Station	Excavation (CuYd)	* Undercut (CuYd)	Total Excavation (CuYd)	** Waste (CuYd)	** Haul (CuYdSta)
238+00	245+00	28663	4198	32861	3960	15352
	Totals:	28663	4198	32861	3960	15352

* The quantities for these items are in the Estimate of Quantities under their respective bid items.
** The quantities for these items are for information only. The Contractor will be responsible for disposing of the waste material at a site approved by the Engineer.

TABLE OF UNCLASSIFIED EXCAVATION

Excavation	28663
Undercut	4198
Topsoil	2320
Added Traffic Diversion Excavation	8605
Salvaged Asphalt Mix and Granular Base Material (from cut sections)	623
Total	44409

CLASSIFICATION OF EXCAVATION

Most of the materials encountered should be easily excavated using conventional methods. However, in areas that traverse the glacial till, very large boulders may be encountered that may require more effort to excavate. All materials encountered during the construction of this project, regardless of their nature or the manner in which they are excavated, will be considered Unclassified Excavation.

TEMPORARY EXCAVATION SLOPES

Steep temporary excavation slopes will be required to excavate and replace the mainline culverts at Station 242+27±. The excavation limits shall not exceed those shown in the Excavation for Deep Pipe Removal diagram unless directed by the Engineer. The temporary backslopes required to excavate and replace the culverts will become unstable over the long-term. However, temporary excavated backslopes should remain globally stable over the short-term during construction provided that measures are taken to divert runoff away from the slope and regular monitoring of the slope is conducted. Construction activities shall be sequenced to minimize the amount of time the steep temporary backslopes are left exposed and unsupported

PROCEDURES FOR DETERMINING UNCLASSIFIED EXCAVATION QUANTITY

When plan quantities are used for payment, the Unclassified Excavation quantity shall be used for final payment.

The following paragraphs are general earthwork information and information in regards to computing the Unclassified Excavation quantity when final cross sections are taken in the field:

The Unstable Material Excavation quantity is included in the Excavation quantity listed in the Table of Unclassified Excavation. When finaling a project, the Unstable Material Excavation quantity shall be added to the Excavation quantity to compute the Unclassified Excavation quantity.

The Topsoil quantity in the Table of Unclassified Excavation is an estimate. When finaling a project, the total quantity of field measured Topsoil shall be used in place of the estimated Topsoil quantity. The quantity of Topsoil from the cuts will be paid for twice as Unclassified Excavation, as it will be in both the Excavation and Topsoil quantities. This will be full compensation for Excavation, which includes necessary undercutting to provide space for placement of topsoil.

The Excavation quantities from individual balances and the Table of Unclassified Excavation have been reduced by the volume of in place surfacing that will be removed and/or salvaged.

HAUL

Included in the Table of Excavation Quantities by Balances are Haul. They are not pay items and are for informational purposes only.

Haul: Estimated quantity (CuYdSta) for moving unclassified excavation material to the locations where it is needed throughout the earthwork balance.

UNDERCUTTING

In all cut sections the earthen subgrade shall be undercut 3 feet below the earthen subgrade surface. The undercut material or other suitable material, as directed by the Engineer, shall then be replaced and compacted to the density specified for the section being constructed.

Shallow embankment sections, fills less than 3 feet in height measured at the finished subgrade shoulders, shall be undercut to ensure a minimum 3 foot height of earth embankment for the entire width of roadbed. The upper 6 inches of undercut material that consists of topsoil with a high humus content shall be used as topsoil, placed in the fill slopes outside the shoulders of the earthen subgrade, or placed in the lower portion (below 4 foot depth) in fills which are greater than 4 feet in height. The remaining undercut soil and soil obtained from adjacent excavation (excluding the upper 6 inches) shall then be replaced and compacted to the density specified for the section being constructed.

The plan shown quantity will be the basis of payment. However, if there are additional areas of undercut other than what is shown in the plans, the Engineer shall direct removal of these areas and the additional areas will be measured according to the Engineer.

TABLE OF UNDERCUTTING

Station	to	Station	Quantity (CuYd)
238+00		245+00	4198
		Total:	4198

Plot Scale - 1:200
Plotted From - tnpr17192
File - ...\prj\cmix04F8\NotesSectionB.dgn

SALVAGE AND STOCKPILE ASPHALT MIX AND GRANULAR BASE MATERIAL

An estimated 1177.5 tons (623 Cubic Yards) of asphalt mix and granular base material shall be salvaged from the entire length of the existing highway and stockpiled at a site furnished by the Contractor and satisfactory to the Engineer.

The quantity of salvage asphalt mix and granular base material may vary from the plans. No adjustment will be made to the contract unit price for variations of the quantity of "Salvage and Stockpile Asphalt Mix and Granular Base Material."

It is estimated that there are 89 cubic yards of salvageable material per station. This rate was used to compute the unclassified excavation quantities. The rate of salvageable material is based on a 24 foot width.

EXCAVATION FOR DEEP PIPE REMOVAL

Included in the quantity of "Unclassified Excavation" is 15188 cubic yards of excavation for removal of deep pipe. Deep pipe are existing mainline pipe at depths of 10 feet or greater (measured from the flow line to the lowest elevation of either the existing ground line, undercut line, or bottom of removed or salvaged surfacing).

All work necessary to excavate and backfill the deep pipe including labor, equipment, and incidentals shall be incidental to the contract unit price per cubic yard for "Unclassified Excavation". Payment for deep pipe excavation shall be based only on plans quantity and measurement of these excavation quantities during construction shall not be performed.

The excavation quantities for deep pipe have been included with the earthwork balance quantities on the plans profile sheets. The quantities computed for excavation of the deep pipe are based on the limits shown in the drawing below. The drawing shows a box culvert for illustration purposes only; the limits are similar for a pipe.

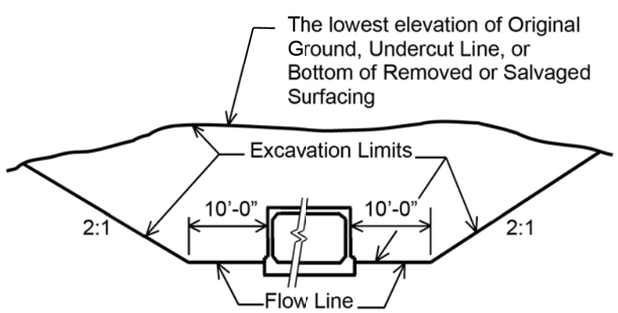

TABLE OF EXCAVATION FOR DEEP PIPE REMOVAL

Station	Type	Quantity (CuYd)
* 242+19 and 242+27	Pipe	15188
	Total:	15188

* The excavation quantity includes excavation for the installation of the new pipe at Station 242+19 and 242+27. This quantity has been added into the mainline excavation.

TABLE OF PIPE CULVERT UNDERCUT

The Table of Pipe Culvert Undercut is intended to be used to establish an estimated quantity of Pipe Culvert Undercut for bidding purposes only. The depth of undercut is an estimate and the actual depth necessary shall be determined during construction. Pipes shown may or may not require undercutting and pipes not shown may require undercutting. The Engineer will determine which pipe shall be undercut in accordance with Section 421 of the Specifications.

Station	Undercut Depth (Ft)	Quantity (CuYd)
242+19	1	92
242+27	1	92
	Total:	184

The table contains the rate of pipe culvert undercut per foot of pipe length and should be used as an aid in determining the actual amount of undercut to be performed during construction. The table is derived from the drawing below and conforms to the Specifications. When calculating pipe culvert undercut, the length of pipe ends should be included in the overall pipe length.

Storm sewer and approach pipes do not require undercutting unless specified otherwise in these plans.

Pipe Diameter (In)	Round Pipe Undercut Rate for 1' Depth (CuYd/Ft)	Arch Pipe Undercut Rate for 1' Depth (CuYd/Ft)
24	0.2407	0.2577
30	0.2623	0.2847
36	0.2840	0.3110
42	0.3056	0.3337
48	0.3272	0.3596
54	0.3488	0.3827
60	0.3704	0.4105
66	0.3920	---
72	0.4136	0.4630
78	0.4352	---
84	0.4568	0.5123
90	0.4784	---

TABLE OF PIPE CULVERT UNDERCUT (CONTINUED)

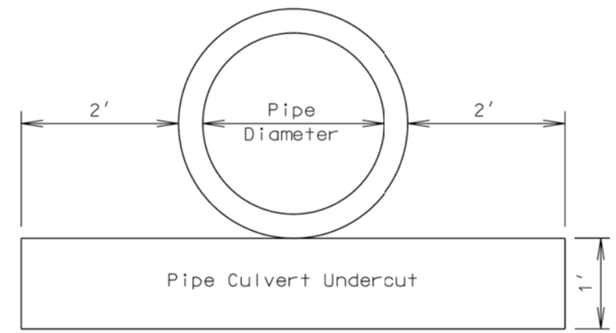

INCIDENTAL WORK, GRADING

Station	L/R	Remarks
242+19		Take Out 54"-318' CMP
242+89	R	Take Out 36"-319' CMP & Frame and Grate

CORRUGATED METAL PIPE

Corrugated metal pipes shall have 2 ⅔-inch X ½-inch corrugations for 42-inch and smaller round pipe and 48-inch and smaller arch pipe unless otherwise stated in the plans. Corrugated metal pipes shall have 3-inch X 1-inch or 5-inch X 1-inch corrugations for 48-inch and larger round pipe and 54-inch and larger arch pipe unless otherwise stated in the plans.

The soils within the project area are highly corrosive to steel. All CMP shall be 14 gauge steel. Corrugated metal pipe in these areas including the connection bands, elbows, and transitions shall be polymer coated and shall be in conformance with AASHTO M245 and AASHTO M36. The connection bands shall be 24 inches wide.

All damage to the polymer coating shall be repaired in accordance with the manufacturer's recommendations prior to installation of the pipe.

All costs associated with the polymer coating including repair of polymer coating shall be incidental to the corresponding CMP bid items.

All metal pipe end sections must have an Aluminized Type 2 Coating. All CMP end sections shall conform to AASHTO M 36, Aluminum Type 2. All costs associated for gauge, coating and connections shall be incidental to the corresponding CMP End Section bid items.

Plot Scale - 1:200
Plotted From - trgr17192
File - ...\prj\cmix04F8\NotesSectionB.dgn

PIPE FOR APPROACHES, INTERSECTING ROADS, AND DOWNSPOUTS

Class II reinforced concrete pipe, high density polyethylene pipe, corrugated polypropylene pipe, or steel reinforced polyethylene pipe may be substituted for corrugated metal pipe at approaches and intersecting roads at no additional cost to the State.

If corrugated metal pipes are provided, the pipes shall be as specified in the CORRUGATED METAL PIPE note.

High density polyethylene pipe may be substituted for 36 inch and smaller pipe downspouts at no additional cost to the State. All necessary connections, transitions, and anchoring methods shall be in accordance with the manufacturer's recommendations and be approved by the Engineer. Bedding and backfill material and installation procedures shall conform to the manufacturer's design requirements.

If high density polyethylene pipe, corrugated polypropylene pipe, or steel reinforced polyethylene pipe are provided, then the end sections shall be metal, be compatible, and conform to the type of end section as shown in the plans.

CONTROLLED DENSITY FILL FOR PIPE

Controlled density fill shall be in conformance with Section 464 of the Specifications.

The controlled density fill shall be placed between the pipes from the base of pipe elevation to the haunch of the pipes.

TABLE OF CONTROLLED DENSITY FILL FOR PIPE

Station		Quantity (CuYd)
242+19		64.1
	Total:	64.1

TABLE OF PVC COATED BANK AND CHANNEL PROTECTION GABIONS

Station	L/R	Quantity (CuYd)
241+16	L	4.5
243+59	R	4.5
243+63	R	6.0
243+70	R	6.0
	Total:	21.0

MAILBOXES

The Contractor shall reset the existing mailboxes on new posts with the necessary support hardware for a double mailbox assemblies. The local Postmaster will determine the recommended mounting height of the mailboxes for the project. The Contractor shall coordinate with the Engineer on the proper postal representative to contact.

If large mailboxes are located at double mailbox installations, a single post may need to be used for the large mailbox.

All costs for removing existing mailboxes, providing temporary mailboxes, and resetting mailboxes with new posts and necessary support hardware shall be incidental to the contract unit price per each for "Refurbish Double Mailbox".

One double mailbox shall be refurbished at Sta. 241+55 L.

TEMPORARY FENCE

The Contractor shall verify the location of the temporary fence with the landowner prior to installation of the fence.

BRACE PANELS FOR ROW FENCE

The E-Z Brace or an approved equal may be utilized as an alternate horizontal brace in the brace panels if approved by the Engineer. The E-Z Brace shall be attached to each wood post utilizing two 5/16" x 3" lag screws. Holes of appropriate diameter, based on wood post condition, shall be drilled before placement of lag screws. The following are contacts regarding the E-Z Brace:

Roger Papka
E-Z Brace
1160 Karen St.
Watertown, SD 57201
605-881-6142

Dennis Mack
E-Z Brace
108 18th St. NE
Watertown, SD 57201
605-881-4990

TABLE OF SUPERELEVATION

Station	to	Station		
238+00.00		239+43.93	-	1432' Radius Curve Left 0.0600'/' Superelevation Rate Point of Rotation at Centerline
239+43.93		241+56.93	-	Superelevation Transition
241+56.93		245+00.00	-	Normal Crown Section

TABLE OF REMOVE BEAM GUARDRAIL

Station	to	Station	Quantity (Ft)
242+32		244+41 R	262
		Total:	262

TABLE OF RIPRAP AND DRAINAGE FABRIC

Station	L/R	Class B Riprap (Ton)	Type B Drainage Fabric (SqYd)
* Div242		20.0	22
241+32 and 241+40	L	0.0	41
	Totals:	20.0	63

* The quantity of riprap used for the traffic diversion shall be reused as riprap at the inlet of the downspouts at station 241+32-99' L and 241+40-99' L.

Turf reinforcement mat may be installed under riprap instead of drainage fabric, particularly in areas where turf reinforcement mat abuts riprap, as approved by the Engineer. All costs for furnishing and installing the turf reinforcement mat and incidentals necessary to satisfactorily complete the work shall be included in the contract unit price per square yard for "Type 1 Turf Reinforcement Mat". Refer to Section D for details on the turf reinforcement mat.

Plot Scale - 1:200
Plotted From - tnpr17192
File - ...\prj\cmix04F8\NotesSectionB.dgn

TABLE OF PIPE QUANTITIES

STATE OF SOUTH DAKOTA	PROJECT	SHEET	TOTAL SHEETS
	P 1804(43)115	B6	B27

Plotting Date: 09/09/2015

		Corrugated Metal												Reinforced Concrete																
		Circular			Safety End		Flared End			Sloped End	Elbow			Circular			Flared End		RCP to CMP Outlet Transition											
		18" 14 Ga	30" 14 Ga		18"		18"			30"	18" 12.5°	30" 10°		30" Cl. 2	30" Cl. 4		30"			30"										
Station	Offset (L/R)	Ft	Ft		Each		Each			Each	Each	Each		Ft	Ft		Each			Each										
240+71 - 77'	L	102			1		1				2																			
242+19 Skew 41°	RHF		120							1		2		90	120		1			1										
242+27 Skew 41°	RHF		120							1		2		90	120		1			1										
242+71 - 125'	R	192			1		1				2																			
Subtotal:		294	240		2		2			2	4	4		180	240		2			2										

Plot Scale - 1:200

Plotted From - trpr17192

File - ...\rdprj\cmix04F8\Tablepipe.dgn

TABLE OF FENCE QUANTITIES

STATE OF SOUTH DAKOTA	PROJECT	SHEET	TOTAL SHEETS
	P 1804(43)115	B7	B27

Plotting Date: 09/09/2015

Station to Station		Side (L/R)	Right-of-Way Fence Type 2 (Ft)					Temporary Fence Type 1A (Ft)			Post Panels 2 Post Panel (Each)	3 Post Panel (Each)					Remove Fence for Reset (Ft)	Reset Fence (Ft)	Remove Fence (Ft)
239+93	243+33	L	352					444			4	1							359
237+94	240+73	R	688					614			10	1							733
243+38-191'	245+08-78'	R															205	205	
		TOTALS:	1040					1058			14	2					205	205	1092

Plot Scale - 1:200

Plotted From - trpr17192

File - ...\rd\pr\cmix04F8\Tablefence.dgn

STATE OF SOUTH DAKOTA	PROJECT	SHEET	TOTAL SHEETS
	P 1804(43)115	B8	B27

Plotting Date: 10/27/2015

TYPICAL GRADING SECTION

238+00 to 245+00

Transitions:
* 238+00 to 240+50 - 2' to 6'
244+00 to 240+00 - 6' to 2'

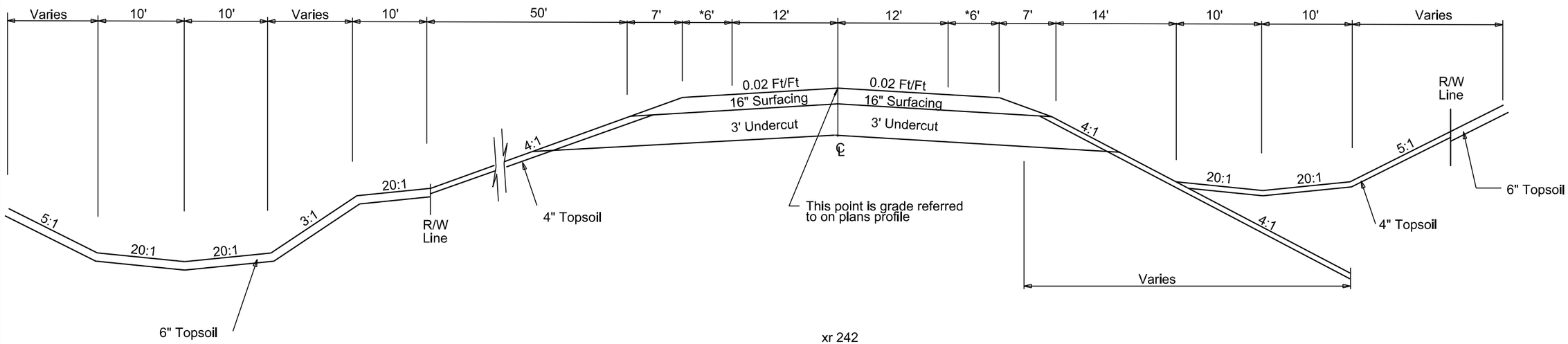

xr 242
0+15 to 3+30

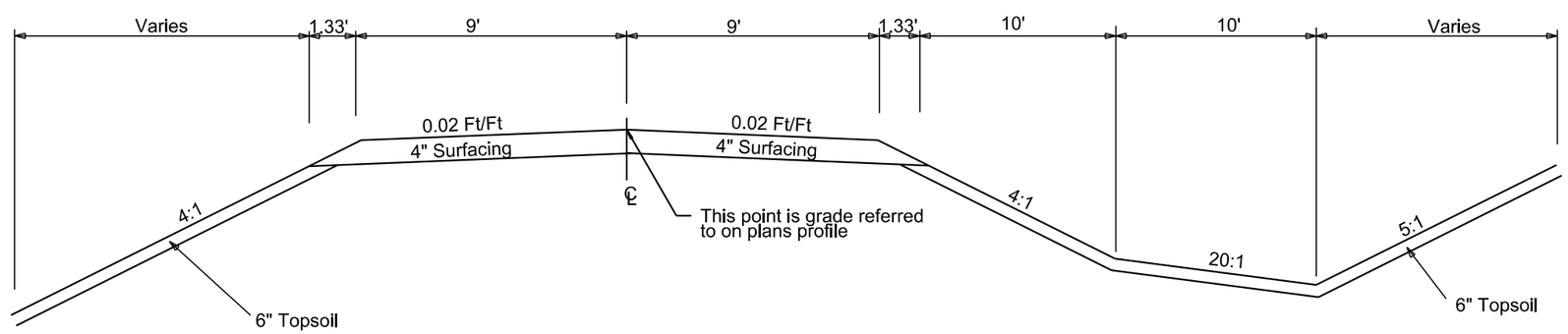

div242 Traffic Diversion
0+00 to 8+50

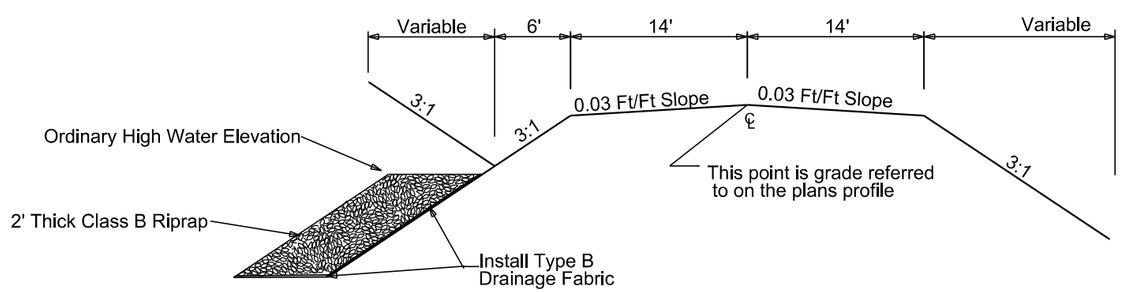

Plot Scale - 1:200

Plotted From - trpr17192

File - U:\rd\prj\cmix04F8\typ.dgn

HORIZONTAL ALIGNMENT DATA

STATE OF SOUTH DAKOTA	PROJECT	SHEET	TOTAL SHEETS
	P 1804(43)115	B9	B27

Plotting Date: 09/02/2015

MAINLINE

Type	Station			Northing	Easting
POB	214+25.62			364615.685	2323044.211
		TL= 811.55	S 47°53'42" E		
PI	222+37.17			364071.549	2323646.313
		TL= 0.28	S 47°53'42" E		
PC	222+37.44			364071.364	2323646.518
PI	232+39.82	R = 1432.00	Delta = 69°58'58" L	363399.278	2324390.199
PT	239+86.53			363867.978	2325276.247
		TL= 0.28	N 62°07'20" E		
PI	239+86.81			363868.107	2325276.492
		TL= 848.51	N 62°07'20" E		
PC	248+35.32			364264.857	2326026.525
PI	253+28.20	R = 1909.00	Delta = 28°57'15" L	364495.326	2326462.211
PT	258+00.02			364907.907	2326731.867
		TL= 0.22	N 33°10'05" E		
PI	258+00.24			364908.093	2326731.988
		TL= 1932.36	N 33°10'05" E		
POE	277+32.61			366525.618	2327789.176

XR 242

Type	Station			Northing	Easting
POB	0+00.00			363978.860	2325485.864
		TL= 112.38	S 27°52'40" E		
PC	1+12.38			363879.520	2325538.413
PI	1+84.77	R = 150.00	Delta = 51°31'30" R	363815.530	2325572.262
PT	2+47.27			363749.217	2325543.226
		TL= 408.51	S 23°38'50" W		
POE	6+55.78			363375.012	2325379.373

Div 242

Type	Station			Northing	Easting
POB	-1+12.47			363748.251	2324968.473
		TL= 95.27	N 74°11'18" E		
PC	-0+17.20			363774.211	2325060.143
PI	0+68.08	R = 353.00	Delta = 27°09'38" R	363797.445	2325142.187
PT	1+50.14			363780.665	2325225.790
		TL= 23.89	S 78°39'04" E		
PC	1+74.04			363775.963	2325249.218
PI	3+11.88	R = 353.00	Delta = 42°39'35" L	363748.838	2325384.364
PT	4+36.86			363820.472	2325502.130
		TL= 6.78	N 58°41'21" E		
PC	4+43.64			363823.995	2325507.922
PI	5+51.82	R = 353.00	Delta = 34°04'32" L	363880.213	2325600.344
PT	6+53.58			363978.562	2325645.400
		TL= 1.68	N 24°36'48" E		
PC	6+55.26			363980.091	2325646.100
PI	7+75.41	R = 353.00	Delta = 37°35'29" R	364089.316	2325696.138
PT	8+86.87			364145.340	2325802.418
		TL= 58.26	N 62°12'17" E		
POE	9+45.12			364172.505	2325853.953

The coordinates shown on this sheet are based on the South Dakota State Plane Coordinate System. South Zone (NAD 83/2011)Geoid G12AUS SF = 0.9998561503

Plot Scale - 1:200
Plotted From - trpr17192
File - ...\rd\prj\cmix04F8\Datahoriz..dgn

CONTROL DATA

STATE OF SOUTH DAKOTA	PROJECT	SHEET	TOTAL SHEETS
	P 1804(43)115	B10	B27

Plotting Date: 10/22/2015

HORIZONTAL AND VERTICAL CONTROL POINTS

POINT	STATION & OFFSET	DESCRIPTION	NORTHING	EASTING	ELEVATION
BASE	Not on Project	LARGE DURANAIL IN NE CORNER OF EAST SIDE APPROACH	372955.049	2322444.934	1729.207
CP1A	244+16.00-49.00' L	MRM 115.53 - 48' LT - 5'8" REBAR & CAP STAMPED "SDDOT CONTROL POINT" - 1 '+/- NORTH OF GUARDRAIL - EAST SIDE OF ASPHALT PRIVATE DRIVEWAY - APPROX 215' EAST OF PIPE & CL INTERSECTION	364025.437	2325678.855	1408.415
CP2	240+95.00-74.00' L	MRM 115.59 - 73' RT - BM DISK SET IN CONCRETE STAMPED "107.47 1971" - 1'+/- SE OF EAST POST OF 2 POST PANEL IN ALONG NORTH ROW - APPROX 95' WEST OF PIPE	363983.881	2325337.166.	1419.084
CP3	235+52.00-19.00' L	MRM 115.69 - 18' RT - 5/8" REBAR & CAP STAMPED "SDDOT CONTROL POINT" - 5'+/- NORTH OF NORTH ASPHALT EDGE OF HWY 1804 - APPROX 630' WEST OF PIPE	363744.147	2324863.608	1439.993

The coordinates shown on this sheet are based on the South Dakota State Plane Coordinate System.
South Zone (NAD 83/2011)Geoid G12US SF = 0.9998561503
The elevations shown on this sheet are based on NAVD 88.

Plot Scale - 1:200
Plotted From - tnpr17192
File - ...\prj\cmix04F8\DataControl.dgn

STATE OF SOUTH DAKOTA	PROJECT	SHEET	TOTAL SHEETS
	P 1804(43)115	B11	B27

Plotting Date: 09/02/2015

EXISTING TOPOGRAPHY SYMBOLOGY AND LEGEND

Anchor
Antenna
Approach
Assumed Corner
Azimuth Marker
BBQ Grill/ Fireplace
Bearing Tree
Bench Mark
Box Culvert
Bridge
Brush
Buildings
Bulk Tank
Cattle Guard
Cemetery
Centerline
Cistern
Clothes Line
Commercial Sign Double Face
Commercial Sign One Post
Commercial Sign Overhead
Commercial Sign Two Post
Concrete Symbol
Creek Edge
Curb/Gutter
Curb
Dam Grade/Dike/Levee
Deck Edge
Ditch Block
Doorway Threshold
Drainage Profile
Drop Inlet
Edge Of Asphalt
Edge Of Concrete
Edge Of Gravel
Edge Of Other
Edge Of Shoulder
Elec. Trans./Power Jct. Box
Fence Barbwire
Fence Chainlink
Fence Electric
Fence Misc.
Fence Rock
Fence Snow
Fence Wood
Fence Woven
Fire Hydrant
Flag Pole
Flower Bed
Gas Valve Or Meter
Gas Pump Island
Grain Bin
Guardrail
Guide Sign One Post
Guide Sign Two Post
Gutter
Guy Pole
Haystack

Hedge
Highway R.O.W. Marker
Interstate Close Gate
Iron Pin
Irrigation Ditch
Lake Edge
Lawn Sprinkler
Mailbox
Manhole Electric
Manhole Gas
Manhole Misc
Manhole Sanitary Sewer
Manhole Storm Sewer
Manhole Telephone
Manhole Water
Merry-Go-Round
Microwave Radio Tower
Misc. Line
Misc. Property Corner
Misc. Post
Overhang Or Encroachment
Overhead Utility Line — OH —
Parking Meter
Pipe With End Section
Pipe With Headwall
Pipe Without End Section
Playground Slide
Playground Swing
Power And Light Pole
Power And Telephone Pole
Power Meter
Power Pole
Power Pole And Transformer
Power Tower Structure
Propane Tank
Property Pipe
Property Pipe With Cap
Property Stone
Public Telephone
Railroad Crossing Signal
Railroad Milepost Marker
Railroad Profile
Railroad R.O.W. Marker
Railroad Signs
Railroad Switch
Railroad Track
Railroad Trestle
Rebar
Rebar With Cap
Reference Mark
Regulatory Sign One Post
Regulatory Sign Two Post
Retaining Wall
Riprap
River Edge
Rock And Wire Baskets
Rockpiles
Satellite Dish
Septic Tank

Shrub Tree
Sidewalk
Sign Face
Sign Post
Slough Or Marsh
Spring
Stream Gauge
Street Marker
Subsurface Utility Exploration Test Hole
Telephone Fiber Optics — T/F —
Telephone Junction Box
Telephone Pole
Television Cable Jct Box
Television Tower
Test Wells/Bore Holes
Traffic Signal
Trash Barrel
Tree Belt
Tree Coniferous
Tree Deciduous
Tree Stumps
Triangulation Station
Underground Electric Line — P —
Underground Gas Line — G —
Underground High Pressure Gas Line — HG —
Underground Sanitary Sewer — S —
Underground Storm Sewer — S —
Underground Tank
Underground Telephone Line — T —
Underground Television Cable — TV —
Underground Water Line — W —
Warning Sign One Post
Warning Sign Two Post
Water Fountain
Water Hydrant
Water Meter
Water Tower
Water Valve
Water Well
Weir Rock
Windmill
Wingwall
Witness Corner

State and National Line
County Line
Section Line
Quarter Line
Sixteenth Line
Property Line
Construction Line
R. O. W. Line
New R. O. W. Line
Cut and Fill Limits
Control of Access
New Control of Access
Proposed ROW (After Property Disposal)

Plot Scale - 1:200
Plotted From - tmp17192
File - U:\raj\prj\cmlx04F8\topog.dgn

STATE OF SOUTH DAKOTA	PROJECT	SHEET	TOTAL SHEETS
	P 1804(43)115	B12	B27

Plotting Date: 10/27/2015

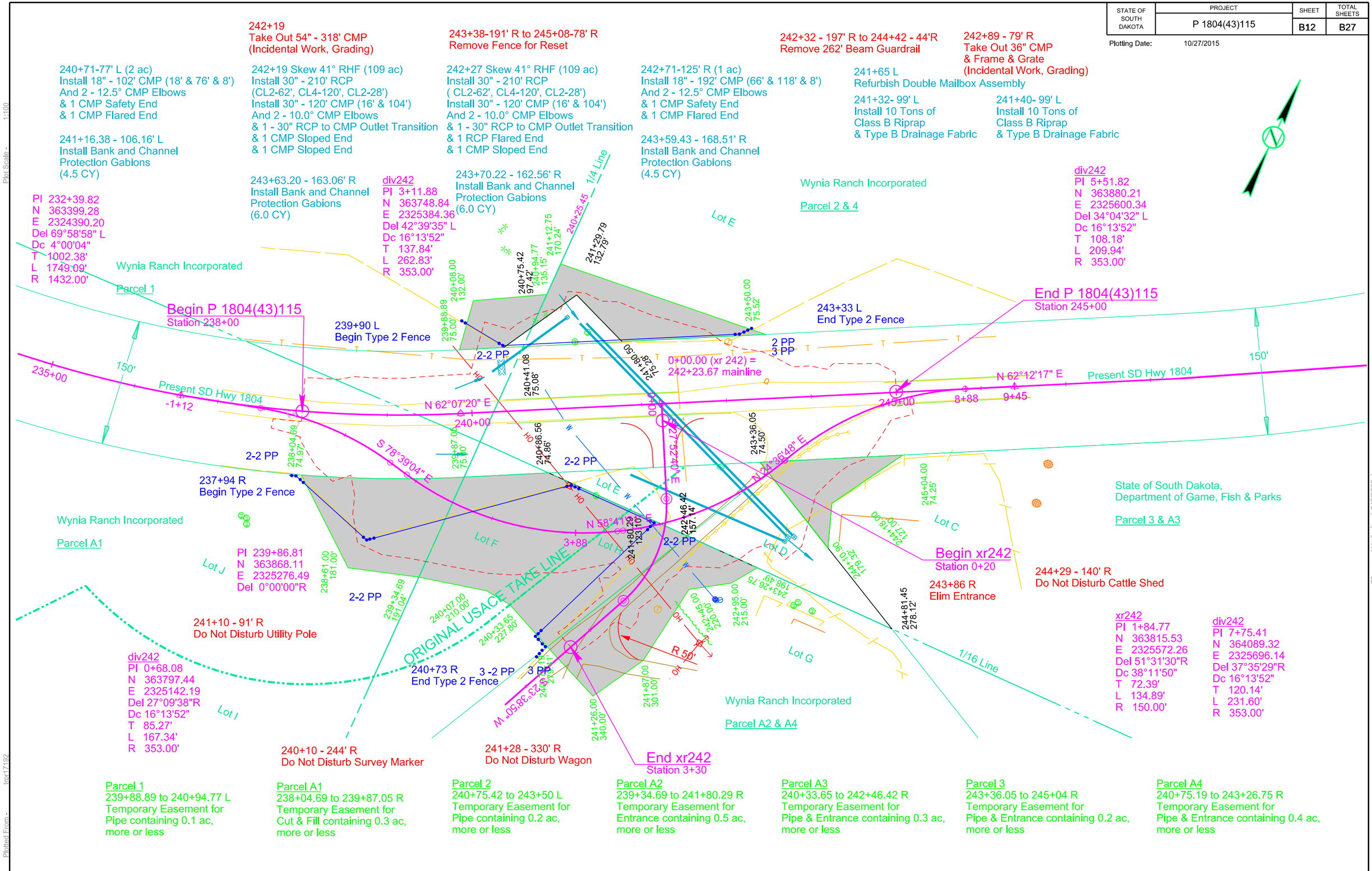

Parcel 1
239+88.89 to 240+94.77 L
Temporary Easement for
Pipe containing 0.1 ac,
more or less

Parcel A1
238+04.69 to 239+87.05 R
Temporary Easement for
Cut & Fill containing 0.3 ac,
more or less

Parcel 2
240+75.42 to 243+50 L
Temporary Easement for
Pipe containing 0.2 ac,
more or less

Parcel A2
239+34.69 to 241+80.29 R
Temporary Easement for
Entrance containing 0.5 ac,
more or less

Parcel A3
240+33.65 to 242+46.42 R
Temporary Easement for
Pipe & Entrance containing 0.3 ac,
more or less

Parcel 3
243+36.05 to 245+04 R
Temporary Easement for
Pipe & Entrance containing 0.2 ac,
more or less

Parcel A4
240+75.19 to 243+26.75 R
Temporary Easement for
Pipe & Entrance containing 0.4 ac,
more or less

Plot Scale - 1:100
Plotted From - tmpr17192
File - U:\rdp\rjcmlx04F8\235.dgn

STATE OF SOUTH DAKOTA	PROJECT	SHEET	TOTAL SHEETS
	P 1804(43)115	B13	B27

Plotting Date: 09/02/2015

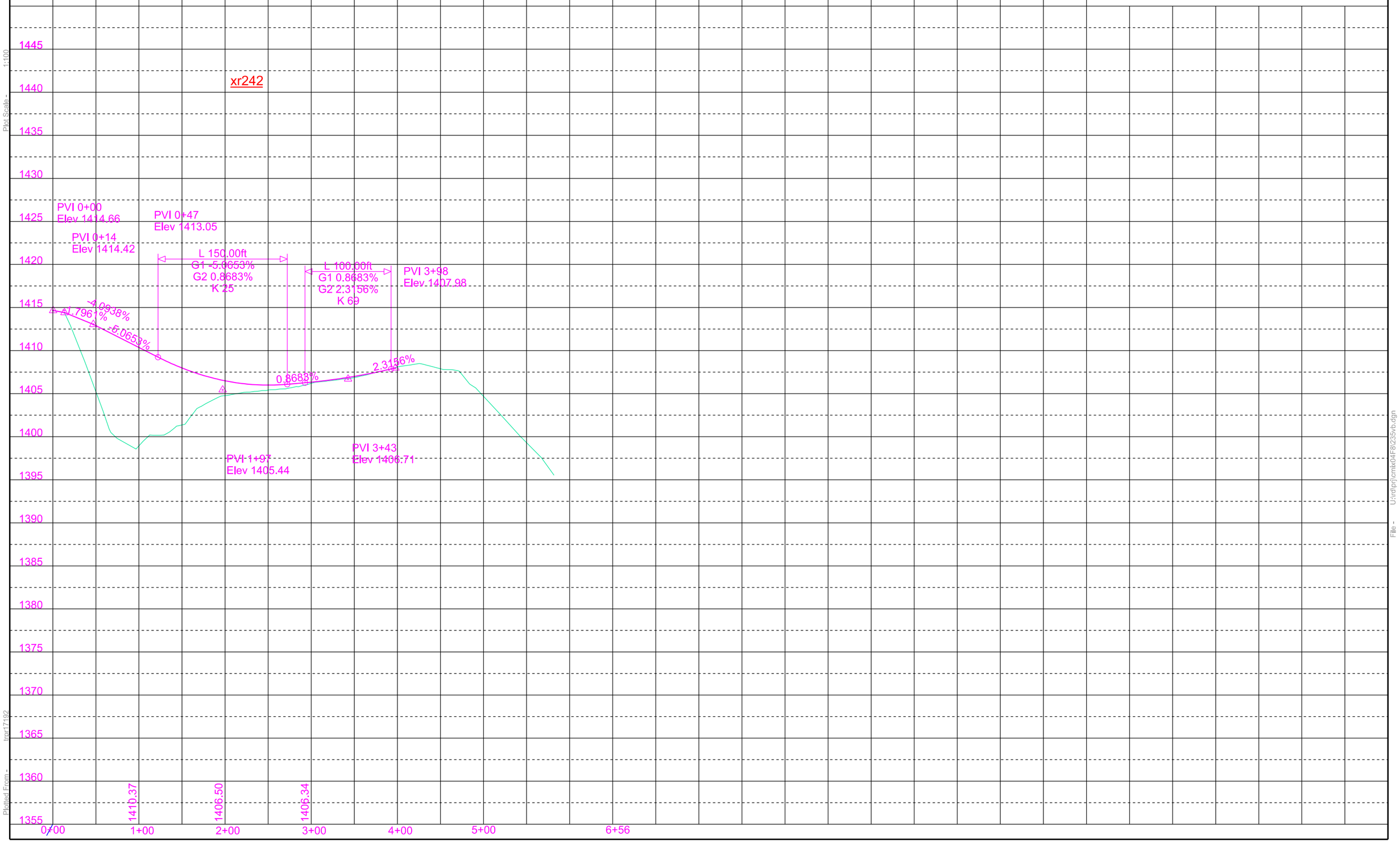

Plot Scale - 1:100

Plotted From tpr17192

File - U:\tr\prj\cmlx04F8\235vb.dgn

STATE OF SOUTH DAKOTA	PROJECT	SHEET	TOTAL SHEETS
	P 1804(43)115	B14	B27

Plotting Date: 10/22/2015

238+00
Begin Work

245+00
End Work

EXC	28663
UNDERCUT	4198
TOTAL	32861

EMB	19886	
20.0%	3977	23863
UNDERCUT	4198	
20.0%	840	5038
WASTE		3960
TOTAL		32861

Quantities have been added to the earthwork calculations that include the pipe excavation at 242+19 and intersecting road at 242+20 R

Waste is to be disposed of at a site approved by the Engineer

PVI 238+00
Elev 1429.12

L 400.00ft
G1 -3.9402%
G2 -2.1343%
K 221

240+38 L
Ditch Block
Elev.1417.7

-3.9402%

242+24 R
28' Int Rd

LDG -3.3333%

LDGPI 238+00
Elev 1424.00

RDG 6.2500%

LDGPI 239+20
Elev 1420.00

LDG -4.5231%

RDG -12.7167%

PVI 241+00
Elev 1417.30

-2.1343%

PVI 244+50
Elev 1409.83

PVI 245+76
Elev 1406.94

-2.2927%

RDGPI 238+60
Elev 1422.90

RDGPI 238+20
Elev 1420.40

LDGPI 240+50
Elev 1414.12

LDG -24.4571%

RDG 12.1667%

LDG 5.8333%

LDG 5.7000%

LDG 4.5000%

LDGPI 243+60
Elev 1407.00

LDGPI 243+00
Elev 1403.50

RDGPI 241+00
Elev 1412.93

RDGPI 241+60
Elev 1405.30

LDG 0.0000%

LDG 1.2500%

RDG -3.0000%

RDG -22.4000%

LDGPI 241+20
Elev 1397.00

LDGPI 241+40
Elev 1397.00

LDGPI 241+80
Elev 1397.50

RDGPI 242+20
Elev 1398.00

RDGPI 242+60
Elev 1396.80

LDGPI 242+00
Elev 1398.40

FL = 97.00
FL = 74.51
FL = 97.00
FL = 74.51

RDG -0.5000%

Q_{100}=121 cfs
El 1404.5

RDGPI 243+60
Elev 1374.40

RDGPI 243+80
Elev 1374.30

CP3
235+52-19' L
MRM 115.00+0.690 - 18' RT-5/8" Rebar
& CAP STAMED "SDDOT CONTROL
POINT - 5'+/- NORTH OF NORTH
ASPHALT EDGE OF HWY 1804 -
APPROX. 630' WEST OF PIPE"

CP2
240+95 - 74' L
MRM 115.00+0.590 - 73' RT-5/8" BM DISK SET
IN CONCRETE STAMPED "107.47 1971"
- 1'+/- SE OF EAST POST OF 2 POST PANEL
IN AND ALONG NORTH ROW - APPROX
95' WEST OF PIPE

CP1A
244+16 - 49' L
MRM 115.00+0.530 - 48' LT-5/8" REBAR
& CAP STAMPED "SDDOT CONTROL
POINT'- 1'+/- NORTH OF GUARDRAIL
EAST SIDE OF ASHALT PRIVATE DRIVE
APPROX 215' EASTOF PIPE & CENTER INTERSECTION

1429.12 1425.18 1421.47 1418.20 1415.39 1413.03 1410.90 1408.68

235+00 240+00 245+00 250+00

1450 1445 1440 1435 1430 1425 1420 1415 1410 1405 1400 1395 1390 1385 1380 1375 1370 1365 1360

Plot Scale - 1:100
Plotted From - tmpr17192
File - U:\rdprj\cmix04F81235va.dgn

STATE OF SOUTH DAKOTA	PROJECT	SHEET	TOTAL SHEETS
	P 1804(43)115	B15	B27

Plotting Date: 10/22/2015

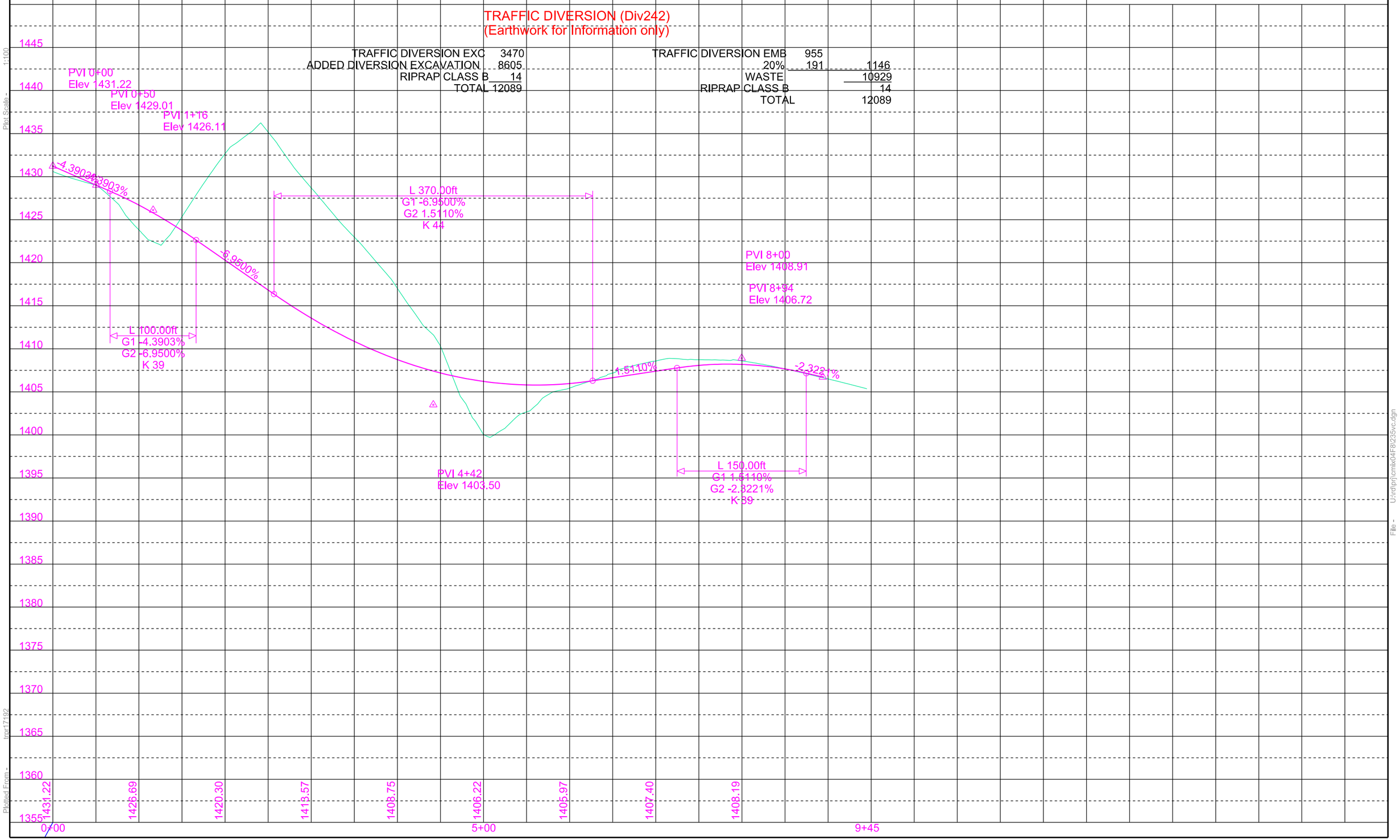

Plot Scale - 1:100

Plotted From - tpr17192

File - U:\rdip\cmlx04F8\235vc.dgn

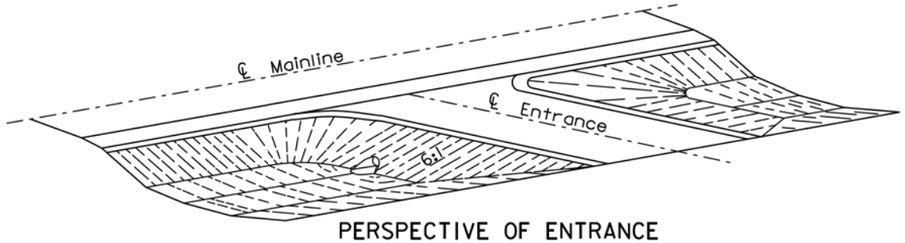

PERSPECTIVE OF ENTRANCE

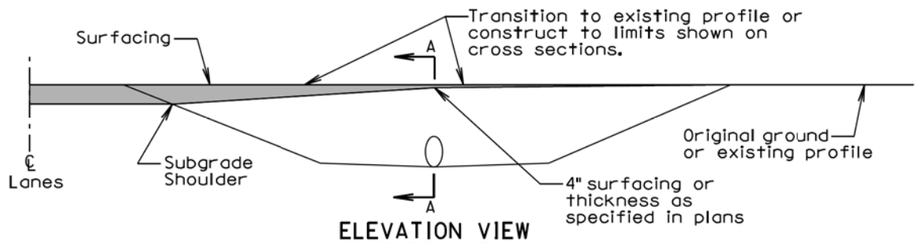

ELEVATION VIEW (ENTRANCE)

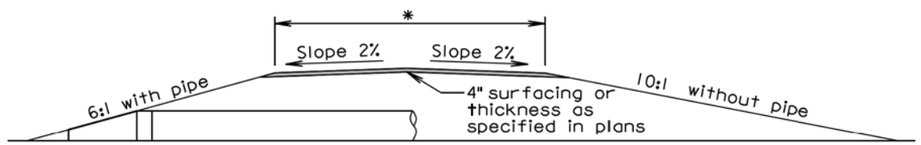

SECTION A-A (ENTRANCE)

*The finished surfacing width is stated elsewhere in the plans. The subgrade width is 4' wider than the finished surfacing width unless stated otherwise in the plans.

GENERAL NOTES:

The ditch section shown above in the perspective and elevation view is only for illustrative purposes.

A 6:1 inslope shall be constructed for an entrance when a pipe is required. A 10:1 inslope shall be constructed when a pipe is not required.

Pipe lengths shall be adjusted if necessary during construction to obtain the 6:1 slopes. For grading projects, the pipe lengths are estimated typically using a 4" thickness of surfacing directly over the subgrade above the pipe.

The transition area between the mainline inslope and the approach inslope for entrances shall be rounded to eliminate an abrupt transition.

The turning radii shall be 35' for intersecting roads and entrances unless stated otherwise in the plans.

September 6, 2013

Published Date: 3rd Qtr. 2015	SDDOT	INTERSECTING ROADS AND ENTRANCES	PLATE NUMBER 120.01
			Sheet 1 of 2

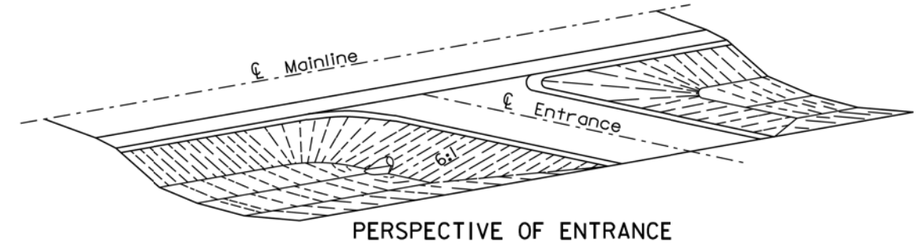

PERSPECTIVE OF ENTRANCE

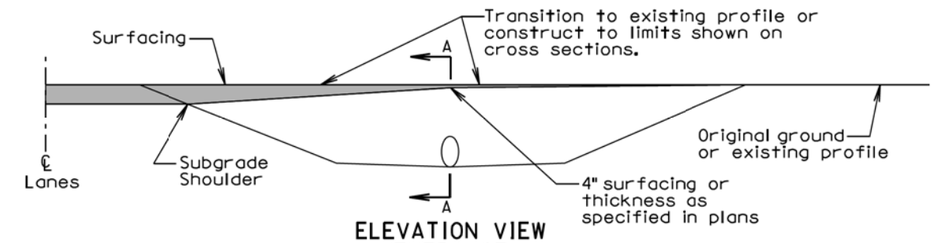

ELEVATION VIEW (ENTRANCE)

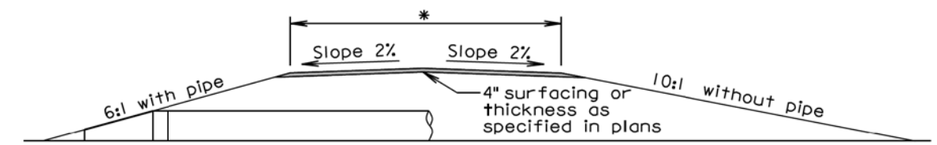

SECTION A-A (ENTRANCE)

*The finished surfacing width is stated elsewhere in the plans. The subgrade width is 4' wider than the finished surfacing width unless stated otherwise in the plans.

GENERAL NOTES:

The ditch section shown above in the perspective and elevation view is only for illustrative purposes.

A 6:1 inslope shall be constructed for an entrance when a pipe is required. A 10:1 inslope shall be constructed when a pipe is not required.

Pipe lengths shall be adjusted if necessary during construction to obtain the 6:1 slopes. For grading projects, the pipe lengths are estimated typically using a 4" thickness of surfacing directly over the subgrade above the pipe.

The transition area between the mainline inslope and the approach inslope for entrances shall be rounded to eliminate an abrupt transition.

The turning radii shall be 35' for intersecting roads and entrances unless stated otherwise in the plans.

September 6, 2013

Published Date: 3rd Qtr. 2015	SDDOT	INTERSECTING ROADS AND ENTRANCES	PLATE NUMBER 120.01
			Sheet 1 of 2

Plot Scale - 1:200
- Plotted From - tnpr17192
File - ...\cmix04F8\s12001_1\s12001_2.dgn

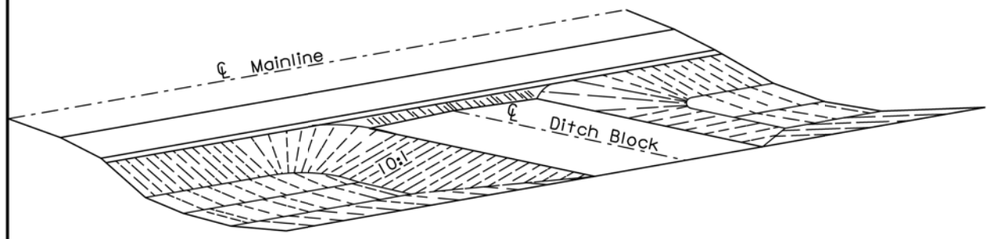

PERSPECTIVE OF DITCH BLOCK

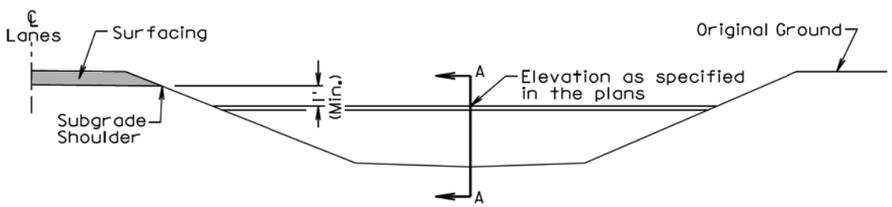

ELEVATION VIEW

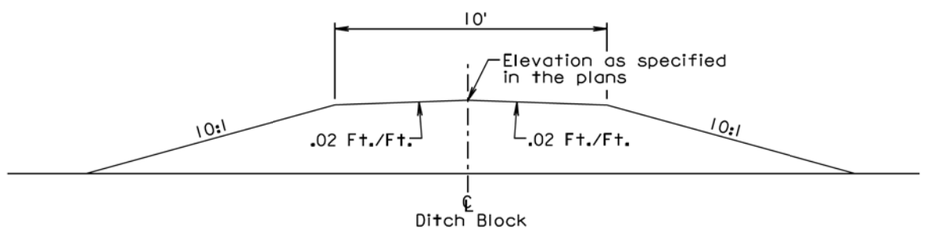

SECTION A-A

GENERAL NOTES:

The ditch section shown above in the perspective and elevation view is only for illustrative purposes.

The inslopes of the ditch block shall be 10:1 or as specified in the plans.

The transition area between the mainline inslope and the ditch block inslope shall be rounded to eliminate an abrupt transition.

February 14, 2011

Published Date: 3rd Qtr. 2015	SDDOT	DITCH BLOCK	PLATE NUMBER 120.02
			Sheet 1 of 1

TOLERANCES IN DIMENSIONS

Diameter: ±1.5% for 24" Dia. or less and ±1% or 3/8" whichever is more for 27" Dia. or greater.
Diameters at joints: ± 3/16" for 30" Dia. or less and ± 1/4" for 36" or greater.
Length of joint (j): ± 1/4".
Wall thickness (T): not less than design T by more than 5% or 3/16", whichever is greater.
Laying length: shall not underrun by more than 1/2".

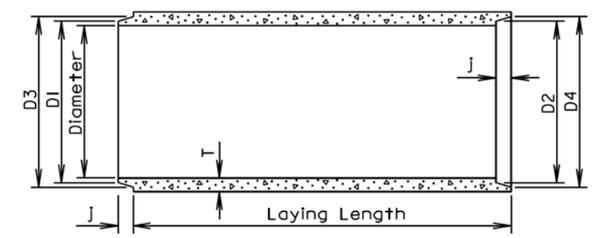

LONGITUDINAL SECTION

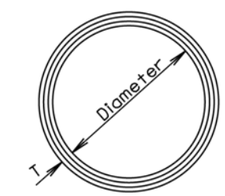

END VIEW

GENERAL NOTES:

Construction of R.C.P. shall conform to the requirements of Section 990 of the Specifications.

Not more than 2 four-foot sections shall be permitted near the ends of any culvert. Four-foot lengths shall be used only to secure the required length of culvert.

Diam. (in.)	Approx. Wt. /Ft. (lb.)	T (in.)	J (in.)	D1 (in.)	D2 (in.)	D3 (in.)	D4 (in.)
12	92	2	1 3/4	13 1/4	13 5/8	13 7/8	14 1/4
15	127	2 1/4	2	16 1/2	16 7/8	17 1/4	17 5/8
18	168	2 1/2	2 1/4	19 5/8	20	20 3/8	20 3/4
21	214	2 3/4	2 1/2	22 7/8	23 1/4	23 3/4	24 1/8
24	265	3	2 3/4	26	26 3/8	27	27 3/8
27	322	3 1/4	3	29 1/4	29 5/8	30 1/4	30 5/8
30	384	3 1/2	3 1/4	32 3/8	32 3/4	33 1/2	33 7/8
36	524	4	3 3/4	38 3/4	39 1/4	40	40 1/2
42	685	4 1/2	4	45 1/8	45 5/8	46 1/2	47
48	867	5	4 1/2	51 1/2	52	53	53 1/2
54	1070	5 1/2	4 1/2	57 7/8	58 3/8	59 3/8	59 7/8
60	1296	6	5	64 1/4	64 3/4	66	66 1/2
66	1542	6 1/2	5 1/2	70 5/8	71 1/8	72 1/2	73
72	1810	7	6	77	77 1/2	79	79 1/2
78	2098	7 1/2	6 1/2	83 3/8	83 7/8	85 5/8	86 1/8
84	2410	8	7	89 3/4	90 1/4	92 1/8	92 5/8
90	2740	8 1/2	7	95 3/4	96 1/4	98 1/8	98 5/8
96	2950	9	7	102 1/8	102 5/8	104 1/2	105
102	3075	9 1/2	7 1/2	109	109 1/2	111 1/2	112
108	3870	10	7 1/2	115 1/2	116	118	118 1/2

June 26, 2015

Published Date: 3rd Qtr. 2015	SDDOT	REINFORCED CONCRETE PIPE	PLATE NUMBER 450.01
			Sheet 1 of 1

Plot Scale - 1:200
Plotted From - tpr17192
File - ...\prj\cmix04F8\s12002s45001.dgn

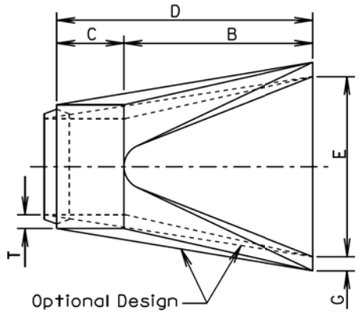

TOP VIEW

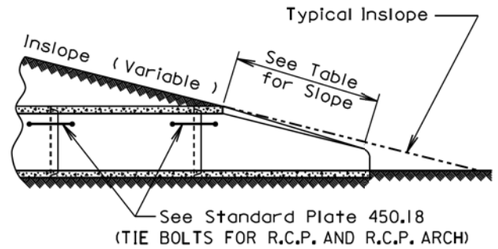

SLOPE DETAIL

GENERAL NOTES:

Lengths of concrete pipe shown on plan sheets are between flared ends only.

Construction of R.C.P. Flared End shall conform to the requirements of Section 990 of the Specifications.

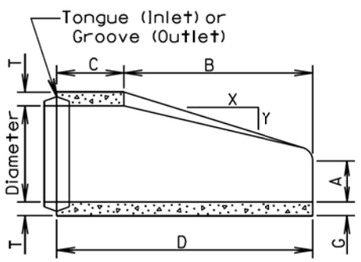

LONGITUDINAL SECTION

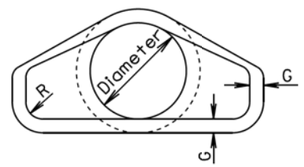

END VIEW

Dia. (in.)	Approx. Wt. of Section (lbs.)	Approx. Slope (X to Y)	T (in.)	A (in.)	B (in.)	C (in.)	D (in.)	E (in.)	G (in.)	R (in.)
12	530	2.4:1	2	4	24	48 7/8	72 7/8	24	2	1 1/2
15	740	2.4:1	2 1/4	6	27	46	73	30	2 1/4	1 1/2
18	990	2.3:1	2 1/2	9	27	46	73	36	2 1/2	1 1/2
21	1280	2.4:1	2 3/4	9	36	37 1/2	73 1/2	42	2 3/4	1 1/2
24	1520	2.5:1	3	9 1/2	43 1/2	30	73 1/2	48	3	1 1/2
27	1930	2.5:1	3 1/4	10 1/2	49 1/2	24	73 1/2	54	3 1/4	1 1/2
30	2190	2.5:1	3 1/2	12	54	19 3/4	73 3/4	60	3 1/2	1 1/2
36	4100	2.5:1	4	15	63	34 3/4	97 3/4	72	4	1 1/2
42	5380	2.5:1	4 1/2	21	63	35	98	78	4 1/2	1 1/2
48	6550	2.5:1	5	24	72	26	98	84	5	1 1/2
54	8240	2:1	5 1/2	27	65	33 1/4	98 1/4	90	5 1/2	1 1/2
60	8730	1.9:1	6	35	60	39	99	96	5	1 1/2
66	10710	1.7:1	6 1/2	30	72	27	99	102	5 1/2	1 1/2
72	12520	1.8:1	7	36	78	21	99	108	6	1 1/2
78	14770	1.8:1	7 1/2	36	90	21	111	114	6 1/2	1 1/2
84	18160	1.6:1	8	36	90 1/2	21	111 1/2	120	6 1/2	1 1/2
90	20900	1.5:1	8 1/2	41	87 1/2	24	111 1/2	132	6 1/2	6

June 26, 2015

Published Date: 3rd Qtr. 2015

SDDOT

R. C. P. FLARED ENDS

PLATE NUMBER 450.10

Sheet 1 of 1

Wall "t" (in.)	Rod Dia. (in.)	Pipe Sleeve Dia. (nominal)
≤ 3 1/4	5/8	3/4
3 1/2-6 1/2	3/4	1
≥ 7	1	1 1/4

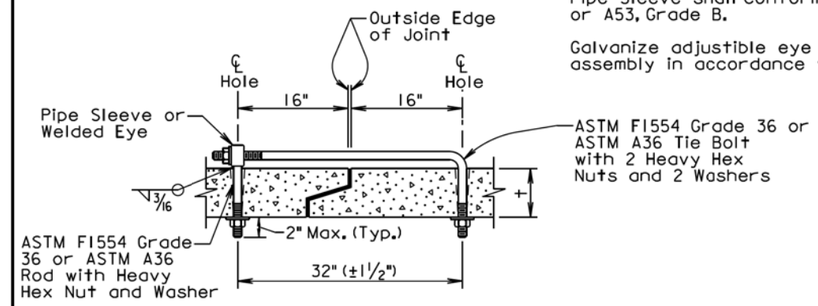

ADJUSTABLE EYE BOLT TIE

GENERAL NOTES:

Tie bolts shall conform to ASTM F1554 Grade 36 or ASTM A36. Nuts shall be heavy hex conforming to ASTM A563. Washers shall conform to ASTM F436.

Pipe Sleeve shall conform to ASTM A500 or A53, Grade B.

Galvanize adjustible eye bolt tie assembly in accordance with ASTM A153.

Pipe Dia. (in.)	"L" (in.)	Bolt Dia. (in.)
≤ 48	4	3/4
> 48	6	1

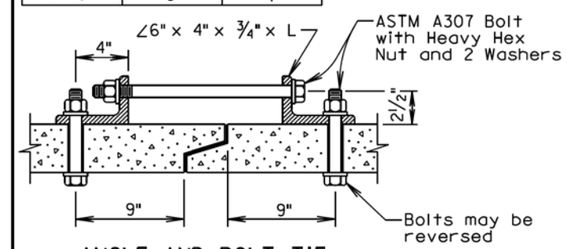

ANGLE AND BOLT TIE

GENERAL NOTES:

Angles shall conform to ASTM A36.

Bolts shall conform to ASTM A307. Nuts shall be heavy hex conforming to ASTM A563. Washers shall conform to ASTM F436.

Galvanize angles, bolts, nuts, and washers in accordance with ASTM A153.

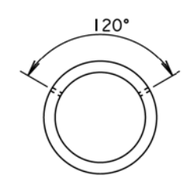

END VIEW "CIRCULAR"

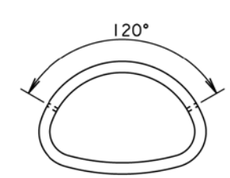

END VIEW "ARCH"

GENERAL NOTES:

In lieu of the tie bolts detailed above other types of tie bolt connections may be installed as approved by the Office of Bridge Design.

All pipe sections of R.C.P. and R.C.P. Arch shall be tied with tie bolts except for pipe located between drop inlets, manholes, and junction boxes. All pipe sections of pipes that only enter or exit drop inlets, manhole, and junction boxes shall be tied with tie bolts.

There will be no separate measurement or payment for the tie bolts. The cost for furnishing and installing the tie bolts shall be incidental to the contract unit price per foot for the corresponding bid item for R.C.P. or R.C.P. Arch.

February 28, 2013

Published Date: 3rd Qtr. 2015

SDDOT

TIE BOLTS FOR R.C.P. AND R.C.P. ARCH

PLATE NUMBER 450.18

Sheet 1 of 1

Plot Scale - 1:200
- Plotted From - trpr17192
File - ...\prj\cmix04F8\s450\10s450\18.dgn

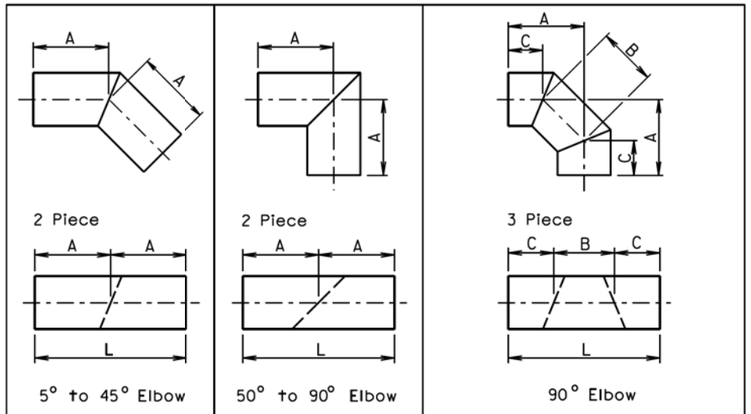

Diameter	A	L	Diameter	A	L	Diameter	A	B	C	L
Inches	Feet	Feet	Inches	Feet	Feet	Inches	Inches			Feet
12	1	2	12	2	4	12	25½	11	18½	4
15	1	2	15	2	4	15	26½	12	18	4
18	1	2	18	2	4	18	27	14	17	4
21	2	4	21	2	4	21	27	15	16½	4
24	2	4	24	2	4	24	27½	16	16	4
27	2	4	27	2	4	27	27½	17	15½	4
30	2	4	30	3	6	30	40	19	26½	6
33	2	4	33	3	6	33	40	20	26	6
36	2	4	36	3	6	36	40½	21	25½	6
42	2	4	42	3	6	42	41	23	24½	6
48	2	4	48	4	8	48	53½	26	35	8
54	3	6	54	4	8	54	54	28	34	8
60	3	6	60	4	8	60	54½	31	32½	8
66	3	6	66	4	8	66	54	33	31½	8
72	3	6	72	5	10	72	67½	36	42	10
78	3	6	78	5	10	78	68	39	40½	10
84	3	6	84	5	10	84	68½	41	39½	10
90	3	6	90	6	12	90	70	46	37	10
96	3	6	96	6	12	96	82	46	49	12

FABRICATED ELBOW LENGTHS FOR ALL CORRUGATIONS

GENERAL NOTES:

All dimensions shown are nominal.

L = Linear Feet of C.M.P. required to fabricate fitting.

June 26, 2001

Published Date: 3rd Qtr. 2015	SDDOT	C.M.P. FABRICATED LENGTHS FOR ELBOWS	PLATE NUMBER 450.32
			Sheet 1 of 1

Alternate Type Connector Sections may be used with approval of the Engineer.

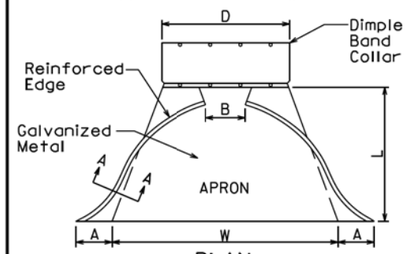

PLAN

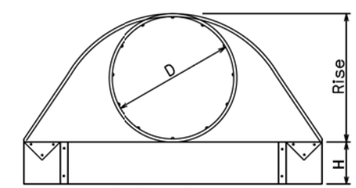

ELEVATION

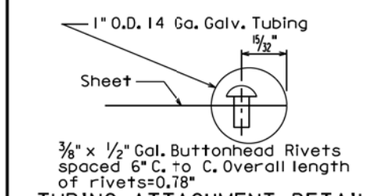

TUBING ATTACHMENT DETAILS
SECTION A-A

Dia. D (in.)	Ga.	DIMENSIONS (in.) A	B	H	L	W	Approx. Slope	Body
12	16	6	6	6	21	24	2½:1	1 Pc.
15	16	7	8	6	26	30	2½:1	1 Pc.
18	16	8	10	6	31	36	2½:1	1 Pc.
21	16	9	12	6	36	42	2½:1	1 Pc.
24	16	10	13	6	41	48	2½:1	1 Pc.
30	14	12	16	8	46	60	2½:1	1 Pc.
36	14	14	19	9	51	72	2½:1	2 Pc.
42	12	16	22	11	60	84	2½:1	2 Pc.
48	12	18	27	12	69	90	2¼:1	2 Pc.
54	12	18	30	12	78	102	2:1	3 Pc.
60	12	18	33	12	84	114	1¾:1	3 Pc.
66	12	18	36	12	87	120	1½:1	3 Pc.
72	12	18	39	12	87	126	1⅓:1	3 Pc.
78	12	18	42	12	87	132	1¼:1	3 Pc.
84	12	18	45	12	87	138	1⅙:1	3 Pc.

STANDARD CONNECTIONS

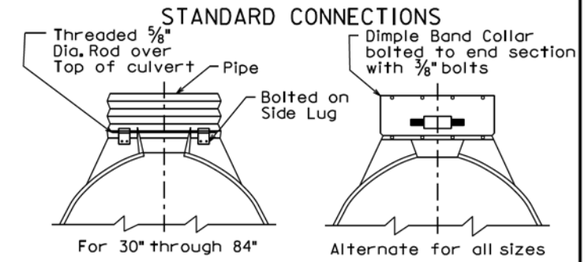

For 30" through 84"

Alternate for all sizes

NOTE:
Tubing is slipped over the sheet and rivets or lugs prior to forming operations of the apron.

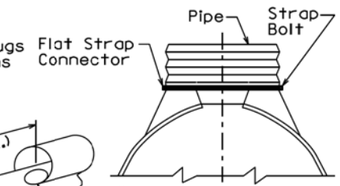

For 12" through 24" only

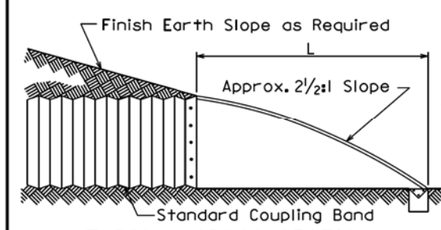

TYPICAL CROSS-SECTION

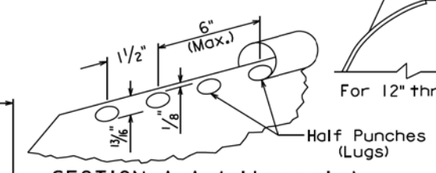

SECTION A-A (alternate)

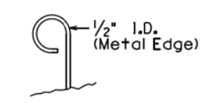

SECTION A-A (alternate)

GENERAL NOTES:

All 3 pc. bodies shall have 12 Ga. sides and 10 Ga. center panels. Width of center panels shall be greater than 20% of the pipe periphery. Multiple panel bodies to have lap seams tightly joined by 3/8" Dia. galvanized rivets or bolts.

For 60" through 84" sizes, reinforced edges shall be supplemented with galvanized stiffener angles. The angles will be 2" x 2" x 1/4" for 60" through 72" diameters and 2½" x 2½" x 1/4" for 78" and 84" diameters. The angles shall be attached by 3/8" diameter galvanized nuts and bolts.

Rivets and Bolts shall be 3/8" Dia. Min. for 10 Ga. and 12 Ga. sheet, and 5/16" Dia. Min. for 14 Ga. and 16 Ga. sheets. Tighten nuts with torque wrench to 25 lbs. torque.

March 31, 2000

Published Date: 3rd Qtr. 2015	SDDOT	C.M.P. FLARED ENDS	PLATE NUMBER 450.35
			Sheet 1 of 1

Plot Scale - 1:200
- Plotted From - trpr17192
File - ...\prj\cmix04F8\s450325450 35.dgn

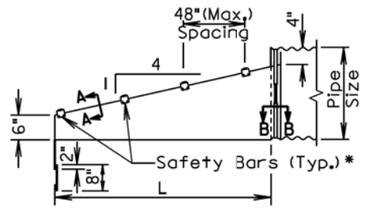

ELEVATION VIEW

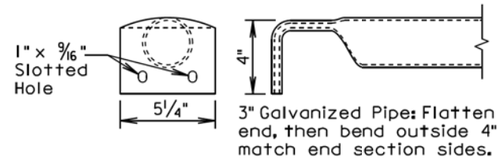

DETAIL OF SAFETY BARS

* Number of bars required will vary depending on the length of the end section.

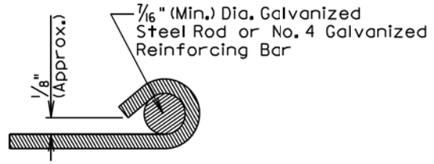

SECTION A-A

When bars are specified in the plans, the cross drainage bar is required when span is over 30". Cross bar to be welded to parallel bars to make one piece unit.

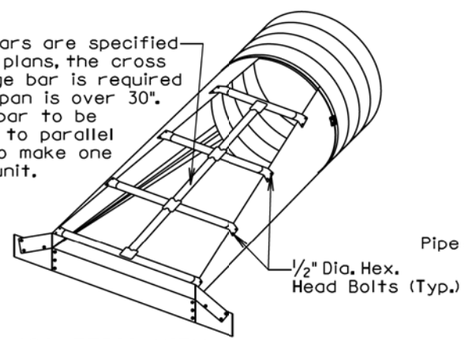

ISOMETRIC VIEW

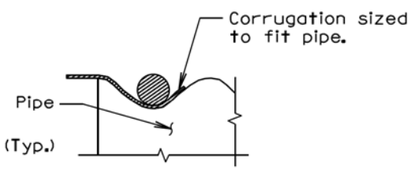

SECTION B-B

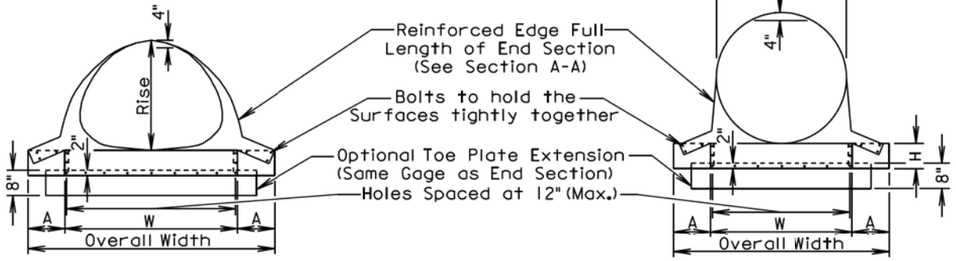

FRONT VIEW

FRONT VIEW

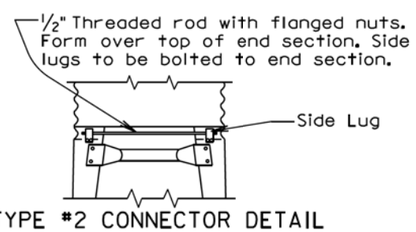

TYPE #2 CONNECTOR DETAIL
(For 30" and Larger)
(For 21" X 15" and Larger)

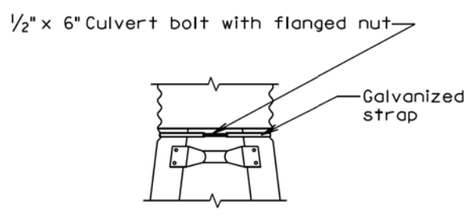

TYPE #1 CONNECTOR DETAIL
(For 15" Through 24")

February 10, 2014

Published Date: 3rd Qtr. 2015	SDDOT	C. M. P. SLOPED ENDS	PLATE NUMBER 450.37
			Sheet 1 of 2

ARCH C.M.P. SLOPED ENDS										
Equv. Dia. (Inch)	(Inches)		Min. Thick.		Dimensions (Inches)				L Dimensions	
	Span	Rise	Inch	Gage	A	H	W	Overall Width	Slope	Length (Inch)
18	21	15	.064	16	8	6	27	43	4:1	20
21	24	18	.064	16	8	6	30	46	4:1	32
24	28	20	.064	16	8	6	34	50	4:1	40
30	35	24	.079	14	12	9	41	65	4:1	56
36	42	29	.109	12	12	9	48	72	4:1	76
42	49	33	.109	12	16	12	55	87	4:1	92
48	57	38	.109	12	16	12	63	95	4:1	112
54	64	43	.109	12	16	12	70	102	4:1	132
60	71	47	.109	12	16	12	77	109	4:1	148
72	83	57	.109	12	16	12	89	121	4:1	188

CIRCULAR C.M.P. SLOPED ENDS								
Pipe Dia. (Inch)	Min. Thick.		Dimensions (Inches)				L Dimensions	
	Inch	Gage	A	H	W	Overall Width	Slope	Length (Inch)
15	.064	16	8	6	21	37	4:1	20
18	.064	16	8	6	24	40	4:1	32
21	.064	16	8	6	27	43	4:1	44
24	.064	16	8	6	30	46	4:1	56
30	.109	12	12	9	36	60	4:1	80
36	.109	12	12	9	42	66	4:1	104
42	.109	12	16	12	48	80	4:1	128
48	.109	12	16	12	54	86	4:1	152
54	.109	12	16	12	60	92	4:1	176
60	.109	12	16	12	66	98	4:1	200

GENERAL NOTES:

Safety bars shall be attached to sloped ends over 30" in diameter only when specified in the plans.

Sloped ends shall be fabricated from galvanized steel and shall conform to the requirements of the Specifications.

Safety bars shall be fabricated from steel schedule 40 pipe in conformance with ASTM A53, grade B or HSS 3.5X.216 in conformance with ASTM A500, grade B.

Slotted holes for safety bar attachment shall be provided for all end sections.

Attachment to circular pipes 15" through 24" diameter shall be made with Type #1 straps. All other sizes shall be attached with Type #2 rods and lugs.

When stated in the plans, optional toe plate extension shall be punched and bolted to end section apron lip with 3/8" diameter galvanized bolts. Steel for toe plate extension shall be same gauge as end section. Dimensions shall be overall width less 6" by 8" high.

Installation shall be performed in accordance with the Specifications.

Cost of all work and materials required for fabrication and installation of sloped ends shall be incidental to the bid items for the various sizes of sloped ends.

February 10, 2014

Published Date: 3rd Qtr. 2015	SDDOT	C. M. P. SLOPED ENDS	PLATE NUMBER 450.37
			Sheet 2 of 2

Plot Scale - 1:200
- Plotted From - trpr17192
File - ...\cmix04F8\s45037_1s45037_2.dgn

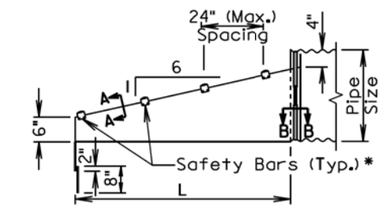

ELEVATION VIEW

* Number of bars required will vary depending on the length of the end section.

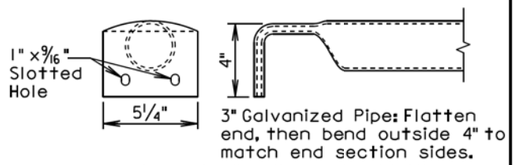

DETAIL OF SAFETY BARS

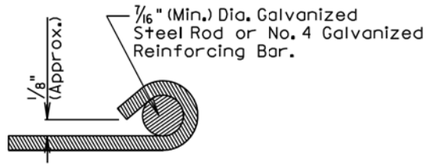

SECTION A-A

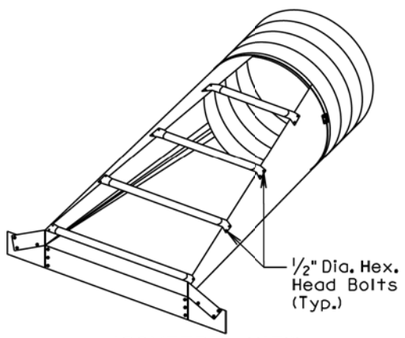

ISOMETRIC VIEW

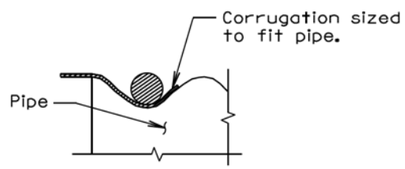

SECTION B-B

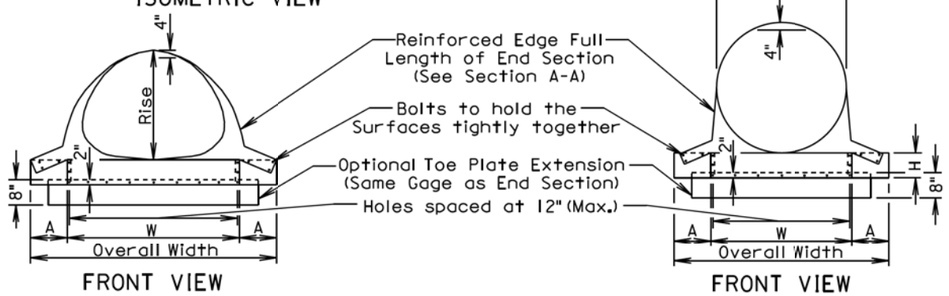

FRONT VIEW

FRONT VIEW

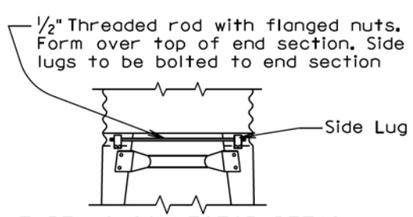

TYPE #2 CONNECTOR DETAIL
(For 30" and Larger)
(For 21" X 15" and Larger)

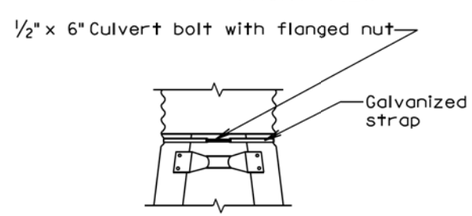

TYPE #1 CONNECTOR DETAIL
(For 15" Through 24")

June 26, 2015

Published Date: 3rd Qtr. 2015	SDDOT	C. M. P. SAFETY ENDS	PLATE NUMBER 450.38
			Sheet 1 of 2

ARCH C.M.P. SAFETY ENDS

Equv. Dia. (Inch)	(Inches)		Min. Thick.		Dimensions (Inches)				L Dimensions	
	Span	Rise	Inch	Gage	A	H	W	Overall Width	Slope	Length (Inch)
18	21	15	.064	16	8	6	27	43	6:1	30
21	24	18	.064	16	8	6	30	46	6:1	48
24	28	20	.064	16	8	6	34	50	6:1	60
30	35	24	.079	14	12	9	41	65	6:1	84
36	42	29	.109	12	12	9	48	72	6:1	114
42	49	33	.109	12	16	12	55	87	6:1	138
48	57	38	.109	12	16	12	63	95	6:1	168
54	64	43	.109	12	16	12	70	102	6:1	198
60	71	47	.109	12	16	12	77	109	6:1	222
72	83	57	.109	12	16	12	89	121	6:1	282

CIRCULAR C.M.P. SAFETY ENDS

Pipe Dia. (Inch)	Min. Thick.		Dimensions (Inches)				L Dimensions	
	Inch	Gage	A	H	W	Overall Width	Slope	Length (Inch)
15	.064	16	8	6	21	37	6:1	30
18	.064	16	8	6	24	40	6:1	48
21	.064	16	8	6	27	43	6:1	66
24	.064	16	8	6	30	46	6:1	84
30	.109	12	12	9	36	60	6:1	120
36	.109	12	12	9	42	66	6:1	156
42	.109	12	16	12	48	80	6:1	192
48	.109	12	16	12	54	86	6:1	228
54	.109	12	16	12	60	92	6:1	264
60	.109	12	16	12	66	98	6:1	300

GENERAL NOTES:

Safety ends shall be fabricated from galvanized steel conforming to the requirements of the Specifications.

Safety bars shall be fabricated from steel schedule 40 pipe in conformance with ASTM A53, grade B or HSS 3.5X.216 in conformance with ASTM A500, grade B.

Slotted holes for safety bar attachment shall be provided for all end sections.

Attachment to circular pipes 15" through 24" diameter shall be made with Type #1 straps. All other sizes shall be attached with Type #2 rods and lugs.

When stated in the plans, optional toe plate extension shall be punched and bolted to end section apron lip with 3/8" diameter galvanized bolts. Steel for toe plate extension shall be same gauge as end section. Dimensions shall be overall width less 6" by 8" high.

Installation shall be performed in accordance with the Specificctions.

Cost of all work and materials required for fabrication and installation of safety ends shall be incidental to the bid items for the various sizes of safety ends.

June 26, 2015

Published Date: 3rd Qtr. 2015	SDDOT	C. M. P. SAFETY ENDS	PLATE NUMBER 450.38
			Sheet 2 of 2

Plot Scale - 1:200
- Plotted From - tnpr17192
File - ...\cmix04F8\s45038_1s45038_2.dgn

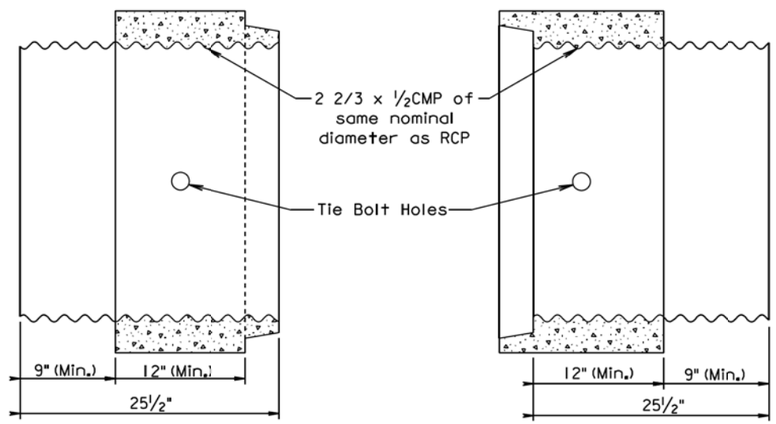

INLET
(CMP to RCP Transition)

OUTLET
(RCP to CMP Transition)

GENERAL NOTE:

Arch pipe transitions shall be fabricated similar to the round transition shown above.

March 31, 2000

Published Date: 3rd Qtr. 2015

SDDOT

C.M.P. TO R.C.P. TRANSITION AND R.C.P. TO C.M.P. TRANSITION

PLATE NUMBER 450.50

Sheet 1 of 1

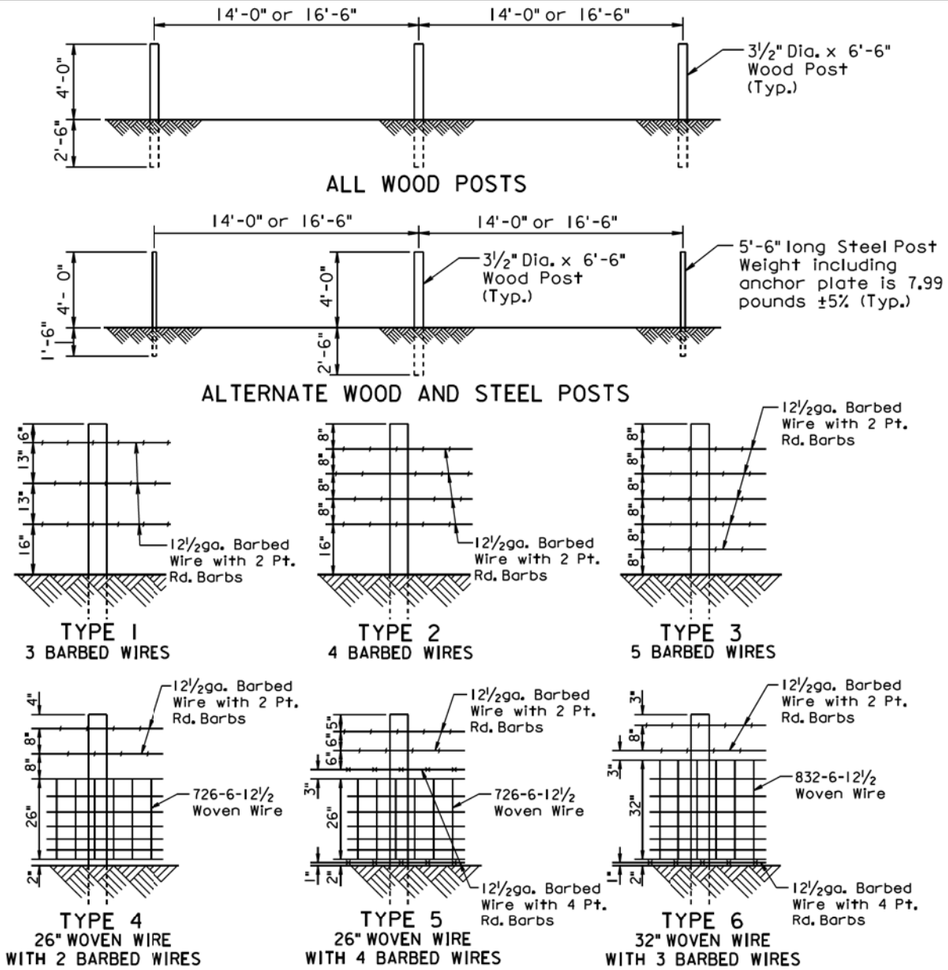

TYPE OF FENCE		LINE POST SPACING	BARBED WIRE		WOVEN WIRE
TYPE	DESCRIPTION		WIRE GAGE	NUMBER AND SHAPE OF BARBS	STYLE OR DESIGN NO.
1	3 Barbed Wires	16'-6"	12½	2 Point Round	—
2	4 Barbed Wires	16'-6"	12½	2 Point Round	—
3	5 Barbed Wires	16'-6"	12½	2 Point Round	—
4	26" Woven Wire with 2 Barbed Wires	14'-0"	12½	2 Point Round	726-6-12½
5	26" Woven Wire with 4 Barbed Wires	14'-0"	12½	2 wires with 2 Pt. Rd. 2 wires with 4 Pt. Rd.	726-6-12½
6	32" Woven Wire with 3 Barbed Wires	14'-0"	12½	2 wires with 2 Pt. Rd. 1 wire with 4 Pt. Rd.	832-6-12½

GENERAL NOTES:

Fence types designated on the plans that are followed by the letter S shall have smooth (barbless) wires.

When type 5S or 6S is designated the bottom wire may be barbed, smooth, or left off.

All degrees of curvature stated for fence are at centerline of roadway.

September 14, 2009

Published Date: 3rd Qtr. 2015

SDDOT

RIGHT-OF-WAY FENCE

PLATE NUMBER 620.01

Sheet 1 of 1

Plot Scale - 1:200
- Plotted From - trpr17192
File - ...\prj\cmix04F8\s45050s62001.dgn

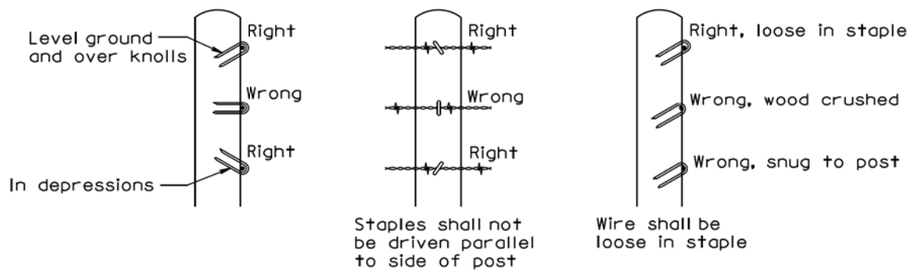

STAPLE INSTALLATION

GENERAL NOTES:

The Right-of-Way fence shall consist of barbed wire or a combination of woven wire and barbed wire. The barbed wire and/or woven wire shall be fastened to all wood posts or fastened to alternating wood and steel posts. Only wood posts shall be used for brace panels. Gates shall be of the type designated in the plans or as otherwise directed by the Engineer. Fence shall be constructed conforming to the details on the standard plates and in the plans unless otherwise directed by the Engineer.

Right-of-Way fence on Interstate Projects shall be constructed one foot within the Interstate Right-of-Way lines except at bridge openings, cattle passes, and as otherwise directed by the Engineer.

Right-of-Way fence other than on Interstate Projects shall be constructed within one foot of the Right-of-Way on the Landowner's side except at bridge openings, cattle passes, and as otherwise directed by the Engineer.

Barbs shall be fabricated from zinc coated 14 ga. wire. Two point barbs shall be wrapped twice around one main strand at 4" spacings and the four point barbs shall be interlocked and wrapped around both main strands at 5" spacings.

The gages of wire and wood post lengths and sizes are the minimum acceptable unless otherwise specified in the plans. The tolerances for steel posts shall be as stated in AASHTO M281. Woven wire shall conform to design and specifications of ASTM A116 and barbed wire shall conform to ASTM A121.

December 23, 2004

Published Date: 3rd Qtr. 2015	SDDOT	STAPLE INSTALLATION AND GENERAL RIGHT-OF-WAY FENCE NOTES	PLATE NUMBER 620.02 Sheet 1 of 1

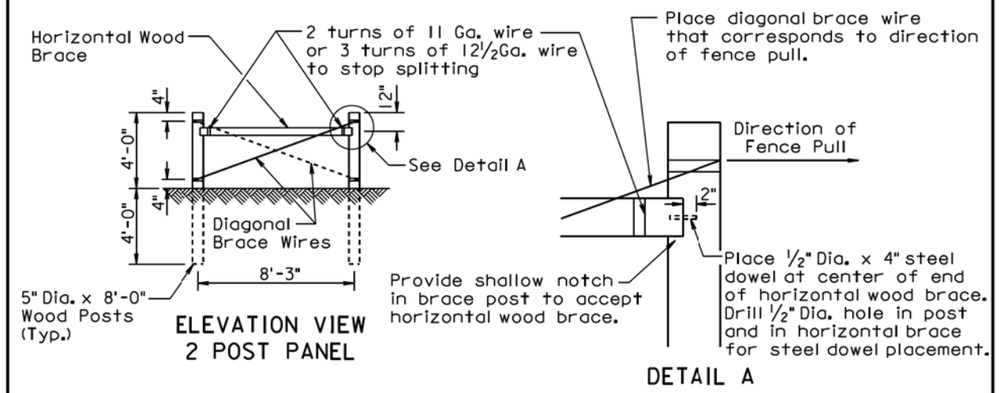

ELEVATION VIEW
2 POST PANEL

DETAIL A

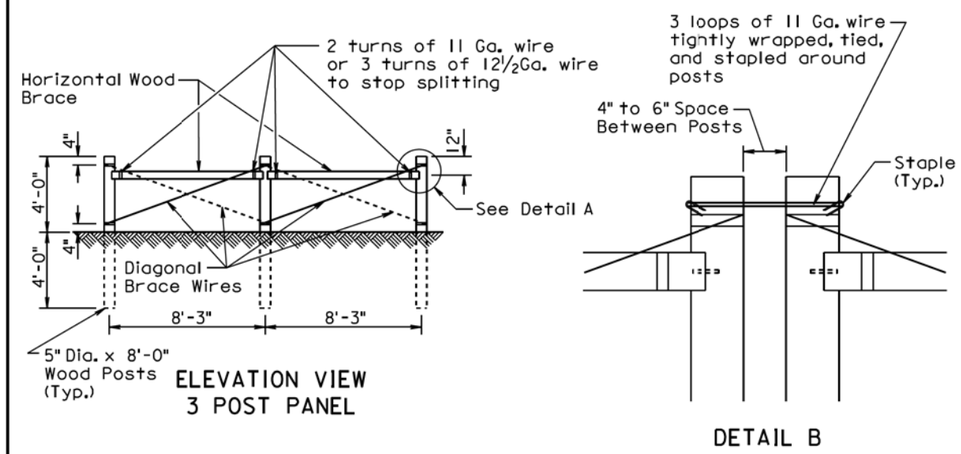

ELEVATION VIEW
3 POST PANEL

DETAIL B

GENERAL NOTES:

Two Post Panels shall be installed at least every 1320' between corners.

Two Post Panels shall be installed at any sharp vertical angle crest points and as directed by the Engineer.

Horizontal wood braces shall consist of 4" dia. x 8' wood posts or rough 4" x 4" x 8' timbers.

Diagonal brace wires shall be fabricated with 4 strands of 9 Ga. galvanized wire twisted tight. The diagonal brace wires shall be installed in accordance with the direction of the fence pull. Two diagonal brace wires are required if fence pull is in both directions.

December 23, 2004

Published Date: 3rd Qtr. 2015	SDDOT	BRACE PANELS AND APPLICATIONS OF BRACE PANELS	PLATE NUMBER 620.03 Sheet 1 of 3

Plot Scale - 1:200
- Plotted From - tnpr17192
File - ...\cmix04F8\s62002s62003_1.dgn

SPACING OF 2 POST PANELS WITHIN CURVES	
DEGREE OF CURVE	SPACING OF 2 POST PANEL
less than 3°15'	** 1320'
3°15' and greater	**At P.C., P.T., and at every 1320' between P.C. and P.T.

GENERAL NOTE:

All degrees of curvature stated for fence are at centerline of roadway.

* If fence length is less than 600' to next corner use a 2 post panel.
If fence length is greater than 600' to next corner use a 3 post panel.

** Fence lengths greater than 1320' and less than 2640' place 2 Post Panel approximately at midpoint.

① See Detail B on Sheet 1 of 3.

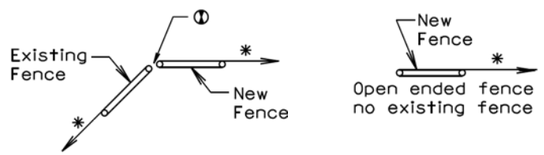

BEGIN OR END FENCE
(where new fence ties into existing fence)

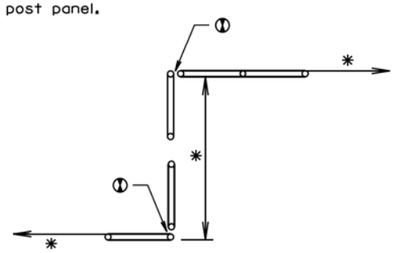

SHORT JOGS IN FENCE

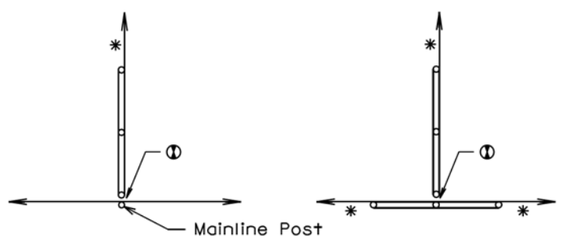

CROSS FENCE

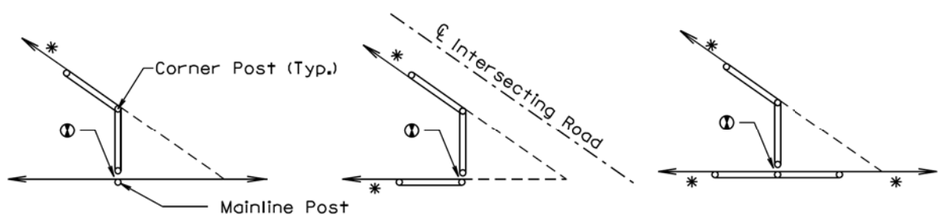

SHARP ANGLES IN CROSS FENCE

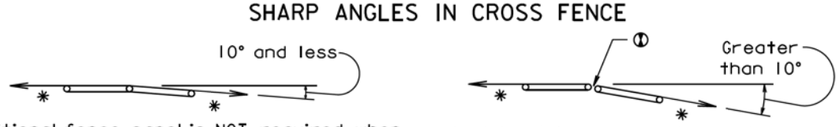

Additional fence panel is NOT required when an angle in the mainline fence is 10° and less.

Additional fence panel is required when an angle in the mainline fence is greater than 10°.

ANGLES IN MAINLINE FENCE

December 23, 2004

Published Date: 3rd Qtr. 2015	SDDOT	BRACE PANELS AND APPLICATIONS OF BRACE PANELS	PLATE NUMBER 620.03
			Sheet 2 of 3

ENTRANCE
(NOT ON CORNER)

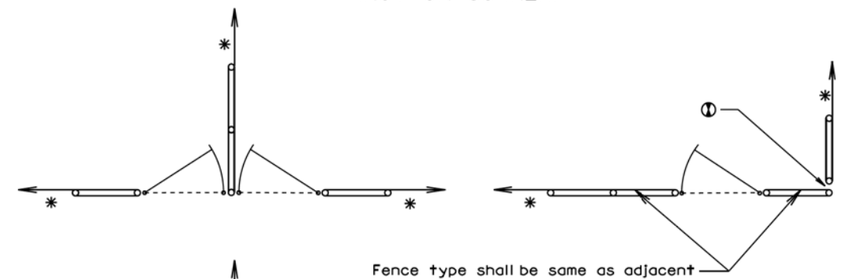

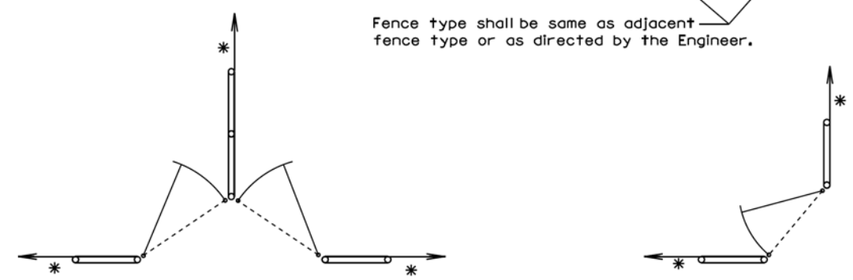

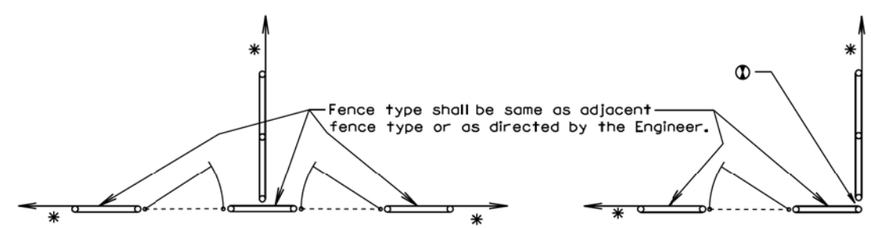

DOUBLE ENTRANCES

ENTRANCES AT CORNERS

GATES

* If fence length is less than 600' to next corner use a 2 post panel.
If fence length is greater than 600' to next corner use a 3 post panel.

① See Detail B on Sheet 1 of 3.

December 23, 2004

Published Date: 3rd Qtr. 2015	SDDOT	BRACE PANELS AND APPLICATIONS OF BRACE PANELS	PLATE NUMBER 620.03
			Sheet 3 of 3

Plot Scale - 1:200
- Plotted From - trpr17192
File - ...\cmix04F8\s62003_2s62003_3.dgn

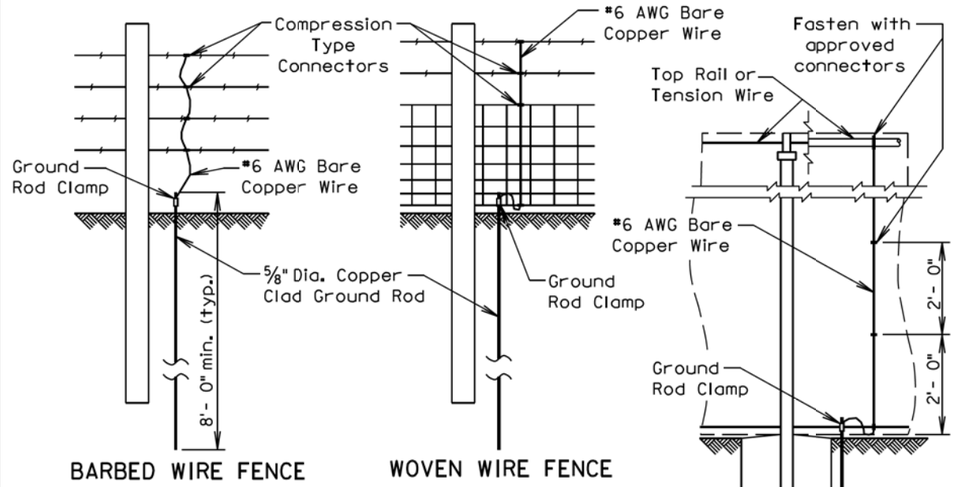

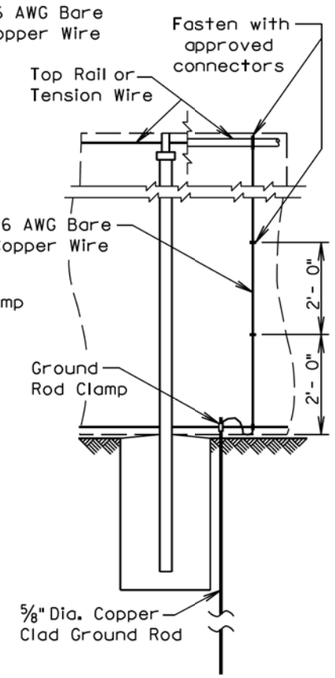

GENERAL NOTES:

Details shown on this standard plate shall apply to all types of Right-of-Way fence constructed with all wood posts or chain link fence.

Continuous fence in urban areas shall be grounded at maximum intervals of 500 feet. Continuous fence in rural areas shall be grounded at maximum intervals of 1000 feet. There shall be a ground at a maximum of 100 feet from a gate in each adjacent section of fence.

Fence placed under a power line shall be grounded with three grounds. One ground shall be placed directly below the crossing and the other two shall be placed 25 feet to 50 feet away, one on each side.

One ground shall be placed directly below each telephone or cable crossing.

Ground rods shall be located on the post side of the fence and shall be as close as possible to the post and fence.

The cost of furnishing and placing all materials for grounding shall be incidental to the contract unit price per Ft for the respective Right-of-Way fence or chain link fence bid item.

The approximate quantites of materials per each installation of a ground are:

- 1 ground rod clamp.
- 1 5/8" dia. X 8' long copper clad ground rod
- 1 #6 AWG bare copper wire; 7' long for Right-of-Way fence or 10' long for chain link fence.

Compression type or other type of connectors:

26" woven wire shall have a total of two connectors, one secured to the top and one secured to the bottom.

32" woven wire shall have a total of three connectors, one secured to the top, one secured to the middle, and one secured to the bottom.

One connector shall be used for each strand of barbed wire.

A minimum of 3 connectors shall be installed on chain link fence, the connectors shall be placed vertically at every two foot increment and connectors shall be placed on the top and bottom tension wires or top rail.

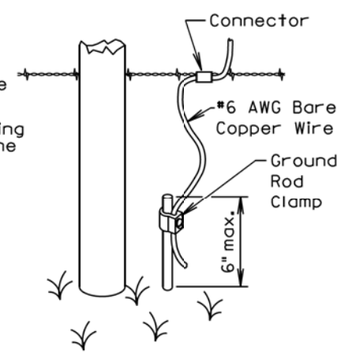

GROUND ROD DETAIL

March 31, 2000

Published Date: 3rd Qtr. 2015	SDDOT	FENCE GROUNDING	PLATE NUMBER 620.11
			Sheet 1 of 1

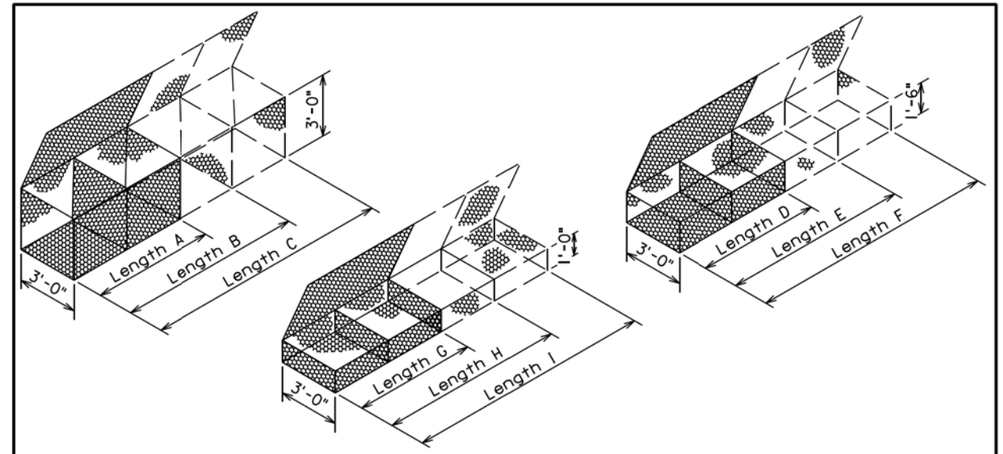

GABION DETAILS

STANDARD SIZES

SIZE	LENGTH	WIDTH	HEIGHT	NUMBER OF CELLS	CAPACITY, Cu. Yd.
A	6'-0"	3'-0"	3'-0"	2	2.0
B	9'-0"	3'-0"	3'-0"	3	3.0
C	12'-0"	3'-0"	3'-0"	4	4.0
D	6'-0"	3'-0"	1'-6"	2	1.0
E	9'-0"	3'-0"	1'-6"	3	1.5
F	12'-0"	3'-0"	1'-6"	4	2.0
G	6'-0"	3'-0"	1'-0"	2	0.7
H	9'-0"	3'-0"	1'-0"	3	1.0
I	12'-0"	3'-0"	1'-0"	4	1.3

Above Dimensions subject to mill tolerances.

GENERAL NOTES:

Lacing and internal connecting wire shall be 0.0866 inch diameter steel wire ASTM A641 Class 3 soft temper measured after galvanizing and for PVC coated gabions shall be 0.0866 inch diameter steel wire measured after galvanizing but before PVC coating.

The lacing procedure is as follows:

1. Cut a length of lacing wire approximately 1 ½ times the distance to be laced but not exceeding 5 feet.
2. Secure the wire terminal at the corner by looping and twisting.
3. Proceed lacing with alternating single and double loops at a spacing not to exceed 6 inches.
4. Securely fasten the other lacing wire terminal.

Wire lacing or interlocking type fasteners shall be used for gabion assembly and final construction of gabion structures. Interlocking fasteners for galvanized gabions shall be high tensile 0.120 inch diameter galvanized steel wire measured after galvanizing. The galvanizing shall conform to ASTM A641-92 Class 3 coating. Fasteners shall also be in accordance with ASTM A764, Class II, Type III.

Interlocking fasteners for PVC coated gabions shall be high tensile 0.120 inch diameter stainless steel wire conforming to ASTM A313, Type 302, Class I. The spacing of the interlocking fasteners during all phases of assembly and construction shall not exceed 6 inches.
All fasteners shall be placed where the mesh weaves around the selvage wire at the vertical and horizontal joints.

June 26, 2001

Published Date: 3rd Qtr. 2015	SDDOT	BANK AND CHANNEL PROTECTION GABIONS	PLATE NUMBER 720.01
			Sheet 1 of 1

Plot Scale - 1:200
Plotted From - trpr17192
File - ...\prj\cmix04F8\s62011s72001.dgn

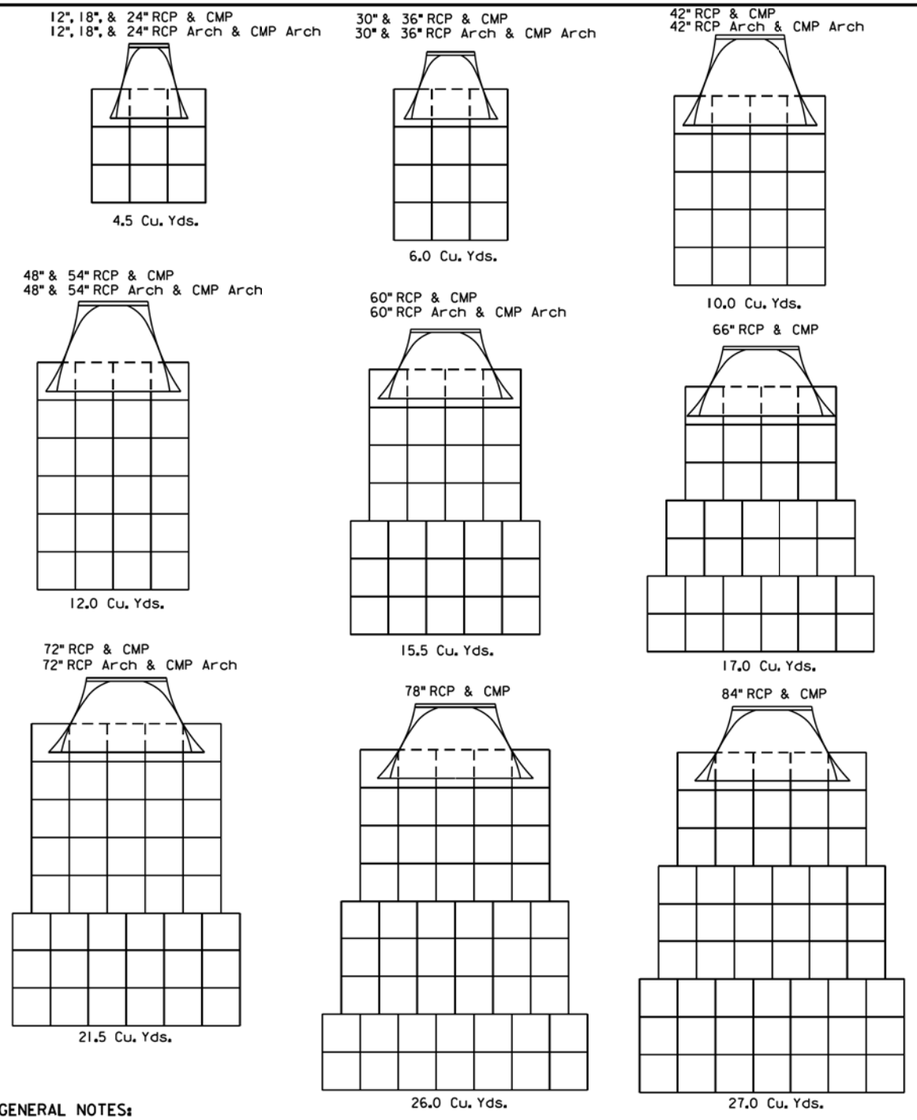

GENERAL NOTES:

Gabions at outlets of C. M. pipe and R. C. pipe shall be placed under the end section a distance of 2' from the outlet end of the section. For C. M. pipe end section installations, the upper fabric of the gabions shall be modified to accommodate the metal end section in a manner approved by the Engineer.

Quantities shown on this standard plate are based on standard gabion sizes D, E, and F (See Standard Plate 720.01).

June 26, 2001

Published Date: 3rd Qtr. 2015	SDDOT	BANK AND CHANNEL PROTECTION GABION PLACEMENT UNDER PIPE END SECTIONS	PLATE NUMBER 720.03
			Sheet 1 of 1

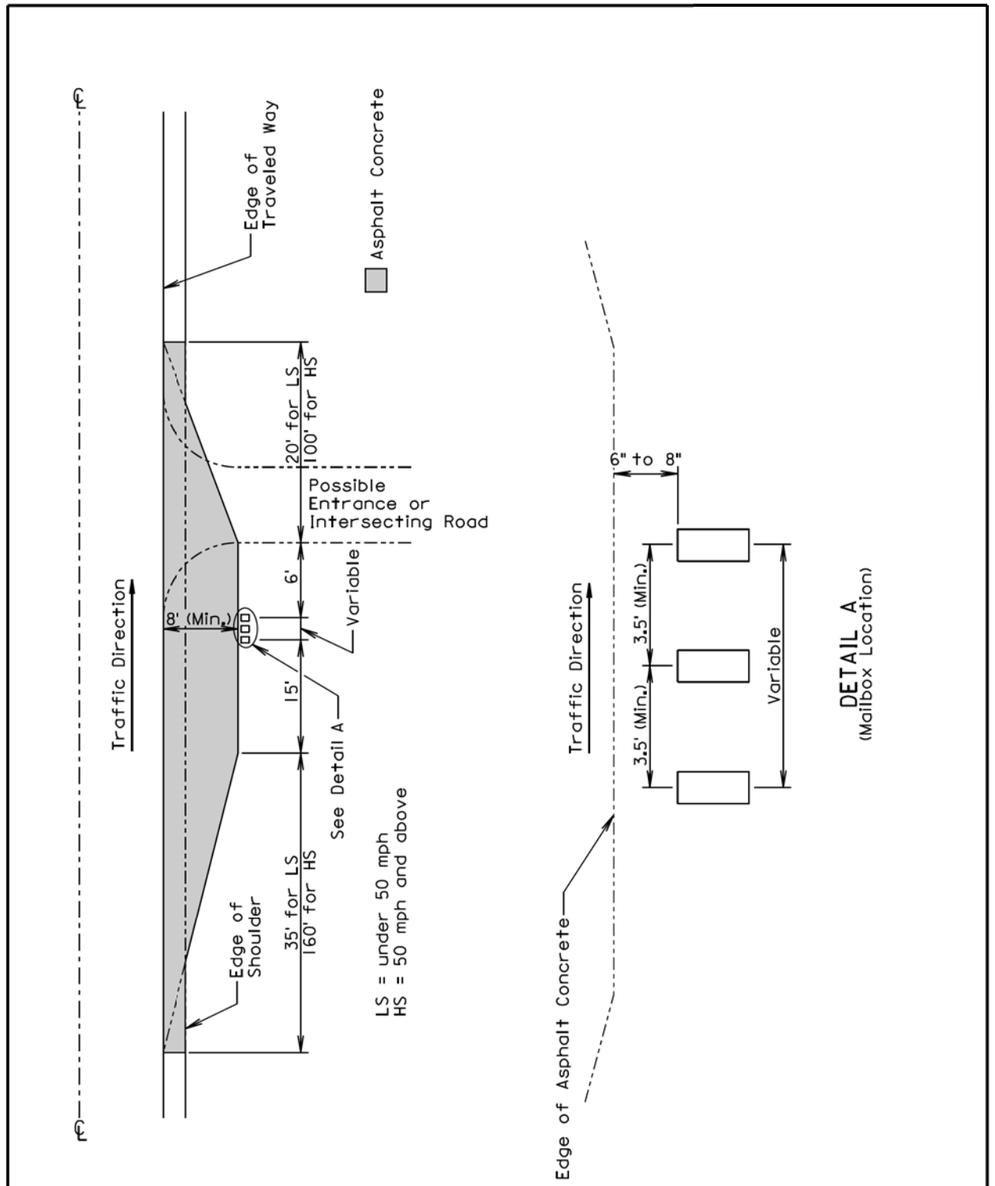

August 31, 2013

Published Date: 3rd Qtr. 2015	SDDOT	MAILBOX TURNOUT	PLATE NUMBER 900.01
			Sheet 1 of 1

Plot Scale - 1:200
- Plotted From - trpr17192
File - ...\prj\cmix04F8\s72003s90001.dgn

STATE OF SOUTH DAKOTA	PROJECT	SHEET	TOTAL SHEETS
	P 1804(43)115	B27	B27

Plotting Date: 09/02/2015

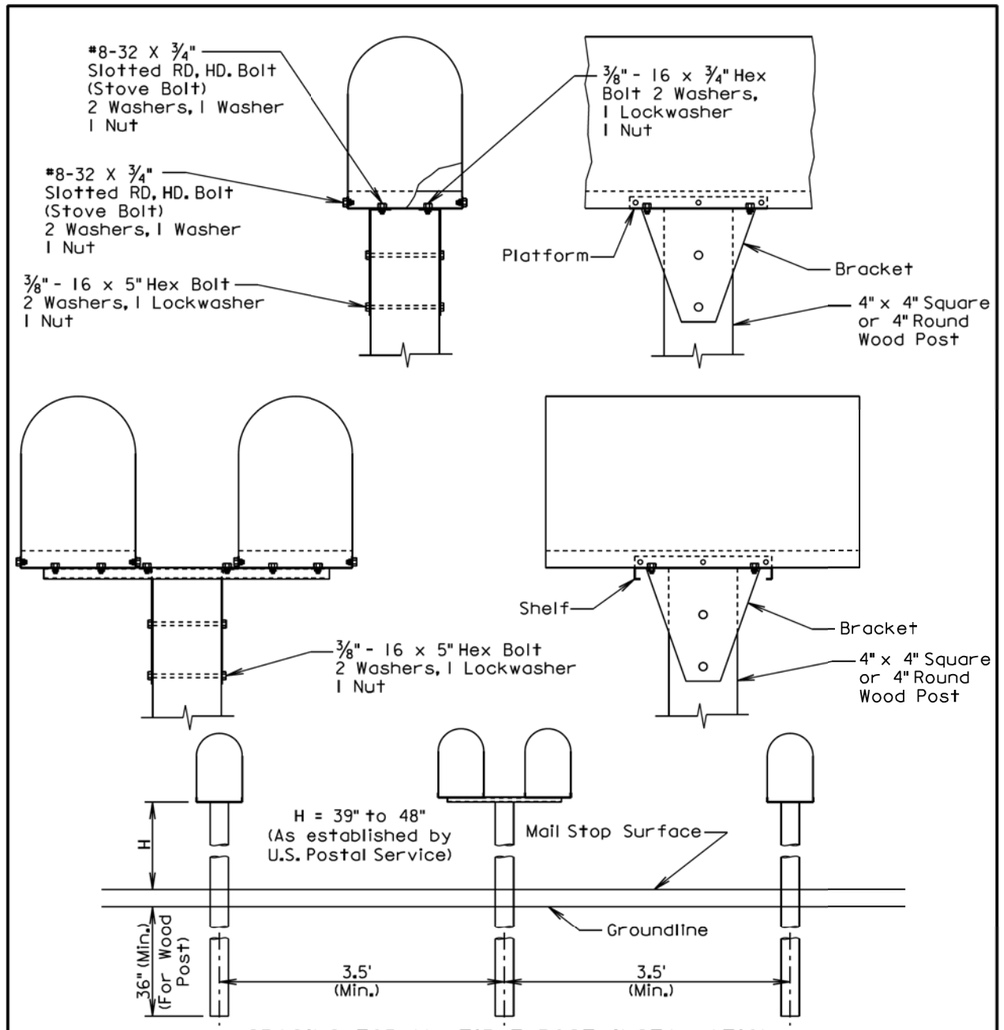

SPACING FOR MULTIPLE POST INSTALLATION

GENERAL NOTES:

The post support assemblies provided should be consistant throughout the project.

Single and double mailboxes may be in any sequence.

Post support assemblies shall be one from the approved products list, a 4"x4" or 4" round wood post, or an alternate post support assembly that meets the test level 3 crash testing requirements of NCHRP 350 or MASH.

Alternate mailbox support assemblies shall be approved by the Engineer prior to installation. The Contractor shall provide the Engineer written certification that the mailbox support assembly has met the crash testing requirements and will be installed in accordance with the manufacturer's installation instructions.

September 6, 2013

Published Date: 3rd Qtr. 2015	SDDOT	**SINGLE AND DOUBLE MAILBOX ASSEMBLIES**	PLATE NUMBER 900.02
			Sheet 1 of 1

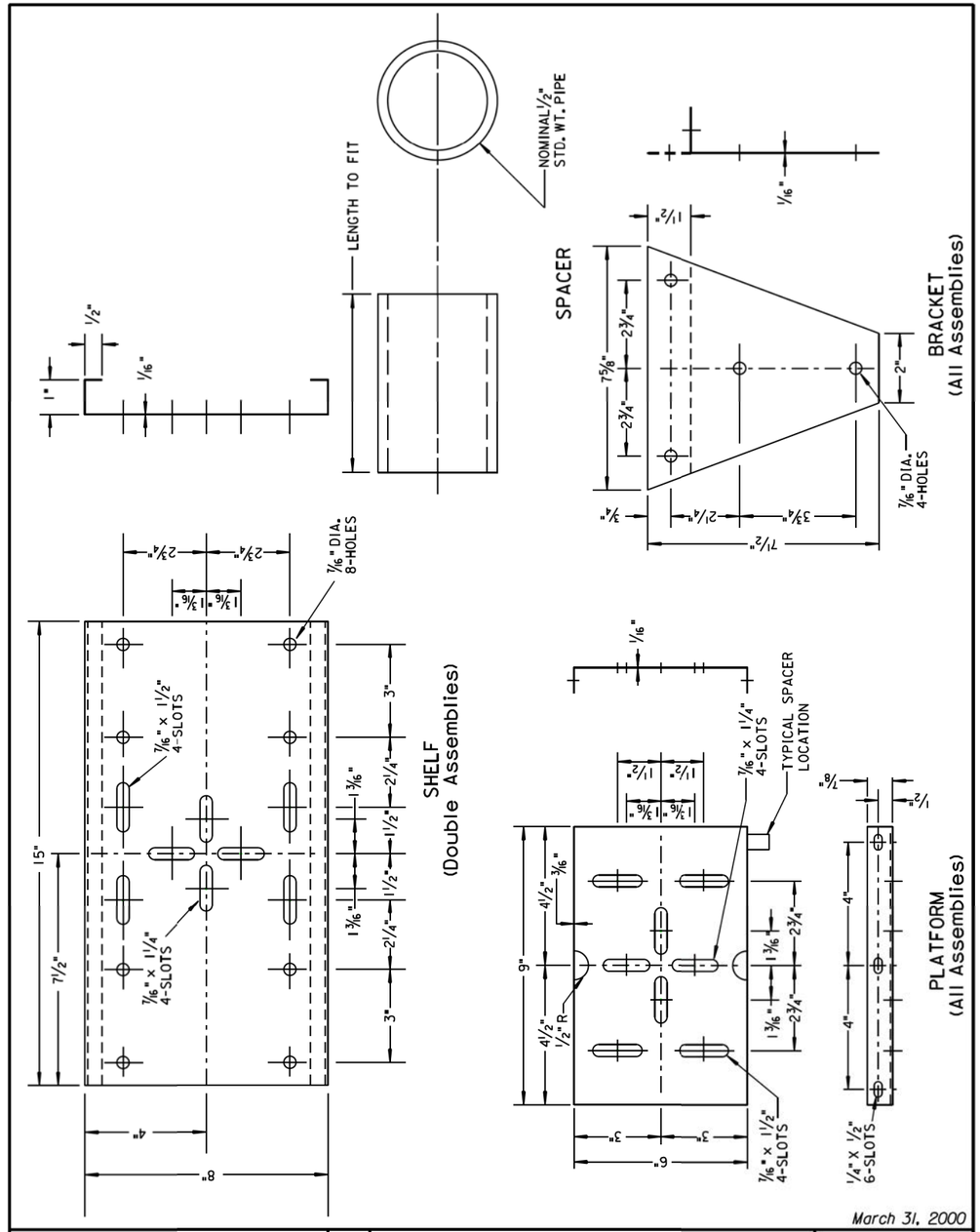

March 31, 2000

Published Date: 3rd Qtr. 2015	SDDOT	**MAILBOX SUPPORT HARDWARE**	PLATE NUMBER 900.03
			Sheet 1 of 1

Plot Scale - 1:200

- Plotted From - tnpr17192

File - ...\prj\cmix04F8\s90002s90003.dgn