SECTION F: SURFACING PLANS

STATE OF SOUTH DAKOTA	PROJECT	SHEET	TOTAL SHEETS
	PH 0046(65)373	F1	F7

Plotting Date: 08/09/2016

INDEX OF SHEETS

F1 General Layout W/Index
F2-F3 Estimate With General Notes & Tables
F4-F6 Typical Sections
F7 Special Detail

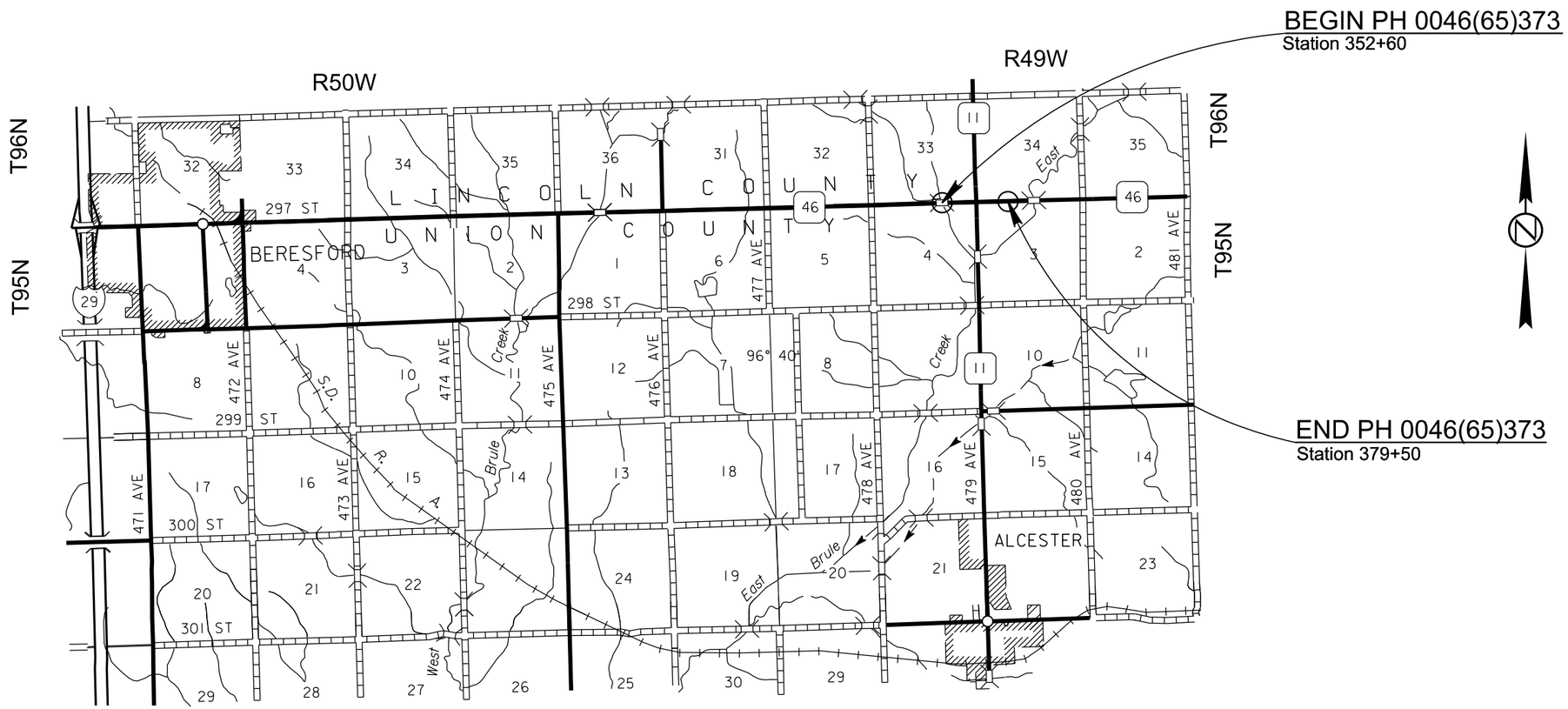

PLOT SCALE - 1:200

PLOT NAME - 1

FILE - U:\MS\PROJ\UNIN04HF\TITLE F.DGN

PLOTTED FROM - TRPR15123

SECTION F – ESTIMATE OF QUANTITIES

BID ITEM NUMBER	ITEM	QUANTITY	UNIT
120E6200	Water for Granular Material	168.2	MGal
260E1010	Base Course	714.6	Ton
260E1030	Base Course, Salvaged	13,376.1	Ton
320E0007	PG 64-28 Asphalt Binder	280.6	Ton
320E1050	Class E Asphalt Concrete	4,923.1	Ton
320E3000	Compaction Sample	3	Each
330E0010	MC-70 Asphalt for Prime	24.2	Ton
330E0100	SS-1h or CSS-1h Asphalt for Tack	7.3	Ton
330E0210	SS-1h or CSS-1h Asphalt for Flush Seal	3.7	Ton
330E2000	Sand for Flush Seal	42.4	Ton

SURFACING THICKNESS DIMENSIONS

Plans quantity will be applied though the thickness may vary from that shown on the plans.

At those locations where material must be placed to achieve a required elevation, plans quantity may be varied to achieve the required elevation.

SALVAGED MATERIAL

The quantity of salvaged asphalt mix and granular base material may vary from the plans. The Contractor will be required to use all the salvaged material on this project by decreasing or increasing the quantity of Base Course, as necessary, or as directed by the Engineer.

No adjustment in the contract prices bid will be allowed as a result of a variation in quantities of Base Course, Salvaged or Base Course.

BASE COURSE, SALVAGED

The Base Course, Salvaged shall be obtained from the stockpiles provided by the Contractor from the asphalt mix and granular base material salvaged on this project and may be used without further testing.

All requirements for Base Course, Salvaged shall apply.

CLASS E ASPHALT CONCRETE

Mineral Aggregate for Class E Asphalt Concrete shall conform to the requirements for Class E Type 1.

All other requirements for Class E shall apply.

SUMMARY OF CLASS E ASPHALT CONCRETE COMPACTION

Location	With Specified Density (1st / 2nd Lift)	Without Specified Density
	Ton	Ton
SD 46		
Sta. 352+60 to 362+51	609.5 / 609.5	---
Sta. 362+51 to 366+71	296.9 / 296.9	---
Sta. 366+71 to 373+51	544.0 / 544.0	---
Sta. 373+51 to 377+71	296.9 / 296.9	---
Sta. 377+71 to 379+50	110.1 / 110.1	---
SD 11		
Sta. 105+00 to 109+48.34	275.7 / 275.7	---
Sta. 110+00.35 to 115+00	307.3 / 307.3	---
Asphalt Entrances – 1	---	42.3
TOTAL	4,880.8	42.3

TABLE OF QUANTITIES

Location-Description	Water for Granular Material	Base Course or Base Course, Salvaged	Class E Asphalt Concrete 1st / 2nd Lift	PG 64-28 Asphalt Binder	MC-70 Asphalt for Prime	SS-1h or CSS-1h Asphalt for Tack 1st / 2nd Lift	SS-1h or CSS-1h Asphalt for Flush Seal	Sand for Flush Seal
	MGal	Ton	Ton	Ton	Ton	Ton	Ton	Ton
SD 46								
Sta. 352+60 to 362+51	40.6	3,399.1	609.5 / 609.5	34.7 / 34.7	5.9	1.0 / 1.0	1.0	9.9
Sta. 362+51 to 366+71	19.3	1,617.0	296.9 / 296.9	16.8 / 16.8	2.9	0.4 / 0.4	0.4	5.0
Sta. 366+71 to 373+51	34.7	2,903.6	544.0 / 544.0	31.3 / 31.3	5.4	0.7 / 0.7	0.7	10.2
Sta. 373+51 to 377+71	19.3	1,617.0	296.9 / 296.9	16.8 / 16.8	2.9	0.4 / 0.4	0.4	5.0
Sta. 377+71 to 379+50	7.3	614.0	110.1 / 110.1	6.3 / 6.3	1.1	0.2 / 0.2	0.2	1.8
SD 11								
Sta. 105+00 to 109+48.34	18.4	1,537.8	275.7 / 275.7	15.7 / 15.7	2.7	0.4 / 0.4	0.4	4.5
Sta. 110+00.35 to 115+00	20.5	1,713.8	307.3 / 307.3	17.5 / 17.5	3.0	0.5 / 0.5	0.5	5.0
Gravel Entrances – 3	1.5	135.0						
Asphalt Entrances – 1	0.6	53.4	42.3	2.4	0.3	0.1	0.1	1.0
Traffic Control (See Section C)	6.0	500.0						
Totals	168.2	14,090.7	4,923.1	280.6	24.2	7.3	3.7	42.4

TYPICAL INPLACE SECTIONS

STATE OF SOUTH DAKOTA	PROJECT	SHEET	TOTAL SHEETS
	PH 0046(65)373	F4	F7

Plotting Date: 08/09/2016

Salvage & Stockpile Asphalt Mix and Granular Base Material

Transitions:

Sta. 359+20 to Sta. 363+56
*12' to 24'

Sta. 363+56 to Sta. 364+20
* 24'

Sta. 374+45 to Sta. 378+00
* 24' to 12'

SD46
Sta. 352+60 to Sta. 364+20
Sta. 374+45 to Sta. 379+50

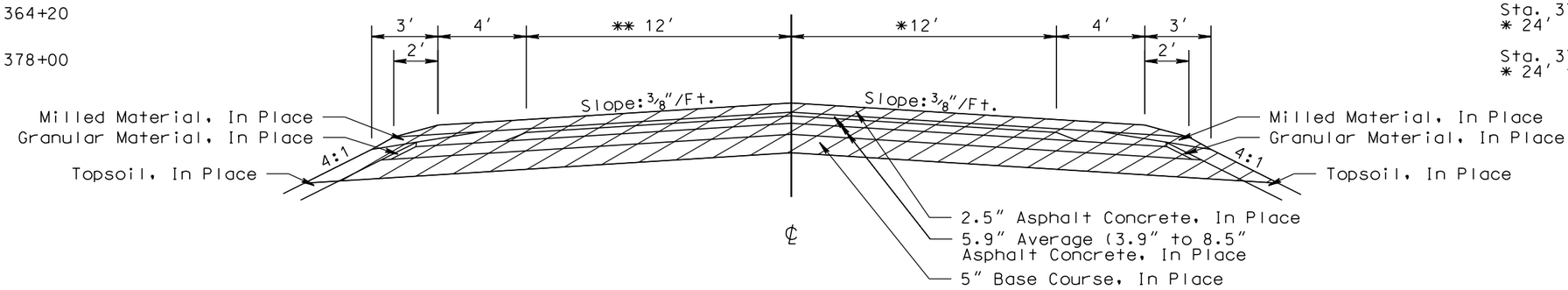

Transitions:

Sta. 361+50 to Sta. 364+20
*12' to 24'

Sta. 374+45 to Sta. 376+70
* 24'

Sta. 376+70 to Sta. 379+50
* 24' to 12'

SD46
Sta. 364+20 to Sta. 374+45

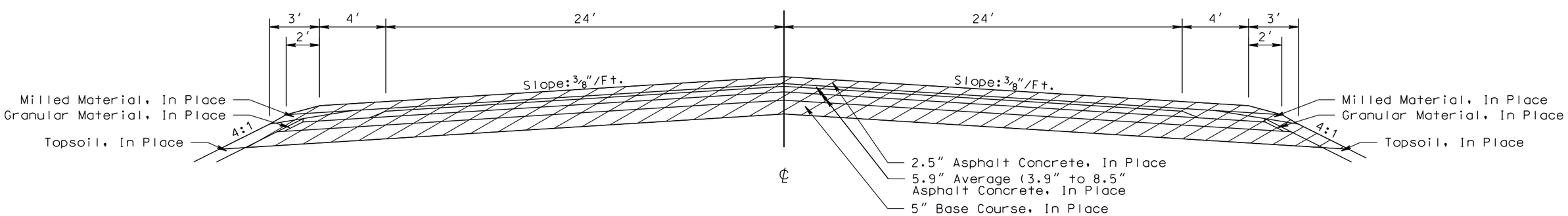

PLOT SCALE - 1:6.00001

PLOTTED FROM - TRPR15123

PLOT NAME - 2

FILE - ...\UNIN04HF\TYPICAL SECTIONS.DGN

TYPICAL INPLACE SECTIONS

STATE OF SOUTH DAKOTA	PROJECT	SHEET	TOTAL SHEETS
	PH 0046(65)373	F5	F7

Plotting Date: 08/09/2016

SD11
Sta. 105+00 to Sta. 109+48.34

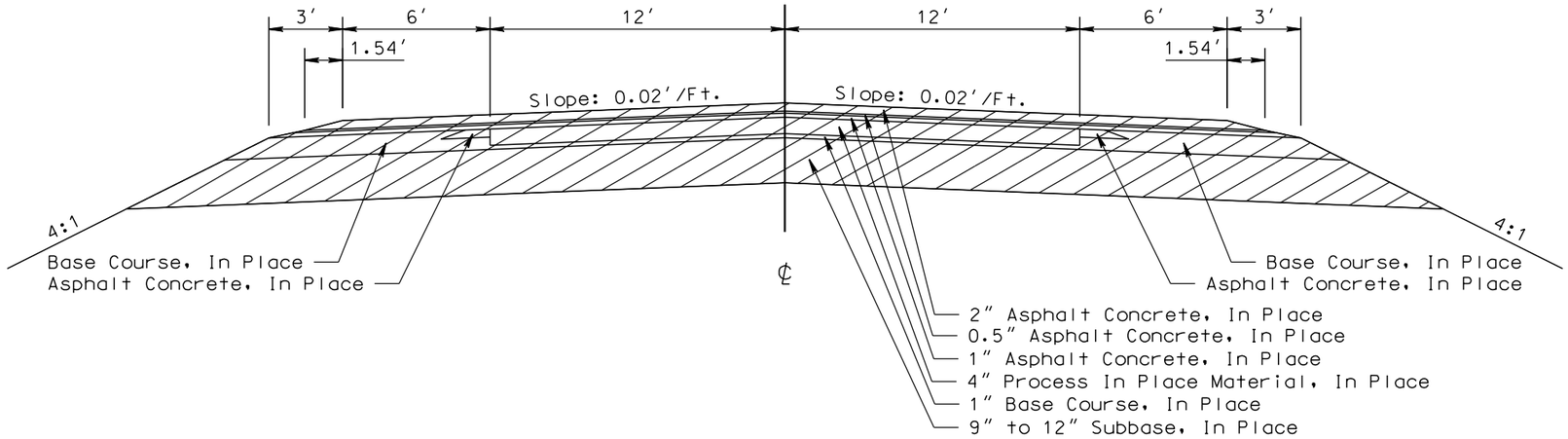

SD11
Sta. 110+00.35 to Sta. 111+60

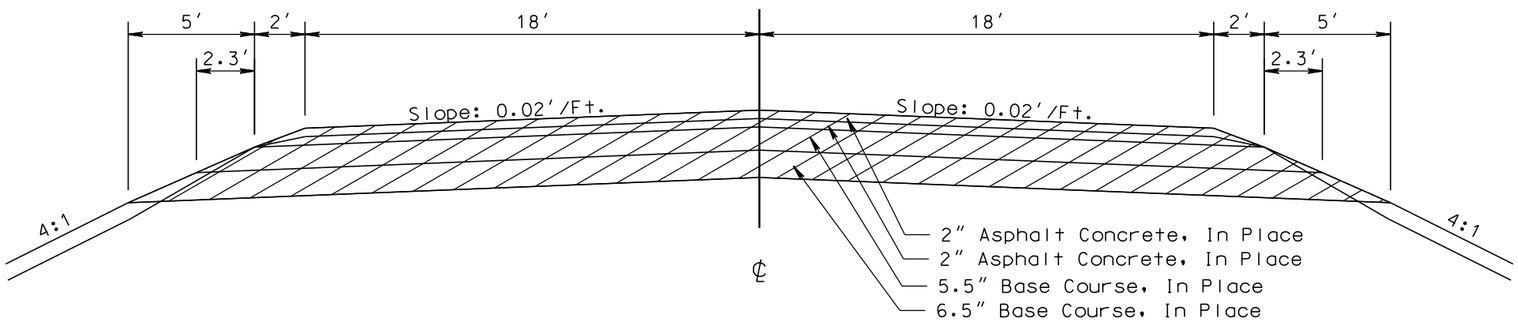

SD11
Sta. 111+60 to Sta. 115+00

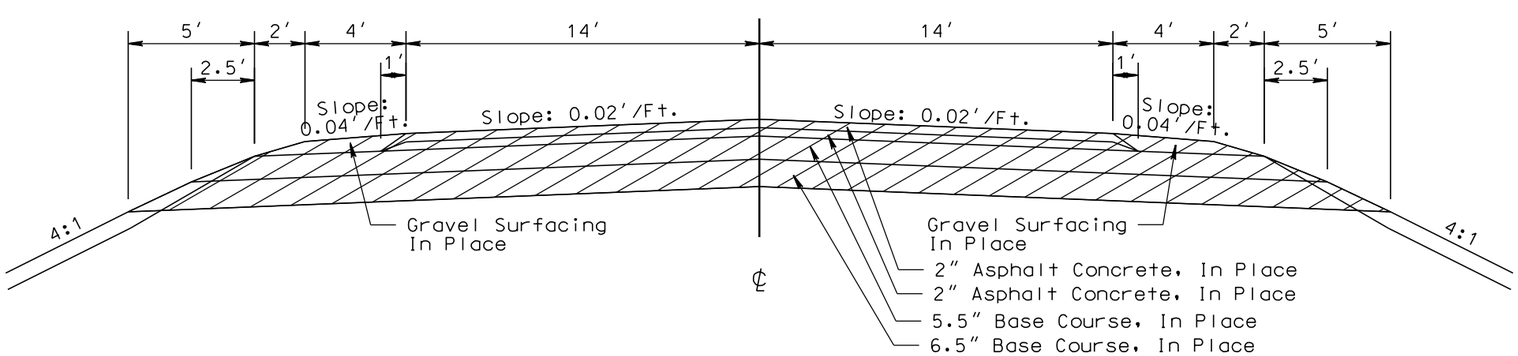

PLOT SCALE - 1:6.00001

PLOTTED FROM - TRPR15123

PLOT NAME - 3

FILE - ...\UNIN04HF\TYPICAL SECTIONS.DGN

TYPICAL SURFACING SECTIONS

STATE OF SOUTH DAKOTA	PROJECT	SHEET	TOTAL SHEETS
	PH 0046(65)373	F6	F7

Plotting Date: 08/09/2016

SD46
Sta. 352+60 to Sta. 362+51
Sta. 377+71 to Sta. 379+50

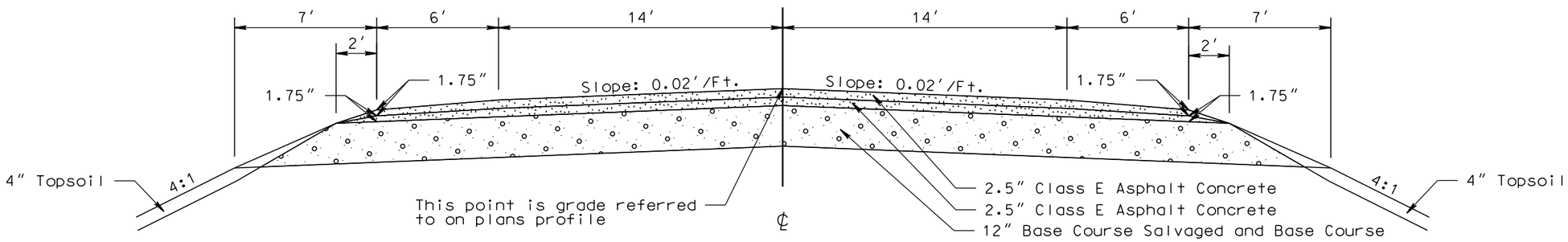

Transitions:

Sta. 362+51 to Sta. 366+71
* 0′ to 6′

Sta. 373+51 to Sta. 377+71
* 6′ to 0′

SD46
Sta. 366+71 to Sta. 373+51

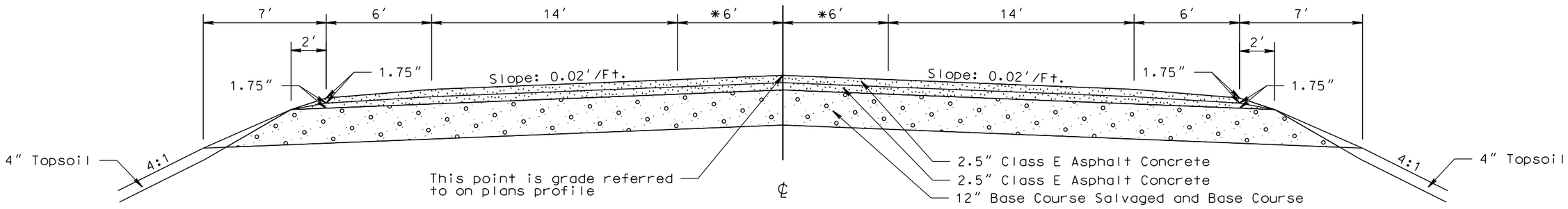

SD11
Sta. 105+00 to Sta. 109+48.34
Sta. 110+00.35 to Sta. 115+00

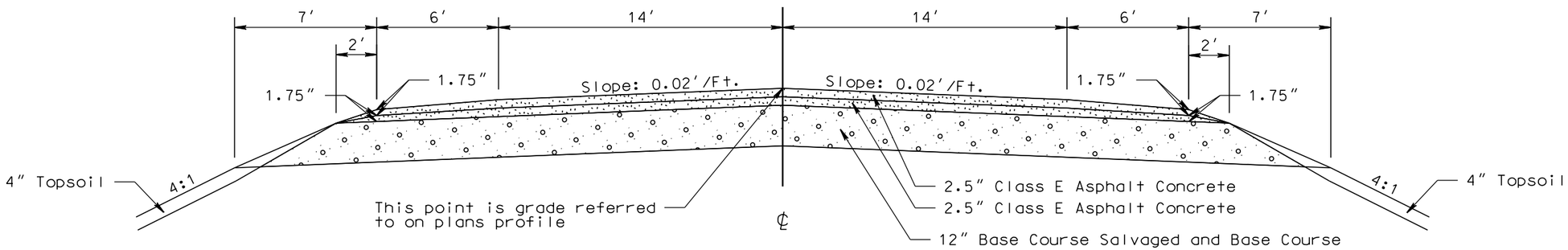

PLOT SCALE - 1:6.00001

PLOTTED FROM - TRPR15123

PLOT NAME - 4

FILE - ...\UNIN04HF\TYPICAL SECTIONS.DGN

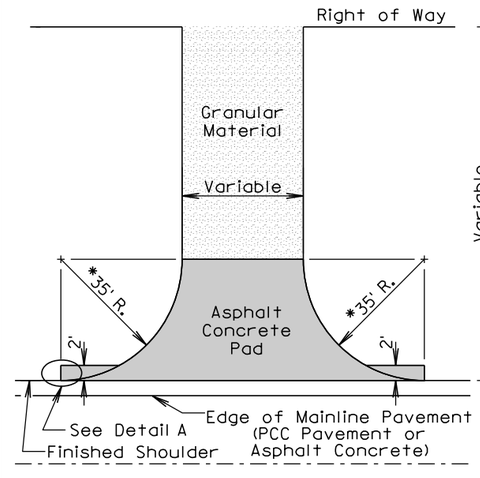

INTERSECTING ROAD
NO ASPHALT CONCRETE SURFACING
BEYOND RIGHT OF WAY

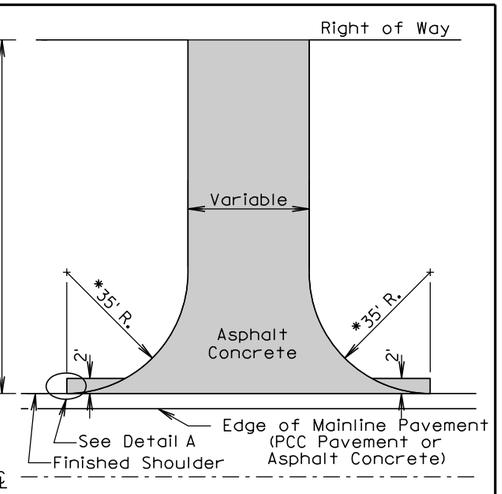

INTERSECTING ROAD
ASPHALT CONCRETE SURFACING
BEYOND RIGHT OF WAY

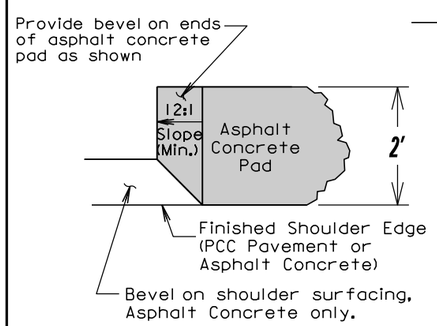

DETAIL A

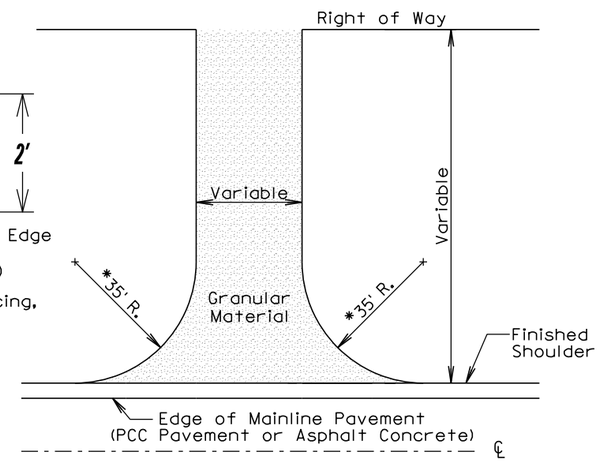

ENTRANCE

GENERAL NOTES:

The details shown are provided as a guide for surfacing. The precise construction limits for situations other than the standards shown will be determined by the Engineer during construction.

*35' Radius except as noted elsewhere in plans.

ROADWAY WITH SHOULDER

SURFACING OF INTERSECTING ROADS AND ENTRANCES (PCCP OR AC PAVED SHOULDERS)