STATE OF	PROJECT	SHEET NO.	TOTAL SHEETS
S.D.	NH 0083(81)87	E1	E14

SECTION E – STRUCTURE

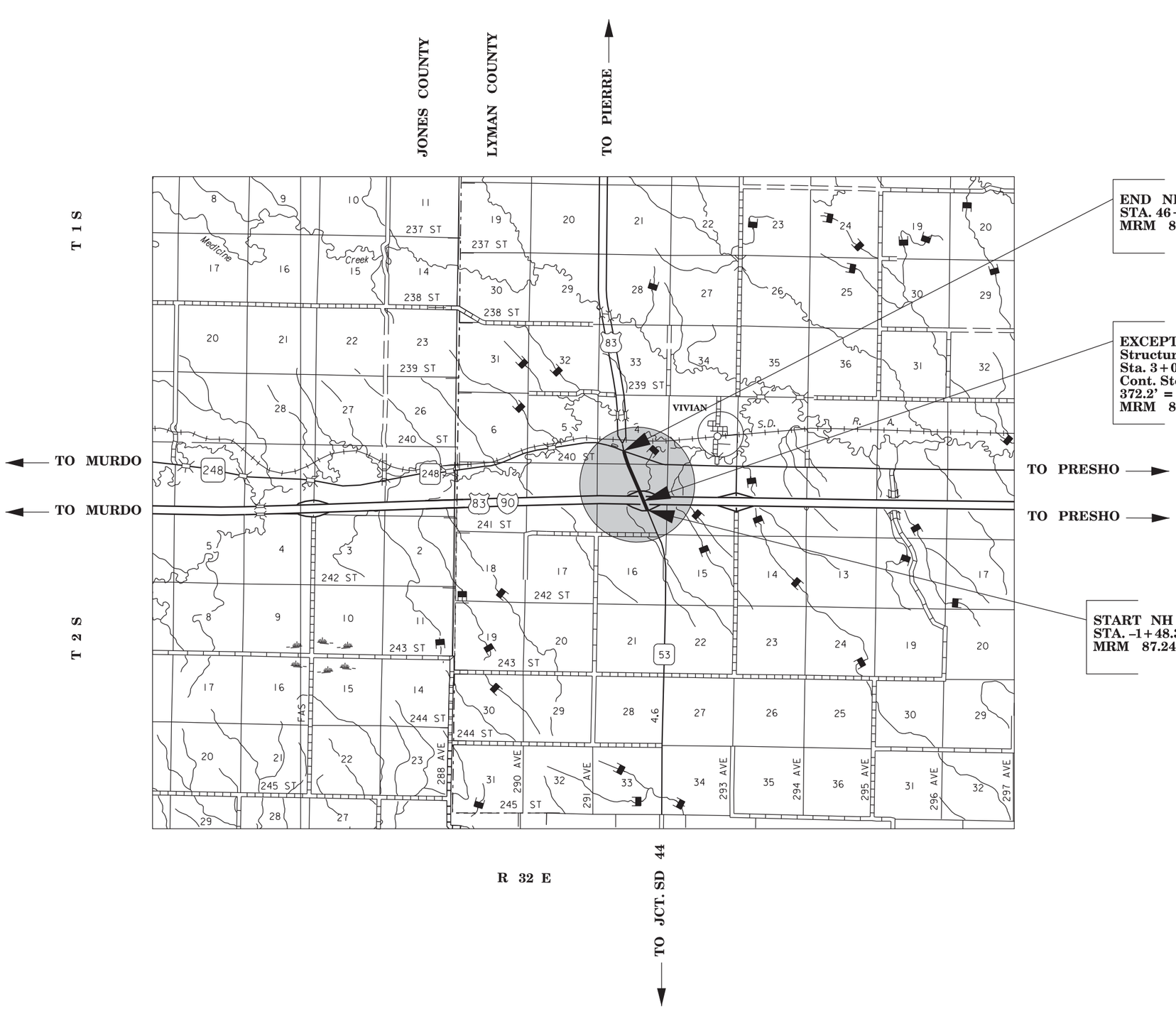

END NH 0083(81)87
STA. 46+89.10
MRM 88.10

EXCEPTION
Structure No. 43–026–195
Sta. 3+05 to Sta. 7+15
Cont. Steel Bridge
372.2' = .070 mile
MRM 87.36

START NH 0083(81)87
STA. –1+48.30
MRM 87.24

N
W
E
S

INDEX OF SHEETS

Sheet No. E1	Layout Map & Index
Sheet No. E2	Estimate of Quantities
Sheet Nos. E3-E14	Str. No. 43-026-195

ESTIMATE OF STRUCTURE QUANTITIES

PCN 04PQ - NH 0083(81)87 Structure No. 43-026-195

Bid Item Number	Item	Quantity	Unit
420E0400	Structure Excavation, Miscellaneous	4	CuYd
430E0300	Granular Bridge End Backfill	8.8	CuYd
430E0510	Approach Slab Underdrain Excavation	21.0	CuYd
460E0070	Class A45 Concrete, Bridge Repair	5.2	CuYd
460E0300	Breakout Structural Concrete	3.2	CuYd
460E0380	Install Dowel in Concrete	84	Each
480E0200	Epoxy Coated Reinforcing Steel	436	Lb
480E0505	No. 5 Rebar Splice	10	Each
680E0040	4" Underdrain Pipe	120	Ft
680E2010	Precast Concrete Headwall for Drain	4	Each
680E2500	Porous Backfill	16.4	Ton

STATE OF	PROJECT	SHEET NO.	TOTAL SHEETS
S.D.	NH 0083(81)87	E3	E14

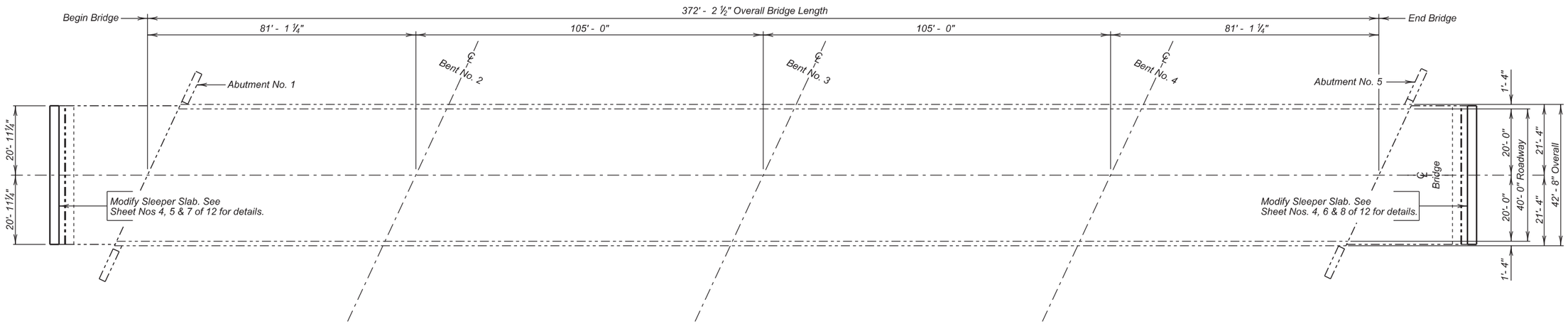

PLAN

INDEX OF BRIDGE SHEETS -

Sheet No. 1 - Layout for Upgrading
Sheet No. 2 - Estimate of Structure Quantities and Notes
Sheet No. 3 - Notes (Continued)
Sheet No. 4 - Layout of Bridge End Backfill Modification
Sheet No. 5 - Details of Bridge End Backfill Modification at Abutment No. 1
Sheet No. 6 - Details of Bridge End Backfill Modification at Abutment No. 5
Sheet No. 7 - Sleeper Slab Modification Details at Abutment No. 1
Sheet No. 8 - Sleeper Slab Modification Details at Abutment No. 5
Sheet No. 9 - Details for Standard Plate No. 680.03
Sheet No. 10 through 12 - Original Construction Plans

LAYOUT FOR UPGRADING

FOR

372' - 2 ½" CONT. COMPOSITE GIRDER BRIDGE

40' - 0" ROADWAY — 25° SKEW L.H.F.
OVER INTERSTATE 90 — SEC. 9-T105N-R79W
STR. NO. 43-026-195 — NH 0083(81)87
PCN 04PQ

LYMAN COUNTY

S. D. DEPT. OF TRANSPORTATION

FEBRUARY 2014

1 OF 12

PLANS BY :
OFFICE OF BRIDGE DESIGN, SOUTH DAKOTA DEPARTMENT OF TRANSPORTATION

DESIGNED BY	CK. DES. BY	DRAFTED BY	
EJA	NP	EJA	Kevin N. Goeden
LYMN04PQ	04PQRA01		BRIDGE ENGINEER

ESTIMATE OF STRUCTURE QUANTITIES

ITEM NO.	DESCRIPTION	QUANTITY	UNIT
420E0400	Structure Excavation, Miscellaneous	4.0	CuYd
430E0300	Granular Bridge End Backfill	8.8	CuYd
430E0510	Approach Slab Underdrain Excavation	21.0	CuYd
460E0070	Class A45 Concrete, Bridge Repair	5.2	CuYd
460E0300	Breakout Structural Concrete	3.2	CuYd
460E0380	Install Dowel in Concrete	84	Each
480E0200	Epoxy Coated Reinforcing Steel	436	Lb
480E0505	No. 5 Rebar Splice	10	Each
680E0040	4" Underdrain Pipe	120	Ft
680E2010	Precast Concrete Headwall for Underdrain	4	Each
680E2500	Porous Backfill	16.4	Ton

SPECIFICATIONS

Construction Specifications: South Dakota Standard Specifications for Roads and Bridges, 2004 Edition and Required Provisions, Supplemental Specifications and Special Provisions as included in the Proposal.

DETAILS AND DIMENSIONS OF EXISTING BRIDGE

All details and dimensions of the existing bridge, contained in these plans, are based on the original construction plans and shop plans and are provided as information only. It is the Contractor's responsibility to inspect and verify the actual field conditions and any necessary as-built dimensions affecting the satisfactory completion of the work required for this project.

SCOPE OF BRIDGE WORK & SEQUENCE OF OPERATIONS

All work on this structure shall be accomplished with the traffic control shown in the plans. Alternate sequence of operations may be submitted by the Contractor for approval by the Engineer at the pre-construction meeting.

1. Remove a portion of the existing sleeper slab for the first phase of construction.
2. Install a drainage trench for the sleeper slab at the location shown in the plans at both bridge ends for the first phase of construction.
3. Modify the existing sleeper slab for the first phase of construction.
4. Repeat steps 1 through 3 for the second phase of construction.

CONCRETE BREAKOUT

1. The existing sleeper slab adjacent to abutment number 5 shall be broken out to the limits shown on the plans. Breakout limits shall be defined with a 3/4" deep sawcut (unless specified otherwise in these plans), where practical, as approved by the Engineer. Reinforcing steel that is exposed and is scheduled for use in the new construction shall be cleaned and straightened to the satisfaction of the Engineer. Care shall be taken not to damage the existing reinforcing steel that is to be reused in the new construction during concrete breakout. Any reinforcing steel that is damaged during concrete breakout shall be replaced or repaired, as approved by the Engineer, by the Contractor at no cost to the Department.
2. All broken out concrete and discarded reinforcing bars shall be disposed of by the Contractor. Any disposal of discarded material shall be in accordance with the Environmental Commitment Notes.
3. The contract unit price per cubic yard for "Breakout Structural Concrete" shall include breaking out concrete, removal of existing reinforcing steel and disposal of all broken out material.

MODIFICATION OF EXISTING BRIDGE END BACKFILL

1. This work shall consist of modifying the portion of the bridge end backfill material under the modified sleeper slabs. The modification will require removal of a plan specified portion of the in-place backfill material to install a drainage trench under the modified sleeper slabs at both bridge ends.
2. Porous Backfill material shall conform to the requirements of Section 800 with the following modifications:

   The material shall consist of natural sand. Crushed material is not acceptable. The percentage of material passing a No. 200 (75µm) Sieve shall not exceed 2.0 percent.
3. The granular bridge end backfill material shall conform to Section 882.
4. The drainage tubing shall be corrugated polyethylene drainage tubing conforming to Section 990.
5. The black steel pipe shall conform to ASTM A53.
6. Excavation for placement of the modified bridge end backfill shall be done with a minimal disturbance to the underlying material.
7. Excavation for the 8 to 12 inch wide trench shall be by a method that will provide a nearly vertical sided trench with the least amount of disturbance to the underlying soil. The bottom of the trench shall be graded to drain away transversely from the roadway at a rate of 1/8 inch per foot.
8. The 4 inch diameter perforated drainage tubing shall be placed in the bottom of the trench to drain toward the precast concrete headwalls. The porous backfill material shall then be placed in the trench and compacted to the satisfaction of the Engineer.
9. Granular bridge end backfill shall be placed in loose lifts not exceeding 4 inches. Compaction shall be accomplished with at least 4 complete passes using a vibratory plate compactor. Each layer of granular material shall be thoroughly watered prior to and during compaction.
10. No measurement shall be made for Approach Slab Underdrain Excavation, Granular Bridge End Backfill, Porous Backfill, 4" Underdrain Pipe and Precast Concrete Headwall for Drain. The plan shown quantity for each of these items will be the quantity accepted for payment.
11. The contract unit price per cubic yard for Granular Bridge End Backfill shall include full compensation for all labor, equipment, materials, water and all other items incidental to furnishing and installing the granular bridge end backfill material.
12. The contract unit price per cubic yard for Approach Slab Underdrain Excavation shall include full compensation for all labor, equipment, materials, and all other items incidental to excavating the 8" to 12" wide trench and shaping the ground surface to the specified limits, including disposal of the excavated material.
13. The contract unit price per foot for 4" Underdrain Pipe shall include full compensation for all labor, equipment, materials, and all other items incidental to furnishing and installing the drainage tubing, black steel pipe, fittings, and rodent screens.
14. The contract unit price per ton for Porous Backfill material shall include compensation for all labor, equipment, materials, and all other items incidental to furnishing and installing the porous backfill material.
15. The contract unit price per each for Precast Concrete Headwall for Drain shall include compensation for all labor, equipment, materials, and all other items incidental to furnish and install the precast concrete headwalls.

ESTIMATE OF STRUCTURE QUANTIES AND NOTES FOR

372' – 2 ½" CONT. COMP. GIRDER BRIDGE

Str. No. 43-026-195

FEBRUARY 2014

DESIGNED BY:	CK. DES. BY:	DRAFTED BY:	
EJA	KSK	EJA	Kevin N Boyden
LYMN04PO	04PONOTA		BRIDGE ENGINEER

SLEEPER SLAB MODIFICATION

1. These notes shall address all work items necessary to modify the existing sleeper slabs to allow for installation of a drainage trench and to accommodate installation of concrete pavement adjacent to the in-place approach slabs.

2. At Abutment No. 1 the existing sleeper slab will allow for the installation of a drainage trench. At Abutment No. 5 a portion of the existing sleeper slab will need to be removed to allow for the installation of the drainage trench. All other work items are similar for both locations.

3. The portion of the sleeper slab removed adjacent to abutment number 5 shall be to the limits shown in the plans. Concrete breakout shall be in conformance with the Concrete Breakout notes. Reinforcing steel shall be cut flush with the removal limits. The existing reinforcing steel that will be cut flush with the removal limits is epoxy coated. After cutting these bars, the cut ends shall be epoxy coated in the field. The epoxy coating shall be inert in concrete and compatible with the coating applied to new epoxy coated reinforcing steel. This coating shall be the epoxy touch up coating material supplied by an epoxy coating manufacturer who supplies coating material for new epoxy coated reinforcing steel. The ends shall be coated promptly and before detrimental oxidation occurs. The coating shall be allowed to cure for 24 hours or as per the manufacturer's recommendations, whichever is more stringent, before concrete can be placed. The ends shall be clean and free from all surface contaminants before coating. The cost of cleaning and epoxy coating these rebar ends shall be incidental to the contract unit price per cubic yard for Class A45 Concrete, Bridge Repair.

4. All mild reinforcing steel shall be epoxy coated and conform to ASTM A615, Grade 60.

5. The dowels used to connect the newly constructed portion of the sleeper slab to the existing sleeper slab shall be installed in accordance with the Installing Dowels in Concrete notes.

6. The concrete shall be cured in accordance with Section 460.3.N of the Construction Specifications.

DESIGN MIX OF CONCRETE

1. Class A45 Concrete shall be used for the bid items Class A45 Concrete, Bridge Repair.

2. The Type of cement, concrete strength requirements, aggregate requirements, slump and air requirements for the contract items Class A45 Concrete, Bridge Repair shall conform to the requirements of Section 460 of the Construction Specification.

INSTALLING DOWELS IN CONCRETE

1. Holes drilled in the existing concrete shall be true and normal or as shown in the plans. Drilling holes using a core drill shall not be allowed. Care shall be taken not to damage the existing reinforcing steel. It is likely that some of the existing reinforcing steel shown in the original construction plans may have been placed out of position during original construction. The Contractor can expect to encounter and have to drill through reinforcing steel or shift the dowel spacing as approved by the Engineer to miss the existing reinforcing steel. If the Contractor shifts the dowel spacing, the unused drill holes shall be completely filled with the epoxy resin as approved by the Engineer.

2. The epoxy resin mixture shall be of a type for bonding steel to hardened concrete and shall conform to AASHTO M235 Type IV, Grade 3 (Equivalent to ASTM C881, Type IV, Grade 3).

3. The diameter of the drilled holes shall not be less than 1/8 inch greater, nor more than 3/8 inch greater than the diameter of the dowels or as per the Manufacturer's recommendations. The drilled holes shall be blown out with compressed air using a device that will reach the back of the hole to ensure that all debris or loose material has been removed prior to epoxy injection.

4. Mix epoxy resin as recommended by the Manufacturer and apply by an injection method as approved by the Engineer. Beginning at the back of the drilled holes, fill the holes 1/3 to 1/2 full of epoxy, or as recommended by the Manufacturer, prior to insertion of the steel bar. Care shall be taken to prevent epoxy from running out of the horizontal holes prior to steel bar insertion. Rotate the steel bar during installation to eliminate voids and ensure complete bonding of the bar. Insertion of the bars by the dipping or painting method will not be allowed.

5. No loads shall be applied to the epoxy grouted dowel bars until the epoxy resin has had sufficient time to cure as specified by the epoxy resin manufacturer.

6. Dowel bars shall be deformed bars conforming to ASTM A615 Grade 60.

7. The cost of epoxy resin, dowels, installation and other incidental items shall be incidental to the contract unit price per each for "Install Dowel in Concrete".

MECHANICAL REBAR SPLICES

Mechanical splice devices will be required for the transverse sleeper slab reinforcing steel. The mechanical rebar splices shall be in accordance with Section 480 of the Construction Specifications.

NOTES (CONTINUED)
FOR
372' – 2 ½" CONT. COMP. GIRDER BRIDGE

Str. No. 43-026-195

FEBRUARY 2014

DESIGNED BY:	CK. DES. BY:	DRAFTED BY:	
EJA	KSK	EJA	Kevin N. Gordon
LYMN04PQ	04PONOTA		BRIDGE ENGINEER

STATE OF	PROJECT	SHEET NO.	TOTAL SHEETS
S.D.	NH 0083(81)87	E6	E14

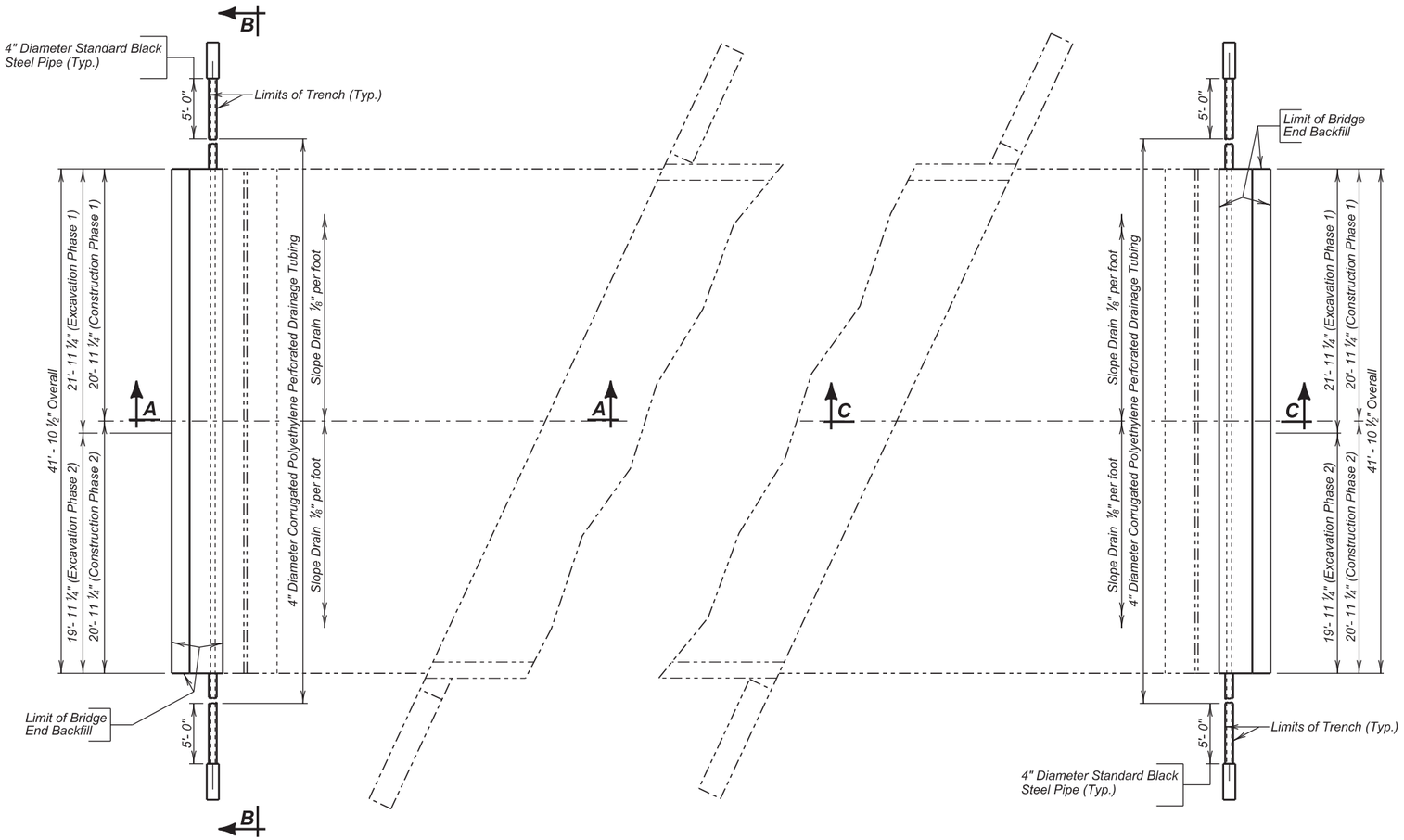

PLAN

(Bridge End Backfill shown adjacent to Abutment No. 1)

PLAN

(Bridge End Backfill shown adjacent to Abutment No. 5)

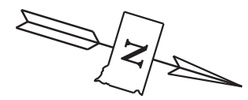

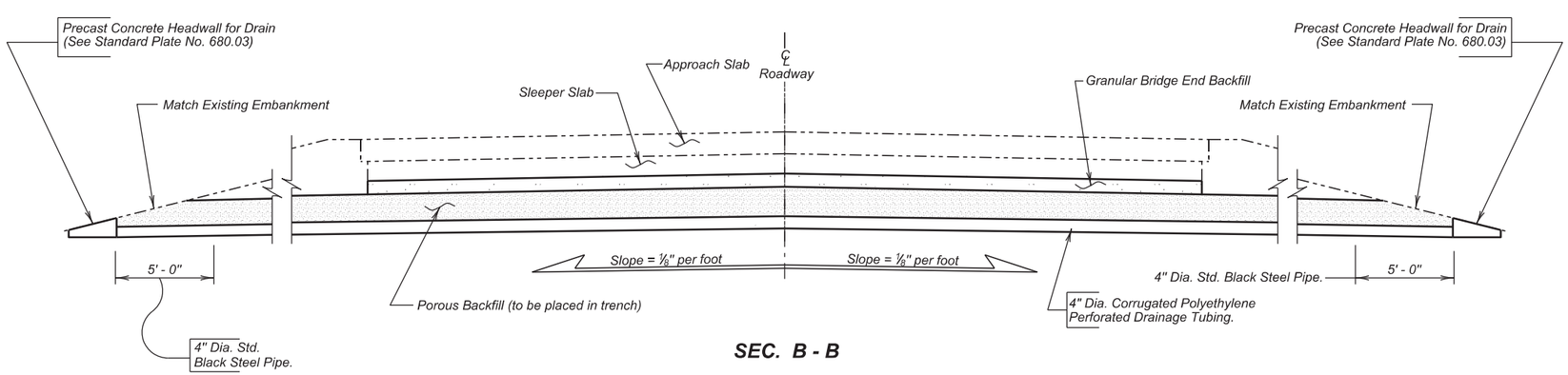

SEC. B - B

LAYOUT OF BRIDGE END BACKFILL MODIFICATION

FOR

372' - 2 ½" CONT. COMPOSITE GIRDER BRIDGE

40' - 0" ROADWAY — 25° SKEW L.H.F.

OVER INTERSTATE 90 — SEC. 9-T105N-R79W

STR. NO. 43-026-195 — NH 0083(81)87

LYMAN COUNTY

S. D. DEPT. OF TRANSPORTATION

FEBRUARY 2014

DESIGNED BY	CK. DES. BY	DRAFTED BY	
EJA	KSK	EJA	Kevin N. Boeder
LYMN04PQ	04PQRA04		BRIDGE ENGINEER

STATE OF	PROJECT	SHEET NO.	TOTAL SHEETS
S.D.	NH 0083(81)87	E7	E14

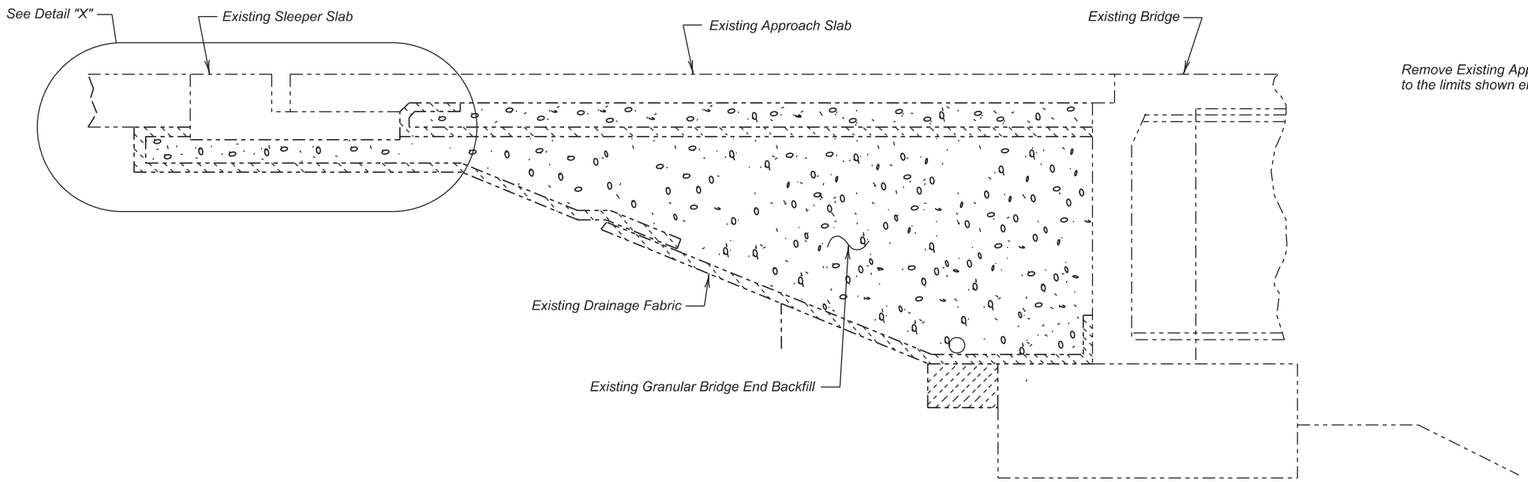

SECTION A - A

(Existing section prior to construction)

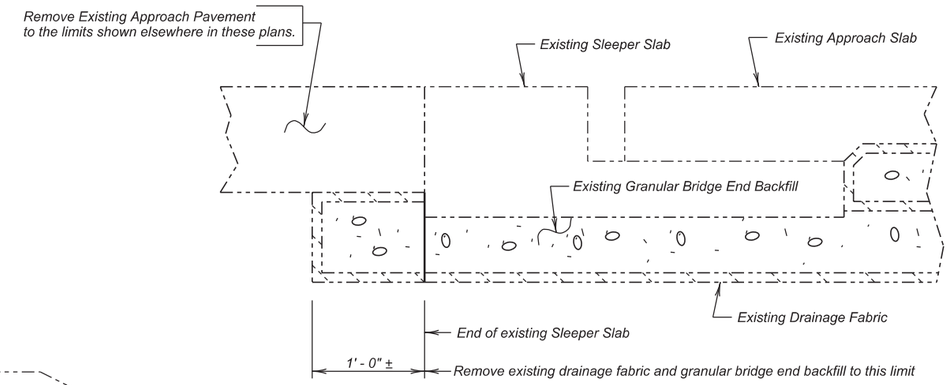

DETAIL "X"

(Step 1 - Removal items for modification)

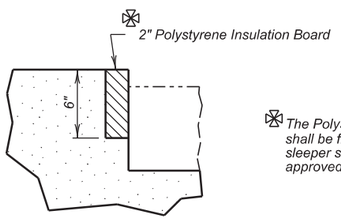

✠ The Polystyrene Insulation Board shall be firmly attached to the sleeper slab by a method to be approved by the Engineer.

DETAIL "W"

GENERAL NOTES:

⌀ The depth of the trench shall be 2' - 0" unless the roadway ditch topography will not allow it. The trench depth shall never be less than 1' - 0" or greater than 2' - 0".

≠ The exact length of the 4" Diameter Corrugated Polyethylene Slotted Drainage Tubing shall be field determined. The length shown is an estimate based on the original construction plans.

ESTIMATED QUANTITIES

(For one Approach Slab)

	ITEM	UNIT	QUANTITY PHASE 1	QUANTITY PHASE 2
⊛	Approach Slab Underdrain Excavation	Cu. Yd.	5.5	5.0
	Granular Bridge End Backfill	Cu. Yd.	2.2	2.2
△	Porous Backfill	Ton	4.1	4.1
	4" Underdrain Pipe	Ft.	30	30
	Precast Concrete Headwall for Drain	Each	1	1

△ For estimating purposes only a factor of 1.89 tons/cu yd was used to convert Cu Yds to Tons. Quantity based on 2'-0" deep x 1'-0" wide trench under the sleeper slab.

	Phase 1	Phase 2
1. 4" Diameter Corrugated Polyethylene Perforated Drainage Tubing.	21 ft	21 ft
2. 4" Diameter Corrugated Polyethylene Plastic Pipe.	4 ft	4 ft
3. 4" Diameter Black Steel Pipe with Rodent Screens.	5 ft	5 ft

⊛ The quantity for Approach Slab Underdrain Excavation includes the excavation from under the existing pavement to the bottom of the new Granular Bridge End backfill and the trench for the Porous Backfill.

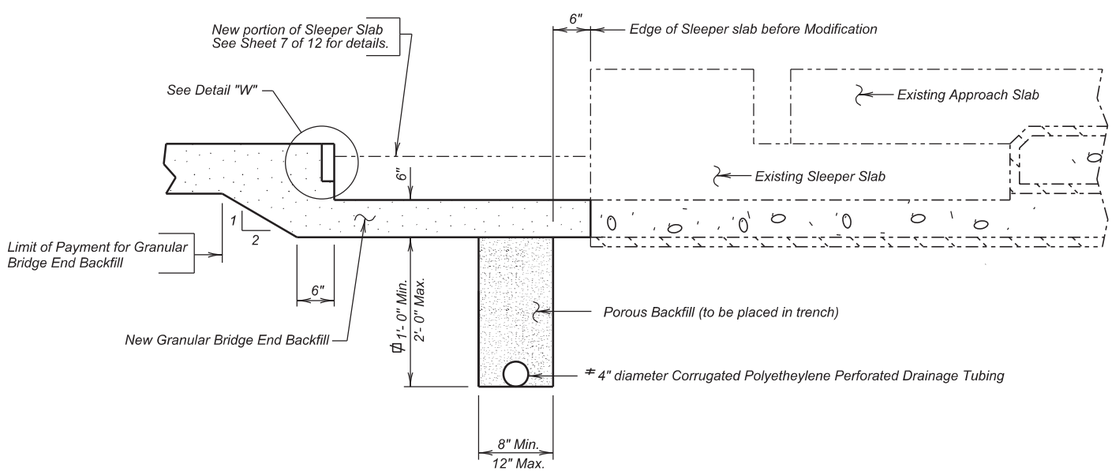

DETAIL "X"

(Step 2 - Trench installation and extending backfill under modified sleeper)

Use this sheet in conjunction with Sheet Nos. 4 & 7 of 12.

DETAILS OF BRIDGE END BACKFILL MODIFICATION AT ABUTMENT NO. 1

FOR

372' - 2 ½" CONT. COMPOSITE GIRDER BRIDGE

40' - 0" ROADWAY — 25° SKEW L.H.F.

OVER INTERSTATE 90 — SEC. 9-T105N-R79W

STR. NO. 43-026-195 — NH 0083(81)87

LYMAN COUNTY

S. D. DEPT. OF TRANSPORTATION

FEBRUARY 2014

DESIGNED BY	CK. DES. BY	DRAFTED BY	
EJA	KSK	EJA	Kevin N. Goeden
LYMN04PQ	04PQRA05		BRIDGE ENGINEER

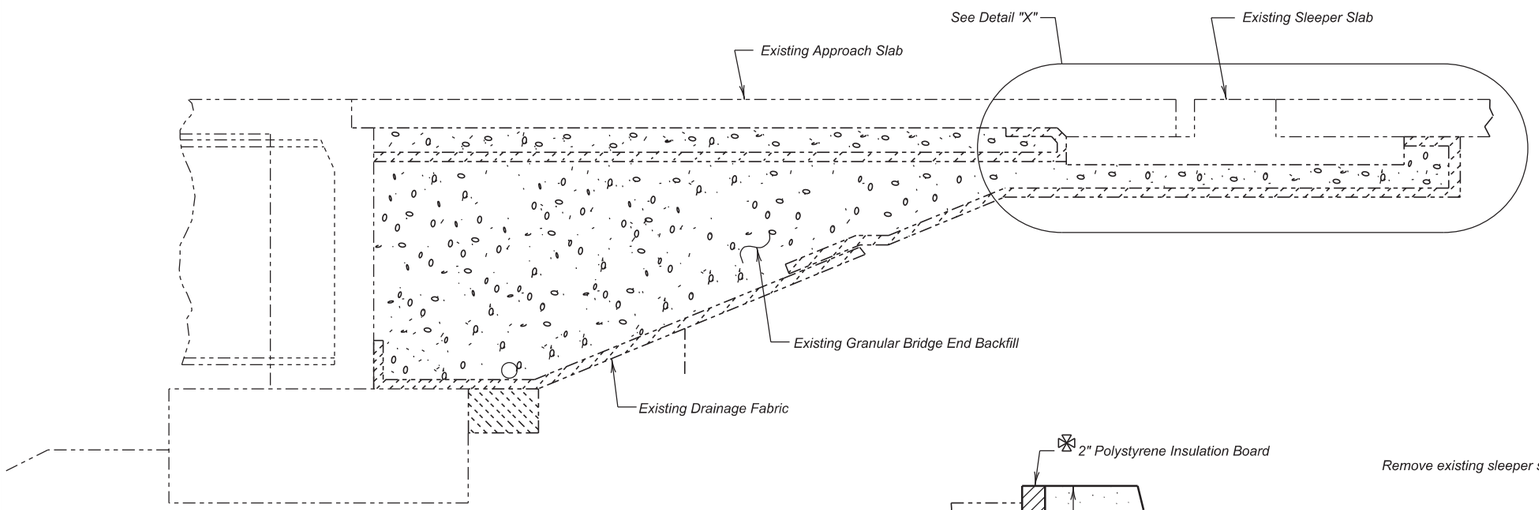

SECTION C - C
(Existing section prior to construction)

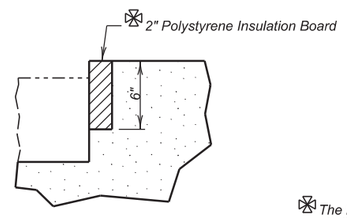

DETAIL "W"

✠ The Polystyrene Insulation Board shall be firmly attached to the sleeper slab by a method to be approved by the Engineer.

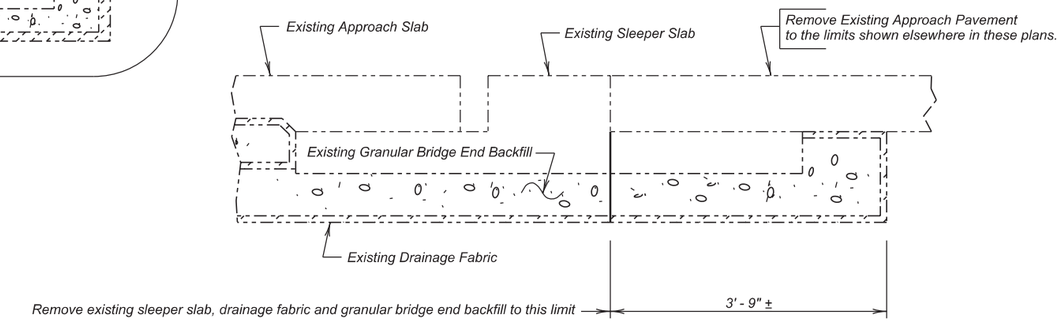

DETAIL "X"
(Step 1 - Removal items for modification)

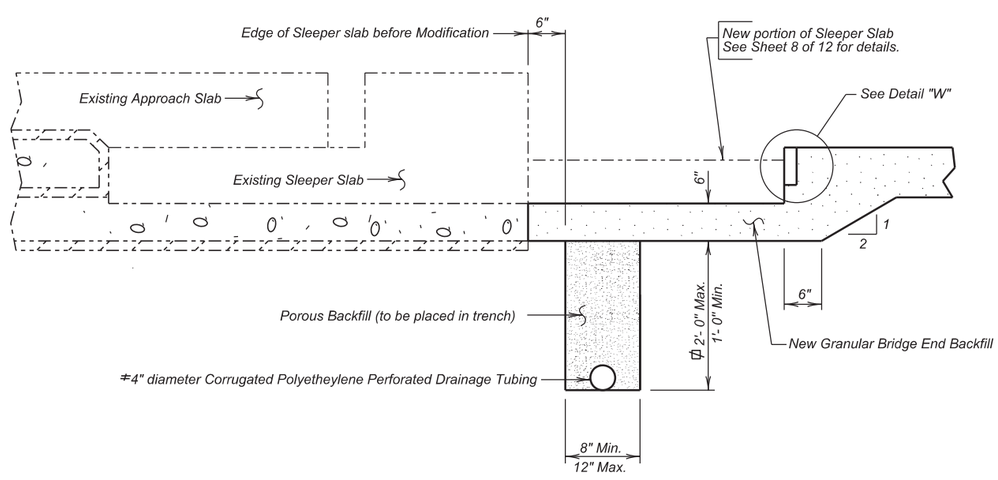

DETAIL "X"
(Step 2 - Trench installation and extending backfill under modified sleeper)

ESTIMATED QUANTITIES
(For one Approach Slab)

ITEM	UNIT	QUANTITY PHASE 1	QUANTITY PHASE 2
⊛ Approach Slab Underdrain Excavation	Cu. Yd.	5.5	5.0
Granular Bridge End Backfill	Cu. Yd.	2.2	2.2
△ Porous Backfill	Ton	4.1	4.1
4" Underdrain Pipe	Ft.	30	30
Precast Concrete Headwall for Drain	Each	1	1

△ For estimating purposes only a factor of 1.89 tons/cu yd was used to convert Cu Yds to Tons. Quantity based on 2'-0" deep x 1'-0" wide trench under the sleeper slab.

	Phase 1	Phase 2
1. 4" Diameter Corrugated Polyethylene Perforated Drainage Tubing.	21 Ft	21 Ft
2. 4" Diameter Corrugated Polyethylene Plastic Pipe.	4 Ft	4 Ft
3. 4" Diameter Black Steel Pipe with Rodent Screens.	5 Ft	5 Ft

⊛ The quantity for Approach Slab Underdrain Excavation includes the excavation from under the existing pavement to the bottom of the new Granular Bridge End backfill and the trench for the Porous Backfill.

GENERAL NOTES:

✠ The depth of the trench shall be 2' - 0" unless the roadway ditch topography will not allow it. The trench depth shall never be less than 1' - 0" or greater than 2' - 0".

≠ The exact length of the 4" Diameter Corrugated Polyethylene Slotted Drainage Tubing shall be field determined. The length shown is an estimate based on the original construction plans.

DETAILS OF BRIDGE END BACKFILL MODIFICATION
AT ABUTMENT NO. 5
FOR
372' - 2 ½" CONT. COMPOSITE GIRDER BRIDGE

40' - 0" ROADWAY — 25° SKEW L.H.F.
OVER INTERSTATE 90 — SEC. 9-T105N-R79W
STR. NO. 43-026-195 — NH 0083(81)87

LYMAN COUNTY
S. D. DEPT. OF TRANSPORTATION
FEBRUARY 2014

Use this sheet in conjuction with Sheet Nos. 4 & 8 of 12.

DESIGNED BY	CK. DES. BY	DRAFTED BY	
EJA	KSK	EJA	Kevin N. Goeden
LYMN04PQ	04PQRA06		BRIDGE ENGINEER

STATE OF	PROJECT	SHEET NO.	TOTAL SHEETS
S.D.	NH 0083(81)87	E9	E14

REINFORCING SCHEDULE
(for one sleeper slab)

	Mk.	No.	Size	Length	Type	Bending Details
Phase 1	⏊e1	5	5	20' - 9"	Str.	
	△d1	21	6	3' - 7"	Str.	

	Mk.	No.	Size	Length	Type
Phase 2	⏊e1	5	5	20' - 9"	Str.
	△d1	21	6	3' - 7"	Str.

NOTES:
All dimensions are out to out of bars.
⏊Mechanical Rebar Splice
△Dowels

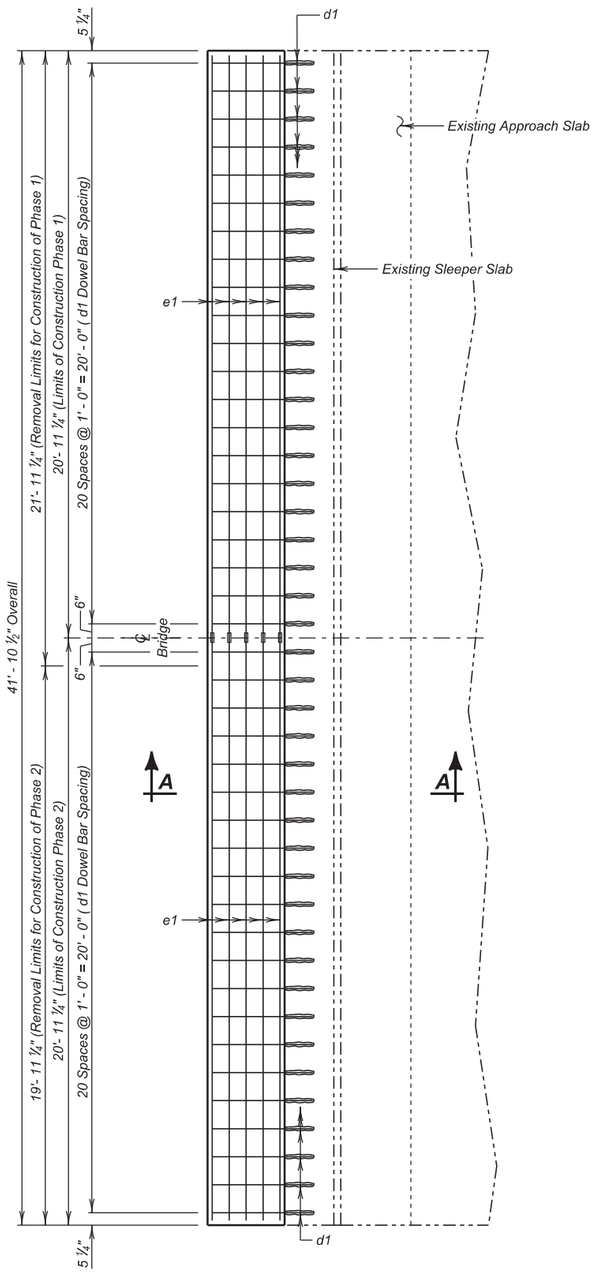

PLAN - ABUTMENT NO. 1

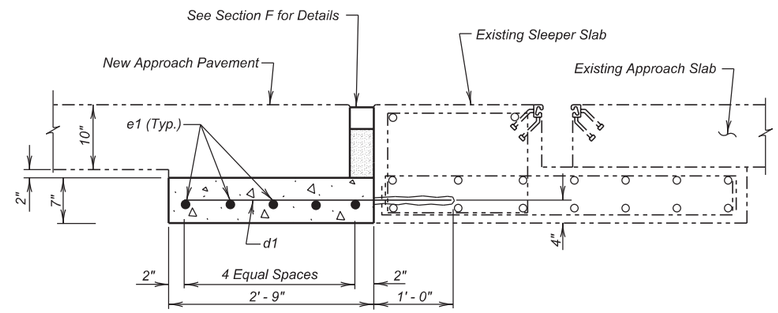

SECTION A - A
(New construction shown)

ESTIMATED QUANTITIES
(For one Sleeper Slab)

	ITEM	UNIT	QUANTITY PHASE 1	QUANTITY PHASE 2
	Structure Excavation, Miscellaneous	Cu. Yd.	2.1	1.9
	Class A45 Concrete, Bridge Repair	Cu. Yd.	1.3	1.3
	Install Dowel in Concrete	Each	21	21
✳	Epoxy Coated Reinforcing Steel	Lb.	109	109
	No. 5 Rebar Splice	Each	5	-

✳ Does not include 113 lbs in Phase 1 and 113 lbs. in Phase 2 for d1 dowels as these are paid for under the bid item " Install Dowel in Concrete".

SLEEPER SLAB MODIFICATION DETAILS
AT ABUTMENT NUMBER 1

FOR

372' - 2 ½" CONT. COMPOSITE GIRDER BRIDGE

40' - 0" ROADWAY — 25° SKEW L.H.F.
OVER INTERSTATE 90 — SEC. 9-T105N-R79W
STR. NO. 43-026-195 — NH 0083(81)87

LYMAN COUNTY
S. D. DEPT. OF TRANSPORTATION
JANUARY 2014

DESIGNED BY	CK. DES. BY	DRAFTED BY	
EJA	KSK	EJA	Kevin N. Goeden
LYMN04PQ	04PQRA07		BRIDGE ENGINEER

STATE OF	PROJECT	SHEET NO.	TOTAL SHEETS
S.D.	NH 0083(81)87	E10	E14

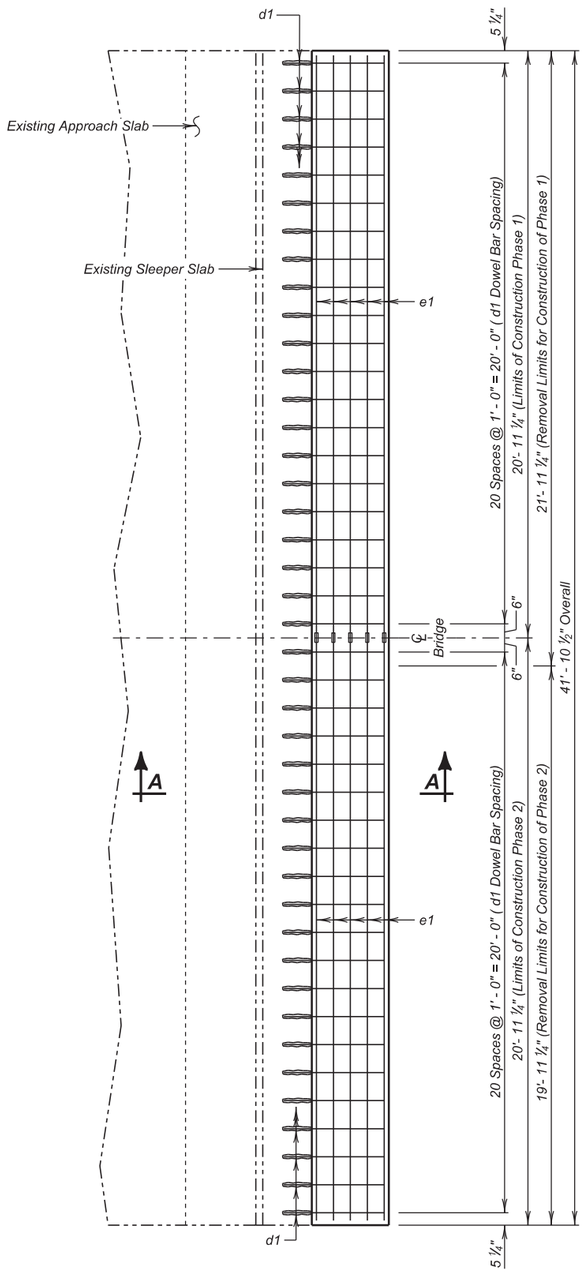

PLAN - ABUTMENT NO. 5

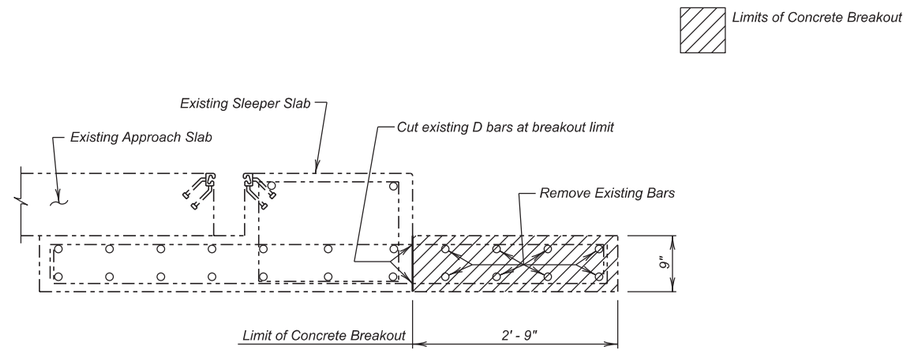

SECTION A - A
(Showing removal limits on existing sleeper slab)

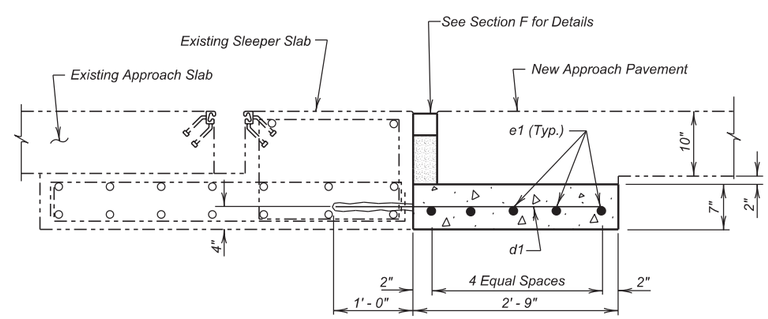

SECTION A - A
(New construction shown)

REINFORCING SCHEDULE
(for one sleeper slab)

	Mk.	No.	Size	Length	Type	Bending Details
Phase 1	⊠e1	5	5	20' - 9"	Str.	
	△d1	21	6	3' - 7"	Str.	

	Mk.	No.	Size	Length	Type
Phase 2	⊠e1	5	5	20' - 9"	Str.
	△d1	21	6	3' - 7"	Str.

NOTES:
All dimensions are out to out of bars.
⊠ Mechanical Rebar Splice
△ Dowels

ESTIMATED QUANTITIES
(For one Sleeper Slab)

ITEM	UNIT	QUANTITY PHASE 1	QUANTITY PHASE 2
Class A45 Concrete, Bridge Repair	Cu. Yd.	1.3	1.3
Breakout Structural Concrete	Cu. Yd.	1.7	1.5
Install Dowel in Concrete	Each	21	21
✳ Epoxy Coated Reinforcing Steel	Lb.	109	109
No. 5 Rebar Splice	Each	5	-

✳ Does not include 113 lbs in Phase 1 and 113 lbs. in Phase 2 for d1 dowels as these are paid for under the bid item " Install Dowel in Concrete".

SLEEPER SLAB MODIFICATION DETAILS
AT ABUTMENT NUMBER 5

FOR

372' - 2 ½" CONT. COMPOSITE GIRDER BRIDGE

40' - 0" ROADWAY — 25° SKEW L.H.F.
OVER INTERSTATE 90 — SEC. 9-T105N-R79W
STR. NO. 43-026-195 — NH 0083(81)87

LYMAN COUNTY
S. D. DEPT. OF TRANSPORTATION
FEBRUARY 2014

DESIGNED BY	CK. DES. BY	DRAFTED BY	
EJA	KSK	EJA	Kevin N. Goeden
LYMN04PQ	04PQRA08		BRIDGE ENGINEER

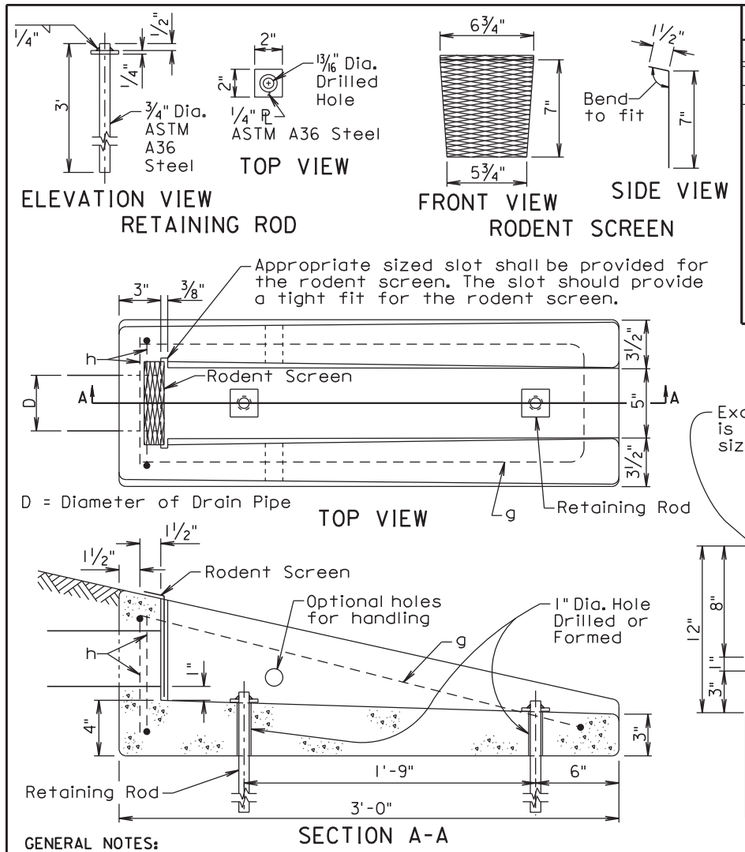

REINFORCING SCHEDULE

MK.	No.	Size	Length	Type
g	1	4	6'-3"	17
h	2	4	2'-4"	17

NOTE:
All dimensions are out to out of bars.

Bending Details

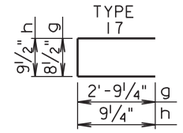

GENERAL NOTES:

The concrete shall be Class M6. The concrete shall conform to the requirements of section 462 of the Standard Specifications. It is estimated that each unit weighs approximately 210 pounds.

All reinforcing steel shall conform to ASTM A615 Grade 60 and shall be epoxy coated. The reinforcing steel shall be securely retained to prevent displacement during placement of concrete. It is estimated that 7.3 pounds of reinforcing steel is required for each unit.

The pipe shall be placed in the concrete headwall with the pipe end flush with the concrete surface adjacent to the rodent screen.

The rodent screen shall be galvanized 13 Ga. steel with a diamond shaped flattened mesh pattern. The size shall be 1/2". The size refers to the measurement across the smallest diamond shaped opening measured from the centers of the wires.

The retaining rod shall be galvanized in accordance with ASTM A123 after all shop welding has been completed.

The drawing indicates using 1/2" fillets; however, 3/4" chamfers may be substituted for the 1/2" fillets.

All costs for furnishing and installing the concrete headwall including equipment, labor, and materials including concrete, reinforcing steel, retaining rods, and rodent screen shall be incidental to the contract unit price per each for "Precast Concrete Headwall for Drain".

December 23, 2010

Published Date: 1st Qtr. 2014	SDDOT	**PRECAST CONCRETE HEADWALL FOR DRAIN**	PLATE NUMBER 680.03
			Sheet 1 of 1

STATE OF	PROJECT	SHEET NO.	TOTAL SHEETS
S.D.	NH 0083(81)87	E12	E14

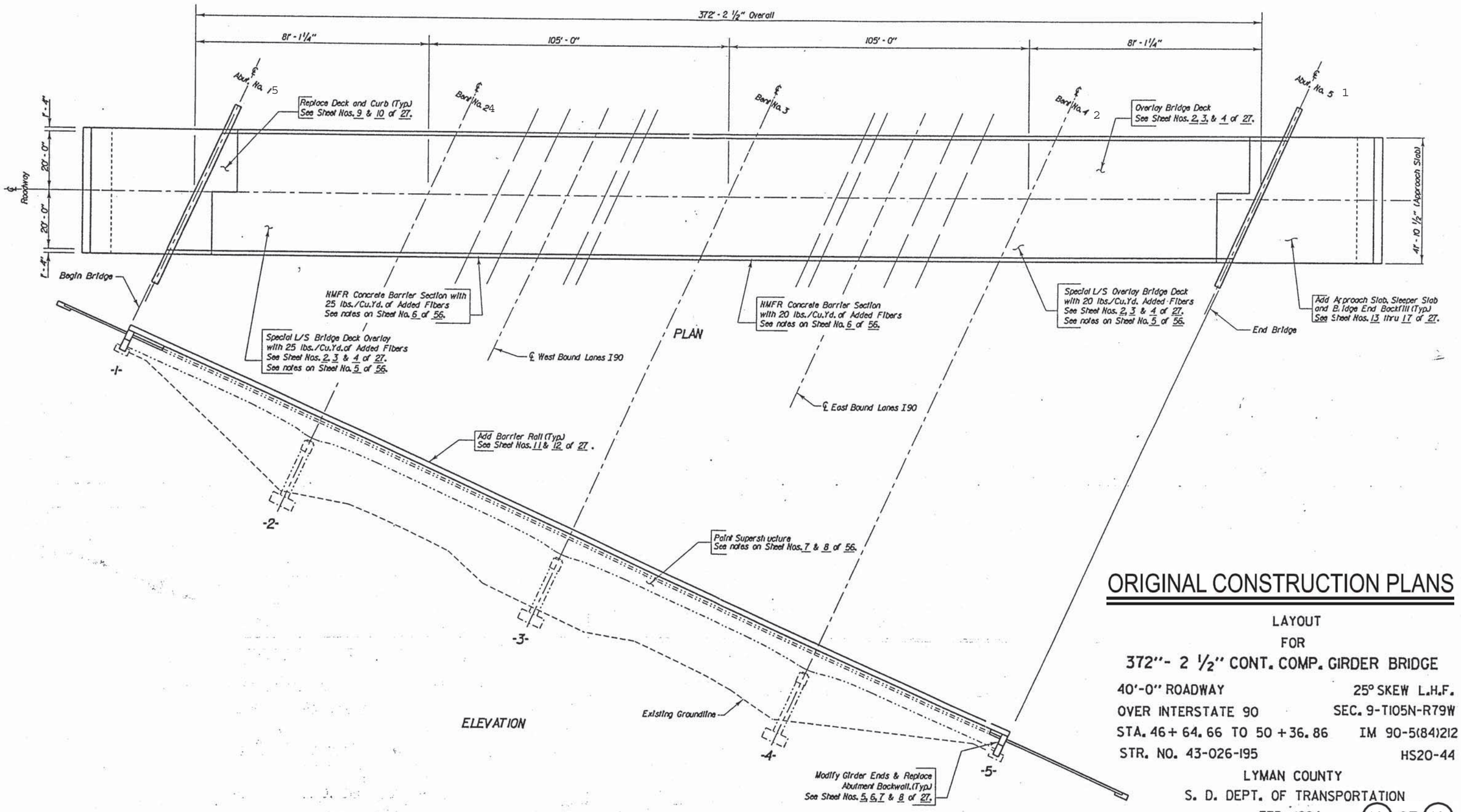

ORIGINAL CONSTRUCTION PLANS

LAYOUT

FOR

372'- 2 1/2" CONT. COMP. GIRDER BRIDGE

40'-0" ROADWAY — 25° SKEW L.H.F.

OVER INTERSTATE 90 — SEC. 9-T105N-R79W

STA. 46+64.66 TO 50+36.86 — IM 90-5(84)212

STR. NO. 43-026-195 — HS20-44

LYMAN COUNTY

S. D. DEPT. OF TRANSPORTATION

FEB. 1994

10 OF 12

PCEMS NO. 4243

DESIGNED BY	DRAWN BY	CHECKED BY	APPROVED
PDN LYMN4243	PDN/JLS 4243PN01	EJA	BRIDGE ENGINEER

STATE OF	PROJECT	SHEET NO.	TOTAL SHEETS
S.D.	NH 0083(81)87	E13	E14

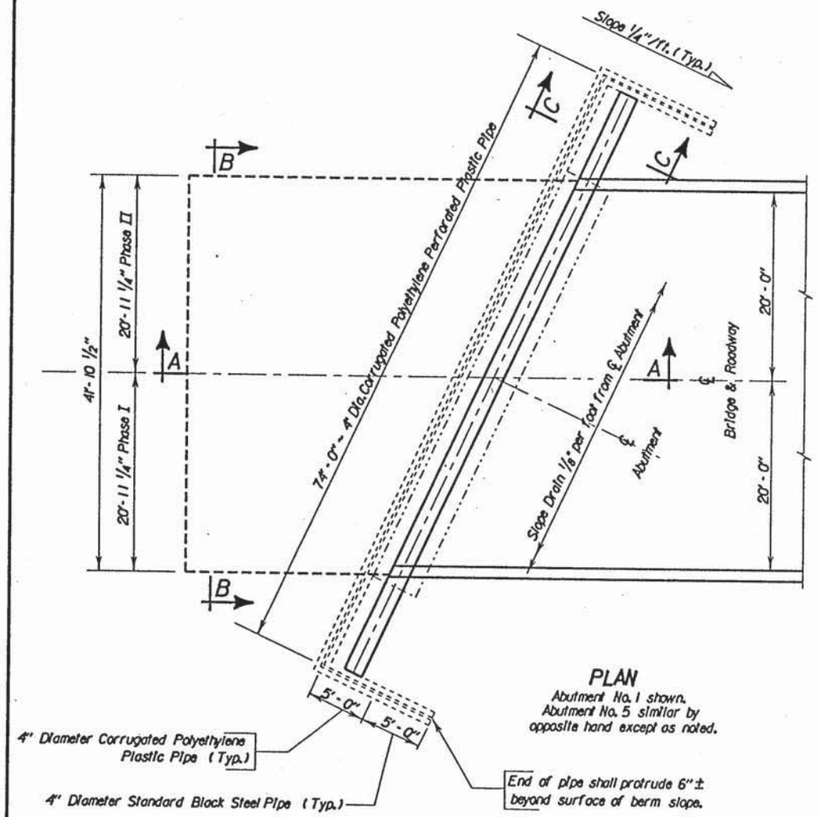

PLAN

Abutment No. 1 shown.
Abutment No. 5 similar by opposite hand except as noted.

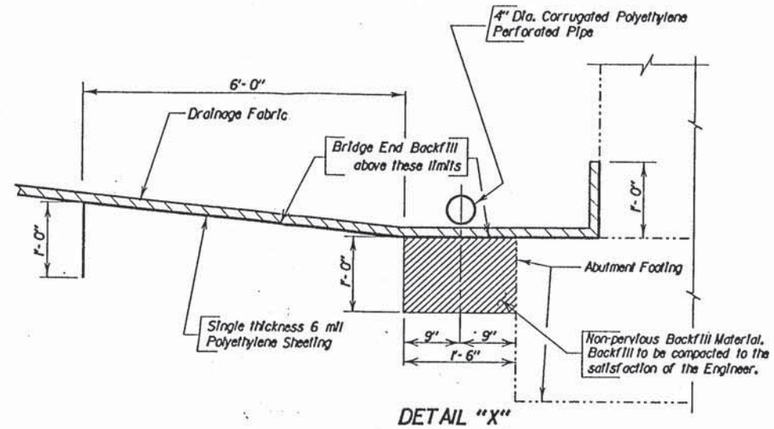

DETAIL "X"
(at ℄ Roadway normal to ℄ Abut.)

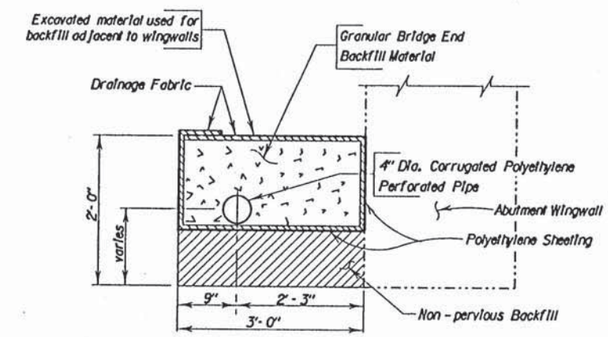

SEC. C - C
(TYP.)

ESTIMATED QUANTITIES (For 2 Abutments)		
ITEM	UNIT	QUANTITY
Bridge End Backfill Underdrain Pipe	L.F.	188
⌀ Bridge End Backfill Excavation	Cu. Yd.	335
✳ Granular Bridge End Backfill	Cu. Yd.	319
Drainage Fabric	Sq. Yd.	643

1. 148 ft. 4" dia. Corrugated Polyethylene Perforated Plastic Pipe for 2 Abutments.
2. 20 ft. 4" dia. Corrugated Polyethylene Plastic Pipe for 2 Abutments.
3. 20 ft. 4" diameter Standard Black Steel Pipe for 2 Abutments.
4. 606 sq. yd. 6 mil Polyethylene Sheeting, not including laps.

Items 1 thru 4 are approximate quantities contained in the above bid items and are for information only.

⌀ Bridge End Backfill Excavation will not be measured. Plans quantity payment will be full compensation for this item.

✳ Quantity has been adjusted by a "Shrinkage" factor of 1.3 to convert final compacted volume to loose volume.

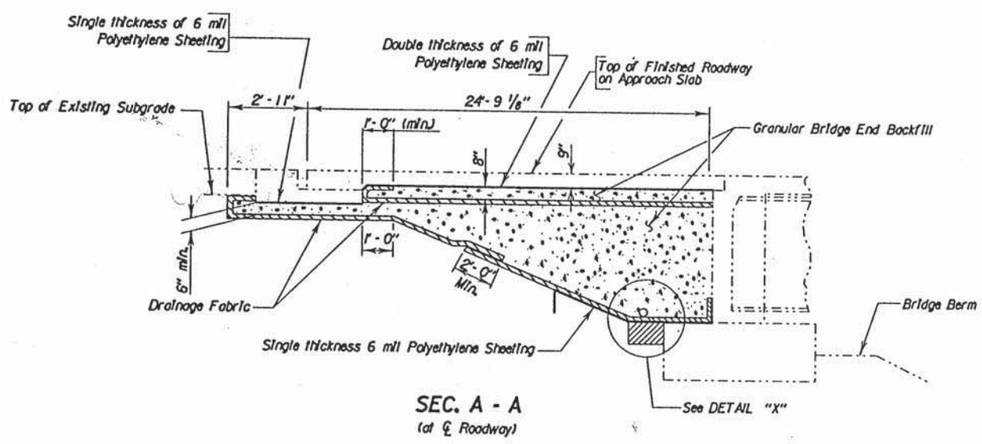

SEC. A - A
(at ℄ Roadway)

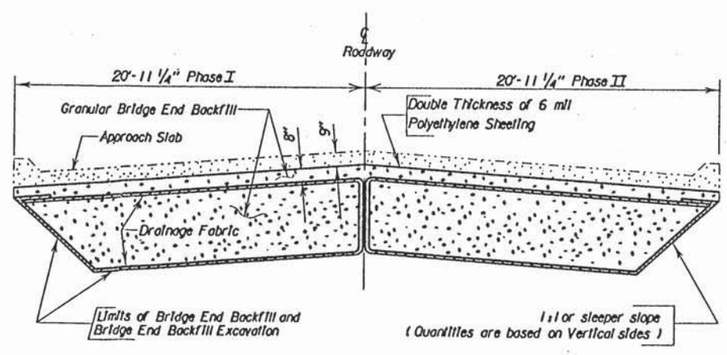

SEC. B - B

ORIGINAL CONSTRUCTION PLANS

DETAILS OF BRIDGE END BACKFILL
FOR
372'- 2 1/2" CONT. COMP. GIRDER BRIDGE
40'-0" ROADWAY — SEC. 9-T105N-R79W
OVER INTERSTATE 90 — 25° SKEW L. H. F.
STA. 46+64.66 TO STA. 50+36.86 — IM 90-5(84) 212
STR. NO. 43-026-195 — HS20-44
LYMAN COUNTY
S. D. DEPT. OF TRANSPORTATION
FEB. 1994

DESIGNED BY	DRAWN BY	CHECKED BY	APPROVED
PDN LYMN4243	JS 4243PN13	EJA	BRIDGE ENGINEER

STATE OF	PROJECT	SHEET NO.	TOTAL SHEETS
S.D.	NH 0083(81)87	E14	E14

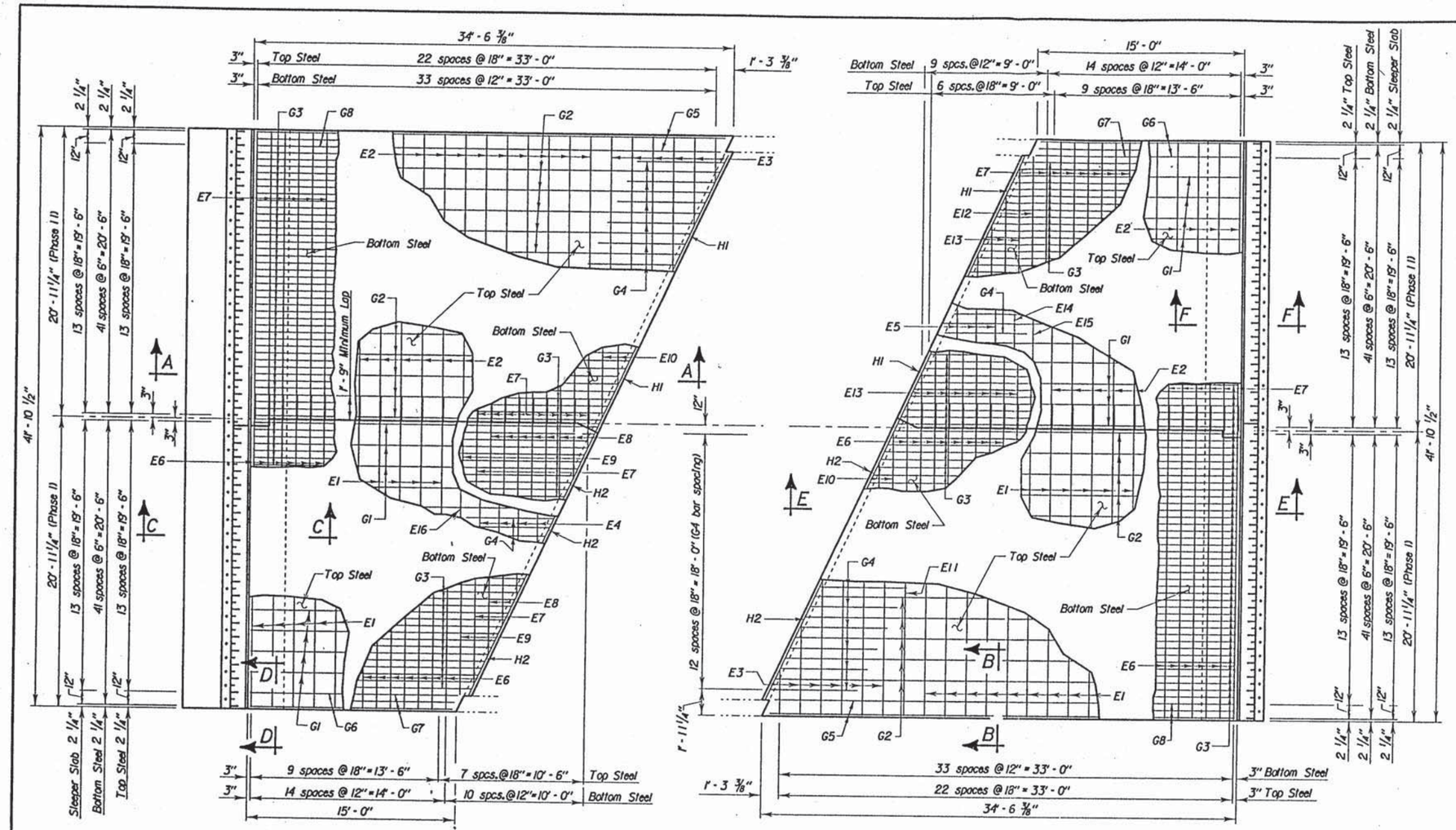

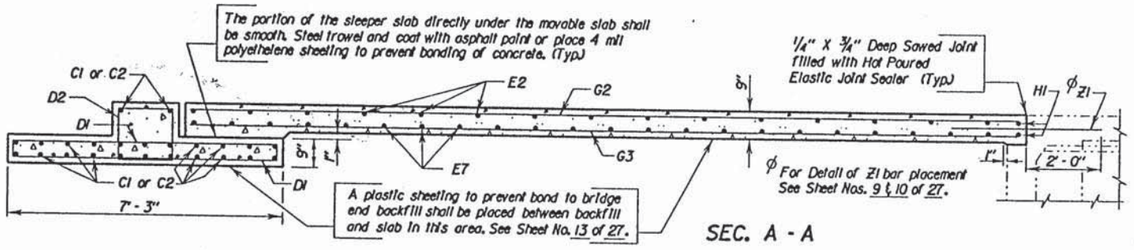

SEC. A - A

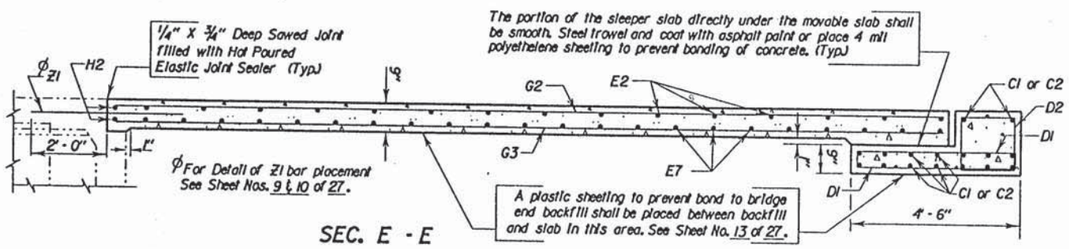

SEC. E - E

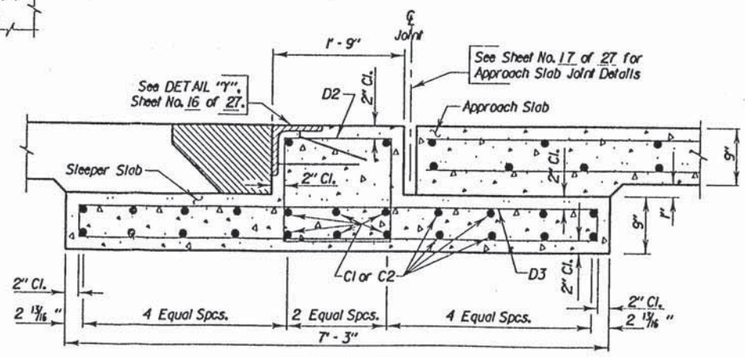

SEC. C - C

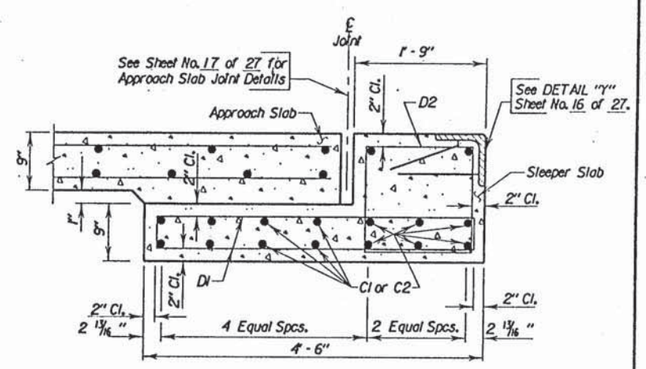

SEC. F - F

ORIGINAL CONSTRUCTION PLANS

APPROACH SLAB DETAILS
FOR UPGRADING OF

372'-2 1/2" CONT. COMP. GIRDER BRIDGE

40'-0" ROADWAY — 25° SKEW L.H.F.
OVER INTERSTATE 90 — SEC. 9-T105N-R79W
STA. 46+64.66 TO STA. 50+36.86 — IM 90-5(84)212
STR. NO. 43-026-195 — HS20-44

LYMAN COUNTY
S. D. DEPT. OF TRANSPORTATION
FEB. 1994

DESIGNED BY	DRAWN BY	CHECKED BY	APPROVED
PDN LYMN4243	PDN/JLS 4243PN15	EJA	BRIDGE ENGINEER