STATE OF SOUTH DAKOTA	PROJECT	SHEET	TOTAL SHEETS
	P 0014(204)421	B1	B39

Plotting Date: 01/30/2015

Section B: Grading Plans

INDEX OF SHEETS

B1	General Layout W/Index
B2-B5	Estimate with General Notes & Tables
B6	Table of Concrete Curb & Gutter & Sidewalk Quantities
B7	Table of Pipe Quantities
B8	Horizontal Alignment Sheet
B9	Control Data Sheet
B10	Subsurface Utility Locations Sheet
B11	Typical Sections
B12	Topography Symbology & Legend
B13-B16	Plan & Profile Sheets
B17-B18	Pavement Removal Layouts
B19-B20	Curb & Gutter Layouts
B21-B23	Curb Ramp Details
B24-B25	Special Details
B26-B39	Standard Plates

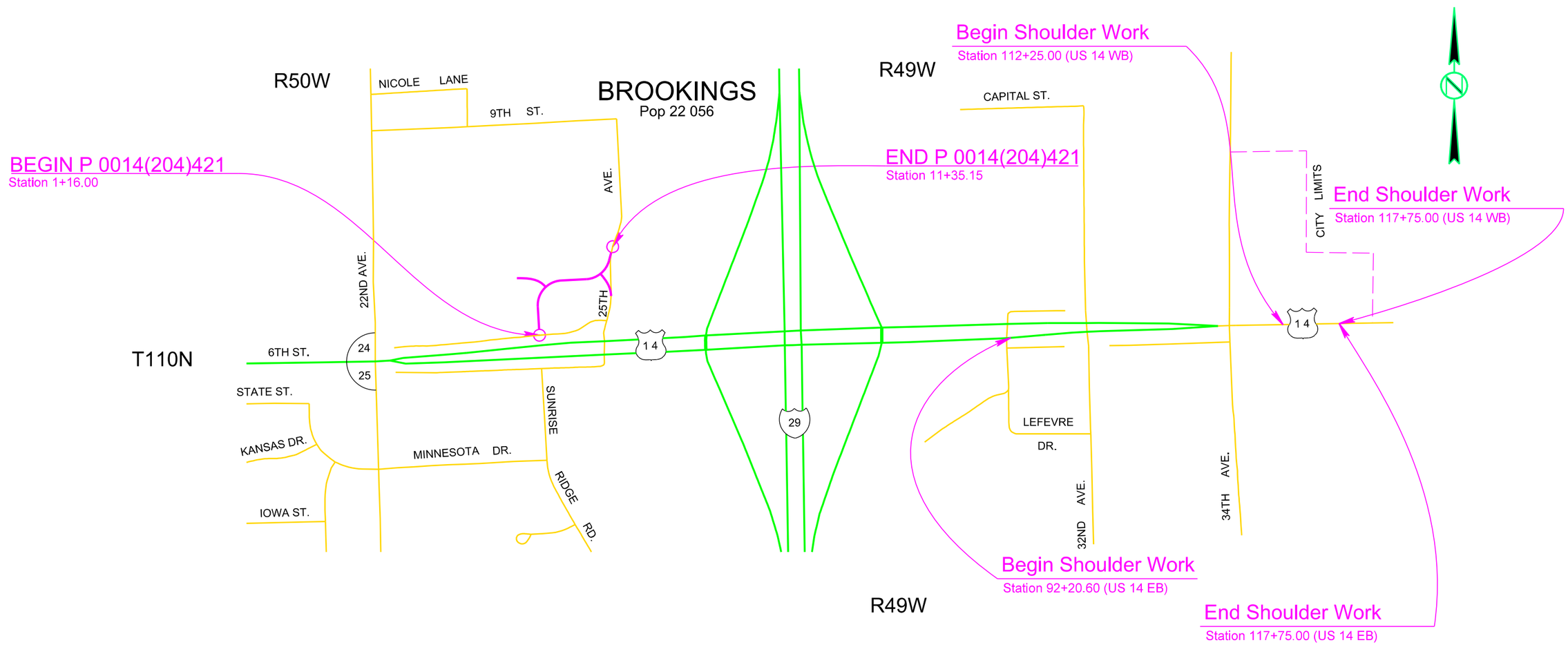

Plot Scale - 1:200

File - U:\rdprj\brok04TV\titleB.dgn

SECTION B ESTIMATE OF QUANTITIES

Bid Item Number	Item	Quantity	Unit
009E0010	Mobilization	Lump Sum	LS
009E3230	Grade Staking	0.290	Mile
009E3250	Miscellaneous Staking	0.781	Mile
009E3280	Slope Staking	0.781	Mile
009E3300	Three Man Survey Crew	40.0	Hour
100E0020	Clear and Grub Tree	8	Each
100E0100	Clearing	Lump Sum	LS
110E0210	Remove Building(s)	Lump Sum	LS
110E0300	Remove Concrete Curb and Gutter	1,123	Ft
110E0320	Remove Concrete Gutter	117	Ft
110E1010	Remove Asphalt Concrete Pavement	8,129.5	SqYd
110E1100	Remove Concrete Pavement	83.5	SqYd
110E1140	Remove Concrete Sidewalk	92.0	SqYd
120E0010	Unclassified Excavation	5,276	CuYd
380E3540	8" PCC Approach Pavement	216.0	SqYd
380E4050	8" PCC Fillet Section	194.0	SqYd
450E0122	18" RCP Class 2, Furnish	416	Ft
450E0130	18" RCP, Install	416	Ft
451E6080	Adjust Water Valve Box	1	Each
462E0100	Class M6 Concrete	7.8	CuYd
480E0100	Reinforcing Steel	939	Lb
600E0200	Type II Field Laboratory	1	Each
650E0080	Type B68 Concrete Curb and Gutter	2,118	Ft
650E0380	Type BL68 Concrete Curb and Gutter	429	Ft
650E4680	Type P8 Concrete Gutter	132	Ft
650E6280	8" Concrete Valley Gutter	127.7	SqYd
651E0040	4" Concrete Sidewalk	8,658	SqFt
651E5000	Sidewalk Drain	21.4	Ft
651E7000	Type 1 Detectable Warnings	138	SqFt
670E1200	Type B Frame and Grate Assembly	5	Each
670E2200	Type C Frame and Grate	2	Each
670E5400	Precast Drop Inlet Collar	5	Each
671E7010	Adjust Manhole	3	Each
831E0300	MSE Geotextile Fabric	3,216	SqYd

GRADING OPERATIONS

Water for Embankment is estimated at the rate of 10 gallons of water per cubic yard of Embankment minus Waste. The estimated quantity of Water for Embankment is 2 MGal. No separate payment will be made for the Water for Embankment and all costs associated shall be incidental to the contract unit price per cubic yard of "Unclassified Excavation".

The estimated cubic yards of excavation and/or embankment required to construct outlet ditches, ditch blocks, and approaches are included in the earthwork balance notes on the profile sheets.

Special ditch grades and other sections of the roadway different than the typical sections shall be constructed to the limits shown on the cross sections. If significant changes to the cross sections are necessary during construction, the Engineer shall contact the Designer for the proposed change.

Generally, all shallow inlet and outlet ditches as noted on the plan sheets shall be cut with a 10-foot wide bottom with 5:1 backslopes. However, the Engineer may direct the Contractor to adjust the ditch width for proper alignment with the drainage structure.

UTILITIES

The Contractor shall be aware that the existing utilities shown in the plans were surveyed prior to the design of this project and might have been relocated or replaced by a new utility facility prior to construction of this project, might be relocated or replaced by a new utility facility during the construction of this project, or might not require adjustment and may remain in its current location. The Contractor shall contact each utility owner and confirm the status of all existing and new utility facilities. The utility contact information is provided elsewhere in the plans or bidding documents.

Subsurface utility explorations were done for this project. The findings can be found in the SUBSURFACE UTILITY LOCATIONS table elsewhere in the plans. The table is provided to aid the Contractor during construction. All information in the table is approximate and shall be verified by the Contractor prior to construction in those areas.

CLEARING

Before clearing activities begin, the Contractor shall contact the Engineer to determine the limits of clearing for the project. If the trees or shrubs that are supposed to remain within the limits of work are damaged or destroyed by the Contractor, the Contractor shall replace them with the same size and type at the Contractor's expense. All trees being removed except the trees listed below shall be incidental to the contract lump sum for "Clearing".

The following tree removals are incidental to the contract unit price per each for "Clear and Grub Tree".

8+56 – 64' R Tree greater than 6 inches in diameter
8+72 – 9' R Tree greater than 6 inches in diameter
9+37 – 57' R Tree greater than 6 inches in diameter
9+46 – 29' L Tree greater than 6 inches in diameter
10+15 – 25' R Tree greater than 6 inches in diameter
10+24 – 39' L Tree greater than 6 inches in diameter
10+30 – 25' L Tree greater than 6 inches in diameter
10+85 – 26' L Tree greater than 6 inches in diameter

SERVICE ROAD CONNECTION

The service road running east/west on the north side of Hwy 14 shall be left in place with this project. Connection to this service road will be needed to maintain traffic. The proposed finished grade of Sunrise Ridge Road will closely match the existing service road grade. Minor asphalt work may be required to provide a smooth transition for traffic entering and exiting Sunrise Ridge Road to and from the service road. All costs for providing this connection and minor asphalt work shall be incidental to the various bid items.

SHRINKAGE FACTOR: Embankment +20%

TABLE OF EXCAVATION QUANTITIES BY BALANCES

Station to	Station	Excavation (CuYd)	Total Excavation (CuYd)	** Waste (CuYd)
Mainline				
1+16	11+35	2,781	2,781	2,641
xr5 LEOP				
0+00	1+74	352	352	341
xr9				
1+00	2+01	188	188	173
	Totals:	3,321	3,321	3,155

** The quantities for these items are for information only.

TABLE OF UNCLASSIFIED EXCAVATION

Excavation	3,321
Topsoil	1,320
US 14 Temporary Shoulder Widening Excavation (See Section F for Details)	635
Total	5,276

PROCEDURES FOR DETERMINING UNCLASSIFIED EXCAVATION QUANTITY

When plan quantities are used for payment, the Unclassified Excavation quantity shall be used for final payment. If final cross sections are taken in the field, add all of the items in the Table of Unclassified Excavation using the following procedures:

The Topsoil quantity in the Table of Unclassified Excavation is an estimate. When finaling a project, the total quantity of field measured Topsoil shall be used in place of the estimated Topsoil quantity. The quantity of Topsoil from the cuts will be paid for twice as Unclassified Excavation, as it will be in both the Excavation and Topsoil quantities. This will be full compensation for Excavation, which includes necessary undercutting to provide space for placement of topsoil.

The Excavation quantities from individual balances and the Table of Unclassified Excavation have been reduced by the volume of in place surfacing that will be removed.

Plot Scale - 1:200
Plotted From - trsf12145
File - ...\prj\brok04TV\NotesSectionB.dgn

UNDERCUTTING

In all cut sections the earthen subgrade shall be undercut 1 foot below the bottom of the proposed Asphalt Concrete surface. The excavated material shall be backfilled with granular material. There is no bid item for Undercutting. Undercutting is included in the excavation quantities and shall be paid for as “Unclassified Excavation”

Shallow embankment sections, fills less than 1 foot in height measured at the curb line, shall be undercut to ensure a 1 foot height of granular material between the top of the subgrade and the bottom of the AC surfacing for the entire width of roadbed.

Prior to placing the granular backfill, the top of the subgrade will be covered with a layer of MSE Geotextile Fabric.

The geotextile will conform to specification for Geotextiles and Impermeable Plastic Membranes, MSE Geotextile Fabric (Section 831.1 of the Specifications). The geotextile will be on the Approved Products List for this material or will be certified by the supplier to meet this specification prior to installation.

Geotextile will be paid for at the contract unit price per square yard for “MSE Geotextile Fabric”. Geotextile quantities were estimated based on area covered plus 15%. Overlaps are accounted for by the additional 15%. Payment will be full compensation for furnishing and installing the geotextile only. Granular backfill materials will be paid for at the contract unite price per ton for “Base Course” found in Section F.

The geotextile will be placed as taut as possible with minimal wrinkles. Placement will be done so that subsequent granular cover material does not shove, wrinkle or distort the in place geotextile. The overlaps will be shingled in a manner that assures granular material will not be forced under the geotextile during backfilling operations. The geotextile may be held in place with small piles of granular material or staples. No traffic will be allowed on the uncovered geotextile.

Granular material will be dumped at least 20 feet behind the leading edge of the backfill and pushed into place with a loader or dozer from the covered areas to the uncovered areas. The granular material will be placed in 6 inch lifts or as directed by the Engineer. The granular material will be compacted to 95% maximum dry density as determined by the Specified Density Method.

The top of the subgrade will be scarified and recompacted with moisture and density control (Specified Density Method) and shall be prepared by smoothing the surface to minimize any ruts, ridges, and depressions. Any rocks or other protrusions that might damage the geotextile will be removed. The geotextile will be unrolled parallel to centerline and overlapped a minimum of 2 feet.

The plan shown quantity of 3,216.2 SqYd of MSE Geotextile Fabric, including overlap allowance, will be the basis of payment. However, if there are additional areas of undercut other than what is shown in the plans, the Engineer shall direct removal of these areas and the additional areas will be measured according to the Engineer.

REMOVAL OF BUILDING

Included in these plans is the removal and disposal of one building. The location and type of building is as follows:

Station	L/R	Type
3+75	40’ R	Commercial 245’ L x 51’ W

This building shall be removed in accordance with Section 110 of the Specifications and all local codes. Where the building foundation is located underneath the new roadway subgrade, remove the foundation to 1’ below the roadway subgrade. Where the building foundation is located outside of the roadway subgrade, remove the foundation to 1’ below the surrounding natural ground. The disconnection and capping of all utility services to these buildings shall be the responsibility of the Contractor. Any borrow and granular material necessary to fill in the foundation space shall be incidental to the contract lump sum price for “Remove Building(s)”.

This building has not been inspected for asbestos. The Contractor shall be responsible for providing an asbestos inspection and following all local, state, and federal regulations regarding the removal of asbestos, if found. All costs for the inspection and any necessary removal shall be incidental to the contract lump sum price for “Remove Building(s)”.

TABLE OF ASPHALT CONCRETE PAVEMENT REMOVAL

Station	to	Station	L/R	Quantity (SqYd)
1+16		11+37		8129.5
			Total:	8129.5

TABLE OF CONCRETE CURB AND GUTTER REMOVAL

Station	to	Station	L/R	Quantity (Ft)
4+85		7+08	L&R	348.0
8+44		8+70	R	74.3
8+62		9+34	L&R	174.5
8+70		8+78	R	25.8
8+92		10+55	R	244.5
9+16		11+35	L&R	218.7
10+02		10+43	L	36.7
			Total:	1122.5

TABLE OF CONCRETE GUTTER REMOVAL

Station	to	Station	L/R	Quantity (Ft)
xr9 Alignment				
1+00		1+12	R	11.8
Mainline				
8+85		9+04	R	34.0
10+35		11+02	R	71.0
			Total:	116.8

TABLE OF CONCRETE PAVEMENT REMOVAL

Station	to	Station	L/R	Quantity (SqYd)
7+06		7+43	R	35.9
8+69		8+88	R	26.2
8+85		9+17	R	21.4
			Total:	83.5

TABLE OF SIDEWALK REMOVAL

Station	to	Station	L/R	Quantity (SqYd)
xr9 Alignment				
1+20		1+63	L	17.4
Mainline Alignment				
8+86		10+02	L&R	55.0
10+02		10+52	R	19.6
			Total:	92.0

CONCRETE PIPE CONNECTIONS

Pipe connections to existing pipes, manholes, junction boxes, and drop inlets shall be done by breaking a hole into the existing structure and inserting the pipe. A concrete collar shall then be poured around the pipe in the area of the connection.

When it is not possible to use a normal pipe joint (male-female ends), connections to existing pipe shall be made by placing a 2’ wide by 6" thick M6 concrete collar around the outside of the connection. The concrete collar shall be reinforced with 6x6 W2.9 x W2.9 wire mesh.

All costs for constructing the concrete collars including materials and labor shall be incidental to the contract unit price per foot for the corresponding pipe bid item.

STORM SEWER

Reinforced concrete pipe may be either bell and spigot or tongue and groove. The pipe sections shall be adjoined such that the ends are fully entered and the inner surfaces are reasonably flush and even.

Lift holes in the reinforced concrete pipe shall be plugged with grout.

Watertight joints are required for reinforced concrete pipe, drop inlets, manholes, and junction boxes where storm sewers run parallel to and within 10 feet horizontally from existing or proposed water mains.

Watertight joints are required where reinforced concrete pipes, drop inlets, manholes, or junction boxes cross water mains and are separated a distance of 18 inches or less, above or below, the water main.

If watertight joints are required then the watertight joints shall extend for a distance of 10 feet beyond the water main. This measurement shall be from the sealed concrete joint to the outer most surface of the water main.

Watertight joint seals shall conform to the following requirements:

1. Reinforced Concrete Pipe (Circular): Gasketed pipe shall conform to the requirements of ASTM C443. Non-gasketed concrete pipe shall be sealed with a mastic joint seal conforming to the requirements of ASTM C990 and encased with a minimum 2’ wide by 6” thick M6 concrete collar reinforced with 6x6 W2.9 x W2.9 wire mesh.

2. Reinforced Concrete Pipe (Arch): Joints shall be sealed with a waterstop seal meeting the requirements of ASTM C990. Waterstop seals shall consist of hydrophilic compounds such as Waterstop-RX or ConSeal CS-231.

Plot Scale - 1:200
Plotted From - trsf12145
File - ...\prj\brok04TV\NotesSectionB.dgn

STORM SEWER (CONTINUED)

3. Drop Inlets, Manholes, and Junction Boxes: Joints shall be sealed with a waterstop seal or seal wrap meeting the requirements of ASTM C990 or encased with a minimum 2' wide by 6" thick M6 concrete collar reinforced with 6x6 W2.9 x W2.9 wire mesh. Waterstop seal shall contain hydrophilic compounds such as Waterstop-RX or ConSeal CS-231. Seal wrap shall be a self-adhesive external joint wrap such as ConWrap CS-217 or Mar Mac Seal Wrap.

Gaskets and seals (mastic, waterstop, and seal wraps) shall be installed in accordance with the manufacturer's recommendations.

The cost for furnishing and installing all gaskets, mastic joint seal, waterstop seal, seal wrap, concrete collars, and for plugging the lift holes shall be incidental to the contract unit price per foot for the corresponding pipe bid item.

DROP INLETS

Where drop inlets are constructed within areas of curb and gutter, the Contractor shall construct weep holes of at least 3 inches in diameter in the drop inlet walls. The weep holes shall be constructed at the same elevation as the adjacent top of the earthen subgrade and shall be maintained clean and open at all times until the permanent surfacing is placed. The drop inlets shall be covered throughout construction operations as necessary with an Engineer approved cover to provide safe travel for motorists and to prevent materials from entering the storm sewer system. After the permanent surfacing has been placed, the Contractor shall seal the weep holes with grout and remove all debris from the drop inlet. All costs involved with the coverings, weep holes, and removing debris from the drop inlets shall be incidental to the contract unit prices for the components of the drop inlets.

The plan shown quantities of the drop inlet components such as Class M6 Concrete, Reinforcing Steel, Type B Frame and Grate Assembly, Type C Frame and Grate, and Precast Drop Inlet Collar will be the basis of payment for these items.

If additions or reductions to the number of drop inlets are ordered by the Engineer, payment for the components required to construct the drop inlets will be made at the contract unit prices for the components of the drop inlets.

TABLE OF DROP INLETS AND QUANTITIES

Station	L / R	Drop Inlet Size	Drop Inlet Type	Class M6 Concrete (CuYd)	Reinf. Steel (Lb)	Concrete Collar (Each)	Frame and Grate Type
7+00.00	R	2'x3'	B	0.73	85	1	B
8+63.33	R	3'x4'	C	1.17	134		C
8+79.42	R	2'x3'	B	0.71	87	1	B
9+06.35	R	2'x3'	B	0.76	92	1	B
9+28.85	R	3'x4'	C	1.34	150		C
9+65.00	R	3'x4'	B	1.51	193	1	B
9+65.00	L	3'x4'	B	1.56	198	1	B
			Totals:	7.78	939	5	

Total Type B Frame and Grate Assembly	5
Total Type C Frame and Grate	2

ADJUSTMENT OF MANHOLES

The Contractor shall adjust manholes to the extent necessary on this project. Adjusting the manholes may consist of removing the upper course of brick or removing the concrete walls, replacing the removed materials with brick or Class M6 concrete, placing adjusting rings if necessary, and resetting the manhole frame and lid. The elevation of the lid shall be set at the same elevation of the adjacent new pavement or surrounding ground. All manhole frames, lids, and rings that are cracked or broken due to carelessness of the Contractor shall be replaced with new manhole frames, lids, and rings that conform with the Specifications at the Contractor's expense. Manholes shall be adjusted to the satisfaction of the Engineer. All costs involved in adjusting the manholes shall be incidental to the contract unit price per each for "Adjust Manhole".

The Engineer may direct adjustment of manholes that were not included in these plans. Payment for adjusting manholes that were not included in the plans will be at the contract unit price per each for "Adjust Manhole".

TABLE OF ADJUST MANHOLES

Station	L/R	Type of Adjustment
7+09	2' L	Raise 0.07' to match Road Finished Elev.
9+16	44' R	Raise 0.67' to match Sidewalk Finished Elev.
10+56	8' L	Raise 0.04' to match Road Finished Elev.

TABLE FOR ADJUSTMENT OF WATER VALVES

Station	L/R	Adjustment
1+41	27' R	Raise 0.68' to match Finished Boulevard Elev.

SIDEWALK DRAINS

At the locations noted in the Table of Sidewalk Drains, drainage from adjacent buildings will be carried through the sidewalk to the gutter. The sidewalk drains shall be constructed in accordance with the details shown on Standard Plate 651.50.

TABLE OF SIDEWALK DRAINS

Station	L/R	Length (Ft)
4+68.00	L	10.7
5+82.00	R	10.7
	Totals:	21.4

TYPE 1 DETECTABLE WARNINGS

Detectable warnings shall be in compliance with the Americans with Disability Act regulations.

The detectable warnings shall be installed according to the manufacturer's installation instructions.

A concrete thickness equal to the adjacent concrete sidewalk thickness and 2 inches of granular cushion material shall be placed below the Type 1 Detectable Warnings. When concrete is placed below the detectable warnings then the concrete thickness shall be transitioned at the rate of 1" per foot to match the adjacent concrete sidewalk thickness.

The detectable warnings shall be a brick red color for application in concrete curb ramps. Cast iron plates may be a natural patina (weathered steel).

When Type 1 Detectable Warnings are specified, the Contractor shall furnish and install only one of the products listed in the Type 1 Detectable Warnings table.

Type 1 Detectable Warnings

Product	Manufacturer
Detectable Warning Plate Cast Iron Plate	Neenah Foundry Company Neenah, WI 800-558-5075 http://www.neenahfoundry.com/
Detectable Warning Plate Cast Iron Plate	Deeter Foundry Lincoln, NE 800-234-7466 http://www.deeter.com/
Detectable Warning Plate Cast Iron Plate(No Coating)	East Jordan Iron Works, Inc. 301 Spring Street East Jordan, MI 49727 800-626-4653 http://www.ejiw.com
CAST-DWD Cast Iron Plate	Key 3 Casting (Northern Foundry) 555 West 25th Street Hibbing, MN 55746 218-263-8871 http://key3casting.com

SPECIAL APPROACH PAVEMENT

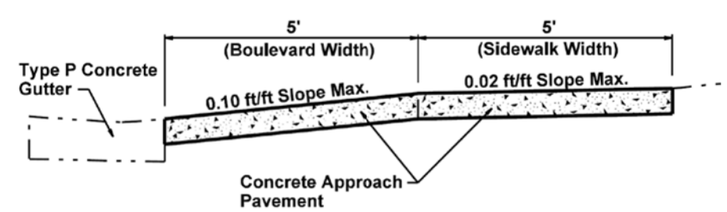

Special Approach Pavement shall be constructed in areas where there is a boulevard between the back of curb and sidewalk, where a portion of the approach functions as a pedestrian walkway. See Type A PCC Approach Pavement Standard Plate for additional information. All costs to construct the Special Approach Pavement will be paid at the contract unit price per square yard of "8" PCC Approach Pavement".

Plot Scale - 1:200
Plotted From - trsf12145
File - ...\pr\brok04TV\NotesSectionB.dgn

TABLE OF CONSTRUCTION STAKING

(See Special Provision for Contractor Staking)

Roadway and Description	Begin Station	End Station	Number of Lanes	Length (Ft)	Grade Staking: Length (Mile)	Grade Staking: Lane Factor	Grade Staking: *Sets of Stakes	Grade Staking: **Grade Staking Quantity (Mile)	Miscellaneous Staking Quantity (Mile)	Slope Staking Quantity (Mile)
Sunrise Ridge Rd (3 Lanes AC Pavement)	1+16	10+65	3	949	0.180	1.5	1	0.270	0.180	0.180
Sunrise Ridge Rd (Transition from 3 Lanes to 2 Lanes AC Pavement)	10+65	11+35	3	70	0.013	1.5	1	0.020	0.013	0.013
Temporary Widening on US 14 EB	92+21	117+75	1	2554	0.484				0.484	0.484
Temporary Widening on US 14 WB	112+25	117+75	1	550	0.104				0.104	0.104
							Totals:	0.290	0.781	0.781

* 1 = Blue Top Stakes Only (Asphalt Concrete Pavement)

** Grade Staking Quantity = (Length) x (Lane Factor) x (Sets of Stakes)

TABLE OF CONCRETE CURB & GUTTER & SIDEWALK

STATE OF SOUTH DAKOTA	PROJECT	SHEET	TOTAL SHEETS
	P 0014(204)421	B6	B39

Plotting Date: 01/30/2015

Station to Station		PCC Fillet Section	Concrete Curb & Gutter		Concrete Gutter		PCC Approach Pavement	Concrete Sidewalk	Detectable Warning	Sidewalk Drain
			Type B	Type BL	Type P	Valley	Type A		Type 1	
		8"	68	68	8	8"	8"	4"		
		SqYd	Ft	Ft	Ft	SqYd	SqYd	SqFt	SqFt	Ft
1+10.08-19.50' L	4+85.73-168.25' L		473		80		117	1510	18	10.7
5+22.29-124.33' L	8+74.10-19.50' L	65	375	429				1769	30	
8+74.10--19.50' L	11+35.15-17.71' L	46	182			35.4		429	20	
10+01.59-45.62' L	10+43.34-53.88' L		37							
1+09.91-24.85' R	7+18.10-39.06' R	13	528		40		56	2521	10	10.7
7+08.18-40.86' R	8+79.03-19.50' R	33	325			35.0	43	1127	30	
8+79.03-19.50' R	11+02.03-12.51' R	37	198		11.7	57.3		1302	30	
Total:		194	2118	429	132	127.7	216	8658	138	21.4

8" PCC FILLET SECTIONS

Payment for "8" PCC Fillet Section" shall be based on plans quantity. If additions or reductions to the area of PCC fillet sections are ordered by the Engineer, payment will be made in accordance with the contract unit price per square yard for "8" PCC Fillet Section".

Plot Scale - 1:200

Plotted From - trsf12145

File - ...\brok04TV\TablesSectionB.dgn

TABLE OF PIPE QUANTITIES

STATE OF SOUTH DAKOTA	PROJECT	SHEET	TOTAL SHEETS
	P 0014(204)421	B7	B39

Plotting Date: 01/30/2015

Station Offset (L/R)	Reinforced Concrete Circular 18" Cl. 2 Ft
7+00.00 - 21.17' R to 8+63.33 - 47.37' R	176
8+63.33 - 47.37' R to 8+79.42 - 56.08' R	20
8+79.42 - 56.08' R to 9+06.35 - 56.08' R	32
9+06.35 - 56.08' R to 9+28.85 - 48.95' R *	26
9+28.85 - 48.95' R to 9+65.00 - 21.17' R *	48
9+65.00 - 21.17' R to 9+65.00 - 21.17' L *	40
9+65.00 - 21.17' L to 10+47.64 - 53.15' L	74
Total:	416

Pipes denoted with an asterisk(*) indicate that the entire length or a portion of the pipe requires watertight joints in accordance with the STORM SEWER plan note.

Plot Scale - 1:200

Plotted From - tsf12145

File - ...\brok04TV\TablesSectionB.dgn

HORIZONTAL ALIGNMENT DATA

STATE OF SOUTH DAKOTA	PROJECT	SHEET	TOTAL SHEETS
	P 0014(204)421	B8	B39

Plotting Date: 01/30/2015

MAINLINE

Type	Station			Northing	Easting
POB	0+00.00			191246.038	2815237.911
		TL= 55.82	N 4°40'53" W		
PC	0+55.82			191301.673	2815233.355
PI	0+97.90	R = 1500.00	Delta = 3°12'49" R	191343.610	2815229.921
PT	1+39.95			191385.673	2815228.844
		TL= 204.51	N 1°28'04" W		
PC	3+44.46			191590.112	2815223.606
PI	5+69.05	R = 235.00	Delta = 87°24'21" R	191814.632	2815217.853
PT	7+02.96			191830.541	2815441.883
		TL= 75.27	N 85°56'18" E		
PC	7+78.22			191835.872	2815516.960
PI	10+06.35	R = 235.00	Delta = 88°18'01" L	191852.031	2815744.517
PT	11+40.39			192079.967	2815735.115
		TL= 34.61	N 2°21'44" W		
POE	11+75.00			192114.552	2815733.688

xr5 LEOP

Type	Station			Northing	Easting
POB	0+00.00			191834.386	2815118.813
		TL= 44.33	N 85°29'11" E		
PC	0+44.33			191837.875	2815163.002
PI	0+79.66	R = 98.00	Delta = 39°39'01" R	191840.655	2815198.223
PCC	1+12.15			191820.322	2815227.116
PI	1+18.99	R = 122.00	Delta = 6°25'24" R	191816.382	2815232.715
PT	1+25.82			191811.840	2815237.837
		TL= 73.72	S 48°26'24" E		
POE	1+99.54			191762.937	2815292.996

xr5 REOP

Type	Station			Northing	Easting
PC	0+00.00			191815.606	2815120.243
PI	0+31.98	R = 178.00	Delta = 20°22'24" R	191817.837	2815152.150
PCC	0+63.29			191808.821	2815182.837
PI	0+83.85	R = 92.00	Delta = 25°11'10" R	191803.027	2815202.556
PT	1+03.74			191789.392	2815217.935
		TL= 73.72	S 48°26'24" E		
POE	1+77.45			191740.489	2815273.094

xr9

Type	Station			Northing	Easting
POB	0+00.00			191656.794	2815674.588
		TL= 111.21	N 1°26'17" W		
PC	1+11.21			191767.971	2815671.797
PI	1+40.46	R = 107.00	Delta = 30°34'47" L	191797.214	2815671.063
PT	1+68.32			191822.016	2815655.554
		TL= 57.81	N 32°01'03" W		
POE	2+26.13			191871.029	2815624.907

US 14

Type	Station			Northing	Easting
POB	45+00.00			191147.437	2813389.419
		TL= 370.07	N 88°19'51" E		
PC	48+70.07			191158.216	2813759.331
PI	49+95.08	R = 10193.06	Delta = 1°24'19" L	191161.857	2813884.285
PRC	51+20.07			191168.562	2814009.112
PI	52+45.08	R = 9966.24	Delta = 1°26'14" R	191175.266	2814133.939
PT	53+70.07			191178.838	2814258.895
		TL= 54.70	N 88°21'46" E		
PC	54+24.77			191180.400	2814313.576
PI	56+48.18	R = 8000.00	Delta = 3°11'57" L	191186.783	2814536.886
PT	58+71.46			191205.618	2814759.493
		TL= 436.85	N 85°09'49" E		
PC	63+08.31			191242.448	2815194.788
PI	65+40.24	R = 16000.00	Delta = 1°39'39" R	191262.002	2815425.894
PT	67+72.14			191274.849	2815657.469
		TL= 2437.73	N 86°49'29" E		
PC	92+09.87			191409.878	2818091.456
PI	94+95.44	R = 25000.00	Delta = 1°18'32" R	191425.696	2818376.584
PT	97+80.98			191434.997	2818661.999
		TL= 1094.42	N 88°08'01" E		
PI	108+75.41			191470.642	2819755.844
		TL= 930.73	N 88°06'07" E		
POE	118+06.14			191501.470	2820686.065

The coordinates shown on this sheet are based on the South Dakota State Plane Coordinate System. North Zone (NAD 83/1996); Geoid 2003; SF = 0.99994679

Plot Scale - 1:200
Plotted From - trsf12145
File - ...\prj\brok04TV\DataSectionB.dgn

CONTROL DATA

STATE OF SOUTH DAKOTA	PROJECT	SHEET	TOTAL SHEETS
	P 0014(204)421	B9	B39

Plotting Date: 01/30/2015

HORIZONTAL AND VERTICAL CONTROL POINTS

POINT	STATION	OFFSET	DESCRIPTION	NORTHING	EASTING	ELEVATION
CP6	55+54	68' R	North of the No Parking sign on south service road 40 ft	191117.6787	2814445.9900	1667.71
CP7	67+12	82' L	Rebar w/ cap NW corner of 25th Ave and 6th St	191353.3480	2815592.9170	1675.08
CP8	77+63	20' L	Rebar w/ Cap West end of West Bound Bridge median	191349.4280	2816645.3830	1678.50
CP9	84+43	2' L	RR Spike East side of NB Ramps in the Median of 6th St	191369.7530	2817326.1150	1669.35
CP10	105+6	98' R	Rebar w/ Cap 1 ft North of fiber optic marker SE corner of 34th Ave and 6th St	191362.9310	2819449.7510	1626.19

* All Station and Offsets are from US 14 Alignment

The coordinates shown on this sheet are based on the South Dakota State Plane Coordinate System. North Zone (NAD 83/1996);
Geoid 2003; SF = 0.99994679
The elevations shown on this sheet are based on NAVD 88.

Plot Scale - 1:200
Plotted From - trsf12145
File - ...\prj\brok04TV\DataSectionB.dgn

SUBSURFACE UTILITY LOCATIONS

STATE OF SOUTH DAKOTA	PROJECT	SHEET	TOTAL SHEETS
	P 0014(204)421	B10	B39

Plotting Date: 01/30/2015

Subsurface utility explorations were done at the following locations. The information below states what was located in the specified areas. This table is provided to aid the Contractor during construction and does not substitute or replace the requirements of SD One Call. All information is approximate and the Contractor shall verify all utility locations before construction in those areas as mandated in SDCL 49-7A.

Test Hole	Station	Offset	Finding	Existing Ground Elev.	Utility Depth (Ft.)	Utility Elevation	Northing	Easting
18	1+43.68	17.33' L	2" Natural Gas	1674.82	3.30	1671.52	191388.955	2815211.425
19	1+46.05	21.06' R	2" Natural Gas	1674.85	3.83	1671.02	191392.303	2815249.742
20	5+12.11	100.54' L	1.5" Fiber Optic	1671.37	4.30	1667.07	191809.143	2815199.280
21	8+81.70	41.45' R	1.5" Fiber Optic	1670.12	3.50	1666.62	191829.174	2815635.561

The coordinates shown on this sheet are based on the South Dakota State Plane Coordinate System. North Zone (NAD 83/1996); Geoid 2003; SF = 0.99994679
The elevations shown on this sheet are based on NAVD 88.

Plot Scale - 1:200
Plotted From - trsf12145
File - ...\prj\brok04TV\DataSectionB.dgn

STATE OF SOUTH DAKOTA	PROJECT	SHEET	TOTAL SHEETS
	P 0014(204)421	B11	B39

Plotting Date: 01/30/2015

TYPICAL GRADING SECTION

Mainline (Sunrise Ridge Rd)
1+16 to 10+64.83

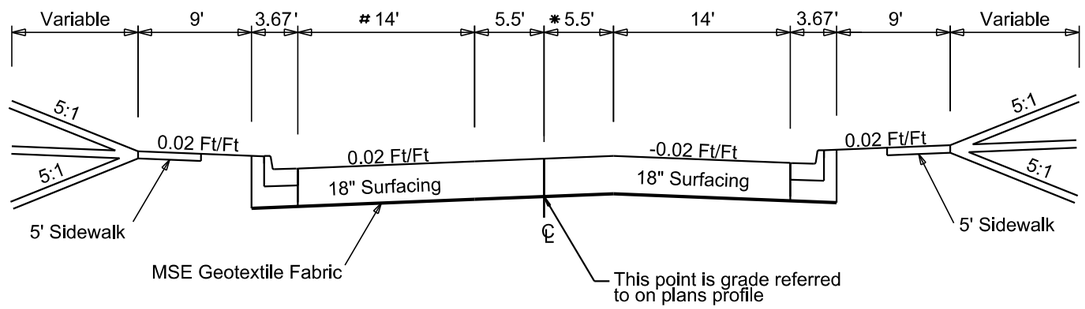

10+64.83 to 11+35.15
Transition 14' to 9.6'

* 9+85.37 to 10+35.37
Transition 0.02 ft/ft to -0.02 ft.ft

xr5 (LEOP)
0+00 to 1+74.38

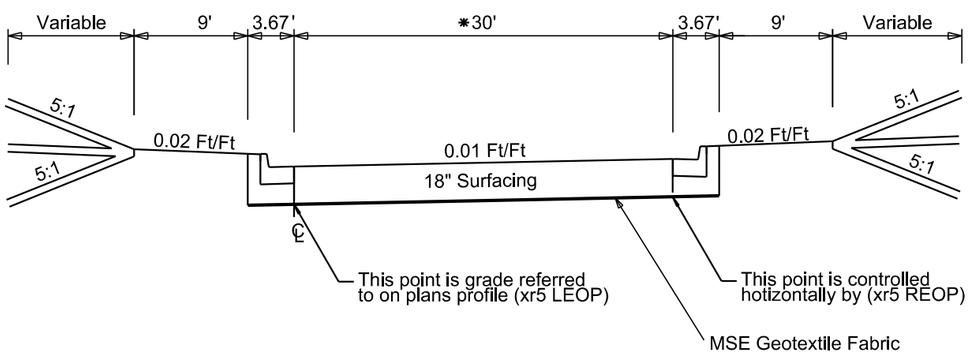

* 0+00 to 1+07.80
Width Varies 18.83' to 30'

xr9
1+00 to 2+00.98

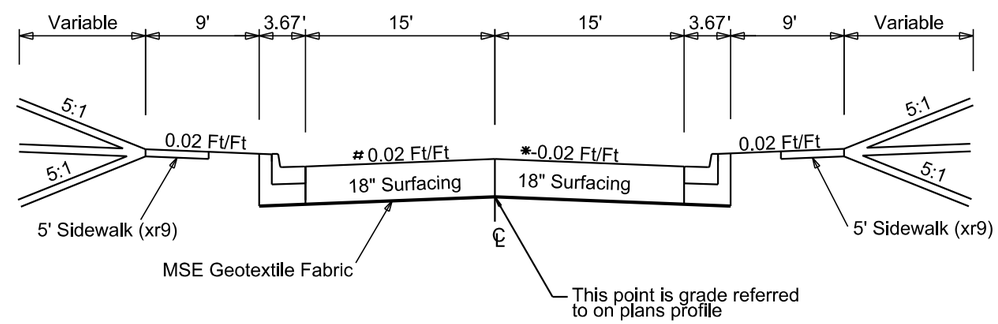

1+50.98 to 2+00.98
Slope transitions 0.02 Ft/Ft to -0.0075 Ft/Ft
to match mainline

* 1+50.98 to 2+00.98
Slope transitions -0.02 Ft/Ft to -0.0075 Ft/Ft
to match mainline

Plot Scale - 1:200
Plotted From - trsf12145
File - U:\rdtprj\brok04TV\typ.dgn

STATE OF SOUTH DAKOTA	PROJECT	SHEET	TOTAL SHEETS
	P 0014(204)421	B12	B39

Plotting Date: 01/30/2015

EXISTING TOPOGRAPHY SYMBOLOGY AND LEGEND

Anchor
Antenna
Approach
Assumed Corner
Azimuth Marker
BBQ Grill/ Fireplace
Bearing Tree
Bench Mark
Box Culvert
Bridge
Brush
Buildings
Bulk Tank
Cattle Guard
Cemetery
Centerline
Cistern
Clothes Line
Commercial Sign Double Face
Commercial Sign One Post
Commercial Sign Overhead
Commercial Sign Two Post
Concrete Symbol
Creek Edge
Curb/Gutter
Curb
Dam Grade/Dike/Levee
Deck Edge
Ditch Block
Doorway Threshold
Drainage Profile
Drop Inlet
Edge Of Asphalt
Edge Of Concrete
Edge Of Gravel
Edge Of Other
Edge Of Shoulder
Elec. Trans./Power Jct. Box
Fence Barbwire
Fence Chainlink
Fence Electric
Fence Misc.
Fence Rock
Fence Snow
Fence Wood
Fence Woven
Fire Hydrant
Flag Pole
Flower Bed
Gas Valve Or Meter
Gas Pump Island
Grain Bin
Guardrail
Guide Sign One Post
Guide Sign Two Post
Gutter
Guy Pole
Haystack

Hedge
Highway R.O.W. Marker
Interstate Close Gate
Iron Pin
Irrigation Ditch
Lake Edge
Lawn Sprinkler
Mailbox
Manhole Electric
Manhole Gas
Manhole Misc
Manhole Sanitary Sewer
Manhole Storm Sewer
Manhole Telephone
Manhole Water
Merry-Go-Round
Microwave Radio Tower
Misc. Line
Misc. Property Corner
Misc. Post
Overhang Or Encroachment
Overhead Utility Line — OH —
Parking Meter
Pipe With End Section
Pipe With Headwall
Pipe Without End Section
Playground Slide
Playground Swing
Power And Light Pole
Power And Telephone Pole
Power Meter
Power Pole
Power Pole And Transformer
Power Tower Structure
Propane Tank
Property Pipe
Property Pipe With Cap
Property Stone
Public Telephone
Railroad Crossing Signal
Railroad Milepost Marker
Railroad Profile
Railroad R.O.W. Marker
Railroad Signs
Railroad Switch
Railroad Track
Railroad Trestle
Rebar
Rebar With Cap
Reference Mark
Regulatory Sign One Post
Regulatory Sign Two Post
Retaining Wall
Riprap
River Edge
Rock And Wire Baskets
Rockpiles
Satellite Dish
Septic Tank

Shrub Tree
Sidewalk
Sign Face
Sign Post
Slough Or Marsh
Spring
Stream Gauge
Street Marker
Subsurface Utility Exploration Test Hole
Telephone Fiber Optics — T/F —
Telephone Junction Box
Telephone Pole
Television Cable Jct Box
Television Tower
Test Wells/Bore Holes
Traffic Signal
Trash Barrel
Tree Belt
Tree Coniferous
Tree Deciduous
Tree Stumps
Triangulation Station
Underground Electric Line — P —
Underground Gas Line — G —
Underground High Pressure Gas Line — HG —
Underground Sanitary Sewer — S —
Underground Storm Sewer — S —
Underground Tank
Underground Telephone Line — T —
Underground Television Cable — TV —
Underground Water Line — W —
Warning Sign One Post
Warning Sign Two Post
Water Fountain
Water Hydrant
Water Meter
Water Tower
Water Valve
Water Well
Weir Rock
Windmill
Wingwall
Witness Corner

State and National Line
County Line
Section Line
Quarter Line
Sixteenth Line
Property Line
Construction Line
R. O. W. Line
New R. O. W. Line
Cut and Fill Limits
Control of Access
New Control of Access
Proposed ROW (After Property Disposal)

Plot Scale - 1:200
Plotted From - tesf12145
File - U:\ra\prj\brok04TV\toposymb.dgn

STATE OF SOUTH DAKOTA	PROJECT	SHEET	TOTAL SHEETS
	P 0014(204)421	B13	B39

Plotting Date: 01/30/2015 Revised: 9-17-14 BTR

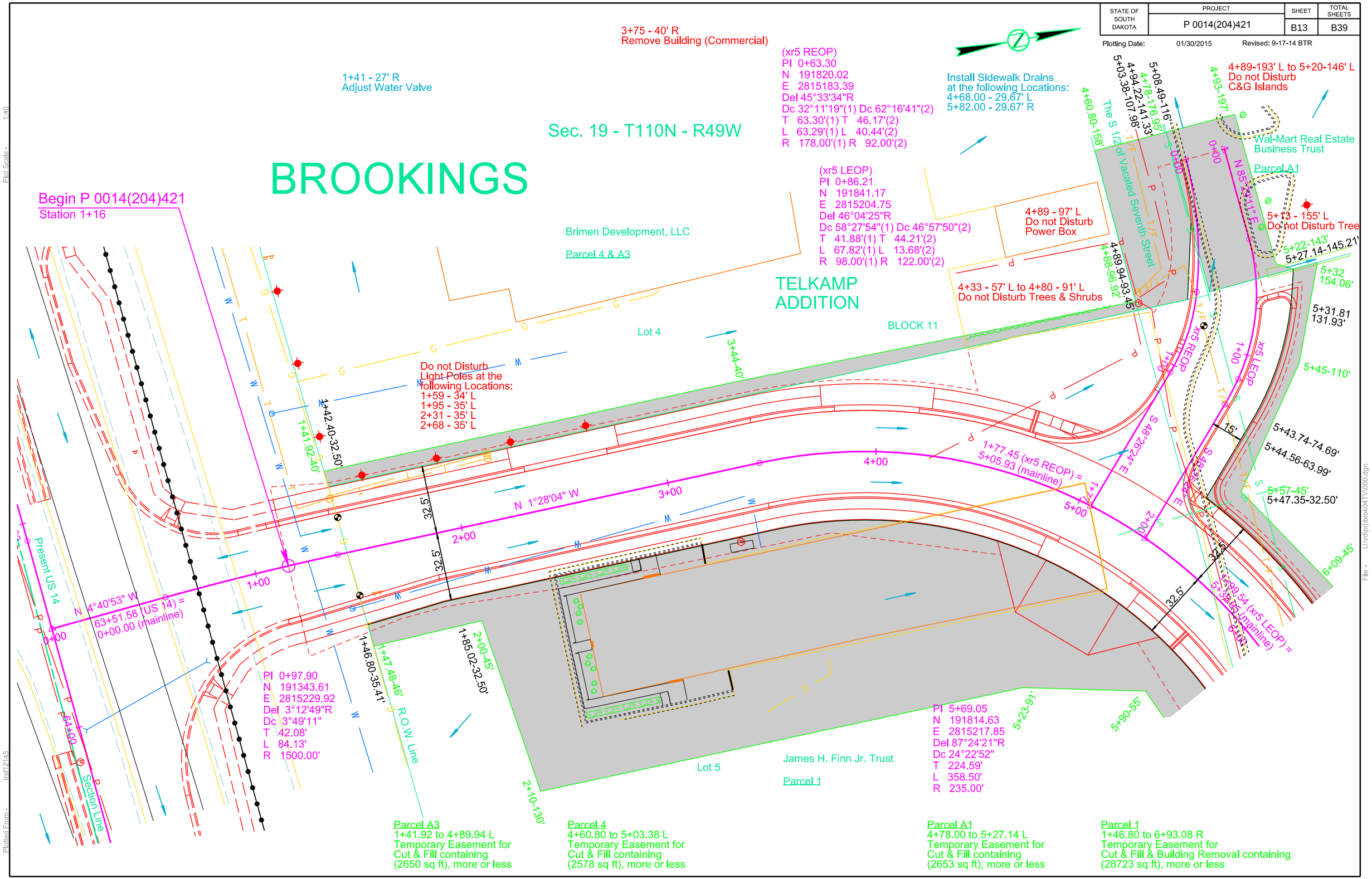

Plot Scale - 1:40

Plotted From - tcsf12145

File - U:\rdprj\brok041V\000.dgn

STATE OF SOUTH DAKOTA	PROJECT	SHEET	TOTAL SHEETS
	P 0014(204)421	B14	B39

Plotting Date: 01/30/2015

Exc	352	Emb	9	
		+20%	2	11
Total	352	Waste		341
			Total	352

Waste is excess material to be disposed of at a site aproved by the Engineer

xr5 LEOP Profile

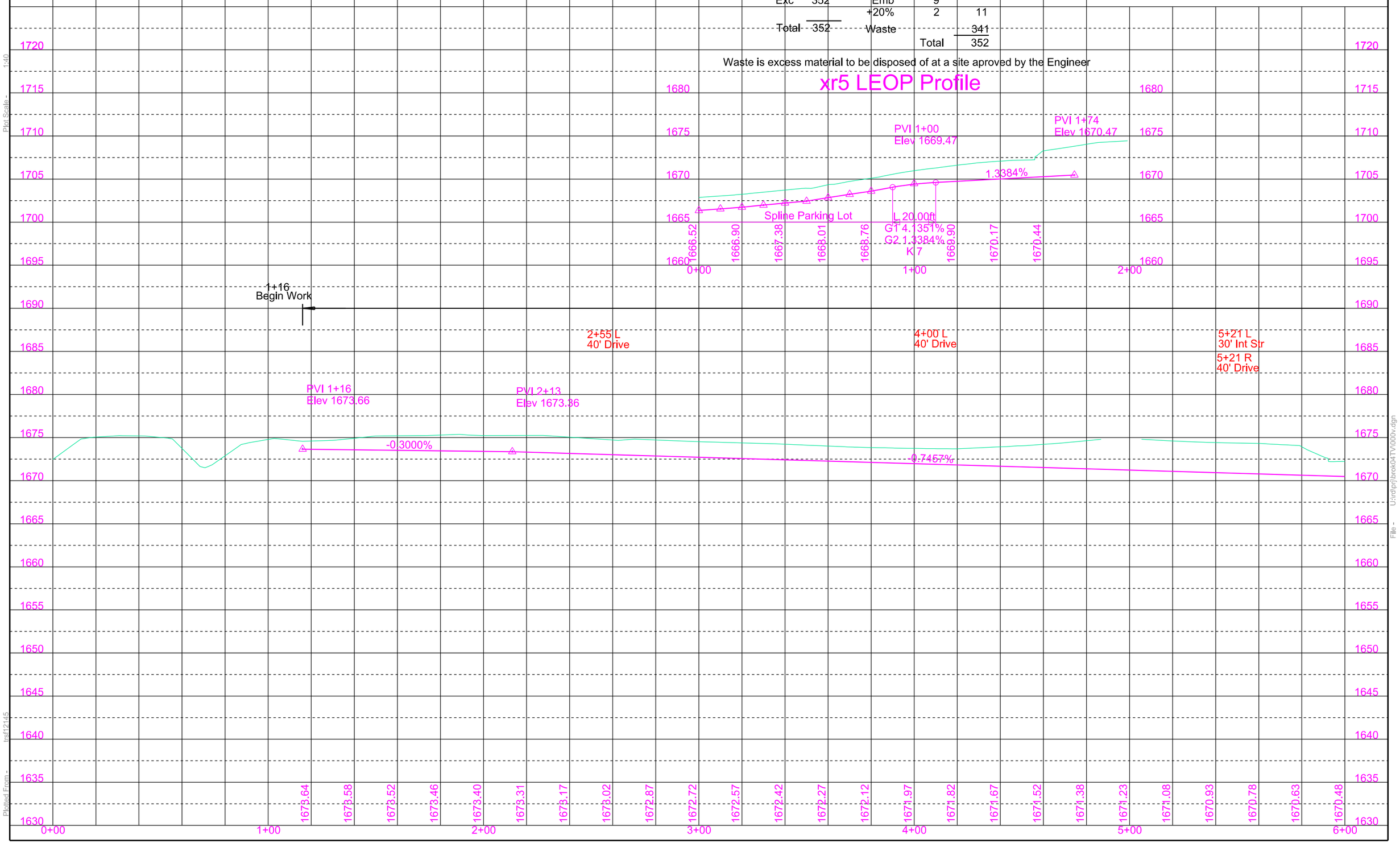

Plot Scale - 1:40

Plotted From - tsf12145

File - U:\rdpn\brok04TV\000v.dgn

STATE OF SOUTH DAKOTA	PROJECT	SHEET	TOTAL SHEETS
	P 0014(204)421	B15	B39

Plotting Date: 01/30/2015 Revised: 9-17-14 BTR

BROOKINGS

Sec. 19 - T110N - R49W

TELKAMP ADDITION

JR & R II, LLC

Parcel 3 & Parcel 3A

BLOCK 10

PI 10+06.35
N 191852.03
E 2815744.52
Del 88°18'01" L
Dc 24°22'52"
T 228.13'
L 362.17'
R 235.00'

10+03 - 56' L
Do not Disturb
ATM

Lowe's Home Centers, Inc.

Parcel A2

End P 0014(204)421
Station 11+35.15

10+48 - 53' L
Retain 4'x4' Type S Drop Inlet
and Type S Lid

10+48 - 53' L to 11+55 - 17' L
Retain 24" - 93' RCP

11+55 - 17' L to 11+55 - 17' R
Retain 24" - 35' RCP

11+55 - 17' L
Retain 4'x6' Type S Drop Inlet
and Type S Lid

11+55 - 17' R
Retain 4'x6' Type S Drop Inlet
and Type S Lid

Do not Disturb Trees
at the following locations:
9+73 - 34' R
10+58 - 43' L

TRACT A

7+00.00 - 21.17' R to 8+63.33- 47.37' R
Install 18" - 176' RCP
(Between Drop Inlets)

8+63.33 - 47.37' R to 8+79.42 - 56.08' R
Install 18" - 20' RCP
(Between Drop Inlets)

8+79.42 - 56.08' R to 9+06.35 - 56.08' R
Install 18" - 32' RCP
(Between Drop Inlets)

9+06.35 - 56.08' R to 9+28.85 - 48.95' R
Install 18" - 26' RCP
(Between Drop Inlets)

9+28.85 - 48.95' R to 9+65.00 - 21.17' R
Install 18" - 48' RCP
(Between Drop Inlets)

9+65.00 - 21.17' R to 9+65.00 - 21.17' L
Install 18" - 40' RCP
(Between Drop Inlets)

9+65.00 - 21.17' L to 10+47.64 - 53.15' L
Install 18" - 74' RCP
(Between Drop Inlet & Existing Drop Inlet)

Install Type B Drop Inlet
with 6" Concrete Collar
and Type B Frame & Grate
at the folowing locations:
7+00.00 - 21.17' R (2'x3')
8+79.42 - 56.08' R (2'x3')
9+06.35 - 56.08' R (2'x3')
9+65.00 - 21.17' R (3'x4')
9+65.00 - 21.17' L (3'x4')

Install 3'x4' Type C Drop Inlet
and Type C Frame & Grate
at the following locations:
8+63.33 - 47.37' R
9+28.85 - 48.95' R

Adjust Manholes at
the following locations:
7+09 - 2' L
9+16 - 44' R
10+56 - 8' L

Lot 5

BLOCK 10

Lot 3

Dakotaland Federal Credit Union

Parcel 2

PI 1+40.46
N 191797.21
E 2815671.06
Del 30°34'47" L
Dc 53°32'51"
T 29.25'
L 57.11'
R 107.00'

Lot 1

BLOCK 12

Twenty-Fifth Avenue

N 85°56'18" E

N 2°21'44" W

N 32°17'03" W

N 1°26'17" W

2+26.10 (xr9) =
8+92.88 (mainline)

Proposed xr9

Parcel 3
5+27.14 to 10+59.00 L
Temporary Easement for
Cut & Fill containing
(9828 sq ft), more or less

Parcel 2
6+91.36 to 8+64.93 RL
Temporary Easement for
Cut & Fill containing
(3495 sq ft), more or less

Parcel A2
10+41.25 to 10+91.00 R
Temporary Easement for
Cut & Fill containing
(420 sq ft), more or less

Plot Scale - 1:40

Plotted From - tesf12145

File - U:\radp\brok04TVU06.dgn

STATE OF SOUTH DAKOTA	PROJECT	SHEET	TOTAL SHEETS
	P 0014(204)421	B16	B39

Plotting Date: 01/30/2015

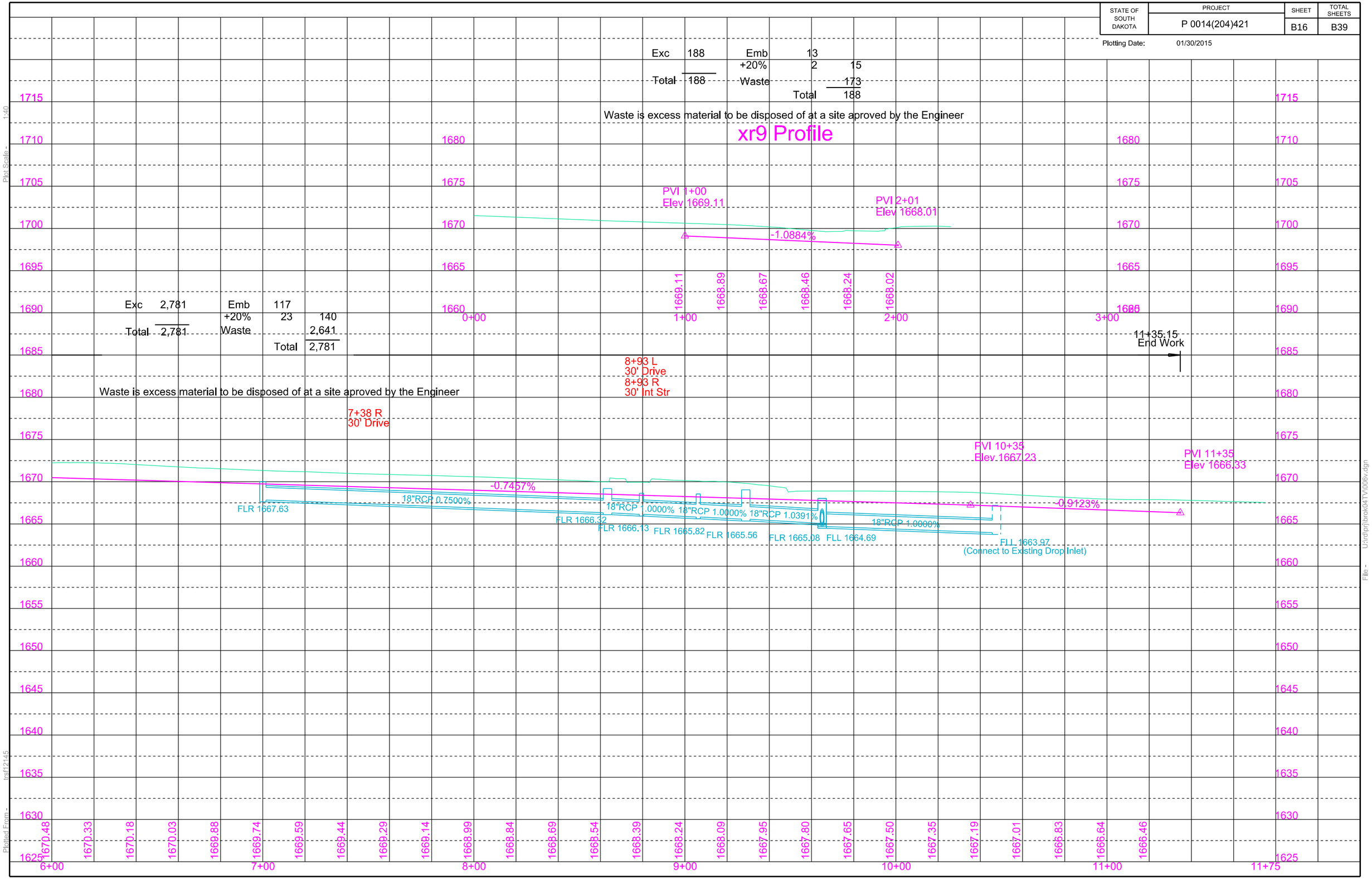

Plot Scale - 1:40

Plotted From - trsf12145

File - U:\rdp\hbrok04TV\006v.dgn

PAVEMENT REMOVAL LAYOUT

STATE OF SOUTH DAKOTA	PROJECT	SHEET	TOTAL SHEETS
	P 0014(204)421	B17	B39

Plotting Date: 01/30/2015

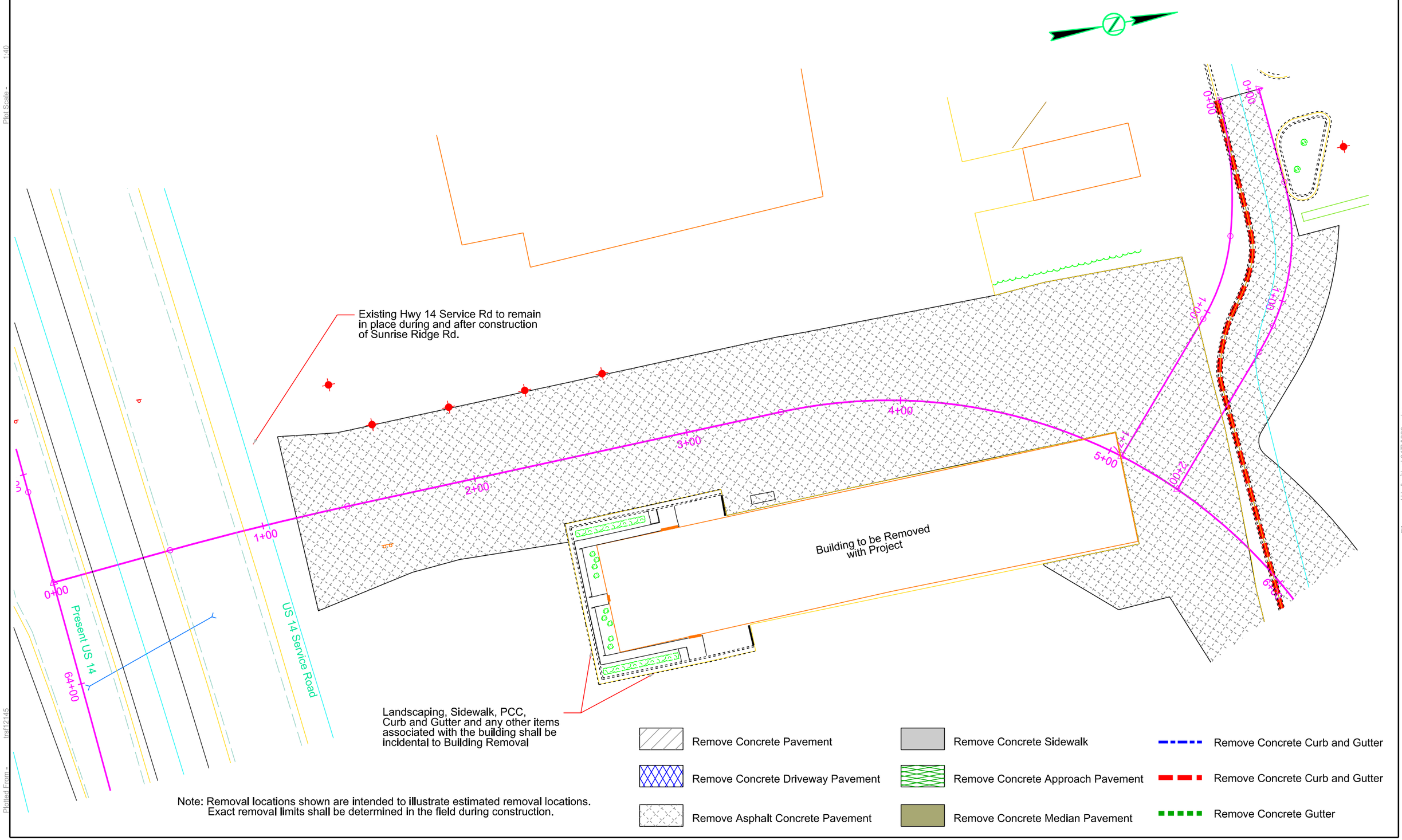

Note: Removal locations shown are intended to illustrate estimated removal locations. Exact removal limits shall be determined in the field during construction.

Plot Scale - 1:40
Plotted From - tcsf12145
File - U:\rdprj\brok\041TV\000pr.dgn

PAVEMENT REMOVAL LAYOUT

STATE OF SOUTH DAKOTA	PROJECT	SHEET	TOTAL SHEETS
	P 0014(204)421	B18	B39

Plotting Date: 01/30/2015

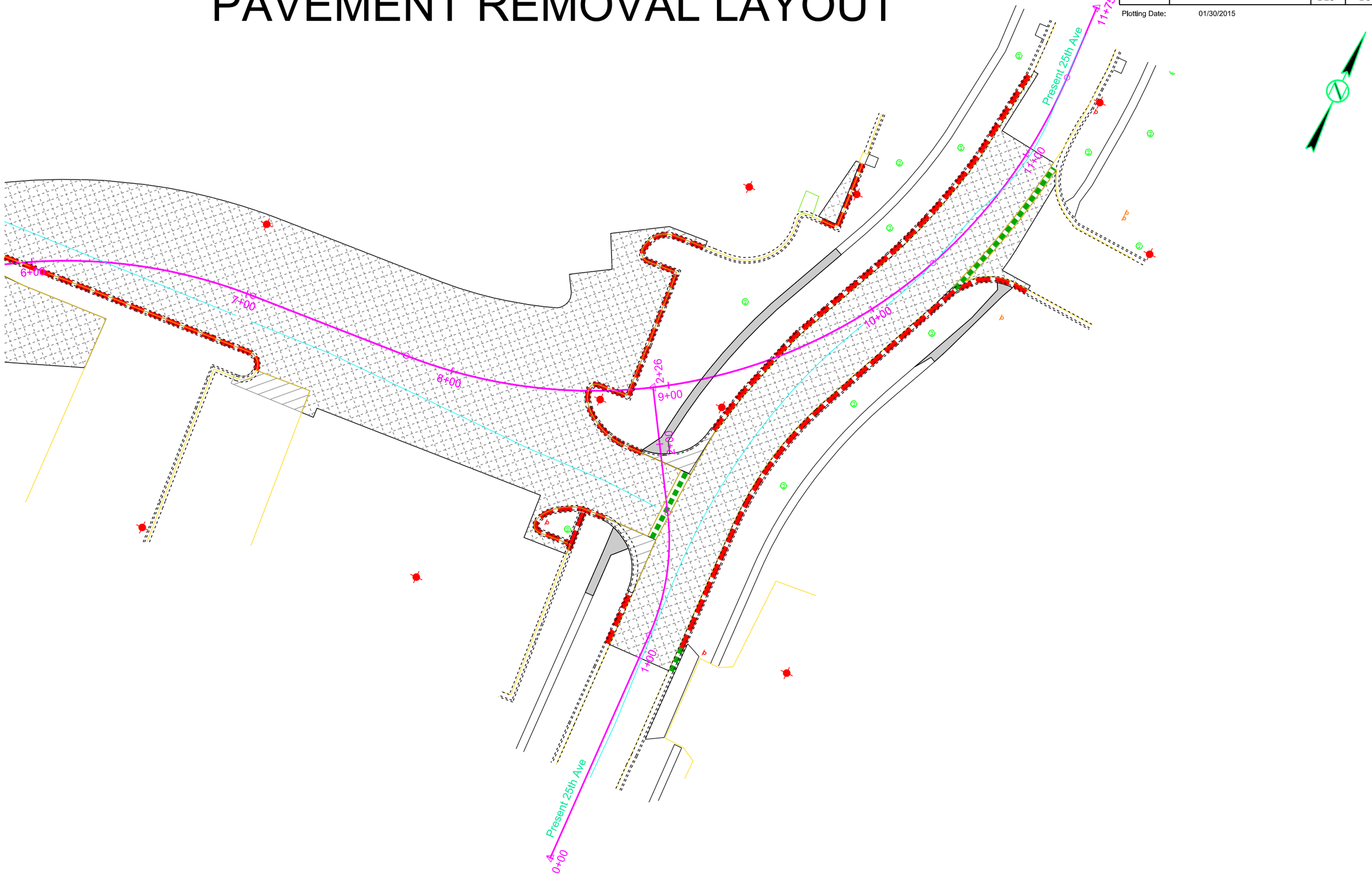

Plot Scale - 1:40

Plotted From - tsf12145

File - U:\r0\pr\bbrok04TV\006pr.dgn

STATE OF SOUTH DAKOTA	PROJECT	SHEET	TOTAL SHEETS
	P 0014(204)421	B19	B39

Plotting Date: 01/30/2015

CURB & GUTTER LAYOUT

Note: All Curb & Gutter shown on this sheet is Type B68 and all P gutter is Type P8 except as noted.
All curbside sidewalk is 6' wide and all boulevard sidewalk is 5' wide except as noted

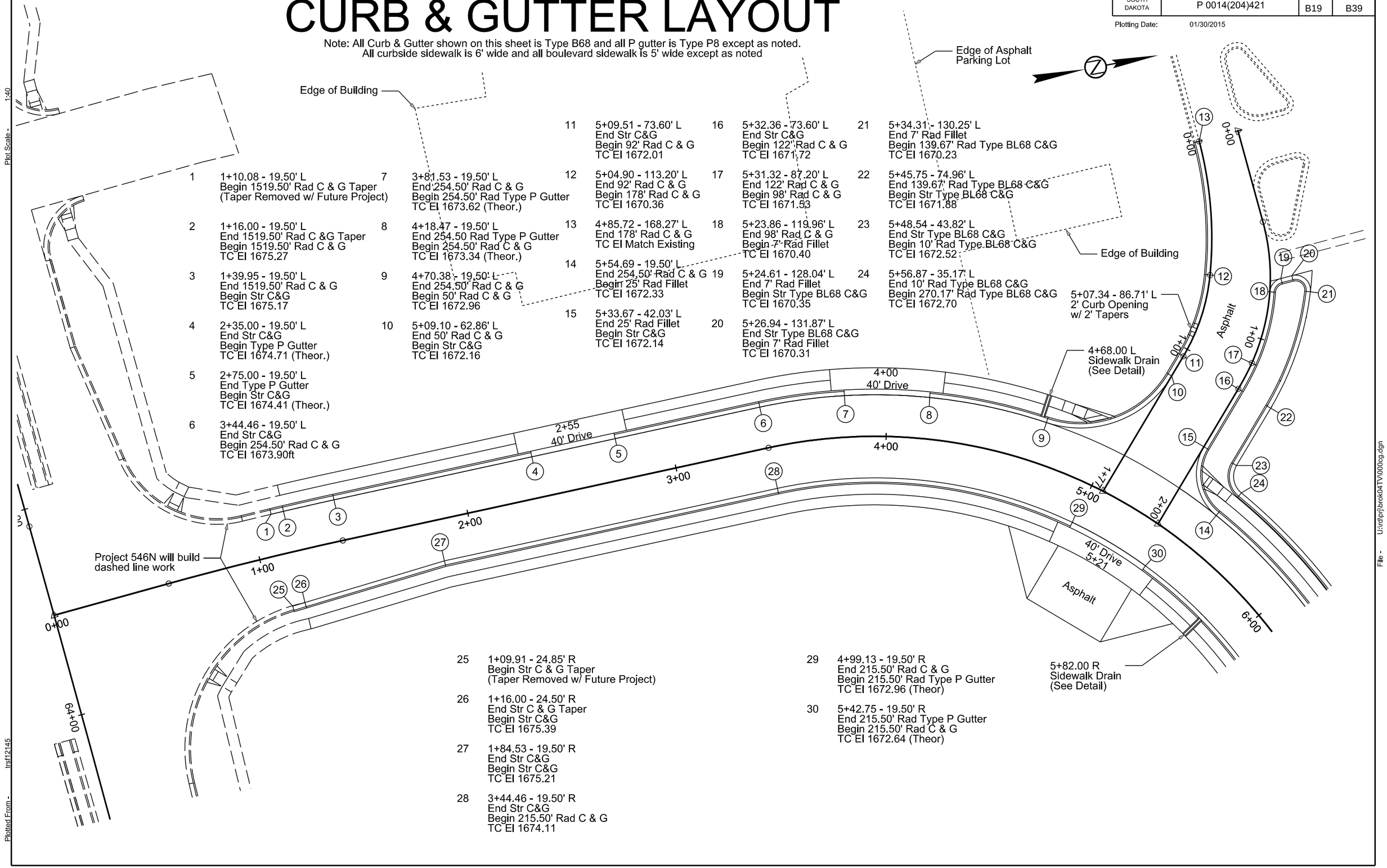

1 1+10.08 - 19.50' L
Begin 1519.50' Rad C & G Taper
(Taper Removed w/ Future Project)

2 1+16.00 - 19.50' L
End 1519.50' Rad C &G Taper
Begin 1519.50' Rad C & G
TC El 1675.27

3 1+39.95 - 19.50' L
End 1519.50' Rad C & G
Begin Str C&G
TC El 1675.17

4 2+35.00 - 19.50' L
End Str C&G
Begin Type P Gutter
TC El 1674.71 (Theor.)

5 2+75.00 - 19.50' L
End Type P Gutter
Begin Str C&G
TC El 1674.41 (Theor.)

6 3+44.46 - 19.50' L
End Str C&G
Begin 254.50' Rad C & G
TC El 1673.90ft

7 3+81.53 - 19.50' L
End 254.50' Rad C & G
Begin 254.50' Rad Type P Gutter
TC El 1673.62 (Theor.)

8 4+18.47 - 19.50' L
End 254.50 Rad Type P Gutter
Begin 254.50' Rad C & G
TC El 1673.34 (Theor.)

9 4+70.38 - 19.50' L
End 254.50' Rad C & G
Begin 50' Rad C & G
TC El 1672.96

10 5+09.10 - 62.86' L
End 50' Rad C & G
Begin Str C&G
TC El 1672.16

11 5+09.51 - 73.60' L
End Str C&G
Begin 92' Rad C & G
TC El 1672.01

12 5+04.90 - 113.20' L
End 92' Rad C & G
Begin 178' Rad C & G
TC El 1670.36

13 4+85.72 - 168.27' L
End 178' Rad C & G
TC El Match Existing

14 5+54.69 - 19.50' L
End 254.50' Rad C & G
Begin 25' Rad Fillet
TC El 1672.33

15 5+33.67 - 42.03' L
End 25' Rad Fillet
Begin Str C&G
TC El 1672.14

16 5+32.36 - 73.60' L
End Str C&G
Begin 122' Rad C & G
TC El 1671.72

17 5+31.32 - 87.20' L
End 122' Rad C & G
Begin 98' Rad C & G
TC El 1671.53

18 5+23.86 - 119.96' L
End 98' Rad C & G
Begin 7' Rad Fillet
TC El 1670.40

19 5+24.61 - 128.04' L
End 7' Rad Fillet
Begin Str Type BL68 C&G
TC El 1670.35

20 5+26.94 - 131.87' L
End Str Type BL68 C&G
Begin 7' Rad Fillet
TC El 1670.31

21 5+34.31 - 130.25' L
End 7' Rad Fillet
Begin 139.67' Rad Type BL68 C&G
TC El 1670.23

22 5+45.75 - 74.96' L
End 139.67' Rad Type BL68 C&G
Begin Str Type BL68 C&G
TC El 1671.88

23 5+48.54 - 43.82' L
End Str Type BL68 C&G
Begin 10' Rad Type BL68 C&G
TC El 1672.52

24 5+56.87 - 35.17' L
End 10' Rad Type BL68 C&G
Begin 270.17' Rad Type BL68 C&G
TC El 1672.70

25 1+09.91 - 24.85' R
Begin Str C & G Taper
(Taper Removed w/ Future Project)

26 1+16.00 - 24.50' R
End Str C & G Taper
Begin Str C&G
TC El 1675.39

27 1+84.53 - 19.50' R
End Str C&G
Begin Str C&G
TC El 1675.21

28 3+44.46 - 19.50' R
End Str C&G
Begin 215.50' Rad C & G
TC El 1674.11

29 4+99.13 - 19.50' R
End 215.50' Rad C & G
Begin 215.50' Rad Type P Gutter
TC El 1672.96 (Theor)

30 5+42.75 - 19.50' R
End 215.50' Rad Type P Gutter
Begin 215.50' Rad C & G
TC El 1672.64 (Theor)

Plot Scale - 1:40
Plotted From - trsf12145
File - U:\rdprj\brok04TV\000cg.dgn

STATE OF SOUTH DAKOTA	PROJECT	SHEET	TOTAL SHEETS
	P 0014(204)421	B20	B39

Plotting Date: 01/30/2015

CURB & GUTTER LAYOUT

Note: All Curb & Gutter shown on this sheet is Type B68 and all P gutter is Type P8 except as noted.
All curbside sidewalk is 6' wide and all boulevard sidewalk is 5' wide except as noted

1 7+02.96 -19.50' L
End 254.50' Rad C&G
Begin Str C&G
TC El 1671.22

2 7+78.22 - 19.50' L
End Str C&G
Begin 215.50' Rad C&G
TC El 1670.66

3 8+43.17 - 19.50' L
End 215.50' Rad C&G
Begin 25' Rad Fillet
TC El 1670.18ft (Theor.)

4 8+74.10 - 19.50' L
Begin 10' Valley Gutter
TC El 1669.95 (Theor.)

5 8+74.00 - 48.14' L
End 25' Rad Fillet
Begin 5' Rad Fillet
TC El 1669.71

6 8+67.06 - 52.65' L
End 5' Rad Fillet
Begin Str Type BL68 C&G
TC El 1669.67

7 8+60.67 - 52.03' L
End Str Type BL68 C&G
Begin 5' Rad Fillet
TC El 1669.76

8 8+55.46 - 45.80' L
End 5' Rad Fillet
Begin 9' Rad Type BL68 C&G
TC El 1669.87

9 8+44.52 - 35.17' L
End 9' Rad Type BL68 C&G
Begin 199.83' Rad
Type BL68 C&G
TC El 1670.28

10 7+78.22 - 35.17' L
End 199.83' Rad
Type BL68 C&G
Begin Str Type
BL68 C&G
TC El 1670.76

11 7+02.96 - 35.17' L
End Str Type BL68 C&G
Begin 270.17' Rad
Type BL68 C&G
TC El 1671.23

12 10+41.86 - 56.30' L
Begin Str C&G
TC El (Match Existing)

13 10+08.65 - 41.46' L
End Str C&G
Begin Str C&G
TC El 1667.84

14 10+04.39 - 47.06' L
End Str C&G
TC El (Match Existing)

15 9+32.92 - 60.12' L
Begin 10' Rad Fillet
TC El (Match Existing)

16 9+12.29 - 53.18 L
End 10' Rad Fillet
Begin Str C&G
TC El 1669.45

17 9+11.77 - 48.14' L
End Str C&G
Begin 25' Rad Fillet
TC El 1669.48

18 9+09.25 - 19.50' L
End 10' Valley Gutter
TC El 1669.68 (Theor.)

19 9+42.60 - 19.50' L
End 25' Rad Fillet
Begin 215.50' Rad C&G
TC El 1669.44 (Theor.)

20 10+64.83 - 19.50' L
End 215.50' Rad C&G
Begin 400' Rad C&G
TC El 1668.48

21 11+34.76 - 15.07' L
End 400' Rad C&G
TC El (Match Existing)

22 7+02.81 - 19.50' R
End 215.50' Rad C&G
Begin 15' Rad Fillet
TC El 1671.44

23 7+17.03 - 19.50' R
Begin 10' Valley Gutter
TC El 1671.34 (Theor.)

24 7+17.81 - 33.68' R
End 15' Rad Fillet
Begin 5' Rad Fillet
TC El 1671.92

25 7+12.72 - 38.95' R
End 5' Rad Fillet
Begin Str C&G
TC El 1671.96

26 7+08.22 - 38.86' R
End Str C&G
TC El (Match Existing)

27 8+56.06 - 72.60' R
Begin Str C&G
TC El (Match Existing)

28 8+61.56 - 53.10' R
End Str C&G
Begin Str C&G
TC El 1670.78 (Theor.)

29 7+53.82 - 35.17' R
End Str C&G
Begin 5' Rad Fillet
TC El 1671.55

30 7+49.31 - 28.00' R
End 5' Rad Fillet
Begin 15' Rad Fillet
TC El 1671.53

31 7+48.82 - 19.50' R
End 10' Valley Gutter
TC El 1671.10 (Theor.)

32 7+62.83 - 19.50' R
End 15' Rad Fillet
Begin Str C&G
TC El 1671.00

33 7+78.22 - 19.50' R
End Str C&G
Begin 254.50' Rad C&G
TC El 1670.88

34 8+59.14 - 19.50' R
End 254.50' Rad C&G
Begin 25' Rad Fillet
TC El 1670.28

35 8+79.03 - 19.50' R
Begin 10' Valley Gutter
TC El 1670.13 (Theor.)

36 8+80.15 - 42.03' R
End 25' Rad Fillet
Begin Str C&G
TC El 1670.07

37 8+80.85 - 57.99' R
End Str C&G
Begin 92' Rad C&G
TC El 1670.11

38 8+73.77 - 105.27' R
End 92' Rad C&G
Begin Str C&G
TC El 1670.58

39 8+70.36 - 115.88' R
End Str C&G
TC El (Match Existing)

40 8+87.92 - 129.53' R
Begin Str Type P Gutter
TC El (Match Existing)

41 8+91.72 - 119.33' R
End Str Type P Gutter
Begin 122' Rad C&G
TC El 1670.59 (Theor.)

42 9+04.92 - 57.99' R
End 122' Rad C&G
Begin Str C&G
TC El 1670.03

43 9+05.61 - 42.03' R
End Str C&G
Begin 25' Rad Fillet
TC El 1669.92

44 9+06.74 - 19.50' R
End 10' Valley Gutter
TC El 1669.92 (Theor.)

45 9+26.63 - 19.50' R
End Str 25' Rad Fillet
Begin 254.50' Rad C&G
TC El 1669.78

46 10+35.37 - 19.50' R
End 254.50' Rad C&G
Begin 25' Rad Fillet
TC El 1668.74

47 10+51.12 - 18.62' R
Begin 4' Valley Gutter
TC El 1668.68 (Theor.)

48 10+55.70 - 36.97' R
End 25' Rad Fillet
TC El (Match Existing)

49 11+02.03 - 12.51' R
End 4' Valley Gutter
TC El (Match Existing)

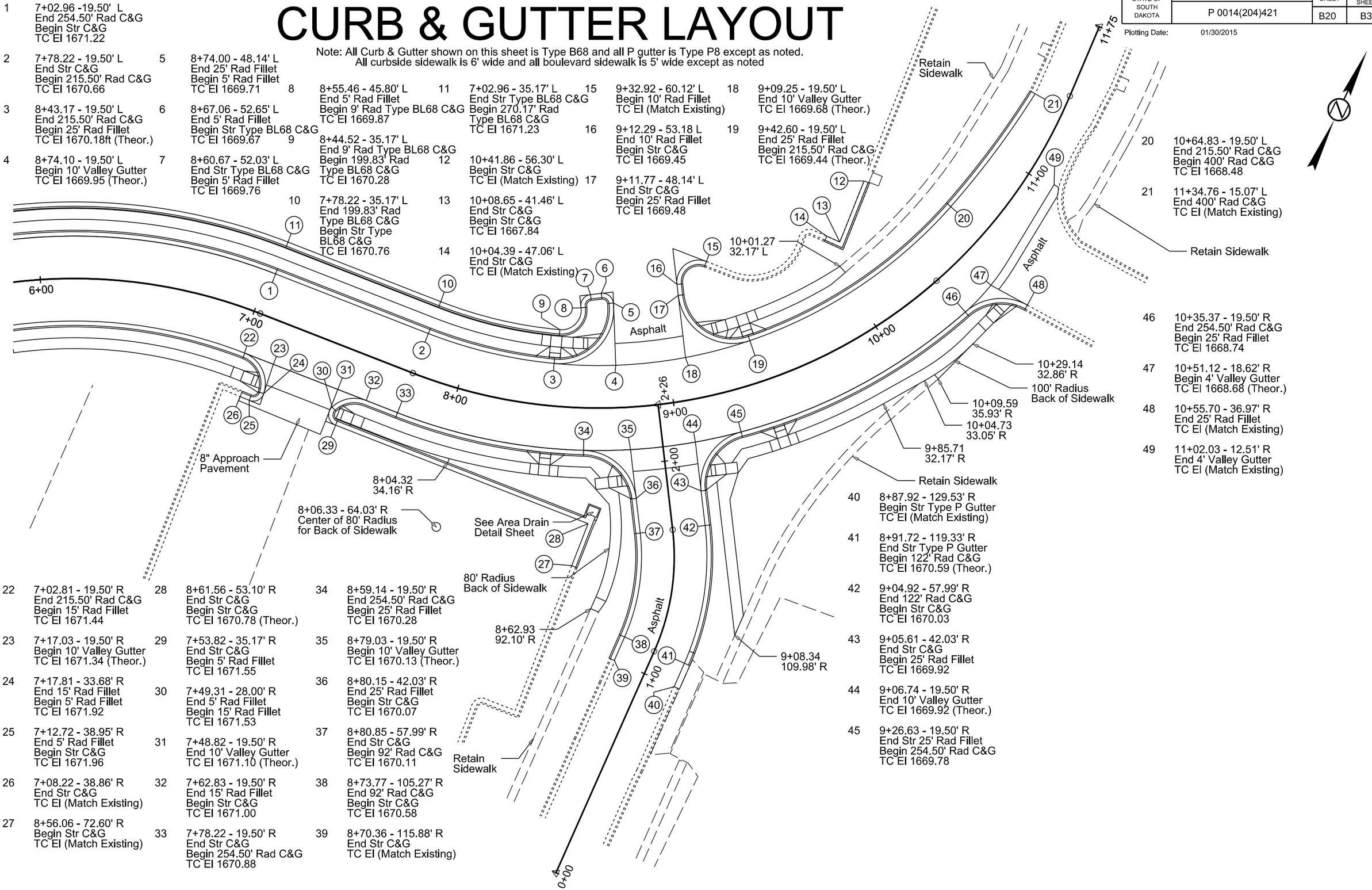

Plot Scale - 1:40

Plotted From - trs12145

File - U:\rdprj\brok04TV\006cg.dgn

CURB RAMP DETAILS

STATE OF SOUTH DAKOTA	PROJECT	SHEET	TOTAL SHEETS
	P 0014(204)421	B21	B39

Plotting Date: 01/30/2015

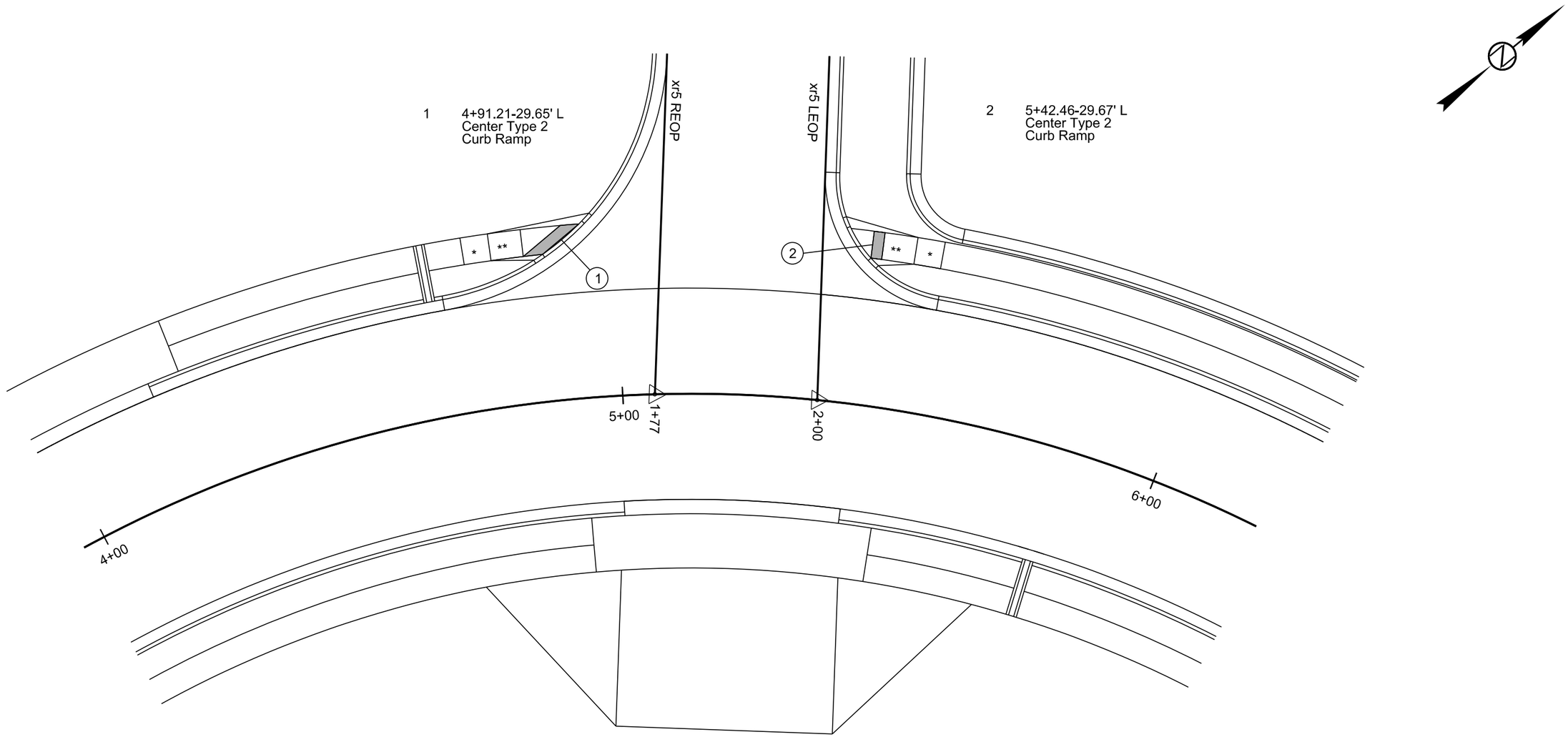

LEGEND:
* Turning Space with 2% maximum slope
** Ramp Slope with 8.3% maximum slope and 2% cross slope
Detectable Warning

Plot Scale - 1:20
Plotted From - trsf12145
File - U:\rdprj\brok04TV\004cr.dgn

CURB RAMP DETAILS

STATE OF SOUTH DAKOTA	PROJECT	SHEET	TOTAL SHEETS
	P 0014(204)421	B22	B39

Plotting Date: 01/30/2015

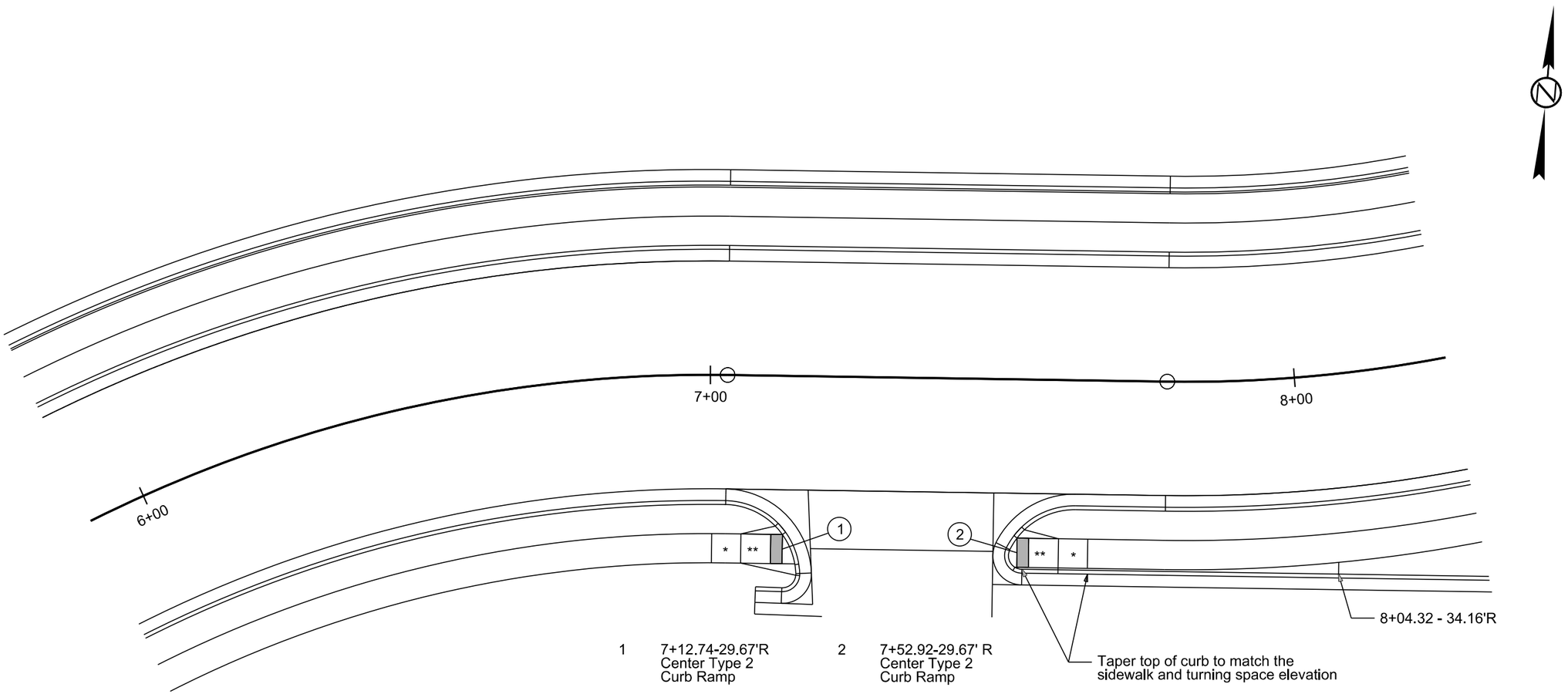

LEGEND:
* Turning Space with 2% maximum slope
** Ramp Slope with 8.3% maximum slope and 2% cross slope
Detectable Warning

Plot Scale - 1:20

Plotted From - trsf12145

File - U:\rdprj\brok04TV\006cr.dgn

STATE OF SOUTH DAKOTA	PROJECT	SHEET	TOTAL SHEETS
	P 0014(204)421	B23	B39

Plotting Date: 01/30/2015

CURB RAMP DETAILS

1 8+43.17-21.50' L
Center Mod Type 1
Curb Ramp

2 8+59.82-29.67' L
Center Type 2
Curb Ramp

3 9+25.95-29.67' L
Center Type 2
Curb Ramp

4 9+42.60-22.31' L
Center Mod Type 1
Curb Ramp

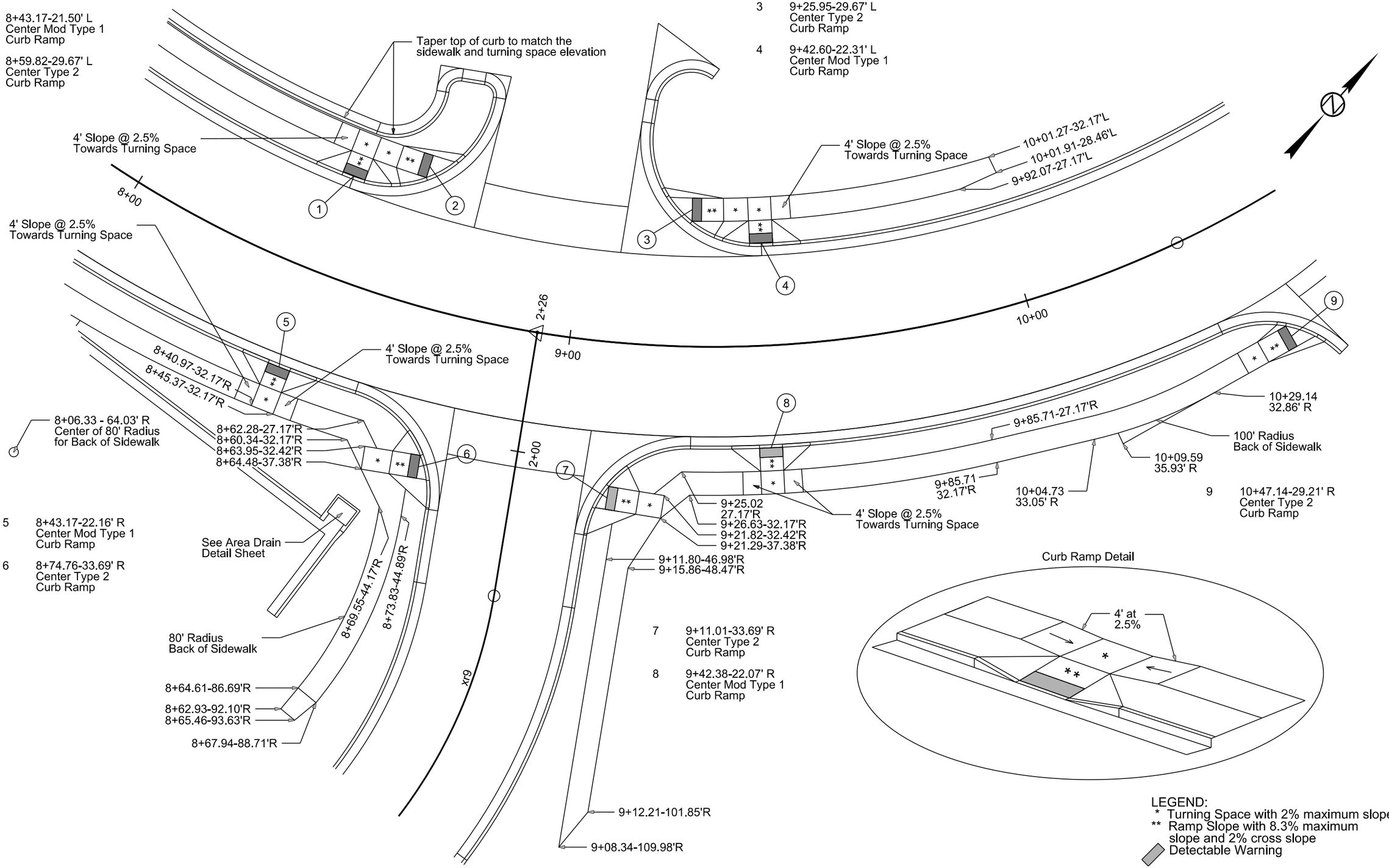

5 8+43.17-22.16' R
Center Mod Type 1
Curb Ramp

6 8+74.76-33.69' R
Center Type 2
Curb Ramp

7 9+11.01-33.69' R
Center Type 2
Curb Ramp

8 9+42.38-22.07' R
Center Mod Type 1
Curb Ramp

9 10+47.14-29.21' R
Center Type 2
Curb Ramp

LEGEND:
* Turning Space with 2% maximum slope
** Ramp Slope with 8.3% maximum slope and 2% cross slope
Detectable Warning

Plot Scale - 1:20

Plotted From - trsf12145

File - U:\rdprj\brok04TV\008cr.dgn

STATE OF SOUTH DAKOTA	PROJECT	SHEET	TOTAL SHEETS
	P 0014(204)421	B24	B39

Plotting Date: 01/30/2015

SIDEWALK DRAIN DETAILS

Street View - Sidewalk Drain at 4+68.00 L

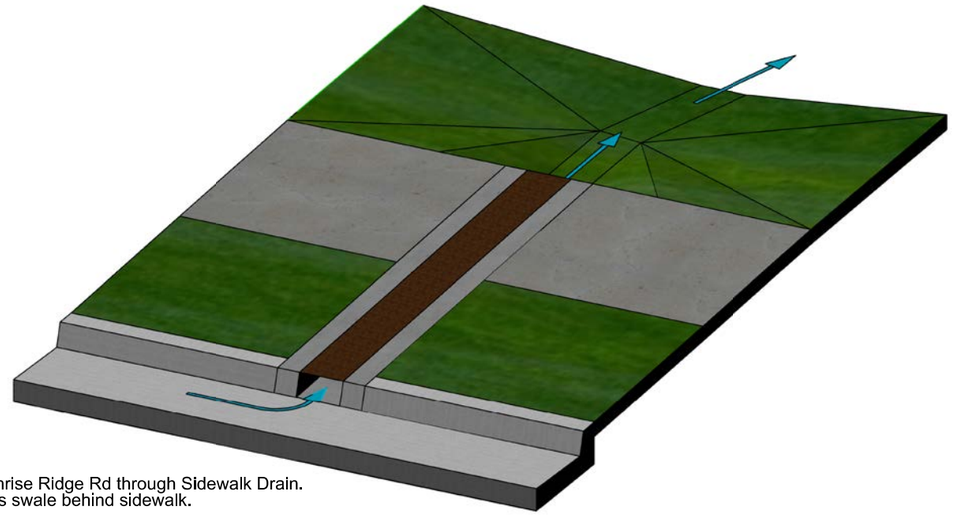

Water drains from Sunrise Ridge Rd through Sidewalk Drain.
Water to run into grass swale behind sidewalk.

Street View - Sidewalk Drain at 5+82.00 R

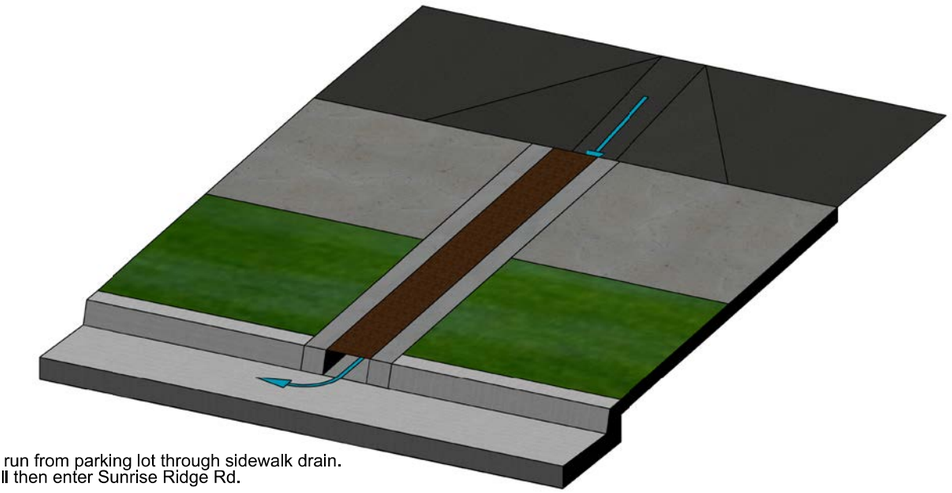

Water to run from parking lot through sidewalk drain.
Water will then enter Sunrise Ridge Rd.

Back of Sidewalk View - Sidewalk Drain at 4+68.00 L

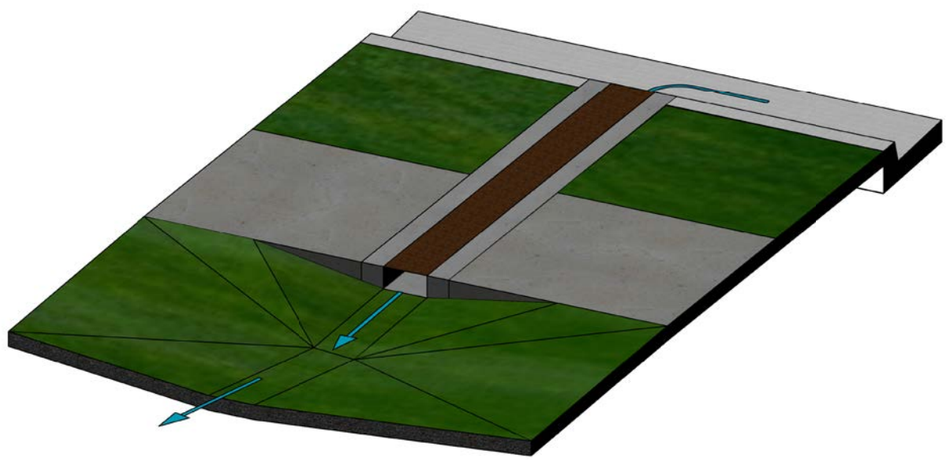

Back of Sidewalk View - Sidewalk Drain at 5+82.00 R

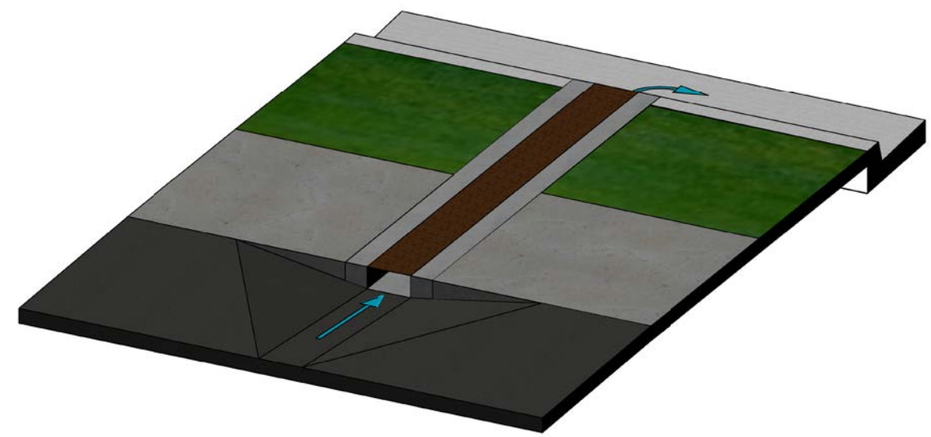

Grass and asphalt swale must provide adequate drainage.
The Field Engineer shall have final approval of swale configuration.
Any earthwork required to construct swales shall be incidental
to the contract unit price per foot for "Sidewalk Drain".

Plot Scale - 1:4
Plotted From - trsf12145
File - ...\SidewalkDrainDetail.dgn

STATE OF SOUTH DAKOTA	PROJECT	SHEET	TOTAL SHEETS
	P 0014(204)421	B25	B39

Plotting Date: 01/30/2015

AREA DRAIN DETAIL

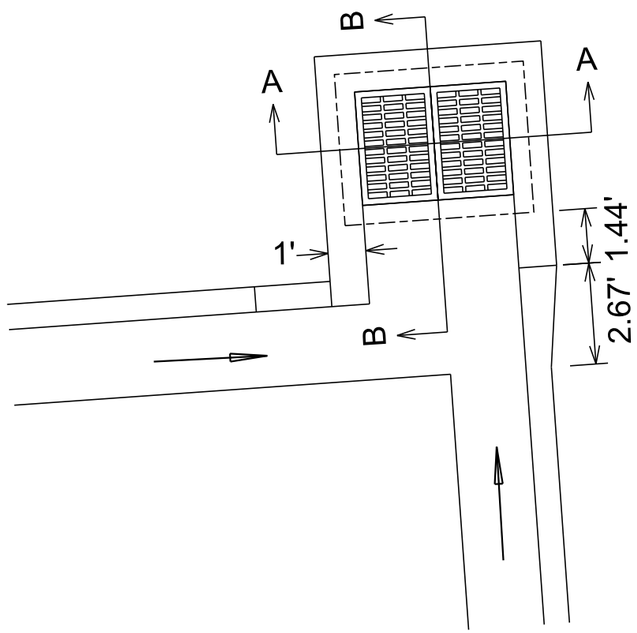

Detail A - Type C Area Drain @ 8+63.33 - 47.37' R

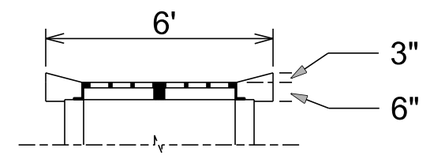

SECTION A-A

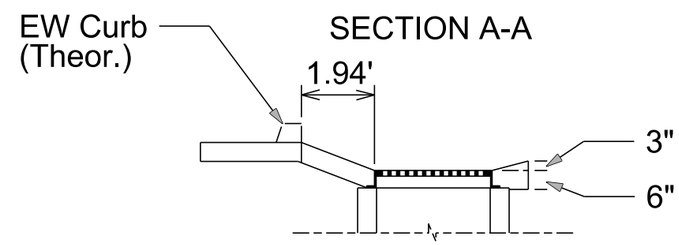

SECTION B-B

Plot Scale - 1:4

Plotted From - trsf12145

File - ...\brok04TV\AreaDrainDetail.dgn

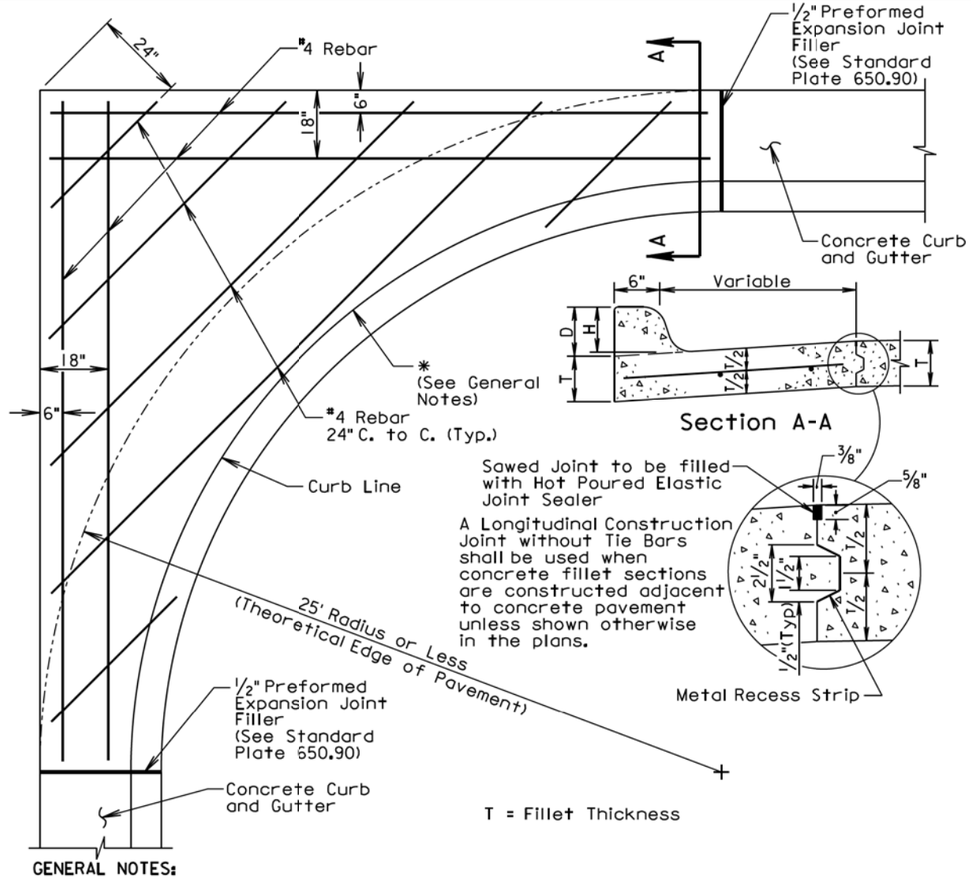

GENERAL NOTES:

* If a curb ramp is constructed adjacent to a PCC fillet section, the curb will need to be modified. Refer to the corresponding curb ramp standard plate or other special details in the plans for modification of the PCC fillet section.

Dimensions D, H, and T shall conform to those shown on the appropriate curb and gutter standard plate.

All rebar shall conform to A.S.T.M. A615 Grade 60 and the Standard Specifications Sections 480 and 1010. All rebar shall have a minimum of 3" clear cover.

Class M6 Concrete shall be used in construction of the fillets.

The concrete curb shall be monolithic with the concrete fillet. No separate payment for this curb will be made as the curb is considered a part of the fillet.

Joints shall be constructed at 10' intervals except when fillets are constructed adjacent to PCC Pavement. If there is adjacent PCC Pavement the joints shall be extended from edge of pavement through the fillet section as directed by the Engineer.

The cost for all materials, labor, and incidentals necessary to construct the PCC fillet section with curb and gutter shall be incidental to the contract unit price per square yard for the corresponding PCC fillet section bid item.

September 6, 2013

Published Date: 1st Qtr. 2015	SDDOT	PCC FILLET SECTION WITH TYPE B CURB AND GUTTER	PLATE NUMBER 380.16
			Sheet 1 of 1

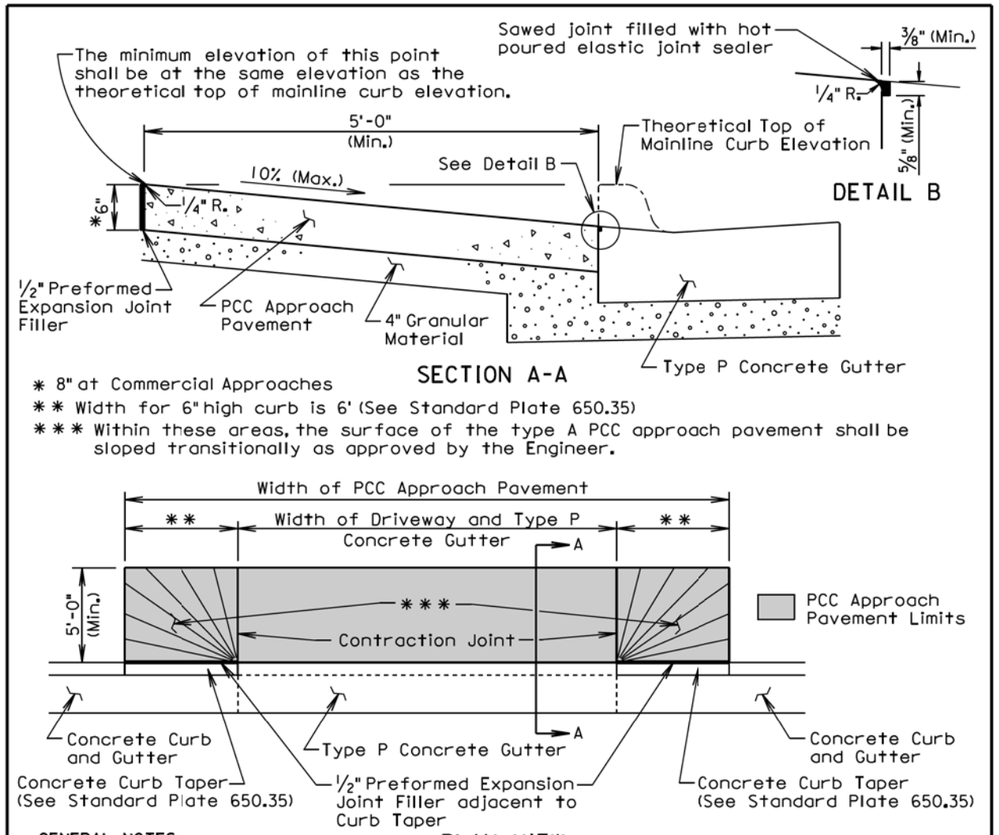

* 8" at Commercial Approaches

** Width for 6" high curb is 6' (See Standard Plate 650.35)

*** Within these areas, the surface of the type A PCC approach pavement shall be sloped transitionally as approved by the Engineer.

GENERAL NOTES:

The concrete for the type A PCC approach pavement and adjacent driveway shall comply with the requirements of the Standard Specifications for class M6 concrete unless otherwise stated in the plans.

Contraction joints in the type A PCC approach pavement shall be 1 1/2 inches deep if formed in the fresh concrete using a suitable grooving tool. If a saw is used to cut the contraction joints, then the depth of the joint shall be at least 1/4 the thickness of the approach pavement. Additional contraction joints not shown in the Plan View shall be spaced as follows:

One joint at the center of the approach for driveways 16' to 24' wide.
Two joints spaced at equal intervals for driveways greater than 24' to 40' wide.

All costs for furnishing and placing the type A PCC approach pavement and constructing the expansion and contraction joints including labor, equipment, and materials including the earthen backfill shall be incidental to the contract unit price per square yard for the corresponding PCC Approach Pavement bid item.

All costs for excavation required for placing the type A PCC approach pavement and granular material shall be incidental to the contract unit price per cubic yard for "Unclassified Excavation". All costs for furnishing and placing the granular material shall be incidental to the contract unit price per ton for the corresponding granular material bid item.

September 6, 2013

Published Date: 1st Qtr. 2015	SDDOT	TYPE A PCC APPROACH PAVEMENT	PLATE NUMBER 380.40
			Sheet 1 of 1

Plot Scale - 1:200
- Plotted From - trsf12145
File - ...\brok04TV\StdPlatesSectionB.dgn

TOLERANCES IN DIMENSIONS

Diameter: ±1.5% for 24" Dia. or less and ±1% or 3/8" whichever is more for 27" Dia. or greater.
Diameters at Joints: ±3/16" for 30" Dia. or less and ±1/4" for 36" or greater.
Length of joint (j): ±1/4".
Wall thickness (T): not less than design T by more than 5% or 3/16", whichever is greater.
Laying length: shall not underrun by more than 1/2".

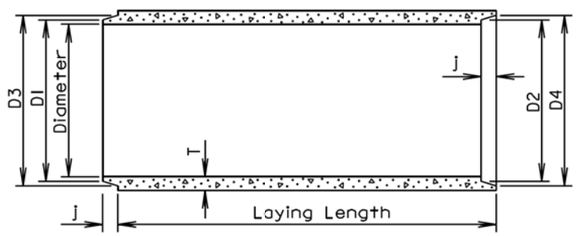

LONGITUDINAL SECTION

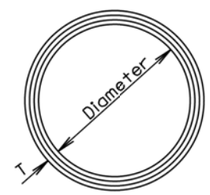

END VIEW

GENERAL NOTES:

Construction of R.C.P. shall conform to the requirements of Section 990 of the Standard Specifications for Roads and Bridges.

Not more than 2 four foot sections shall be permitted near the ends of any culvert. Four foot lengths shall be used only to secure the required length of culvert.

Diam. (in.)	Approx. Wt./Ft. (lb.)	T (in.)	J (in.)	D1 (in.)	D2 (in.)	D3 (in.)	D4 (in.)
12	92	2	1 3/4	13 1/4	13 5/8	13 7/8	14 1/4
15	127	2 1/4	2	16 1/2	16 7/8	17 1/4	17 5/8
18	168	2 1/2	2 1/4	19 5/8	20	20 3/8	20 3/4
21	214	2 3/4	2 1/2	22 7/8	23 1/4	23 3/4	24 1/8
24	265	3	2 3/4	26	26 3/8	27	27 3/8
27	322	3 1/4	3	29 1/4	29 5/8	30 1/4	30 5/8
30	384	3 1/2	3 1/4	32 3/8	32 3/4	33 1/2	33 7/8
36	524	4	3 3/4	38 3/4	39 1/4	40	40 1/2
42	685	4 1/2	4	45 1/8	45 5/8	46 1/2	47
48	867	5	4 1/2	51 1/2	52	53	53 1/2
54	1070	5 1/2	4 1/2	57 7/8	58 3/8	59 3/8	59 7/8
60	1296	6	5	64 1/4	64 3/4	66	66 1/2
66	1542	6 1/2	5 1/2	70 5/8	71 1/8	72 1/2	73
72	1810	7	6	77	77 1/2	79	79 1/2
78	2098	7 1/2	6 1/2	83 3/8	83 7/8	85 5/8	86 1/8
84	2410	8	7	89 3/4	90 1/4	92 1/8	92 5/8
90	2740	8 1/2	7	95 3/4	96 1/4	98 1/8	98 5/8
96	2950	9	7	102 1/8	102 5/8	104 1/2	105
102	3075	9 1/2	7 1/2	109	109 1/2	111 1/2	112
108	3870	10	7 1/2	115 1/2	116	118	118 1/2

March 31, 2000

Published Date: 1st Qtr. 2015

SDDOT

REINFORCED CONCRETE PIPE

PLATE NUMBER 450.01

Sheet 1 of 1

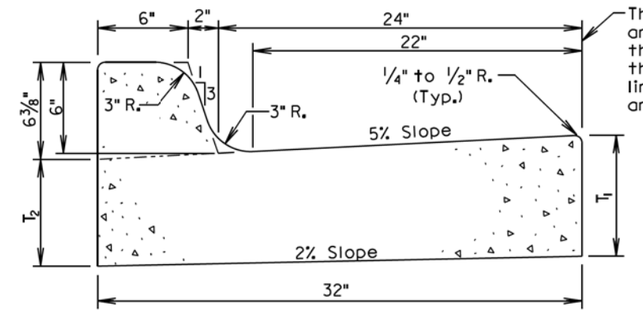

The stated radii on the plans and cross sections refer to this line and it shall also be the basis for horizontal linear foot measurement and payment.

Type	T_1 (Inches)	T_2 (Inches)	Cu. Yd. Per Lin. Ft.	Lin. Ft. Per Cu. Yd.
B66	6	5 1/16	0.057	17.7
B67	7	6 1/16	0.065	15.4
B68	8	7 1/16	0.073	13.7
B68.5	8.5	7 9/16	0.077	13.0
B69	9	8 1/16	0.081	12.3
B69.5	9.5	8 9/16	0.085	11.7
B610	10	9 1/16	0.090	11.2
B610.5	10.5	9 9/16	0.094	10.7
B611	11	10 1/16	0.098	10.2
B611.5	11.5	10 9/16	0.102	9.8
B612	12	11 1/16	0.106	9.4

GENERAL NOTES:

When concrete curb and gutter longitudinally adjoins new concrete pavement, the method of attachment shall be by one of the methods shown on Standard Plate 380.11.

See Standard Plate 650.90 for expansion and contraction joints in the curb and gutter.

September 6, 2008

Published Date: 1st Qtr. 2015

SDDOT

TYPE B CONCRETE CURB AND GUTTER

PLATE NUMBER 650.01

Sheet 1 of 1

Plot Scale - 1:200
Plotted From - trsf12145
File - ...\brok04TV\StdPlatesSectionB.dgn

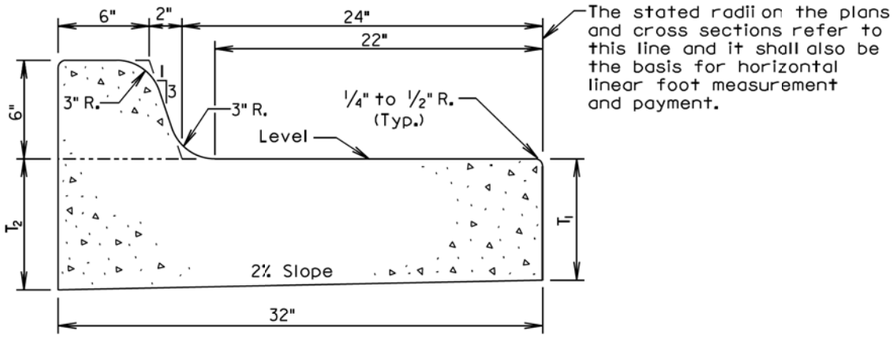

Type	T_1 (Inches)	T_2 (Inches)	Cu. Yd. Per Lin. Ft.	Lin. Ft. Per Cu. Yd.
BL66	6	6 5/8	0.063	15.9
BL67	7	7 5/8	0.071	14.1
BL68	8	8 5/8	0.080	12.5
BL68.5	8.5	9 1/8	0.084	11.9
BL69	9	9 5/8	0.088	11.4
BL69.5	9.5	10 1/8	0.092	10.9
BL610	10	10 5/8	0.096	10.4
BL610.5	10.5	11 1/8	0.100	10.0
BL611	11	11 5/8	0.104	9.6
BL611.5	11.5	12 1/8	0.108	9.3
BL612	12	12 5/8	0.112	8.9

GENERAL NOTES:

When concrete curb and gutter longitudinally adjoins new concrete pavement, the method of attachment shall be by one of the methods shown on Standard Plate 380.11.

See Standard Plate 650.90 for expansion and contraction joints in the curb and gutter.

September 6, 2006

Published Date: 1st Qtr. 2015	SDDOT	TYPE BL CONCRETE CURB AND GUTTER	PLATE NUMBER 650.05 Sheet 1 of 1

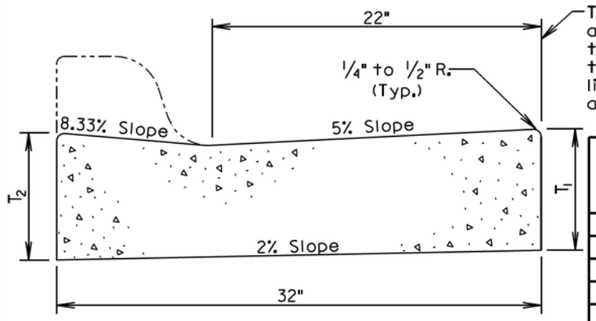

TRANSVERSE SECTION

Type	T_1 (Inches)	T_2 (Inches)	Cu. Yd. Per Lin. Ft.	Lin. Ft. Per Cu. Yd.
P6	6	6 3/8	0.047	21.2
P7	7	7 3/8	0.055	18.1
P8	8	8 3/8	0.064	15.7
P8.5	8.5	8 7/8	0.068	14.8
P9	9	9 3/8	0.072	13.9
P9.5	9.5	9 7/8	0.076	13.2
P10	10	10 3/8	0.080	12.5
P10.5	10.5	10 7/8	0.084	11.9
P11	11	11 3/8	0.088	11.3
P11.5	11.5	11 7/8	0.092	10.8
P12	12	12 3/8	0.096	10.4

Type P Concrete Gutter Limits

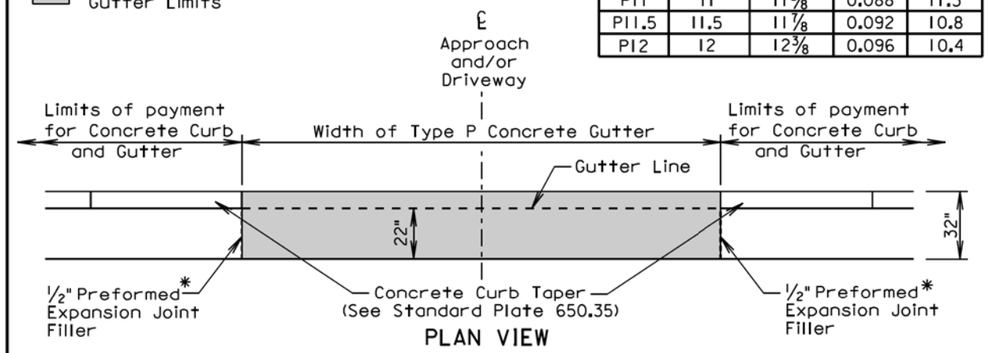

PLAN VIEW

* Joint will not be needed if concrete curb and gutter and type P concrete gutter is placed at the same time. If the 1/2" Preformed Expansion Joint Filler is provided, then the joint shall be sealed in accordance with standard plate 650.90.

GENERAL NOTES:

The concrete for the Type P Concrete Gutter shall comply with the requirements of the Standard Specifications for Class M6 Concrete.

When concrete gutter longitudinally adjoins new concrete pavement, the method of attachment shall be by one of the methods shown on Standard Plate 380.11.

Transverse contraction joints shall be constructed at 10' intervals in the concrete gutter except when concrete gutter is constructed adjacent to mainline PCC pavement. When concrete gutter is constructed adjacent to mainline PCC pavement, a transverse contraction joint shall be constructed in the concrete gutter at each mainline PCC pavement transverse contraction joint location.

When concrete gutter is placed monolithically with mainline PCC pavement, the transverse contraction joints in the concrete gutter shall be sawed and sealed the same as the transverse contraction joints in the mainline PCC pavement.

When concrete gutter is not placed monolithically with the mainline PCC pavement and when the adjacent mainline surfacing is not PCC concrete, the transverse contraction joints in the concrete gutter shall be 1 1/2 inches deep if formed in the fresh concrete using a suitable grooving tool. If a saw is used to cut the contraction joints, then the depth of the joint shall be at least 1/4 the thickness of the concrete.

September 6, 2013

Published Date: 1st Qtr. 2015	SDDOT	TYPE P CONCRETE GUTTER	PLATE NUMBER 650.30 Sheet 1 of 1

Plot Scale - 1:200
Plotted From - trsf12145
File - ...\brok04TV\StdPlatesSectionB.dgn

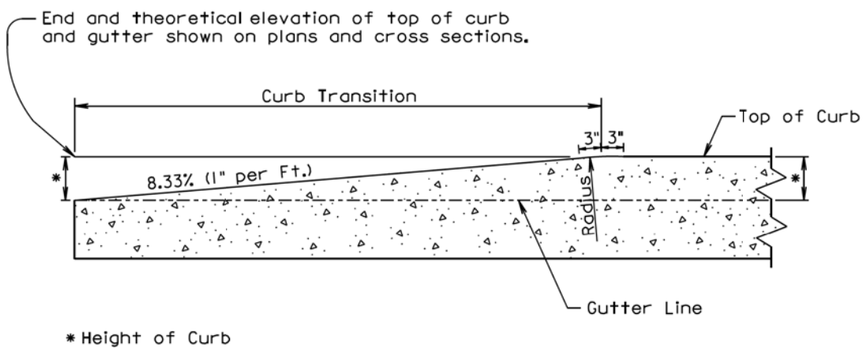

LONGITUDINAL SECTION OF CONCRETE CURB TAPER

September 14, 2005

Published Date: 1st Qtr. 2015	SDDOT	CONCRETE CURB TAPER	PLATE NUMBER 650.35
			Sheet 1 of 1

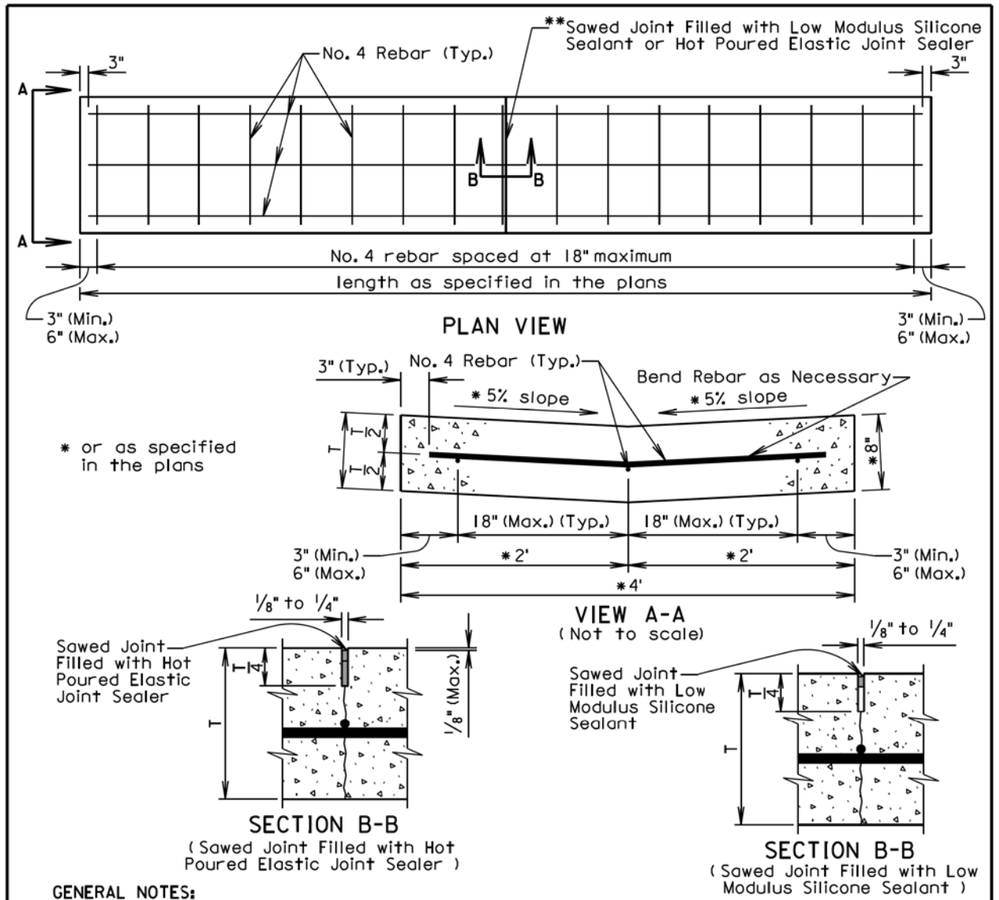

GENERAL NOTES:

The concrete shall comply with the Specifications for Class M6 concrete.

The reinforcing steel shall comply with the requirements of the Specification Sections 480 and 1010.

If a lap splice is provided the No. 4 rebar shall be lapped a minimum of 12".

** The sawed joints shall be spaced at 12'; however, when the length of the valley gutter is 12' to 24' there shall be a joint at the midpoint of the length. The saw cut to control cracking shall be a minimum of 1/4 the thickness of the pavement.

All hot poured elastic joint sealer material spilled on the surface of the concrete pavement shall be removed as soon as the material has cooled. The extent of removal of material shall be to the satisfaction of the Engineer. All costs for removal of the spilled joint sealer material shall be borne by the Contractor.

The silicone sealant shall be be bonded to the sides of a clean joint to completely seal the joint as approved by the Engineer.

All costs for furnishing and installing the valley gutter including materials, equipment, labor, and incidentals shall be included in the contract unit price per square yard for the corresponding Valley Gutter bid item.

February 10, 2014

Published Date: 1st Qtr. 2015	SDDOT	VALLEY GUTTER	PLATE NUMBER 650.40
			Sheet 1 of 1

Plot Scale - 1:200
Plotted From - trs112145
File - ...\brok04TV\StdPlatesSectionB.dgn

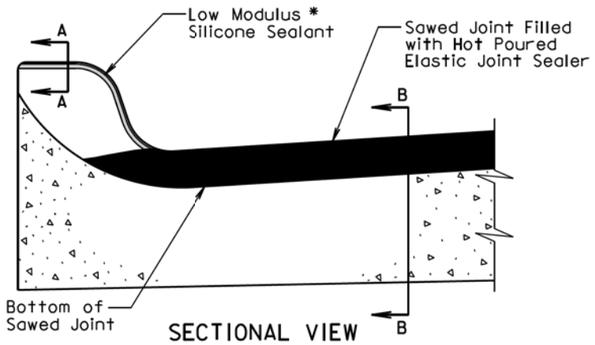

SECTIONAL VIEW

(Curb and Gutter Placed Monolithic with Adjacent Mainline PCC Pavement)

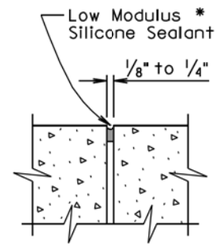

SECTION A-A

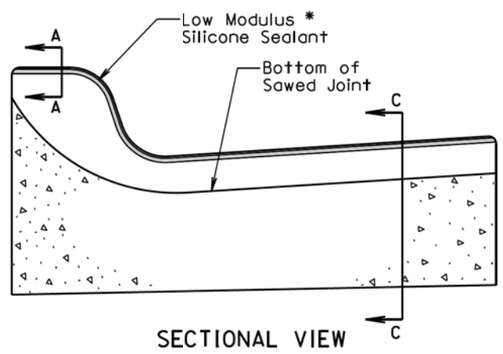

SECTIONAL VIEW

(Curb and Gutter not Placed Monolithic with Adjacent Mainline PCC Pavement or Mainline Surfacing is not PCC Pavement)

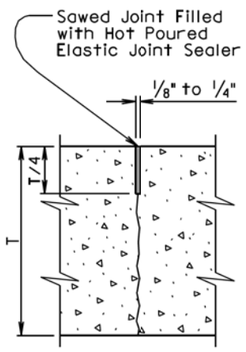

SECTION B-B

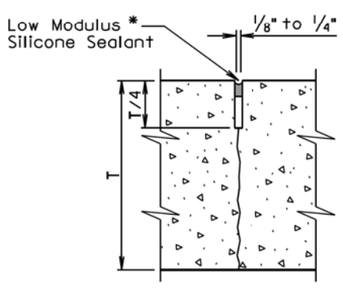

SECTION C-C

* The silicone sealant shall be placed such that it completely seals the joint and is bonded to the sides of the clean joint as approved by the Engineer.

September 6, 2013

Published Date: 1st Qtr. 2015	SDDOT	JOINTS IN CONCRETE CURB AND GUTTER	PLATE NUMBER 650.90
			Sheet 1 of 2

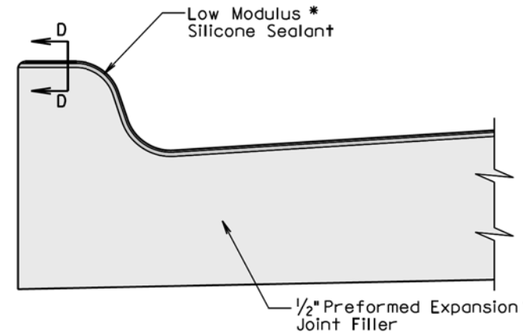

SECTIONAL VIEW

(Curb and Gutter at 1/2" Preformed Expansion Joint Filler Location)

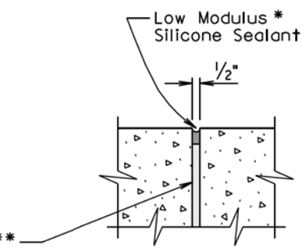

SECTION D-D

* The silicone sealant shall be placed such that it completely seals the joint and is bonded to the sides of the clean joint as approved by the Engineer.

GENERAL NOTES:

For illustrative reason, only the type B curb and gutter is shown.

** A 1/2" preformed expansion joint filler shall be placed transversely in the curb and gutter at the following locations:

1. At each junction between the radius return of curb and gutter and curb and gutter which is parallel to the project centerline.
2. At each junction between new curb and gutter and existing curb and gutter.

Transverse contraction joints shall be constructed at 10' intervals in the concrete curb and gutter except when the concrete curb and gutter is constructed adjacent to mainline PCC pavement. When concrete curb and gutter is constructed adjacent to mainline PCC pavement, a transverse contraction joint shall be constructed in the concrete curb and gutter at each mainline PCC pavement transverse contraction joint location.

When concrete curb and gutter is not placed monolithically with the mainline PCC pavement or when the adjacent mainline surfacing is not PCC concrete, the transverse contraction joints in the concrete curb and gutter shall be 1 1/2 inches deep if formed in the fresh concrete using a suitable grooving tool. If a saw is used to cut the contraction joints, then the depth of the joint shall be at least 1/4 the thickness of the concrete and the joint shall be sealed in accordance with the details shown above.

September 6, 2013

Published Date: 1st Qtr. 2015	SDDOT	JOINTS IN CONCRETE CURB AND GUTTER	PLATE NUMBER 650.90
			Sheet 2 of 2

Plot Scale - 1:200
Plotted From - trsf12145
File - ...\brok04TV\StdPlatesSectionB.dgn

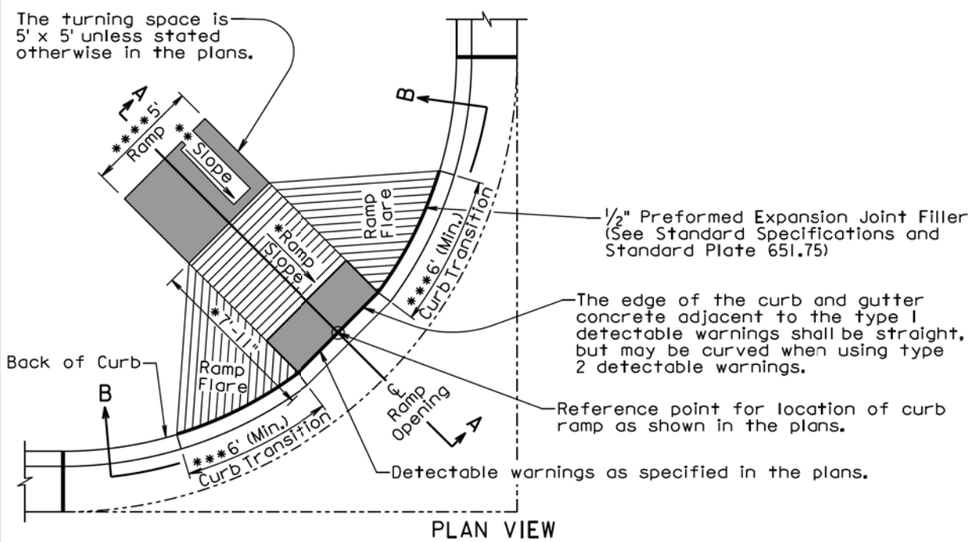

PLAN VIEW
(With 6'+ Curb Transition)

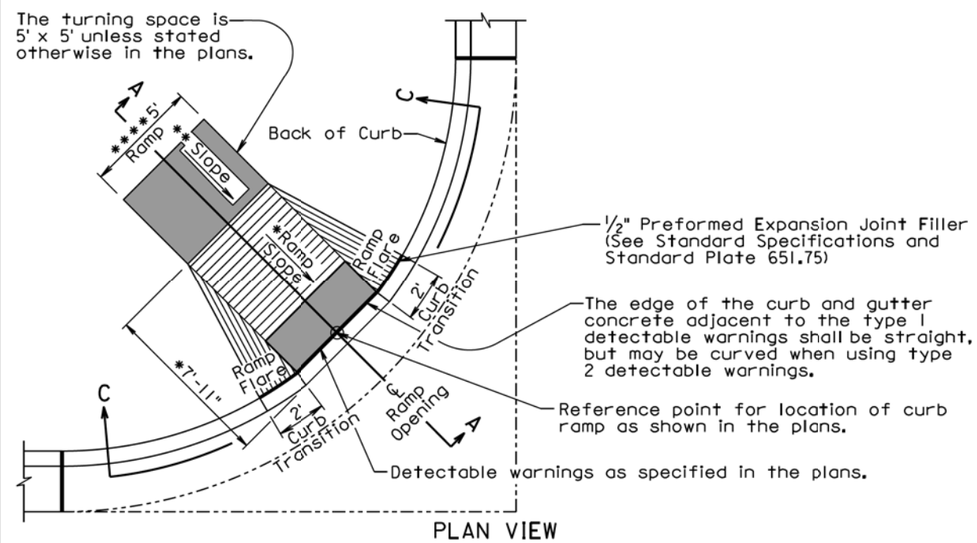

PLAN VIEW
(With 2' Curb Transition)

September 6, 2013

Published Date: 1st Qtr. 2015	SDDOT	TYPE 1 CURB RAMP (PERPENDICULAR CURB RAMP)	PLATE NUMBER 651.01
			Sheet 1 of 3

The ramp slope shall be 12:1 (8.3%) maximum. The ramp length shall not exceed 15' unless stated otherwise in the plans. Ramp slopes are designed at 12:1 (8.3%) unless stated otherwise in the plans.

* The cross slope of the ramp shall not be steeper than 50:1 (2%).

The 7'-11" dimension was computed based on a flat roadway profile, a continuous 2% theoretical slope from top of theoretical curb to the top of ramp, and a 6" high curb. The dimension shall be adjusted based on the curb type shown in the plans, the roadway geometrics, and the sidewalk geometrics.

** The slope in the turning space shall not be steeper than 50:1 (2%) in any direction of pedestrian travel.

*** The curb transition shall be a minimum of 6' long, a maximum of 10' long, and the curb transition slope shall not be steeper than 10:1 (10%) unless stated otherwise in the plans.

**** The ramp width is 5' unless stated otherwise in the plans.

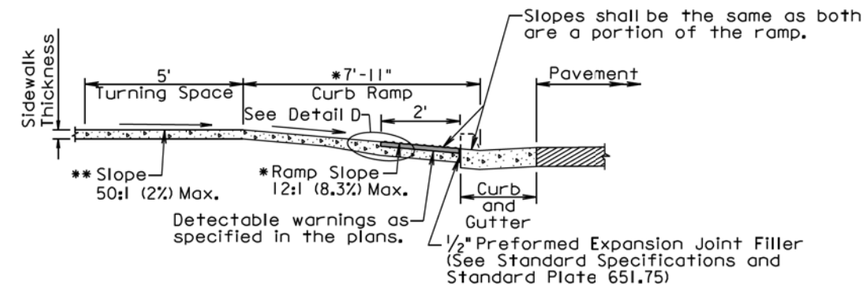

SECTION A-A

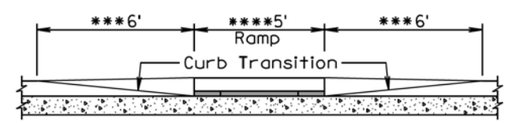

SECTIONAL VIEW B-B

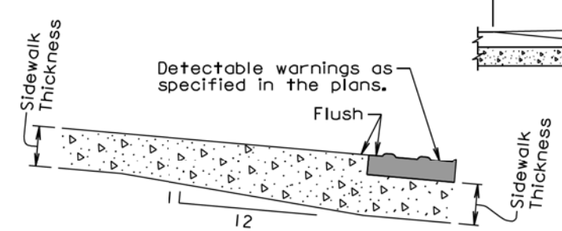

DETAIL D

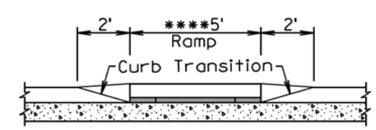

SECTIONAL VIEW C-C

September 6, 2013

Published Date: 1st Qtr. 2015	SDDOT	TYPE 1 CURB RAMP (PERPENDICULAR CURB RAMP)	PLATE NUMBER 651.01
			Sheet 2 of 3

Plot Scale - 1:200
Plotted From - trsf12145
File - ...\brok04TV\StdPlatesSectionB.dgn

GENERAL NOTES:

For illustrative purpose only, type I detectable warnings are shown in the drawings.

For illustrative purpose only, PCC fillet sections are shown in the drawings. The curb ramp depicted on this standard plate may be used with a PCC fillet section, with curved curb and gutter, or with straight curb and gutter.

For illustrative purpose only, the curb ramp location is shown at the center of a PCC fillet section. The curb ramp shall be placed at the location stated in the plans.

Sidewalk shall not be placed adjacent to the ramp flares when a 2' curb transition is used unless shown otherwise in the plans.

* Care shall be taken to ensure a uniform grade on the ramp, free of sags and short grade changes.

Surface texture of the ramp shall be obtained by coarse brooming transverse to the slope of the ramp.

The normal gutter line profile shall be maintained through the area of the ramp.

Joints shall be sawed or tooled into the concrete adjacent to the detectable warnings to alleviate possible corner cracking.

Care shall be taken to ensure that the surface of the detectable warnings are clean and maintains a uniform color.

The detectable warnings shall be cut as necessary to fit the plan specified limits of the detectable warnings. Cost for cutting the detectable warnings shall be incidental to the corresponding detectable warning bid item.

There will be no separate payment for curb ramps. The curb ramp shall be measured and paid for at the contract unit price per square foot for the corresponding concrete sidewalk bid item. The square foot area of the detectable warnings shall be included in the measured and paid for quantity of sidewalk.

The curb transitions and ramp opening shall be measured and paid for at the contract unit price per foot for the corresponding curb and gutter bid item when curb and gutter is used. The curb transitions and ramp opening shall be measured and paid for at the contract unit price per square yard for the corresponding PCC fillet section bid item when a PCC fillet section is used.

The type I detectable warnings shall be measured to the nearest square foot. All costs for furnishing and installing the type I detectable warnings including labor, equipment, materials, and incidentals shall be paid for at the contract unit price per square foot for "Type I Detectable Warnings".

The type 2 detectable warnings shall be measured to the nearest square foot. All costs for furnishing and installing the type 2 detectable warnings including labor, equipment, and materials, including adhesive, necessary sealant or grout, and necessary grinding shall be paid for at the contract unit price per square foot for "Type 2 Detectable Warnings".

September 6, 2013

Published Date: 1st Qtr. 2015	SDDOT	TYPE 1 CURB RAMP (PERPENDICULAR CURB RAMP)	PLATE NUMBER 651.01
			Sheet 3 of 3

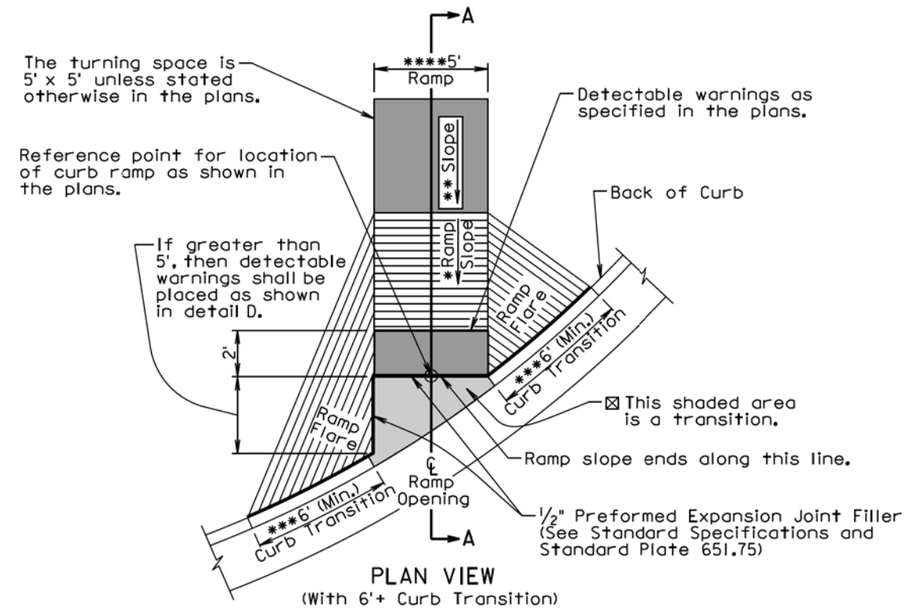

PLAN VIEW
(With 6'+ Curb Transition)

⊠ The slope within the transition area shall not be steeper than a 20:1 (5%). The concrete within the transition shall be placed monolithic with the curb and gutter or fillet section concrete. The concrete thickness within the transition shall be the same as the curb and gutter or fillet section concrete thickness.

*** The curb transition shall be a minimum of 6' long, a maximum of 10' long, and the curb transition slope shall not be steeper than a 10:1 (10%) unless stated otherwise in the plans.

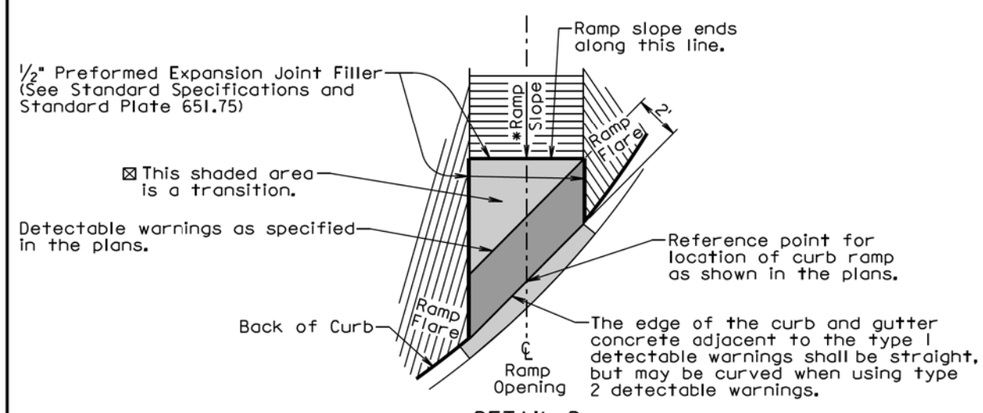

DETAIL D

September 6, 2013

Published Date: 1st Qtr. 2015	SDDOT	TYPE 2 CURB RAMP (DIRECTIONAL CURB RAMP)	PLATE NUMBER 651.02
			Sheet 1 of 3

Plot Scale - 1:200
Plotted From - trsf12145
File - ...\brok04TV\StdPlatesSectionB.dgn

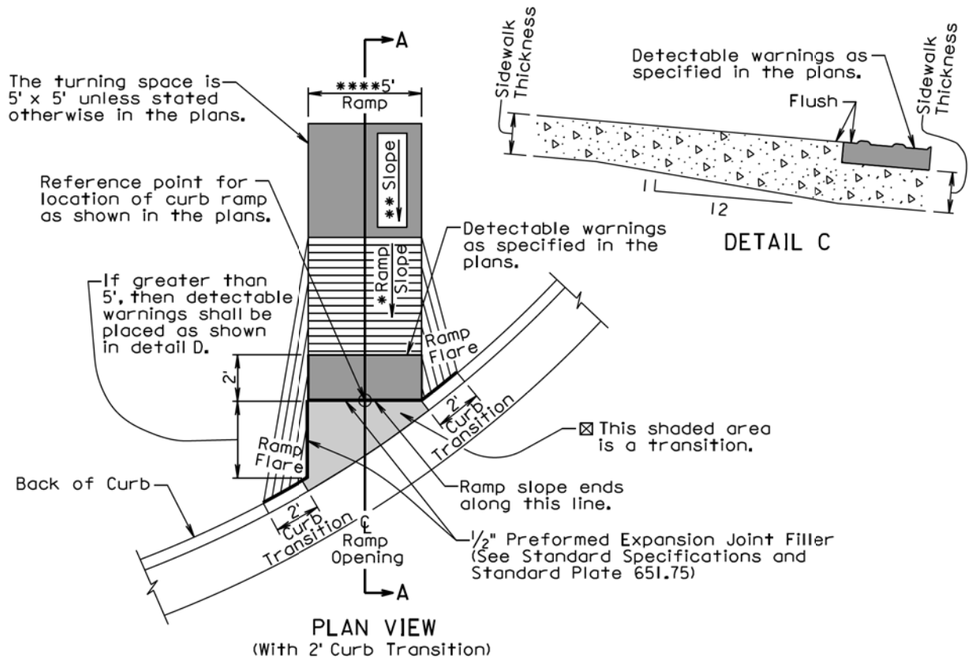

* The ramp slope shall be 12:1 (8.3%) maximum. The ramp length shall not exceed 15' unless stated otherwise in the plans. Ramp slopes are designed at 12:1 (8.3%) unless stated otherwise in the plans.

The cross slope of the ramp shall not be steeper than 50:1 (2%).

** The slope in the turning space shall not be steeper than a 50:1 (2%) in any direction of pedestrian travel.

**** The ramp width is 5' unless stated otherwise in the plans.

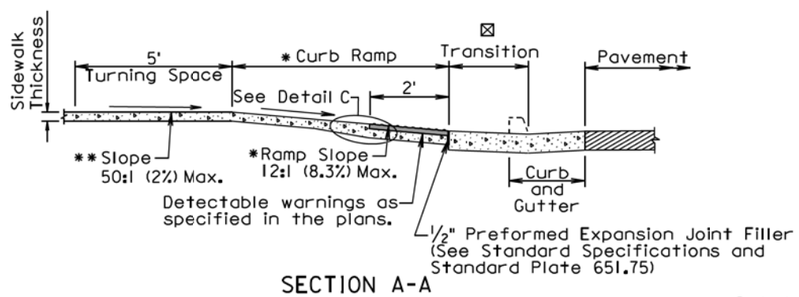

SECTION A-A

September 6, 2013

Published Date: 1st Qtr. 2015	SDDOT	TYPE 2 CURB RAMP (DIRECTIONAL CURB RAMP)	PLATE NUMBER 651.02
			Sheet 2 of 3

GENERAL NOTES:

For illustrative purpose only, type 1 detectable warnings are shown in the drawings.

The curb ramp depicted on this standard plate may be used with a PCC fillet section, with curved curb and gutter, or with straight curb and gutter. The curb ramp shall be placed at the location stated in the plans.

Sidewalk shall not be placed adjacent to the ramp flares when a 2' curb transition is used unless shown otherwise in the plans.

* Care shall be taken to ensure a uniform grade on the ramp, free of sags and short grade changes.

Surface texture of the ramp shall be obtained by coarse brooming transverse to the slope of the ramp.

The normal gutter line profile shall be maintained through the area of the ramp.

Joints shall be sawed or tooled into the concrete adjacent to the detectable warnings to alleviate possible corner cracking.

Care shall be taken to ensure that the surface of the detectable warnings are clean and maintains a uniform color.

The detectable warnings shall be cut as necessary to fit the plan specified limits of the detectable warnings. Cost for cutting the detectable warnings shall be incidental to the corresponding detectable warning bid item.

There will be no separate payment for curb ramps. The curb ramp shall be measured and paid for at the contract unit price per square foot for the corresponding concrete sidewalk bid item. The square foot area of the detectable warnings shall be included in the measured and paid for quantity of sidewalk.

The curb transitions and ramp opening shall be measured and paid for at the contract unit price per foot for the corresponding curb and gutter bid item when curb and gutter is used. The curb transitions and ramp opening shall be measured and paid for at the contract unit price per square yard for the corresponding PCC fillet section bid item when a PCC fillet section is used.

All costs for furnishing and installing the transition area at the base of the ramp shall be incidental to the contract unit price per foot for the corresponding curb and gutter bid item when curb and gutter is used and shall be incidental to the contract unit price per square yard for the corresponding PCC fillet section bid item when a PCC fillet section is used.

The type 1 detectable warnings shall be measured to the nearest square foot. All costs for furnishing and installing the type 1 detectable warnings including labor, equipment, materials, and incidentals shall be paid for at the contract unit price per square foot for "Type 1 Detectable Warnings".

The type 2 detectable warnings shall be measured to the nearest square foot. All costs for furnishing and installing the type 2 detectable warnings including labor, equipment, and materials, including adhesive, necessary sealant or grout, and necessary grinding shall be paid for at the contract unit price per square foot for "Type 2 Detectable Warnings".

September 6, 2013

Published Date: 1st Qtr. 2015	SDDOT	TYPE 2 CURB RAMP (DIRECTIONAL CURB RAMP)	PLATE NUMBER 651.02
			Sheet 3 of 3

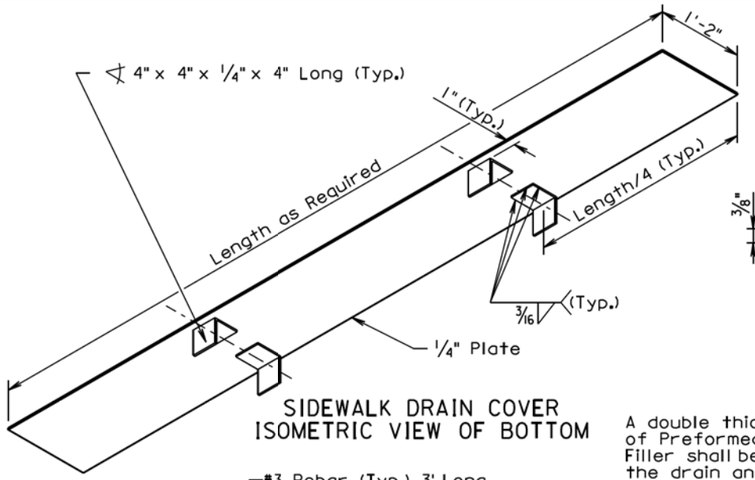

SIDEWALK DRAIN COVER
ISOMETRIC VIEW OF BOTTOM

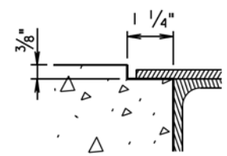

DETAIL B

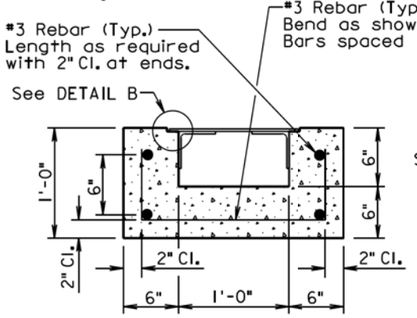

DETAIL A

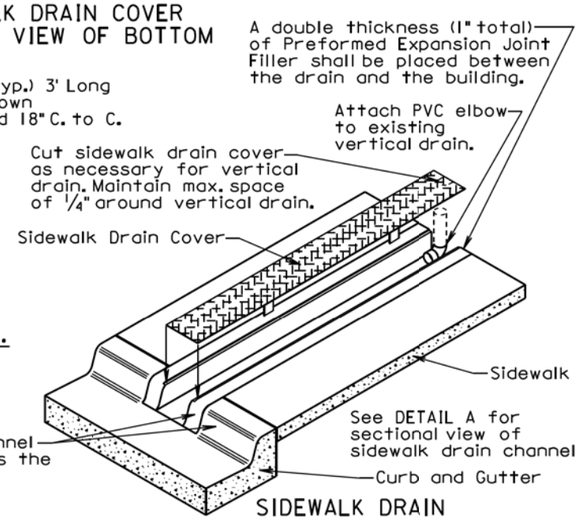

SIDEWALK DRAIN

GENERAL NOTES:

Concrete shall be Class M6 in accordance with Section 462 of the Standard Specifications.

Reinforcing steel shall conform to ASTM A615, Grade 60.

Structural Steel shall conform to ASTM A36. The sidewalk drain cover shall conform to ASTM A786.

Welding and weld inspection shall be in conformance with the current edition of the AWS D1.1 Structural Welding Code-Steel.

The cover plate assembly shall be galvanized after fabrication. Galvanizing shall be in accordance with ASTM 123.

All costs associated for providing the required curb cut shall be incidental to the contract unit price per foot for the corresponding curb and gutter bid item.

The sidewalk drain shall be measured and paid for to the nearest tenth of a foot. The length of the drain shall be measured from the gutter to the necessary end location adjacent to the building. All costs associated with furnishing and installing the sidewalk drain channel and cover including the attachment to the vertical drain shall be incidental to the contract unit price per foot for "Sidewalk Drain".

June 26, 2013

Published Date: 1st Qtr. 2015	SDDOT	SIDEWALK DRAIN	PLATE NUMBER 651.50
			Sheet 1 of 1

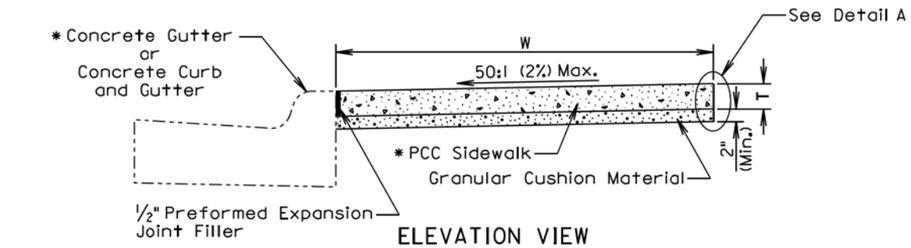

ELEVATION VIEW
(PCC Sidewalk without Boulevard)

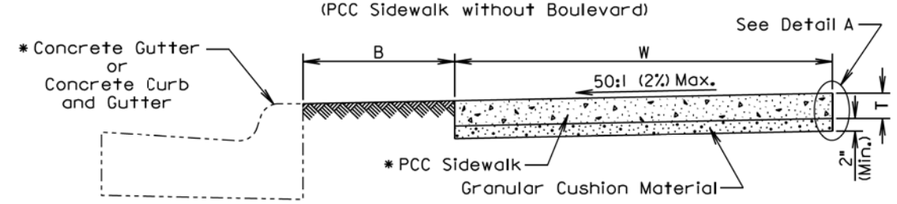

ELEVATION VIEW
(PCC Sidewalk with Boulevard)

B Width of boulevard as specified in the plans.
T Thickness of PCC sidewalk as specified in the plans.
W Width of PCC sidewalk as specified in the plans.
* Type as specified in the plans.

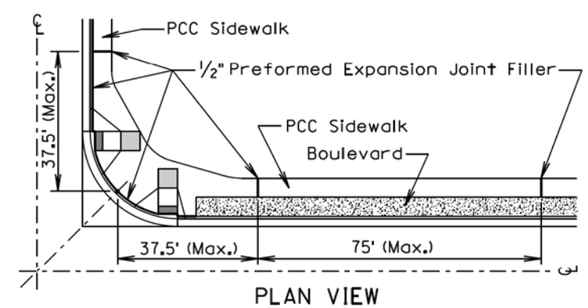

PLAN VIEW

GENERAL NOTES:

The PCC sidewalk shall be constructed in accordance with Section 651 of the Standard Specifications.

The maximum length between expansion joints in PCC sidewalk is 75 feet.

PCC sidewalk placed adjacent to intersection of roadways shall have an expansion joint placed transversely a maximum of 37.5 feet from the intersection. See PLAN VIEW.

An expansion joint in PCC sidewalk shall consist of a 1/2 inch thick preformed expansion joint filler material placed full depth and width of the PCC sidewalk.

** Large areas of PCC pavement adjacent to PCC sidewalk may require a different joint treatment than shown in the detail. If a different joint detail is necessary, plans will contain the joint detail and the Contractor shall construct the joint treatment in accordance with the plans.

August 31, 2013

Published Date: 1st Qtr. 2015	SDDOT	PCC SIDEWALK	PLATE NUMBER 651.75
			Sheet 1 of 2

Plot Scale - 1:200
Plotted From - trsf12145
File - ...\brok04TV\StdPlatesSectionB.dgn

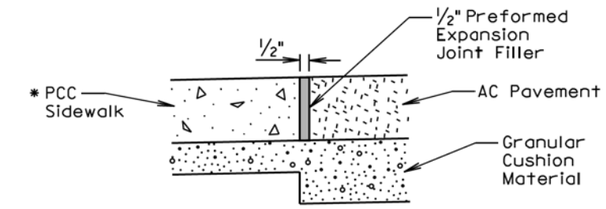

ELEVATION VIEW
(PCC sidewalk adjacent to asphalt concrete pavement)

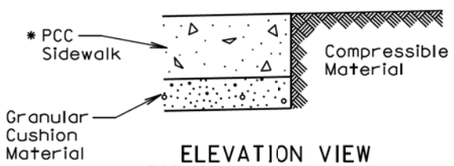

ELEVATION VIEW
(PCC sidewalk adjacent to earthen material, landscape rock, or other compressible materials)

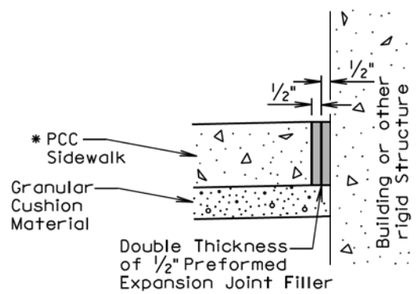

ELEVATION VIEW
(PCC sidewalk adjacent to building or other rigid structure)

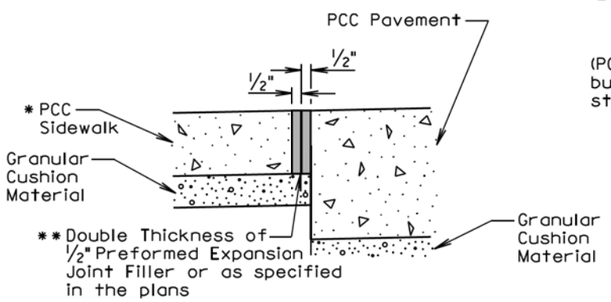

ELEVATION VIEW
(PCC sidewalk adjacent to PCC pavement)

Detail A
(Use Appropriate Detail(s))

August 31, 2013

Published Date: 1st Qtr. 2015	SDDOT	PCC SIDEWALK	PLATE NUMBER 651.75
			Sheet 2 of 2

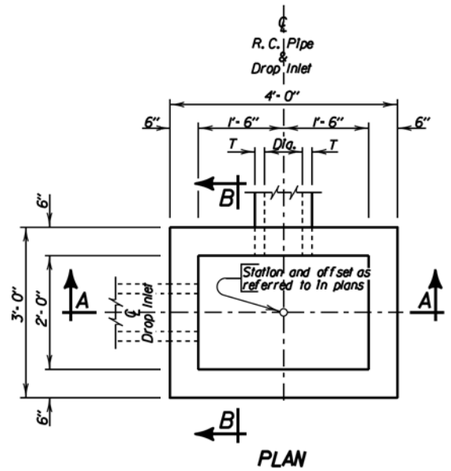

PLAN

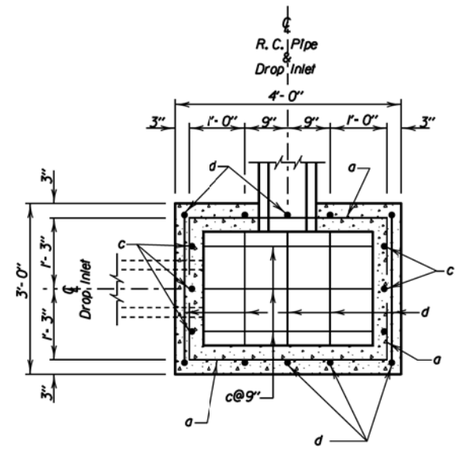

BOTTOM SECTION

PIPE DISPLACEMENT REDUCTIONS

R.C. Pipe Diameter Inches	T Inches	Class M6 Concrete Cu'd
12	2	0.03
15	2 1/4	0.04
18	2 1/2	0.05
24	3	0.09
27	3 1/4	0.11

ESTIMATED QUANTITIES

ITEM	UNIT	CONSTANT QUANTITY	VARIABLE QUANTITY
✳ Class M6 Concrete	Cu'd	0.26	0.22H
Reinforcing Steel	Lb	37	20.04H
Frame and Grate Assembly	Each	1	———

DROP INLETS FOR 12" TO 27" DIAMETER PIPE

GENERAL NOTES:

✳ Reduce total quantities of concrete by the amount of concrete displaced by the pipe. The total quantity of concrete shall be computed to the nearest hundredth of a cubic yard. The total quantity of reinforcing steel shall be computed to the nearest pound.

Drop inlets shown may be modified by the addition or omission of connecting pipes as shown on the layouts.

Reinforcing steel shall conform to ASTM A615 Grade 60. The b bars shall be lapped 12 inches. Cut and bend reinforcing steel as required to place pipe(s) through the drop inlet wall.

Pipe shall not enter through a corner of the drop inlet.

Use 2" clear cover on all reinforcing steel unless otherwise noted.

Precasting of reinforced drop inlets will be permissible. Prior to precasting, the Contractor shall submit details to the Engineer for approval.

Maximum pipe diameter shall not exceed 18 inches on the 3 foot wide side and shall not exceed 27 inches on the 4 foot wide side of the drop inlet.

The dimension of H is in feet.

December 23, 2009

Published Date: 1st Qtr. 2015	SDDOT	2'X 3' TYPE B REINFORCED CONCRETE DROP INLET	PLATE NUMBER 670.01
			Sheet 1 of 2

Plot Scale - 1:200
Plotted From - trsf12145
File - ...\brok04TV\StdPlatesSectionB.dgn

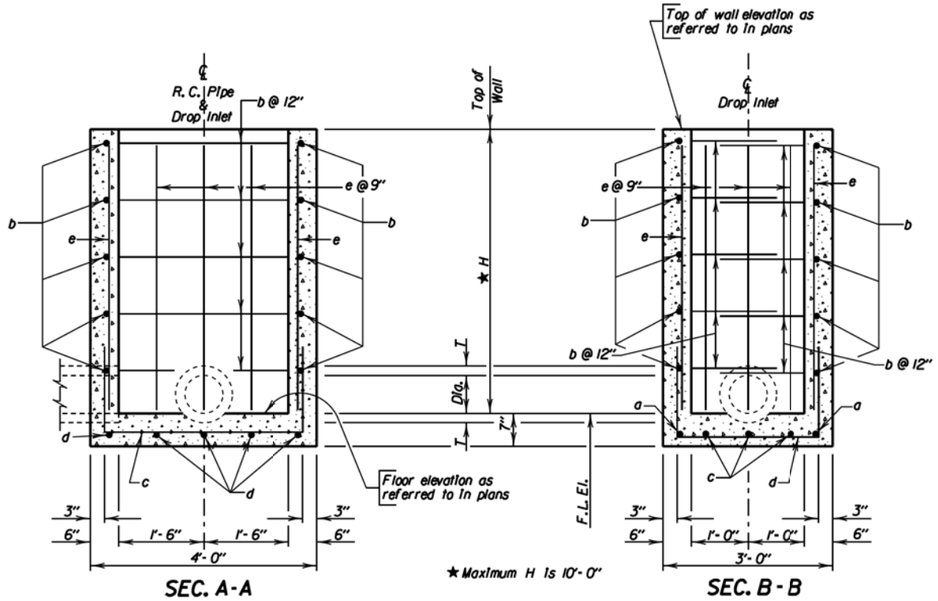

SEC. A-A

SEC. B-B

DROP INLETS FOR 12" TO 27" DIAMETER PIPE

REINFORCING SCHEDULE

MK.	No.	Size	Length	Type	Bending Details
a	2	4	5'-6"	17	
b	2H	4	7'-0"	17	
c	3	4	6'-6"	17	
d	5	4	5'-6"	17	
e	16	4	H - 2"	Str.	

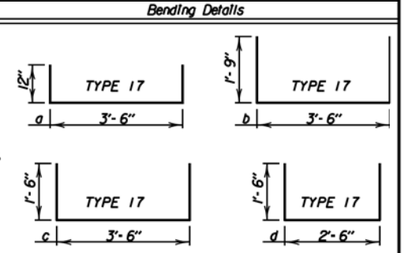

NOTE:
All dimensions are out to out of bars.

December 23, 2009

Published Date: 1st Qtr. 2015	SDDOT	2'X 3' TYPE B REINFORCED CONCRETE DROP INLET	PLATE NUMBER 670.01
			Sheet 2 of 2

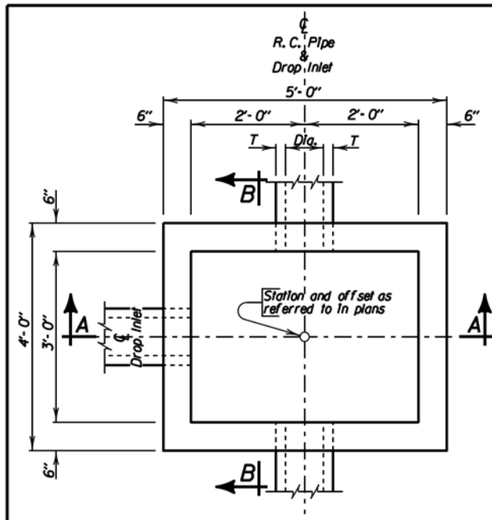

PLAN

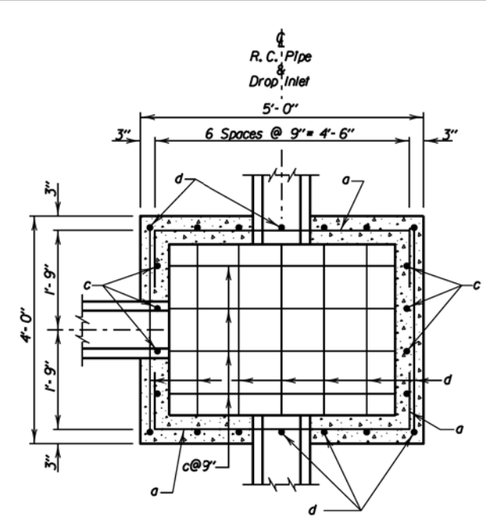

BOTTOM SECTION

PIPE DISPLACEMENT REDUCTIONS

R.C. Pipe Diameter Inches	T Inches	Class M6 Concrete Cu'd
12	2	0.03
15	2 1/4	0.04
18	2 1/2	0.05
24	3	0.09
30	3 1/2	0.14
36	4	0.20

ESTIMATED QUANTITIES

ITEM	UNIT	CONSTANT QUANTITY	VARIABLE QUANTITY
✳ Class M6 Concrete	Cu'd	0.43	0.29H
Reinforcing Steel	Lb	57	26.72H
Frame and Grate	Each	1	———

DROP INLETS FOR 12" TO 36" DIAMETER PIPE

GENERAL NOTES:

✳ Reduce total quantities of concrete by the amount of concrete displaced by the pipe. The total quantity of concrete shall be computed to the nearest hundredth of a cubic yard. The total quantity of reinforcing steel shall be computed to the nearest pound.

Drop inlets shown may be modified by the addition or omission of connecting pipes as shown on the layouts.

Reinforcing steel shall conform to ASTM A615 Grade 60. The b bars shall be lapped 12 inches. Cut and bend reinforcing steel as required to place pipe(s) through the drop inlet wall.

Pipe shall not enter through a corner of the drop inlet.

Use 2" clear cover on all reinforcing steel unless otherwise noted.

Precasting of reinforced drop inlets will be permissible. Prior to precasting, the Contractor shall submit details to the Engineer for approval.

Maximum pipe diameter shall not exceed 27 inches on the 4 foot wide side and shall not exceed 36 inches on the 5 foot wide side of the drop inlet.

The dimension of H is in feet.

December 23, 2009

Published Date: 1st Qtr. 2015	SDDOT	3'X 4' TYPE C REINFORCED CONCRETE DROP INLET	PLATE NUMBER 670.10
			Sheet 1 of 2

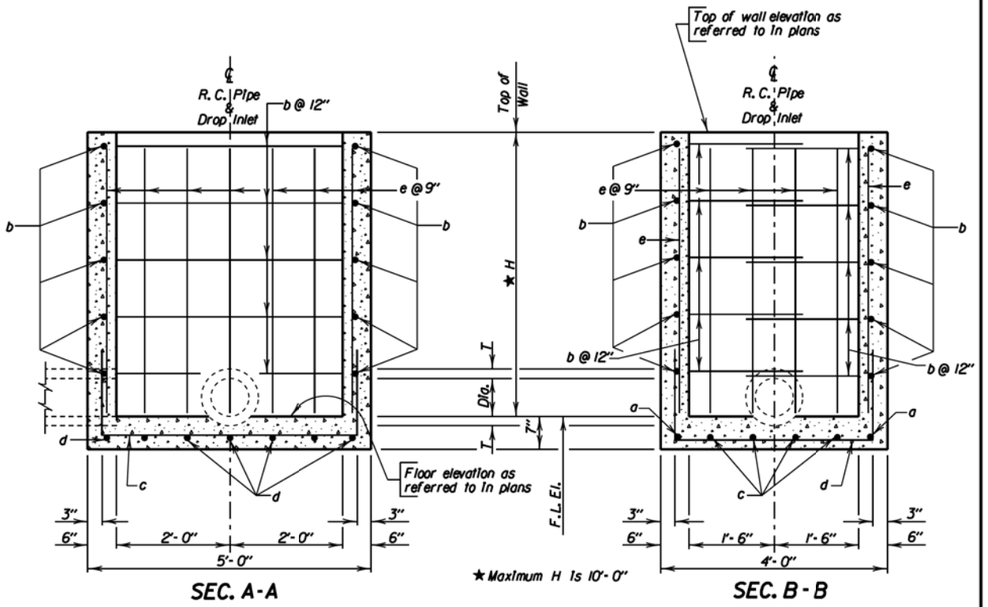

DROP INLETS FOR 12" TO 36" DIAMETER PIPE

REINFORCING SCHEDULE

Mk.	No.	Size	Length	Type	Bending Details
a	2	4	6'-6"	17	
b	2H	4	9'-0"	17	
c	4	4	7'-6"	17	
d	7	4	6'-6"	17	
e	22	4	H - 2"	Str.	

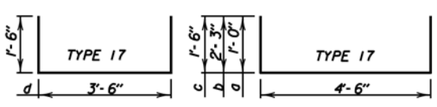

NOTE: All dimensions are out to out of bars.

December 23, 2009

Published Date: 1st Qtr. 2015

SDDOT

3' X 4' TYPE C REINFORCED CONCRETE DROP INLET

PLATE NUMBER 670.10

Sheet 2 of 2

GENERAL NOTE:

Top of grate elevation shall be 0.04' below theoretical elevation of gutter.

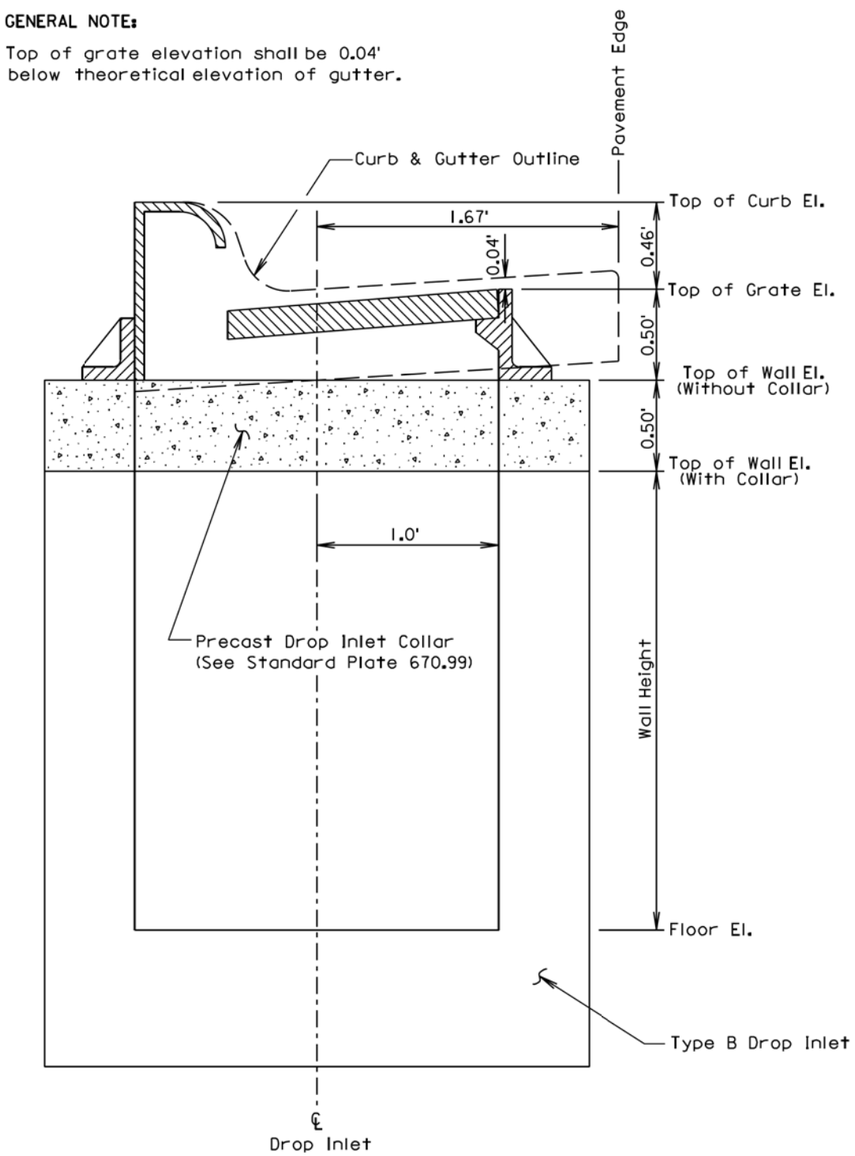

June 26, 2011

Published Date: 1st Qtr. 2015

SDDOT

INSTALLATION OF TYPE B DROP INLET

PLATE NUMBER 670.75

Sheet 1 of 1

Plot Scale - 1:200

Plotted From - trsf12145

File - ...\brok04TV\StdPlatesSectionB.dgn

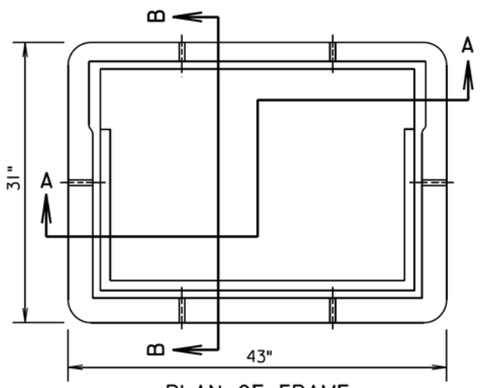

PLAN OF FRAME

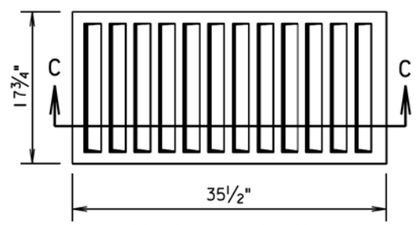

PLAN OF GRATE

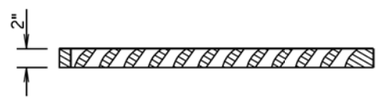

SECTION C-C

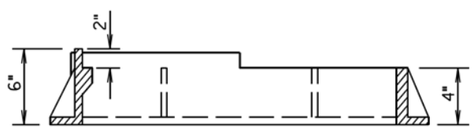

SECTION A-A

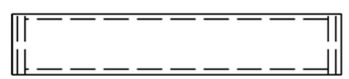

TOP VIEW OF CURB BOX

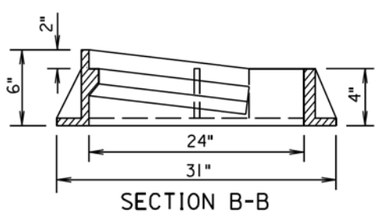

SECTION B-B

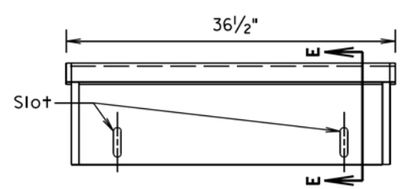

ELEVATION OF CURB BOX

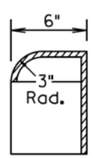

SECTION E-E

GENERAL NOTE:

Total weight of the assembly shall be 490 Lbs. minimum and the curb box shall be adjustable 6" to 9".

March 31, 2000

Published Date: 1st Qtr. 2015	SDDOT	TYPE B FRAME AND GRATE ASSEMBLY	PLATE NUMBER 670.80
			Sheet 1 of 1

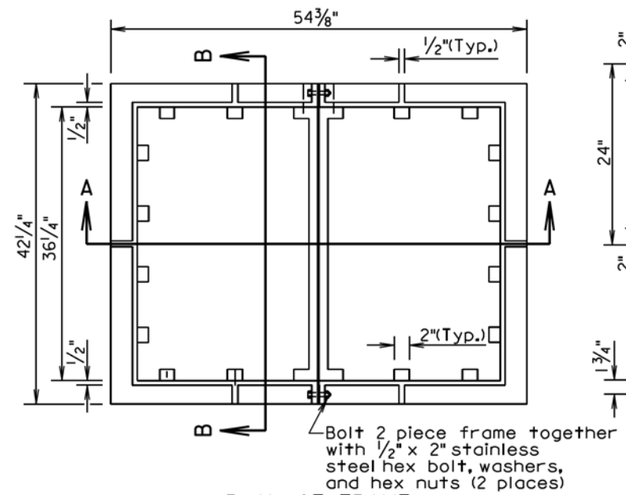

PLAN OF FRAME

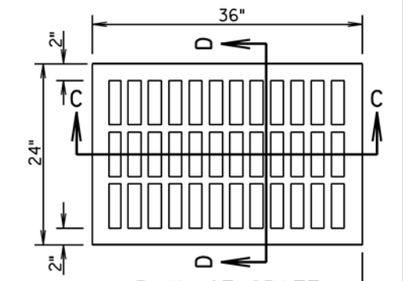

PLAN OF GRATE

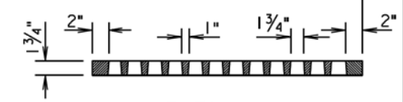

SECTION C-C

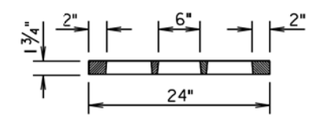

SECTION D-D

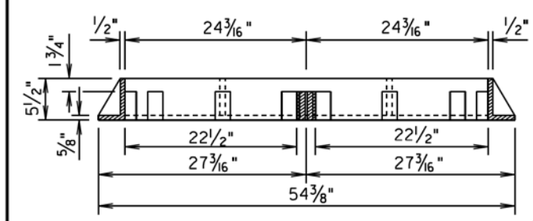

SECTION A-A

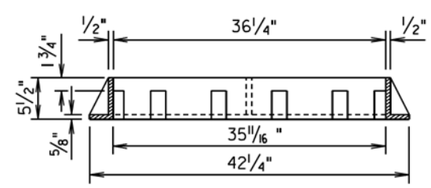

SECTION B-B

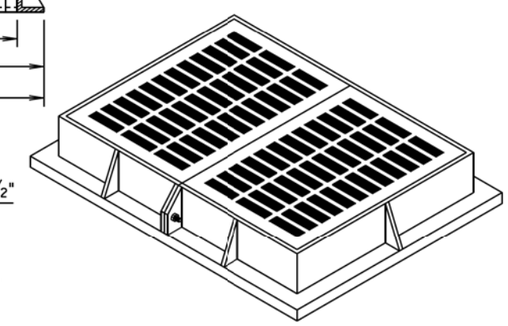

ASSEMBLED VIEW

GENERAL NOTE:

The total weight of the frame and grate shall be 850 pounds minimum.

March 31, 2000

Published Date: 1st Qtr. 2015	SDDOT	TYPE C FRAME AND GRATE	PLATE NUMBER 670.82
			Sheet 1 of 1

Plot Scale - 1:200
Plotted From - trsf12145
File - ...\brok04TV\StdPlatesSectionB.dgn

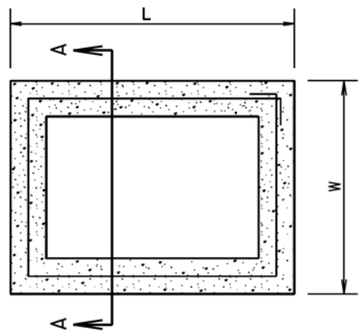

PLAN VIEW

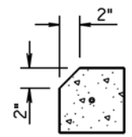

For Type D Drop Inlets only:
Use Precast Drop Inlet Collar with
2" chamfer on L sides only.

DETAIL B

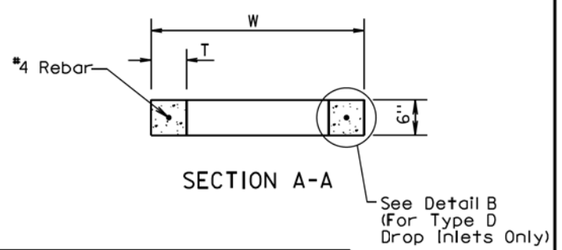

SECTION A-A

INFORMATIONAL QUANTITIES					
FRAME AND GRATE TYPE	L Ft-In	W Ft-In	T In	CLASS M6 CONCRETE CuYd	REINFORCING STEEL Lb
TYPE B	4'-0"	3'-0"	6	0.11	9
TYPE C	5'-0"	4'-0"	6	0.15	11
TYPE D	4'-0"	2'-6"	6	0.10	8

GENERAL NOTES:

All reinforcing steel shall conform to ASTM A615, Grade 60.

The ½" diameter bar shall lap 6"± and shall be centered in the concrete.

The cost of furnishing and installing Precast Drop Inlet Collars, including labor, materials, and incidentals shall be incidental to the contract unit price per Each for "Precast Drop Inlet Collar".

March 31, 2000

Published Date: 1st Qtr. 2015	SDDOT	***PRECAST DROP INLET COLLAR***	*PLATE NUMBER* 670.99
			Sheet 1 of 1

Plot Scale - 1:200
Plotted From - trsf12145
File - ...\brok04TV\StdPlatesSectionB.dgn