STATE OF SOUTH DAKOTA	PROJECT	SHEET	TOTAL SHEETS
	P 0014(204)421	F1	F8

Plotting Date: 01/27/2015

Section F: Surfacing Plans

INDEX OF SHEETS

F1 General Layout w/ Index
F2 - F4 Estimate with General Notes & Tables
F5 - F8 Typical Sections

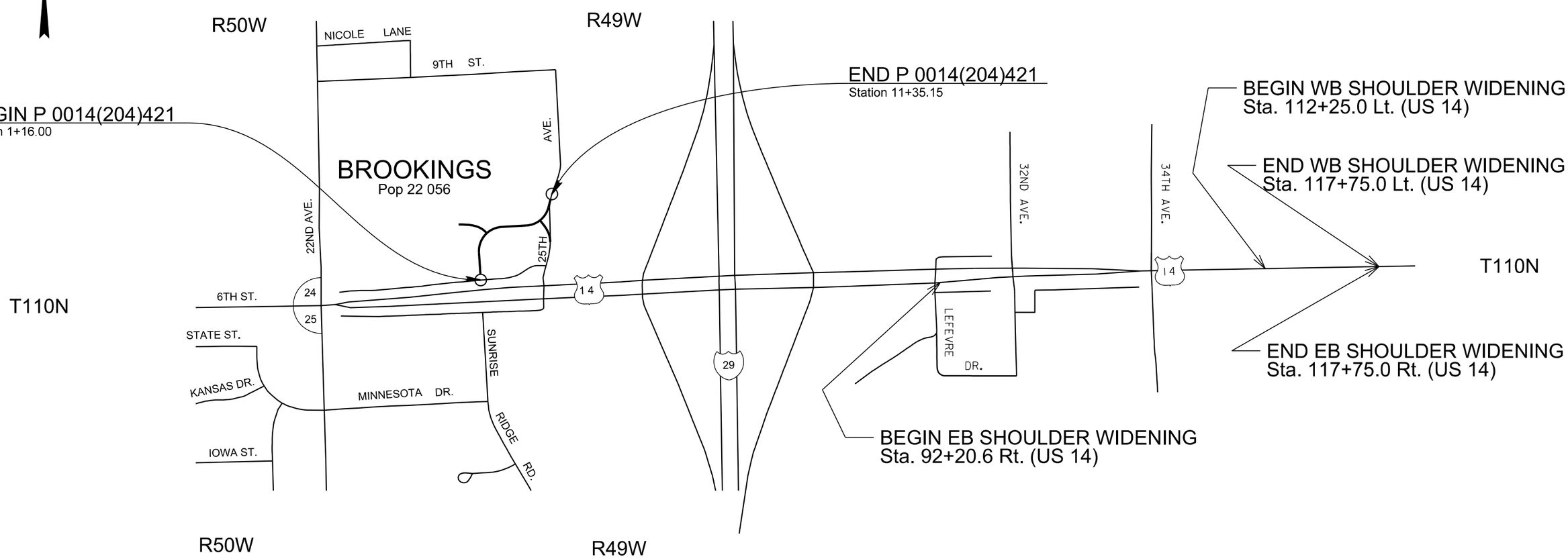

PLOT SCALE - 1:200

PLOT NAME - 1

FILE - ...\PRJ\BROK 04TV\TITLE F 04TV.DGN

PLOTTED FROM - TRPR16032

SECTION F ESTIMATE OF QUANTITIES

Bid Item Number	Item	Quantity	Unit
120E0600	Contractor Furnished Borrow	1,379	CuYd
120E6100	Water for Embankment	17.8	MGal
120E6200	Water for Granular Material	56.3	MGal
260E1010	Base Course	4,707.2	Ton
320E0007	PG 64-28 Asphalt Binder	242.4	Ton
320E1050	Class E Asphalt Concrete	4,398.7	Ton
320E3000	Compaction Sample	3	Each
330E0100	SS-1h or CSS-1h Asphalt for Tack	5.0	Ton
330E0210	SS-1h or CSS-1h Asphalt for Flush Seal	1.3	Ton
330E2000	Sand for Flush Seal	20.1	Ton

SURFACING THICKNESS DIMENSIONS

Plans quantity will be applied though the thickness may vary from that shown on the plans.

At those locations where material must be placed to achieve a required elevation, plans quantity may be varied to achieve the required elevation.

SAWING IN EXISTING SURFACING

Where new Portland Cement Concrete Pavement (PCCP) or new asphalt concrete is placed adjacent to existing asphalt concrete or PCCP, the existing pavement shall be sawed full depth to a true line with a vertical face. No separate payment shall be made for sawing.

CONTRACTOR FURNISHED BORROW

The Contractor shall provide a suitable site for Contractor furnished borrow material. The Contractor is responsible for obtaining all required permits and clearances for the borrow site. The borrow material shall be approved by the Engineer. The plans quantity for Contractor Furnished Borrow and Water For Embankment as shown in the Estimate of Quantities will be the basis of payment for these items.

Restoration of the Contractor furnished borrow site shall be the responsibility of the Contractor.

Location	Contractor Furnished Borrow	Water For Embankment
	Cu.Yds.	MGal
Sta. 92+20.6 to Sta. 96+26.8 Rt.	93.9	1.2
Sta. 97+24.1 to Sta. 104+94.2 Rt.	1,248.2	16.1
Sta. 105+63.6 to Sta. 111+25.0 Rt.	36.9	0.5
TOTAL	1,378.9	17.8

CLASS E ASPHALT CONCRETE

Mineral Aggregate for Class E Asphalt Concrete shall conform to the requirements for Class E, Type 1.

All other requirements for Class E shall apply.

Summary of Class E Asphalt Concrete Compaction

Location	With Specified Density Ton	Without Specified Density Ton
Sunrise Ridge Road		
Sta. 1+16.0 to Sta. 1+84.5	35.2 / 35.2 / 35.2	---
Sta. 1+84.5 to Sta. 10+35.37	409.3 / 409.3 / 409.3	---
Sta. 10+35.37 to Sta. 11+36.9	30.7 / 30.7 / 30.7	---
US 14 Shoulder Widening		
Sta. 92+20.6 to Sta. 117+75.0 Rt.	798.7 / 751.5 / 474.5	---
Sta. 112+25.0 to Sta. 117+75.0 Lt.	162.0 / 151.8 / 95.5	---
XR5		
Sta. 0+00.0 to Sta. 1+80.5	60.7 / 60.7 / 60.7	---
XR9		
Sta. 1+00.0 to Sta. 2+02.6	38.0 / 38.0 / 38.0	---
Driveways/Approaches		
Sta. 5+21 Rt.	---	23.5 / 23.5 / 23.5
Sta. 7+33 Rt.	---	7.1 / 7.1 / 7.1
Sta. 8+92 Lt.	---	18.0 / 18.0 / 18.0
Sta. 10+72 Rt.	---	1.6 / 1.6 / 1.6
Parking Lots		
Sta. 1+16.0 to Sta. 2+36.2 Rt.	---	5.9 / 5.9
Sta. 1+16.0 to Sta. 4+42.6 Lt.	---	9.0 / 9.0
Sta. 1+44.3 Lt. (XR5) to Sta. 8+74.1 Lt.	---	12.1 / 12.1
Sta. 5+73.3 to Sta. 6+33.6 Rt.	---	8.9 / 8.9
Sta. 7+48.8 to Sta. 8+61.6 Rt.	---	8.3 / 8.3
Sta. 10+03.0 to Sta. 10+41.9 Lt.	---	2.0 / 2.0
TOTALS	4,155.7	243.0

RATES OF MATERIALS

The Estimate of Surfacing Quantities is based on the following quantities of materials per **station**.

SUNRISE RIDGE ROAD

Sta. 1+84.5 to Sta. 10+35.37

BASE COURSE

Crushed Aggregate 324.38 Tons.

Water for Granular Material at the rate of 3.89 M. Gallons.

CLASS E ASPHALT CONCRETE – 1st Lift

Crushed Aggregate	45.45 Tons
PG 64-28 Asphalt Binder	2.65 Tons
Total Mix	48.10 Tons

SS-1h or CSS-1h Asphalt for Tack at the rate of 0.09 ton applied 39.0 feet wide (Rate = 0.05 gallon per square yard).

CLASS E ASPHALT CONCRETE – 2nd Lift

Crushed Aggregate	45.45 Tons
PG 64-28 Asphalt Binder	2.65 Tons
Total Mix	48.10 Tons

SS-1h or CSS-1h Asphalt for Tack at the rate of 0.09 ton applied 39.0 feet wide (Rate = 0.05 gallon per square yard).

CLASS E ASPHALT CONCRETE – 3rd Lift

Crushed Aggregate	45.45 Tons
PG 64-28 Asphalt Binder	2.65 Tons
Total Mix	48.10 Tons

The exact proportions of this material will be determined on construction.

FLUSH SEAL

SS-1h or CSS-1h Asphalt for Flush Seal at the rate of 0.09 ton applied 39.0 feet wide (Rate = 0.05 gallon per square yard).

Sand for Flush Seal at the rate of 1.64 tons applied 37.0 feet wide (Rate = 8.00 lbs. per square yard).

US 14 SHOULDER WIDENING

Sta. 92+20.6 to Sta. 115+00.0 Rt.
Sta. 112+25.0 to Sta. 115+00.0 Lt.

CLASS E ASPHALT CONCRETE – 1st Lift

Crushed Aggregate	30.02 Tons
PG 64-28 Asphalt Binder	1.75 Tons
Total Mix	31.77 Tons

SS-1h or CSS-1h Asphalt for Tack at the rate of 0.04 ton applied 17.17 feet wide (Rate = 0.05 gallon per square yard).

CLASS E ASPHALT CONCRETE – 2nd Lift

Crushed Aggregate	28.27 Tons
PG 64-28 Asphalt Binder	1.65 Tons
Total Mix	29.92 Tons

SS-1h or CSS-1h Asphalt for Tack at the rate of 0.04 ton applied 16.17 feet wide (Rate = 0.05 gallon per square yard).

CLASS E ASPHALT CONCRETE – 3rd Lift

Crushed Aggregate	17.87 Tons
PG 64-28 Asphalt Binder	1.04Tons
Total Mix	18.91 Tons

The exact proportions of this material will be determined on construction.

TABLE OF ADDITIONAL QUANTITIES

Location-Description	Water for Granular Material	Base Course	Class E Asphalt Concrete 1st / 2nd / 3rd Lift	PG 64-28 Asphalt Binder 1st / 2nd / 3rd Lift	SS-1h or CSS-1h Asphalt for Tack 1st / 2nd Lift	SS-1h or CSS-1h Asphalt for Flush Seal	Sand for Flush Seal
	MGal	Ton	Ton	Ton	Ton	Ton	Ton
Sunrise Ridge Road							
Sta. 1+16.0 to Sta. 1+84.5	2.8	234.9	35.2 / 35.2 / 35.2	1.9 / 1.9 / 1.9	--- / 0.1 / 0.1	0.1	1.2
Sta. 10+35.37 to Sta. 11+36.9	2.7	226.4	30.7 / 30.7 / 30.7	1.7 / 1.7 / 1.7	--- / 0.1 / 0.1	0.1	1.6
US 14 Shoulder Widening							
Sta. 115+00 to Sta. 117+75.0 Rt.	---	---	74.6 / 69.5 / 43.5	4.1 / 3.8 / 2.4	--- / 0.1 / 0.1	---	---
Sta. 115+00 to Sta. 117+75.0 Lt.	---	---	74.6 / 69.5 / 43.5	4.1 / 3.8 / 2.4	--- / 0.1 / 0.1	---	---
XR5							
Sta. 0+00.0 to Sta. 1+80.5	5.4	445.4	60.7 / 60.7 / 60.7	3.4 / 3.4 / 3.4	--- / 0.2 / 0.2	0.2	2.0
XR9							
Sta. 1+00.0 to Sta. 2+02.6	3.3	278.5	38.0 / 38.0 / 38.0	2.1 / 2.1 / 2.1	--- / 0.1 / 0.1	0.1	1.3
Driveways/Approaches							
Sta. 5+21 Rt.	1.6	133.6	23.5 / 23.5 / 23.5	1.3 / 1.3 / 1.3	--- / --- / ---	---	---
Sta. 7+33 Rt.	0.6	53.4	7.1 / 7.1 / 7.1	0.4 / 0.4 / 0.4	--- / --- / ---	---	---
Sta. 8+92 Lt.	1.7	145.3	18.0 / 18.0 / 18.0	1.0 / 1.0 / 1.0	--- / --- / ---	---	---
Sta. 10+72 Rt.	0.2	17.4	1.6 / 1.6 / 1.6	0.1 / 0.1 / 0.1	--- / --- / ---	---	---
Parking Lots							
Sta. 1+16.0 to Sta. 2+36.2 Rt.	0.2	16.8	5.9 / 5.9	0.3 / 0.3	--- / ---	---	---
Sta. 1+16.0 to Sta. 4+42.6 Lt.	0.3	25.6	9.0 / 9.0	0.5 / 0.5	--- / ---	---	---
Sta. 1+44.3 Lt. (XR5) to Sta. 8+74.1 Lt.	2.6	220.1	12.1 / 12.1	0.7 / 0.7	--- / ---	---	---
Sta. 5+73.3 to Sta. 6+33.6 Rt.	0.3	25.2	8.9 / 8.9	0.5 / 0.5	--- / ---	---	---
Sta. 7+48.8 to Sta. 8+61.6 Rt.	1.2	99.3	8.3 / 8.3	0.5 / 0.5	--- / ---	---	---
Sta. 10+03.0 to Sta. 10+41.9 Lt.	0.3	25.2	2.0 / 2.0	0.1 / 0.1	--- / ---	---	---
Totals	23.2	1,947.1	1,112.0	61.5	1.4	0.5	6.1

The above quantities are included in the Estimate of Surfacing Quantities.

The tonnage shown above for Driveways/Approaches and Parking Lots for Class E Asphalt Concrete is based on a compacted depth of 2” per lift.

TYPICAL SURFACING SECTIONS

STATE OF SOUTH DAKOTA	PROJECT	SHEET	TOTAL SHEETS
	P 0014(204)421	F5	F8

Plotting Date: 01/27/2015

Transitions:

Sta. 1+16 to Sta. 1+84.5
** 19.3′ to 14′

Sta. 9+85.37 to Sta. 10+35.7
* 0.02′/Ft. to -0.02′/Ft.

Sta. 10+35.37 to Sta. 11+03.9
** 14′ to 7.1′
* -0.02′/Ft.

Sta. 10+64.8 to Sta. 11+03.9
14′ to 12.6′

Sunrise Ridge Rd.
Sta. 1+16 to Sta. 11+03.9

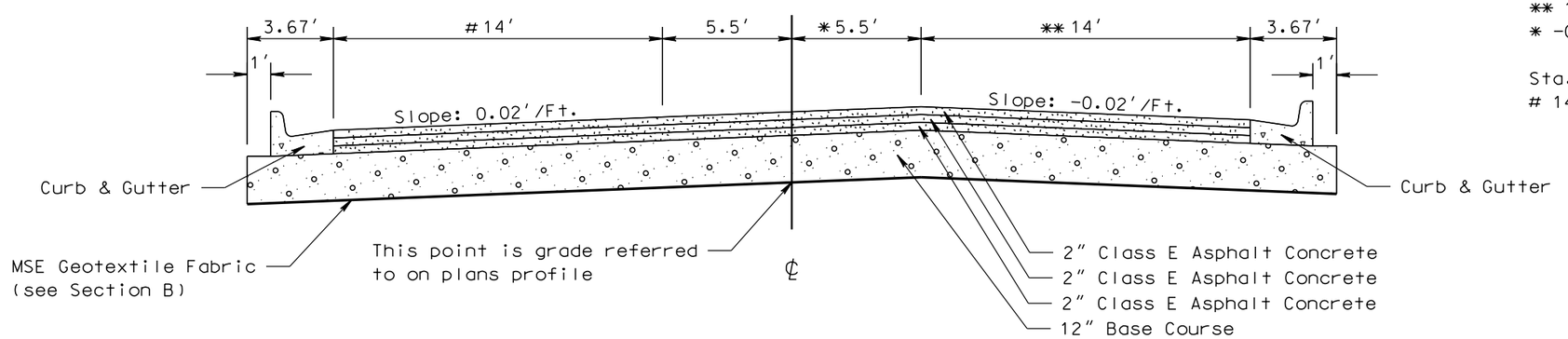

Sunrise Ridge Road
Sta. 11+03.9 to Sta. 11+36.9

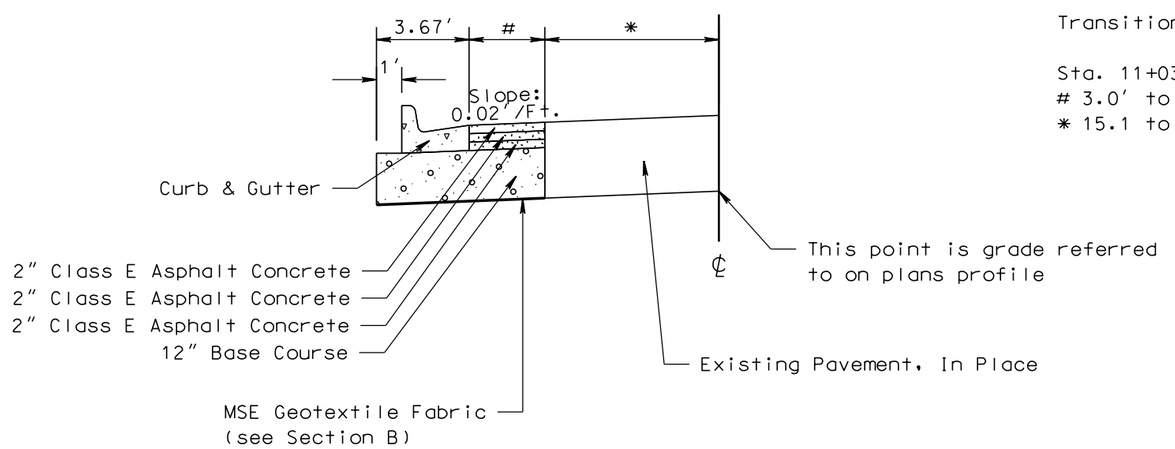

Transition:

Sta. 11+03.9 to Sta. 11+36.9
3.0′ to 2.2′
* 15.1 to 12.8′

PLOT SCALE - 1:6.00001

PLOTTED FROM - TRPR16032

PLOT NAME - 2

FILE - ...\TYPICAL SECTION 04TV.DGN

TYPICAL SURFACING SECTIONS

STATE OF SOUTH DAKOTA	PROJECT	SHEET	TOTAL SHEETS
	P 0014(204)421	F6	F8

Plotting Date: 01/27/2015

XR5 (LEOP)
Sta. 0+00 to Sta. 1+80.5

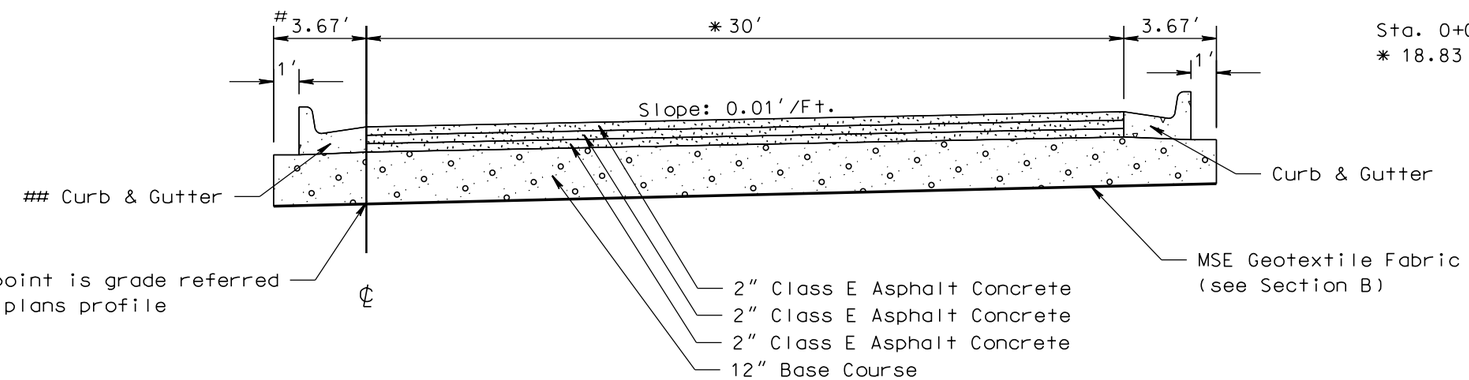

Transitions:

Sta. 0+00 to Sta. 0+72.5
0.0′
No Curb & Gutter

Sta. 0+00 to 1+07.8
∗ 18.83 to 30′

XR9
Sta. 1+00 to Sta. 2+02.6

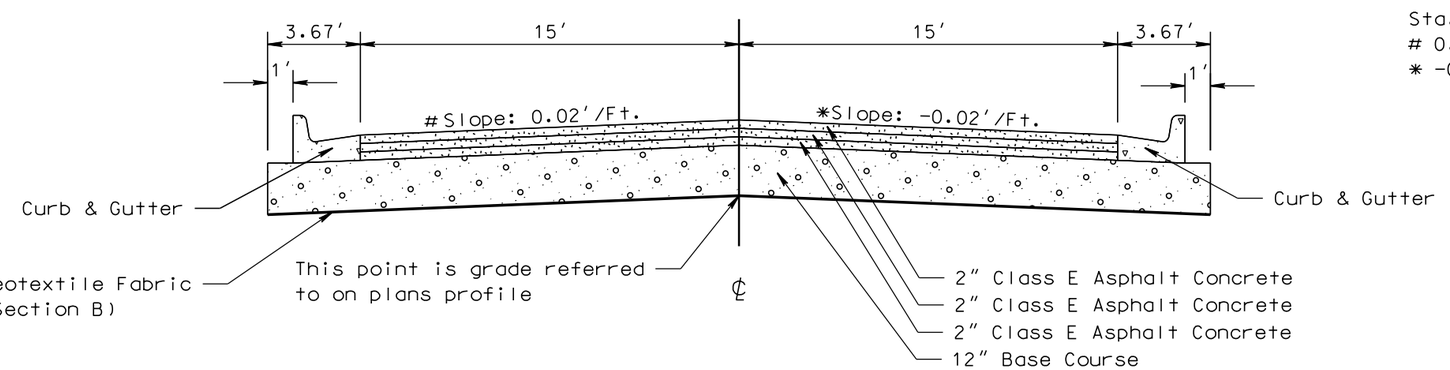

Transition:

Sta. 1+51.0 to 2+02.6
0.02′/Ft. to -0.0075′/Ft.
∗ -0.02′/Ft. to -0.0075′/Ft.

PLOT SCALE - 1:6.00001
PLOTTED FROM - TRPR16032
PLOT NAME - 3
FILE - ...\TYPICAL SECTION 04TV.DGN

IN PLACE SURFACING SECTIONS

STATE OF SOUTH DAKOTA	PROJECT	SHEET	TOTAL SHEETS
	P 0014(204)421	F7	F8

Plotting Date: 01/27/2015

Unclassified Excavation

US 14E
Sta. 92+20.6 to Sta. 105+25.7

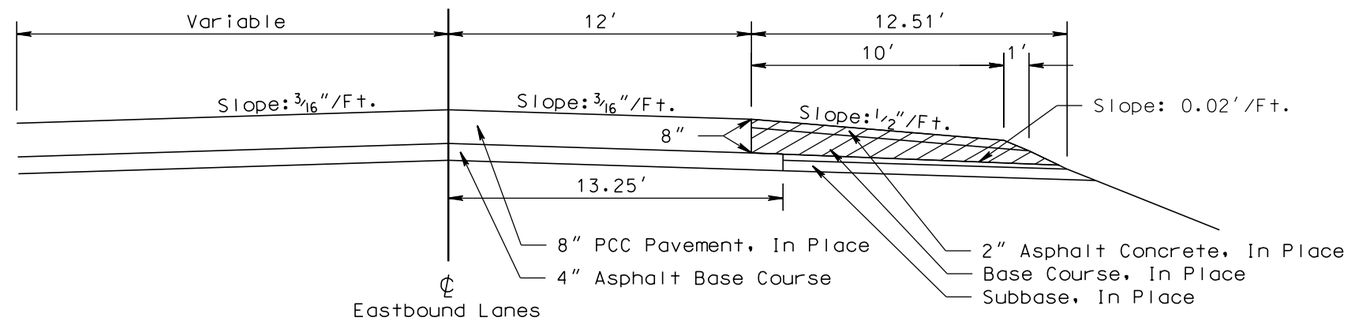

US 14
Sta. 105+25.7 to Sta. 112+25.0

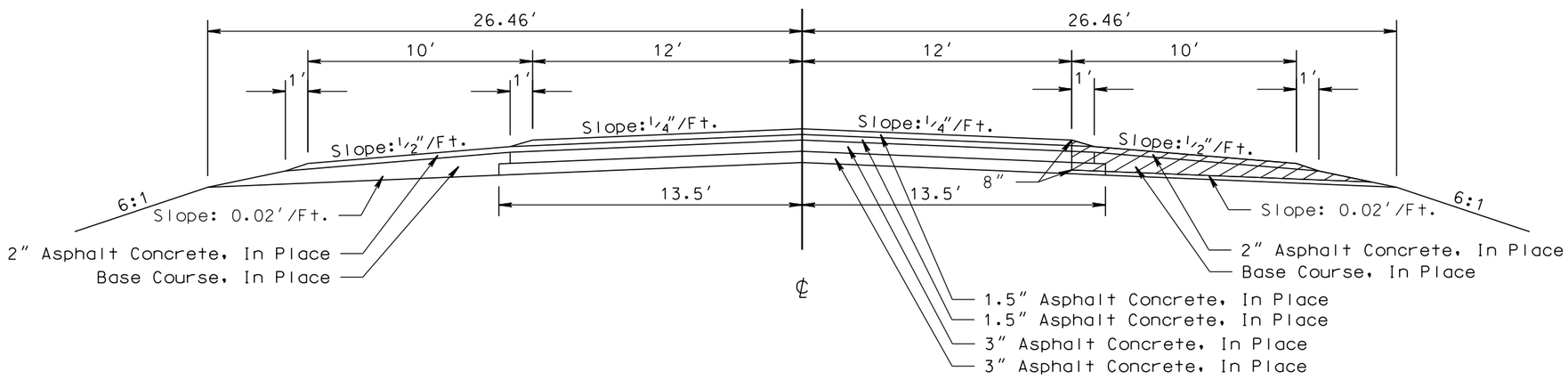

US 14
Sta. 112+25.0 to Sta. 117+75.0

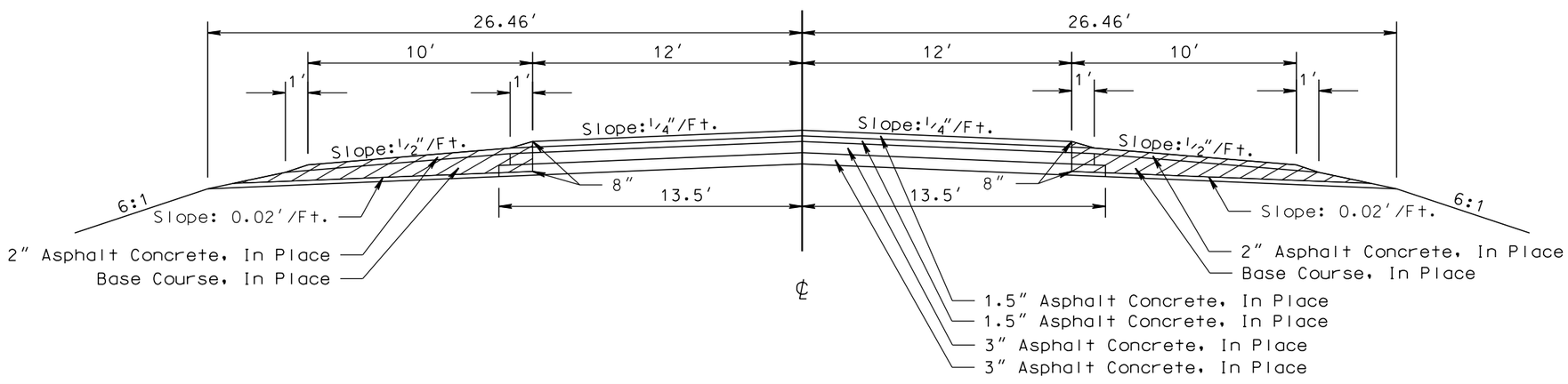

PLOT SCALE - 1:6.00001

PLOTTED FROM - TRPR16032

PLOT NAME - 4

FILE - ...\TYPICAL SECTION 04TV.DGN

TYPICAL SURFACING SECTIONS

STATE OF SOUTH DAKOTA	PROJECT	SHEET	TOTAL SHEETS

Plotting Date: 02/02/2015

US 14E
Sta. 92+20.6 to Sta. 105+25.7

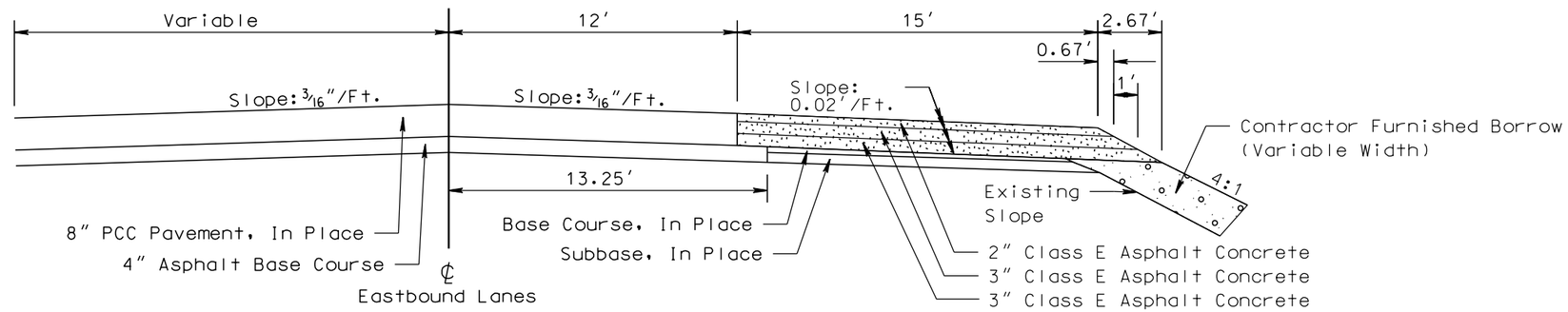

US 14
Sta. 105+25.7 to Sta. 112+25.0

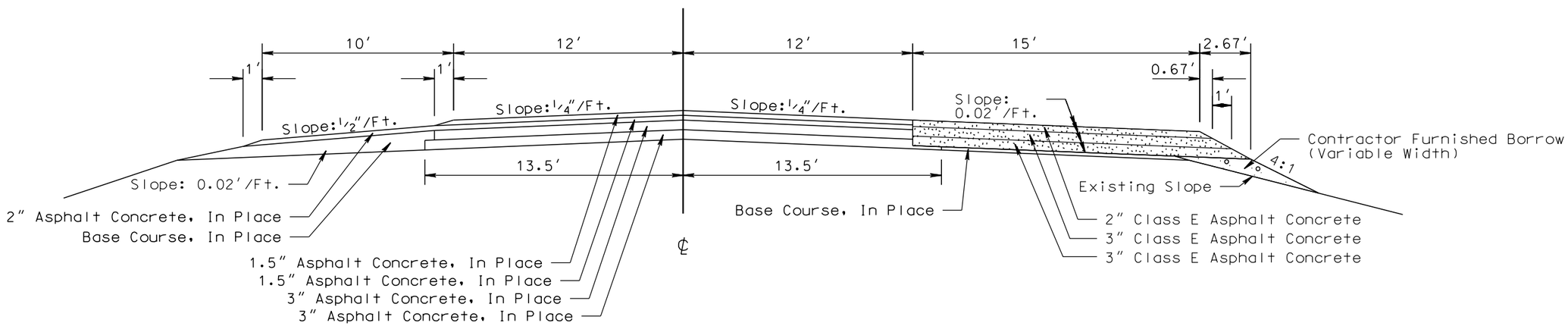

US 14
Sta. 112+25.0 to Sta. 117+75.0

Transition:

Sta. 115+00.0 to Sta. 117+75.0
* 15′ to 10′

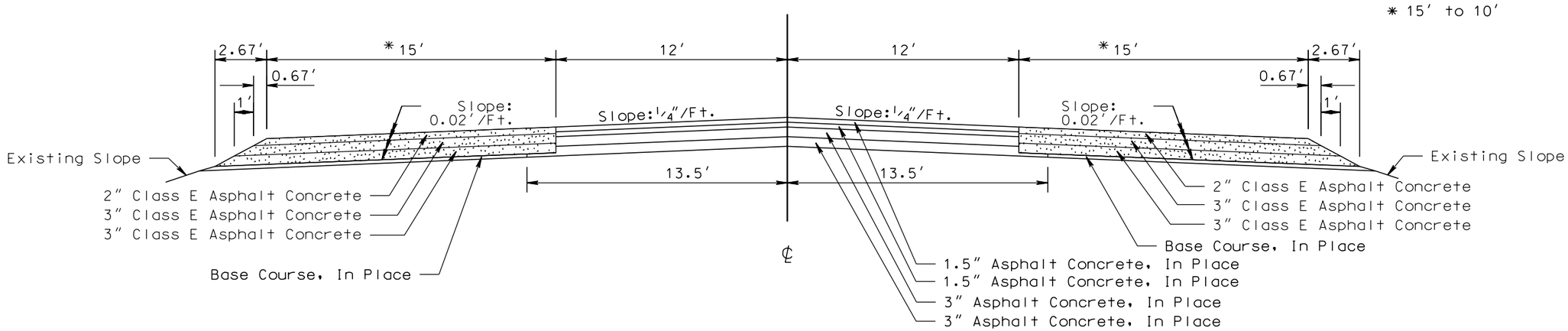

PLOT SCALE - 1:6.00001
PLOTTED FROM - TRPR16032
PLOT NAME - 5
FILE - ...\TYPICAL SECTION 04TV.DGN