Section L: Signal & Lighting Plans

STATE OF SOUTH DAKOTA	PROJECT	SHEET	TOTAL SHEETS
	NH-PH 0085(20)26	L1	L50

Plotting Date: 06/20/2014

INDEX OF SHEETS

L1	General Layout With Index
L2 - L9	Estimate With General Notes & Tables
L10 - L13	Existing Signal & Signal Layouts
L14 - L30	Conduit Layouts
L31	Signal Timing
L32 - L38	Wiring Diagrams
L39 - L41	Special Detail
L42 - L50	Standard Plates

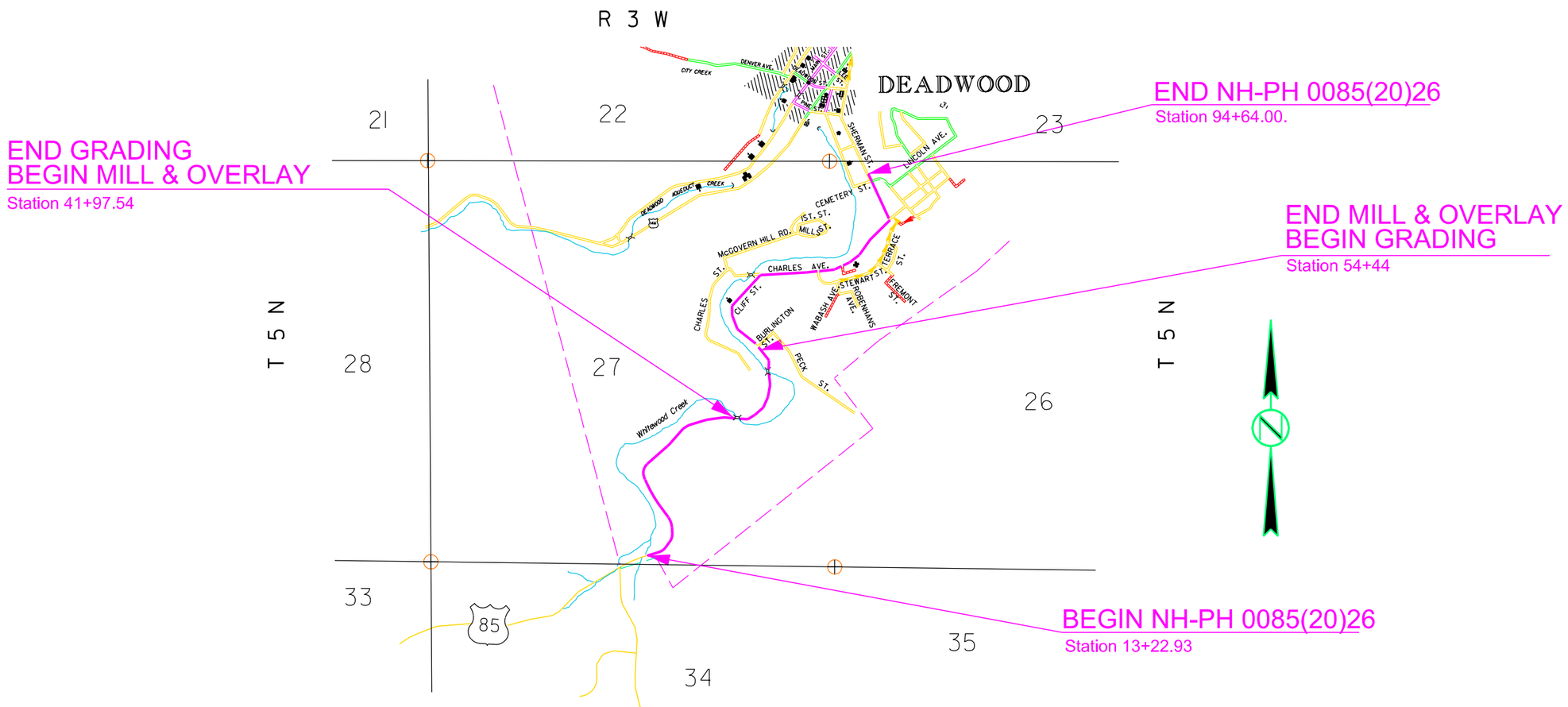

Plot Scale - 1:200

Plotted From - TRPR14341

File - U:\rdproj\law\0085\title_L.dgn

SECTION L ESTIMATE OF QUANTITIES

Bid Item Number	Item	Quantity	Unit
110E1540	Remove Luminaire Pole Footing	11	Each
110E5110	Salvage Signal Equipment	Lump Sum	LS
420E0400	Structure Excavation, Miscellaneous	22	CuYd
462E0100	Class M6 Concrete	5.4	CuYd
480E0200	Epoxy Coated Reinforcing Steel	792	Lb
632E3720	Relocate Radar Speed Sign	1	Each
635E0045	Breakaway Base Luminaire Pole with Arm, 45' Mounting Height	20	Each
635E0900	Decorative Luminaire Pole	33	Each
635E2000	Pedestal Signal Pole	5	Each
635E2025	Signal Pole with 25' Mast Arm	1	Each
635E2115	Signal Pole with 15' Mast Arm and Luminaire Arm	1	Each
635E2125	Signal Pole with 25' Mast Arm and Luminaire Arm	1	Each
635E3340	Roadway Luminaire, 400 Watt with Photoelectric Cell	22	Each
635E3440	Decorative Luminaire, 100 Watt with Photoelectric Cell	99	Each
635E4030	3 Section Vehicle Signal Head	10	Each
635E4040	4 Section Vehicle Signal Head	2	Each
635E5020	2' Diameter Footing	302.0	Ft
635E5030	3' Diameter Footing	26.0	Ft
635E5302	Type 2 Electrical Junction Box	25	Each
635E5303	Type 3 Electrical Junction Box	6	Each
635E5360	Surface Mounted Junction Box	2	Each
635E5400	Electrical Service Cabinet	5	Each
635E5430	Traffic Signal Controller	1	Each
635E5530	Preformed Detector Loop	9	Each
635E5550	Detector Unit	5	Each
635E5900	Pedestrian Push Button	12	Each
635E5910	Pedestrian Push Button Pole	12	Each
635E5922	Pedestrian Signal Head with Countdown Timer	8	Each
635E5930	Pedestrian Crossing Sign	14	Each
635E5980	Rectangular Rapid Flashing Beacon	2	Each
635E7500	Remove and Reset Luminaire Pole	11	Each
635E7908	0.75" Intermediate Metal Conduit	425	Ft
635E8020	2" Rigid Galvanized Steel Conduit	120	Ft
635E8120	2" Rigid Conduit, Schedule 40	10,615	Ft
635E8130	3" Rigid Conduit, Schedule 40	505	Ft
635E8140	4" Rigid Conduit, Schedule 40	15	Ft
635E8220	2" Rigid Conduit, Schedule 80	1,250	Ft
635E8230	3" Rigid Conduit, Schedule 80	165	Ft
635E9014	1/C #4 AWG Copper Wire	18,910	Ft
635E9016	1/C #6 AWG Copper Wire	26,830	Ft
635E9020	1/C #10 AWG Copper Wire	195	Ft
635E9024	1/C #14 AWG Copper Wire	1,140	Ft
635E9502	2/C #14 AWG Copper Tray Cable, K2	120	Ft
635E9504	4/C #14 AWG Copper Tray Cable, K2	1,725	Ft
635E9505	5/C #14 AWG Copper Tray Cable, K2	70	Ft
635E9507	7/C #14 AWG Copper Tray Cable, K2	160	Ft
635E9512	12/C #14 AWG Copper Tray Cable, K2	270	Ft
635E9519	19/C #14 AWG Copper Tray Cable, K2	115	Ft
635E9524	24/C #14 AWG Copper Tray Cable, K2	290	Ft
635E9600	#16 AWG Copper Twisted Shielded Pair	730	Ft
635E9710	2/C #10 AWG Copper Pole and Bracket Cable	2,140	Ft

TRAFFIC SIGNAL CONTROL CABLE LABELS

Traffic signal cable shall be identified in hand holes, junction boxes, pedestal bases, electrical service cabinets, and controller cabinets as indicated on the Wiring Diagram. Labels shall be wrapped around traffic signal cable to indicate the signal pole and signal head that it is connected to. Labels shall be self-adhesive vinyl cloth with a preprinted legend. Traffic signal control cables to the poles shall be marked with a legend and shall be color coded as follows; northwest (blue), northeast (red), southeast (green), and southwest (orange).

SUPPLYING AS BUILT PLANS

If the traffic signal systems or roadway lighting systems are constructed differently than what is stated in the plans, the Contractor shall supply as built plans to the Engineer and a copy shall be sent to the Traffic Design Engineer. The as built plans may include conduit layouts, wiring diagrams, or other drawings depicting the changes from the original plans.

SHOP DRAWING AND CATALOG CUTS SUBMITTALS

The Contractor shall submit shop drawings and catalog cuts in accordance with Section 985 of the Standard Specifications or in Adobe PDF format.

Adobe PDF submittals shall be sent to the following email addresses:

Stacy.Bartlett@state.sd.us
Pete.Longman@state.sd.us

ON-SITE INSPECTION

An on-site inspection of the traffic signal shall be conducted before acceptance of the project, once the traffic signal is completed and operational. The on-site inspection shall be conducted by the Project Engineer or Region Traffic Engineer with the Contractor, City Representative, and the Traffic Design Engineer present.

SALVAGE SIGNAL EQUIPMENT

Existing signal equipment shall be salvaged and delivered to the City of Deadwood by the Contractor. The Contractor shall notify the City 5 days before the delivery of the salvaged signal equipment. The City contact is Kevin Kuchenbecker at (605) 578-2082.

All costs for work involved in the salvage and delivery of the existing signal equipment shall be incidental to the contract lump sum price for "Salvage Signal Equipment".

REMOVE LUMINAIRE POLE FOOTING

The footings of existing luminaire poles EDL1–EDL8 & ETL8–ETL10 shall be removed by the Contractor to a minimum of 2' below the ground surface. Restoration of the disturbed area shall be to the satisfaction of the Engineer.

All costs for removing the footings of the existing luminaire poles shall be incidental to the contract unit price per each for "Remove Luminaire Pole Footing".

REMOVE AND RESET LUMINAIRE POLE

Existing luminaire poles EDL1–EDL8 & ETL8–ETL10 shall be removed and reset as REDL1-REDL8 & RETL8–RETL10 as shown on the plan sheets. Luminaire poles and luminaires damaged during relocation shall be repaired or replaced by the Contractor at no cost to the State.

It shall be the Contractor's responsibility to obtain the bolt circle pattern and anchor bolts for the relocated poles from the pole manufacturer listed below. Existing luminaire poles EDL1–EDL8 were purchased by the City of Deadwood and installed under Project NH 0085(00)27, PCEMS No. 276H. Existing luminaire poles ETL8–ETL10 were purchased and installed under Mickelson Trail Lighting Project.

Antique Street Lamps, Inc.
2011-b W Rundberg Ln
Austin, TX 78758
Phone (512) 977-8444

Reset luminaire poles RETL8–RETL10 shall be atop a gravity large concrete block mounted, refer to **Section E, Wall A, Retaining Wall Notes** of the plans for mounting locations.

Luminaire pole bases for RETL8–RETL10 shall have a ground rod and the intermediate metal conduit shall be used as a ground for the circuit.

All costs involved with removing and resetting the existing luminaire poles shall be incidental to the contract unit price per each for "Remove and Reset Luminaire Pole".

EXISTING LUMINAIRE POLES

Existing luminaire poles EL2-EL29 shall be removed by Black Hills Power. The Contractor shall coordinate the removal of the existing luminaire poles with the installation of the new luminaire poles with Black Hills Power.

All costs involved with coordinating the installation of the new luminaire poles shall be incidental to the contract unit price per each for "Breakaway Base Luminaire Pole with Arm, 50' Mounting Height".

TABLE OF FOOTING DATA

Site Designation	Footing Diameter	* Footing Depth	**Spiral Diameter	**Spiral Length	Vertical Reinforcement
DL1-DL3, DL5, DL7, DL9, DL11, DL13, DL15-DL25, DL27, DL29-DL33 & REDL1-REDL8	2' - 0"	4' - 0"	1' - 8"	33' - 9"	8-#7 x 3' - 6"
A2 & S1-S4	2' - 0"	6' - 0"	1' - 8"	44' - 3"	8-#7 x 5' - 6"
L1-L20	2' - 0"	7' - 0"	1' - 8"	49' - 6"	8-#7 x 6' - 6"
A3	3' - 0"	8' - 0"	2' - 8"	87' – 6"	14-#8 x 7' -6"
A1 & A4	3' - 0"	9' - 0"	2' - 8"	95' - 9"	14-#8 x 8' -6"

* Footing depth shall be below ground level.
** The size of all spirals shall be #3.

Plot Scale - 1:200
Plotted From - TRPR14341
File - ...\pr\lawr0555\NotesSectionL.dgn

FOOTING DATA

The subsurface conditions within the limits of the project generally consist of brown to gray schist derived gravelly silt-sand to gravelly clay-silt soil with gravel and cobble layers at various depths over in-place schist or rhyolite bedrock. Lab results classify the soil samples obtained from the borings as gravel silt-sand to sand-silt. The depth to bedrock varies from 2.5' below surface to greater than 15' below the surface. Review the table of US85 Boring Data to estimate the depth to bedrock throughout the project. Groundwater was not encountered in most of the borings but was measured to be between 9.2' and 18.9' below the surface in the borings it was observed in. Borings caved between 1.8' and 19.8' below the surface.

The subsurface conditions at the intersection of US85/Sherman St. & Cemetery St. consist of 7' to 8' of brown gravelly sand-silt with cobbles over in-place schist bedrock. No groundwater was encountered during the subsurface investigation at the intersection. The borings caved between 4.7' and 5.9' below the surface. Some of the cylindrical footings for the luminaires may encounter in-place schist. Additional effort may be required when excavating for these footings. If schist is encountered it may have to be prebored with a smaller bit and then drilled to the final footing diameter.

Three of the cylindrical footings for the traffic signals will encounter in-place schist. The density of the in-place schist varies from firm to hard. Drilling operations are expected to include the use of pilot rock bits and/or core barrels to advance the excavation.

During construction of the cylindrical footings, concrete placement operations should closely follow excavation procedures. The longer the excavations are left open the more likely caving may occur. If caving soils are encountered during excavation, casing may be required to construct the cylindrical footings.

If casing is required to construct the footings, it shall be of sufficient strength to withstand handling and installation procedures. The casing material may consist of sonotube, corrugated metal pipe, PVC, smooth metal pipe or any other material as approved by the Engineer.

Concrete shall not be dropped through standing water. If water is present in the excavation it shall be removed prior to concrete placement or the concrete shall be tremied. If caving occurs during dewatering the concrete shall be placed through a tremie or by means of a casing.

If in-place bedrock is present at the bottom of footing elevation during construction of the spread footing, the undercut will not be required.

Spread Footing on Rock

The rock surface shall be cleaned of all soil and debris prior to placing reinforcing steel for the spread footing. Cleaning shall be accomplished by water washing and/or air jetting. Material washed from the rock surface shall be directed into a sump or low area and physically removed from the exposed rock surface.

Vertical fractures in the foundation rock that are detrimental to the integrity of the foundation shall be repaired. Designated fractures shall be repaired by cleaning to remove soil and other relatively weak material to a depth of 1.5 to 2 times the width of the fracture. The cleaned opening shall then be filled with grout or a lean concrete mix.

The cost of cleaning the rock shall be incidental to the unit price bid for Structure Excavation. Payment shall be considered full compensation for all materials, labor equipment and incidentals necessary to satisfactorily complete the work.

FOOTING DATA (continued)

If the required depth to the bottom of the spread footing is not obtained during excavation due to in-place rock contact the Office of Bridge Design for a revised footing design.

The boring logs and laboratory tests are available for review at the Central Office in Pierre. If questions arise or additional information is needed concerning the cylindrical footings contact the Geotechnical Engineering Activity in Pierre at 605.773.3401.

BREAKAWAY BASES

A statement is required, signed by a Professional Engineer registered in the State of South Dakota, certifying that the breakaway base devices meet the design requirements, including breakaway and structural adequacy, of the current edition of the "AASHTO Specifications for Structural Supports for Highway Signs, Luminaires, and Traffic Signals". The physical testing procedures outlined in Section 8 of the Fifth Edition of the Aluminum Association's "Specifications for Aluminum Structures" may be used to establish service limits for structural adequacy certification of aluminum breakaway transformer bases and frangible couplings. If requested, test data of production samples to support the certification shall be provided.

POLES

New poles shall be galvanized steel. Galvanizing shall be in accordance with AASHTO Specification M111 (ASTM A123). Steel pole material shall be in accordance with ASTM A36, A242, A570, A572, A607 or A595 Grade A or B. A595 material shall be limited to a 3/8 inch maximum thickness. Steel pole material with a thickness of 1/2 inch to 2 inches, shall satisfy Charpy V-Notch toughness test requirements of 15 ft. lb. at 40 degrees F. The SDDOT Office of Bridge Design shall be contacted for Charpy impact requirements for steel pole material thickness greater than 2 inches.

The steel pole-to-base-plate connection shall be a full-penetration groove-welded connection with a backing ring as described in Table 11.9.3.1-1, Section 4.5 of the current edition of the "AASHTO Standard Specifications for Structural Supports for Highway Signs, Luminaires, and Traffic Signals".

Cantilever traffic signal supports, including anchor bolts, shall be designed for fatigue in accordance with Fatigue Importance Category III without galloping and truck induced gusts.

Signal poles shall have rotatable mast arms.

Luminaire extension(s) shall have a 45 Ft. mounting height with 8 Ft. arm.

All poles shall have transformer bases.

DECORATIVE POLES

Decorative luminaire poles DL1-DL33 shall be 12' smooth cast aluminum shaft with a 4" outside diameter. The decorative poles shall include a two arm ornamental top with 10" transition pieces painted the same color as the pole and tapped for triple sphere pole mount.

The decorative luminaire poles shall have a convenience duplex festoon outlet receptacle (15 amp, 3 wire) suitable for outdoor use.

Decorative luminaire poles shall have identical color, and match the triple mount appearance of existing decorative luminaire poles EDL1-EDL8. The following luminaire pole or **equivalent** meets the requirements for this design:

Antique Street Lamp: Sussex Series, Model Number PX S9 12 S4

MICKELSON TRAIL LIGHTING

The Contractor shall retain and restore all existing circuits for the Mickelson Trail Lighting according to the National Electric Code (NEC).

The existing circuits for the Mickelson Trail Lighting were installed under agreement between the City of Deadwood and Muth Electric, Inc. on December 17, 2007. Existing circuits are ¾" intermediate metal conduit (IMC), 2 wires (240V), each light base has a ground rod and the IMC was used as a ground for the circuit.

The Contractor shall install junction boxes JT1 & JT5 to intercept existing ¾" IMC for Mickelson Trail Lighting. Junction box JT1 shall be installed north of decorative trail luminaire ETL7 and junction box JT5 shall be installed north of decorative trail luminaire ETL11 as indicated on plan sheets.

The Contractor shall splice the existing 1/ C #6 AWG Copper Wire at junction box JT1 and place new IMC and 1/ C #6 AWG Copper Wire from junction box JT1 to junction box JT5. The Contractor shall splice the new 1/ C #6 AWG Copper Wire to the existing 1/ C #6 AWG Copper Wire at junction box JT5.

The Contractor shall match the ground resistance of installed IMC; including conduit elbows and conduit fittings, and junction boxes JT1 -JT5 to the existing IMC.

The Contractor shall consult the block retaining wall manufacturer for conduit installation to the decorative trail luminaires and refer to **Section E, Wall A, Retaining Wall Notes.**

All costs for supplying and installing junction boxes to match the ground resistance of existing IMC shall be incidental to the contract unit price per each for "Type 2 Electrical Junction Box".

All costs for supplying and installing IMC to match existing IMC shall be incidental to the contract unit price per each for "0.75" Intermediate Metal Conduit".

All work involved with installing the junction boxes to intercept the existing intermediate metal conduit, retaining the existing trail lighting circuitry in accordance with NEC and restoring operation of the decorative trail luminaires shall be incidental to the contract unit price per each for "Remove and Reset Luminaire Pole".

Plot Scale - 1:200
Plotted From - TRPR14341
File - ...\ph\lawr0555\NotesSectionL.dgn

LUMINAIRES

The accepted design for the roadway luminaires L1-L20 shall provide 1.2 and greater average maintained foot-candles and a uniformity ratio (average maintained to minimum maintained foot-candles) of 3:1 and less using the following parameters:

Setback:	0 Ft.
Lamp Loss Factor (LLF):	0.7
Width of Lighted Area:	36 Ft.
Spacing:	560 Ft.
Configuration:	Staggered
Mounting Height:	45 Ft.
Lamp:	400W HPS

The following luminaires meet the requirements for this design:

a.) Hubbell: Test No. HP03018.IES High Pressure Sodium, Medium, semi-cutoff, Type II

b.) Cooper Lighting: Test No. OVY4S3E.IES High Pressure Sodium, Medium, semi-cutoff, Type III

The accepted design for the roadway luminaires DL28-DL33 & REDL1-REDL8 shall provide 0.9 and greater average maintained foot-candles and a uniformity ratio (average maintained to minimum maintained foot-candles) of 3:1 and less using the following parameters:

Setback:	4 Ft.
Lamp Loss Factor (LLF):	0.7
Width of Lighted Area:	35 Ft.
Spacing:	130 Ft.
Configuration:	Staggered
Mounting Height:	12 Ft.
Lamp:	Triple Sphere 100W HPS

The accepted design for the roadway luminaires DL1-DL27 shall provide 0.8 and greater average maintained foot-candles and a uniformity ratio (average maintained to minimum maintained foot-candles) of 3:1 and less using the following parameters:

Setback:	4 Ft.
Lamp Loss Factor (LLF):	0.7
Width of Lighted Area:	35 Ft.
Spacing:	140 Ft.
Configuration:	Staggered
Mounting Height:	12 Ft.
Lamp:	Triple Spheres 100W HPS

The decorative luminaires shall match the triple sphere mount appearance of existing decorative luminaires EDL1-EDL8. The following decorative luminaire or **equivalent** meets the requirements for this design:

Antique Street Lamp: Test No. S14 100S PWS GR5

Three copies of the isofootcandle charts and utilization curves shall be furnished to the Engineer for approval. The Contractor must get approval from the Engineer prior to installation of the luminaires.

The approved isofootcandle data for each case shall be used to determine the correct socket position at each site. Each luminaire shall be installed with its lamp socket in the proper position and in a level attitude.

TRAFFIC SIGNAL CONTROLLER

The controller shall be a solid state, digital, NEMA TS2 Type 1 from the approved product list and as approved by the South Dakota Department of Transportation Traffic Design Engineer in the Office of Road Design.

The controller shall be two through twelve phase controllers.

Vehicle detectors E1, E2, N1-N3, W1 & W2 shall operate in the presence (non-locking) mode and shall have call delay timing capability. The call delay feature shall be inhibited by the controller. Set these detectors to 3 seconds delay.

Vehicle detectors S1 & N4 shall operate in the passage (locking) mode

The controller cabinet doors shall be hinged on the right side.

Digital timing shall be provided with a battery backup.

The controller shall alternate the red and yellow indication when flashing.

The interface panels shall be capable of inserting up to sixteen load switches.

The controller cabinet shall be pad mounted.

The controller shall be capable of programming by manual entry via the front panel keyboard, data downloading from a portable PC computer via null-modem cable, and data downloading from one controller to another using a serial port on each controller.

The controller shall be capable of operating coordinated by time-based, hardwire, and telemetry.

The controller cabinet shall be capable of placing vehicle and pedestrian calls into the controller. Placed calls shall provide for eight vehicle phases and four pedestrian phases. The placed calls for vehicle phases shall be capable of extending the associated vehicle phase by continuous or intermittent contact.

The controller shall have a copy function to copy all timing data from one phase to another. The controllers shall also permit copying all coordination pattern data from one pattern to another.

A Malfunction Management Unit shall be installed in each cabinet and shall conform to the requirements of NEMA Standard TS-2 Section 4.

A sufficient quantity of BUS Interface Units shall be installed in the cabinet to provide communication between detectors, load switches, controller unit, etc. Each BUS Interface Unit shall conform to NEMA Standard TS-2, Section 8.

The controller shall have internal signal dimming.

The controller Solid State Flasher shall have dimming capability.

The Contractor is responsible for programming controller with the signal timings provided in these plans.

All costs for constructing the concrete pad and footing, materials, labor, and furnishing and installing the controller cabinet shall be incidental to the contract unit price per each for “Traffic Signal Controller”.

CONTROLLER PROGRAMMING

The Contractor shall furnish the Road Design Office with a copy of the data programmed into the Controller prior to the full operation of the Controller for approval. The address is as follows:

Pete Longman or Stacy Bartlett
Traffic Design Engineer
Office of Road Design
700 East Broadway
Pierre, SD 57501

TRAFFIC SIGNAL METER SOCKET

The meter socket provided for traffic signal by the Contractor shall be a 200 amp, positive by-pass.

SIGNAL BACKPLATES

Signal backplates shall extend not less than 5 inches from the edge of the signal head at the top, bottom, and sides. The bottom of the backplate on vehicle signal faces mounted directly above pedestrian signal indications shall be sized to permit the separate adjustment of the vehicle and pedestrian signal indication and may be less than 4 inches. All backplates shall have a dull black finish. Signal backplates shall be polycarbonate.

SIGNAL AIMING

Signals shall be aimed and trees shall be trimmed such that all the signals for each approach shall be continuously visible for the minimum distance listed in the table in Section 4D.12 of the MUTCD.

SURFACE MOUNTED JUNCTION BOXES

Surface mounted junction boxes shall comply with NEMA 4X stainless steel, shall be UL-listed and, at a minimum, shall be sized according to Article 314 of the 2008 National Electrical Code. The stainless steel junction box shall have the cover held in place with a continuous hinge and kept closed with screws and clamps on the remaining three sides. The cover shall be removable by removing the pin with the continuous hinge. All seams shall be continuously welded. Gaskets shall be closed cell neoprene.

RIGID STEEL CONDUIT

The Contractor shall install steel conduit on the existing structure at approximately Station 42+00 to 43+00. The Contractor shall use corrosion resistant brackets for attachment to the structure. Inserts shall be galvanized or corrosion resistant.

All costs for installing the steel conduit on the structure and furnishing and installing the attachment hardware shall be incidental to the contract unit price per foot for “2” Rigid Steel Conduit”.

Plot Scale - 1:200
Plotted From - TRPR14341
File - ...\pnlawn0555\NotesSectionL.dgn

PEDESTRIAN PUSH BUTTON

The pedestrian push button shall meet the following requirements:

General Requirements:

1. Shall be pressure activated with essentially no moving parts.
2. Shall be vandal resistant.
3. Shall activate with 3 lbs. force or less.
4. Shall have an LED that illuminates when the button is being pushed and remains illuminated until the pedestrian call is served.
5. Shall give a toned beep verification of button being pushed.
6. Shall have an operating life of 1 million actuations.
7. Shall be compatible with NEMA TS1 and TS2 controllers.

Housing:

1. Button housing shall be high impact cast or machined aluminum.
2. All switch electronics shall be sealed within the high impact cast or machined aluminum housing.
3. Shall have a gasket between the button housing and the mounting cup.

Electrical:

1. Operating Voltage: 15 to 24V DC or 12 to 24V AC.
2. On Resistance 10 Ohms (When the button is activated and placing a call).
3. Standby Current 10 micro amps typical.
4. Shall have built in surge protection.
5. Shall have a solid state electronic piezo switch rated for 1 million cycles with no moving plunger or moving electrical contacts.
6. Shall hold the call for a minimum of 5 seconds.
7. Requires only two conductors be run from the traffic signal cabinet to the push button to operate.
8. Six units wired in parallel on a single pedestrian isolator input shall not pull the input voltage of the pedestrian isolator down such that a false pedestrian call is placed in the controller.

RELOCATE RADAR SPEED SIGN

The existing “Your Speed is XX“ sign located along US HWY 85 at approximately station 75+00 R shall be removed, relocated and reset by the Contractor as indicated on the Conduit Layout Sheets.

The “Your Speed is XX“ sign shall be reset on a telespar pole by the Contractor, see Section S for mounting quantities.

The Contractor shall make all necessary connections to make the “Your Speed is XX“ sign operational.

All costs for labor and materials required to remove, relocate and reset the “Your Speed is XX“ sign shall be incidental to the contract price per each for “Relocate Radar Speed Sign”.

RECTANGULAR RAPID FLASHING BEACONS (RRFB)

1. Beacon Dimensions and Placement in Sign Assembly:

Each RRFB shall consist of two rectangular-shaped yellow indications, each with an LED-array based light source. Each RRFB indication shall be a minimum of approximately 5 inches wide by approximately 2 inches high.

RRFB shall be located on the right and left hand side of the road for both directions of traffic.

The two RRFB indications shall be aligned horizontally, with the longer dimension horizontal and with a minimum space between the two indications of approximately 7 inches, measured from inside edge of one indication to inside edge of the other indication.

The outside edges of the RRFB indications, including any housings, shall not project beyond the outside edges of the W11-2 sign.

The RRFB shall be located between the bottom of the pedestrian crossing warning sign and the top of the supplemental downward diagonal arrow.

2. Beacon Flashing Requirements:

When activated, the two yellow indications in each RRFB shall flash in a rapidly alternating "wig-wag" flashing sequence (left light on, then right light on).

Each of the two yellow indications of the RRFB shall have 70 to 80 periods of flashing per minute and shall have alternating but approximately equal periods of rapid pulsing light emissions and dark operation. During each of its 70 to 80 flashing periods per minute, one of the yellow indications on the left side of the RRFB shall emit two slow pulses of light after which the yellow indication on the right side of the RRFB shall emit four rapid pulses of light followed by a long pulse.

The flash rate of each individual yellow indication, as applied over the full on-off sequence of a flashing period of the indication, shall not be between 5 and 30 flashes per second, to avoid frequencies that might cause seizures.

The light intensity of the yellow indications shall meet the minimum specifications of the Society of Automotive Engineers (SAE) standard J595 (Directional Flashing Optical Warning Devices for Authorized Emergency, Maintenance, and Service Vehicles) Class 1 yellow peak luminous intensity dated January 2005.

RECTANGULAR RAPID FLASHING BEACONS (continued)

3. Beacon Operation:

The RRFB shall be normally dark, shall initiate operation only upon pedestrian actuation, and shall cease operation at a predetermined time of 28 seconds after the pedestrian actuation.

All RRFBs associated with a given crosswalk (including those with an advance crossing sign, if used) shall, when activated, simultaneously commence operation of their alternating rapid flashing indications and shall cease operation simultaneously.

A pedestrian instruction sign with the legend PUSH BUTTON FOR WARNING FLASHER and WATCH FOR TRAFFIC should be mounted adjacent to or integral with each pedestrian pushbutton.

A small light directed at and visible to pedestrians in the crosswalk shall be installed integral to the RRFB or push button to give confirmation that the RRFB is in operation.

4. Other:

Except as otherwise provided above, all other provisions of the MUTCD applicable to Warning Beacons shall apply to RRFBs.

REPLACE PEDESTRIAN INSTRUCTION SIGN

The Contractor shall remove the existing pedestrian instruction signs located at US HWY 14A/US HWY 85 & Wall St and install pedestrian instruction signs having the legend PUSH BUTTON FOR WARNING FLASHER and WATCH FOR TRAFFIC as indicated on the Existing RRFB & Signs Sheet.

The pedestrian instruction signs with the legend PUSH BUTTON FOR WARNING FLASHER and WATCH FOR TRAFFIC should be mounted at the location of the removed pedestrian instruction signs.

All costs for work involved in removing the existing pedestrian instruction signs shall be incidental to the contract lump sum price for “Salvage Signal Equipment”. All costs for labor and materials required to mount pedestrian instruction signs with the legend PUSH BUTTON FOR WARNING FLASHER and WATCH FOR TRAFFIC shall be incidental to the contract price per each for “Pedestrian Crossing Sign”.

Plot Scale - 1:200
Plotted From - TRPR14341
File - ...\pr\lawn\0555\NotesSectionL.dgn

TABLE OF CONDUIT AND CABLE QUANTITIES

STATE OF SOUTH DAKOTA	PROJECT	SHEET	TOTAL SHEETS
	NH-PH 0085(20)26	L6	L50

Plotting Date: 06/20/2014

		Rigid Conduit									Copper Wire				Copper Tray Cable, K2							Twisted Shielded Pair		Pole and Bracket Cable	
		Schedule 40			Schedule 80		Steel		IMC						#14 AWG										
		2"	3"	4"	2"	3"	2"		3/4"		1/C #4 AWG	1/C #6 AWG	1/C #10 AWG	1/C #14 AWG	2/C	4/C	5/C	7/C	12/C	19/C	24/C	#16 AWG		2/C #10 AWG	
Location to Location		Ft	Ft	Ft	Ft	Ft	Ft		Ft		Ft	Ft	Ft	Ft	Ft	Ft	Ft	Ft	Ft	Ft	Ft	Ft		Ft	
LIGHTING																									
L1	JL1	190			35							700													
JL1	L2				60							190													
JL1	L3	235			35							835													
L3	JL2	285										885													
JL2	L4				60							190													
JL2	L5	295										915													
L5	JL3	300										930													
JL3	L6				60							190													
JL3	L7	300										930													
L7	JL4	170										530													
JL4	SERVICE CABINET	35										220													
JL4	JL5	125										390													
JL5	L8				60							190													
JL5	L9	290										900													
L9	L10	285										885													
L10	L11	220			60							870													
L11	SJ1	105										850													
SJ1	SJ2						120																		
SJ2	JL6	75																							
JL6	L12				65							205													
JL6	L13	265										820													
L13	L14	260										805													
L15	JL7	265										820													
JL7	L16				75							235													
JL7	L17	275										850													
L17	JL8	295										915													
JL8	L18				65							205													
JL8	L19	290										900													
L19	JL9	305										945													
JL9	SERVICE CABINET		30								250	95													
JL9	JL10				95						785														
JL9	L20	20										65													
JL10	DL1	15										50													
JL10	DL3	135									560														
DL3	DL5	145									600														
DL5	DL7	160									660														
DL7	DL9	160									660														
DL9	DL11	140			25						680														
DL11	DL13	185									765														
DL13	DL15	140									435														
JL10	JL11				70						290														
JL11	DL2	90									375														
DL2	DL4	125									520														
DL4	DL6	150									620														
DL6	DL8	160									660														
DL8	DL10	145									600														
DL10	DL12	180									745														
DL12	DL14	145									450														
JT1	JT2								70			220													
JT2	RETL8								15			50													
JT2	JT3								100			310													
JT3	RETL9								15			50													
JT3	JT4								100			310													
JT4	RETL10								15			50													
JT4	JT5								110			340													
	Subtotal:	6,960	30	0	765	0	120		425		9,655	18,840	0	0		0	0	0	0	0	0	0		0	0

Plot Scale - 1:200

Plotted From - TRPR14341

File - ...\pr\lawr0555\TableConduit.dgn

TABLE OF CONDUIT AND CABLE QUANTITIES

STATE OF SOUTH DAKOTA	PROJECT	SHEET	TOTAL SHEETS
	NH-PH 0085(20)26	L7	L50

Plotting Date: 06/20/2014

		Rigid Conduit									Copper Wire				Copper Tray Cable, K2							Twisted Shielded Pair	Pole and Bracket Cable
		Schedule 40			Schedule 80		Steel		IMC						#14 AWG								
Location to Location		2" Ft	3" Ft	4" Ft	2" Ft	3" Ft	2" Ft		3/4" Ft		1/C #4 AWG Ft	1/C #6 AWG Ft	1/C #10 AWG Ft	1/C #14 AWG Ft	2/C Ft	4/C Ft	5/C Ft	7/C Ft	12/C Ft	19/C Ft	24/C Ft	#16 AWG Ft	2/C #10 AWG Ft
LIGHTING																							
DL16	JS2	160										495											
JS2	JS1		175								540	725											
JS2	DL18	20										65											
JS2	S4		35								120					80			40				
JS2	PS4	30														35							
JS2	JS3				70											75			75				
JS3	S1	25																	30				
JS3	PS1	20														25							
JS1	DL20	40										125											
JS1	S3		25								80	105				50			25				
JS1	PS3	20														25							
JS1	JS4				70											75			75				
JS4	S2	20																	25				
JS4	PS2	25														30							
JS1	JL12		135								840	560											
JL12	SERVICE CABINET		35								220	290											
JL12	JL13				70							290											
DL17	DL19	150										465											
DL19	DL21	150										620											
DL21	JL13	70										290											
JL12	DL22	35										145											
DL22	DL24	155										640											
DL24	DL26	150										620											
DL26	DL28	145										450											
JL13	DL23	70										290											
DL23	DL25	145										600											
DL25	DL27	150										465											
DL29	DL31	110									340												
DL31	DL33	130									540												
DL33	REDL2	120									495												
REDL2	REDL4	70			65						560												
REDL4	JL14	205			35						970												
JL14	REDL7	80									250												
DL30	DL32	85			50						420												
DL32	REDL1	155									640												
REDL1	REDL3	115									475												
REDL3	REDL5	135									560												
REDL5	JL15	120			65						765												
JL15	REDL6	15									50												
JL15	REDL8	120									370												
JL15	JL14				60						250												
JL15	SERVICE CABINET		70								580												
LUMINAIRE POLES																							
LUMINAIRE POLE	L1																						60
LUMINAIRE POLE	L2																						60
LUMINAIRE POLE	L3																						60
LUMINAIRE POLE	L4																						60
LUMINAIRE POLE	L5																						60
LUMINAIRE POLE	L6																						60
LUMINAIRE POLE	L7																						60
LUMINAIRE POLE	L8																						60
LUMINAIRE POLE	L9																						60
LUMINAIRE POLE	L10																						60
LUMINAIRE POLE	L11																						60
LUMINAIRE POLE	L12																						60
LUMINAIRE POLE	L13																						60
LUMINAIRE POLE	L14																						60
	Subtotal:	3,040	475	0	485	0	0		0		9,065	7,240	0	0	0	395	0	0	270	0	0	0	840

Plot Scale - 1:200

Plotted From - TRPR14341

File - ...\pr\lawr0555\TableConduit.dgn

TABLE OF CONDUIT AND CABLE QUANTITIES

STATE OF SOUTH DAKOTA	PROJECT	SHEET	TOTAL SHEETS
	NH-PH 0085(20)26	L8	L50

Plotting Date: 06/20/2014

Location to Location		Rigid Conduit									Copper Wire				Copper Tray Cable, K2							Twisted Shielded Pair		Pole and Bracket Cable	
		Schedule 40			Schedule 80		Steel		IMC						#14 AWG										
		2" Ft	3" Ft	4" Ft	2" Ft	3" Ft	2" Ft		3/4" Ft		1/C #4 AWG Ft	1/C #6 AWG Ft	1/C #10 AWG Ft	1/C #14 AWG Ft	2/C Ft	4/C Ft	5/C Ft	7/C Ft	12/C Ft	19/C Ft	24/C Ft	#16 AWG Ft		2/C #10 AWG Ft	
LUMINAIRE POLES																									
LUMINAIRE POLE	L15																							60	
LUMINAIRE POLE	L16																							60	
LUMINAIRE POLE	L17																							60	
LUMINAIRE POLE	L18																							60	
LUMINAIRE POLE	L19																							60	
LUMINAIRE POLE	L20																							60	
LUMINAIRE POLE	DL1													30										20	
LUMINAIRE POLE	DL2													30										20	
LUMINAIRE POLE	DL3													30										20	
LUMINAIRE POLE	DL4													30										20	
LUMINAIRE POLE	DL5													30										20	
LUMINAIRE POLE	DL6													30										20	
LUMINAIRE POLE	DL7													30										20	
LUMINAIRE POLE	DL8													30										20	
LUMINAIRE POLE	DL9													30										20	
LUMINAIRE POLE	DL10													30										20	
LUMINAIRE POLE	DL11													30										20	
LUMINAIRE POLE	DL12													30										20	
LUMINAIRE POLE	DL13													30										20	
LUMINAIRE POLE	DL14													30										20	
LUMINAIRE POLE	DL15													30										20	
LUMINAIRE POLE	DL16													30										20	
LUMINAIRE POLE	DL17													30										20	
LUMINAIRE POLE	DL18													30										20	
LUMINAIRE POLE	DL19													30										20	
LUMINAIRE POLE	DL20													30										20	
LUMINAIRE POLE	DL21													30										20	
LUMINAIRE POLE	DL22													30										20	
LUMINAIRE POLE	DL23													30										20	
LUMINAIRE POLE	DL24													30										20	
LUMINAIRE POLE	DL25													30										20	
LUMINAIRE POLE	DL26													30										20	
LUMINAIRE POLE	DL27													30										20	
LUMINAIRE POLE	DL28													30										20	
LUMINAIRE POLE	DL29													30										20	
LUMINAIRE POLE	DL30													30										20	
LUMINAIRE POLE	DL31													30										20	
LUMINAIRE POLE	DL32													30										20	
LUMINAIRE POLE	DL33													30										20	
LUMINAIRE POLE	REDL1													30										20	
LUMINAIRE POLE	REDL2													30										20	
LUMINAIRE POLE	REDL3													30										20	
LUMINAIRE POLE	REDL4													30										20	
LUMINAIRE POLE	REDL5													30										20	
LUMINAIRE POLE	RETL8																							20	
LUMINAIRE POLE	RETL9																							20	
LUMINAIRE POLE	RETL10																							20	
Subtotal:		0	0	0	0	0	0		0		0	0	0	1,140	0	0	0	0	0	0	0	0		1,180	

Plot Scale - 1:200

Plotted From - TRPR14341

File - ...\pn\lawr0555\TableConduit.dgn

TABLE OF CONDUIT AND CABLE QUANTITIES

STATE OF SOUTH DAKOTA	PROJECT	SHEET	TOTAL SHEETS
	NH-PH 0085(20)26	L9	L50

Plotting Date: 06/20/2014

		Rigid Conduit									Copper Wire				Copper Tray Cable, K2							Twisted Shielded Pair	Pole and Bracket Cable
		Schedule 40			Schedule 80		Steel		IMC						#14 AWG								
		2"	3"	4"	2"	3"	2"		3/4"		1/C #4 AWG	1/C #6 AWG	1/C #10 AWG	1/C #14 AWG	2/C	4/C	5/C	7/C	12/C	19/C	24/C	#16 AWG	2/C #10 AWG
Location to Location		Ft	Ft	Ft	Ft	Ft	Ft		Ft		Ft	Ft	Ft	Ft	Ft	Ft	Ft	Ft	Ft	Ft	Ft	Ft	Ft
US HWY 85 & CEMETARY STREET																							
SERVICE CABINET	JA1	45									140	140											
JA1	CONTROLLER			15							50					125		20		20	50	80	
JA1	A3	15																			20		
JA1	PA5	20														25							
JA1	PA6	10														15							
JA1	JA2	20																				25	
JA1	JA3					55						170				115					60	60	
JA3	A4	15										50									20		
JA3	PA7	10														15							
JA3	PA8	25														30							
JA3	JA4	140																				145	
JA1	JA5					70						215				290		75		75	75	215	
JA5	A2	15																		20			
JA5	PA3	20														25							
JA5	PA4	20														25							
JA5	JA6	30																				65	
JA6	JA7	100																				105	
JA5	JA8	30																				35	
JA5	JA9					40						125				85		45			45		
JA9	A1	15										50						20			20		
JA9	PA1	20														25							
JA9	PA2	20														25							
SIGNAL POLE	A1															100	50						60
SIGNAL POLE	A2															65							
SIGNAL POLE	A3															115							
SIGNAL POLE	A4															90	20						60
PED PB POLE	PA1														10								
PED PB POLE	PA2														10								
PED PB POLE	PA3														10								
PED PB POLE	PA4														10								
PED PB POLE	PA5														10								
PED PB POLE	PA6														10								
PED PB POLE	PA7														10								
PED PB POLE	PA8														10								
SERVICE CABINET	JB1	35											110										
JB1	SIGN POST	10											35										
SIGN POST													50										
SIGNAL POLE	S1															40							
SIGNAL POLE	S2															40							
SIGNAL POLE	S3															40							
SIGNAL POLE	S4															40							
PED PB POLE	PS1														10								
PED PB POLE	PS2														10								
PED PB POLE	PS3														10								
PED PB POLE	PS4														10								
Subtotal:		615	0	15	0	165	0		0		190	750	195	0	120	1,330	70	160	0	115	290	730	120
Total:		10,615	505	15	1,250	165	120		425		18,910	26,830	195	1,140	120	1,725	70	160	270	115	290	730	2,140

Plot Scale - 1:200

Plotted From - TRPR14341

File - ...\prj\lawr0555\TableConduit.dgn

STATE OF SOUTH DAKOTA	PROJECT	SHEET	TOTAL SHEETS
	NH-PH 0085(20)26	L10	L50

Plotting Date: 06/20/2014

RECTANGULAR RAPID FLASHING BEACONS & SIGNS LAYOUT

US HWY 85

SCALE
1" = 40'

ESTIMATE OF QUANTITIES

KEY	ITEM	EST QUANT	UNIT
PUSH BUTTON FOR WARNING FLASHER / WATCH FOR TRAFFIC	PEDESTRIAN CROSSING SIGN	4	EACH
PB	PEDESTRIAN PUSH BUTTON	4	EACH
	PEDESTRIAN PUSH BUTTON POLE (PS1-PS4)	4	EACH
	4" PEDESTAL SIGNAL POLE (S1-S4)	4	EACH
	RECTANGULAR RAPID FLASHING BEACON (1-4,5-8)	2	EACH
	PEDESTRIAN SIGN W11-2 SEE SECTION S	8	EACH
	PEDESTRIAN DIRECTIONAL SIGN W16-7pL/W16-7pR SEE SECTION S	8	EACH

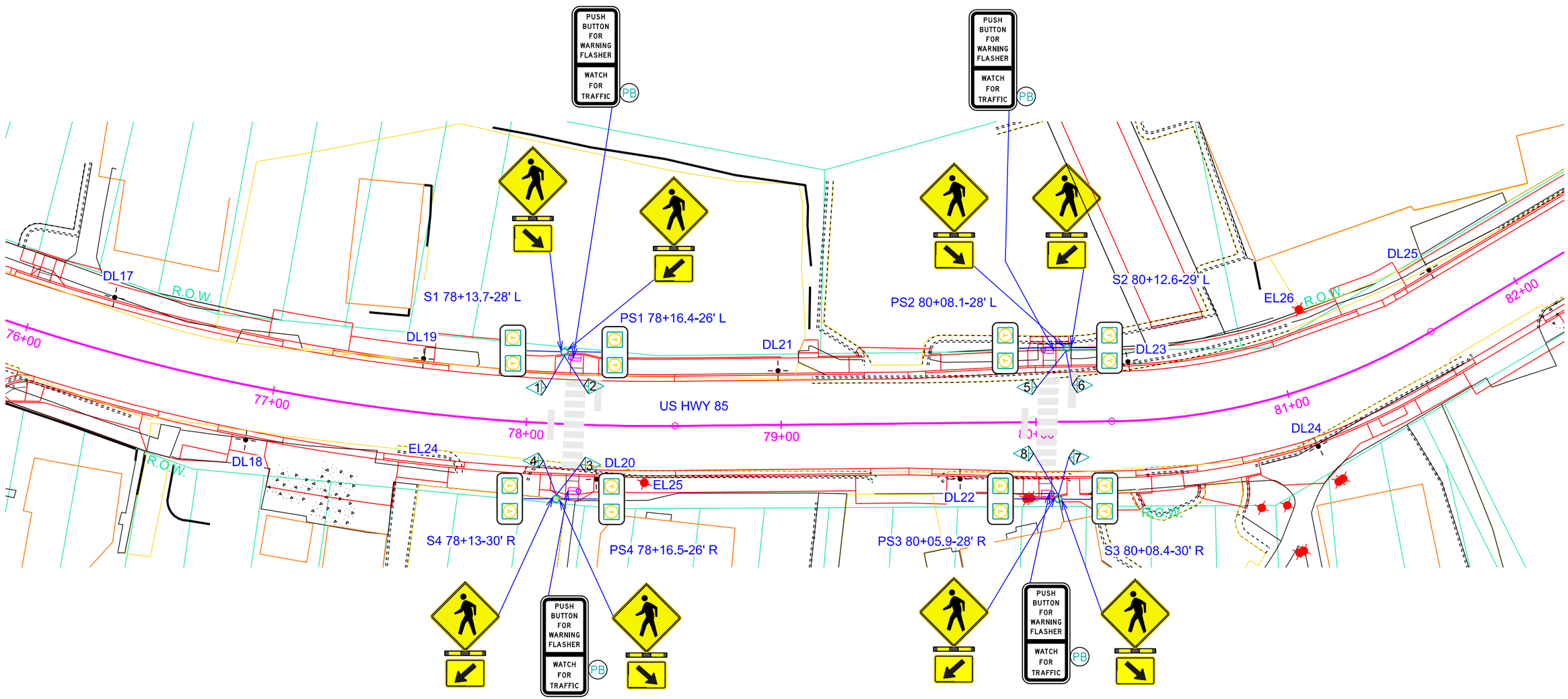

Plot Scale - 1:40
Plotted From - TRPR14341
File - U:\rdprj\law\0555\079s.dgn

STATE OF SOUTH DAKOTA	PROJECT	SHEET	TOTAL SHEETS
	NH-PH 0085(20)26	L11	L50

Plotting Date: 06/20/2014

EXISTING RECTANGULAR RAPID FLASHING BEACONS & SIGNS

US HWY 14A/US HWY 85 & WALL STREET

EXISTING ITEMS

KEY	ITEM
PB	PEDESTRIAN PUSH BUTTON
	2 X 2 PERFORATED TUBE POST (PA1,PA2)
	2 X 2 PERFORATED TUBE POST (S1)
	RECTANGULAR RAPID FLASHING BEACON (1,4 & 2,3)
	PEDESTRIAN SIGN W11-2 (PA1,PA2), RESA2, EL1
	PEDESTRIAN DIRECTIONAL SIGN W16-7pL/W16-7pR (PA1,PA2)
AHEAD	AHEAD SIGN W16-9p (EL1,RESA2)
STATE LAW / TO / WITHIN CROSSWALK	PEDESTRIAN CROSSING SIGN R1-6 (S1)

ESTIMATE OF QUANTITIES

KEY	ITEM	EST QUANT	UNIT
PUSH BUTTON FOR WARNING FLASHER / WATCH FOR TRAFFIC	PEDESTRIAN CROSSING SIGN (PA1&PA2)	2	EACH
	SALVAGE SIGNAL EQUIPMENT	LUMP SUM	LS

SALVAGE SIGNAL EQUIPMENT

KEY	ITEM
1. Push Button To Alert Motorist. 2. Wait For Vehicles To Stop 3. Cross Carefully & 4. Thank The Driver	REMOVE PEDESTRIAN CROSSING SIGN (PA1,PA2)

SCALE
1" = 40'

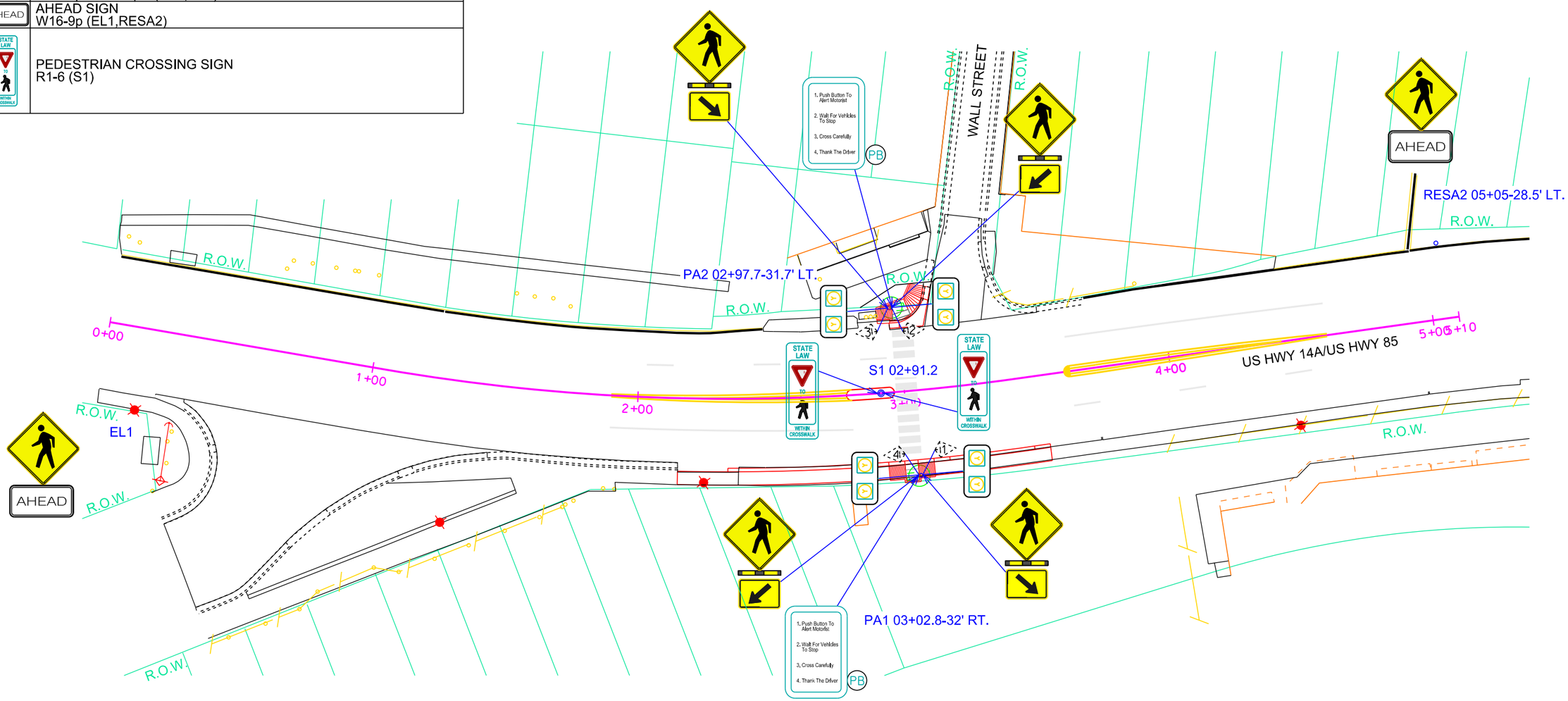

Plot Scale - 1:40

Plotted From - TRPR14341

File - U:\rdpr\lawr0555\0035.dgn

EXISTING SIGNAL LAYOUT

US HWY 85 & CEMETERY STREET

STATE OF SOUTH DAKOTA	PROJECT	SHEET	TOTAL SHEETS
	NH-PH 0085(20)26	L12	L50

Plotting Date: 06/20/2014

SCALE
1" = 40'

SALVAGE SIGNAL EQUIPMENT	
KEY	ITEM
	SPAN WIRE SYSTEM (EA1-EA4)
	3 SECTION VEHICLE SIGNAL HEAD (2,3,5-8)
	5 SECTION VEHICLE SIGNAL HEAD (1,4)
	TRAFFIC SIGNAL CONTROLLER
	PEDESTRIAN SIGNAL HEAD (9,10)

ESTIMATE OF QUANTITIES			
KEY	ITEM	EST QUANT	UNIT
	SALVAGE SIGNAL EQUIPMENT	LUMP SUM	LS

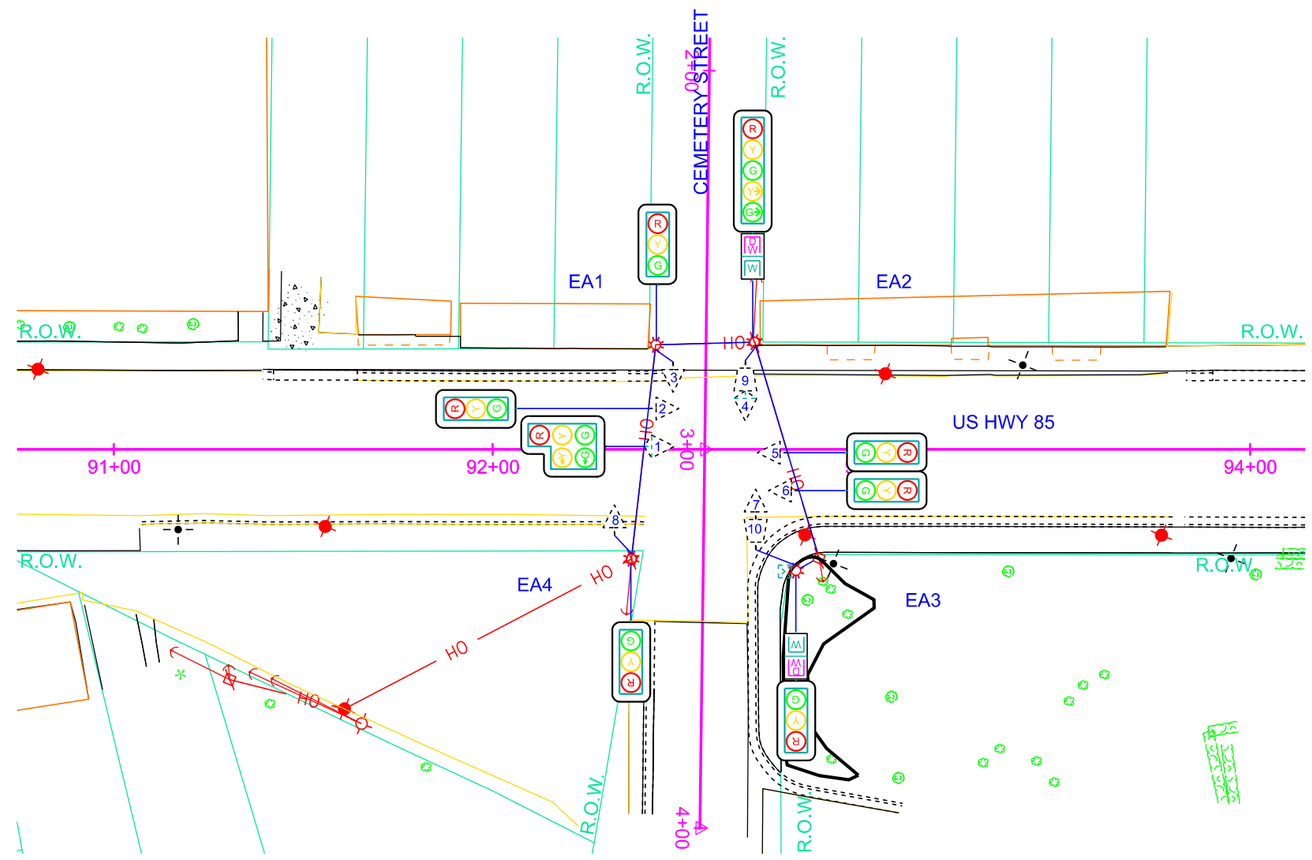

Plot Scale - 1:40
Plotted From - TRPR14341
File - U:\rdp\hawr0555\093es.dgn

STATE OF SOUTH DAKOTA	PROJECT	SHEET	TOTAL SHEETS
	NH-PH 0085(20)26	L13	L50

Plotting Date: 06/20/2014

SIGNAL LAYOUT

US HWY 85 & CEMETERY STREET

ESTIMATE OF QUANTITIES

KEY	ITEM	EST QUANT	UNIT
	SIGNAL PEDESTAL POLE (A2)	1	EACH
	SIGNAL POLE W/25' MAST ARM (A3)	1	EACH
	SIGNAL POLE W/15' MAST ARM & 8' LUMIN ARM 50' MT HT (A4)	1	EACH
	SIGNAL POLE W/25' MAST ARM & 8' LUMIN ARM 50' MT HT (A1)	1	EACH
	ROADWAY LUMINAIRE, 400W WITH P.E. (A1,A4)	2	EACH
	3 SECTION VEHICLE SIGNAL HEAD (3-12)	10	EACH
	4 SECTION VEHICLE SIGNAL HEAD (1,2)	2	EACH
PB	PEDESTRIAN PUSH BUTTON	8	EACH
	PEDESTRIAN PUSH BUTTON POLE (PA1-PA8)	8	EACH
	PEDESTRIAN SIGNAL HEAD W/COUNTDOWN TIMER (13-20)	8	EACH
	PEDESTRIAN CROSSING SIGN R10-3e (LEFT - 4/RIGHT - 4)	8	EACH

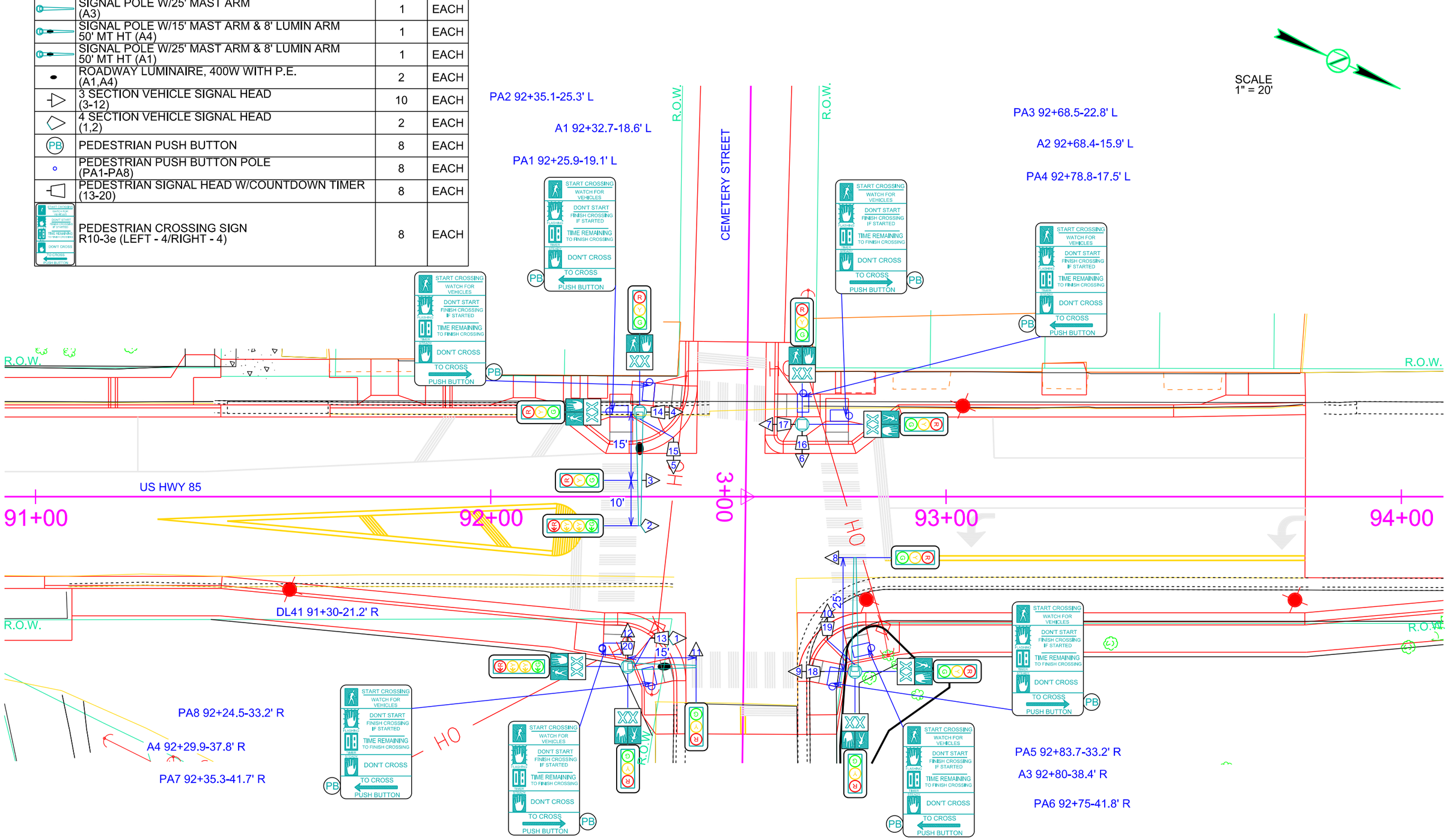

Plot Scale - 1:40

Plotted From - TRPR14341

File - U:\rdphlawr0555\092s.dgn

CONDUIT LAYOUT

US HWY 85

STATE OF SOUTH DAKOTA	PROJECT	SHEET	TOTAL SHEETS
	NH-PH 0085(20)26	L14	L50

Plotting Date: 06/20/2014

EXISTING ITEMS

KEY	ITEM
	LUMINAIRE POLE (EL1,EDL9)
	ROADWAY LUMINAIRE, 400W WITH P.E. (EL1)
	TRIPLE SPHERE DECORATIVE LUMINAIRE, 100W EACH (EDL9)
	DECORATIVE TRAIL LUMINAIRE (ETL1-ETL24)
3/4" IMC	3/4" INTERMEDIATE METAL CONDUIT
#6	1/C #6 AWG COPPER WIRE
#10	1/C #10 AWG COPPER WIRE

ESTIMATE OF QUANTITIES (ROADWAY LIGHTING)

KEY	ITEM	EST QUANT	UNIT
	REMOVE AND RESET LUMINAIRE POLE 12' MT HT (EDL1-EDL8 AS REDL1-REDL8)	8	EACH
	BREAKAWAY BASE LUMINAIRE POLE W/8' ARM 45' MT HT (L1-L20)	20	EACH
	DECORATIVE LUMINAIRE POLE 12' MT HT (DL1-DL33)	33	EACH
	GALVANIZED STEEL UTILITY POLE NOT A BID ITEM	4	EACH
	ROADWAY LUMINAIRE, 400W WITH P.E. (L1-L20)	20	EACH
	DECORATIVE LUMINAIRE, 100W WITH P.E., TRIPLE SPHERE MOUNT (DL1-DL33)	99	EACH
	2' DIAMETER FOOTING (DL1-DL3,DL5,DL7,DL9,DL11,DL15-DL25,DL27, DL29-DL33,L1-L20,REDL1-REDL8)	272	FT
	EPOXY COATED REINFORCING STEEL (DL4,DL6,DL8,DL10,DL12-DL14,DL26,DL28)	792	LB
	CLASS M6 CONCRETE (DL4,DL6,DL8,DL10,DL12-DL14,DL26,DL28)	5.4	Cu Yd
	STRUCTURAL EXCAVATION, MISCELLANEOUS (DL4,DL6,DL8,DL10,DL12-DL14,DL26,DL28)	22	Cu Yd
	TYPE 2 ELECTRICAL JUNCTION BOX (JL1-JL15)	15	EACH
	SURFACE MOUNTED JUNCTION BOX (SJ1-SJ2)	2	EACH
	ELECTRICAL SERVICE CABINET	4	EACH
2" SCH 40	2" RIGID CONDUIT, SCHEDULE 40	9,850	FT
2" SCH 80	2" RIGID CONDUIT, SCHEDULE 80	1,110	FT
2" RG SG	2" RIGID GALVANIZED STEEL CONDUIT	120	FT
3" SCH 40	3" RIGID CONDUIT, SCHEDULE 40	505	FT
#4	1/C #4 AWG COPPER WIRE	16,920	FT
#6	1/C #6 AWG COPPER WIRE	24,750	FT
#14	1/C #14 AWG COPPER WIRE	1,140	FT
	2/C #10 AWG COPPER POLE & BRACKET CABLE	1,960	FT
	REMOVE LUMINAIRE POLE FOOTING (EDL1-EDL8 & ETL8-ETL10)	11	EACH

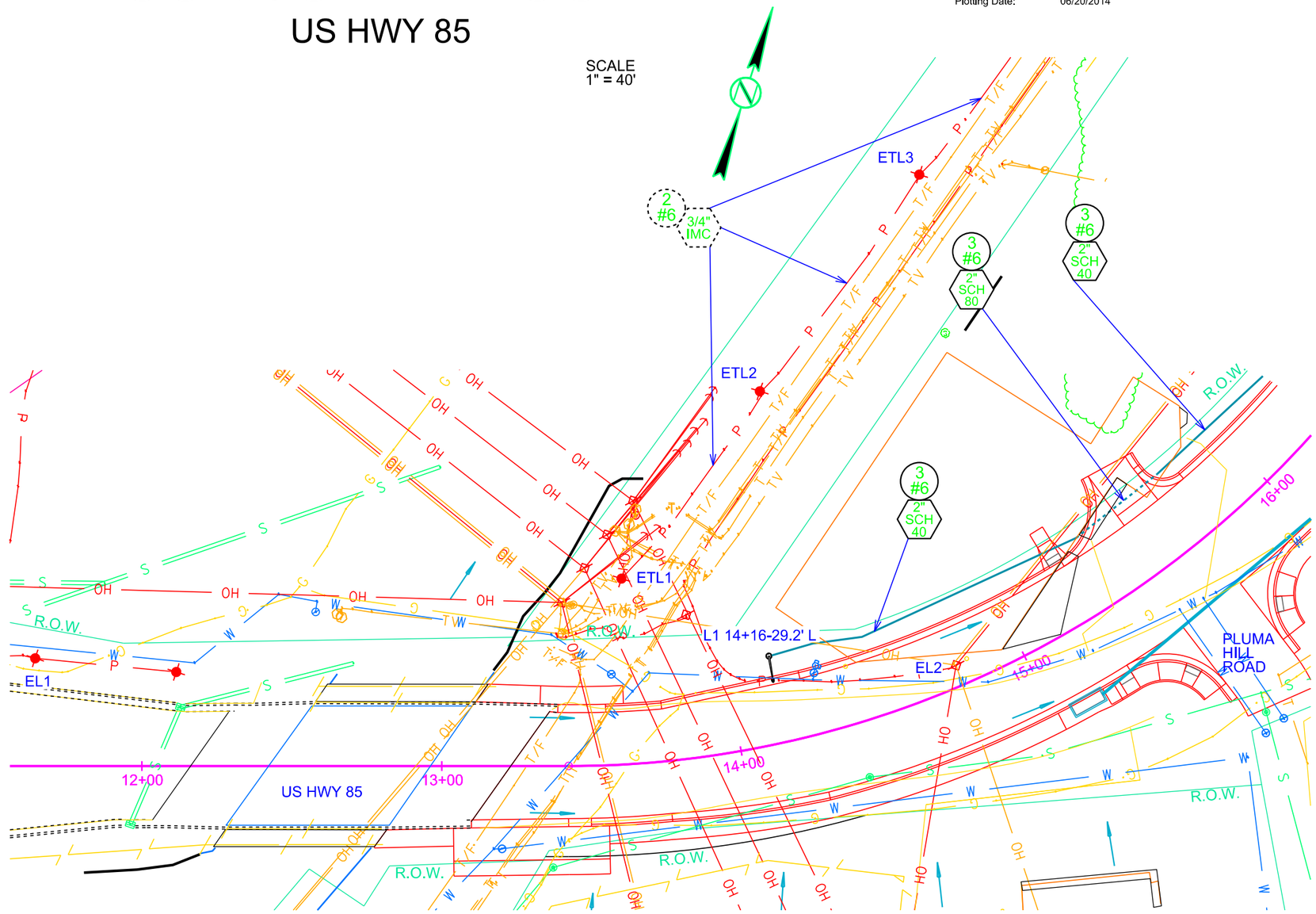

Plot Scale - 1:40

Plotted From - TRPR14341

File - U:\rdplnlawn\0555\011c.dgn

CONDUIT LAYOUT

US HWY 85

STATE OF SOUTH DAKOTA	PROJECT	SHEET	TOTAL SHEETS
	NH-PH 0085(20)26	L15	L50

Plotting Date: 06/20/2014

ESTIMATE OF QUANTITIES (TRAIL LIGHTING)

KEY	ITEM	EST QUANT	UNIT
■	TYPE 2 ELECTRICAL JUNCTION BOX (JT1-JT5)	5	EACH
3/4" IMC	3/4" INTERMEDIATE METAL CONDUIT	425	FT
#6	1/C #6 AWG COPPER WIRE	1,330	FT
	2/C #10 AWG COPPER POLE & BRACKET CABLE	60	FT
✦	REMOVE AND RESET LUMINAIRE POLE (ETL8-ETL10 AS RETL8-RETL10)	3	EACH

SCALE
1" = 40'

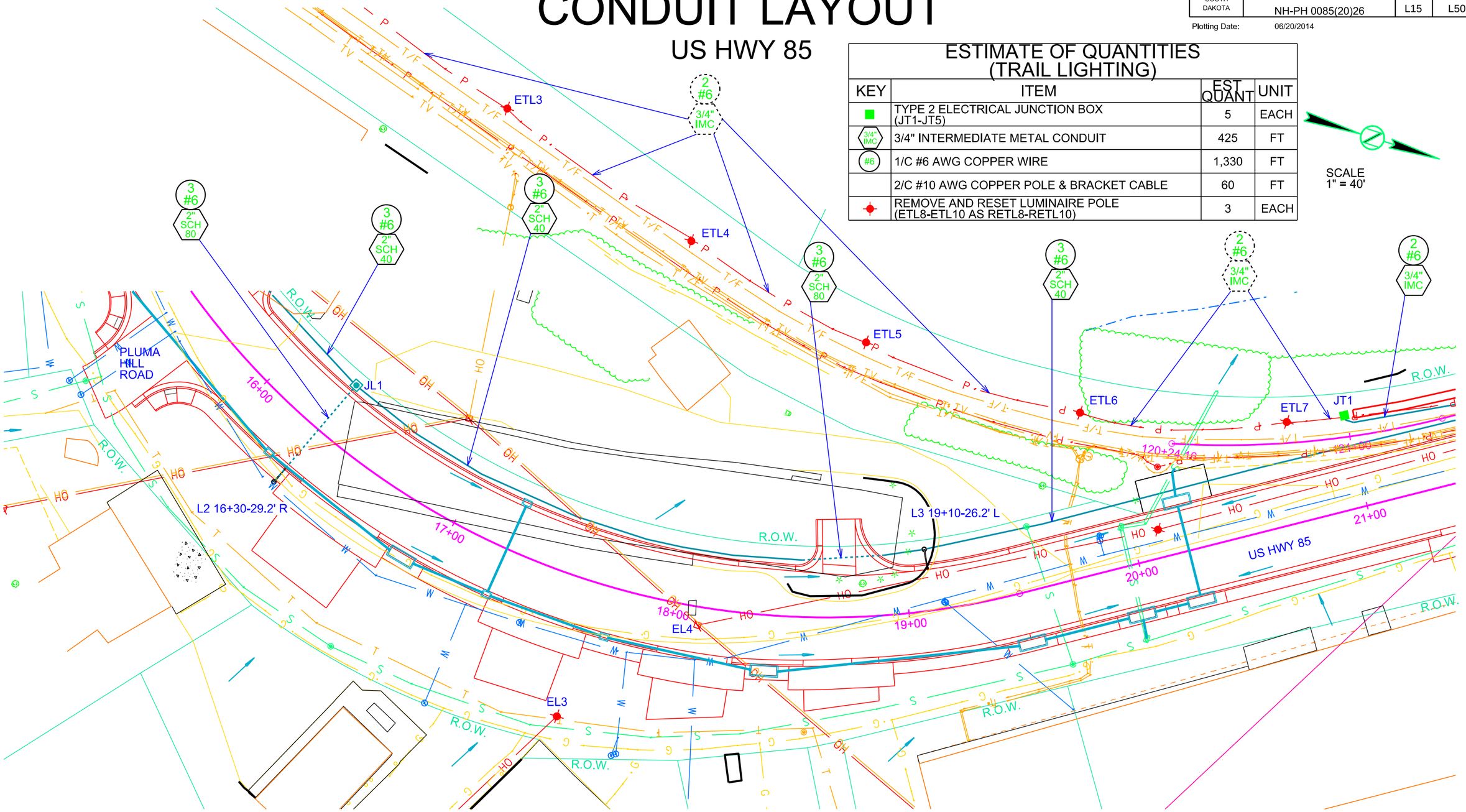

NOTE: JUNCTION BOXES JT1 - JT5 SHALL BE MATERIAL SUPPORTING THE GROUND OF THE EXISTING AND INSTALLED IMC

Plot Scale - 1:40
Plotted From - TRPR14341
File - U:\traipr\jlawr05555\015c.dgn

STATE OF SOUTH DAKOTA	PROJECT	SHEET	TOTAL SHEETS
	NH-PH 0085(20)26	L16	L50

Plotting Date: 06/20/2014

NOTE: 1. ELECTRICAL CONTRACTOR SHALL COORDINATE WITH BLOCK MANUFACTURER FOR INSTALLATION OF CONDUIT

2. REFER TO **SECTION E, WALL A, RETAINING WALL NOTES** FOR RESET OF LUMINAIRE POLES RETL8-RETL10

CONDUIT LAYOUT

US HWY 85

SCALE
1" = 40'

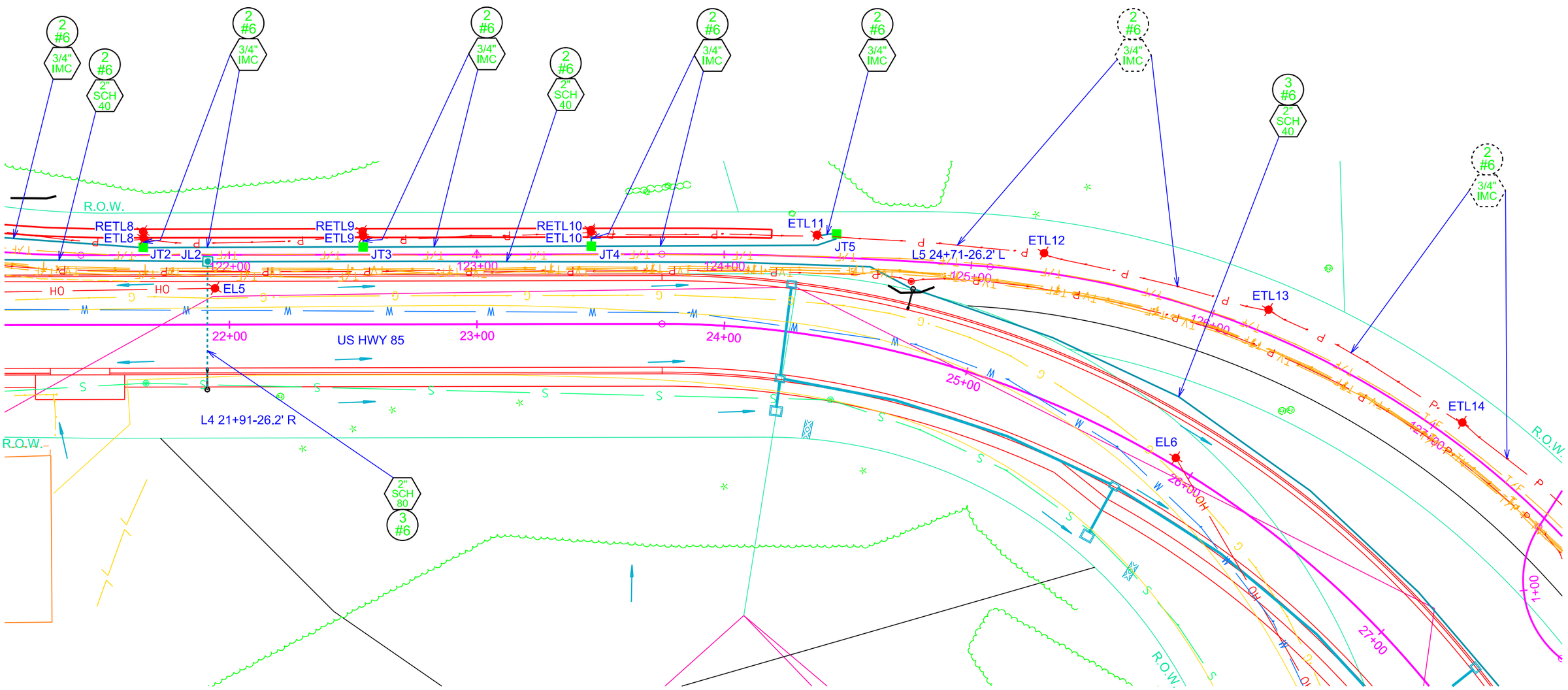

Plot Scale - 1:40

Plotted From - TRPR14341

File - U:\rdprj\lawr0555\021c.dgn

CONDUIT LAYOUT

US HWY 85

STATE OF SOUTH DAKOTA	PROJECT	SHEET	TOTAL SHEETS
	NH-PH 0085(20)26	L17	L50

Plotting Date: 06/20/2014

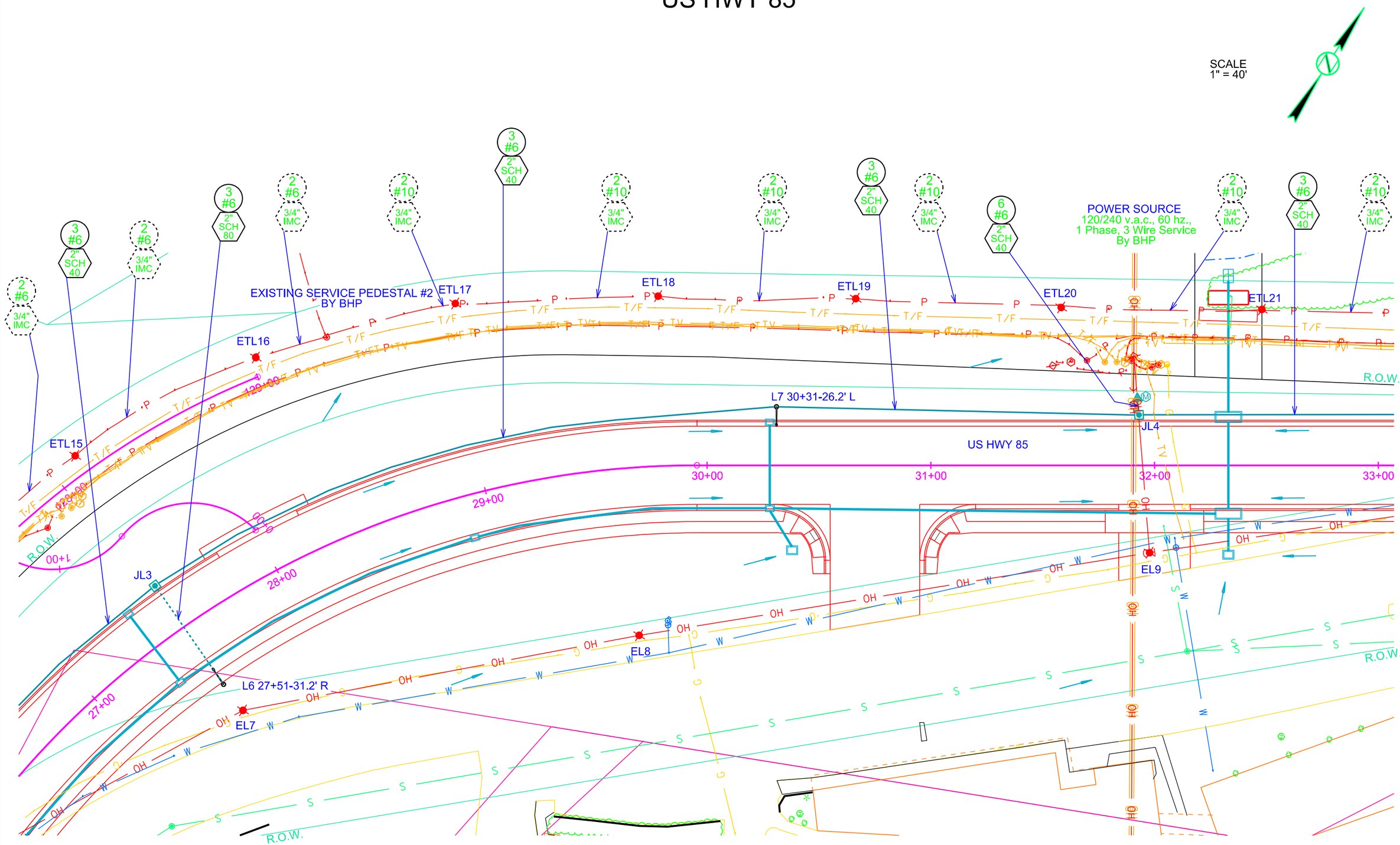

Plot Scale - 1:40

Plotted From - TRPR14341

File - U:\rdphl\lawn\0555\027c.dgn

CONDUIT LAYOUT

US HWY 85

STATE OF SOUTH DAKOTA	PROJECT	SHEET	TOTAL SHEETS
	NH-PH 0085(20)26	L18	L50

Plotting Date: 06/20/2014

SCALE
1" = 40'

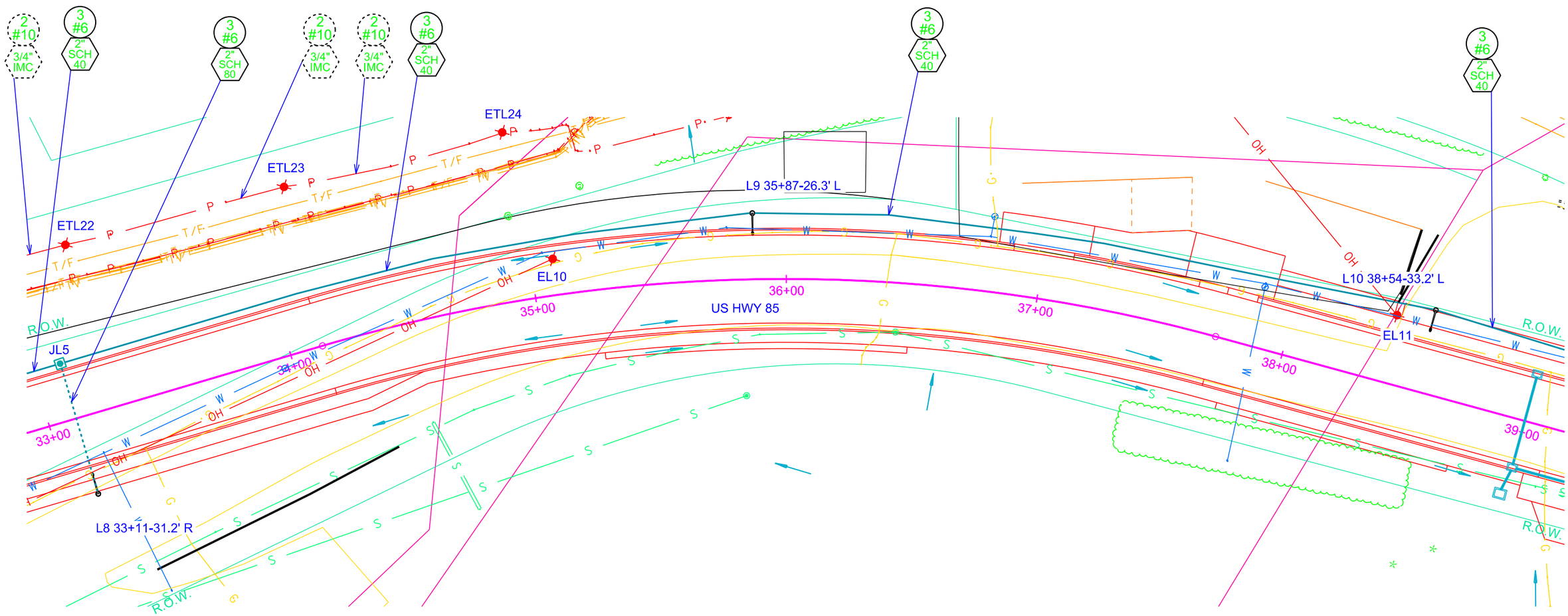

Plot Scale - 1:40

Plotted From - TRPR14341

File - U:\rdpr\jlawr0555\033c.dgn

CONDUIT LAYOUT

US HWY 85

STATE OF SOUTH DAKOTA	PROJECT	SHEET	TOTAL SHEETS
	NH-PH 0085(20)26	L19	L50

Plotting Date: 06/20/2014

SCALE
1" = 40'

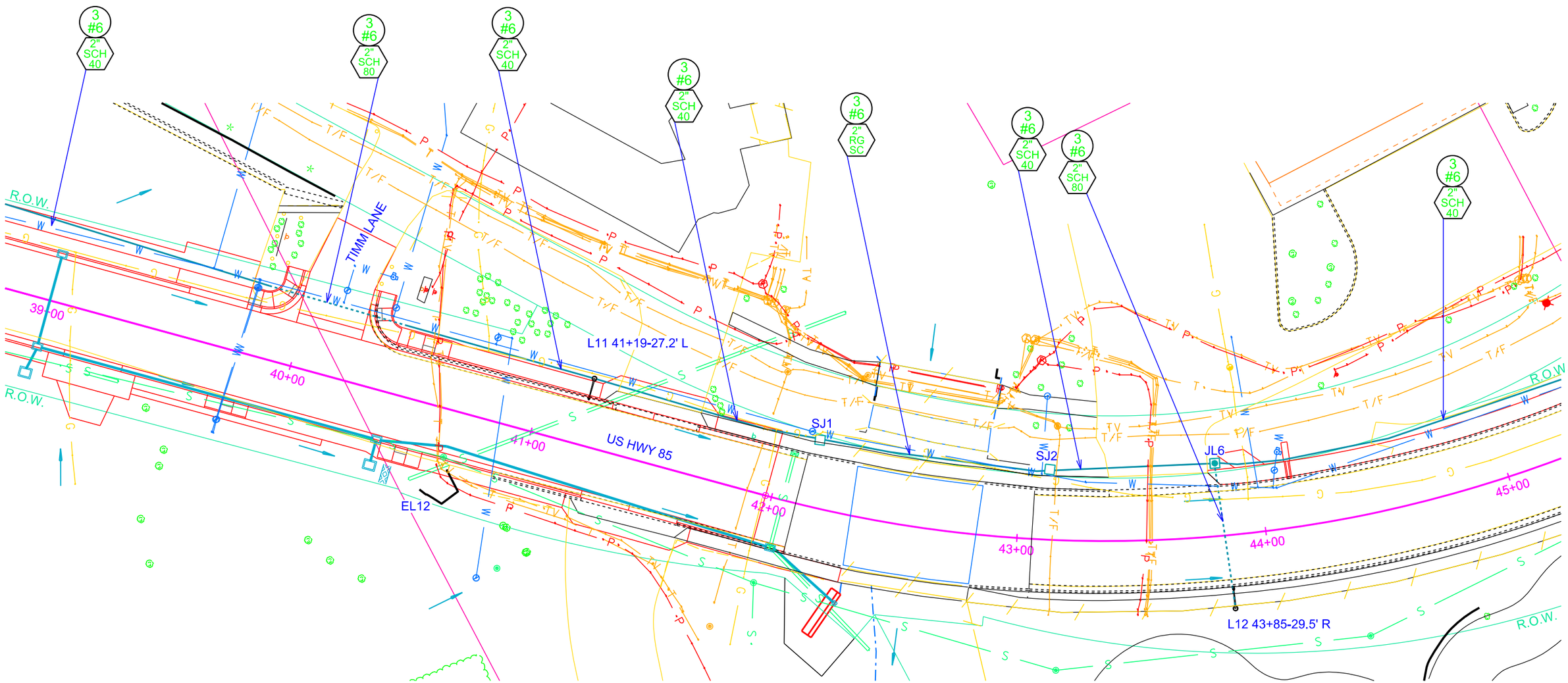

Plot Scale - 1:40

Plotted From - TRPR14341

File - U:\rdp\Nawn\0555\039c.dgn

CONDUIT LAYOUT

US HWY 85

STATE OF SOUTH DAKOTA	PROJECT	SHEET	TOTAL SHEETS
	NH-PH 0085(20)26	L20	L50

Plotting Date: 06/20/2014

SCALE
1" = 40'

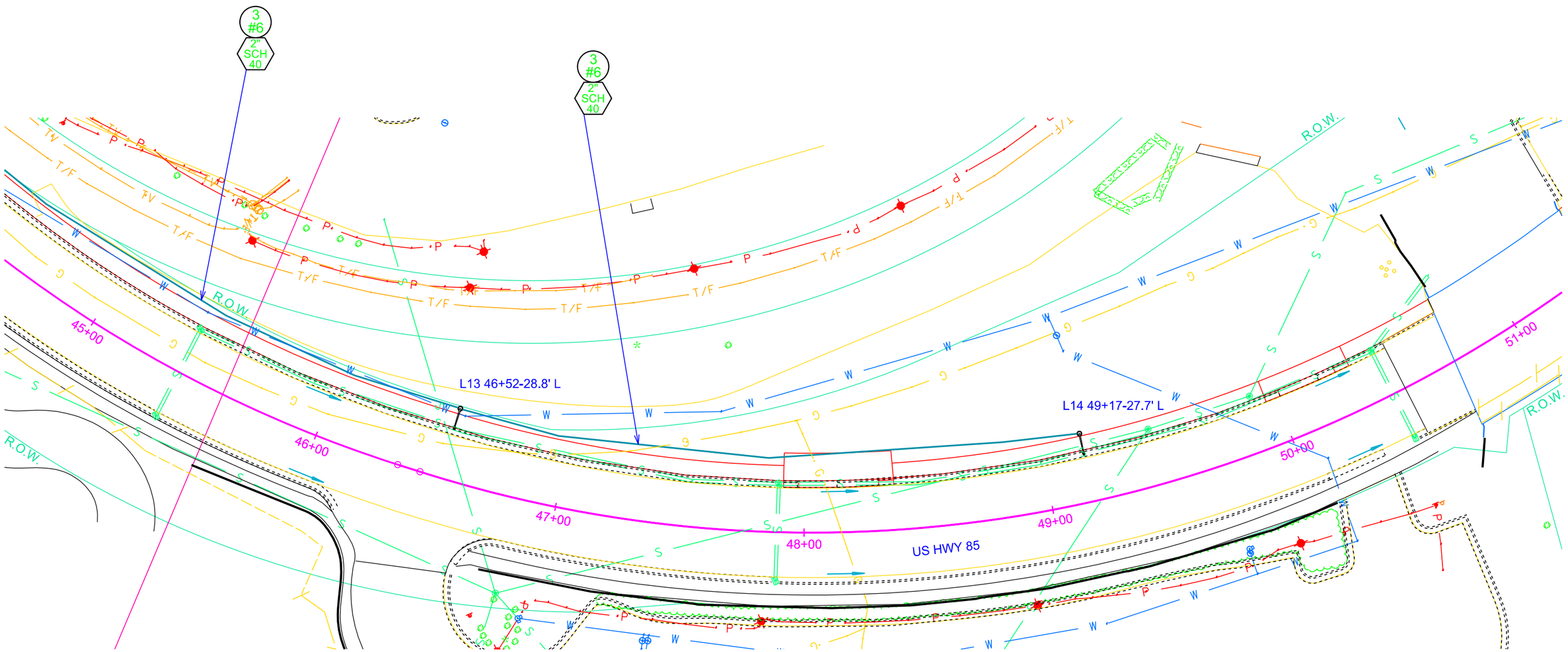

Plot Scale - 1:40

Plotted From - TRPR14341

File - U:\rdprj\lawro555\045c.dgn

CONDUIT LAYOUT

US HWY 85

STATE OF SOUTH DAKOTA	PROJECT	SHEET	TOTAL SHEETS
	NH-PH 0085(20)26	L21	L50

Plotting Date: 06/20/2014

SCALE
1" = 40'

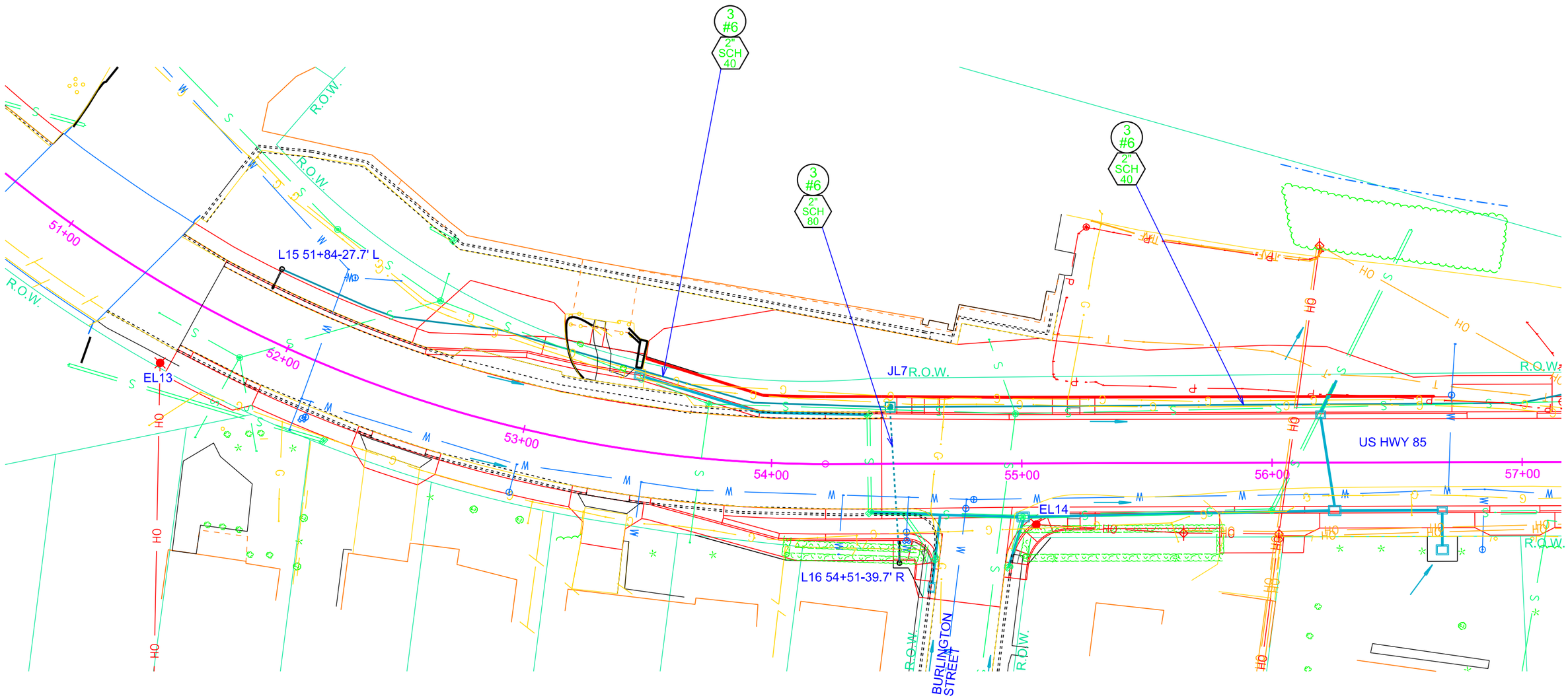

Plot Scale - 1:40

Plotted From - TRPR14341

File - U:\rdpr\jlawr0555\051c.dgn

CONDUIT LAYOUT

US HWY 85

STATE OF SOUTH DAKOTA	PROJECT	SHEET	TOTAL SHEETS
	NH-PH 0085(20)26	L22	L50

Plotting Date: 06/20/2014

SCALE
1" = 40'

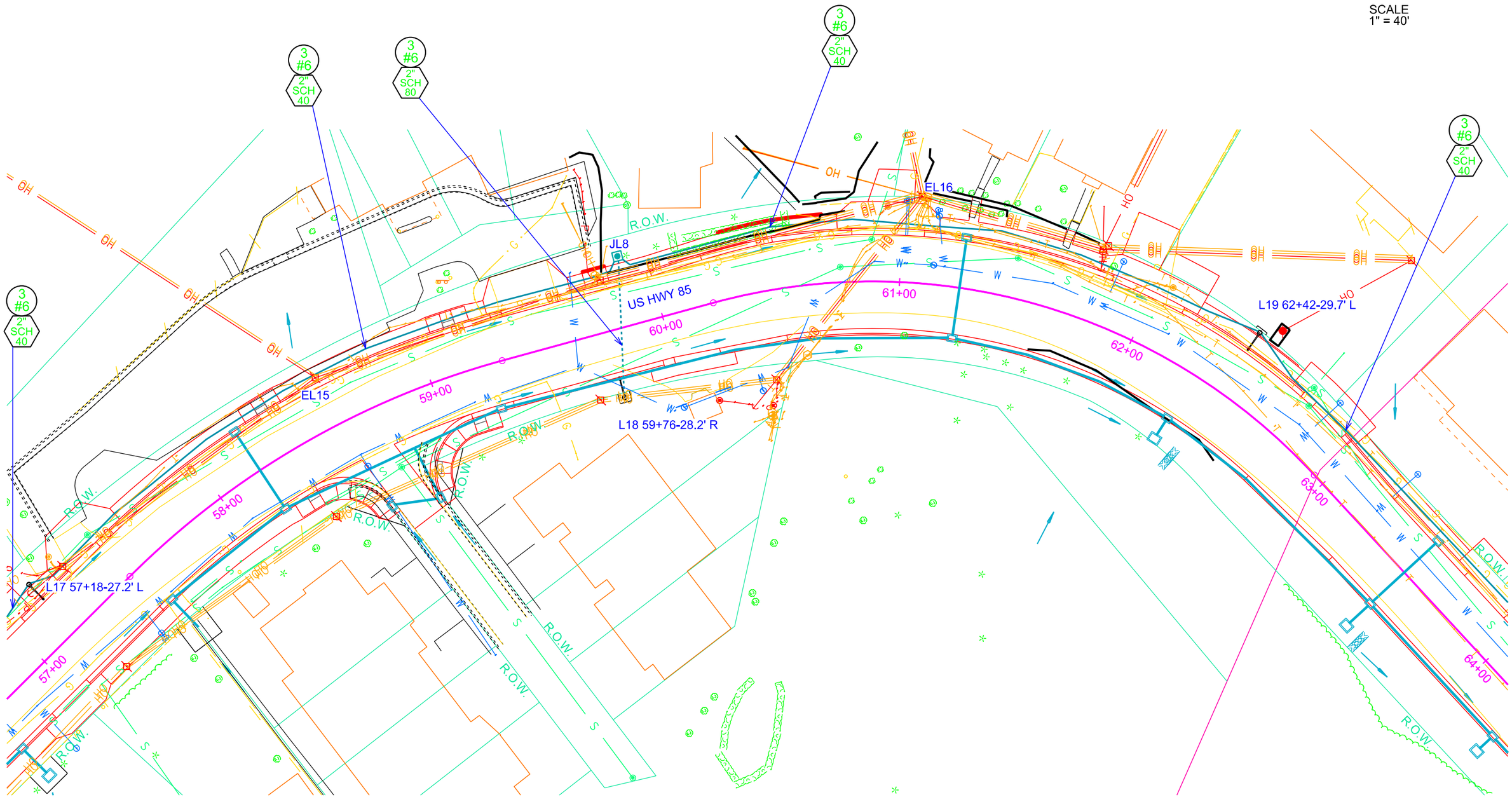

Plot Scale - 1:40

Plotted From - TRPR14341

File - U:\drlprj\awr\05551\057c.dgn

CONDUIT LAYOUT

US HWY 85

STATE OF SOUTH DAKOTA	PROJECT	SHEET	TOTAL SHEETS
	NH-PH 0085(20)26	L23	L50

Plotting Date: 06/20/2014

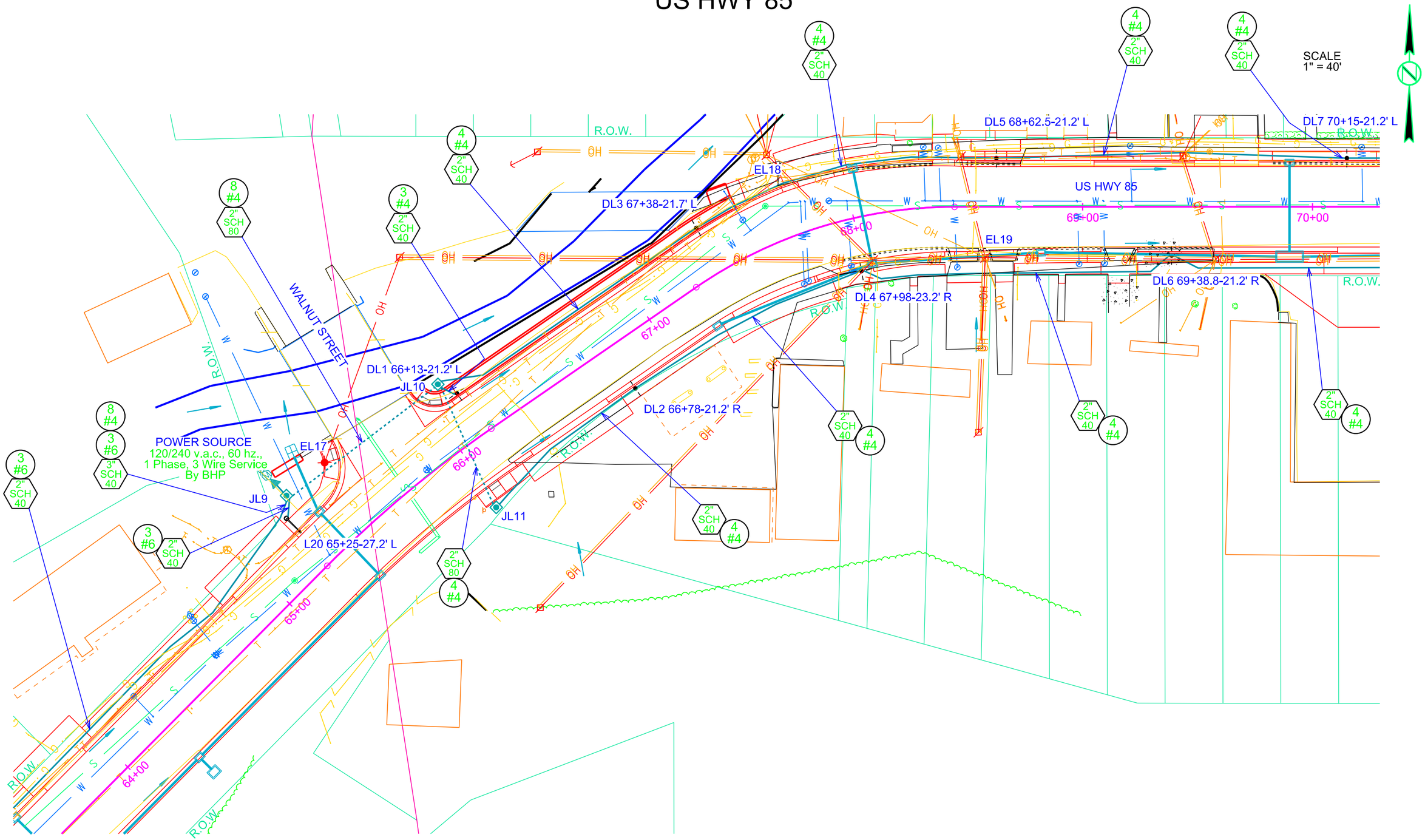

Plot Scale - 1:40

Plotted From - TRPR14341

File - U:\rdp\jlawr\0555\l064c.dgn

CONDUIT LAYOUT

US HWY 85

STATE OF SOUTH DAKOTA	PROJECT	SHEET	TOTAL SHEETS
	NH-PH 0085(20)26	L24	L50

Plotting Date: 06/20/2014

SCALE
1" = 40'

ESTIMATE OF QUANTITIES RELOCATE RADAR SPEED SIGN			
KEY	ITEM	EST QUANT	UNIT
	RELOCATE RADAR SPEED SIGN (YOUR SPEED IS SIGN)	1	EACH
	TYPE 2 JUNCTION BOX (JB1)	1	EACH
#10	1/C #10 AWG COPPER WIRE	195	FT
2" SCH 40	2" RIGID CONDUIT, SCHEDULE 40	45	FT

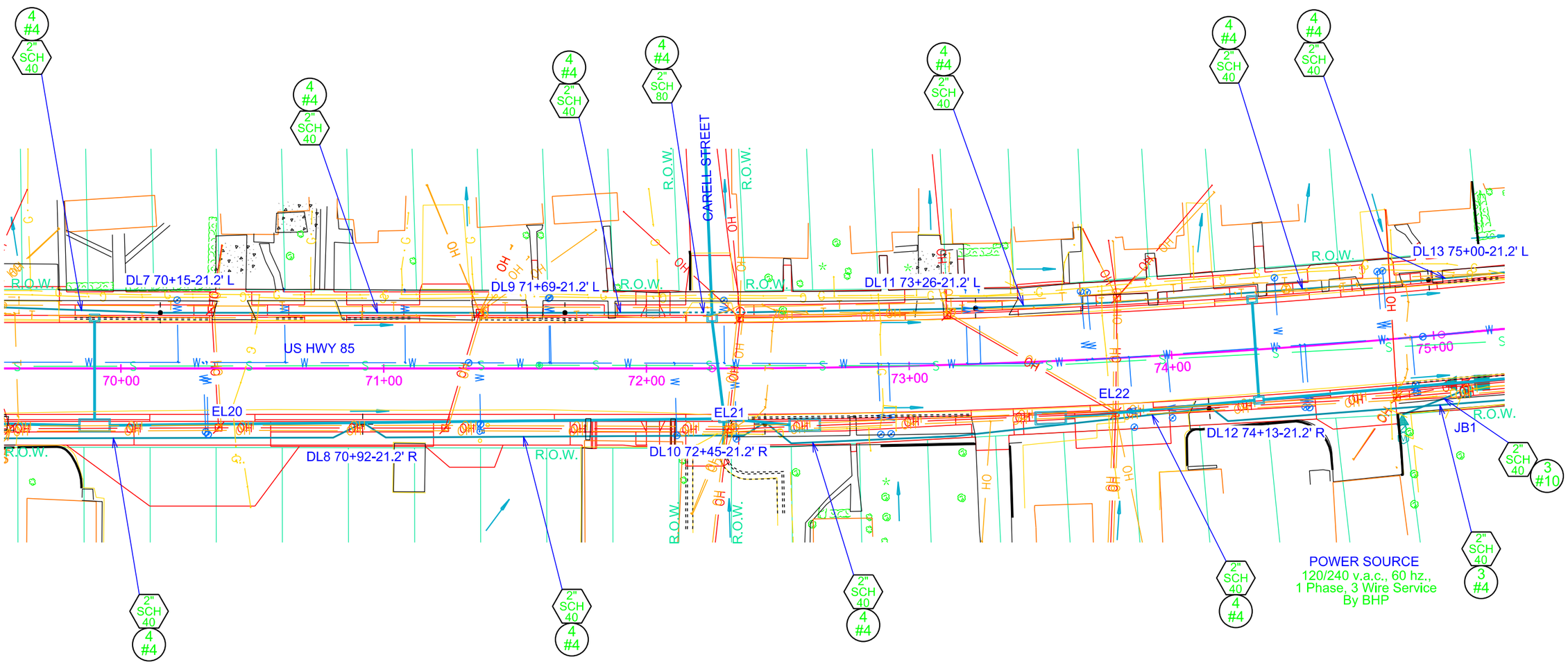

Plot Scale - 1:40
Plotted From - TRPR14341
File - U:\drlpn\lawr0555\070c.dgn

CONDUIT LAYOUT

US HWY 85

STATE OF SOUTH DAKOTA	PROJECT	SHEET	TOTAL SHEETS
	NH-PH 0085(20)26	L25	L50

Plotting Date: 06/20/2014

SCALE
1" = 40'

ESTIMATE OF QUANTITIES (RECTANGULAR RAPID FLASHING BEACONS)

KEY	ITEM	EST QUANT	UNIT
	2' DIAMETER FOOTING (S1-S4)	24	FT
	TYPE 3 ELECTRICAL JUNCTION BOX (JS1-JS4)	4	EACH
	SIGNAL CONTROLLER (S3,S4) NOT A BID ITEM	2	EACH
2" SCH 40	2" RIGID CONDUIT, SCHEDULE 40	260	FT
2" SCH 80	2" RIGID CONDUIT, SCHEDULE 80	140	FT
#4	1/C #4 AWG COPPER WIRE	610	FT
4/C	4/C #14 AWG COPPER TRAY CABLE, K2	765	FT
12/C	12/C #14 AWG COPPER TRAY CABLE, K2	665	FT
	2/C #14 AWG COPPER TRAY CABLE, K2	40	FT

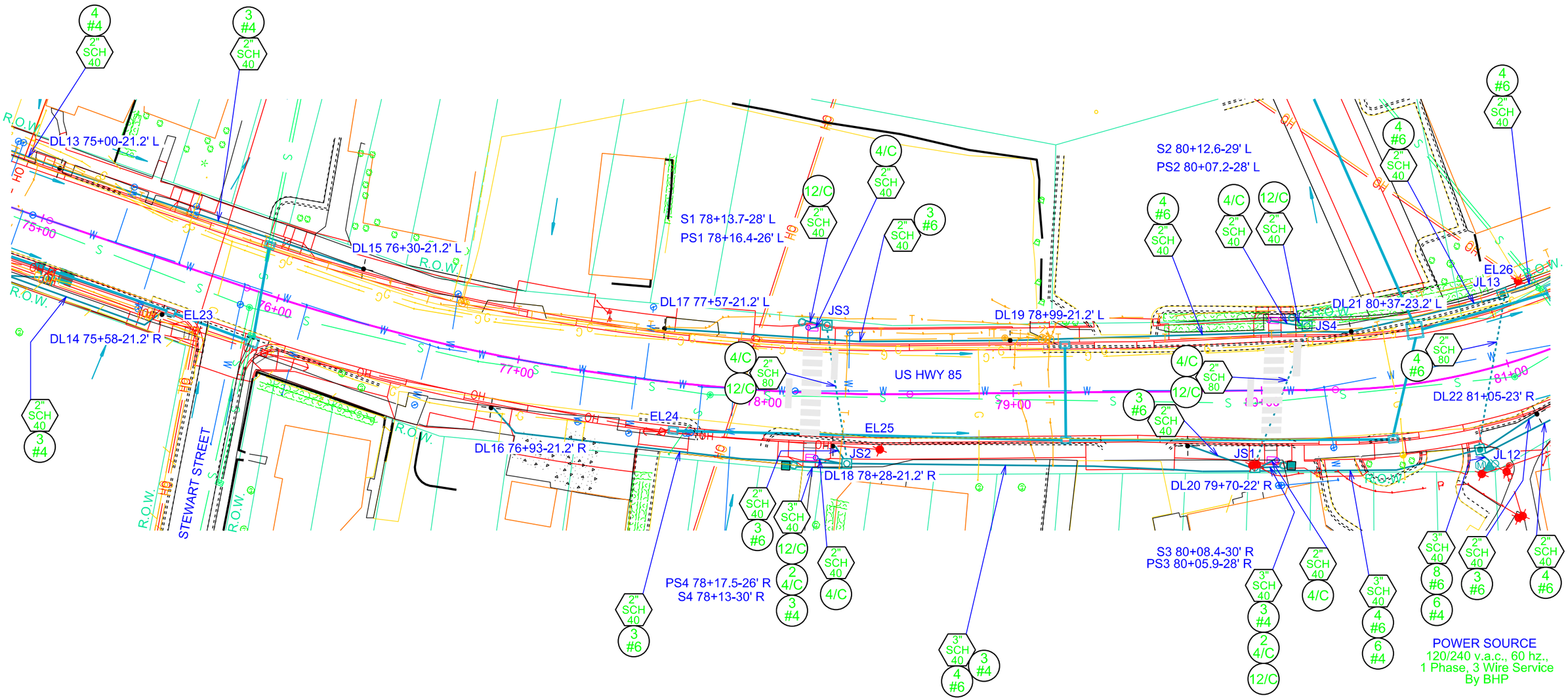

Plot Scale - 1:40
Plotted From - TRPR14341
File - U:\rdplnlawr0655\075c.dgn

CONDUIT LAYOUT

US HWY 85

STATE OF SOUTH DAKOTA	PROJECT	SHEET	TOTAL SHEETS
	NH-PH 0085(20)26	L26	L50

Plotting Date: 06/20/2014

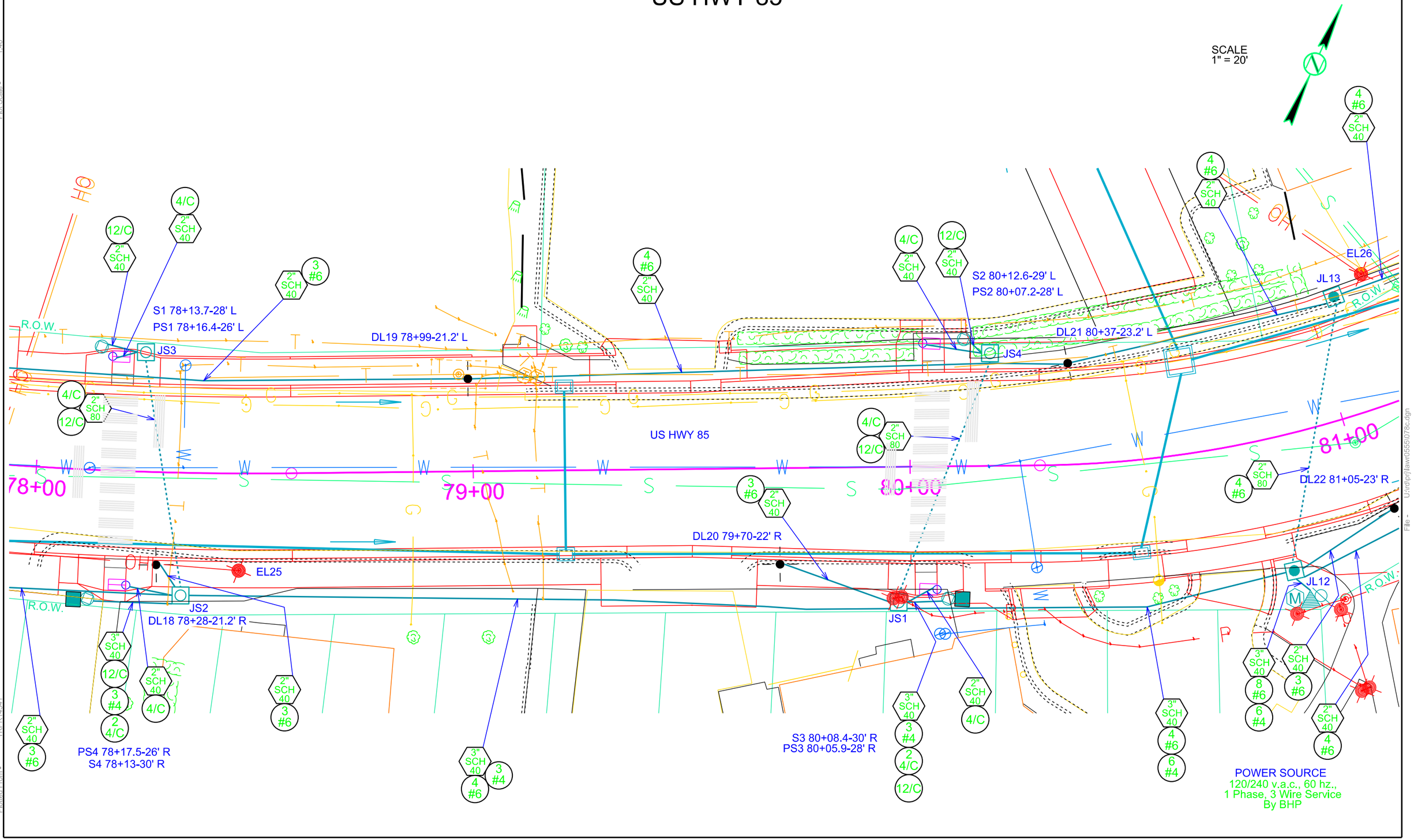

CONDUIT LAYOUT

US HWY 85

STATE OF SOUTH DAKOTA	PROJECT	SHEET	TOTAL SHEETS
	NH-PH 0085(20)26	L27	L50

Plotting Date: 06/20/2014

SCALE
1" = 40'

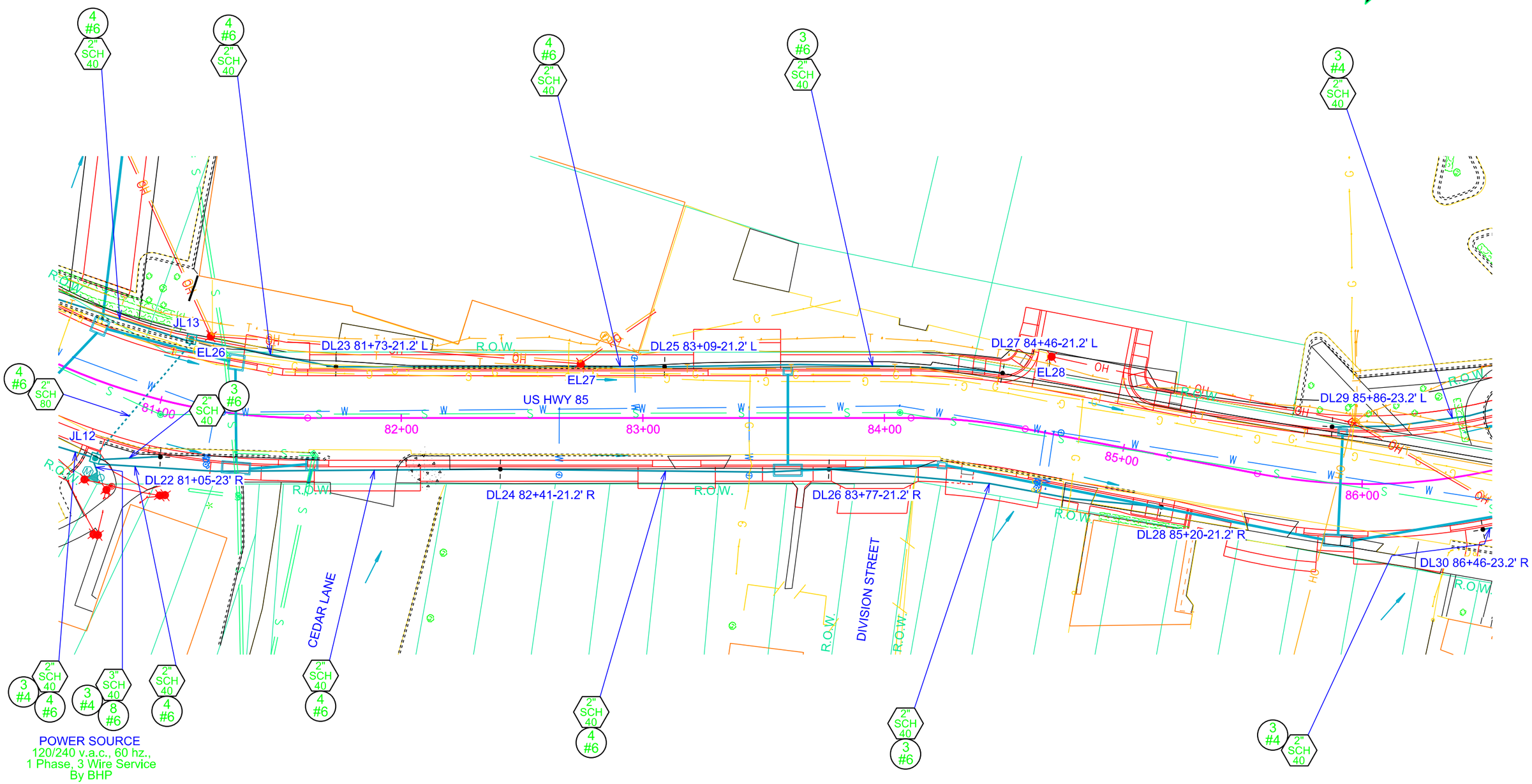

Plot Scale - 1:40

Plotted From - TRPR14341

File - U:\traipr\lawr05551081c.dgn

CONDUIT LAYOUT

US HWY 85

STATE OF SOUTH DAKOTA	PROJECT	SHEET	TOTAL SHEETS
	NH-PH 0085(20)26	L28	L50

Plotting Date: 06/20/2014

SCALE
1" = 40'

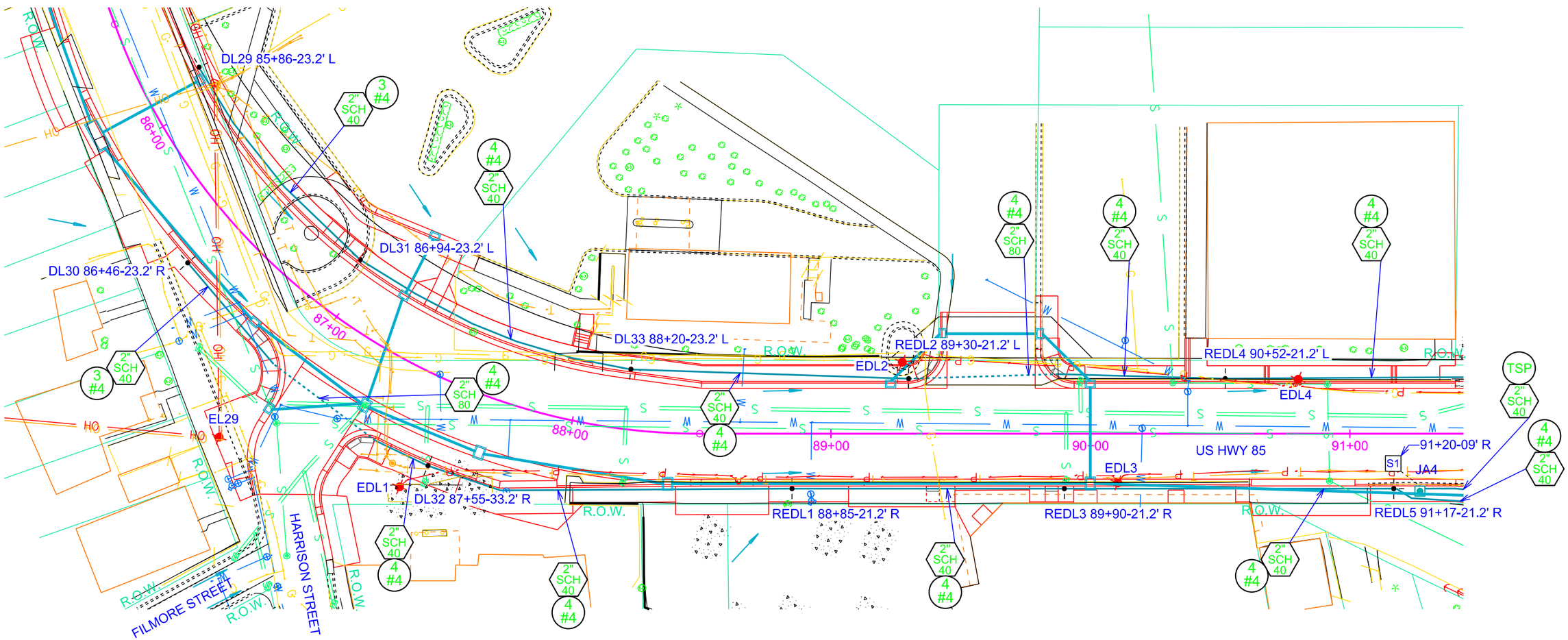

Plot Scale - 1:40

Plotted From - TRPR14341

File - U:\rdprj\lawr0555\086c.dgn

CONDUIT LAYOUT

US HWY 85 & CEMETERY STREET

STATE OF SOUTH DAKOTA	PROJECT	SHEET	TOTAL SHEETS
	NH-PH 0085(20)26	L29	L50

Plotting Date: 06/20/2014

ESTIMATE OF QUANTITIES (SIGNAL)

KEY	ITEM	EST QUANT	UNIT
	2' DIAMETER FOOTING (A2)	6	FT
	3' DIAMETER FOOTING (A1,A3,A4)	26	FT
	TYPE 2 ELECTRICAL JUNCTION BOX (JA2,JA4-JA6)	4	EACH
	TYPE 3 ELECTRICAL JUNCTION BOX (JA1,JA3)	2	EACH
	ELECTRICAL SERVICE CABINET	1	EACH
	GALVANIZED STEEL UTILITY POLE NOT A BID ITEM	1	EACH
M	METER SOCKET NOT A BID ITEM	1	EACH
	TRAFFIC SIGNAL CONTROLLER	1	EACH
	PREFORMED DETECTOR LOOP (E1-E2,N1-N4,S1,W1-W2)	9	EACH
	DETECTOR UNIT	5	EACH
2" SCH 40	2" RIGID CONDUIT, SCHEDULE 40	570	FT
4" SCH 40	4" RIGID CONDUIT, SCHEDULE 40	15	FT
3" SCH 80	3" RIGID CONDUIT, SCHEDULE 80	165	FT
#4	1/C #4 AWG COPPER WIRE	190	FT
#6	1/C #6 AWG COPPER WIRE	750	FT
	2/C #14 AWG COPPER TRAY CABLE, K2	80	FT
4/C	4/C #14 AWG COPPER TRAY CABLE, K2	1,170	FT
	5/C #14 AWG COPPER TRAY CABLE, K2	70	FT
7/C	7/C #14 AWG COPPER TRAY CABLE, K2	160	FT
19/C	19/C #14 AWG COPPER TRAY CABLE, K2	115	FT
24/C	24/C #14 AWG COPPER TRAY CABLE, K2	290	FT
TSP	#16 AWG COPPER TWISTED SHIELDED PAIR	730	FT
	2/C #10 AWG COPPER POLE & BRACKET CABLE	120	FT

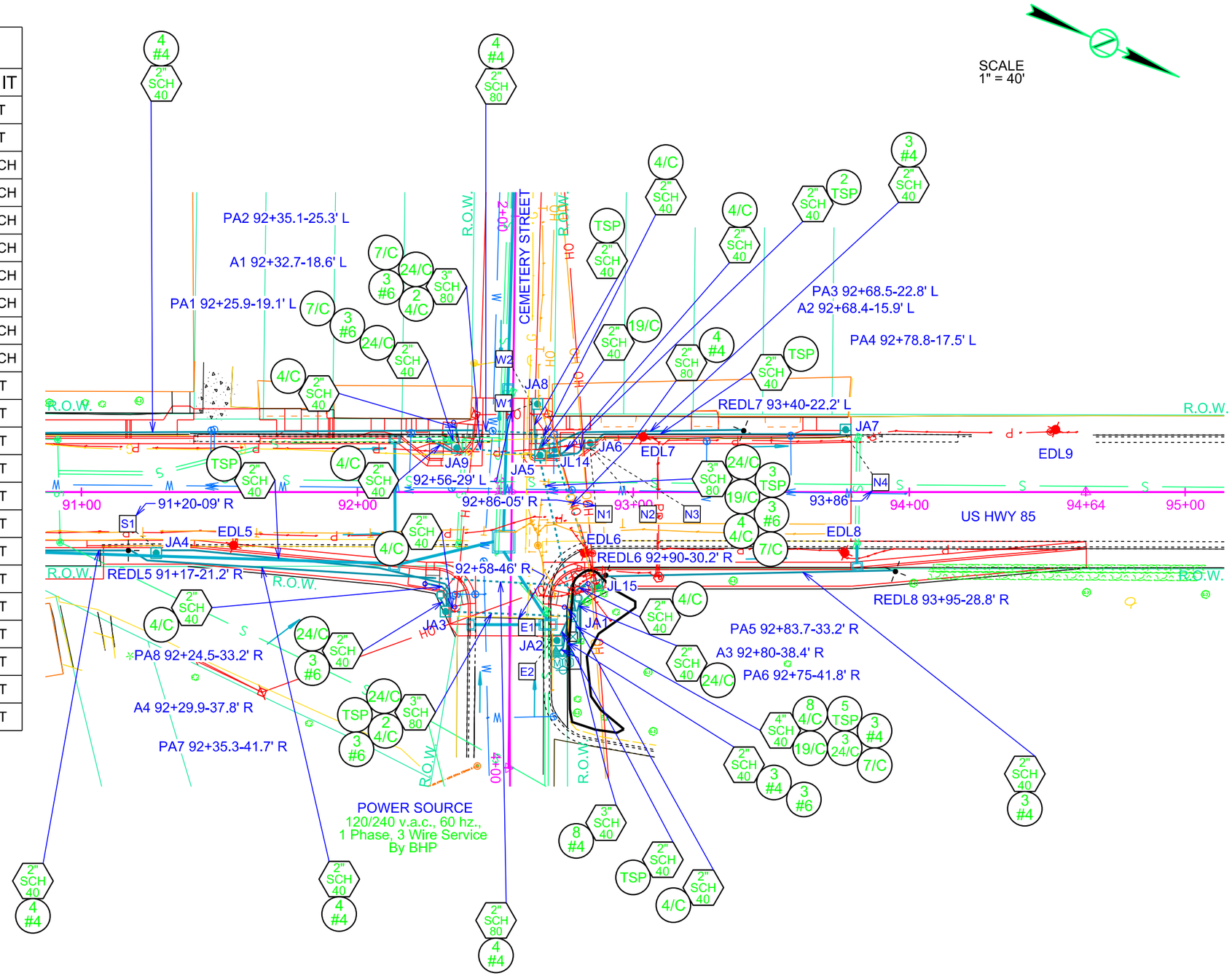

Plot Scale - 1:40

Plotted From - TRPR14341

File - U:\rdp\rjlawr0555\093c.dgn

CONDUIT LAYOUT

US HWY 85 & CEMETERY STREET

STATE OF SOUTH DAKOTA	PROJECT	SHEET	TOTAL SHEETS
	NH-PH 0085(20)26	L30	L50

Plotting Date: 06/20/2014

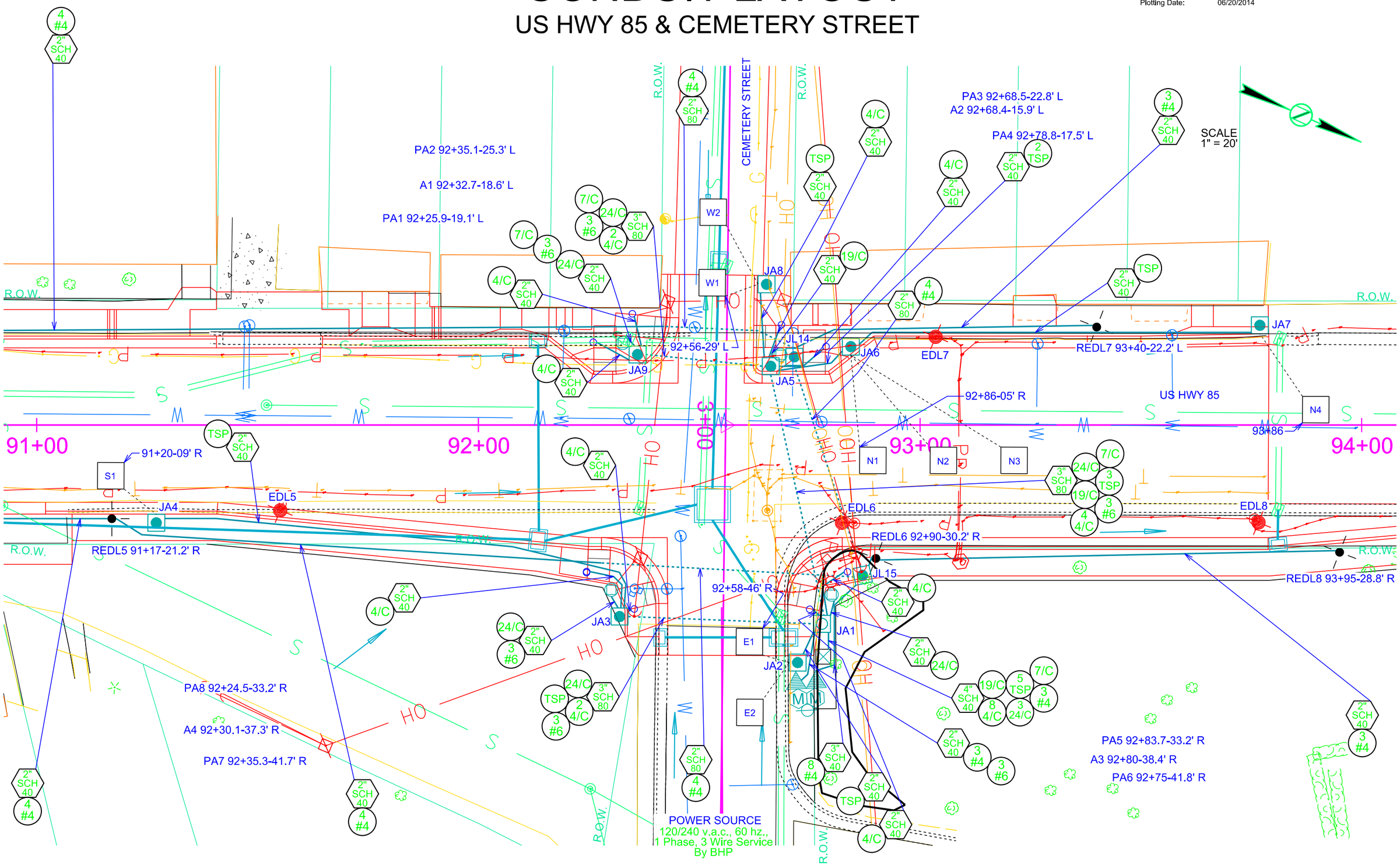

Plot Scale - 1:40

Plotted From - TRPR14341

File - U:\roj\rj\awr\0555\\92c.dgn

STATE OF SOUTH DAKOTA	PROJECT	SHEET	TOTAL SHEETS
	NH-PH 0085(20)26	L31	L50

Plotting Date: 06/20/2014

SIGNAL TIMING

US HWY 85 & CEMETERY STREET

PHASING AND SEQUENCING

INTERVAL / SIGNAL HEAD	1	2	3	4	5	6	7	8	9	10	11	12	13	14	15	16	FLASH DISPLAY
5,6,10,11,12	G	Y		G	G	Y											R
1,2								<G	<Y	F <Y	F <Y		F <Y	F <Y	<Y		Y
3,4								G	G	G	Y		G	G	Y		Y
7,8,9										G	Y		G	G	Y		Y
15,16,19,20	DW	DW	DW	W	F DW	DW	DW	DW	DW	DW	DW	DW	DW	DW	DW	DW	NO DISPLAY
13,14,17,18	DW	DW	DW	DW	DW	DW	DW	DW	DW	DW	DW	DW	W	F DW	DW	DW	NO DISPLAY
MOVEMENTS	4&8			4&8 W/PED				1&6		2&6			2&6 W/PED				
PHASES	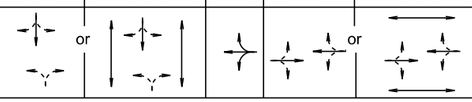																

CONTROLLER TIMINGS (FREE OPERATION)

MOVEMENT	1	2	3	4	5	6	7	8
PHASE								
MIN GREEN	4	12		7		12		7
ADDED INITIAL								
MAX INITIAL								
PASSAGE TIME	3	3		3		3		3
MAXIMUM 1	10	30		20		30		20
MAXIMUM 2	15	40		25		40		25
TIME BEFORE								
TIME TO REDUCE								
MINIMUM GAP								
YELLOW CHANGE	3	3		3		3		3
RED CLEARANCE		2		2		2		2
WALK		7		7		7		7
PED CLEARANCE		20		20		20		20

WEEKLY PROGRAM

	SUN	MON	TUE	WED	THU	FRI	SAT
TIMING PLAN	2	1	1	1	1	1	2

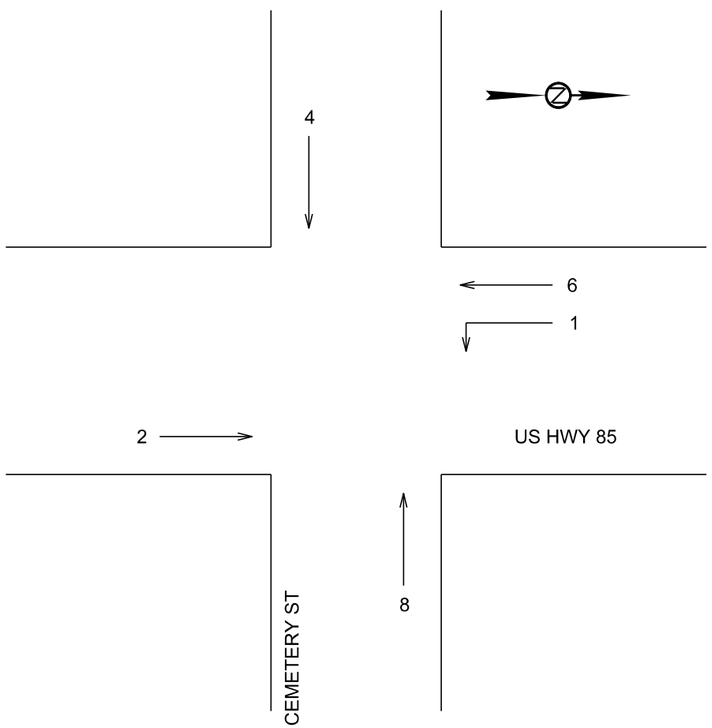

DETECTOR SETTINGS

DETECTOR LABEL	AMPLIFIED CHANNEL DETECTOR	DETECTOR TYPE	DETECTOR OPERATION: CALLS & EXTENDS	DETECTOR OPERATION: CALLS ONLY	DETECTOR OPERATION: EXTENDS ONLY	LOCKING CALL	MOVEMENT CALLED	MOVEMENT EXTENDED
N1,N2,N3	1	PREFORMED	X				1	1&6
N4	2	SAWED-IN	X			X	6	1&6 OR 2&6
E1,E2	3	PREFORMED	X				8	4&8
S1	4	PREFORMED	X			X	2	2&6
W1	5	PREFORMED	X				4	4&8
W2		SAWED-IN						

Plot Scale - 1:40

Plotted From - TRPR14341

File - U:\rdprj\lawr0555\093time.dgn

STATE OF SOUTH DAKOTA	PROJECT	SHEET	TOTAL SHEETS
	NH-PH 0085(20)26	L32	L50

Plotting Date: 06/20/2014

LEGEND:

FUSE: 6 amp. Non-Time Delay
or
2 8/10 amp. Dual Element

LUMINAIRE: 400 watt High Pressure Sodium Lamp

NOTE:
All circuits shall be bonded in accordance with the NATIONAL ELECTRICAL CODE. Quantities for bonding conductors are not included in these plans.

WIRING DIAGRAM

US HWY 85

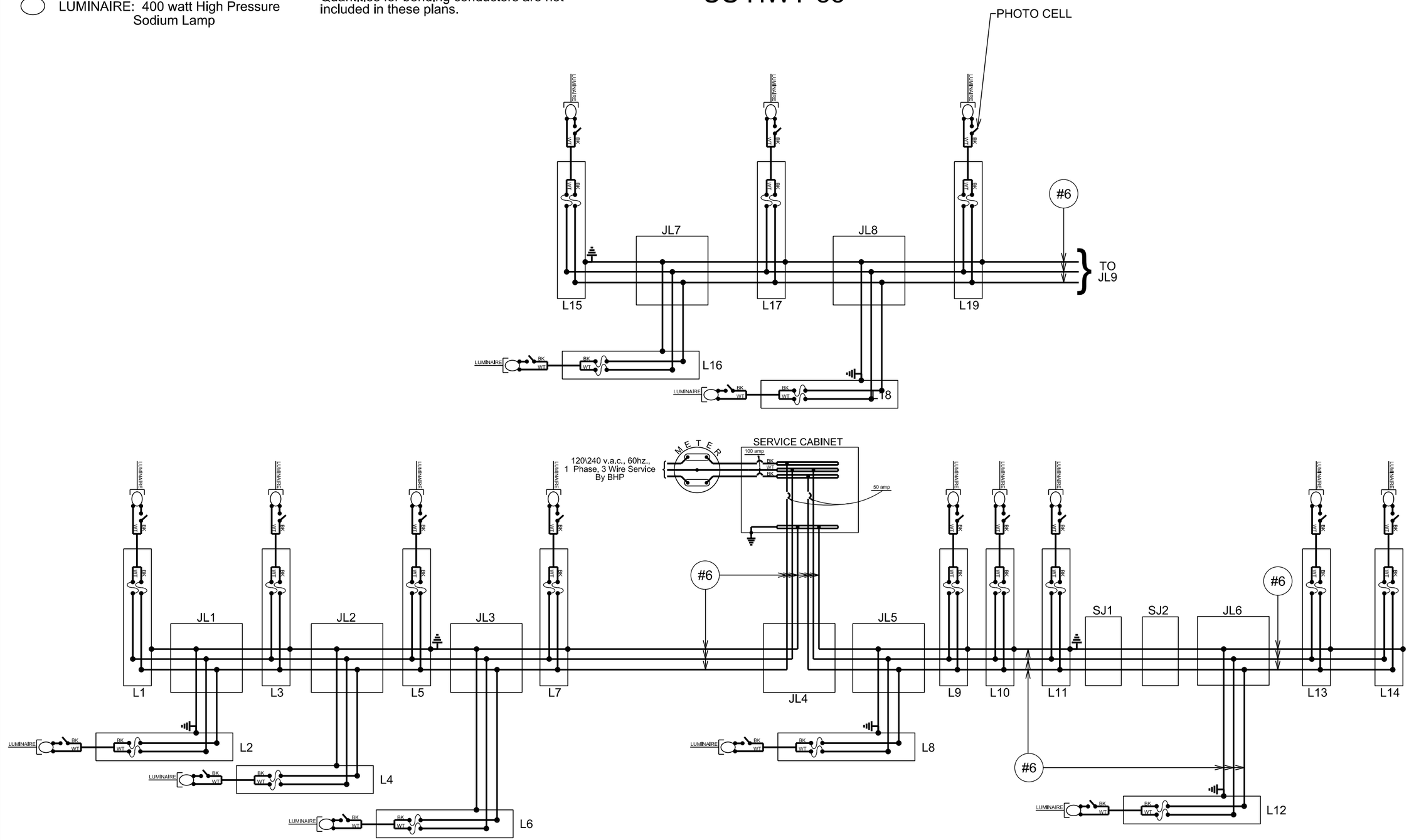

Plot Scale - 1:40

Plotted From - TRPR14341

File - U:\rdtprj\lawn\0555\0140\65w.dgn

STATE OF SOUTH DAKOTA	PROJECT	SHEET	TOTAL SHEETS
	NH-PH 0085(20)26	L33	L50

Plotting Date: 06/20/2014

WIRING DIAGRAM

US HWY 85

LEGEND:

FUSE: 6 amp. Non-Time Delay
or
2 8/10 amp. Dual Element

LUMINAIRE: 400 watt High Pressure Sodium Lamp

NOTE:
All circuits shall be bonded in accordance with the NATIONAL ELECTRICAL CODE. Quantities for bonding conductors are not included in these plans.

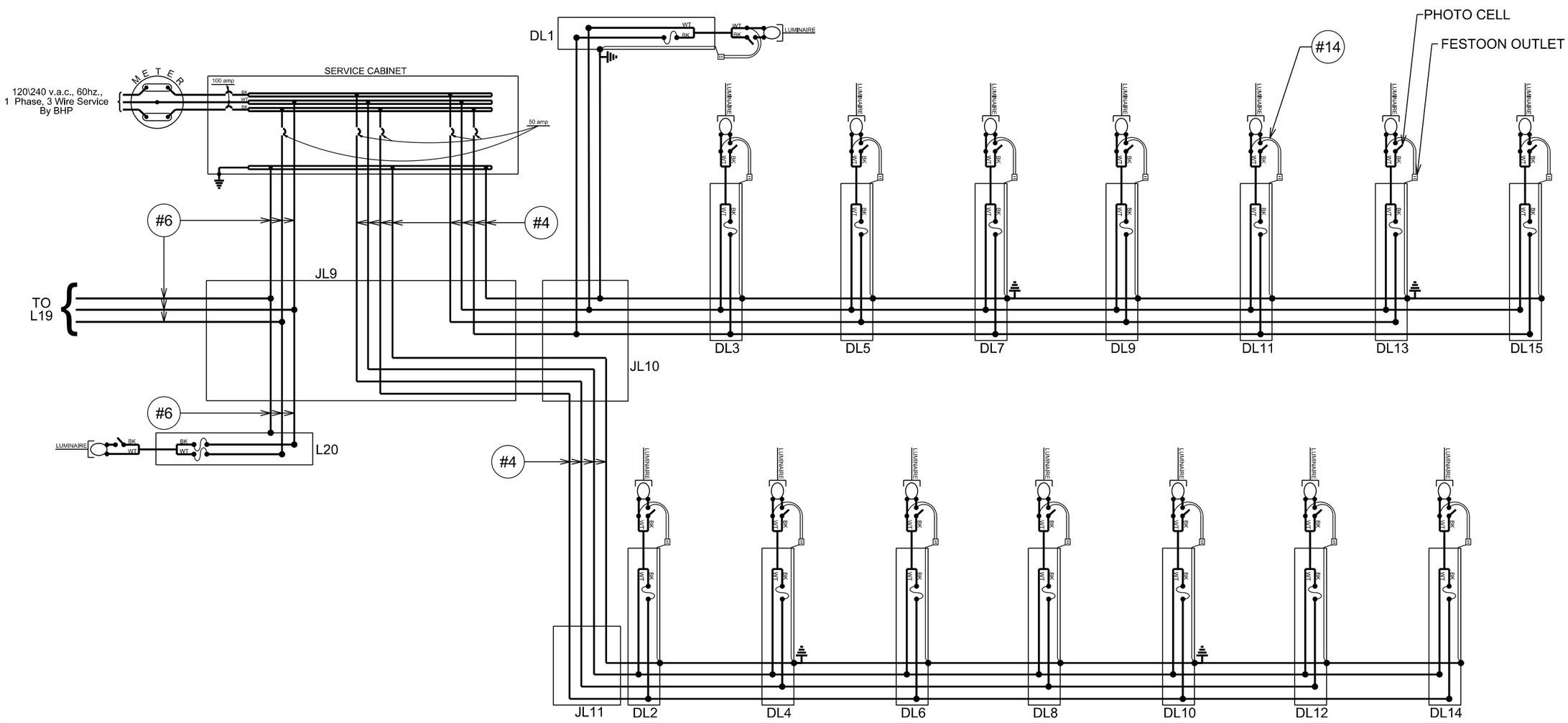

Plot Scale - 1:40

Plotted From - TRPR14341

File - U:\rdpnl\awr0555\065076w.dgn

WIRING DIAGRAM

US HWY 85

STATE OF SOUTH DAKOTA	PROJECT	SHEET	TOTAL SHEETS
	NH-PH 0085(20)26	L34	L50

Plotting Date: 06/20/2014

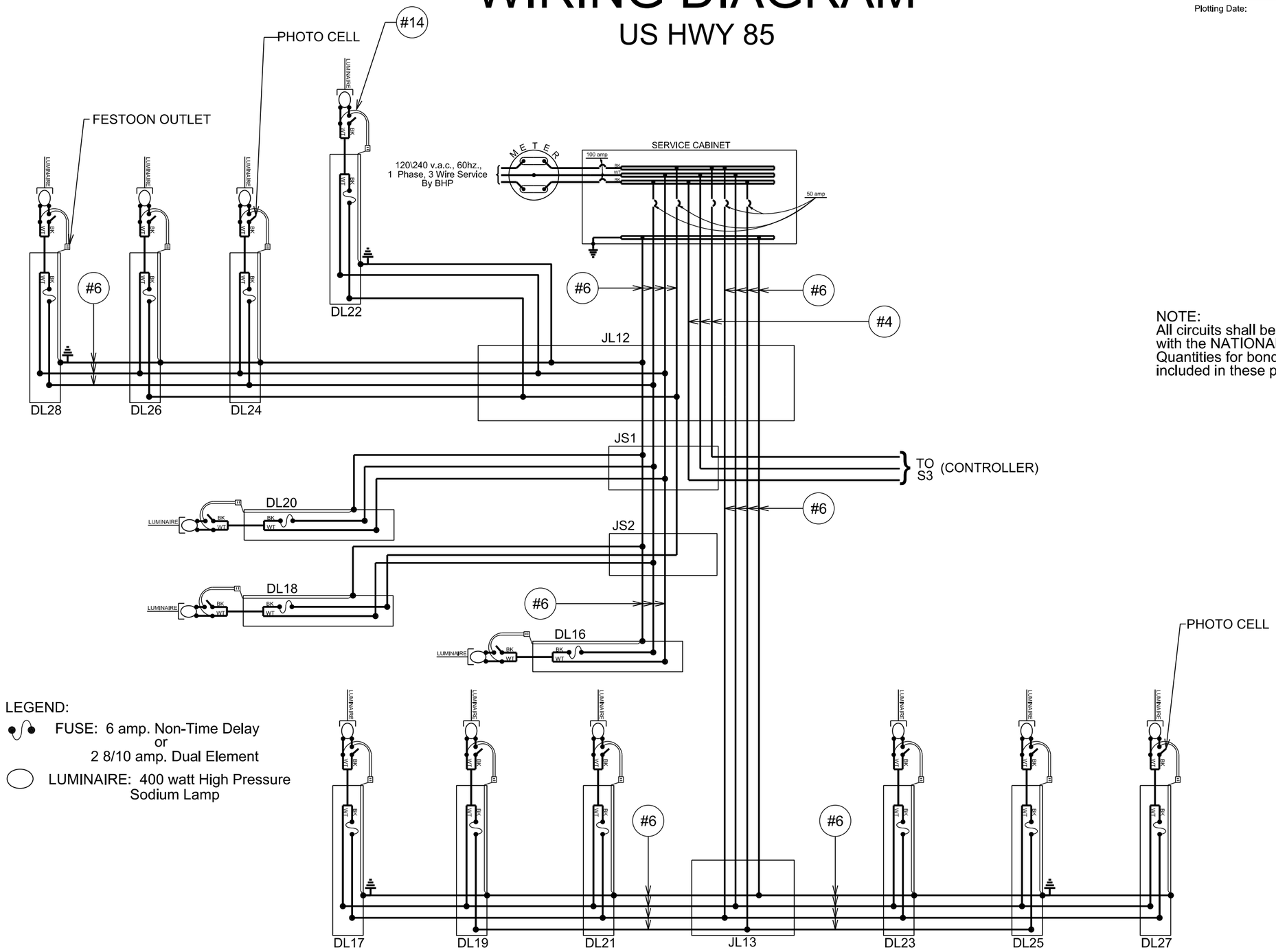

NOTE:
All circuits shall be bonded in accordance with the NATIONAL ELECTRICAL CODE. Quantities for bonding conductors are not included in these plans.

LEGEND:

FUSE: 6 amp. Non-Time Delay
or
2 8/10 amp. Dual Element

LUMINAIRE: 400 watt High Pressure Sodium Lamp

Plot Scale - 1:40

Plotted From - TRPR14341

File - U:\rdlpr\lawr0555\077085w.dgn

RECTANGULAR RAPID FLASHING BEACONS WIRING DIAGRAM

US HWY 85

STATE OF SOUTH DAKOTA	PROJECT	SHEET	TOTAL SHEETS
	NH-PH 0085(20)26	L35	L50

Plotting Date: 06/20/2014

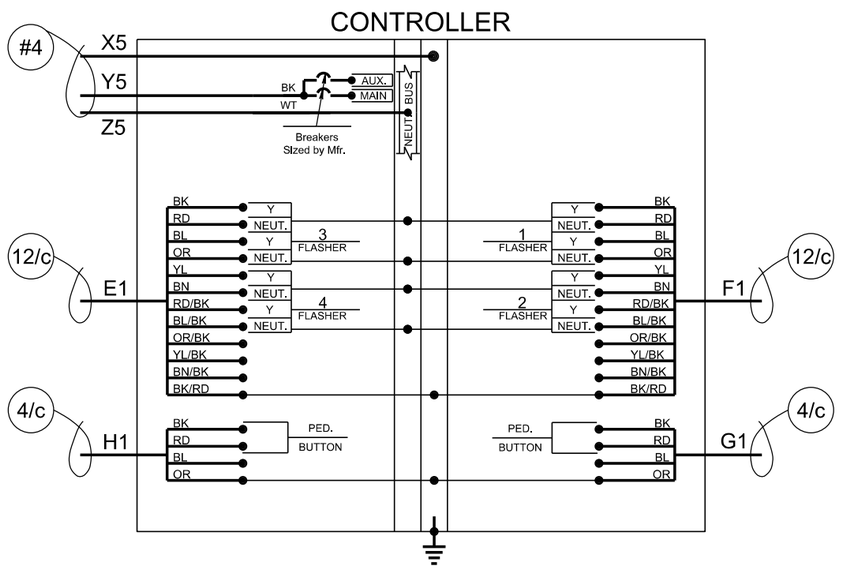

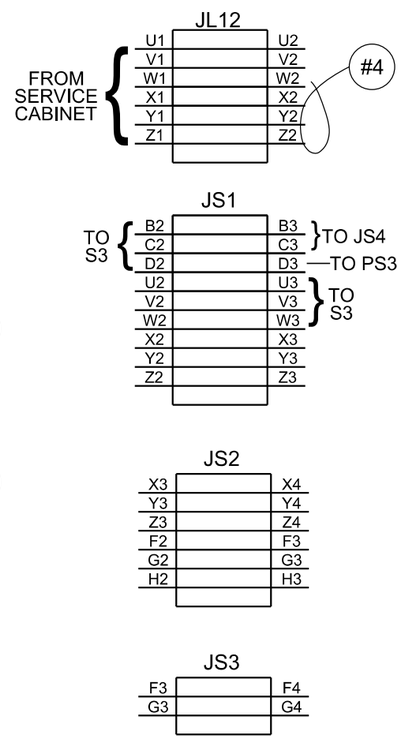

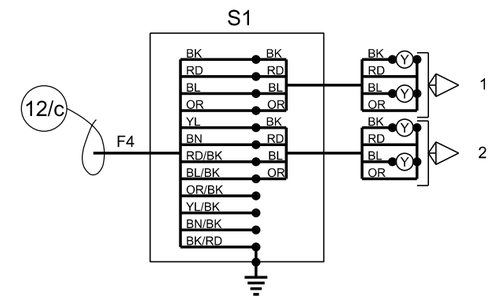

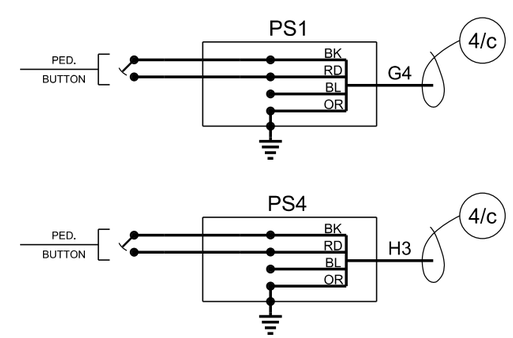

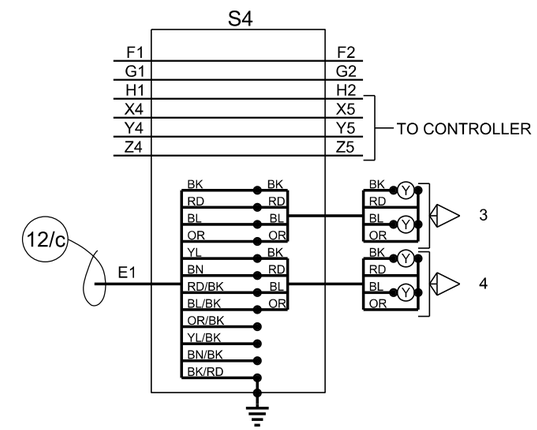

NOTE:
All circuits shall be bonded in accordance with the NATIONAL ELECTRICAL CODE. Quantities for bonding conductors are not included in these plans.

Plot Scale - 1:40

Plotted From - TRPR14341

File - U:\rdprj\awr0555\079w.dgn

RECTANGULAR RAPID FLASHING BEACONS WIRING DIAGRAM

US HWY 85

STATE OF SOUTH DAKOTA	PROJECT	SHEET	TOTAL SHEETS
	NH-PH 0085(20)26	L36	L50

Plotting Date: 06/20/2014

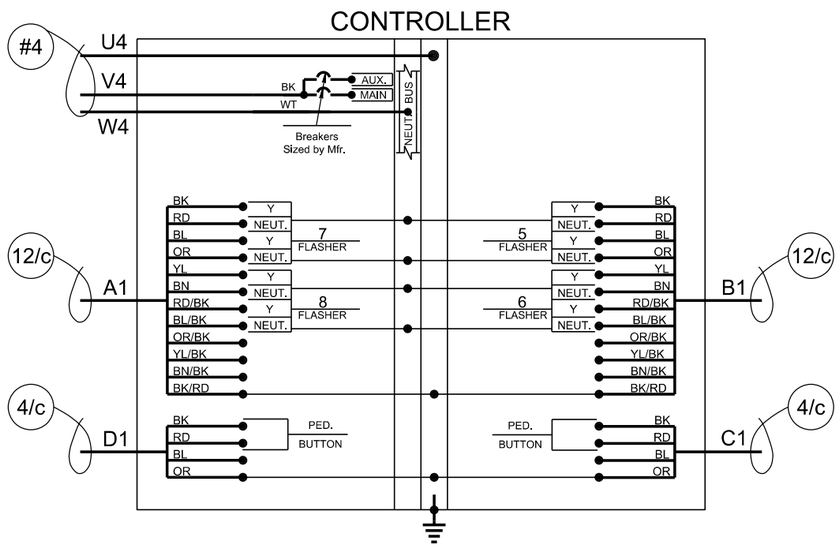

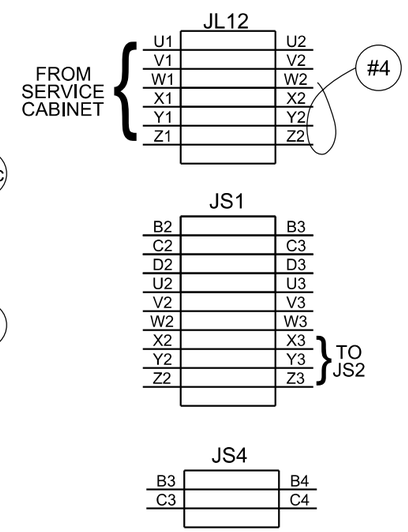

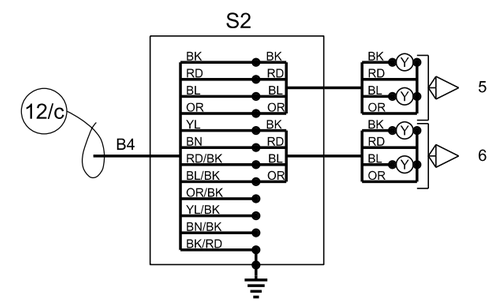

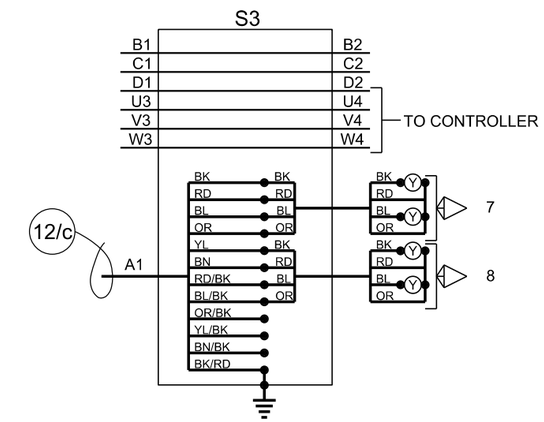

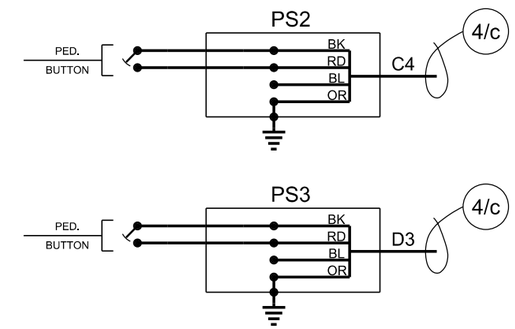

NOTE:
All circuits shall be bonded in accordance with the NATIONAL ELECTRICAL CODE. Quantities for bonding conductors are not included in these plans.

Plot Scale - 1:40

Plotted From - TRPR14341

File - U:\rdprj\awr0555\080w.dgn

WIRING DIAGRAM

US HWY 85

STATE OF SOUTH DAKOTA	PROJECT	SHEET	TOTAL SHEETS
	NH-PH 0085(20)26	L37	L50

Plotting Date: 06/20/2014

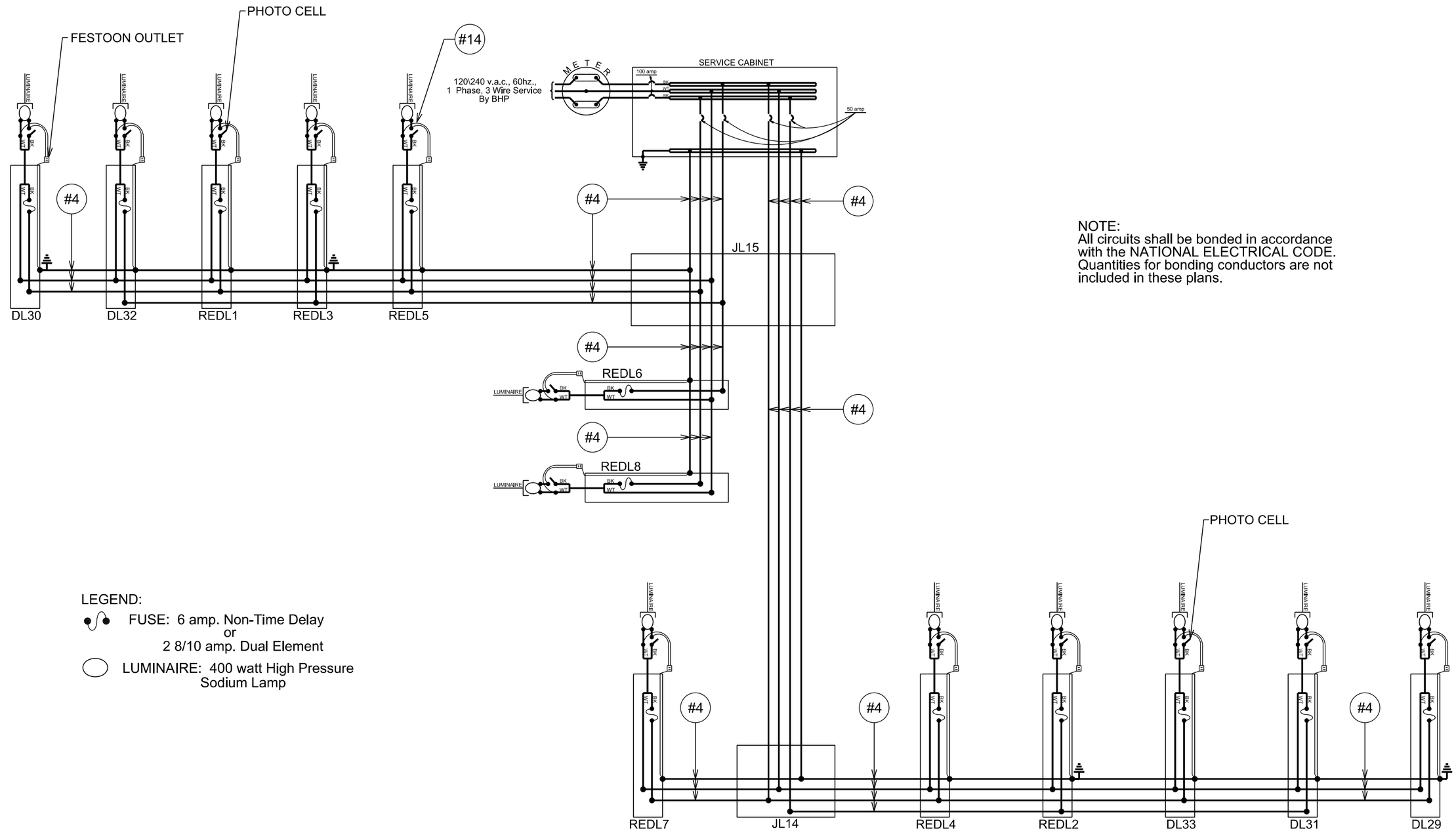

NOTE:
All circuits shall be bonded in accordance with the NATIONAL ELECTRICAL CODE. Quantities for bonding conductors are not included in these plans.

LEGEND:

FUSE: 6 amp. Non-Time Delay
or
2 8/10 amp. Dual Element

LUMINAIRE: 400 watt High Pressure Sodium Lamp

Plot Scale - 1:40

Plotted From - TRPR14341

File - U:\rdprj\awr0555\086095w.dgn

WIRING DIAGRAM

US HWY 85 & CEMETERY STREET

STATE OF SOUTH DAKOTA	PROJECT	SHEET	TOTAL SHEETS
	NH-PH 0085(20)26	L38	L50

Plotting Date: 06/20/2014

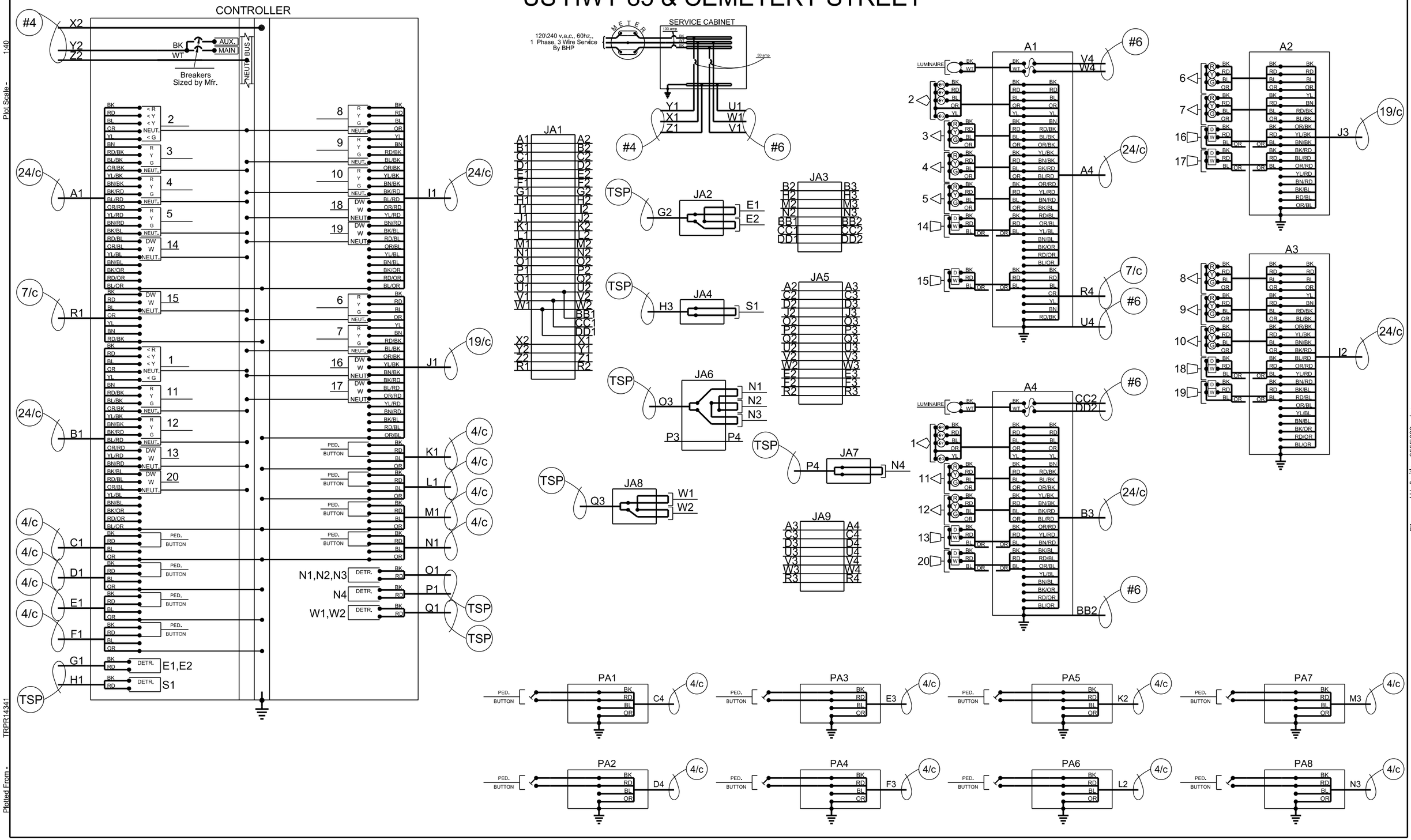

Plot Scale - 1:40

Plotted From - TRPR14341

File - U:\rdprj\awr0555\093w.dgn

SPECIAL DETAIL

RECTANGULAR RAPID FLASHING BEACONS & SIGNS

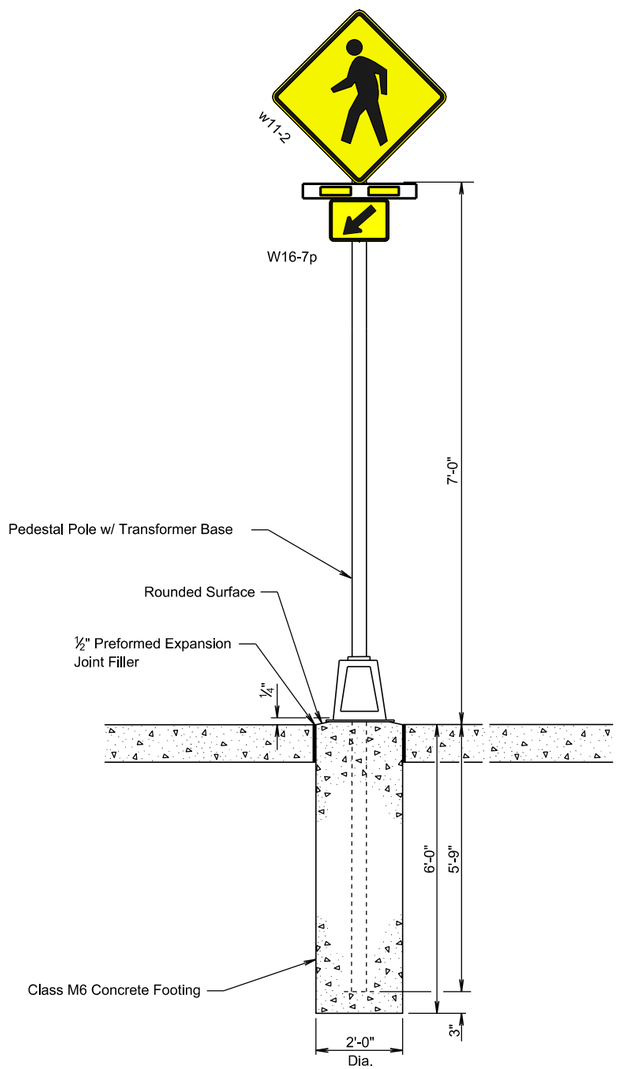

FRONT VIEW

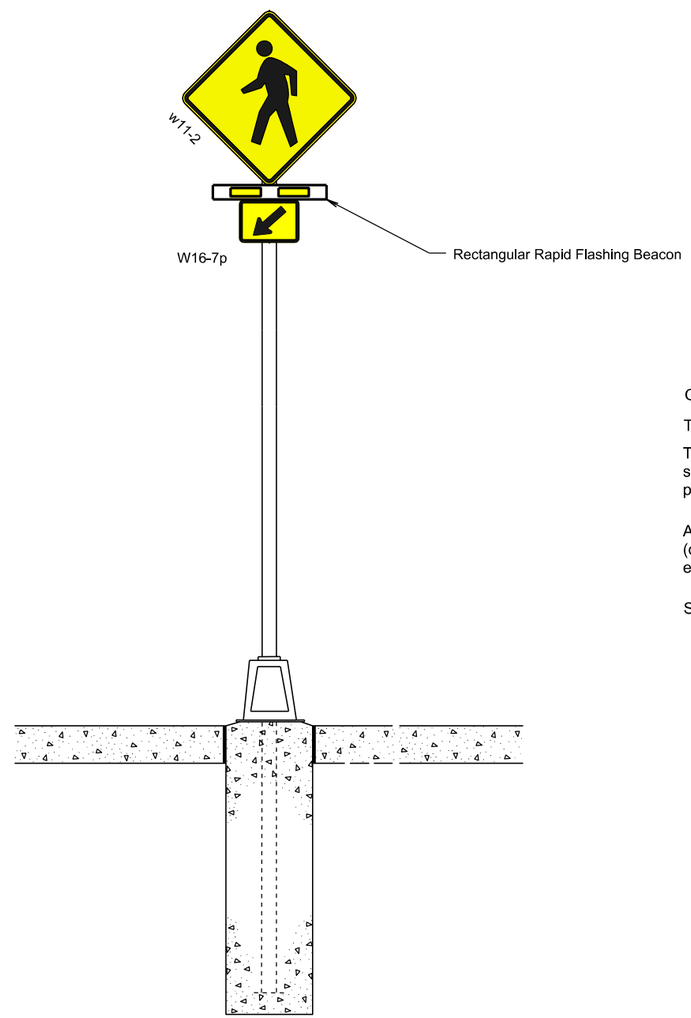

BACK VIEW

GENERAL NOTES:

The concrete for the pole footing shall be class M6 concrete.

The signal controllers shall be located on pedestal signal pole S3 & S4 below sign W-16-7p at a mounting height that may be reached by maintenance personnel without the use of a ladder or other climbing device.

All costs for furnishing and installing the controller and rectangular rapid flashing beacons (one each direction) shall be incidental to the contract unit price per each for "Rectangular Rapid Flashing Beacon".

SEE SECTION S FOR SIGN RESET

PLOT SCALE - 1:200
PLOTTED FROM - TRPR14341
PLOT NAME - 39
FILE - ...\LAWR0555\PED SIGN DETAIL.DGN

STATE OF SOUTH DAKOTA	PROJECT	SHEET	TOTAL SHEETS
	NH-PH 0085(20)26	L40	L50

Plotting Date: 06/20/2014

SPECIAL DETAIL

PEDESTRIAN PUSH BUTTON SIGN DETAIL

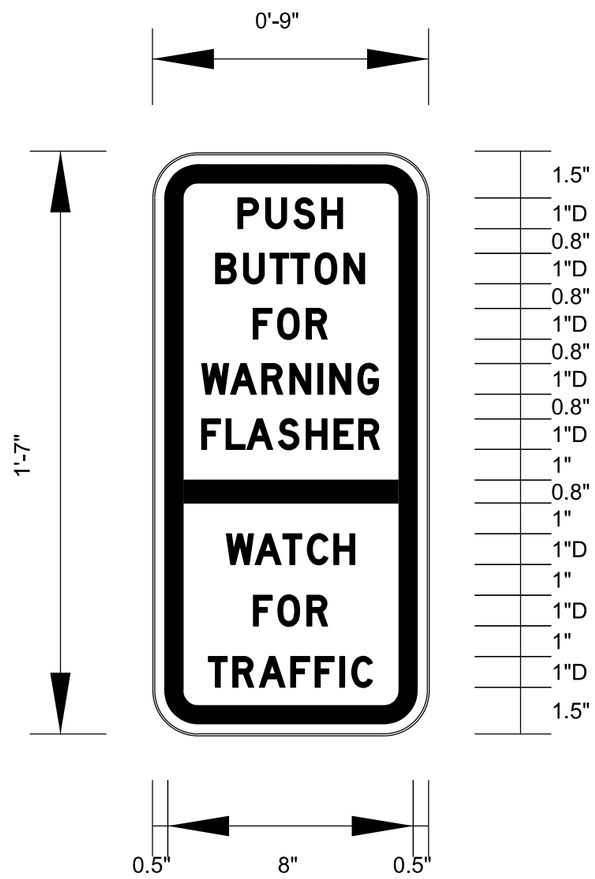

SIGN NUMBER	Ped Crossing	
WIDTH x HEIGHTH	0'-9" x 1'-7"	
BORDER WIDTH	0.63"	
CORNER RADIUS	1.13"	
MOUNTING	Ground	
BACKGROUND	TYPE:	High Intensity
	COLOR:	White
LEGEND/BORDER	TYPE:	Vinyl
	COLOR:	Black

Dimensions are in inches.tenths. Word lengths and spaces between words are shown.

LETTER POSITIONS (X)																LENGTH	SERIES/SIZE
	P	U	S	H													D1
2.8	3.4				2.8											3.4	
	B	U	T	T	O	N											D1
2.1	4.9						2.1									4.9	
	F	O	R														D1
3.3	2.4			3.3												2.4	
	W	A	R	N	I	N	G										D1
1.6	5.8							1.6								5.8	
	F	L	A	S	H	E	R										D1
1.6	5.8							1.6								5.8	
	W	A	T	C	H												D1
2.4	4.2					2.4										4.2	
	F	O	R														D1
3.3	2.4			3.3												2.4	
	T	R	A	F	F	I	C										D1
1.8	5.4							1.8								5.4	

Plot Scale - 1:40
Plotted From - TRPR14341
File - ...\lawr0535\ppb sign detail.dgn

STATE OF	PROJECT	SHEET NO.	TOTAL SHEETS
S.D.	NH-PH 0085(20)26	L41	L50

SPECIAL DETAIL
SPREAD FOOTING FOR LUMINAIRES

REINFORCING SCHEDULE
(For One Footing)

Mk.	No.	Size	Length	Type	Bending Details
H1	6	6	1' - 6"	Str.	
J1	3	4	5' - 5"	T3	
K1	16	4	4' - 9"	17	
K2	2	4	5' - 7"	17	

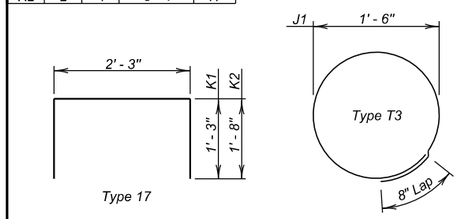

NOTE:
All dimensions are out to out of bars.

INFORMATIONAL QUANTITIES
(For One Footing)

ITEM	UNIT	QUANTITY
Epoxy Coated Reinforcing Steel	Lb.	88
Class M6 Concrete	Cu.Yd.	0.6
Structure Excavation, Miscellaneous	Cu.Yd.	2.4

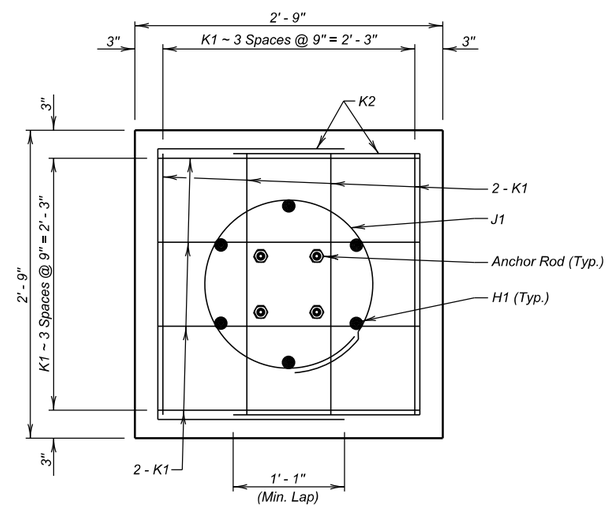

PLAN

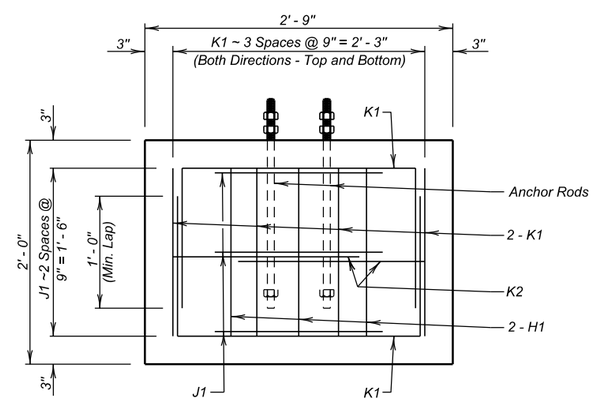

ELEVATION

SPECIFICATIONS

1. Design Specifications: AASHTO LRFD Bridge Design Specifications, 2012 Edition with 2013 interims.
2. Construction Specifications: South Dakota Standard Specifications for Roads and Bridges, 2004 Edition and required Provisions, Supplemental Specifications, and Special Provisions as included in the Proposal.

GENERAL NOTES

1. Unit Stresses: Concrete fc = 1800 p.s.i.
   Reinforcing Steel fs = 24000 p.s.i.
2. All concrete shall be Class M6 conforming to Section 462.
3. All reinforcing steel shall conform to ASTM A615 Grade 60.
4. All exposed edges shall be chamfered ¾ inch.
5. Use 1 inch clear cover on all reinforcing steel EXCEPT as shown.
6. The embedment depth to the bottom of the footing shall be 2 ft. The footing shall be undercut 6 inches and backfilled with granular material conforming to the specifications for aggregate base course in Section 882 of the Specifications. If in- place bedrock is present at the bottom of the footing elevation during construction of the spread footing, the undercut will not be required.

LUMINAIRE FOOTING DETAILS
FOR
SPREAD FOOTING FOR LUMINAIRES
NH 0085(20)26
LAWRENCE COUNTY
S. D. DEPT. OF TRANSPORTATION
APRIL 2014

DESIGNED BY	CK. DES. BY	DRAFTED BY	
TB	MM	BT	Kevin N. Goeden
LAWR0555	0555TA01		BRIDGE ENGINEER

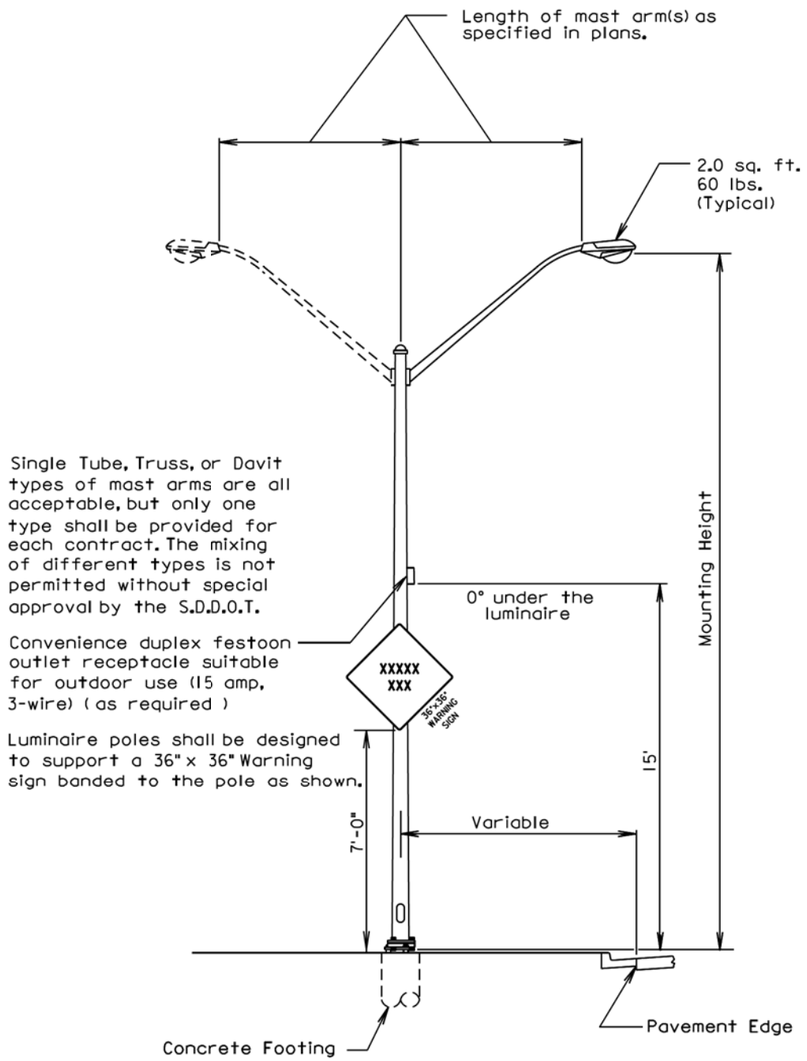

March 31, 2000

Published Date: 2nd Qtr. 2014	SDDOT	STEEL ROADWAY LUMINAIRE POLE WITH MAST ARM(S)	PLATE NUMBER 635.01
			Sheet 1 of 1

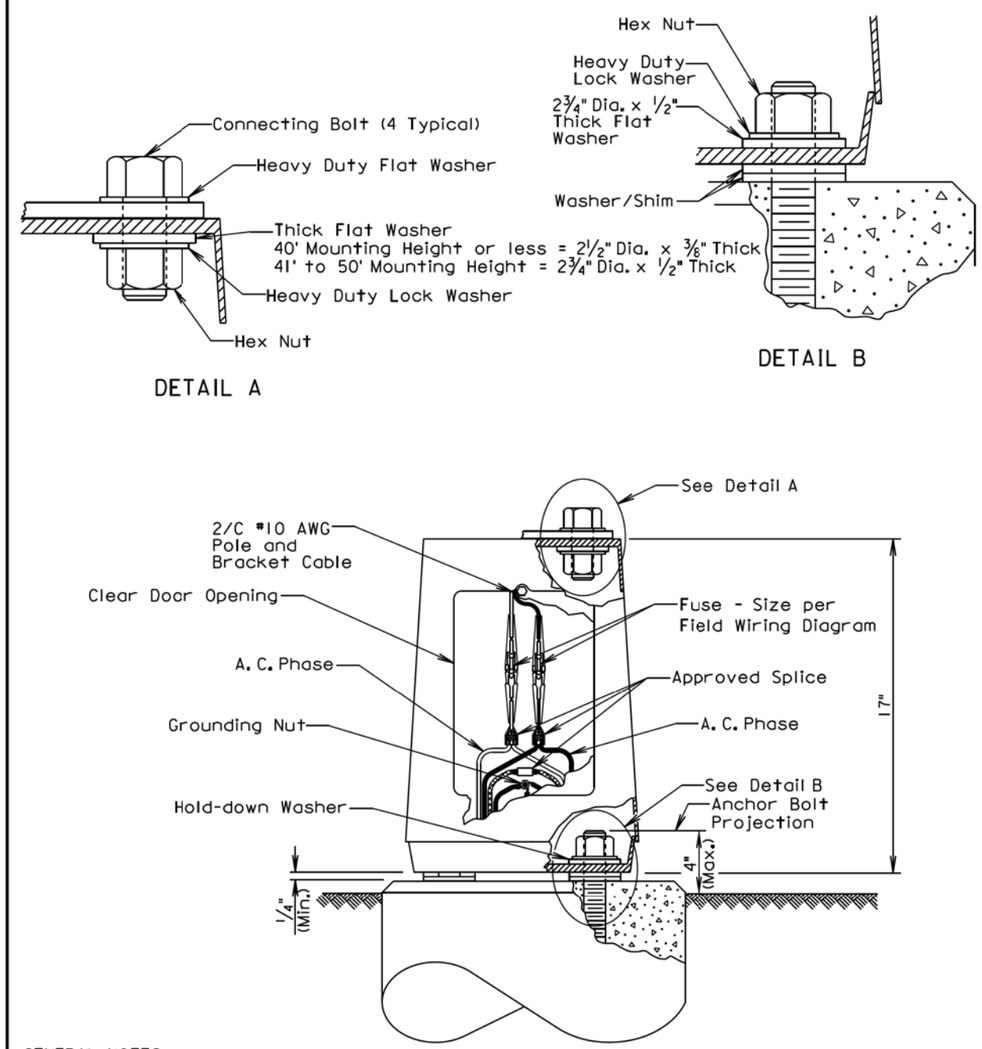

GENERAL NOTES:

Base details are provided for example only and are not intended to be a complete design.

Connectors shall be breakaway type.

The Contractor shall install "U" shaped shims or round flat washers if shimming is necessary to install the light poles plumb and level. The washers and shims shall be installed around the anchor bolts.

June 26, 2013

Published Date: 2nd Qtr. 2014	SDDOT	ROADWAY LUMINAIRE POLE BREAKAWAY TRANSFORMER BASE	PLATE NUMBER 635.21
			Sheet 1 of 1

Plot Scale - 1:200
- Plotted From - TRPR14341
File - ...\proj\law0555\s63501s63521.dgn

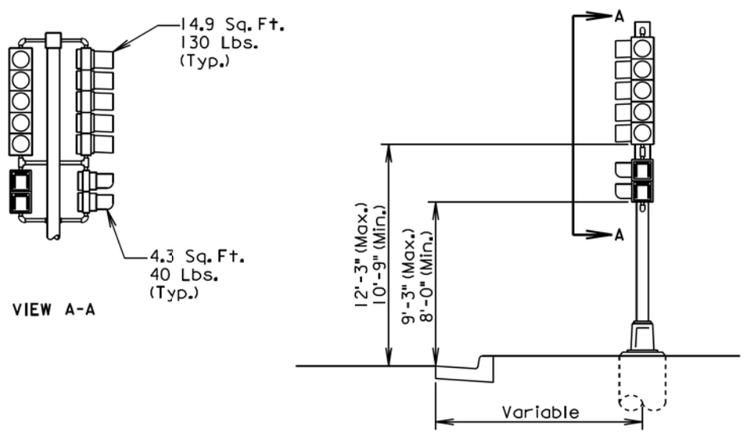

GENERAL NOTE:

The signal heads are shown with backplates removed so that the mounting hardware is visible.

October 15, 2007

Published Date: 2nd Qtr. 2014	SDDOT	SIGNAL POLE (PEDESTAL)	PLATE NUMBER 635.30
			Sheet 1 of 1

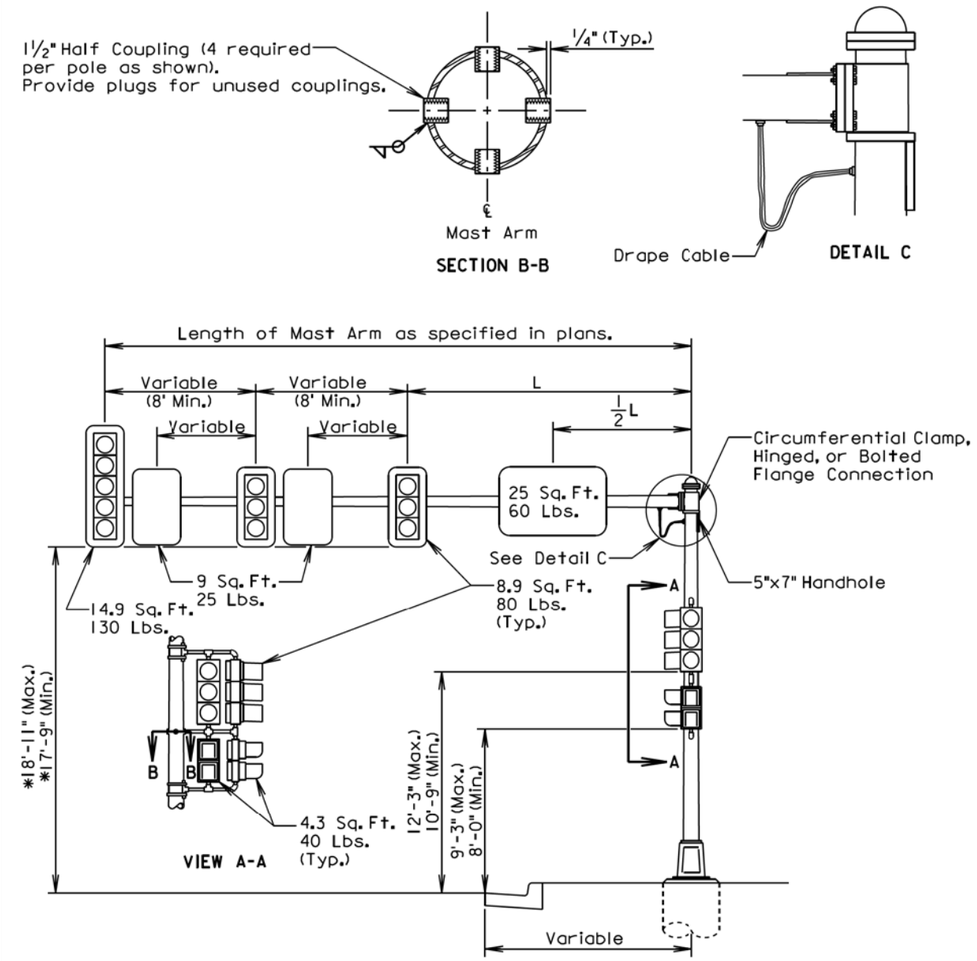

GENERAL NOTES:

Some of the signal heads are shown with backplates removed so that the mounting hardware is visible.

* The signal height allowances shown above are based on a horizontal distance greater than 53' between the signals and stop line. For horizontal distance of 53' and less between the signals and the stop line, the height allowances shall be as specified in Section 4D.15 of the MUTCD.

December 23, 2008

Published Date: 2nd Qtr. 2014	SDDOT	SIGNAL POLE (WITH MAST ARM)	PLATE NUMBER 635.31
			Sheet 1 of 1

Plot Scale - 1:200
- Plotted From - TRPR14341
File - ...\prj\lawn0555\s635306s63531.dgn

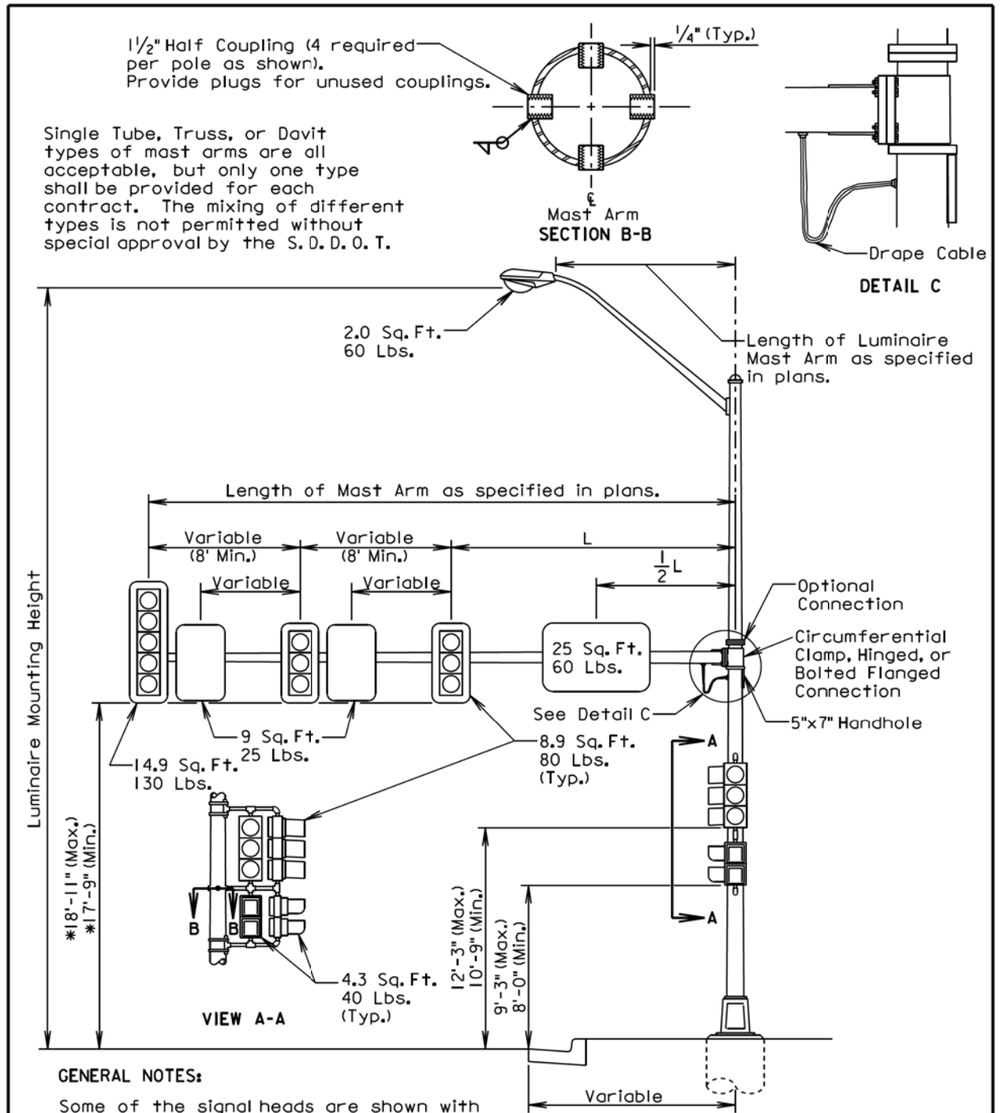

GENERAL NOTES:

Some of the signal heads are shown with backplates removed so that the mounting hardware is visible.

* The signal height allowances shown above are based on a horizontal distance greater than 53' between the signals and stop line. For horizontal distance of 53' and less between the signals and the stop line, the height allowances shall be as specified in Section 4D.15 of the MUTCD.

December 23, 2008

Published Date: 2nd Qtr. 2014	SDDOT	SIGNAL POLE (WITH MAST ARM AND LUMINAIRE EXTENSION)	PLATE NUMBER 635.32 Sheet 1 of 1

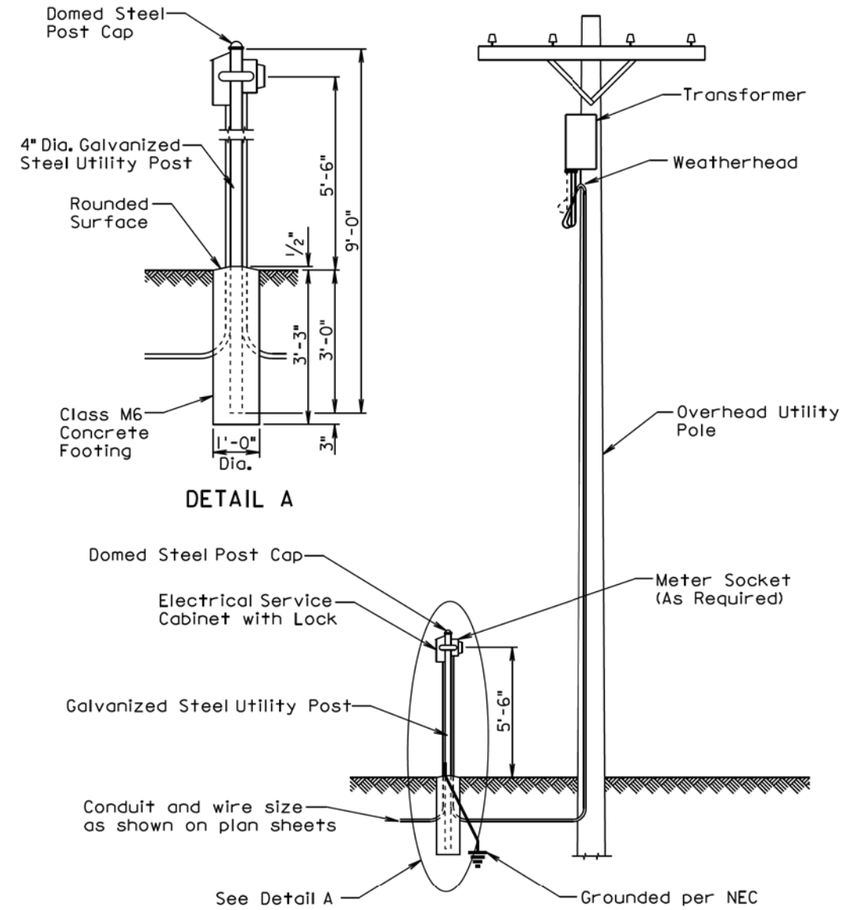

GENERAL NOTES:

The concrete for the post footing shall be class M6 concrete.

The 4" diameter galvanized steel utility post shall be 9' long and shall be in conformance with AASHTO Standard Specifications M181. The post shall be Type 1 and either Grade 1 or Grade 2. The domed steel post cap shall be in conformance with AASHTO Standard Specifications M181 and shall be Type 1.

The Contractor shall contact and coordinate his/her work with the Utility Companies regarding hookup requirements, fees, materials, and equipment necessary.

All costs for furnishing and installing all materials from the electrical service cabinet to the transformer including labor, equipment, hookup fees, all items within the cabinet, post, concrete footing, post cap, meter socket if required, conduit, and incidentals shall be incidental to the contract unit price per each for "Electrical Service Cabinet".

June 26, 2006

Published Date: 2nd Qtr. 2014	SDDOT	GALVANIZED STEEL UTILITY POST WITH OVERHEAD UTILITY POLE	PLATE NUMBER 635.35 Sheet 1 of 1

Plot Scale - 1:200
- Plotted From - TRPR14341
File - ...\prj\lawr0555\s63532\s63535.dgn

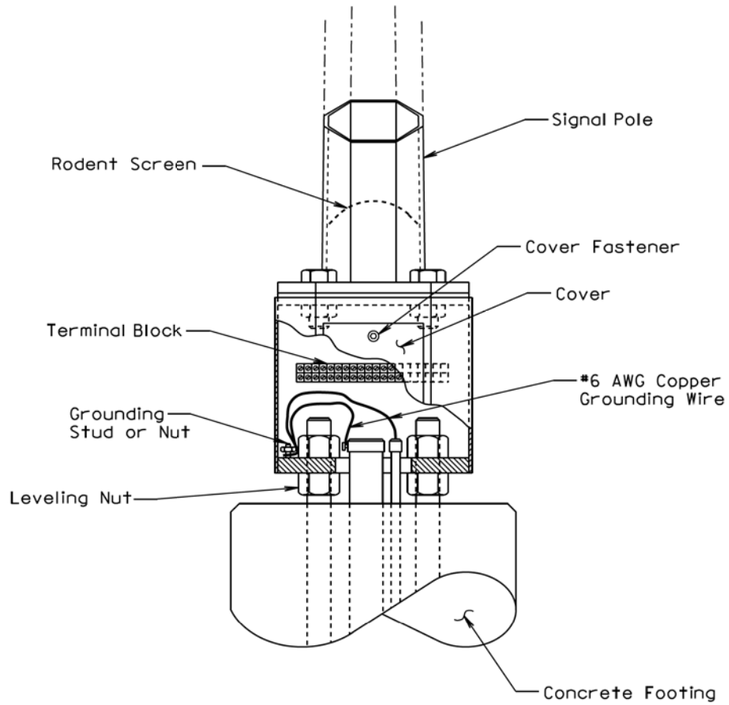

GENERAL NOTES:

Base details are provided for example only and are not intended to be a complete design.

The Contractor shall furnish and install a rodent screen in the signal pole above the tranformer base. The rodent screen shall be a galvanized steel mesh with a maximum opening size of 1/4 inch. The rodent screen shall be friction fitted or installed by other methods approved by the Engineer.

All costs for furnishing and installing the rodent screen including labor, equipment, and materials shall be incidental to the contract unit price per each for the corresponding signal pole bid item.

December 23, 2008

Published Date: 2nd Qtr. 2014	SDDOT	TRANSFORMER SIGNAL POLE BASE	PLATE NUMBER 635.50
			Sheet 1 of 1

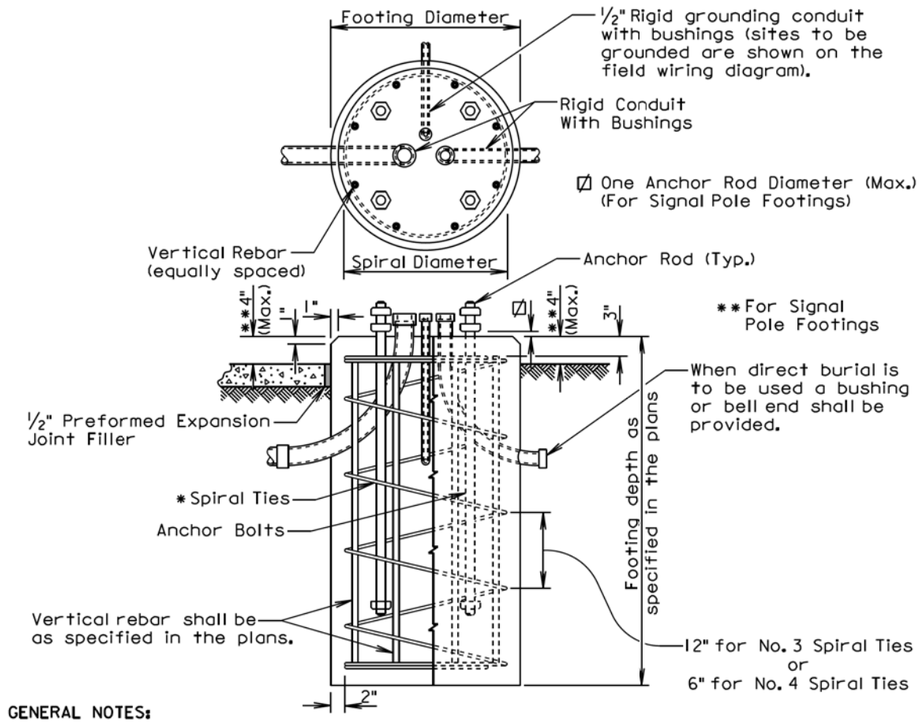

GENERAL NOTES:

* The tie sizes are specified in the plans. Circular ties may be used in lieu of the spiral ties. The No. 3 ties shall be spaced 12 inches apart except for the top two which shall be spaced 6 inches apart. The No. 4 ties shall be spaced 6 inches apart except for the top two which shall be spaced 3 inches apart. The ties shall be lapped 18 inches and the laps shall be staggered around the cage.

Spiral ties shall have 1-1/2 extra turns at each end.

See section 985 of the Standard Specifications for footing materials.

Conduits and bushings may project 2 1/2 inches to 6 inches above footing for fixed base poles but shall not project above the slip plane or fracture plane for breakaway poles.

Conduits shall be sealed water-tight during all phases of construction until poles are in place.

The anchor rods shall fit inside the reinforcing steel cage. If the anchor rods designed by the Pole Manufacturer do not fit, contact the Office of Bridge Design for footing redesign. No additional payment will be made for the redesigned footing.

Costs of conduit and conduit bushings shown on footing detail shall be incidental to the footing bid item(s).

The pole shall not be installed until the concrete has attained design strength (4000 psi).

The contour of the area surrounding the breakaway pole shall be flat, though not necessarily level for a distance of 5 feet in all directions. The Contractor may be required to provide finish grading at some breakaway pole locations.

September 6, 2013

Published Date: 2nd Qtr. 2014	SDDOT	POLE FOOTING	PLATE NUMBER 635.55
			Sheet 1 of 1

Plot Scale - 1:200
Plotted From - TRPR14341
File - ...\prj\lawr0555\s63550\s63555.dgn

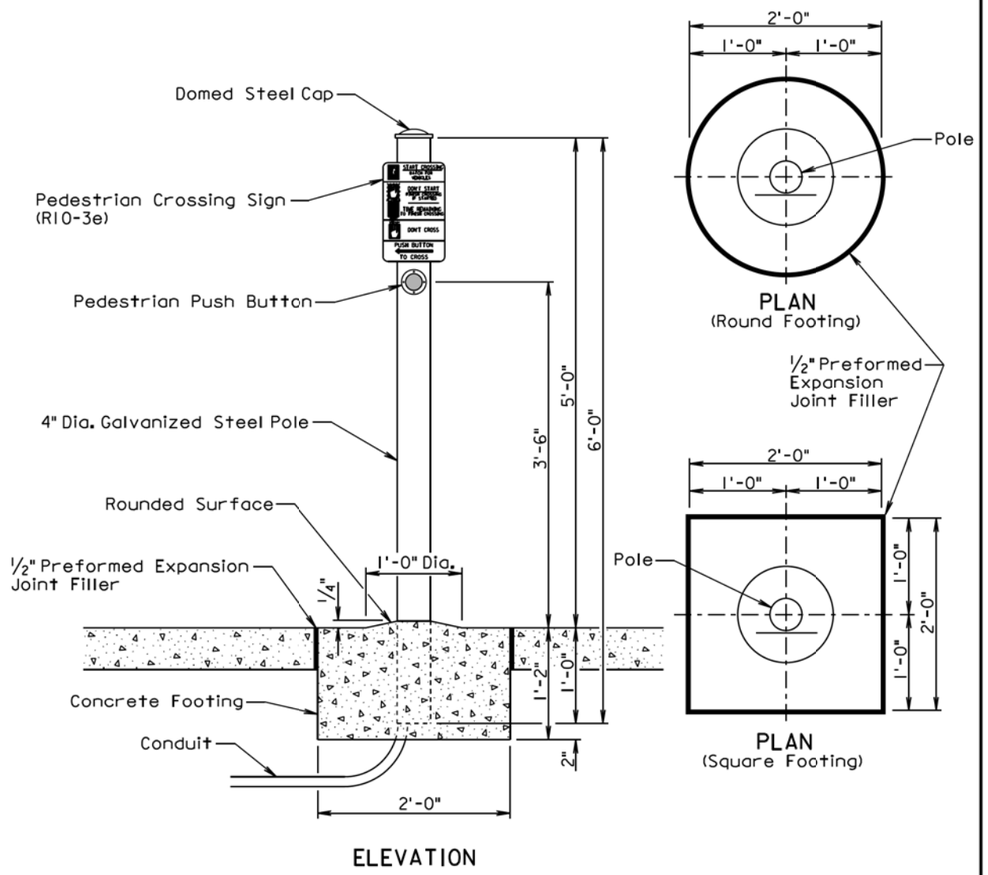

GENERAL NOTES:

The Contractor shall install either the round or the square concrete footing. For informational purpose, the quantity of concrete for one footing is 0.14 cubic yards for the round footing and 0.17 cubic yards for the square footing.

The concrete for the footing shall be class M6 concrete.

The 4" diameter galvanized steel pole shall be 6' long and shall be in conformance with AASHTO Standard Specifications M181. The pole shall be Type 1 and either Grade 1 or Grade 2. The domed steel pole cap shall be in conformance with AASHTO Standard Specifications M181 and shall be Type 1.

All costs for furnishing and installing the pedestrian push button pole including labor, equipment, and materials including the pole, concrete footing, steel cap, and the conduit in the footing shall be incidental to the contract unit price per each for "Pedestrian Push Button Pole".

February 14, 2010

Published Date: 2nd Qtr. 2014	SDDOT	PEDESTRIAN PUSH BUTTON POLE	PLATE NUMBER 635.57
			Sheet 1 of 1

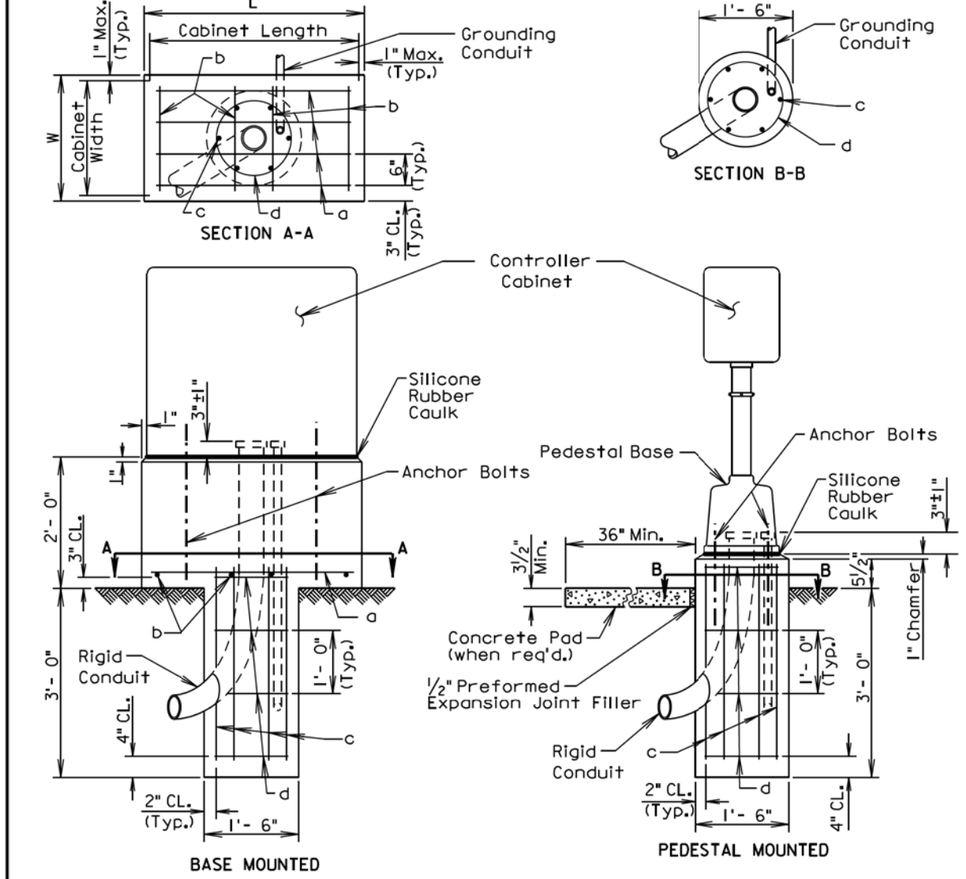

GENERAL NOTES:

The above ground portion of the footing shall conform to the base of the controller to the satisfaction of the Engineer.

Conduits shall be sealed and water-tight until the conductor cables are installed.

If the controller is not located within or adjacent to an existing sidewalk, the Contractor shall provide a concrete pad as directed by the Engineer.

Anchor bolts and related hardware shall conform to the controller manufacturer's requirements and recommendations.

A continuous bead of silicone rubber caulk shall provide a weather-tight seal between the base and the concrete.

Reinforcing Schedule (for one footing)

Mk.	No.	Size	Length	Type	Bending Detail
a	*	3	L - 4"	Str.	
b	*	3	W - 4"	Str.	
c	6	6	3'- 0"	Str.	
d	4	3	4'- 0"	T3	Type T3

Note: Dimensions are out to out of bar

* Vary number of bars as required by footing size.

March 31, 2000

Published Date: 2nd Qtr. 2014	SDDOT	CONTROLLER CABINET AND FOOTING	PLATE NUMBER 635.60
			Sheet 1 of 1

Plot Scale - 1:200
- Plotted From - TRPR14341
File - ...\prj\lawn0555\s635557s63560.dgn

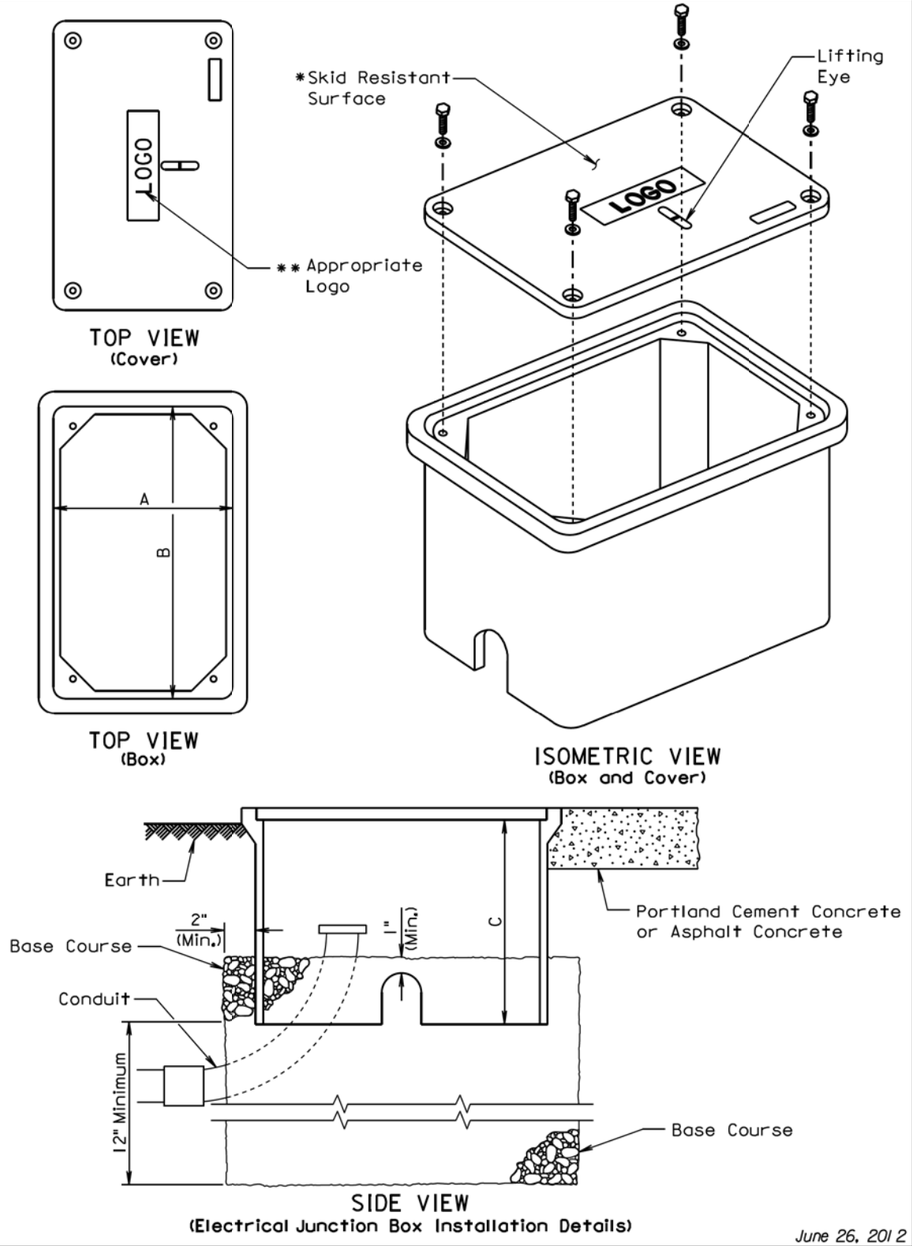

June 26, 2012

Published Date: 2nd Qtr. 2014

SDDOT

ELECTRICAL JUNCTION BOXES TYPE 1 THROUGH TYPE 4

PLATE NUMBER 635.65

Sheet 1 of 2

ELECTRICAL JUNCTION BOX

TYPE	DESCRIPTION	DIMENSIONS		
		A	B	C
1	Open Bottom with Gasket	11"-15"	18"-21"	18" (Min.)
2	Open Bottom with Gasket	13"-18"	23"-28"	18" (Min.)
3	Open Bottom with Gasket	17"-22"	24"-30"	18" (Min.)
4	Open Bottom with Gasket	28"-33"	36"-48"	24" (Min.)

GENERAL NOTES:

The cover shall be gasketed with a minimum of two stainless steel bolts and washers.

The cover shall have a lifting eye.

* The surface of the cover shall have a minimum wet and dry coefficient of friction value of 0.5 as determined by ASTM F 609.

** The cover of the junction box shall have the appropriate logo in one inch size letters and shall be recessed. When the junction box contains cables or wires for a traffic signal then the logo shall be "Signal". When the junction box contains lighting conductors then the logo shall be "Lighting".

The electrical junction boxes shall comply with the American National Standards Institute (ANSI)/Society of Cable Telecommunications Engineers (SCTE) 77 2007 Specification for Underground Enclosure Integrity. The loading requirement for all the electrical junction boxes shall be Tier 8 of ANSI/SCTE 77 2007.

The electrical junction boxes shall be UL listed.

June 26, 2012

Published Date: 2nd Qtr. 2014

SDDOT

ELECTRICAL JUNCTION BOXES TYPE 1 THROUGH TYPE 4

PLATE NUMBER 635.65

Sheet 2 of 2

Plot Scale - 1:200

- Plotted From - TRPR14341

File - ...\lawr0555\s63565_1\s63565_2.dgn

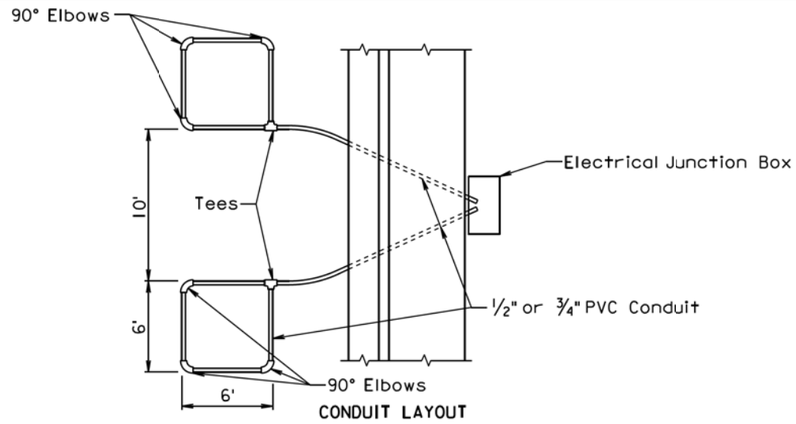

CONDUIT LAYOUT

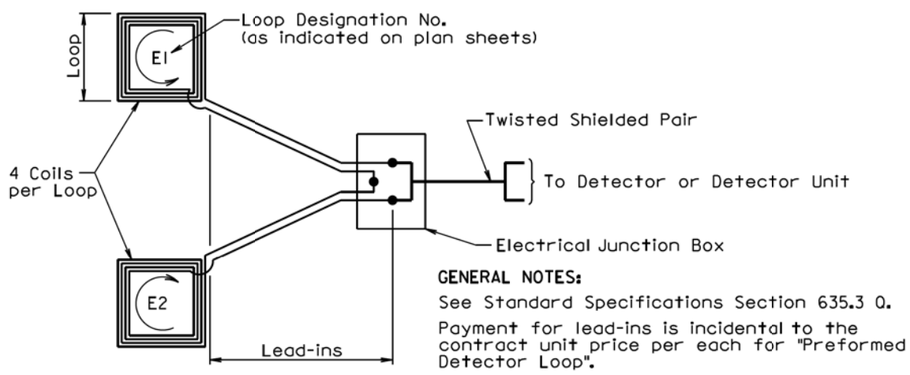

GENERAL NOTES:

See Standard Specifications Section 635.3 Q.

Payment for lead-ins is incidental to the contract unit price per each for "Preformed Detector Loop".

WIRING DIAGRAM

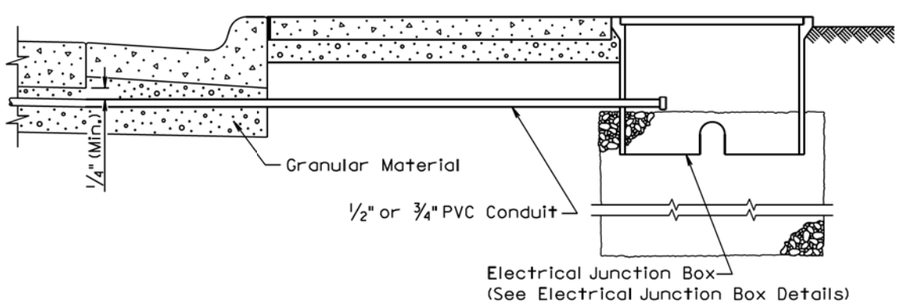

LEAD-IN DETAIL

February 14, 2011

Published Date: 2nd Qtr. 2014	SDDOT	PREFORMED DETECTOR LOOP	PLATE NUMBER 635.70
			Sheet 1 of 1

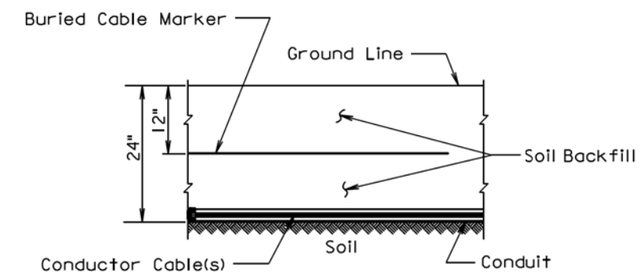

SECTION VIEW

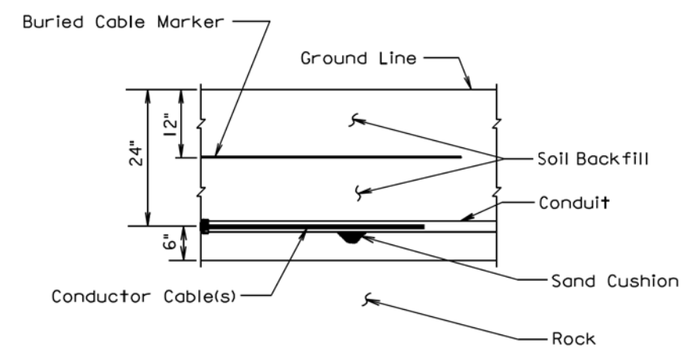

SECTION VIEW

GENERAL NOTE:

The Buried Cable Marker shall be plastic, approximately 6" wide, and shall be capable of sustaining a minimum of a 350% tolerance of elongation without tearing. The Buried Cable Marker shall have a life expectancy approximately equal to that of the conductor(s) beneath it. A phrase indicating the presence of a buried electric circuit below shall be printed in a contrasting color on the cable marker. The Buried Cable Marker shall be subject to approval by the Engineer. All costs associated with furnishing and installing the Buried Cable Marker shall be incidental to the contract unit price per Foot for the bid item used for the electrical conductor.

March 31, 2000

Published Date: 2nd Qtr. 2014	SDDOT	CONDUIT INSTALLATION	PLATE NUMBER 635.76
			Sheet 1 of 1

Plot Scale - 1:200
Plotted From - TRPR14341
File - ...\prj\awr0555\s635\70s635\76.dgn

Step 1. Strip loop wires and lead-in cable.

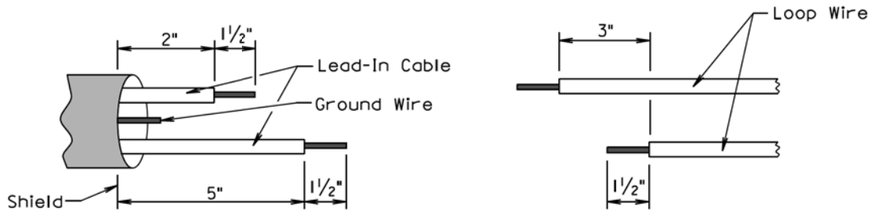

Step 2. Connect and solder.

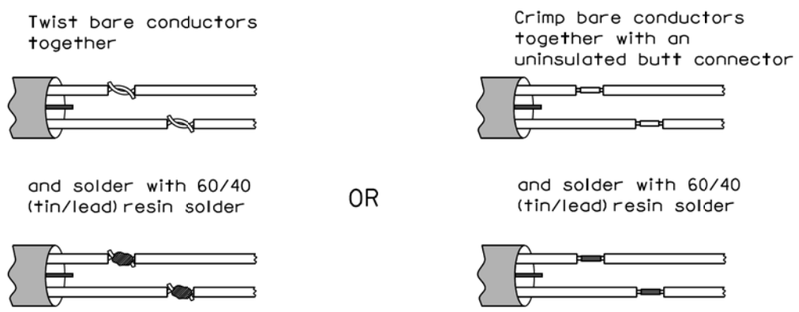

Step 3. Insulate each solder joint seperately.

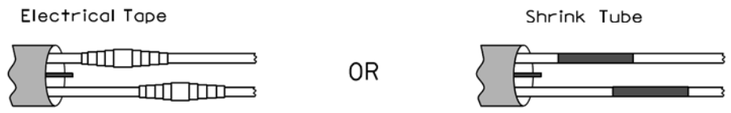

Step 4. Environmentally seal total splice against weather, moisture and abrasion. Methods for environmentally sealing the splice include heat-shrinkable tubing, special sealing kits, special forms to be filled by sealant, and tape and coating.

June 20, 2000

Published Date: 2nd Qtr. 2014

SDDOT

DETECTOR LOOP WIRE SPLICING

PLATE NUMBER 635.77

Sheet 1 of 1

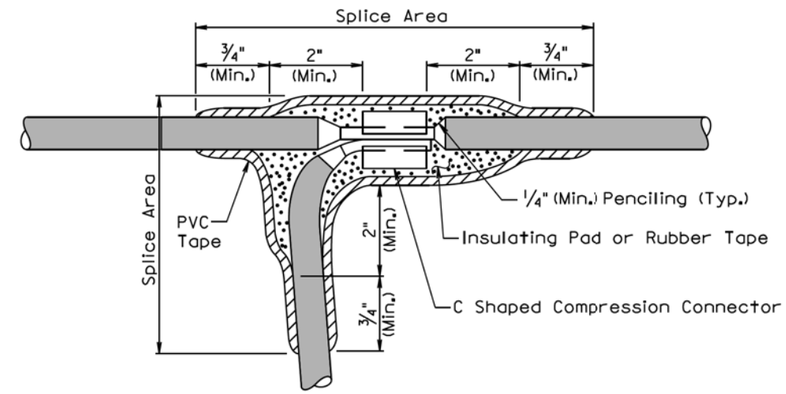

TYPE C SPLICE
(Between 1 free end and 1 through conductor)

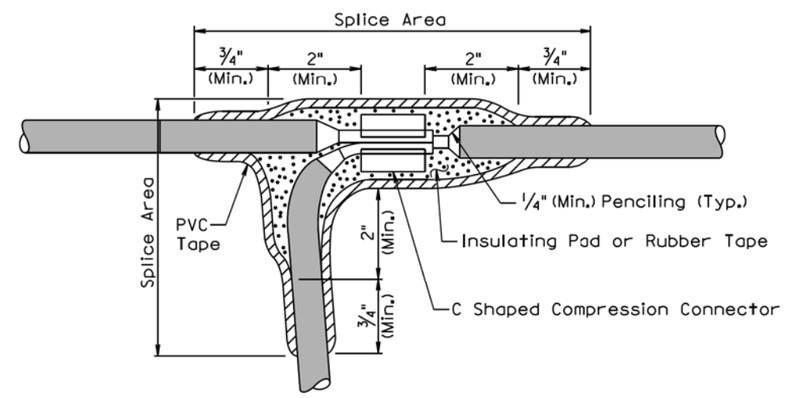

TYPE T SPLICE
(For 3 free ends)

February 14, 2010

Published Date: 2nd Qtr. 2014

SDDOT

WIRE SPLICING FOR LIGHTING (LOW VOLTAGE CIRCUITS (0 to 600 V))

PLATE NUMBER 635.80

Sheet 1 of 2

Plot Scale - 1:200
- Plotted From - TRPR14341
File - ...\lawr0555\s63577s63580_1.dgn

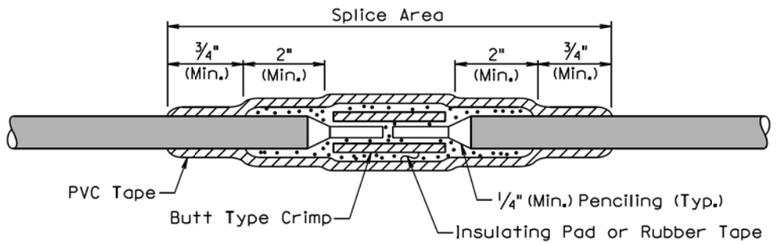

TYPE S SPLICE
(Between 2 free ends)

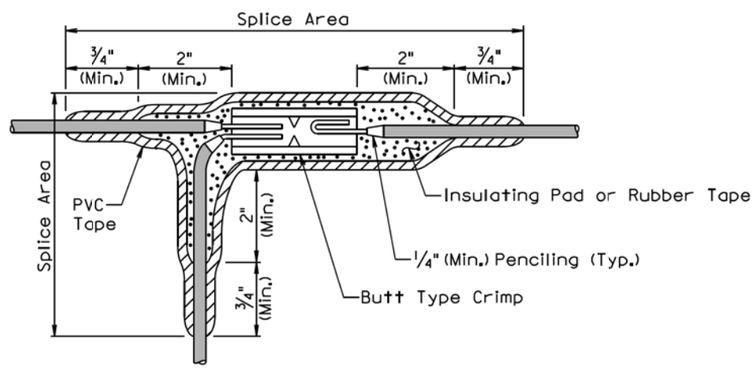

TYPE ST SPLICE
(For 3 free ends)

GENERAL NOTES:

The splice shall be environmentally sealed for protection from weather, moisture, and abrasion in accordance with the method stated below.

The rubber tapes shall be rolled after application.

Method for insulating splice area:

1. The splice area shall be completely covered with electrical insulating coating and dried.
2. Apply two layers of 1/8" minimum thickness electrical insulating pad or two layers of half lapped synthetic oil resistant self fusing rubber tape.
3. Three layers of half lapped polyvinyl chloride tape shall be applied.
4. The entire splice area shall be covered with electrical insulating coating and dried.

February 14, 2010

Published Date: 2nd Qtr. 2014	SDDOT	WIRE SPLICING FOR LIGHTING (LOW VOLTAGE CIRCUITS (0 to 600 V))	PLATE NUMBER 635.80
			Sheet 2 of 2

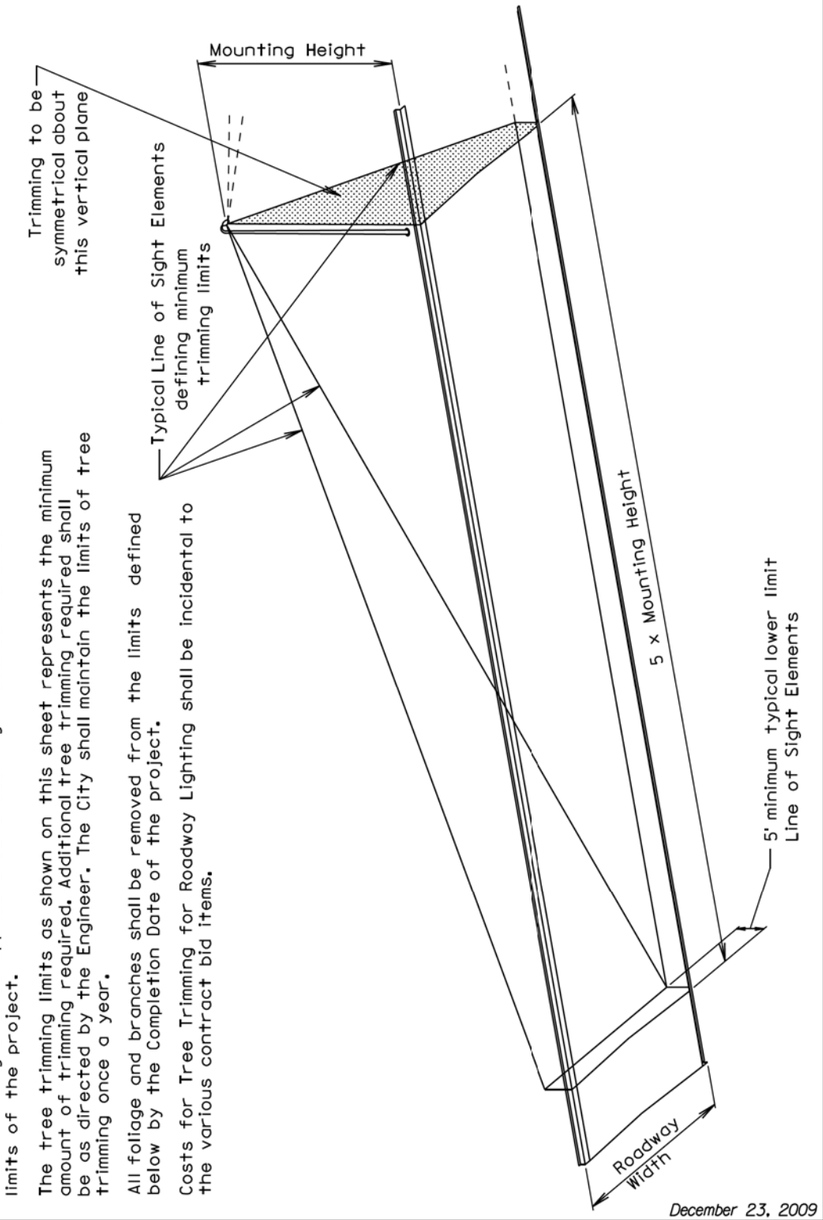

GENERAL NOTES:

Tree Trimming shall be done in accordance with proper tree trimming practices. The underside of each branch to be removed shall have a groove sawed through the bark (1/2" Min. depth) before any sawing is started on the top side of the branch.

Tree trimming shall be applied around each light source installed within the limits of the project.

The tree trimming limits as shown on this sheet represents the minimum amount of trimming required. Additional tree trimming required shall be as directed by the Engineer. The City shall maintain the limits of tree trimming once a year.

All foliage and branches shall be removed from the limits defined below by the Completion Date of the project.

Costs for Tree Trimming for Roadway Lighting shall be incidental to the various contract bid items.

December 23, 2009

Published Date: 2nd Qtr. 2014	SDDOT	TREE TRIMMING FOR ROADWAY LIGHTING	PLATE NUMBER 635.99
			Sheet 1 of 1