Section E: Structure Plans

INDEX OF SHEETS

E1	Layout Map and Index of Sheets
E2	Estimate of Structure Quantities
E3-E42	Str. 68-129-205

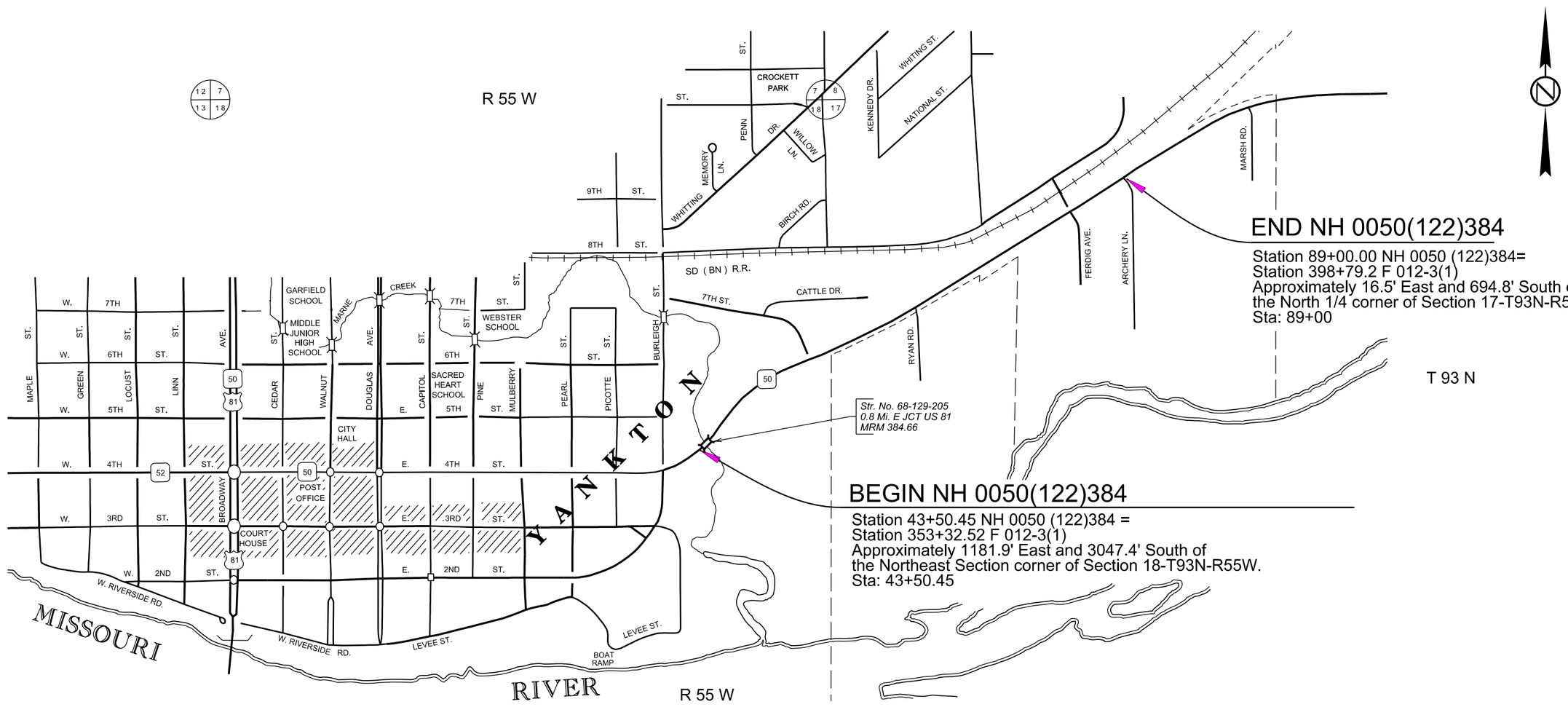

ESTIMATE OF STRUCTURE QUANTITIES

PCN 05HD - NH 0050(122)384

Str. No. 68-129-205

BID ITEM NUMBER	ITEM	QUANTITY	UNIT
009E3310	Bridge Elevation Survey	Lump Sum	LS
110E0010	Remove Concrete Bridge Approach Slab	436.7	SqYd
110E0020	Remove Bridge Railing	226	Ft
410E2600	Membrane Sealant Expansion Joint	110.0	Ft
430E0300	Granular Bridge End Backfill	89.4	CuYd
430E0510	Approach Slab Underdrain Excavation	105.9	CuYd
430E0700	Precast Concrete Headwall for Drain	4	Each
460E0070	Class A45 Concrete, Bridge Repair	31.3	CuYd
460E0150	Concrete Approach Slab for Bridge	415.5	SqYd
460E0160	Concrete Approach Sleeper Slab for Bridge	88.6	SqYd
460E0200	Special Surface Finish	437	SqFt
460E0300	Breakout Structural Concrete	23.2	CuYd
460E0380	Install Dowel in Concrete	160	Each
464E0100	Controlled Density Fill	6.4	CuYd
470E0040	Steel Pedestrian Railing	114.6	Ft
480E0200	Epoxy Coated Reinforcing Steel	4,461	Lb
480E0504	No. 4 Rebar Splice	46	Each
480E0505	No. 5 Rebar Splice	48	Each
480E0506	No. 6 Rebar Splice	72	Each
480E5000	Galvanic Anode	97	Each
550E0010	Low Slump Dense Concrete Bridge Deck Overlay	48	CuYd
550E0100	Concrete Removal Type 1A	682.5	SqYd
550E0105	Concrete Removal Type 2A	170.7	SqYd
550E0110	Concrete Removal Type 1B	68.2	SqYd
550E0120	Concrete Removal Type 1C	34.2	SqYd
550E0130	Concrete Removal Type 1D	34.2	SqYd
550E0140	Concrete Removal Type B	43.0	Ft
550E0200	Class A45 Concrete Fill	13.3	CuYd
550E0500	Finishing and Curing	682.5	SqYd
621E0300	Chain Link Fence for Bridge Sidewalk	114	Ft
680E0040	4" Underdrain Pipe	218	Ft
680E2500	Porous Backfill	30.5	Ton
700E0210	Class B Riprap	263.2	Ton
831E0110	Type B Drainage Fabric	285	SqYd

STATE OF	PROJECT	SHEET NO.	TOTAL SHEETS
S.D.	NH 0050(122)384	E3	E42

FOR BIDDING PURPOSES ONLY

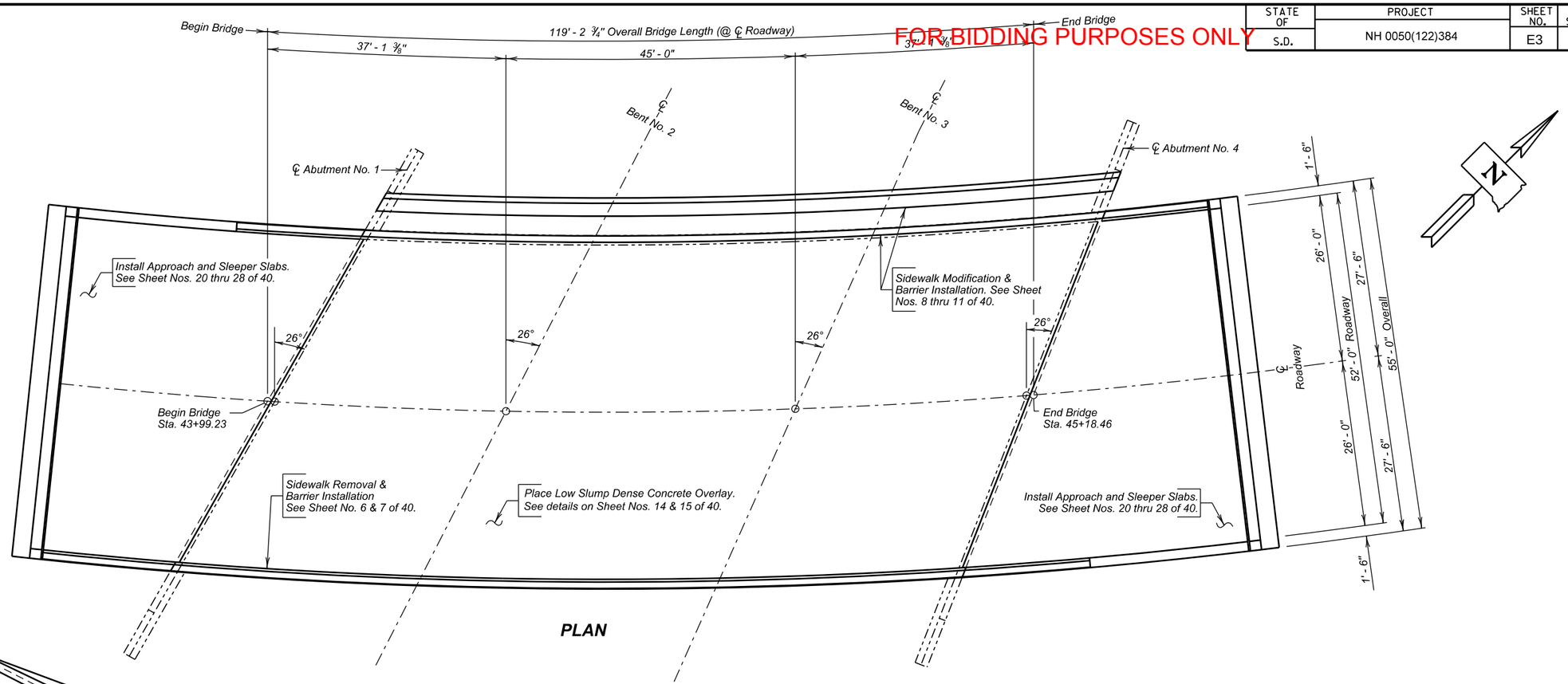

PLAN

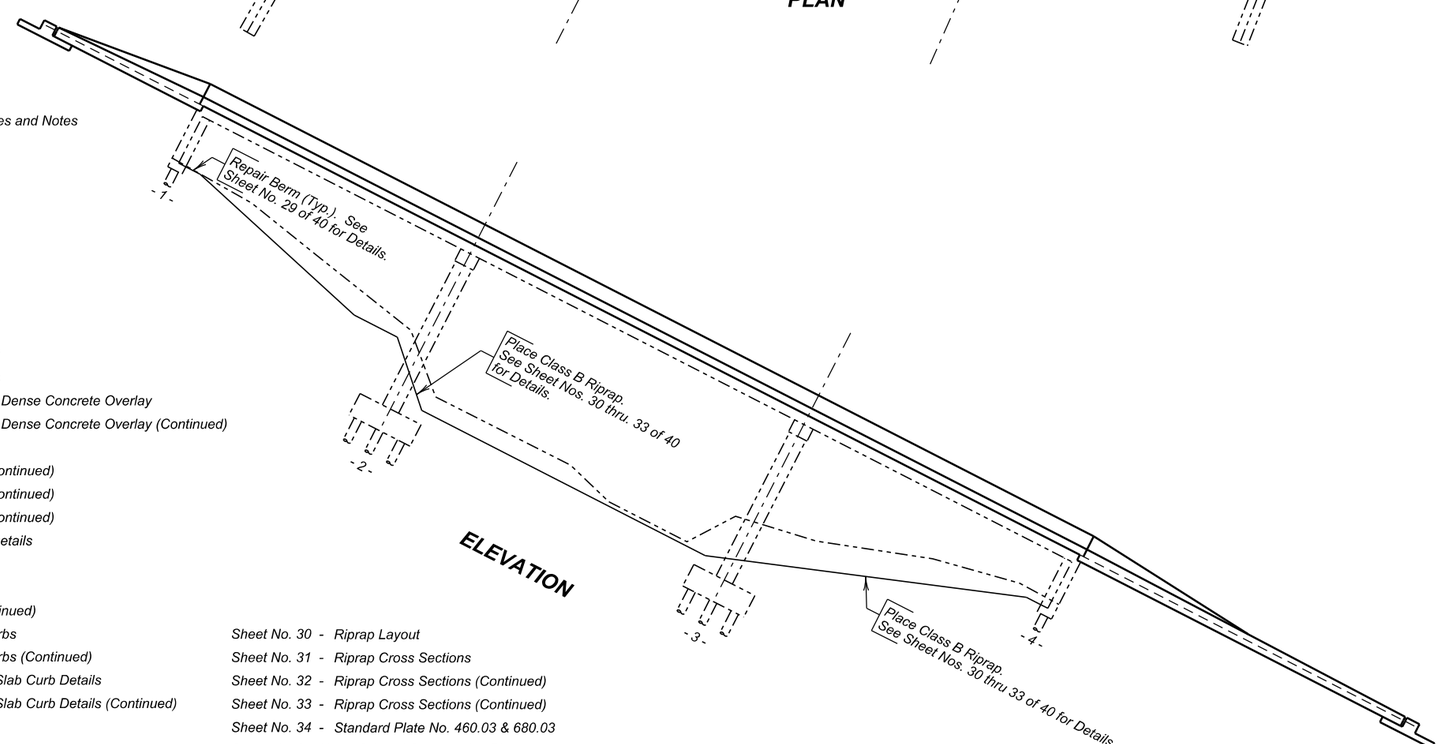

ELEVATION

INDEX OF BRIDGE SHEETS

Sheet No. 1 - Layout for Upgrade
Sheet No. 2 - Estimate of Structure Quantities and Notes
Sheet No. 3 - Notes (Continued)
Sheet No. 4 - Notes (Continued)
Sheet No. 5 - Notes (Continued)
Sheet No. 6 - South Sidewalk Removal
Sheet No. 7 - South Barrier Details
Sheet No. 8 - North Barrier Details
Sheet No. 9 - North Sidewalk Removal
Sheet No. 10 - North Sidewalk
Sheet No. 11 - North Sidewalk Details
Sheet No. 12 - Steel Pedestrian Rail Layout
Sheet No. 13 - Steel Pedestrian Rail Details
Sheet No. 14 - Deck Profiles for Low Slump Dense Concrete Overlay
Sheet No. 15 - Deck Profiles for Low Slump Dense Concrete Overlay (Continued)
Sheet No. 16 - As-Built Elevation Survey
Sheet No. 17 - As-Built Elevation Survey (Continued)
Sheet No. 18 - As-Built Elevation Survey (Continued)
Sheet No. 19 - As-Built Elevation Survey (Continued)
Sheet No. 20 - Approach Slab Underdrain Details
Sheet No. 21 - Approach Slab Layout
Sheet No. 22 - Approach Slab Details
Sheet No. 23 - Approach Slab Details (Continued)
Sheet No. 24 - Details of Approach Slab Curbs
Sheet No. 25 - Details of Approach Slab Curbs (Continued)
Sheet No. 26 - Approach Slab & Approach Slab Curb Details
Sheet No. 27 - Approach Slab & Approach Slab Curb Details (Continued)
Sheet No. 28 - Approach Slab Joint Details
Sheet No. 29 - Bridge Berm Details
Sheet No. 30 - Riprap Layout
Sheet No. 31 - Riprap Cross Sections
Sheet No. 32 - Riprap Cross Sections (Continued)
Sheet No. 33 - Riprap Cross Sections (Continued)
Sheet No. 34 - Standard Plate No. 460.03 & 680.03
Sheet No. 35-40 - Original Construction Plans

LAYOUT FOR UPGRADE

FOR

119' - 2¾" CONTINUOUS CONCRETE BRIDGE

52'-0" ROADWAY
OVER MARNE CREEK
STR. NO. 68-129-205
PCN 05HD

26° SKEW L.H.F.
SEC. 18-T93N-R55W
NH 0050(122)384

YANKTON COUNTY
S. D. DEPT. OF TRANSPORTATION
JANUARY 2015

1 OF 40

PLANS BY :
OFFICE OF BRIDGE DESIGN, SOUTH DAKOTA DEPARTMENT OF TRANSPORTATION

DESIGNED BY	CK. DES. BY	DRAFTED BY	
KH	MM	KR	Kevin N. Goeden
YANK05HD	05HDRA01		BRIDGE ENGINEER

ESTIMATE OF STRUCTURE QUANTITIES

ITEM NO.	DESCRIPTION	QUANTITY	UNIT
009E3310	Bridge Elevation Survey	Lump Sum	LS
110E0010	Remove Concrete Bridge Approach Slab	436.7	SqYd
110E0020	Remove Bridge Railing	226	Ft
410E2600	Membrane Sealant Expansion Joint	110	Ft
430E0300	Granular Bridge End Backfill	89.4	CuYd
430E0510	Approach Slab Underdrain Excavation	105.9	CuYd
430E0700	Precast Concrete Headwall for Drain	4	Each
460E0070	Class A45 Concrete, Bridge Repair	31.3	CuYd
460E0150	Concrete Approach Slab for Bridge	415.5	SqYd
460E0160	Concrete Approach Sleeper Slab for Bridge	88.6	SqYd
460E0200	Special Surface Finish	437	SqFt
460E0300	Breakout Structural Concrete	23.2	CuYd
460E0380	Install Dowel in Concrete	160	Each
462E0200	Controlled Density Fill	6.4	CuYd
470E0040	Steel Pedestrian Railing	114.6	Ft
480E0200	Epoxy Coated Reinforcing Steel	4461	Lb
480E0504	No. 4 Rebar Splice	46	Each
480E0505	No. 5 Rebar Splice	48	Each
480E0506	No. 6 Rebar Splice	72	Each
480E5000	Galvanic Anode	97	Each
550E0010	Low Slump Dense Concrete Bridge Deck Overlay	48	CuYd
550E0100	Concrete Removal Type 1A	682.5	SqYd
550E0105	Concrete Removal Type 2A	170.7	SqYd
550E0110	Concrete Removal Type 1B	68.2	SqYd
550E0120	Concrete Removal Type 1C	34.2	SqYd
550E0130	Concrete Removal Type 1D	34.2	SqYd
550E0140	Concrete Removal Type B	43.0	Ft
550E0200	Class A45 Concrete Fill	13.3	CuYd
550E0500	Finishing and Curing	682.5	CuYd
621E0300	Chain Link Fence for Bridge Sidewalk	114	Ft
680E0040	4" Underdrain Pipe	218	Ft
680E2500	Porous Backfill	30.5	Ton
700E0210	Class B Riprap	263.2	Ton
831E0110	Type B Drainage Fabric	285	SqYd

SPECIFICATIONS

1. Design Specifications: AASHTO Standard Specifications for Highway Bridges 17th Edition using Working Stress Design.

2. Construction Specifications: South Dakota Standard Specifications for Roads and Bridges, 2015 Edition and Supplemental Specifications and Special Provisions as included in the Proposal.

DETAILS AND DIMENSIONS OF EXISTING BRIDGE

All details and dimensions of the existing bridge, contained in these plans, are based on the original construction plans and shop plans. It is the Contractor's responsibility to inspect and verify the actual field conditions and any necessary as-built dimensions affecting the satisfactory completion of the work required for this project.

SCOPE OF BRIDGE WORK & SEQUENCE OF OPERATIONS

All work on this structure shall be accomplished with the traffic control shown elsewhere in the plans. Alternate sequence of operations may be submitted by the contractor for approval by the engineer a minimum of two weeks prior to the preconstruction meeting.

1. Remove the steel railing, concrete curb and sidewalk and place a concrete block barrier on top of the existing bridge deck for the first phase of construction. (South)

2. Scarify the existing bridge deck for the first phase of construction. Traffic will not be allowed on the scarified bridge deck.

3. Accomplish all Concrete Removal Type 1A, 2A, 1B, 1C, 1D and B and place Class A45 Concrete Fill to the satisfaction of the Engineer for the first phase of construction.

4. Overlay the first phase of the bridge deck with a two inch minimum thickness of Low Slump Dense Concrete.

5. Remove the existing approach slabs for the first phase of construction.

6. Install the Approach Slab Underdrain System for the first phase of construction.

7. Install Sleeper Slabs and Approach Slabs for first phase of construction.

8. Apply a Surface Finish to the concrete barriers as outlined in the plans for the first phase of construction.

9. Switch traffic and modify the existing bridge, for the second phase of construction by removing the steel railing and placing a concrete block barrier on top of the existing curb. (North)

10. Remove and replace sidewalk within limits as shown in the plans for the second phase of construction.

11. Add new pedestrian railing along new sidewalk for the second phase of construction.

12. Repeat steps 2 through 8 for the second phase of construction.

13. Reshape the channel within the limits shown by the plans and place riprap to the limits shown in the plans.

14. Repair berm in front of Abutment No. 1.

GENERAL CONSTRUCTION NOTES

1. All mild reinforcing steel shall conform to ASTM A615, Grade 60.

2. All exposed concrete corners and edges shall be chamfered 3/4" unless noted otherwise in the plans. Match existing chamfer if the existing chamfer differs.

3. Use 2" clear cover on all reinforcing steel except as shown otherwise.

4. Request for construction joints or resteel splices at points other than those shown, must be submitted to the Engineer for prior approval. If additional splices are approved, no payment will be allowed for the added quantity of reinforcing steel.

5. The Contractor shall only imprint one year plate on the structure. The year plate shall contain the date the existing bridge was built and shall be located as specified and detailed on Standard Plate No. 460.03.

6. Barrier Curbs and End blocks shall be built normal to the grade.

7. Surfaces of fresh concrete at construction joints shall be rough floated sufficiently to consolidate the surface. All construction joints shall be cleaned of surface laitance, curing compounds and other foreign materials prior to placing fresh concrete against the joint.

8. The type of vibratory screed shall be approved by the Engineer.

9. Snap ties, if used in the barrier curb formwork, shall be epoxy coated. The epoxy coating shall be inert in concrete and compatible with the coating applied to the new epoxy coated reinforcing steel.

10. The concrete barriers shall be cured in accordance with Section 460.3 M. of the Construction Specifications except that no curing compounds shall be allowed.

REMOVAL OF EXISTING BRIDGE RAIL

1. The existing rail and rail posts on the bridge shall be completely removed by the Contractor and disposed of in accordance with the Environmental Commitments. If the Contractor elects to salvage the rail and rail posts for his own use, they must be removed from view of the ROW to the satisfaction of the Engineer prior to project completion.

2. The existing rail anchor bolts protruding from the concrete shall be cut off and ground flush with the concrete surface as approved by the Engineer. The exposed ends shall be coated with a zinc-rich galvanizing paint in conformance with ASTM A780.

3. The cost of all labor, tools, materials, and incidentals necessary to cut and remove the steel rail, cut off the anchor bolts, and paint their exposed ends shall be incidental to the contract price per foot for "Remove Bridge Railing".

ESTIMATE OF STRUCTURE QUANTITIES AND NOTES

FOR

119' - 2¾" CONTINUOUS CONCRETE BRIDGE

STR. NO. 68-129-205

JANUARY 2015

DESIGNED BY	CK. DES. BY	DRAFTED BY	
KH	MM	KH	Kevin N. Goeden
YANK05HD	05HDRA02		BRIDGE ENGINEER

CONCRETE BREAKOUT

1. The existing curbs and sidewalk shall be broken out to the limits shown on the plans. Breakout limits shall be defined with a 3/4" deep sawcut (unless specified otherwise in these plans), where practical, as approved by the Engineer. Reinforcing steel that is exposed and is scheduled for use in the new construction shall be cleaned and straightened to the satisfaction of the Engineer. Care shall be taken not to damage the existing reinforcing steel that is to be reused in the new construction during concrete breakout. Any reinforcing steel that is damaged during concrete breakout shall be replaced or repaired, as approved by the Engineer, by the Contractor at no cost to the Department.

2. All broken out concrete, discarded reinforcing bars and expansion devices shall be disposed of by the Contractor. Any disposal of discarded material shall be in accordance with the Environmental Commitments.

3. During concrete removal options, no broken out concrete shall be allowed to fall into Marne Creek.

4. The contract unit price per cubic yard for "Breakout Structural Concrete" shall include breaking out concrete, cleaning, straightening existing reinforcing steel, and disposal of all broken out material.

GALVANIC ANODE

1. The Contractor shall furnish and place Galvanic anodes in the concrete repair areas specified in this plan set.

2. The galvanic anodes shall be supplied as one of the following:

   a. Galvashield XP2
      Vector Corrosion Technologies
      13312 N 56th St, Suite 102
      Tampa, FL 33617
      Phone: (813) 830-7566
      Website: www.vector-corrosion.com

   b. Sentinel Silver
      Euclid Chemical Company
      19218 Redwood Road
      Cleveland, OH 44110
      Phone: (800) 321-7628
      Website: www.euclidchemical.com

   c. Sika Galvashield XP+
      Sika Corporation US
      201 Polito Avenue
      Lyndhurst, NJ 07071
      Phone: (800) 933-7452
      Website: http://usa.sika.com

3. The anodes shall be placed in accordance with manufacturer's recommendations and as approved by the Engineer. The anodes have not been shown on the drawings. The Contractor shall provide shop drawings of the galvanic anode installation including locations of the individual anodes to the Office of Bridge Design.

4. The anodes shall be placed with a minimum ¾" cover and shall be set in Embedding Mortar per the manufacturer's recommendations. The anodes shall be fully encased in the concrete repair material. Where adequate cover does not exist, a concrete pocket shall be chipped out behind the anode to provide sufficient cover. The Contractor may need to chip around the reinforcing bar locally at the anode installation to make the electrical connection. The reinforcing steel at the connection location shall be cleaned per the manufacturer's recommendations to provide sufficient electrical connection and mechanical bond.

5. The electrical continuity of the electrical connections and reinforcing steel shall be confirmed per the manufacturer's recommendations.

6. The Contractor shall provide manufacturer's product literature and installation instructions to the Engineer 10 days prior to installation.

7. All costs associated with placing anodes including labor, equipment, materials and incidentals shall be included in the contract unit price per each for "Galvanic Anode".

DESIGN MIX OF CONCRETE

1. Class A45 Concrete shall be used for the bid items Class A45 Concrete, Bridge Repair, Concrete Approach Slab for Bridge and Concrete Approach Sleeper Slab for Bridge.

2. The type of cement, concrete strength requirements, aggregate requirements, slump and air requirements for the contract items Class A45 Concrete, Bridge Repair, Concrete Approach Sleeper Slab for Bridge and Concrete Approach Slab for Bridge shall conform to the requirements of Section 460 of the Construction Specifications.

INSTALL DOWELS IN CONCRETE

1. Holes drilled in the existing concrete shall be true and normal or as shown in the plans. Drilling holes using a core drill shall not be allowed. Care shall be taken not to damage the existing reinforcing steel. It is likely that some of the existing reinforcing steel shown in the original construction plans may have been placed out of position during original construction. Therefore, prior to the start of drilling any holes in the concrete, an effort will be made by Department forces to mark on the concrete surface where practical any locations of the in-place reinforcing steel. In spite of this precaution, the Contractor can still expect to encounter and have to drill through reinforcing steel or shift the dowel spacing as approved by the Engineer to miss the existing reinforcing steel. If the Contractor shifts the dowel spacing, the unused drill holes shall be completely filled with the epoxy resin specified in note number 2 under "Install Dowels in Concrete" as approved by the Engineer.

2. The epoxy resin mixture shall be of a type for bonding steel to hardened concrete and shall conform to AASHTO M235 Type IV, (Equivalent to ASTM C881, Type IV). Grade 1, 2 or 3 may be used for vertical dowels.

3. The diameter of the drilled holes shall not be less than 1/8 inch greater, nor more than 3/8 inch greater than the diameter of the dowels or as per the Manufacturer's recommendations. The drilled holes shall be blown out with compressed air using a device that will reach the back of the hole to ensure that all debris or loose material has been removed prior to epoxy injection.

4. Mix epoxy resin as recommended by the Manufacturer and apply by an injection method as approved by the Engineer. Beginning at the back of the drilled holes, fill the holes 1/3 to 1/2 full of epoxy, or as recommended by the Manufacturer, prior to insertion of the steel bar. Care shall be taken to prevent epoxy from running out of the horizontal holes prior to steel bar insertion. Rotate the steel bar during installation to eliminate voids and ensure complete bonding of the bar. Insertion of the bars by the dipping or painting method will not be allowed.

5. No loads shall be applied to the epoxy grouted dowel bars until the epoxy resin has had sufficient time to cure as specified by the epoxy resin manufacturer.

6. Dowel bars shall be deformed bars conforming to ASTM A615 Grade 60.

7. The cost of epoxy resin, dowels, installation and other incidental items shall be incidental to the contract unit price per each for "Install Dowel in Concrete".

NOTES (CONTINUED)
FOR
119' - 2¾" CONTINUOUS CONCRETE BRIDGE

STR. NO. 68-129-205

JANUARY 2015

DESIGNED BY	CK. DES. BY	DRAFTED BY	
KH	MM	KH	Kevin N. Goeden
YANK05HD	05HDRA03		BRIDGE ENGINEER

BRIDGE DECK OVERLAY

1. The preparation for resurfacing consists of Type 1A Removal on the entire bridge deck and Type 2A, Type 1B, Type 1C, Type 1D and Type B Removal over the deck surface as detailed on the plan sheets. Such removal shall be in conformance with these plans and Section 550 of the Construction Specifications. There is an existing asphalt overlay that has an average thickness of 3/8" inches. The entire asphalt overlay shall be removed by the Contractor as approved by the Engineer. The cost for the removal of the asphalt overlay including all labor, equipment and incidentals shall be incidental to the unit price bid for Type 1A Removal.

2. Type 1A Removal shall consist of removing the existing concrete overlay to a depth of 1.5 inches. There are some specific areas, identified on the Deck Profile plan sheets that require Type 1A Removal in excess of 1.5 inches.

3. Extreme care shall be taken during the Type 1B Removal, Type 1C Removal, Type 1D Removal and Type B Removal to ensure that the existing resteel is not damaged. In the event that resteel damage inadvertently occurs, the Bridge Construction Engineer shall be immediately notified. Any damaged resteel shall be repaired by the Contractor, as approved by the Engineer, at no additional cost to the Department.

4. Type 2A Removal, Type 1B Removal, Type 1C Removal, Type 1D Removal, Type B Removal and Class A45 Concrete Fill may not be encountered and may be omitted from the project as determined by the Engineer.

5. Type 1C Removal, Type 1D Removal and Class A45 Concrete Fill is not anticipated to exceed the plan shown quantities. If the Engineer determines that Type 1C Removal, Type 1D Removal and/or Class A45 Concrete Fill in excess of the plan shown quantity is necessary, payment for the additional quantity shall be in conformance with Section 550.5 of the Construction Specifications.

6. Concrete for final deck overlay shall be as specified for Low Slump Dense Concrete in Section 550 of the Construction Specifications.

7. The bridge deck shall be overlayed with a minimum thickness of 2" Low Slump Dense Concrete.

8. It will be necessary for the Contractor to shape the surface of the Low Slump Dense Concrete Overlay within one foot of the curb as detailed in the plans to insure that water drains to the floor drains or off the ends of the bridge.

9. No traffic will be allowed to operate on the scarified portion of the bridge deck. If it appears that the entire Low Slump Dense Concrete Overlay can not be completed prior to winter, the Type 1A, 2A, 1B, 1C, 1D and Type B removal shall not be done until work resumes in the spring. In the event that scarification has been started and due to unforeseen circumstances it becomes impossible to complete the placement of the Low Slump Dense Concrete Overlay on the entire surface of the structure prior to winter, the Office of Bridge Design shall be notified. Recommendations for handling winter traffic will then be made. These recommendations may include, but are not limited to, filling extra depth removal areas with Class A45 Concrete, placing an asphalt overlay on the uncompleted area so that the entire roadway width may be opened to traffic, removal of the asphalt overlay when work is resumed and scarifying an additional 1/4" of depth on the bridge deck. The cost of this work, including asphalt overlay, scarification, Class A45 Concrete, extra Low Slump Dense Concrete, and all other items incidental to this work, shall be at the expense of the Contractor.

REMOVAL OF CONCRETE BRIDGE APPROACH SLAB

1. The existing concrete approach and sleeper slabs adjacent to the structure shall be completely removed by the Contractor.

2. The crushed concrete and reinforcing steel from the removal shall be disposed of by the Contractor at an approved site. An appropriate site will be described in the Environmental Commitment notes in Section A.

3. All labor, tools, equipment and any incidentals necessary for removal and disposal of the existing approach and sleeper slabs shall be incidental to the contract unit price per square yard for "Remove Concrete Bridge Approach Slab".

APROACH SLAB UNDERDRAIN SYSTEM

1. This work consists of excavating in place material under the limits of the new approach slab and installing a drainage system to prevent water retention directly under the approach and sleeper slabs. Excavation for placement of the new approach slab and sleeper slab underdrain system shall be done with minimal disturbance to the underlying material.

2. The Approach Slab Underdrain System shall be constructed in accordance with Section 435 of the Specifications.

APPROACH SLABS

1. Excavation for placement of new approach slabs and sleeper slabs shall be done with minimal disturbance to the underlying material.

2. Low spots in the area where the approach slabs will be located are to be filled and compacted with bridge end backfill material back to the original grade line. Granular Bridge End Backfill material shall be in accordance with Section 882 of the Construction Specifications. All costs for this work shall be incidental to the various contract bid items.

3. The top of approach slab elevations shall be established during construction and shall be subject to the approval of the Engineer. Care shall be taken to provide a smooth transition from the bridge deck elevations to the new pavement elevations established in the field so as to prevent any dips or bumps in the areas of the bridge ends or ends of the new approach slabs. The maximum rate of grade transition through the approach slab shall be 1/8 inch per 10 feet.

4. Sleeper Slab riser shall be cast with or later than the approach slab. Care shall be taken to ensure the correct grade is maintained across the joint.

5. The use of a vibratory screed will be required during placement of Class A45 Concrete for the approach slabs. Concrete Placement in front of the screed shall be kept parallel to the screed.

6. The concrete in the approach slab shall be tined parallel with the skew of the bridge.

7. The new approach slabs and sleeper slabs shall have a surface finish as stipulated in Section 460.3 L.4 of the Construction Specifications.

8. The Concrete Approach Slabs Adjacent to Bridge shall be cured in accordance with Section 460.3 M of the Construction Specifications.

9. Concrete Approach Sleeper Slab for Bridge will be paid for at the contract unit price per square yard. This payment shall be full compensation for all excavation, furnishing, hauling, and placing all materials including concrete, structural steel, concrete anchors, and reinforcing steel; for disposal of all excavated material and surplus materials; and for labor, tools, equipment and any incidentals necessary to complete this item of work..

10. Concrete Approach Slab for Bridge will be paid for at the contract unit price per square yard. This payment shall be full compensation for all excavation, furnishing, hauling and placing all materials including concrete, asphalt paint or 6 mil polyethylene sheeting, elastic joint sealer and reinforcing steel; for disposal of all excavated material and surplus materials and for labor, tools, equipment and any incidentals necessary to complete this item of work.

NOTES (CONTINUED)

FOR

119' - 2¾" CONTINUOUS CONCRETE BRIDGE

STR. NO. 68-129-205

JANUARY 2015

DESIGNED BY	CK. DES. BY	DRAFTED BY	
KH	MM	KH	Kevin N. Goeden
YANK05HD	05HDRA04		BRIDGE ENGINEER

SURFACE FINISH

1. All surfaces of the new concrete barrier curb in the area of the barrier reconstruction and all visible surfaces of the newly constructed endblocks shall be given a Class B Commercial Texture Finish. Surface Finishes shall be in accordance with Section 460.3 L of the Construction Specifications.

2. The color of both the Commercial and Special Surface Finishes shall match each other and shall closely simulate the color of the original concrete.

3. The concrete surfaces requiring the application of the Commercial Texture Finish shall be prepared in accordance with the Manufacturers' recommendations. The Contractor shall submit a product data sheet, or an approved equal, documenting all pertinent information with regard to preparation of the concrete surfaces, materials and equipment required, mixing requirements, and application procedures to the Engineer in advance of the application of the Commercial Texture Finish for review and approval.

4. For informational purposes the amount of surface area requiring the Class B commercial texture finish is 538.4 square feet for Phase 1 and 858.4 square feet for Phase 2.

5. Any damage to the commercial texture finish or special surface finish during the construction including abrasion from traffic due to traffic control shall be repaired by the Contractor, as approved by the Engineer, at no expense to the Department.

6. The cost of the commercial texture finish shall be incidental to the contract unit price per cubic yard for "Class A45 Concrete, Bridge Repair". This payment shall be full compensation for furnishing all materials, labor, tools and equipment necessary or incidental to the application of this finish. All costs associated with the application of the special surface finish to the existing curb face, including all materials, labor, tools and equipment shall be incidental to the contract price per square foot for "Special Surface Finish".

RIPRAP

1. The cross sections in this plan set are provided as a guide for riprap placement and are based on the existing ground locations at the time of the survey in the fall of 2014. The location of the toe of the riprap may vary to suit local site conditions as long as the following items are adhered to:

   a. The 2.5 foot of riprap thickness is attained.
   b. The opening provided under the structure for water flow is not reduced from what is shown on the cross sections.
   c. Any changes in the riprap configuration shall be approved by the Engineer.

2. Additional riprap shall be placed adjacent to the sidewalk on the west berm in areas of missing riprap. For bidding purposes, it is estimated that approximately 20 tons of riprap will be required on the west berm. This shall be field verified and placed as approved by the Engineer.

3. Excavate to limits shown on cross section for Riprap placement and cut off all old exposed pilings. Piling shall be cut off to at least the riprap thickness below the finished riprap or channel bottom surface. Material excavated to allow for Riprap placement shall be stockpiled for use to restore channel slopes.

4. All labor, equipment, material and incidental costs associated with piling cut off for finished riprap or channel bottom surface shall be incidental to the contract unit price per ton for "Class B Riprap".

5. The Class B Riprap shall be constructed to the configuration, limits and elevations shown in these plans and shall have a minimum of two crushed faces. All costs associated with placement of the riprap including all material, labor and equipment shall be incidental to the contract unit price per ton for "Class B Riprap".

6. A factor of 1.4 tons/cu.yd. was used to convert the Riprap quantity from Cu. Yds. To Tons.

STEEL RAILING – SIDEWALK

1. All rail and chain link fence posts shall be built vertical.

2. All structural steel parts for railing shall conform to ASTM A500, Grade B. Material less than ¼" thick may be ASTM A1011, Grade 36. Rail post base plates shall conform to ASTM A709, Grade 36.

3. All anchor bolts and nuts for railing shall conform to ASTM A307. Washers shall conform to ASTM F436 and all components shall be galvanized in accordance with ASTM A153 or ASTM F2329, as applicable. The bolts shall be hex head "structural" type with heavy hex nuts and round washers.

4. All anchor bolts shall be tightened to a torque of 120 ft.-lbs. (approximated without the use of a calibrated torque wrench).

5. The non-shrink grout used to fill the recess beneath the rail post base plates shall be a commercially available non-shrink grout containing no metallic particles and capable of attaining a 28 day compressive strength of 3000 psi. The non-shrink grout shall be mixed according to the manufacturer's recommendations. The cost of furnishing and placing the non-shrink grout shall be incidental to the contract unit price per foot for "Steel Pedestrian Railing".

6. All steel railing shall be painted in accordance with Section 411 of the South Dakota Standard Specifications and the color shall be an approved green (Federal Standard 595B Color 24108).

7. The costs of structural steel, welding, weld inspection, painting and galvanizing shall be incidental to the contract unit price per foot for "Steel Pedestrian Railing".

CHAIN LINK FENCE

1. The chain link fence fabric shall conform to Section 930 of the Specifications as modified by the following notes.

2. The chain link fence fabric, wire ties and miscellaneous hardware shall be galvanized and conform to AASHTO M181. The fence fabric shall be Type IV 9 gauge wire woven in a 2 inch diamond mesh. Knuckled selvage shall be used on the top and bottom of the fence fabric.

3. A green (Federal Standard 595B Color 24108) thermally extruded polyvinyl coating shall be applied to the fence fabric, wire ties and all miscellaneous hardware.

4. The item Chain Link Fence for Bridge Sidewalk shall be paid for by the linear foot. This payment shall be full compensation for furnishing all material, labor, tools and equipment necessary or incidental to the construction of the chain link fence including chain link fence fabric, wire ties, miscellaneous hardware, painting and welding, all to satisfactorily complete this work.

CONTROLLED DENSITY FILL

1. Controlled Density Fill shall be placed in the voids under Abutment No. 1 and shall be in accordance with Section 464 of the Specifications, Type 2 CLSM.

2. Do not place Controlled Density Fill during inclement weather, e.g. rain, when the subgrade is frozen, or when the subgrade contains an abnormal amount of moisture from recent rainfall as evidenced by standing water on the pavement or in joints or cracks. Do not place Controlled Density Fill when ambient air temperature of 40° F or less is anticipated in the 24 hour period following proposed placement. Produce and deliver the flowable fill at a minimum temperature of 50° F. Protect flowable fill from freezing for a period of 36 hours after placement.

NOTES (CONTINUED)

FOR

119' - 2¾" CONTINUOUS CONCRETE BRIDGE

STR. NO. 68-129-205

JANUARY 2015

DESIGNED BY	CK. DES. BY	DRAFTED BY	
KH	MM	KH	Kevin N. Goeden
YANK05HD	05HDRA05		BRIDGE ENGINEER

FOR BIDDING PURPOSES ONLY

STATE OF	PROJECT	SHEET NO.	TOTAL SHEETS
S.D.	NH 0050(122)384	E8	E42

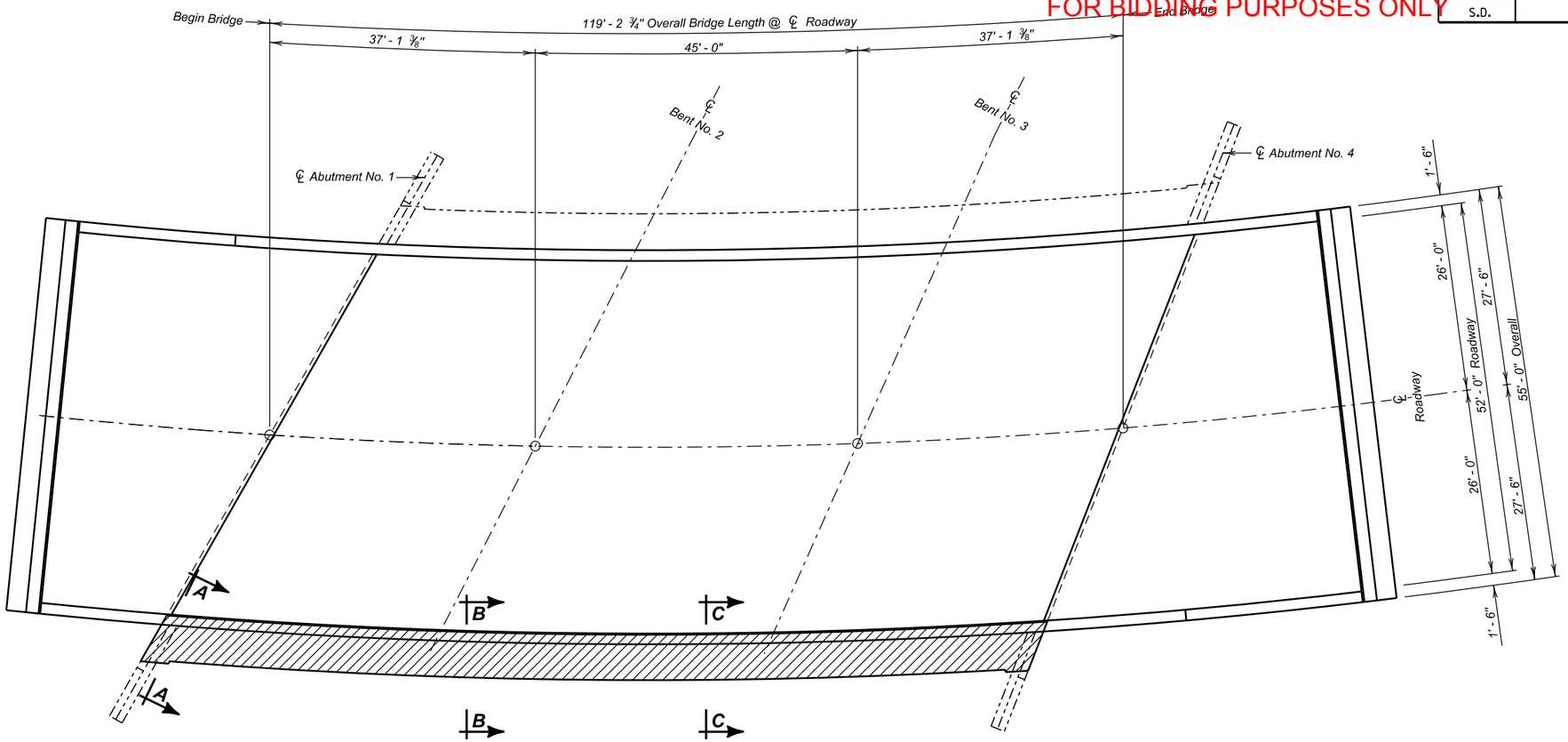

PLAN
(Phase 1 - Removal)

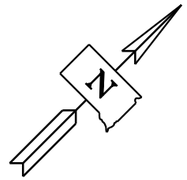

LEGEND:

Shaded areas indicate limits of Concrete Breakout.

Quantities for Concrete Removal found on Sheet No. 7 of 40.

Use this sheet in conjunction with Sheet Nos. 7 of 40.

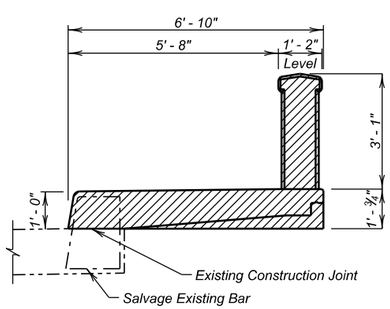

SEC. A - A

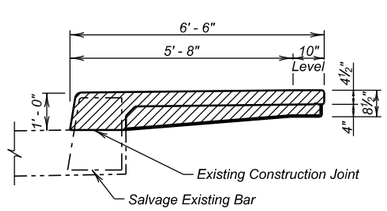

SEC. B - B

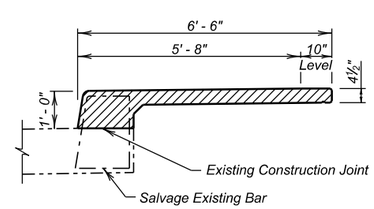

SEC. C - C

SOUTH SIDEWALK REMOVAL

FOR

119' - 2¾" CONTINUOUS CONCRETE BRIDGE

52'-0" ROADWAY — 26° SKEW L.H.F.
OVER MARNE CREEK — SEC. 18-T93N-R55W
STR. NO. 68-129-205 — NH 0050(122)384

YANKTON COUNTY
S. D. DEPT. OF TRANSPORTATION
JANUARY 2015

DESIGNED BY	CK. DES. BY	DRAFTED BY	
KH	MM	KR	Kevin N. Goeden
YANK05HD	05HDRA06		BRIDGE ENGINEER

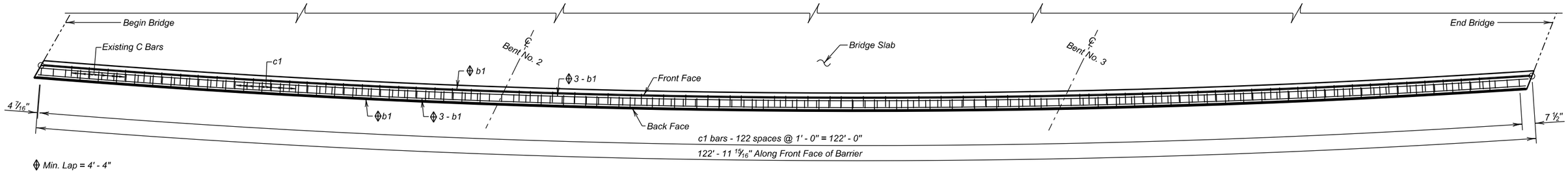

PLAN

(Phase 1 - Construction)

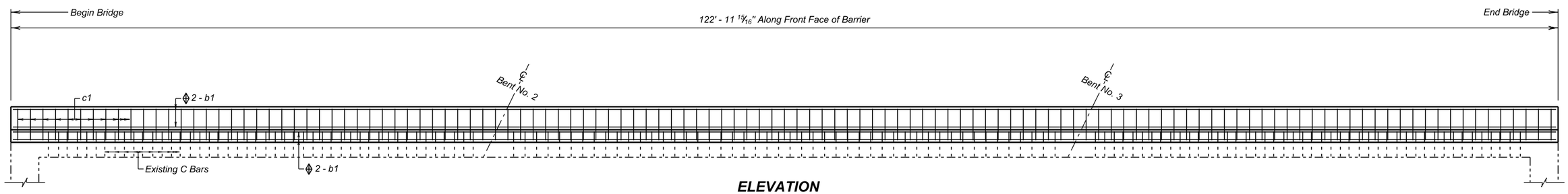

ELEVATION

(Phase 1 - Construction)

REINFORCING SCHEDULE

(For One Barrier)

	Mk.	No.	Size	Length	Type	Bending Details
PHASE 1	b1	24	7	43' - 10"	Str.	
	c1	123	4	7' - 1"	T2	

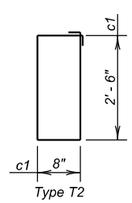

NOTES:

All Dimensions are out to out of bars.

All Bars to be Epoxy Coated.

✳ Bend in field as necessary

ESTIMATED QUANTITIES

ITEM	UNIT	PHASE 1 QUANTITY
Remove Bridge Railing	Ft.	117
Class A45 Concrete, Bridge Repair	Cu. Yd.	14.8
Special Surface Finish	Sq. Ft.	149
Breakout Structural Concrete	Cu. Yd.	18.4
✳ Epoxy Coated Reinforcing Steel	Lb.	2732
Galvanic Anode	Each	52

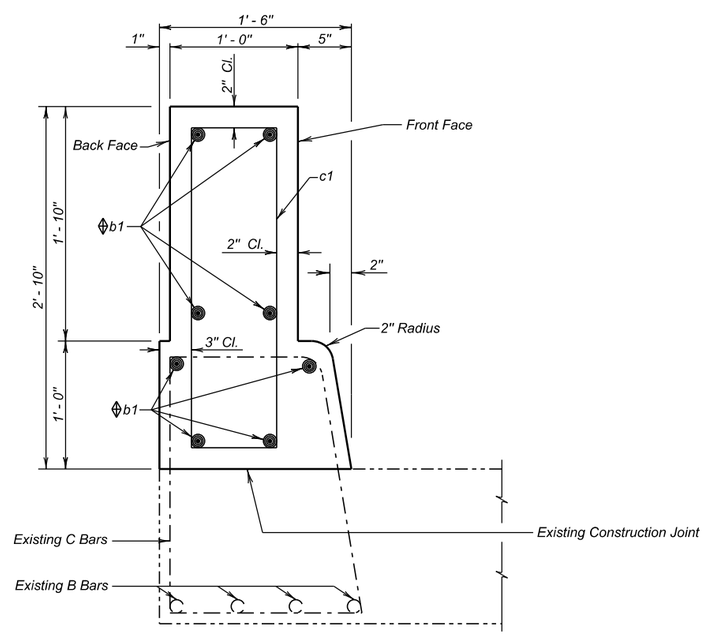

TYPICAL SECTION

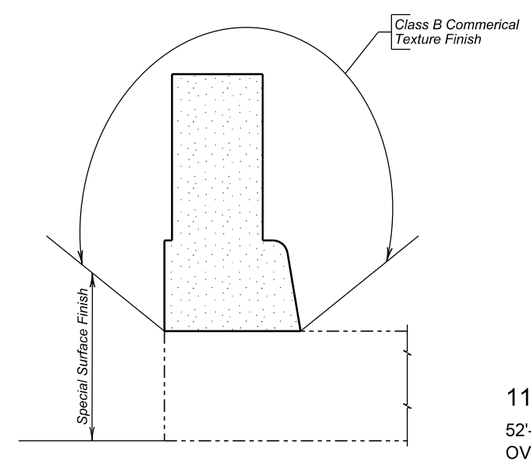

SPECIAL SURFACE FINISH

Use this sheet in conjuction with Sheet No. 6 of 40.

SOUTH BARRIER DETAILS

FOR

119' - 2¾" CONTINUOUS CONCRETE BRIDGE

52'-0" ROADWAY — 26° SKEW L.H.F.

OVER MARNE CREEK — SEC. 18-T93N-R55W

STR. NO. 68-129-205 — NH 0050(122)384

YANKTON COUNTY

S. D. DEPT. OF TRANSPORTATION

JANUARY 2015

DESIGNED BY	CK. DES. BY	DRAFTED BY	
KH	MM	KR	Kevin N. Goeden
YANK05HD	05HDRA07		BRIDGE ENGINEER

FOR BIDDING PURPOSES ONLY

STATE OF	PROJECT	SHEET NO.	TOTAL SHEETS
S.D.	NH 0050(122)384	E10	E42

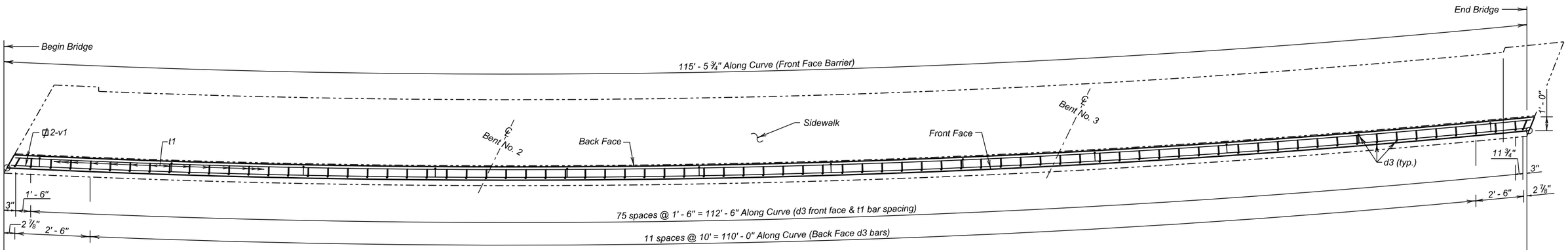

PLAN
(Phase 2 - Construction)

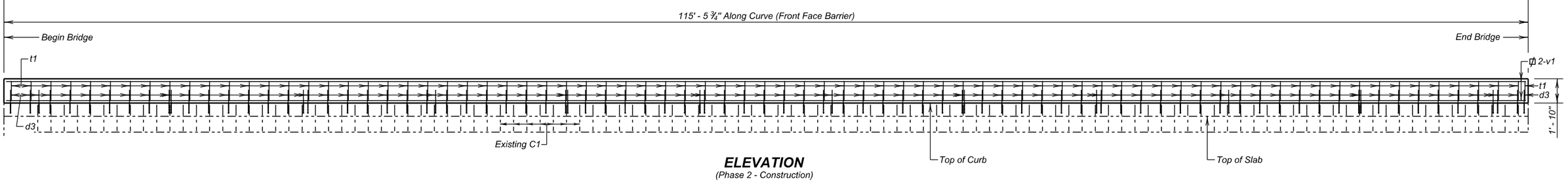

ELEVATION
(Phase 2 - Construction)

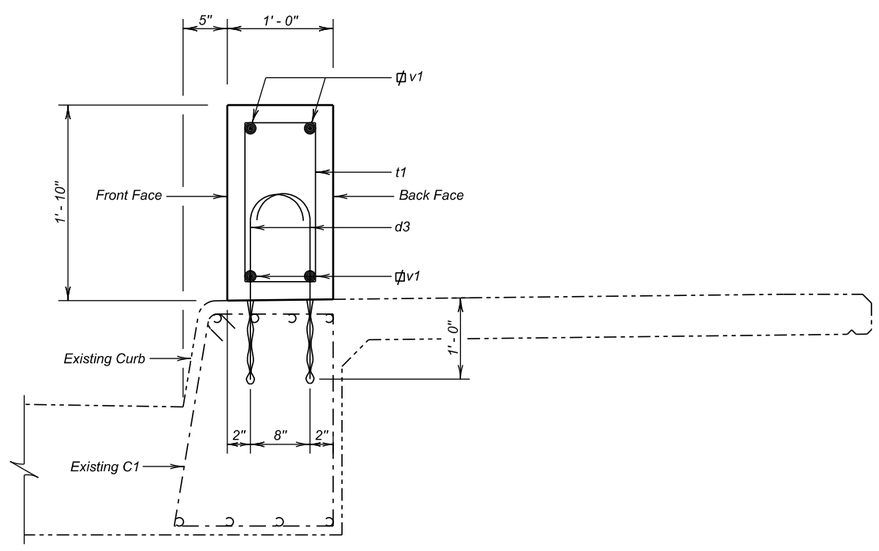

TYPICAL SECTION

ϕ Min lap = 1' - 3"

Use this sheet in conjuction with Sheet Nos. 9, 10 & 11 of 40.

Quantities found on Sheet No. 11 of 40.

NORTH BARRIER DETAILS
FOR
119' - 2 3/4" CONTINUOUS CONCRETE BRIDGE

52'-0" ROADWAY — 26° SKEW L.H.F.
OVER MARNE CREEK — SEC. 18-T93N-R55W
STR. NO. 68-129-205 — NH 0050(122)384

YANKTON COUNTY
S. D. DEPT. OF TRANSPORTATION
JANUARY 2015

DESIGNED BY	CK. DES. BY	DRAFTED BY	
KH	MM	KR	Kevin N. Goeden
YANK05HD	05HDRA08		BRIDGE ENGINEER

FOR BIDDING PURPOSES ONLY

STATE OF	PROJECT	SHEET NO.	TOTAL SHEETS
S.D.	NH 0050(122)384	E11	E42

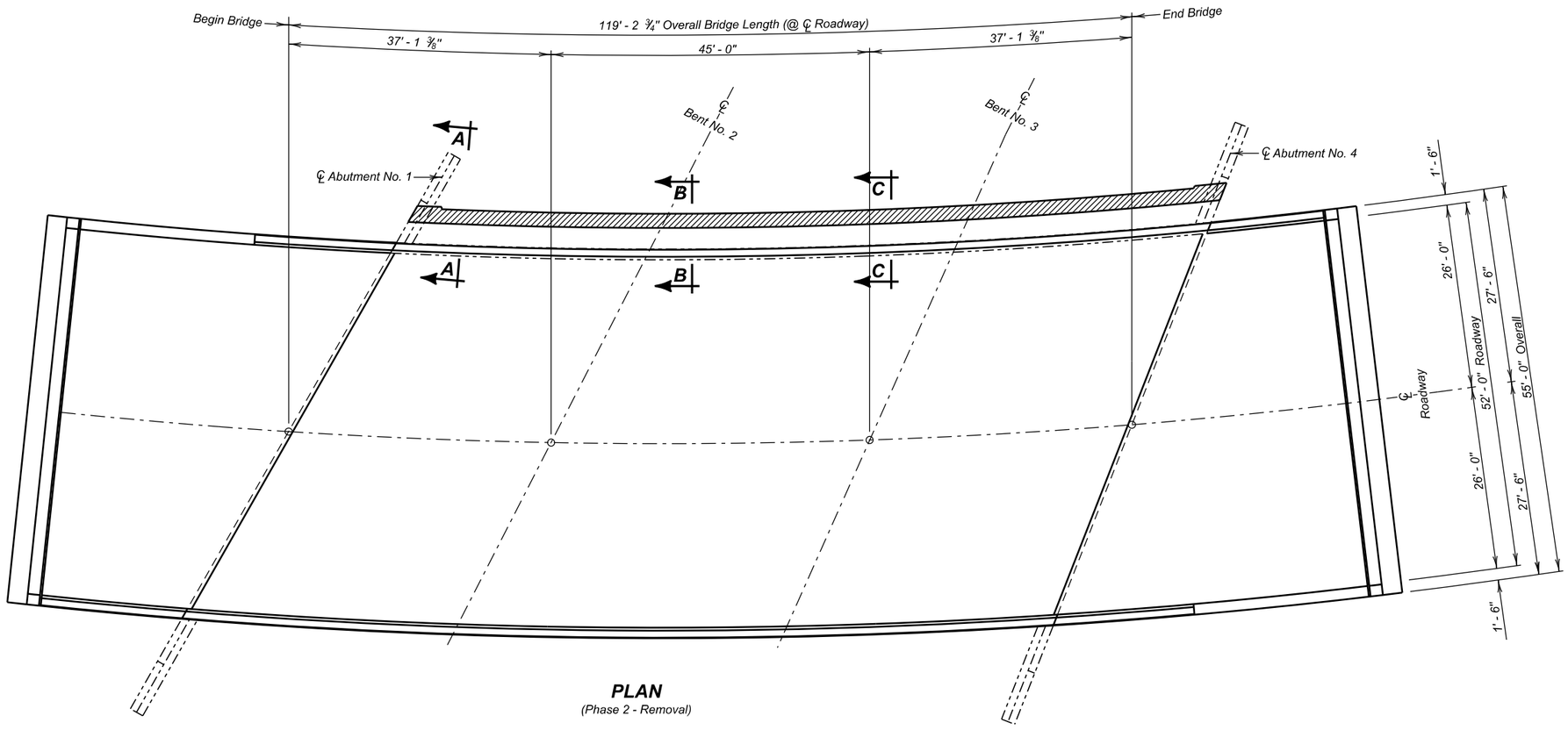

PLAN
(Phase 2 - Removal)

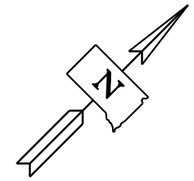

LEGEND:

Shaded areas indicate limits of Concrete Breakout.

Quantities for Concrete Removal found on Sheet No. 11 of 40.

Use this sheet in conjuction with Sheet Nos. 8, 10 & 11 of 40.

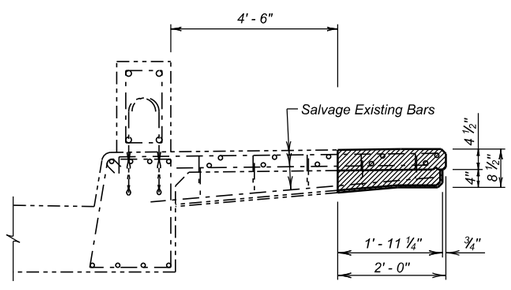

SECTION B - B

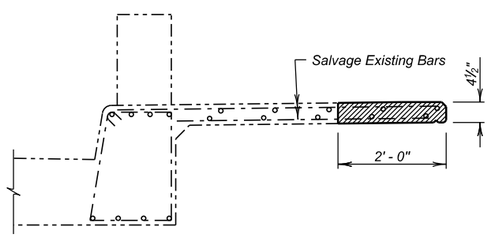

SECTION C - C

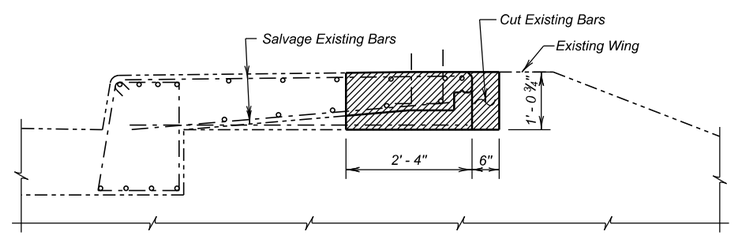

SECTION A - A

NORTH SIDEWALK REMOVAL
FOR
119' - 2¾" CONTINUOUS CONCRETE BRIDGE

52'-0" ROADWAY
OVER MARNE CREEK
STR. NO. 68-129-205

26° SKEW L.H.F.
SEC. 18-T93N-R55W
NH 0050(122)384

YANKTON COUNTY
S. D. DEPT. OF TRANSPORTATION
JANUARY 2015

DESIGNED BY	CK. DES. BY	DRAFTED BY	
KH	MM	KR	Kevin N. Goeden
YANK05HD	05HDRA09		BRIDGE ENGINEER

STATE OF	PROJECT	SHEET NO.	TOTAL SHEETS
S.D.	NH 0050(122)384	E12	E42

FOR BIDDING PURPOSES ONLY

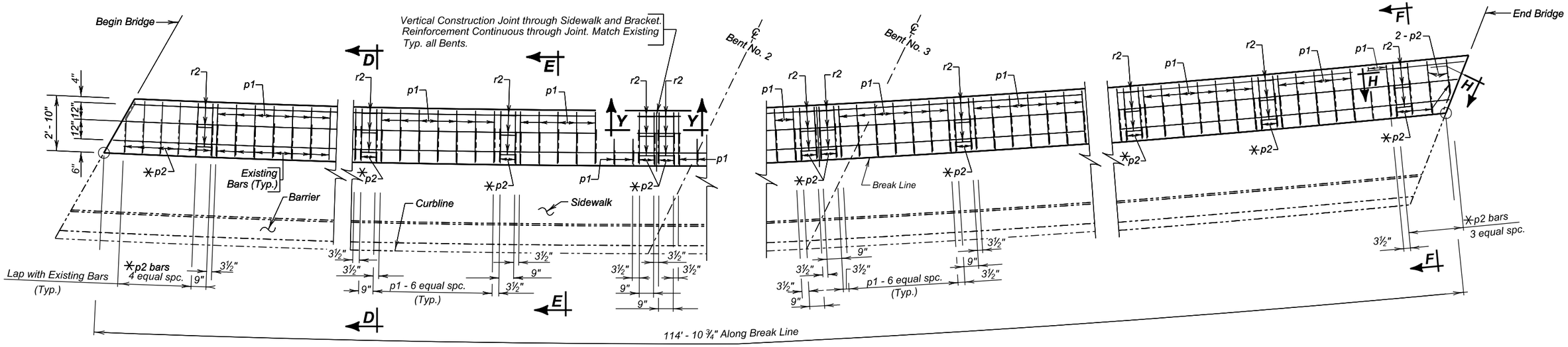

PLAN

(Bottom Steel)

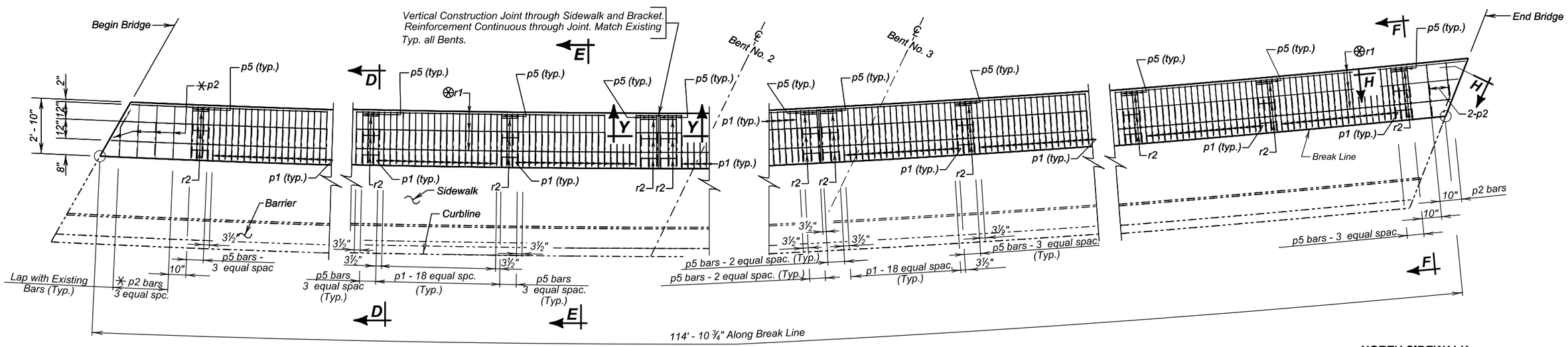

PLAN

(Top Steel)

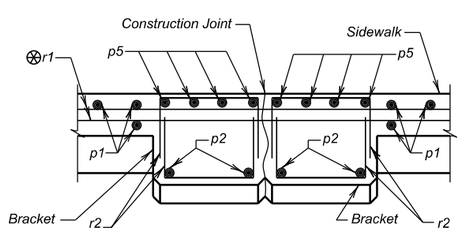

SECTION Y - Y

Section D - D, E - E and F - F are on Sheet No. 11 of 40.

Use this sheet in conjuction with Sheet Nos. 8, 9 & 11 of 40.

Quantites found on Sheet No. 11 of 40.

✳ Bend in Field as necessary to fit.

⊛ Min lap 1' - 0"

NORTH SIDEWALK

FOR

119' - 2¾" CONTINUOUS CONCRETE BRIDGE

52'-0" ROADWAY
OVER MARNE CREEK
STR. NO. 68-129-205

26° SKEW L.H.F.
SEC. 18-T93N-R55W
NH 0050(122)384

YANKTON COUNTY
S. D. DEPT. OF TRANSPORTATION
JANUARY 2015

DESIGNED BY	CK. DES. BY	DRAFTED BY	
KH	MM	KR	Kevin N. Goeden
YANK05HD	05HDRA10		BRIDGE ENGINEER

STATE OF	PROJECT	SHEET NO.	TOTAL SHEETS
S.D.	NH 0050(122)384	E13	E42

FOR BIDDING PURPOSES ONLY

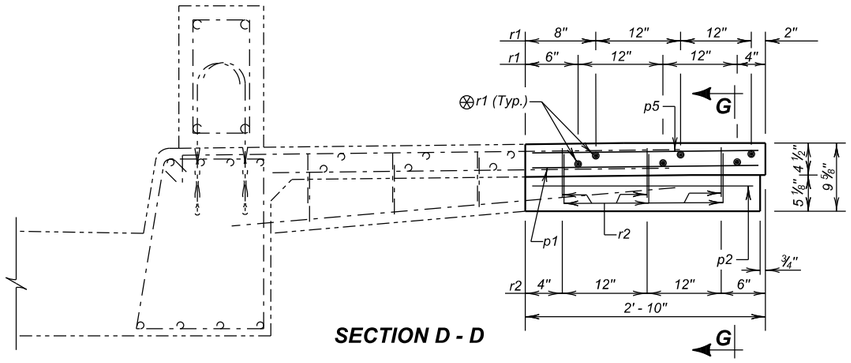

SECTION D - D

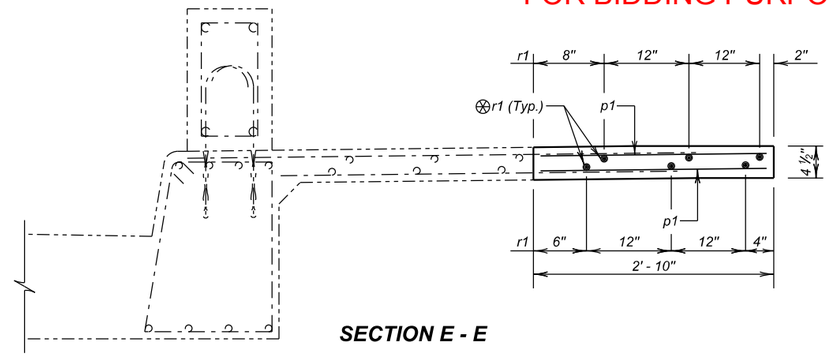

SECTION E - E

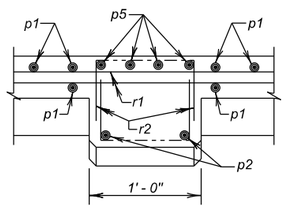

SECTION G - G

Min. Lap = 1' - 3"
Min. Lap = 1' - 0"

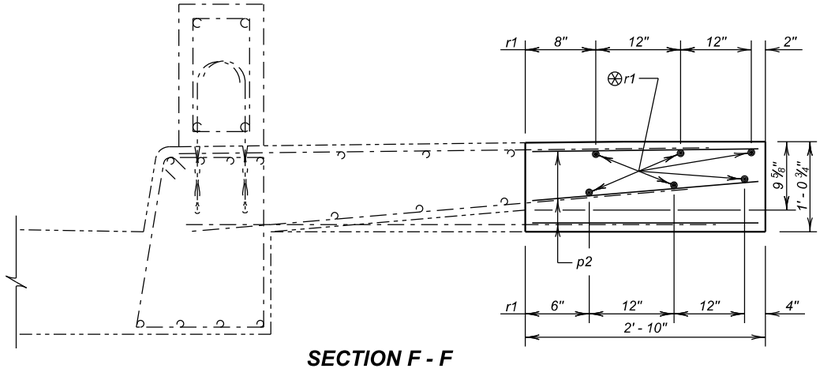

SECTION F - F

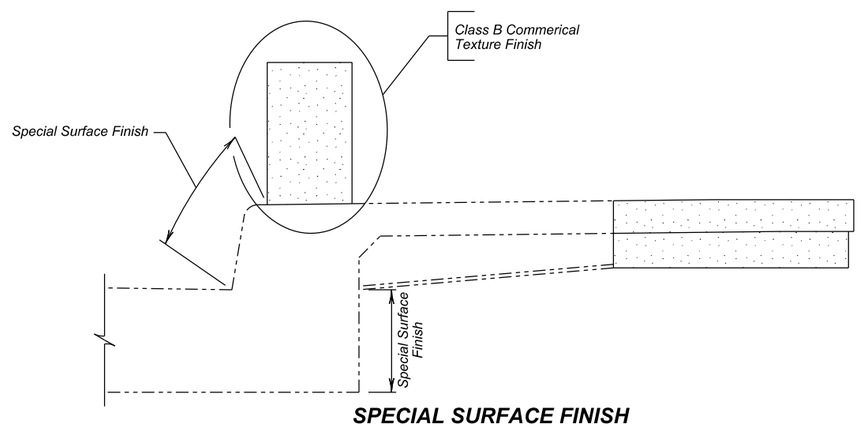

SPECIAL SURFACE FINISH

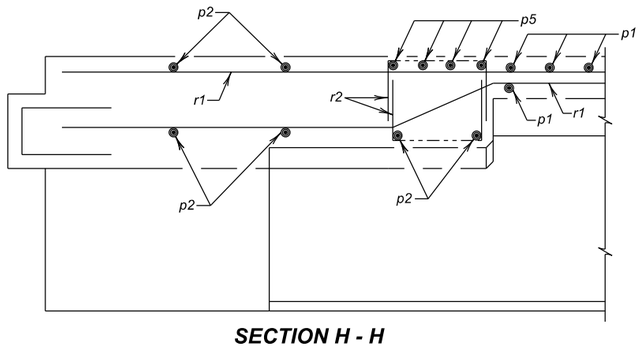

SECTION H - H

REINFORCING SCHEDULE

(For One Barrier and One Sidewalk)

	Mk.	No.	Size	Length	Type
PHASE 2	p1	390	4	2' - 8"	Str.
	✳ p2	48	4	2' - 8"	Str.
	p5	68	5	2' - 8"	Str.
	⊗ r1	18	4	38' - 10"	Str.
	r2	108	4	1' - 8"	S10
	t1	78	4	5' - 1"	T2
	⊡ v1	12	4	39' - 2"	Str.
	△ d3	92	6	3' - 2"	1A

Bending Details

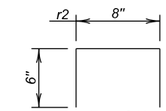

Type S10

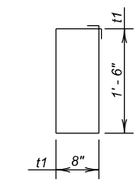

Type T2

NOTES:
All Dimensions are out to out of bars.
All Bars to be Epoxy Coated.
△ Dowels

✳ Bend in Field as necessary

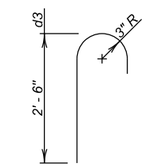

Type 1A

ESTIMATED QUANTITIES

ITEM	UNIT	PHASE 2 QUANTITY
Remove Bridge Railing	Ft.	109
Class A45 Concrete, Bridge Repair	Cu. Yd.	13.7
Special Surface Finish	Sq. Ft.	288
Breakout Structural Concrete	Cu. Yd.	4.8
Install Dowel in Concrete	Each	92
✳ Epoxy Coated Reinforcing Steel	Lb.	1575
Galvanic Anode	Each	45

✳ Does not include the following quantities for d3 bars. These are included in the Bid Item "Install Dowel in Concrete".

PHASE 2
438 Lb.

NORTH SIDEWALK DETAILS
FOR
119' - 2¾" CONTINUOUS CONCRETE BRIDGE

52'-0" ROADWAY — 26° SKEW L.H.F.
OVER MARNE CREEK — SEC. 18-T93N-R55W
STR. NO. 68-129-205 — NH 0050(122)384

YANKTON COUNTY
S. D. DEPT. OF TRANSPORTATION
JANUARY 2015

DESIGNED BY	CK. DES. BY	DRAFTED BY	
KH	MM	KR	Kevin N. Goeden
YANK05HD	05HDRA11		BRIDGE ENGINEER

FOR BIDDING PURPOSES ONLY

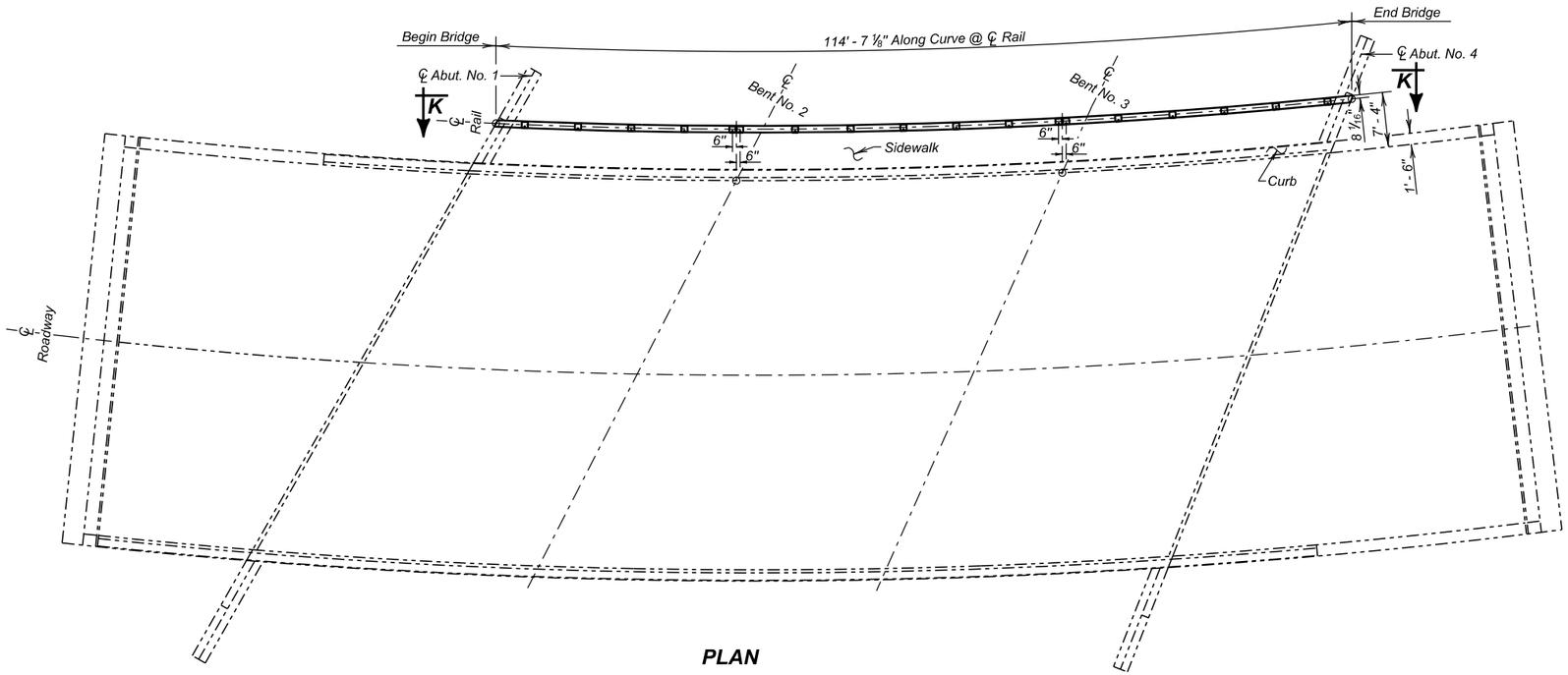

PLAN

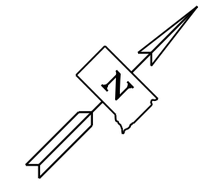

ESTIMATED QUANTITIES		
ITEM	UNIT	QUANTITY
Steel Pedestrian Railing	Ft.	114.6
# Chain Link Fence for Bridge Sidewalk	Ft.	114

For informational purposes only, the following items are included in this bid item:

Modified Tension Band	78 Ea.
Fence Fabric Stretcher	70 Ea.
Bar Connection	

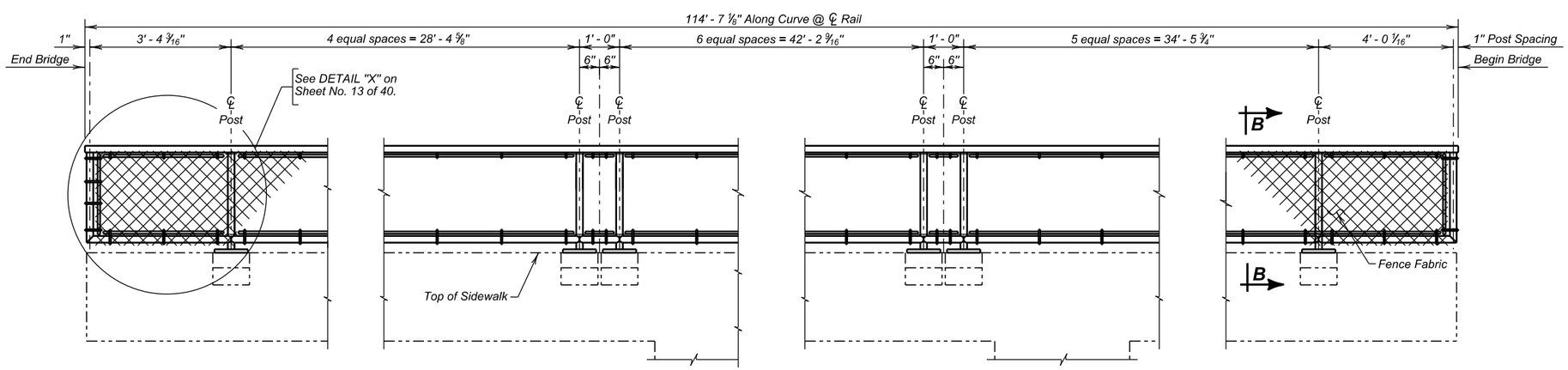

VIEW K - K

Use this sheet in conjuction with Sheet No. 13 of 40.

STEEL PEDESTRAIN RAIL LAYOUT
FOR
119' - 2¾" CONTINUOUS CONCRETE BRIDGE

52'-0" ROADWAY — 26° SKEW L.H.F.
OVER MARNE CREEK — SEC. 18-T93N-R55W
STR. NO. 68-129-205 — NH 0050(122)384

YANKTON COUNTY
S. D. DEPT. OF TRANSPORTATION
JANUARY 2015

DESIGNED BY	CK. DES. BY	DRAFTED BY	
KH	MM	KR	Kevin N. Boeden
YANK05HD	05HDRA12		BRIDGE ENGINEER

FOR BIDDING PURPOSES ONLY

STATE OF	PROJECT	SHEET NO.	TOTAL SHEETS
S.D.	NH 0050(122)384	E15	E42

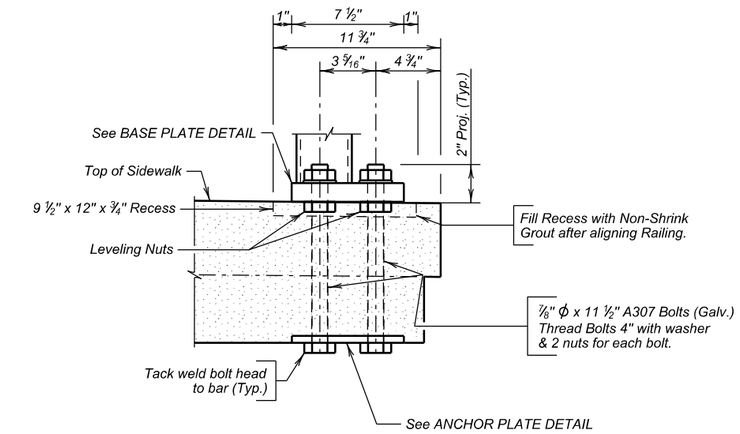

DETAIL "U"

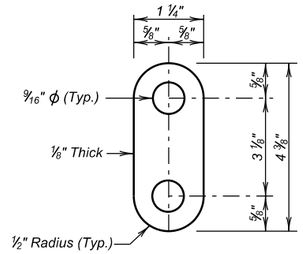

DETAIL "Y"

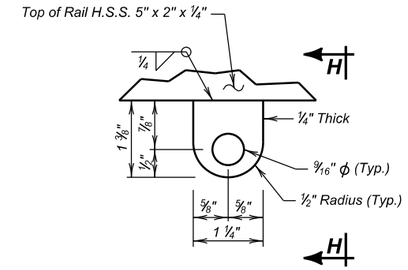

CONNECTION TAB DETAIL

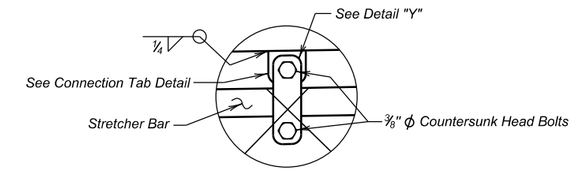

FENCE FABRIC STRETCHER BAR CONNECTION DETAIL

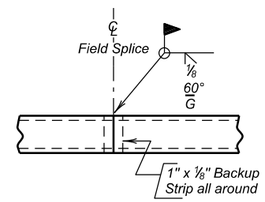

RAIL FIELD SPLICE

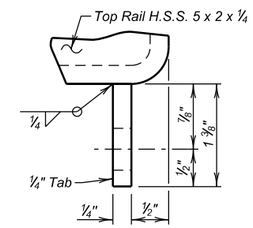

VIEW H - H

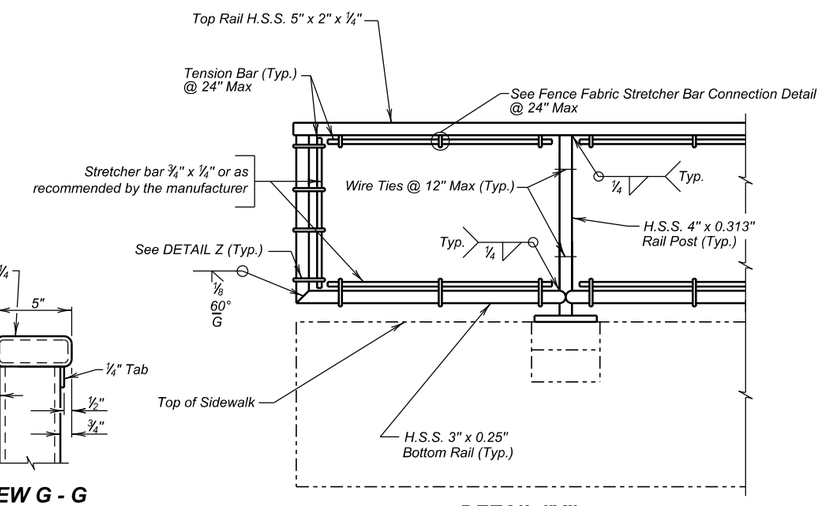

DETAIL "X"

(Fence Fabric not shown for clarity)

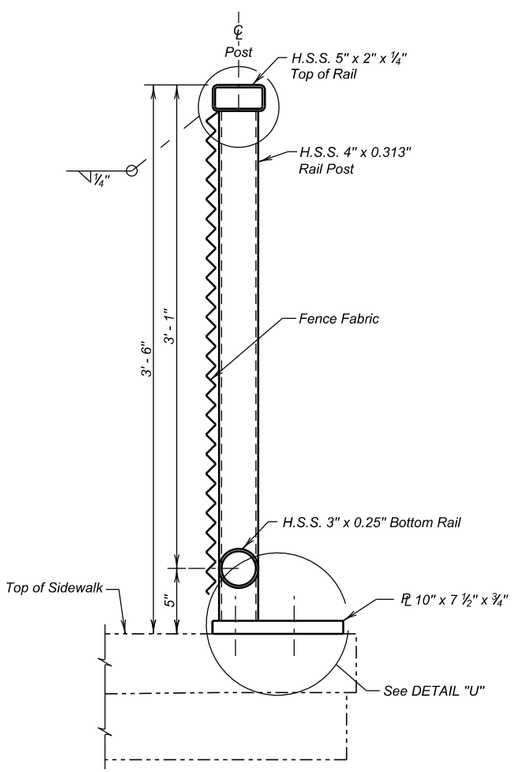

SECTION B - B

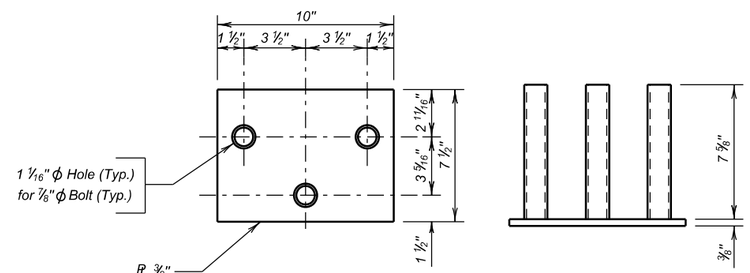

ANCHOR PLATE DETAIL

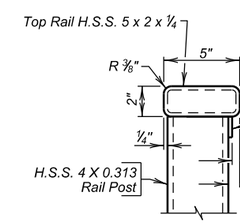

VIEW G - G

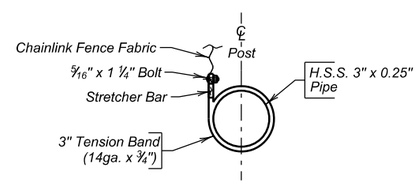

DETAIL "Z"

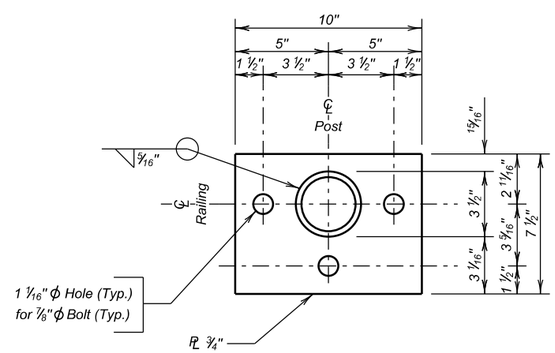

BASE PLATE DETAIL

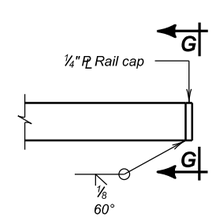

RAIL END CAP DETAIL

Use this sheet in conjuction with Sheet Nos. 12 of 40.

STEEL PEDESTRAIN RAIL DETAILS

FOR

119' - 2¾" CONTINUOUS CONCRETE BRIDGE

52'-0" ROADWAY — 26° SKEW L.H.F.

OVER MARNE CREEK — SEC. 18-T93N-R55W

STR. NO. 68-129-205 — NH 0050(122)384

YANKTON COUNTY

S. D. DEPT. OF TRANSPORTATION

JANUARY 2015

DESIGNED BY	CK. DES. BY	DRAFTED BY	
KH	MM	KR	Kevin N. Goeden BRIDGE ENGINEER
YANK05HD	05HDRA13		

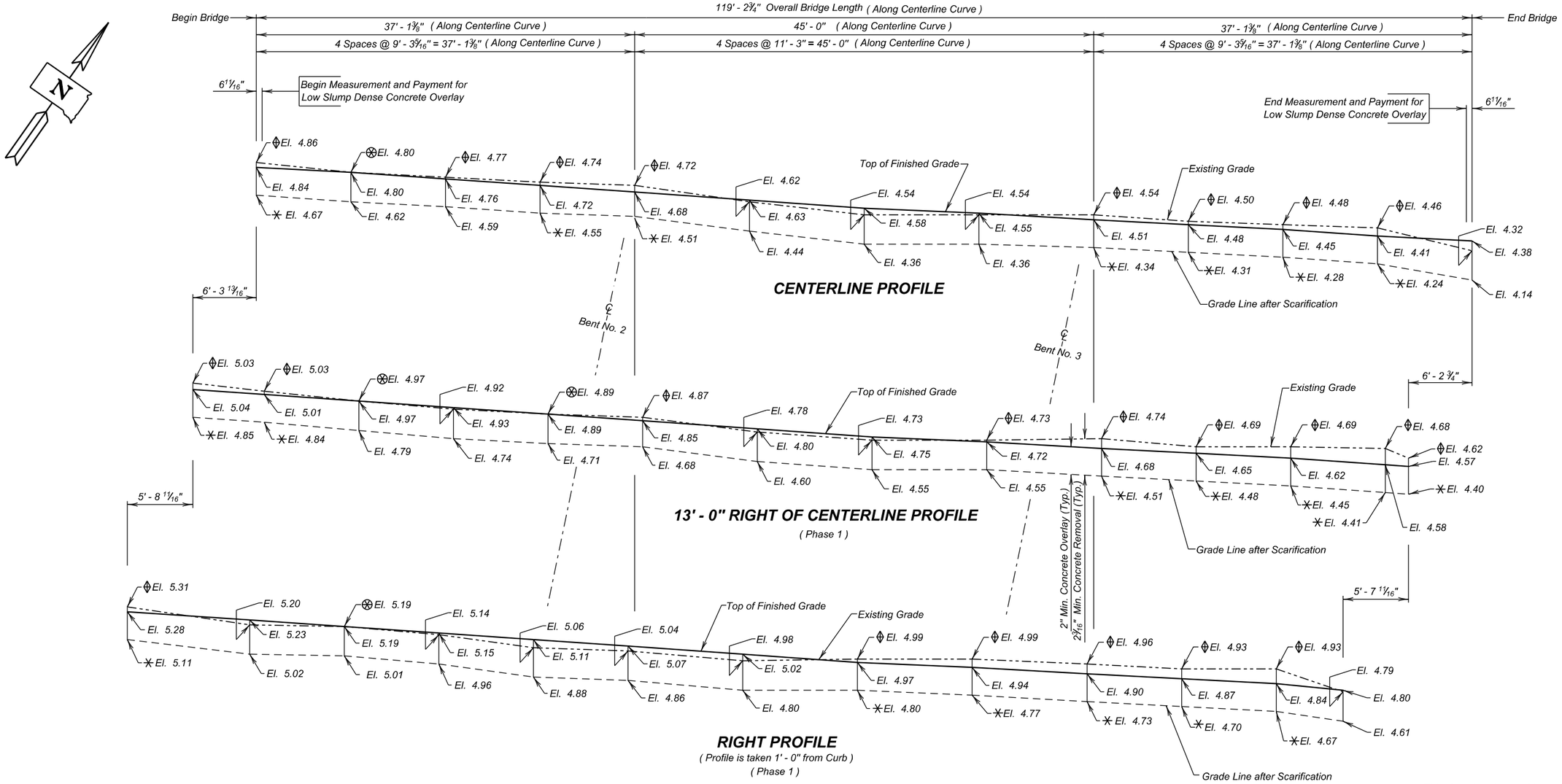

This sheet is to be used in conjunction with Sheet No. 15 of 40.

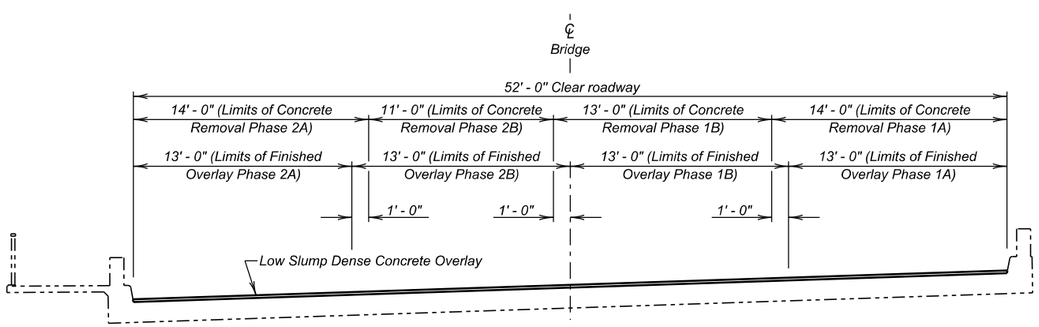

TYPICAL SECTION

0' .25' .5' 1.00'

VERTICAL SCALE

Benchmark Description:

Brass Cap Stamped "X342 Reset"
Southwest Wingwall
Elevation 1186.20

NOTE :
Add 1180.00 to all elevations shown on profiles.
✳ Scarify in excess of 2 5/16" in these areas.
⊗ Existing Elevation is the same as the Finished Surface Elevation.
◊ Existing Elevation is higher than the Finished Surface Elevation.

DECK PROFILES FOR LOW SLUMP DENSE CONCRETE OVERLAY (CONTINUED)

FOR

119' - 2¾" CONTINUOUS CONCRETE BRIDGE

52'-0" ROADWAY — 26° SKEW L.H.F.
OVER MARNE CREEK — SEC. 18-T93N-R55W
STR. NO. 68-129-205 — NH 0050(122)384

YANKTON COUNTY
S. D. DEPT. OF TRANSPORTATION
JANUARY 2015

DESIGNED BY	CK. DES. BY	DRAFTED BY	
KH	MM	KR	Kevin N. Goeden BRIDGE ENGINEER
YANK05HD	05HDRA14		

FOR BIDDING PURPOSES ONLY

STATE OF	PROJECT	SHEET NO.	TOTAL SHEETS
S.D.	NH 0050(122)384	E17	E42

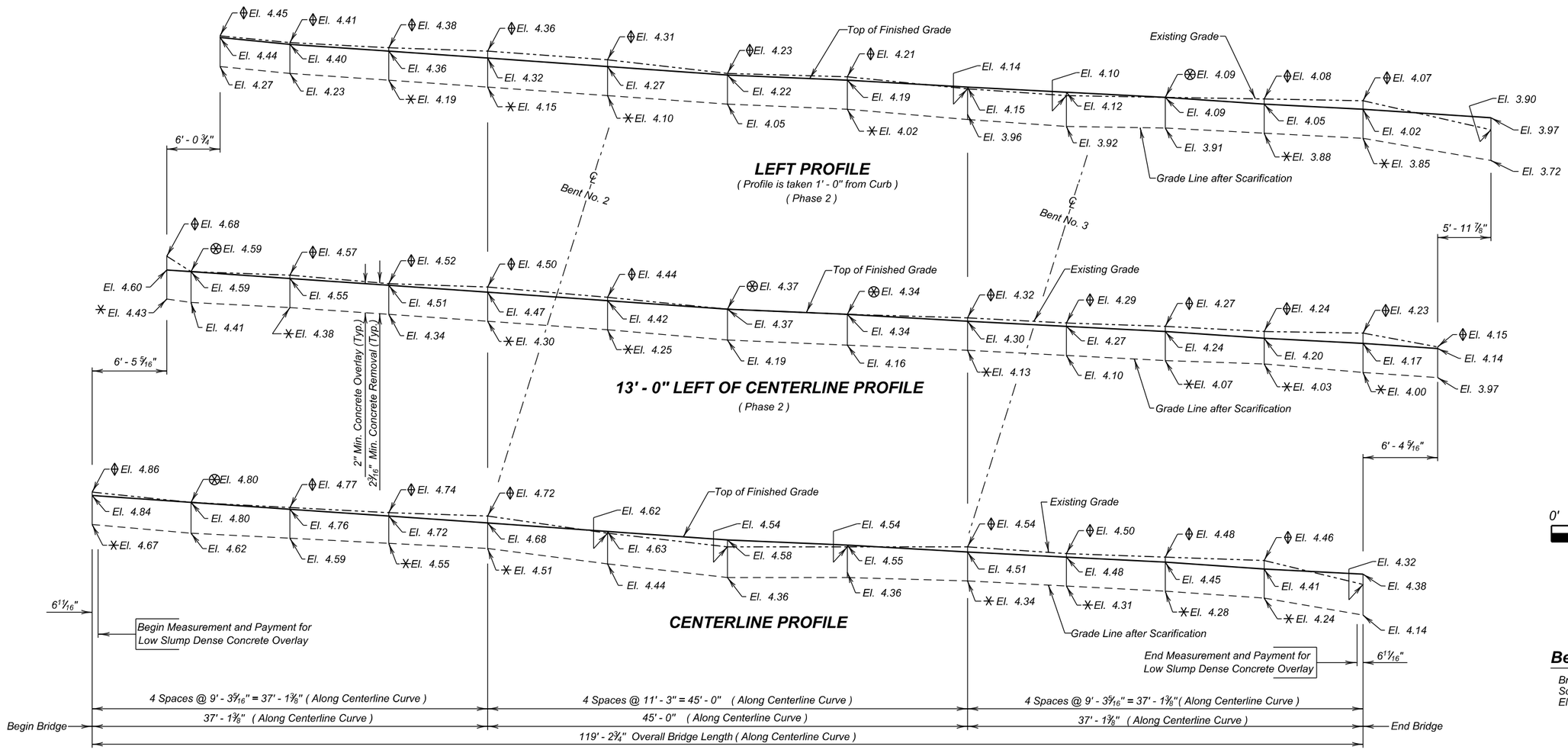

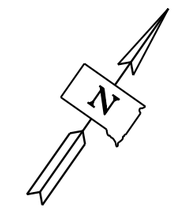

0' 0.25' 0.50' 1.00'

VERTICAL SCALE

Benchmark Description:

Brass Cap Stamped "X342 Reset"
Southwest Wingwall
Elevation 1186.20

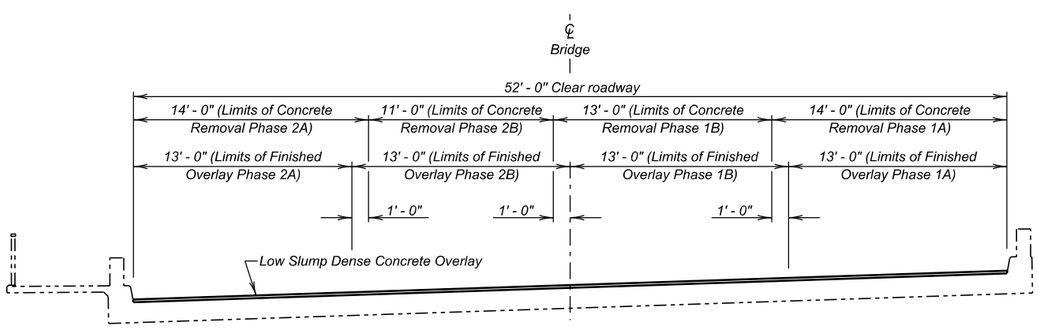

TYPICAL SECTION

NOTE :
Add 1180.00 to all elevations shown on profiles.
✳ Scarify in excess of 2 3/16" in these areas.
⊗ Existing Elevation is the same as the Finished Surface Elevation.
⊕ Existing Elevation is higher than the Finished Surface Elevation.

ESTIMATED QUANTITIES

ITEM	UNIT	QUANTITY			
		Phase 1A	Phase 1B	Phase 2A	Phase 2B
Low Slump Dense Concrete Deck Overlay	Cu. Yd.	12.2	12.1	11.9	12.0
Concrete Removal Type 1A	Sq. Yd.	188.1	171.8	179.4	143.2
Concrete Removal Type 2A	Sq. Yd.	47.0	43.0	44.9	35.8
Concrete Removal Type 1B	Sq. Yd.	18.8	17.2	17.9	14.3
Concrete Removal Type 1C	Sq. Yd.	9.4	8.6	9.0	7.2
Concrete Removal Type 1D	Sq. Yd.	9.4	8.6	9.0	7.2
Concrete Removal Type B	Ft.	12	11	10	10
Class A45 Concrete Fill	Cu. Yd.	3.7	3.3	3.5	2.8
Finishing and Curing	Sq. Yd.	174.7	172.0	166.6	169.2

This sheet is to be used in conjunction with Sheet No. 14 of 40.

DECK PROFILES FOR LOW SLUMP DENSE CONCRETE OVERLAY

FOR

119' - 2 3/4" CONTINUOUS CONCRETE BRIDGE

52'-0" ROADWAY — 26° SKEW L.H.F.
OVER MARNE CREEK — SEC. 18-T93N-R55W
STR. NO. 68-129-205 — NH 0050(122)384

YANKTON COUNTY
S. D. DEPT. OF TRANSPORTATION
JANUARY 2015

DESIGNED BY	CK. DES. BY	DRAFTED BY	
KH	MM	KR	Kevin N. Goeden
YANK05HD	05HDRA15		BRIDGE ENGINEER

STATE OF	PROJECT	SHEET NO.	TOTAL SHEETS
S.D.	NH 0050(122)384	E18	E42

FOR BIDDING PURPOSES ONLY

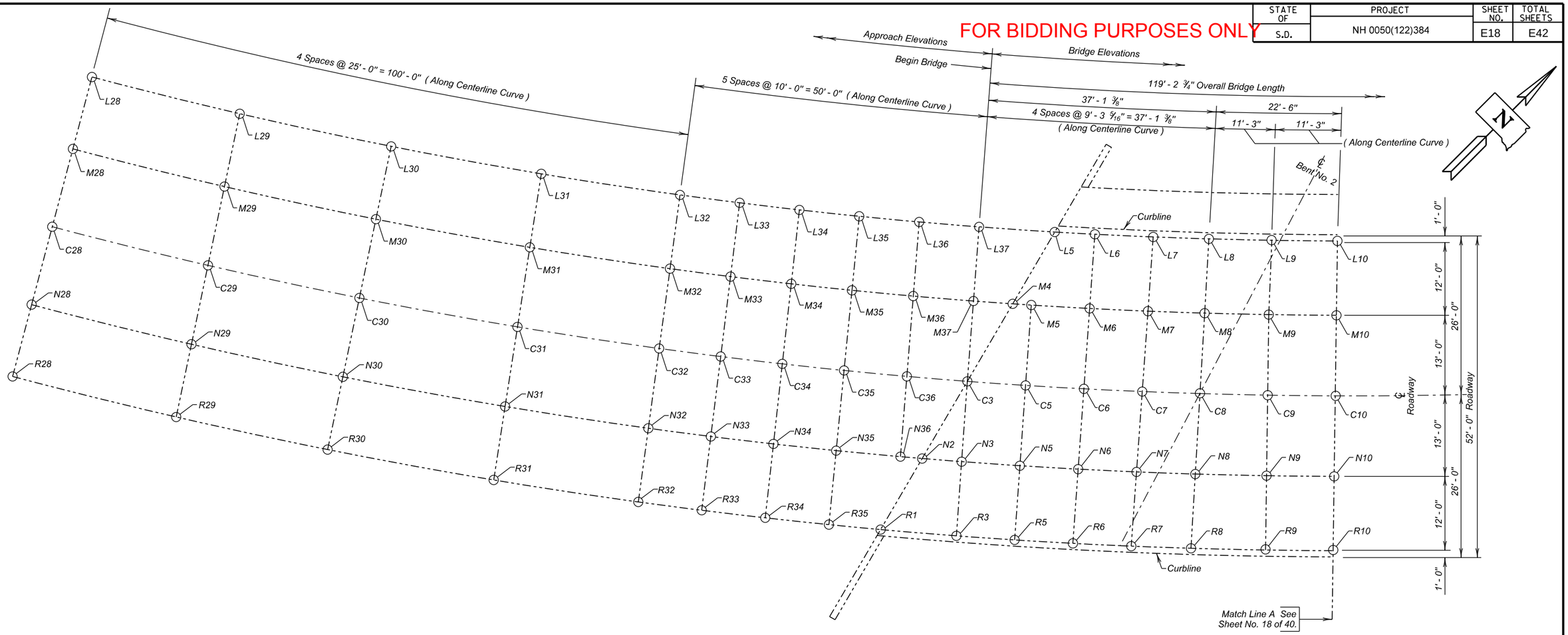

PARTIAL PLAN

NOTE :
The Contractor shall be responsible for producing the As - Built Elevation Survey soon after construction is complete and before the bridge is completely opened to traffic.
The As - Built Elevations of the overlay shall be based on the National Geodetic Survey North American Vertical Datum of 1988 *and shall be taken and recorded at the locations shown by the table on this sheet. The completed table shall be given to the Engineer who will forward a copy to the Bridge Maintenance Engineer in the Office of Bridge Design and the Region Bridge Maintenance Engineer.*

Benchmark Description:
Brass Cap Stamped "X342 Reset"
Southwest Wingwall
Elevation 1186.20

AS-BUILT ELEVATION SURVEY
FOR
119' - 2¾" CONTINUOUS CONCRETE BRIDGE

52'-0" ROADWAY — 26° SKEW L.H.F.
OVER MARNE CREEK — SEC. 18-T93N-R55W
STR. NO. 68-129-205 — NH 0050(122)384

YANKTON COUNTY
S. D. DEPT. OF TRANSPORTATION
JANUARY 2015

DESIGNED BY	CK. DES. BY	DRAFTED BY	
KH	MM	KH	Kevin N. Goeden
YANK05HD	05HDRA16		BRIDGE ENGINEER

FOR BIDDING PURPOSES ONLY

Table of Elevations - Approach Roadway									
Location	Elevation	Location	Elevation	Location	Elevation	Location	Elevation	Location	Elevation
L28		M28		C28		N28		R28	
L29		M29		C29		N29		R29	
L30		M30		C30		N30		R30	
L31		M31		C31		N31		R31	
L32		M32		C32		N32		R32	
L33		M33		C33		N33		R33	
L34		M34		C34		N34		R34	
L35		M35		C35		N35		R35	
L36		M36		C36		N36			
L37		M37							

Table of Elevations - Bridge									
Location	Elevation	Location	Elevation	Location	Elevation	Location	Elevation	Location	Elevation
								R1	
						N2			
				C3		N3		R3	
		M4							
L5		M5		C5		N5		R5	
L6		M6		C6		N6		R6	
L7		M7		C7		N7		R7	
L8		M8		C8		N8		R8	
L9		M9		C9		N9		R9	
L10		M10		C10		N10		R10	

NOTE :
The Contractor shall be responsible for producing the As - Built Elevation Survey soon after construction is complete and before the bridge is completely opened to traffic.
The As - Built Elevations of the overlay shall be based on the National Geodetic Survey North American Vertical Datum of 1988 *and shall be taken and recorded at the locations shown by the table on this sheet. The completed table shall be given to the Engineer who will forward a copy to the Bridge Maintenance Engineer in the Office of Bridge Design and the Region Bridge Maintenance Engineer.*

Benchmark Description:
Brass Cap Stamped "X342 Reset"
Southwest Wingwall
Elevation 1186.20

AS-BUILT ELEVATION SURVEY (CONTINUED)

FOR

119' - 2¾" CONTINUOUS CONCRETE BRIDGE

52'-0" ROADWAY — 26° SKEW L.H.F.
OVER MARNE CREEK — SEC. 18-T93N-R55W
STR. NO. 68-129-205 — NH 0050(122)384

YANKTON COUNTY
S. D. DEPT. OF TRANSPORTATION
JANUARY 2015

DESIGNED BY	CK. DES. BY	DRAFTED BY	
KH	MM	KH	Kevin N. Boeden
YANK05HD	05HDRA17		BRIDGE ENGINEER

FOR BIDDING PURPOSES ONLY

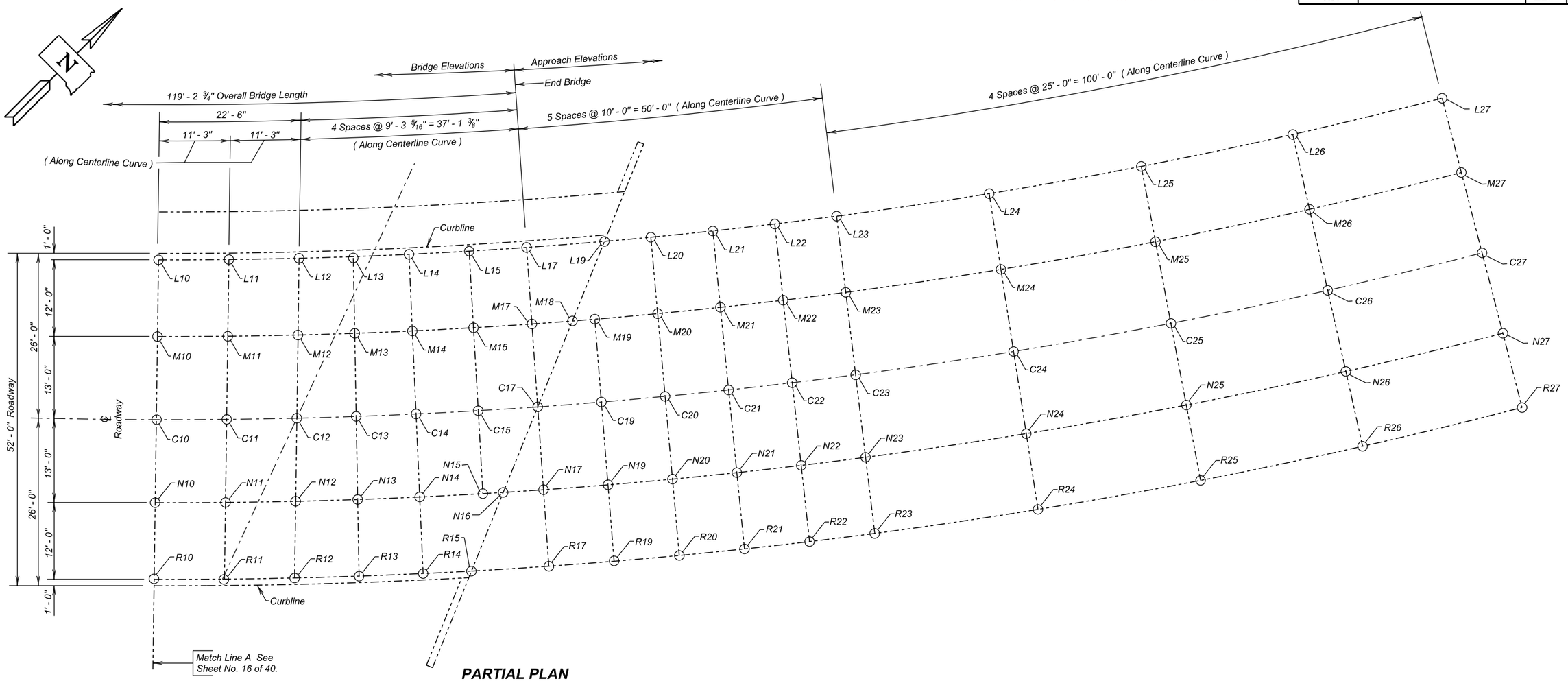

PARTIAL PLAN

AS-BUILT ELEVATION SURVEY (CONTINUED)

FOR

119' - 2¾" CONTINUOUS CONCRETE BRIDGE

52'-0" ROADWAY — 26° SKEW L.H.F.
OVER MARNE CREEK — SEC. 18-T93N-R55W
STR. NO. 68-129-205 — NH 0050(122)384

YANKTON COUNTY

S. D. DEPT. OF TRANSPORTATION

JANUARY 2015

NOTE :
The Contractor shall be responsible for producing the As - Built Elevation Survey soon after construction is complete and before the bridge is completely opened to traffic.
The As - Built Elevations of the overlay shall be based on the National Geodetic Survey North American Vertical Datum of 1988 *and shall be taken and recorded at the locations shown by the table on this sheet. The completed table shall be given to the Engineer who will forward a copy to the Bridge Maintenance Engineer in the Office of Bridge Design and the Region Bridge Maintenance Engineer.*

Benchmark Description:
Brass Cap Stamped "X342 Reset"
Southwest Wingwall
Elevation 1186.20

DESIGNED BY	CK. DES. BY	DRAFTED BY	
KH	MM	KH	Kevin N. Goeden
YANK05HD	05HDRA18		BRIDGE ENGINEER

Table of Elevations - Bridge

Location	Elevation	Location	Elevation	Location	Elevation	Location	Elevation	Location	Elevation
L10		M10		C10		N10		R10	
L11		M11		C11		N11		R11	
L12		M12		C12		N12		R12	
L13		M13		C13		N13		R13	
L14		M14		C14		N14		R14	
L15		M15		C15		N15		R15	
						N16			
L17		M17		C17					
		M18							
L19									

Table of Elevations - Approach Roadway

Location	Elevation	Location	Elevation	Location	Elevation	Location	Elevation	Location	Elevation
						N17		R17	
		M19		C19		N19		R19	
L20		M20		C20		N20		R20	
L21		M21		C21		N21		R21	
L22		M22		C22		N22		R22	
L23		M23		C23		N23		R23	
L24		M24		C24		N24		R24	
L25		M25		C25		N25		R25	
L26		M26		C26		N26		R26	
L27		M27		C27		N27		R27	

NOTE :
The Contractor shall be responsible for producing the As - Built Elevation Survey soon after construction is complete and before the bridge is completely opened to traffic.
The As - Built Elevations of the overlay shall be based on the National Geodetic Survey North American Vertical Datum of 1988 *and shall be taken and recorded at the locations shown by the table on this sheet. The completed table shall be given to the Engineer who will forward a copy to the Bridge Maintenance Engineer in the Office of Bridge Design and the Region Bridge Maintenance Engineer.*

Benchmark Description:
Brass Cap Stamped "X342 Reset"
Southwest Wingwall
Elevation 1186.20

AS-BUILT ELEVATION SURVEY (CONTINUED)
FOR
119' - 2¾" CONTINUOUS CONCRETE BRIDGE

52'-0" ROADWAY — 26° SKEW L.H.F.
OVER MARNE CREEK — SEC. 18-T93N-R55W
STR. NO. 68-129-205 — NH 0050(122)384

YANKTON COUNTY
S. D. DEPT. OF TRANSPORTATION
JANUARY 2015

DESIGNED BY	CK. DES. BY	DRAFTED BY	
KH	MM	KH	Kevin N. Goeden
YANK05HD	05HDRA19		BRIDGE ENGINEER

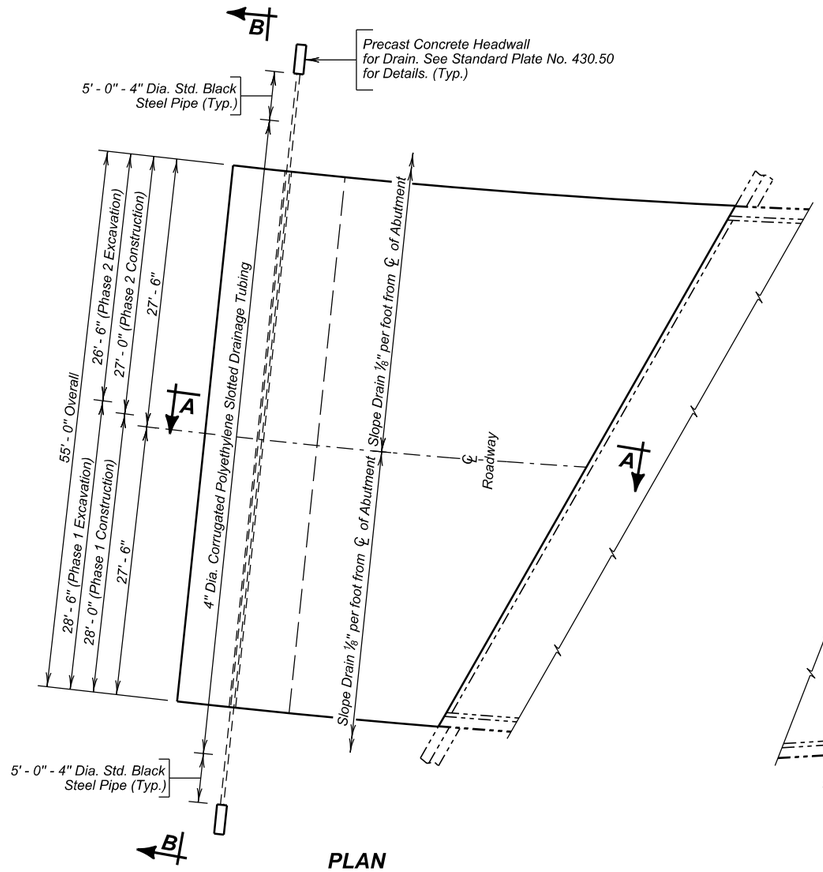

PLAN
(Abutment No. 1 Shown)

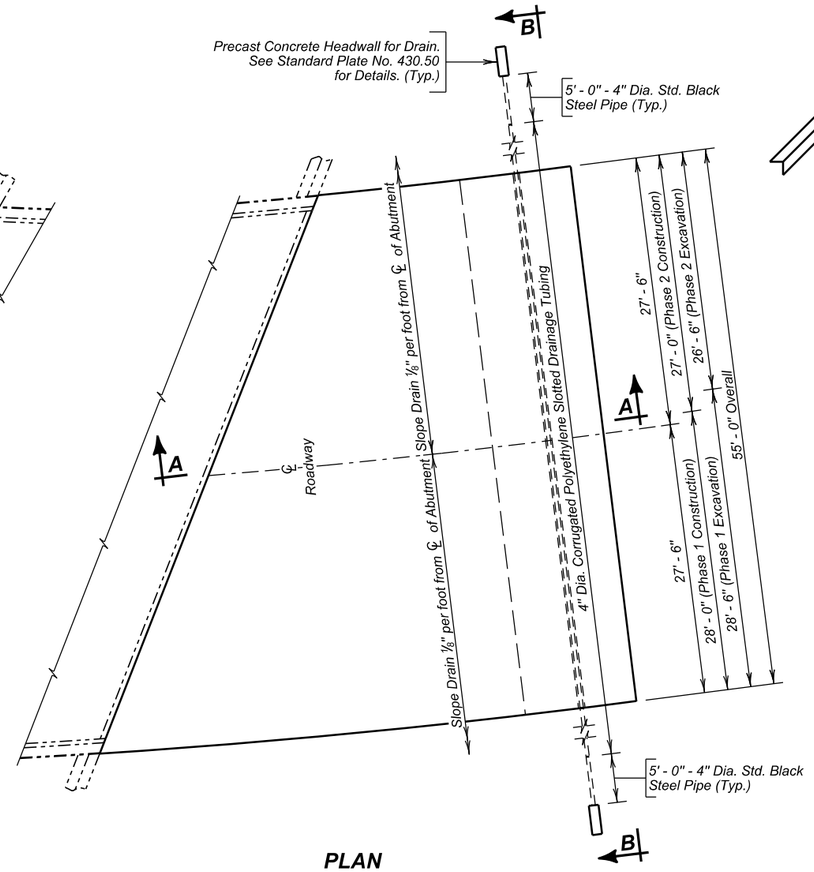

PLAN
(Abutment No. 4 Shown)

ESTIMATED QUANTITIES

	ITEM	UNIT	PHASE I QUANTITY	PHASE 2 QUANTITY
⊛	Granular Bridge End Backfill	Cu. Yd.	46.1	43.3
	Approach Slab Underdrain Excavation	Cu. Yd.	55.6	50.3
✳	4" Underdrain Pipe	Ft.	115	103
	Precast Concrete Headwall for Drain	Each	2	2
★	Porous Backfill	Ton	16.1	14.4

✳ For informational purposes only, 10 feet of 4" Diameter Standard Black Steel Pipe is needed for Phase 1 & 2 which is contained in the above bid items.

★ For estimating purposes only, a factor of 1.89 tons/cu. yd. was used to convert Cu. Yd. to Ton. Quantities shown are based on a 2 foot x 12 inch trench.

⊛ Includes 751 Sq. Yd. of 6 mi. Polyethylene Sheeting (not including laps) and 501 Sq. Yd. of Type B Drainage Fabric.

GENERAL NOTES:

△ The depth of the trench shall be 2' - 0" unless the roadway ditch topography will not allow it. The trench depth shall never be less than 1' - 0".

∡ Type B Drainage fabric shall be placed between the Granular Bridge End Backfill and any inplace material predominately larger than ⅜" diameter.

⊕ The centerline of the trench may be adjusted by one foot toward or away from the bridge as approved by the Engineer.

☆ For location where the approach slab is on a zero grade to one percent grade provide this minimum slope. For all other grades finish this surface to match the finished grade to the approach slab.

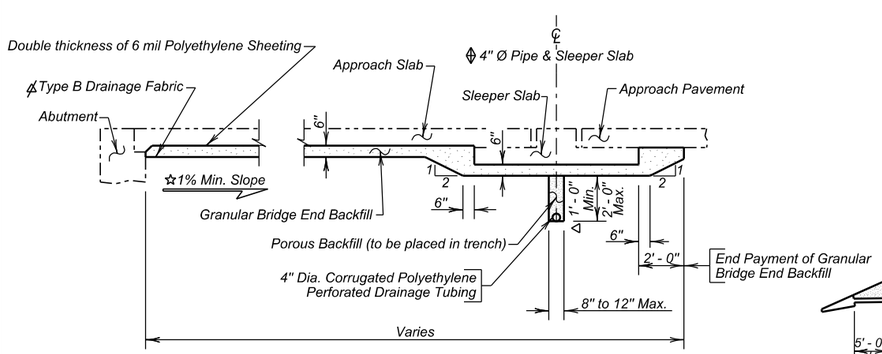

SECTION A - A

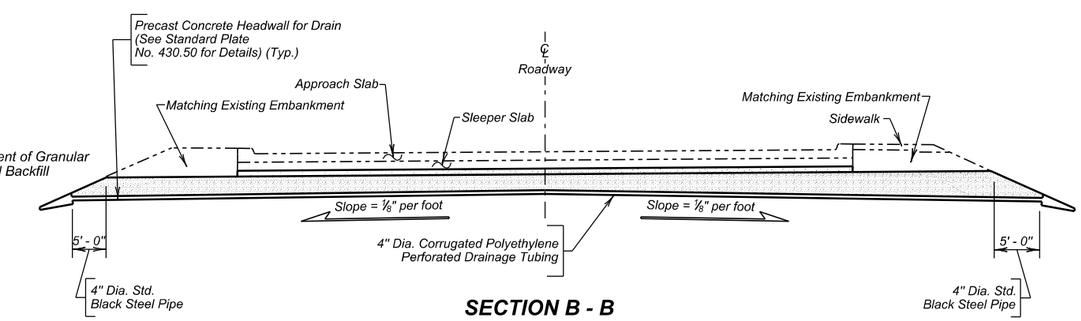

SECTION B - B

APPROACH SLAB UNDERDRAIN DETAILS
FOR
119' - 2¾" CONTINUOUS CONCRETE BRIDGE

52'-0" ROADWAY
OVER MARNE CREEK
STR. NO. 68-129-205

26° SKEW L.H.F.
SEC. 18-T93N-R55W
NH 0050(122)384

YANKTON COUNTY
S. D. DEPT. OF TRANSPORTATION
JANUARY 2015

DESIGNED BY	CK. DES. BY	DRAFTED BY	
KH	MM	KR	Kevin N. Goeden
YANK05HD	05HDRA20		BRIDGE ENGINEER

STATE OF	PROJECT	SHEET NO.	TOTAL SHEETS
S.D.	NH 0050(122)384	E23	E42

FOR BIDDING PURPOSES ONLY

View F - F and View G - G are on Sheet No. 24 of 40.
View K - K and View L - L are on Sheet No. 25 of 40.

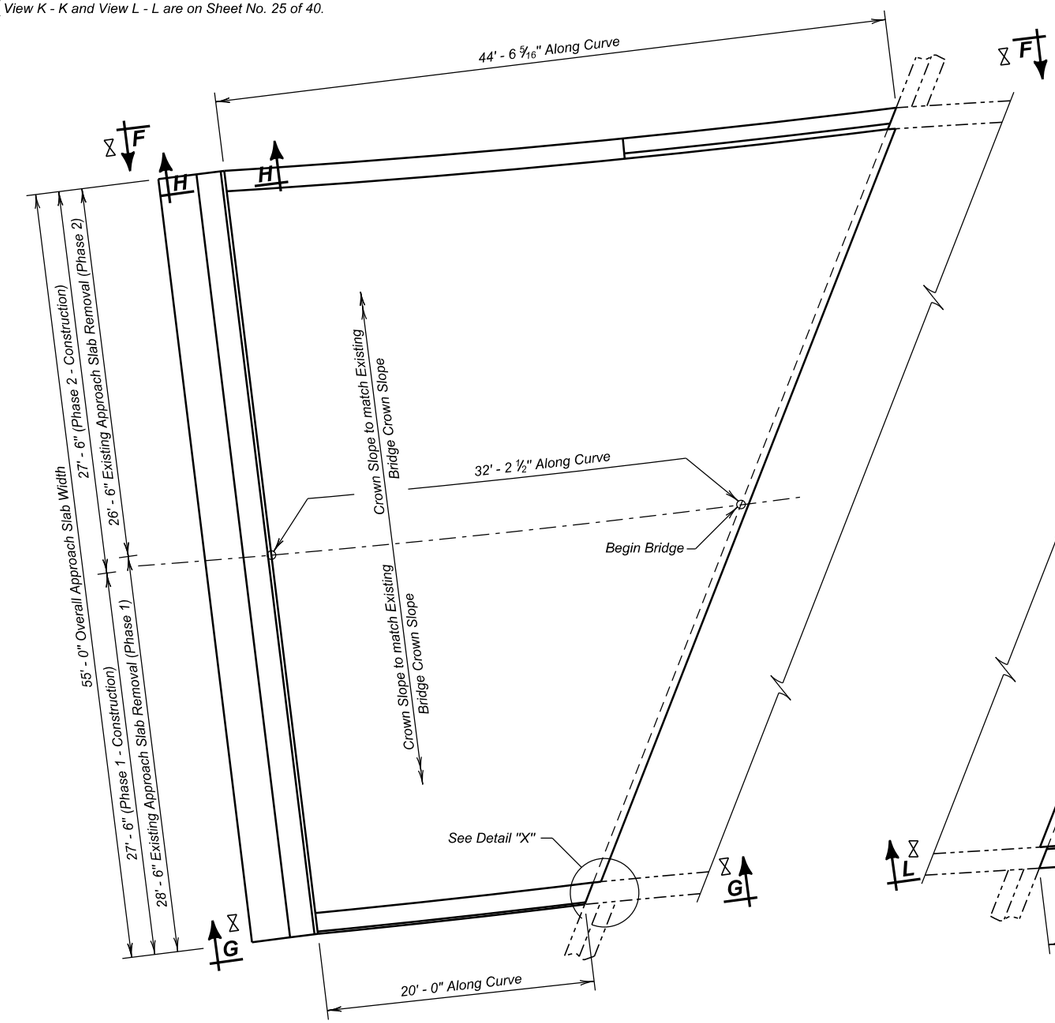

PLAN
(Adjacent to Abutment No. 1)

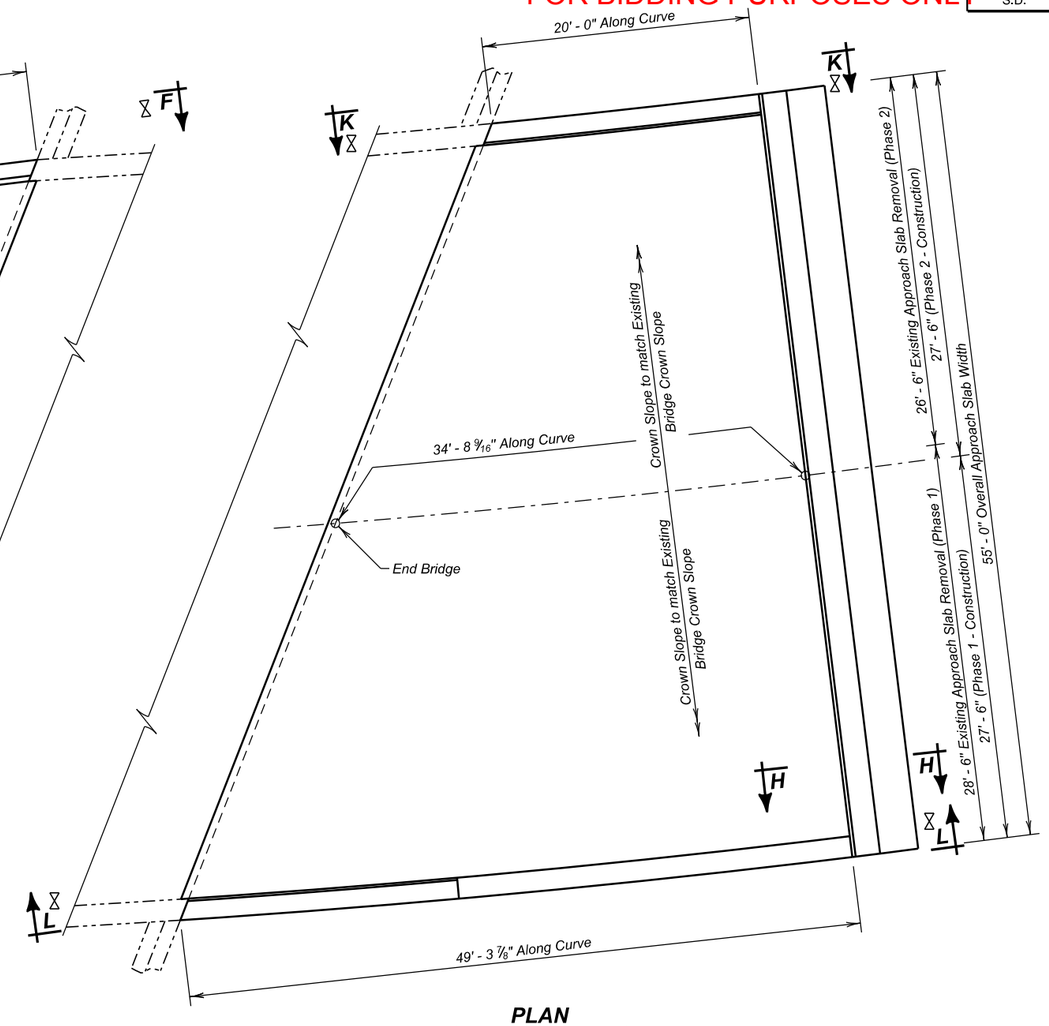

PLAN
(Adjacent to Abutment No. 4)

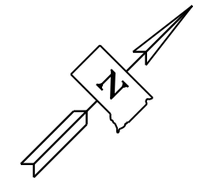

Use this sheet in conjuction with Sheet Nos. 22 through 27 of 40.

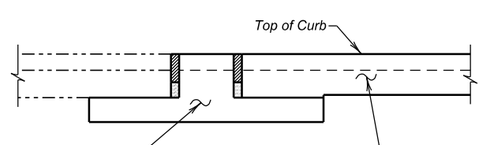

VIEW H - H

APPROACH SLAB LAYOUT
FOR
119' - 2¾" CONTINUOUS CONCRETE BRIDGE

52'-0" ROADWAY
OVER MARNE CREEK
STR. NO. 68-129-205

26° SKEW L.H.F.
SEC. 18-T93N-R55W
NH 0050(122)384

YANKTON COUNTY
S. D. DEPT. OF TRANSPORTATION
JANUARY 2015

DESIGNED BY	CK. DES. BY	DRAFTED BY	
KH	MM	KR	Kevin N. Goeden
YANK05HD	05HDRA21		BRIDGE ENGINEER

STATE OF	PROJECT	SHEET NO.	TOTAL SHEETS
S.D.	NH 0050(122)384	E24	E42

FOR BIDDING PURPOSES ONLY

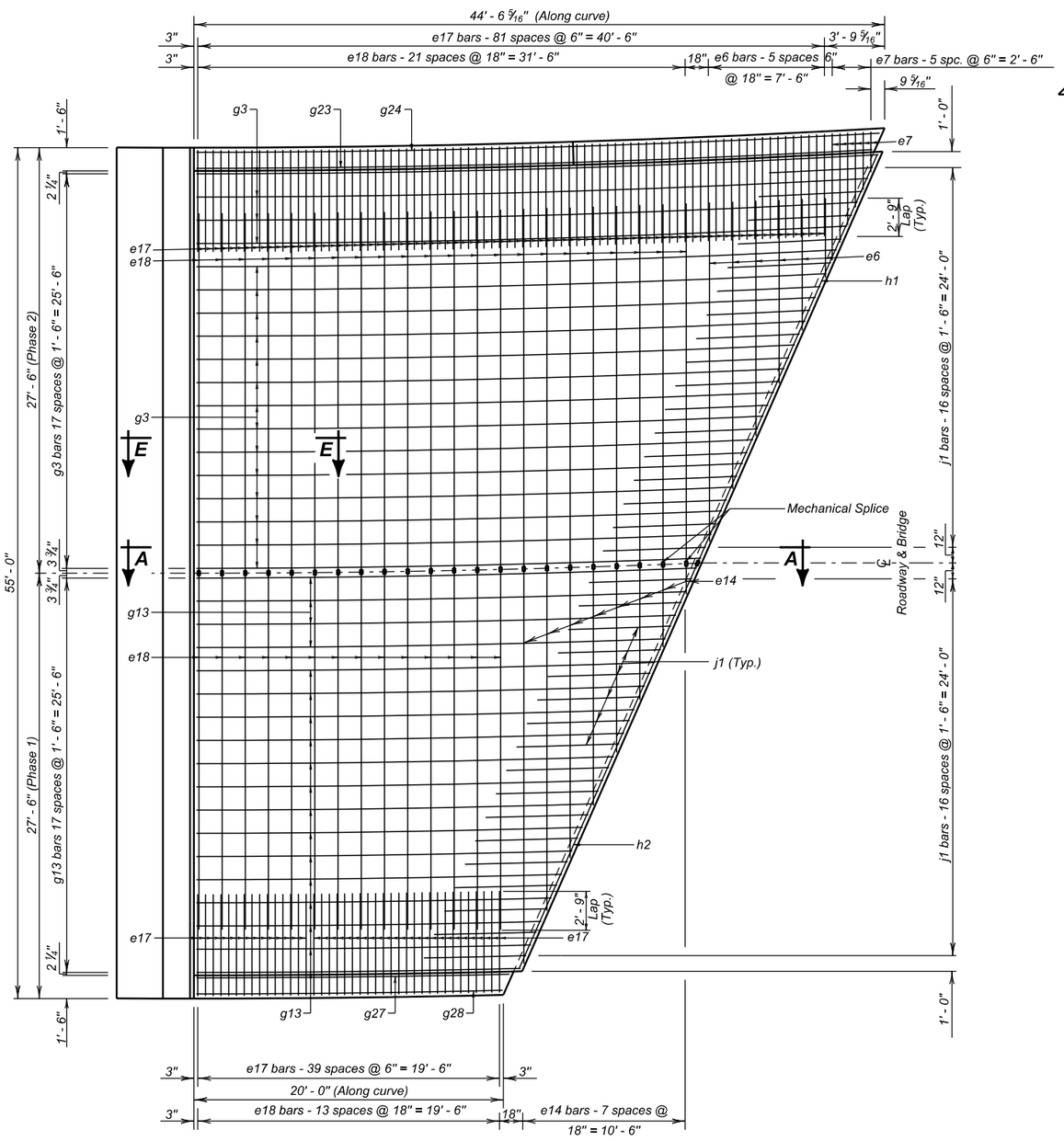

PLAN
(Top Steel Shown)
(Approach slab shown adjacent to Abutment No. 1)

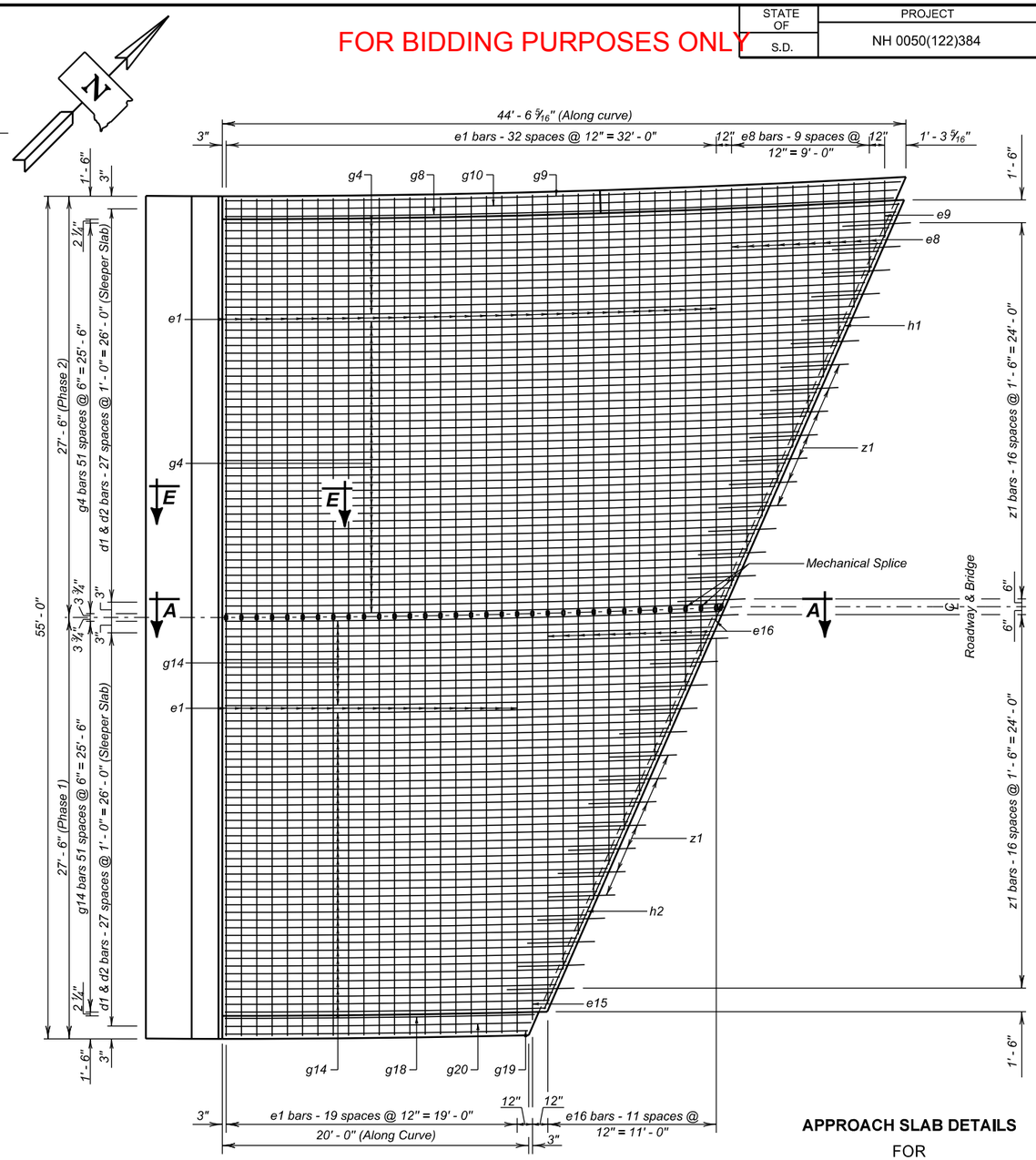

PLAN
(Bottom Steel Shown)
(Approach slab shown adjacent to Abutment No. 1)

APPROACH SLAB DETAILS
FOR
119' - 2¾" CONTINUOUS CONCRETE BRIDGE

52'-0" ROADWAY
OVER MARNE CREEK
STR. NO. 68-129-205

26° SKEW L.H.F.
SEC. 18-T93N-R55W
NH 0050(122)384

Section A - A and Section E - E are on Sheet No. 26 of 40.

Use this sheet in conjuction with Sheet Nos. 21 & 23 thru 27 of 40.

YANKTON COUNTY
S. D. DEPT. OF TRANSPORTATION
JANUARY 2015

DESIGNED BY	CK. DES. BY	DRAFTED BY	
KH	MM	KR	Kevin N. Goeden
YANK05HD	05HDRA22		BRIDGE ENGINEER

FOR BIDDING PURPOSES ONLY

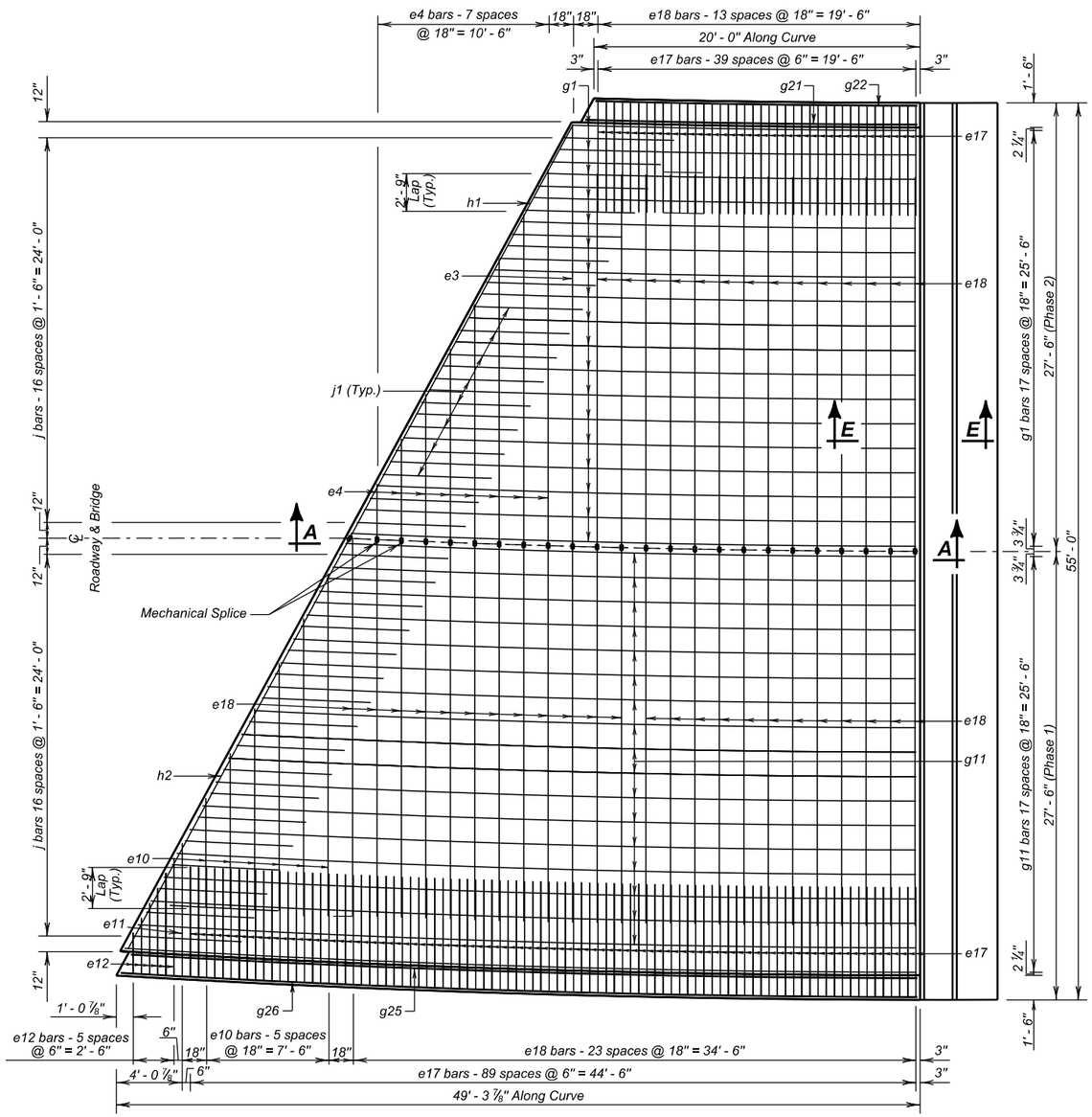

PLAN
(Top Steel Shown)
(Approach slab shown adjacent to Abutment No. 4)

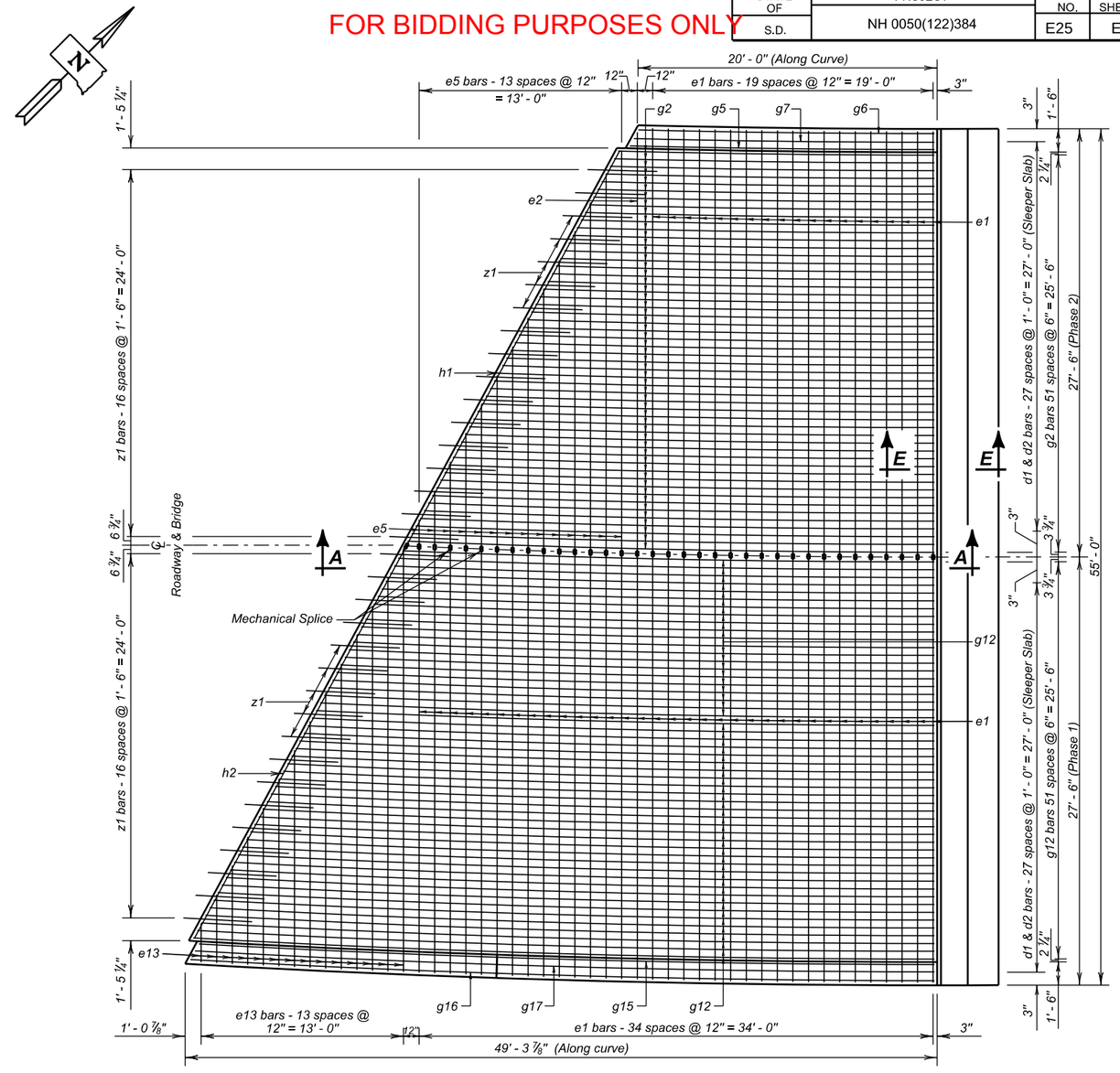

PLAN
(Bottom Steel Shown)
(Approach slab shown adjacent to Abutment No. 4)

APPROACH SLAB DETAILS (CONTINUED)

FOR

119' - 2¾" CONTINUOUS CONCRETE BRIDGE

52'-0" ROADWAY
OVER MARNE CREEK
STR. NO. 68-129-205

26° SKEW L.H.F.
SEC. 18-T93N-R55W
NH 0050(122)384

Section E - E and Section A - A are on Sheet No. 26 of 40.

Use this sheet in conjuction with Sheet Nos. 21, 22, 24 thru 27 of 40.

YANKTON COUNTY
S. D. DEPT. OF TRANSPORTATION
JANUARY 2015

DESIGNED BY	CK. DES. BY	DRAFTED BY	
KH	MM	KR	Kevin N. Goeden
YANK05HD	05HDRA23		BRIDGE ENGINEER

FOR BIDDING PURPOSES ONLY

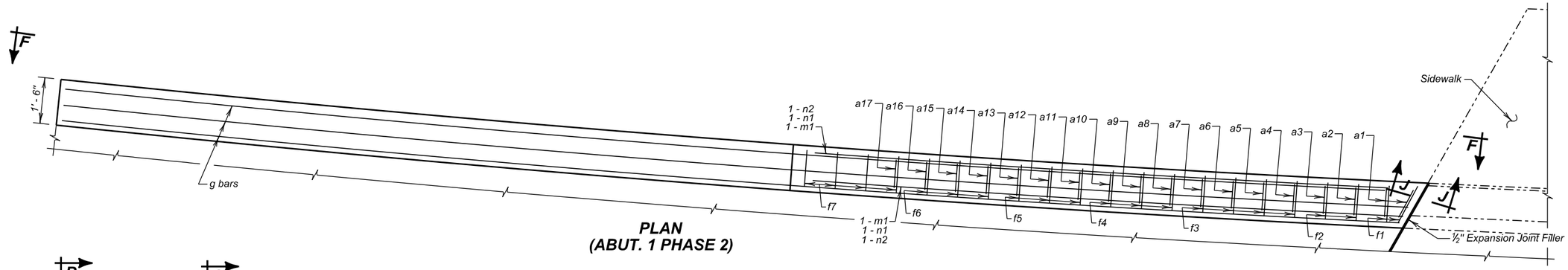

PLAN
(ABUT. 1 PHASE 2)

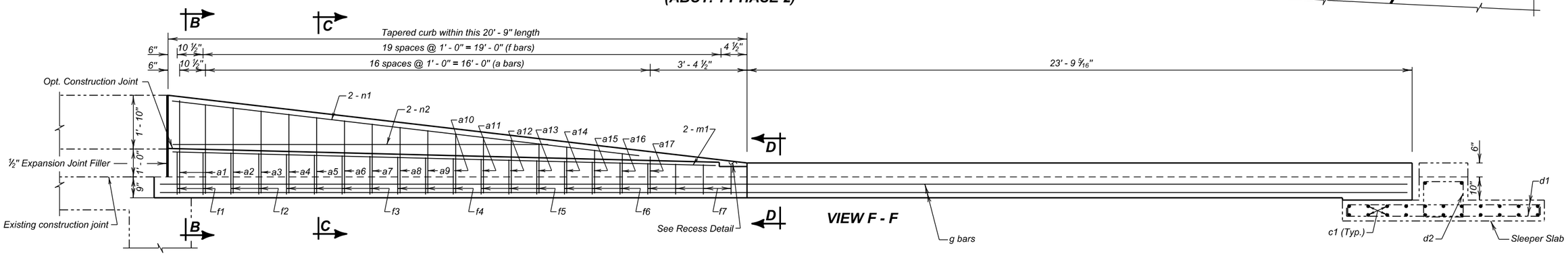

VIEW F - F

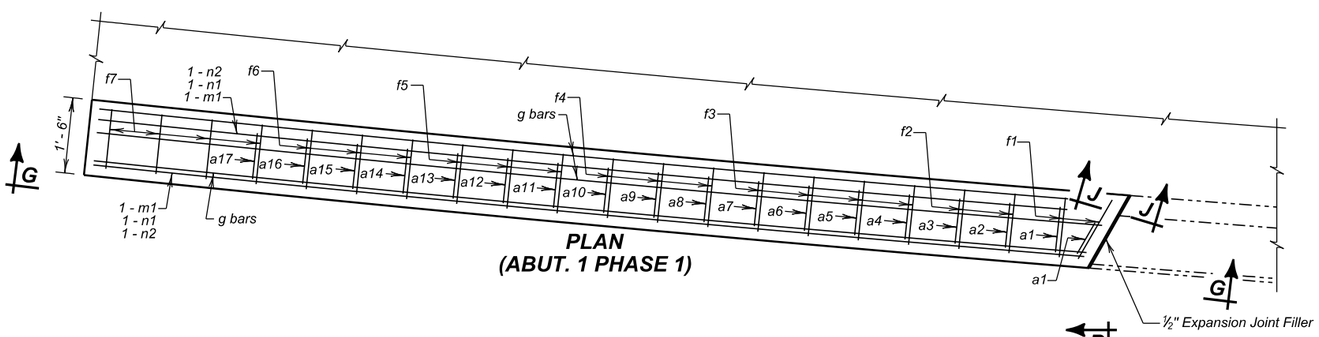

PLAN
(ABUT. 1 PHASE 1)

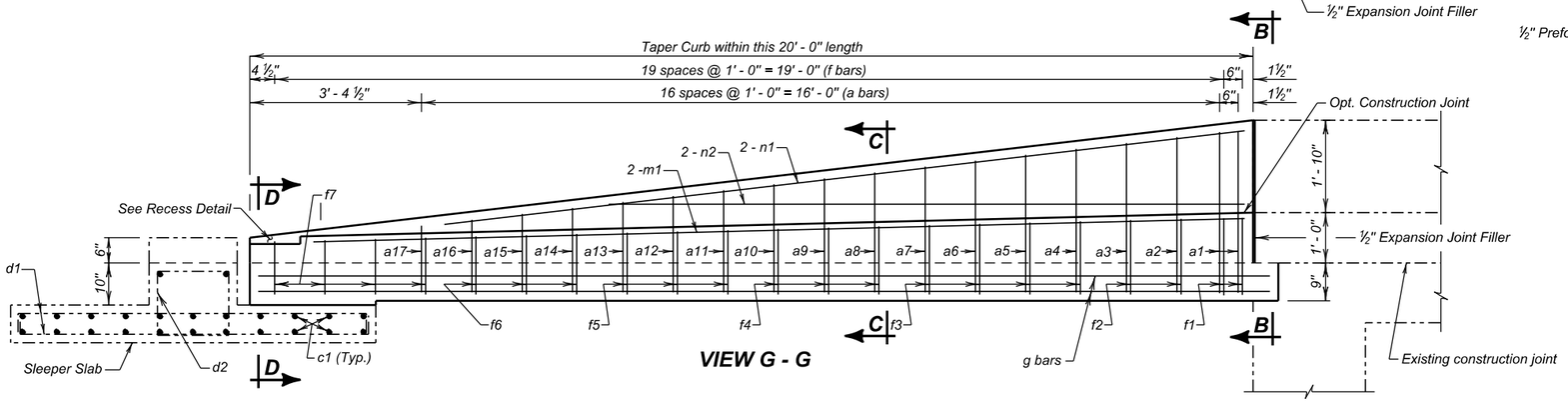

VIEW G - G

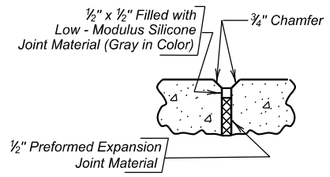

SECTION J - J

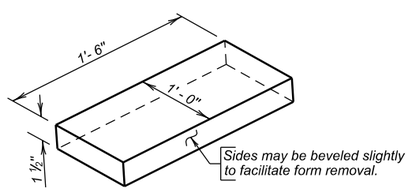

RECESS DETAIL

Section B - B, C - C and D - D are on Sheet No. 26 of 40.
Use this sheet in conjuction with Sheet Nos. 21 thru 23 & 25 thru 27 of 40.

DETAILS OF APPROACH SLAB CURBS
FOR
119' - 2¾" CONTINUOUS CONCRETE BRIDGE

52'-0" ROADWAY — 26° SKEW L.H.F.
OVER MARNE CREEK — SEC. 18-T93N-R55W
STR. NO. 68-129-205 — NH 0050(122)384

YANKTON COUNTY
S. D. DEPT. OF TRANSPORTATION
JANUARY 2015

DESIGNED BY	CK. DES. BY	DRAFTED BY	
KH	MM	KR	Kevin N. Goeden BRIDGE ENGINEER
YANK05HD	05HDRA24		

FOR BIDDING PURPOSES ONLY

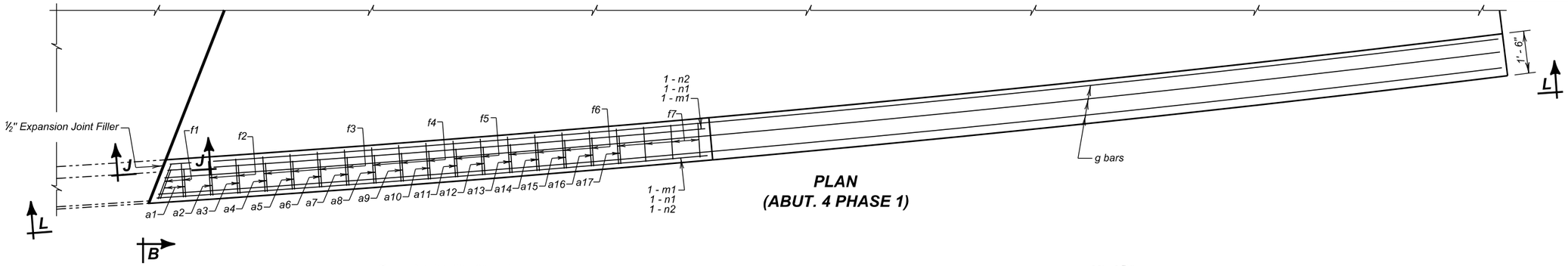

PLAN
(ABUT. 4 PHASE 1)

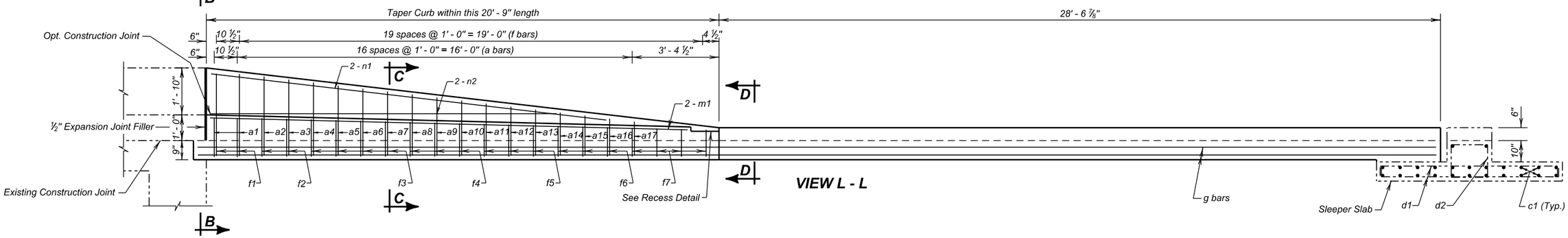

VIEW L - L

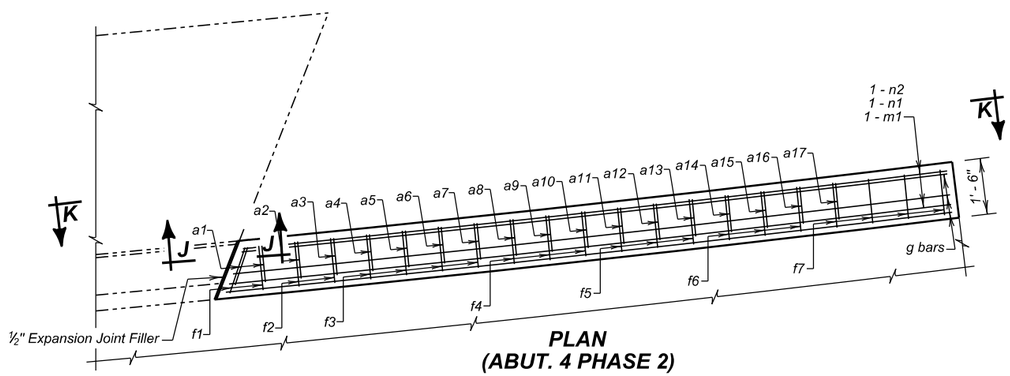

PLAN
(ABUT. 4 PHASE 2)

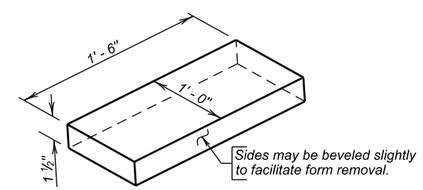

RECESS DETAIL

Section B - B, C - C and D - D are on Sheet No. 26 of 40.

Use this sheet in conjuction with Sheet Nos. 21 thru 24 & 26 thru 27 of 40.

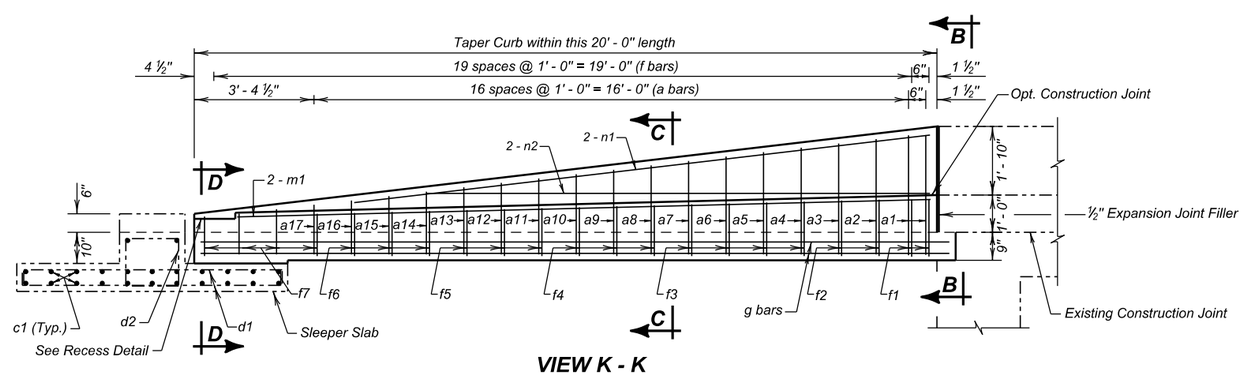

VIEW K - K

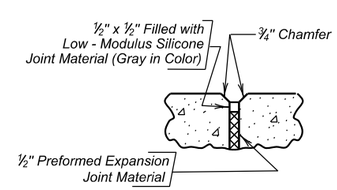

SECTION J - J

DETAILS OF APPROACH SLAB CURBS (CONTINUED)
FOR
119' - 2¾" CONTINUOUS CONCRETE BRIDGE

52'-0" ROADWAY — 26° SKEW L.H.F.
OVER MARNE CREEK — SEC. 18-T93N-R55W
STR. NO. 68-129-205 — NH 0050(122)384

YANKTON COUNTY
S. D. DEPT. OF TRANSPORTATION
JANUARY 2015

DESIGNED BY	CK. DES. BY	DRAFTED BY	
KH	MM	KR	Kevin N. Goeden
YANK05HD	05HDRA25		BRIDGE ENGINEER

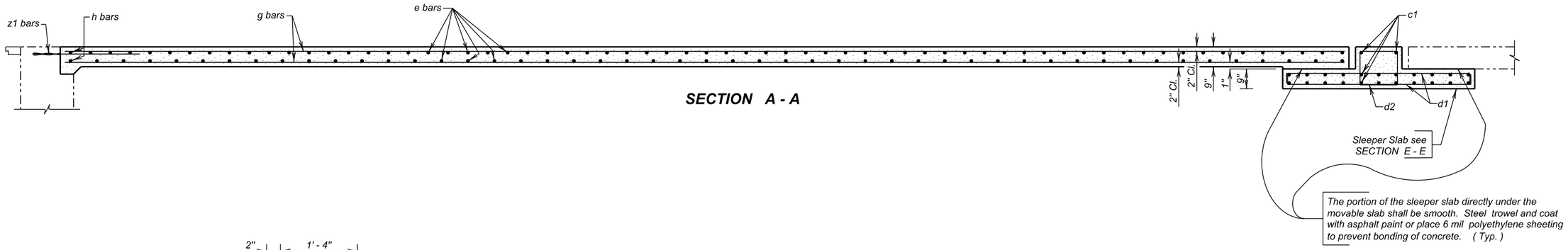

SECTION A - A

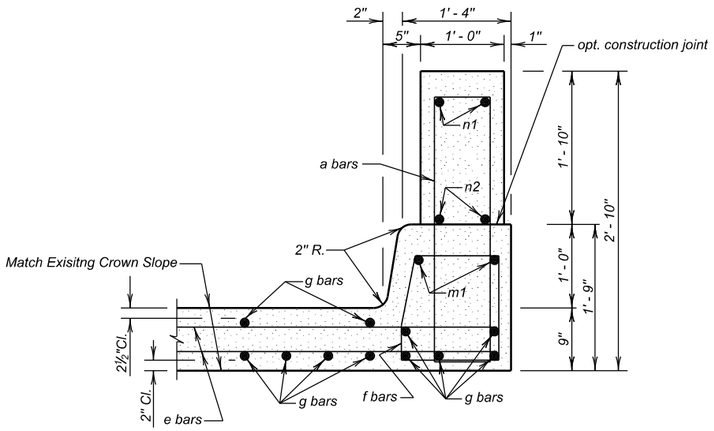

SECTION B - B

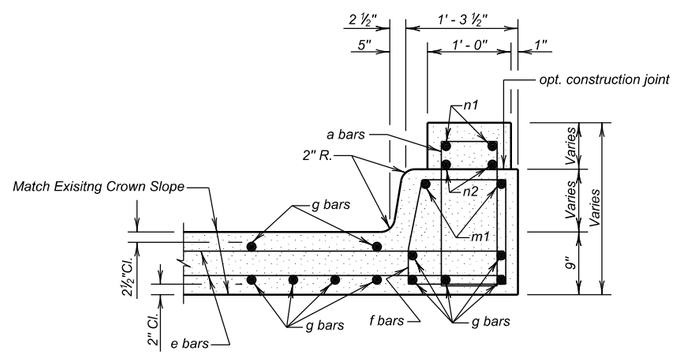

SECTION C - C

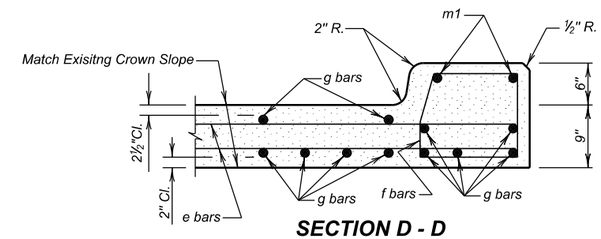

SECTION D - D

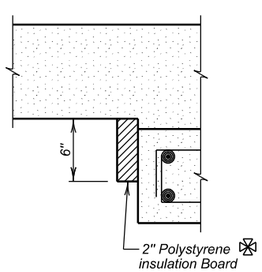

DETAIL "W"

The Polystyrene Insulation Board shall be firmly attached to the sleeper slab by a method to be approved by the Engineer.

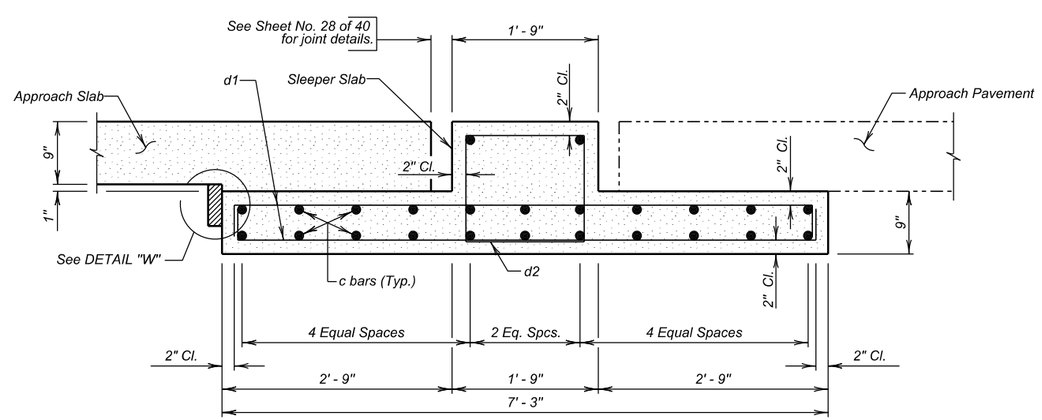

SECTION E - E
(Sleeper Slab)

Use this sheet in conjunction with Sheet Nos. 20 thru 25 & 27 of 40.

APPROACH SLAB & APPROACH SLAB CURB DETAILS

FOR

119' - 2¾" CONTINUOUS CONCRETE BRIDGE

52'-0" ROADWAY — 26° SKEW L.H.F.
OVER MARNE CREEK — SEC. 18-T93N-R55W
STR. NO. 68-129-205 — NH 0050(122)384

YANKTON COUNTY
S. D. DEPT. OF TRANSPORTATION
JANUARY 2015

DESIGNED BY	CK. DES. BY	DRAFTED BY	
KH	MM	KR	Kevin N. Goeden BRIDGE ENGINEER
YANK05HD	05HDRA26		

FOR BIDDING PURPOSES ONLY

REINFORCING SCHEDULE
(For Two Approach, Two Sleeper Slabs and Tapered Barriers)

PHASE 1

Mk.	No.	Size	Length	Type
a1	4	4	8' - 5"	T2
a2	2	4	8' - 1"	T2
a3	2	4	7' - 11"	T2
a4	2	4	7' - 9"	T2
a5	2	4	7' - 5"	T2
a6	2	4	7' - 3"	T2
a7	2	4	6' - 11"	T2
a8	2	4	6' - 9"	T2
a9	2	4	6' - 7"	T2
a10	2	4	6' - 3"	T2
a11	2	4	6' - 1"	T2
a12	2	4	5' - 9"	T2
a13	2	4	5' - 7"	T2
a14	2	4	5' - 5"	T2
a15	2	4	5' - 1"	T2
a16	2	4	4' - 11"	T2
a17	2	4	4' - 7"	T2
⌀c1	48	5	27' - 4"	Str.
d1	112	4	7' - 9"	2
d2	56	4	6' - 1"	T2
⌀e1	55	6	27' - 4"	Str.
◊ e10	3	4	28' - 2"	Str.
e11	1	6	8' - 2"	Str.
◊ e12	3	6	9' - 9"	Str.
e13	7	6	29' - 6"	Str.
◊ ⌀e14	4	4	27' - 4"	Str.
⌀e15	1	6	26' - 6"	Str.
◊ ⌀e16	6	6	26' - 3"	Str.
e17	130	6	6' - 9"	Str.
⌀e18	38	4	23' - 4"	Str.
f1	4	4	5' - 11"	T2A
f2	4	4	5' - 9"	T2A
f3	8	4	5' - 7"	T2A
f4	6	4	5' - 5"	T2A
f5	6	4	5' - 3"	T2A
f6	6	4	5' - 1"	T2A
f7	8	4	4' - 11"	T2A
◊ g11	9	4	83' - 6"	Str.
◊ g12	26	8	83' - 6"	Str.
◊ g13	9	4	53' - 1"	Str.
◊ g14	26	8	53' - 1"	Str.
g15	1	8	48' - 2"	Str.
g16	1	8	48' - 9"	Str.
g17	1	8	48' - 6"	Str.
g18	1	8	20' - 2"	Str.
g19	1	8	19' - 7"	Str.
g20	1	8	19' - 11"	Str.
g25	1	4	48' - 3"	Str.
g26	1	4	48' - 10"	Str.
g27	1	4	20' - 2"	Str.
g28	1	4	19' - 7"	Str.
⌀h2	4	6	28' - 7"	Str.
j1	34	6	6' - 0"	Str.
m1	4	4	18' - 8"	Str.
n1	4	4	16' - 0"	Str.
n2	4	4	12' - 8"	Str.
△z1	34	6	4' - 0"	Str.

Bending Details

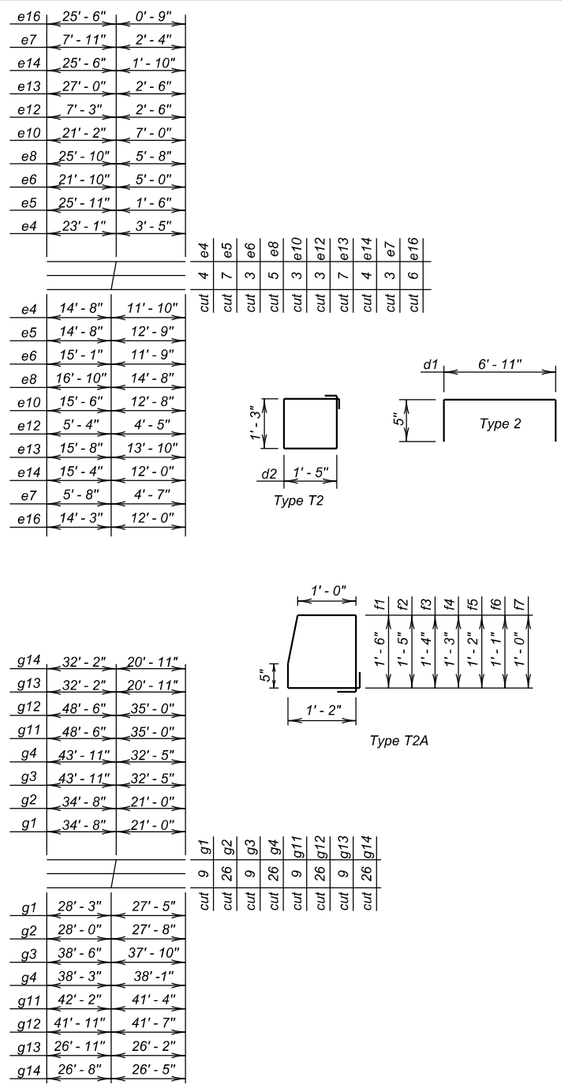

PHASE 2

Mk.	No.	Size	Length	Type
a1	4	4	8' - 5"	T2
a2	2	4	8' - 1"	T2
a3	2	4	7' - 11"	T2
a4	2	4	7' - 9"	T2
a5	2	4	7' - 5"	T2
a6	2	4	7' - 3"	T2
a7	2	4	6' - 11"	T2
a8	2	4	6' - 9"	T2
a9	2	4	6' - 7"	T2
a10	2	4	6' - 3"	T2
a11	2	4	6' - 1"	T2
a12	2	4	5' - 9"	T2
a13	2	4	5' - 7"	T2
a14	2	4	5' - 5"	T2
a15	2	4	5' - 1"	T2
a16	2	4	4' - 11"	T2
a17	2	4	4' - 7"	T2
⌀c1	48	5	27' - 4"	Str.
d1	112	4	7' - 9"	2
d2	56	4	6' - 1"	T2
⌀e1	53	6	27' - 4"	Str.
⌀e2	1	6	26' - 8"	Str.
⌀e3	1	4	25' - 10"	Str.
◊ ⌀e4	4	4	26' - 6"	Str.
◊ ⌀e5	7	6	27' - 5"	Str.
◊ e6	3	4	26' - 10"	Str.
◊ e7	3	6	10' - 3"	Str.
◊ e8	5	6	31' - 6"	Str.
e9	1	6	3' - 6"	Str.
e17	122	6	6' - 9"	Str.
⌀e18	36	4	23' - 4"	Str.
f1	4	4	5' - 11"	T2A
f2	4	4	5' - 9"	T2A
f3	8	4	5' - 7"	T2A
f4	6	4	5' - 5"	T2A
f5	6	4	5' - 3"	T2A
f6	6	4	5' - 1"	T2A
f7	8	4	4' - 11"	T2A
◊ g1	9	4	55' - 8"	Str.
◊ g2	26	8	55' - 8"	Str.
◊ g3	9	4	76' - 4"	Str.
◊ g4	26	8	76' - 4"	Str.
g5	1	8	20' - 3"	Str.
g6	1	8	19' - 8"	Str.
g7	1	8	20' - 0"	Str.
g8	1	8	43' - 6"	Str.
g9	1	8	44' - 0"	Str.
g10	1	8	43' - 11"	Str.
g21	1	4	20' - 4"	Str.
g22	1	4	19' - 8"	Str.
g23	1	4	48' - 6"	Str.
g24	1	4	44' - 0"	Str.
⌀h1	4	6	28' - 10"	Str.
j1	34	6	6' - 0"	Str.
m1	4	4	18' - 8"	Str.
n1	4	4	16' - 0"	Str.
n2	4	4	12' - 8"	Str.
△z1	34	6	4' - 0"	Str.

NOTES:

All Dimensions are out to out of bars.
All Bars to be Epoxy Coated.
△ Dowels
◊ Cut Bars
⌀ These bars shall be spliced with mechanical splice devices

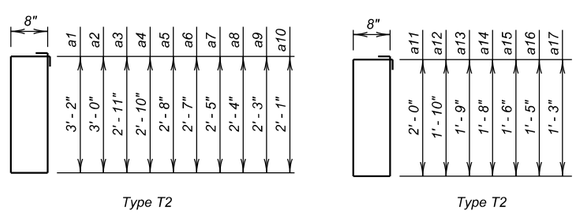

ESTIMATED QUANTITIES
(For Two Approach and Sleeper Slabs)

ITEM	UNIT	PHASE I QUANTITY	PHASE 2 QUANTITY
Remove Concrete Bridge Approach Slab	Sq. Yd.	229.4	207.3
Concrete Approach Slab for Bridge	Sq. Yd.	211.4	204.1
Concrete Approach Sleeper Slab for Bridge	Sq. Yd.	44.3	44.3
Install Dowel In Concrete	Each	34	34
No. 4 Rebar Splice	Each	46	–
No. 5 Rebar Splice	Each	48	–
No. 6 Rebar Splice	Each	72	–
Class A45 Concrete, Bridge Repair	Cu. Yd.	1.4	1.4
Epoxy Coated Reinforcing Steel	Lb.	77	77

	PHASE I	PHASE 2
1. Concrete in Approach Slabs.	55.6 Cu. Yd.	53.6 Cu. Yd.
✳ 2. Epoxy Coated Re-Steel in Approach Slabs.	16,720 Lb.	16,128 Lb.
3. Concrete in Sleeper Slabs	14.0 Cu. Yd.	14.0 Cu. Yd.
4. Epoxy Coated Re-Steel in Sleeper Slabs.	2176 Lb.	2176 Lb.

Items 1 thru 4 are approximate quantities contained in the above bid item and are for information only.

✳ Does not include the following quantities for z1 bars as these are paid for in the Bid Item "Install Dowel in Concrete".

PHASE I	PHASE 2
204 Lb.	204 Lb.

APPROACH SLAB & APPROACH SLAB CURB DETAILS (CONTINUED)

FOR

119' - 2¾" CONTINUOUS CONCRETE BRIDGE

52'-0" ROADWAY — 26° SKEW L.H.F.
OVER MARNE CREEK — SEC. 18-T93N-R55W
STR. NO. 68-129-205 — NH 0050(122)384

YANKTON COUNTY
S. D. DEPT. OF TRANSPORTATION
JANUARY 2015

Use this sheet in conjunction with Sheet Nos. 21 thru 26 of 40.

DESIGNED BY	CK. DES. BY	DRAFTED BY	
KH	MM	KR	Kevin N. Cooden BRIDGE ENGINEER
YANK05HD	05HDRA27		

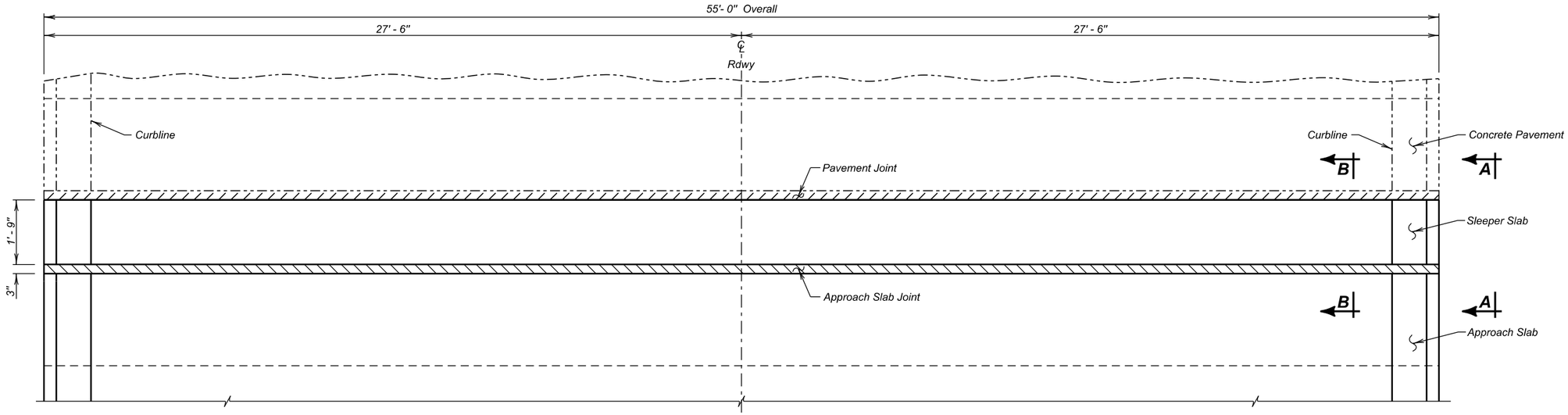

PLAN

GENERAL NOTES

1. The Membrane Sealant shall be on the approved product list for Membrane Sealant Expansion Joints.
2. The manufacturer shall supply the membrane sealant in packaging that precompresses the membrane sealant. The precompressed dimension shall be as recommended by the sealant manufacturer, however, in no case shall the precompressed dimension exceed 75% of the joint opening width. The foam sealant shall be slowly self expanding to permit workers ample time to install the membrane sealant before the membrane sealant exceeds the joint opening width.
3. The membrane sealant shall provide a water tight seal throughout a joint movement range of + 25% (minimum) from the specified joint opening dimension.
4. The membrane sealant shall be supplied in pieces a minimum of 5 feet in length. The foam sealant shall be ultra-violet and ozone resistant.
5. The bonding adhesive used to attach the membrane sealant to the adjacent concrete shall be approved by the membrane sealant manufacturer.
6. Adhesive used to join adjacent pieces of the membrane sealant shall be as recommended by the manufacturer.
7. If Styrofoam filler material is used in the construction, it shall be closed cell and water-tight as approved by the Engineer.
8. The minimum concrete air temperature at the time of joint installation and adhesive curing shall be 40° F.
9. A technical representative of the membrane sealant manufacturer shall be present at the jobsite during installation. The technical representative shall be knowledgeable in the correct procedures for the preparation and installation of the joint material to ensure the Contractor installs the joint to the Manufacturers recommendations.
10. Surfaces that will be in contact with the membrane sealant shall be thoroughly cleaned by abrasive blasting to remove all laitance and contaminants (such as oil, curing compounds, etc.) from the surface. At a minimum, two passes of abrasive blasting with the nozzle held at an angle to within 1 to 2 inches of the surface will be required. Cleaning of the surfaces with solvents, wire brushing, or grinding shall not be permitted.
11. After abrasive blasting, but immediately prior to membrane joint installation, the entire joint contact surface shall be air blasted. The air compressor used for joint cleaning shall be equipped with trap devices capable of providing moisture-free and oil-free air at a recommended pressure of 90 psi. To obtain complete bonding with the adhesive, the adjacent surfaces must be dry and clean. The contact surfaces for the joint shall be visually inspected by the Engineer immediately prior to joint installation to verify the surface is dry and clean.
12. Individual spliced sections shall be installed as per the manufacturers' recommendations. The membrane joint sealant manufacturer shall submit a detailed installation procedure to the Engineer at least 5 days prior to joint installation for his review.
13. Traffic shall not be allowed on the joint until the bonding adhesive has had time to cure, as recommended by the manufacturer.
14. Use plywood or other material to protect concrete adjacent to the joint from spalling before any equipment is moved across the joint. Any spall areas will be repaired at the Contractor's expense by breaking out and replacing adjacent concrete, as approved by the Engineer.
15. The Membrane Sealant Expansion Joint will be measured in feet to the nearest one-tenth foot, complete in place. Measurement will be made of the overall horizontal length. The Membrane Sealant Expansion Joint will be paid for at the contract unit price per foot complete in place. Payment for this item shall be full compensation for furnishing all the required materials in place, including labor, equipment and incidentals necessary to complete the work in accordance with the plans and the foregoing specifications.

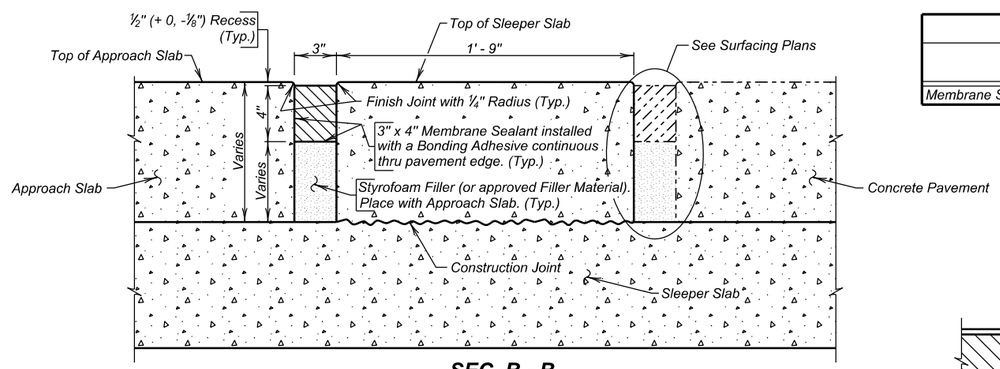

SEC. B - B

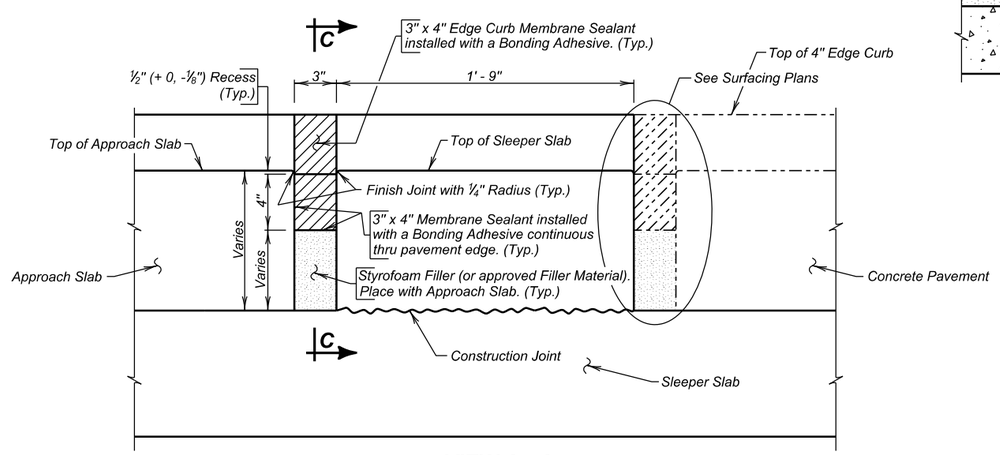

VIEW A - A

ESTIMATED QUANTITIES

ITEM	UNIT	QUANTITY	
		Phase 1	Phase 2
Membrane Sealant Expansion Joint	Ft.	55	55

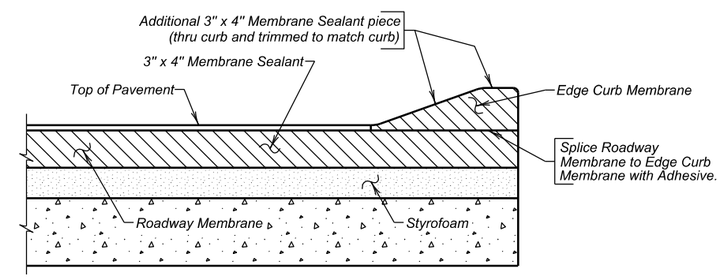

SEC. C - C

APPROACH SLAB JOINT DETAILS CONTINUED

FOR

119' - 2¾" CONTINUOUS CONCRETE BRIDGE

52'-0" ROADWAY — 26° SKEW L.H.F.
OVER MARNE CREEK — SEC. 18-T93N-R55W
STR. NO. 68-129-205 — NH 0050(122)384

YANKTON COUNTY
S. D. DEPT. OF TRANSPORTATION
JANUARY 2015

DESIGNED BY	CK. DES. BY	DRAFTED BY	
KH	MM	KH	Kevin N. Goeden
YANK05HD	05HDRA28		BRIDGE ENGINEER

FOR BIDDING PURPOSES ONLY

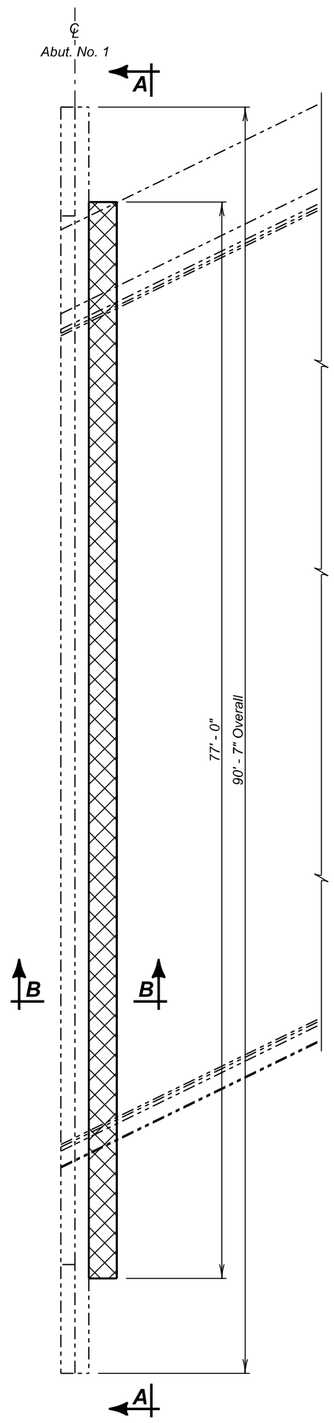

PLAN
(Abutment No. 1)

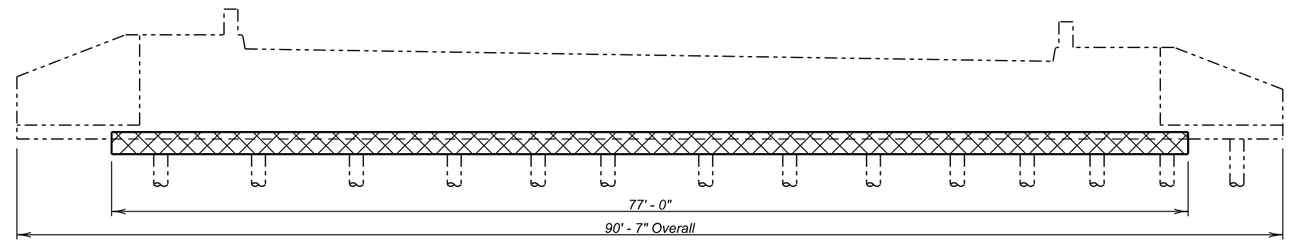

VIEW A - A

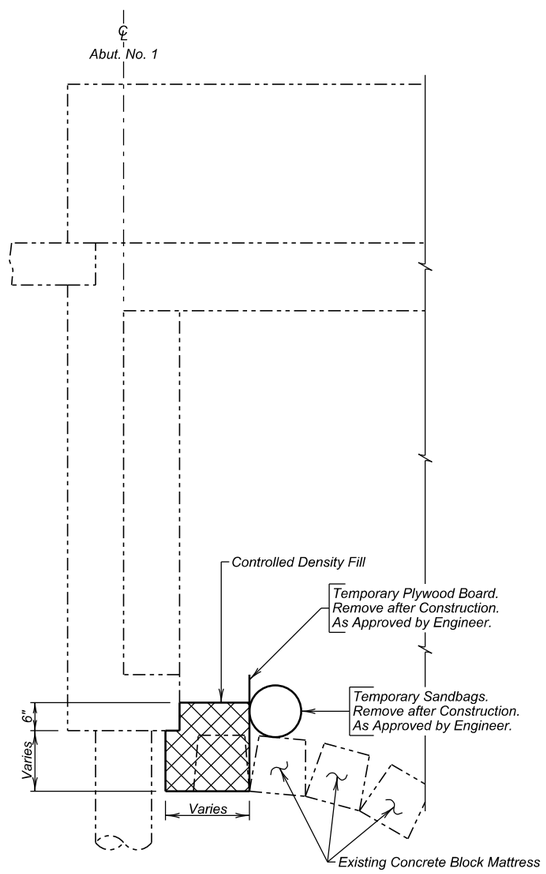

SECTION B - B

Controlled Density Fill

ESTIMATED QUANTITIES

ITEM	UNIT	QUANTITY
Controlled Density Fill	Cu. Yd.	6.4

BRIDGE BERM DETAILS

FOR

119' - 2¾" CONTINUOUS CONCRETE BRIDGE

52'-0" ROADWAY
OVER MARNE CREEK
STR. NO. 68-129-205

26° SKEW L.H.F.
SEC. 18-T93N-R55W
NH 0050(122)384

YANKTON COUNTY
S. D. DEPT. OF TRANSPORTATION
JANUARY 2015

DESIGNED BY	CK. DES. BY	DRAFTED BY	
KH	NP	KH	Kevin N. Goeden
YANK05HD	05HDRA29		BRIDGE ENGINEER

FOR BIDDING PURPOSES ONLY

STATE OF	PROJECT	SHEET NO.	TOTAL SHEETS
S.D.	NH 0050(122)384	E32	E42

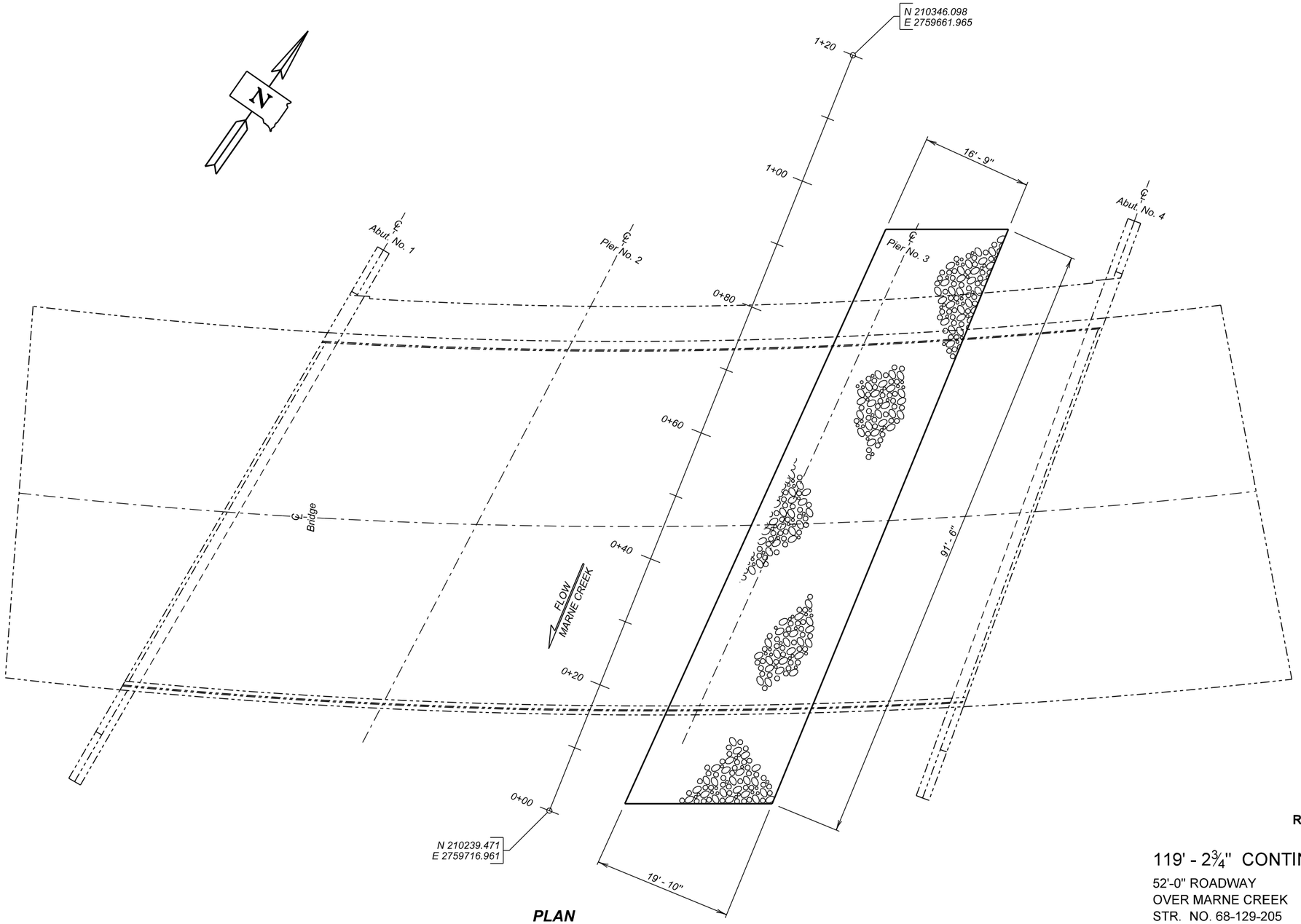

PLAN

RIPRAP LAYOUT

FOR

119' - 2¾" CONTINUOUS CONCRETE BRIDGE

52'-0" ROADWAY
OVER MARNE CREEK
STR. NO. 68-129-205

26° SKEW L.H.F.
SEC. 18-T93N-R55W
NH 0050(122)384

YANKTON COUNTY

S. D. DEPT. OF TRANSPORTATION

JANUARY 2015

DESIGNED BY	CK. DES. BY	DRAFTED BY	
NP	KH	KR	Kevin N. Goeden
YANK05HD	05HDRA30		BRIDGE ENGINEER

FOR BIDDING PURPOSES ONLY

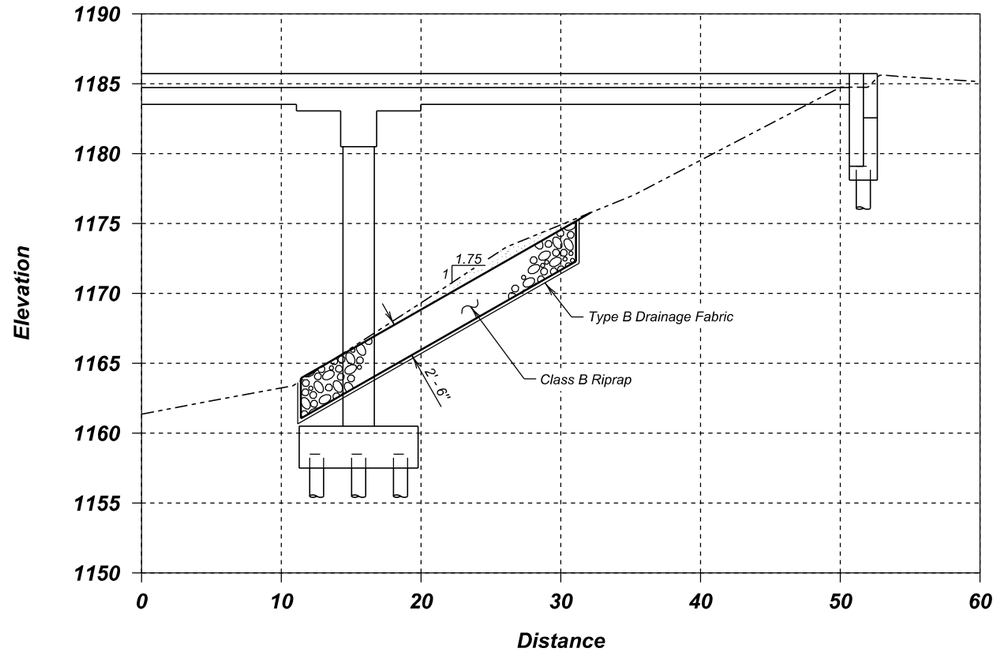

CROSS SECTION (0+40)

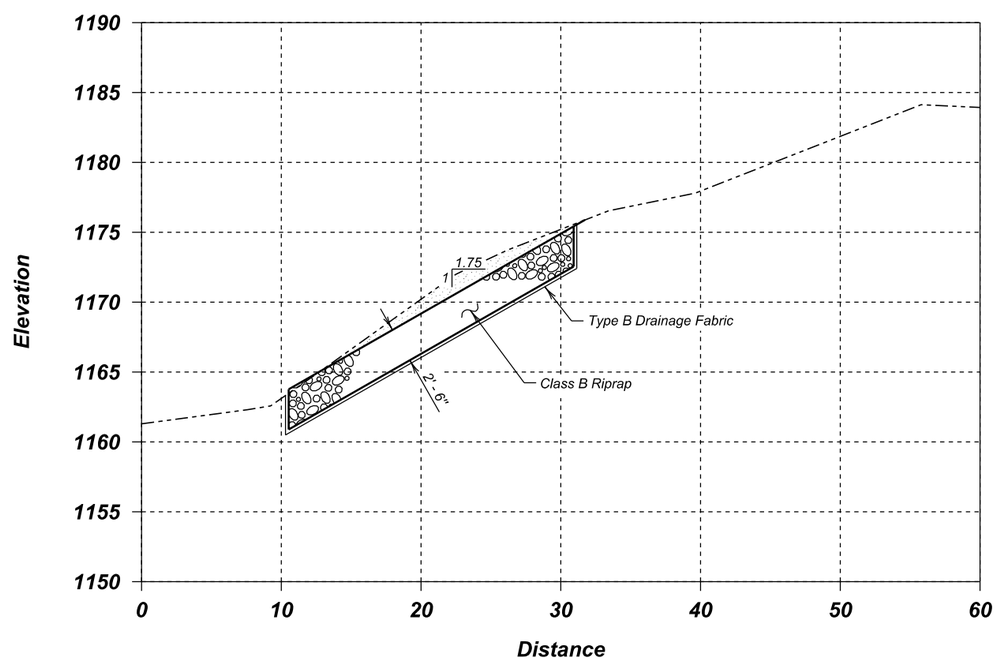

CROSS SECTION (0+20)

Existing Ground Line

Class B Riprap

Excavated Material

RIRAP CROSS SECTIONS

FOR

119' - 2¾" CONTINUOUS CONCRETE BRIDGE

52'-0" ROADWAY — 26° SKEW L.H.F.

OVER MARNE CREEK — SEC. 18-T93N-R55W

STR. NO. 68-129-205 — NH 0050(122)384

YANKTON COUNTY

S. D. DEPT. OF TRANSPORTATION

JANUARY 2015

DESIGNED BY	CK. DES. BY	DRAFTED BY	
NP	KH	NP	Kevin N. Goeden
YANK05HD	05HDRA31		BRIDGE ENGINEER

FOR BIDDING PURPOSES ONLY

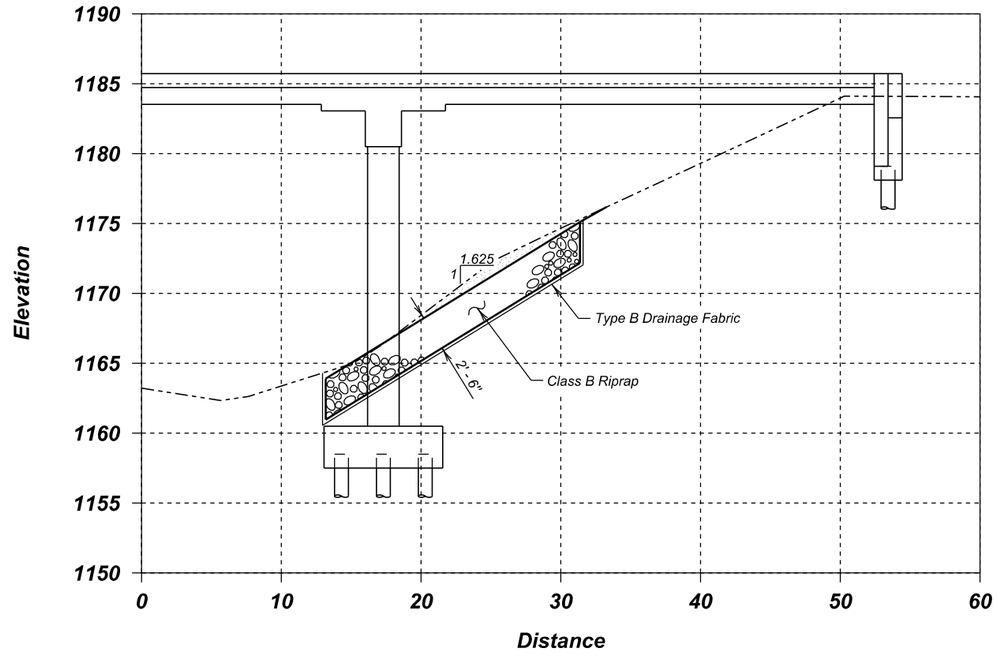

CROSS SECTION (0+80)

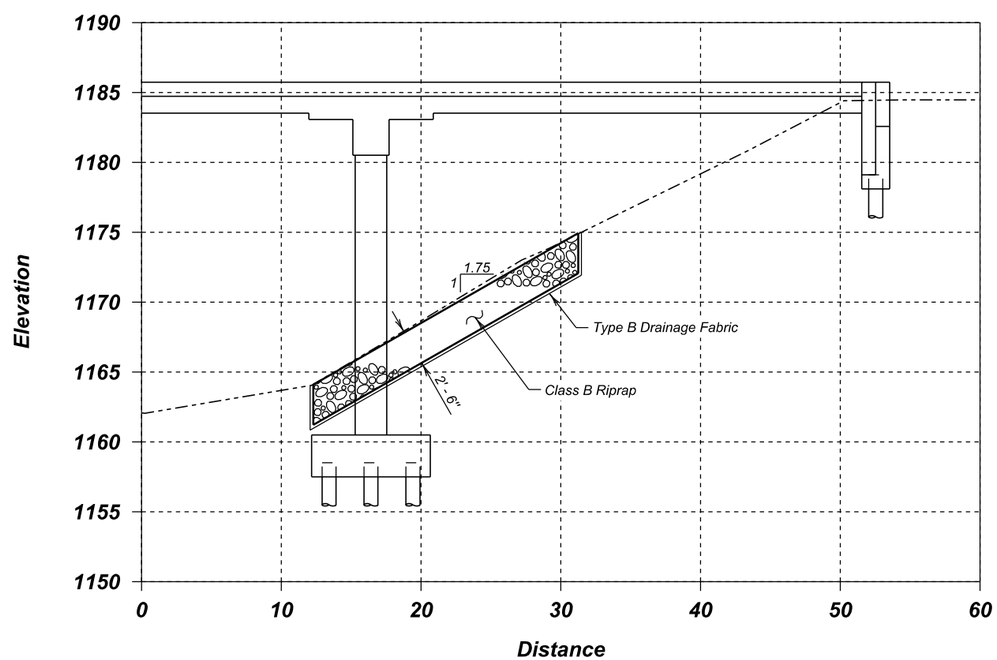

CROSS SECTION (0+60)

Existing Ground Line

Class B Riprap

Excavated Material

RIPRAP CROSS SECTIONS (CONTINUED)

FOR

119' - 2¾" CONTINUOUS CONCRETE BRIDGE

52'-0" ROADWAY — 26° SKEW L.H.F.

OVER MARNE CREEK — SEC. 18-T93N-R55W

STR. NO. 68-129-205 — NH 0050(122)384

YANKTON COUNTY

S. D. DEPT. OF TRANSPORTATION

JANUARY 2015

DESIGNED BY	CK. DES. BY	DRAFTED BY	
NP	KH	NP	Kevin N. Goeden
YANK05HD	05HDRA32		BRIDGE ENGINEER

FOR BIDDING PURPOSES ONLY

Existing Ground Line

Class B Riprap

Excavated Material

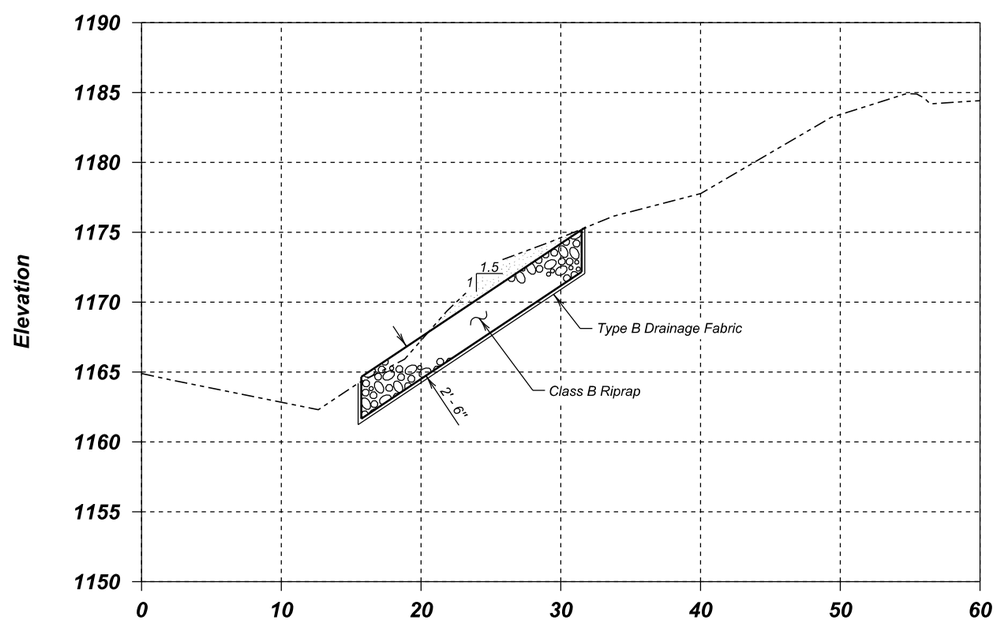

CROSS SECTION (1+00)

ESTIMATED QUANTITIES

ITEM	UNIT	QUANTITY
✳ Class B Riprap	Ton	263.2
Type B Drainage Fabric	Sq. Yd.	285

✳ A factor of 1.4 was used to convert Cubic Yards to Tons.

For informational purposes only, 216.0 cubic yards of excavated material is included in this payment item

RIPRAP CROSS SECTIONS (CONTINUED)

FOR

119' - 2¾" CONTINUOUS CONCRETE BRIDGE

52'-0" ROADWAY — 26° SKEW L.H.F.

OVER MARNE CREEK — SEC. 18-T93N-R55W

STR. NO. 68-129-205 — NH 0050(122)384

YANKTON COUNTY

S. D. DEPT. OF TRANSPORTATION

JANUARY 2015

DESIGNED BY	CK. DES. BY	DRAFTED BY	
NP	KH	NP	Kevin N. Goeden
YANK05HD	05HDRA33		BRIDGE ENGINEER

YEAR PLATE DETAILS FOR ORIGINAL CONSTRUCTION

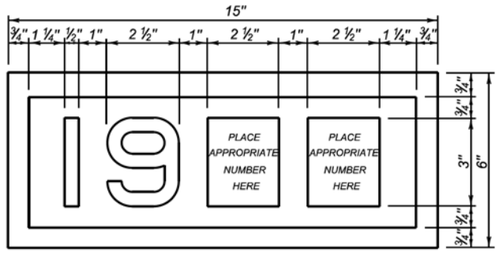

YEAR PLATE DETAILS FOR NEW CONSTRUCTION

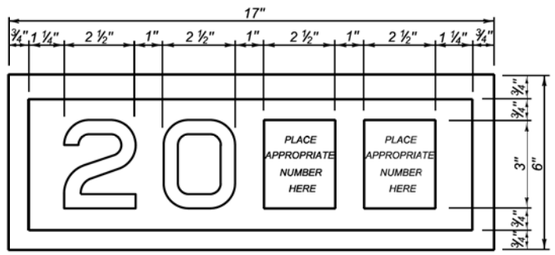

GENERAL NOTES:

1. Year plates of the general dimensions shown shall be constructed on all box culverts and bridges. The year plates shall be constructed in reverse and attached to the forms in such a manner that the finished imprint in the concrete does not exceed one-half (½) inch in depth.
2. Year plates shall be located on structure(s) as follows:
   a. On cast-in-place box culverts the year plates shall be four and one - half (4 ½) inches below the top of the upstream parapet wall and centered laterally on the upstream face. On precast box culverts the year plate shall be centered laterally on the upstream face of the top slab. Where an extended interior wall interferes with this location, the year plate shall be centered in an adjacent barrel.
   b. On bridges with six (6) inch curbs or "Jersey" shaped barriers with no endblocks, the year plate shall be centered vertically on the curb face approximately six (6) inches from the end of the bridge, or as designated by the Engineer. On bridges with "Jersey" shaped barrier endblocks, the year plate shall be centered on the upper sloped portion of the barrier approximately 5'- 6" from the end of the bridge, or as designated by the Engineer. There shall be one year plate at each end of the bridge on opposite sides.
   c. When the plans specify that both the original date of construction and the date of reconstruction are to be shown, one date shall be placed as listed above and the other located adjacent to it. Both year plates shall be shown at each end of the bridge on opposite sides.
3. There will be no separate measurement or payment made for year plates on box culverts and bridges. All costs for this work shall be incidental to other contract items.

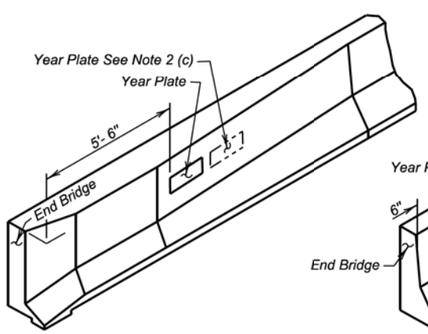

JERSEY BARRIER
(With Endblock)

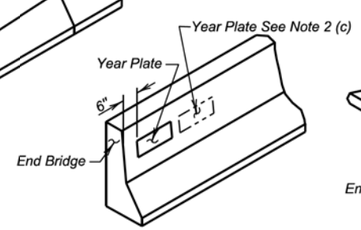

JERSEY BARRIER

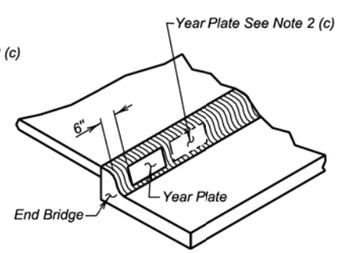

TYPE B CURB

June 26, 2012

Published Date: 2nd Qtr. 2016	SDDOT	DUAL DATE YEAR PLATE DETAILS	PLATE NUMBER 460.03 Sheet 1 of 1

STATE OF S.D.	PROJECT	SHEET NO.	TOTAL SHEETS
	NH 0050(122)384	E37	E42

FOR BIDDING PURPOSES ONLY

-X020-

INDEX OF BRIDGE SHEETS—

Sheet No. 1 – General Drawing and Quantities
Sheet No. 2 – Subsurface Investigations
Sheet No. 3 – Abutment Details
Sheet No. 4 – Bent Details
Sheet No. 5 – Superstructure Details
Sheet No. 6 – Curve Ordinates, Slab Elevations and Rail Post Spacing
Sheet No. 7 – Details of Curb and Sidewalks
Sheet No. 8 – Type RE-Steel Railing and Drain Details
Sheet No. 9 – Bridge End Backfill (Plan "A")
Sheet No. 10 – Details of Standard Plates No. 301 and No. 303.1

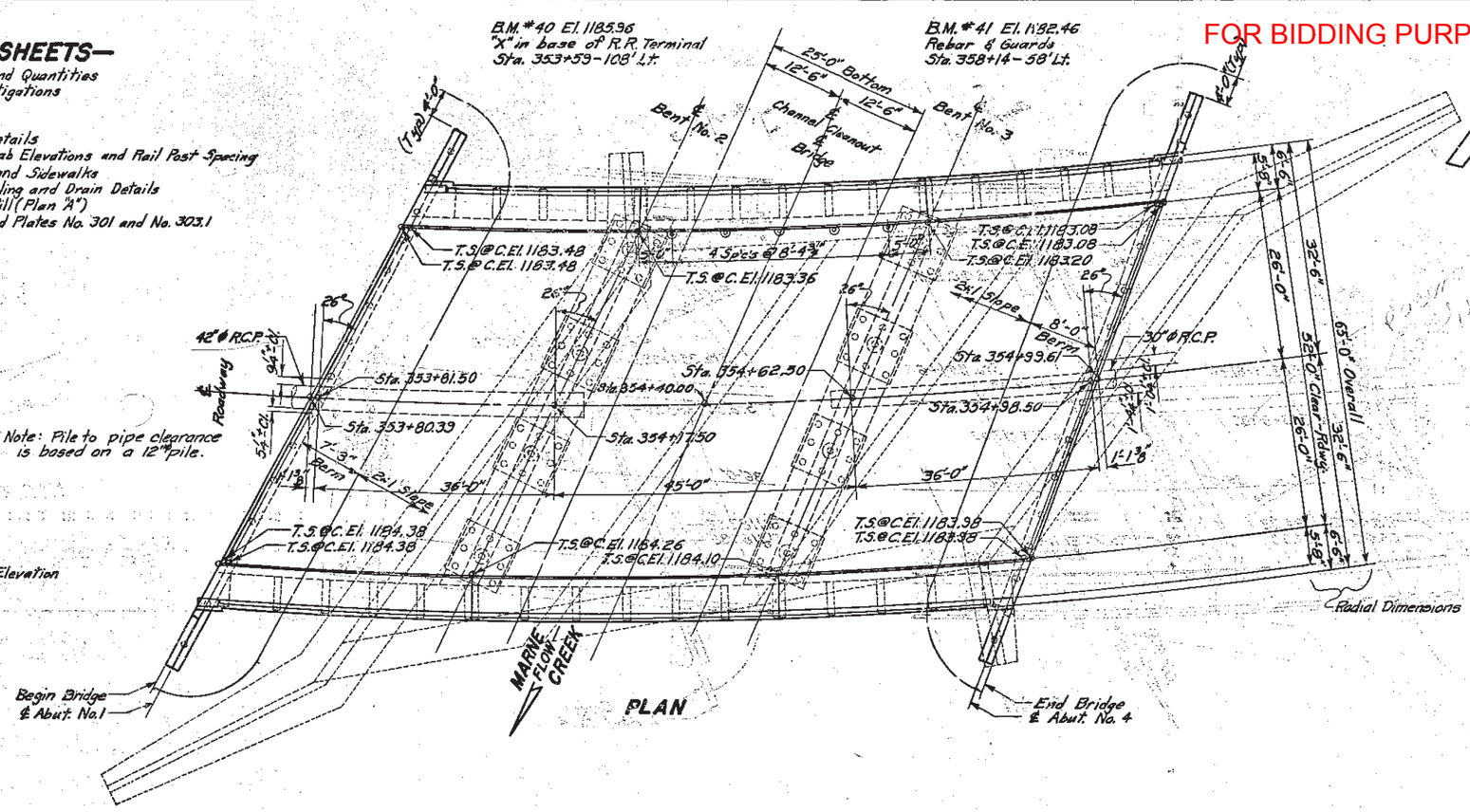

Q100	2300 c.f.s
A	483 sq. ft.
V	6.0 f.p.s

Note: Pile to pipe clearance is based on a 12" pile.

NOTE:
T.S. @ C. El. = Top of Slab at Curb Elevation

P.C. Sta. 347+50.20
P.I. Sta. 351+95.54
P.T. Sta. 355+65.91
Δ 57° 06' Lt.
D 7°
T. 445.34'
L. 815.71'
R. 818.51'

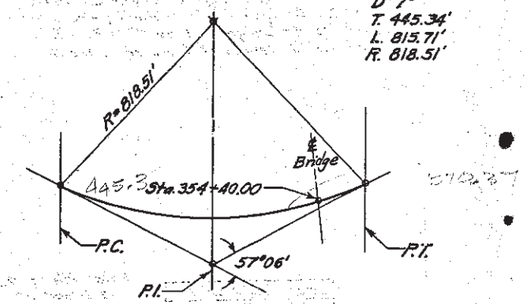

HORIZONTAL CURVE DATA

SPECIFICATION NOTE—

Use South Dakota Standard Specifications for Roads and Bridges, 1963 Edition, and Required Provisions, Supplemental Specifications and/or Special Provisions as included in the Proposal.
Type II Cement is required.

GENERAL NOTES—

1. Design Specifications: AASHO Specifications for Highway Bridges, 1965, with Iterim Specifications for 1966 and 1967.
2. See NOTES on Sheets No. 1 thru No. 10.
3. Place floor drains as shown in Plan (5 Required).
4. Longitudinal elements of the slab shall conform to the grade.
5. Rail Posts including End Posts shall be built normal to grade.
6. Design Loading: HS 20-44 AASHO
7. All exposed edges shall be chamfered 1" except as shown.
8. The contractor shall have sufficient pile splice material on hand before pile driving is started. See Standard Plate No. 303.1 for splice details.
9. Prebored holes for piles at Abutments shall be backfilled with granular material acceptable to the ENGINEER and compacted as specified by the ENGINEER. The cost of granular material in place shall be included in the unit price bid for the piles. Prebore Abut. piles to the El. 1164.3±.
10. All steel pile shoes shall be used, See Standard Plate No. 301 for details.
11. Elevation top of slab at centerline is 0.6667' above centerline subgrade elevation.
12. Standard Plates referred to in these plans are the plates printed on Sheet No. 10 of these plans and are not intended to be referred to in the Standard Plates Manual.
13. The Contractor shall imprint on the structure the date of construction as specified and detailed on Standard Plate No. 308, which is on file with the ENGINEER.

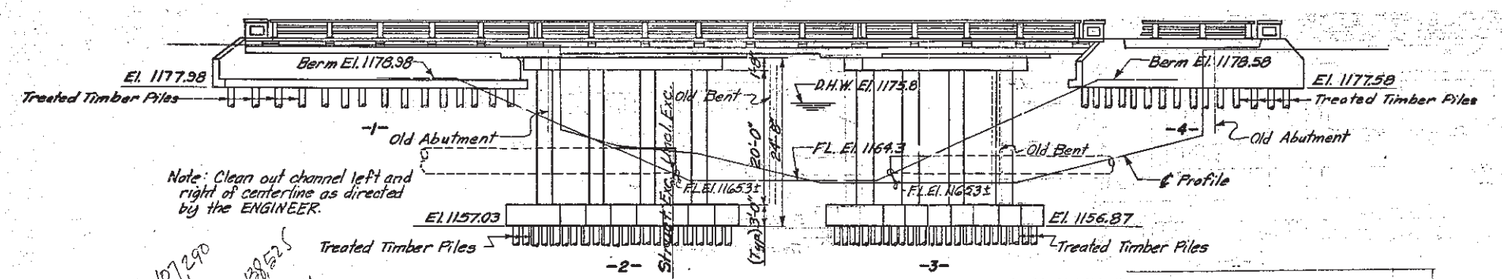

ELEVATION

ESTIMATED QUANTITIES

OLD ITEM No.		40105	40505	40535	40150	40705	40710	10310	10405	40805	10721	10165
ITEM		Cl. "A" Conc. Cu. Yds.	Steel-Lbs. Reinf.	Steel-Lbs. Struct.	Type RE Steel Railing Lin. Ft.	Timber Piles Tr'td. Timber	Lin. Ft. ϕ Test*	Excavation-Cu. Yds. Struct.	Excavation-Cu. Yds. Unclass.	File Shoes ϕ No.	Bridge End Backfill # Lump Sum	*
Superstructure		332.5	103,935	60	226.5							INCIDENTAL WORK
Abut. No. 1 & No. 4		114.0	5,940	1,380		28 @ 45=1260	2 @ 50=100	30		30		
Bent No. 2 & No. 3		112.0	21,000			70 @ 25=1750	2 @ 30=60	440		72		
Totals		818.5	130,875	1,440	226.5	3010	ϕ 160	470	Δ	102	#	

ϕ One Treated Timber Test Pile shall be driven at Abutments No. 1 and No. 4 and Bents No. 2 and No. 3 before remaining piles are ordered.
Δ See Grading Plans for Unclassified Excavation.
● All Steel Piles shoes shall be as shown on Standard Plate No. 301.
For information only, the approximate volume of Granular Backfill will be 120 cu. yds. in place; and length of 6" ϕ perforated Metal Pipe will be 244'±.
* Incidental Work:- In place on ℄ Sta. 354+12.0 to Sta. 355+03.5 is a 3-span 90'-11½" x Variable Roadway 42'± to 48'± I Beam Bridge with 5' sidewalk on south side, concrete railing and concrete floor. The substructure is concrete Abutments and concrete Bents on timber piles. The bridge is on horizontal curve and variable skew. Break down and remove the concrete railing and concrete floor slab. Dismantle and remove the steel stringers, bearings plates and joint angles, material to be salvaged. The steel stringers and other salvaged materials shall be placed neatly within the right-of-way as directed by the ENGINEER, the site not to exceed 500'± from present location, to be picked up by the state forces for future maintenance work. Care shall be taken not to injure the structural properties of the steel stringers and other salvable materials during the dismantling or storage operations. The concrete abutments of old structure shall be broken down and removed completely or as necessary to provide the required area for construction of the new bent No. 2 and new abutment No. 4 as directed by the ENGINEER. The concrete bents of old structure shall be broken down and removed to 1'± below finished ground line except for new bent No. 3 where old footings interfere with its component parts, the old footings shall be removed completely as directed by the the ENGINEER.
All broken concrete from existing bridge shall be disposed of at the same site as for broken pavement as directed by the ENGINEER see grading plans for location. All other material not salvaged shall be disposed of as directed by the ENGINEER.

PLANS BY
BRIDGE SEC. S. DAK. DEPT. HWYS.

ORIGINAL CONSTRUCTION PLANS

GENERAL DRAWING AND QUANTITIES
FOR
119'-2¾" CONTINUOUS CONCRETE BRIDGE
52'-0" ROADWAY 26° SKEW L.H.F. 2-5'-8" SIDEWALKS
OVER MARNE CREEK SEC. 18-T93N-R55W
STA. 353+80.385 TO 354+99.615 F 012-3(1)
STR. NO. 68-129-205 YANKTON COUNTY
SOUTH DAKOTA HS 20-44
DEPARTMENT OF HIGHWAYS
JULY 1969 (35) OF (40)

-X020-

DRAWN BY	CHECKED BY	APPROVED
C.D.	W.C.P.	R.K. Schult BRIDGE ENGINEER

STATE OF	PROJECT	SHEET NO.	TOTAL SHEETS
S.D.	NH 0050(122)384	E38	E42

FOR BIDDING PURPOSES ONLY

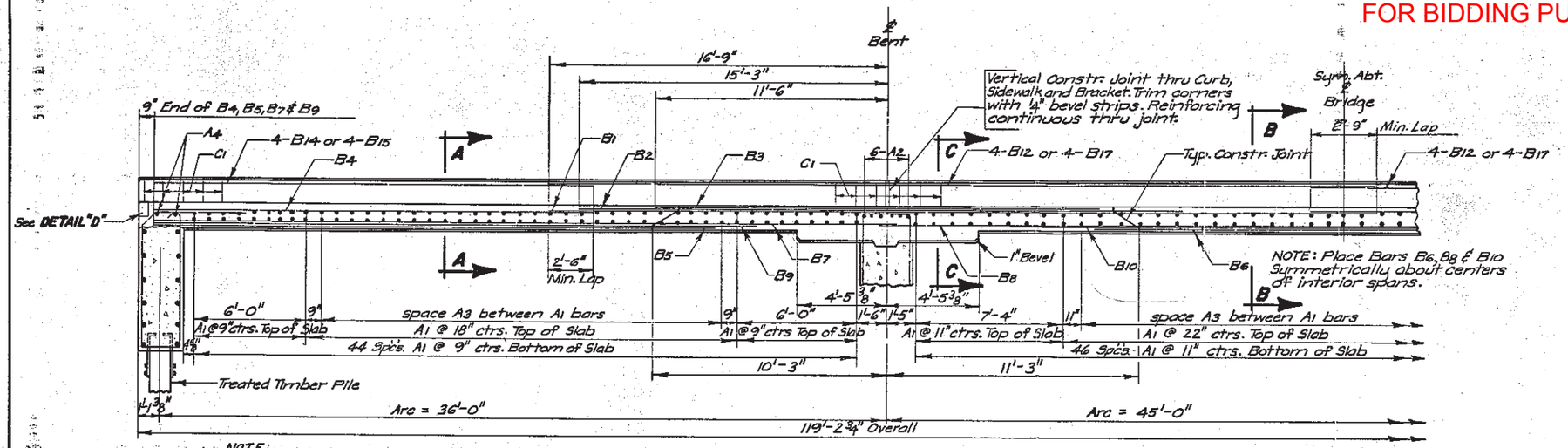

NOTE:
Spacing shown for A1 & A3 bars is at ℄ Rdwy. Spacing at the curbs in the end spans is 8 3/4" at inside curb and 9 3/4" at outside curb. In the interior span the spacing is 10 3/4" at inside curb and 11 3/4" at outside curb.

HALF LONGITUDINAL SECTIONAL VIEW

(All dimensions shown are arc dimensions @ ℄ Rdwy.)

NOTE:
All longitudinal bars shall be placed parallel to ℄ Rdwy. Bar laps will vary with the minimum laps being at the outside (Right) Curb.

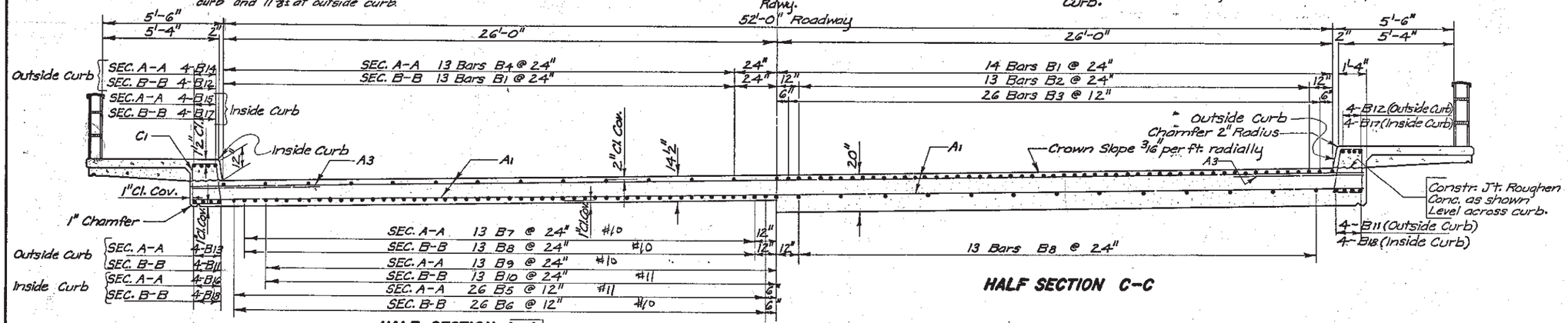

HALF SECTION C-C

HALF SECTION A-A
HALF SECTION B-B

As shown and noted

REINFORCING SCHEDULE

Mk.	No.	Size	Length	Type	Bending Details
A1	231	5	31'-9"	Str.	
A2	See Bent Details				
A3	86	5	6'-0"		
B1	54	11	41'-3"		
B2	52	11	30'-0"		
B3	104	11	22'-0"		
B4	54	9	23'-3"		
B5	104	11	28'-0"		
B6	52	10	24'-6"		
B7	52	10	37'-0"		
B8	26	10	46'-0"		
B9	50	10	30'-0"		
B10	25	11	31'-0"		
B11	4	9	46'-6"		
B12	8	11	41'-3		
B13	8	9	37'-9"		
B14	8	9	23'-9"	Str.	
C1	241	4	7'-6"	T1	
A4	8	9	31'-9"	Str.	
B15	8	9	21'-3"	Str.	
B16	8	9	35'-6"	Str.	
B17	8	11	39'-9"	Str.	
B18	4	9	43'-6"	Str.	

Note: Dimensions are out to out of bar.

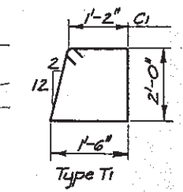

ESTIMATED QUANTITIES

ITEM	UNIT	QUANTITY
Class "A" Concrete	Cu. Yds.	299.2
Reinforcing Steel	Lbs.	99,640

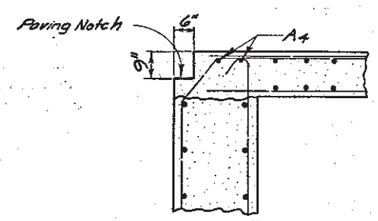

DETAIL "D"

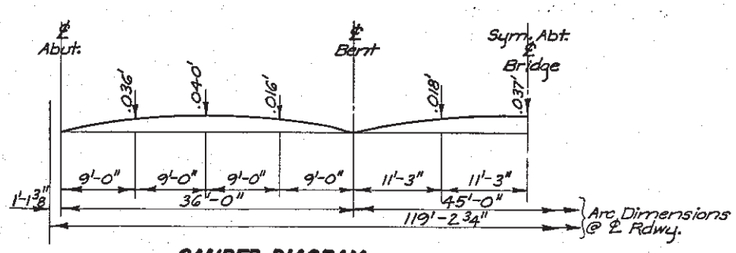

CAMBER DIAGRAM

Camber is calculated for dead load plus plastic flow. Camber shall be added to the proposed grade elevations at the respective stations to establish the elevations of the top of the finished roadway slab.

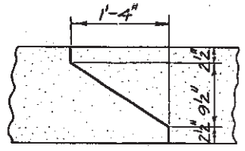

TYP. CONSTR. JOINT

(Re-Steel not shown)

NOTES—

1. These notes cover superstructure, abutment, Bent and railing details. See respective sheets for other appropriate notes.
2. Design Specifications: A.A.S.H.O. Specifications for Highway Bridges, 1965, with Interim Specifications for 1966 and 1967.
3. Pile connections in Abutments, floor drains, and 5/8" ϕ bolts shall be paid for as structural steel.
4. All reinforcing steel, except spirals, shall conform to A.S.T.M.-A615, Grade 40. Spiral reinforcing may be fabricated from cold drawn wire, ASTM-A82., or hot rolled plain or deformed bars conforming to the strength requirements of ASTM-A615, Grade 40.
5. All exposed concrete corners and edges shall be chamfered to 1" bevel unless noted otherwise.
6. Design Loading: HS20-44 A.A.S.H.O.
7. Unit Stresses: Concrete fc = 1600 p.s.i. Reinforcing Steel fs = 20,000 p.s.i.
8. Curbs and Sidewalks shall be poured after all of the slab has been poured.
9. All Concrete shall be Class "A".
10. If necessary to facilitate construction, transverse construction joints may be made at the points shown in each or any span adjacent to interior bents as shown in details.
11. Use 1" clear cover on all reinforcing steel for Superstructure except as shown.

ORIGINAL CONSTRUCTION PLANS

SUPERSTRUCTURE DETAILS
FOR
119'-2 3/4" CONTINUOUS CONCRETE BRIDGE

52'-0" ROADWAY 26° SKEW L.H.F. 2-5'-8" SIDEWALKS
OVER MARNE CREEK SEC. 18-T93N-R55W
STA. 353+80.385 TO 354+99.615 F012-3(1)
STR. NO. 68-129-205 YANKTON COUNTY
SOUTH DAKOTA HS20-44
DEPARTMENT OF HIGHWAYS
68-129-205 JULY 1969 (36) OF (40)

DESIGNED BY	DRAWN BY	CHECKED BY	APPROVED
	W.C.P.	D.C.	R.H. Schultz BRIDGE ENGINEER

FOR BIDDING PURPOSES ONLY

STATE OF	PROJECT	SHEET NO.	TOTAL SHEETS
S.D.	NH 0050(122)384	E39	E42

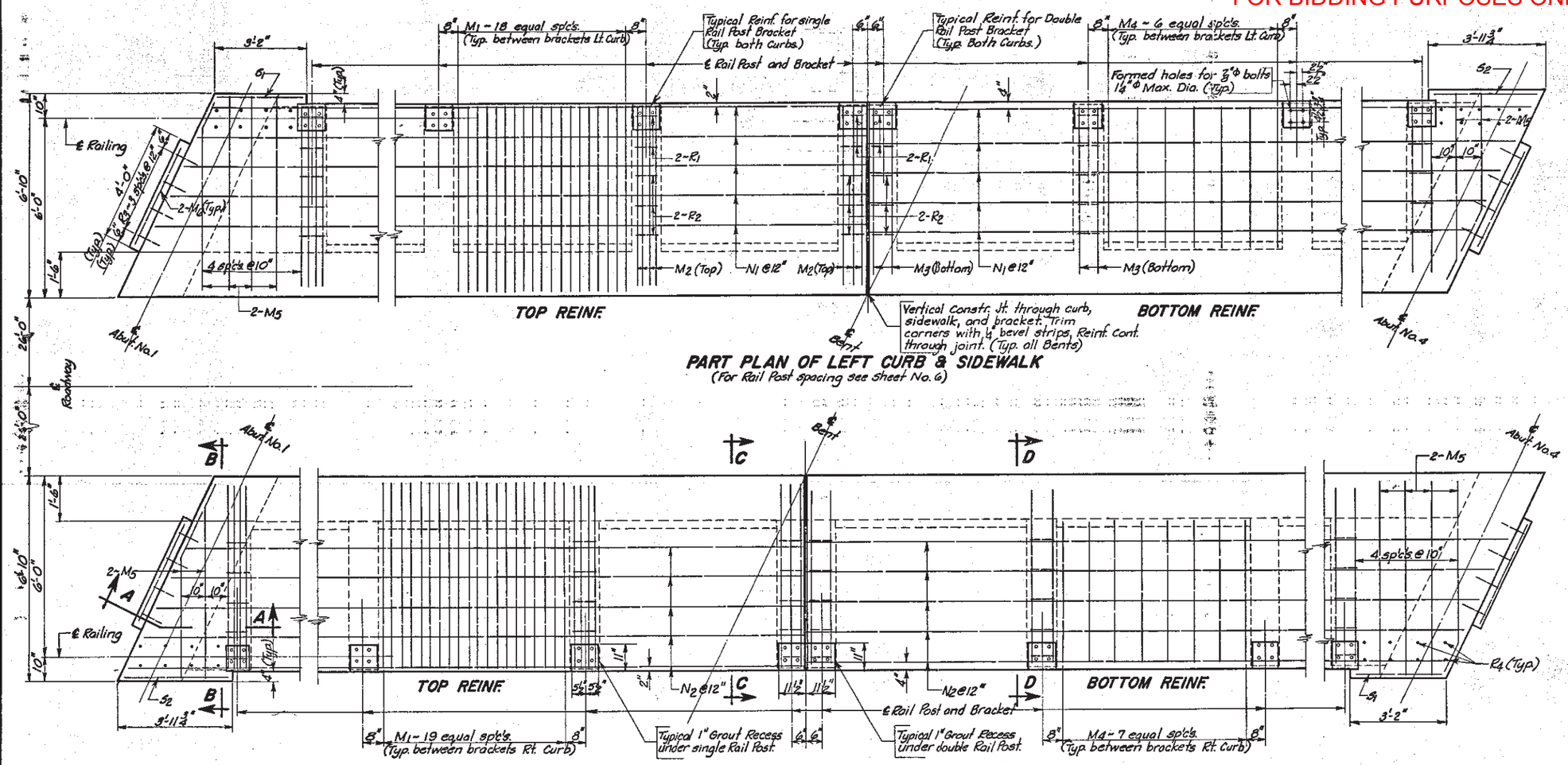

REINFORCING SCHEDULE

Mark	No.	Size	Length	Type	Bending Details
M1	585	3	6'-0"	Str.	
M2	136	5	6'-3"	2A	
M3	72	4	5'-3"	Str.	
M4	225	3	4'-9"	Str.	
*M5	24	4	6'-3"	Str.	
M6	8	3	3'-9"	Str.	
*N1	30	3	38'-9"	Str.	
*N2	30	3	41'-6"	Str.	
R1	144	3	1'-9"	S10	
R2	216	3	2'-0"	S10	
R3	16	3	2'-0"	S10	
R4	16	4	7'-9"	S5	
R5	12	4	7'-6"	T1	
S1	2	3	3'-0"	Str.	
S2	2	3	3'-9"	Str.	

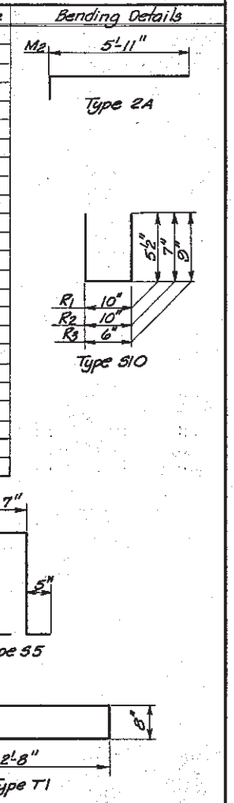

*Bend in Field as necessary.
Note: all dimensions are out to out of bars.

ESTIMATED QUANTITIES

ITEM	UNIT	QUANTITY
Class "A" Concrete	Cu. Yds.	*32.0
Reinforcing Steel	Lbs.	4295

*Includes all curbs and sidewalks except directly over Abutments.

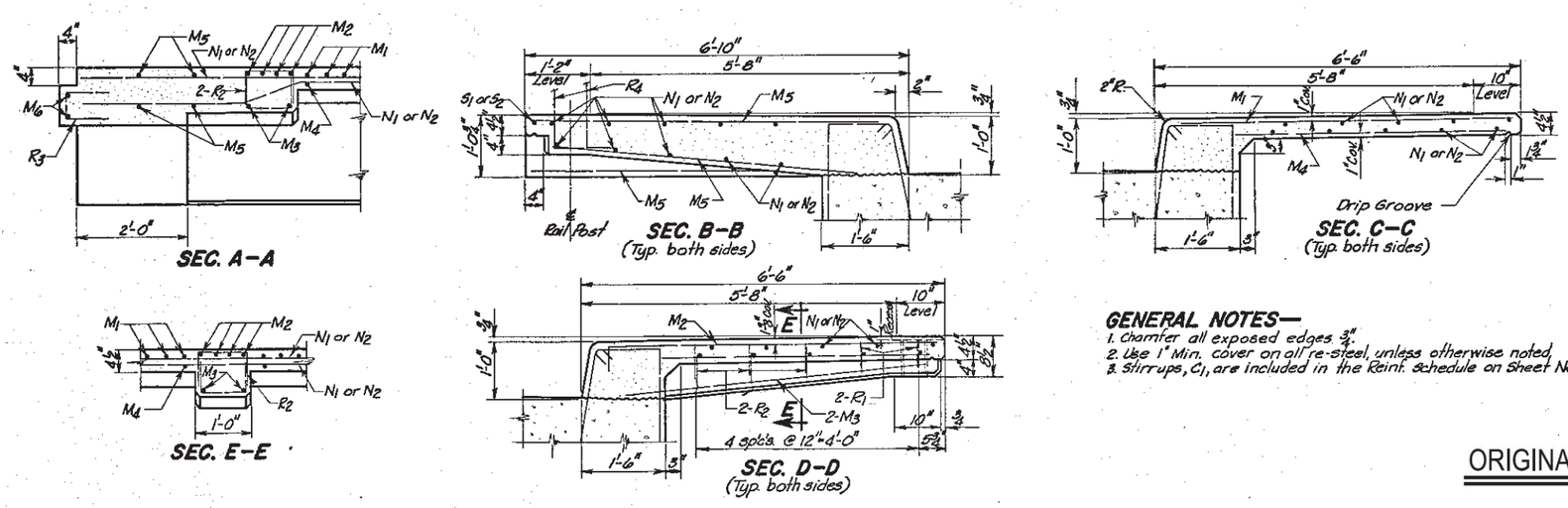

GENERAL NOTES—

1. Chamfer all exposed edges ¾".
2. Use 1" Min. cover on all re-steel, unless otherwise noted.
3. Stirrups, C1, are included in the Reinf. schedule on Sheet No. 5.

DETAILS OF CURB AND SIDEWALKS
FOR
119'-2¾" CONTINUOUS CONCRETE BRIDGE

52'-0" ROADWAY 26° SKEW L.H.F. 2-5'-8" SIDEWALKS
OVER MARNE CREEK SEC. 18-T93N-R55W
STA. 353+80.385 TO 354+99.615 F012-3(1)
STR. NO. 68-129-205 YANKTON COUNTY
SOUTH DAKOTA HS20-44
DEPARTMENT OF HIGHWAYS
JULY 1969

ORIGINAL CONSTRUCTION PLANS

DESIGNED BY	DRAWN BY	CHECKED BY	APPROVED
	M.E.R.	W.C.P. & D.P.	

BRIDGE ENGINEER

STATE OF	PROJECT	SHEET NO.	TOTAL SHEETS
S.D.	NH 0050(122)384	E40	E42

FOR BIDDING PURPOSES ONLY

GENERAL NOTES—

1. Rail Posts shall be built normal to grade.
2. All structural steel parts for railing shall conform to A.S.T.M. specification A36.
3. Railing shall be painted with one shop coat of Red Lead Paint (AASHO Designation M72 Type I) or Red Lead Iron Oxide Paint (AASHO Designation M72 Type III) and shall be field painted with with one coat of gray paint followed by a coat of green paint.
4. High strength anchor bolts, and nuts shall conform to A.S.T.M. specification A325. All anchor bolt assemblies and bottom 1/4" plate shall be galvanized. All anchor bolts shall be tightened to a minimum torque of 120 ft. lbs. (approximated without the use of a calibrated torque wrench).
5. Cost of welding, cost of painting, and cost of galvanized anchor bolt assemblies and plate shall be included in the unit price bid for railing.
6. Ends of top rail shall be ground smooth.
7. Use manual submerged arc process. Welding procedures shall be in accordance with paragraph 406 of AWS.
8. Grout shall be according to the design mix provided in the South Dakota Standard Specifications. The quantity of grout is included in and shall be paid for as Class "A" Concrete.
9. Weight of Floor Drains and cost of galvanizing drains shall be included in and paid for as structural steel.

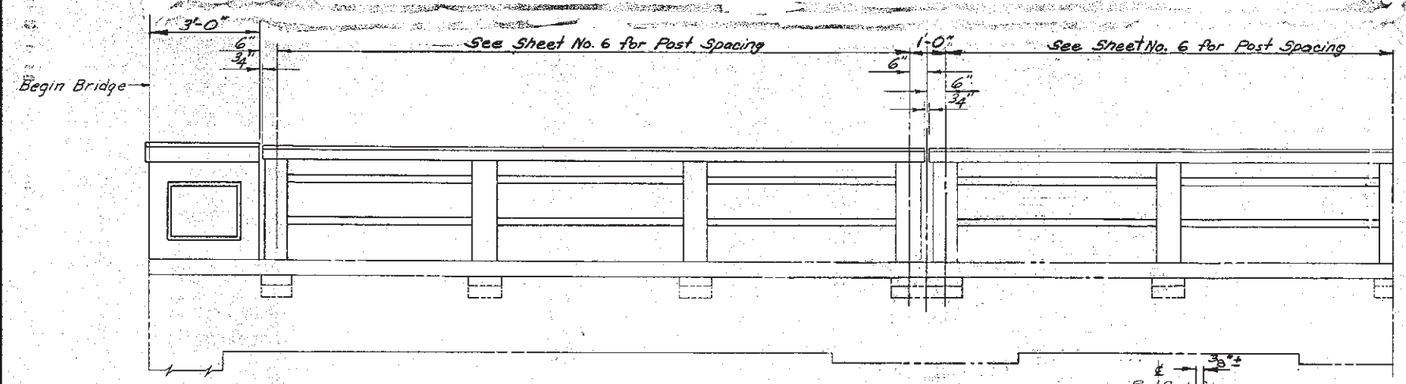

ELEVATION

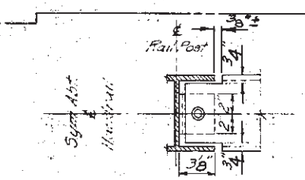

SEC. A–A

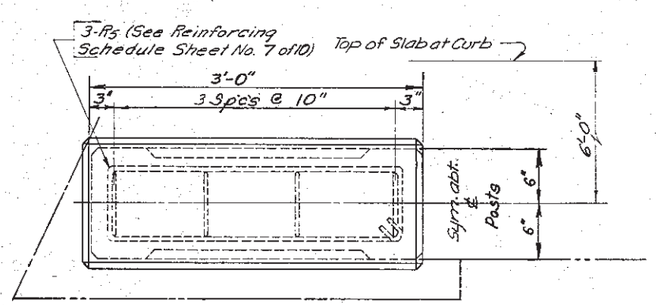

NOTE: All chamfers shall be 1"

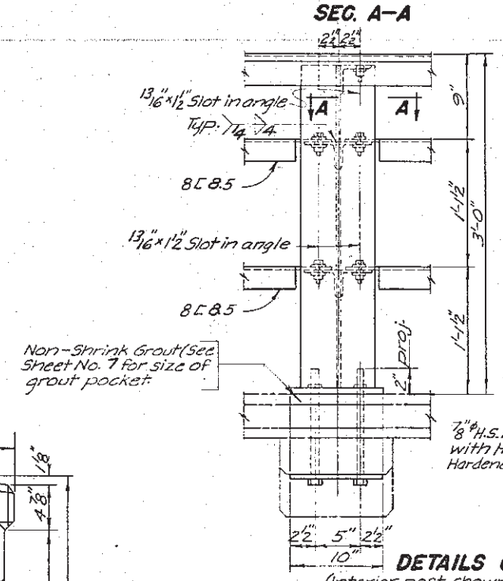

DETAILS OF STEEL HANDRAIL POST
(Interior post shown—Posts at Abuts & Bents same, except as noted)

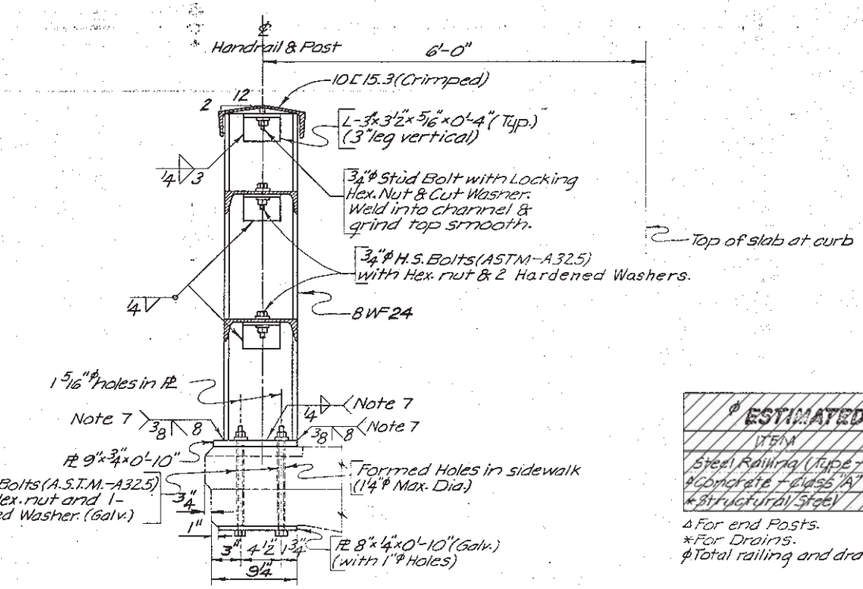

DETAILS OF STEEL HANDRAIL POST

ESTIMATED QUANTITIES		
ITEM	UNIT	QUANTITY
Steel Railing (Type RE)	Lin. Ft.	226.5
φConcrete - Class "A"	Cu. Yds.	1.3
*Structural Steel	Lbs.	60

Δ For end Posts.
*For Drains.
φTotal railing and drain quantities for bridge.

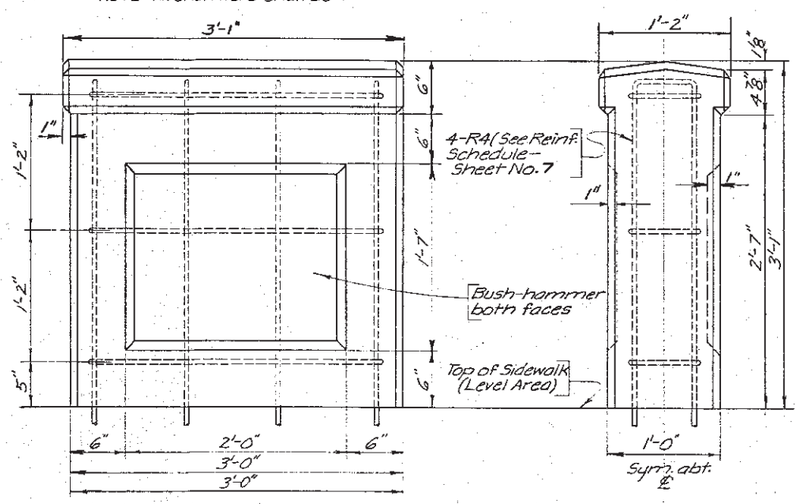

DETAILS OF END POST

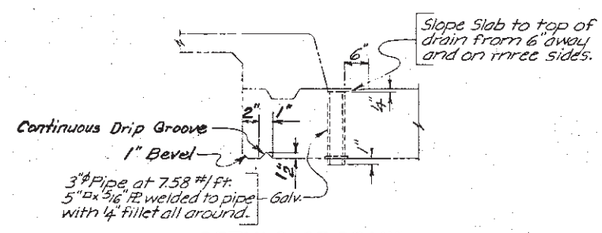

DETAILS OF DRAIN
(See Sheet No. 1 for spacing of drains)

Rev. from Penn. Co. SU65 91(4) (7-17-69)

ORIGINAL CONSTRUCTION PLANS

TYPE RE STEEL RAILING AND DRAIN DETAILS
FOR
119'–2 3/4" CONTINUOUS CONCRETE BRIDGE
52'-0" ROADWAY 26° SKEW L.H.F 2-5'-8" SIDEWALKS
OVER MARNE CREEK SEC. 18–T93N–R55W
STA. 353+80.385 TO 354+99.615 FO 12–3( )
STR. NO. 68-129-205 YANKTON COUNTY
SOUTH DAKOTA HS 20-44
DEPARTMENT OF HIGHWAYS
JULY 1969

DESIGNED BY	DRAWN BY	CHECKED BY	APPROVED
	JKB Rev. by L.M.	F.M. 2nd by D.P.	STATE HIGHWAY ENGINEER

STATE OF	PROJECT	SHEET NO.	TOTAL SHEETS
S.D.	NH 0050(122)384	E41	E42

FOR BIDDING PURPOSES ONLY

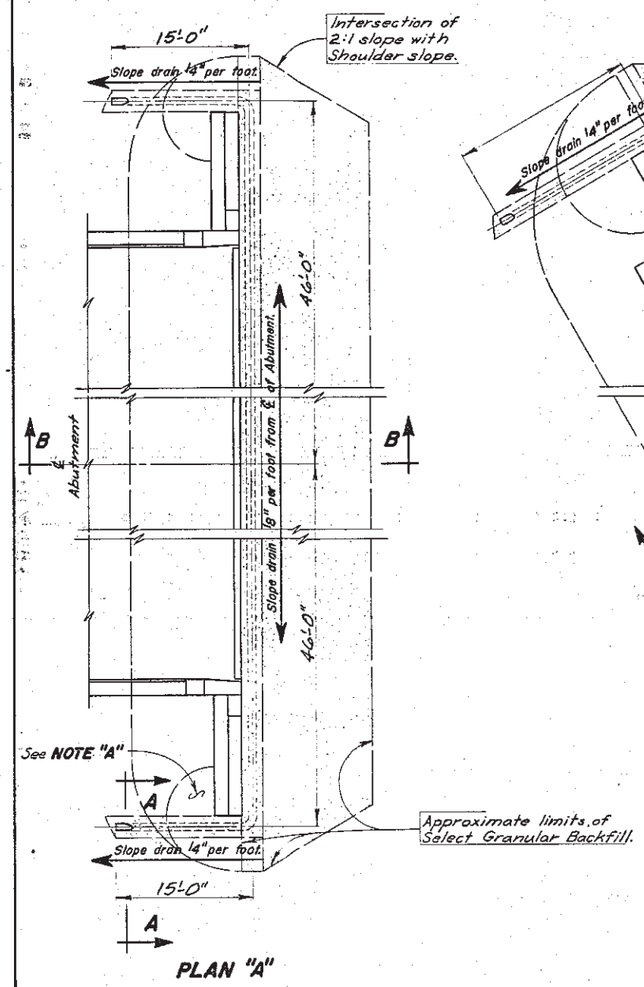

PLAN "A"

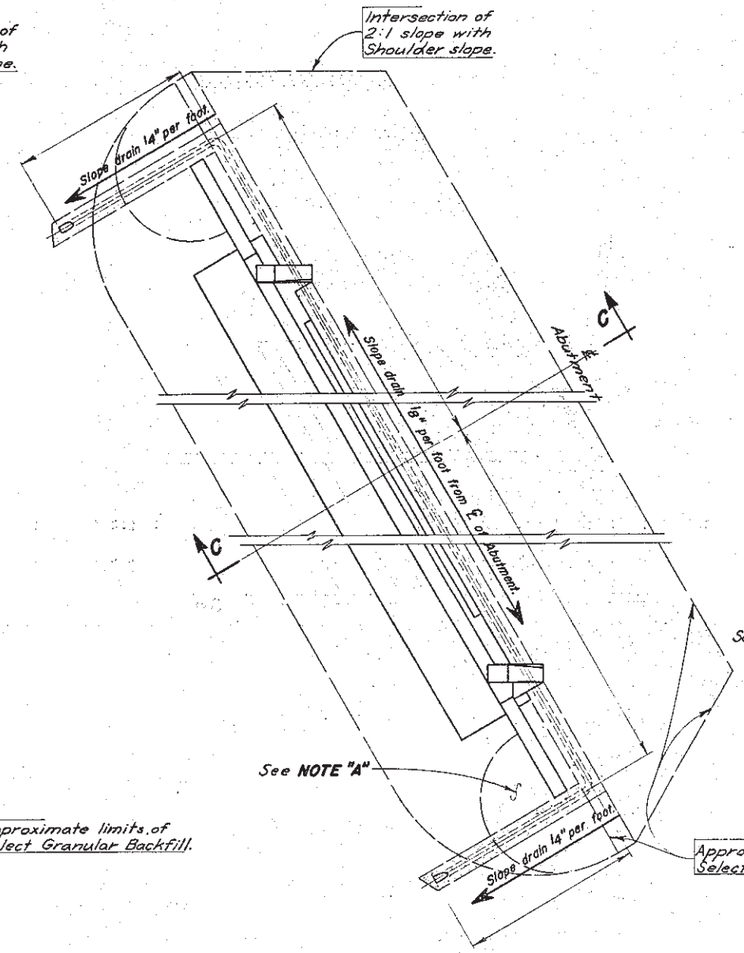

PLAN "B"

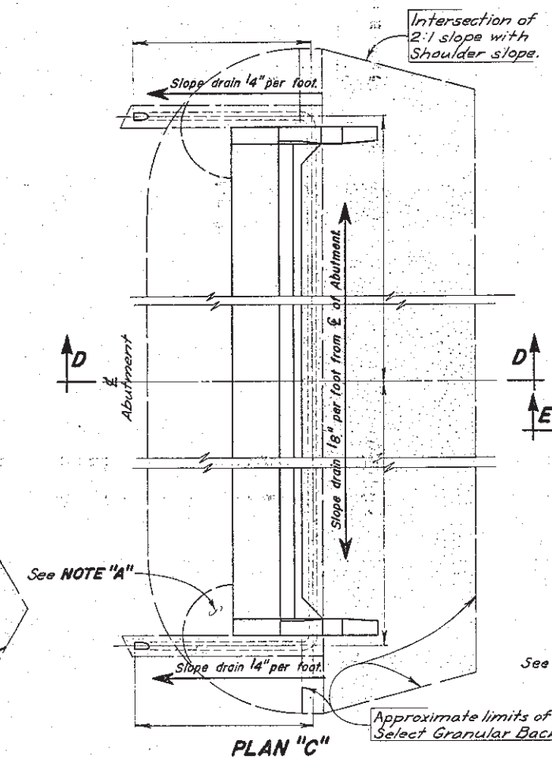

PLAN "C"

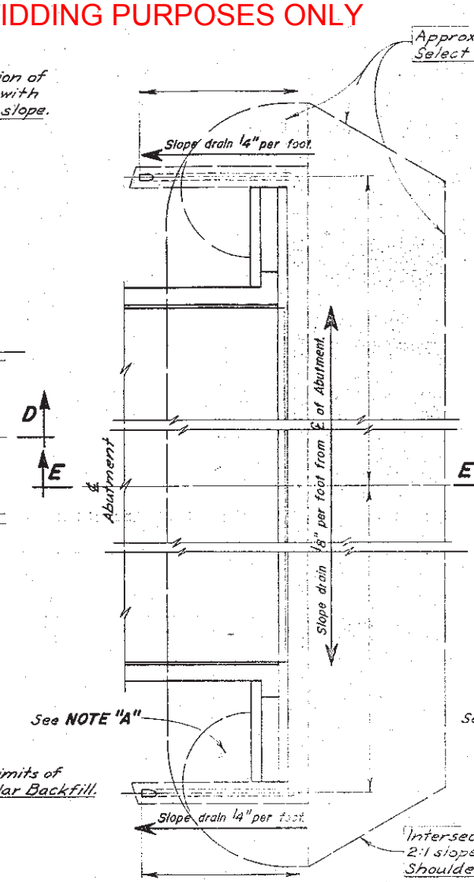

PLAN "D"

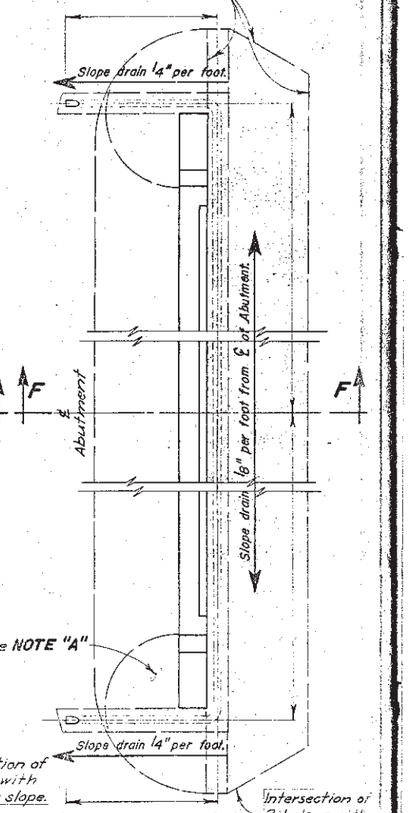

PLAN "E"

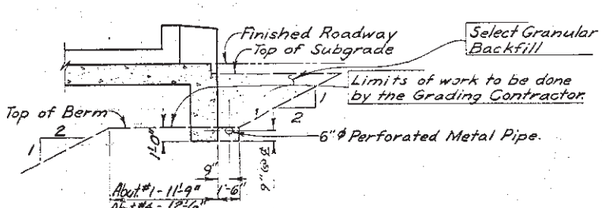

SEC. B-B

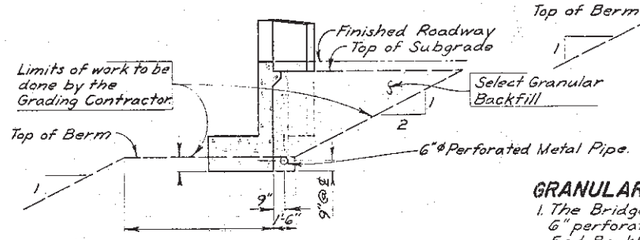

SEC. C-C

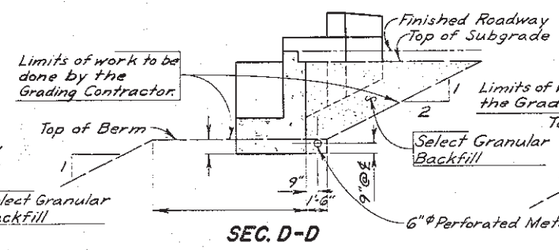

SEC. D-D

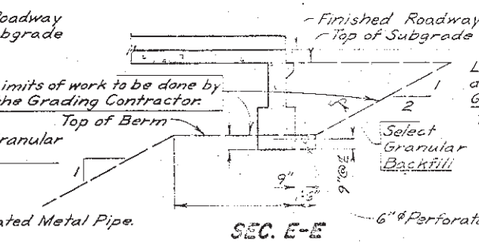

SEC. E-E

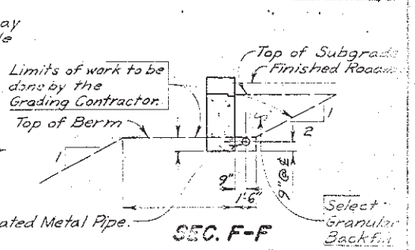

SEC. F-F

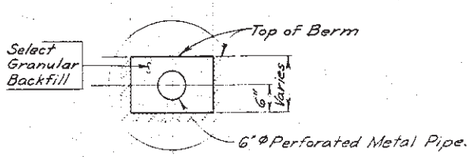

SEC. A-A
(Typical trench for 6"ϕ pipe)

NOTE "A"—
Excavated material not used for backfill of Abutments, supplemented with Select Granular Backfill, if required, shall be used to build those spill cones as directed by the ENGINEER.

GRANULAR BACKFILL NOTES—

1. The Bridge Contractor shall place Select Granular Backfill and install 6" perforated metal pipe according to the Special Provision for Bridge End Backfill.
2. Suitable screen or grating shall be provided at pipe outlets as approved by the ENGINEER.
3. Pipe shall be placed with perforations down.
4. Structure Excavation will not be computed for the outlet portions of the pipe drains beyond normal excavation limits.
5. For Information Only - The approximate volume of granular backfill will be 120 Cu. Yds. in place, and the length of the 6"ϕ perforated metal pipe will be 244 feet; total for both Abutments.

DETAILS OF BRIDGE END BACKFILL (PLAN "A")
FOR
119'-2¾" CONTINUOUS CONCRETE BRIDGE
52'-0" ROADWAY 26° SKEW L.H.F 2-5'-8" SIDEWALKS
OVER MARNE CREEK SEC. 18-T93N-R55W
STA. 353+80.385 TO 354+99.615 FO 12-3(1)
STR. NO. 68-129-205 YANKTON COUNTY

SOUTH DAKOTA
DEPARTMENT OF HIGHWAYS
JULY 1969

ORIGINAL CONSTRUCTION PLANS

STATE OF	PROJECT	SHEET NO.	TOTAL SHEETS
S.D.	NH 0050(122)384	E42	E42

FOR BIDDING PURPOSES ONLY

☆ Section F-F and Section G-G are on Sheet No.10 of 13.

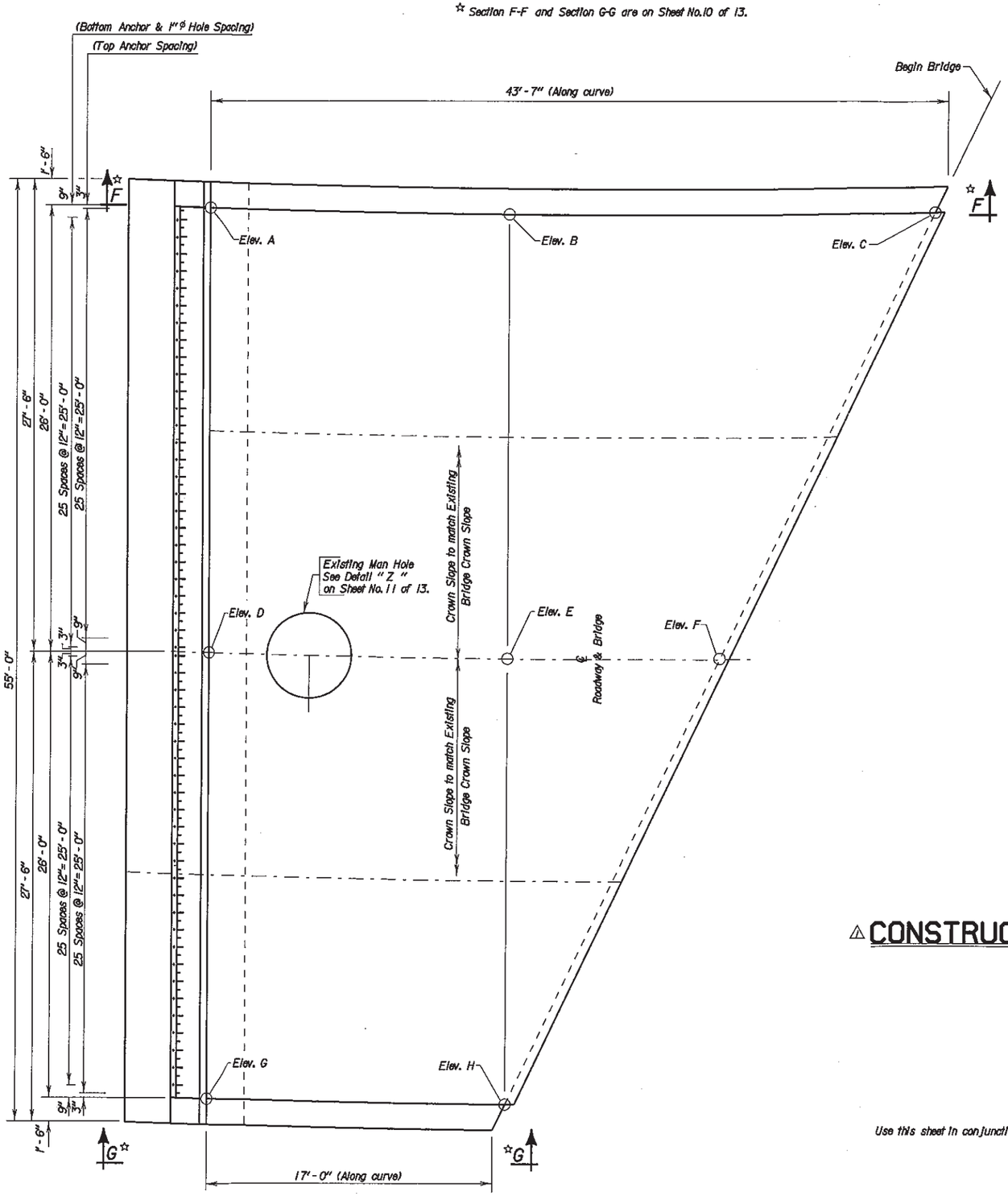

PLAN

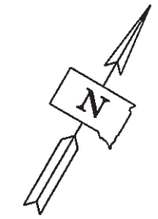

AS BUILT ELEVATIONS	
Elev. A	
Elev. B	
Elev. C	
Elev. D	
Elev. E	
Elev. F	
Elev. G	
Elev. H	

⚠ CONSTRUCTION CHANGE

Use this sheet in conjunction with Sheet Nos.8 through 12 of 13.

ORIGINAL CONSTRUCTION PLANS

LAYOUT OF APPROACH SLAB
ADJACENT TO BRIDGE FOR

119'-2¾" CONTINUOUS CONCRETE BRIDGE

52' - 0" ROADWAY — 26° SKEW
OVER MARNE CREEK — SEC. 18-T93N-R55W
STR. NO. 68-129-205 — PH-NH 0050(18) 384

YANKTON COUNTY

S. D. DEPT. OF TRANSPORTATION

APRIL 2003

40 OF 40

⚠ Created 4 - 23 - 03

DESIGNED BY	DRAWN BY	CHECKED BY	APPROVED
CJD	CJD	EJA	John C. Cole
YANK5680	5680CC07		BRIDGE ENGINEER