FOR BIDDING PURPOSES ONLY

STATE OF SOUTH DAKOTA	PROJECT	SHEET	TOTAL SHEETS
	IM 1902(61)0	B1	B253

Plotting Date: 05-06-2015

Section B: Grading Plans

INDEX OF SHEETS

B1	General Layout w/ Index
B2-B32	General Notes and Tables
B33-B45	Typical Sections
B46-B48	Horizontal Alignment Data
B49	Control Data
B50	Existing Topography Symbology and Legend
B51-B52	I-190 ROW Layout
B53-B56	North Street ROW Layout
B57-B60	West Boulevard ROW Layout
B61-B64	I-190 Removal Sheets
B65-B68	North Street Removal Sheets
B69-B71	West Boulevard Removal Sheets
B72-B73	West Boulevard North Removal Sheets
B74-B81	I-190 Plan & Profile Sheets
B83-B99	Ramp Plan & Profile Sheets
B100-B107	North Street Plan & Profile Sheets
B108-B113	West Boulevard Plan & Profile Sheets
B114-B117	West Boulevard North Plan & Profile Sheets
B118-B128	Large Diameter Pipe Plan & Profile Sheets
B129-B154	Curb & Gutter Layout Sheets
B155-B166	Curb Ramp Details
B167-B169	Ramp Gore Layouts
B170-B179	Guardrail Layout Sheets
B180-B183	Sedimentation Basin Layout and Details
B184-B196	Special Details
B197-B202	Interim Grading Layout and Cross-Sections
B203-B253	Standard Plates

END IM 1902(61)0
INTERSTATE 190
Station 155+33.00
14.87 Feet East & 4265.99 Feet North of the East Quarter of Section 35 - Township 2 North, Range 7 East

INTERSTATE 190
Station 154+00.00 - End Resurfacing

Sec. 26-T2N-R7E
Sec. 35-T2N-R7E

INTERSTATE 190
Station 149+60.00 - End Grading, Begin Resurfacing

END IM 1902(61)0
WEST BLVD.
Station 26+75.28 - End Grading

BEGIN IM 1902(61)0
WEST BLVD.
Station 10+24.43 - Begin Grading

BEGIN IM 1902(61)0
NORTH ST.
Station 209+01.71 - Begin Grading

BEGIN IM 1902(61)0
INTERSTATE 190
Station 100+20.00 = Station 70+19.00 on I 091-1(01). 465.08 Feet West & 1215.86 Feet South of the East Quarter of Section 35 - Township 2 North, Range 7 East
MRM = 0.12

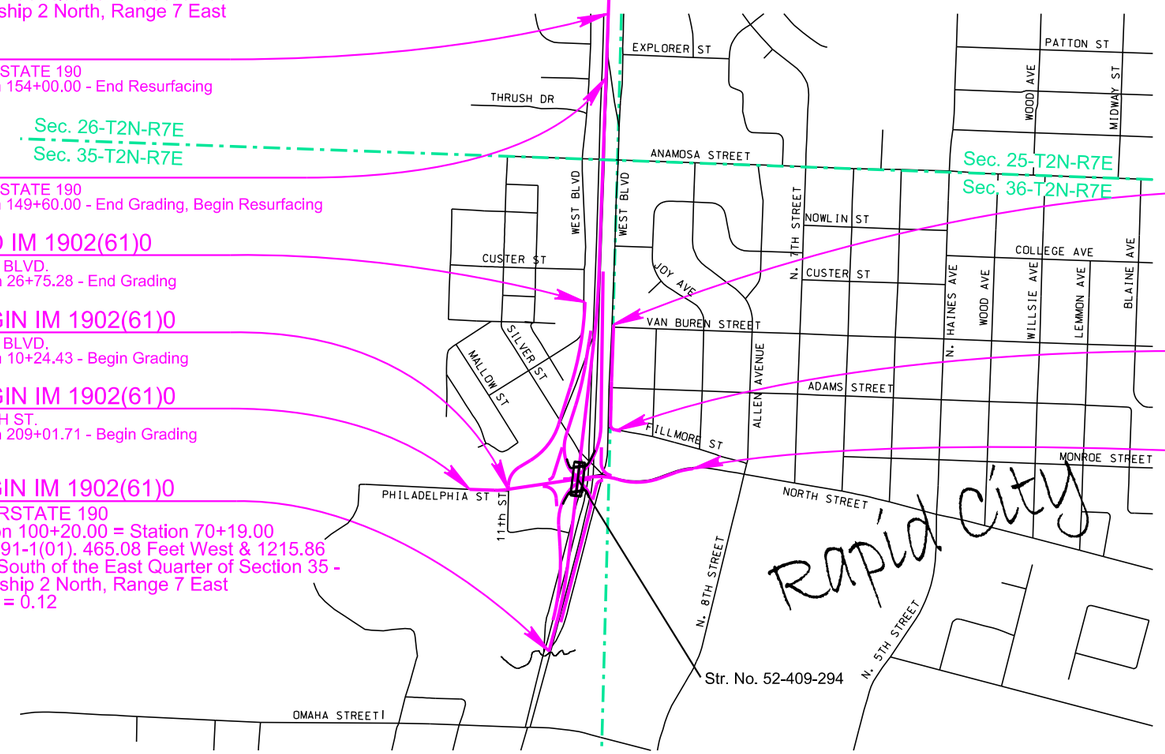

END IM 1902(61)0
WEST BLVD. NORTH
Station 59+08.72 - End Grading

Sec. 25-T2N-R7E
Sec. 36-T2N-R7E

BEGIN IM 1902(61)0
WEST BLVD. NORTH
50+24.42 - Begin Grading

END IM 1902(61)0
NORTH ST.
Station 224+72.00 - End Grading

REGISTERED PROFESSIONAL ENGINEER
REG. NO. 8328
JODY W. PAGE
SOUTH DAKOTA
1 MAY 2015

HDR

Plot Scale - 1:200
Plotted From - rfiggett
File - ...\Design\Section_B\ttleb.dgn

SECTION B ESTIMATE OF QUANTITIES

Bid Item Number	Item	Quantity	Unit
009E0010	Mobilization	Lump Sum	LS
009E3230	Grade Staking	6.165	Mile
009E3250	Miscellaneous Staking	3.449	Mile
009E3280	Slope Staking	3.449	Mile
009E3290	Structure Staking	8	Each
009E3300	Three Man Survey Crew	100.0	Hour
009E4300	Construction Schedule, Category III	Lump Sum	LS
100E0010	Clear and Grub Stump	31	Each
100E0020	Clear and Grub Tree	161	Each
110E0210	Remove Building(s)	Lump Sum	LS
110E0300	Remove Concrete Curb and Gutter	20,134	Ft
* 110E0300	Remove Concrete Curb and Gutter	57	Ft
110E0400	Remove Drop Inlet	42	Each
110E0460	Remove Manhole	5	Each
110E0530	Remove Storm Sewer Pipe	5,831	Ft
110E0600	Remove Fence	223	Ft
110E0730	Remove Beam Guardrail	7,140.0	Ft
* 110E1010	Remove Asphalt Concrete Pavement	172.0	SqYd
110E1010	Remove Asphalt Concrete Pavement	12,611.0	SqYd
110E1100	Remove Concrete Pavement	36,471.0	SqYd
110E1140	Remove Concrete Sidewalk	2,228.0	SqYd
110E1150	Remove Concrete Median Barrier	3,721	Ft
110E1300	Remove Concrete Retaining Wall	1,950.0	Ft
110E5800	Salvage Fence	7,824	Ft
110E7802	Remove Fence for Reset	66	Ft
120E0010	Unclassified Excavation	400,125	CuYd
120E0400	Select Subgrade Topping	118,707	CuYd
120E6100	Water for Embankment	2,787.3	MGal
240E0010	Obliterate Old Road	5	Sta
250E0020	Incidental Work, Grading	Lump Sum	LS
260E1010	Base Course	6,910.0	Ton
260E5000	Shot Rock	13,560.0	Ton
270E0040	Salvage and Stockpile Asphalt Mix and Granular Base Material	38,819.0	Ton
380E3520	6" PCC Approach Pavement	72.0	SqYd
380E3525	6" Reinforced PCC Approach Pavement	109.0	SqYd
380E4070	9" PCC Fillet Section	133.0	SqYd
420E0400	Structure Excavation, Miscellaneous	60	CuYd
421E0100	Pipe Culvert Undercut	2,968	CuYd
450E0123	18" RCP Class 3, Furnish	6,164	Ft
450E0124	18" RCP Class 4, Furnish	116	Ft
450E0130	18" RCP, Install	6,280	Ft
450E0143	24" RCP Class 3, Furnish	1,522	Ft
450E0144	24" RCP Class 4, Furnish	324	Ft
450E0150	24" RCP, Install	1,846	Ft
450E0163	30" RCP Class 3, Furnish	1,000	Ft
450E0170	30" RCP, Install	1,000	Ft
450E0183	36" RCP Class 3, Furnish	510	Ft
450E0184	36" RCP Class 4, Furnish	8	Ft
450E0190	36" RCP, Install	518	Ft
450E0193	42" RCP Class 3, Furnish	824	Ft
450E0194	42" RCP Class 4, Furnish	578	Ft
450E0200	42" RCP, Install	1,402	Ft
450E0203	48" RCP Class 3, Furnish	56	Ft
450E0205	48" RCP Class 5, Furnish	228	Ft
450E0210	48" RCP, Install	284	Ft
450E0263	84" RCP Class 3, Furnish	200	Ft
450E0270	84" RCP, Install	200	Ft
450E0273	90" RCP Class 3, Furnish	630	Ft
450E0274	90" RCP Class 4, Furnish	480	Ft
450E0280	90" RCP, Install	1,110	Ft
450E0283	96" RCP Class 3, Furnish	114	Ft
450E0284	96" RCP Class 4, Furnish	260	Ft

Bid Item Number	Item	Quantity	Unit
450E0290	96" RCP, Install	374	Ft
450E0416	24" RCP Bend, Furnish	2	Each
450E0417	24" RCP Bend, Install	2	Each
450E0424	30" RCP Bend, Furnish	1	Each
450E0425	30" RCP Bend, Install	1	Each
450E0464	90" RCP Bend, Furnish	1	Each
450E0465	90" RCP Bend, Install	1	Each
450E0466	96" RCP Bend, Furnish	4	Each
450E0467	96" RCP Bend, Install	4	Each
450E0700	RCP Tee, Furnish	11	Each
450E0701	RCP Tee, Install	11	Each
450E1200	RCP Increaser, Furnish	1	Each
450E1201	RCP Increaser, Install	1	Each
450E2008	18" RCP Flared End, Furnish	4	Each
450E2009	18" RCP Flared End, Install	4	Each
450E2024	30" RCP Flared End, Furnish	1	Each
450E2025	30" RCP Flared End, Install	1	Each
450E2032	42" RCP Flared End, Furnish	3	Each
450E2033	42" RCP Flared End, Install	3	Each
450E2036	48" RCP Flared End, Furnish	2	Each
450E2037	48" RCP Flared End, Install	2	Each
450E3003	18" RCP Arch Class 3, Furnish	104	Ft
450E3010	18" RCP Arch, Install	104	Ft
450E3043	42" RCP Arch Class 3, Furnish	74	Ft
450E3050	42" RCP Arch, Install	74	Ft
450E4739	12" CMP 16 Gauge, Furnish	16	Ft
450E4740	12" CMP, Install	16	Ft
450E5000	12" CMP Elbow, Furnish	5	Each
450E5001	12" CMP Elbow, Install	5	Each
450E6109	12" Slotted CMP 16 Gauge, Furnish	940	Ft
450E6110	12" Slotted CMP, Install	940	Ft
462E0100	Class M6 Concrete	451.6	CuYd
462E0200	Controlled Density Fill	62.5	CuYd
470E0025	Cable Handrail	362.0	Ft
480E0100	Reinforcing Steel	75,597	Lb
600E0300	Type III Field Laboratory	1	Each
620E4100	Reset Fence	66	Ft
621E0160	6' Chain Link Fence with Tension Wired Top	10,145	Ft
621E0420	Single Vehicular Swing Gate	3	Each
628E1500	Concrete Barrier End Protection	1	Each
630E0110	Straight Double Class A Thrie Beam Guardrail with Wood Posts	75.0	Ft
630E1010	Straight Class A W Beam Guardrail with Wood Posts	1,187.5	Ft
630E1020	Curved Class A W Beam Guardrail with Wood Posts	77.0	Ft
630E1140	Straight Double Class A W Beam Guardrail with Wood Posts	2,237.5	Ft
630E2000	W Beam to Thrie Beam Guardrail Transition	6	Each
630E2020	W Beam Guardrail Tangent End Terminal	9	Each
630E2035	W Beam Guardrail Special Anchor Assembly	1	Each
630E2050	Beam Guardrail Trailing End Terminal	6	Each
632E2220	Guardrail Delineator	86	Each
650E0060	Type B66 Concrete Curb and Gutter	9,450	Ft
* 650E0060	Type B66 Concrete Curb and Gutter	56	Ft
650E0090	Type B69 Concrete Curb and Gutter	2,525	Ft
650E0360	Type BL66 Concrete Curb and Gutter	627	Ft
650E1060	Type F66 Concrete Curb and Gutter	8,690	Ft
650E1090	Type F69 Concrete Curb and Gutter	596	Ft
650E1110	Type F611 Concrete Curb and Gutter	4,428	Ft
650E4360	Type D46 Concrete Curb and Gutter	1,369	Ft
650E4390	Type D49 Concrete Curb and Gutter	454	Ft
650E4410	Type D411 Concrete Curb and Gutter	919	Ft

Bid Item Number	Item	Quantity	Unit
650E4460	Type DL46 Concrete Curb and Gutter	67	Ft
650E4660	Type P6 Concrete Gutter	520	Ft
650E4690	Type P9 Concrete Gutter	690	Ft
650E4710	Type P11 Concrete Gutter	300	Ft
651E0040	4" Concrete Sidewalk	15,552	SqFt
651E0050	5" Concrete Sidewalk	24,631	SqFt
651E0060	6" Concrete Sidewalk	2,697	SqFt
651E0140	4" Reinforced Concrete Sidewalk	234	SqFt
651E0150	5" Reinforced Concrete Sidewalk	101	SqFt
651E0540	4" Colored Concrete Sidewalk	3,330	SqFt
651E0550	5" Colored Concrete Sidewalk	964	SqFt
651E7000	Type 1 Detectable Warnings	543	SqFt
670E1200	Type B Frame and Grate Assembly	76	Each
670E2200	Type C Frame and Grate	1	Each
670E3200	Type D Frame and Grate	15	Each
670E5200	Special Frame and Grate Assembly	28	Each
670E5340	4' x 11' Precast Concrete Type S Drop Inlet Lid	18	Each
670E5342	4' x 6' Precast Concrete Type S Drop Inlet Lid	1	Each
670E5400	Precast Drop Inlet Collar	120	Each
671E0550	Special Manhole	1	Each
671E4048	48" Manhole Riser Section	3.0	Ft
671E4548	48" Manhole Cone Section	12.0	Ft
671E6009	Type A9 Manhole Frame and Lid	10	Each
680E0440	4" Slotted Corrugated Polyethylene Drainage Tubing	1,632	Ft
680E2500	Porous Backfill	53.0	Ton
700E0110	Class A Riprap	410.0	Ton
700E0310	Class C Riprap	2,068.0	Ton
831E0110	Type B Drainage Fabric	1,949	SqYd
831E0210	Non-woven Geotextile Separator	7,760	SqYd
831E0300	MSE Geotextile Fabric	6,920	SqYd
831E1010	Geogrid Reinforcement	990	SqYd
900E0010	Refurbish Single Mailbox	5	Each

* - Denotes Non-Participating

GRADING OPERATIONS

Water for Embankment is estimated at the rate of 10 gallons of water per cubic yard of Embankment minus Waste. The estimated quantity of Water for Embankment is 2,787.3 MGal.

The estimated cubic yards of excavation and/or embankment required to construct outlet ditches, ditch blocks, and approaches are included in the earthwork balance notes on the profile sheets.

Special ditch grades and other sections of the roadway different than the typical section(s) shall be constructed to the limits shown on the cross sections. If significant changes to the cross sections are necessary during construction, the Engineer shall contact the Designer for the proposed change.

Generally, all shallow inlet and outlet ditches as noted on the plan sheets shall be cut with a 10-foot wide bottom with 5:1 backslopes. However, the Engineer may direct the Contractor to adjust the ditch width for proper alignment with the drainage structure.

Temporary fence and/or permanent fence shall be placed ahead of the grading operation unless otherwise directed by the Engineer.

A copy of the Soils Report is available for review at the Rapid City Region Office or the Rapid City Area Office.

RESTRICTED WORK AREA

The Contractor's work limits shall be confined to the area within the existing right-of-way for parcel number 21 (West Blvd Sta. 18+53 Lt. to Sta. 19+87 Lt.) until the late spring of 2016. The Engineer will notify the Contractor of the date when work outside of the existing right-of-way may proceed.

TYPE III FIELD LABORATORY

The lab shall be equipped with an internet connection such as DSL, cable modem, or other approved service. The internet connection shall be provided with a multi-port wireless router. The internet connection shall be a minimum speed of 512 Kb unless limited by job location and approved by the DOT. Prior to installing the wireless router the Contractor shall submit the wireless router's technical data to the Area Office to check for compatibility with the state's computer equipment. The internet connection is intended for state personnel usage only. The Contractor's personnel are prohibited from using the internet connection unless pre-approved by the Project Engineer.

The Contractor shall submit a copy of each monthly bill for calls charged to this phone at the end of each month. The Project Engineer will then audit the bills to ensure all calls are legitimate and then initiate a Construction Change Order (CCO) to reimburse the Contractor for the actual phone calls made, including local and long distance calls. Reimbursement will not be made for fees associated with the purchase, installation, disconnection, monthly line charges, and incidentals involved in the installation, maintenance, and disconnection of the phone (including attachments). These items shall be incidental to the contract unit price per each for "Type III Field Laboratory".

CONDUIT INSTALLATION

Each end of each conduit shall be marked with a ½-inch dia. x 12-inch long reinforcing bar driven flush with the finished grade, except when the conduit end terminates inside a junction box. The ends of each conduit run shall be capped to prevent water and soil from entering. This work shall be done by the Lighting Contractor and shall not be disturbed by the Grading Contractor.

TABLE OF CLEAR AND GRUB STUMP

Station	to	Station	Quantity (Each)
West Blvd.			
20+97-29 L			1
I-190			
102+20-98 L		109+08-119 L	2
109+63-107 L		114+91-147 L	23
114+87-192 L		117+99-239 L	4
117+36-CL		124+26-117 L	1
		Total:	**31**

TABLE OF CLEAR AND GRUB TREE

Station	to	Station	Quantity (Each)
West Blvd.			
20+16-23 L		21+89-24 L	17
22+15-50 L			1
I-190			
102+20-98 L		109+08-119 L	20
108+10-178 R		113+41-236 R	14
109+63-107 L		114+91-147 L	33
114+87-192 L		117+99-239 L	32
117+36-CL		124+26-117 L	12
118+72-154 R		125+71-88 R	6
129+88-93 R		134+31-78 R	6
129+85-219 L		135+07-236 L	4
129+85-219 L		135+07-79 L	3
214+56-74 R			1
214+69-29 R			1
220+04-49 L		222+04-49 L	9
222+04-49 L			1
222+30-50 L			1
		Total:	**161**

OBLITERATING OLD ROAD

The Contractor shall obliterate the existing roadway at the locations listed in the Table of Obliterating Old Road.

The surfacing material of the existing roadway shall be salvaged. Refer to the Salvage and Stockpile Asphalt Mix and Granular Base Material note for quantities and payment information.

The Contractor shall obliterate the existing roadway in accordance with Section 240 of the Specifications when the existing roadway is not being removed in accordance with the template section.

The earthwork necessary for obliterating the existing road shall be accomplished to such an extent that placing topsoil and seeding can be done in a satisfactory manner. Quantities of topsoil, fertilizing, mulching, and seeding for the obliterated section of the old road are included in the Section D - Erosion and Sediment Control Plans Estimate of Quantities.

TABLE OF OBLITERATING OLD ROAD

Station	to	Station	L/R	Length (Sta)
I-190				
141+53		146+74	R	5.21
			Total:	**5.21**

UTILITIES

The Contractor shall be aware that the existing utilities shown in the plans were surveyed prior to the design of this project and might have been relocated or replaced by a new utility facility prior to construction of this project, might be relocated or replaced by a new utility facility during the construction of this project, or might not require adjustment and may remain in its current location. The Contractor shall contact each utility owner and confirm the status of all existing and new utility facilities. The utility contact information is provided elsewhere in the plans or bidding documents.

A utility conflict analysis, with each utility company, was completed on this project. Detailed information on the identified utility conflicts and the resolution to each conflict is available from the Engineer.

Subsurface utility explorations were done for this project. The findings can be found in the SUBSURFACE UTILITY LOCATIONS table elsewhere in the plans. The table is provided to aid the Contractor during construction. All information in the table is approximate and shall be verified by the Contractor prior to construction in those areas. The information shown in the table is not a replacement or substitution for the requirement of SDCL 49-7A – One-Call Notification System for Excavation Activities.

BLACK HILLS POWER – (Transmission)

The company has a 69kV OH transmission line within the project limits. That portion of the OH transmission line, from the beginning of the project going north, along the east side of I-190 to the SE quadrant (North Street and I-190 NB off ramp) will remain in its existing location.
That portion of the OH transmission line, from the SE quadrant (North Street and the I-190 NB off ramp) to 211+50 Lt. (Philadelphia Street) will be relocated prior to the construction of the project. A new OH transmission crossing over I-190 will be located at approximately 117+60.

BLACK HILLS POWER – (Distribution)
The company has both OH and UG distribution facilities within the project limits. Any relocation or adjustments to the existing facilities will be accomplished prior to the construction of the project. The company will be installing a new UG facility in a joint trench from W Philadelphia St., north on Wood St., to Boegel St. The company will also have abandoned facilities within the project limits.

CITY OF RAPID CITY –

The City will be adjusting and replacing portions of their water and sanitary sewer facilities under Project Number 12-2053 – CIP # 50940 – PCN X03T.

VAST BROADBAND –

The company has both OH and UG facilities that will be adjusted, relocated or abandoned prior to construction. The company will be installing a portion of their new facility in a joint trench with Black Hills Power.

MIDCONTINENT COMMUNICATIONS –

The company has both OH and UG facilities that will be adjusted, relocated or abandoned prior to construction. The company will be installing a portion of their new facility in a joint trench with Black Hills Power.

MONTANA DAKOTA UTILITIES –

"HIGH PRESSURE GAS LINE"
Removal of the existing northbound off-ramp in the area of 100+20 to 103+60 Rt. shall be limited to curb & gutter, PCC pavement and AC pavement only. Existing base course shall remain in place to aid in preserving adequate cover over the existing MDU 8" steel HP gas line. The contractor shall protect the existing 8" HP and 4" MP gas line, along the east side of I-190, during grading operations. The company will cap off the 4" main in the Boegel St. area prior to construction. Location of the termination point will be determined by the engineer. Contractor shall contact MDU 48 hours prior to commencing grading operations.

SOUTH DAKOTA NETWORK –

The Company's hand-hole and fiber cable from 108+35 – 160' Rt. to 108+90 – 160' Rt. will be adjusted prior to the construction of the project. The Company's remaining fiber cable within the project limits will not be impacted.

QWEST / CENTURY LINK -

The company has both copper and fiber cables within the project limits that will be adjusted, relocated or abandoned prior to construction. The Company's cross-box, fiber and copper cables from 108+35 – 160' Rt. to 108+90 – 160' Rt. will be adjusted prior to the construction of the project. The Company's remaining copper cables within the project limits will not be impacted or else they will be abandoned.

Utility Contact Information:

Black Hills Power
409 Deadwood Ave.
Rapid City, SD 57709
Mark Carda - 605-721-2274 (Transmission)
Marvin Geersen – 605-721-2232 (Transmission)
Nathan Woods - 605-721-2218 (Distribution)

Century Link
612 Mt. Rushmore Road
Rapid City, SD 57701
Keith Nelson - 605-394-4720

City of Rapid City
300 Sixth St.
Rapid City, SD 57701
Todd Peckosh - 605-394-4154
Klare Schroeder - 605-394-4154 (Construction)
Chip Petrik - 605-394-4163 (Water)
Larry Reber - 605-394-4163 (Waste Water)

MidContinent Communications
1624 Concourse Court
Rapid City, SD 57703
Terry Hofer – 605-791-7123

Montana Dakota Utilities
703 Kansas City St.
Rapid City, SD 57709
Rick Himmelspach - 605-355-4031
or 605-390-5073 Cell

South Dakota Network
1089 Rand Road
Rapid City, SD 57702
Paul Lowe – 605-390-3502

Vast Broadband
809 Deadwood Ave.
Rapid City, SD 57702
Julie Burckhard - 605-415-0692

REGISTERED PROFESSIONAL ENGINEER
REG. NO. 8328
JODY W. PAGE
SOUTH DAKOTA
1 MAY 2015

SHRINKAGE FACTOR: Embankment +25%

TABLE OF EXCAVATION QUANTITIES BY BALANCES

Station to	Station	Excavation (CuYd)	Select Subgrade Topping Exc. (CuYd)	Total Excavation (CuYd)	Out-of-Balance Exc. (CuYd)	Total Excavation + Out-of-Balance Exc. (CuYd)	** Waste (CuYd)	** Haul (CuYdSta)
Phase 1								
I-190 SB								
109+00	112+52		1,664	1,664	24,921	26,585		299,052
115+17	120+00		2,233	2,233	29,444	31,677		323,884
West Blvd								
10+24	16+75	93,890	3,118	97,008		97,008	92,200	
16+75	26+75	4,021	5,919	9,940		9,940	698	
North Street								
209+02	216+32	42,767	5,304	48,071		48,071	40,427	
Ramp C								
603+44	611+08	1,982	3,479	5,461	18,987	24,448		132,909
Ramp D								
701+42	710+25	678	3,522	4,200	6,103	10,303		61,030
Ramp G								
650+23	651+50	870	356	1,226		1,226	779	
Ramp H								
750+35	752+38	3,408	725	4,133		4,133	3,227	
Sediment Basin								
496+00	501+00	8,865		8,865		8,865	6,545	
Subtotal		*156,481*	*26,320*	*182,801*	*79,455*	*262,256*	*143,876*	*816,875*
Phase 2								
I-190 SB								
100+20	109+00		5,301	5,301	14,049	19,350		168,588
120+00	149+60	2,703	16,081	18,784	3,957	22,741		47,484
149+60	155+33	886		886		886	886	
Central High Pkg Lot								
219+70	221+29	731		731	66	797		594
Subtotal		*4,320*	*21,382*	*25,702*	*18,072*	*43,774*	*886*	*216,666*
Phases 3 & 4								
I-190 NB								
100+20	112+52		7,074	7,074	35,318	42,392		412,184
115+17	120+00	4,507	2,233	6,740	4,626	11,366		46,260
120+00	155+33	8,558	16,444	25,002		25,002	4,414	
Ramp A								
301+45	314+51	37,470	5,485	42,955		42,955	35,365	
Ramp B								
403+32	411+47	1,190	3,157	4,347	14,798	19,145		147,980
Ramp E								
350+69	352+38	2,045	551	2,596		2,596	1,907	
Ramp F								
450+41	451+48	109	326	435	46	481		276
North Street								
216+32	224+72	6,171	7,927	14,098		14,098	4,052	
West Blvd N								
50+24	58+66	3,368	4,069	7,437		7,437	2,273	
Subtotal		*63,418*	*47,266*	*110,684*	*54,788*	*165,472*	*48,011*	*606,700*
	Totals:	***224,219***	***94,968***	***319,187***	***152,315***	***471,502***	***192,773***	***1,640,241***

TABLE OF UNCLASSIFIED EXCAVATION

Excavation	224,219
Select Subgrade Topping Excavation	94,968
Temporary Stockpile Excavation for Interim Grading Phase 1A	22,212
Large Diameter Storm Sewer Trench Excavation during Interim Grading Phase 1A	7,692
Excavation for Walls "A" and "B" Foundation Preparation	26,872
Salvaged Asphalt Mix and Granular Base Material (from cut sections)	16,182
Salvaged Asphalt Mix and Granular Base Material (from fill sections)	4,017
Salvaged Asphalt Mix and Granular Base Material (from off-alignment roadways or from obliterated roads, NB I-190 Ramp including Gore Areas)	340
Topsoil	3,623
Total	400,125

REGISTERED PROFESSIONAL ENGINEER
REG. NO. 8328
JODY W. PAGE
SOUTH DAKOTA
18 JUN 15

** The quantities for these items are for information only.

EXCAVATION OF WEST BOULEVARD SLOPE (PHASE 1A)

The area identified as “Phase 1A” throughout the plans is anticipated to experience significant movement (rebound and swell) after excavation of the slope. Because of the possibility of rebound and other issues caused by the unloading and exposure of unweathered shale, this area will have special sequencing requirements. The Phase 1A area will be excavated to rough grade as early as practical. Subsequent operations including installation of utilities and construction of the new roadways will be delayed for a period of 6 months allowing the rebound movement to occur prior to the aforementioned work items. Construction of the Soil Nail wall shall be completed as part of the West Blvd Phase 1A Excavation. The required 6 month rebound period shall begin with the completion of the Soil Nail Wall. Construction of the Reinforced Fill Slope and the Large Concrete Block Retaining Wall (Wall J) shall not begin until after the 6 month rebound period has lapsed for the Wall Construction/Rebound Area as shown on the Interim Grading Layout. The 6 month rebound period for the Grading Excavation/Rebound Area can be sequenced separately from the Wall Construction/Rebound Area as described in the Special Provision for Contract Time.

Temporary stockpiling is anticipated for the material as it is excavated from the slope, and will be used for construction of the bridge and ramp embankments. The unweathered shale located at the lower elevations of the excavation cannot be used for fill and should be wasted off site. Weathered shale can be used for fill below the Select Topping elevation and on the flanks of fills outside the shoulder. Please refer to the Soils Report for additional information. It is assumed that the useable material will be stockpiled west of I-190 in the vicinity of Ramps C and D (proposed). Refer to the Special Details in Section B for the anticipated Interim Grading Layout for Phase 1A. A portion of the material excavated from the West Boulevard ridgeline has been identified as a source for Select Subgrade Topping (See separate plan note for Select Subgrade Topping). It is assumed that 41,850 CuYd of Select Subgrade Topping material will be stockpiled at “Stockpile N” as shown on the Interim Grading Layout. This material will be used during Phases 1 and 2, and may require re-handling due to the Contractor’s sequencing plan. No additional payment will be made for relocating the Select Subgrade Topping stockpile to accommodate the Contractor’s sequencing plan. Additional stockpiling area is available on the west side of West Boulevard, south of Custer Street.

The earthwork balance for Phase 1A is included on the Interim Grading Layout. It is assumed that 101,408 CuYd of material will be stockpiled as indicated in the Layout, including the Select Subgrade Topping. A portion of the stockpile will remain in-place as permanent embankment. A quantity of 22,212 CuYd from “Stockpile S” will be temporarily placed and used during future phases of construction. This quantity has been added to the Unclassified Excavation as payment for moving the material twice. The plan quantity of 22,212 will not be adjusted according to field measurements.

The quantities shown for Phase 1 in the Table of Excavation Quantities by Balances include the Phase 1A earthwork quantities referenced in this note and the Interim Grading Layout.

PHASE 1A TRENCH EXCAVATION AND BACKFILL

Due to anticipated rebound issues following excavation of the West Boulevard slope, the slope will be cut to rough grade, followed by a six month delay prior to installation of the Large Diameter Storm Sewer. During Phase 1A, while the slope is being excavated, the Contractor shall also excavate the trench for the Large Diameter Storm Sewer to the depth of the 3’ undercut between Station 504+00 and 509+50. The trench will then be loosely backfilled with the excavated spoils until the time of pipe installation. This will allow for additional rebounding to occur while protecting the trench from the elements. Payment for this work shall be based on a plan quantity of 7,692 Cubic Yards of Unclassified Excavation.

PROCEDURES FOR DETERMINING UNCLASSIFIED EXCAVATION QUANTITY

When plan quantities are used for payment, the Unclassified Excavation quantity shall be used for final payment. If final cross sections are taken in the field, add all of the items in the Table of Unclassified Excavation using the following procedures:

Out-of-Balance Excavation is material obtained from waste generated from excavation from other balances. The quantity of Out-of-Balance Excavation is included in the Excavation quantity in the balance where it is excavated and is paid for once as Unclassified Excavation.

The Topsoil quantity in the Table of Unclassified Excavation is an estimate. When finaling a project, the total quantity of field measured Topsoil shall be used in place of the estimated Topsoil quantity. The quantity of Topsoil from the cuts will be paid for twice as Unclassified Excavation, as it will be in both the Excavation and Topsoil quantities. This will be full compensation for Excavation, which includes necessary undercutting to provide space for placement of topsoil.

The Excavation quantities from individual balances and the Table of Unclassified Excavation have been reduced by the volume of in place surfacing that will be removed.

As shown in the Table of Unclassified Excavation, the estimated quantity of 4,017 cubic yards of Salvaged Asphalt Mix and Granular Base Material from fill sections and 340 cubic yards of Salvaged Asphalt Mix and Granular Base Material from off-alignment roadways or obliterated old roads shall be added to the Excavation quantity to determine the Unclassified Excavation quantity. When finaling a project, the quantities of Salvaged Asphalt Mix and Granular Base Material from fill sections and off-alignment roadways or obliterated old roads will not be adjusted according to field measurements. The quantity of Salvaged Asphalt Mix and Granular Base Material from cut sections will not be added to the Excavation quantity as it is already in the cuts on the final cross sections.

The volume of in place Concrete Surfacing removed will NOT be paid for as Unclassified Excavation.

The Excavation quantities from individual balances and the table above have been reduced by the volume of in place concrete pavement that will be removed.

When finaling a project, the estimated quantity of 7,968 cubic yards of Concrete Pavement removed from the cut sections shall be subtracted from the Unclassified Excavation quantity for final payment. The quantity of Concrete Pavement from cut sections subtracted from the Unclassified Excavation quantity shall be plans quantity and will not be adjusted according to field measurements.

When finaling a project, the plan quantity of 22,212 CuYd will be the basis for the Temporary Stockpiles required for Interim Grading Phase 1A. The plan quantity will not be adjusted according to field measurements. Additionally, the plan quantity of 26,872 CuYd will be the basis of payment for the excavation required for Walls “A” and “B” Foundation Preparation and will not be adjusted according to field measurements.

SELECT SUBGRADE TOPPING

The upper three feet of the subgrade will be constructed from Select Topping material. Select Topping material width will be from 3 feet outside the edge of the outside curb & gutter to 3 feet outside the edge of the opposite curb & gutter. The moisture content of the Select Topping at the time of compaction will be as per Section 120.3.B.3.a. The subgrade in cut sections will be undercut 3 feet to ensure that the desired material is placed in the upper subgrade.

Because the excavation required to place the Select Topping in cut sections might not be backfilled with the cut material, this excavation will not be paid for as undercut. Payment for this operation will be absorbed in the unclassified excavation and Select Subgrade Topping items. No additional payment will be made for wasting excavated material that is determined to be unsuitable.

Material for Select Topping will conform to the following:

Any material with less than 60 % passing the #200 sieve.
Any material that has more than 60 % passing the #200 sieve and having a Liquid Limit less than or equal to 50 and Plastic Index (PI) less than or equal to 25.

Silt clay with gravel will be ideal for Select Topping. It is anticipated that the soil from the West Blvd. excavation above elevation 3290’ will meet the Select Topping requirements. The subsurface investigation indicated that boulders and large cobbles were also present in the silt clay. These large rocks will not be allowed in the new embankment. It is estimated that 41,850 Cubic Yards of Select Topping material can be obtained from this location. It is unlikely that the weathered shale and unweathered shale lying below the silt clay layer will meet the requirements for Select Topping. Additional sources of the Select Topping material may be found throughout the remaining project area.

It will be acceptable to mix salvaged crushed PCCP and/ gravel cushion/base course with the undercut soil to meet the above specification. Salvaged asphalt concrete will not be allowed. The PCCP must be crushed to a minus 2.5 inch size and free of reinforcing steel prior to being mixed into the subgrade.

Please refer to the Soils Report for additional information.

REGISTERED PROFESSIONAL ENGINEER
REG. NO. 8328
JODY W. PAGE
SOUTH DAKOTA
21 MAY 15

SELECT SUBGRADE TOPPING, CONTINUED

The plan quantity of 118,707 CuYd shall be the basis of payment for Select Subgrade Topping. No additional payment shall be made for the various methods described above including use of on-site material from the West Boulevard excavation, hauling in virgin material from an off-site source, and/or mixing salvaged crushed PCCP, granular material, and undercut material. No additional payment shall be made unless additional areas of Select Subgrade Topping Excavation are identified by the Engineer. No additional payment will be made for crushing and processing the PCCP for use as Select Subgrade Topping.

TABLE OF SELECT SUBGRADE TOPPING

Alignment	Station to	Station	Excavation (CuYd)	Quantity (CuYd)
I-190 (NB)	100+20	149+60	25,751	32,188
I-190 (SB)	100+20	154+00	25,279	31,599
Ramp A	302+27	312+00	5,485	6,856
Ramp B	403+32	411+47	3,157	3,946
Ramp C	603+44	611+08	3,479	4,349
Ramp D	701+42	710+25	3,522	4,402
Ramp E	350+69	352+38	551	689
Ramp F	450+41	451+48	326	407
Ramp G	650+23	651+50	356	445
Ramp H	750+35	752+38	725	906
North Street	209+02	224+72	13,231	16,539
West Blvd.	10+22	26+75	9,037	11,295
West Blvd N	50+24	58+66	4,069	5,086
		Total:	**94,968**	**118,707**

SALVAGE AND STOCKPILE ASPHALT MIX AND GRANULAR BASE MATERIAL

Asphalt mix and granular base material shall be salvaged from the mainline, shoulders of the interstate, and ramp gore areas.

Salvaged material shall be processed to provide material meeting the following gradation:

Sieve Size	% Passing
2 inch (50.0 mm)	100
1 inch (25.0 mm)	70-100

The quantity of salvaged asphalt mix and granular base material may vary from the plans. The Contractor will be required to use all salvaged material on this project by decreasing or increasing the quantity of Gravel Cushion as necessary, or as directed by the Engineer. Plans quantity will be the basis of measurement and payment for the above mentioned work.

No adjustment in the contract unit price per ton for salvaged material will be made because of a variation in salvaged material quantities.

TABLE OF SALVAGE ASPHALT MIX AND GRANULAR BASE MATERIAL

Site	Beginning Station	Ending Station	Quantity (CuYd)	Quantity (Ton)
Mainline I-190 SB Lanes	20+65.31	25+25.00	755.9	1,428.70
Mainline I-190 NB Lanes	20+65.31	25+25.00	755.9	1,428.70
Mainline I-190 SB Lanes	25+25.00	31+04.40	952.8	1,800.80
Mainline I-190 NB Lanes	25+25.00	31+04.40	952.8	1,800.80
Mainline I-190 SB Lanes	31+04.40	53+80.00	3,759.0	7,104.40
Mainline I-190 NB Lanes	31+04.40	54+14.32	3,815.6	7,211.60
Mainline I-190 SB Lanes	58+03.00	70+17.81	1,376.8	2,602.10
Mainline I-190 NB Lanes	58+03.00	70+17.81	1,376.8	2,602.10
Lt Service Road	42+32.70	55+22.77	1,677.1	3,169.70
Lt Service Road	55+22.77	68+04.40	1,495.2	2,826.00
Rt Service Road	44+12.70	52+33.66	957.8	1,810.20
Rt Service Road	52+33.66	68+04.40	1,832.5	3,463.50
SB I-190 Ramp including Gore Areas	---	---	491.1	928.2
NB I-190 Ramp including Gore Areas	---	---	340	642.6
		Total:	20,539.3	38,819

Note: Underlying Plans Sta. 16+00.00 = Plans Station 154+25.31

FOUNDATION PREPARATION FOR WALLS "A" AND "B"

Foundation Preparation will be required beneath the abutment retaining walls and adjacent berms to remove weak compressible soils from the proposed wall and bridge berm footprints. The foundation preparation shall consist of excavating the footprint of the MSE Large Panel Retaining Wall and adjacent bridge berm as shown on the typical section in Section E. If shale is encountered within the footprint of the excavation, the depth of the excavation may be reduced at the direction of the Engineer. Backfilling of the excavation shall be done according the Typical Installation Procedures listed below.

Typical Installation Procedure

1. After the area has been excavated all spoil or loose material shall be removed and the area wetted then proof rolled.
2. Any protrusions that might damage the geotextile will be removed prior to placing the geotextile.
3. Place the MSE Geotextile Fabric on as level and smooth of surface as possible.
4. All seams in the MSE Geotextile Fabric will be stitched in accordance with the attached seaming procedure and as shown on the detail labeled "Geotextile Seam Types".
5. An underdrain pipe shall be placed on top of the MSE Geotextile Fabric along the edge of the excavation in front of and adjacent to the wall face.
6. The MSE Geotextile Fabric should be kept as taut as possible prior to backfilling.
7. Place a 4 inch loose lift of aggregate base course on top of the stitched MSE Geotextile Fabric. No equipment is to be allowed on the MSE Geotextile Fabric until the aggregate base course is in place.
8. Granular material will be dumped at least 20 feet behind the leading edge of the fill and pushed into place with a loader or dozer.
9. Cover the aggregate base course with 3.25 feet of Shot Rock.
10. Shot Rock will be placed in 1 foot lifts and compacted to the satisfaction of the Engineer.
11. Shape and compact the Shot Rock to provide a relatively smooth, level surface. Fill voids and level shot rock surface with aggregate base course. Any protrusions that might damage the geotextile will be removed prior to placing the Non-Woven Separator Fabric.
12. Cover the shot rock and aggregate base course with Non-Woven Separator Fabric.
13. The Non-woven Separator Fabric should be kept as taut as possible prior to backfilling.

FOUNDATION PREPARATION FOR WALLS "A" AND "B", CONTINUED

Typical Installation Procedure

14. All seems in the Non-Woven Separator Fabric shall be overlapped at least 2 feet and shingled in a manner that assures that material will not be forced under the geotextile during backfilling operations.

15. A minimum of 6 inches of aggregate base course shall be placed on top of the Non-Woven Separator Fabric beneath the leveling pad and the Granular Backfill for MSE Large Panel Wall. This layer of aggregate base course shall extend from 4 feet in front of the wall to 4 feet beyond the length of the reinforcement. Cover the remainder of the fabric with soil backfill.

16. Backfill material shall be dumped behind the leading edge of the fill and pushed into place with a loader or dozer.

17. No equipment shall be allowed on the Non-Woven Separator Fabric until backfill material has been placed.

The MSE Geotextile Fabric and Non-Woven Separator Fabric shall conform to the requirements in Section 831 of the Specifications.

An estimated 6,920 Sq. Yds. of MSE Geotextile Fabric have been included for the wall/berm foundation improvement. MSE Geotextile Fabric will be paid for at the contract unit price per sq. yd. for MSE Geotextile Fabric. Payment will be full compensation for furnishing and installing the MSE Geotextile Fabric only.

An estimated 7,760 Sq. Yds. of Non-Woven Geotextile Separator have been included for the wall/berm foundation improvement. Non-Woven Geotextile Separator will be paid for at the contract unit price per sq. yd. for Non-Woven Geotextile Separator. Payment quantities will be based on area covered plus 15%. Overlaps are accounted for by the additional 15%. Payment will be full compensation for furnishing and installing the Non-Woven Geotextile Separator only. Backfill material will be paid for as either Shot Rock or Base Course.

An estimated 13,560 Tons of Shot Rock have been included for wall/berm foundation improvement. A factor of 1.68 was used to convert from cubic yards to Tons. Shot Rock shall consist of broken or crushed ledge rock produced from blasting or quarrying operations. Shot Rock material utilized in the foundation preparation shall be less than 8 inches in diameter with a nominal size of 4 inches. Gypsum may not be used as Shot Rock. Compaction shall be to the satisfaction of the Engineer. Acceptance of Shot Rock will be by Visual Inspection. Independent Assurance will not be required. Payment for Shot Rock shall be full compensation for all furnishing, hauling and placing material, and for all labor, tools, equipment, and any incidentals necessary to complete this work.

An estimated 3,430 Tons of aggregate base course have been included for the wall/berm foundation improvement. A factor of 1.89 was used to convert from cubic yards to Tons. Aggregate base course shall be paid for as Base Course.

The estimated quantity of aggregate base course includes the cushion layer, the leveling and preparing of the Shot Rock surface for fabric placement, and the granular leveling course beneath the MSE Retaining Wall. Aggregate base course shall conform to the requirements in Section 882 of the Specifications. Compaction of the 6 inch layer over the Non-Woven Separator Fabric shall be governed by the Specified Density Method. All costs for equipment, labor, tools, and incidentals required for the furnishing, placing, watering, and compacting the aggregate base course shall be paid for at the contract unit price per ton for Base Course.

An estimated 750 feet of underdrain pipe have been included for the wall/berm foundation improvement. The underdrain system shall consist of 4 inch diameter slotted corrugated polyethylene tubing installed at the edge of the excavation in front of and adjacent to the wall face. The outlet portions of the underdrain system shall consist of 4 inch diameter corrugated polyethylene tubing to the locations detailed in the plans. Both the 4 inch diameter slotted and solid corrugated polyethylene tubing and all materials, fittings, and incidentals required to install the underdrain shall be incidental to the contract unit price per foot of 4" Slotted Corrugated Polyethylene Tubing.

The additional excavation required for Walls "A" and "B" Foundation Preparation shall be paid for as Unclassified Excavation. The estimated volume of excavation for Wall "A" is 9,691 CuYd and Wall "B" is 17,181 CuYd. The combined volume of 26,872 CuYd has been added to the Table of Unclassified Excavation. The plan quantity of 26,872 CuYd will be the basis of payment for the excavation required for Walls "A" and "B" Foundation Preparation and will not be adjusted according to field measurements.

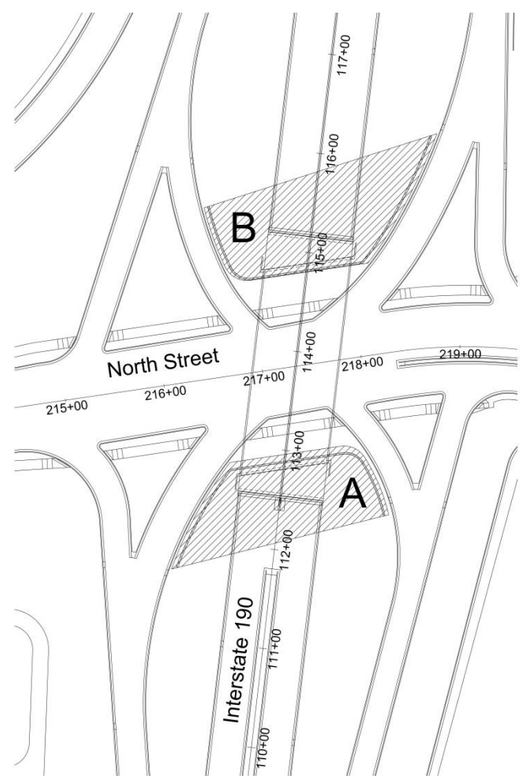

Walls "A" and "B" Foundation Preparation Areas

Geotextile Seaming Procedure

The sewn seams shall consist of two parallel rows of stitching ("prayer" seam, TypeSSa-2), or shall consist of a J-seam, (Type SSn-1), using a single row of stitching. The stitching shall be a lock type stitch.

If the SSa-2 seam is used, the two rows of stitching shall be 1 inch apart with a tolerance of plus or minus 1/2 inch and shall not cross, except for restitching. The minimum seam allowance, i.e., the minimum distance from the geotextile edge to the stitch line nearest to that edge, shall be 1-1/2 inches.

If the J seam, Type SSn-1, is used, the minimum seam allowance shall be 1 inch.

The seam, stitch type, and the equipment used to perform the stitching shall be as recommended by the manufacturer of the geotextile and approved by the Engineer.

The seams shall be sewn in such a manner that the seam can be readily inspected by the Engineer.

Thread used shall be high strength polypropylene, polyester, or Kevlar thread. Nylon threads will not be allowed.

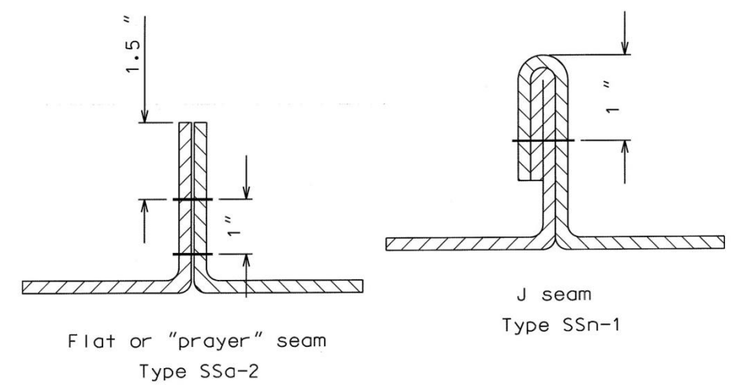

Geotextile Seam Types

MISCELLANEOUS WORK

A portion of the existing gravity large concrete block wall at North Street Station 212+00 Lt. will be removed and reset. Special details have been included in Section E to describe the requirements of this work, which will be incidental to the contract unit price per site for "Miscellaneous Work" (See Section E).

TABLE OF PIPE CULVERT UNDERCUT

The Table of Pipe Culvert Undercut is intended to be used to establish an estimated quantity of Pipe Culvert Undercut for bidding purposes only. The depth of undercut is an estimate and the actual depth necessary shall be determined during construction. Pipes shown may or may not require undercutting and pipes not shown may require undercutting. The Engineer will determine which pipe shall be undercut in accordance with Section 421 of the Specifications.

Station	Diam. (In)	Undercut Depth (Ft)	Quantity (CuYd)
West Blvd			
19+86.97-10.44'R to 20+59.35-16.65'L	42	1	24
20+64.88-17.79'L to 23+54.32-17.74'L	42	1	88
I-190			
107+57.99-105.33'L to 107+95.57-117.90'R	48	1	75
129+98.30-208.76'L to 130+22.88-87.53'L	42	1	38
130+22.11-104.02'R to 130+24.08-58.50'R	42	1	14
130+22.99-84.19'L to 130+24.11-43.17'L	42	1	13
130+24.14-55.50'R to 130+24.14-3.58'R	42	1	17
130+24.15-3.58'L to 130+24.15-40.17'L	42	1	12
144+64.97-151.37'L to 144+65.01-95.95'L	48	1	18
144+73.78-58.04'L to 144+73.98-43.17'L	42	1	5
144+73.69-3.58'L to 144+73.99-40.17'L	42A	1	13
144+73.71-3.58'R to 144+74.21-38.92'R	42A	1	12
144+74.25-41.67'R to 146+54.85-70.22'R	42	1	56
Ramp B			
405+68.15-46.38'R to 408+57.39-46.86'R	42	1	89
408+63.39-46.64'R to 410+57.23-92.65'R	42	1	75
		Total:	**549**

The table contains the rate of pipe culvert undercut per foot of pipe length and should be used as an aid in determining the actual amount of undercut to be performed during construction. The table is derived from the drawing below and conforms to the Specifications. When calculating pipe culvert undercut, the length of pipe ends should be included in the overall pipe length.

Storm sewer and approach pipes do not require undercutting unless specified otherwise in these plans.

Pipe Diameter (In)	Round Pipe Undercut Rate for 1' Depth (CuYd/Ft)	Arch Pipe Undercut Rate for 1' Depth (CuYd/Ft)
24	0.2407	0.2577
30	0.2623	0.2847
36	0.2840	0.3110
42	0.3056	0.3337
48	0.3272	0.3596
54	0.3488	0.3827
60	0.3704	0.4105
66	0.3920	---
72	0.4136	0.4630
78	0.4352	---
84	0.4568	0.5123
90	0.4784	---
96	0.5000	---

REGISTERED PROFESSIONAL ENGINEER
REG. NO. 8328
JODY W. PAGE
SOUTH DAKOTA
21 MAY 15

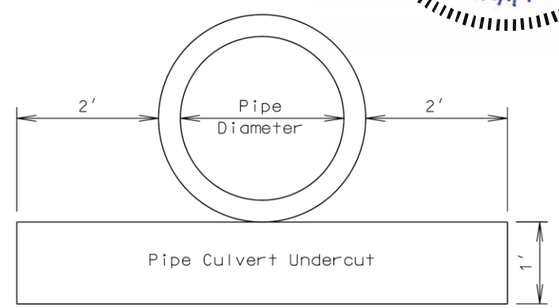

Undercut Detail for 24" to 78" RCP

FOUNDATION PREPARATION FOR LARGE DIAMETER STORM SEWER

The Large Diameter Storm Sewer from Station 496+89 to Station 514+22, ranging from 84" to 96" RCP, will have special foundation preparation as follows:

From Station 496+89 to 500+68 and from 509+50 to 514+22

The undercut shall be minimum 12" below the pipe in this area. Compaction of earth embankment and storm sewer backfill material shall be governed by the Specified Density Method.

From Station 500+68 to 504+00

The undercut shall taper from minimum 12" below the pipe to 36" below the pipe between Station 500+68 and 504+00. An underdrain with porous backfill shall be installed at the bottom of the undercut. Compaction of earth embankment and storm sewer backfill material shall be governed by the Specified Density Method.

From Station 504+00 to 509+50

The undercut shall be 36" below the pipe in this area. The undercut shall contain a layer of Geogrid and an underdrain with porous backfill as indicated in the detail. The compaction and lift requirements for the pipe culvert undercut backfill shall be waived in this area. Compaction of the earth embankment above and adjacent to the pipe culvert and storm sewer backfill material shall be governed by the Specified Density Method.

Geogrid Specification:

The geogrid will be a biaxial grid of single layer construction. Vibratory welded, integrally formed or woven and coated geogrids will be acceptable. Grids with laser welded grid junctions will not be allowed. The geogrid will be certified by the supplier to meet the following specification prior to installation:

Property	Test	MARV
Wide Width Strip Tensile Strength (Ultimate)	ASTM D 6637 Method B	850lb/ft MD and XD

Geogrid will be paid for at the contract unit price per sq. yd. for Geogrid Reinforcement. Payment quantities will be based on area covered plus 15%. Overlaps are accounted for by the additional 15%. Payment will be full compensation for furnishing and installing the geogrid only. An estimated quantity of 990 square yards of geogrid will be required for the special pipe culvert undercut. Granular backfill materials will be paid for under a different bid item.

Granular Material

Granular Material will conform to the specification for Aggregate Base Course in Section 882 of the Specifications. Granular Material used to backfill the pipe culvert undercut will be paid for at the contract unit price for Pipe Culvert Undercut. Payment will be full compensation for furnishing and placing this material. Granular material placed between the undercut and the haunch shall be paid for by the ton. See Undercut Detail for 84", 90" and 96" RCP.

Installation

The geogrid shall be placed on a level surface and overlapped a minimum of 2 feet.

The geogrid will be placed as taut as possible with minimal wrinkles. Placement will be done so that subsequent granular cover material does not shove, wrinkle or distort the in place geogrid. The overlaps will be shingled in a manner that assures granular material will not be forced under the geogrid during backfilling operations. The geogrid may be held in place with small piles of granular material or staples.

The pipe culvert undercut backfill material shall conform to the requirements of Aggregate Base Course in Section 882 of the Specifications. Aggregate Base Course will be dumped at least 20 feet behind the leading edge of the backfill and pushed into place with a loader or dozer from the covered areas to the uncovered areas. No traffic will be allowed on the uncovered geogrid.

FOUNDATION PREPARATION FOR LARGE DIAMETER STORM SEWER, CONTINUED

An estimated quantity of 3,480 tons of Aggregate Base Course, 882 feet of 4" diameter slotted corrugated polyethylene tubing, and 53 tons of porous backfill will be required for the special undercut. The 4" diameter slotted corrugated polyethylene tubing and all materials, fittings, and incidentals required to install the underdrain shall be incidental to the contract unit price for 4" Slotted Corrugated Polyethylene Drainage Tubing.

Station	Undercut Depth (Ft)	Undercut Quantity (CuYd)	Geogrid (SqYd)	Granular Material (ton)	Under-drain (Ft)
Large Diameter Storm Pipe					
496+89 to 500+68	1	274		761	
500+68 to 504+00	2	1,593		667	
504+00 to 509+50	3	552	990	1,104	332
509+50 to 512+17	1			536	550
512+17 to 514.22	1			412	
	Total:	**2,419**	**990**	**3,480**	**882**

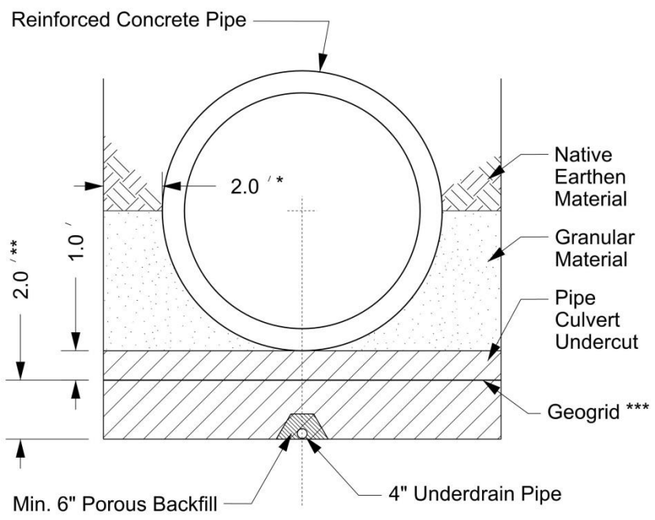

* At lateral pipe connections extend pipe culvert undercut and granular material a distance of one pipe length along the lateral pipe.

** 0.0' from Sta 496+89 to Sta 500+68; transition from 0.0' at Sta 500+68 to 2.0' at Sta 504+00.

*** Geogrid installed from Sta 504+00 to Sta 509+50

Undercut Detail for 84", 90", and 96" RCP

INCIDENTAL WORK, GRADING

Station	Remarks
West Blvd	
11+41-136 L	Remove Concrete Fdn. (81 SqYd)
11+44-191 L	Remove Concrete Fdn. (126 SqYd)
18+42-114 L	Remove Mailbox
19+86-29 L to 20+28-76 L	Remove Retaining Wall (63 Ft)
20+36-45 L to 20+42-53 L	Remove & Reset Block Wall
20+38-46 L to 20+93-37 L	Remove Retaining Wall (95 Ft)
20+76-2 L to 21+31-20 L	Remove Retaining Wall (92 Ft)
I-190 Mainline	
104+76-194 L	Remove Concrete Fdn. (24 SqYd)
104+82-148 L	Remove Concrete Fdn. (355 SqYd)
106+41 L	Remove Mailbox
106+87-120 L	Remove Concrete Fdn. (298 SqYd)
107+25 L	Remove Mailbox
107+39-183 L	Remove Concrete Fdn. (117 SqYd)
108+28 L	Remove Mailbox
108+41-92 L	Remove Concrete Fdn. (233 SqYd)
110+07-224 L	Remove Concrete Fdn. (117 SqYd)
110+13-157 L	Remove Concrete Fdn. (43 Ft)
110+57-224 L	Remove Concrete Fdn. (12 SqYd)
111+08-119 L	Remove Concrete Fdn. (25 SqYd)
111+11-137 L	Remove Concrete Fdn. (13 SqYd)
111+19-144 L to 111+76-1 R	Remove Retaining Wall (196 Ft)
111+48-122 L	Remove Concrete Fdn. (93 SqYd)
112+36-10 R to 113+07-20 R	Remove Retaining Wall (65 Ft)
112+84-64 L	Remove Concrete Fdn. (38 SqYd)
113+55-37 L	Remove Concrete Fdn. (38 Ft)
113+56-58 L	Remove Concrete Fdn. (33 SqYd)
113+74-92 L	Remove Concrete Fdn. (40 SqYd)
113+97-44 L	Remove Concrete Fdn. (32 SqYd)
114+37-106 L	Remove Concrete Fdn. (68 Ft)
114+85-89 L	Remove Concrete Fdn. (90 Ft)
114+90-17 L	Remove Concrete Fdn. (29 SqYd)
114+98-157 L to 115+34-111 L	Remove Retaining Wall (58 Ft)
115+02-77 L	Remove Concrete Fdn. (32 SqYd)
115+12-48 L	Remove Concrete Fdn. (9 SqYd)
115+16-134 L	Remove Concrete Fdn. (57 Ft)
115+68-146 L	Remove Concrete Fdn. (41 SqYd)
115+70-105 L	Remove Concrete Fdn. (41 Ft)
115+95-189 L	Remove Concrete Fdn. (3 SqYd)
116+36-191 L	Remove Concrete Fdn. (36 SqYd)
116+55-198 L	Remove Concrete Fdn. (5 SqYd)
116+55-119 L	Remove Concrete Fdn. (3 SqYd)
116+63-251 L	Remove Concrete Fdn. (29 Ft)
117+54-256 L	Remove Concrete Fdn. (200 SqYd)
117+64-57 L	Clear Shrubs (117 SqYd)
118+51-70 L	Clear Shrubs (280 SqYd)
119+71-75 L	Clear Shrubs (319 SqYd)
120+77-67 L	Remove 18" End Section
120+77-67 L	Temporary Drainage Connection
121+60-120 L	Clear Shrubs (2003 SqYd)
126+34-56 L	Clear Shrubs (135 SqYd)
126+85-77 R	Clear Shrubs (127 SqYd)
127+29-66 L	Clear Shrubs (127 SqYd)
128+03-75 R	Clear Shrubs (79 SqYd)
130+14-66 R	Clear Shrubs (80 SqYd)
130+16-252 L	Remove 24" End Section
130+92-67 L	Clear Shrubs (51 SqYd)
131+90-72 R	Clear Shrubs (99 SqYd)
132+59-67 L	Clear Shrubs (135 SqYd)
133+34-77 R	Clear Shrubs (159 SqYd)
136+05-81 L	Clear Shrubs (202 SqYd)
137+09-77 L	Clear Shrubs (366 SqYd)
137+79-73 R	Clear Shrubs (248 SqYd)
140+43-74 L	Clear Shrubs (328 SqYd)
140+95-90 R	Clear Shrubs (320 SqYd)
141+51-72 L	Clear Shrubs (164 SqYd)
144+57-92 L to 144+88-79 L	Remove Concrete Apron
144+74-65 L	Remove 24" End Section
146+55-70 R	Remove 24" End Section
North Street	
224+50-48 L to 224+62-54 L	Remove Landscaping

Remove Concrete Foundation

A number of house and garage structures have been removed or relocated prior to the project. The Contractor will be required to remove the remaining foundations, generally consisting of concrete slab on-grade foundations. Any below-grade concrete foundations shall be removed along with any miscellaneous concrete and rubble adjacent to the structures. The Contractor is advised to visit the site to properly gage the level of effort that will be required to remove the old foundations. The plan area of slab on-grade foundations is indicated in the table in Square Yards. Foundations that are below grade with footings are described in Feet.

Special care shall be taken when removing the below-grade foundation at West Boulevard Station 11+44-191 L. This foundation lies in close proximity to a newly relocated structure. The section of foundation lying within the temporary easement area shall be sawn and removed to a depth of 1 foot (minimum) below finished grade. The remaining portion of foundation lying within the permanent easement and right-of-way shall be removed.

Remove Retaining Wall

All concrete block retaining walls lying within the project limits shall be removed unless otherwise noted.

INCIDENTAL WORK, GRADING, CONTINUED

Parcel 23 – Sta 19+86-29 L to 20+28-76 L
An existing retaining wall and chain link fence adjacent to the alley shall be removed in its entirety along the back lot line. The retaining wall is constructed of concrete cylinders and mortar. The vegetation around the wall and fence shall be removed and trimmed as necessary in order to access the wall. The disturbed area from which the wall was removed shall be left in a neat, workmanlike condition and seeded to grass. Prior to removing the wall, the Contractor shall furnish and install a temporary 4' high chain link fence along the entire length of the backyard so as to retain the landowner's pets. The temporary fence shall remain in place until grading is complete and the homeowner installs a permanent fence.

Parcel 30 – Sta 22+25-49 L to 22+64-83 L
A large existing tree is to be removed at Sta 22+15-50 L, which will be paid for separately at the contract unit price per each for Clear and Grub Tree. The Contractor is allowed to remove the easterly 12' of the concrete block retaining wall if necessary to accommodate the tree removal. Removal and disposal of the wall will be paid for at the contract unit price for Incidental Work, Grading. Any damage to the wall beyond the easterly 12' will be repaired or replaced as necessary at the Contractor's expense.

Shotrock Subgrade Stabilization Material
I-190 traverses a spring area near Anamosa Street. Three feet of undercut is required from Station 130+00± to Station 149+50± to excavate unstable and possibly saturated subgrade material as part of the I-190 resurfacing. An unknown thickness of shot rock was used to stabilize the subgrade as part of a past surfacing project in the vicinity of Anamosa Street. All shot rock encountered within the subgrade shall be excavated and wasted as part of the proposed undercut. The exact depth and length of shot rock stabilized subgrade is unknown. The additional effort required to excavate and remove the shot rock shall be incidental to the contract unit price for Incidental Work, Grading.

Existing Underdrain Systems
The proposed undercut and resurfacing will eliminate the existing underdrain and edgedrain systems installed to mitigate known springs near the Anamosa Bridge Crossing. The existing edgedrain system consists of 12" stripdrains installed along the exterior and interior shoulders from Station 130+20± to Station 145+20±. The outside edgedrains outlet into the existing drop inlets at Station 130+20± and Station 138+10±, Lt. & Rt. The median edgedrains outlet into the existing median drop inlets at Station 130+20± and 134+20±, Lt. & Rt.
Underlying plans indicate two underdrain systems parallel I-190 from Station 130+20± to Station 143+20±, 36' Rt. and Station 130+20± to Station 143+70±, 36' Lt. The exact configuration of the underdrains is unknown but is believed to consist of 4-6" Polyethylene Drainage Tubing placed in a trench of variable depth and width backfilled with porous backfill.
A third underdrain system was installed approximately 1 foot behind the existing curb from Station 138+10± to Station 140+20±, Lt. & Rt. The underdrains outlet into the drop inlets at 138+10±, Lt. & Rt. Both underdrains consist of 6" Polyethylene Drainage Tubing placed in 1 foot deep by 2 ½ foot deep trench backfilled with porous backfill.
All existing underdrain systems shall be excavated and eliminated to prevent collection of water in abandoned tubing and/or porous backfilled trenches. All excavated drainage tubing shall be disposed of by the contractor. All labor, materials, equipment, and incidentals necessary to remove the existing underdrain system shall be incidental to the contract unit price for Incidental Work, Grading.

Lawn Irrigation System
A city owned lawn irrigation system exists within the I-190 corridor. The exact location and extent of the irrigation distribution pipe is not known. The irrigation system has been inactive for several years. The existing irrigation system has been capped. Removal of irrigation tubing, fittings, and equipment may be necessary to complete the work described in these plans. A concrete vault with metal housing is located at 177+66-183 R. The vault, housing, equipment, and piping shall be removed as necessary to complete grading operations. All material that is removed shall become the property of the Contractor to dispose of at an approved waste site. All labor, materials, equipment, and incidentals necessary to remove the existing irrigation system as needed shall be incidental to the contract unit price for Incidental Work, Grading.

Temporary Drainage Connection
A temporary drainage connection will be required for the 18" RCP culvert that discharges to the I-190 ditch at 120+77-67'L. The temporary connection will remain in place during Phase 1A. Approximately 30 Ft of 18" RCP, Class 3, shall be installed between the existing culvert and the 60" RCP Arch storm sewer on the west side of the SB Exit Ramp. The connection to the existing 60" RCP Arch shall be made by creating an opening in the pipe wall, inserting the temporary 18" RCP, and forming a concrete collar around the connection. An 18" RCP bend or concrete collar will also be required at the connection to the existing 18" RCP. Additional temporary drainage connections between new and existing storm sewer will be required at locations shown in the Storm Sewer Construction Sequencing Layout provided in Section C. All costs for furnishing, installing, removal, labor, materials, and incidentals for the temporary drainage connections shall be incidental to the contract unit price for Incidental Work, Grading.

There may also be instances where temporary drainage facilities are necessary to accommodate the Contractor's schedule. All materials, labor, and incidentals required to install, maintain and remove temporary drainage facilities to accommodate the Contractor's sequencing schedule shall be incidental to the contract unit price for Incidental Work, Grading. All temporary drainage plans shall be submitted to the Engineer at least 2 weeks prior to installation.

Salvaged Items
The metal frames with grates and lids that are being removed with drop inlets and manhole structures on the project shall be salvaged. These items shall be carefully removed, hauled, and delivered to the location identified in the "Salvaged Items" note below. Payment for this work shall be incidental to the contract unit price for Incidental Work, Grading.

The existing CAT-350 Crash Attenuator located at Sta 110+98-85 R shall be salvaged. All associated guardrail, posts, terminals, transitions, and hardware shall be carefully removed, hauled, and neatly stacked at the location identified in "Salvaged Items" note below. Payment for this work shall be incidental to the contract unit price for Incidental Work, Grading.

REMOVE BUILDINGS

There are two structures located on Parcel 22 at Station 20+67-37'L and 21+45-42'L. The structures shall be demolished and all debris removed from the site. Any basements, wells, cisterns, or holes shall be broken up and removed to 1 foot below finished ground. Basements, wells, cisterns, and holes shall be filled and the site shall be graded to properly drain. All site improvements such as landscaping, retaining walls, fencing, sheds, sidewalks, driveways, and concrete floors located on the property shall be removed. Vegetation shall be re-established as described in Section D of the plans. All work associated with demolishing and removing the structures, removing and filling below-grade features, removal of miscellaneous site improvements, and final grading of the site shall be incidental to the contract lump sum price for Remove Building(s). Any required coordination with local utility providers for disconnection and closure of public or private utilities shall be incidental to the contract lump sum price for Remove Building(s).

SALVAGED ITEMS

All salvaged items noted on the plans shall be salvaged for future highway use and hauled to the Department of Transportation's South Maintenance Yard on South Highway 79 in Rapid City as directed by the Engineer. Care shall be taken not to damage the structural properties of the items during dismantling and transporting. All broken concrete and materials not salvaged shall be disposed of in accordance with the Specifications. All costs for salvaging and transporting the items shall be incidental to the contract lump sum price for "Incidental Work, Grading". Before preparing his/her bid, the Contractor shall make a visual inspection of the project to verify the extent of the work and material involved.

REMOVAL OF EXISTING CONCRETE PAVEMENT
STA. 100+20.00 to STA. 155+33.00

Existing asphalt concrete and/or existing asphalt concrete patch work that was placed above the existing concrete pavement is included in the quantity for "Remove Concrete Pavement". The Contractor shall dispose of the concrete pavement and asphalt concrete at a site approved by the Engineer. The existing 9 inch P.C.C. Pavement is typically 24 feet wide and is reinforced with welded wire fabric. The welded wire fabric weighs not less than 60 pounds per 100 square feet. The longitudinal wires are No. 1 gauge and are spaced 6 inches center to center and the transverse wires are No. 4 gauge and are spaced 12 inches center to center. The existing pavement on North Street is 7" Non Reinforced PCC pavement.

REGISTERED PROFESSIONAL ENGINEER
REG. NO. 8326
JODY W. PAGE
SOUTH DAKOTA
5 JUN 15

TABLE OF CONCRETE PAVEMENT REMOVAL (INCLUDES CURB AND GUTTER)

Station	to	Station	Quantity (SqYd)
I-190 Mainline			
100+20 L/R		112+27-103 R	7,962
106+42-173 L		107+10-203 L	239
108+27-197 R		108+66-192 R	74
112+06-104 L		112+09-7 R	200
116+50-58 L		130+00-32 L	4,446
116+18-126 R		130+00-32 R	4,587
130+00-32 L		145+00-31 L	5,029
130+00-32 R		145+00-32 R	5,088
145+00-31 L		149+60-32 L	1,564
145+00-32 R		149+60-42 R	1,582
149+60-32 L		155+33-8 L	2,117
149+60-8 R		155+33-9 R	458
North Street			
219+93-28 L		222+09-25 R	1,297
222+09-25 R		224+72-29 L	1,828
			36,471

TABLE OF CONCRETE MEDIAN BARRIER REMOVAL

Station	to	Station	Quantity (Ft)
I-190 Mainline			
118+17-79 R		130+00 L/R	1187
130+00 L/R		145+00 L/R	1500
145+00 L/R		155+33 L/R	1034
		Total:	**3721**

TABLE OF CONCRETE RETAINING WALL REMOVAL

Station	to	Station	Quantity (Ft)
I-190 Mainline			
103+72-92 L		105+05-85 L	470
101+99-46 R		106+71-72 R	479
101+99-45 L		106+52-22 L	445
109+53-111 R		112+43-151 R	272
109+89-24 L		112+32-58 L	246
116+16-94 R		116+49+88 R	38
		Total:	**1950**

TABLE OF SIDEWALK REMOVAL

Station	to	Station	Quantity (SqYd)
West Blvd			
20+54-20 L		20+66-16 L	4
23+43-77 L		26+74-24 L	182
West Blvd North			
50+24-24 R		50+89-14 R	36
53+60-36 R		53+75-44 R	13
54+10-36 R		54+25-31 R	7
58+40-31 R		58+55-36 R	8
I-190 Mainline			
100+20-53 L		109+10-35 L	482
100+20-54 R		102+14-86 R	102
103+80-92 L		104+67-198 L	99
106+31-73 L		106+53-172 L	39
108+21-117 L		108+39-168 L	27
108+35-46 L		108+45-73 L	16
108+44-114 L		108+56-166 L	29
108+68-164 L		108+72-110 L	26
109+68-222 L		110+56-215 L	35
109+81-26 L		109+87-51 L	7
109+89-106 L		110+02-113 L	9
110+24-79 L		110+30-19 L	20
112+24-136 L		112+25-82 L	13
113+51-4 R		113+57-28 R	6
113+75-27 R		114+21-25 R	30
114+96-238 R		117+85-294 R	208
116+62-153 L		116+79-135 L	8
116+79-169 L		117+19-152 L	18
117+51-223 L		117+89-252 L	28
130+06-120 L		130+21-132 L	8
North Street			
209+88-25 R		211+51-53 R	102
219+64-29 R		222+09-31 R	161
219+70-70 L		222+09-34 L	174
222+09-31 R		222+50-117 R	89
222+09-34 L		224+58-35 L	155
223+07-33 R		224+47-35 R	87
			2228

TABLE OF CONCRETE CURB AND GUTTER REMOVAL

Station	to	Station	Quantity (Ft)
West Blvd			
22+44-121 L		26+75-16 R	488
22+69-144 L		26+75-17 L	454
West Blvd North			
50+24-18 R		53+78-100 R	407
54+06-100 R		55+25-15 R	193
55+25-15 R		58+55-43 R	350
**58+58-43 R		58+58-74 R	31
**58+92-31 R		59+09-16 R	26
I-190 Mainline			
101+23-65 L		109+26-237 L	988
101+27-46 L		113+54-67 R	1235
101+99-36 L		112+31-68 R	1035
102+02-78 R		113+84-217 R	1869
102+06-61 R		113+94-180 R	1210
102+14-39 R		112+22-139 R	1022
109+54-247 L		113+56-31 R	642
114+91-187 R		123+75-14 L	1050
114+91-187 R		125+94-120 R	1115
114+97-233 R		117+85-294 R	352
115+29-5 R		119+78+327 L	561
117+07-51 R		123+75-14 L	675
119+98-303 L		130+24-42 L	1307
130+07-121 L		130+26-161 L	50
130+11-86 L		130+90-86 L	79
130+24-42 L		145+00-42 L	1472
130+71-121 L		130+88-121 L	18
141+53-112 R		145+45-43 R	401
143+80-111 R		146+75-49 R	333
145+00-42 L		146+35-42 L	136
North Street			
209+02-18 L		212+05-1 R	303
209+88-20 R		211+51-53 R	189
211+81-58 R		212+00-36 R	34
217+58-31 R		217+75-138 L	170
217+93-50 R		219+16-32 R	137
218+15-84 L		219+02-20 L	324
219+54-42 R		219+88-25 R	42
219+67-154 R		221+29-65 R	223
219+70-70 L		219+93-28 L	59
219+95-65 L		220+05-53 L	33
221+09-110 R		220+76-108 R	75
222+08-82 R		222+57-60 R	141
222+25-136 R		222+71-168 R	75
222+92-60 R		223+04-100 R	57
224+42-25 L		224+62-54 L	40
South I-190 Crossover			
100+35 L/R		103+80 L/R	690
		Additional Qty	100
			20,191

*** Non-participating*

TABLE OF ASPHALT CONCRETE PAVEMENT REMOVAL

Station	to	Station	Quantity (SqYd)
West Blvd			
22+45-122 L		26+75-16 R	1,651
**26+75-7 R		26+87-7 L	19
West Blvd North			
**58+58-73 R		58+66-74 R	29
**58+66-31 R		59+09-14R	124
I-190 Mainline			
100+20 L/R		110+47-79 R	1,177
100+69-35 L		112+52-56 R	1,263
101+30-41 R		112+45-159 R	1,261
104+58-198 L		109+30-177 L	3,032
107+00-149 L		107+59-168 L	287
108+65-153 R		109+09-159 R	127
109+16-33 L		109+51-246 L	559
111+02-204 R		111+39-210 R	57
116+16-120 R		118+17-86 R	332
130+07-119 L		130+90-88 L	203
144+55-111 L		144+76-133 L	55
Temporary Traffic Crossovers			677
North Street			
209+02-16 L		212+05-1 R	930
219+71-154 R		221+25-117 R	565
219+97-63 L		220+06-58 L	4
220+75-137 R		221+09-152 R	68
222+25-133 R		223+04-103 R	189
222+60-60 R		222+89-76 R	54
224+65-54 L		224+72-29 L	20
		Additional Qty	100
			12,783

*** Non-participating*

TABLE OF SALVAGE ASPHALT CONCRETE PAVEMENT

Station	to	Station	Quantity (SqYd)
I-190 Mainline			
101+24-63 L		115+00-17 R	4,890
101+99-36 L		112+31-68 R	769
102+03-76 R		115+00-230 R	5,433
102+14-39 R		112+22-139 R	781
115+00-230 R		125+96-144 R	4,836
115+00-17 R		119+78-327 L	3,407
116+18-130 R		130+00-42 R	1,144
117+07-52 L		130+00-40 L	1,048
119+03-139 L		126+07-26 L	1,242
130+00-40 L		145+00-40 L	1,305
130+00-42 R		145+00-40 R	1,334
141+54-114 R		145+00-75 R	635
145+00-40 L		154+00-43 L	479
145+00-40 R		150+34-43 R	644
145+00-75 R		146+69-47 R	285
			28,232

The Table of Salvage Asphalt Concrete Pavement is included for informational purposes only; the quantities shown in the table are included in the item "Salvage and Stockpile Asphalt Mix and Granular Base Material".

TABLE OF DROP INLET REMOVAL

All costs for removal of the frame and grate assembly shall be incidental to the contract unit price per each for "Remove Drop Inlet".

Station	L/R	Quantity (Each)
West Blvd		
17+64	L	1
17+94	L	1
I-190 Mainline		
100+31	R	1
100+31	L	1
102+18	R	1
102+30	R	1
102+31	L	1
103+37	R	1
103+37	R	1
103+62	L	1
103+62	L	1
109+38	R	1
109+42	R	1
109+44	R	1
109+48	R	1
109+49	R	1
109+54	R	1
109+56	R	1
109+61	L	1
110+54	R	1
120+85	R	1
120+88	R	1
120+91	R	1
125+86	R	1
130+24	L	1
130+24	R	1
130+24	L	1
134+22	L	1
138+10	L	1
138+11	R	1
138+11	L	1
140+19	L	1
140+20	R	1
144+74	L	1
144+74	R	1
144+75	L	1
145+71	R	1
148+23	L	1
North Street		
219+14	L	1
219+96	L	1
223+43	R	1
223+46	L	1
		42

TABLE OF STORM SEWER PIPE REMOVAL

Station	to	Station	Type	Quantity (Ft)
West Blvd				
17+64-81 L		17+94-56 L	18" RCP	39
17+94-56 L		18+10-6 L	18" RCP	52
I-190 Mainline				
100+31-6 L		100+31-7 R	18" RCP	13
100+35-1 R		102+33-4 R	72" RCP Arch	197
102+18-88 R		103+37-90 R	18" RCP	121
102+30-40 R		102+33-4 R	18" RCP	37
102+31-40 L		102+33-4 R	18" RCP	44
102+33-4 R		109+50-68 R	72" RCP Arch	718
103+37-90 R		103+37-54 R	18" RCP	36
103+62-86 L		103+62-51 L	18" RCP	35
109+38-152 R		109+42-117 R	18" RCP	36
109+42-117 R		109+44-104 R	18" RCP	14
109+44-104 R		109+48-72 R	18" RCP	33
109+48-72 R		109+50-68 R	18" RCP	5
109+49-58 R		109+54-25 R	18" RCP	34
109+50-68 R		109+49-58 R	18" RCP	5
109+50-68 R		110+54-80 R	60" RCP Arch	105
109+54-25 R		109+56-12 R	18" RCP	13
109+56-12 R		109+61-22 L	18" RCP	35
110+54-80 R		115+03-105 R	60" RCP Arch	450
115+03-105 R		119+26-183 L	60" RCP Arch	512
119+26-183 L		121+19-165 L	60" RCP Arch	202
120+77-67 L		120+85-16 R	18" RCP	83
120+85-16 R		120+88-55 R	18" RCP	39
120+88-55 R		120+91-96 R	18" RCP	41
120+88-55 R		125+86-14 R	18" RCP	500
130+17-252 L		130+24-40 L	24" RCP	212
130+24-40 L		130+24-1 L	18" RCP	39
130+24-1 L		130+24-40 R	18" RCP	41
130+24-1 L		134+22-0 L	18" RCP	397
134+22-0 L		138+11-0 L	18" RCP	390
138+10-41 L		138+11-0 L	18" RCP	41
138+10-41 L		140+19-40 L	18" RCP	209
138+11-41 R		140+20-42 R	18" RCP	209
138+11-0 L		138+11-41 R	18" RCP	41
144+74-40 L		144+75-0 L	24" RCP	41
144+74-40 R		144+75-0 L	24" RCP	41
144+74-40 L		144+74-65 L	24" RCP	25
144+74-40 R		145+71-64 R	24" RCP	100
144+75-0 L		148+23-0 L	18" RCP	349
145+71-64 R		146+55-70 R	24" RCP	84
North Street				
218+61-88 L		219+14-68 L	36" RCP	65
219+14-68 L		219+97-51 L	36" RCP	94
223+43-28 R		223+46-26 L	18" RCP	54
				5,831

TABLE OF MANHOLE (JUNCTION BOX) REMOVAL

Station	L/R	Quantity (Each)
I-190 Mainline		
102+33	R	1
109+50	R	1
115+03	R	1
119+26	L	1
120+94	L	1
		5

UNDERDRAIN

An underdrain system shall be installed on mainline I-190 near the Anamosa Bridge, West Boulevard W, North Street, and West Boulevard N (see plans and cross sections in Section F for details).

CORRUGATED METAL PIPE

Corrugated metal pipes shall have 2 ⅔-inch X ½-inch corrugations for 42-inch and smaller round pipe and 48-inch and smaller arch pipe unless otherwise stated in the plans. Corrugated metal pipes shall have 3-inch X 1-inch or 5-inch X 1-inch corrugations for 48-inch and larger round pipe and 54-inch and larger arch pipe unless otherwise stated in the plans.

The gauge of the corrugated metal elbows and ends shall match the thickest gauge of corrugated metal pipe it is connected to.

SLOTTED C.M.P. DRAIN

Slotted Drain piping shall be installed along the I-190 southbound median shoulder at the locations shown on the plans. A special detail has been included for the slotted drain piping with a throat height that will conform to the typical pavement section.

Several sections of Slotted Drain piping are required in the plans and will connect / terminate at drop inlets as indicated in the plan and profile layouts. At the downstream end, the slotted drain piping shall be connected to a C.M.P. bend that will be oriented toward an adjacent inlet. A section of C.M.P. will be installed between the bend and inlet. The upstream end of the Slotted Drain shall be capped. Payment for installation of the slotting drain piping and connections shall be incidental to the Slotted C.M.P. Drain and C.M.P. bid items.

CONTROLLED DENSITY FILL FOR PIPE

Controlled density fill shall be a flowable mortar material. Materials shall be in accordance with the Specifications, except as modified below. The mix design shall be:

Mix design with CLSM (Controlled Low Strength Material):

Material	Rate per Cubic Yard
Portland Cement Type I, II, III, or V	200 Lb
Fine Aggregate	2600 Lb
Coarse Aggregate	None
Water	35 Gal
"W.R. Grace – Darafill" or approved equal	1 (3 oz.) capsule or equivalent *

* Shall be one 3 ounce capsule or equivalent CLSM performance additive (foaming admixture).

The fine aggregate shall be natural sand consisting of mineral aggregate particles conforming to the following gradation requirements:

Passing 3/8 Inch Sieve	100%
Passing No. 200 Sieve	0-10%

The mix design shown above is designed to produce a minimum compressive strength of 100 psi. The Engineer may allow adjustments to the proportion of water at the site to provide the necessary consistency of the mix.

Controlled density fill shall be contained within the required limits with sandbags or other methods approved by the Engineer.

The Contractor shall prevent the flotation or movement of the culvert due to the buoyant force from the controlled density fill until the controlled density fill hardens. Overlying surfacing materials shall not be placed sooner than four hours after placement of the controlled density fill.

All costs for furnishing and installing the controlled density fill, including sandbags, labor, materials, equipment and incidentals necessary to complete the work shall be included in the contract unit price per cubic yard for "Controlled Density Fill."

Plans quantity will be the basis for payment unless otherwise ordered by the Engineer.

TABLE OF CONTROLLED DENSITY FILL FOR PIPE

Station	Quantity (CuYd)	Fill Height (between pipes)
I-190 Mainline		
144+65 L	20.41	2.4'
99+66 L to 103+62 L	25.92	Fill 18" CMP
99+71 R to 102+18 R	16.17	Fill 18" CMP
Total:	**62.5**	

STORM SEWER

Reinforced concrete pipe may be either bell and spigot or tongue and groove. The pipe sections shall be adjoined such that the ends are fully entered and the inner surfaces are reasonably flush and even.

Lift holes in the reinforced concrete pipe shall be plugged with grout.

Watertight joints are required for reinforced concrete pipe, drop inlets, manholes, and junction boxes where storm sewers run parallel to and within 10 feet horizontally from existing or proposed water mains.

Watertight joints are required where reinforced concrete pipes, drop inlets, manholes, or junction boxes cross water mains and are separated a distance of 18 inches or less, above or below, the water main.

If watertight joints are required then the watertight joints shall extend for a distance of 10 feet beyond the water main. This measurement shall be from the sealed concrete joint to the outer most surface of the water main.

Watertight joint seals shall conform to the following requirements:

1. Reinforced Concrete Pipe (Circular): Gasketed pipe shall conform to the requirements of ASTM C443. Non-gasketed concrete pipe shall be sealed with a mastic joint seal conforming to the requirements of ASTM C990 and encased with a minimum 2' wide by 6" thick M6 concrete collar reinforced with 6x6 W2.9 x W2.9 wire mesh.

2. Reinforced Concrete Pipe (Arch): Joints shall be sealed with a waterstop seal meeting the requirements of ASTM C990. Waterstop seals shall consist of hydrophilic compounds such as Waterstop-RX or ConSeal CS-231.

3. Drop Inlets, Manholes, and Junction Boxes: Joints shall be sealed with a waterstop seal or seal wrap meeting the requirements of ASTM C990 or encased with a minimum 2' wide by 6" thick M6 concrete collar reinforced with 6x6 W2.9 x W2.9 wire mesh. Waterstop seal shall contain hydrophilic compounds such as Waterstop-RX or ConSeal CS-231. Seal wrap shall be a self adhesive external joint wrap such as ConWrap CS-217 or Mar Mac Seal Wrap.

Gaskets and seals (mastic, waterstop, and seal wraps) shall be installed in accordance with the manufacturer's recommendations.

The cost for furnishing and installing all gaskets, mastic joint seal, waterstop seal, seal wrap, concrete collars, and for plugging the lift holes shall be incidental to the contract unit price per foot for the corresponding pipe bid item.

REGISTERED PROFESSIONAL ENGINEER
REG. NO. 8328
JODY W. PAGE
SOUTH DAKOTA
MAY 2015

CONCRETE PIPE CONNECTIONS

Pipe connections to existing pipes, manholes, junction boxes, and drop inlets shall be done by breaking a hole into the existing structure and inserting the pipe. A concrete collar shall then be poured around the pipe in the area of the connection.

When it is not possible to use a normal pipe joint (male-female ends), connections to existing pipe shall be made by placing a 2' wide by 6" thick M6 concrete collar around the outside of the connection. The concrete collar shall be reinforced with 6x6 W2.9 x W2.9 wire mesh.

All costs for constructing the concrete collars including materials and labor shall be incidental to the contract unit price per foot for the corresponding pipe bid item.

LARGE DIAMETER RCP STORM SEWER

A number of special fittings are required for the large diameter storm sewer. A checked design (by a South Dakota registered P.E.) and shop plans shall be submitted to the Office of Bridge Design for the fittings listed below.

An RCP eccentric transition section will be needed to smoothly increase the pipe diameter from 84" RCP to 90" RCP at Station 512+17. Payment for the transition section shall be incidental to the contract unit price for RCP Increaser, Furnish and Install.

The 96" RCP alignment requires a change in bearing of 30 degrees at Station 498+01. The change in alignment bearing shall be accomplished with 4 (four) 7.5 degree Long Radius Bends. Payment for the long radius bends shall be incidental to the contract unit price for 96" RCP Bend, Furnish and Install.

A variety of Tees will be required for the 90" RCP storm sewer to accommodate a range of lateral pipe diameters.

TABLE OF LARGE DIAMETER RCP STORM SEWER FITTINGS

Station	Description	Bid Item
Large Diameter Storm Pipe		
498+01	96" Bend (4 Ea x 7.5° Long Radius Bends)	96" RCP Bend
503+43	90"x 90"x18" Tee	RCP Tee
505+31	90"x90"x48" (Access Tee)	RCP Tee
505+37	90"x90"x18" Tee	RCP Tee
506+03	90"x90"x18" Tee	RCP Tee
506+09	90"x90"x36" Tee	RCP Tee
506+88	90"x90"x18" Tee	RCP Tee
507+53	90"x90"x18" Tee	RCP Tee
508+44	90" 20° Bend	90" RCP Bend
509+85	90"x90"x18" Tee	RCP Tee
509+91	90"x90"x48" (Access Tee)	RCP Tee
510+64	90"x90"x30" Tee	RCP Tee
512+11	90"x90"x36" Tee	RCP Tee
512+17	84"x90" Transition	RCP Increaser

SPECIAL CONCRETE HEADWALL FOR 96" RCP

A special detail has been included for the 96" RCP outfall. A special concrete headwall shall be constructed at Station 496+89. Construction requirements and payment information is included in the detail.

SPECIAL MANHOLE ACCESS TEE

A special detail has been included for accessing the 90" RCP storm sewer using a Tee fitting. The assembly will be required at two locations: Station 505+31 and Station 509+91. Construction requirements and payment information is included in the detail.

SPECIAL MANHOLE (OUTLET STRUCTURE FOR SEDIMENT BASIN)

A special detail has been included in the plans for the Sediment Basin Outlet Structure at Station 497+00 L. Construction requirements and payment information is included in the detail.

C.I.P. CONCRETE HEADWALL (SPECIAL CONNECTION)

At Station 100+24.50, a new 24" RCP storm sewer will be connected to the existing 72" RCP Arch that continues south and discharges under the Rapid Creek Bridge. A special detail has been included for this connection.

SPECIAL 10' X 10' JUNCTION BOX

Special details have been included for the 10'x10' storm sewer Junction Boxes at Stations 500+68.26 and 514+22.80-3.14' Rt.

DROP INLETS

Where drop inlets are constructed within areas of curb and gutter, the Contractor shall construct weep holes of at least 3 inches in diameter in the drop inlet walls. The weep holes shall be constructed at the same elevation as the adjacent top of the earthen subgrade and shall be maintained clean and open at all times until the permanent surfacing is placed. The drop inlets shall be covered throughout construction operations as necessary with an Engineer approved cover to provide safe travel for motorists and to prevent materials from entering the storm sewer system. After the permanent surfacing has been placed, the Contractor shall seal the weep holes with grout and remove all debris from the drop inlet. All costs involved with the coverings, weep holes, and removing debris from the drop inlets shall be incidental to the contract unit prices for the components of the drop inlets.

The plan shown quantities of the drop inlet components such as Class M6 Concrete, Reinforcing Steel, Type B Frame and Grate Assembly, Type C Frame and Grate, Type D Frame and Grate, Precast Drop Inlet Collar, and Precast Concrete Type S Drop Inlet Lid will be the basis of payment for these items.

If additions or reductions to the number of drop inlets are ordered by the Engineer, payment for the components required to construct the drop inlets will be made at the contract unit prices for the components of the drop inlets.

The Contractor shall install a 1 foot long 6 inch diameter PVC pipe for each drop inlet receiving an underdrain. The pipe shall be placed at a location to allow for the insertion of the 4 inch Slotted Corrugated Polyethylene Tubing. The 6 inch PVC pipe shall be placed on the upgrade side of the drop inlet or as determined by the Engineer. All costs involved to install the 6 inch PVC pipe shall be incidental to the contract unit prices for the components of the drop inlets.

Adjoining drop inlets, installed side-by-side, shall be connected by a short section of 18" RCP or an equivalent sized opening shall be provided in the adjoining walls. Installation of the pipe section to connect the adjoining inlets shall be incidental to the contract unit prices for the components of the drop inlets.

SPECIAL 5.5' X 5.5' DROP INLET

A special detail has been included for the 5.5'x5.5' Drop Inlet at Station 23+57.09-17.58' Lt.

SPECIAL CONCRETE MEDIAN BARRIER DROP INLET - DOUBLE

Special details and payment information for the Special Concrete Median Barrier Inlets are included in Section E.

SPECIAL 3'X6.5' TYPE B REINFORCED CONCRETE DROP INLET

A special detail has been included for the Special 3'x6.5' Type B Reinforced Concrete Drop Inlet. Payment for this item shall be based on the required amount of Class M6 Concrete and Reinforcing Steel. The unit also requires a special frame and grate as indicated on the detail which will be paid for as Special Frame and Grate Assembly. Concrete collars for the Special 3'x6.5' Type B Drop Inlets will be incidental to the contract unit price per each for Precast Drop Inlet Collar.

REGISTERED PROFESSIONAL ENGINEER
REG. NO. 8328
JODY W. PAGE
SOUTH DAKOTA
21 MAY 15

TABLE OF DROP INLETS AND QUANTITIES

Station	L/R	Size	Type	Class M6 (CuYd)	Reinf Steel (Lb)	Collar (Ea)	Frame And Grate
West Blvd							
10+47	L	3'x6.5'	Special	2.69	613	1	Special
10+79	R	3'x6.5'	Special	2.75	606	1	Special
11+83	L	2'x3'	B	1.74	176	1	B
15+46	L	3'x6.5'	Special	2.6	583	1	Special
15+46	R	2'x3'	B	2.42	243	1	B
16+72	L	4'x11'	S	3.95	672		S
16+72	R	2'x3'	B	0.87	97	1	B
17+68	L	4'x11'	S	5.73	924		S
17+69	L	4'x11'	S	3.24	604		S
18+09	L	4'x11'	S	3.96	701		S
18+11	L	4'x11'	S	3.49	632		S
18+51	L	2'x3'	B	1.14	126	1	B
18+51	R	4'x11'	S	3.41	605		S
20+60	R	2'x3'	B	1.21	128	1	B
20+62	L	5.5'x5.5'	B	5.12	1562	1	B
23+57	L	5.5'x5.5'	Special B	10.0	2009	1	B
23+58	R	2'x3'	B	1.54	158	1	B
25+24	L	2'x3'	B	1.25	136	1	B
25+26	R	2'x3'	B	1.17	124	1	B
West Blvd North							
50+49	L	4'x6'	S	4.1	626		S
51+11	L	1.5'x3'	D	0.85	103	1	D
51+14	R	2'x3'	B	1.19	131	1	B
I-190 Mainline							
100+34	L	1.5'x3'	D	1.09	126	1	D
100+34	R	1.5'x3'	D	1.13	130	1	D
100+35	L	2'x3'	B	1.45	154	1	B
100+35	R	3'x4'	B	2.49	312	1	B
102+59	L	2'x3'	B	1.15	123	1	B
102+59	R	3'x4'	B	2.34	292	1	B
104+09	L	1.5'x3'	D	1.02	119	1	D
104+12	R	2'x3'	B	1.49	159	1	B
105+83	L	2'x3'	B	1.62	177	1	B
105+96	L	2'x3'	B	1.56	168	1	B
105+96	R	3'x6.5'	Special	3.14	687	1	Special
106+03	L	3'x6.5'	Special	2.95	646	1	Special
108+70	L	4'x4'	B	3.66	571	1	B
108+70	R	3'x4'	B	0.83	110	1	B
109+49	L	2'x3'	B	1.04	113	1	B
109+49	L	3'x4'	B	2.01	256	1	B
109+49	R	2'x3'	B	0.99	120	1	B
109+50	R	3'x4'	B	0.87	109	1	B
111+85		3'x4'	C	1.74	191	1	C
111+85	L	1.5'x3'	D	1.06	123	1	D
111+85	R	1.5'x3'	D	1.06	123	1	D
115+30	L	1.5'x3'	D	0.94	111	1	D
115+30	L	2'x3'	B	1.05	118	1	B
115+30	R	1.5'x3'	D	0.96	113	1	D
115+30	R	2'x3'	B	1.03	121	1	B
118+63	L	3'x4'	B	3.69	435	1	B

TABLE OF DROP INLETS AND QUANTITIES

Station	L/R	Size	Type	Class M6 (CuYd)	Reinf Steel (Lb)	Collar (Ea)	Frame And Grate
118+63	R	2'x3'	B	1.17	125	1	B
118+63	L	2'x3'	B	2.1	221	1	B
118+63	R	2'x3'	B	2.08	220	1	B
121+53	L	2'x3'	B	1.37	163	1	B
121+53	R	3'x6.5'	Special	2.82	617	1	Special
121+54		Concrete Barrier Inlet - See Section E					
125+13	L	1.5'x3'	D	1.03	120	1	D
125+13	R	2'x3'	B	1.26	137	1	B
125+14		Concrete Barrier Inlet - See Section E					
125+14	R	2'x3'	B	1.27	138	1	B
126+99	R	2'x3'	B	1.57	161	1	B
126+99		Concrete Barrier Inlet - See Section E					
127+00	L	1.5'x3'	D	0.98	115	1	D
128+50		Concrete Barrier Inlet - See Section E					
130+10	R	4'x11'	S	5.88	886		S
130+22	R	4'x11'	S	6.08	938		S
130+22	L	3'x5.5'	B	4.45	974	1	B
130+24	R	3'x4'	B	2.67	362	1	B
130+24		Concrete Barrier Inlet - See Section E					
130+24	L	3'x6.5'	Special	3.42	786	1	Special
130+34	R	4'x11'	S	5.99	898		S
130+46	R	4'x11'	S	6.10	910		S
130+79	L	3'x6.5'	Special	2.52	570	1	Special
130+80	L	3'x6.5'	Special	2.8	622	1	Special
131+80	R	3'x6.5'	Special	3.2	676	1	Special
131+96		Concrete Barrier Inlet - See Section E					
131+97	L	3'x6.5'	Special	3.41	711	1	Special
134+20	L	3'x6.5'	Special	2.77	611	1	Special
134+22		Concrete Barrier Inlet - See Section E					
134+22	R	3'x6.5'	Special	2.69	598	1	Special
136+12	L	3'x6.5'	Special	2.82	618	1	Special
136+12		Concrete Barrier Inlet - See Section E					
136+15	R	3'x6.5'	Special	2.77	610	1	Special
138+08	R	1.5'x3'	D	0.86	108	1	D
138+11	L	3'x6.5'	Special	2.49	565	1	Special
138+11		Concrete Barrier Inlet - See Section E					
140+18	L	1.5'x3'	D	1.02	119	1	D
140+18	R	3'x6.5'	Special	2.73	612	1	Special
140+21		Concrete Barrier Inlet - See Section E					
142+46	R	3'x5.5'	B	3.38	731	1	B
142+46		Concrete Barrier Inlet - See Section E					
144+73		Concrete Barrier Inlet - See Section E					
144+74	L	3'x5.5'	B	2.51	659	1	B
144+74	R	5.5'x5.5'	B	3.85	1285	1	B
148+24		Concrete Barrier Inlet - See Section E					
North Street							
214+40	R	2'x3'	B	1.84	186	1	B
214+84	L	2'x3'	B	1.82	184	1	B
216+22	R	3'x6.5'	Special	3.3	707	1	Special
216+62	L	3'x4'	B	2.18	264	1	B
217+53	R	3'x6.5'	Special	4.11	820	1	Special
217+54	L	2'x3'	B	0.70	82	1	B

TABLE OF DROP INLETS AND QUANTITIES

Station	L/R	Size	Type	Class M6 (CuYd)	Reinf Steel (Lb)	Collar (Ea)	Frame And Grate
218+73	R	3'x6.5'	Special	3.25	692	1	Special
219+15	R	3'x5.5'	B	2.93	699	1	B
219+18	L	3'x5.5'	B	2.85	691	1	B
219+99	L	3'x6.5'	Special	4.66	905	1	Special
220+52	R	2'x3'	B	1.43	149	1	B
221+68	L	3'x4'	B	1.88	238	1	B
221+69	R	2'x3'	B	1.02	111	1	B
222+23	R	3'x4'	B	1.76	220	1	B
223+40	R	4'x11'	S	3.35	625		S
223+41	L	4'x11'	S	3.72	650		S
223+51	R	4'x11'	S	3.54	625		S
Ramp A							
302+08	L	2'x3'	B	1.78	180	1	B
302+32	R	4'x11'	S	5.71	876		S
304+65	L	2'x3'	B	1.23	130	1	B
304+67	R	3'x6.5'	Special	2.77	647	1	Special
306+59	L	2'x3'	B	1.33	148	1	B
306+60	R	2'x3'	B	1.15	123	1	B
308+62	R	2'x3'	B	1.11	119	1	B
308+63	L	2'x3'	B	1.22	139	1	B
310+61	L	2'x3'	B	1.33	144	1	B
310+61	R	2'x3'	B	1.17	125	1	B
312+63	L	2'x3'	B	1.58	162	1	B
312+61	R	3'x6.5'	Special	2.59	582	1	Special
Ramp E							
350+99	L	4'x4'	B	2.61	449	1	B
351+41	R	3'x6.5'	Special	3	667	1	Special
Ramp B							
403+41	L	3'x6.5'	Special	3.73	780	1	Special
403+83	R	3'x4'	B	3.45	409	1	B
408+59	L	2'x3'	B	1.68	171	1	B
408+60	R	2'x3'	B	2.11	214	1	B
409+63	R	2'x3'	B	1.25	132	1	B
409+64	L	2'x3'	B	1.45	155	1	B
410+96	R	4'x11'	S	6.33	948		S
410+99	L	2'x3'	B	1.94	199	1	B

REGISTERED PROFESSIONAL ENGINEER
REG. NO. 8328
JODY W. PAGE
SOUTH DAKOTA
1 MAY 2015

TABLE OF DROP INLETS AND QUANTITIES

Station	L/R	Size	Type	Class M6 (CuYd)	Reinf Steel (Lb)	Collar (Ea)	Frame And Grate
Ramp F							
451+09	R	4'x11'	S	5.59	911		S
451+32	L	3'x4'	B	2.51	304	1	B
Ramp C							
603+48	L	1.5'x3'	D	0.87	105	1	D
603+51	R	2'x3'	B	1.21	133	1	B
607+87	L	3'x4'	B	3.77	435	1	B
608+29	R	3'x4'	B	2.08	248	1	B
609+97	R	3'x6.5'	Special	2.54	573	1	Special
Ramp G							
650+79	R	4'x11'	S	4.84	778		S
650+79	L	2'x3'	B	2.19	229	1	B
Ramp D							
701+74	R	3'x6.5'	Special	2.6	590	1	Special
701+89	L	4'x4'	B	2.43	414	1	B
702+91	R	3'x6.5'	Special	2.57	578	1	Special
704+82	L	3'x4'	B	3.39	413	1	B
704+82	R	3'x4'	B	2.07	272	1	B
706+23	L	1.5'x3'	D	1.02	120	1	D
706+26	R	4'x4'	B	2.32	442	1	B
709+14	L	1.5'x3'	D	1.07	124	1	D
709+18	R	4'x4'	B	2.55	460	1	B
Ramp H							
750+95	R	4'x11'	S	4.31	713		S
750+96	L	2'x3'	B	1.63	171	1	B
			Totals:	**343.3**	**57,492**	**120**	

Total Type B Frame and Grate Assembly	76
Total Type C Frame and Grate Assembly	1
Total Type D Frame and Grate Assembly	15
Total Special Frame and Grate Assembly (for 3'x6.5' Type B Inlet – Double; see Special Detail)	28
Total 4'x6' Precast Concrete Type S Drop Inlet Lid	1
Total 4'x11' Precast Concrete Type S Drop Inlet Lid	18

TABLE OF JUNCTION BOXES AND QUANTITIES

Station	L / R	Size L'xW'xH'	Frame and Lid (Type)	Class M6 Concrete (CuYd)	Reinforcing Steel (Lb)
I-190 Mainline					
100+35		5'x5'x6.5'	A9	5.35	1020
138+08	R	5'x5'x4'	A9	4.10	821
140+19	R	5'x5'x4'	A9	4.18	821
North Street					
211+58	L	5'x5'x4'	A9	4.27	821
Ramp B					
405+65	R	7'x7'x8'	A9	8.93	1924
408+60	R	6'x6'x9.5'	A9	8.10	1755
Large Diameter Storm Pipe					
500+68		10'x10'x14'	A9	27.3	4496
505+31		Access Tee	A9		
509+91		Access Tee	A9		
514+22	R	10'x10'x14'	A9	27.3	4496
			Totals:	**89.6**	**16,154**

Total Type A9 Manhole Frame and Lid 10

TABLE OF CLASS M6 CONCRETE, REINFORCING STEEL, AND STRUCTURE EXCAVATION, MISC

Item	Class M6 Concrete	Reinforcing Steel	Structure Excavation, Misc.
Drop Inlets	343.3	57,492	
Junction Boxes	89.6	16,154	
Concrete Headwall for 96" RCP	15.4	1,699	55.8
CIP Concrete Headwall	3.3	252	4.5
Totals:	**451.6**	**75,597**	**60.3**

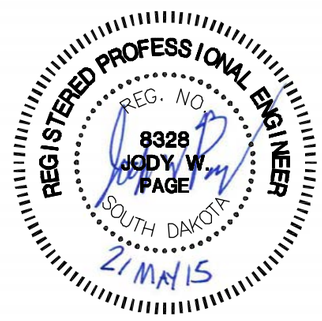

MANHOLE CONE AND BARREL SECTIONS

The quantities shown in the Table of Manholes Cone and Barrel Sections are estimates; the Contractor will be required to verify the quantities in the field. Cone and Barrel Sections will be paid for separately.

TABLE OF MANHOLE CONE AND BARREL SECTIONS

Station	L/R	Rings (in)	Cone (in)	Barrel (in)
I-190 Mainline				
100+35	L	12		
138+08	R	12		
140+19	R	12		
North Street				
211+58	L	12		
Ramp B				
405+65	R	12	36	
Large Diameter Storm Pipe				
500+68		1	36	
505+31		5	36	
509+91			36	36
514+22	R	3		

TABLE OF RIPRAP AND DRAINAGE FABRIC

Station	L/R	Class A Riprap (Ton)	Class C Riprap (Ton)	Type B Drainage Fabric (SqYd)
I-190 Mainline				
129+98	L		78	78
144+61	L		40	46
Large Diameter Storm Pipe				
496+39	L/R		1,950	1,310
496+60	L	20		30
498+79	L	390		485
	Totals:	**410**	**2,068**	**1,949**

CONCRETE DRAINAGE APRON

Concrete slabs / aprons shall be installed at the locations shown below for various drainage applications. The aprons shall be 6" thick and paid for at the contract unit price for 6" Concrete Sidewalk.

Station	Description	6" Concrete Sidewalk (SqYd)
I-190 Mainline		
144+71.56-81.66 L	Between End Sections	785
Large Diameter Storm Pipe		
497+27.88-76.29 L	Basin Micropool	580
500+43.89-67.09 L	Basin Forebay	1,332
Totals:		**2,697**

9" PCC FILLET SECTIONS

Payment for "9" PCC Fillet Section" shall be based on plans quantity. If additions or reductions to the area of PCC fillet sections are ordered by the Engineer, payment will be made in accordance with the contract unit price per square yard for "9" PCC Fillet Section".

TYPE 1 DETECTABLE WARNINGS

Detectable warnings shall be in compliance with the Americans with Disability Act regulations.

The detectable warnings shall be installed according to the manufacturer's installation instructions.

A concrete thickness equal to the adjacent concrete sidewalk thickness and 2 inches of granular cushion material shall be placed below the Type 1 Detectable Warnings. When concrete is placed below the detectable warnings then the concrete thickness shall be transitioned at the rate of 1" per foot to match the adjacent concrete sidewalk thickness.

The detectable warnings shall be a brick red color for application in concrete curb ramps. Cast iron plates may be a natural patina (weathered steel).

When Type 1 Detectable Warnings are specified, the Contractor shall furnish and install only one of the products listed in the Type 1 Detectable Warnings table.

Type 1 Detectable Warnings

Product	Manufacturer
Detectable Warning Plate Cast Iron Plate	Neenah Foundry Company Neenah, WI 800-558-5075 http://www.neenahfoundry.com/
Detectable Warning Plate Cast Iron Plate	Deeter Foundry Lincoln, NE 800-234-7466 http://www.deeter.com/
Detectable Warning Plate Cast Iron Plate (No Coating)	East Jordan Iron Works, Inc. 301 Spring Street East Jordan, MI 49727 800-626-4653 http://www.ejiw.com
CAST-DWD Cast Iron Plate	Key 3 Casting (Northern Foundry) 555 West 25th Street Hibbing, MN 55746 218-263-8871 http://key3casting.com

Type 1 Detectable Warnings shall be installed along a radius at the locations as shown in the plans. The radius necessary shall be as shown in the plans. Payment for the radius detectable warnings shall be at the contract unit price per square foot for "Type 1 Detectable Warnings".

When Type 1 Detectable Warnings with a radius are specified, the Contractor shall furnish and install an appropriately sized product listed in the following Type 1 Detectable Warnings (Radius) table.

Type 1 Detectable Warnings (Radius)

Product	Manufacturer
Detectable Warning Plate Cast Iron Plate 9'-5", 15', 20', 25', 35' Radius	Neenah Foundry Company Neenah, WI 800-558-5075 http://www.neenahfoundry.com/
Detectable Warning Plate Cast Iron Plate (No Coating) 10', 15', 17.5', 20', 25', 30', 35' Radius	East Jordan Iron Works, Inc. 301 Spring Street East Jordan, MI 49727 800-626-4653 http://www.ejiw.com

COLORED CONCRETE SIDEWALK

The Colored Concrete Sidewalk shall have the integral color Kailua (#677) by Davis Colors at a rate of 4 lbs per 94 lbs of cement, or approved equal. The colored concrete shall be cured with an acrylic sealer according to manufacturer's recommendations for the integral color. No white pigmented cure shall be used. All costs for coloring shall be incidental to the contract unit price per square foot for the various colored concrete sidewalk bid items.

MAILBOXES

The Contractor shall reset the existing mailboxes on new posts with the necessary support hardware for single mailbox assemblies. The local Postmaster will determine the recommended mounting height of the mailboxes throughout the project. The Contractor shall coordinate with the Engineer on the proper postal representative to contact.

All costs for removing existing mailboxes, providing temporary mailboxes, and resetting mailboxes with new posts and necessary support hardware shall be incidental to the contract unit price per each for "Refurbish Single Mailbox".

TABLE OF REFURBISH SINGLE MAILBOX

Station	Quantity (Each)
West Blvd.	
17+28 L	1
17+80 L	1
18+22 L	1
I-190 Mainline	
109+54 L	1
109+58 L	1
Total:	**5**

PERMANENT CONCRETE BARRIER END PROTECTION

The crash cushion provided shall meet the test level 3 requirements of NCHRP 350 or MASH and be from the following list. Only one type of crash cushion shall be used on a project; however, if conditions warrant a need for using more than one type of crash cushion on a project, then it shall be as approved by the Engineer.

Product	Manufacturer
SCI100GM	Work Area Protection Corp. a division of Stabler Companies Inc. St. Charles, IL Phone: 1-630-377-9100 www.workareaprotection.com

The anchoring pad for the crash cushion shall be 8 inch AC over compacted subgrade.

Documentation for the crash cushion, which includes the drawing details of the crash cushion, details for the transition to the concrete barrier, and details for the anchoring pad, shall be provided to the Project Engineer at the pre-construction meeting.

The crash cushion shall be attached to the concrete barrier with a transition that meets test level 3 requirements of NCHRP 350 or MASH at locations shown below in the Table of Permanent Concrete Barrier End Protection. For bidirectional traffic, the transition shall be placed on both sides of the crash cushion and barrier.

The Contractor shall certify that the crash cushion was installed according to the manufacturer's installation instructions.

All costs for furnishing and installing the crash cushion including the anchoring pad, anchors for connection to the pad, transitions to the concrete barrier (if required), materials, labor, equipment, and incidental items shall be paid for at the contract unit price per each for "Concrete Barrier End Protection".

TABLE OF PERMANENT CONCRETE BARRIER END PROTECTION

Station	Location	Unidirectional/ Bidirectional	Quantity (Each)
112+17.75	Median	Bidirectional	1
		Total	1

CABLE HANDRAIL

Cable handrail shall be installed adjacent to the proposed retaining walls at Station 219+74-56' L to Station 223+52-38' L. The cable railing system shall be Series 200 Aluminum DesignRail® as manufactured by Feeney Architectural Products®, or approved equal. The Contractor shall submit detailed shop drawings prior to beginning fabrication of the cable railing system, for the Engineer's Approval. All costs associated with furnishing and installing the cable railing shall be incidental to the contract unit price per foot for "Cable Handrail".

TABLE OF GUARDRAIL (See Section E for Concrete Barrier)

Location	Remove Beam Guardrail (Ft)	Straight Double Class A Thrie Beam Guardrail with Wood Posts (Ft)	Straight Double Class A W Beam Guardrail with Wood Posts (Ft)	Straight Class A W Beam Guardrail with Wood Posts (Ft)	Curved Class A W Beam Guardrail with Wood Posts (Ft)	W Beam to Thrie Beam Guardrail Transition (Each)	W Beam Guardrail Tangent End Terminal (Each)	Beam Guardrail Trailing End Terminal (Each)	W Beam Guardrail Special Anchor Assembly (Each)	Concrete Barrier End Protection (Each)	Guardrail Delineator (Each)
Sta. 50+43.39 – 59.96' to Sta. 57+82.55 – 22.09' L				662.5	77		1		1		16
Structure No. 52-409-298											
Begin Bridge Lt.											
Sta. 100+20.94 – 45.72' L to Sta. 106+10.74 – 75.54' L		12.5	518.75			1	1				11
Sta. 100+21.82 – 46.46' L to Sta. 101+45.61 – 70.52' L	128										
Sta. 101+93.31 – 41.44' L to Sta. 119+60.71 – 20.08' R	1777										
Sta. 102+05.69 – 45.10' L to Sta. 106+51.73 – 21.93' L	444										
Sta. 112+17.75 – 0.00' to Sta. 112+39.77 – 0.00'										1	
Begin Bridge Rt.											
Sta. 100+20.90 – 46.25' R to Sta. 102+60.89 – 56.75' R		12.5	225			1		1			5
Sta. 100+21.05 – 46.54' R to Sta. 102+01.90 – 77.28' R	184										
Sta. 100+97.08 – 41.69' R to Sta. 116+19.65 – 129.94' R	1439										
Sta. 102+17.59 – 45.59' R to Sta. 106+69.36 – 72.04' R	460										
Structure No. 52-409-298											
Begin Bridge Lt.											
Sta. 111+40.39 – 42.67' L to Sta. 112+68.50 – 42.00' L		12.5	62.5			1	1				4
Sta. 114+79.13 – 42.01' L to Sta. 117+07.25 – 42.67' L		12.5	162.5			1	1				5
Sta. 128+32.35 – 44.35' L to Sta. 705+77.24 – 24.67' L			962.5				1	1			21
Begin Bridge Rt.											
Sta. 109+99.60 – 117.30' R to Sta. 112+20.15 – 148.13' R	227										
Sta. 110+30.30 – 30.08' R to Sta. 112+31.49 – 64.54' R	215										
Sta. 110+50.34 – 42.67' R to Sta. 112+91.01 – 42.00' R		12.5	175			1	1				5
Sta. 110+98.36 – 84.85' R to Sta. 118+16.90 – 76.90' R	707										
Sta. 111+00.17 – 87.39' R to Sta. 118+16.94 – 79.00' R	708										
Sta. 113+73.83 – 232.11' R to Sta. 113+91.91 – 238.07' R	51										
Sta. 115+01.64 – 42.00' R to Sta. 116+67.25 – 42.67' R		12.5	131.25			1		1			4
Sta. 117+48.50 – 183.76' R to Sta. 117+83.12 – 178.76' R	40										
Structure No. 52-410-290											
Begin Bridge Lt.											
Sta. 138+75.89 – 40.72' L to Sta. 141+27.53 – 51.87' L	255										
Sta. 138+81.68 – 40.80' L to Sta. 140+81.54 – 42.67' L				150			1	1			4
Begin Bridge Rt.											
Sta. 137+11.43 – 50.57' R to Sta. 139+62.03 – 41.94' R	253										
Sta. 137+40.49 – 43.65' R to Sta. 139+53.13 – 41.67' R				162.5			1	1			5
Sta. 147+65.70 – 42.50' R to Sta. 150+28.19 – 42.49' R				212.5			1	1			6
Sta. 147+74.41 – 44.87' R to Sta. 150+24.02 – 42.63' R	252										
Totals:	7140	75	2237.5	1187.5	77	6	9	6	1	1	86

REGISTERED PROFESSIONAL ENGINEER
REG. NO. 8328
JODY W. PAGE
SOUTH DAKOTA
1 MAY 2015

TABLE OF SUPERELEVATION

I-190 NB

Station	to	Station		
100+20.00		100+25.45	-	Normal Crown Section
100+25.45		103+01.45	-	Superelevation Transition
103+01.45		106+86.39	-	3560' Radius Curve Left 0.0340'/' Superelevation Rate Point of Rotation at 20' Right of Centerline
106+86.39		109+62.39	-	Superelevation Transition
109+62.39		123+38.78	-	Normal Crown Section
123+38.78		125+14.28	-	Superelevation Transition
125+14.28		130+04.12	-	6770' Radius Curve Left 0.0240'/' Superelevation Rate Point of Rotation at 20' Right of Centerline
130+04.12		131+79.62	-	Superelevation Transition
131+79.62		149+60.00	-	Normal Crown Section

I-190 SB

Station	to	Station		
100+20.00		100+25.45	-	Normal Crown Section
100+25.45		103+01.45	-	Superelevation Transition
103+01.45		106+86.39	-	3560' Radius Curve Left 0.0340'/' Superelevation Rate Point of Rotation at 20' Left of Centerline
106+86.39		109+62.39	-	Superelevation Transition
109+62.39		123+38.78	-	Normal Crown Section
123+38.78		125+14.28	-	Superelevation Transition
125+14.28		130+04.12	-	6770' Radius Curve Left 0.0240'/' Superelevation Rate Point of Rotation at 20' Left of Centerline
130+04.12		131+79.62	-	Superelevation Transition
131+79.62		154+00.00	-	Normal Crown Section

Ramp A

Station	to	Station		
301+38.34		302+00.00	-	300' Radius Curve Left 0.0175'/' Superelevation Rate Point of Rotation at Centerline
302+00.00		302+20.00	-	Superelevation Transition
302+20.00		313+18.00	-	Normal Crown Section
313+18.00		314+50.57	-	Superelevation Transition

Ramp B

Station	to	Station		
		403+32.45	-	0.0340'/' Superelevation Rate Point of Rotation at Centerline
403+32.45		404+95.00	-	Superelevation Transition
404+95.00		410+75.00	-	Normal Crown Section
410+75.00		411+53.66	-	Superelevation Transition

Ramp C

Station	to	Station		
		603+43.75	-	0.0340'/' Superelevation Rate Point of Rotation at Centerline
603+43.75		603+87.00	-	Superelevation Transition
603+87.00		606+63.00	-	Normal Crown Section
606+63.00		609+19.53	-	Superelevation Transition
609+19.53		610+21.00	-	400' Radius Curve Right 0.0200'/' Superelevation Rate Point of Rotation at Centerline
610+21.00		611+21.71	-	Superelevation Transition

Ramp D

Station	to	Station		
701+40.86		701+71.00	-	175' Radius Curve Right 0.0050'/' Superelevation Rate Point of Rotation at Centerline
701+71.00		702+16.00	-	Superelevation Transition
702+16.00		703+37.20	-	Normal Crown Section
703+37.20		705+22.00	-	Superelevation Transition
705+22.00		710+25.18	-	0.0200'/' Superelevation Rate Point of Rotation at Centerline

Ramp E

Station	to	Station		
350+63.93		350+74.19	-	100' Radius Curve Right 0.0110'/' Superelevation Rate Point of Rotation at Centerline
350+74.19		351+09.19	-	Superelevation Transition
351+09.19		352+39.54	-	Normal Crown Section

Ramp F

Station	to	Station		
450+35.23		451+18.85	-	Normal Crown Section
451+18.85		451+52.86	-	Superelevation Transition

Ramp G

Station	to	Station		
650+20.83		651+37.67	-	Normal Crown Section
651+37.67		651+60.56	-	Superelevation Transition

Ramp H

Station	to	Station		
750+33.81		750+48.11	-	50' Radius Curve Left 0.0290'/' Superelevation Rate Point of Rotation at Centerline
750+48.11		750+76.02	-	Superelevation Transition
750+76.02		752+44.30	-	Normal Crown Section

North Street

Station	to	Station		
		209+87.98	-	0.0400'/' Superelevation Rate
209+87.98		211+32.19	-	Superelevation Transition
211+32.19		213+78.00	-	510' Radius Curve Left 0.0200'/' Superelevation Rate Point of Rotation at Median Lane Line
213+78.00		214+42.00	-	Superelevation Transition
214+42.00		223+00.00	-	0.0100'/' Superelevation Rate Point of Rotation at Centerline
223+00.00		223+68.00	-	Superelevation Transition
223+68.00		224+72.00	-	510' Radius Curve Left 0.0200'/' Superelevation Rate Point of Rotation at Centerline

West Blvd W

Station	to	Station		
10+22.00		10+41.00	-	0.0100'/' Superelevation Rate
10+41.00		11+20.00	-	Superelevation Transition
11+20.00		13+10.00	-	180' Radius Curve Right 0.0200'/' Superelevation Rate Point of Rotation at Centerline
13+10.00		14+15.00	-	Superelevation Transition
14+15.00		26+75.28	-	Normal Crown Section

West Blvd N

Station	to	Station		
50+00.00		50+43.55	-	0.0200'/' Superelevation Rate

REGISTERED PROFESSIONAL ENGINEER
REG. NO. 8328
JODY W. PAGE
SOUTH DAKOTA
1 MAY 2015

TABLE OF CONSTRUCTION STAKING FOR PROJECT IM 1902(61)0
(See Special Provision for Contractor Staking)

Roadway and Description	Begin Station	End Station	Number of Lanes	Length (Ft)	Grade Staking: Length (Mile)	Grade Staking: Lane Factor	Grade Staking: *Sets of Stakes	Grade Staking: **Grade Staking Quantity (Mile)	Miscellaneous Staking Quantity (Mile)	Slope Staking Quantity (Mile)	Structure Staking Quantity (Each)
I190											
SB Mainline	100+20	112+56	2	1236	0.234	1	1	0.234	0.234	0.234	
NB Mainline	100+20	112+56	2	1,236	0.234	1	1	0.234	0.234	0.234	
Wall A (MSE Large Panel Retaining Wall)	111+71	113+04									1
Structure #52-409-294	112+81	114+89									1
SB Mainline	115+20	120+00	2	480	0.091	1	1	0.091	0.091	0.091	
NB Mainline	115+20	120+00	2	480	0.091	1	1	0.091	0.091	0.091	
Wall B (MSE Large Panel Retaining Wall)	114+66	116+30									1
Wall C (MSE Large Panel Retaining Wall)	118+35	126+35									1
SB Mainline	120+00	154+00	2	3400	0.644	1	2	1.288	0.644	0.644	
NB Mainline	120+00	149+43	2	2943	0.557	1	2	1.115	0.557	0.557	
I190 Ramps											
Ramp A	301+45	302+27	2	82	0.016	1	2	0.031	0.016	0.016	
Ramp A	302+27	312+00	2	973	0.184	1	1	0.184	0.184	0.184	
Wall D (MSE Large Panel Retaining Wall)	305+20	310+85									1
Ramp A	312+00	314+51	2	251	0.048	1	2	0.095	0.048	0.048	
Ramp B	403+32	411+00	2	768	0.145	1	1	0.145	0.145	0.145	
Ramp B	411+00	411+47	2	47	0.009	1	2	0.018	0.009	0.009	
Ramp C	603+44	610+32	2	688	0.130	1	1	0.130	0.130	0.130	
Ramp C	610+32	611+08	2	76	0.014	1	2	0.029	0.014	0.014	
Ramp D	701+42	701+93	2	51	0.010	1	2	0.019	0.010	0.010	
Ramp D	701+93	705+35	2	342	0.065	1	1	0.065	0.065	0.065	
Ramp D	705+35	710+25	2	490	0.093	1	2	0.186	0.093	0.093	
Ramp E	350+68	351+05	2	37	0.007	1	2	0.014	0.007	0.007	
Ramp E	351+05	352+38	2	133	0.025	1	1	0.025	0.025	0.025	
Ramp F	450+41	451+12	2	71	0.013	1	1	0.013	0.013	0.013	
Ramp F	451+12	451+48	2	36	0.007	1	2	0.014	0.007	0.007	
Ramp G	650+23	651+50	2	127	0.024	1	1	0.024	0.024	0.024	
Ramp H	750+35	752+38	2	203	0.038	1	1	0.038	0.038	0.038	
North Street	209+02	211+25	3	223	0.042	1.5	1	0.063	0.042	0.042	
Wall J (Gravity Large Concrete Block Retaining Wall)	209+87	211+31									1
North Street	211+25	212+25	4	100	0.019	2	1	0.038	0.019	0.019	
North Street	212+25	213+00	5	75	0.014	2.5	1	0.036	0.014	0.014	
North Street	213+00	213+50	6	50	0.009	3	1	0.028	0.009	0.009	
North Street	213+50	216+32	7	282	0.053	3.5	1	0.187	0.053	0.053	
North Street	216+32	221+85	7	553	0.105	3.5	2	0.733	0.105	0.105	
Special Type C Concrete Retaining Wall	219+48	223+39									1
North Street	221+85	223+20	6	135	0.026	3	2	0.153	0.026	0.026	
North Street	223+20	224+20	5	100	0.019	2.5	2	0.095	0.019	0.019	
North Street	224+20	224+72	4	52	0.010	2	2	0.039	0.010	0.010	
West Blvd. West	10+24	26+75	3	1651	0.313	1.5	1	0.469	0.313	0.313	
Soil Nail Wall with Reinforced Fill Slope	10+80	13+64									1
West Blvd. North	50+24	58+66	3	842	0.159	1.5	1	0.239	0.159	0.159	
							Totals:	6.165	3.449	3.449	8

* 1 = Blue Top Stakes Only (Asphalt Concrete Pavement)
2 = Blue Top and Paving Hub Stakes (PCC Pavement)

** Grade Staking Quantity = (Length) x (Lane Factor) x (Sets of Stakes)

REGISTERED PROFESSIONAL ENGINEER
REG. NO. 8328
JODY W. PAGE
SOUTH DAKOTA
1 MAY 2015

TABLE OF PIPE QUANTITIES

FOR BIDDING PURPOSES ONLY

STATE OF SOUTH DAKOTA	PROJECT	SHEET	TOTAL SHEETS
	IM 1902(61)0	B22	B253

Station	Offset (L/R)	Reinforced Concrete																											Corr. Metal		
		Circular																Flared End					Bend				Arch		CMP	CMP	Slot. Drain
		18" Cl 3	18" Cl 4	24" Cl 3	24" Cl 4	30" Cl 3	36" Cl 3	36" Cl 4	42" Cl 3	42" Cl 4	48" Cl 3	48" Cl 5	84" Cl 3	90" Cl 3	90" Cl 4	96" Cl 3	96" Cl 4		18"	30"	42"	48"		24" 15D	30" 30D	90" 20D	96" 7.5D	18" Cl 3	42" Cl 3	12" 16 Ga	12" Bend 90D	12" Slot. Drain
West Blvd																															
10+48.84-16.17'L to 10+77.70-15.51'R		44																													
10+50.77-16.41'L to 11+82.28-17.08'L		142																													
15+46.49-17.67'L to 15+46.49-17.67'L		34																													
15+46.73-18.67'R to 15+48.65-26.71'R			10																												
16+72.19-18.63'L to 16+72.69-16.67'R																											36				
* 16+77.88-22.29'L to 17+66.39-48.56'L *		94																													
17+68.52-44.32'L to 17+69.68-7.69'R							52																								
17+70.41-49.07'L to 18+07.62-47.37'L				38																											
* 18+11.52-45.89'L to 18+51.34-16.67'L *		48																													
18+51.34-16.67'L to 18+51.41-17.96'R																											36				
19+86.97-10.44'R to 20+59.35-16.65'L									78																						
20+61.00-16.71'R to 20+62.02-14.88'L		32																													
* 20+64.88-17.79'L to 23+54.32-17.74'L *										288																					
23+57.17-14.83'L to 23+58.03-16.76'R		32																													
23+57.93-20.33'L to 23+59.71-26.10'L								8																							
23+59.86-17.67'L to 25+22.86-17.65'L		162																													
25+24.43-16.61'L to 25+26.25-16.74'R		34																													
West Blvd North																															
50+50.56-17.00'L to 51+12.85-16.56'R		64																													
51+11.14-15.67'L to 51+14.25-15.67'R																											32				
I-190 Mainline																															
100+26.42-0.00' to 100+35.00-0.00'				8																											
100+34.95-45.42'L to 100+35.00-7.33'L		38																													
100+34.97-45.92'R to 100+35.00-7.33'R		38																													
100+35.00-2.50' L to 100+35.00-5.33'L		4																													
100+35.00-5.33'R to 100+35.00-2.50'R				4																											
100+36.48-6.33'R to 102+59.85-6.33'R		222																													
102+59.60-55.69'L to 102+59.85-4.83'R		62																													
102+61.85-6.29'R to 104+11.42-6.30'R		150																													
104+09.89-59.11'L to 104+12.88-5.33'R		66																													
105+83.04-42.67'R to 105+83.79-45.02'R				4																											
105+83.11-40.67'R to 105+96.18-7.83'R				36																											
105+86.43-48.29'R to 106+21.52-76.86'R				44																											
105+96.05-71.38'L to 106+01.18-47.40'L		26																													
105+96.64-5.33'L to 105+96.77-4.83'R				12																											
105+96.81-7.33'L to 106+02.73-40.17'L		34																													
106+01.72-45.44'L to 106+02.49-43.17'L		4																													
106+23.44-77.31'R to 107+92.77-120.63'R					178																										
107+57.99-105.33'L to 107+95.57-117.90'R												228																			
107+57.16-110.26'L to 108+68.50-6.33' L					146																										
108+70.00-5.33'L to 108+70.00-40.17'R		46																													
Subtotal:		1154	10	146	324	0	52	8	78	288	0	228	0	0	0	0	0		0	0	0	0		0	0	0	0	104	0	0	0	0

Pipes denoted with an asterisk(*) indicate that the entire length or a portion of the pipe requires watertight joints in accordance with the STORM SEWER plan note.

REGISTERED PROFESSIONAL ENGINEER
REG. NO. 8328
JODY W. PAGE
SOUTH DAKOTA
MAY 2015

TABLE OF PIPE QUANTITIES

FOR BIDDING PURPOSES ONLY

STATE OF SOUTH DAKOTA	PROJECT	SHEET	TOTAL SHEETS
	IM 1902(61)0	B23	B253

Station	Offset (L/R)	Reinforced Concrete																										Corr. Metal		
		Circular																	Flared End					Bend				Arch		CMP	CMP	Slot. Drain
		18" Cl 3	18" Cl 4	24" Cl 3	24" Cl 4	30" Cl 3	36" Cl 3	36" Cl 4	42" Cl 3	42" Cl 4	48" Cl 3	48" Cl 5	84" Cl 3	90" Cl 3	90" Cl 4	96" Cl 3	96" Cl 4		18"	30"	42"	48"		24" 15D	30" 30D	90" 20D	96" 7.5D	18" Cl 3	42" Cl 3	12" 16 Ga	12" Bend 90D	12" Slot. Drain
I-190 Mainline																																
108+71.50-6.33'R to 109+48.34-6.33'R				76																												
109+49.84-40.67'L to 109+49.84-7.33'L		34																														
109+49.84-5.33'L to 109+49.87-5.33'R			12																													
109+49.88-7.33'R to 109+50.00-40.67'R			34																													
109+51.34-6.29'L to 111+84.00-0.03'L		234																														
111+85.00-1.50'L to 111+85.00-40.67'L		40																														
111+85.00-1.50'R to 111+85.00-40.67'R		40																														
115+30.34-40.67'L to 115+30.35-3.00'L		38																														
115+30.35-1.00'L to 115+30.36-1.00'R		2																														
115+30.35-41.42'R to 115+30.36-2.00'R		38																														
115+31.86-2.00'R to 118+61.93-2.00'R		332																														
117+27.37-128.88'L to 118+64.49-102.38'L						140																										
118+63.11-40.17'L to 118+63.42-3.00'L				38																												
118+63.17-40.67'R to 118+63.42-3.00'R		38																														
118+63.18-43.17'L to 118+66.34-99.99'L				58																												
118+63.43-1.00'R to 118+63.43-1.00'L				2																												
118+68.43-101.68'L to 121+52.11-54.97'L						288																										
121+53.83-40.67'L to 121+54.34-3.00'L						38																										
121+53.91-41.67'R to 121+54.30-3.58'R		38																														
121+54.34-0.00' to 121+59.39-6.00'L																												4	1			
121+57.01-0.00'L to 125+11.48-0.01'L				356																												
121+59.39-6.00'L to 125+14.08-6.51'L																														354		
125+13.82-58.27'L to 125+14.13-3.58'L		56																														
125+13.92-40.67'R to 125+14.13-3.58'R		38																														
125+13.95-42.67'R to 125+14.56-61.08'R		20																														
125+14.07-2.93'L to 125+14.08-6.51'L																												4	1			
125+14.08-6.51'L to 126+99.84-7.21'L																														186		
125+14.62-63.09'R to 125+15.40-86.29'R		24																														
125+16.81-0.04'R to 126+96.85-0.04'L		182																														
126+98.71-71.21'R to 126+99.47-3.58'R		70																														
126+99.58-3.58'L to 127+00.36-48.95'L		46																														
126+99.84-7.21'L to 126+99.85-3.06'L																												4	1			
126+99.84-7.21'L to 128+50.50-5.47'L																														150		
127+02.59-0.00'R to 128+47.33-0.03'L		146																														
128+50.46-3.06'L to 128+50.50-5.47'L																												2	1			
128+50.50-5.47'L to 130+24.59-5.78'L																														174		
129+98.30-208.76'L to 130+22.88-87.53'L								124												1												
130+22.11-104.02'R to 130+24.08-58.50'R								46																								
130+22.99-84.19'L to 130+24.11-43.17'L								42																								
130+24.14-55.50'R to 130+24.14-3.58'R								54																								
130+24.15-3.58'L to 130+24.59-5.78'L																												2	1			
Subtotal:		1416	46	530	0	466	0	0	266	0	0	0	0	0	0	0	0		0	0	1	0		0	0	0	0	0	0	16	5	864

Pipes denoted with an asterisk(*) indicate that the entire length or a portion of the pipe requires watertight joints in accordance with the STORM SEWER plan note.

REGISTERED PROFESSIONAL ENGINEER
REG. NO. 8328
JODY W. PAGE
SOUTH DAKOTA
1 MAY 2015

TABLE OF PIPE QUANTITIES

FOR BIDDING PURPOSES ONLY

STATE OF SOUTH DAKOTA	PROJECT	SHEET	TOTAL SHEETS
	IM 1902(61)0	B24	B253

Station	Offset (L/R)	Reinforced Concrete																											Corr. Metal		
		Circular																	Flared End					Bend				Arch		CMP	CMP	Slot. Drain
		18" Cl 3	18" Cl 4	24" Cl 3	24" Cl 4	30" Cl 3	36" Cl 3	36" Cl 4	42" Cl 3	42" Cl 4	48" Cl 3	48" Cl 5	84" Cl 3	90" Cl 3	90" Cl 4	96" Cl 3	96" Cl 4		18"	30"	42"	48"		24" 15D	30" 30D	90" 20D	96" 7.5D	18" Cl 3	42" Cl 3	12" 16 Ga	12" Bend 90D	12" Slot. Drain
I-190 Mainline																																
130+24.15-3.58'L to 130+24.15-40.17'L								38																							
130+24.59-5.78'L to 131+00.00-6.00'L																															76
130+26.23-86.03'L to 130+77.07-86.00'L		52																													
130+26.81-0.01'L to 131+93.87-0.01'L							168																								
130+79.43-119.75'L to 130+80.75-87.49'L		34																													
131+80.51-52.35'R to 131+96.52-3.58'R		52																													
131+96.64-3.59'L to 131+97.64-40.17'L		38																													
131+99.20-0.01'L to 134+19.69-0.00'L							222																								
134+20.32-40.17'L to 134+22.17-3.58'L		38																													
134+22.38-3.58'R to 134+22.70-47.50'R		46																													
134+25.03-0.00'L to 136+10.15-0.00'L						186																									
136+12.23-40.17'L to 136+12.77-3.17'L		38																													
136+12.98-3.17'R to 136+15.10-43.66'R		42																													
136+15.48-0.00'L to 138+08.81-0.00'L						194																									
138+08.40-40.67'R to 138+08.69-37.22'R				4																											
138+09.09-32.20'R to 138+11.25-3.17'R				30																											
138+11.19-40.17'L to 138+11.46-3.17'L		38																													
138+11.40-34.71'R to 140+16.74-34.11'R				206																											
140+18.28-40.67'L to 140+21.17-3.18'L		38																													
140+18.84-40.17'R to 140+19.07-36.60'R		4																													
140+19.40-31.59'R to 140+21.22-3.15'R		30																													
140+21.99-41.67'R to 142+43.43-41.67'R		222																													
142+46.20-40.17'R to 142+46.82-3.17'R		38																													
144+64.97-151.37'L to 144+65.01-95.95'L										56											2										
144+73.78-58.04'L to 144+73.98-43.17'L								16												1											
144+73.69-3.58'L to 144+73.99-40.17'L																												38			
144+73.71-3.58'R to 144+74.21-38.92'R																												36			
144+74.25-41.67'R to 146+54.85-70.22'R								182												1											
144+76.32-0.00' to 148+21.93-0.00'		346																													
North Street																															
209+06.92-17.06'L to 211+56.02-9.61'L		248																													
211+59.16-11.61'L to 211+67.88-48.64'L		40																													
214+41.54-43.79'R to 215+10.93-41.40'R		70																													
214+84.92-39.84'L to 215+18.45-39.30'L		34																													
215+20.60-41.51'R to 216+19.31-45.98'R				100																											
216+23.24-44.61'R to 216+61.81-42.13'L		96																													
* 218+52.96-67.40'L to 219+15.62-44.32'L *				74																											
218+74.73-47.58'R to 218+78.73-52.59'R				6																											
218+81.16-55.58'R to 219+04.95-82.73'R		34																													
219+07.54-79.16'R to 219+15.18-12.00'R							68																								
219+15.41-9.00'R to 219+18.09-42.09'L						52																									
Subtotal:		1578	0	420	0	432	458	0	236	0	56	0	0	0	0	0	0		0	0	2	2		0	0	0	0	0	74	0	0	76

Pipes denoted with an asterisk(*) indicate that the entire length or a portion of the pipe requires watertight joints in accordance with the STORM SEWER plan note.

REGISTERED PROFESSIONAL ENGINEER
REG. NO. 8328
JODY W. PAGE
SOUTH DAKOTA
1 MAY 2015

TABLE OF PIPE QUANTITIES

FOR BIDDING PURPOSES ONLY

STATE OF SOUTH DAKOTA	PROJECT	SHEET	TOTAL SHEETS
	IM 1902(61)0	B25	B253

Station / Offset (L/R)	Reinforced Concrete																											Corr. Metal		
	Circular																	Flared End					Bend				Arch		CMP	CMP	Slot. Drain
	18" Cl 3	18" Cl 4	24" Cl 3	24" Cl 4	30" Cl 3	36" Cl 3	36" Cl 4	42" Cl 3	42" Cl 4	48" Cl 3	48" Cl 5	84" Cl 3	90" Cl 3	90" Cl 4	96" Cl 3	96" Cl 4		18"	30"	42"	48"		24" 15D	30" 30D	90" 20D	96" 7.5D	18" Cl 3	42" Cl 3	12" 16 Ga	12" Bend 90D	12" Slot. Drain
North Street																														
* 219+20.69-43.72'L to 219+96.43-53.97'L *	84																													
220+54.06-10.10'R to 221+66.74-7.96'L	114																													
221+68.77-8.05'L to 222+22.06-36.17'R	68																													
221+68.85-6.56'L to 221+69.74-10.40'R	18																													
222+25.40-37.34'R to 223+35.15-34.37'R	118																													
223+40.37-32.86'R to 223+41.77-29.96'L			64																											
* 223+41.82-31.96'L to 223+74.15-43.30'L *	28																	1												
Ramp A																														
302+09.01-0.67'L to 302+31.34-33.96'R	42																													
303+12.53-98.81'R to 304+64.97-41.77'R			180																											
304+65.12-0.67'L to 304+67.86-39.65'R	42																													
304+67.95-41.15'R to 304+75.92-49.45'R			10																											
304+70.85-40.05'R to 306+58.34-1.43'L	198																													
304+75.92-49.45'R to 305+21.44-102.14'R			72																				2							
305+21.44-102.14'R to 305+29.15-107.37'R			8																											
306+59.87-0.67'L to 306+60.83-28.09'R	28																													
306+61.34-1.67'L to 308+61.54-1.67'L	202																													
308+62.53-25.42'R to 308+63.02-0.67'L	26																													
308+64.54-1.67'L to 310+60.06-1.67'L	196																													
310+61.57-0.67'L to 310+61.64-25.07'R	26																													
Ramp E																														
* 350+84.46-17.57'L to 350+98.73-4.41'L *			18																											
350+99.91-3.04'L to 351+41.29-24.67'R			42																											
Ramp B																														
405+68.15-46.38'R to 408+57.39-46.86'R									290																					
408+59.97-0.67'L to 408+60.21-23.67'R	26																													
408+60.23-25.67'R to 408+60.37-43.86'R	20																													
408+63.39-46.64'R to 410+57.23-92.65'R								244																						
409+63.18-28.10'R to 409+64.79-0.67'L	30																													
409+66.37-1.89'L to 410+93.19-25.01'R	134																													
410+60.92-94.08'R to 410+94.85-28.98'R	80																													
410+96.39-24.96'R to 410+99.74-0.67'L	26																													
411+01.40-1.98'L to 411+47.55-5.69'L	46																													
Subtotal:	1552	0	394	0	0	0	0	244	290	0	0	0	0	0	0	0		1	0	0	0		2	0	0	0	0	0	0	0	0

Pipes denoted with an asterisk(*) indicate that the entire length or a portion of the pipe requires watertight joints in accordance with the STORM SEWER plan note.

REGISTERED PROFESSIONAL ENGINEER
REG. NO. 8328
JODY W. PAGE
SOUTH DAKOTA
1 MAY 2015

TABLE OF PIPE QUANTITIES

FOR BIDDING PURPOSES ONLY

STATE OF SOUTH DAKOTA	PROJECT	SHEET	TOTAL SHEETS
	IM 1902(61)0	B26	B253

Station	Offset (L/R)	Reinforced Concrete																										Corr. Metal		
		Circular																Flared End					Bend				Arch		CMP	CMP	Slot. Drain
		18" Cl 3	18" Cl 4	24" Cl 3	24" Cl 4	30" Cl 3	36" Cl 3	36" Cl 4	42" Cl 3	42" Cl 4	48" Cl 3	48" Cl 5	84" Cl 3	90" Cl 3	90" Cl 4	96" Cl 3	96" Cl 4	18"	30"	42"	48"		24" 15D	30" 30D	90" 20D	96" 7.5D	18" Cl 3	42" Cl 3	12" 16 Ga	12" Bend 90D	12" Slot. Drain
Large Diameter Storm Pipe																														
496+72.76-76.58'L to 496+80.61-74.06'L						8													1					1						
496+89.33-0.00' to 498+01.45-0.00'																114										4				
498+01.45-0.00' to 500+68.26-0.00'																	260													
496+98.90-79.77'L to 496+80.61-74.06'L						20																								
499+81.93-62.88'L to 500+12.97-66.07'L		32																2												
500+68.26-0.00' to 503+43.31-0.00'															268															
503+43.31-0.00' to 505+37.44-0.00'														190																
505+37.44-0.00' to 506+07.20-0.00'														66																
506+07.20-0.00' to 506+88.20-0.00'														76																
506+88.20-0.00' to 507+53.69-0.00'														62																
507+53.69-0.00' to 508+44.35-0.00'														86																
508+44.35-0.00' to 509+85.00-0.00'															136										1					
509+85.00-0.00' to 510+64.04-0.00'															76															
510+61.04-0.11'R to 512+11.49-0.00'														150																
512+17.49-0.04'L to 514+19.28-0.06'R													200																	
Ramp C																														
604+98.15-100.34'L to 605+11.44-49.54'L			54															1												
607+86.89-37.95'L to 607+87.25-30.81'L			6																											
607+88.81-29.43'L to 608+29.53-1.67'R		50																												
609+68.39-59.13'L to 609+96.28-0.16'R		68																												
Ramp G																														
650+79.27-4.92'R to 650+79.55-24.17'L				30																										
650+79.56-25.17'L to 650+79.99-27.92'L				2																										
Ramp D																														
* 701+11.79-30.96'R to 701+72.00-3.18'R *		62																												
* 701+73.25-36.44'L to 701+86.98-25.86'L *		20																												
* 701+75.02-0.16'R to 701+88.01-23.17'L *		28																												
702+32.19-99.86'L to 702+90.56-0.17'R		120																												
704+82.61-65.04'L to 704+82.84-24.67'L						40																								
704+82.85-23.17'L to 704+82.97-0.17'R						24																								
706+23.09-24.42'L to 706+26.64-1.67'R		24																												
709+14.89-24.42'L to 709+18.11-1.67'R		24																												
709+18.11-1.67'R to 709+19.16-13.60'R						10																								
Ramp H																														
750+93.52-31.20'L to 750+96.03-24.67'L		6																												
750+95.87-4.49'R to 750+96.02-23.67'L		30																												
Subtotal:		464	60	32	0	102	0	0	0	0	0	0	200	630	480	114	260	3	1	0	0	0	1	1	4	0	0	0	0	0
Total:		6164	116	1522	324	1000	510	8	824	578	56	228	200	630	480	114	260	4	1	3	2	2	1	1	4	104	74	16	5	940

Pipes denoted with an asterisk(*) indicate that the entire length or a portion of the pipe requires watertight joints in accordance with the STORM SEWER plan note.

REGISTERED PROFESSIONAL ENGINEER
REG. NO. 8328
JODY W. PAGE
SOUTH DAKOTA
MAY 2015

TABLE OF FENCE QUANTITIES

FOR BIDDING PURPOSES ONLY

STATE OF SOUTH DAKOTA	PROJECT	SHEET	TOTAL SHEETS
	IM 1902(61)0	B27	B253

Station to Station			Chain Link Fence: 4' with Top Rail (Ft)	Chain Link Fence: 6' with Tensioned Wire (Ft)	Chain Link Fence: 6' Single Vehicular Swing Gate (12' Width) (Ea)	Fence Salvage (Ft)	Fence Remove (Ft)	Fence Remove for Reset (Ft)	Fence Reset (Ft)
14+91	15+91	R/L				164			
16+32	16+61	L				121			
19+67	19+77	L					38		
21+93	22+17	L/R					41		
100+20	113+81	R		1395					
100+20	112+51	L		1228					
102+49		L			1				
102+50		R			1				
103+08	103+21	L					144		
109+04	109+39	R						66	66
112+95	138+83	L		2719					
114+84	138+93	R		2436					
115+54	116+63	R/L				244			
115+54	130+00	R				1476			
115+70		R			1				
116+63	120+68	L				410			
119+15	130+00	L				1095			
130+00	145+00	R				1205			
130+00	145+00	L				1450			
139+46	151+22	L		1181					
139+48	151+30	R		1186					
145+00	153+28	R				829			
145+00	153+28	L				830			
219+74	223+52	L	362						
		TOTALS:	362	10145	3	7824	223	66	66

REGISTERED PROFESSIONAL ENGINEER
REG. NO. 8328
JODY W. PAGE
SOUTH DAKOTA
MAY 2015

TABLE OF PAVEMENT, CURB AND GUTTER, AND SIDEWALK QUANTITIES

FOR BIDDING PURPOSES ONLY

STATE OF SOUTH DAKOTA	PROJECT	SHEET	TOTAL SHEETS
	IM 1902(61)0	B28	B253

Rev. 06/05/2015 AJF

Station to Station		PCC Fillet Section			Concrete Curb and Gutter												Concrete Gutter									Type B				Concrete Sidewalk				Reinf Conc Sidewalk			Detectable Warning						
					Type B		Type BL		Type D			Type DL		Type F			Type P			PCC Approach Pavement			Reinforced PCC Approach Pavement				Colored		Colored						Type 1							
			9"		66	69	66		46	49	411	46		66	69	611	6	9	11		6"			6"		4"	4"	5"	5"	4"	5"										
			SqYd		Ft	Ft	Ft		Ft	Ft	Ft	Ft		Ft	Ft	Ft	Ft	Ft	Ft		SqYd			SqYd		SqFt	SqFt	SqFt	SqFt	SqFt	SqFt			SqFt							
West Boulevard																																											
10+24.02 - 49.86' L	16+78.90 - 26.67' L																											5354			101			34							
16+78.90 - 26.67' L	17+10.90 - 26.67' L																							28																	
16+84.90 - 16.00' L	209+01.71 - 15.40' L				918																																				
16+84.90 - 16.00' L	17+04.90 - 16.00' L																20																								
17+04.90 - 16.00' L	31+13.00 - 16.00' L				159																																				
17+10.90 - 26.67' L	17+54.58 - 30.67' L																											420													
18+23.21 - 30.67' L	19+82.59 - 26.64' L																											1346													
19+82.59 - 26.67' L	20+14.87 - 26.67' L																							28																	
19+88.63 - 16.00' L	20+08.77 - 16.00' L																20																								
19+88.63 - 16.00' L	31+35.00 - 16.00' R				256																																				
20+08.77 - 16.00' L	41+50.00 - 14.00' L				399																																				
20+14.87 - 26.67' L	22+78.91 - 30.64' L																											2166													
23+45.42 - 30.67' L	26+57.02 - 26.67' L																											2542													
26+57.02 - 26.67' L	26+73.44 - 28.31' L																									86															
26+75.18 - 15.61' L	41+50.00 - 14.00' R				479																																				
26+75.39 - 16.00' R	752+50.30 - 23.00' L				2151																																				
28+89.96 - 23.18' L	29+05.11 - 34.33' L																									101								10							
Silver Street																																									
30+30.67 - 34.32' L	31+65.00 - 29.67' L																									866								10							
30+30.67 - 34.32' R	31+65.00 - 29.67' R																									678								10							
31+07.00 - 24.67' L	31+39.00 - 24.67' L																				22																				
31+13.00 - 16.00' L	31+33.00 - 16.00' L																20																								
31+33.00 - 16.00' L	31+65.00 - 16.00' L				32																																				
31+04.89 - 24.67' R	31+36.89 - 24.67' R																				22																				
31+10.89 - 16.00' R	31+65.00 - 16.00' R				34												20																								
Boegel Street																																									
40+30.87 - 33.37' L	41+50.00 - 22.67' L																									738								10							
40+30.88 - 32.32' R	41+50.00 - 22.67' R																									909								10							
West Boulevard North																																									
50+08.64 - 23.67' L	50+24.42 - 23.67' L																									95															
50+24.42 - 15.00' L	50+30.42 - 15.00' L				6																																				
50+24.42 - 15.25' R	51+11.77 - 15.00' R						64																																		
50+24.42 - 23.67' L	50+47.42 - 23.67' L																				15																				
50+30.42 - 15.00' L	50+41.42 - 15.00' L																11																								
50+42.78 - 25.54' R	50+84.36 - 19.36' R																									207								10							
50+41.42 - 15.00' L	58+64.75 - 22.56' L				825																																				
50+47.42 - 23.67' L	50+64.53 - 23.67' L																									127				21				10							
51+11.77 - 15.00' R	51+91.55 - 15.00' R				80																																				
51+85.55 - 22.67' R	52+09.55 - 22.67' R																				13																				
51+91.55 - 15.00' R	52+03.55 - 15.00' R																12																								
52+03.55 - 15.00' R	61+00.00 - 12.70' R				245																																				
	Subtotal:		0		5584	0	64		0	0	0	0		0	0	0	103	0	0		72			56		3807	0	11828	0	21	101			104							

REGISTERED PROFESSIONAL ENGINEER
REG. NO. 8320
JODY W. PAGE
SOUTH DAKOTA
5 JUN 15

TABLE OF PAVEMENT, CURB AND GUTTER, AND SIDEWALK QUANTITIES

FOR BIDDING PURPOSES ONLY

STATE OF SOUTH DAKOTA	PROJECT	SHEET	TOTAL SHEETS
	IM 1902(61)0	B29	B253

Rev. 06/05/2015 AJF

Station to Station		PCC Fillet Section	Concrete Curb and Gutter												Concrete Gutter			Type B			Concrete Sidewalk				Reinf Conc Sidewalk		Detectable Warning	
			Type B		Type BL		Type D			Type DL		Type F			Type P			PCC Approach Pavement		Reinforced PCC Approach Pavement			Colored		Colored		Type 1	
		9"	66	69	66		46	49	411	46		66	69	611	6	9	11		6"			6"		4"	4"	5"	5"	4"	5"		
		SqYd	Ft	Ft	Ft		Ft	Ft	Ft	Ft		Ft	Ft	Ft	Ft	Ft	Ft		SqYd			SqYd		SqFt	SqFt	SqFt	SqFt	SqFt	SqFt		SqFt
West Boulevard North																															
58+48.96 - 26.65' R	58+54.77 - 42.61' R																							110							10
58+57.16 - 73.62' R	61+07.00 - 11.30' L		577																												
**58+57.44 - 42.62' R	58+57.16 - 73.62' R		31																												
**58+91.04 - 31.45' R	59+08.72 - 13.79' R		25																												
Adams Street																															
60+25.82 - 23.73' L	60+41.57 - 17.18' L																							111							10
60+26.26 - 23.67' R	60+43.93 - 17.16' R																							178							10
Interstate 190																															
100+20.00 - 44.00' L	603+12.99 - 23.00' L						536																								
100+20.00 - 8.00' L	111+80.50 - 8.00' L											1161																			
100+20.00 - 8.00' R	111+80.50 - 8.00' R											1161																			
100+20.00 - 44.50' R	102+67.05- 55.06' R						248																								
102+67.05- 55.06' R	450+29.16 - 23.00' R											1010																			
105+74.80 - 40.00' R	110+06.84 - 40.00' R											432																			
105+93.13 - 40.00' L	110+96.89 - 40.00' L											504																			
110+06.84 - 40.00' R	111+06.36 - 40.00' R														100																
110+96.89 - 40.00' L	111+96.41 - 40.00' L														100																
111+06.36 - 40.00'R	112+52.27 - 40.00' R						149																								
111+96.41 - 40.00' L	112+52.27 - 40.00' L						59																								
115+17.87 - 40.00' L	116+51.25 - 40.00' L						133																								
115+17.87 - 40.00' R	116+54.76 - 40.00' R						137																								
116+51.25 - 40.00' L	117+44.75 - 40.00' L														94																
116+54.76 - 40.00' R	120+00.00 - 40.00' R											345																			
117+44.75 - 40.00' L	120+00.00 - 40.00' L											255																			
120+00.00 - 40.00' L	122+60.94 - 40.00' L													261																	
120+00.00 - 40.00' R	127+00.53 - 40.00' R													701																	
127+75.90 - 44.50' L	128+76.09 - 40.00' L																100														
128+76.09 - 40.00' L	138+30.00 - 40.00' L													954																	
127+75.90 - 44.50' L	710+25.34 - 23.00' L								606																						
129+99.47 - 109.94' R	130+56.82 - 110.15' R		58																												
130+06.07 - 119.51' L	130+26.42 - 160.99' L		49																												
130+10.52 - 87.65' L	130+89.57 - 87.67' L		79																												
130+70.41 - 119.94' L	130+88.12 - 119.58' L		17																												
136+96.35 - 41.86' R	137+96.51 - 40.00' R																100														
136+96.35 - 41.86' R	314+50.55 -23.00' R													1248																	
137+96.51 - 40.00' R	139+59.38 - 40.00' R								163																						
138+75.41 - 39.23' L	140+25.52 - 40.00' L								150																						
139+59.38 - 40.00' R	146+74.64 - 40.00' R													715																	
140+25.52 - 40.00' L	141+25.64 - 40.00' L																100														
141+25.64 - 40.00' L	146+74.64 - 40.00' L													549																	
141+53.40 - 114.15' R	143+79.95 - 113.86' R		227																												
South I-190 Crossover																															
100+35 - R/L	103+80 - R/L															690															
	Subtotal:	0	1063	0	0		1262	0	919	0		4868	0	4428	294	690	300		0			0		399	0	0	0	0	0		30

REGISTERED PROFESSIONAL ENGINEER
REG. NO. 8326
JODY W. PAGE
SOUTH DAKOTA
5 JUN 15

TABLE OF PAVEMENT, CURB AND GUTTER, AND SIDEWALK QUANTITIES

FOR BIDDING PURPOSES ONLY

STATE OF SOUTH DAKOTA	PROJECT	SHEET	TOTAL SHEETS
	IM 1902(61)0	B30	B253

Rev. 06/05/2015 AJF

Station to Station		PCC Fillet Section			Concrete Curb and Gutter												Concrete Gutter									Type B											
					Type B		Type BL		Type D			Type DL		Type F			Type P			PCC Approach Pavement			Reinforced PCC Approach Pavement				Colored		Colored					Type 1				
			9"		66	69	66		46	49	411	46		66	69	611	6	9	11		6"			6"		4"	4"	5"	5"	4"	5"						
			SqYd		Ft	Ft	Ft		Ft	Ft	Ft	Ft		Ft	Ft	Ft	Ft	Ft	Ft		SqYd			SqYd		SqFt	SqFt	SqFt	SqFt	SqFt	SqFt			SqFt					
North Street																																					
209+72.25 - 23.08' L	211+29.54 - 28.92' L																									774											
209+87.82 - 24.77' R	211+20.17 - 29.65' R																									675											
209+87.98 - 17.10' R	211+53.36 - 54.60' R				187																																
211+19.98 - 32.65' R	211+43.84 - 52.78' R																											361						34			
211+78.47 - 57.97' R	650+14.83 - 23.00' L				451																																
211+85.02 - 43.28' R	214+97.39 - 69.56' R																											3029						63			
212+11.44 - 45.90' L	215+21.28 - 63.67' L																											3164						49			
215+37.16 - 68.17' R	216+16.41 - 68.17' R																											930						52			
215+55.28 - 63.67' L	216+64.16 - 63.67' L																											1168						45			
216+32.38 - 41.51' L	701+93.44 - 23.00' L					72																															
216+32.38 - 41.51' L	752+37.73 - 3.96' R				280																																
216+32.38 - 44.28' R	610+32.25 - 32.00' L					34																															
216+32.38 - 44.28' R	650+23.03 - 2.06' R				227																																
216+71.38 - 68.17' R	217+75.36 - 68.17' R																											927						59			
216+90.51 - 54.17' R	217+64.69 - 54.17' R																												559								
216+97.15 - 63.67' L	217+88.41 - 63.67' L																											787						62			
217+07.47 - 49.67' L	217+66.24 - 49.67' L																												405								
218+08.81 - 68.17' R	218+73.22 - 68.17' R																											690						45			
218+34.49 - 8.83' L	221+84.97 - 9.77' L					343																															
218+34.49 - 17.17' R	221+85.48 - 12.46' R					344																															
218+45.68 - 63.67' L	219+20.77 - 63.67'L																											974									
219+12.73 - 67.02' R	222+45.18 - 94.69' R																									2101											
219+53.56 - 75.03' L	224+61.74 - 47.87' L																									3080				90							
219+97.24 - 62.58' L	220+05.63 - 55.76' L				20																																
220+23.72 - 82.36' R	221+29.49 - 66.83' R				55																																
220+23.72 - 82.36' R	405+98.13 - 77.67' R						559																														
220+79.87 - 139.34' R	220+79.87 - 139.34' R				80																																
222+08.03 - 81.68' R	222+55.26 - 68.72' R				95																																
222+25.35 - 35.86' R	451+11.69 - 23.00' R					338																															
222+25.35 - 35.86' R	222+55.26 - 68.72' R		42.3																																		
222+25.43 - 133.43' R	222+31.61 - 135.18' R				8																																
222+31.61 - 135.18' R	222+89.48 - 71.38' R								107																												
222+73.43 - 167.60' R	222+72.87 - 163.67' R						4																														
222+72.87 - 163.67' R	223+00.76 - 101.60' R											67																									
222+89.48 - 71.38' R	222+90.50 - 60.23' R					11																															
222+90.50 - 60.23' R	223+18.15 - 31.89' R		29.1																																		
222+95.92 - 49.65' R	224+64.48 - 47.74' R																									1687		773		123							
223+00.76 - 101.60' R	223+04.04 - 100.92' R				4																																
223+18.15 - 31.89' R	224+39.08 - 26.48' R					211																															
224+37.21 - 25.00' L	352+11.26 - 23.00' R					500																															
224+37.21 - 25.00' L	224+64.87 - 53.08' L		30.6																																		
224+39.08 - 26.48' R	224+67.96 - 55.00' R		30.9																																		
	Subtotal:		133		1407	1853	563		107	0	0	67		0	0	0	0	0	0		0			0		8317	0	12803	964	213	0			409			

REGISTERED PROFESSIONAL ENGINEER
REG. NO. 8326
JODY W. PAGE
SOUTH DAKOTA
5 JUN 15

TABLE OF PAVEMENT, CURB AND GUTTER, AND SIDEWALK QUANTITIES

FOR BIDDING PURPOSES ONLY

STATE OF SOUTH DAKOTA	PROJECT	SHEET	TOTAL SHEETS
	IM 1902(61)0	B31	B253

Rev. 06/05/2015 AJF

Station to Station		PCC Fillet Section			Concrete Curb and Gutter												Concrete Gutter									Type B											
					Type B		Type BL		Type D			Type DL		Type F			Type P			PCC Approach Pavement			Reinforced PCC Approach Pavement			Colored		Colored						Type 1					
			9"		66	69	66		46	49	411	46		66	69	611	6	9	11		6"			6"		4"	4"	5"	5"	4"	5"							
			SqYd		Ft	Ft	Ft		Ft	Ft	Ft	Ft		Ft	Ft	Ft	Ft	Ft	Ft		SqYd			SqYd		SqFt	SqFt	SqFt	SqFt	SqFt	SqFt			SqFt					
Ramp A																																							
302+26.87 - 0.00'	303+85.60 - 0.00'				159																																		
302+26.87 - 0.00'	701+93.44 - 0.00'					175																																	
302+26.87 - 32.00' R	303+79.60 - 32.00' R				153																																		
302+26.87 - 32.00' R	351+05.40 - 3.55' L					170																																	
303+85.60 - 0.00'	312+00.00 - 0.00'													815																									
304+72.44 - 46.35' R	311+30.49 - 30.84' R																										3330												
312+00.00 - 0.00'	352+37.64 - 23.00' R													822																									
Ramp E																																							
351+05.40 - 3.55' L	352+37.64 - 2.04' L				134																																		
351+05.40 - 23.00' R	352+11.26 - 23.00' R				106																																		
Ramp B																																							
403+32.45 - 0.00'	410+27.90 - 0.00'													696																									
405+89.47 - 70.00' R	410+61.37 - 160.77' R																									2829													
405+92.08 - 126.68' R	405+98.13 - 77.67' R				49																																		
406+93.15 - 197.10' R	406+94.79 - 195.95' R				2																																		
406+94.79 - 195.95' R	407+23.03 - 176.15' R																35																						
407+01.86 - 209.52' R	407+33.39 - 187.42' R																							53															
407+16.07 - 210.31' R	407+42.23 - 199.64' R																									200													
407+23.03 - 176.15' R	407+73.90 - 174.05' R				51																																		
410+27.90 - 0.00'	411+00.07 - 0.00'				72																																		
410+33.90 - 23.00' R	411+00.07 23.00' R				66																																		
411+00.07- 0.00'	610+32.25 -0.00'					197																																	
411+00.07 - 23.00' R	451+11.69 - 2.52' L					130																																	
Ramp F																																							
450+29.16 - 23.00' R	451+11.69 - 23.00' R				83																																		
450+40.53 - 3.83' L	451+11.69 - 2.52' L				71																																		
Ramp C																																							
603+43.75 - 0.00'	609+15.92 - 0.00'													572																									
603+12.99 - 23.00' L	604+01.22 - 23.73' L																88																						
604+01.22 - 23.73' L	650+14.83 - 23.00' L													519																									
609+15.92 - 0.00'	610+32.25 - 0.00'				116																																		
609+21.92 - 32.00' L	610+32.25 - 32.00' L				110																																		
Ramp D																																							
701+93.44 - 0.00'	703+36.30 - 0.00'				143																																		
701+93.44 - 23.00' L	703+30.30 - 23.00'				137																																		
703+36.30 - 0.00'	705+35.00 - 0.00'													199																									
705+35.00 - 0.00'	710+95.04 - 0.00'														560																								
705+35.00 - 23.00' L	705+70.99 - 23.00' L														36																								
705+35.00 - 23.00' L	752+50.30 -23.00' L													199																									
705+70.99 - 23.00' L	710+25.34 - 23.00' L									454																													
Subtotal:			0		1452	672	0		0	454	0	0		3822	596	0	123	0	0		0			53		3029	3330	0	0	0	0			0					
Total:			133		9506	2525	627		1369	454	919	67		8690	596	4428	520	690	300		72			109		15552	3330	24631	964	234	101			543					

REGISTERED PROFESSIONAL ENGINEER
REG. NO. 8326
JODY W. PAGE
SOUTH DAKOTA
5 JUN 15

STATE OF SOUTH DAKOTA	PROJECT	SHEET	TOTAL SHEETS
	IM 1902(61)0	B32	B253

Plotting Date: 05-05-2015

FOR BIDDING PURPOSES ONLY

I-190 TYPICAL GRADING SECTIONS

I-190 Mainline Typical

100+20.00 to 105+93.13 Mainline Sta.
(Not to Scale)

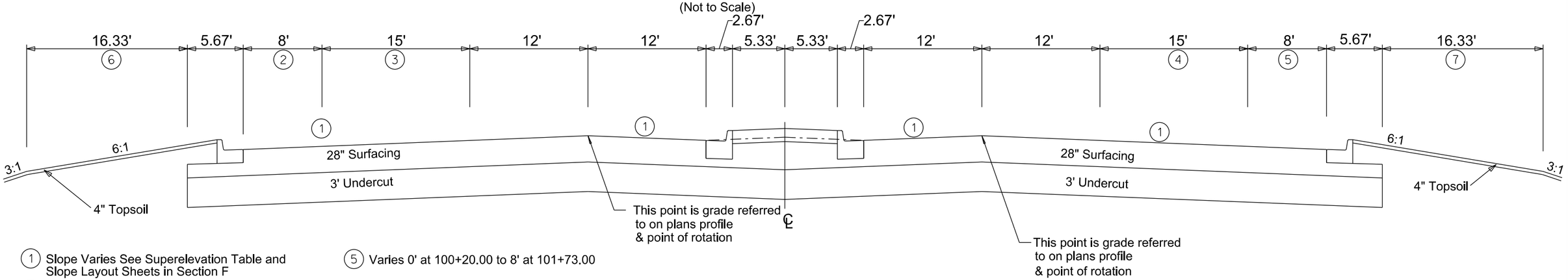

1. Slope Varies See Superelevation Table and Slope Layout Sheets in Section F
2. Varies 0' at 100+20.00 to 8' at 102+46.25
3. Varies 12.0' at 100+20.00 to 15.0' at 102+46.25
   Varies 15.0' at 102+46.25 to 30.4' at 105+93.13
4. Varies 12.5' at 100+20.00 to 15' at 101+73.00
   15' from 101+73.00 to 102+46.25
   Varies 15' at 102+46.25 to 30.4' at 105+74.80
   Varies 30.4' at 105+74.80 to 32.2' at 105+93.13
5. Varies 0' at 100+20.00 to 8' at 101+73.00
6. 16.33' from 100+20.00 to 100+96.08
   Varies 16.33' at 100+96.08 to 4.33' at 102+45.89
   4.33' from 102+45.89 to 105+93.13
7. 16.33' from 100+20.00 to 100+28.93
   Varies 16.33' at 100+28.93 to 4.33 at 101+72.93
   4.33' from 101+72.53 to 105+74.80
   16.33' from 105+74.80 to 105+93.13
8. 3:1 Max. Slope at 111+67.61 to 115+47.94

I-190 Mainline Typical

105+93.13 to 111+80.50 Mainline Sta.
(Not to Scale)

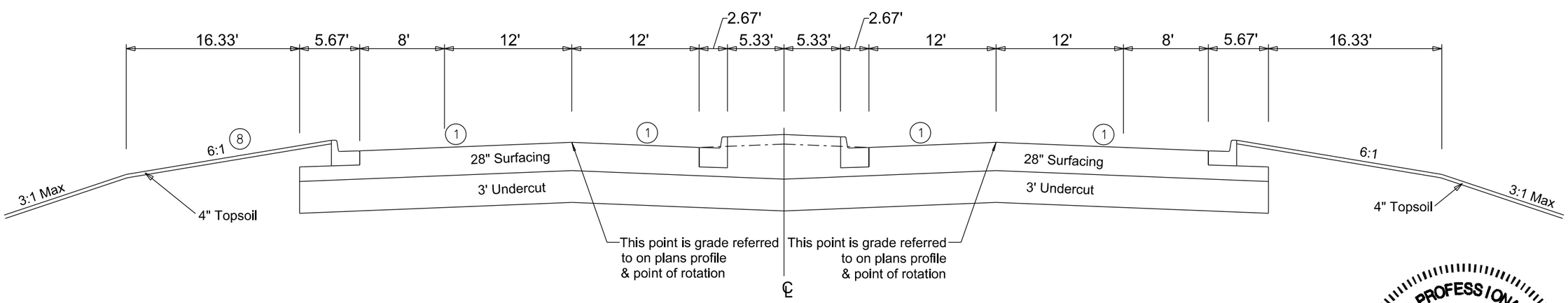

Notes:

See Section F for Surfacing Sections.

REGISTERED PROFESSIONAL ENGINEER
REG. NO. 8328
JODY W. PAGE
SOUTH DAKOTA
MAY 2015

HDR

Plot Scale - 1:9.99998

Plotted From - rliggett

File - ...\Typical Sections\typ01.DGN

FOR BIDDING PURPOSES ONLY

I-190 TYPICAL GRADING SECTIONS

I-190 Mainline Typical

111+80.50 to 112+52.27 Mainline Sta.
115+17.87 to 120+00.00 Mainline Sta.
(Not to Scale)

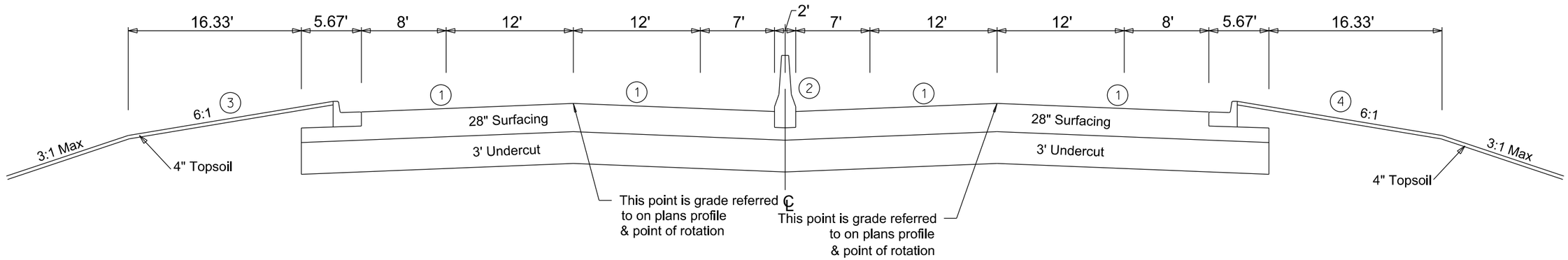

1. Slope Varies See Superelevation Table and Slope Layout Sheets in Section F
2. There is no Concrete Median Barrier from 111+80.50 to 112+52.27
3. 3:1 Max. Slope at 111+67.61 to 115+47.94
4. 3:1 Max. Slope at 112+33.93 to 116+42.33

Notes:

See Section F for Surfacing Sections.

REGISTERED PROFESSIONAL ENGINEER
REG. NO. 8328
JODY W. PAGE
SOUTH DAKOTA
1 MAY 2015

I-190 Mainline Typical

120+00.00 to 122+60.94 Mainline Sta.
(Not to Scale)

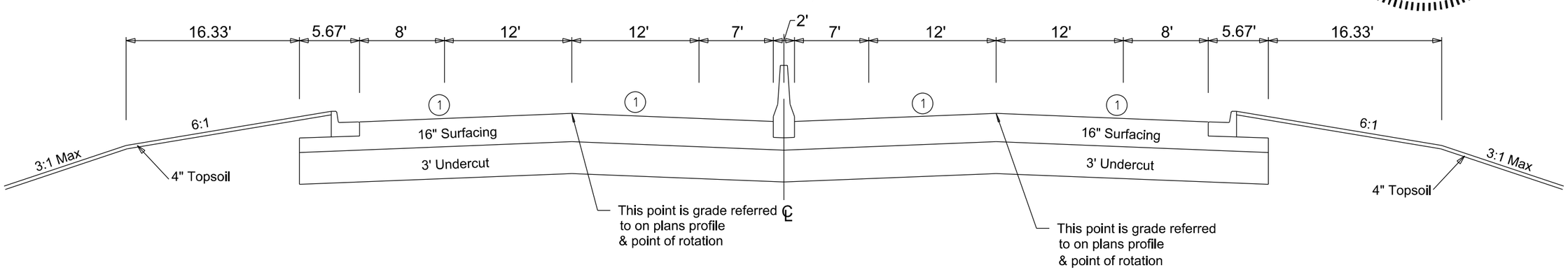

FOR BIDDING PURPOSES ONLY

I-190 TYPICAL GRADING SECTIONS

I-190 Mainline Typical

122+60.94 to 146+74.64 Mainline Sta.
(Not to Scale)

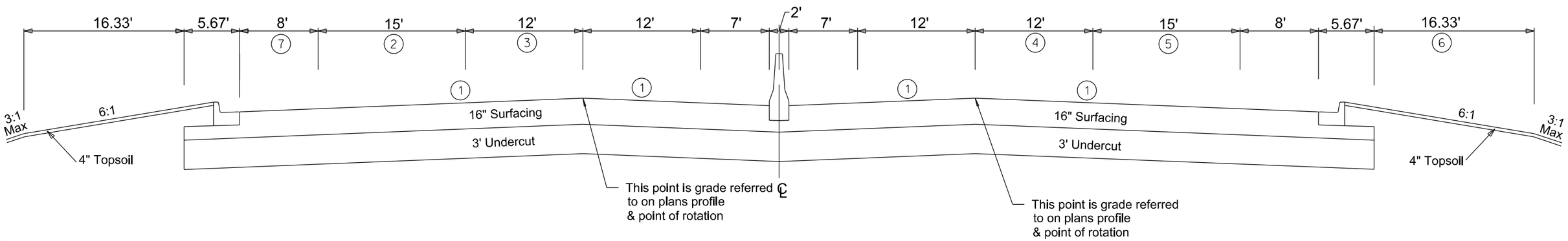

I-190 Mainline Typical

146+74.64 to 149+60.00 Mainline Sta.
(Not to Scale)

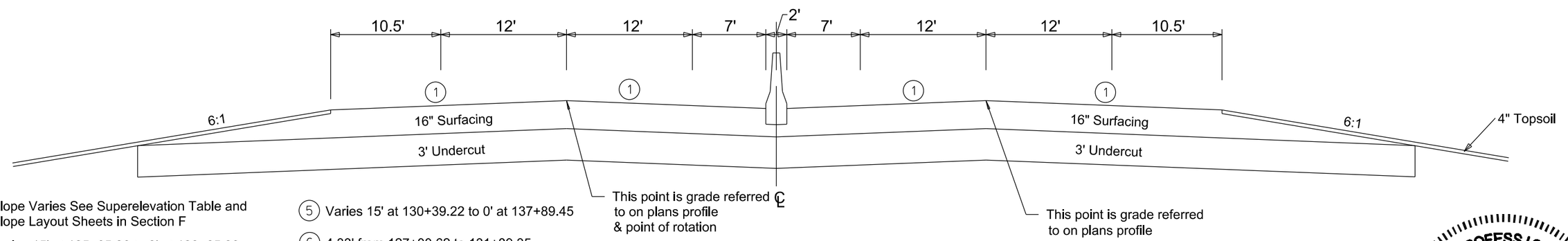

1. Slope Varies See Superelevation Table and Slope Layout Sheets in Section F
2. Varies 15' at 125+65.26 to 0' at 128+65.98
3. Varies 27.3' at 122+60.94 to 12' at 125+65.26
4. Varies 27.3' at 127+00.53 to 12' at 130+39.22
5. Varies 15' at 130+39.22 to 0' at 137+89.45
6. 4.33' from 127+00.62 to 131+89.35
   Varies 4.33' at 131+89.55 to 16.33' at 137+89.45
7. Varies 8' at 138+30.00 to 7' at 138+90.00
   Varies 7' at 139+50.00 to 8' at 140+10.00

Notes:

See Section F for Surfacing Sections.

I-190 Mainline Typical

149+60.00 to 154+00.00 Mainline Sta.
(Not to Scale)

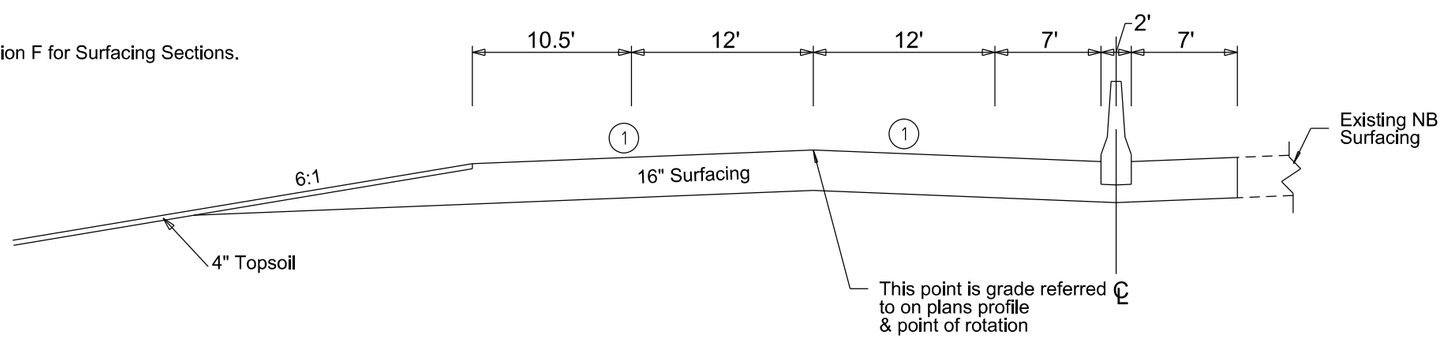

I-190 Mainline Typical

154+00.00 to 155+33.00 Mainline Sta.
(Not to Scale)

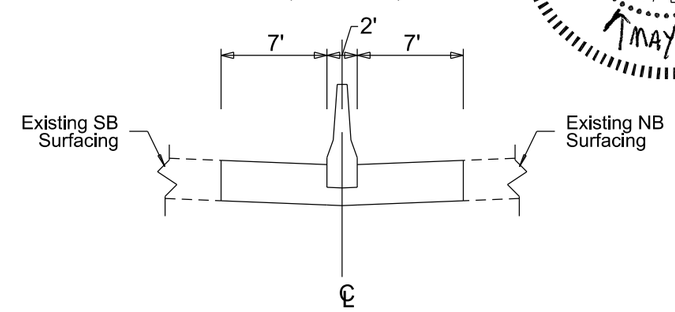

REGISTERED PROFESSIONAL ENGINEER
REG. NO. 8328
JODY W. PAGE
SOUTH DAKOTA
MAY 2015

HDR

STATE OF SOUTH DAKOTA	PROJECT	SHEET	TOTAL SHEETS
	IM 1902(61)0	B35	B253

Plotting Date: 05-05-2015

I-190 RAMP TYPICAL GRADING SECTIONS

FOR BIDDING PURPOSES ONLY

I-190 Ramp Typical

603+43.75 to 606+58.30 Ramp C Sta.
(Not to Scale)

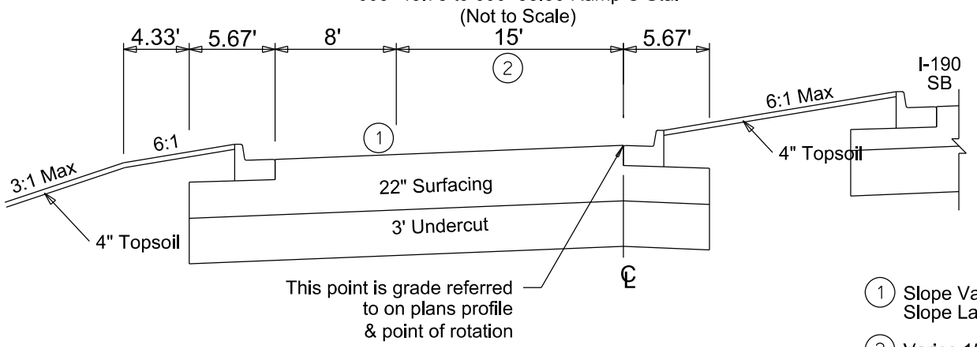

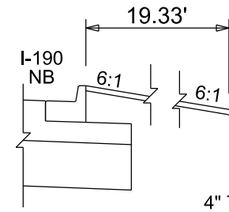

I-190 Ramp Typical

403+32.45 to 404+50.00 Ramp B Sta.
(Not to Scale)

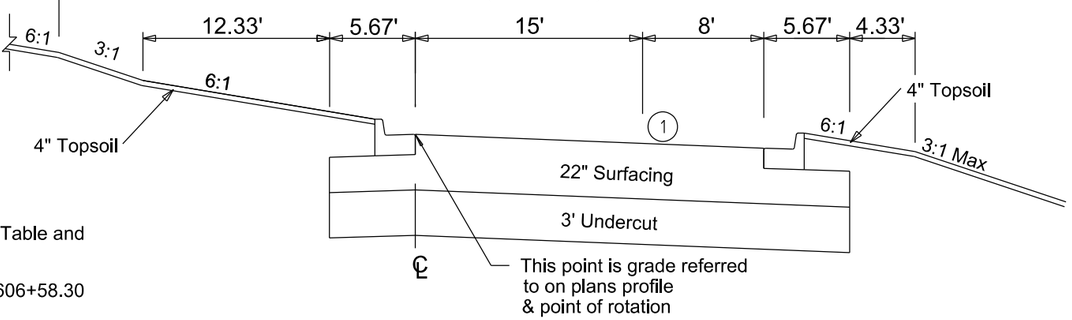

1. Slope Varies See Superelevation Table and Slope Layout Sheets in Section F
2. Varies 15' at 603+58.30 to 20' at 606+58.30
3. Varies 13' at 606+58.30 to 17' at 608+12.64
   17' at 608+12.64 to 609+24.00

I-190 Ramp Typical

606+58.30 to 609+24.00 Ramp C Sta.
(Not to Scale)

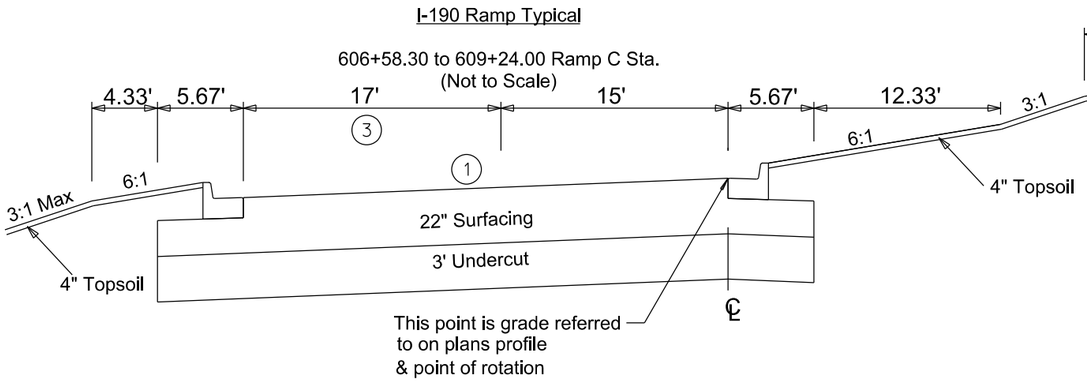

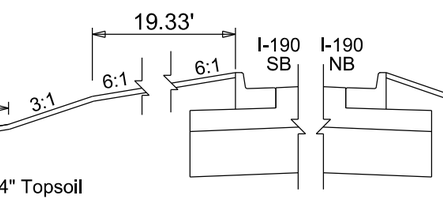

I-190 Ramp Typical

404+50.00 to 410+03.00 Ramp B Sta.
(Not to Scale)

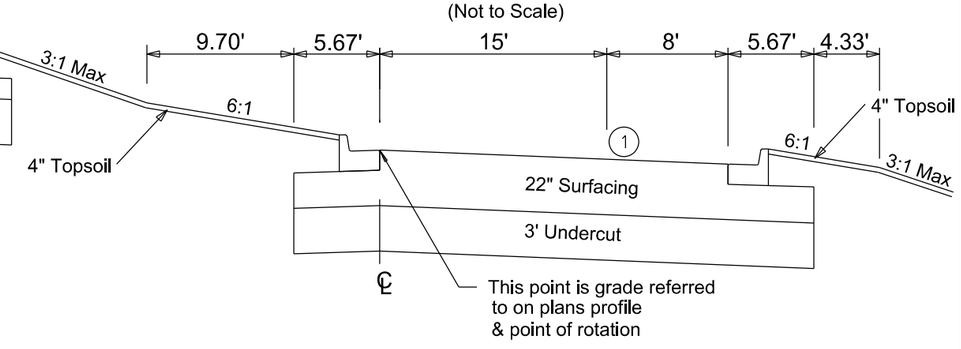

I-190 Ramp Typical

609+24.00 to 610+32.25 Ramp C Sta.
(Not to Scale)

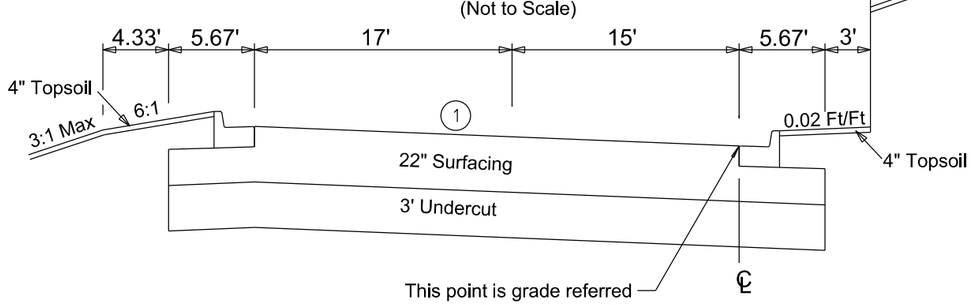

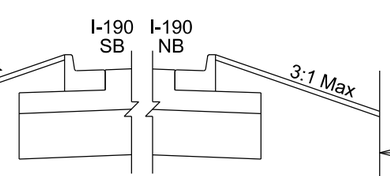

I-190 Ramp Typical

410+03.00 to 411+00.07 Ramp B Sta.
(Not to Scale)

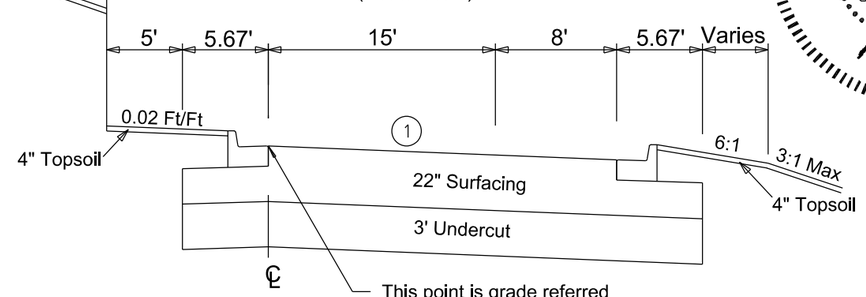

Notes:

See Section F for Surfacing Sections.

REGISTERED PROFESSIONAL ENGINEER
REG. NO. 8328
JODY W. PAGE
SOUTH DAKOTA
1 MAY 2015

HDR

Plot Scale - 1:9.99998

Plotted From - rliggett

File - ...\Typical Sections\typ04.DGN

STATE OF SOUTH DAKOTA	PROJECT	SHEET	TOTAL SHEETS
	IM 1902(61)0	B36	B253

Plotting Date: 05-05-2015

I-190 RAMP TYPICAL GRADING SECTIONS

FOR BIDDING PURPOSES ONLY

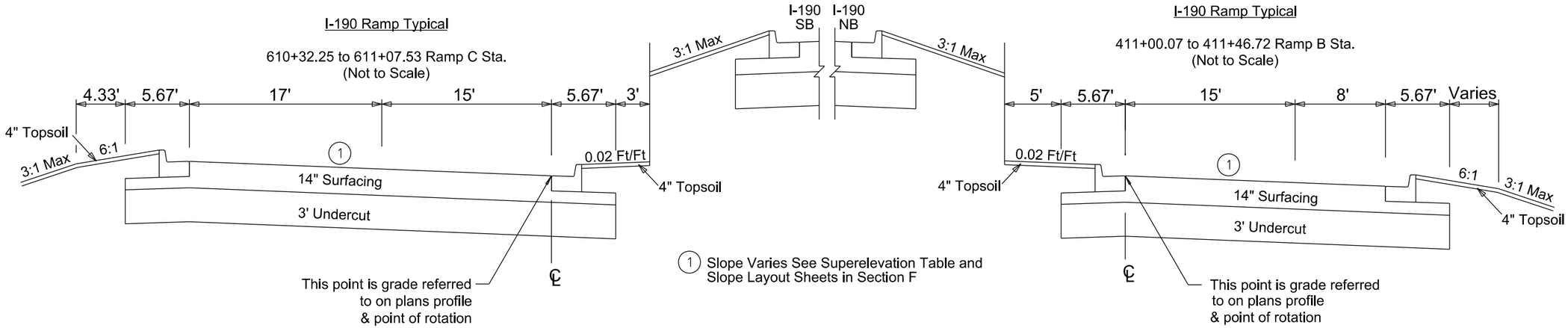

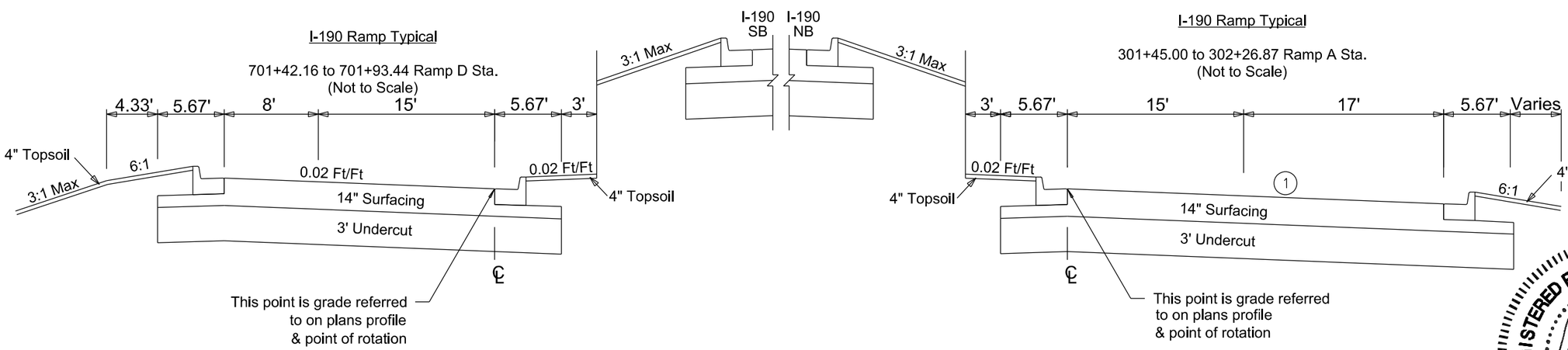

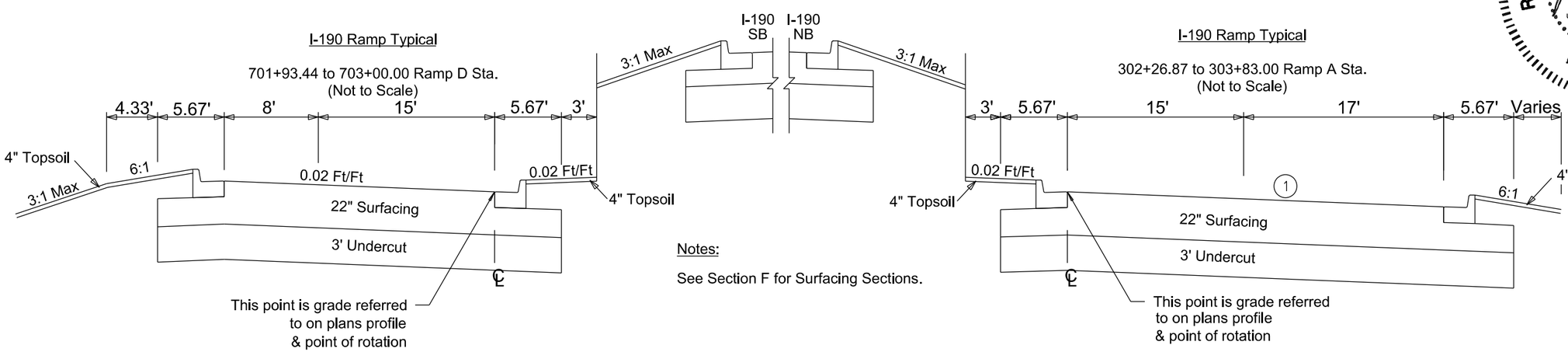

Notes:

See Section F for Surfacing Sections.

REGISTERED PROFESSIONAL ENGINEER
REG. NO. 8328
JODY W. PAGE
SOUTH DAKOTA
1 MAY 2015

HDR

Plot Scale - 1:9.99998

Plotted From - rliggett

File - ...\Typical Sections\typ05.DGN

I-190 RAMP TYPICAL GRADING SECTIONS

FOR BIDDING PURPOSES ONLY

I-190 Ramp Typical

703+00.00 to 705+35.00 Ramp D Sta.
(Not to Scale)

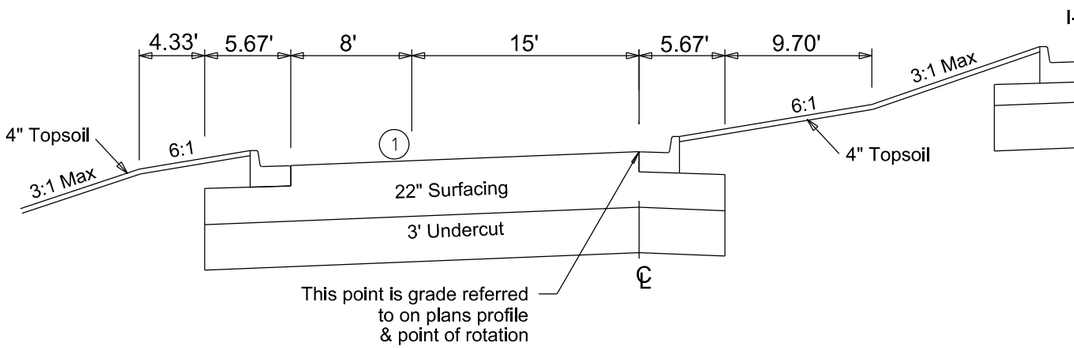

I-190 Ramp Typical

303+83.00 to 303+79.60 Ramp A Sta.
(Not to Scale)

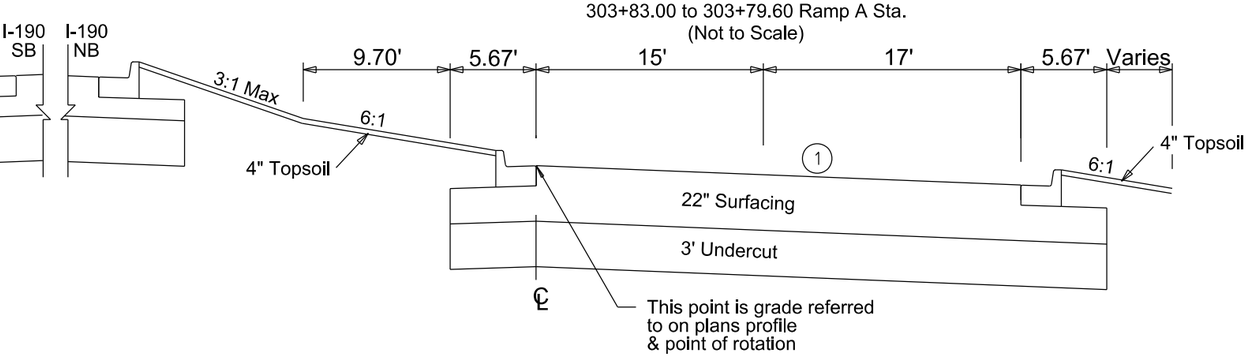

I-190 Ramp Typical

705+35.00 to 706+13.40 Ramp D Sta.
(Not to Scale)

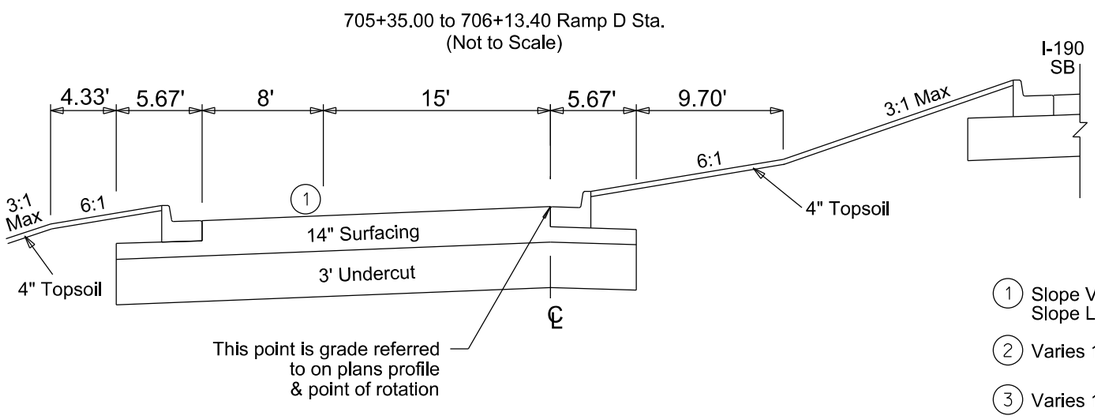

I-190 Ramp Typical

303+79.60 to 305+81.68 Ramp A Sta.
(Not to Scale)

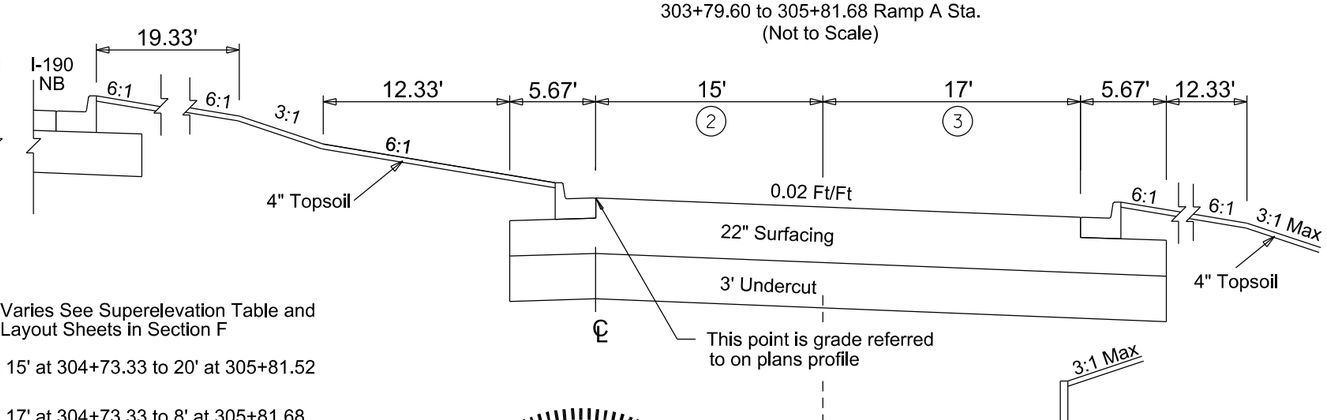

1. Slope Varies See Superelevation Table and Slope Layout Sheets in Section F
2. Varies 15' at 304+73.33 to 20' at 305+81.52
3. Varies 17' at 304+73.33 to 8' at 305+81.68

Notes:

See Section F for Surfacing Sections.

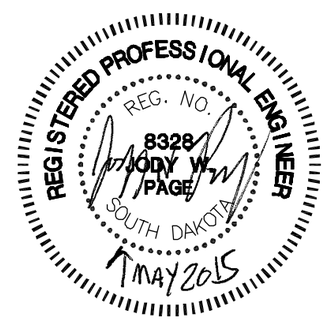

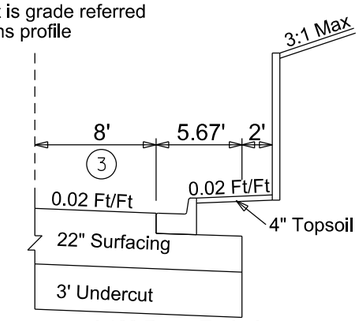

I-190 Ramp Typical

305+20.00 to 305+81.68 RT Ramp A Sta.

Plot Scale - 1:9.99998
Plotted From - rliggett
File - ...\Typical Sections\typ06.DGN

I-190 RAMP TYPICAL GRADING SECTIONS

FOR BIDDING PURPOSES ONLY

I-190 Ramp Typical

706+13.40 to 710+25.18 Ramp D Sta.
(Not to Scale)

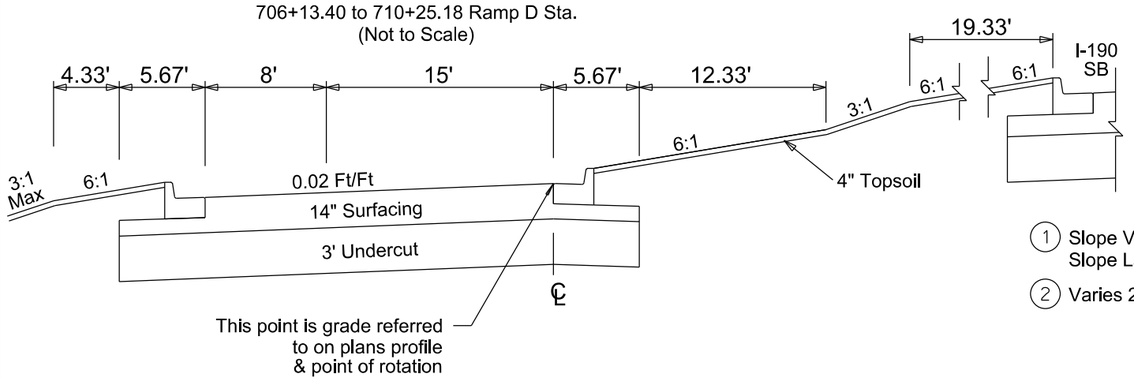

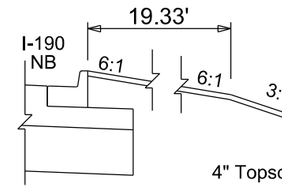

1 Slope Varies See Superelevation Table and Slope Layout Sheets in Section F

2 Varies 20' at 305+81.68 to 15' at 311+81.66

I-190 Ramp Typical

305+81.68 to 312+00.00 Ramp A Sta.
(Not to Scale)

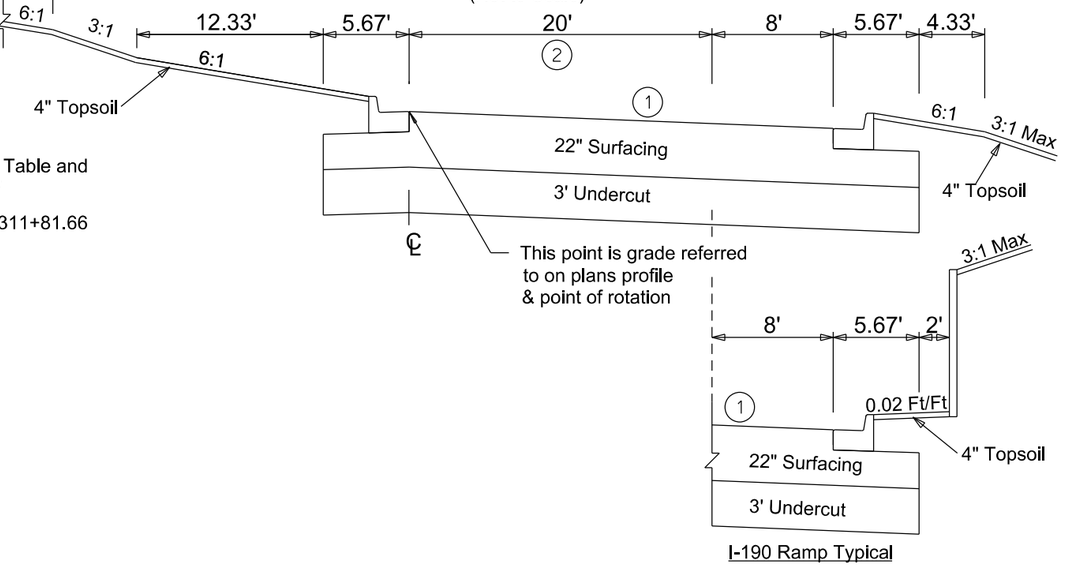

I-190 Ramp Typical

305+81.68 to 310+81.47 RT Ramp A Sta.

I-190 Ramp Typical

312+00.00 to 314+50.57 Ramp A Sta.
(Not to Scale)

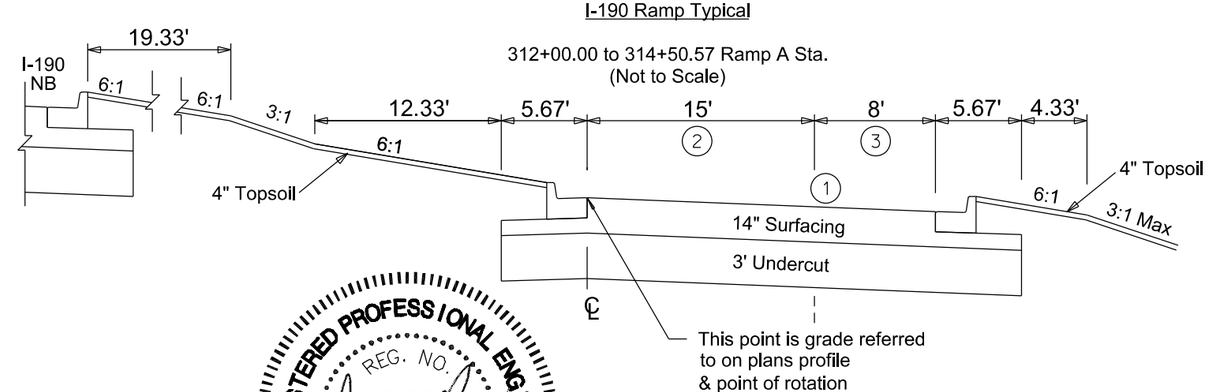

Notes:

See Section F for Surfacing Sections.

REGISTERED PROFESSIONAL ENGINEER
REG. NO. 8328
JODY W. PAGE
SOUTH DAKOTA
1 MAY 2015

Plot Scale - 1:9.99998
Plotted From - rfiggett
File - ...\Typical Sections\typ07.DGN

FOR BIDDING PURPOSES ONLY

I-190 RAMP TYPICAL GRADING SECTIONS

I-190 Ramp Typical

650+23.03 to 651+49.94 Ramp G Sta.
750+35.11 to 752+37.73 Ramp H Sta.
(Not to Scale)

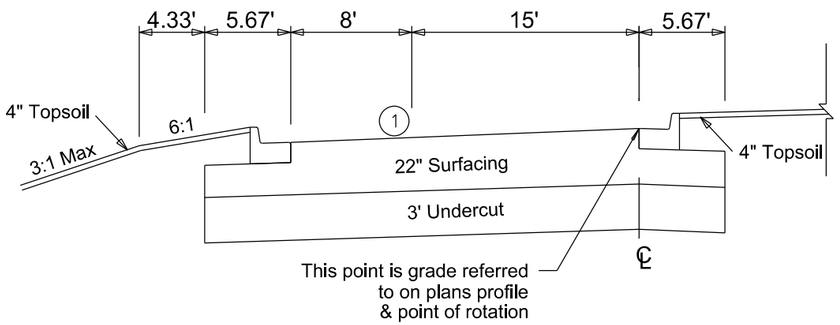

I-190 Ramp Typical

350+68.51 to 351+05.40 Ramp E Sta.
451+11.69 to 451+47.82 Ramp F Sta.
(Not to Scale)

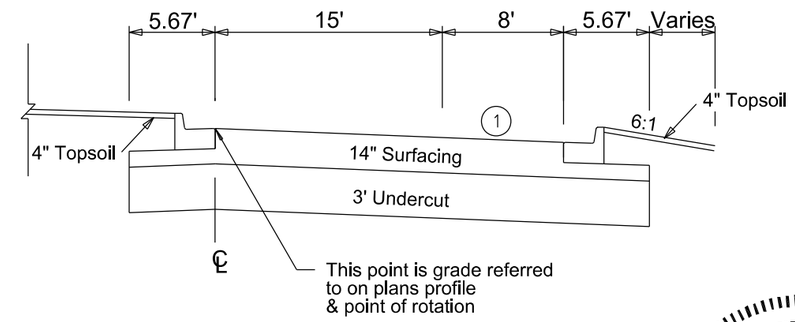

(1) Slope Varies, See Superelevation Table and Slope Layout Sheets in Section F

I-190 Ramp Typical

351+05.40 to 352+37.64 Ramp E Sta.
450+40.53 to 451+11.69 Ramp F Sta.
(Not to Scale)

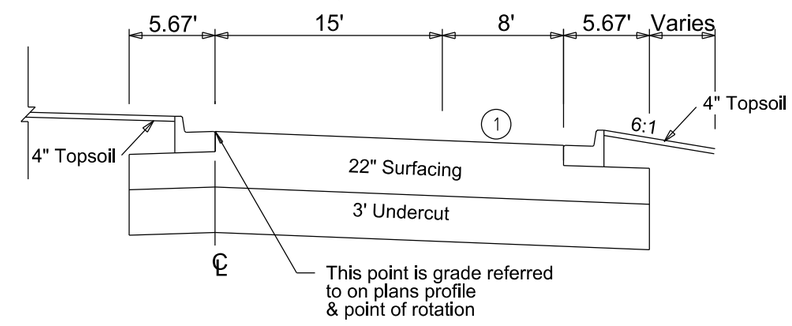

Notes:

See Section F for Surfacing Sections.

STATE OF SOUTH DAKOTA	PROJECT	SHEET	TOTAL SHEETS
	IM 1902(61)0	B40	B253

Plotting Date: 05-05-2015

FOR BIDDING PURPOSES ONLY

NORTH ST. TYPICAL GRADING SECTIONS

North Street Typical

209+01.71 to 211+31.57 North St. Sta.
(Not to Scale)

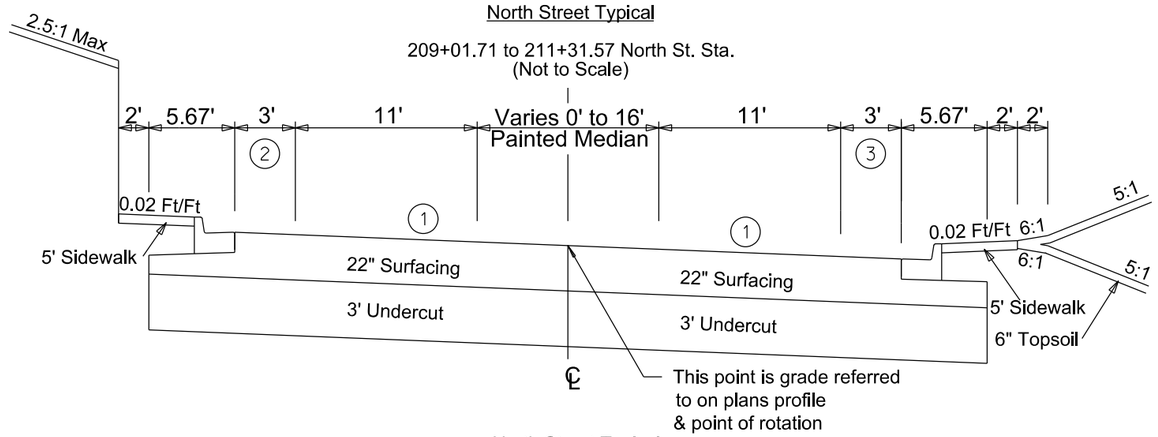

1. Slope Varies See Superelevation Table and Slope Layout Sheets in Section F
2. Varies approx. 5' at 209+87.98 to 3' at 210+53.97
3. Varies approx. 5' at 209+87.98 to 3' at 210+82.06

North Street Typical

211+31.57 to 212+87.40 North St. Sta.
(Not to Scale)

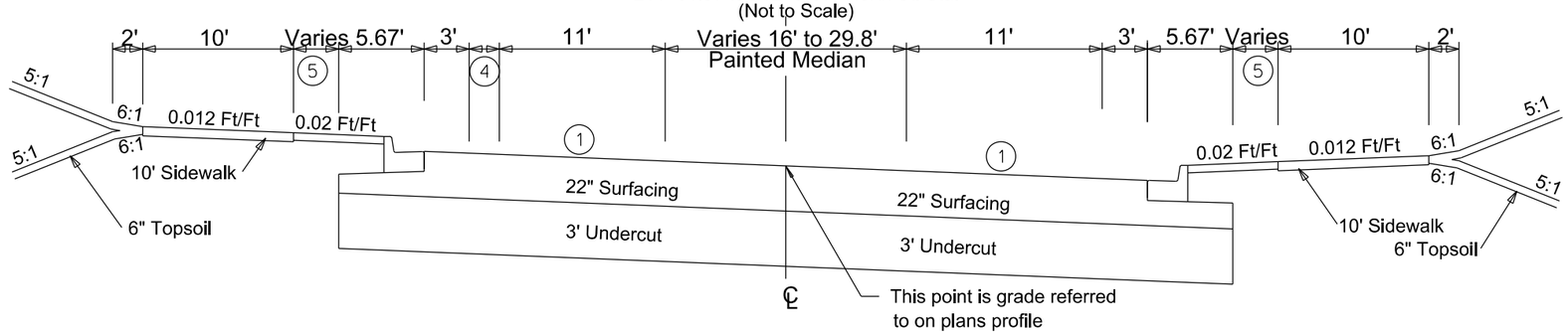

4. Varies 0' at 212+52.63 to 2.3' at 212+87.40
5. Boulevard Width Varies See Curb and Gutter Layout

North Street Typical

212+87.40 to 214+06.90 North St. Sta.
(Not to Scale)

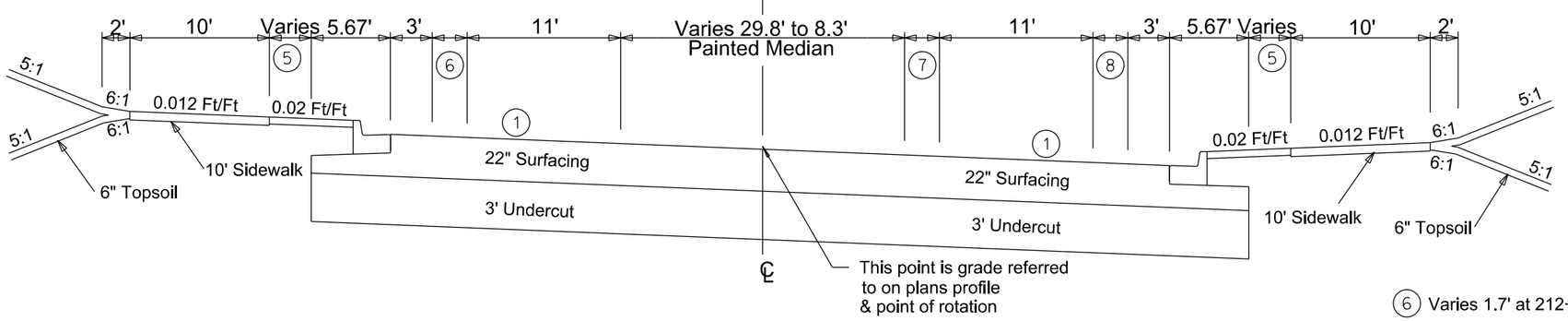

6. Varies 1.7' at 212+87.40 to 7.6' at 214+06.90
7. Varies 0' at 213+00.02 to 22' at 214+06.90
8. Varies 0' at 213+00.02 to 11' at 213+60.00

Notes:

See Section F for Surfacing Sections
and Underdrain Information.

HDR

Plot Scale - 1:9.99998

Plotted From - rliggett

File - ...\Typical Sections\typ09.DGN

STATE OF SOUTH DAKOTA	PROJECT	SHEET	TOTAL SHEETS
	IM 1902(61)0	B41	B253

Plotting Date: 05-05-2015

FOR BIDDING PURPOSES ONLY

NORTH ST. TYPICAL GRADING SECTIONS

North Street Typical

214+06.90 to 216+22.90 North St. Sta.
(Not to Scale)

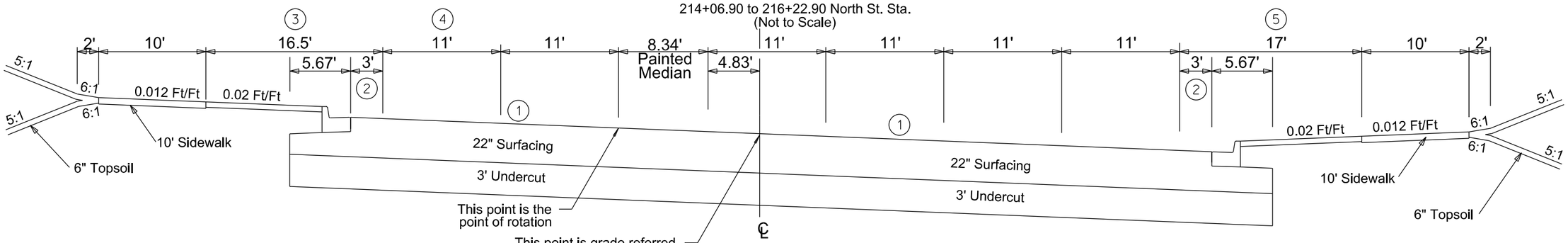

North Street Typical

216+22.90 to 218+34.49 North St. Sta.
(Not to Scale)

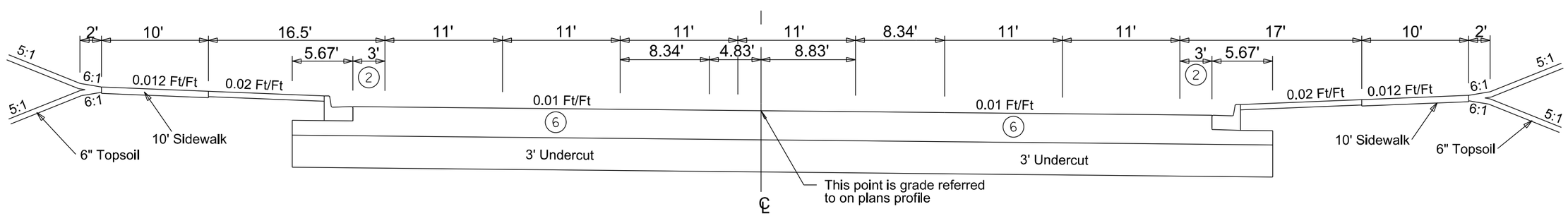

North Street Typical

218+34.49 to 219+48.49 North St. Sta.
(Not to Scale)

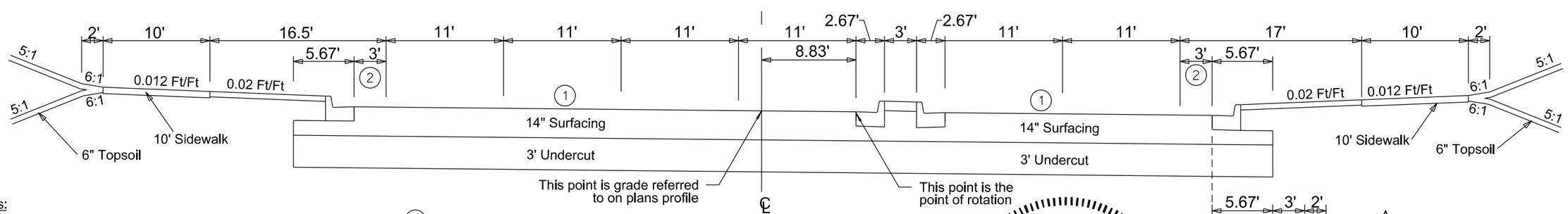

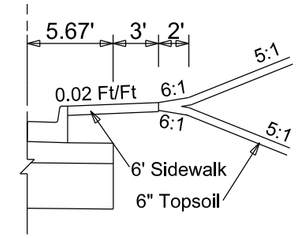

North Street Typical

219+12.73 to 219+48.49 RT North St. Sta.

Notes:

See Section F for Surfacing Sections and Underdrain Information.

1. Slope Varies See Superelevation Table and Slope Layout Sheets in Section F
2. Shoulder Width Varies See Curb and Gutter Layout
3. Width Varies 15.0' at 214+06.90 LT to 16.5' at 214+76.82 LT
4. Width Varies 7.6' at 214+06.90 LT to 11.0' at 214+76.82 LT
5. Width Varies 10.7' at 214+06.90 RT to 17.0' at 214+81.49 RT
6. 22" Surfacing from 216+22.90 to 216+32.38
   14" Surfacing from 216+32.38 to 218+34.49

REGISTERED PROFESSIONAL ENGINEER
REG. NO. 8328
JODY W. PAGE
SOUTH DAKOTA
MAY 2015

Plot Scale - 1:9.99998

Plotted From - rfiggett

File - ...\Typical Sections\typ10.DGN

HDR

FOR BIDDING PURPOSES ONLY

NORTH ST. TYPICAL GRADING SECTIONS

North Street Typical

219+48.49 to 220+54.30 North St. Sta.
(Not to Scale)

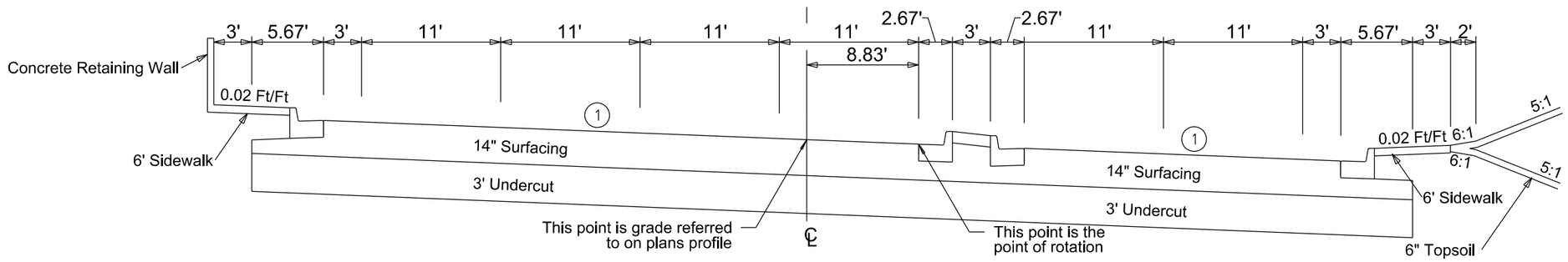

1 Slope Varies See Superelevation Table and Slope Layout Sheets in Section F

North Street Typical

220+54.30 to 221+85.20 North St. Sta.
(Not to Scale)

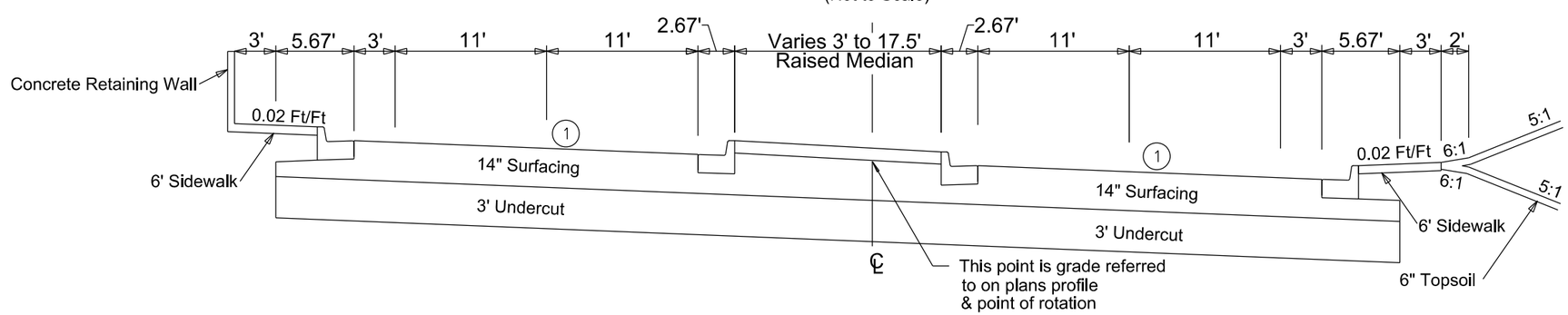

Notes:

See Section F for Surfacing Sections and Underdrain Information.

REGISTERED PROFESSIONAL ENGINEER
REG. NO. 8328
JODY W. PAGE
SOUTH DAKOTA
MAY 2015

HDR

Plot Scale - 1:9.99998
Plotted From - rliggett
File - ...\Typical Sections\typ11.DGN

FOR BIDDING PURPOSES ONLY

NORTH ST. & WEST BLVD. TYPICAL GRADING SECTIONS

North Street Typical

221+85.20 to 224+72.00 North St. Sta.
(Not to Scale)

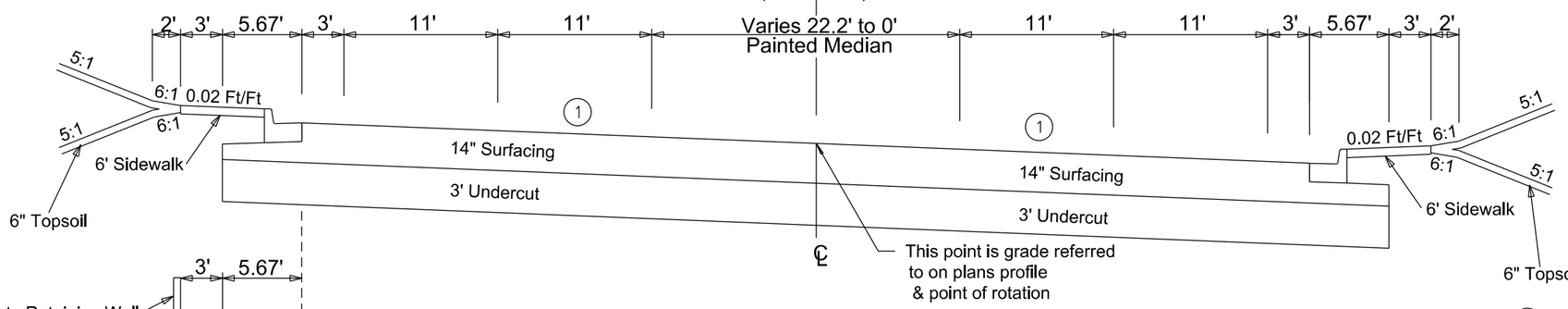

1 Slope Varies See Superelevation Table and Slope Layout Sheets in Section F

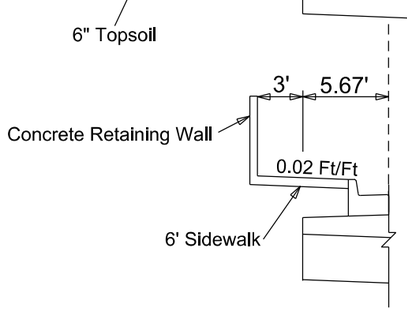

North Street Typical

221+85.20 to 223+47.37 LT North St. Sta.

West Boulevard Typical

10+24.43 to 13+45.00 West Blvd. Sta.
(Not to Scale)

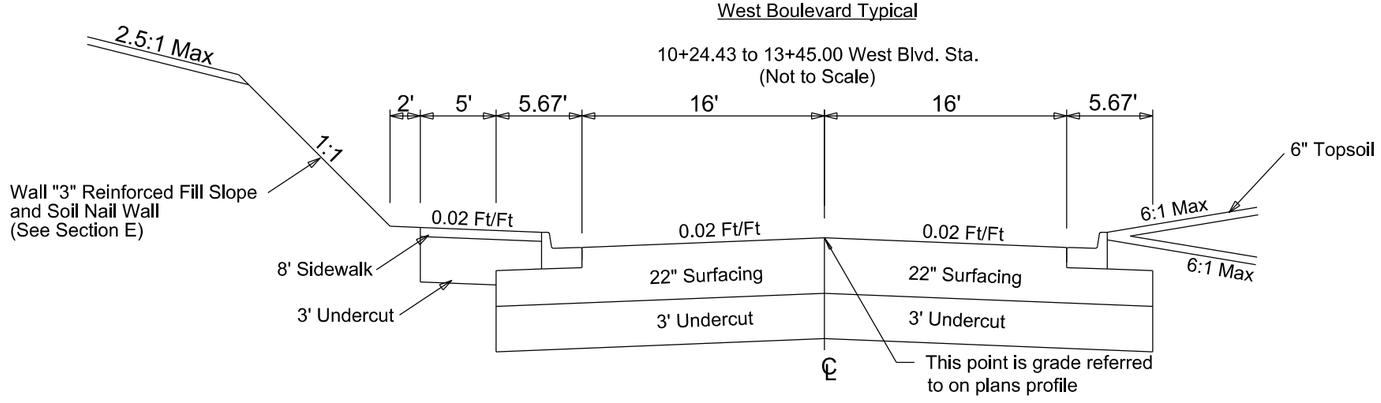

Notes:

See Section F for Surfacing Sections and Underdrain Information.

See Section E for Reinforced Fill Slope (RFS) and Soil Nail Wall "3".

Plot Scale - 1:9.99998
Plotted From - rfiggett
File - ...\Typical Sections\typ12.DGN

FOR BIDDING PURPOSES ONLY

WEST BLVD. & WEST BLVD. NORTH TYPICAL GRADING SECTIONS

West Boulevard Typical

13+45.00 to 17+25.00 West Blvd. Sta.
25+29.38 to 26+75.28 West Blvd. Sta.
(Not to Scale

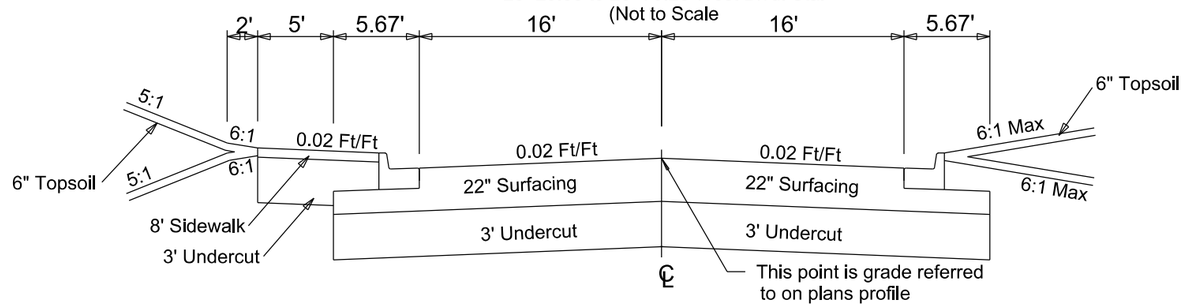

West Boulevard Typical

17+25.00 to 25+29.38 West Blvd. Sta.
(Not to Scale)

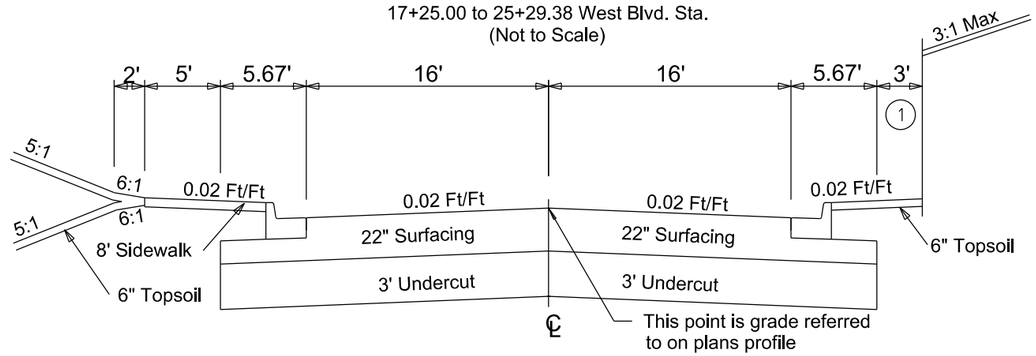

(1) 13.33' from 17+25.00 to 18+37.21
Varies 13.33' at 18+37.21 to 3' at 19+74.14

West Boulevard North Typical

50+24.42 to 58+65.61 West Blvd. North Sta.
(Not to Scale)

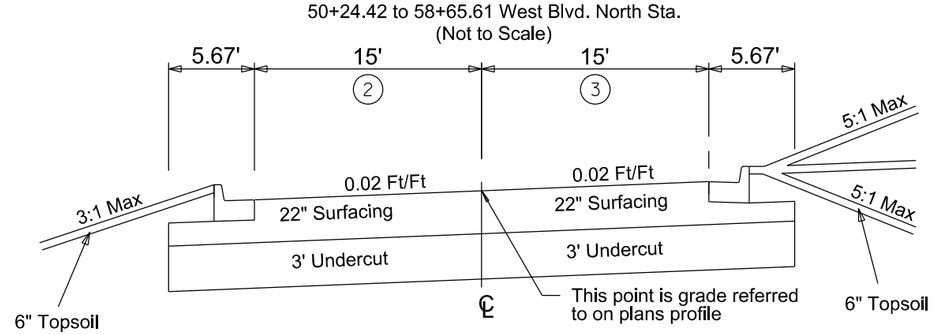

(2) Varies 15' at 56+66.92 to 22.6' at 58+65.61

(3) Varies 15.3' at 50+24.42 to 17.7' at 50+54.02
to 15.0' at 51+11.77

Notes:

See Section F for Surfacing Sections
and Underdrain Information.

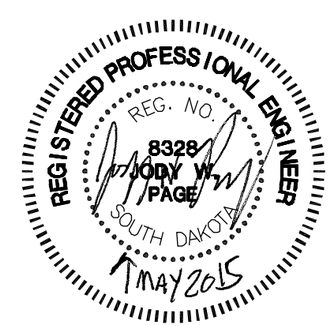

Plot Scale - 1:9.99998
Plotted From - rliggett
File - ...\Typical Sections\typ13.DGN

FOR BIDDING PURPOSES ONLY

HORIZONTAL ALIGNMENT DATA

I-190 Mainline

Type	Station			Northing	Easting
POB	95+00.00			651618.78	1206534.11
		TL = 746.25	N 14°36′30″ E		
PC	102+46.25			652340.91	1206722.33
PI	104+94.32	R = 3560.00	DELTA=07°58′19″ Left	652580.95	1206784.89
PT	107+41.59			652827.36	1206813.56
		TL = 1737.60	N 06°38′11″ E		
PC	124+79.18			654553.31	1207014.37
PI	127+59.36	R = 6770.00	DELTA=04°44′23″ Left	654831.61	1207046.75
PT	130+39.22			655111.64	1207056.02
		TL = 831.77	N 01°53′48″ E		
PC	138+70.99			655942.95	1207083.55
PI	138+99.80	R = 14100.00	DELTA=00°14′03″ Right	655971.75	1207084.50
PT	139+28.61			656000.53	1207085.57
		TL = 1671.39	N 02°07′50″ E		
POE	156+00.00			657670.77	1207147.71

North Street

Type	Station			Northing	Easting
POB	200+00.00			653412.22	1205161.21
		TL = 1068.61	S 88°09′24″ E		
PC	210+68.61			653377.85	1206229.26
PI	211+14.16	R = 510.00	DELTA=10°12′25″ Left	653376.38	1206274.79
PT	211+59.46			653383.01	1206319.85
		TL = 672.45	N 81°38′11″ E		
PC	218+31.92			653480.82	1206985.15
PI	219+46.83	R = 510.00	DELTA=25°23′43″ Right	653497.54	1207098.84
PT	220+57.96			653463.88	1207208.71
		TL = 0.00	S 72°58′07″ E		
PC	220+57.96			653463.88	1207208.71
PI	222+25.74	R = 510.00	DELTA=36°25′11″ Left	653414.74	1207369.13
PT	223+82.14			653470.43	1207527.39
		TL = 146.68	N 70°36′42″ E		
PC	225+28.82			653519.13	1207665.75
PI	226+72.33	R = 550.00	DELTA=29°14′53″ Right	653566.77	1207801.13
PT	228+09.58			653542.19	1207942.52
		TL = 337.02	S 80°08′24″ E		
POE	231+46.60			653484.48	1208274.56

Ramp A

Type	Station			Northing	Easting
POB	300+00.00			653457.56	1206773.10
		TL = 0.00	N 81°38′11″ E		
PC	300+00.00			653457.56	1206773.10
PI	301+42.06	R = 300.00	DELTA=50°40′41″ Left	653478.23	1206913.65
PT	302+65.35			653600.05	1206986.73
		TL = 0.00	N 30°57′29″ E		
PC	302+65.35			653600.05	1206986.73
PI	304+27.28	R = 600.00	DELTA=30°12′26″ Left	653738.91	1207070.03
PT	305+81.68			653900.83	1207072.15
		TL = 1209.85	N 00°45′03″ E		
POE	317+91.53			655110.58	1207088.00

Ramp B

Type	Station			Northing	Easting
POB	400+00.00			652332.84	1206753.29
		TL = 924.61	N 14°36′30″ E		
PC	409+24.61			653227.55	1206986.49
PI	412+14.54	R = 192.00	DELTA=112°58′19″ Left	653508.11	1207059.61
PT/POE	413+03.18			653465.94	1206772.77

Ramp C

Type	Station			Northing	Easting
POB	600+00.00			652348.98	1206691.36
		TL = 0.00	N 14°36′30″ E		
PC	600+00.00			652348.98	1206691.36
PI	602+98.53	R = 1840.00	DELTA=18°25′53″ Left	652637.86	1206766.66
PT	605+91.91			652935.73	1206746.75
		TL = 166.25	N 03°49′23″ W		
PC	607+58.16			653101.61	1206735.66
PI	609+11.66	R = 400.00	DELTA=41°59′16″ Right	653254.77	1206725.43
PT	610+51.29			653375.45	1206820.28
		TL = 0.00	N 38°09′53″ E		
PC	610+51.29			653375.45	1206820.28
PI	611+58.59	R = 264.00	DELTA=44°14′16″ Right	653459.82	1206886.58
PT/POE	612+55.13			653474.00	1206992.94

REGISTERED PROFESSIONAL ENGINEER
REG. NO. 8328
JODY W. PAGE
SOUTH DAKOTA
1 MAY 2015

The coordinates shown on this sheet are based on the South Dakota State Plane Coordinate System. South Zone (NAD 83/96) Epoch 2002.00 Geoid 03 SF = 0.9997864601

FOR BIDDING PURPOSES ONLY

HORIZONTAL ALIGNMENT DATA

Ramp D

Type	Station			Northing	Easting
POB	700+00.00			653465.74	1206994.04
		TL = 0.00	S 82°24′09″ W		
PC	700+00.00			653465.74	1206994.04
PI	701+29.69	R = 175.00	DELTA=73°05′02″ Right	653448.60	1206865.49
PCC	702+23.22			653566.60	1206811.68
		TL = 0.00	N 24°30′49″ W		
PC	702+23.22			653566.60	1206811.68
PI	703+57.88	R = 350.00	DELTA=42°05′12″ Right	653689.12	1206755.81
PT	704+80.31			653817.49	1206796.47
		TL = 245.09	N 17°34′23″ E		
PC	707+25.41			654051.14	1206870.46
PI	708+87.74	R = 2300.00	DELTA=08°04′28″ Left	654205.90	1206919.48
PT	710+49.53			654366.00	1206946.26
		TL = 194.17	N 09°29′55″ E		
PC	712+43.70			654557.51	1206978.31
PI	712+86.58	R = 6727.40	DELTA=00°43′49″ Left	654599.80	1206985.39
PT/POE	713+29.45			654942.17	1206991.94

Ramp E

Type	Station			Northing	Easting
POB	350+00.00			653493.65	1207154.94
		TL = 0.00	N 79°31′52″ W		
PC	350+00.00			653493.65	1207154.94
PI	350+84.33	R = 100.00	DELTA=80°16′55″ Right	653508.98	1207072.01
PT	351+40.12			653593.30	1207073.12
		TL = 124.74	N 00°45′03″ E		
POE	352+64.86			653718.03	1207074.75

Ramp F

Type	Station			Northing	Easting
POB	450+00.00			653302.42	1207006.00
		TL = 121.43	N 14°36′30″ E		
PC	451+21.43			653419.92	1207036.63
PI	451+62.50	R = 50.00	DELTA=78°48′01″ Right	653459.67	1207046.99
PT/POE	451+90.20			653457.23	1207087.98

Ramp G

Type	Station			Northing	Easting
POB	650+00.00			653251.27	1206720.65
		TL = 64.75	N 03°49′23″ W		
PC	650+64.75			653315.88	1206716.34
PI	651+64.75	R = 100.00	DELTA=90°00′00″ Left	653415.66	1206709.67
PT/POE	652+21.83			653408.99	1206609.89

Ramp H

Type	Station			Northing	Easting
POB	750+00.00			653460.59	1206653.93
		TL = 0.00	N 81°38′11″ E		
PC	750+00.00			653460.59	1206653.93
PI	750+31.28	R = 50.00	DELTA=64°03′48″ Left	653465.14	1206684.88
PT	750+55.91			653494.97	1206694.32
		TL = 234.75	N 17°34′23″ E		
POE	752+90.65			653718.76	1206765.20

West Boulevard

Type	Station			Northing	Easting
POB	10+00.00			653385.39	1206336.04
		TL = 28.84	N 02°11′44″ E		
PC	10+28.84			653414.21	1206337.15
PI	11+25.71	R = 180.00	DELTA=56°34′35″ Right	653511.01	1206340.86
PT	12+06.58			653561.23	1206423.70
		TL = 104.37	N 58°46′19″ E		
PC	13+10.95			653615.34	1206512.94
PI	15+02.64	R = 510.00	DELTA=41°11′56″ Left	653714.72	1206676.86
PT	16+77.66			653897.46	1206734.73
		TL = 310.97	N 17°34′23″ E		
PC	19+88.63			654325.69	1206870.35
PI	23+34.19	R = 2500.00	DELTA=15°44′22″ Left	654523.35	1206932.95
PT	26+75.39			654868.73	1206944.01
		TL = 525.60	N 01°50′01″ E		
POE	32+01.00			655394.06	1206960.82

REGISTERED PROFESSIONAL ENGINEER
REG. NO. 8328
JODY W. PAGE
SOUTH DAKOTA
MAY 2015

The coordinates shown on this sheet are based on the South Dakota State Plane Coordinate System. South Zone (NAD 83/96) Epoch 2002.00 Geoid 03 SF = 0.9997864601

FOR BIDDING PURPOSES ONLY

HORIZONTAL ALIGNMENT DATA

West Boulevard North

Type	Station			Northing	Easting
POB	50+00.00			653846.86	1207229.05
		TL = 48.91	N 79°16′39″ W		
PC	50+48.91			653855.96	1207181.00
PI	50+85.05	R = 42.50	DELTA=80°45′33″ Right	653862.68	1207145.48
PT	51+08.81			653898.81	1207146.42
		TL = 339.50	N 01°28′54″ E		
PI	54+48.32			654238.201	1207155.20
		TL = 551.69	N 02°04′43″ E		
POE	60+00.00			654789.53	1207175.21

Large Diameter Storm Pipe

Type	Station			Northing	Easting
POB	495+00.00			652331.34	1206545.58
		TL = 301.45	N 31°21′02″ E		
PI	498+01.45			652588.78	1206702.42
		TL = 266.81	N 00°43′58″ E		
PI	500+68.26			652855.57	1206705.84
		TL = 776.09	N 02°55′77″ W		
PI	508+44.36			653630.65	1206666.32
		TL = 575.86	N 17°04′53″ E		
PI	514+20.22			654181.11	1206835.47
		TL = 256.24	N 32°42′01″ W		
PI	516+76.46			654396.74	1206697.04
		TL = 243.69	N 15°55′30″ E		
POE	519+20.15			654631.08	1206763.90

Adams Street

Type	Station			Northing	Easting
POB	60+00.00			654182.54	1207153.76
		TL = 116.62	S 88°31′06″ E		
POE	61+16.62			654179.53	1207270.34

Boegel Street

Type	Station			Northing	Easting
POB	40+00.00			654508.33	1206906.19
		TL = 35.89	N 79°51′15″ W		
PC	40+35.89			654514.66	1206870.86
PI	40+74.65	R = 100.00	DELTA=42°22′10″ Left	654521.48	1206832.71
PT	41+09.84			654500.82	1206799.93
		TL = 45.06	S 57°46′35″ W		
POE	41+54.90			654476.79	1206761.80

Silver Street

Type	Station			Northing	Easting
POB	30+00.00			654003.51	1206768.32
		TL = 43.39	N 72°25′37″ W		
PC	30+43.39			654016.61	1206726.95
PI	30+79.35	R = 100.00	DELTA=39°33′21″ Right	654027.47	1206692.67
PT	31+12.43			654057.67	1206673.15
		TL = 85.45	N 32°52′16″ W		
POE	31+97.88			654129.44	1206626.77

REGISTERED PROFESSIONAL ENGINEER
REG. NO. 8328
JODY W. PAGE
SOUTH DAKOTA
MAY 2015

The coordinates shown on this sheet are based on the South Dakota State Plane Coordinate System. South Zone (NAD 83/96) Epoch 2002.00 Geoid 03 SF = 0.9997864601

FOR BIDDING PURPOSES ONLY

CONTROL DATA

Point #	Station / Offset (Alignment)	Description	Northing	Easting	Elevation
2035	122+58.91-2760.53' R (I-190 Mainline)	BNCHMK	654015.49	1206730.94	3259.31
CP01	212+19.20-1759.28' R (North Street)	REBAR	651651.13	1206634.85	3236.23
CP02	109+56.37-34.84' L (I-190 Mainline)	BAR WITH CAP	653044.73	1206803.78	3241.24
CP03	119+12.27-227.23' R (I-190 Mainline)	2 FT REBAR AND CAP 706 WEST BLVD NORTH	653963.94	1207174.56	3294.38
CP04	124+91.13-32.63' L (I-190 Mainline)	5 FT REBAR S BOUND OFF RAMP	654568.89	1206983.32	3287.71
CP05	138+44.64-104.91' R (I-190 Mainline)	5 FT REBAR AND CAP SW CORNER ANAMOSA AND WEST BLVD NORTH	655913.14	1207187.53	3310.79
CP06	208+22.47-1942.56' R (North Street)	COTTON GIN SPINDLE	651444.21	1205920.77	3240.85

REGISTERED PROFESSIONAL ENGINEER
REG. NO. 8328
JODY W. PAGE
SOUTH DAKOTA
1 MAY 2015

The coordinates shown on this sheet are based on the South Dakota State Plane Coordinate System. South Zone (NAD 83/96) Epoch 2002.00 Geoid 03 SF = 0.9997864601 The elevations shown on this sheet are based on NAVD 88.

TABLE OF SUBSURFACE UTILITY LOCATIONS

Subsurface utility explorations were done at the following locations. The information below states what was located in the specified areas. This table is provided to aid the Contractor during construction and does not substitute or replace the requirements of SD One Call. All information is approximate and the Contractor shall verify all utility locations before construction in those areas as mandated in SDCL 49-7A.

Baseline Alignment: North

Test Hole	Station	Offset	Side	Finding	Existing Ground Elev.	Utility Depth in Ft.	Utility Elevation	Northing	Easting
TH5-1A	219+59.23	15.54	R	8” Steel	3243.79	4.75	3239.04	653468.050	1207110.503
TH5-7A	219+63.31	11.75	R	4” Steel	3243.88	5.70	3238.18	653471.396	1207114.851
TH5-1C	219+68.69	25.94	L	4” Steel	3245.25	5.05	3240.20	653508.186	1207124.664
TH5-7B	219+65.74	26.62	L	8” Steel	3245.50	4.05	3241.45	653509.235	1207121.666
TH4-4A	222+54.76	47.90	R	2” Fiber	3237.65	3.55	3234.10	653395.802	1207407.461
TH4-4B	223+07.43	34.85	R	2” Fiber	3237.54	3.45	3234.09	653416.661	1207462.003
TH10-11A	219+99.44	38.26	L	8” PVC	3245.42	6.40	3239.02	653515.394	1207158.840
TH10-11B	221+03.49	38.95	L	8” PVC	3242.43	7.30	3235.13	653490.614	1207260.820
TH10-11C	221+99.83	39.57	L	8” PVC	3239.82	6.60	3233.22	653481.162	1207349.112

Baseline Alignment: West Blvd N

Test Hole	Station	Offset	Side	Finding	Existing Ground Elev.	Utility Depth in Ft.	Utility Elevation	Northing	Easting
TH5-1D	51+08.22	2.61	R	8” Steel	3286.24	5.95	3280.29	653898.191	1207149.013
TH5-1E	54+06.57	15.50	R	8” Steel	3296.79	3.45	3293.34	654196.070	1207169.608
TH5-1F	56+67.56	17.39	R	8” Steel	3297.78	3.35	3294.43	654456.670	1207180.530

Test Hole Owner Identification Number Codes (First number denotes utility ownership)

1 = Black Hills Power, 2 = Century Link / Qwest, 3 = Wide Open West, 4 = MidContinent Communications 5 = Montana Dakota Utilities , 7 = City of Rapid City / Sanitary, 10 = City of Rapid City / Water, = 13 = South Dakota Network

REGISTERED PROFESSIONAL ENGINEER
REG. NO. 8328
JODY W. PAGE
SOUTH DAKOTA
1 MAY 2015

The coordinates shown on this sheet are based on the South Dakota State Plane Coordinate System. South Zone (NAD 83/96) Epoch 2002.00 Geoid 03 SF = 0.9997864601 The elevations shown on this sheet are based on NAVD 88.

STATE OF SOUTH DAKOTA	PROJECT	SHEET	TOTAL SHEETS
	IM 1902(61)0	B50	B253

FOR BIDDING PURPOSES ONLY

Plotting Date: 03/19/2014

EXISTING TOPOGRAPHY SYMBOLOGY AND LEGEND

Anchor
Antenna
Approach
Assumed Corner
Azimuth Marker
BBQ Grill/ Fireplace
Bearing Tree
Bench Mark
Box Culvert
Bridge
Brush
Buildings
Bulk Tank
Cattle Guard
Cemetery
Centerline
Cistern
Clothes Line
Commercial Sign Double Face
Commercial Sign One Post
Commercial Sign Overhead
Commercial Sign Two Post
Concrete Symbol
Creek Edge
Curb/Gutter
Curb
Dam Grade/Dike/Levee
Deck Edge
Ditch Block
Doorway Threshold
Drainage Profile
Drop Inlet
Edge Of Asphalt
Edge Of Concrete
Edge Of Gravel
Edge Of Other
Edge Of Shoulder
Elec. Trans./Power Jct. Box
Fence Barbwire
Fence Chainlink
Fence Electric
Fence Misc.
Fence Rock
Fence Snow
Fence Wood
Fence Woven
Fire Hydrant
Flag Pole
Flower Bed
Gas Valve Or Meter
Gas Pump Island
Grain Bin
Guardrail
Guide Sign One Post
Guide Sign Two Post
Gutter
Guy Pole
Haystack

Hedge
Highway R.O.W. Marker
Interstate Close Gate
Iron Pin
Irrigation Ditch
Lake Edge
Lawn Sprinkler
Mailbox
Manhole Electric
Manhole Gas
Manhole Misc
Manhole Sanitary Sewer
Manhole Storm Sewer
Manhole Telephone
Manhole Water
Merry-Go-Round
Microwave Radio Tower
Misc. Line
Misc. Property Corner
Misc. Post
Overhang Or Encroachment
Overhead Utility Line — OH —
Parking Meter
Pipe With End Section
Pipe With Headwall
Pipe Without End Section
Playground Slide
Playground Swing
Power And Light Pole
Power And Telephone Pole
Power Meter
Power Pole
Power Pole And Transformer
Power Tower Structure
Propane Tank
Property Pipe
Property Pipe With Cap
Property Stone
Public Telephone
Railroad Crossing Signal
Railroad Milepost Marker
Railroad Profile
Railroad R.O.W. Marker
Railroad Signs
Railroad Switch
Railroad Track
Railroad Trestle
Rebar
Rebar With Cap
Reference Mark
Regulatory Sign One Post
Regulatory Sign Two Post
Retaining Wall
Riprap
River Edge
Rock And Wire Baskets
Rockpiles
Satellite Dish
Septic Tank

Shrub Tree
Sidewalk
Sign Face
Sign Post
Slough Or Marsh
Spring
Stream Gauge
Street Marker
Subsurface Utility Exploration Test Hole
Telephone Fiber Optics — T/F —
Telephone Junction Box
Telephone Pole
Television Cable Jct Box
Television Tower
Test Wells/Bore Holes
Traffic Signal
Trash Barrel
Tree Belt
Tree Coniferous
Tree Deciduous
Tree Stumps
Triangulation Station
Underground Electric Line — P —
Underground Gas Line — G —
Underground High Pressure Gas Line — HG —
Underground Sanitary Sewer — S —
Underground Storm Sewer — S —
Underground Tank
Underground Telephone Line — T —
Underground Television Cable — TV —
Underground Water Line — W —
Warning Sign One Post
Warning Sign Two Post
Water Fountain
Water Hydrant
Water Meter
Water Tower
Water Valve
Water Well
Weir Rock
Windmill
Wingwall
Witness Corner

State and National Line
County Line
Section Line
Quarter Line
Sixteenth Line
Property Line
Construction Line
R. O. W. Line
New R. O. W. Line
Cut and Fill Limits
Control of Access
New Control of Access
Proposed ROW (After Property Disposal)

Plot Scale - 1:200
Plotted From - tmpr14419
File - ...\Seed\English\toposymb.dgn

STATE OF SOUTH DAKOTA	PROJECT	SHEET	TOTAL SHEETS
	IM 1902(61)0	B51	B253

Plotting Date: 05-05-2015

Interstate ROW Layout

FOR BIDDING PURPOSES ONLY

Sta 100+20 97.67' LT
Begin New Control of Access

Sta 100+20 48.11'RT
Begin New Control of Access

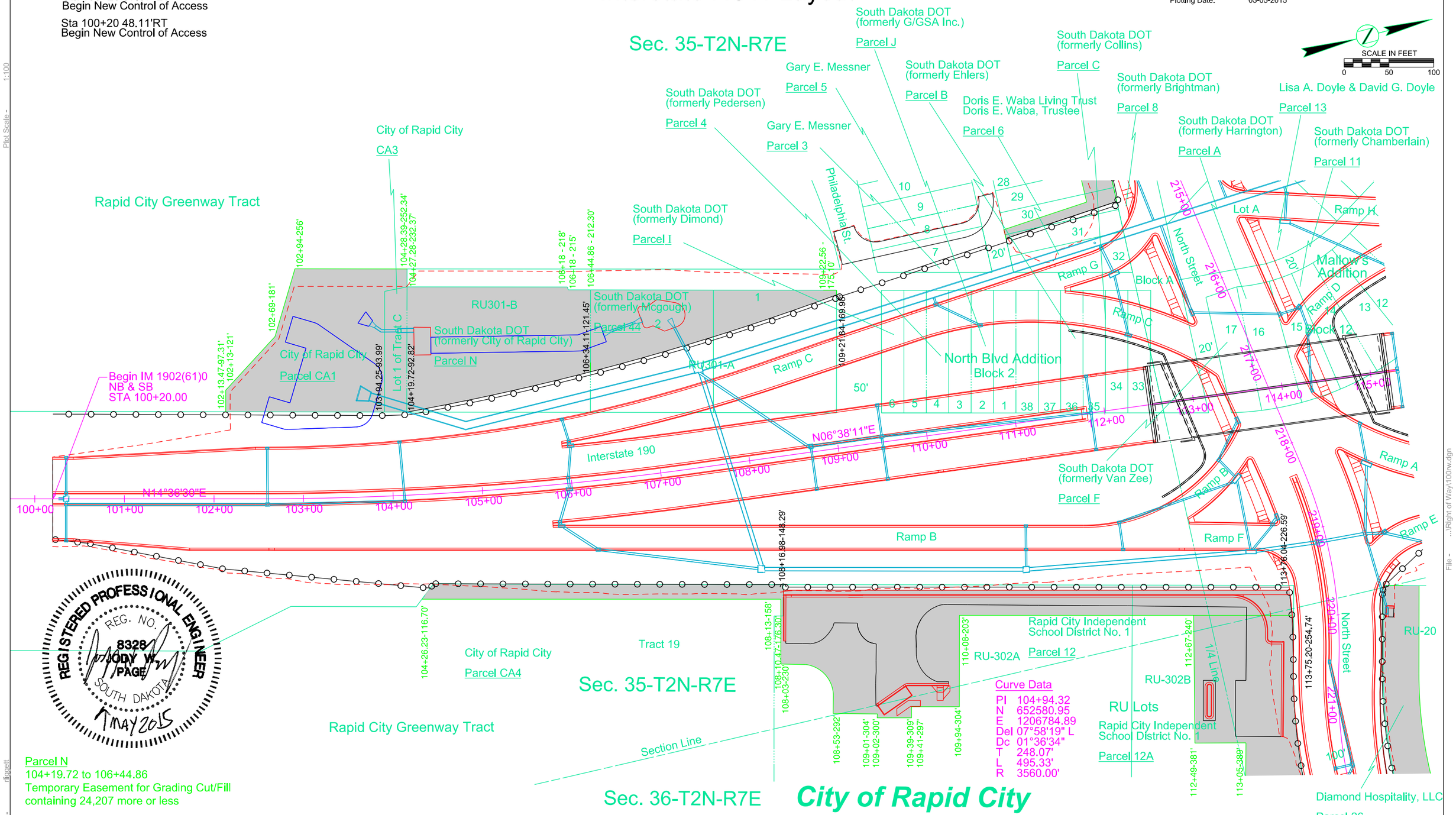

REGISTERED PROFESSIONAL ENGINEER
REG. NO. 8328
JODY W. PAGE
SOUTH DAKOTA
MAY 2015

Parcel N
104+19.72 to 106+44.86
Temporary Easement for Grading Cut/Fill
containing 24,207 more or less

Parcel CA1
102+13.47 to 104+28.39 LT
Temporary Easement for Grading Cut/Fill
containing 22,220 sq ft, more or less

Parcel CA3
103+94.25 to 104+27.28 LT
Temporary Easement for Grading Cut/Fill
containing 3,414 sq ft, more or less

Parcel CA4
104+26.23 to 108+16.98 RT
Temporary Easement for Grading Cut/Fill
containing 6,680 sq ft, more or less

Parcel 12
108+10.47 to 113+76.04
Temporary Easement for Grading Cut/Fill
containing 34,521 sq ft, more or less

Parcel 44
106+34.11 to 109+22.56 LT
Temporary Easement for Grading Cut/Fill
containing 13,963 sq ft, more or less

HDR

Plot Scale - 1:100
Plotted From - dlippett
File - ...\Right of Way\100nw.dgn

Sta 118+58.91 - 171.43'RT
End New Control of Access

Interstate ROW Layout

FOR BIDDING PURPOSES ONLY

STATE OF SOUTH DAKOTA	PROJECT	SHEET	TOTAL SHEETS
	IM 1902(61)0	B52	B253

Plotting Date: 05-05-2015

SCALE IN FEET
0 50 100

Sec. 35-T2N-R7E

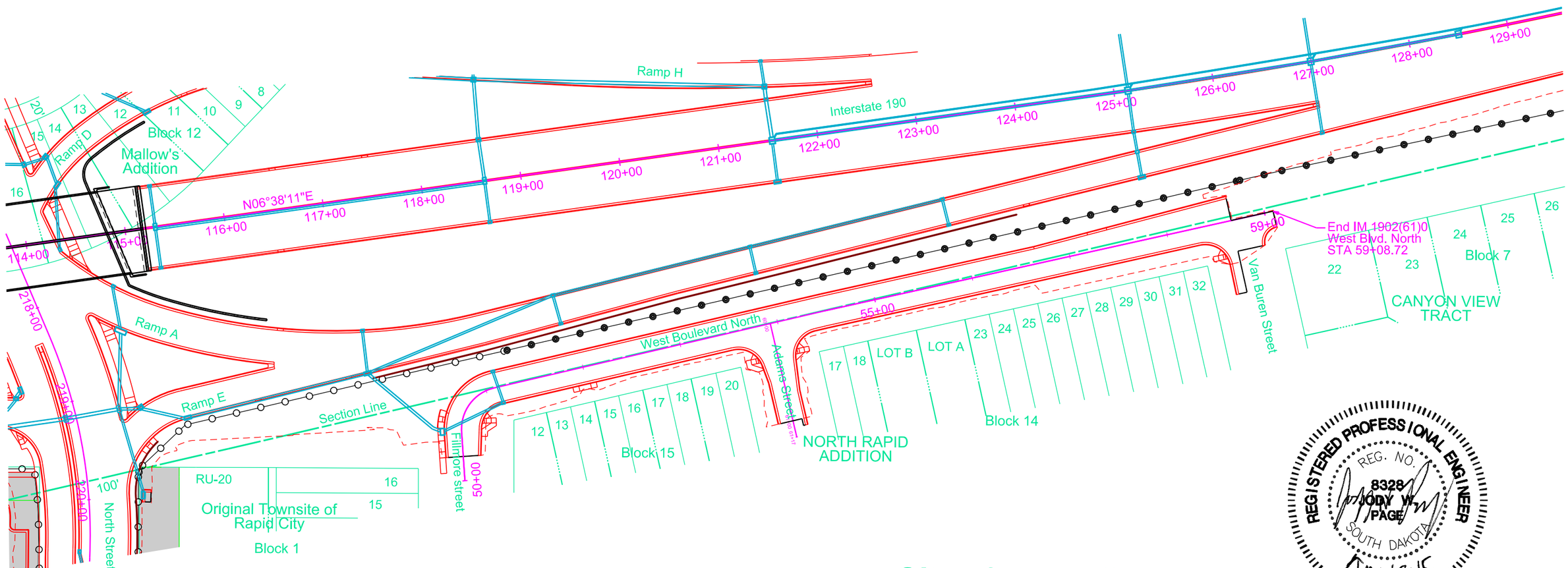

Sec. 36-T2N-R7E

City of Rapid City

REGISTERED PROFESSIONAL ENGINEER
REG. NO. 8328
JODY W. PAGE
SOUTH DAKOTA
MAY 2015

HDR

Plot Scale - 1:100
Plotted From - dlggett
File - ...\Right of Way\115rw.dgn

Sta 211+95 - 43.35' RT
End New Control of Access

Sta 212+25 - 44.49' LT
Begin New Control of Access

North Street ROW Layout

FOR BIDDING PURPOSES ONLY

STATE OF SOUTH DAKOTA	PROJECT	SHEET	TOTAL SHEETS
	IM 1902(61)0	B53	B253

Plotting Date: 05-05-2015

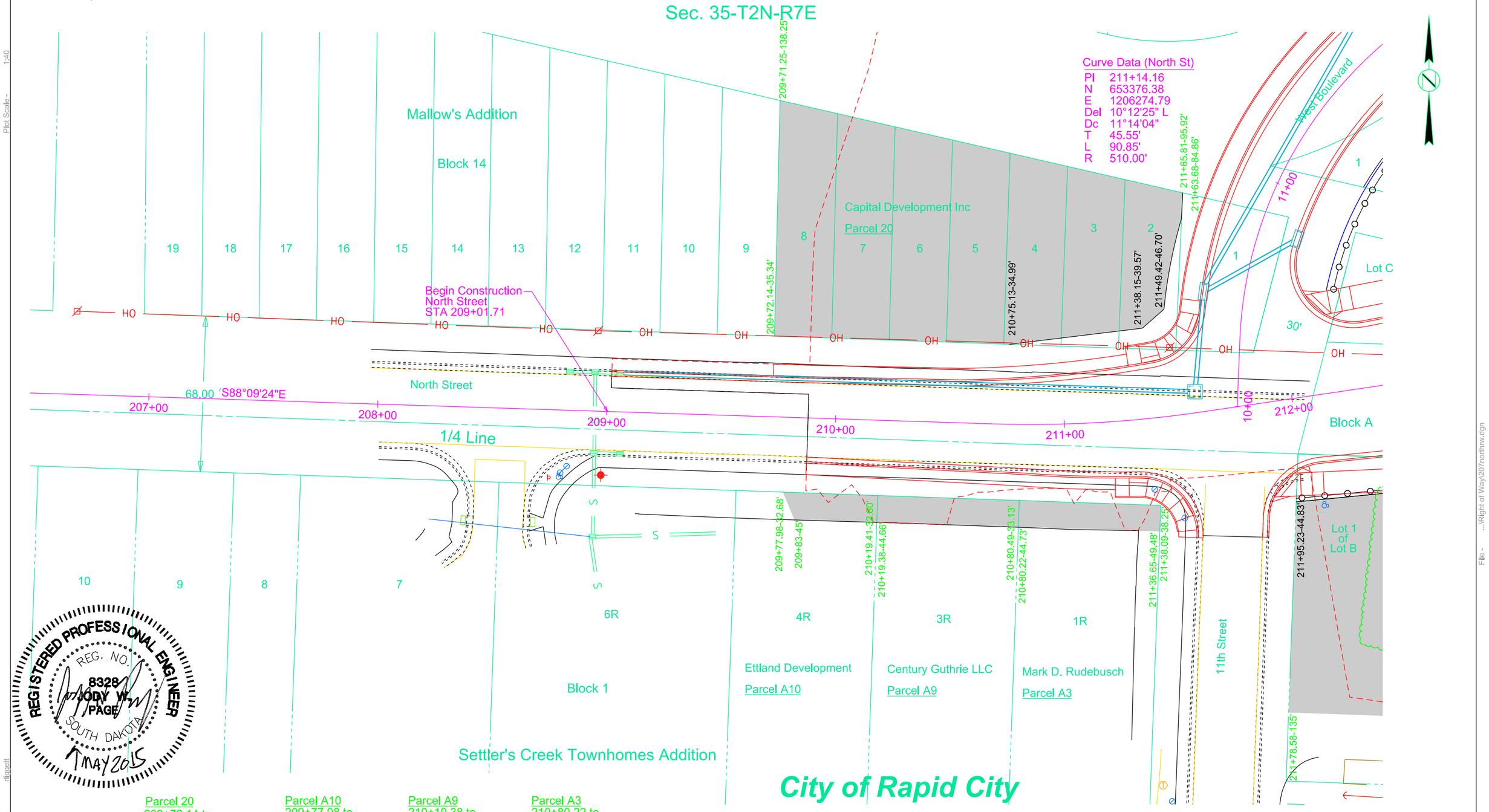

REGISTERED PROFESSIONAL ENGINEER
REG. NO. 8328
JODY W. PAGE
SOUTH DAKOTA
1 MAY 2015

Parcel 20
209+72.14 to
211+65.81 LT
Temporary Easement
for Grading Cut/Fill
containing 14,488 sq ft,
more or less

Parcel A10
209+77.98 to
210+19.41 RT
Temporary Easement
for Grading Cut/Fill
containing 460 sq ft,
more or less

Parcel A9
210+19.38 to
210+80.49 RT
Temporary Easement
for Grading Cut/Fill
containing 725 sq ft,
more or less

Parcel A3
210+80.22 to
211+38.09 RT
Temporary Easement
for Grading Cut/Fill
containing 709 sq ft,
more or less

HDR

Plot Scale - 1:40
Plotted From - dlignett
File - ...\Right of Way\207\northrw.dgn

STATE OF SOUTH DAKOTA	PROJECT	SHEET	TOTAL SHEETS
	IM 1902(61)0	B54	B253

North Street ROW Layout

FOR BIDDING PURPOSES ONLY

Plotting Date: 05-05-2015

REGISTERED PROFESSIONAL ENGINEER
REG. NO. 8328
JODY W. PAGE
SOUTH DAKOTA
1 MAY 2015

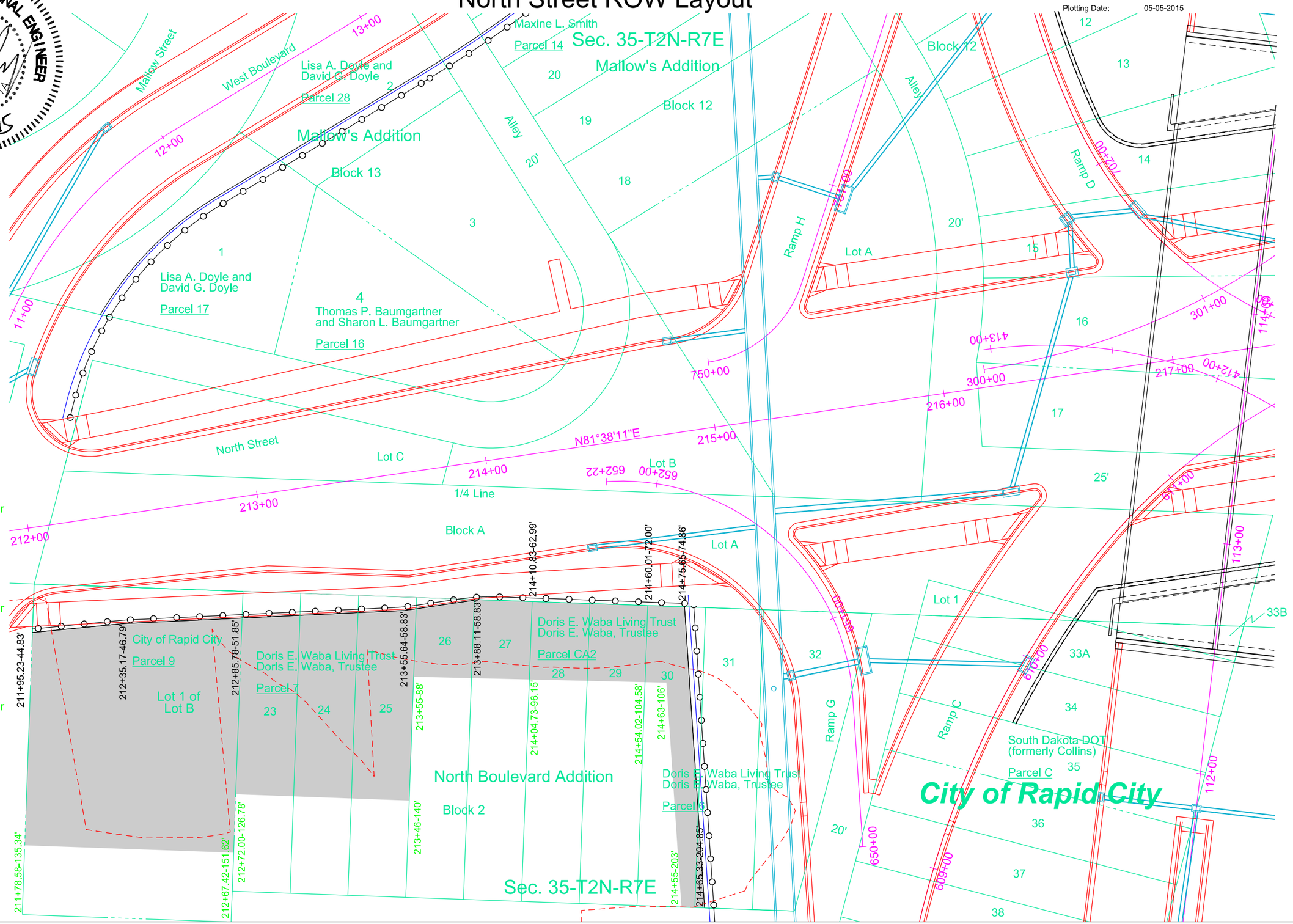

Parcel 7
212+72.00 to
214+10.83 RT
Temporary Easement for Grading Cut/Fill containing 7,582 sq ft, more or less

Parcel CA2
214+04.73 to
214+60.01 RT
Temporary Easement for Grading Cut/Fill containing 1,671 sq ft, more or less

Parcel 6
214+54.02 to
214+65.33 RT
Temporary Easement for Grading Cut/Fill containing 1,554 sq ft, more or less

Parcel 9
211+78.58 to
212+85.78 RT
Temporary Easement for Grading Cut/Fill containing 8,790 sq ft, more or less

Plot Scale - 1:40

Plotted From - rlignett

File - ...\Right of Way\212northrw.dgn

HDR

North Street ROW Layout

FOR BIDDING PURPOSES ONLY

STATE OF SOUTH DAKOTA	PROJECT	SHEET	TOTAL SHEETS
	IM 1902(61)0	B55	B253

Plotting Date: 06-04-2015

Rev. 06/05/2015 AJF

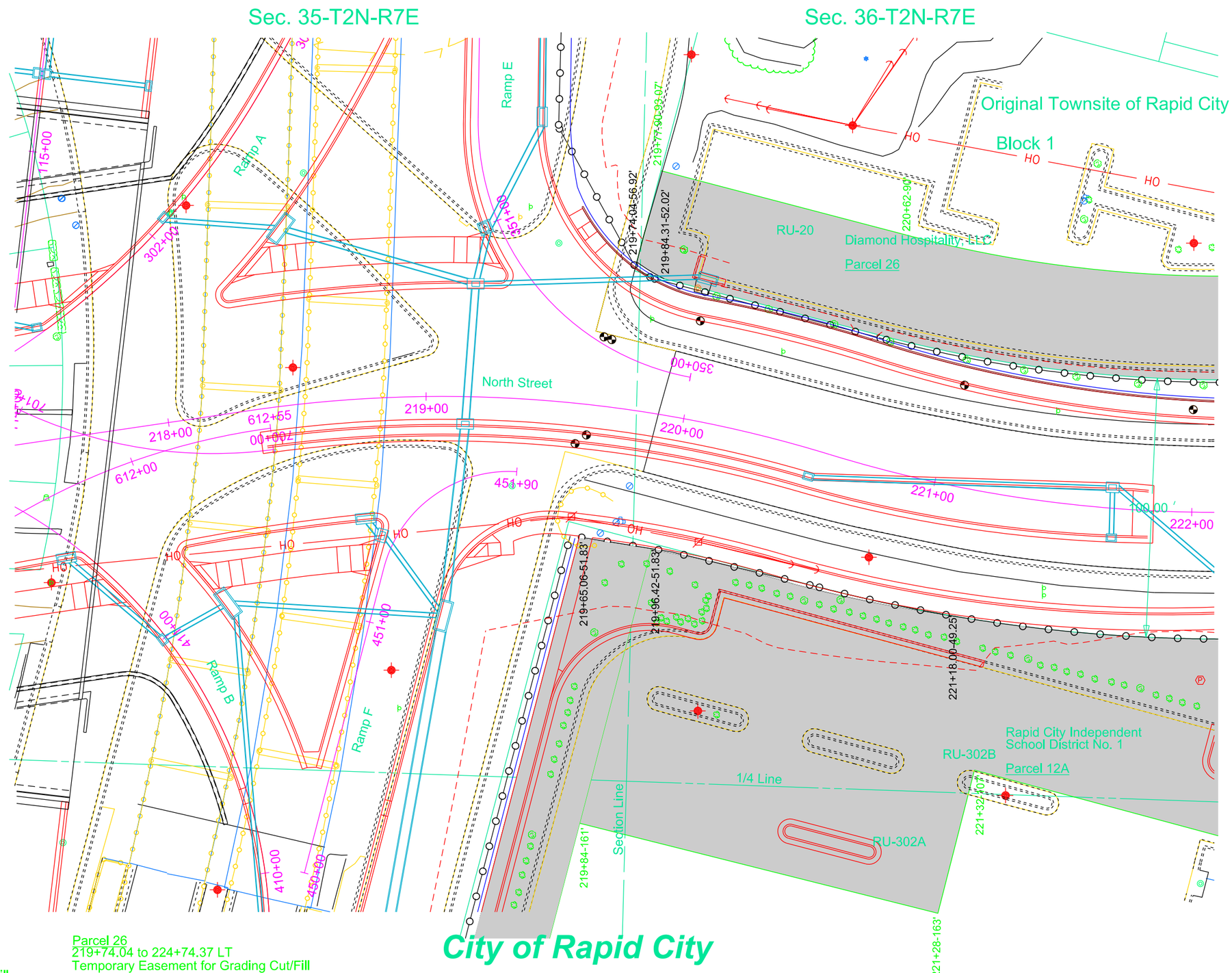

Curve Data (North St)

PI	219+46.83
N	653497.54
E	1207098.84
Del	25°23'43" R
Dc	11°14'04"
T	114.91'
L	226.05'
R	510.00'

Curve Data (North St)

PI	222+25.74
N	653414.74
E	1207369.13
Del	36°25'11" L
Dc	11°14'04"
T	167.78'
L	324.18'
R	510.00'

REGISTERED PROFESSIONAL ENGINEER
REG. NO. 8326
JODY W. PAGE
SOUTH DAKOTA
5 JUN 15

Parcel 12A
219+96.42 to 223+06.97
224+50.95 to 224+76.20
Temporary Easement for Grading Cut/Fill
containing 32,320 sq ft, more or less

Parcel 26
219+74.04 to 224+74.37 LT
Temporary Easement for Grading Cut/Fill
containing 18,547 sq ft, more or less

HDR

Plot Scale - 1:40

Plotted From - dlippett

File - ...\Right of Way\217northrw.dgn

STATE OF SOUTH DAKOTA	PROJECT	SHEET	TOTAL SHEETS
	IM 1902(61)0	B56	B253

Plotting Date: 06-04-2015 Rev. 06/05/2015 AJF

North Street ROW Layout

FOR BIDDING PURPOSES ONLY

Sta 224+62-47.37' LT
Begin New Control of Access

Sta 222+16-48.86 RT
End New Control of Access

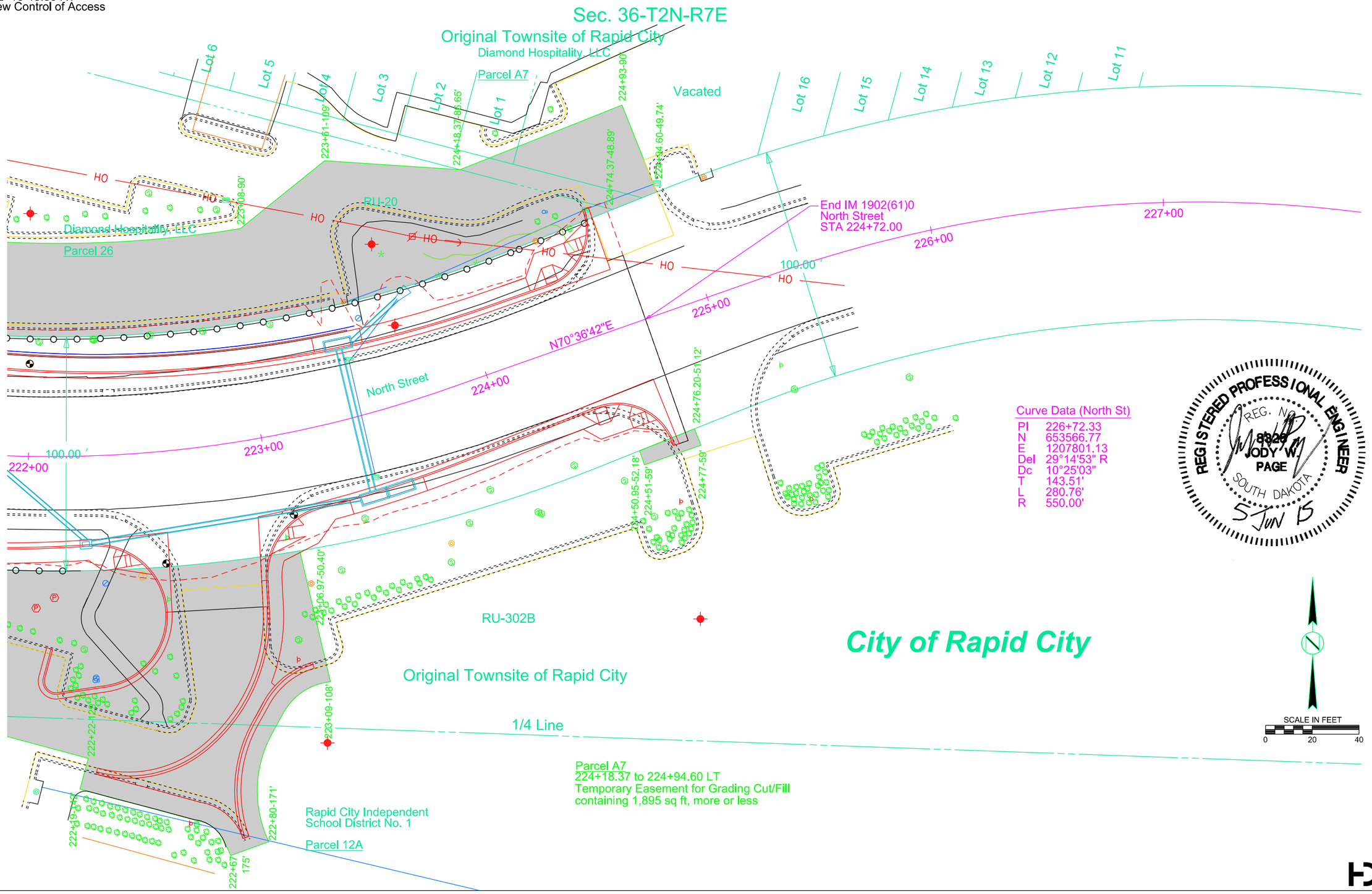

Curve Data (North St)

PI	226+72.33
N	653566.77
E	1207801.13
Del	29°14'53" R
Dc	10°25'03"
T	143.51'
L	280.76'
R	550.00'

Plot Scale - 1:40

Plotted From - dlippett

File - ...\Right of Way\222northrw.dgn

STATE OF SOUTH DAKOTA	PROJECT	SHEET	TOTAL SHEETS
	IM 1902(61)0	B57	B253

Plotting Date: 05-05-2015

West Boulevard ROW Layout

FOR BIDDING PURPOSES ONLY

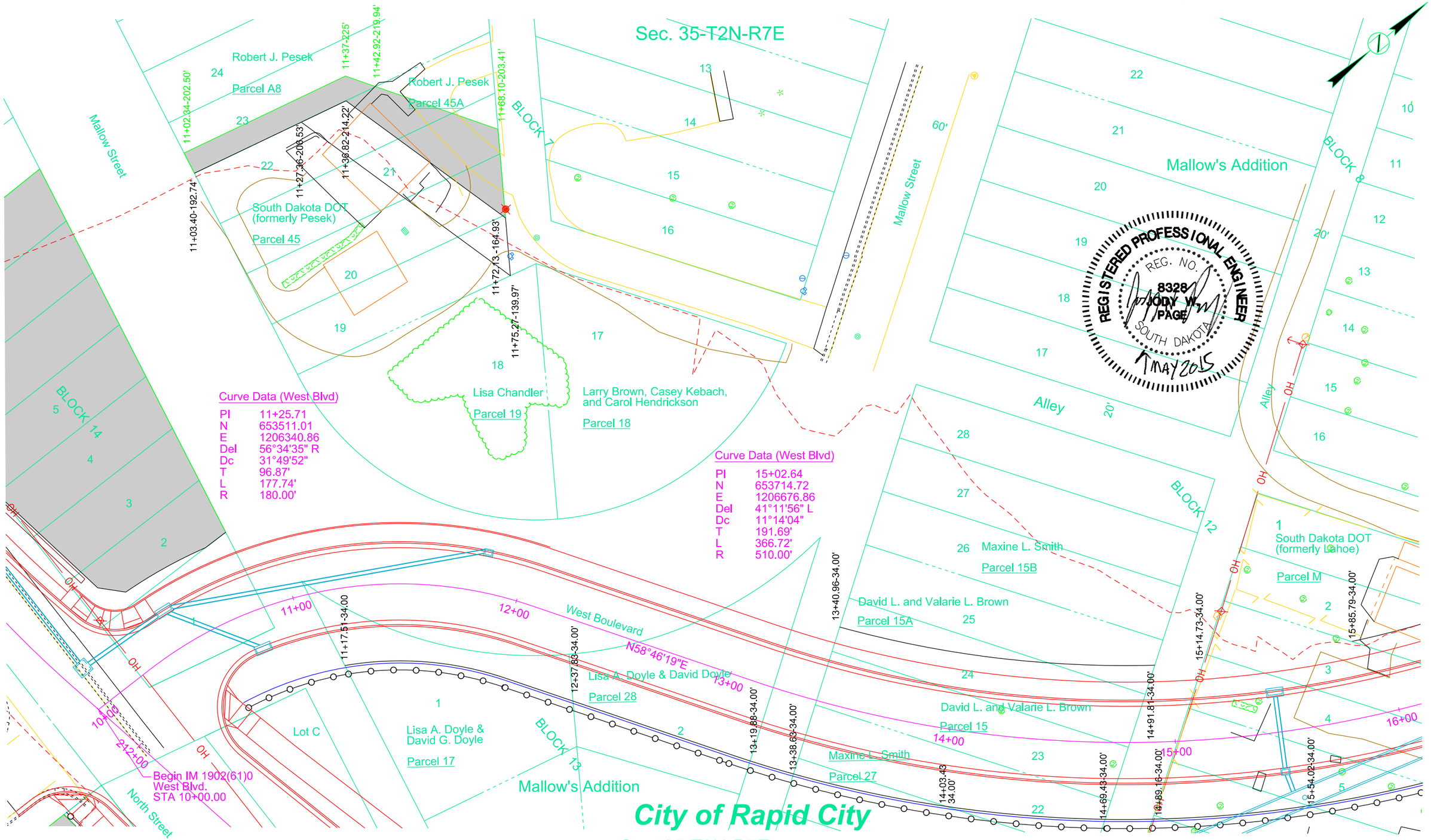

Curve Data (West Blvd)

PI	11+25.71
N	653511.01
E	1206340.86
Del	56°34'35" R
Dc	31°49'52"
T	96.87'
L	177.74'
R	180.00'

Curve Data (West Blvd)

PI	15+02.64
N	653714.72
E	1206676.86
Del	41°11'56" L
Dc	11°14'04"
T	191.69'
L	366.72'
R	510.00'

City of Rapid City

Sec. 35-T2N-R7E

Parcel A8
11+02.34 to 11+42.92 LT Temporary Easement for Grading Cut/Fill containing 839 sq ft, more or less

Parcel 45A
11+36.82 to 11+72.13 Temporary Easement for Grading Cut/Fill containing 1,590 sq ft, more or less

HDR

Plot Scale - 1:40
Plotted From - dlignett
File - ...\Right of Way\10westrw.dgn

Sta 18+00 - 32.33'LT
End New Control of Access

West Boulevard ROW Layout

FOR BIDDING PURPOSES ONLY

STATE OF SOUTH DAKOTA	PROJECT	SHEET	TOTAL SHEETS
	IM 1902(61)0	B58	B253

Plotting Date: 06-04-2015 Rev. 06/05/2015 AJF

Sec. 35-T2N-R7E

Curve Data (West Blvd)

PI	23+34.19
N	654523.35
E	1206932.95
Del	15°44'22" L
Dc	02°17'31"
T	345.56'
L	686.78'
R	2500.00'

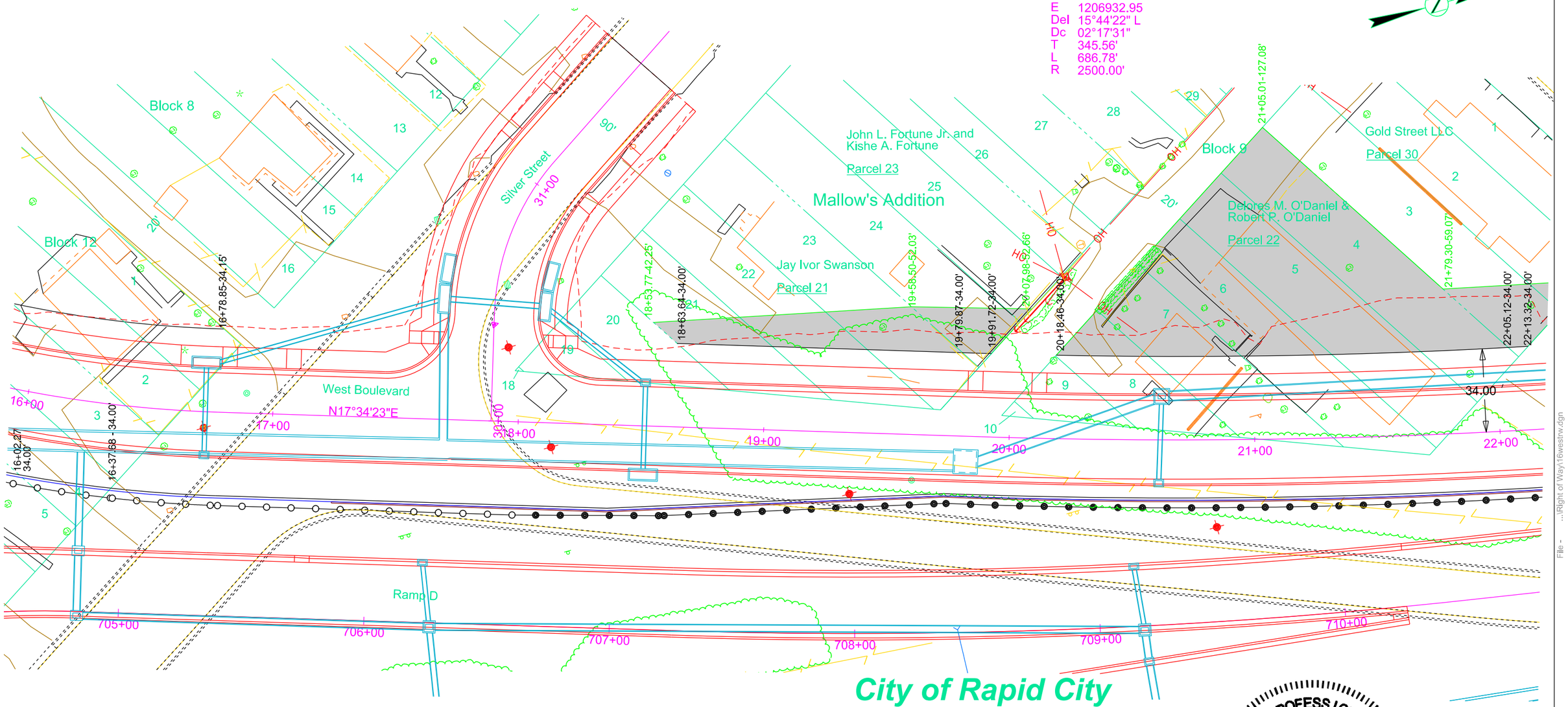

City of Rapid City

Parcel 21
18+53.77 to 19+79.87
Temporary Easement for Grading Cut/Fill containing 1,528 sq ft, more or less

Parcel 22
20+18.46 to 22+05.12
Temporary Easement for Grading Cut/Fill containing 9,469sq ft, more or less

Parcel 23
19+58.71 to 20+07.98
Temporary Easement for Grading Cut/Fill containing 561 sq ft, more or less

Parcel 30
21+79.30 to 22+39.68
Temporary Easement for Grading Cut/Fill containing 848 sq ft, more or less

Sec. 35-T2N-R7E

REGISTERED PROFESSIONAL ENGINEER
REG. NO. 8320
JODY W. PAGE
SOUTH DAKOTA
5 JUN 15

HDR

Plot Scale - 1:40
Plotted From - dlagett
File - ...\Right of Way\16westrw.dgn

West Boulevard ROW Layout

FOR BIDDING PURPOSES ONLY

STATE OF SOUTH DAKOTA	PROJECT	SHEET	TOTAL SHEETS
	IM 1902(61)0	B59	B253

Plotting Date: 05-05-2015

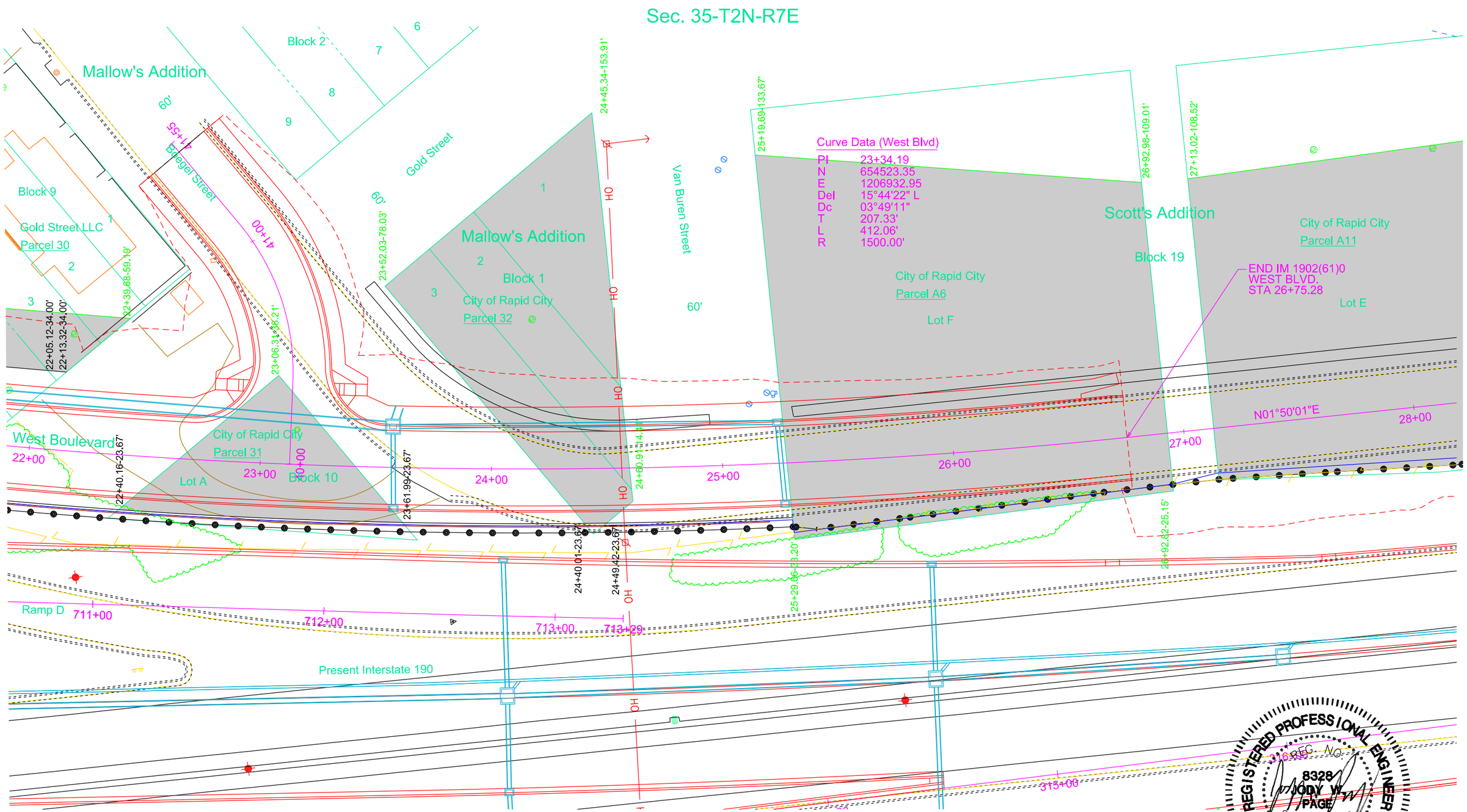

Sec. 35-T2N-R7E

Parcel 31
22+40.16 to 23+61.99
Temporary Easement
for Grading Cut/Fill
containing 3,821 sq ft,
more or less

Parcel 32
23+52.03to 24+60.91
Temporary Easement
for Grading Cut/Fill
containing 9,712 sq ft,
more or less

Parcel A6
25+19.69 to 26+92.98
Temporary Easement
for Grading Cut/Fill
containing 24,853 sq ft,
more or less

City of Rapid City

HDR

Plot Scale - 1:40

Plotted From - dlggett

File - ...\Right of Way\22westrw.dgn

STATE OF SOUTH DAKOTA	PROJECT	SHEET	TOTAL SHEETS
	IM 1902(61)0	B60	B253

Plotting Date: 05-05-2015

West Boulevard Plan

FOR BIDDING PURPOSES ONLY

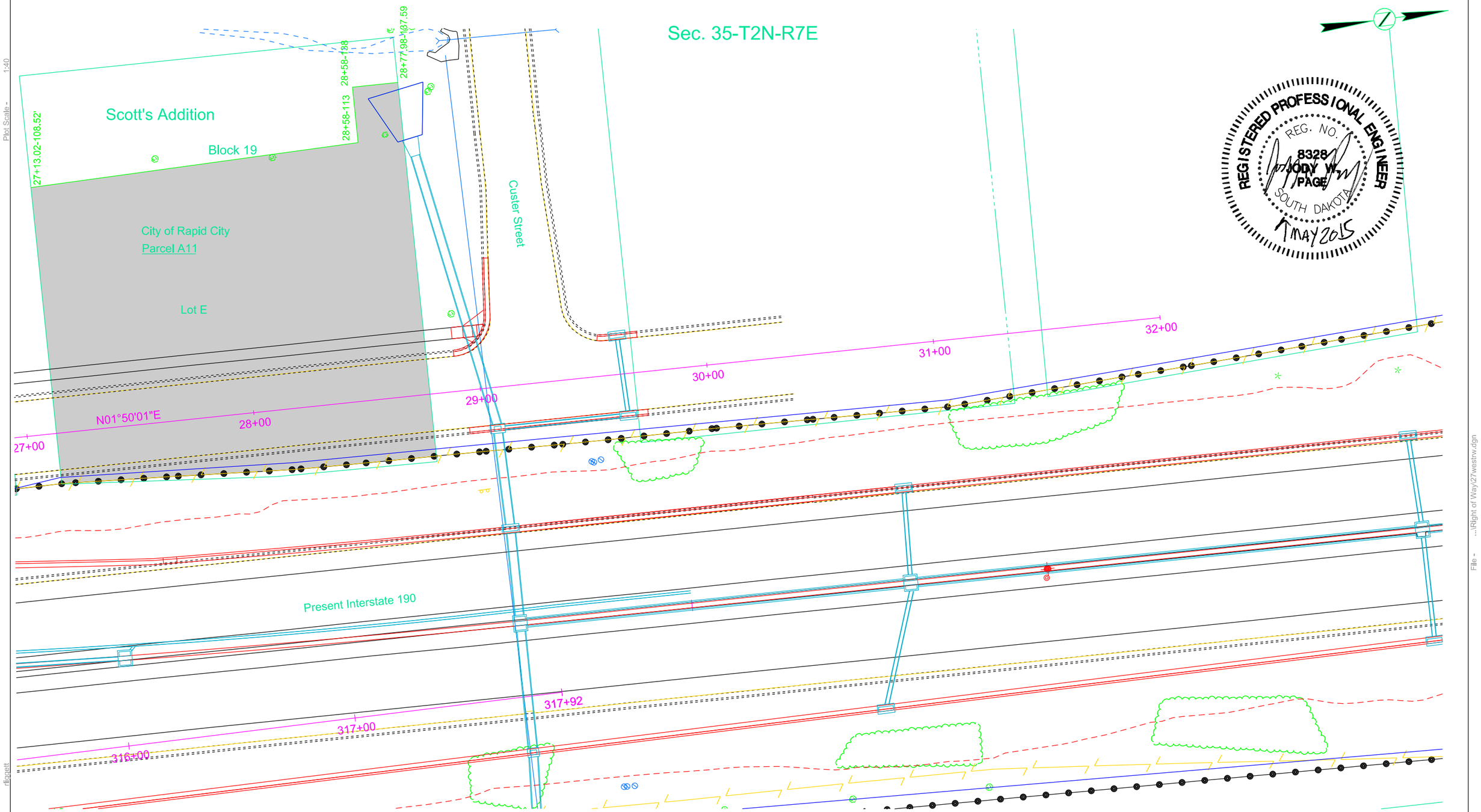

Parcel A11
27+13.02 to 28+77.98
Temporary Easement
for Grading Cut/Fill
containing 22,988 sq ft,
more or less

City of Rapid City

HDR

Plot Scale - 1:40

Plotted From - dlippett

File - ...\Right of Way\27westrw.dgn

Removal Layout Sheet

FOR BIDDING PURPOSES ONLY

STATE OF SOUTH DAKOTA	PROJECT	SHEET	TOTAL SHEETS
	IM 1902(61)0	B61	B253

Plotting Date: 05-06-2015

Take Out Drop Inlets with Frame & Grate at the following locations:
100+31-7 R
100+31-6 L
102+31-40 L
102+30-40 R
102+18-88 R
103+37-90 R
103+37-54 R
103+62-86 L
103+62-51 L
109+61-22 L
109+56-12 R
109+54-25 R
109+49-58 R
109+48-72 R
109+44-104 R
109+42-117 R
109+38-152 R
110+54-80 R

100+35-1 R to 102+33-4 R
Take Out 72"-197' RCP Arch
100+31-6 L to 100+31-7 R
Take Out 18"-13' RCP
102+18-88 R to 103+37-90 R
Take Out 18"-121' RCP
102+30-40 R to 102+33-4 R
Take Out 18"-37' RCP
102+31-40 L to 102+33-4 R
Take Out 18"-44' RCP
102+33-4 R to 109+50-68 R
Take Out 72"-718' RCP Arch
103+37-90 R to 103+37-54 R
Take Out 18"-36' RCP
103+62-86 L to 103+62-51 L
Take Out 18"-35' RCP
109+38-152 R to 109+42-117 R
Take Out 18"-36' RCP

Take Out Asphalt Concrete Pavement at the following locations:
100+20 L/R to 110+47-79 R (Median, 1177 SqYd)
100+69-35 L to 112+52-56 R (Boulevard, 1263 SqYd)
101+30-41 R to 112+45-159 R (Boulevard, 1261 SqYd)
104+58-198 L to 109+30-177 L (3032 SqYd)
107+00-149 L to 107+59-168 L (287 SqYd)
108+65-153 R to 109+09-159 R (127 SqYd)
109+16-33 L to 109+51-246 L (559 SqYd)
111+02-204 R to 111+39-210 R (57 SqYd)

103+08-239 L to 103+21-96 L
Remove Fence (144 Ft)

109+04-293 R to 109+39-273 R
Remove and Reset Fence (66 Ft)

Do Not Disturb Surfacing or Landscaping Inside Temporary Easement at the following locations:
109+64-202 R to 110+97-204 R
111+46-213 R to 112+73 -231 R

103+00-243 R to 103+26-208 L
Do Not Disturb Fence

Remove Mail Box
(Incidental Work, Grading)
at the following locations:
106+41-67 L
107+25-57 L
108+28-43 L

Take Out Concrete Curb and Gutter at the following locations:
101+23-65 L to 109+26-237 L (988 Ft)
101+27-46 L to 113+54-67 R (1235 Ft)
101+99-36 L to 112+31-68 R (1035 Ft)
102+02-78 R to 113+84-217 R (1869 Ft)
102+06-61 R to 113+94-180 R (1210 Ft)
102+14-39 R to 112+22-139 R (1022 Ft)
109+54-247 L to 113+56-31 R (642 Ft)

Fill Existing 18" CMP with Controlled Density Fill
99+71-95 R to 102+18-88 R (16.17 CuYd)
99+66-87 L to 103+62-86 L (25.92 CuYd)

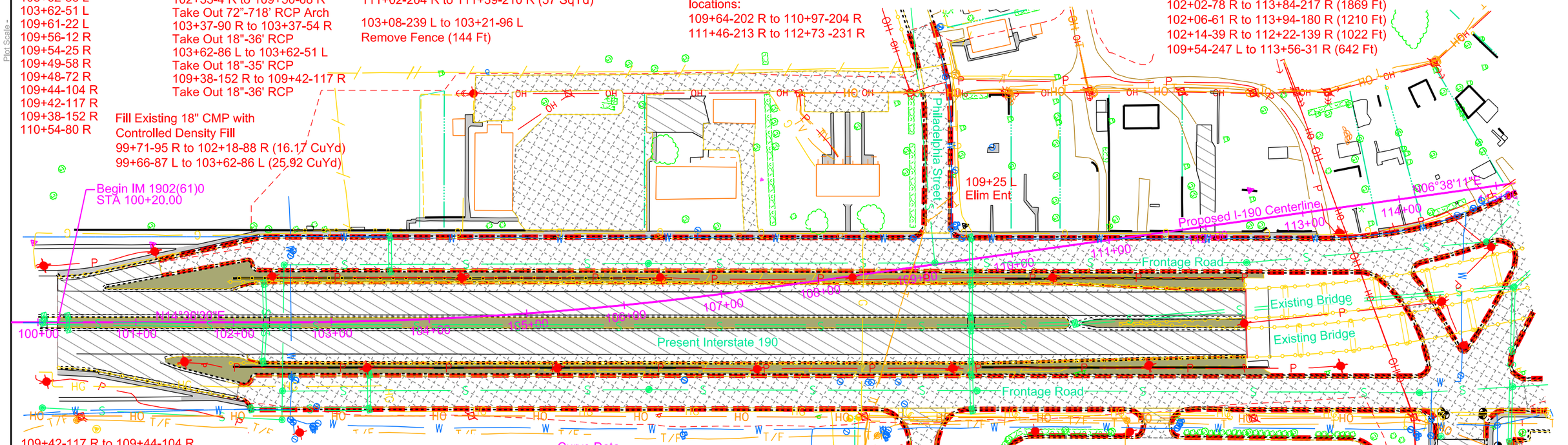

109+42-117 R to 109+44-104 R
Take Out 18"-14' RCP
109+44-104 R to 109+48-72 R
Take Out 18"-33' RCP
109+48-72 R to 109+50-68 R
Take Out 18"-5' RCP
109+50-68 R to 109+49-58 R
Take Out 18"-5' RCP
109+49-58 R to 109+54-25 R
Take Out 18"-34' RCP
109+54-25 R to 109+56-12 R
Take Out 18"-13' RCP
109+56-12 R to 109+61-22 L
Take Out 18"-35' RCP
109+50-68 R to 110+54-80 R
Take Out 60"-105' RCP Arch
110+54-80 R to 115+03-105 R
Take Out 60"-450' RCP Arch

Do Not Disturb Trees at the following locations:
102+20-98 L
102+36-95 L
108+10-178 R
109+20-254 R
109+29-194 R
110+29-187 R
111+70-208 R
112+15-215 R
112+61-222 R

Take Out Concrete Sidewalk at the following locations:
100+20-53 L to 109+10-35 L (482 SqYd)
100+20-54 R to 102+14-86 R (102 SqYd)
103+80-92 L to 104+67-198 L (99 SqYd)
106+31-73 L to 106+53-172 L (39 SqYd)
108+21-117 L to 108+39-168 L (27 SqYd)
108+35-46 L to 108+45-73 L (16 SqYd)
108+44-114 L to 108+56-166 L (29 SqYd)
108+68-164 L to 108+72-110 L (26 SqYd)
109+68-222 L to 110+56-215 L (35 SqYd)
109+81-26 L to 109+87-51 L (7 SqYd)
109+89-106 L to 110+02-113 L (9 SqYd)
110+24-79 L to 110+30-19 L (20 SqYd)
112+24-136 L to 112+25-82 L (13 SqYd)
113+51-4 R to 113+57-28 R (6 SqYd)
113+75-27 R to 114+21-25 R (30 SqYd)

Remove Concrete Retaining Wall at the following locations:
103+72-92 L to 105+05-85 L (470 Ft)
101+99-46 R to 106+71-72 R (479 Ft)
101+99-45 L to 106+52-22 L (445 Ft)
109+53-111 R to 112+43-151 R (272 Ft)
109+89-24 L to 112+32-58 L (246 Ft)

100+37-95 L to 103+72-92 L
Do Not Disturb Retaining Wall

Curve Data

PI	104+94.32
N	652580.95
E	1206784.89
Del	07°58'19" L
Dc	01°36'34"
T	248.07'
L	495.33'
R	3560.00'

Remove Concrete Foundation
(Incidental Work Grading)
at the following locations:

104+76-194 L	112+84-64 L
104+82-148 L	113+55-37 L
106+87-120 L	113+56-58 L
107+39-183 L	113+74-92 L
108+41-92 L	113+97-44 L
110+07-224 L	114+37-106 L
110+13-157 L	114+90-17 L
110+57-224 L	114+85-89 L
111+08-119 L	115+02-77 L
111+11-137 L	115+12-48 L
111+48-122 L	

Structure to be Removed by Others at the following locatins:
110+08-223 L

108+81 R
Elim Ent

111+21 R
Elim Ent

Take Out Concrete Pavement at the following locations:
100+20 L/R to 112+27-103 R (7962 SqYd)
106+42-173 L to 107+10-203 L (239 SqYd)
108+27-197 R to 108+66-192 R (74 SqYd)
112+06-104 L to 112+09-7 R (200 SqYd)

Take Out Junction Box with Frame & Lid at the following locations:
102+33-4 R
109+50-68 R
115+03-105 R

Clear and Grub Tree at the following locations:
102+20-98 L to 109+08-119 L (20 Each)
108+10-178 R to 113+41-236 R (14 Each)
109+63-107 L to 114+91-147 L (33 Each)

Take Out Guard Rail at the following locations:
100+22-46 L to 101+46-71 L (128)
100+21-47 R to 102+02-77 R (184)
100+97-42 R to 116+20-130 R (1439)
101+93-41 L to 119+61-20 R (1777)
102+06-45 L to 106+52-22 L (444)
102+18-46 R to 106+69-72 R (460)
110+00-117 R to 112+20-148 R (227)
110+30-30 R to 112+31-66 R (215)
110+98-85 R to 118+17-77 R (707)
111+00-87 R to 118+17-79 R (708)
113+74-232 R to 113+91-238 R (51)

Clear and Grub Stump at the following locations:
102+20-98 L to 109+08-119 L (2 Each)
109+63-107 L to 114+91-147 L (23 Each)

Salvage Asphalt Concrete Pavement at the following locations:
101+24-63 L to 115+00-17 R (4890 SqYd)
101+99-36 L to 112+31-68 R (769 SqYd)
102+03-76 R to 115+00-230 R (5433 SqYd)
102+14-39 R to 112+22-139 R (781 SqYd)

Salvage CAT-350 Crash Attenuator
(Incidental Work, Grading)
110+98-85 R

Remove Concrete Block Retaining Wall
(Incidental Work Grading)
at the following locations:
111+19-144 L to 111+76-1 R (196 Ft)
112+36-10 R to 113+07-20 R (65 Ft)
114+98-157 L to 115+34-111 L (58 Ft)

REGISTERED PROFESSIONAL ENGINEER
REG. NO. 8328
JODY W. PAGE
SOUTH DAKOTA
MAY 2015

Note:
See Section E for Bridge Removal
See Section L for Light and Signal Removals
See Section S for Sign Removals

- Remove Concrete Sidewalk
- Remove Concrete Pavement (Include Curb and Gutter)
- Remove or Salvage Asphalt Pavement
- Remove Curb and Gutter
- Remove Median or Boulevard Pavement
- Remove Concrete Approach Pavement
- Remove Concrete Driveway Pavement

HDR

Plot Scale - 1:100
Plotted From - dlggett
File - ...\Section_B\Removal\100_rem.dgn

STATE OF SOUTH DAKOTA	PROJECT	SHEET	TOTAL SHEETS
	IM 1902(61)0	B62	B253

Plotting Date: 05-06-2015

FOR BIDDING PURPOSES ONLY

Removal Layout Sheet

Sec. 35 - T2N - R7E

Take Out Drop Inlets with Frame & Grate at the following locations:
120+85-16 R
120+91-96 R
120+88-55 R
125+86-14 R

120+88-55 R to 125+86-14 R
Take Out 18"-500' RCP

115+03-105 R to 119+26-183 L
Take Out 60"-512' RCP Arch
119+26-183 L to 121+19-165 L
Take Out 60"-202' RCP Arch
120+77-67 L to 120+85-16 R
Take Out 18"-83' RCP
120+85-16 R to 120+88-55 R
Take Out 18"-39' RCP
120+88-55 R to 120+91-96 R
Take Out 18"-41' RCP

120+77-67 L
Take Out 1 End Section:
(Incidental Work, Grading)

Temporary Drainage Connection
for Phase 1A
(Incidental Work, Grading)
120+57-142'L to 120+77-67'L
Install 18"-30' RCP Between Existing 18" RCP
Culvert and Existing 60" RCP Arch Storm Sewer
(See Section B Grading Notes for Additional Information)

Take Out Junction Box with Frame & Lid at the following locations:
119+26-183 L
120+94-137 L

Structure to be Removed by Others
at the following locations:
117+54-256 L
121+84-164 L

Remove Concrete Retaining Wall
at the following locations:
116+16-94 R to 116+49+88 R (38 Ft)

Remove Lawn Irrigation System
Vault, Equipment, and Piping
(Incidental Work, Grading)
177+66-183 R

Remove Concrete Foundation
(Incidental Work, Grading)
at the following locations:
115+16-134 L 116+55-198 L
115+68-146 L 116+55-119 L
115+70-105 L 116+63-251 L
115+95-189 L 117+54-256 L
116+36-191 L

REGISTERED PROFESSIONAL ENGINEER
REG. NO. 8328
JODY W. PAGE
SOUTH DAKOTA
1 MAY 2015

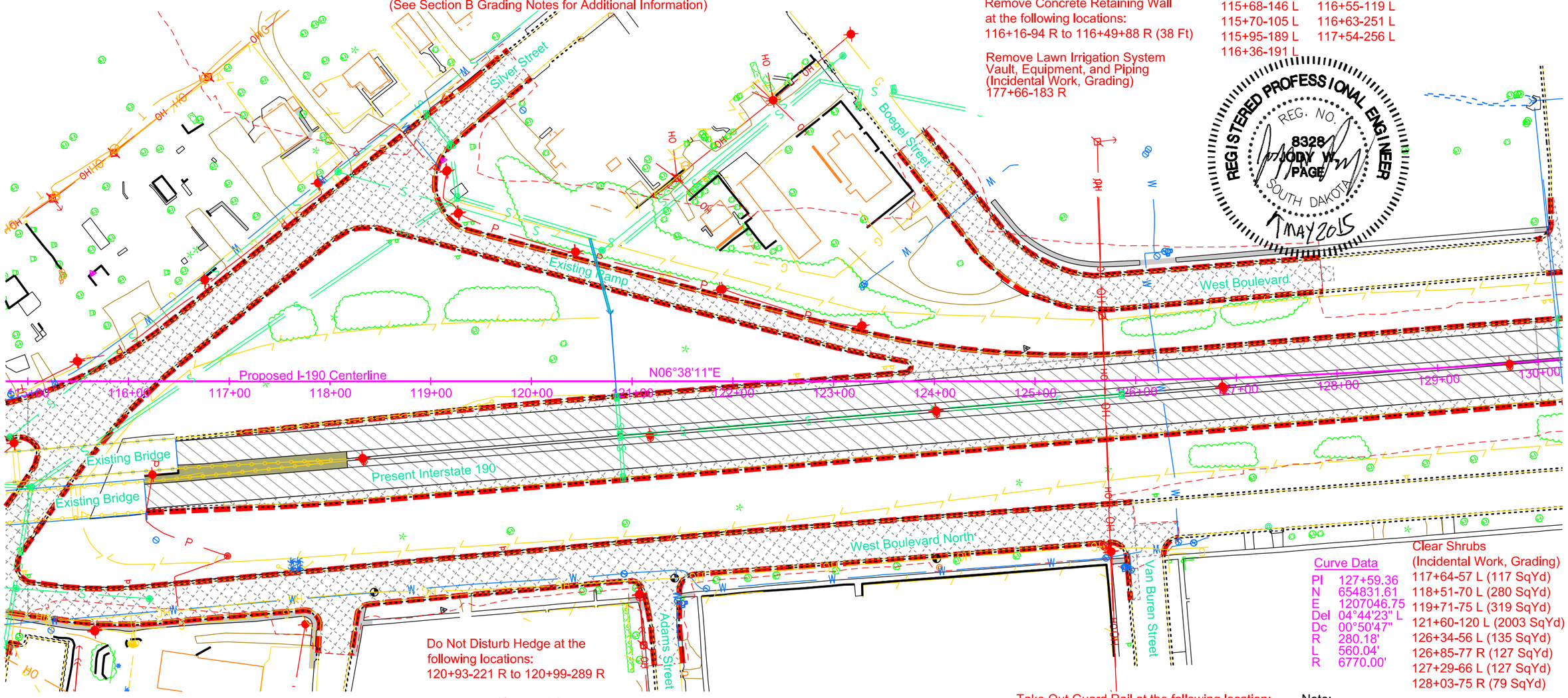

Do Not Disturb Hedge at the following locations:
120+93-221 R to 120+99-289 R

Curve Data

PI	127+59.36
N	654831.61
E	1207046.75
Del	04°44'23" L
Dc	00°50'47"
R	280.18'
L	560.04'
R	6770.00'

Clear Shrubs
(Incidental Work, Grading)
117+64-57 L (117 SqYd)
118+51-70 L (280 SqYd)
119+71-75 L (319 SqYd)
121+60-120 L (2003 SqYd)
126+34-56 L (135 SqYd)
126+85-77 R (127 SqYd)
127+29-66 L (127 SqYd)
128+03-75 R (79 SqYd)

Salvage Chain Link Fence at the following locations:
115+54-138 R to 116+63-13 L (244 Ft)
115+54-139 R to 130+00-84 R (1476 Ft)
116+63-13 L to 120+68-63 L (410 Ft)
119+15-181 L to 130+00-77 L (1095 Ft)

Take Out Concrete Sidewalk at
the following locations:
114+96-238 R to 117+85-294 R (208 SqYd)
116+62-153 L to 116+79-135 L (8 SqYd)
116+79-169 L to 117+19-152 L (18 SqYd)
117+51-223 L to 117+89-252 L (28 SqYd)

Do Not Disturb Tree at the following locations:
120+51-209 R
120+67-208 R
122+15-196 R
122+43-193 R
123+02-188 R
123+63-184 R
124+23-178 R
124+82-174 R
133+66-74 L
134+31-78 R
135+07-79 L

Clear and Grub Tree at
the following locations:
114+87-192 L to 117+99-239 L (32 Each)
117+36-CL to 124+26-117 L (12 Each)
118+72-154 R to 125+71-88 R (6 Each)
Clear and Grub Stump at
the following locations:
114+87-192 L to 117+99-239 L (4 Each)
117+36-CL to 124+26-117 L (1 Each)
116+18-130 R to 130+20-32 L
Take Out Concrete Pavement (9560 SqYd)
118+17-79 R to 130+00-CL
Take Out Concrete Barrier (1187 Ft)

Take Out Concrete Pavement at
the following locations:
116+50-58 L to 130+00-32 L (4446 SqYd)
116+18-126 R to 130+00-32 R (4587 SqYd)

Take Out Concrete Curb and Gutter at
the following locations:
114+91-187 R to 123+75-14 L (1050 Ft)
114+91-187 R to 125+94-120 R (1115 Ft)
114+97-233 R to 117+85-294 R (352 Ft)
115+29-5 R to 119+78+327 L (561 Ft)
117+07-51 R to 123+75-14 L (675 Ft)
119+98-303 L to 130+24-42 L (1307 Ft)

Take Out Guard Rail at the following location:
117+49-184 R to 117+83-179 R (40)

Salvage Asphalt Concrete Pavement
at the following locations:
115+00-230 R to 125+96-144 R (4836 SqYd)
115+00-17 R to 119+78-327 L (3407 SqYd)
116+18-130 R to 130+00-42 R (1144 SqYd)
117+07-52 L to 130+00-40 L (1048 SqYd)
119+03-139 L to 126+07-26 L (1242 SqYd)

Take Out Asphalt Concrete Pavement
at the following locations:
116+16-120 R to 118+17-86 R (Median, 332 SqYd)

Note:
See Section E for Bridge Removal
See Section L for Light and Signal Removals
See Section S for Sign Removals
Remove Concrete Sidewalk
Remove Concrete Pavement (Include Curb and Gutter)
Remove or Salvage Asphalt Pavement
Remove Curb and Gutter
Remove Median or Boulevard Pavement
Remove Concrete Approach Pavement
Remove Concrete Driveway Pavement

HDR

Plot Scale - 1:100
Plotted From - rlipgelt
File - ...\Section_B\Removal\115_rem.dgn

STATE OF SOUTH DAKOTA	PROJECT	SHEET	TOTAL SHEETS
	IM 1902(61)0	B63	B253

Removal Layout Sheet

FOR BIDDING PURPOSES ONLY

Plotting Date: 05-05-2015

Take Out Drop Inlets with Frame & Grate at the following locations:
130+24-40 L
130+24-40 R
130+24-1 L
134+22-0 L
138+10-41 L
138+11-41 R
138+11-0 L
140+19-40 L
140+20-42 R
144+74-40 L
144+74-40 R
144+75-0 L

130+17-252 L to 130+24-40 L
Take Out 24"-212' RCP
130+24-40 L to 130+24-1 L
Take Out 18"-39' RCP
130+24-1 L to 130+24-40 R
Take Out 18"-41' RCP
130+24-1 L to 134+22-0 L
Take Out 18"-397' RCP
134+22-0 L to 138+11-0 L
Take Out 18"-390' RCP
138+10-41 L to 138+11-0 L
Take Out 18"-41' RCP
138+10-41 L to 140+19-40 L
Take Out 18"-209' RCP
138+11-41 R to 140+20-42 R
Take Out 18"-209' RCP
138+11-0 L to 138+11-41 R
Take Out 18"-41' RCP
144+74-40 L to 144+75-0 L
Take Out 24"-41' RCP
144+74-40 R to 144+75-0 L
Take Out 24"-41' RCP
144+74-40 L to 144+74-65 L
Take Out 24"-25' RCP

130+16-252 L
Take Out 1 End Section:
(Incidental Work, Grading)

144+74-65 L
Take Out 1 End Section:
(Incidental Work, Grading)

Clear Shrubs
(Incidental Work, Grading)
130+14-66 R (80 SqYd)
130+92-67 L (51 SqYd)
131+90-72 R (99 SqYd)
132+59-67 L (135 SqYd)
133+34-77 R (159 SqYd)
136+05-81 L (202 SqYd)
137+09-77 L (366 SqYd)
137+79-73 R (248 SqYd)
140+43-74 L (328 SqYd)
140+95-90 R (320 SqYd)
141+51-72 L (164 SqYd)

Sec. 35 - T2N - R7E

Salvage Chain Link Fence at the following locations:
130+00-84 R to 145+00-115 R(1205 Ft)
130+00-77 L to 145+00-57 L (1450 Ft)

Take Out Guard Rail at the following locations:
138+76-41 L to 141+28-52 L (255)
137+11-51 R to 139+62-42 R (253)

144+57-92 L to 144+88-79 L
Take Out Concrete Apron (35 SqYd)
(Incidental Work, Grading)

130+06-120 L to 130+21-132 L
Take Out Concrete Sidewalk (8 SqYd)

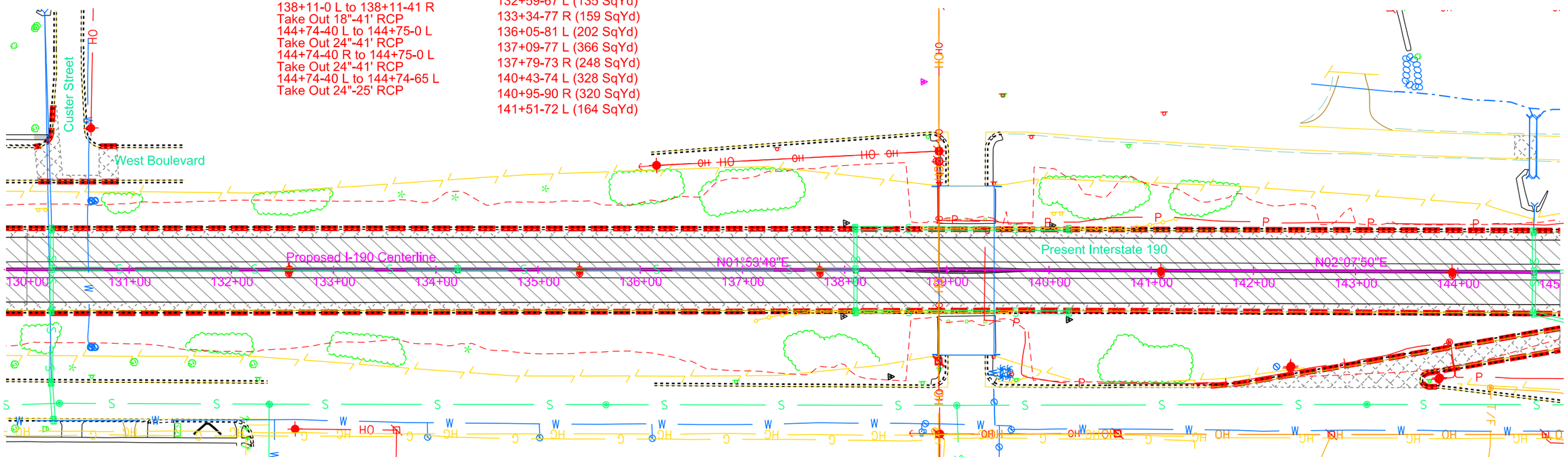

Curve Data

PI	138+99.80
N	655971.75
E	1207084.50
Del	00°14'03" R
Dc	00°24'23"
T	28.81'
L	57.62'
R	14100.00'

141+53 to 146+74 R
Obliterate NB Entrance Ramp

Clear and Grub Tree at
the following locations:
133+66-74 L to 135+07-79 L (3 Each)
129+88-93 R to 134+31-78 R (6 Each)
129+85-219' L (1 Each)
130+07-138' L (1 Each)
130+07-236' L (2 Each)

Take Out Concrete Pavement at
the following locations:
130+00-32 L to 145+00-31 L (5029 SqYd)
130+00-32 R to 145+00-32 R (5088 SqYd)

Salvage Asphalt Concrete Pavement at
the following locations:
130+00-40 L to 145+00-40 L (1305 SqYd)
130+00-42 R to 145+00-40 R (1334 SqYd)
141+54-114 R to 145+00-75 R (635 SqYd)

Take Out Concrete Curb and Gutter at
the following locations:
130+11-86 L to130+90-86 L (79 Ft)
130+07-121 L to 130+26-161 L (50 Ft)
130+24-42 L to 145+00-42 L (1472 Ft)
130+71-121 L to 130+88-121 L (18 Ft)
141+53-112 R to 145+45-43 R (401 Ft)
143+80-111 R to 146+75-49 R (333 Ft)

Take Out Asphalt Concrete Pavement at
the following locations:
130+07-119 L to 130+90-88 L (203 SqYd)
144+55-111 L to 144+76-133 L (55 SqYd)

130+00-CL to 145+00-CL
Take Out Concrete Barrier (1500 Ft)

Sec. 36 - T2N - R7E

REGISTERED PROFESSIONAL ENGINEER
REG. NO. 8328
JODY W. PAGE
SOUTH DAKOTA
1 MAY 2015

Note:
See Section L for Light and Signal Removals
See Section S for Sign Removals
Remove Concrete Sidewalk
Remove Concrete Pavement (Include Curb and Gutter)
Remove or Salvage Asphalt Pavement
Remove Curb and Gutter
Remove Median or Boulevard Pavement
Remove Concrete Approach Pavement
Remove Concrete Driveway Pavement

HDR

Plot Scale - 1:100
Plotted From - dlggett
File - ...\Section_B\Removal\130_rem.dgn

STATE OF SOUTH DAKOTA	PROJECT	SHEET	TOTAL SHEETS
	IM 1902(61)0	B64	B253

Plotting Date: 05-05-2015

Removal Layout Sheet

FOR BIDDING PURPOSES ONLY

Sec. 35 - T2N - R7E

147+74-45 R to 150+24-43 R
Take Out Guard Rail (252 Ft)

Take Out Drop Inlets with Frame & Grate at the following locations:
145+71-64 R
148+23-0 L

146+55-70 R
Take Out 1 End Section:
(Incidental Work, Grading)

144+74-40 R to 145+71-64 R
Take Out 24"-100' RCP
144+75-0 L to 148+23-0 L
Take Out 18"-349' RCP
145+71-64 R to 146+55-70 R
Take Out 24"-84' RCP

Do Not Disturb Drop Inlet
152+48.50

Salvage Chain Link Fence at the following locations:
145+00-115 R to 153+28-115 R (829 Ft)
145+00-57 L to 153+28-76 L (830 Ft)

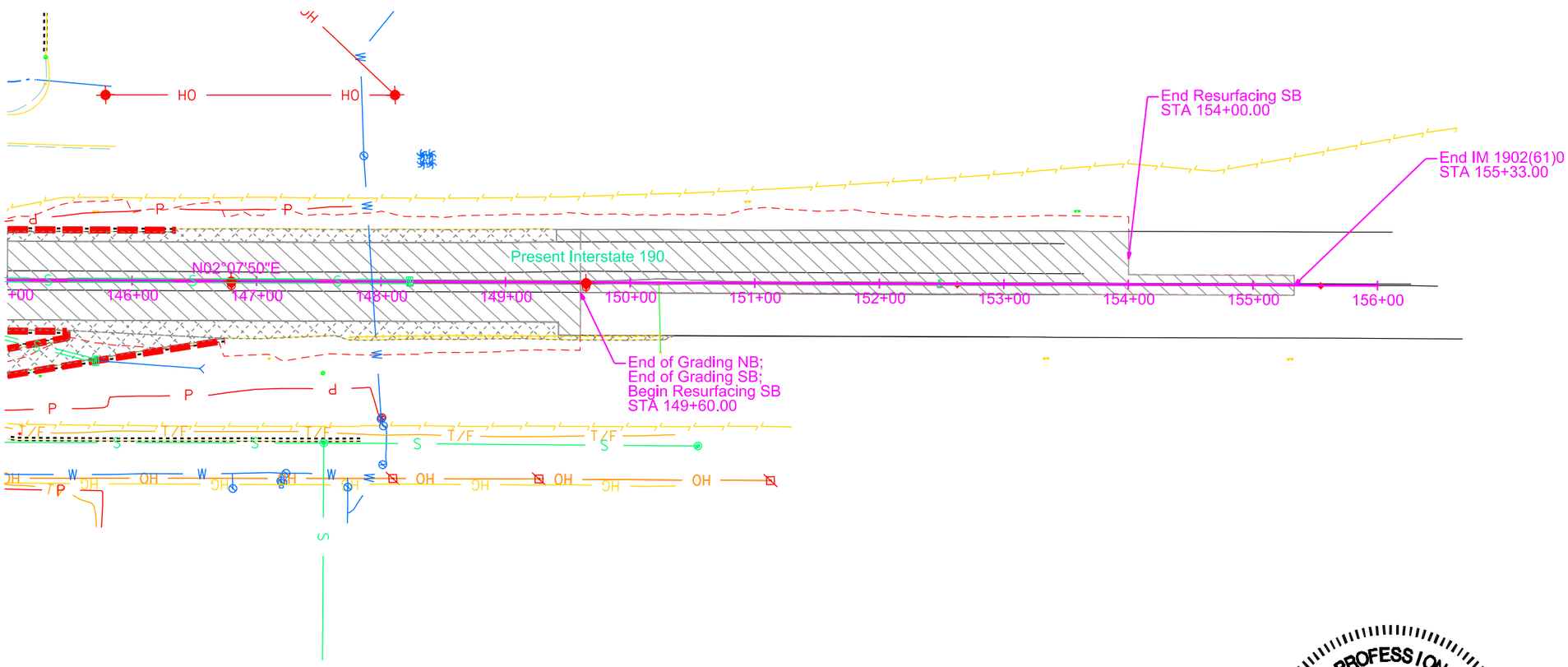

145+00-CL to 155+33-CL
Take Out Concrete Barrier (1034 Ft)

Take Out Concrete Pavement at the following locations:
145+00-31 L to 149+60-32 L (1564 SqYd)
145+00-32 R to 149+60-42 R (1582 SqYd)
149+60-32 L to 155+33-8 L (2117 SqYd)
149+60-8 R to 155+33-9 R (458 SqYd)

145+00-42 L to 146+35-42 L
Take Out Concrete Curb and Gutter (136 Ft)

Salvage Asphalt Concrete Pavement at the following locations:
145+00-40 L to 154+00-43 L (479 SqYd)
145+00-40 R to 150+34-43 R (644 SqYd)
145+00-75 R to 146+69-47 R (285 SqYd)

REGISTERED PROFESSIONAL ENGINEER
REG. NO. 8328
JODY W. PAGE
SOUTH DAKOTA
MAY 2015

Note:
See Section L for Light and Signal Removals
See Section S for Sign Removals

- Remove Concrete Sidewalk
- Remove Concrete Pavement (Include Curb and Gutter)
- Remove or Salvage Asphalt Pavement
- Remove Curb and Gutter
- Remove Median or Boulevard Pavement
- Remove Concrete Approach Pavement
- Remove Concrete Driveway Pavement

HDR

Plot Scale - 1:100
Plotted From - dlipgett
File - ...\Section_B\Removal\145_rem.dgn

STATE OF SOUTH DAKOTA	PROJECT	SHEET	TOTAL SHEETS
	IM 1902(61)0	B65	B253

Plotting Date: 05-05-2015

FOR BIDDING PURPOSES ONLY

Removal Layout Sheet
North Street
Sec. 35-T2N-R7E

209+88-23 L to 212+09-6 L
Remove and Reset Gravity Large Concrete Block Wall
(Miscellaneous Work)

209+16-44 R to 211+28-48 R
Do Not Disturb Retaining Wall

209+88-25 R to 211+51-53 R
Take Out Concrete Sidewalk (102 SqYd)

Take Out Asphalt Concrete Pavement
at the following locations:
209+02-16 L to 212+05-1 R (930 SqYd)

Take Out Concrete Curb and Gutter at
the following locations:
209+02-18 L to 212+05-1 R (303 Ft)
209+88-20 R to 211+51-53 R (189 Ft)
211+81-58 R to 212+00-36 R (34 Ft)

Curve Data (North St)

PI	211+14.16
N	653376.38
E	1206274.79
Del	10°12'25" L
Dc	11°14'04"
T	45.55'
L	90.85'
R	510.00'

Note:
See Section L for Light and Signal Removals
See Section S for Sign Removals
Remove Concrete Sidewalk
Remove Concrete Pavement
(Include Curb and Gutter)
Remove or Salvage Asphalt Pavement
Remove Curb and Gutter
Remove Median or Boulevard Pavement
Remove Concrete Approach Pavement
Remove Concrete Driveway Pavement

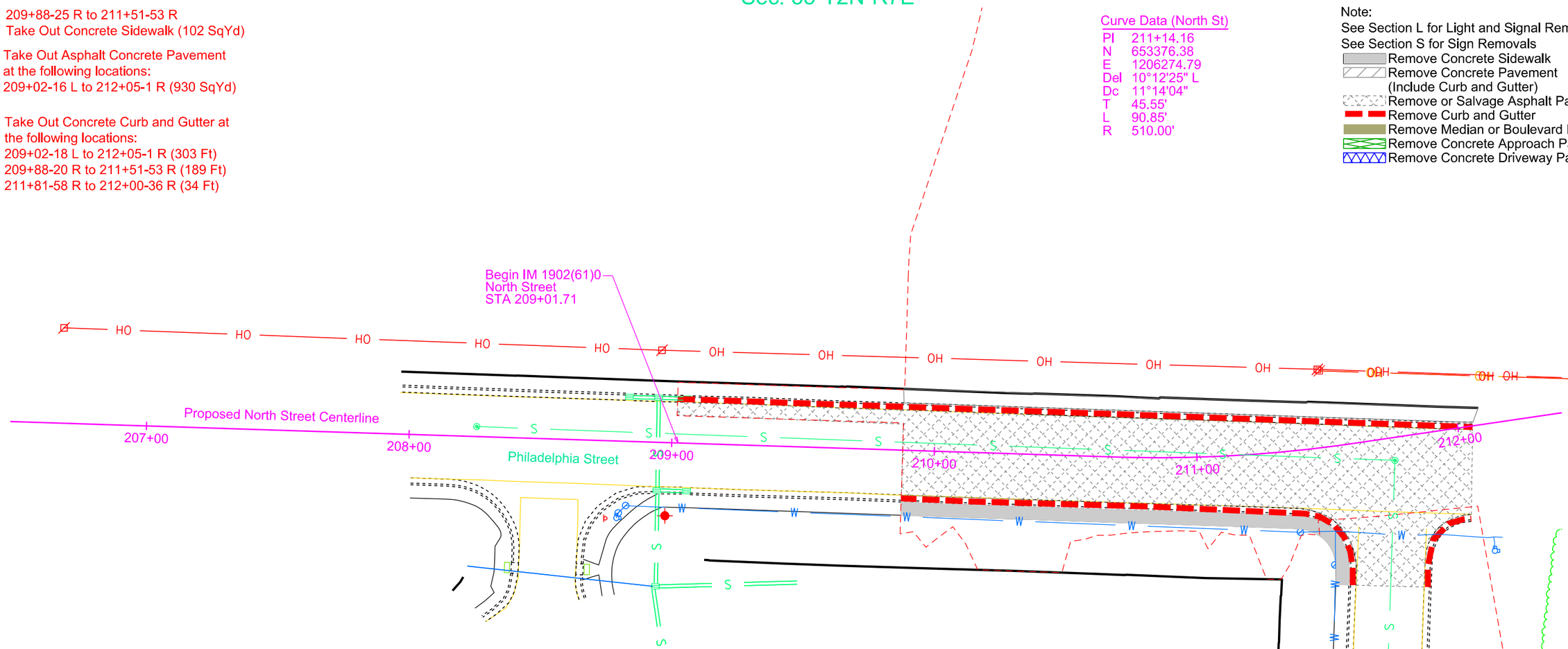

Sec. 35-T2N-R7E

REGISTERED PROFESSIONAL ENGINEER
REG. NO. 8328
JODY W. PAGE
SOUTH DAKOTA
MAY 2015

HDR

Plot Scale - 1:40
Plotted From - dlggett
File - ...\Removal\207\north_rem.dgn

STATE OF SOUTH DAKOTA	PROJECT	SHEET	TOTAL SHEETS
	IM 1902(61)0	B66	B253

Plotting Date: 05-05-2015

Clear and GrubTree at the following locations:
214+56-74 R
214+69-29 R

Removal Layout Sheet
North Street
Sec. 35-T2N-R7E

FOR BIDDING PURPOSES ONLY

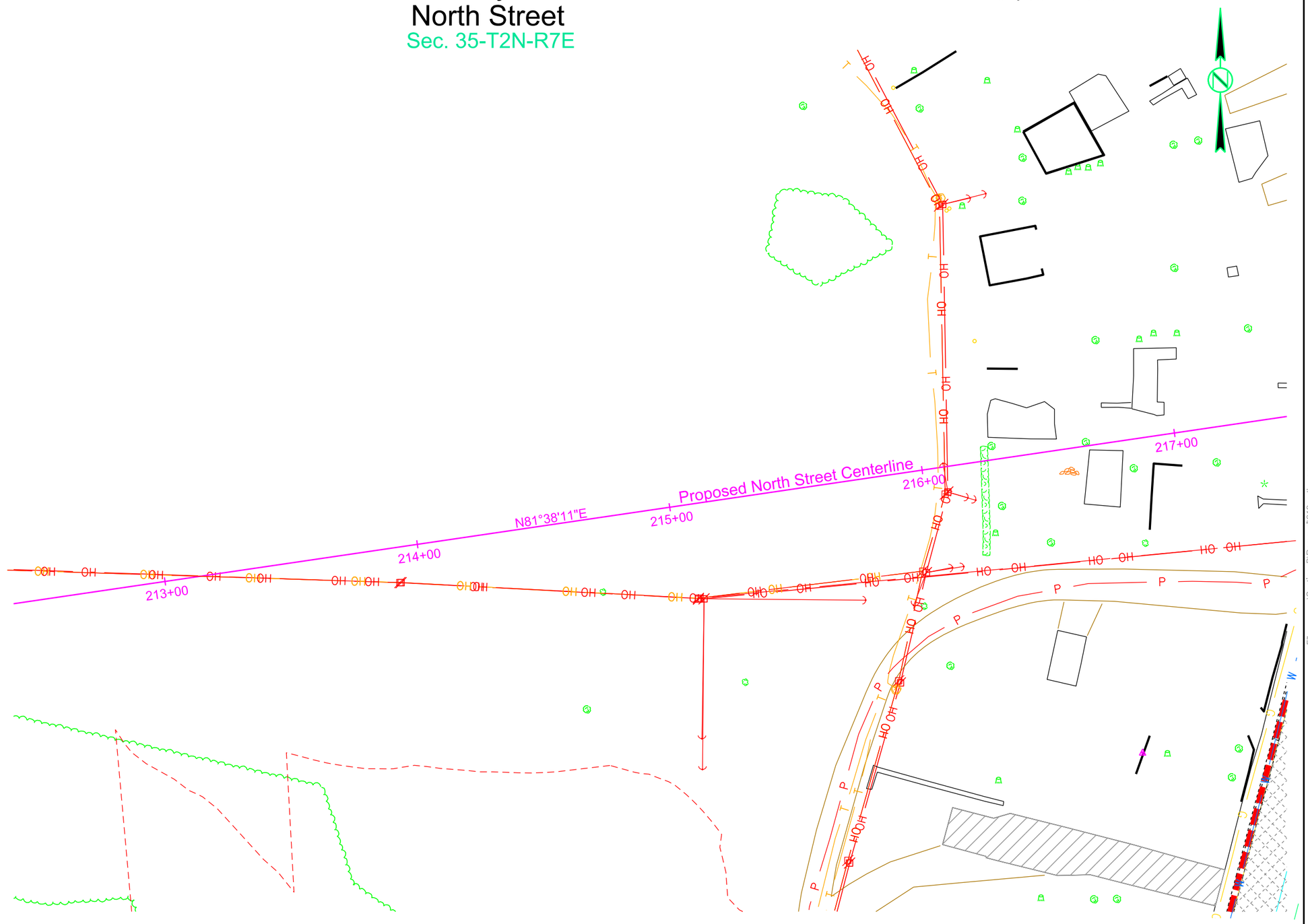

REGISTERED PROFESSIONAL ENGINEER
REG. NO. 8328
JODY W. PAGE
SOUTH DAKOTA
MAY 2015

Note:
See Section L for Light and Signal Removals
See Section S for Sign Removals

- Remove Concrete Sidewalk
- Remove Concrete Pavement (Include Curb and Gutter)
- Remove or Salvage Asphalt Pavement
- Remove Curb and Gutter
- Remove Median or Boulevard Pavement
- Remove Concrete Approach Pavement
- Remove Concrete Driveway Pavement

Sec. 35-T2N-R7E

HDR

Plot Scale - 1:40
Plotted From - rlagett
File - ...\Section_B\Removal\212north_rem

STATE OF SOUTH DAKOTA	PROJECT	SHEET	TOTAL SHEETS
	IM 1902(61)0	B67	B253

Plotting Date: 05-05-2015

Removal Layout Sheet
North Street

FOR BIDDING PURPOSES ONLY

219+91-56 L to 224+72-56 L
Do Not Disturb Curb and Gutter
in Temporary Easement

218+61-88 L to 219+14-68 L
Take Out 36"-65' RCP
219+14-68 L to 219+97-51 L
Take Out 36"-94' RCP
219+90-64 L
Do Not Disturb Trees

220+42-109 R
Do Not Disturb Shrubs

220+33-109 R
Do Not Disturb Light Pole

220+08-188 R to 220+58-108 R
Do Not Disturb Island
with Curb & Gutter

Take Out Concrete Pavement
at the following locations:
219+93-28 L to 222+09-25 R (1297 SqYd)

Take Out Asphalt Concrete Pavement at the following locations:
219+71-154 R to 221+25-117 R (565 SqYd)
219+97-63 L to 220+06-58 L (4 SqYd)
220+75-137 R to 221+09-152 R (68 SqYd)

Take Out Concrete Sidewalk at the following locations:
219+64-29 R to 222+09-31 R (161 SqYd)
219+70-70 L to 222+09-34 L (174 SqYd)
219+55-42 R to 219+77-36 R
=113+74-232R to 113+92-238 R
Take Out Guard Rail (51 Ft)
Take Out Drop Inlet with Frame &
Grate at the following locations:
219+14-68 L
219+96-51 L

Clear and Grub Tree at
the following locations:
220+04-49 L to 222+04-49 L (9 Each)

Take Out Concrete Curb & Gutter at the
following locations:
217+58-31 R to 217+75-138 L (170 Ft)
217+93-50 R to 219+16-32 R (137 Ft)
218+15-84 L to 219+02-20 L (324 Ft)
219+54-42 R to 219+88-25 R (42 Ft)
219+67-154 R to 221+29-65 R (223 Ft)
219+70-70 L to 219+93-28 L (59 Ft)
219+95-65 L to 220+05-53 L (33 Ft)
221+09-110 R to 220+76-108 R (75 Ft)

REGISTERED PROFESSIONAL ENGINEER
REG. NO. 8328
JODY W. PAGE
SOUTH DAKOTA
1 MAY 2015

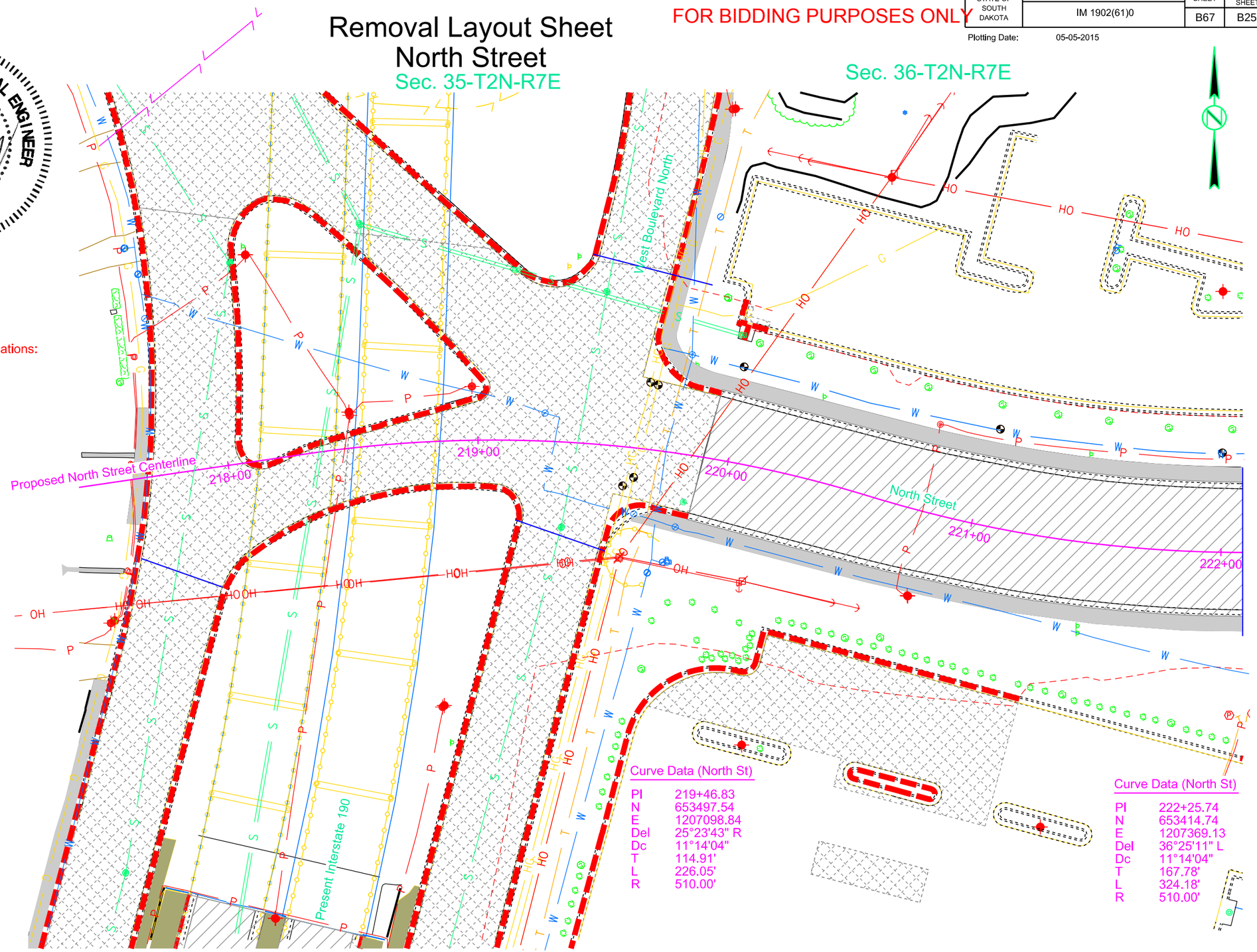

Note:
See Section L for Light and Signal Removals
See Section S for Sign Removals
- Remove Concrete Sidewalk
- Remove Concrete Pavement (Include Curb and Gutter)
- Remove or Salvage Asphalt Pavement
- Remove Curb and Gutter
- Remove Median or Boulevard Pavement
- Remove Concrete Approach Pavement
- Remove Concrete Driveway Pavement

HDR

Plot Scale - 1:40
Plotted From - rfiggett
File - ...\Removal\217\north_rem.dgn

STATE OF SOUTH DAKOTA	PROJECT	SHEET	TOTAL SHEETS
	IM 1902(61)0	B68	B253

Plotting Date: 06-05-2015 Rev. 06/05/2015 AJF

Removal Layout Sheet
North Street
Sec. 36-T2N-R7E

FOR BIDDING PURPOSES ONLY

Do Not Disturb Drop Inlets at the following locations:
224+63-53 L
224-96-53 L
223+48-49 L

Do Not Disturb Trees at the following locations:
222+22-83 R
222+30-50 L
222+57-50 L
222+82-49 L
223+13-47 L
223+35-43 R
223+95-47 L
224+12-47 L

Clear and Grub Tree at the following locations:
222+04-49 L
222+30-50 L

223+43-28 R to 223+46-26 L
Take Out 18"-54' RCP

Take Out Drop Inlet with Frame & Grate at the following locations:
223+43-28 R
223+46-26 L

224+50-48 L to 224+62-54 L
Remove Landscaping
(Incidental Work - Grading)

Take Out Concrete Pavement at the following locations:
222+09-25 R to 224+72-29 L (1828 SqYd)

Take Out Asphalt Concrete Pavement at the following locations:
222+60-60 R to 222+89-76 R (54 SqYd)
224+65-54 L to 224+72-29 L (20 SqYd)
222+25-133 R to 223+04-103 R (189 SqYd)

Take Out Concrete Sidewalk at the following locations:
222+09-31 R to 222+50-117 R (89 SqYd)
222+09-34 L to 224+58-35 L (155 SqYd)
223+07-33 R to 224+47-35 R (87 SqYd)

Take Out Concrete Curb & Gutter at the following locations:
222+08-82 R to 222+57-60 R (141 Ft)
222+92-60 R to 223+04-100 R (57 Ft)
224+42-25 L to 224+62-54 L (40 Ft)
222+25-136 R to 222+71-168 R (75 Ft)

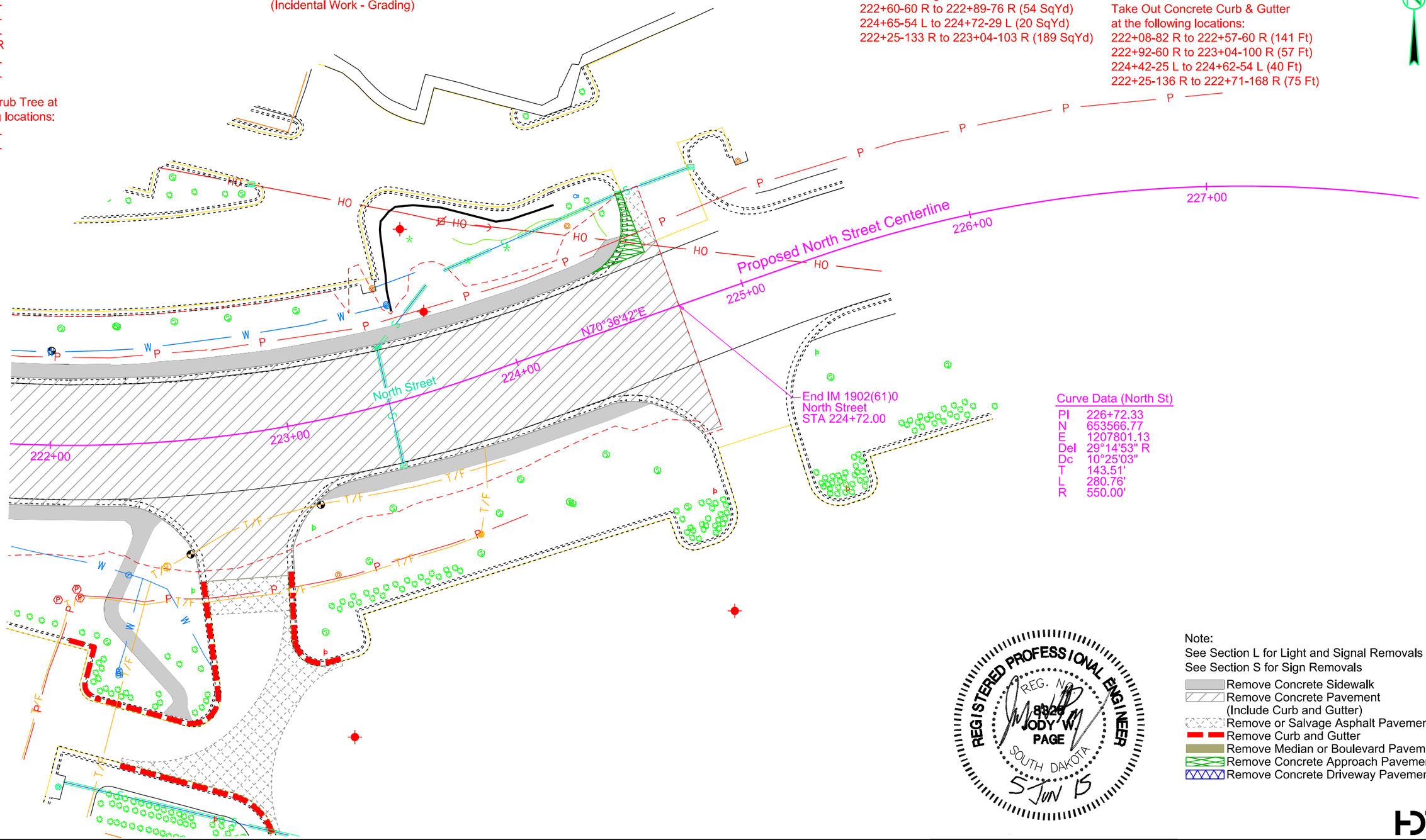

Curve Data (North St)

PI	226+72.33
N	653566.77
E	1207801.13
Del	29°14'53" R
Dc	10°25'03"
T	143.51'
L	280.76'
R	550.00'

REGISTERED PROFESSIONAL ENGINEER
REG. NO. 8326
JODY W. PAGE
SOUTH DAKOTA
5 JUN 15

Note:
See Section L for Light and Signal Removals
See Section S for Sign Removals

- Remove Concrete Sidewalk
- Remove Concrete Pavement (Include Curb and Gutter)
- Remove or Salvage Asphalt Pavement
- Remove Curb and Gutter
- Remove Median or Boulevard Pavement
- Remove Concrete Approach Pavement
- Remove Concrete Driveway Pavement

HDR

Plot Scale - 1:40
Plotted From - dlogett
File - ...\Removal\222north_rem.dgn

STATE OF SOUTH DAKOTA	PROJECT	SHEET	TOTAL SHEETS
	IM 1902(61)0	B69	B253

Plotting Date: 05-07-2015

FOR BIDDING PURPOSES ONLY

Removal Layout Sheet
West Boulevard
Sec. 35-T2N-R7E

Remove Concrete Foundation
(Incidental Work, Grading)
at the following locations:
11+41-136 L
11+44-191 L

Structure to be Removed by Others
at the following locations:
11+41-136 L
11+44-191 L

14+91-31 R to 15+91-35 L
Salvage Chain Link Fence (164 Ft)

Remove Concrete Sidewalk
Remove Concrete Pavement
(Include Curb and Gutter)
Remove or Salvage Asphalt Pavement
Remove Curb and Gutter
Remove Median or Boulevard Pavement
Remove Concrete Approach Pavement
Remove Concrete Driveway Pavement

Note:
See Section L for Light and Signal Removals
See Section S for Sign Removals

Alley

Mallow Street

Curve Data (West Blvd)

PI	11+25.71
N	653511.01
E	1206340.86
Del	56°34'35" R
Dc	31°49'52"
T	96.87'
L	177.74'
R	180.00'

Proposed West Boulevard Centerline

N58°46'19"E

11+00 12+00 13+00 14+00 15+00 16+00

BEGIN CONSTRUCTION
WEST BLVD.
STA 10+24.43

Curve Data (West Blvd)

PI	15+02.64
N	653714.72
E	1206676.86
Del	41°11'56" L
Dc	11°14'04"
T	191.69'
L	366.72'
R	510.00'

Philadelphia Street

11th Street

Alley

SCALE IN FEET
0 20 40

REGISTERED PROFESSIONAL ENGINEER
REG. NO. 8328
JODY W. PAGE
SOUTH DAKOTA
MAY 2015

Sec. 35-T2N-R7E

HDR

Plot Scale - 1:40
Plotted From - rlogett
File - ...\Section_B\Removal\10West_rem

STATE OF SOUTH DAKOTA	PROJECT	SHEET	TOTAL SHEETS
	IM 1902(61)0	B70	B253

Plotting Date: 06-05-2015 Rev. 06/05/2015 AJF

FOR BIDDING PURPOSES ONLY

Removal Layout Sheet
West Boulevard
Sec. 35-T2N-R7E

17+64-81 L to 17+94-56 L
Take Out 18"-39' RCP
17+94-56 L to 18+10-6 L
Take Out 18"-52' RCP

Remove Structures
at the following locations:
20+67-34 L
21+45-42 L
(See General Notes)

Take out Drop Inlet with Frame &
Grate at the following locations:
17+64-81 L
17+94-56 L

16+32-16 L to 16+61-47 L
Salvage Chain Link Fence (121 Ft)

20+54-20 L to 20+66-16 L
Take Out Concrete Sidewalk (4 SqYd)

Remove Concrete Block Retaining Wall
(Incidental Work Grading)
at the following locations:
20+38-46 L to 20+93-37 L (95 Ft)
20+76-2 L to 21+31-20 L (92 Ft)

Remove Mailbox
(Incidental Work, Grading)
18+42.96-113.56' L

Remove Retaining Wall
and Chain Link Fence
Install Temporary 4' High
Chain Link Fence
(Incidental Work, Grading)
19+86-29 L to 20+28-76 L

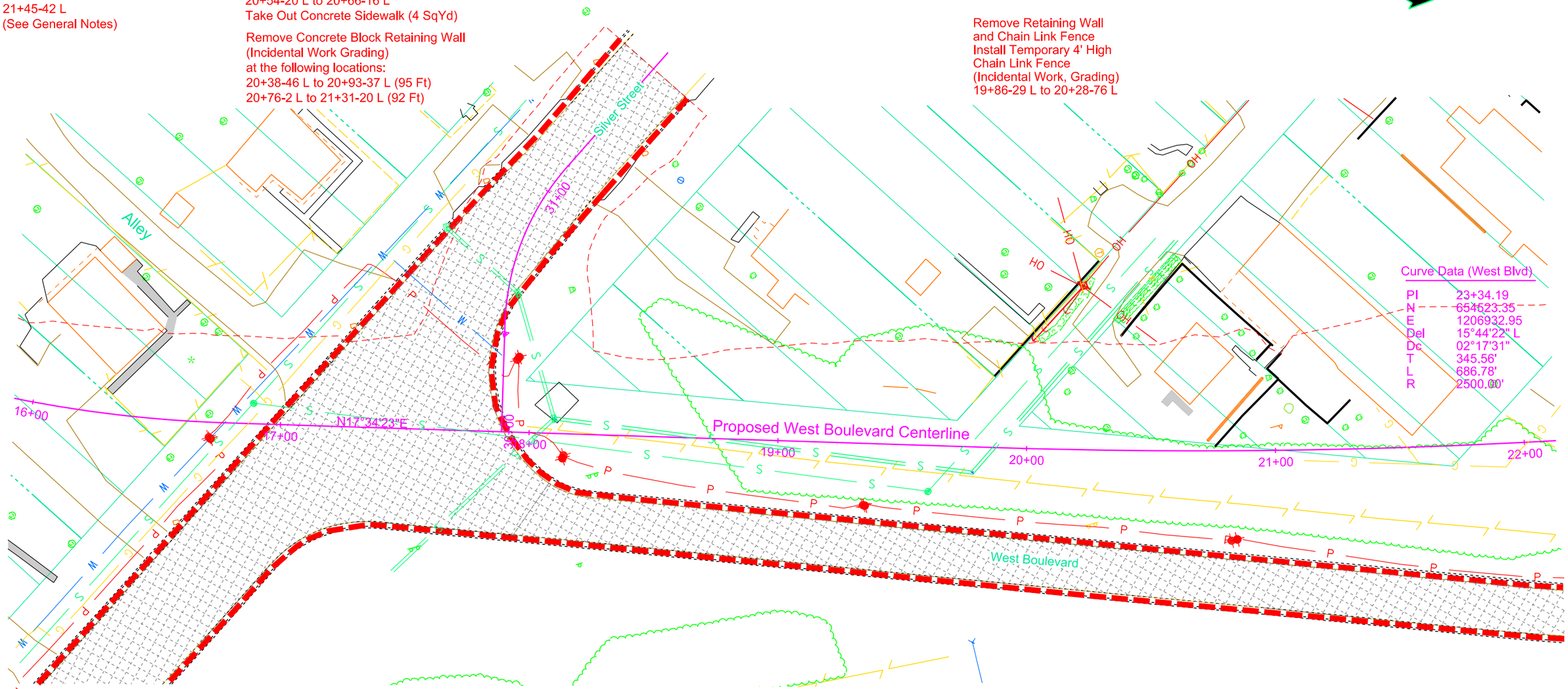

Curve Data (West Blvd)

PI	23+34.19
N	654523.35
E	1206932.95
Del	15°44'22" L
Dc	02°17'31"
T	345.56'
L	686.78'
R	2500.00'

Do Not Disturb Trees at
the following locations:
16+67-40 L
16+74-36 L

19+96-53 L to 20+02-52 L
Do Not Disturb Retaining Wall
19+67-44 L to 19+77-18 L
Remove Fence (38 Ft)
20+36-45 L to 20+42-53 L
Remove and Reset Block Wall
(Incidental Work, Grading)

20+01-42 L
Do Not Disturb Guy Wire

Sec. 35-T2N-R7E

REGISTERED PROFESSIONAL ENGINEER
REG. NO. 8326
JODY W. PAGE
SOUTH DAKOTA
5 JUN 15

20+97-29 L
Clear and Grub Stump

Clear and Grub Trees
at the following locations:
20+16-23 L to 21+89-24 L (17 Each)

Note:
See Section L for Light and Signal Removals
See Section S for Sign Removals

- Remove Concrete Sidewalk
- Remove Concrete Pavement (Include Curb and Gutter)
- Remove or Salvage Asphalt Pavement
- Remove Curb and Gutter
- Remove Median or Boulevard Pavement
- Remove Concrete Approach Pavement
- Remove Concrete Driveway Pavement

HDR

Plot Scale - 1:40
Plotted From - dlippett
File - ...\Removal\1West_rem.dgn

STATE OF SOUTH DAKOTA	PROJECT	SHEET	TOTAL SHEETS
	IM 1902(61)0	B71	B253

Plotting Date: 05-07-2015

Removal Layout Sheet
West Boulevard
Sec. 35-T2N-R7E

FOR BIDDING PURPOSES ONLY

Clear and Grub Tree
at the following locations:
22+15-50 L

22+25-49 L to 22+64-83 L
Do Not Disturb Wall
(See Note for Incidental
Work, Grading)

24+18-65 L
Do Not Disturb Tree

Take Out Asphalt Concrete Pavement
at the following locations:
22+45-122 L to 26+75-16 R (1651 SqYd)
26+75-7 R to 26+87-7 L (19 SqYd)

23+43-77 L to 26+74-24 L
Take Out Concrete Sidewalk (182 SqYd)

Take Out Concrete Curb & Gutter at the following locations:
22+44-121 L to 26+75-16 R (488 Ft)
22+69-144 L to 26+75-17 L (454 Ft)

21+93-11 L to 22+17-17 R
Remove Fence (41 Ft)

Note:
See Section L for Light and Signal Removals
See Section S for Sign Removals

- Remove Concrete Sidewalk
- Remove Concrete Pavement (Include Curb and Gutter)
- Remove or Salvage Asphalt Pavement
- Remove Curb and Gutter
- Remove Median or Boulevard Pavement
- Remove Concrete Approach Pavement
- Remove Concrete Driveway Pavement

Curve Data (West Blvd)

PI	23+34.19
N	654523.35
E	1206932.95
Del	15°44'22" L
Dc	02°17'31"
T	345.56'
L	686.78'
R	2500.00'

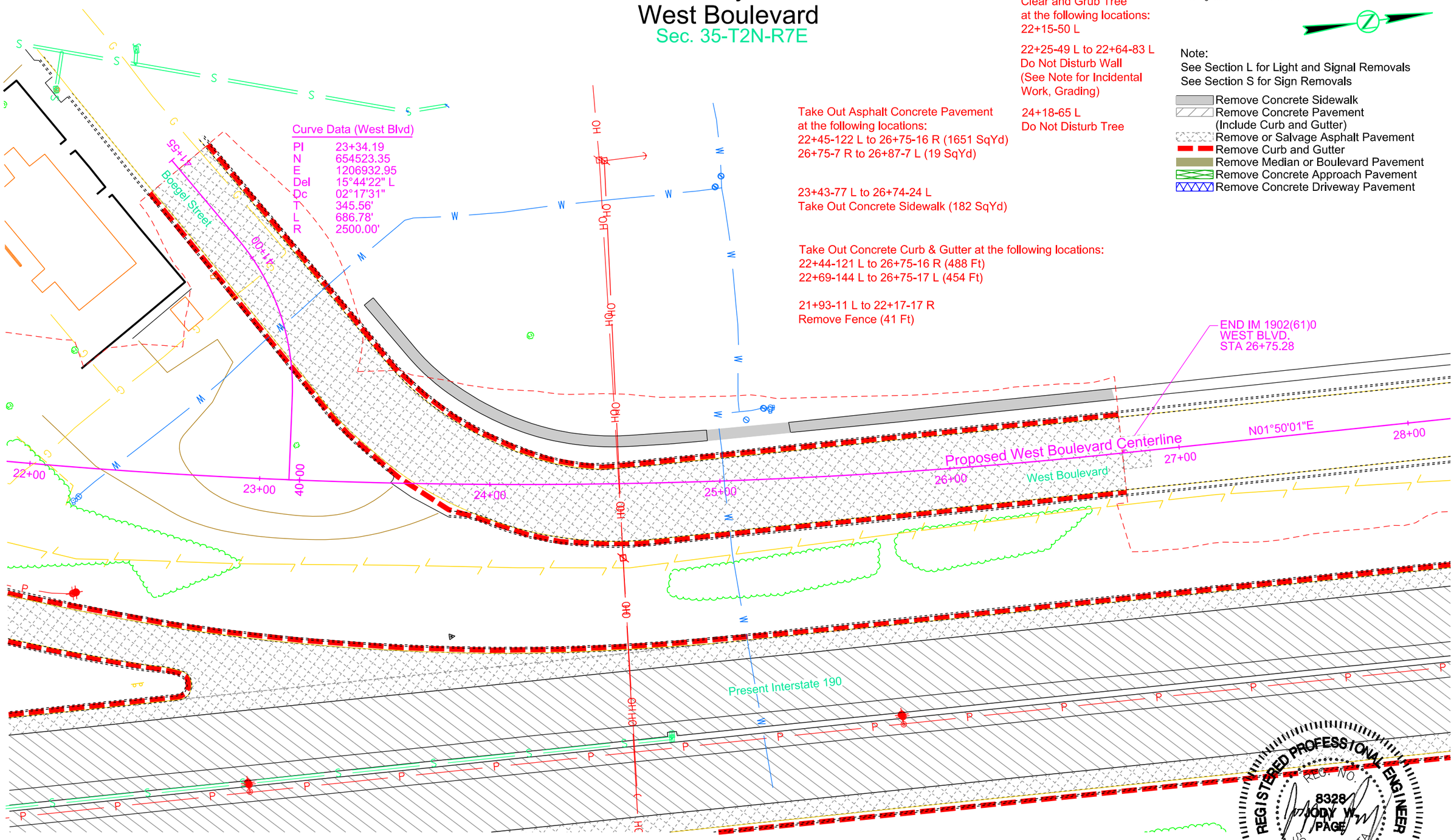

Sec. 35-T2N-R7E

REGISTERED PROFESSIONAL ENGINEER
REG. NO. 8328
JODY W. PAGE
SOUTH DAKOTA
7 MAY 2015

HDR

Plot Scale - 1:40
Plotted From - rlippett
File - ...\Removal\2west_rem.dgn

STATE OF SOUTH DAKOTA	PROJECT	SHEET	TOTAL SHEETS
	IM 1902(61)0	B72	B253

Plotting Date: 05-05-2015

FOR BIDDING PURPOSES ONLY

Removal Layout Sheet
West Boulevard North
Sec. 35-T2N-R7E

Take Out Concrete Curb and Gutter at
the following locations:
50+24-18 R to 53+78-100 R (407 Ft)
54+06-100 R to 55+25-15 R (193 Ft)
Take Out Concrete Sidewalk at
the following locations:
50+24-24 R to 50+89-14 R (36 SqYd)
53+60-36 R to 53+75-44 R (13 SqYd)
54+10-36 R to 54+25-31 R (7 SqYd)

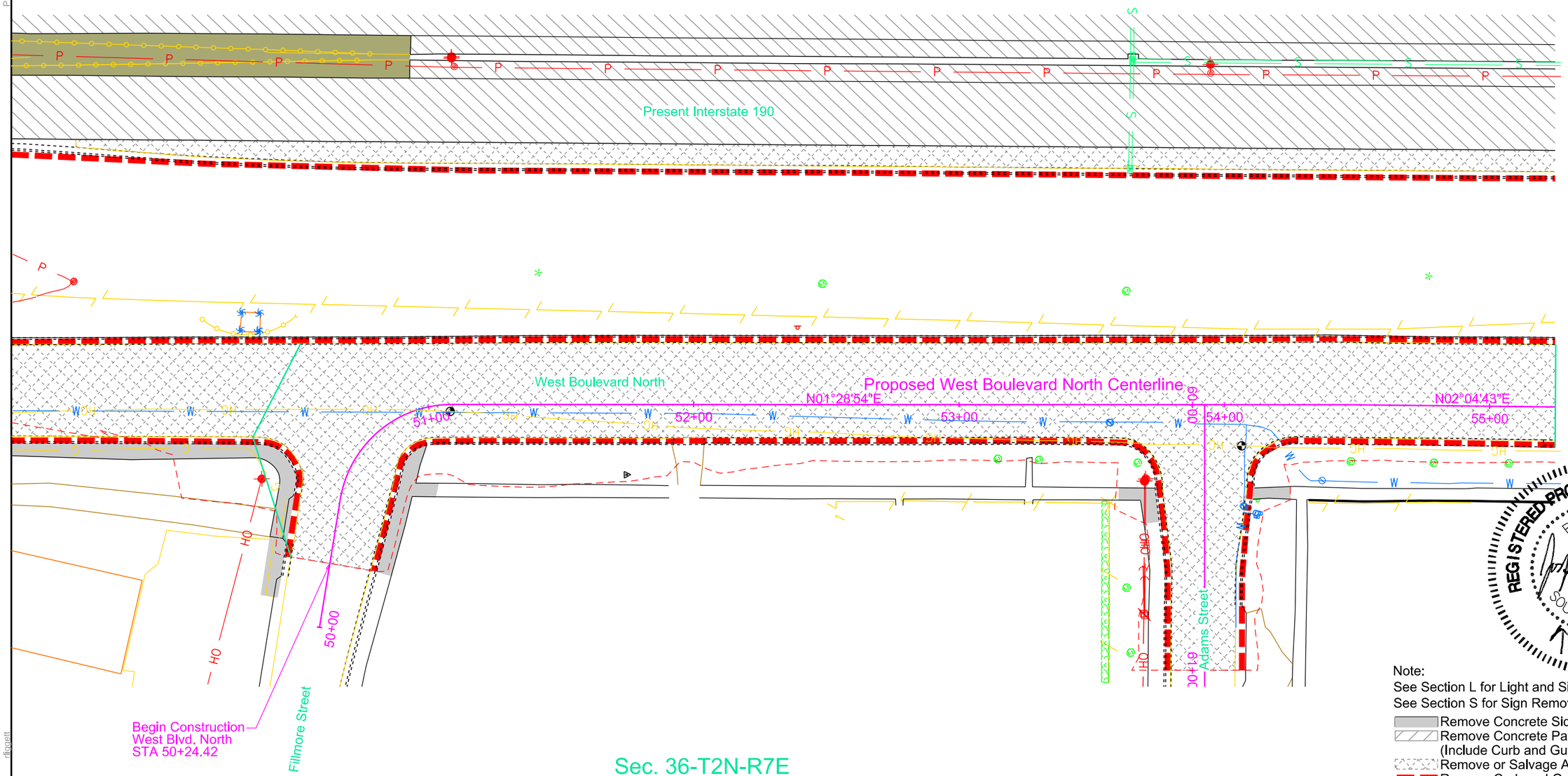

REGISTERED PROFESSIONAL ENGINEER
REG. NO. 8328
JODY W. PAGE
SOUTH DAKOTA
MAY 2015

Note:
See Section L for Light and Signal Removals
See Section S for Sign Removals

- Remove Concrete Sidewalk
- Remove Concrete Pavement (Include Curb and Gutter)
- Remove or Salvage Asphalt Pavement
- Remove Curb and Gutter
- Remove Median or Boulevard Pavement
- Remove Concrete Approach Pavement
- Remove Concrete Driveway Pavement

HDR

Plot Scale - 1:40
Plotted From - rlagett
File - ...\Removal2\westN_rem.dgn

Take Out Asphalt Concrete Pavement
at the following locations:
58+58-73 R to 58+66-74 R (29 SqYd)
58+66-31 R to 59+09-14R (124 SqYd)

58+40-31 R to 58+55-36 R
Take Out Concrete Sidewalk (8 SqYd)

55+25-15 R to 58+55-43 R
Take Out Concrete Curb and Gutter (350 Ft)
58+58-43 R to 58+58-74 R
Take Out Concrete Curb and Gutter (31 Ft)
58+92-31 R to 59+09-16 R
Take Out Concrete Curb and Gutter (26 Ft)

Removal Layout Sheet
West Boulevard North

Sec. 35-T2N-R7E

FOR BIDDING PURPOSES ONLY

STATE OF SOUTH DAKOTA	PROJECT	SHEET	TOTAL SHEETS
	IM 1902(61)0	B73	B253

Plotting Date: 05-05-2015

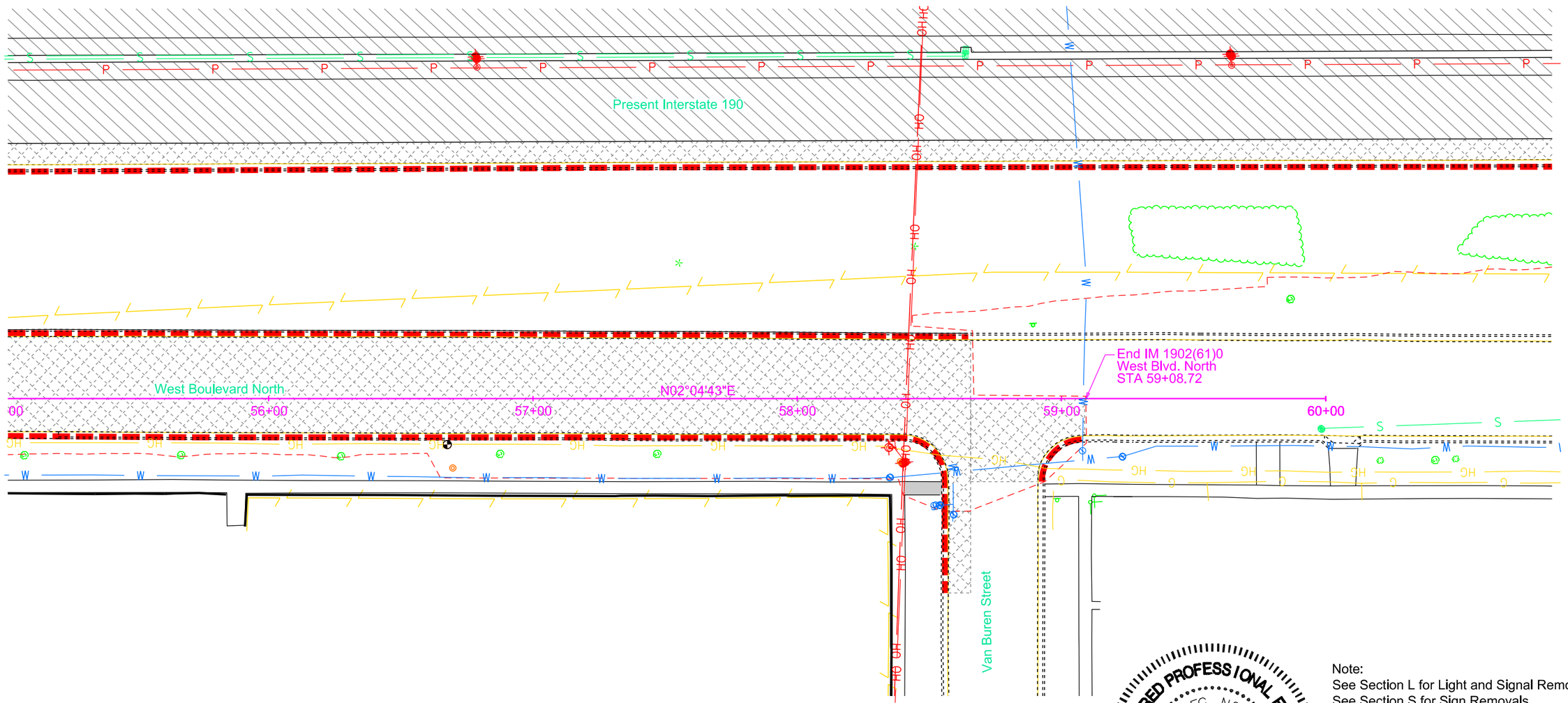

Sec. 36-T2N-R7E

REGISTERED PROFESSIONAL ENGINEER
REG. NO. 8328
JODY W. PAGE
SOUTH DAKOTA
7 MAY 2015

Note:
See Section L for Light and Signal Removals
See Section S for Sign Removals

- Remove Concrete Sidewalk
- Remove Concrete Pavement (Include Curb and Gutter)
- Remove or Salvage Asphalt Pavement
- Remove Curb and Gutter
- Remove Median or Boulevard Pavement
- Remove Concrete Approach Pavement
- Remove Concrete Driveway Pavement

HDR

Plot Scale - 1:40
Plotted From - rlippett
File - ...\Removal\24westN_rem.dgn

STATE OF SOUTH DAKOTA	PROJECT	SHEET	TOTAL SHEETS
	IM 1902(61)0	B74	B253

FOR BIDDING PURPOSES ONLY

Rev. 05/21/2015 AJF

Mainline Plan

Install MSE Retaining Wall
at the folowing locations:
111+71.24-95.68 LT to
112+46.49-106.22' RT (Wall "A")
(See Section E)

Install 208' - 7" Comp. Steel Girder Bridge
at the following location:
112+80.78 CL to 114+89.36 CL
(See Section E)

Install Guardrail at the following locations:
Sta. 100+20.94-45.72' L to Sta. 106+10.74-75.54' L
Sta. 100+20.90-46.25' R to Sta. 102+60.89-56.75' R
Sta. 110+50.34-42.67' R to Sta. 112+91.01-42.00' R
Sta. 111+40.39-42.67' L to Sta. 112+68.50-42.00' L
(See Guardrail Layout Sheets)

Install 3' x 4' Type B Drop Inlet with 6"
Concrete Collar and Type B Frame & Grate at
the following locations:
100+35.00 - 6.33' R (IN #79)
102+59.85 - 6.33' R (IN #74)
109+49.84 - 6.33' L (IN #61)

Install 3' x 4' Type C Drop Inlet with 6"
Concrete Collar and Type C Frame & Grate
111+85.00 - 0.00' (IN #60)

Refurbish Single Mailbox
at the following locations:
109+54-240 L
109+58-215 L

Install C.I.P. Concrete Headwall
(See Special Details)
100+24.50

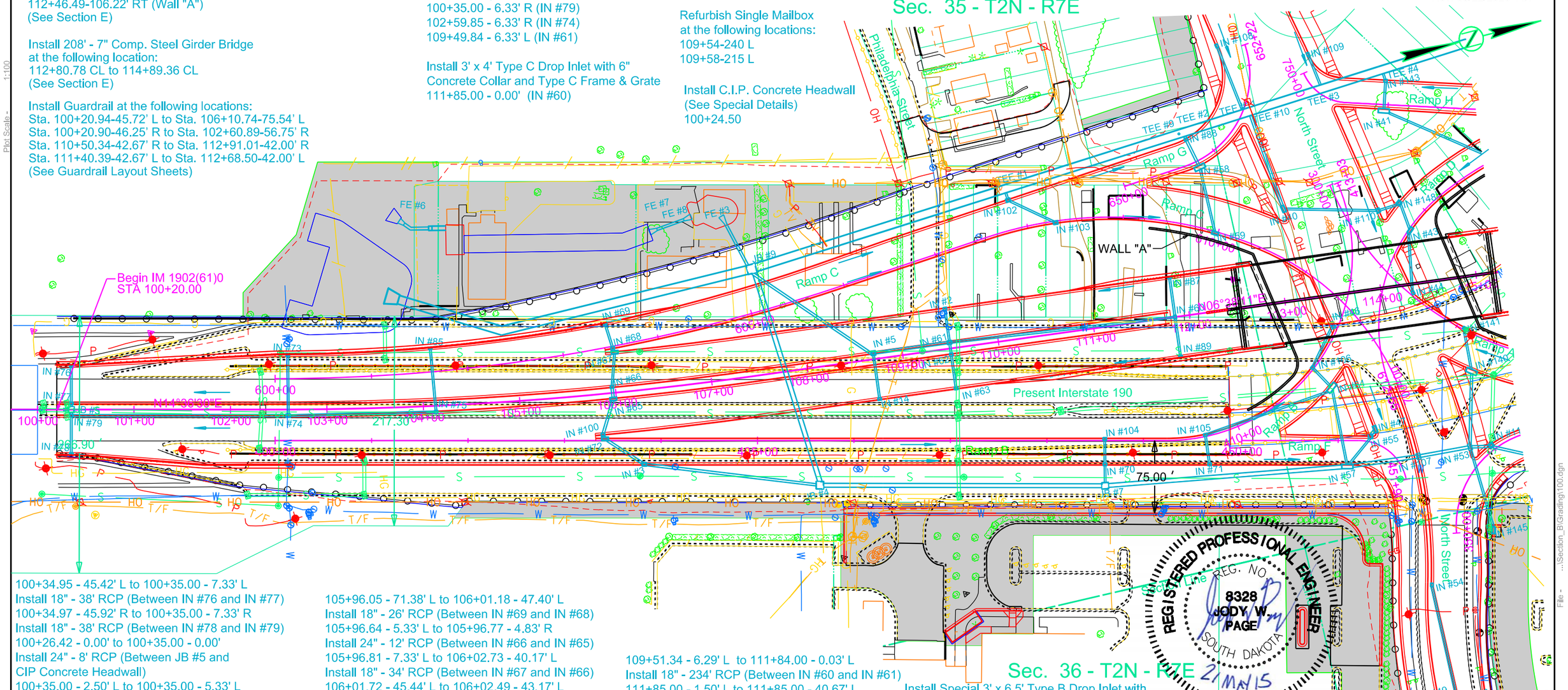

100+34.95 - 45.42' L to 100+35.00 - 7.33' L
Install 18" - 38' RCP (Between IN #76 and IN #77)
100+34.97 - 45.92' R to 100+35.00 - 7.33' R
Install 18" - 38' RCP (Between IN #78 and IN #79)
100+26.42 - 0.00' to 100+35.00 - 0.00'
Install 24" - 8' RCP (Between JB #5 and
CIP Concrete Headwall)
100+35.00 - 2.50' L to 100+35.00 - 5.33' L
Install 18" - 4' RCP (Between IN #77 and JB #5)
100+35.00 - 5.33' R to 100+35.00 - 2.50' R
Install 24" - 4' RCP (Between IN #79 and JB #5)
100+36.48 - 6.33' R to 102+59.85 - 6.33' R
Install 24" - 222' RCP (Between IN #74 and IN #79)
102+59.60 - 55.69' L to 102+59.85 - 4.83' R
Install 18" - 62' RCP (Between IN #73 and IN #74)
102+61.85 - 6.29' R to 104+11.42 - 6.30' R
Install 18" - 150' RCP (Between IN #75 and IN #74)
104+09.89 - 59.11' L to 104+12.88 - 5.33' R
Install 18" - 66' RCP (Between IN #85 and IN #75)
105+83.04 - 42.67' R to 105+83.79 - 45.02' R
Install 24" - 4' RCP (Between IN #100 and IN #72)
105+83.11 - 40.67' R to 105+96.18 - 7.83' R
Install 24" - 36' RCP (Between IN #65 and IN #100)
105+86.43 - 48.29' R to 106+21.52 - 76.86' R
Install 24" - 44' RCP (Between IN #72 and IN #3)

105+96.05 - 71.38' L to 106+01.18 - 47.40' L
Install 18" - 26' RCP (Between IN #69 and IN #68)
105+96.64 - 5.33' L to 105+96.77 - 4.83' R
Install 24" - 12' RCP (Between IN #66 and IN #65)
105+96.81 - 7.33' L to 106+02.73 - 40.17' L
Install 18" - 34' RCP (Between IN #67 and IN #66)
106+01.72 - 45.44' L to 106+02.49 - 43.17' L
Install 18" - 4' RCP (Between IN #68 and IN #67)
106+23.44 - 77.31' R to 107+92.77 - 120.63' R
Install 24" - 178' RCP (Between IN #3 and JB #4)
107+57.99 - 105.33' L to 107+95.57 - 117.90' R
Install 48" - 228' RCP (Between JB #4 and JB #9)
107+57.16 - 110.26' L to 108+68.50 - 6.33' L
Install 24" - 146' RCP (Between IN #5 and JB #9)
108+70.00 - 5.33' L to 108+70.00 - 40.17' R
Install 18" - 46' RCP (Between IN #5 and IN #14)
108+71.50 - 6.33' L to 109+48.34 - 6.33' L
Install 24" - 76' RCP (Between IN #61 and IN #5)
109+49.84 - 5.33' L to 109+49.87 - 5.33' R
Install 18" - 12' RCP (Between IN #61 and IN #62)
109+49.84 - 7.33' L to 109+49.84 - 40.67' L
Install 18" - 34' RCP (Between IN #2 and IN #61)
109+49.88 - 7.33' R to 109+50.00 - 40.67' R
Install 18" - 34' RCP (Between IN #62 and IN #63)

109+51.34 - 6.29' L to 111+84.00 - 0.03' L
Install 18" - 234' RCP (Between IN #60 and IN #61)
111+85.00 - 1.50' L to 111+85.00 - 40.67' L
Install 18" - 40' RCP (Between IN #87 and IN #60)
111+85.00 - 1.5' R to 111+85.00 - 40.67' R
Install 18" - 40' RCP (Between IN #89 and IN #60)

Install 5' x 5' Junction Box with Type A9
Manhole Frame & Lid and 12" Adjusting Ring
100+35.00 - 0.00' (JB #5)

Install 1.5' x 3' Type D Drop Inlet with 6"
Concrete Collar and Type D Frame & Grate at
the following locations:
100+34.95 - 46.15' L (IN #76)
100+34.97 - 46.95' R (IN #78)
104+09.86 - 59.86' L (IN #85)
109+49.84 - 6.33' L (IN #61)
111+85.00 - 41.42' R (IN #89)
111+85.00 - 41.42' L (IN #87)

Install Special 3' x 6.5' Type B Drop Inlet with
Special Type B Frame & Grate at the following
locations:
105+96.78 - 6.33' R (IN #65)
106+03.00 - 41.67' L (IN #67)

Install 2' x 3' Type B Drop Inlet with 6"
Concrete Collar and Type B Frame & Grate at
the following locations:
100+35.00 - 6.33' L (IN #77)
102+59.60 - 56.69' L (IN #73)
104+12.92 - 6.33' R (IN #75)
105+82.71-41.67' R (IN #100)
105+96.63 - 6.33' L (IN #66)
108+70.00 - 41.67' R (IN #14)
109+49.84 - 41.67' L (IN #2)
109+49.88 - 6.33' R (IN #62)
109+50.00 - 41.67' R (IN #63)

Curve Data

PI	104+94.32
N	652580.95
E	1206784.89
Del	07°58'19" L
Dc	01°36'34"
T	248.07'
L	495.33'
R	3560.00'

Install 1-12' Chain Link Single Vehicular
Swing Gate at the Following Locations:
102+49 L (1 Ea)
102+50 R (1 Ea)

Install 6' Chain Link Fence
with Tension Wire:
100+20-98' L to 112+51-229' L (1228 Ft)

Install 6' Chain Link Fence
with Tension Wire:
100+20-47' R to 113+81-226' R (1395 Ft)

Install 4' x 4' Type B Drop Inlet with 6"
Concrete Collar and Type B Frame & Grate at
the following locations:
108+70.00 - 6.33' L (IN #5)

REGISTERED PROFESSIONAL ENGINEER
REG. NO. 8328
JODY W. PAGE
SOUTH DAKOTA
21 MAY 15

HDR

Plot Scale - 1:100
Plotted From - jlipgett
File - ...\Section_B\Grading\100.dgn

STATE OF SOUTH DAKOTA	PROJECT	SHEET	TOTAL SHEETS
	IM 1902(61)0	B75	B253

FOR BIDDING PURPOSES ONLY

Plotting Date: 06-17-2015

Rev. 06/18/2015 AJF

I-190 NB Profile

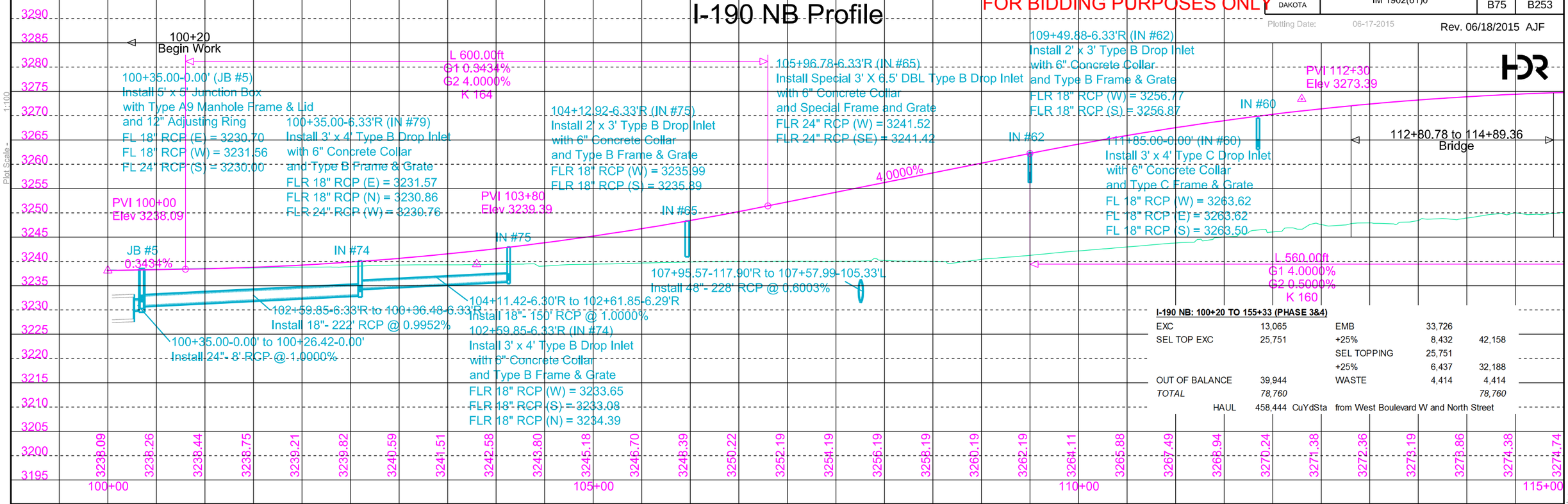

I-190 NB: 100+20 TO 155+33 (PHASE 3&4)

EXC	13,065		EMB	33,726	
SEL TOP EXC	25,751		+25%	8,432	42,158
			SEL TOPPING	25,751	
			+25%	6,437	32,188
OUT OF BALANCE	39,944		WASTE	4,414	4,414
TOTAL	*78,760*				*78,760*
HAUL	458,444	CuYdSta	from West Boulevard W and North Street		

I-190 SB Profile

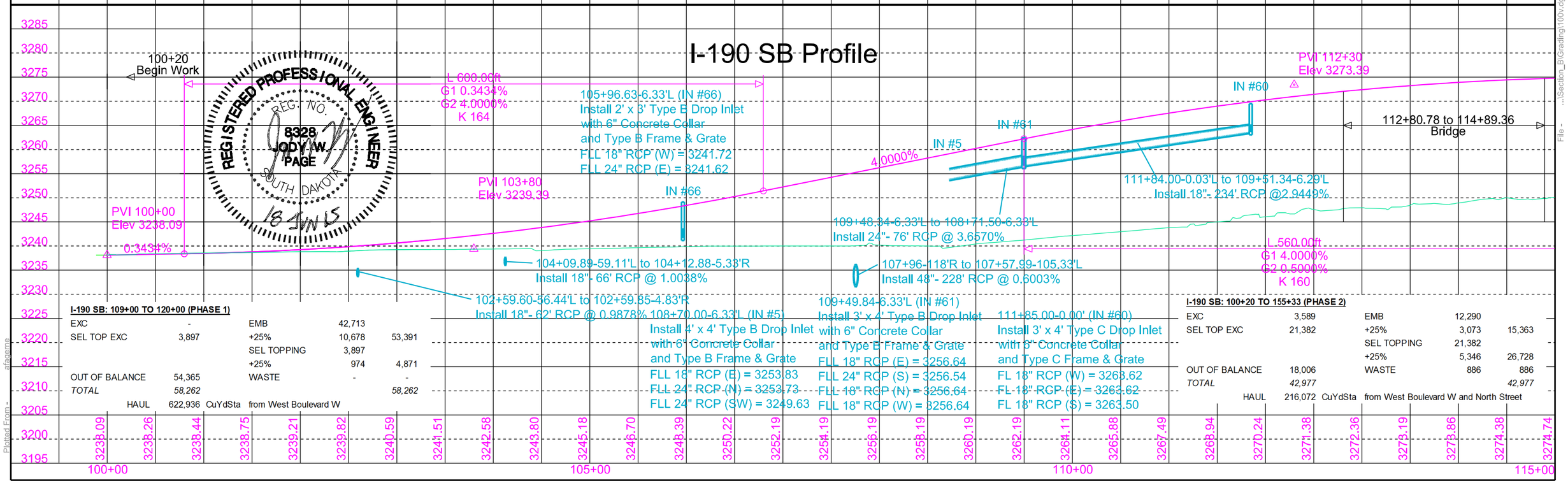

REGISTERED PROFESSIONAL ENGINEER
REG. NO. 8328
JODY W. PAGE
SOUTH DAKOTA
18 JUN 15

I-190 SB: 109+00 TO 120+00 (PHASE 1)

EXC	-		EMB	42,713	
SEL TOP EXC	3,897		+25%	10,678	53,391
			SEL TOPPING	3,897	
			+25%	974	4,871
OUT OF BALANCE	54,365		WASTE	-	-
TOTAL	*58,262*				*58,262*
HAUL	622,936	CuYdSta	from West Boulevard W		

I-190 SB: 100+20 TO 155+33 (PHASE 2)

EXC	3,589		EMB	12,290	
SEL TOP EXC	21,382		+25%	3,073	15,363
			SEL TOPPING	21,382	
			+25%	5,346	26,728
OUT OF BALANCE	18,006		WASTE	886	886
TOTAL	*42,977*				*42,977*
HAUL	216,072	CuYdSta	from West Boulevard W and North Street		

Plot Scale - 1:100

Plotted From - afagame

File - ...\Section_B\Grading\100v.dgn

STATE OF SOUTH DAKOTA	PROJECT	SHEET	TOTAL SHEETS
	IM 1902(61)0	B76	B253

Plotting Date: 05-07-2015

FOR BIDDING PURPOSES ONLY

Mainline Plan

Sec. 35 - T2N - R7E

Install MSE Retaining Wall at the following locations:
115+34.00-106.27' LT to
116+30.14-108.96' RT(Wall "B")
118+35.25-158.62'LT to
126+35.13-71.79' LT (Wall "C")
(See Section E)

Install Median Concrete Barrier at the following locations:
115+17.87 to 154+00.00
(See Section E)

Install Special 3' X 6.5' DBL Type B Drop Inlet with 6" Concrete Collar and Special Frame and Grate
121+53.91 - 41.67' R (IN #117)

Install 3' x 4' Type B Drop Inlet with 6" Concrete Collar and Type B Frame & Grate
118+63.10 - 41.67' L (IN #101)

Install 2' x 3' Type B Drop Inlet with 6" Concrete Collar and Type B Frame & Grate at the following locations:
115+30.35 - 2.00' L (IN # 131)
115+30.36 - 2.00' R (IN #29)
118+63.43 - 2.00' L (IN #151)
118+63.16 - 41.67' R (IN #114)
118+63.43 - 2.00' R (IN #26)
121+53.83 - 41.67' L (IN #118)
125+13.92 - 41.67' R (IN #124)
125+14.59-62.08' R (IN #133)
126+98.70 - 72.21' R (IN #127)

Install 1.5' x 3' Type D Drop Inlet with 6" Concrete Collar and Type D Frame & Grate at the following locations:
115+30.34 - 41.42' L (IN #86)
115+30.35 - 41.42' R (IN #90)
125+13.82 - 59.02' L (IN #123)
127+00.37 - 49.70' L (IN #126)

Install 5' X 4' Concrete Barrier Drop Inlet and 2 Barrier Drop Inlets - Double Unit Frame and Grate at the following locations:
121+54.34 - 0.00' (IN #25)
125+14.15 - 0.00' (IN #24)
126+99.51 - 0.00' (IN #23)
128+50.00 - 0.00' (IN #128)

Install Guardrail at the following locations:
Sta. 114+79.13-42.01' L to Sta. 117+07.25-42.67' L
Sta. 115+01.64-42.00' R to Sta. 116+67.25-42.67' R
Sta. 128+32.35-44.35' L to Sta. 705+77.24-24.67' L
(See Guardrail Layout Sheets)

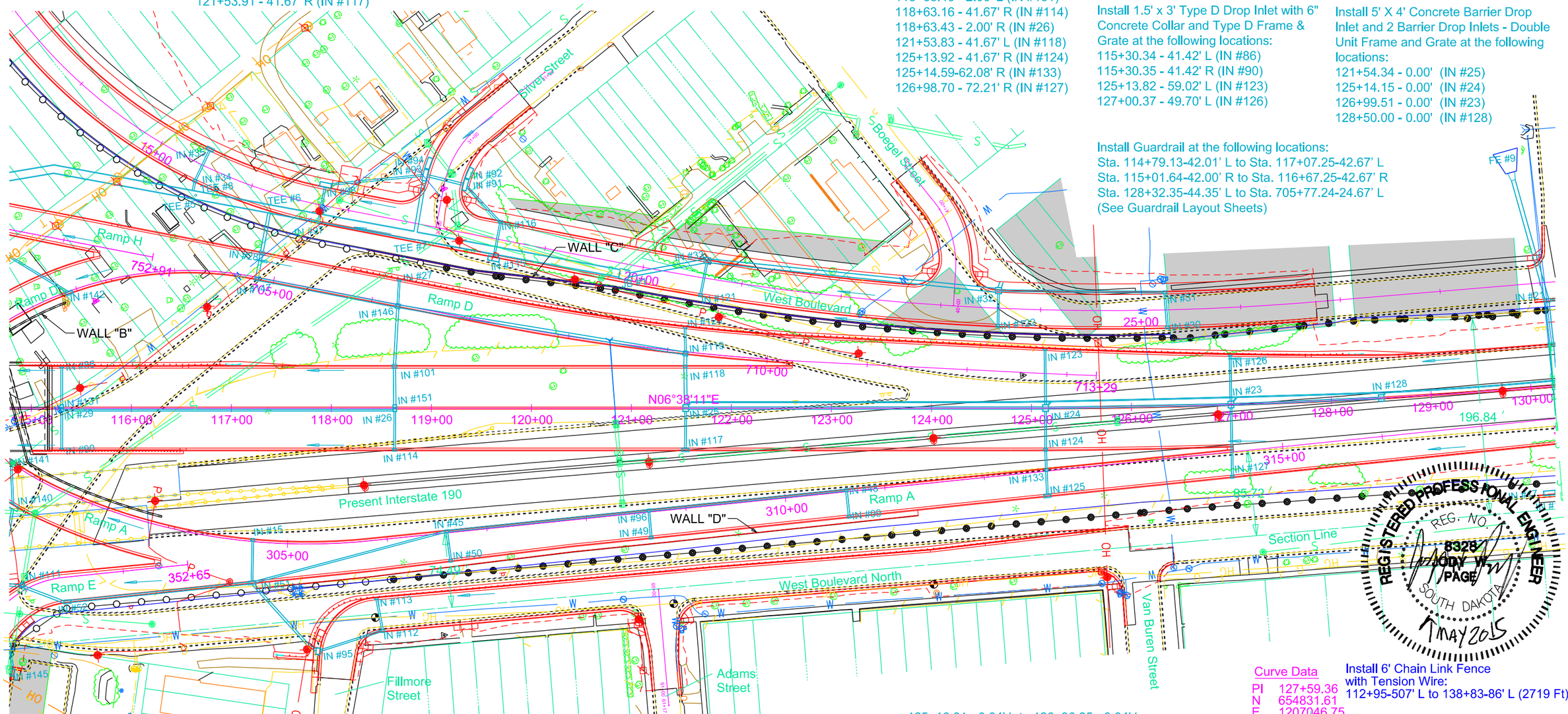

REGISTERED PROFESSIONAL ENGINEER
REG. NO. 8328
JODY W. PAGE
SOUTH DAKOTA
7 MAY 2015

Curve Data	
PI	127+59.36
N	654831.61
E	1207046.75
Del	04°44'23" L
Dc	00°50'47"
T	280.18'
L	560.04'
R	6770.00'

Install 6' Chain Link Fence with Tension Wire:
112+95-507' L to 138+83-86' L (2719 Ft)

Install 6' Chain Link Fence with Tension Wire:
114+84-236' R to 138+93-83' R (2436 Ft)

Install 1-12' Chainlink Vehicular Swing Gate at the Following Locaiton:
115+70 - 201' R (1 Ea)

115+30.34 - 40.67' L to 115+30.35 - 3.00' L
Install 18" - 38' RCP (Between IN #86 and IN # 131)
115+30.35 - 1.00' L to 115+30.36 - 1.00' R
Install 18" - 2' RCP (Between IN # 131 and IN #29)
115+30.35 - 41.42' R to 115+30.36 - 2.00' R
Install 18" - 38' RCP (Between IN #90 and IN #29)
115+31.86 - 2.00' R to 118+61.93 - 2.00' R
Install 18" - 332' RCP (Between IN #29 and IN #26)
117+27.37 - 128.88' L to 118+64.49 - 102.38' L
Install 30" - 140' RCP (Between IN #146 and IN #147)
118+63.17 - 40.67' R to 118+63.42 - 3.00' R
Install 18" - 38' RCP (Between IN #114 and IN #26)
118+63.11 - 40.17' L to 118+63.42 - 3.00' L
Install 24" - 38' RCP (Between IN #151 and IN #101)

118+63.43 - 1.00' R to 118+63.43 - 1.00' L
Install 24" - 2' RCP (Between IN #26 and IN #151)
118+63.18 - 43.17' L to 118+66.34 - 99.99' L
Install 24" - 58' RCP (Between IN #146 and IN #101)
118+68.43 - 101.68' L to 121+52.11 - 54.97' L
Install 30" - 288' RCP (Between IN #119 and IN #146)
121+53.91 - 41.67' R to 121+54.30 - 3.58' R
Install 18" - 38' RCP (Between IN #117 and IN #25)
121+53.83 - 40.67' L to 121+54.34 - 3.00' L
Install 30" - 38' RCP (Between IN #25 and IN #118)
121+54.34 - 0.00' to 121+59.39 - 6.00' L
Install 12" - 4' CMP (Between IN#25 and CMP Bend)
121+57.01 - 0.00' L to 125+11.48 - 0.01' L
Install 24" - 356' RCP (Between IN #24 and IN #25)

121+59.39 - 6.00' L to 125+14.08 - 6.51' L
Install 12" - 354' CMP Slotted Drain (Between Bend and Bend)
125+13.82 - 58.27' L to 125+14.13 - 3.58' L
Install 18" - 56' RCP (Between IN #123 and IN #24)
125+13.92 - 40.67' R to 125+14.13 - 3.58' R
Install 18" - 38' RCP (Between IN #124 and IN #24)
125+13.95 - 42.67' R to 125+14.56 - 61.08' R
Install 18" - 20' RCP (Between IN #133 and IN #124)
125+14.62 - 63.09' R to 125+15.40 - 86.29' R
Install 18" - 24' RCP (Between IN #125 and IN #133)
125+14.08 - 6.51' L to 125+14.07 - 2.93' L
Install 12" - 4' CMP (Between IN#24 and IN #24)

Sec. 36 - T2N - R7E

125+16.81 - 0.04' L to 126+96.85 - 0.04' L
Install 18" - 182' RCP (Between IN #23 and IN #24)
126+98.71 - 71.21' R to 126+99.47 - 3.58' R
Install 18" - 70' RCP (Between IN #127 and IN #23)
125+14.08 - 6.51' L to 126+99.84 - 7.21' L
Install 12" - 186' CMP Slotted Drain (Between Bend and Bend)
126+99.84 - 7.21' L to 126+99.85 - 3.06' L
Install 12" - 4' CMP (Between IN#23 and IN #23)
126+99.58 - 3.58' L to 127+00.36 - 48.95' L
Install 18" - 46' RCP (Between IN #126 and IN #23)
126+99.84 - 7.21' L to 128+50.50 - 5.47' L
Install 12" - 150' CMP Slotted Drain (Between Bend and Bend)
127+02.59 - 0.03' L to 128+47.33 - 0.03' L
Install 18" - 146' RCP (Between IN #128 and IN #23)

128+50.46 - 3.06' L to 128+50.50 - 5.47' L
Install 12" - 2' CMP (Between IN#128 and IN #128)
128+50.50 - 5.47' L to 130+24.59 - 5.78' L
Install 12" - 174' CMP Slotted Drain (Between Bend and Bend)

HDR

Plot Scale - 1:100
Plotted From - afageme
File - ...\Section_B\Grading\1115.dgn

STATE OF SOUTH DAKOTA	PROJECT	SHEET	TOTAL SHEETS
	IM 1902(61)0	B77	B253

FOR BIDDING PURPOSES ONLY

Plotting Date: 05-05-2015

I-190 NB Profile

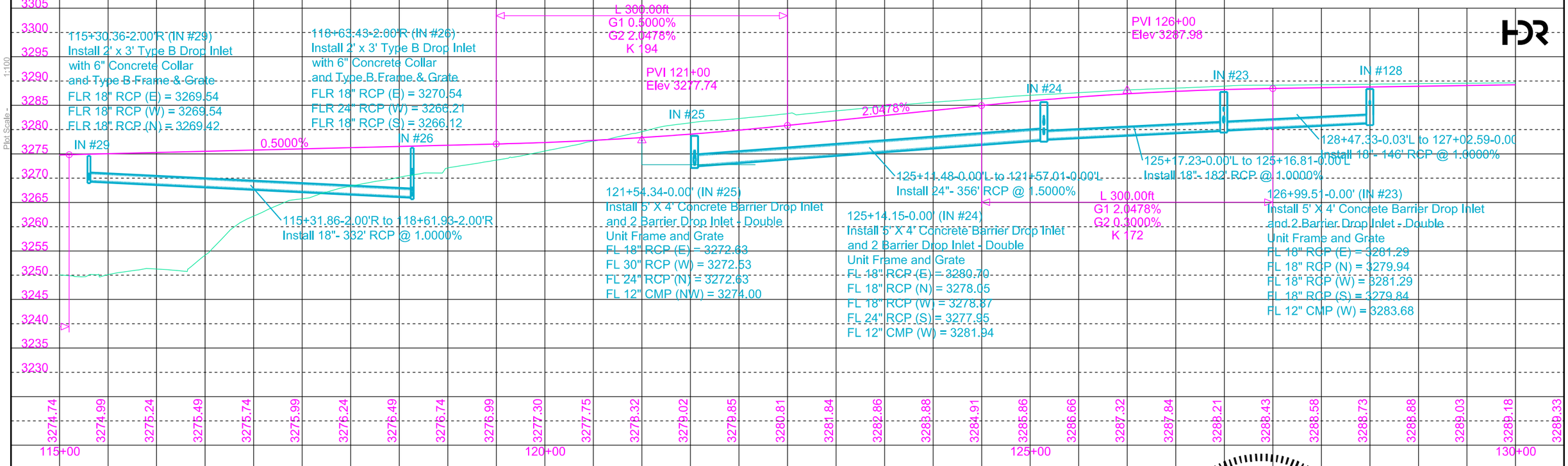

I-190 SB Profile

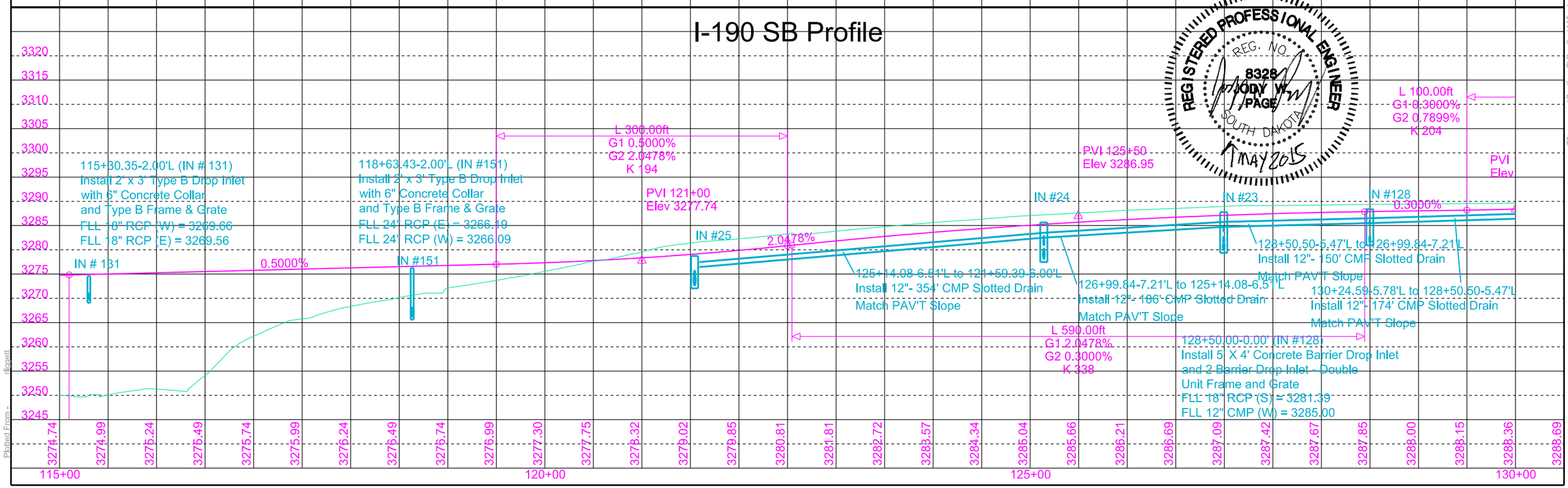

REGISTERED PROFESSIONAL ENGINEER
REG. NO. 8328
JODY W. PAGE
SOUTH DAKOTA
7 MAY 2015

Plot Scale - 1:100

Plotted From - dlippett

File - ...\Section_B\Grading\115v.dgn

STATE OF SOUTH DAKOTA	PROJECT	SHEET	TOTAL SHEETS
	IM 1902(61)0	B78	B253

FOR BIDDING PURPOSES ONLY

Plotting Date: 05-07-2015

Mainline Plan

Sec. 35 - T2N - R7E

Install 5' X 4' Concrete Barrier Drop Inlet and 2 Barrier Drop Inlets - Double Unit Frame and Grate at the following locations:
130+24.15 - 0.00' (IN #19)
131+96.54 - 0.01' L (IN #11)
134+22.36 - 0.00' L (IN #10)
136+12.81 - 0.00' L (IN #150)
138+11.48 - 0.00' L (IN #9)
140+21.42 - 0.02' L (IN #6)
142+46.87 - 0.00' (IN #144)
144+73.66 - 0.00' (IN #1)

Install 5' x 5' Junction Boxes with Type A9 Manhole Frame & Lid and 12" Adjusting Ring at the following locations:
138+08.90 - 34.71' R (JB #2)
140+19.24 - 34.10' R (JB #3)

Install Special 3' x 6.5' Type B Drop Inlet with Special Type B Frame & Grate at the following locations:
130+24.15 - 41.67' L (IN #20)
130+79.37 - 121.24' L (IN #129)
130+80.82 - 85.99' L (IN #22)
131+97.68 - 41.67' L (IN #130)
131+80.01 - 53.86' R (IN #139)
134+22.71 - 49.01' R (IN #132)
134+20.25 - 41.67' L (IN #138)
136+15.18 - 45.16' R (IN #134)
136+12.21 - 41.67' L (IN #135)
138+11.18 - 41.67' L (IN #8)
140+18.74 - 41.67' R (IN #12)

Install 4' x 11' Type S Drop Inlet with Type S Drop Inlet Lid at the following locations:
130+10.21 - 105.99' R (IN #17)
130+22.03 - 106.02' R (IN #16)
130+33.84 - 106.07' R (IN #152)
130+45.76 - 106.13' R (IN #153)

Install 3' x 4' Type B Drop Inlet with 6" Concrete Collar and Type B Frame & Grate at the following locations:
130+24.14 - 57.00' R (IN #18)

Install 1.5' x 3' Type D Drop Inlet with 6" Concrete Collar and Type D Frame & Grate at the following locations:
138+08.34 - 41.42' R (IN #13)
140+18.23 - 41.42' L (IN #7)

Install 3' x 5'-6"' Type B Drop Inlet with 6" Concrete Collar and Type B Frame & Grate at the following locations:
130+22.94 - 86.03' L (IN #21)
142+46.18 - 41.67' R (IN #136)
144+74.01 - 41.67' L (IN #4)

129+98.30 - 208.76' L
Install 78 Ton Class C Riprap
Install 78 SqYd Type B Drainage Fabric
(See Specail Details)

Install 42" FE at the following locations:
129+98.30 - 208.76' L (FE #9)
144+73.74 - 58.04' L (FE #1)

Install 48" FE at the following locations:
144+62.32-145.72' L (FE#4)
144+63.68-101.06' L (FE #5)

Install 5.5' x 5.5' Type B Drop Inlet with 6" Concrete Collar and Type B Frame & Grate at the following locations:
144+74.25 - 41.67' R (IN #39)

Install 20.4 CuYd - Controlled Density Fill (Between 48" RCP and Existing 27" RCP)
144+62.32 - 145.72' L to 144+63.68 - 101.06' L

Install 6' Chain Link Fence with Tension Wire:
139+46-78' LT to 151+22-71' LT (1181)

Install 6' Chain Link Fence with Tension Wire:
139+48-79' RT to 151+30-110' RT (1186)

144+61.93-158.36'L
Install 40 Ton Class C Riprap
Install 46 SqYd Type B
Drainage Fabric
(See Special Details)

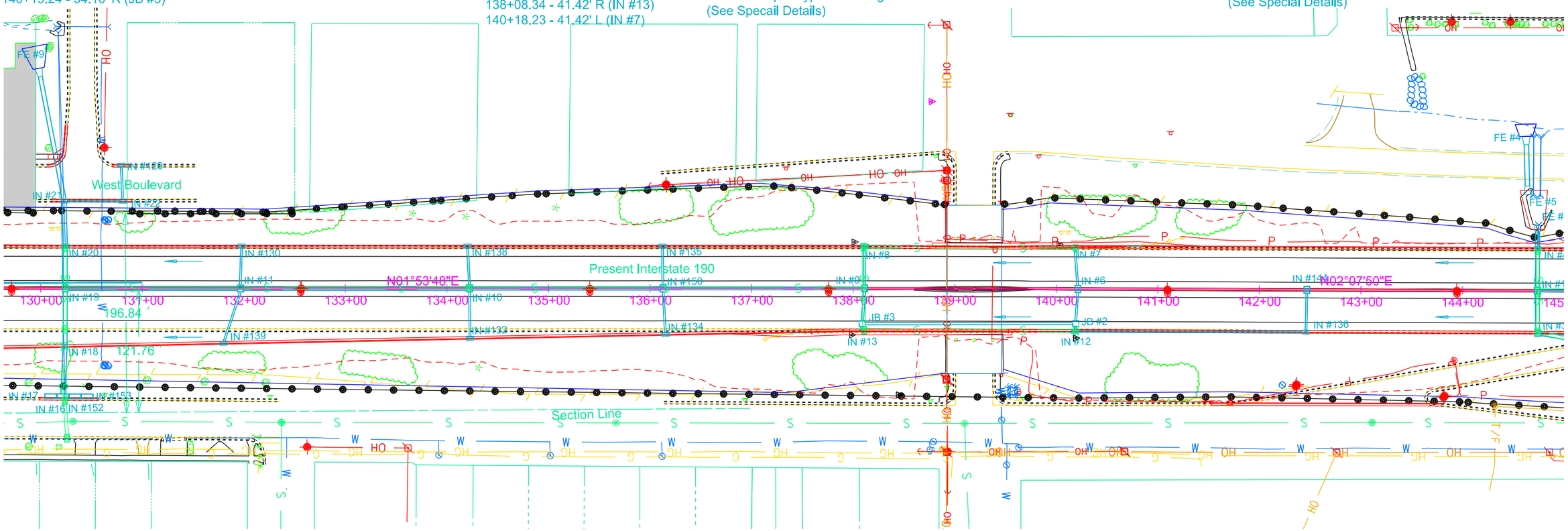

130+22.11 - 104.02' R to 130+24.08 - 58.50' R
Install 42" - 46' RCP (Between IN #16 and IN #18)
129+98.30 - 208.76' L to 130+22.88 - 87.53' L
Install 42" - 124' RCP (Between IN #21 and FE #9)
130+22.99 - 84.19' L to 130+24.11 - 43.17' L
Install 42" - 42' RCP (Between IN #20 and IN #21)
130+24.14 - 55.50' R to 130+24.14 - 3.58' R
Install 42" - 54' RCP (Between IN #18 and IN #19)
130+24.15 - 3.58' L to 130+24.15 - 40.17' L
Install 42" - 38' RCP (Between IN #19 and IN #20)
130+24.15 - 3.58' L to 130+24.59 - 5.78' L
Install 12" - 2' CMP (Between IN#19 and IN #19)
130+26.23 - 86.03' L to 130+77.07 - 86.00' L
Install 18" - 52' RCP (Between IN #22 and IN #21)
130+79.43 - 119.75' L to 130+80.75 - 87.49' L
Install 18" - 34' RCP (Between IN #129 and IN #22)
130+24.59 - 5.78' L to 131+00.00 - 6.00' L
Install 12" - 76' CMP Slotted Drain (Between and IN#19)

130+26.81 - 0.01' L to 131+93.87 - 0.01' L
Install 36" - 168' RCP (Between IN #11 and IN #19)
131+80.51 - 52.35' R to 131+96.52 - 3.58' R
Install 18" - 52' RCP (Between IN #139 and IN #11)
131+96.64 - 3.59' L to 131+97.64 - 40.17' L
Install 18" - 38' RCP (Between IN #130 and IN #11)
131+99.20 - 0.01' L to 134+19.69 - 0.00' L
Install 36" - 222' RCP (Between IN #11 and IN #10)
134+20.32 - 40.17' L to 134+22.17 - 3.58' L
Install 18" - 38' RCP (Between IN #138 and IN #10)
134+22.38 - 3.58' R to 134+22.70 - 47.50' R
Install 18" - 46' RCP (Between IN #132 and IN #10)
134+25.03 - 0.00' L to 136+10.15 - 0.00' L
Install 30" - 186' RCP (Between IN #150 and IN #10)
136+12.23 - 40.17' L to 136+12.77 - 3.17' L
Install 18" - 38' RCP (Between IN #135 and IN #150)
136+12.98 - 3.17' R to 136+15.10 - 43.66' R
Install 18" - 42' RCP (Between IN #134 and IN #150)

136+15.48 - 0.00' L to 136+08.81 - 0.00' L
Install 30" -194' RCP (Between IN #150 and IN #9)
138+08.40 - 40.67' R to 138+08.69 - 37.22' R
Install 24" - 4' RCP (Between IN #13 and JB #2)
138+09.09 - 32.20' R to 138+11.25 - 3.17' R
Install 24" - 30' RCP (Between JB #2 and IN #9)
138+11.19 - 40.17' L to 138+11.46 - 3.17' L
Install 18" - 38' RCP (Between IN #8 and IN #9)
138+11.40 - 34.71' R to 40+16.74 - 34.11' R
Install 24" - 206' RCP (Between JB #3 and JB #2)
140+18.28 - 40.67' L to 140+21.17 - 3.18' L
Install 18" - 38' RCP (Between IN #7 and IN #6)
140+18.84 - 40.17' R to 140+19.07 - 36.60' R
Install 18" - 4' RCP (Between IN #12 and JB #3)
140+19.40 - 31.59' R to 140+21.22 - 3.15' R
Install 18" - 30' RCP (Between IN #6 and JB #3)

Sec. 36 - T2N - R7E

140+21.99 - 41.67' R to 142+43.43 - 41.67' R
Install 18" - 222' RCP (Between IN #136 and IN #12)
142+46.82 - 3.17' R to 142+46.20 - 40.17' R
Install 18" - 38' RCP (Between IN #144 and IN #136)
144+64.97 - 151.37' L to 144+65.01 - 95.95' L
Install 48" - 56' RCP (Between FE #5 and FE #4)
144+73.69 - 3.58' L to 144+73.99 - 40.17' L
Install 42" - 38' RCP Arch (Between IN #1 and IN #4)
144+73.98 - 43.17' L to 144+73.78 - 58.04' L
Install 42" - 16' RCP (Between IN #4 and FE #1)
144+73.71 - 3.58' R to 144+74.21 - 38.92' R
Install 42" - 36' RCP Arch (Between IN #39 and IN #1)

Install Guardrail at the following locations:
Sta. 137+40.49-43.65' R to Sta. 139+53.13-41.67' R
Sta. 138+81.68-40.80' L to Sta. 140+81.54-42.67' L
(See Guardrail Layout Sheets)

Install 6" Concrete Sidewalk
(Concrete Drainage Apron)
144+71.56 - 81.66' L (785 SqFt)
Form flowline between end sections

REGISTERED PROFESSIONAL ENGINEER
REG. NO. 8328
JODY W. PAGE
SOUTH DAKOTA
1 MAY 2015

HDR

Plot Scale - 1:100
Plotted From - afageme
File - ...\Section_B\Grading\130.dgn

STATE OF SOUTH DAKOTA	PROJECT	SHEET	TOTAL SHEETS
	IM 1902(61)0	B79	B253

FOR BIDDING PURPOSES ONLY

Plotting Date: 05-05-2015

I-190 NB Profile

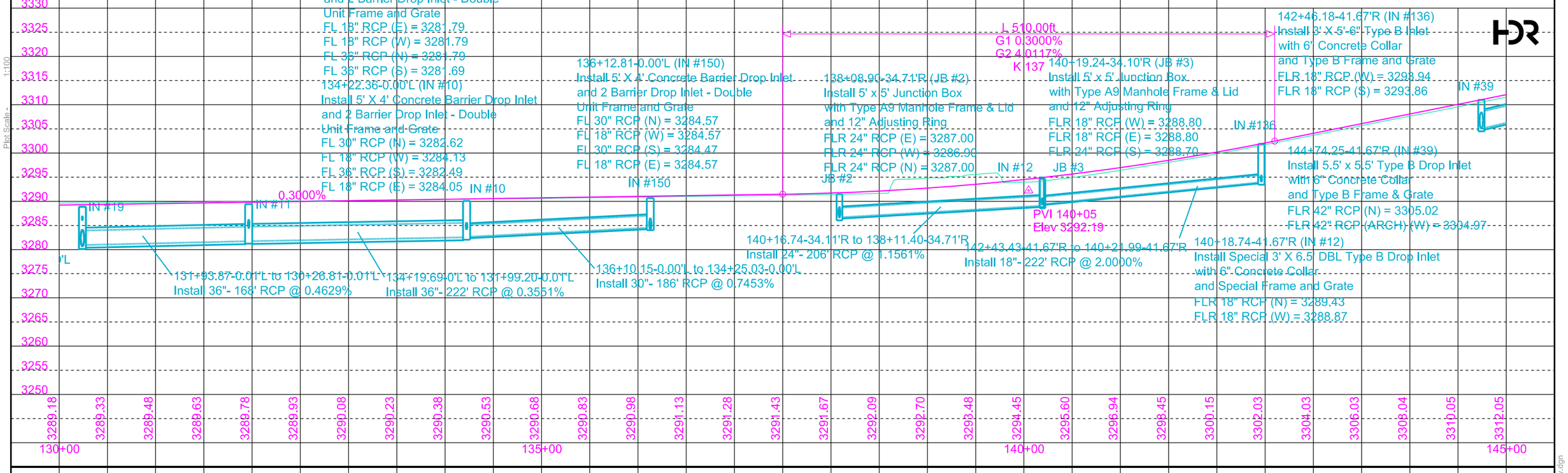

I-190 SB Profile

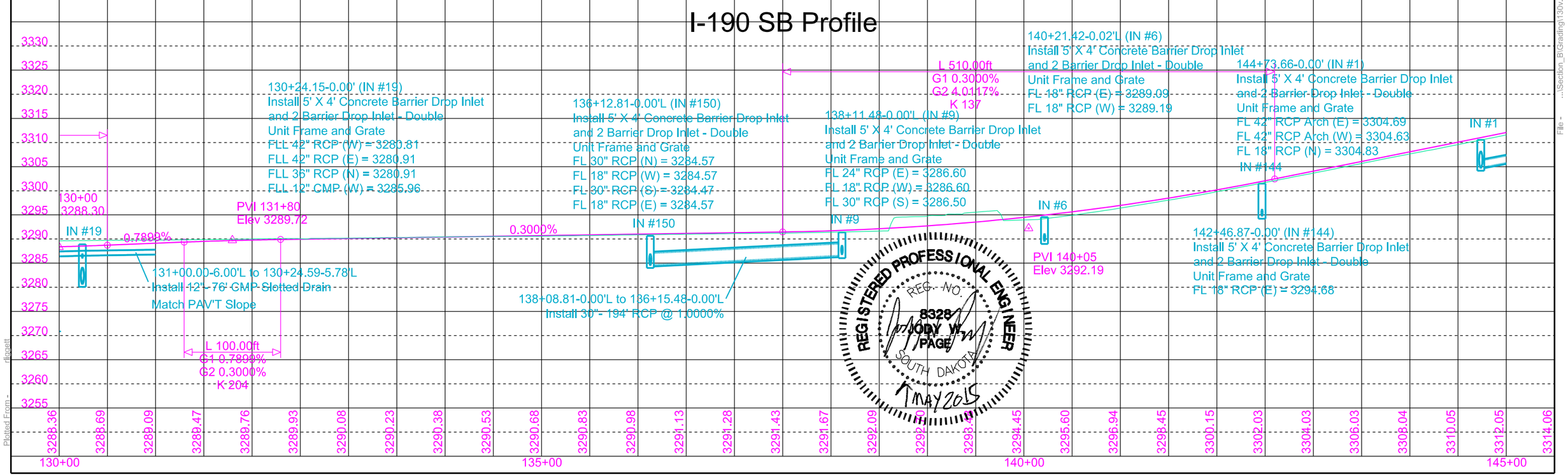

Plot Scale - 1:100

Plotted From - dlippett

File - ...\Section_B\Grading\130v.dgn

STATE OF SOUTH DAKOTA	PROJECT	SHEET	TOTAL SHEETS
	IM 1902(61)0	B80	B253

Plotting Date: 05-07-2015

Mainline Plan

FOR BIDDING PURPOSES ONLY

Sec. 35 - T2N - R7E

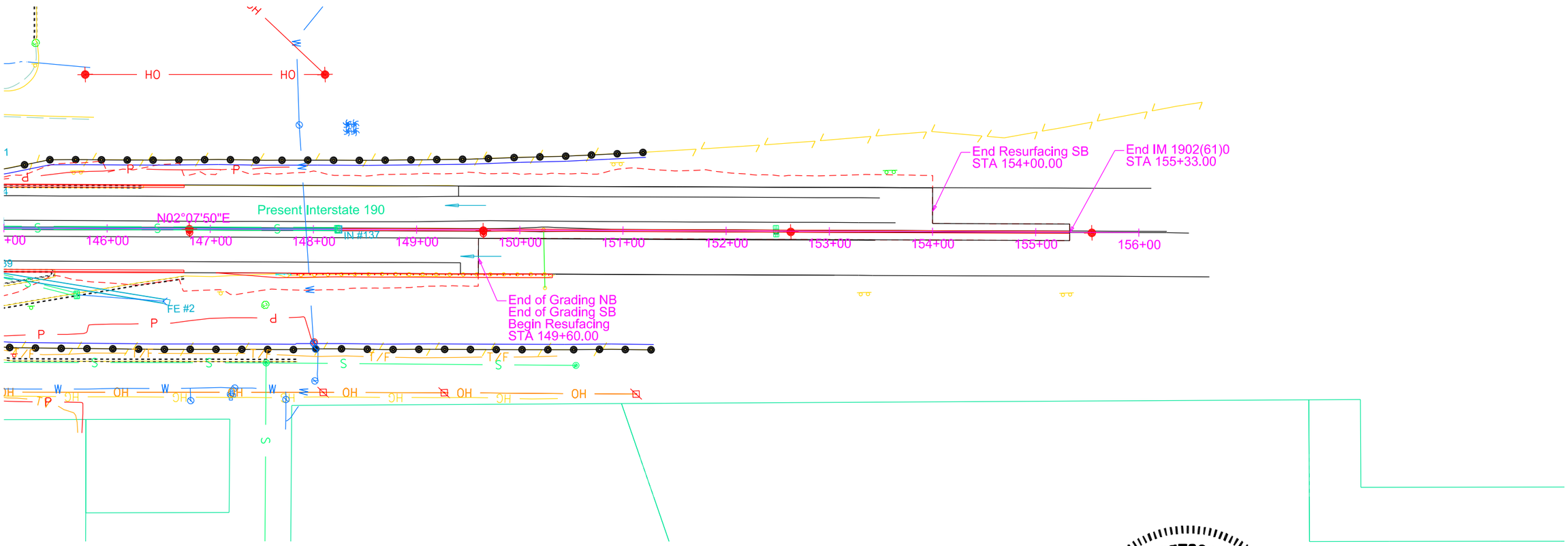

Install 5' X 4' Concrete Barrier Drop Inlet and 2 Barrier Drop Inlet - Double Unit Frame and Grate
148+24.60 - 0.00' (IN #137)

Install 42" FE at the following locations:
146+54.85 - 70.22' R (FE #2)

144+74.25 - 41.67' R to 146+54.85 - 70.22' R
Install 42" - 182' RCP (Between FE #2 and IN #39)
144+76.32 - 0.00' to 148+21.93 - 0.00'
Install 18" - 346' RCP (Between IN #137 and IN #1)

Sta. 147+65.70-42.50' R to Sta. 150+28.19-42.49' R
Install Guardrail
(See Guardrail Layout Sheets)

Sec. 36 - T2N - R7E

REGISTERED PROFESSIONAL ENGINEER
REG. NO. 8328
JODY W. PAGE
SOUTH DAKOTA
MAY 2015

HDR

Plot Scale - 1:100

Plotted From - afagerne

File - ...\Section_B\Grading\145.dgn

STATE OF SOUTH DAKOTA	PROJECT	SHEET	TOTAL SHEETS
	IM 1902(61)0	B81	B253

FOR BIDDING PURPOSES ONLY

Plotting Date: 05-05-2015

I-190 NB Profile

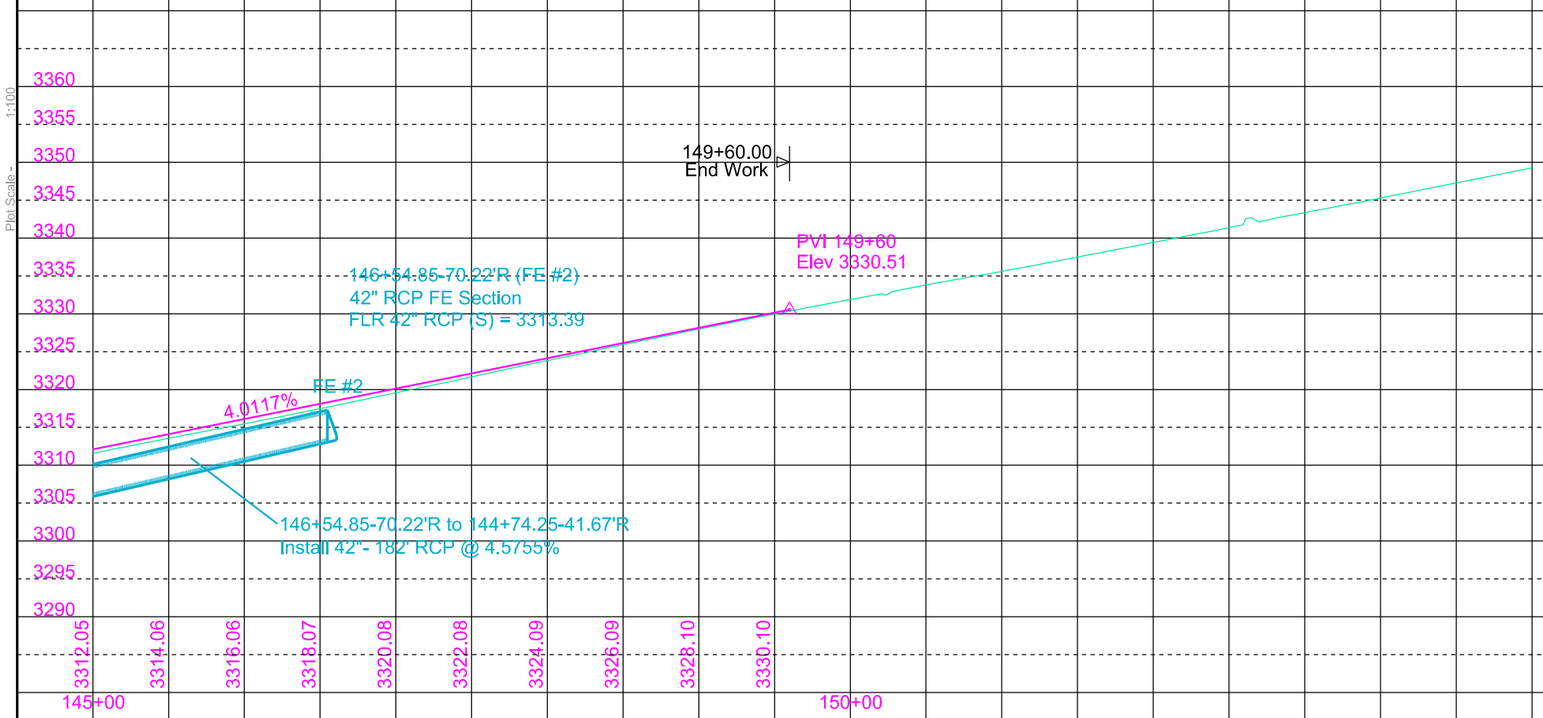

I-190 SB Profile

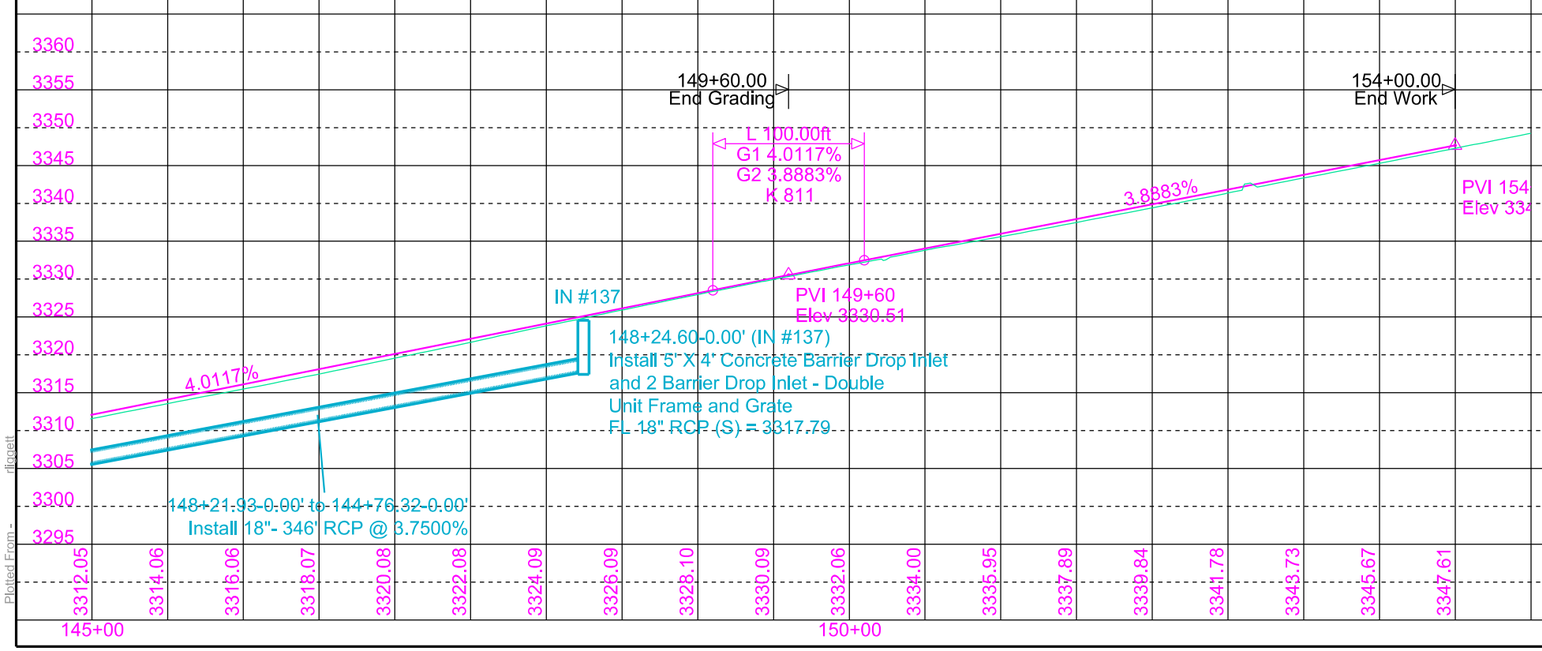

REGISTERED PROFESSIONAL ENGINEER
REG. NO. 8328
JODY W. PAGE
SOUTH DAKOTA
1 MAY 2015

Plot Scale - 1:100

Plotted From - dlippett

File - ...\Section_B\Grading\145v.dgn

STATE OF SOUTH DAKOTA	PROJECT	SHEET	TOTAL SHEETS
	IM 1902(61)0	B82	B253

Plotting Date: 05-07-2015

FOR BIDDING PURPOSES ONLY

Ramps A & E

Sec. 35-T2N-R7E

Install 2' x 3' Type B Drop Inlet with 6" Concrete Collar and Type B Frame & Grate at the following locations:
302+08.27 - 1.67' L (IN #141)
304+65.04 - 1.67' L (IN #15)
306+59.84 - 1.67' L (IN #45)

Install Special 3' x 6.5' DBL Type B Drop Inlet with 6" Concrete Collar and Type B Frame & Grate at the following locations:
304+67.95 - 41.15' R (IN #51)
351+41.29 - 24.67' R (IN #52)

Install 4' x 4' Type B Drop Inlet with 6" Concrete Collar and Type B Frame & Grate
350+98.73 - 4.41' L (IN #111)

Install 4' x 11' Type S Drop Inlet Base and Precast Type S Drop Inlet Lid
302+32.46 - 35.96' R (IN #140)

Install 1.5' x 3' Type D Drop Inlet with 6" Concrete Collar and Type D Frame & Grate
306+60.83 - 28.09' R (IN #50)

302+09.01 - 0.67' L to 302+31.34 - 33.96' R
Install 18" - 42' RCP (Between IN #141 and IN #140)
303+12.53 - 98.81' R to 304+64.97 - 41.77' R
Install 24" - 180' RCP (Between IN #51 and IN #52)
304+65.12 - 0.67' L to 304+67.86 - 39.65' R
Install 18" - 42' RCP (Between IN #15 and IN #51)
304+67.95 - 41.15' R to 304+75.92 - 49.45' R
Install 24" - 10' RCP (Between 15° Elbow #2 and IN #51)
304+75.92 - 49.45' R to 305+21.44 - 102.14' R
Install 24" - 72' RCP (Between 15° Elbow #1 and 15° Elbow #2)
304+70.85 - 40.05' R to 306+58.34 - 1.43' L
Install 18" - 198' RCP (Between IN #45 and IN #51)
305+21.44 - 102.14' R to 305+29.15 - 107.37' R
Install 24" - 8' RCP (Between IN #95 and 15° Elbow #1)
306+59.87 - 0.67' L to 306+60.83 - 28.09' R
Install 18" - 28' RCP (Between IN #50 and IN #45)
306+61.34 - 1.67' L to 308+61.54 - 1.67' L
Install 18" - 202' RCP (Between IN #96 and IN #45)
350+84.46 - 17.57' L to 350+98.73 - 4.41' L
Install 24" - 18' RCP (Between IN #111 and IN #53)
350+99.91 - 3.04' L to 351+41.29 - 24.67' R
Install 24" - 42' RCP (Between IN #52 and IN #111)

Install MSE Retaining Wall at the following location:
304+72.44-48.35' RT to
311+30.49-30.84' RT (Wall "D")
(See Section E)

REGISTERED PROFESSIONAL ENGINEER
REG. NO. 8328
JODY W. PAGE
SOUTH DAKOTA
7 MAY 2015

Curve Data (Ramp A)

PI	301+42.06
N	653478.23
E	1206913.65
Del	50°40'41" L
Dc	19°05'55"
T	142.06'
L	265.35'
R	300.00'

Curve Data (Ramp A)

PI	304+27.28
N	653738.91
E	1207070.03
Del	30°12'26"
Dc	9°32'57"
T	161.93'
L	316.33'
R	600.00'

Curve Data (Ramp E)

PI	350+84.33
N	653508.98
E	1207072.01
Del	80°16'55" R
Dc	57°17'45"
T	84.33'
L	140.12'
R	100.00'

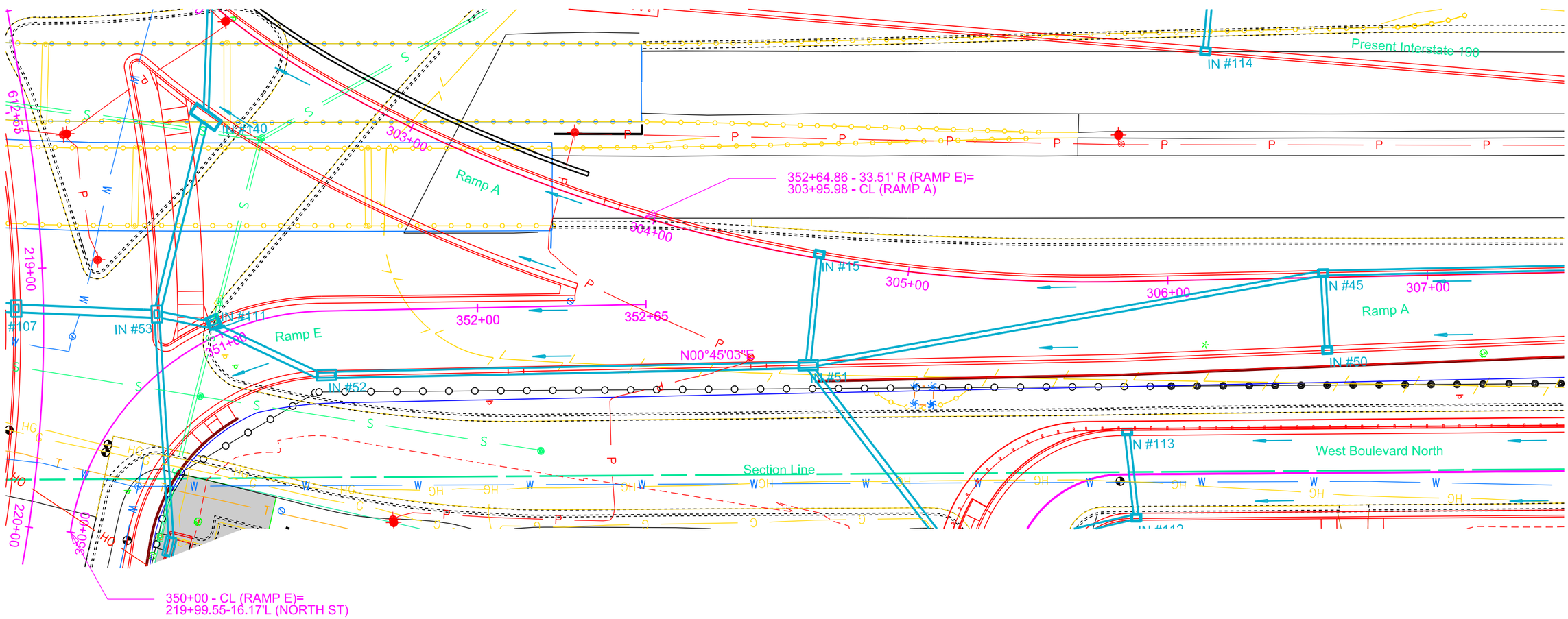

Sec. 36-T2N-R7E

Plot Scale - 1:40
Plotted From - dlippett
File - ...\Grading\11 Ramp A.dgn

STATE OF SOUTH DAKOTA	PROJECT	SHEET	TOTAL SHEETS
	IM 1902(61)0	B83	B253

Plotting Date: 06-17-2015 Rev. 06/18/2015 AJF

FOR BIDDING PURPOSES ONLY

Ramp A and E Profiles
Ramp E

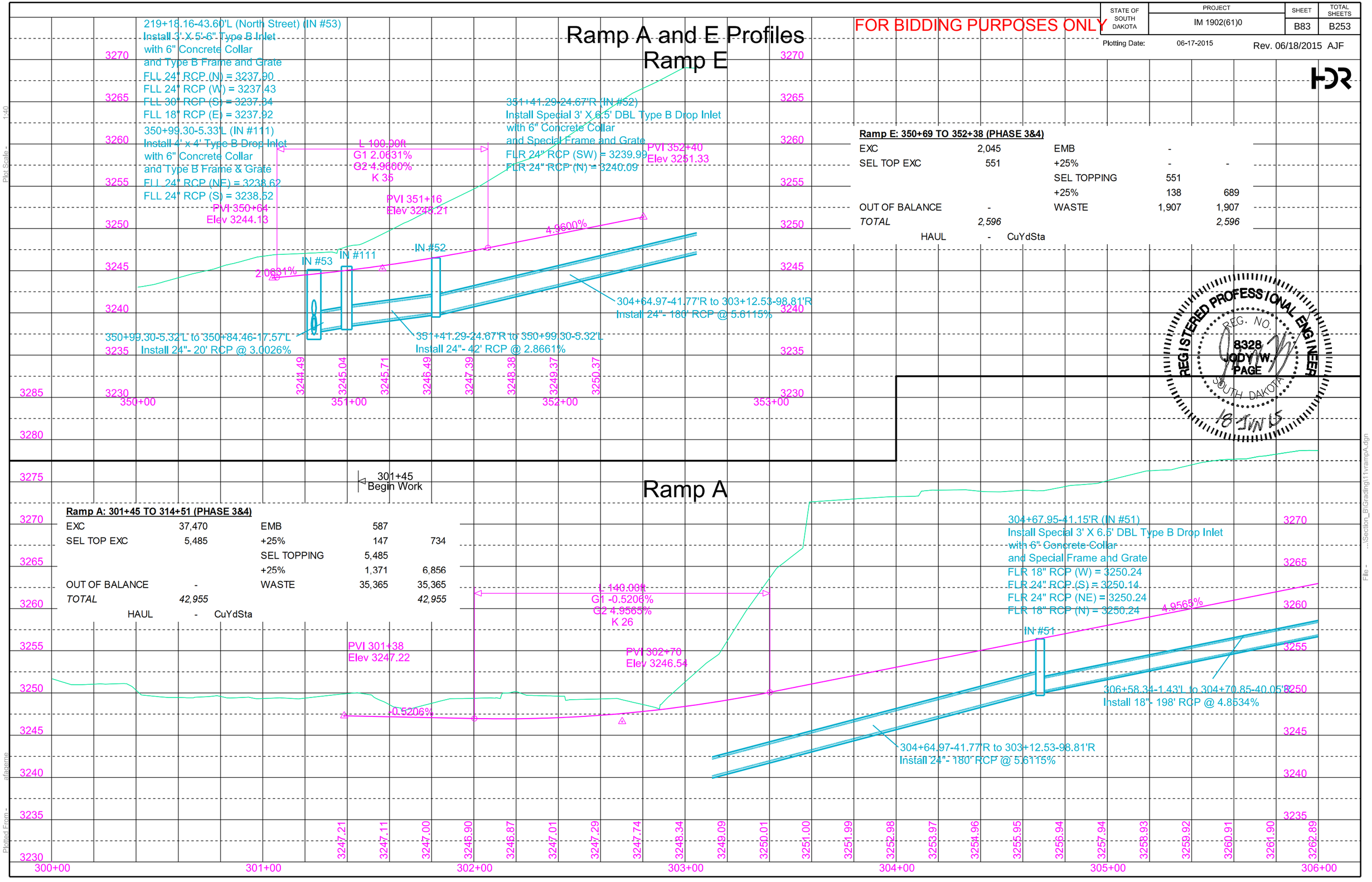

Ramp E: 350+69 TO 352+38 (PHASE 3&4)

EXC	2,045	EMB	-	
SEL TOP EXC	551	+25%	-	-
		SEL TOPPING	551	
		+25%	138	689
OUT OF BALANCE	-	WASTE	1,907	1,907
TOTAL	*2,596*			*2,596*
HAUL	- CuYdSta			

REGISTERED PROFESSIONAL ENGINEER
REG. NO. 8328
JODY W. PAGE
SOUTH DAKOTA
18 JUN 15

Ramp A

Ramp A: 301+45 TO 314+51 (PHASE 3&4)

EXC	37,470	EMB	587	
SEL TOP EXC	5,485	+25%	147	734
		SEL TOPPING	5,485	
		+25%	1,371	6,856
OUT OF BALANCE	-	WASTE	35,365	35,365
TOTAL	*42,955*			*42,955*
HAUL	- CuYdSta			

301+45
Begin Work

L 140.00ft
G1 -0.5206%
G2 4.9565%
K 26
PVI 301+38
Elev 3247.22
PVI 302+70
Elev 3246.54
-0.5206%
304+67.95-41.15'R (IN #51)
Install Special 3' X 6.5' DBL Type B Drop Inlet
with 6" Concrete Collar
and Special Frame and Grate
FLR 18" RCP (W) = 3250.24
FLR 24" RCP (S) = 3250.14
FLR 24" RCP (NE) = 3250.24
FLR 18" RCP (N) = 3250.24
4.9565%
IN #51
306+58.34-1.43'L to 304+70.85-40.05'R
Install 18"- 198' RCP @ 4.8534%
304+64.97-41.77'R to 303+12.53-98.81'R
Install 24"- 180' RCP @ 5.6115%
3247.21
3247.11
3247.00
3246.90
3246.87
3247.01
3247.29
3247.74
3248.34
3249.09
3250.01
3251.00
3251.99
3252.98
3253.97
3254.96
3255.95
3256.94
3257.94
3258.93
3259.92
3260.91
3261.90
3262.89
300+00
301+00
302+00
303+00
304+00
305+00
306+00
3270
3265
3260
3255
3250
3245
3240
3235
3230

Plot Scale - 1:40
Plotted From - afagerne
File - ...\Section_B\Grading\11rampA.dgn

STATE OF SOUTH DAKOTA	PROJECT	SHEET	TOTAL SHEETS
	IM 1902(61)0	B84	B253

FOR BIDDING PURPOSES ONLY

Plotting Date: 05-07-2015

Ramp A

Sec. 35-T2N-R7E

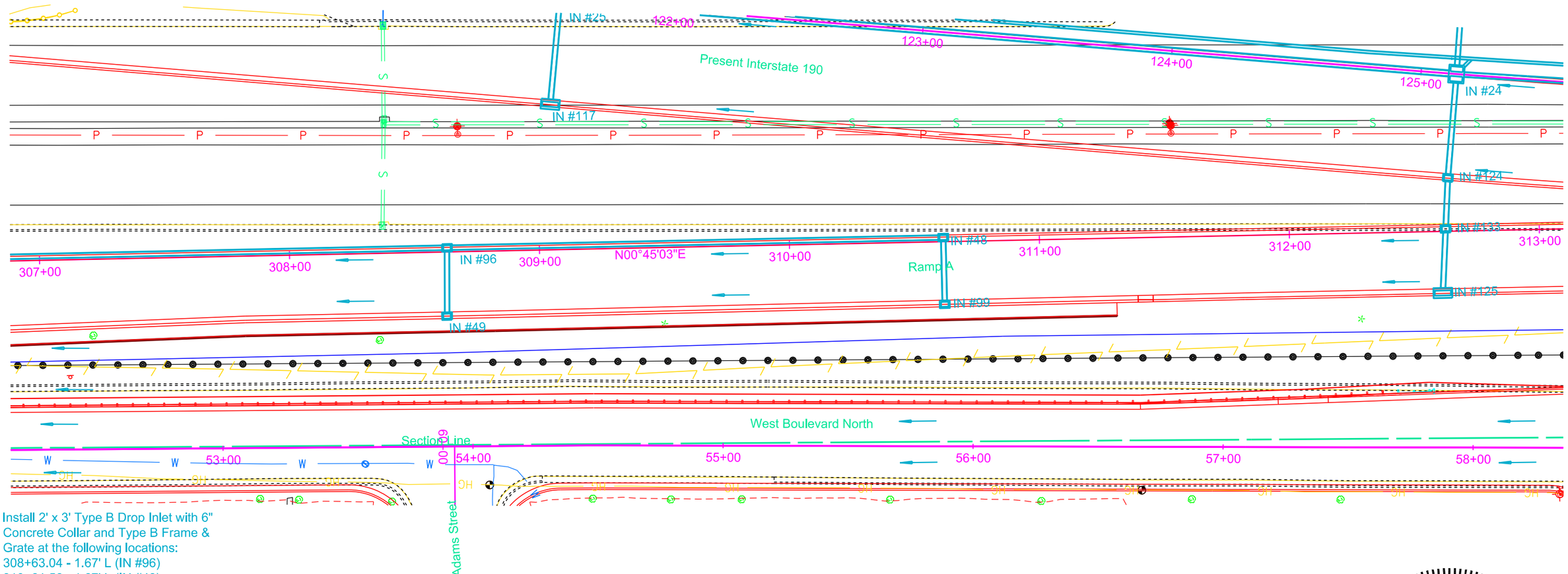

Install 2' x 3' Type B Drop Inlet with 6" Concrete Collar and Type B Frame & Grate at the following locations:
308+63.04 - 1.67' L (IN #96)
310+61.56 - 1.67' L (IN #48)
312+62.53 - 1.00' L (IN #133)

Install 1.5' x 3' Type D Drop Inlet with 6" Concrete Collar and Type D Frame & Grate at the following locations:
308+62.53 - 25.67' R (IN #49)
310+61.64 - 25.07' R (IN #99)

Install Special 3' X 6.5' DBL Type B Drop Inlet with 6" Concrete Collar and Special Frame and Grate
312+60.90 - 24.67' R (IN #125)

305+21.44 - 102.14' R to 305+29.15 - 107.37' R
Install 24" - 8' RCP (Between IN #95 and 15° Elbow #1)
306+61.34 - 1.67' L to 308+61.54 - 1.67' L
Install 18" - 202' RCP (Between IN #96 and IN #45)
308+62.53 - 25.42' R to 308+63.02 - 0.67' L
Install 18" - 26' RCP (Between IN #49 and IN #96)
308+64.54 - 1.67' L to 310+60.06 - 1.67' L
Install 18" - 196' RCP (Between IN #48 and IN #96)
310+61.57 - 0.67' L to 310+61.64 - 25.07' R
Install 18" - 26' RCP (Between IN #99 and IN #48)

Sec. 36-T2N-R7E

REGISTERED PROFESSIONAL ENGINEER
REG. NO. 8328
JODY W. PAGE
SOUTH DAKOTA
1 MAY 2015

HDR

Plot Scale - 1:40
Plotted From - rfiggett
File - ...\Section_B\Grading\17 RampA.dgn

STATE OF SOUTH DAKOTA	PROJECT	SHEET	TOTAL SHEETS
	IM 1902(61)0	B85	B253

Plotting Date: 05-05-2015

Ramp A Profile

FOR BIDDING PURPOSES ONLY

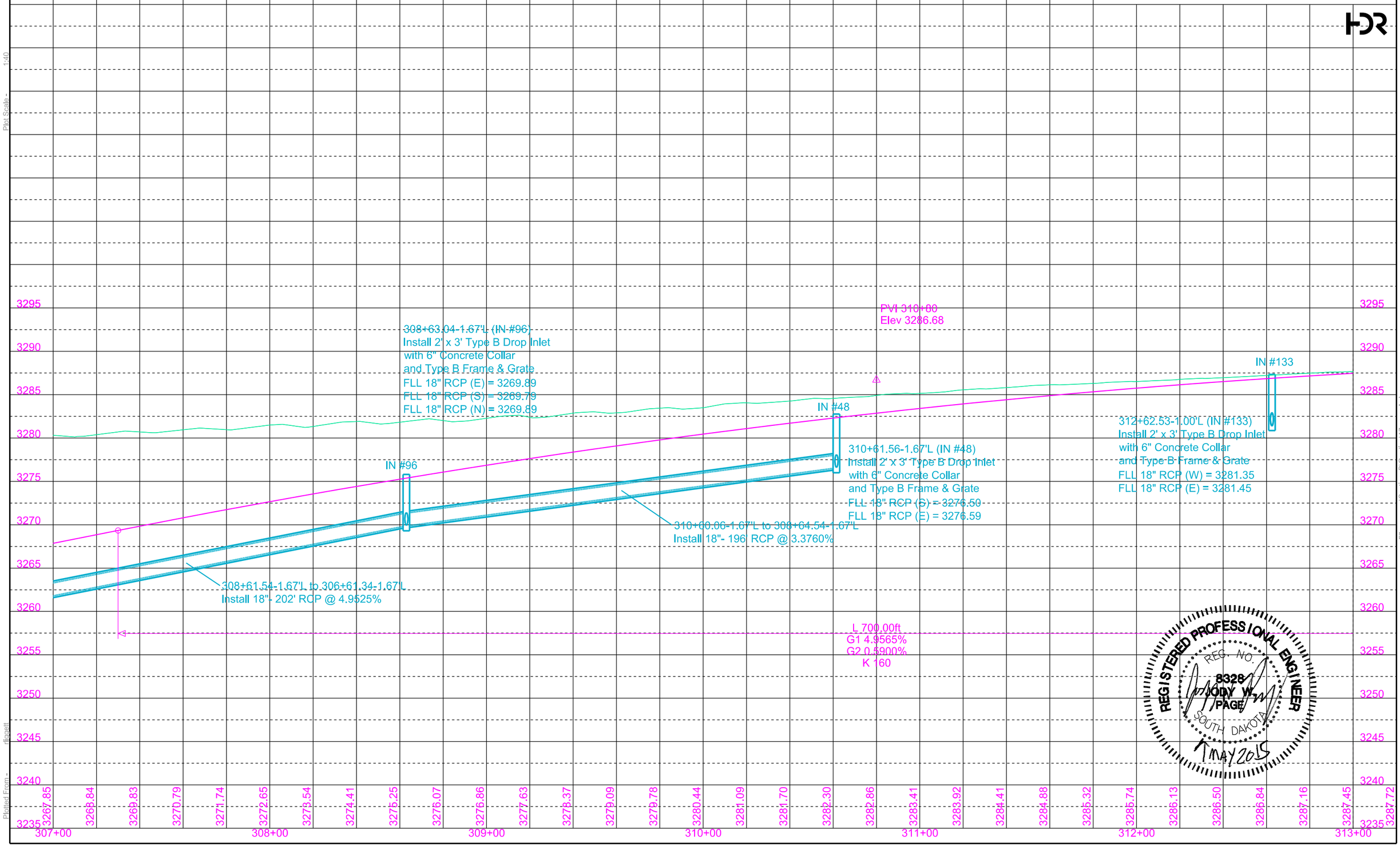

REGISTERED PROFESSIONAL ENGINEER
REG. NO. 8328
JODY W. PAGE
SOUTH DAKOTA
1 MAY 2015

Plot Scale - 1:40

Plotted From - dlippett

File - ...\Section_B\Grading\17\rampA.dgn

STATE OF SOUTH DAKOTA	PROJECT	SHEET	TOTAL SHEETS
	IM 1902(61)0	B86	B253

FOR BIDDING PURPOSES ONLY

Plotting Date: 05-05-2015

Ramp A

Sec. 35-T2N-R7E

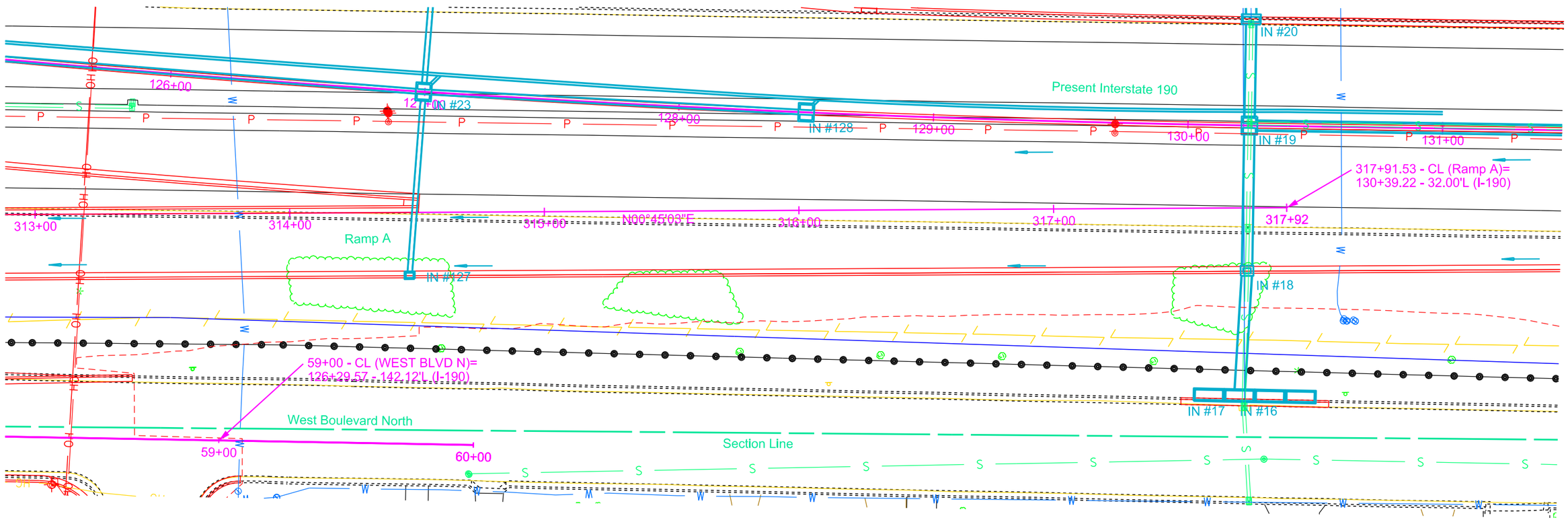

Sec. 36-T2N-R7E

REGISTERED PROFESSIONAL ENGINEER
REG. NO. 8328
JODY W. PAGE
SOUTH DAKOTA
MAY 2015

HDR

Plot Scale - 1:40

Plotted From - rliggett

File - ...\Section_B\Grading\23 RampA.dgn

STATE OF SOUTH DAKOTA	PROJECT	SHEET	TOTAL SHEETS
	IM 1902(61)0	B87	B253

Plotting Date: 05-05-2015

Ramp A Profile

FOR BIDDING PURPOSES ONLY

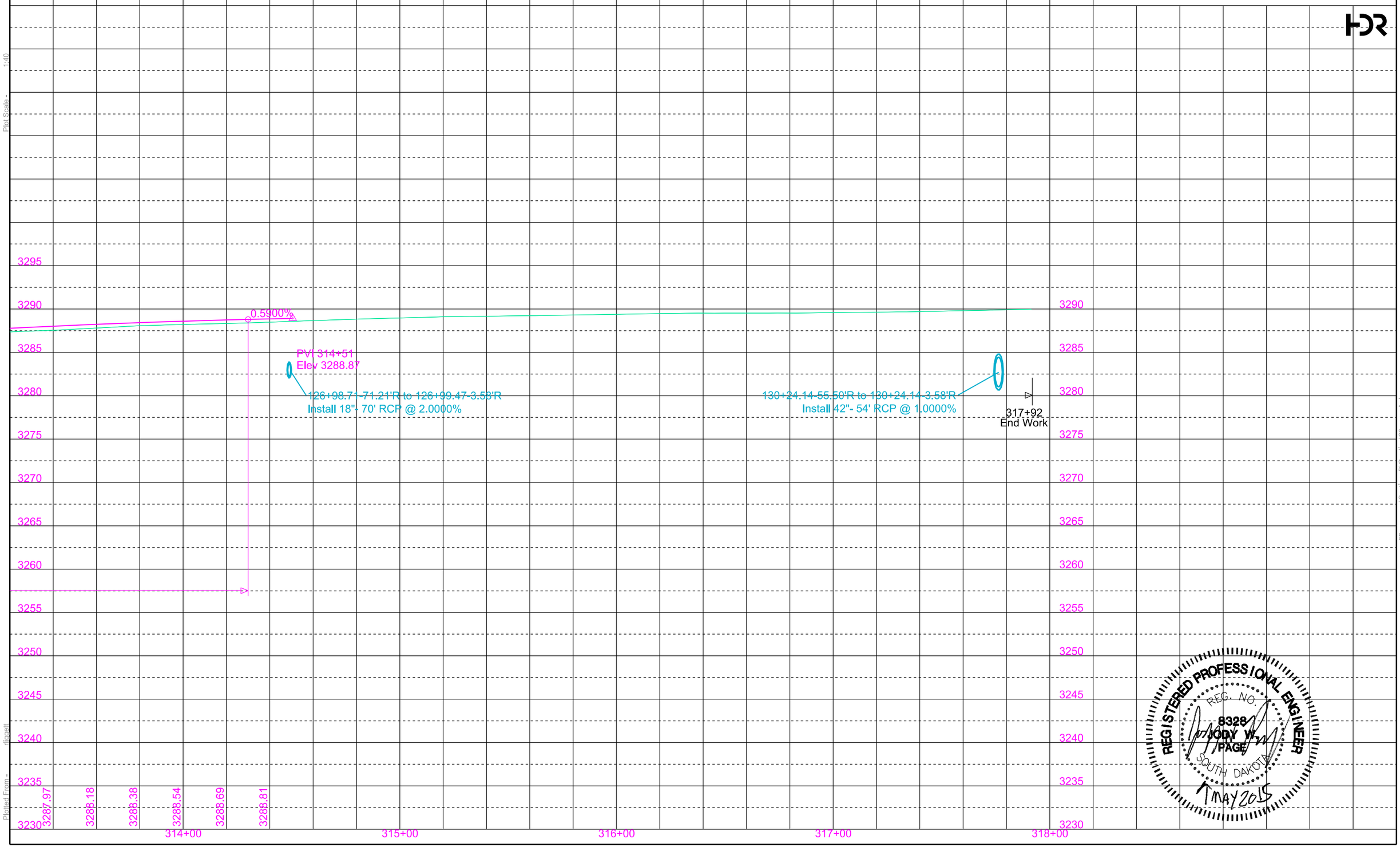

REGISTERED PROFESSIONAL ENGINEER
REG. NO. 8328
JODY W. PAGE
SOUTH DAKOTA
7 MAY 2015

Plot Scale - 1:40

Plotted From - rlippett

File - ...\Section_B\Grading\23vrampA.dgn

STATE OF SOUTH DAKOTA	PROJECT	SHEET	TOTAL SHEETS
	IM 1902(61)0	B88	B253

Plotting Date: 05-05-2015

Ramp B

FOR BIDDING PURPOSES ONLY

Sec. 35-T2N-R7E

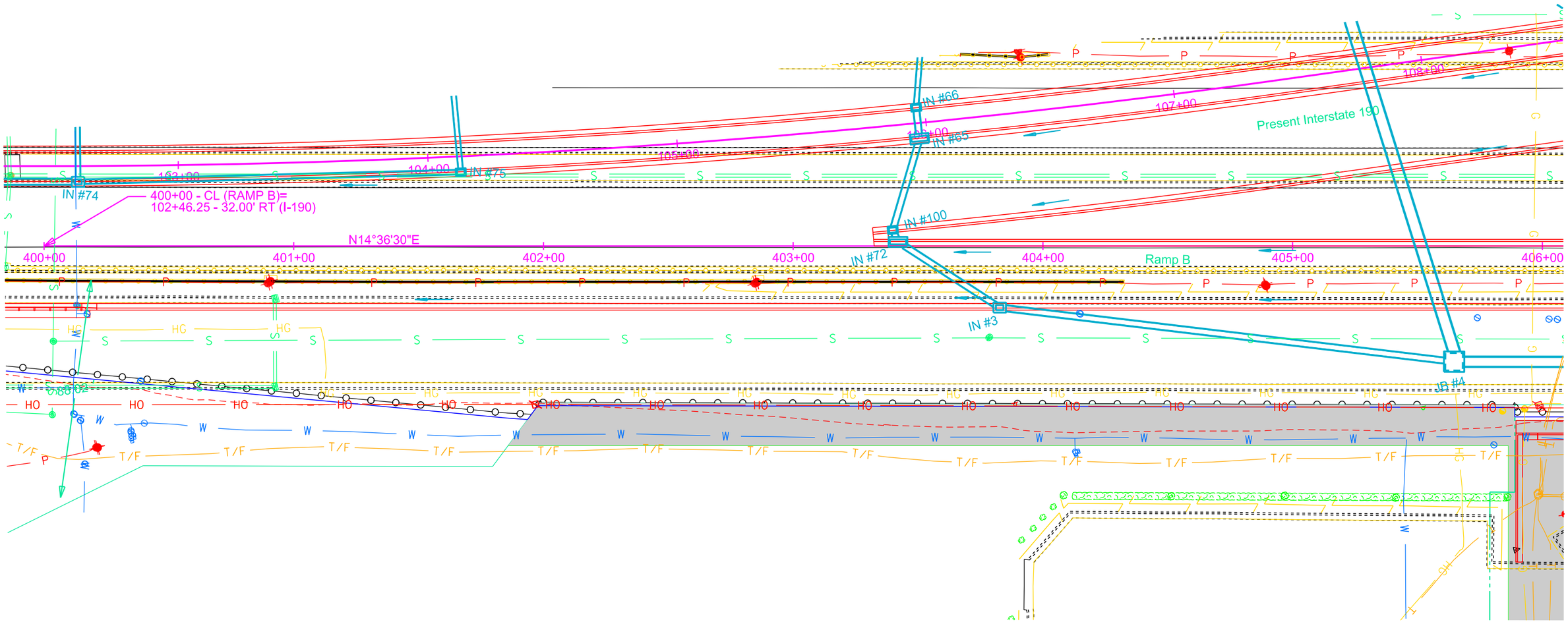

Install Special 3' X 6.5' DBL Type B Drop Inlet with 6" Concrete Collar and Special Frame and Grate
403+41.95 - 1.67' L (IN #72)

Install 3' x 4' Type B Drop Inlet with 6" Concrete Collar and Type B Frame & Grate at the following locations:
403+82.66 - 24.67' R (IN #3)

405+68.15-46.38' R to 408+57.47-39 - 46.86' R
Install 42" - 290' RCP (Between JB #7 and JB #4)

Install 7' x 7' Junction Box with Type A9 Manhole Frame & Lid and 12" Adjusting Ring
405+64.65 - 46.37' R (JB #4)

REGISTERED PROFESSIONAL ENGINEER
REG. NO. 8328
JODY W. PAGE
SOUTH DAKOTA
MAY 2015

Sec. 35-T2N-R7E

Plot Scale - 1:40
Plotted From - dlogett
File - ...\Grading\30 Ramp B.dgn

STATE OF SOUTH DAKOTA	PROJECT	SHEET	TOTAL SHEETS
	IM 1902(61)0	B89	B253

Plotting Date: 06-17-2015 Rev. 06/18/2015 AJF

Ramp B Profile

FOR BIDDING PURPOSES ONLY

REGISTERED PROFESSIONAL ENGINEER
REG. NO. 8328
CODY W. PAGE
SOUTH DAKOTA
18 JUN 15

Ramp B: 403+32 TO 411+47 (PHASE 3&4)

EXC	1,190		EMB	12,159	
SEL TOP EXC	3,157		+25%	3,040	15,199
			SEL TOPPING	3,157	
			+25%	789	3,946
OUT OF BALANCE	14,798		WASTE	-	-
TOTAL	*19,145*				*19,145*
HAUL	147,980	CuYdSta	from Ramp A		

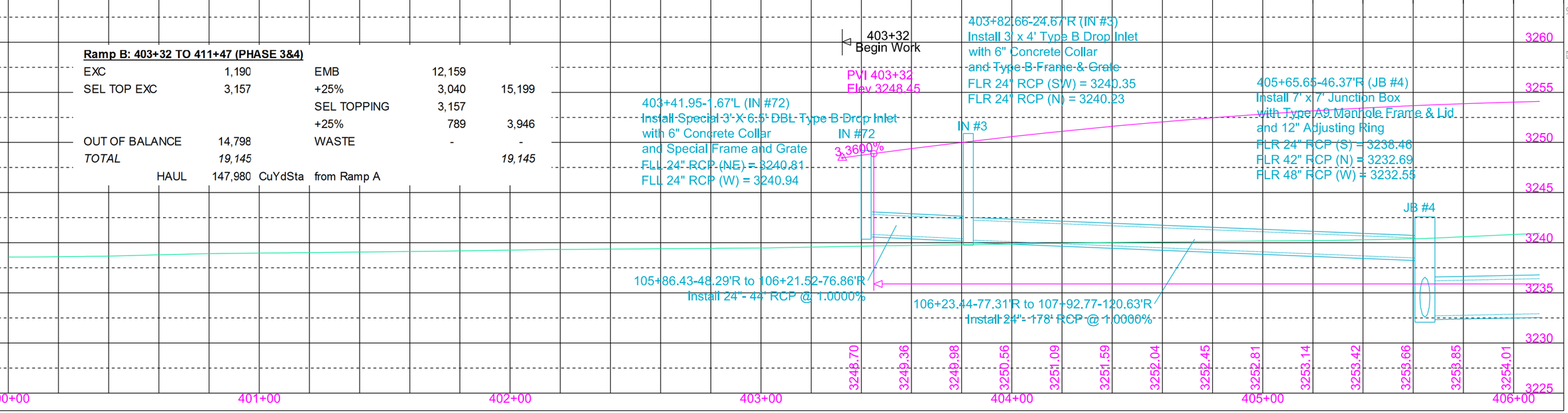

Plot Scale - 1:40

Plotted From - afagerne

File - ...\Section_B\Grading\30vrampB.dgn

STATE OF SOUTH DAKOTA	PROJECT	SHEET	TOTAL SHEETS
	IM 1902(61)0	B90	B253

FOR BIDDING PURPOSES ONLY

Rev. 05/21/2015 AJF

Ramp B

Sec. 35-T2N-R7E

Install 4' x 11' Type S Drop Inlet with Type S Drop Inlet Lid at the following locations:
410+96.15 - 26.96' R (IN #64)
451+09.49 - 26.96' R (IN #57)

Install 2' x 3' Type B Drop Inlet with 6" Concrete Collar and Type B Frame & Grate at the following locations:
408+59.96 - 1.67' L (IN #104)
408+60.22 - 24.67' R (IN #70)
409+63.13 - 29.11' R (IN #71)
409+64.85 - 1.67' L (IN #105)
410+99.89 - 1.67' L (IN #106)

Install 3' x 4' Type B Drop Inlet with 6" Concrete Collar and Type B Frame & Grate
451+31.54 - 4.92' L (IN #55)

405+68.15 - 46.38' R to 408+57.39 - 46.86' R
Install 42" - 290' RCP (Between JB #7 and JB #4)
408+59.97 - 0.67' L to 408+60.21 - 23.67' R
Install 18" - 26' RCP (Between IN #104 and IN #70)
408+60.23 - 25.67' R to 408+60.37 - 43.86' R
Install 18" - 20' RCP (Between IN #70 and JB #7)
409+63.18 - 28.10' R to 409+64.79 - 0.67' L
Install 18" - 30' RCP (Between IN #71 and IN #105)
409+66.37 - 1.89' L to 410+93.19 - 25.01' R
Install 18" - 134' RCP (Between IN #105 and IN #64)
408+63.39 - 46.64' R to 410+57.23 - 92.65' R
Install 42" - 244' RCP (Between IN #57 and JB #7)
410+60.92 - 94.08' R to 410+94.85 - 28.98' R
Install 18" - 80' RCP (Between IN #64 and IN #57)
410+96.39 - 24.96' R to 410+99.74 - 0.67' L
Install 18" - 26' RCP (Between IN #106 and IN #64)
411+01.40 - 1.98' L to 411+47.55 - 5.69' L
Install 18" - 46' RCP (Between IN #46 and IN #106)

Install 6' x 6' Junction Box with Type A9 Manhole Frame & Lid and 12" Adjusting Ring
408+60.40 - 46.86' R (JB #7)

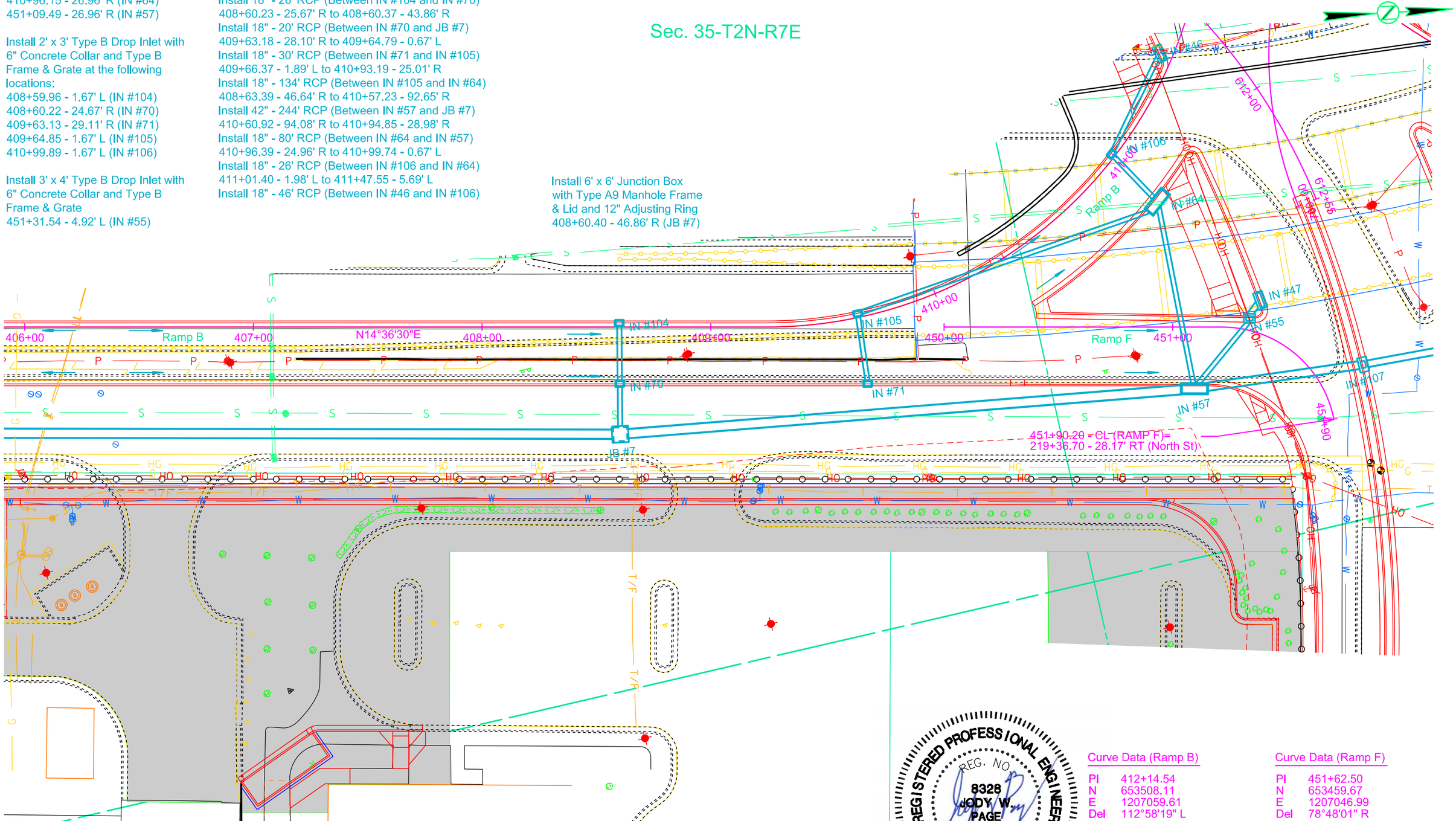

REGISTERED PROFESSIONAL ENGINEER
REG. NO. 8328
JODY W. PAGE
SOUTH DAKOTA
21 MAY 15

Sec. 35-T2N-R7E

Curve Data (Ramp B)

PI	412+14.54
N	653508.11
E	1207059.61
Del	112°58'19" L
Dc	29°50'30"
T	289.93'
L	378.57'
R	192.00'

Curve Data (Ramp F)

PI	451+62.50
N	653459.67
E	1207046.99
Del	78°48'01" R
Dc	114°35'30"
T	41.07'
L	68.77'
R	50.00'

HDR

Plot Scale - 1:40
Plotted From - rlippett
File - ...\Grading\36 Ramp B.dgn

STATE OF SOUTH DAKOTA	PROJECT	SHEET	TOTAL SHEETS
	IM 1902(61)0	B91	B253

Plotting Date: 06-17-2015 Rev. 06/18/2015 AJF

FOR BIDDING PURPOSES ONLY

Ramp B and F Profiles
Ramp F

Ramp F: 450+41 TO 451+48 (PHASE 3&4)

EXC	109		EMB	59	
SEL TOP EXC	326		+25%	15	74
			SEL TOPPING	326	
			+25%	81	407
OUT OF BALANCE	46		WASTE		-
TOTAL	*481*				*481*
HAUL	276	CuYdSta	from North Street		

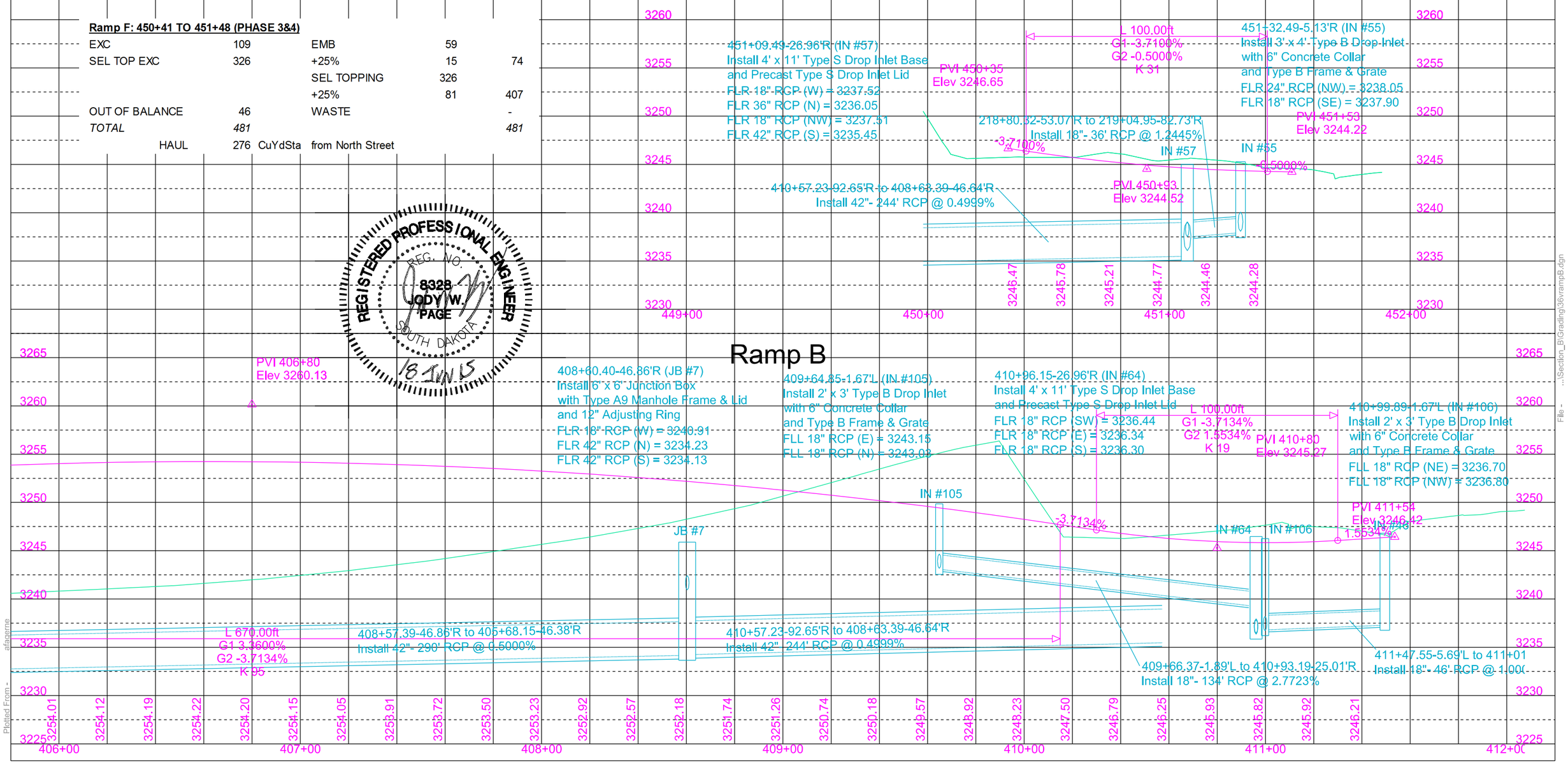

REGISTERED PROFESSIONAL ENGINEER
REG. NO. 8328
JODY W. PAGE
SOUTH DAKOTA
18 JUN 15

Plot Scale - 1:40

Plotted From - afagerne

File - ...\Section_B\Grading\36vrampB.dgn

STATE OF SOUTH DAKOTA	PROJECT	SHEET	TOTAL SHEETS
	IM 1902(61)0	B92	B253

Plotting Date: 05-05-2015

FOR BIDDING PURPOSES ONLY

Ramp C

Sec. 35-T2N-R7E

Curve Data (Ramp C)

PI	602+98.53
N	652637.86
E	1206766.66
Del	18°25'53" L
Dc	3°06'50"
T	298.53'
L	591.91'
R	1840.00'

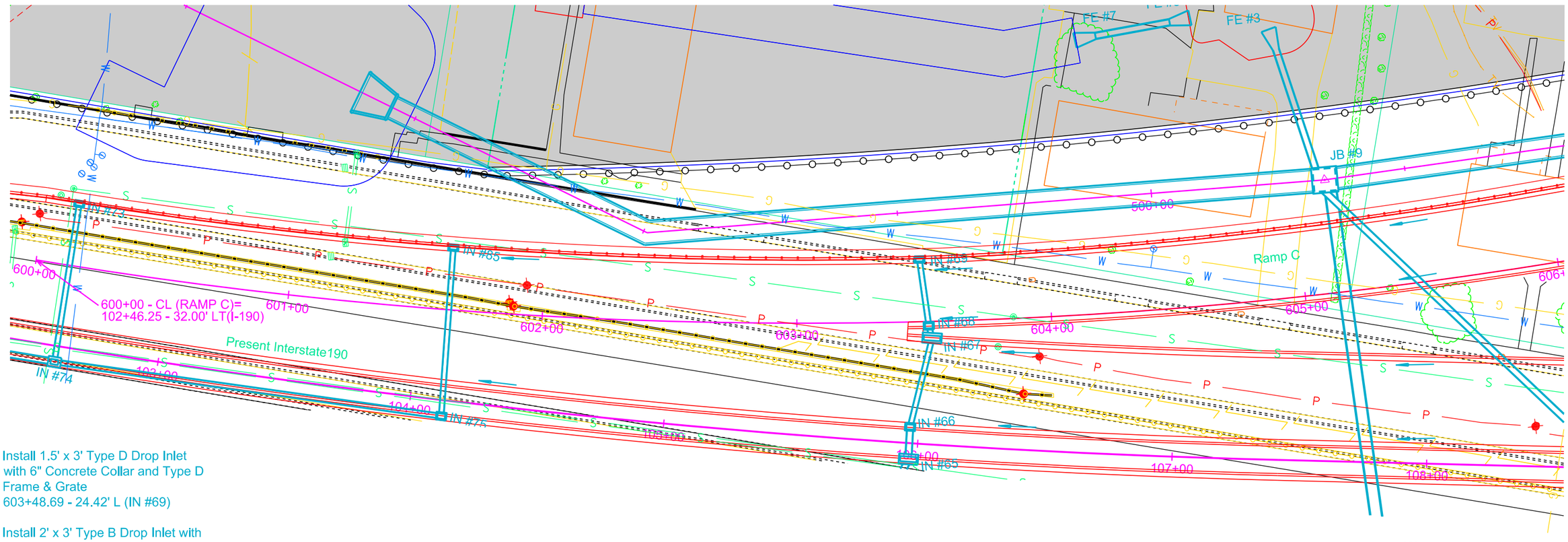

Install 1.5' x 3' Type D Drop Inlet with 6" Concrete Collar and Type D Frame & Grate
603+48.69 - 24.42' L (IN #69)

Install 2' x 3' Type B Drop Inlet with 6" Concrete Collar and Type B Frame & Grate
603+51.75 - 1.67' R (IN #68)

REGISTERED PROFESSIONAL ENGINEER
REG. NO. 8328
JODY W. PAGE
SOUTH DAKOTA
MAY 2015

HDR

Plot Scale - 1:40
Plotted From - dlippett
File - ...\Grading\50 Ramp C.dgn

STATE OF SOUTH DAKOTA	PROJECT	SHEET	TOTAL SHEETS
	IM 1902(61)0	B93	B253

Plotting Date: 06-17-2015 Rev. 06/18/2015 AJF

Ramp C Profile

FOR BIDDING PURPOSES ONLY

REGISTERED PROFESSIONAL ENGINEER
REG. NO. 8328
JODY W. PAGE
SOUTH DAKOTA
18 Jun 15

Ramp C: 603+44 TO 611+08 (PHASE 1)

EXC	1,982	EMB	16,079	
SEL TOP EXC	3,479	+25%	4,020	20,099
		SEL TOPPING	3,479	
		+25%	870	4,349
OUT OF BALANCE	18,987	WASTE	-	-
TOTAL	*24,448*			*24,448*
HAUL	132,909 CuYdSta	from North Street		

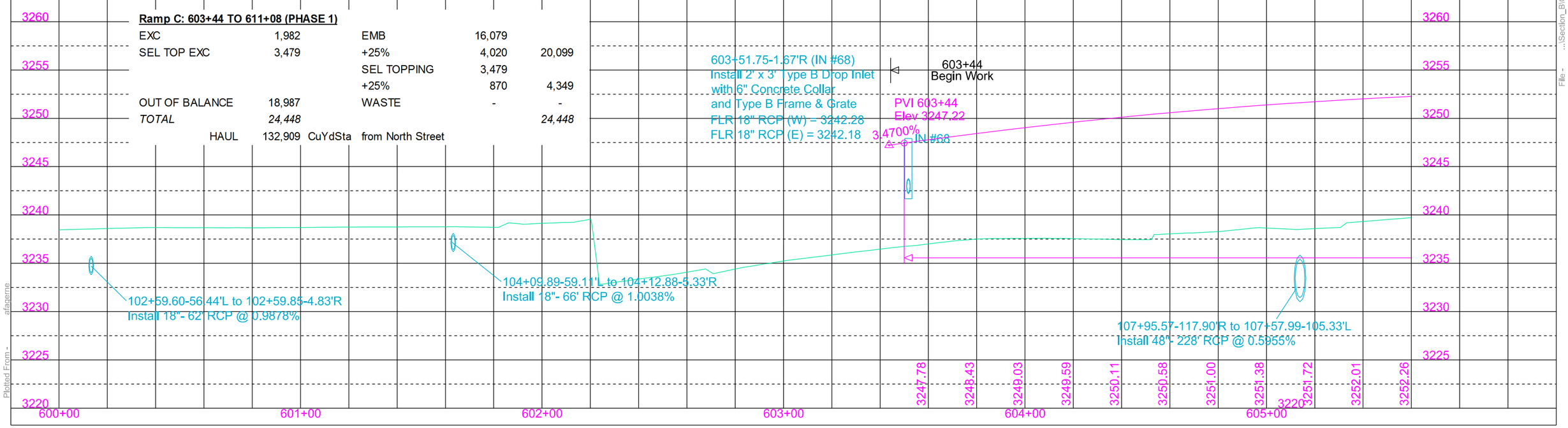

Plot Scale - 1:40
Plotted From - afagerne
File - ...\Section_B\Grading\50\rampC.dgn

STATE OF SOUTH DAKOTA	PROJECT	SHEET	TOTAL SHEETS
	IM 1902(61)0	B94	B253

Plotting Date: 05-05-2015

Ramps C & G

FOR BIDDING PURPOSES ONLY

Sec. 35-T2N-R7E

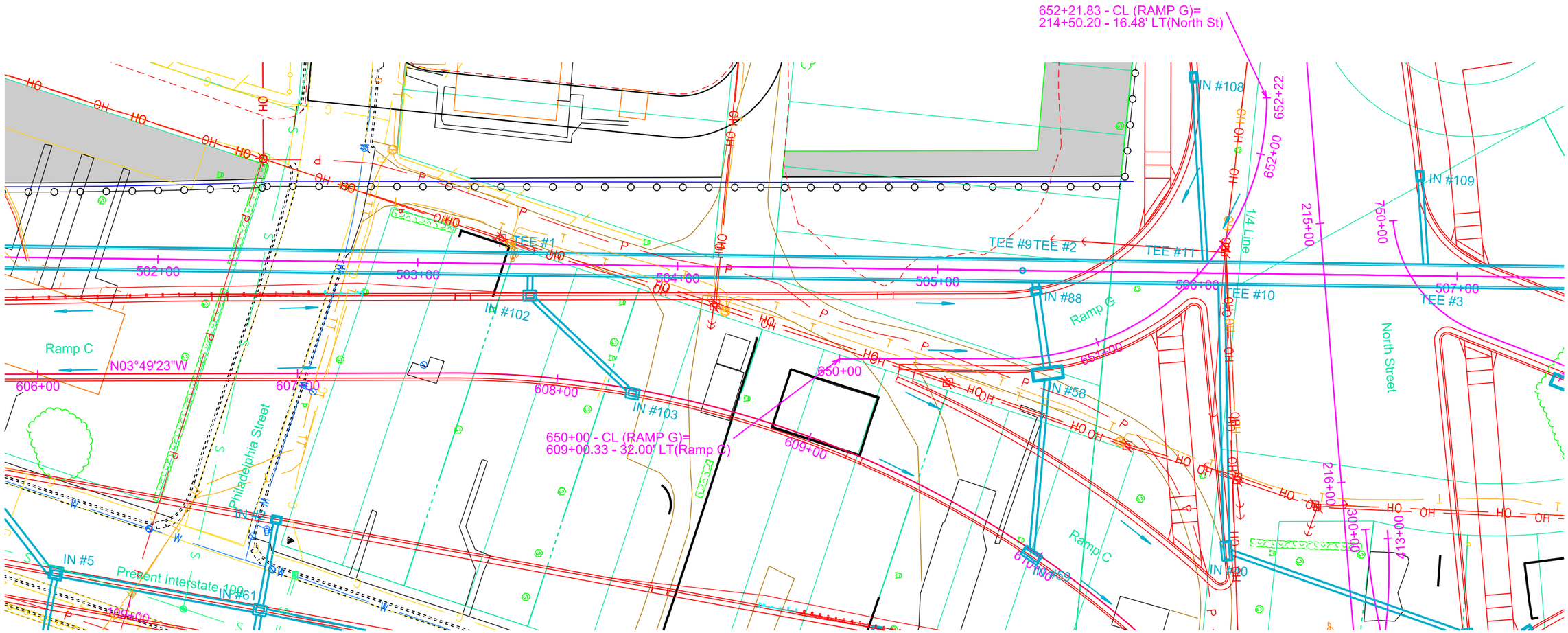

Install 3' x 4' Type B Drop Inlet with 6" Concrete Collar and Type B Frame & Grate at the following locations:
607+87.25 - 30.81' L (IN #102)
608+29.53 - 1.67' R (IN #103)

Install Special 3' X 6.5' DBL Type B Drop Inlet with 6" Concrete Collar and Special Frame and Grate
609+97.12 - 1.67' R (IN #59)

Install 2' x 3' Type B Drop Inlet with 6" Concrete Collar and Type B Frame & Grate
650+79.56 - 25.17' L (IN #88)

Install 4' x 11' Type S Drop Inlet Base and Precast Type S Drop Inlet Lid
650+79.25 - 6.92' R (IN #58)

607+86.89 - 37.95' L to 607+87.25 - 30.81' L
Install 18" - 6' RCP (Between IN #102 and TEE #1)
607+88.81 - 29.43' L to 608+29.53 - 1.67' R
Install 18" - 50' RCP (Between IN #103 and IN #102)
609+68.39 - 59.13' L to 609+96.28 - 0.16' R
Install 18" - 68' RCP (Between IN #59 and IN #58)
650+79.27 - 4.92' R to 650+79.55 - 24.17' L
Install 24" - 30' RCP (Between IN #58 and IN #88)
650+79.56 - 25.17' L to 650+79.99 - 27.92' L
Install 18" - 2' RCP (Between IN #88 and TEE #2)

Curve Data (Ramp C)	
PI	609+11.66
N	653254.77
E	1206725.43
Del	41°59'16" R
Dc	14°19'26"
T	153.50'
L	293.13'
R	400.00'

Curve Data (Ramp C)	
PI	611+58.59
N	653459.82
E	1206886.58
Del	44°14'16" R
Dc	21°42'11"
T	107.30'
L	203.83'
R	264.00'

Curve Data (Ramp G)	
PI	651+64.75
N	653415.66
E	1206709.67
Del	90°00'00" L
Dc	57°17'45"
T	100.00'
L	157.08'
R	100.00'

REGISTERED PROFESSIONAL ENGINEER
REG. NO. 8328
JODY W. PAGE
SOUTH DAKOTA
MAY 2015

HDR

Plot Scale - 1:40
Plotted From - rlippett
File - ...\Grading\56 Ramp C.dgn

STATE OF SOUTH DAKOTA	PROJECT	SHEET	TOTAL SHEETS
	IM 1902(61)0	B95	B253

Plotting Date: 06-17-2015 Rev. 06/18/2015 AJF

Ramp C and G Profiles

FOR BIDDING PURPOSES ONLY

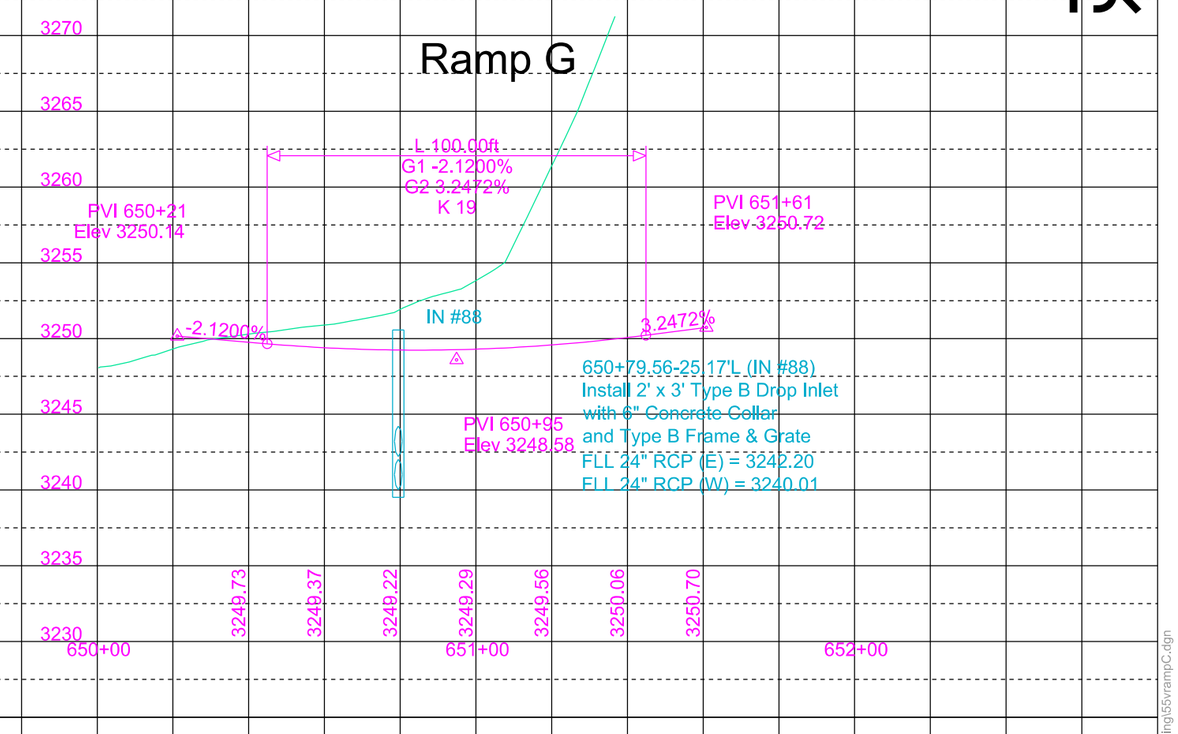

Ramp G: 650+23 TO 651+50 (PHASE 1)

EXC	870	EMB	1	
SEL TOP EXC	356	+25%	1	2
		SEL TOPPING	356	
		+25%	89	445
OUT OF BALANCE	-	WASTE	779	779
TOTAL	*1,226*			*1,226*

HAUL - CuYdSta

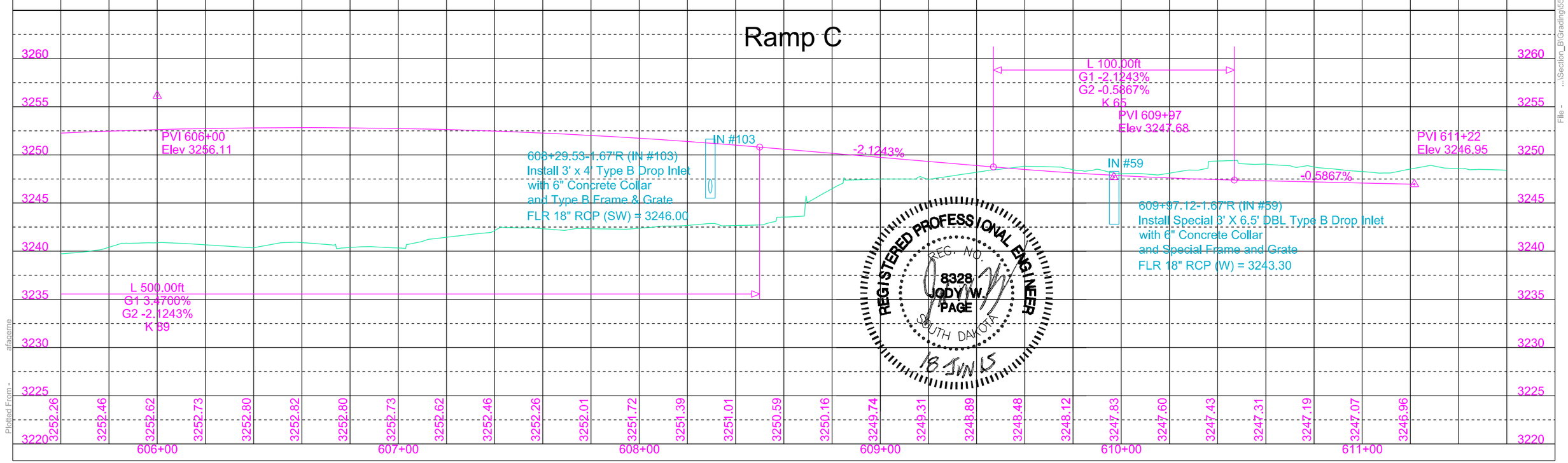

REGISTERED PROFESSIONAL ENGINEER
REG. NO. 8328
JODY W. PAGE
SOUTH DAKOTA
18 JUN 15

Plot Scale - 1:40

Plotted From - afaqerne

File - ...\Section_B\Grading\55vrampC.dgn

STATE OF SOUTH DAKOTA	PROJECT	SHEET	TOTAL SHEETS
	IM 1902(61)0	B96	B253

FOR BIDDING PURPOSES ONLY

Plotting Date: 05-07-2015

Ramps D & H

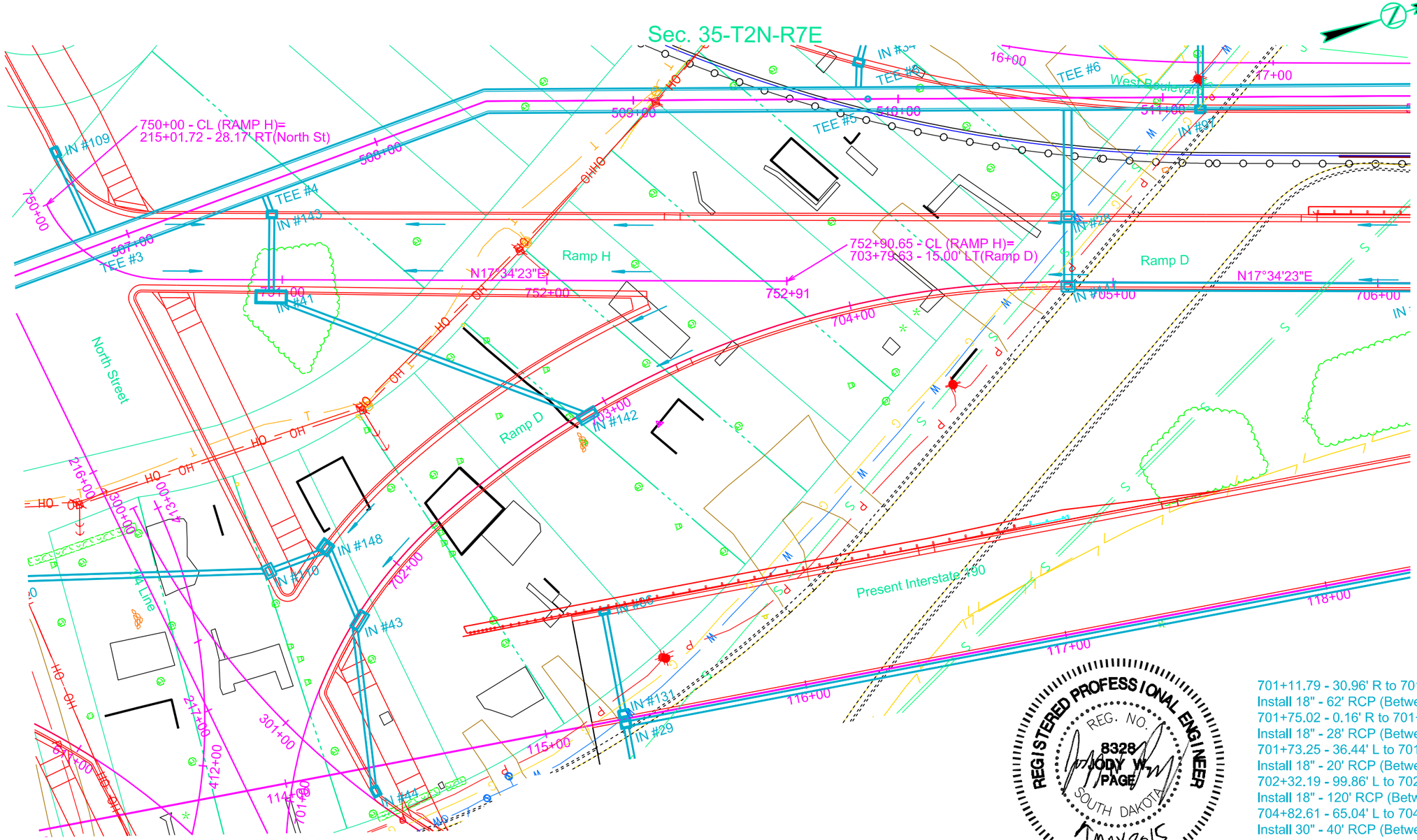

Install Special 3' x 6.5' DBL Type B Drop Inlet with 6" Concrete Collar and Type B Frame & Grate at the following locations:
701+74.03 - 1.67' R (IN #43)
702+91.76 - 1.67' R (IN #142)

Install 3' x 4' Type B Drop Inlet with 6" Concrete Collar and Type B Frame & Grate at the following locations:
704+82.98 - 1.67' R (IN #147)
704+82.84 - 24.67' L (IN #28)

Install 2' x 3' Type B Drop Inlet with 6" Concrete Collar and Type B Frame & Grate
750+96.03 - 24.67' L (IN #143)

Install 4' x 11' Type S Drop Inlet Base and Precast Type S Drop Inlet Lid
750+95.86 - 6.49' R (IN #41)

Install 4' x 4' Type B Drop Inlet with 6" Concrete Collar and Type B Frame & Grate
701+88.73 - 24.67' L (IN #148)

Sec. 35-T2N-R7E

Curve Data (Ramp H)	
PI	750+31.28
N	653465.14
E	1206684.88
Del	64°03'48" L
Dc	114°35'30"
T	31.28'
L	55.91'
R	50.00'

Curve Data (Ramp D)	
PI	701+29.69
N	653448.60
E	1206865.49
Del	73°05'02" R
Dc	32°44'26"
T	129.69'
L	223.22'
R	175.00'

Curve Data (Ramp D)	
PI	703+57.88
N	653689.12
E	1206755.81
Del	42°05'12" R
Dc	16°22'13"
T	134.66'
L	257.09'
R	350.00'

REGISTERED PROFESSIONAL ENGINEER
REG. NO. 8328
JODY W. PAGE
SOUTH DAKOTA
1 MAY 2015

701+11.79 - 30.96' R to 701+72.00 - 3.18' R
Install 18" - 62' RCP (Between IN #44 and IN #43)
701+75.02 - 0.16' R to 701+88.01 - 23.17' L
Install 18" - 28' RCP (Between IN #43 and IN #148)
701+73.25 - 36.44' L to 701+86.98 - 25.86' L
Install 18" - 20' RCP (Between IN #148 and IN #110)
702+32.19 - 99.86' L to 702+90.56 - 0.17' R
Install 18" - 120' RCP (Between IN #142 and IN #41)
704+82.61 - 65.04' L to 704+82.84 - 24.67' L
Install 30" - 40' RCP (Between IN #28 and TEE #6)
704+82.85 - 23.17' L to 704+82.97 - 0.17' R
Install 30" - 24' RCP (Between IN #147 and IN #28)
750+95.87 - 4.49' R to 750+96.02 - 23.67' L
Install 18" - 30' RCP (Between IN #41 and IN #143)
750+93.52 - 31.20' L to 750+96.03 - 24.67' L
Install 18" - 6' RCP (Between IN #143 and TEE #4)

HDR

Plot Scale - 1:40
Plotted From - dlippett
File - ...\Section_B\Grading\71 RampD.dgn

STATE OF SOUTH DAKOTA	PROJECT	SHEET	TOTAL SHEETS
	IM 1902(61)0	B97	B253

Plotting Date: 06-17-2015 Rev. 06/18/2015 AJF

FOR BIDDING PURPOSES ONLY

Ramp D and H Profiles
Ramp H

Ramp H: 750+35 TO 752+38 (PHASE 1)

EXC	3,408	EMB	-	
SEL TOP EXC	725	+25%	-	-
		SEL TOPPING	725	
		+25%	181	906
OUT OF BALANCE	-	WASTE	3,227	3,227
TOTAL	*4,133*			*4,133*
HAUL	- CuYdSta			

Ramp D: 701+42 TO 710+25 (PHASE 1)

EXC	678	EMB	4,721	
SEL TOP EXC	3,522	+25%	1,180	5,901
		SEL TOPPING	3,522	
		+25%	880	4,402
OUT OF BALANCE	6,103	WASTE	-	-
TOTAL	*10,303*			*10,303*
HAUL	61,030 CuYdSta	from North Street		

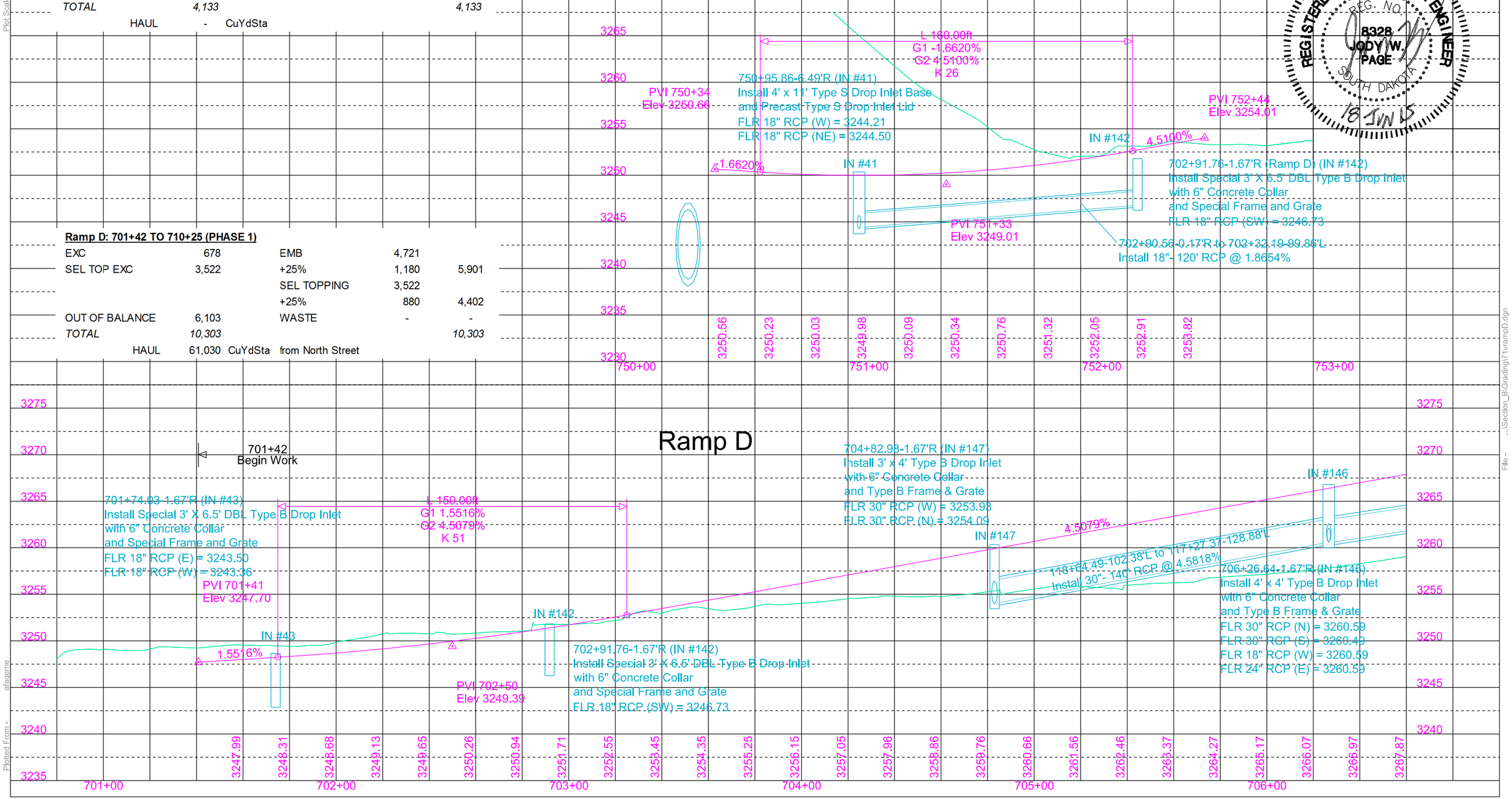

REGISTERED PROFESSIONAL ENGINEER
REG. NO. 8328
JODY W. PAGE
SOUTH DAKOTA
18 JUN 15

Plot Scale - 1:40
Plotted From - afagerne
File - ...\Section_B\Grading\71rampD.dgn

STATE OF SOUTH DAKOTA	PROJECT	SHEET	TOTAL SHEETS
	IM 1902(61)0	B98	B253

Plotting Date: 05-05-2015

FOR BIDDING PURPOSES ONLY

Ramp D

Sec. 35-T2N-R7E

Install 4' x 4' Type B Drop Inlet with 6" Concrete Collar and Type B Frame & Grate
706+26.64 - 1.67' R (IN #146)
709+18.11 - 1.67' R (IN #119)

Install 1.5' x 3' Type D Drop Inlet with 6" Concrete Collar and Type D Frame & Grate at the following locations:
706+23.09 - 24.42' L (IN #27)
709+14.89 - 24.42' L (IN #120)

706+23.09 - 24.42' L to 706+26.64 - 1.67' R
Install 18" - 24' RCP (Between IN #27 and IN #146)
709+14.89 - 24.42' L to 709+18.11 - 1.67' R
Install 18" - 24' RCP (Between IN #120 and IN #119)
709+18.11 - 1.67' R to 709+19.16 - 13.60' R
Install 30" - 10' RCP (Between IN #118 and IN #119)

Curve Data (Ramp D)

PI	708+87.74
N	654205.90
E	1206919.48
Del	08°04'28" L
Dc	02°29'28"
T	162.33'
L	324.13'
R	2300.00'

Curve Data (Ramp D)

PI	712+86.58
N	654599.80
E	1206985.39
Del	00°43'49" L
Dc	00°51'06"
T	42.88'
L	85.75'
R	6727.40'

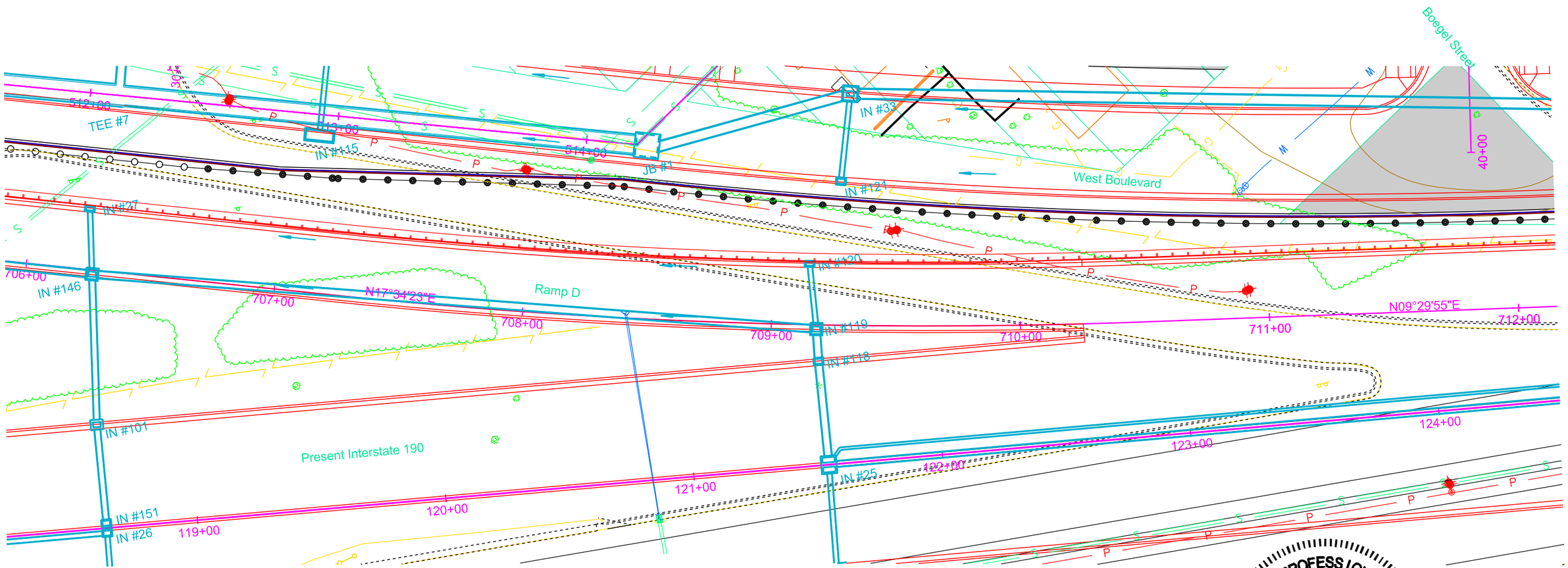

REGISTERED PROFESSIONAL ENGINEER
REG. NO. 8328
JODY W. PAGE
SOUTH DAKOTA
1 MAY 2015

Sec. 35-T2N-R7E

HDR

Plot Scale - 1:40
Plotted From - rfiggett
File - ...\Section_B\Grading\76 RampD.dgn

STATE OF SOUTH DAKOTA	PROJECT	SHEET	TOTAL SHEETS
	IM 1902(61)0	B99	B253

Plotting Date: 05-05-2015

Ramp D Profile

FOR BIDDING PURPOSES ONLY

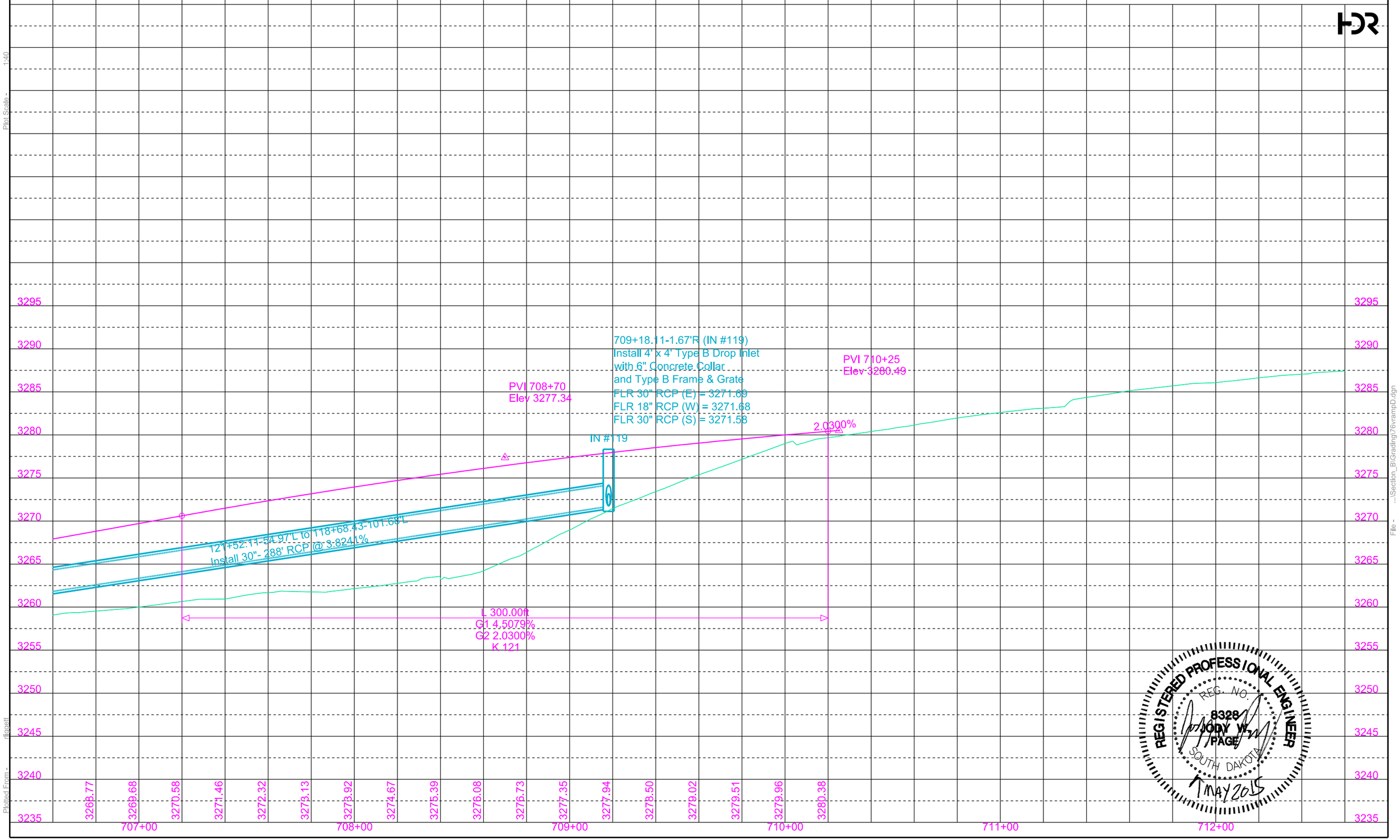

REGISTERED PROFESSIONAL ENGINEER
REG. NO. 8328
JODY W. PAGE
SOUTH DAKOTA
7 MAY 2015

Plot Scale - 1:40

Plotted From - diggett

File - ...\Section_B\Grading\7ovrampD.dgn

STATE OF SOUTH DAKOTA	PROJECT	SHEET	TOTAL SHEETS
	IM 1902(61)0	B100	B253

Plotting Date: 05-05-2015

North Street Plan

FOR BIDDING PURPOSES ONLY

Reset Gravity Large Concrete Block Wall
at the following locations:
209+87.94-23.07' LT to
211+31.12-35.92' LT (Wall "J")
(See Section E)

Sec. 35-T2N-R7E

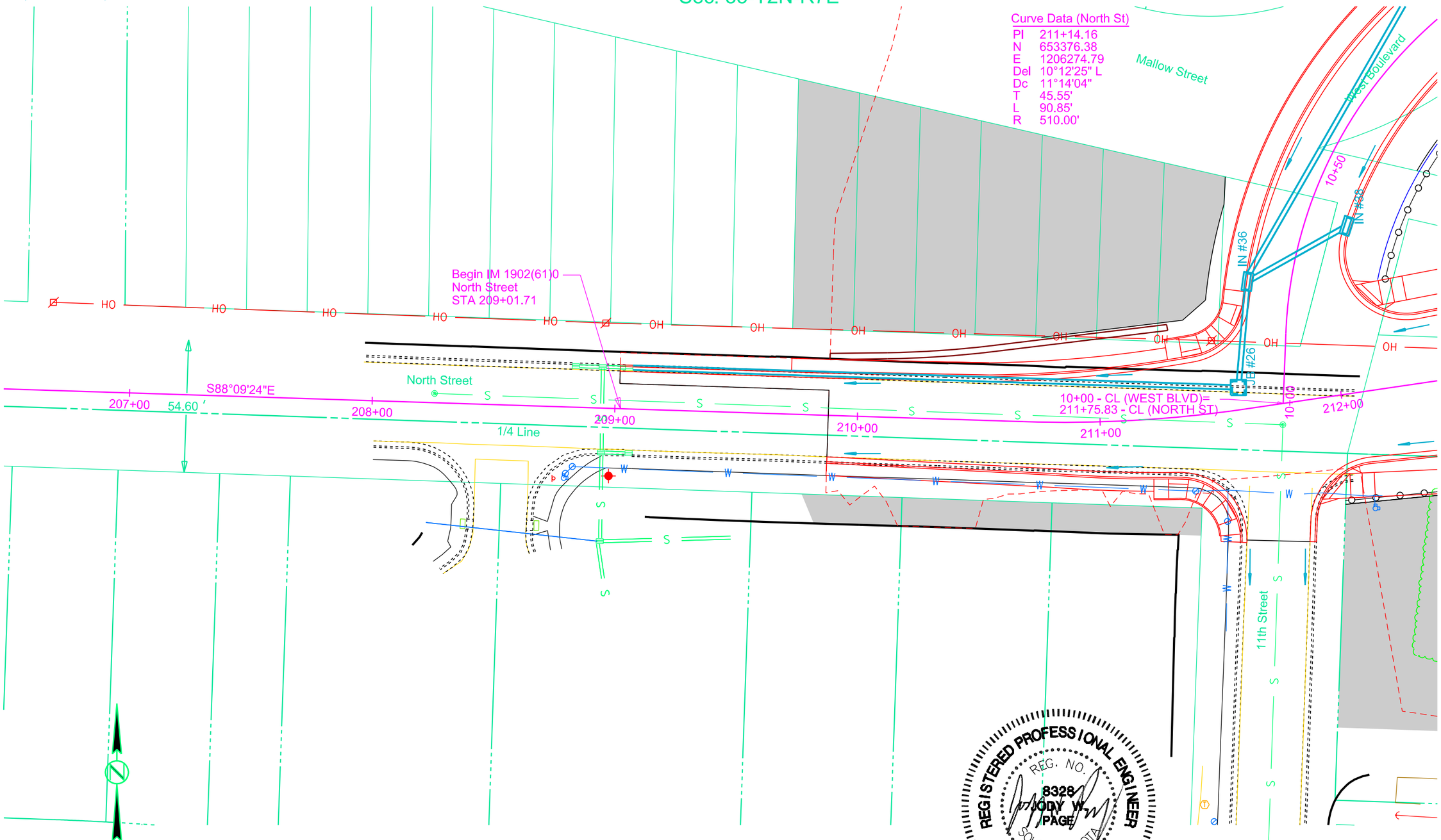

REGISTERED PROFESSIONAL ENGINEER
REG. NO. 8328
JODY W. PAGE
SOUTH DAKOTA
1 MAY 2015

209+06.92-17.06' L to 211+56.00-10' L
Install 18" - 248' RCP (Between Existing inlet and JB #26)
211+59.16-11.61' L to 211+67.88-48.64' L
Install 18" - 40' RCP (Between IN #36 and JB # 26)

Install 5'X5' Junction Box
with Type A9 Manhole Frame & Lid
211+58.53-9.17' L (JB #26)

Sec. 35-T2N-R7E

HDR

Plot Scale - 1:40
Plotted From - rlipgett
File - ...\Section_B\Grading\207north.dgn

STATE OF SOUTH DAKOTA	PROJECT	SHEET	TOTAL SHEETS
	IM 1902(61)0	B101	B253

Plotting Date: 06-17-2015 Rev. 06/18/2015 AJF

North Street Profile

FOR BIDDING PURPOSES ONLY

North Street: 209+02 TO 216+32 (PHASE 1)

EXC	42,767	EMB	811	
SEL TOP EXC	5,304	+25%	203	1,014
		SEL TOPPING	5,304	
		+25%	1,326	6,630
OUT OF BALANCE		WASTE	40,427	40,427
TOTAL	*48,071*			*48,071*
HAUL	-	CuYdSta		

North Street: 216+32 TO 224+72 (PHASE 3&4)

EXC	6,171	EMB	110	
SEL TOP EXC	7,927	+25%	27	137
		SEL TOPPING	7,927	
		+25%	1,982	9,909
OUT OF BALANCE		WASTE	4,052	4,052
TOTAL	*14,098*			*14,098*
HAUL	-	CuYdSta		

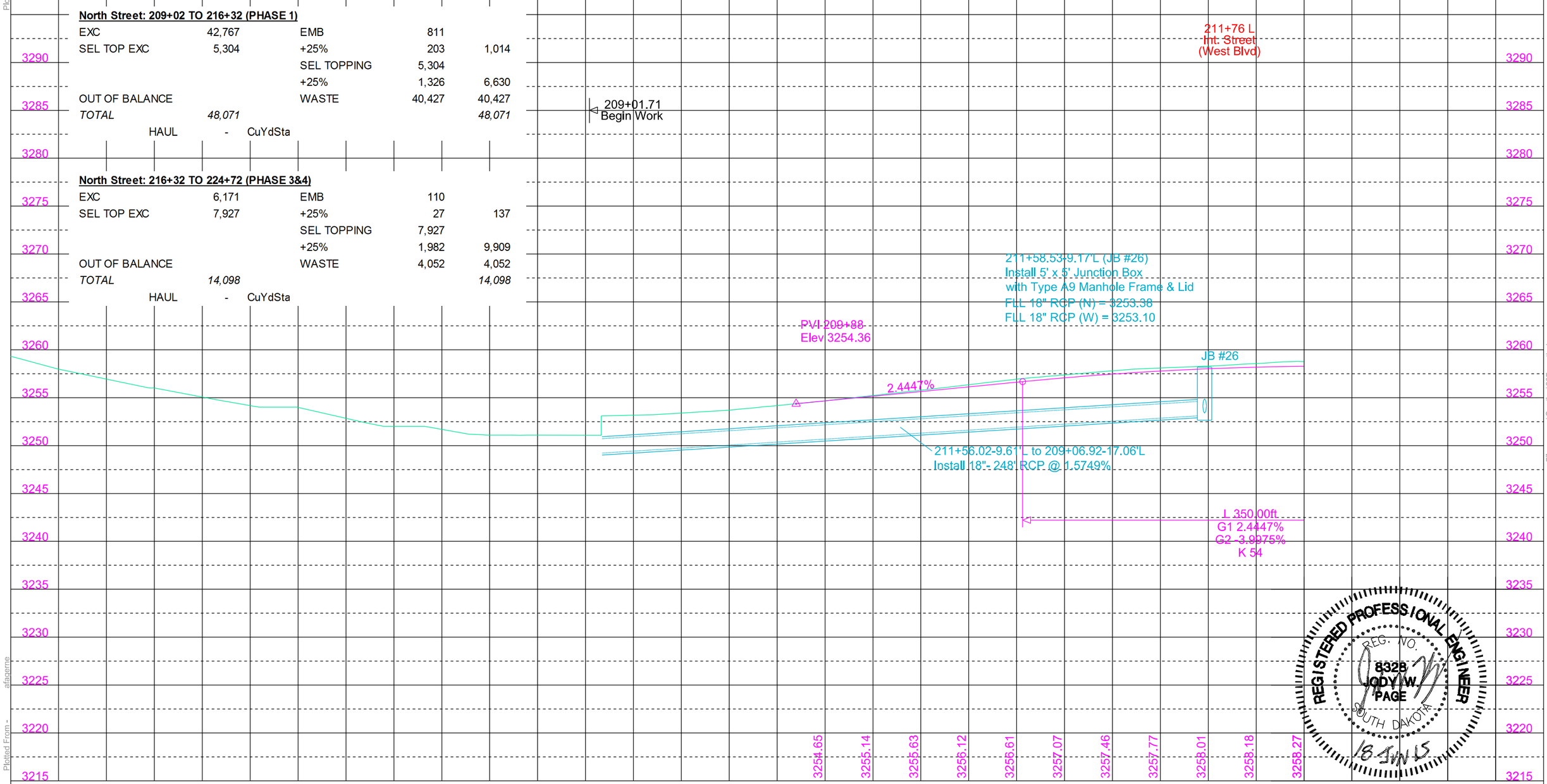

REGISTERED PROFESSIONAL ENGINEER
REG. NO. 8328
JODY W. PAGE
SOUTH DAKOTA
18 JUN 15

Plot Scale - 1:40
Plotted From - afaceme
File - ...\Grading\20\vnorth.dgn

STATE OF SOUTH DAKOTA	PROJECT	SHEET	TOTAL SHEETS
	IM 1902(61)0	B102	B253

Plotting Date: 05-05-2015

North Street Plan

FOR BIDDING PURPOSES ONLY

Sec. 35-T2N-R7E

Install 2' x 3' Type B Drop Inlet with 6" Concrete Collar and Type B Frame & Grate at the following locations:
214+40.04 - 43.84' R (IN #108)
214+84.92 - 39.84' L (IN #109)

Install 3' x 4' Type B Drop Inlet with 6" Concrete Collar and Type B Frame & Grate
216+62.48 - 43.64' L (IN #110)

Install Special 3' X 6.5' DBL Type B Drop Inlet with 6" Concrete Collar and Special Frame and Grate
216+22.57 - 46.12' R (IN #40)

214+41.54 - 43.79' R to 215+10.93 - 41.40' R
Install 18" - 70' RCP (Between IN #108 and TEE #11)
214+84.92 - 39.84' L to 215+18.45 - 39.30' L
Install 18" - 34' RCP (Between IN #109 and TEE #3)
215+20.60 - 41.51' R to 216+19.31 - 45.98' R
Install 24" - 100' RCP (Between IN #40 and TEE #10)
216+23.24 - 44.61' R to 216+61.81 - 42.13' L
Install 18" - 96' RCP (Between IN #110 and IN #40)

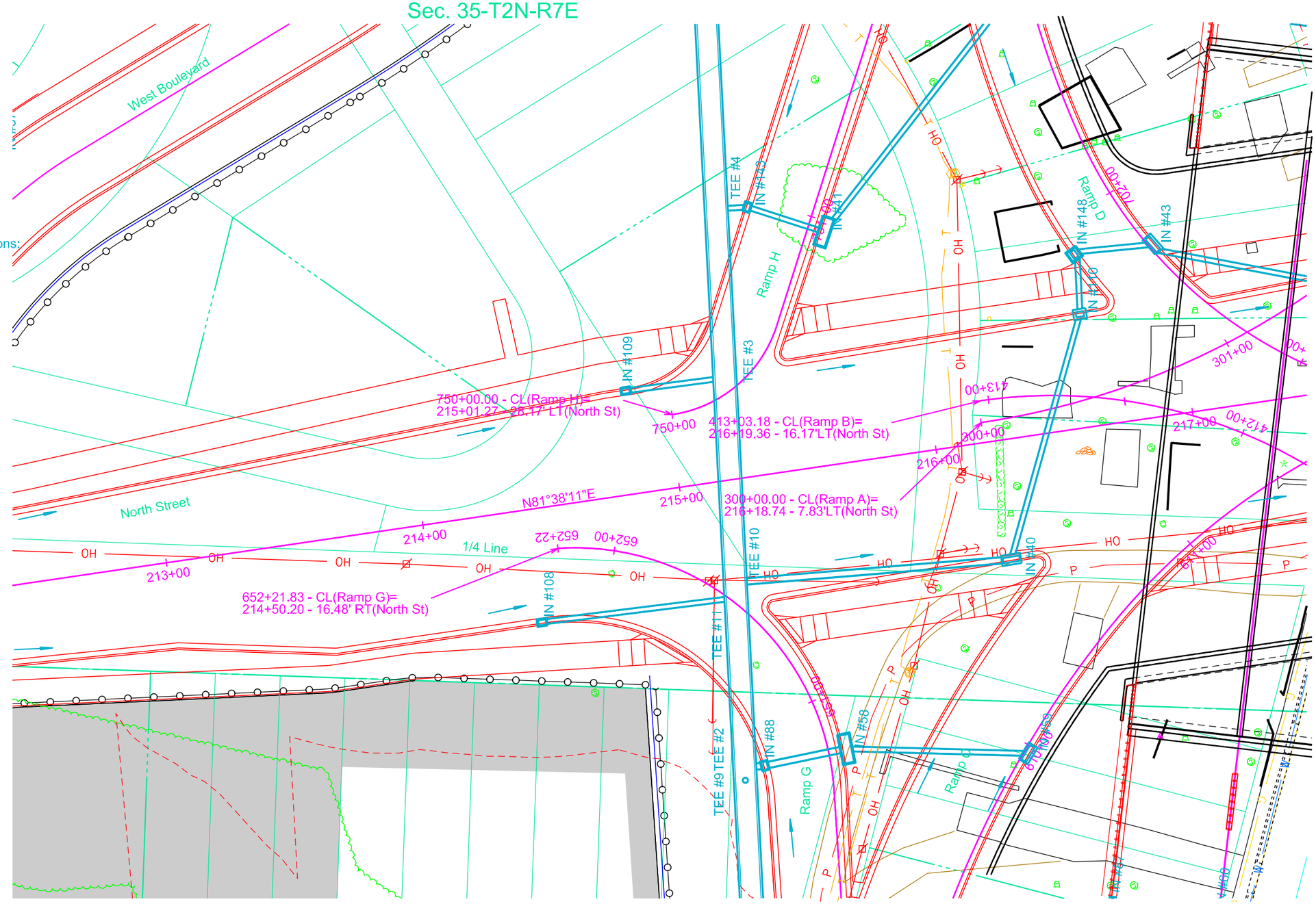

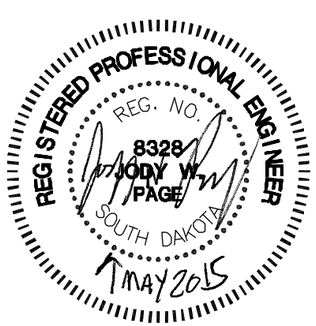

Sec. 35-T2N-R7E

HDR

Plot Scale - 1:40
Plotted From - rfiggett
File - ...\Section_B\Grading\212north.dgn

STATE OF SOUTH DAKOTA	PROJECT	SHEET	TOTAL SHEETS
	IM 1902(61)0	B103	B253

Plotting Date: 05-05-2015

North Street Profile

FOR BIDDING PURPOSES ONLY

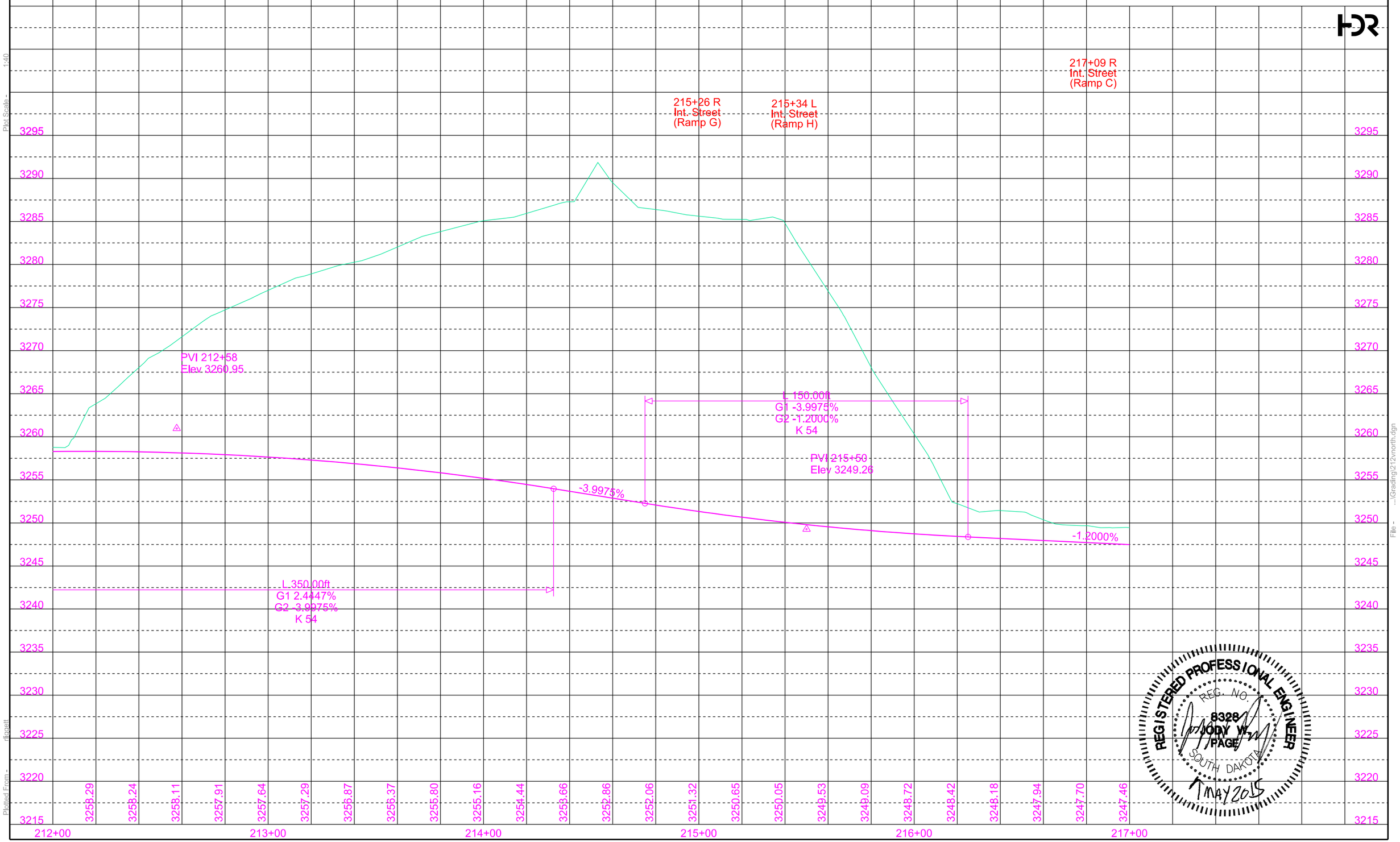

REGISTERED PROFESSIONAL ENGINEER
REG. NO. 8328
JODY W. PAGE
SOUTH DAKOTA
7 MAY 2015

Plot Scale - 1:40

Plotted From - dlcgett

File - ...\Grading\212north.dgn

STATE OF SOUTH DAKOTA	PROJECT	SHEET	TOTAL SHEETS
	IM 1902(61)0	B104	B253

Plotting Date: 06-05-2015 Rev. 06/05/2015 AJF

North Street Plan

FOR BIDDING PURPOSES ONLY

See Utility Notes for work in vicinity of Montana Dakota Utilities High Pressure Gas Line

Install Special Type 'C' Retaining Wall at the folowing location:
219+48.49-85.59' LT to 223+39.04-36.82' LT
(See Section E)

Install 2' x 3' Type B Drop Inlet with 6" Concrete Collar and Type B Frame & Grate at the following locations:
220+52.53 - 10.49' R (IN #54)
221+69.80 - 11.40' R (IN #149)

Install 2' x 3' Type B Drop Inlet with 6" Concrete Collar and Type B Frame & Grate at the following locations:
217+54.96 -43.73' L (IN #44)

Install Special 3' x 6.5' Type B Drop Inlet with Special Type B Frame & Grate at the following locations:
217+53.36 - 46.00' R (IN #46)
218+73.58 - 46.11' R (IN #47)
219+99.43 - 54.64' L (IN #145)

Install 3' x 4' Type B Drop Inlet with 6" Concrete Collar and Type B Frame & Grate
221+68.77 - 8.05' L (IN #80)

Install 3' x 5'-6"' Type B Drop Inlet with 6" Concrete Collar and Type B Frame & Grate at the following locations:
219+15.32 - 10.50' R (IN #107)
219+18.16 - 43.60' L (IN #53)

218+52.96 - 67.40' L to 219+15.62 - 44.32' L
Install 24" - 74' RCP (Between IN #140 and IN #53)
218+81.16 - 55.58' R to 219+04.95 - 82.73' R
Install 18" - 34' RCP (Between IN #55 and IN #57)
218+74.73 - 47.58' R to 218+78.73 - 52.59' R
Install 24" - 6' RCP (Between IN #47 and IN #55)
219+07.54 - 79.16' R to 219+15.18 - 12.00' R
Install 36" - 68' RCP (Between IN #107 and IN #57)
219+15.41 - 9.00' R to 219+18.09 - 42.09' L
Install 30" - 52' RCP (Between IN #53 and IN #107)
219+20.69 - 43.72' L to 219+96.43 - 53.97' L
Install 18" - 84' RCP (Between IN #145 and IN #53)
220+54.06 - 10.10' R to 221+66.74 - 7.96' L
Install 18" - 114' RCP (Between IN #54 and IN #80)
221+68.77 - 8.05' L to 222+22.06 - 36.17' R
Install 18" - 68' RCP (Between IN #80 and IN #81)
221+68.85 - 6.56' L to 221+69.74 - 10.40' R
Install 18" - 18' RCP (Between IN #149 and IN #80)

Install Cable Handrail:
219+74-56'L to 223+52-38' L (362 Ft)

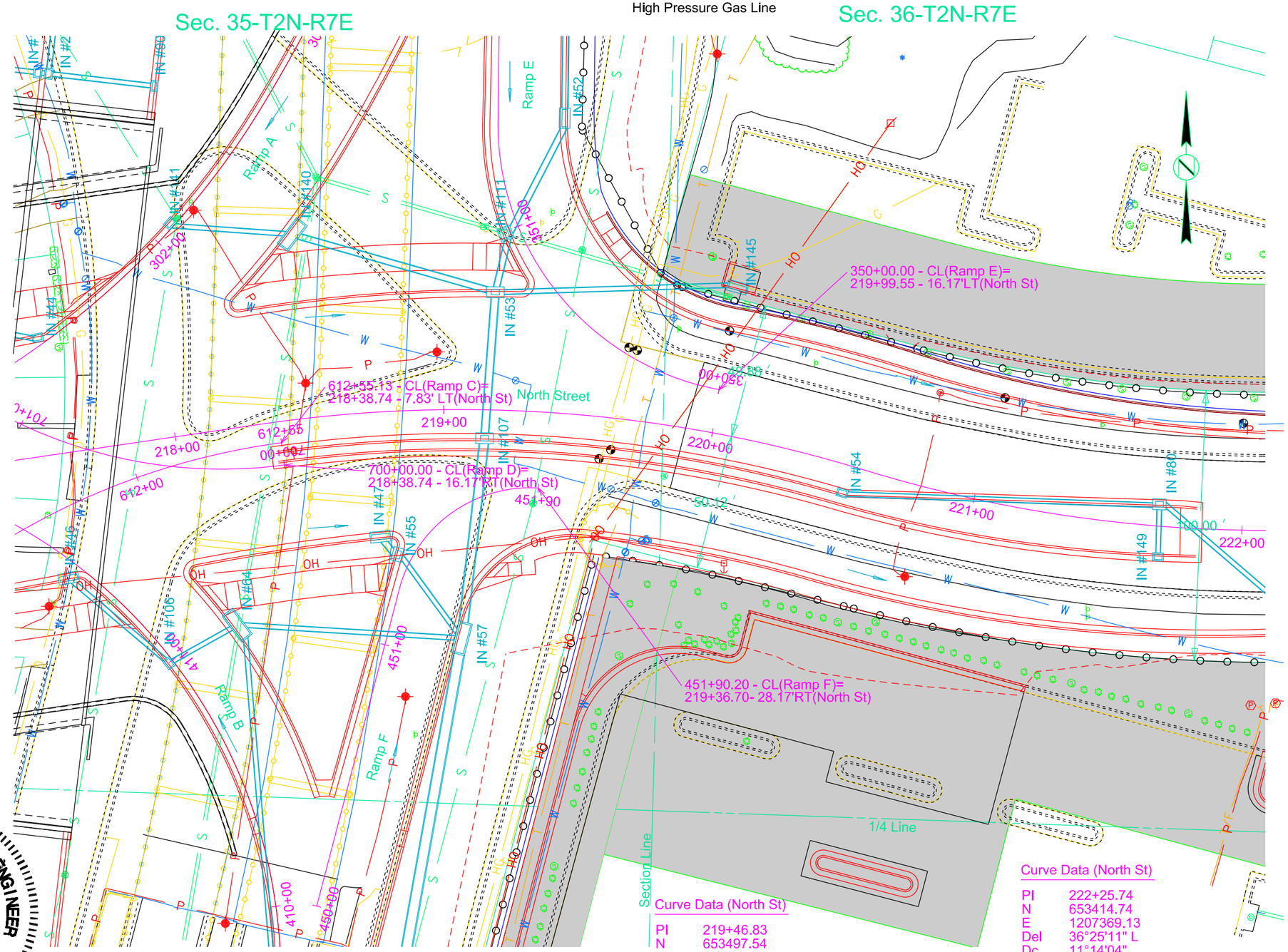

Curve Data (North St)

PI	219+46.83
N	653497.54
E	1207098.84
Del	25°23'43" R
Dc	11°14'04"
T	114.91'
L	226.05'
R	510.00'

Curve Data (North St)

PI	222+25.74
N	653414.74
E	1207369.13
Del	36°25'11" L
Dc	11°14'04"
T	167.78'
L	324.18'
R	510.00'

REGISTERED PROFESSIONAL ENGINEER
REG. NO. 8326
JODY W. PAGE
SOUTH DAKOTA
5 JUN 15

HDR

Plot Scale - 1:40
Plotted From - afaqerne
File - ...\Section_B\Grading\217\north.dgn

STATE OF SOUTH DAKOTA	PROJECT	SHEET	TOTAL SHEETS
	IM 1902(61)0	B105	B253

Plotting Date: 06-17-2015 Rev. 06/18/2015 AJF

North Street Profile

FOR BIDDING PURPOSES ONLY

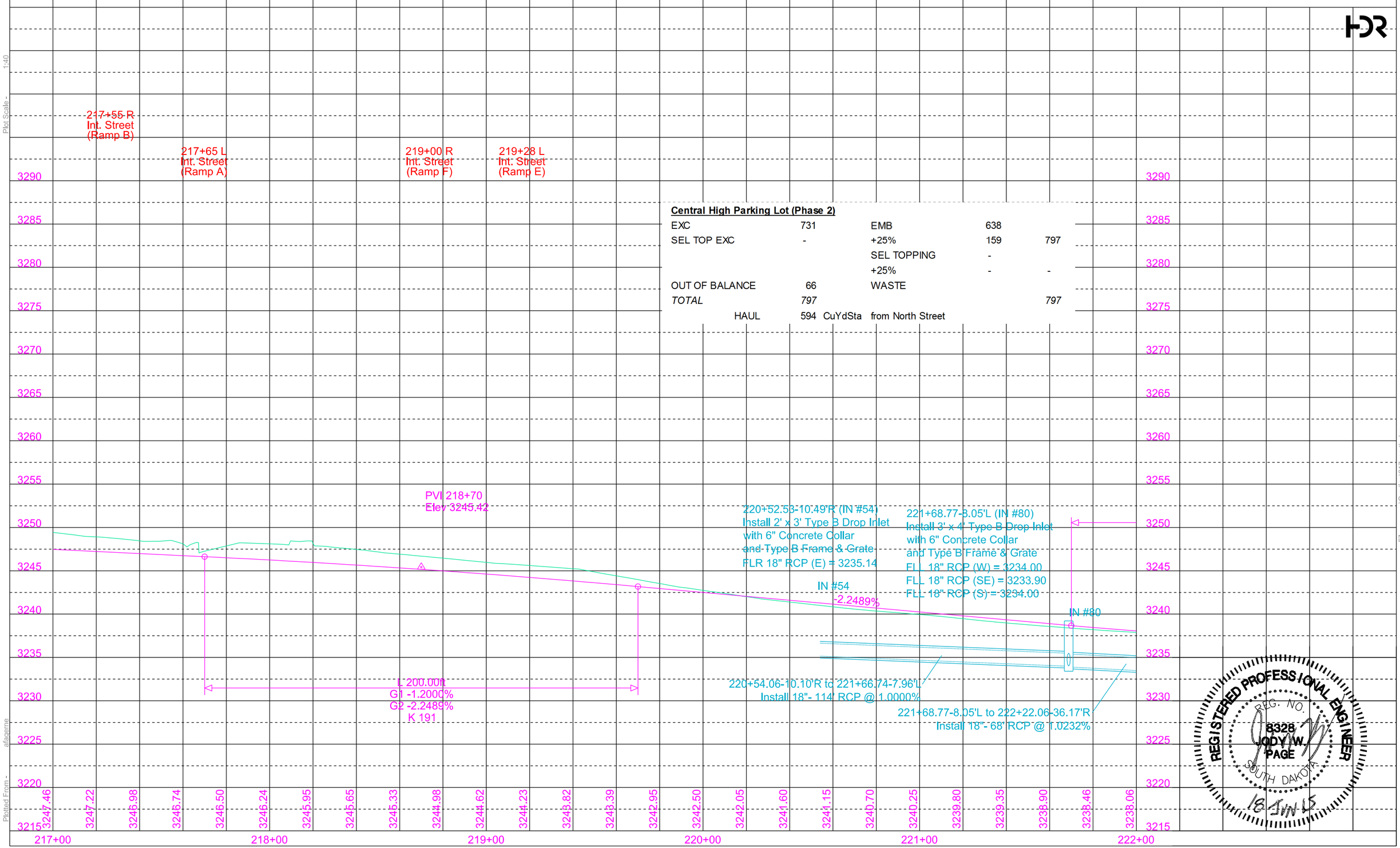

Central High Parking Lot (Phase 2)

EXC	731		EMB	638	
SEL TOP EXC	-		+25%	159	797
			SEL TOPPING	-	
			+25%	-	-
OUT OF BALANCE	66		WASTE		
TOTAL	*797*				797
HAUL	594	CuYdSta	from North Street		

REGISTERED PROFESSIONAL ENGINEER
REG. NO. 8328
JODY W. PAGE
SOUTH DAKOTA
18 JUN 15

Plot Scale - 1:40
Plotted From - afagerne
File - ...\Grading\217\north.dgn

STATE OF SOUTH DAKOTA	PROJECT	SHEET	TOTAL SHEETS
	IM 1902(61)0	B106	B253

Plotting Date: 06-05-2015 Rev. 06/05/2015 AJF

FOR BIDDING PURPOSES ONLY

North Street Plan

Sec. 36-T2N-R7E

Install 4' x 11' Type S Drop Inlet with Type S Drop Inlet Lid at the following locations:
223+41.82 - 31.96' L (IN #84)
223+51.57 - 34.36' R (IN #83)
223+40.33 - 34.86' R (IN #82)

Install 3' x 4' Type B Drop Inlet with 6" Concrete Collar and Type B Frame & Grate
222+23.55 - 37.61' R (IN #81)

Install 18" Concrete Flared End Section
223+74.15 - 43.30' L (FE #10)

222+25.40 - 37.34' R to 223+35.15 - 34.37' R
Install 18" - 118' RCP (Between IN #81 and IN #82)
223+40.37 - 32.86' R to 223+41.77 - 29.96' L
Install 24" - 64' RCP (Between IN #84 and IN #82)
223+41.82 - 31.96' L to 223+74.15 - 43.30' L
Install 18" - 28' RCP (Between Flared End and IN #84)

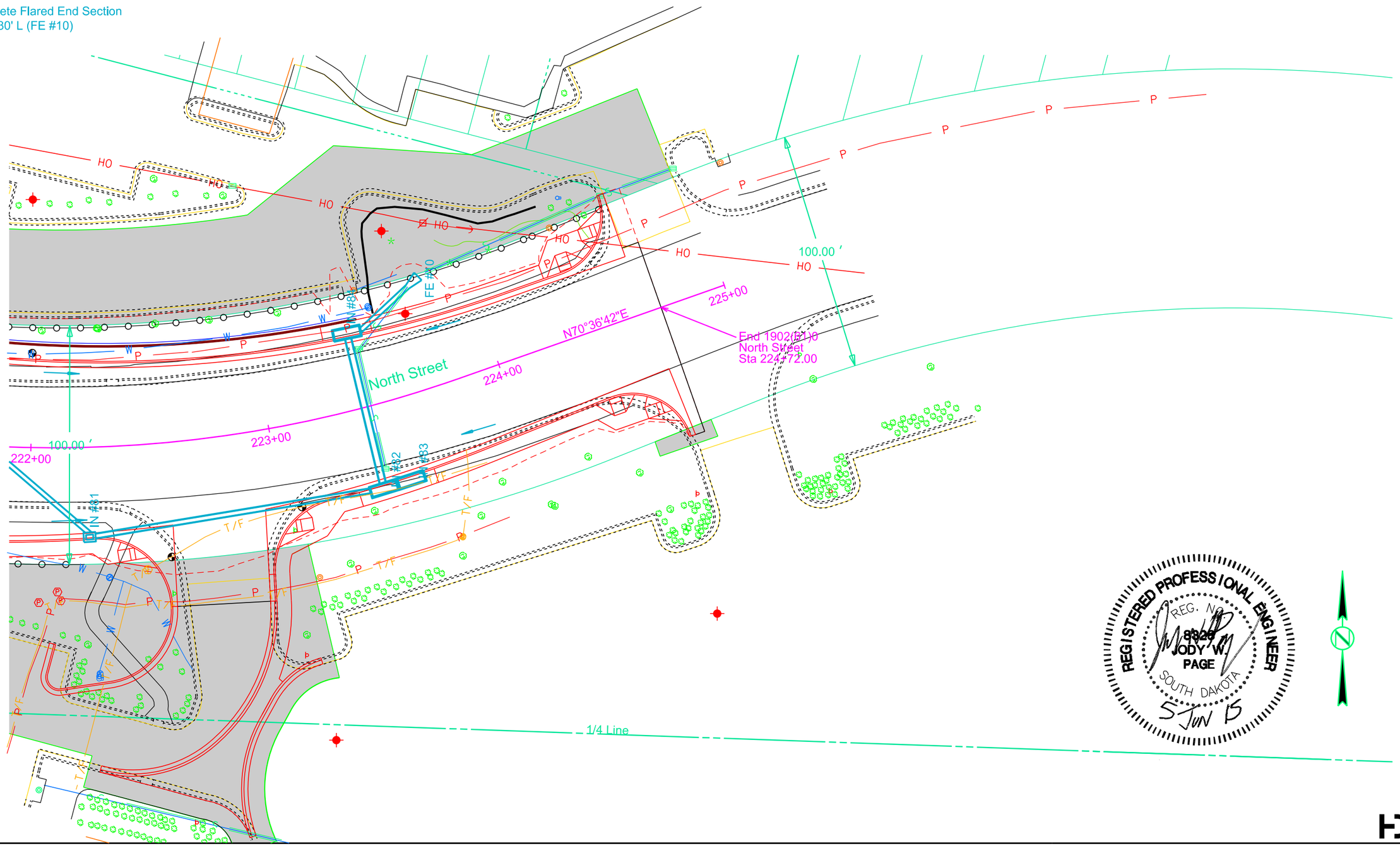

Plot Scale - 1:40

Plotted From - rfiggett

File - ...\Section_B\Grading\222north.dgn

STATE OF SOUTH DAKOTA	PROJECT	SHEET	TOTAL SHEETS
	IM 1902(61)0	B107	B253

Plotting Date: 05-05-2015

North Street Profile

FOR BIDDING PURPOSES ONLY

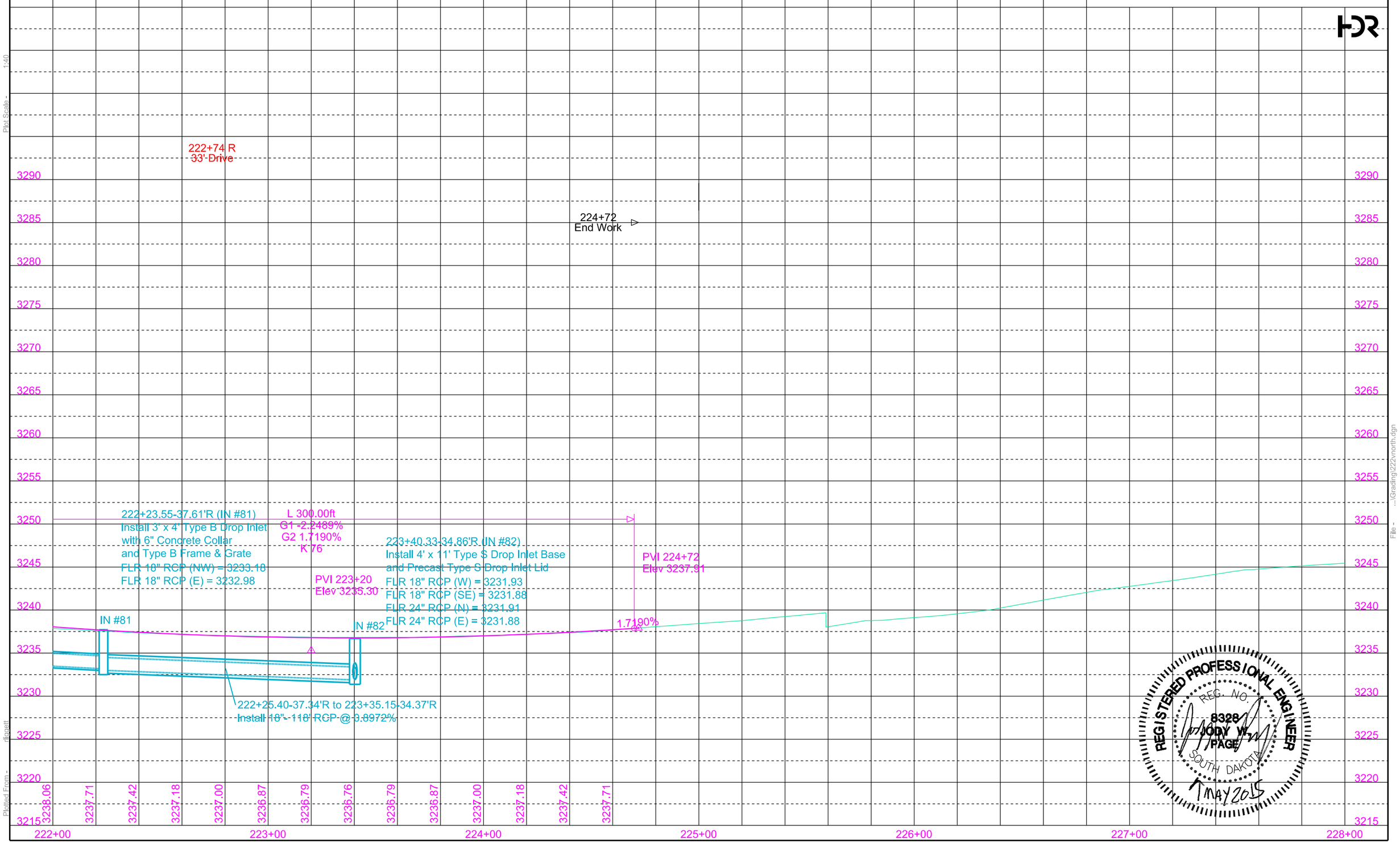

REGISTERED PROFESSIONAL ENGINEER
REG. NO. 8328
JODY W. PAGE
SOUTH DAKOTA
1 MAY 2015

Plot Scale - 1:40

Plotted From - dlippett

File - ...\Grading\222vnorth.dgn

STATE OF SOUTH DAKOTA	PROJECT	SHEET	TOTAL SHEETS
	IM 1902(61)0	B108	B253

Plotting Date: 05-05-2015

FOR BIDDING PURPOSES ONLY

West Boulevard Plan

Install 2' x 3' Type B Drop Inlet with 6" Concrete Collar and Type B Frame & Grate at the following locations:
11+83.65 - 17.67' L (IN #37)
15+46.49 - 17.67' R (IN #34)

Install Special 3' x 6.5' DBL Type B Drop Inlet with 6" Concrete Collar and Type B Frame & Grate at the following locations:
10+47.79 - 17.67' L (IN #36)
10+79.48 - 17.00' R (IN #38)
15+46.49 - 17.67' L (IN #35)

Install Soil Nail Wall with Reinforced Slope:
10+80.00-36.67'L to 13+40.00-28.67'L

Sec. 35-T2N-R7E

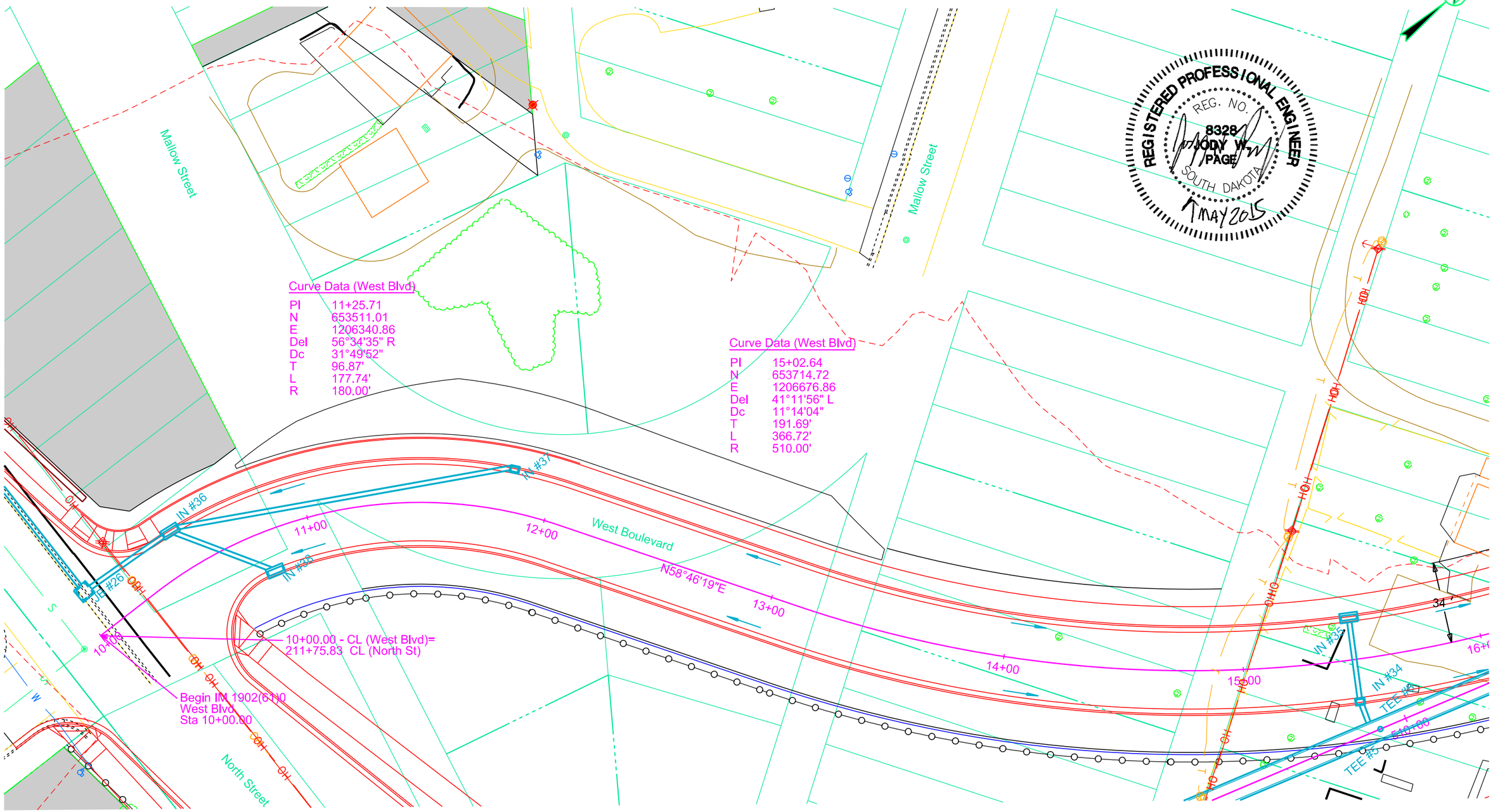

Curve Data (West Blvd)

PI	11+25.71
N	653511.01
E	1206340.86
Del	56°34'35" R
Dc	31°49'52"
T	96.87'
L	177.74'
R	180.00'

Curve Data (West Blvd)

PI	15+02.64
N	653714.72
E	1206676.86
Del	41°11'56" L
Dc	11°14'04"
T	191.69'
L	366.72'
R	510.00'

10+48.84 - 16.17' L to 10+77.70 - 15.51' R
Install 18" - 44' RCP (Between IN #38 and IN #36)
10+50.77 - 16.41' L to 11+82.28 - 17.08' L
Install 18" - 142' RCP (Between IN #37 and IN #36)

15+46.49 - 17.67' L to 15+46.49 - 17.67' R
Install 18" - 34' RCP (Between IN #35 and IN #34)
15+46.73 - 18.67' R to 15+48.65 - 26.71' R
Install 18" - 10' RCP (Between IN #34 and TEE #5)

Sec. 35-T2N-R7E

Plot Scale - 1:40
Plotted From - rligsett
File - ...\Section_B\Grading\10west.dgn

West Boulevard Profile

FOR BIDDING PURPOSES ONLY

STATE OF SOUTH DAKOTA	PROJECT	SHEET	TOTAL SHEETS
	IM 1902(61)0	B109	B253

Plotting Date: 06-17-2015 Rev. 06/18/2015 AJF

HDR

Plot Scale - 1:40

West Boulevard W: 10+24 TO 26+75 (PHASE 1)

EXC	97,911	EMB	2,205	
SEL TOP EXC	9,037	+25%	550	2,755
		SEL TOPPING	9,037	
		+25%	2,258	11,295
OUT OF BALANCE		WASTE	92,898	92,898
TOTAL	*106,948*			*106,948*

HAUL - CuYdSta

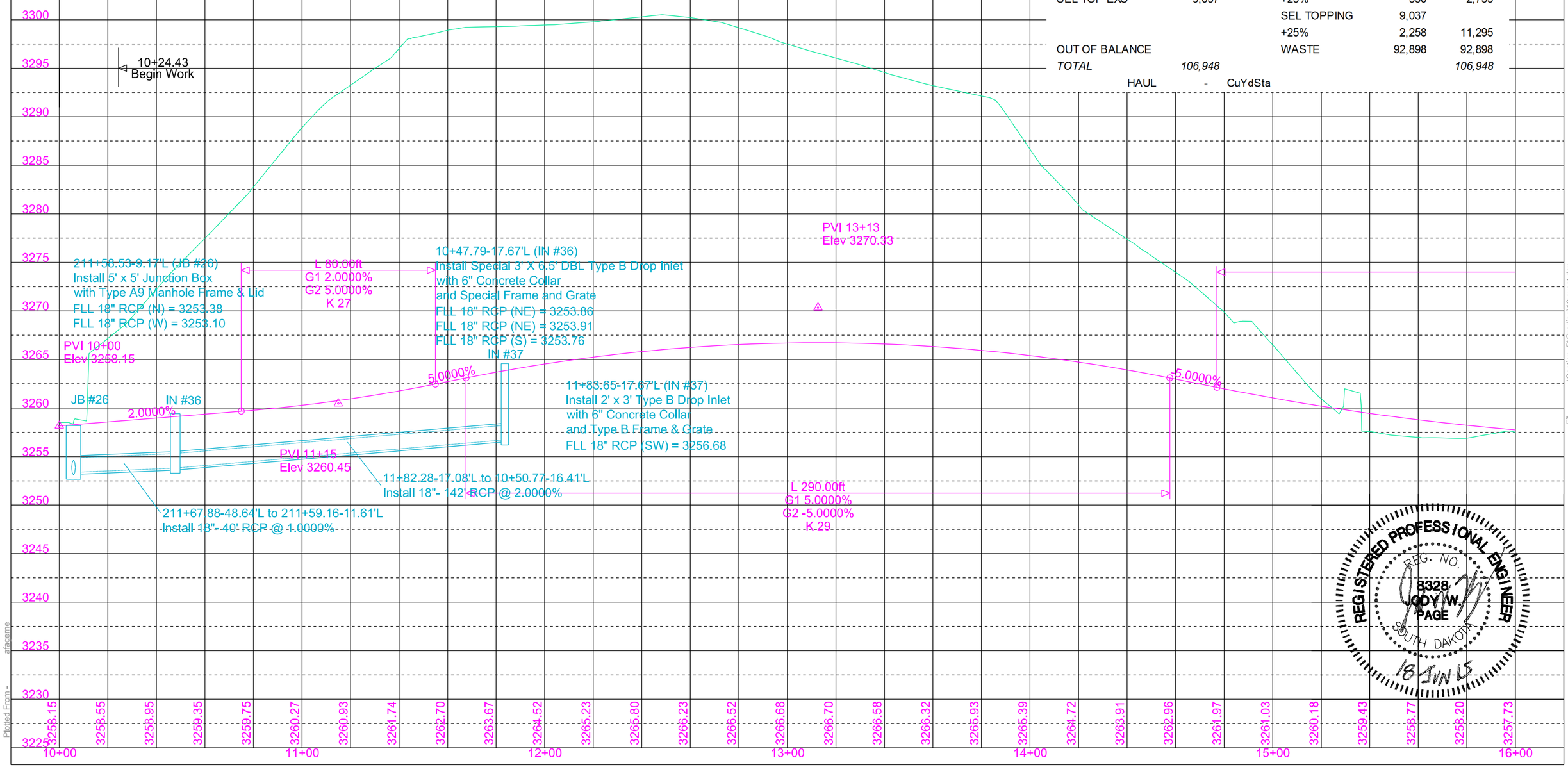

REGISTERED PROFESSIONAL ENGINEER
REG. NO. 8328
COPY W. PAGE
SOUTH DAKOTA
18 JUN 15

Plotted From - efaqerne

File - ...\Section_B\Grading\10vwest.dgn

STATE OF SOUTH DAKOTA	PROJECT	SHEET	TOTAL SHEETS
	IM 1902(61)0	B110	B253

Plotting Date: 05-05-2015

FOR BIDDING PURPOSES ONLY

West Boulevard Plan

Refurbish Single Mailbox at the following Locations:
17+28.14-60.63' L
17+79.67-100.52' L
18+22.35-149.69' L

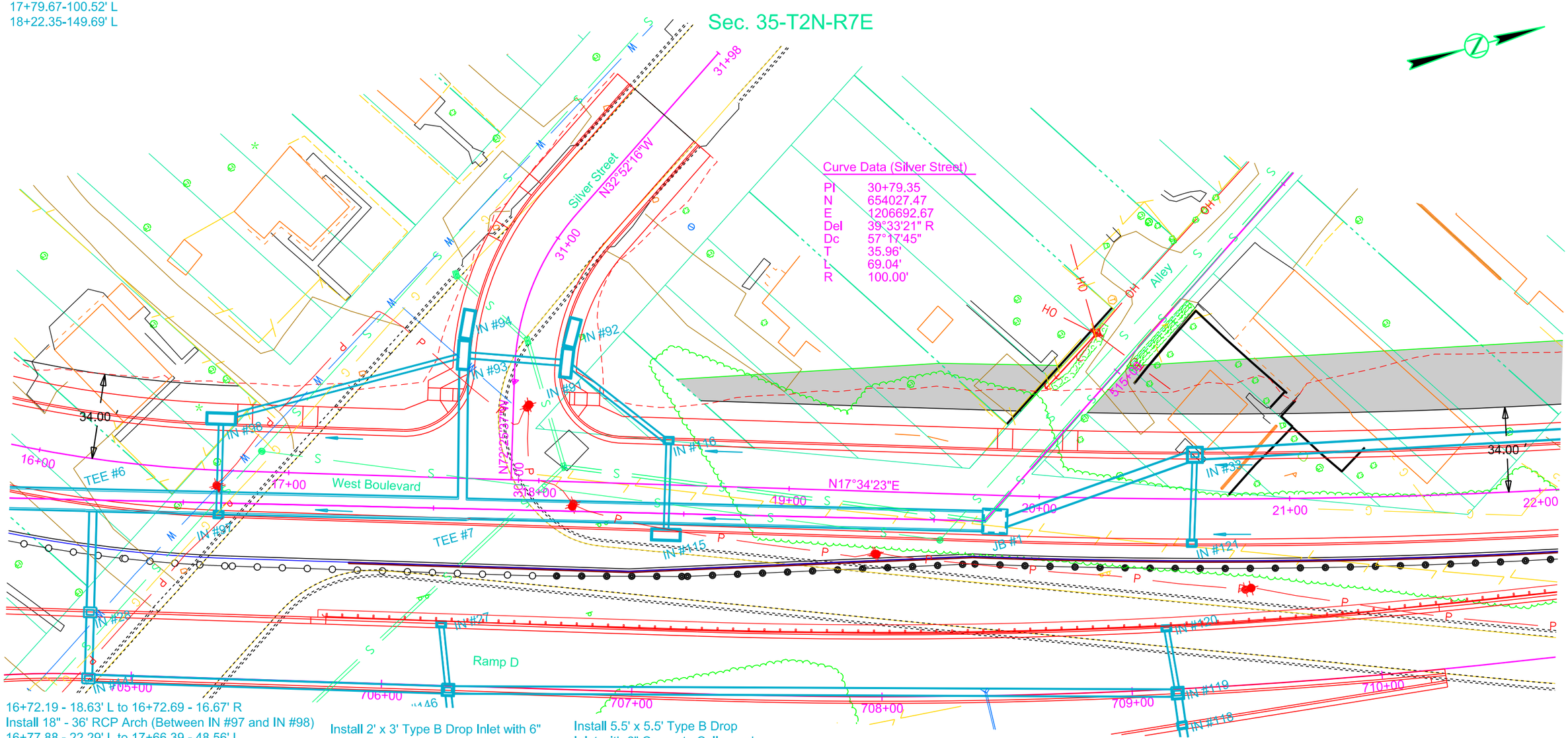

16+72.19 - 18.63' L to 16+72.69 - 16.67' R
Install 18" - 36' RCP Arch (Between IN #97 and IN #98)
16+77.88 - 22.29' L to 17+66.39 - 48.56' L
Install 18" - 94' RCP (Between IN #98 and IN #93)
17+68.52 - 44.32' L to 17+69.68 - 7.69' R
Install 36" - 52' RCP (Between IN #93 and Tee #7)
17+70.41 - 49.07' L to 18+07.62 - 47.37' L
Install 24" - 38' RCP (Between IN #91 and IN #93)
18+11.52 - 45.89' L to 18+51.34 - 16.67' L
Install 18" - 48' RCP (Between IN #116 and IN #91)
18+51.34 - 16.67' L to 18+51.41 - 17.96' R
Install 18" - 36' RCP Arch (Between IN #115 and IN #116)
19+86.97 - 10.44' R to 20+59.35 - 16.65' L
Install 42" - 78' RCP (Between IN #33 and JB #1)
20+61.00 - 16.71' R to 20+62.02 - 14.88' L
Install 18" - 32' RCP (Between IN #121 and IN #33)
20+64.88 - 17.79' L to 23+54.32 - 17.74' L
Install 42" - 288' RCP (Between IN #32 and IN #33)

Install 2' x 3' Type B Drop Inlet with 6" Concrete Collar and Type B Frame & Grate at the following locations:
16+72.71 - 17.67' R (IN #97)
18+51.34 - 17.67' L (IN #116)
20+60.97 - 17.71' R (IN #121)

Install 4' x 11' Type S Drop Inlet with Type S Drop Inlet Lid at the following locations:
16+72.16 - 20.63' L (IN #98)
17+68.41 - 49.16' L (IN #93)
17+69.57 - 61.50' L (IN #94)
18+51.42 - 19.96' R (IN #115)
18+09.62 - 47.28' L (IN #91)
18+11.21 - 59.88' L (IN #92)

Install 5.5' x 5.5' Type B Drop Inlet with 6" Concrete Collar and Type B Frame & Grate
20+62.11 - 17.63' L (IN #33)

Sec. 35-T2N-R7E

REGISTERED PROFESSIONAL ENGINEER
REG. NO. 8328
JODY W. PAGE
SOUTH DAKOTA
7 MAY 2015

HDR

Plot Scale - 1:40
Plotted From - rfiggett
File - ...\Section_B\Grading\16west.dgn

STATE OF SOUTH DAKOTA	PROJECT	SHEET	TOTAL SHEETS
	IM 1902(61)0	B111	B253

Plotting Date: 05-05-2015

West Boulevard Profile

FOR BIDDING PURPOSES ONLY

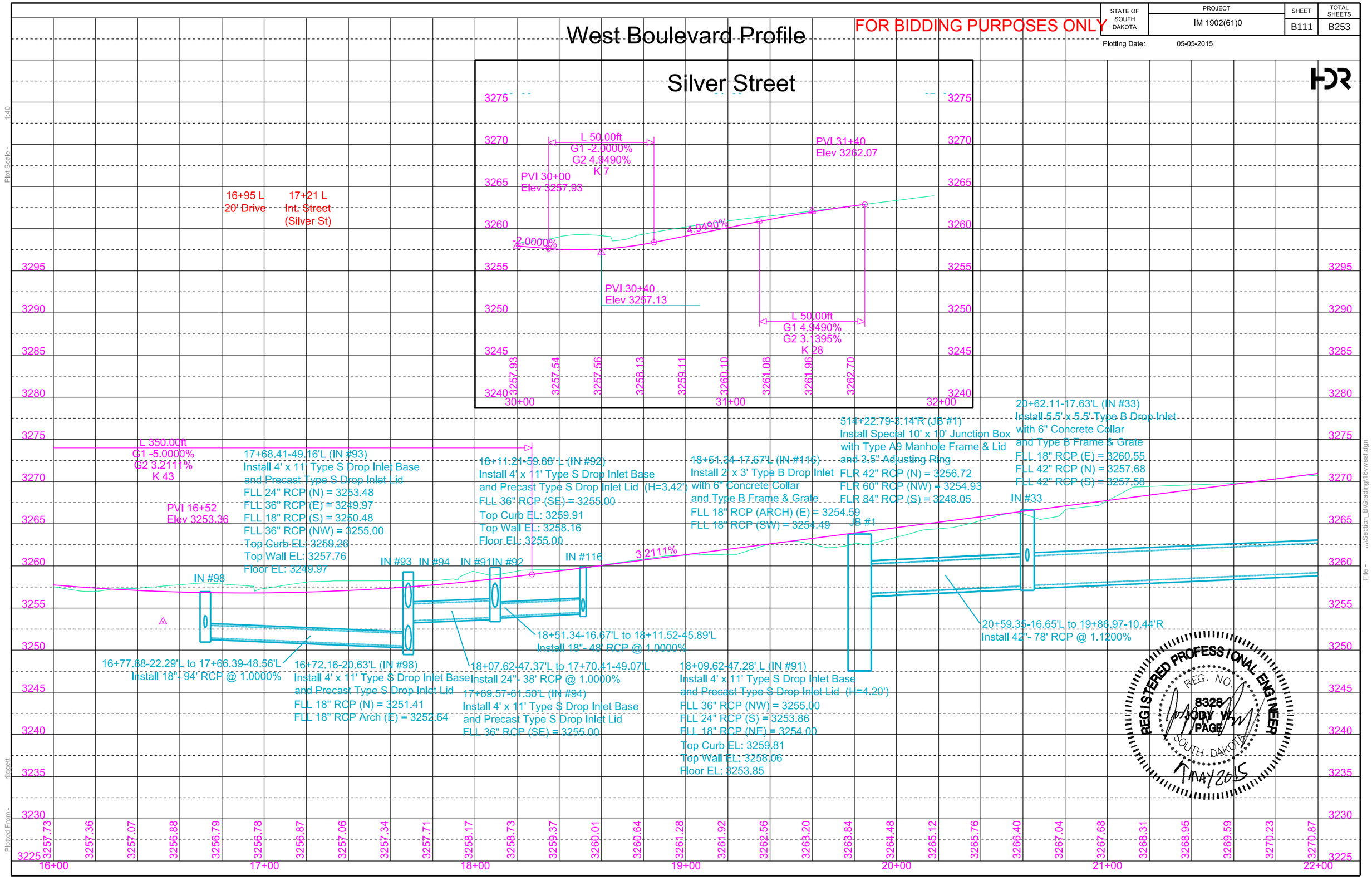

Plot Scale - 1:40

Plotted From - rlggett

File - ...\Section_B\Grading\16wwest.dgn

STATE OF SOUTH DAKOTA	PROJECT	SHEET	TOTAL SHEETS
	IM 1902(61)0	B112	B253

Plotting Date: 05-05-2015

West Boulevard Plan

FOR BIDDING PURPOSES ONLY

Sec. 35-T2N-R7E

Curve Data (Boegel Street)

PI	40+74.65
N	654521.48
E	1206832.71
Del	42°22'10" L
Dc	57°17'45"
T	38.76'
L	73.95'
R	100.00'

Curve Data (West Blvd)

PI	23+34.19
N	654523.35
E	1206932.95
Del	15°44'22" L
Dc	02°17'31"
T	345.56'
L	686.78'
R	2500.00'

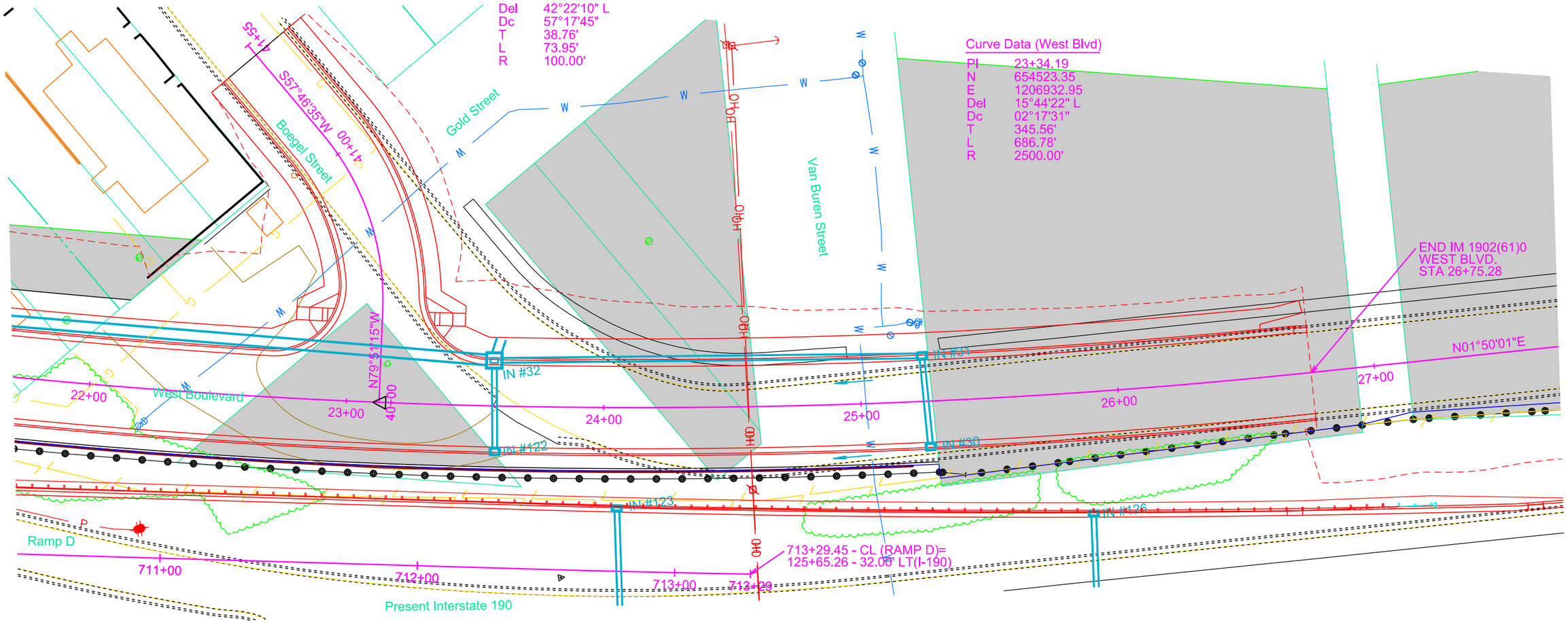

Install Special 5.5' x 5.5' Type B Drop Inlet with 6" Concrete Collar and Type B Frame & Grate
23+57.09 - 17.58' L (IN #32)

Install 2' x 3' Type B Drop Inlet with 6" Concrete Collar and Type B Frame & Grate at the following locations:
23+58.06 - 17.76' R (IN #122)
25+24.37 - 17.60' L (IN #31)
25+26.30 - 17.74' R (IN #30)

20+64.88 - 17.79' L to 23+54.32 - 17.74' L
Install 42" - 288' RCP (Between IN #32 and IN #33)
23+57.17 - 14.83' L to 23+58.03 - 16.76' R
Install 18" - 32' RCP (Between IN #122 and IN #32)
23+57.93 - 20.33' L to 23+59.71 - 26.10' L
Install 36" - 8' RCP (Stub out for City connection and IN #32)
23+59.86 - 17.67' L to 25+22.86 - 17.65' L
Install 18" - 162' RCP (Between IN #31 and IN #32)
25+24.43 - 16.61' L to 25+26.25 - 16.74' R
Install 18" - 34' RCP (Between IN #30 and IN #31)

REGISTERED PROFESSIONAL ENGINEER
REG. NO. 8328
JODY W. PAGE
SOUTH DAKOTA
7 MAY 2015

HDR

Plot Scale - 1:40
Plotted From - rlippett
File - ...\Section_B\Grading\22west.dgn

STATE OF SOUTH DAKOTA	PROJECT	SHEET	TOTAL SHEETS
	IM 1902(61)0	B113	B253

Plotting Date: 05-05-2015

West Boulevard Profile

FOR BIDDING PURPOSES ONLY

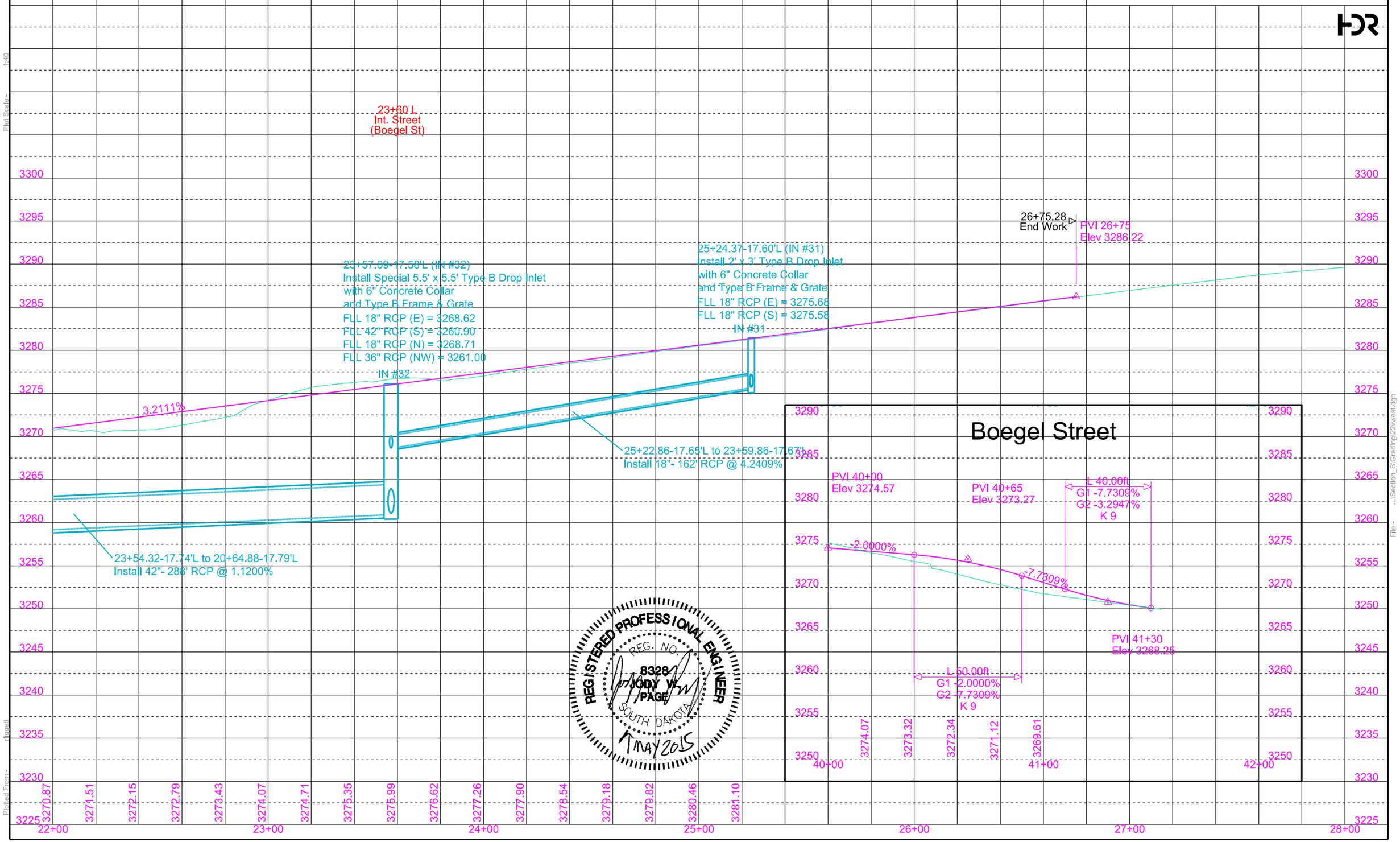

REGISTERED PROFESSIONAL ENGINEER
REG. NO. 8328
JODY W. PAGE
SOUTH DAKOTA
1 MAY 2015

Plot Scale - 1:40

Plotted From - dpagett

File - ...\Section_B\Grading\22\west.dgn

STATE OF SOUTH DAKOTA	PROJECT	SHEET	TOTAL SHEETS
	IM 1902(61)0	B114	B253

Plotting Date: 05-07-2015

West Boulevard North Plan

FOR BIDDING PURPOSES ONLY

Sec. 35-T2N-R7E

Curve Data (West Blvd N)

PI	50+48.91
N	653862.68
E	1207145.48
Del	80°45'33" R
Dc	134°48'49"
T	36.14'
L	59.90'
R	42.50'

Sta. 50+43.39-59.96' to Sta. 57+82.55-22.09' L
Install Guardrail
(See Guardrail Layout Sheets)

See Utility Notes for
work in vicinity of
Montana Dakota Utilities
High Pressure Gas Line

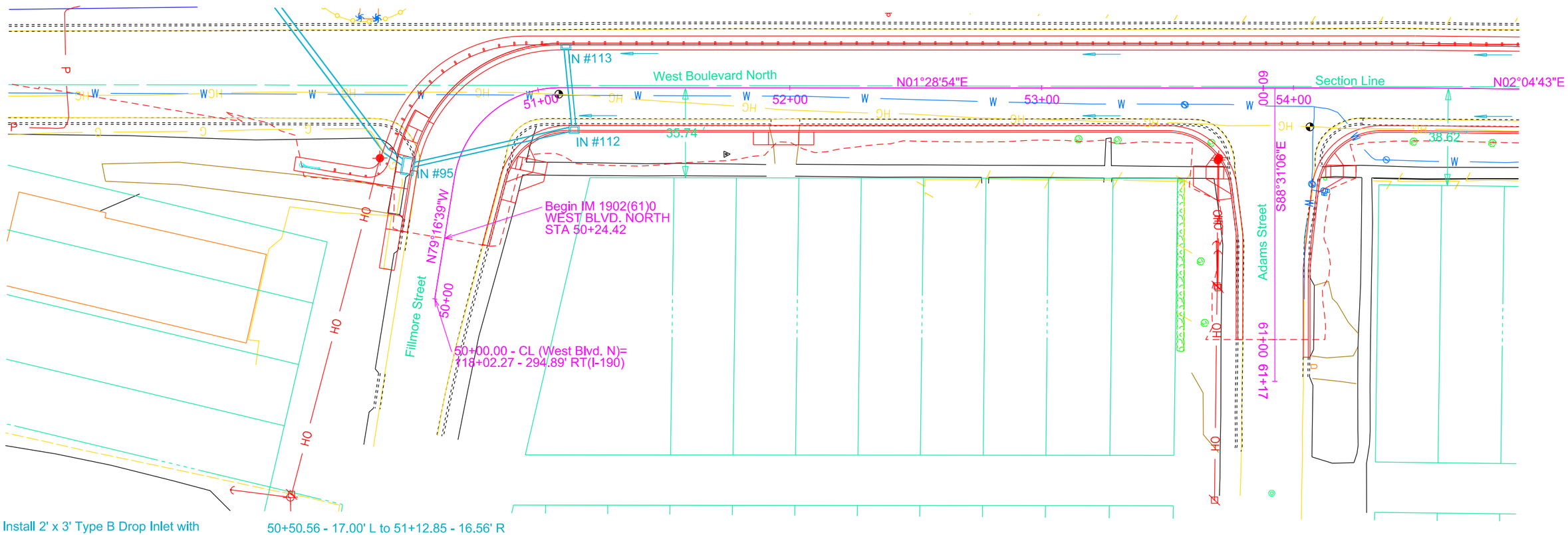

Install 2' x 3' Type B Drop Inlet with
6" Concrete Collar and Type B
Frame & Grate
51+14.35 - 16.67' R (IN #112)

Install 1.5' x 3' Type D Drop Inlet
with 6" Concrete Collar and Type D
Frame & Grate
51+11.07 - 16.42' L (IN #113)

Install 4' x 6' Type S Drop Inlet Base
and Precast Type S Drop Inlet Lid
50+49.95 - 18.98' L (IN #95)

50+50.56 - 17.00' L to 51+12.85 - 16.56' R
Install 18" - 64' RCP (Between IN #112 and IN #95)
51+11.14 - 15.67' L to 51+14.25 - 15.67' R
Install 18" - 32' RCP Arch (Between IN #113 and IN #112)

Sec. 36-T2N-R7E

REGISTERED PROFESSIONAL ENGINEER
REG. NO. 8328
JODY W. PAGE
SOUTH DAKOTA
MAY 2015

HDR

Plot Scale - 1:40
Plotted From - afaqerne
File - ...\Section_B\Grading\50westN.dgn

STATE OF SOUTH DAKOTA	PROJECT	SHEET	TOTAL SHEETS
	IM 1902(61)0	B115	B253

Plotting Date: 06-17-2015 Rev. 06/18/2015 AJF

West Boulevard North Profile

FOR BIDDING PURPOSES ONLY

West Boulevard North: 50+24 TO 58+66 (PHASE 3&4)

EXC	3,368	EMB	63	
SEL TOP EXC	4,069	+25%	15	78
		SEL TOPPING	4,069	
		+25%	1,017	5,086
OUT OF BALANCE		WASTE	2,273	2,273
TOTAL	*7,437*			*7,437*

HAUL - CuYdSta

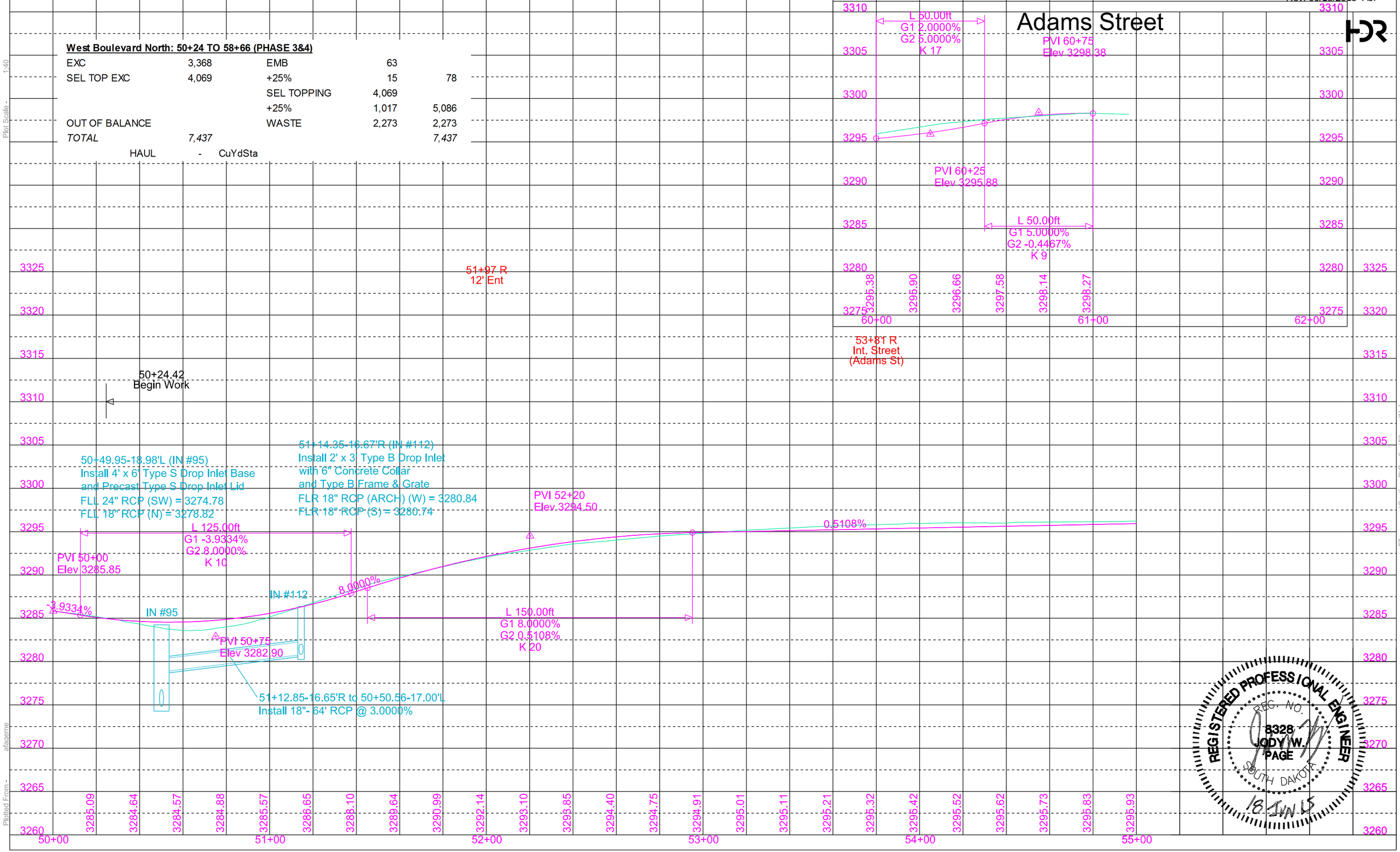

REGISTERED PROFESSIONAL ENGINEER
REG. NO. 8328
JODY W. PAGE
SOUTH DAKOTA
18 JUN 15

Plot Scale - 1:40

Plotted From - afangerne

File - ...\Section_B\Grading\50\westN.dgn

STATE OF SOUTH DAKOTA	PROJECT	SHEET	TOTAL SHEETS
	IM 1902(61)0	B116	B253

Plotting Date: 05-05-2015

West Boulevard North Plan

FOR BIDDING PURPOSES ONLY

Sec. 35-T2N-R7E

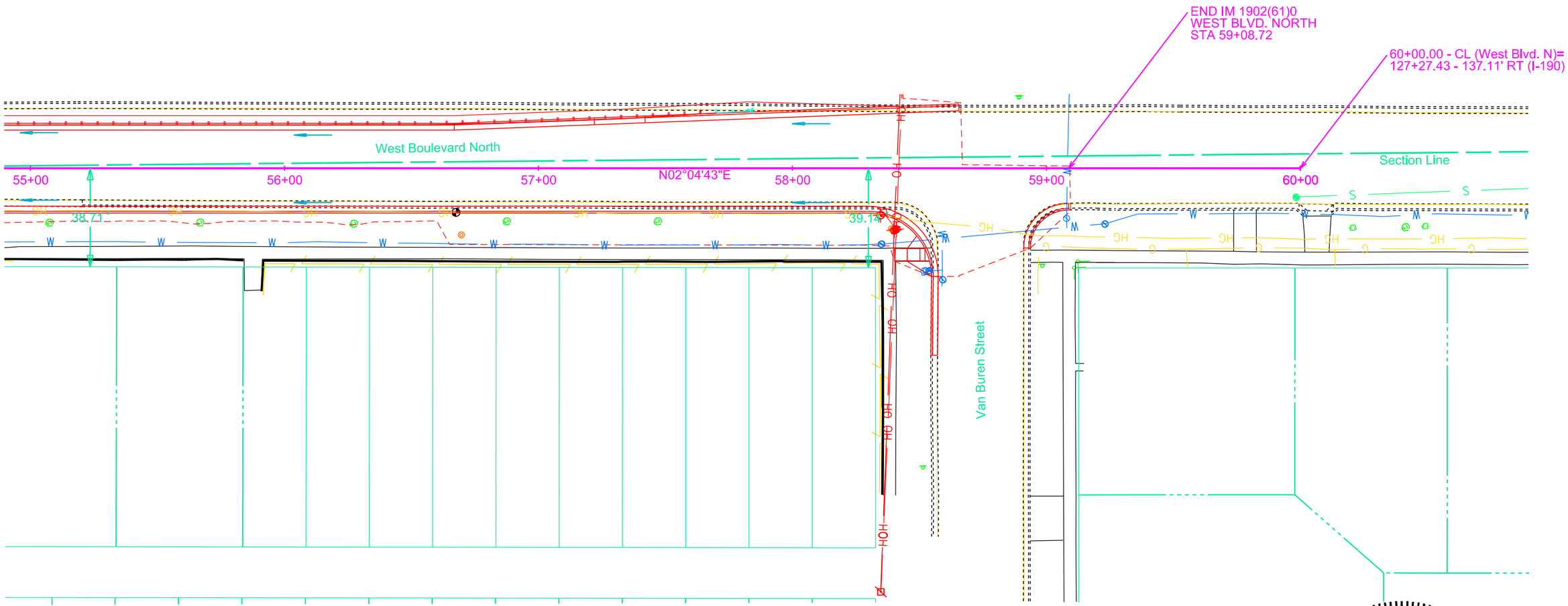

Sec. 36-T2N-R7E

REGISTERED PROFESSIONAL ENGINEER
REG. NO. 8328
JODY W. PAGE
SOUTH DAKOTA
MAY 2015

HDR

Plot Scale - 1:40

Plotted From - rlogett

File - ...\Section_B\Grading\55westN.dgn

STATE OF SOUTH DAKOTA	PROJECT	SHEET	TOTAL SHEETS
	IM 1902(61)0	B117	B253

Plotting Date: 05-05-2015

West Boulevard North Profile

FOR BIDDING PURPOSES ONLY

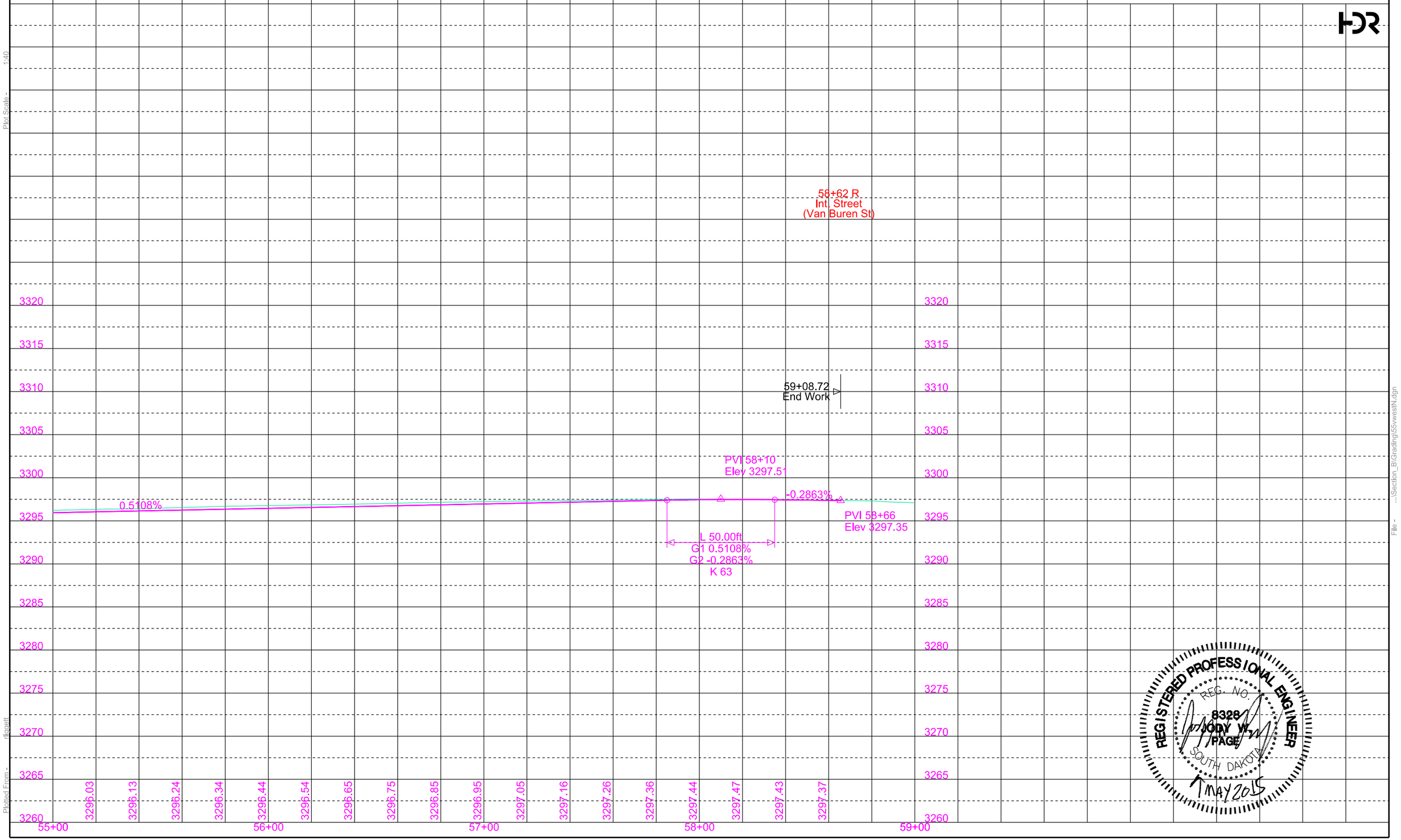

REGISTERED PROFESSIONAL ENGINEER
REG. NO. 8328
JODY W. PAGE
SOUTH DAKOTA
7 MAY 2015

Plot Scale - 1:40

Plotted From - diggett

File - ...\Section_B\Grading\I55vwestN.dgn

STATE OF SOUTH DAKOTA	PROJECT	SHEET	TOTAL SHEETS
	IM 1902(61)0	B118	B253

Plotting Date: 05-05-2015

FOR BIDDING PURPOSES ONLY

Large Diameter Pipe

496+72.76 - 76.58' L to 496+80.61 - 74.06' L
Install 30" - 8' RCP (Between Bend #6 and FE #6)
496+89.33 - 0.00' to 498+01.45 - 0.00'
Install 96" - 114' RCP (Between Bend #5 and Concrete Headwall)
498+01.45 - 0.00' to 500+68.26 - 0.00'
Install 96" - 260' RCP (Between JB #9 and Bend #5)
496+98.90 - 79.77' L to 496+80.61 - 74.06' L
Install 30" - 20' RCP (Between IN #154 and Bend #6)
499+81.93 - 62.88' L to 500+12.97 - 66.07' L
Install 18" - 32' RCP (Between FE #7 and FE #8)
500+68.26 - 0.00' to 503+43.31 - 0.00'
Install 90" - 268' RCP (Between TEE #1 and JB #9)
604+98.15 - 100.34' L to 605+11.44 - 49.54' L
Install 18" - 54' RCP (Between JB #9 and FE #3)
Install 30" Concrete Flared End Section
496+72.76 - 76.58' L (FE #6)

Install 30° 30" RCP Bend
496+80.61 - 74.06' L (Bend #6)

Install Special Concrete Headwall for 96" RCP
496+89.33
(See Special Details)

Install 18" Concrete Flared End Section
499+81.61 - 62.88' L (FE #7)
500+52.46 - 55.35' L (FE #3)
500+12.97 - 66.07' L (FE #8)

Install Special 10' x 10' Junction Box with Type A9 Manhole Frame & Lid with precast Cone
500+68.26 - 0.00' (JB #9)

Install 96" RCP Bend
(4 Ea - 7.5° Long Radius Bends)
498+01.45 - 0.00' (Bend #5)

Install Special Manhole
for Sedimentation Basin
497+00.04 - 80.23' L
(See Special Details)

Install 6" Concrete Sidewalk
(Concrete Drainage Apron)
497+27.88 - 76.29' L (580 SqFt)
500+43.89 - 67.09' L (1332 SqFt)
(See Sedimentation Basin Layout Details)

496+39.12-0.00
Install 1950 Ton Class C Riprap
Install 1310 SqYd Type B Drainage Fabric
(See Special Details)

496+60.66-80.49'L
Install 20 Ton Class A Riprap
Install 30 SqYd Type B Drainage Fabric
(See Special Details)

498+79.91-75.13'L
Install 390 Ton Class A Riprap
Install 485 SqYd Type B Drainage Fabric
(See Special Details)

REGISTERED PROFESSIONAL ENGINEER
REG. NO. 8328
JODY W. PAGE
SOUTH DAKOTA
MAY 2015

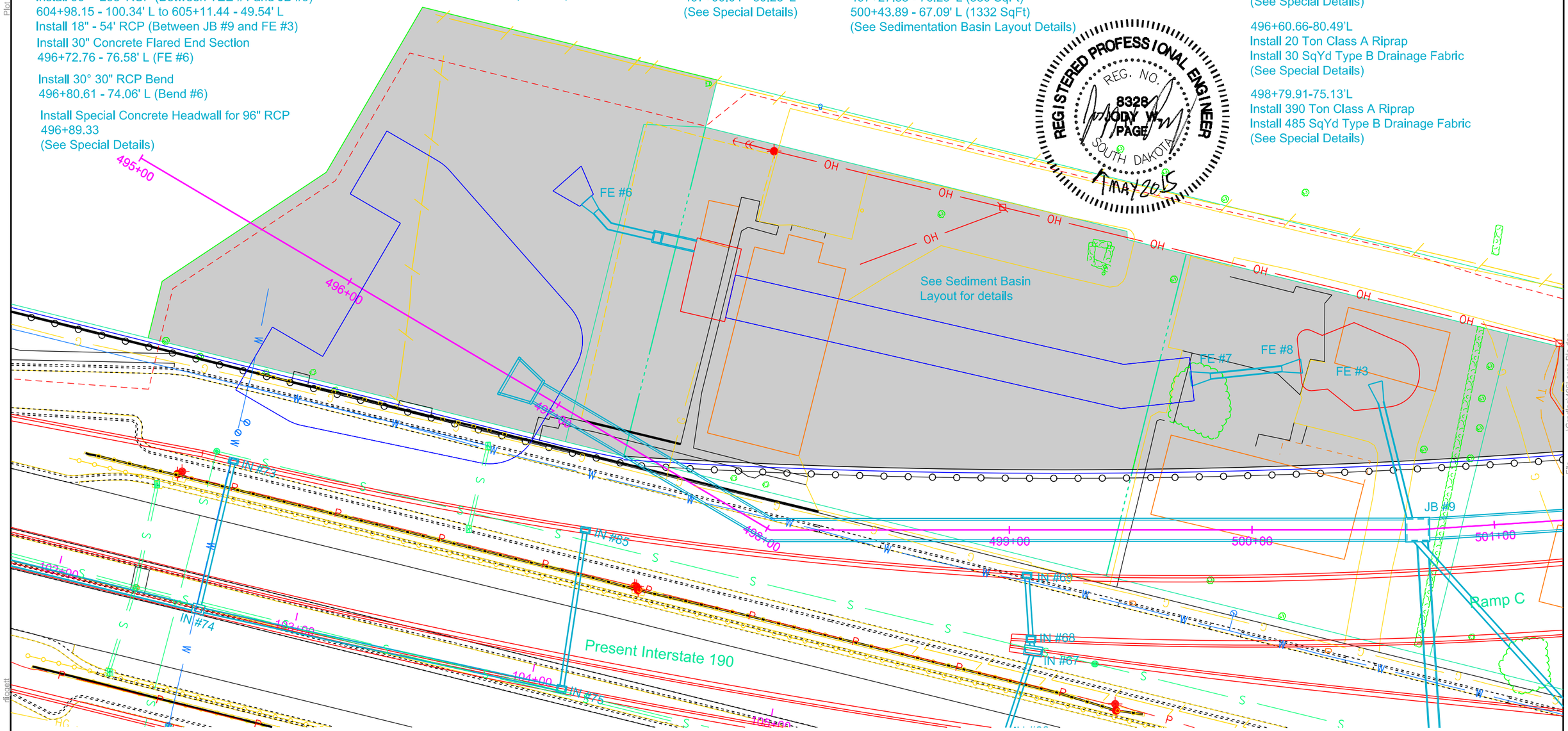

Plot Scale - 1:40
Plotted From - rlingett
File - ...\Grading\496Large Dia.dgn

STATE OF SOUTH DAKOTA	PROJECT	SHEET	TOTAL SHEETS
	IM 1902(61)0	B119	B253

Plotting Date: 05-05-2015

Large Diameter Pipe

FOR BIDDING PURPOSES ONLY

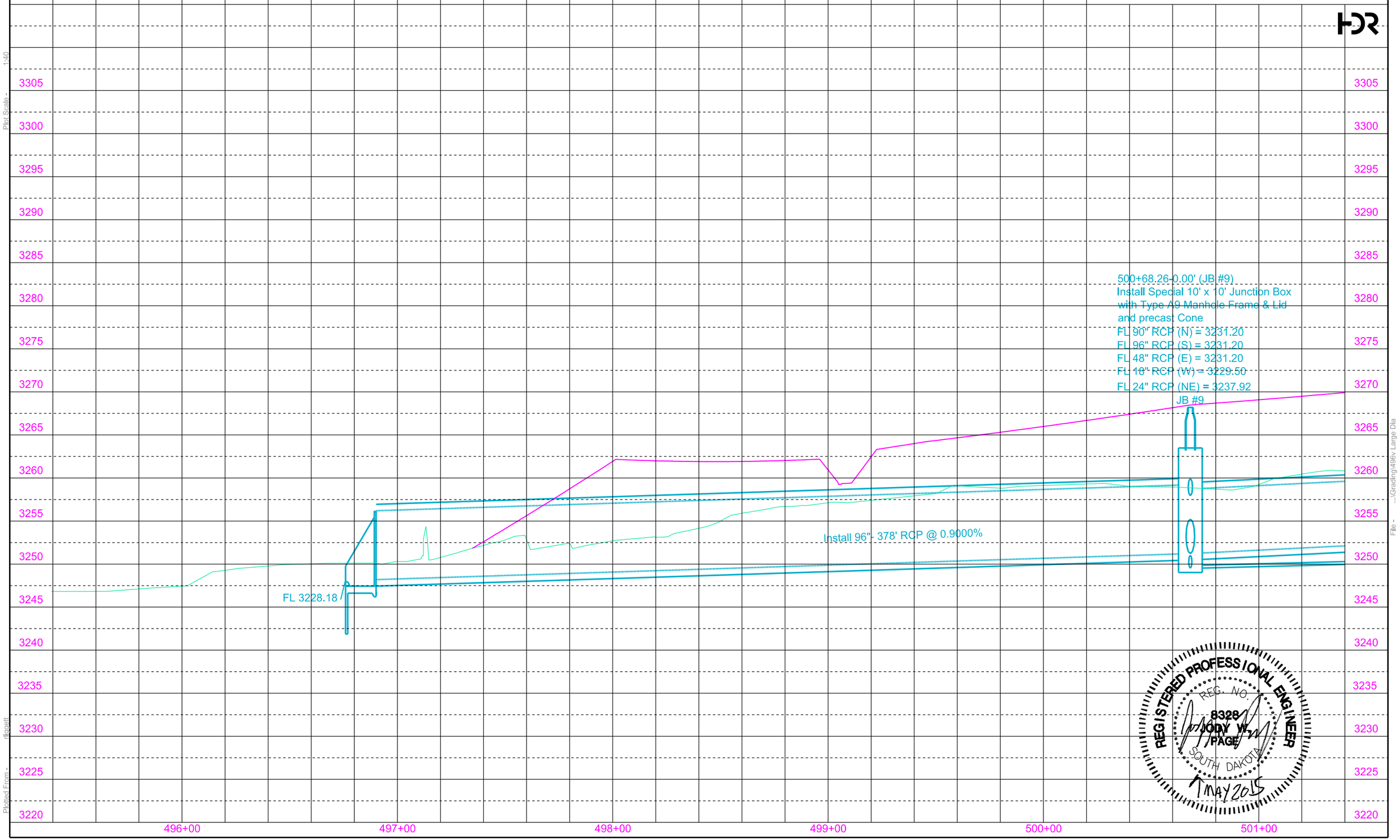

REGISTERED PROFESSIONAL ENGINEER
REG. NO. 8328
JODY W. PAGE
SOUTH DAKOTA
MAY 2015

Plot Scale - 1:40
Plotted From - rlippett
File - ...\Grading\496v Large Dia

Mowry Shale is a marine shale with a textural classification that varies from silt-clay to clay-silt. Color varies from gray to black. Bentonite zones may be encountered throughout. Nonweathered Mowry Shale is considered to be "Soft Rock".

The Geotechnical Engineering Activity has on file all of the boring logs for this project. These logs and additional results of laboratory test, if any, are available for review at the Central Office in Pierre.

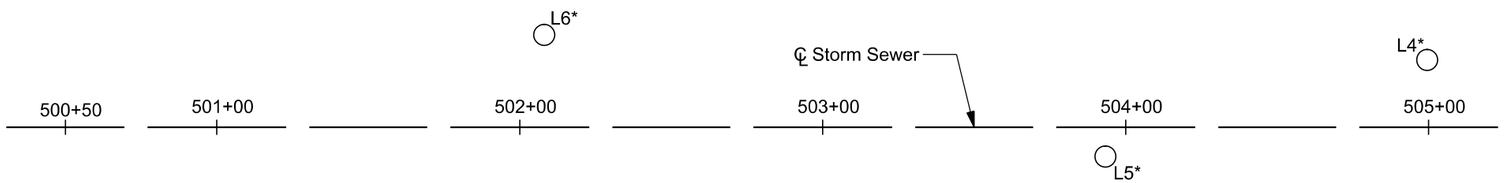

LEGEND

Penetration Test

Water

Caved

Sample Zone

Penetration test holes are drilled with a 6⅝" inch diameter hollow stem auger. Penetration tests are conducted by dropping a 140 pound hammer 30 inches to obtain 2 inch nominal diameter samples and to measure the resistance to penetration of the soil.

* Values represent uncorrected "N" values from Penetration Test.

Sample Zone — 48 Blows Per Foot

If refusal of the penatration test was achieved based on 50 blows within one of the 6 inch sets, then the number of blows over inches is listed.

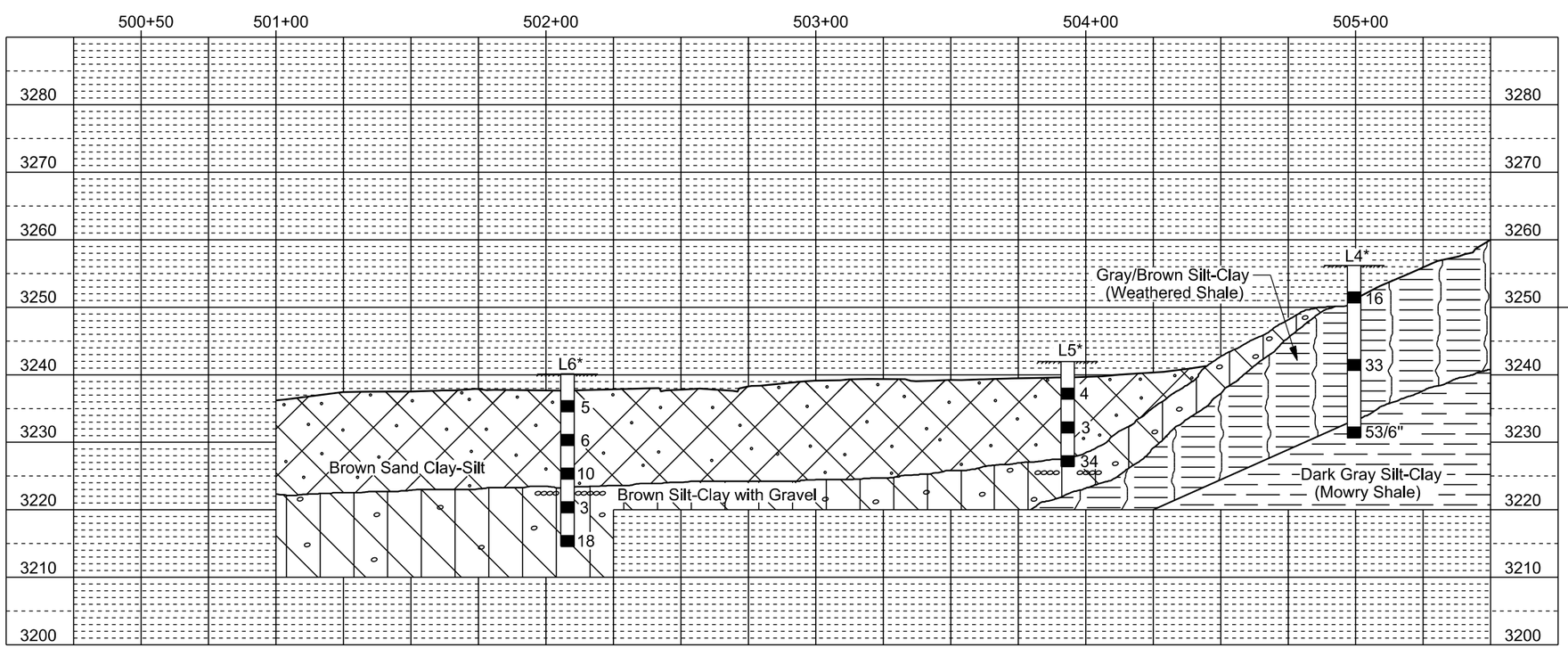

GROUND WATER ELEVATIONS

as of JULY 2014

L4	3227.5
L5	3219.5
L6	

IM1902(61)0 PENNINGTON COUNTY PCN 1162
I-190 - EXIT 1 IN RAPID CITY (SILVER STREET)
SEC. 35 - T2N - R7E
STA. 501+00 TO 515+25
STORM SEWER

SITE PLAN & SUBSURFACE PROFILE

DESIGNED BY	DRAWN BY	CHECKED BY	
JL	JW		

Plot Scale - 1:20
Plotted From - rfignett
File - ...\Penn1162-BoxCulvert1.dgn

STATE OF SOUTH DAKOTA	PROJECT	SHEET	TOTAL SHEETS
	IM 1902(61)0	B121	B253

Plotting Date: 05-05-2015

Large Diameter Pipe

FOR BIDDING PURPOSES ONLY

503+43.31 - 0.00' to 505+37.44 - 0.00'
Install 90" - 190' RCP (Between TEE #2 and TEE #1)
505+37.44 - 0.00' to 506+07.20 - 0.00'
Install 90" - 66' RCP (Between TEE #11 and TEE #2)
506+07.20 - 0.00' to 506+88.20 - 0.00'
Install 90" - 76' RCP (Between TEE #3 and TEE #10)
506+88.20 - 0.00' to 507+53.69 - 0.00'
Install 90" - 62' RCP (Between TEE #4 and TEE #3)

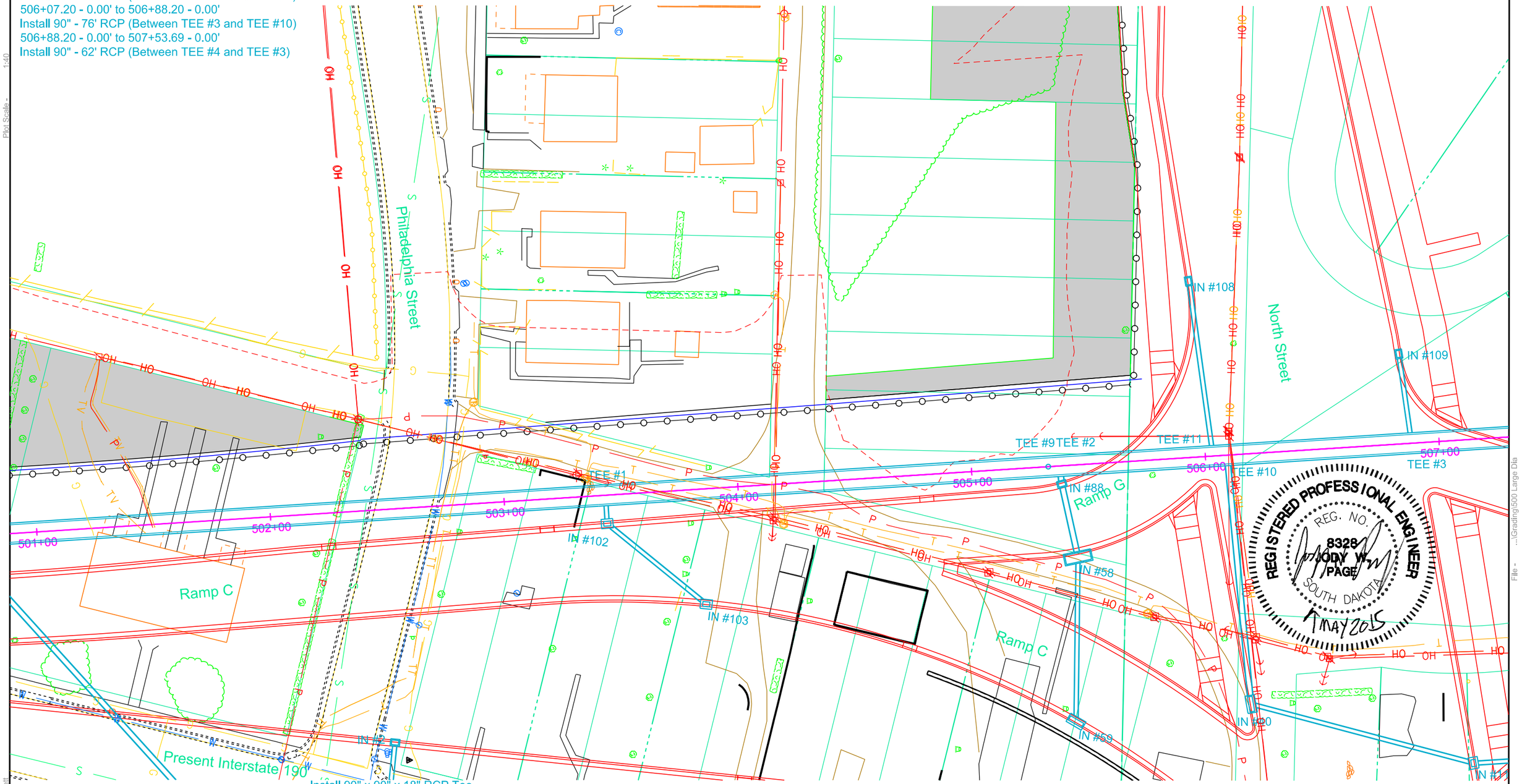

Install 90"X90"X36" RCP Tee
506+09.28- 0.00' (TEE #11)

Install 90"x90"x48" Manhole Access Tee
505+31.44-0.00' (TEE #9)

Install 90" x 90" x 18" RCP Tee
at the following locations:
503+43.31 - 0.00' (TEE #1)
505+37.44 - 0.00' (TEE #2)
506+03.28 - 0.00' (TEE #10)
506+88.20 - 0.00' (TEE #3)

Sec. 35-T2N-R7E

HDR

Plot Scale - 1:40

Plotted From - rlippett

File - ...\Grading\500 Large Dia

STATE OF SOUTH DAKOTA	PROJECT	SHEET	TOTAL SHEETS
	IM 1902(61)0	B122	B253

Plotting Date: 05-05-2015

Large Diameter Pipe

FOR BIDDING PURPOSES ONLY

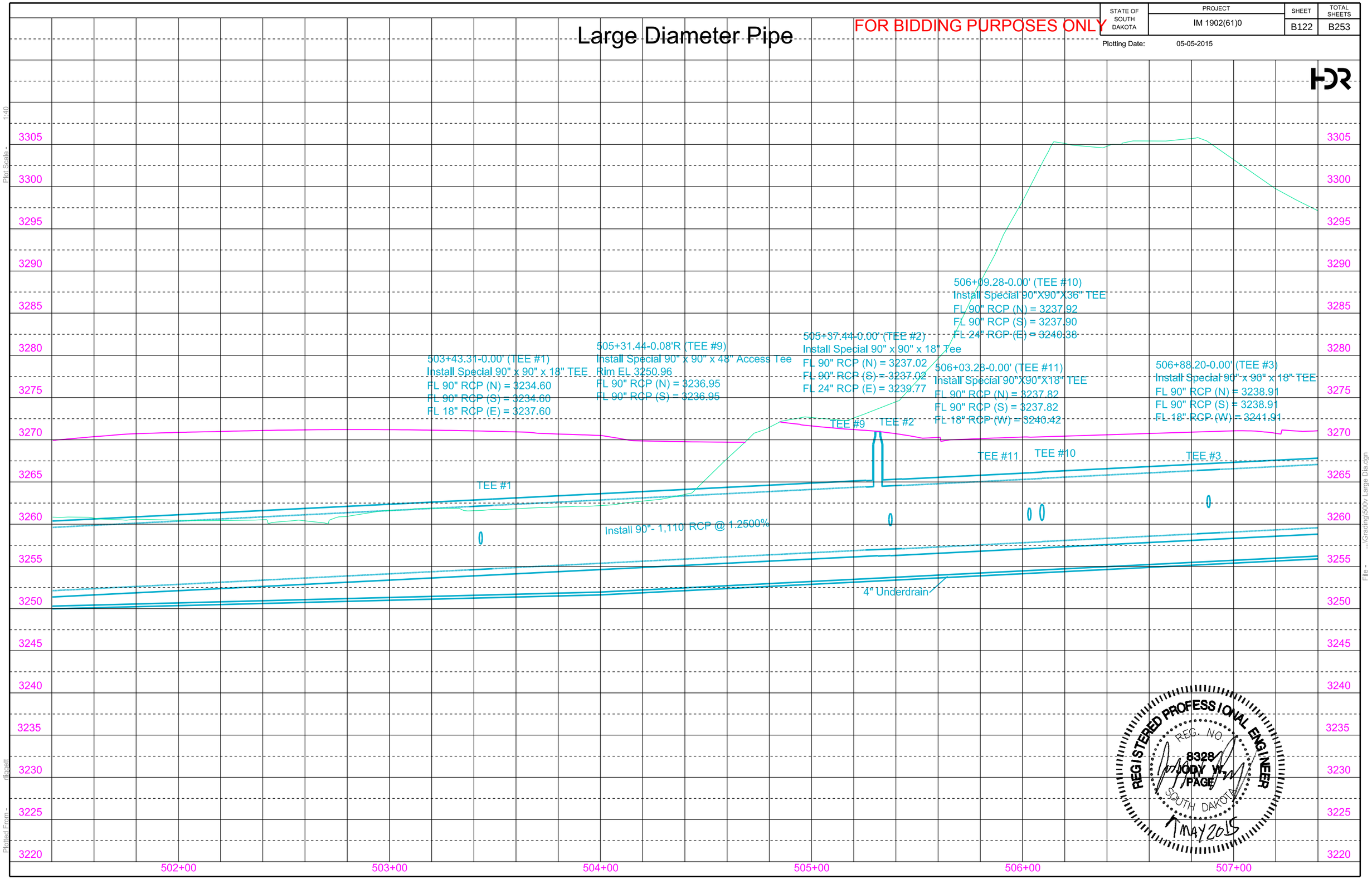

REGISTERED PROFESSIONAL ENGINEER
REG. NO. 8328
JODY W. PAGE
SOUTH DAKOTA
MAY 2015

Plot Scale - 1:40
Plotted From - rlippett
File - ...\Grading\500v Large Dia.dgn

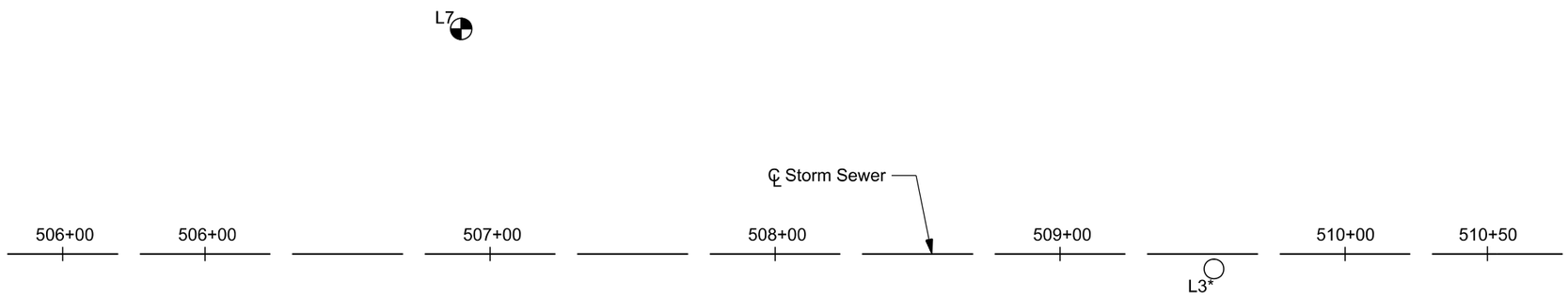

Mowry Shale is a marine shale with a textural classification that varies from silt-clay to clay-silt. Color varies from gray to black. Bentonite zones may be encountered throughout. Nonweathered Mowry Shale is considered to be "Soft Rock".

The Geotechnical Engineering Activity has on file all of the boring logs for this project. These logs and additional results of laboratory test, if any, are available for review at the Central Office in Pierre.

LEGEND

- Penetration Test
- Water
- Sample Zone
- Auger Test
- Caved
- Continuous Sampler

Penetration test holes are drilled with a 6⅝" inch diameter hollow stem auger. Penetration tests are conducted by dropping a 140 pound hammer 30 inches to obtain 2 inch nominal diameter samples and to measure the resistance to penetration of the soil.

Samples collected with the continuous sampler may be collected with or without a fiberglass clear liner. The nominal size of the sample within the sampler is 2¼ inch diameter. Zones were either the full 5 feet of the sampler or 2½ feet depending on the material being sampled.

* Values represent uncorrected "N" values from Penetration Test.

Sample Zone — 48 Blows Per Foot

If refusal of the penatration test was achieved based on 50 blows within one of the 6 inch sets, then the number of blows over inches is listed.

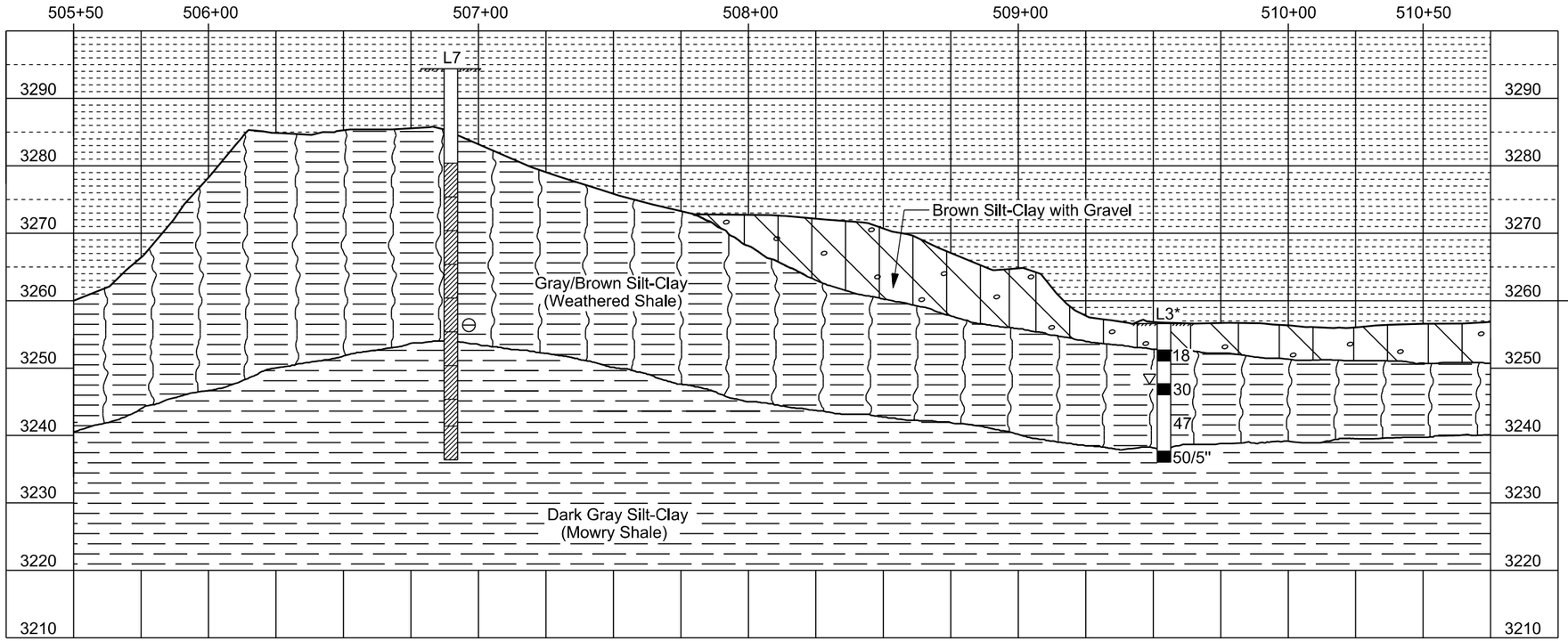

GROUND WATER ELEVATIONS
as of JULY 2014

L3	3247.6
L7	(CAVED) 3256.4

IM1902(61)0 PENNINGTON COUNTY PCN 1162
I-190 - EXIT 1 IN RAPID CITY (SILVER STREET)
SEC. 35 - T2N - R7E
STA. 501+00 TO 515+25
STORM SEWER

SITE PLAN & SUBSURFACE PROFILE

DESIGNED BY	DRAWN BY	CHECKED BY	
JL	JW		

Plot Scale - 1:20
Plotted From - rliggett
File - ...\Penn1162-BoxCulvert2.dgn

STATE OF SOUTH DAKOTA	PROJECT	SHEET	TOTAL SHEETS
	IM 1902(61)0	B124	B253

Plotting Date: 05-05-2015

FOR BIDDING PURPOSES ONLY

Large Diameter Pipe

Sec. 35-T2N-R7E

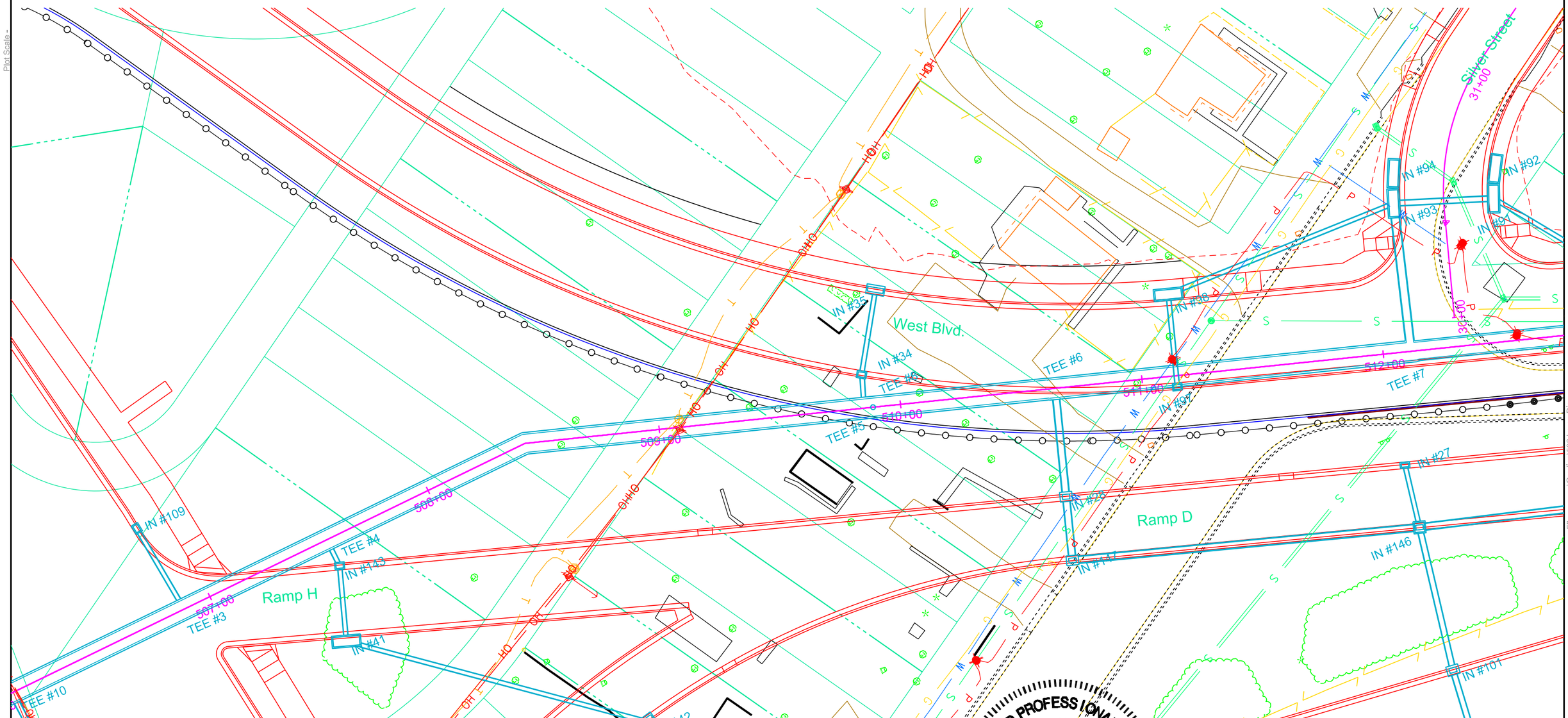

507+53.69 - 0.00' to 508+44.35 - 0.00'
Install 90" - 86' RCP (Between BEND #1 and TEE #4)
508+44.35 - 0.00' to 509+85.00 - 0.00'
Install 90" - 136' RCP (Between TEE #5 and BEND #1)
509+85.00 - 0.00' to 510+64.04 - 0.00'
Install 90" - 76' RCP (Between TEE #6 and TEE #5)
510+61.04 - 0.11' R to 512+11.49 - 0.00'
Install 90" - 150' RCP (Between Tee #7 and TEE #6)
512+17.49 - 0.04' L to 514+19.28 - 0.06' R
Install 84" - 200' RCP (Between JB #1 and Transition #1)

Install 84"X90" RCP Increaser
512+17.49 - 0.04' L (Transition #1)

Install 20° 90" RCP Bend
508+44.35 - 0.00' (BEND #1)
Install 90" x 90" x 30" RCP Tee
510+64.04 - 0.00' (TEE #6)
Install 90" x 90" x 18" RCP Tee
509+85.00 - 0.00' (TEE #5)

Install 90" x 90" x 48" Manhole Access Tee
509+91.00 - 0.00' (TEE #8)

Install 90"X90"X36" RCP Tee
512+11.49 - 0.00' (Tee #7)

Install 90"X90"X18" RCP Tee
507+53.69 - 0.00' (TEE #4)

REGISTERED PROFESSIONAL ENGINEER
REG. NO. 8328
JODY W. PAGE
SOUTH DAKOTA
1 MAY 2015

HDR

Plot Scale - 1:40
Plotted From - rlippett
File - ...\Grading\306 Large Dia

STATE OF SOUTH DAKOTA	PROJECT	SHEET	TOTAL SHEETS
	IM 1902(61)0	B125	B253

Plotting Date: 05-05-2015

Large Diameter Pipe

FOR BIDDING PURPOSES ONLY

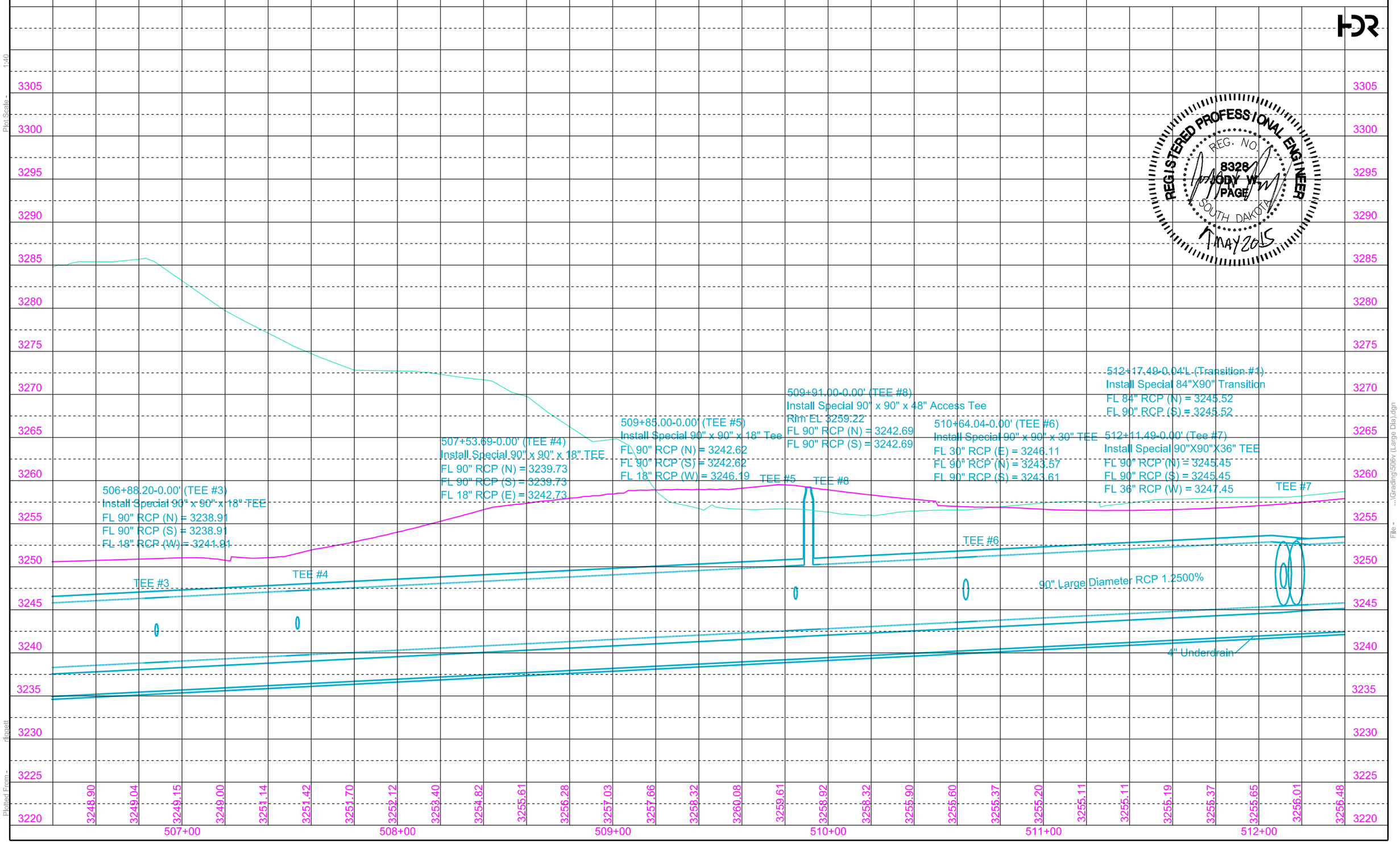

Plot Scale - 1:40

Plotted From - diggett

File - ...\Grading\506v (Large Dia).dgn

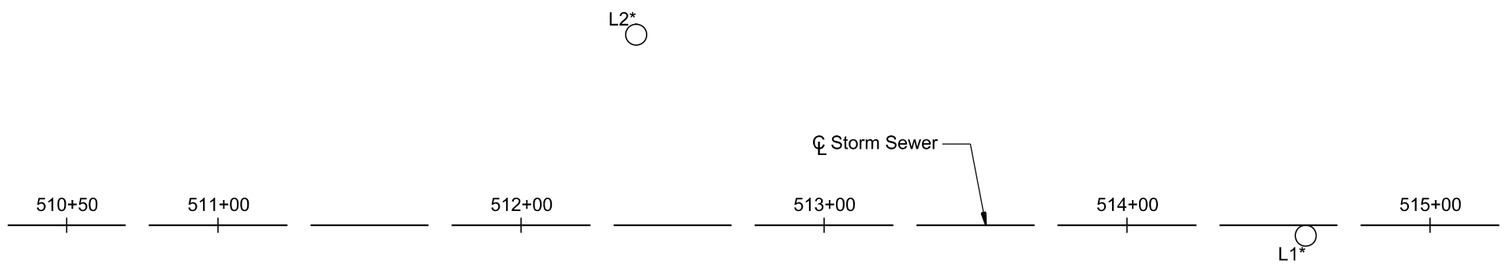

Mowry Shale is a marine shale with a textural classification that varies from silt-clay to clay-silt. Color varies from gray to black. Bentonite zones may be encountered throughout. Nonweathered Mowry Shale is considered to be "Soft Rock".

The Geotechnical Engineering Activity has on file all of the boring logs for this project. These logs and additional results of laboratory test, if any, are available for review at the Central Office in Pierre.

LEGEND

- Penetration Test
- Water
- Caved
- Sample Zone

Penetration test holes are drilled with a 6⅝" inch diameter hollow stem auger. Penetration tests are conducted by dropping a 140 pound hammer 30 inches to obtain 2 inch nominal diameter samples and to measure the resistance to penetration of the soil.

* Values represent uncorrected "N" values from Penetration Test.

Sample Zone — 48 Blows Per Foot

If refusal of the penatration test was achieved based on 50 blows within one of the 6 inch sets, then the number of blows over inches is listed.

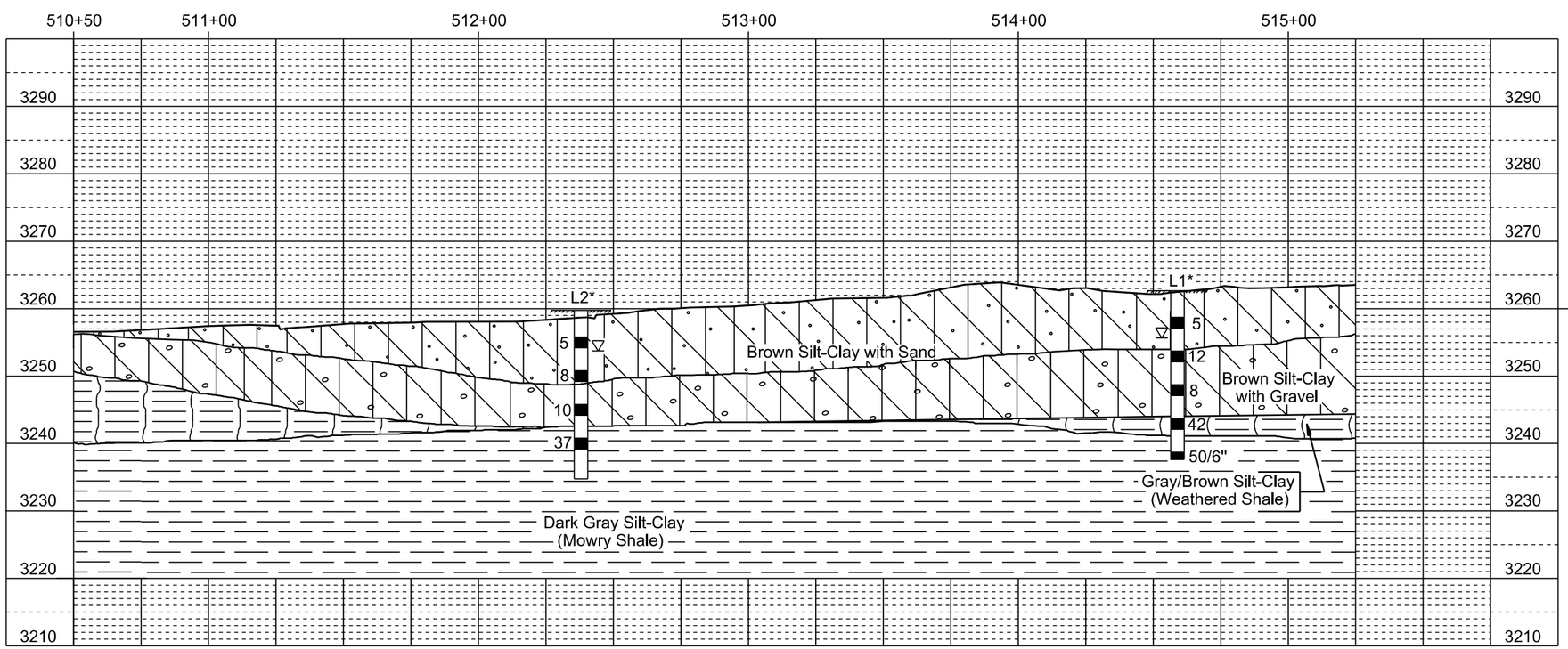

GROUND WATER ELEVATIONS

as of JULY 2014

L1	3255.7
L2	3253.8

IM1902(61)0 PENNINGTON COUNTY PCN 1162
I-190 - EXIT 1 IN RAPID CITY (SILVER STREET)
SEC. 35 - T2N - R7E
STA. 501+00 TO 515+25
STORM SEWER

SITE PLAN & SUBSURFACE PROFILE

DESIGNED BY	DRAWN BY	CHECKED BY	
JL	JW		

Plot Scale - 1:20
Plotted From - rfiggett
File - ...\Penn1162-BoxCulvert3.dgn

STATE OF SOUTH DAKOTA	PROJECT	SHEET	TOTAL SHEETS
	IM 1902(61)0	B127	B253

Plotting Date: 05-05-2015

Large Diameter Pipe

FOR BIDDING PURPOSES ONLY

Sec. 35-T2N-R7E

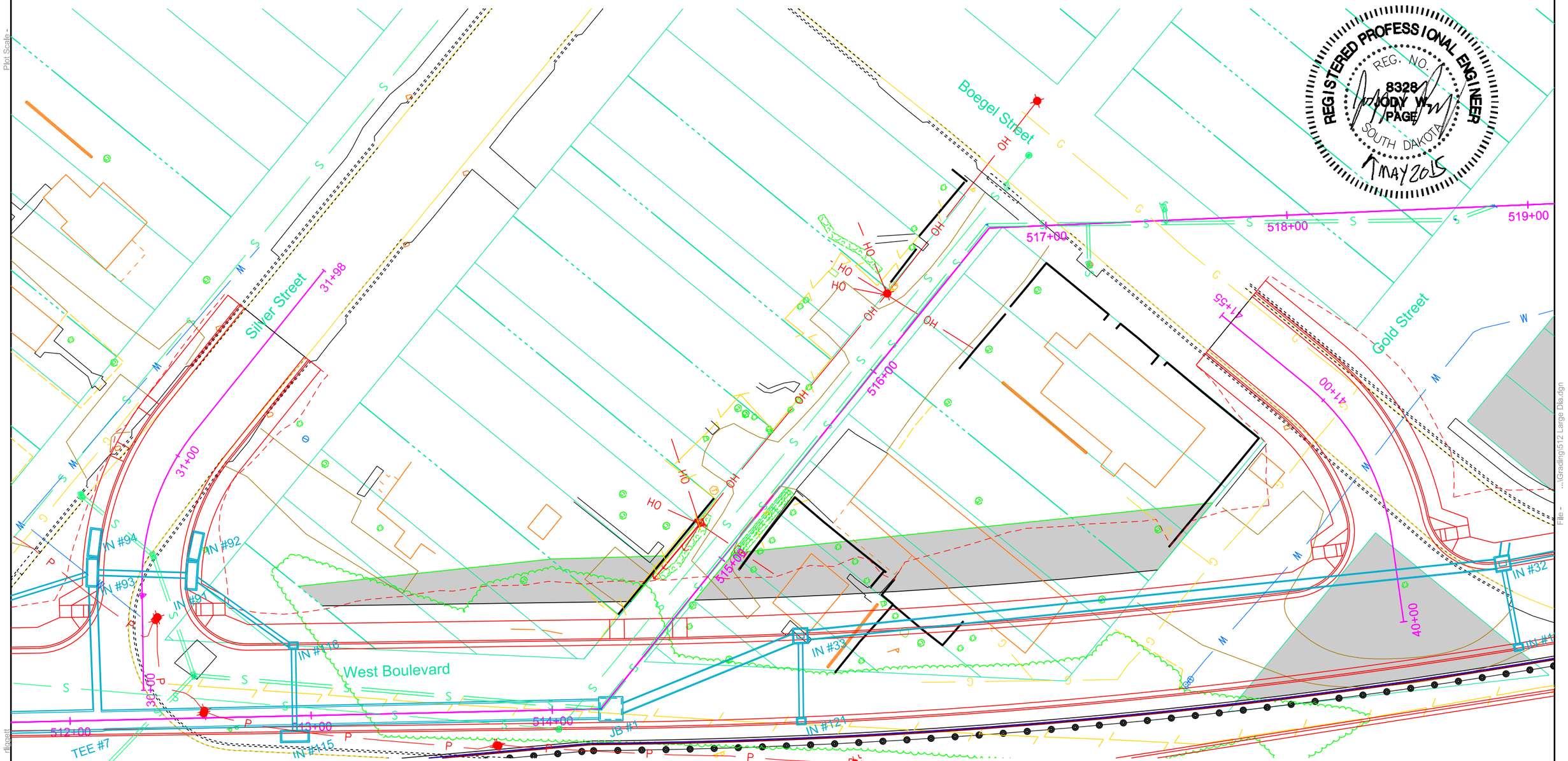

Install Special 84"X90" Transition
512+17.49 - 0.04' L (Transition #1)

Install Special 90"X90"X36" TEE
512+11.49 - 0.00' (Tee #7)

Install Special 10' x 10' Junction
Box with Type A9 Manhole Frame
& Lid and 3.5" Adjusting Ring
514+22.79 - 3.14' R (JB #1)

512+17.49 - 0.04' L to 514+19.28 - 0.06' R
Install 84" - 200' RCP (Between JB #1 and Transition #1)

HDR

Plot Scale - 1:40

Plotted From - rllgcett

File - ...\Grading\512 Large Dia.dgn

STATE OF SOUTH DAKOTA	PROJECT	SHEET	TOTAL SHEETS
	IM 1902(61)0	B128	B253

Plotting Date: 05-05-2015

Large Diameter Pipe

FOR BIDDING PURPOSES ONLY

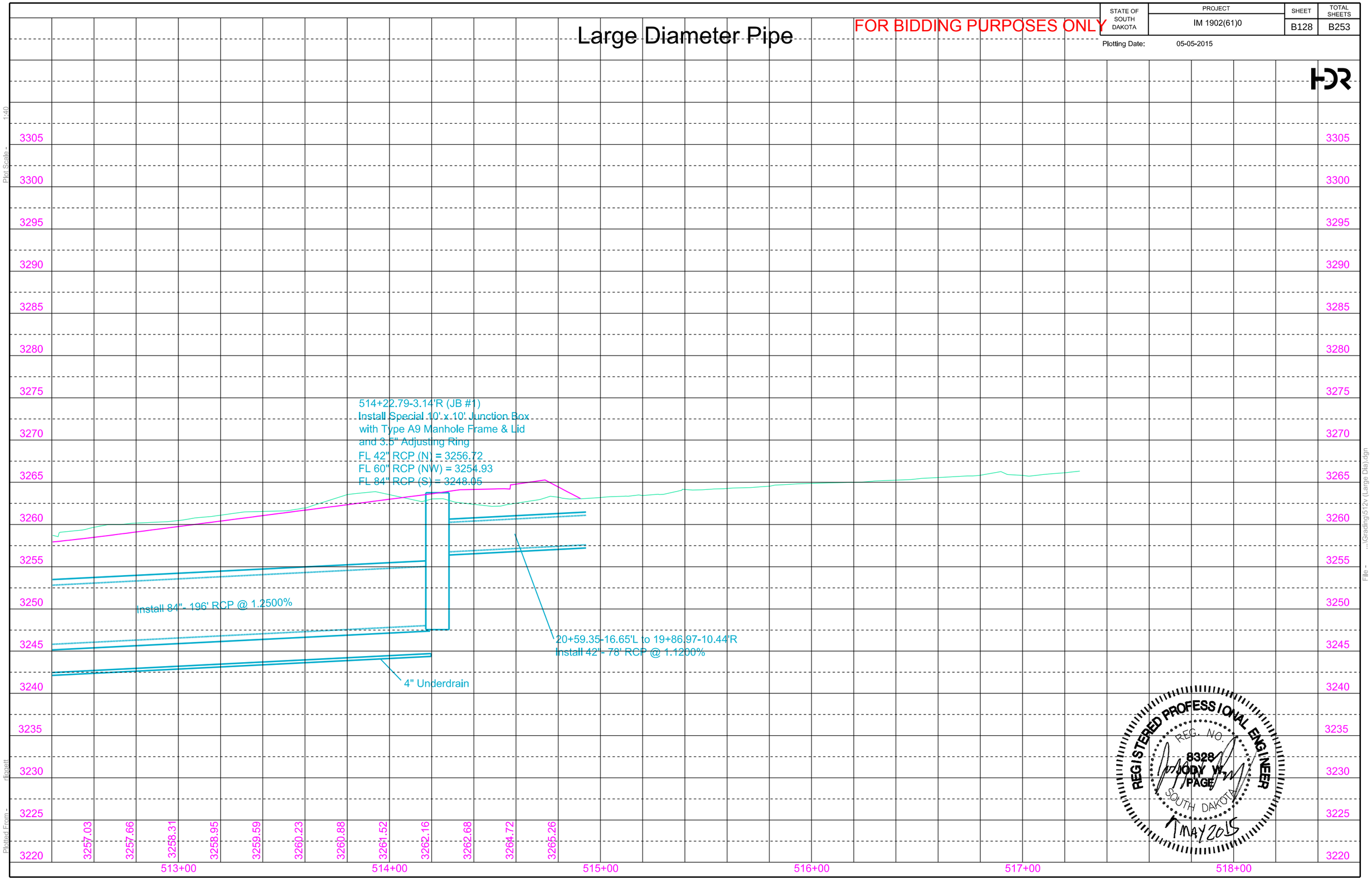

REGISTERED PROFESSIONAL ENGINEER
REG. NO. 8328
JODY W. PAGE
SOUTH DAKOTA
1 MAY 2015

Plot Scale - 1:40
Plotted From - dlgpett
File - ...\Grading\512v (Large Dia).dgn

STATE OF SOUTH DAKOTA	PROJECT	SHEET	TOTAL SHEETS
	IM 1902(61)0	B129	B253

FOR BIDDING PURPOSES ONLY

Plotting Date: 05-06-2015

Curb & Gutter Layout
Mainline

1 100+20.00-44.00' L
Begin Str Type D46 C & G
TC Elev 3237.93
(Match Existing)

374 100+42.89-44.00' L
PI Str Type D46 C & G
TC Elev 3238.01

2 102+46.25-55.00' L
End Str Type D46 C & G
Begin 1817' Rad Type D46 C & G
TC Elev 3239.22

5 100+20.00-8.00' L
Begin Str Type F66 C & G
TC Elev 3238.32
(Match Existing)

6 102+46.25-8.00' L
End Str Type F66 C & G
Begin 3552' Rad Type F66 C & G
TC Elev 3240.46

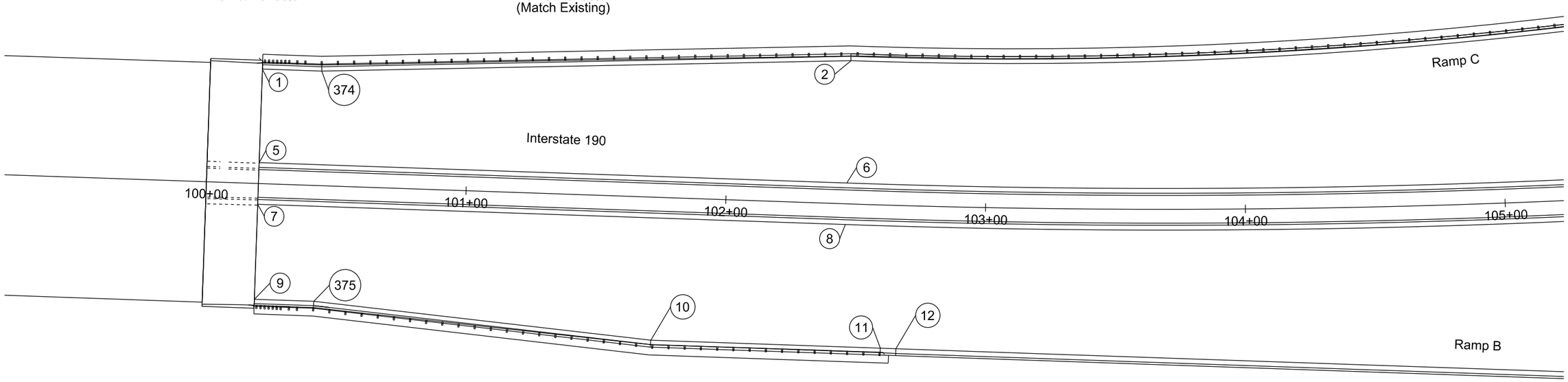

7 100+20.00-8.00' R
Begin Str Type F66 C & G
TC Elev 3238.32
(Match Existing)

8 102+46.25-8.00' R
End Str Type F66 C & G
Begin 3568' Rad Type F66 C & G
TC Elev 3239.90

9 100+20.00-44.50' R
Begin Str Type D46 C & G
TC Elev 3237.91
(Match Existing)

375 100+42.89-44.50' R
PI Str Type D46 C & G
TC Elev 3238.09

10 101+73.00-55.00' R
PI Str Type D46 C & G
TC Elev 3239.51

11 102+61.14-55.03' R
End Str Type D46 C & G
Begin Transition to Str Type F66 C & G
TC Elev 3241.16

12 102+67.05-55.06' R
End Transition to Str Type F66 C & G
Begin Str Type F66 C & G
TC Elev 3241.43

REGISTERED PROFESSIONAL ENGINEER
REG. NO. 8328
JODY W. PAGE
SOUTH DAKOTA
MAY 2015

HDR

Plot Scale - 1:40
Plotted From - rliggett
File - ...\99+00 Mainline

STATE OF SOUTH DAKOTA	PROJECT	SHEET	TOTAL SHEETS
	IM 1902(61)0	B130	B253

FOR BIDDING PURPOSES ONLY

Plotting Date: 05-05-2015

Curb & Gutter Layout
Mainline

13 105+93.13-40.00' L
Begin 3520' Rad Curb Taper
TC Elev 3247.87 (Theor)

14 107+41.59-40.00' L
End 3520' Rad Type F66 C & G
Begin Str Type F66 C & G
TC Elev 3253.80

15 110+96.89-40.00' L
End Str Type F66 C & G
Begin Str Transition to Type P6 C & G
TC Elev 3267.40

16 111+02.89-40.00' L
End Str Transition to Type P6 C & G
Begin Str Type P6 C & G
TC Elev 3267.43 (Theor)

17 107+41.59-8.00' L
End 3552' Rad Type F66 C & G
Begin Str Type F66 C & G
TC Elev 3254.54

330 105+99.21-40.00' L
End 3520' Rad Curb Taper
Begin 3520' Rad Type F66 C & G
TC Elev 3248.09

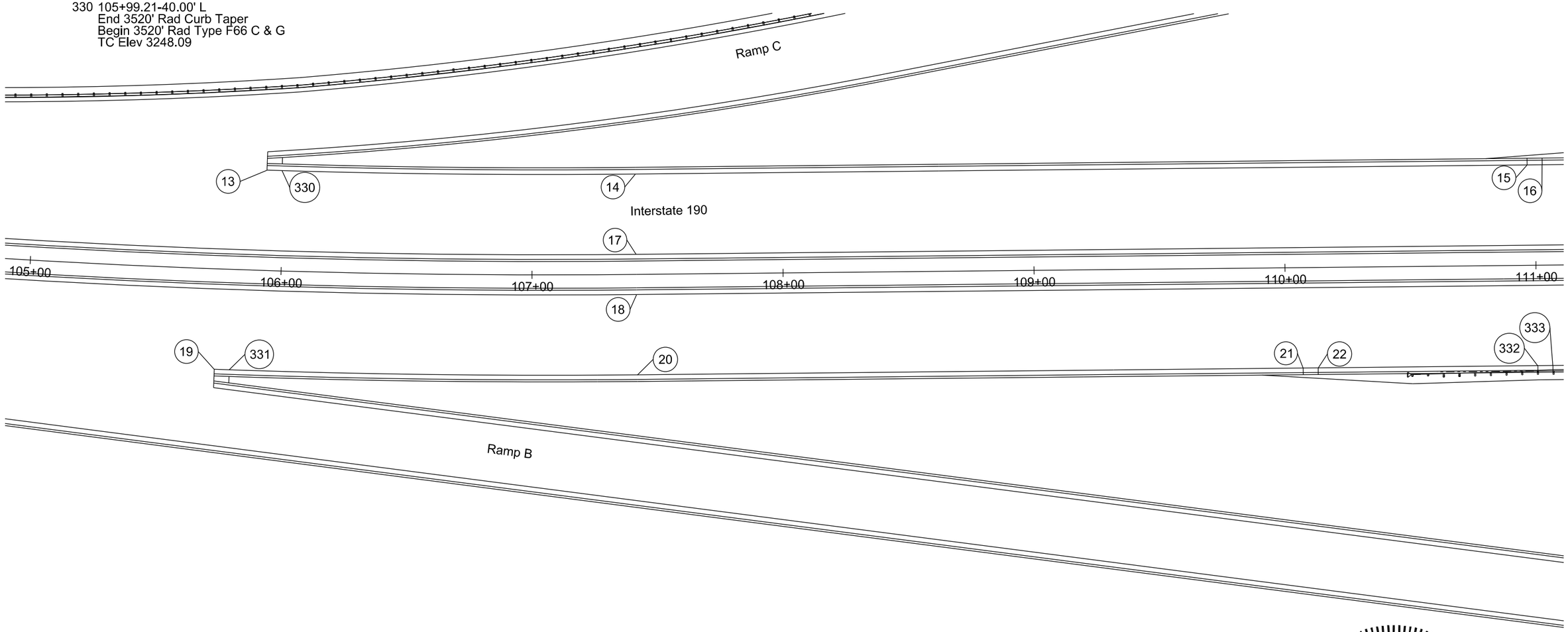

18 107+41.59-8.00' R
End 3568' Rad Type F66 C & G
Begin Str Type F66 C & G
TC Elev 3253.99

19 105+74.80-40.00' R
Begin 3600' Rad Curb Taper
TC Elev 3248.61 (Theor)

331 105+80.73-40.00' R
End 3600' Rad Curb Taper
Begin 3600' Rad Type F66 C & G
TC Elev 3248.81

20 107+41.59-40.00' R
End 3600' Rad Type F66 C & G
Begin Str Type F66 C & G
TC Elev 3254.73

21 110+06.84-40.00' R
End Str Type F66 C & G
Begin Str Transition to Type P6 C & G
TC Elev 3264.37

22 110+12.84-40.00' R
End Str Transition to Type P6 C & G
Begin Str Type P6 C & G
TC Elev 3264.44 (Theor)

332 111+00.36-40.00' R
End Str Type P6 C & G
Begin Str Transition to Type D46 C & G
TC Elev 3267.36 (Theor)

333 111+06.36-40.00' R
End Str Transition to Type D46 C & G
Begin Str Type D46 C & G
TC Elev 3267.54

REGISTERED PROFESSIONAL ENGINEER
REG. NO. 8328
JODY W. PAGE
SOUTH DAKOTA
MAY 2015

HDR

Plot Scale - 1:40
Plotted From - rfiggett
File - ...\105+00 Mainline.dgn

STATE OF SOUTH DAKOTA	PROJECT	SHEET	TOTAL SHEETS
	IM 1902(61)0	B131	B253

FOR BIDDING PURPOSES ONLY

Plotting Date: 05-05-2015

Curb & Gutter Layout
Mainline

23 112+52.27-40.00' L
End Str Type D46 C & G
TC Elev 3271.29
(Match Approach Panel)

24 115+17.87-40.00' L
Begin Str Type D46 C & G
TC Elev 3273.60
(Match Approach Panel)

334 111+90.41-40.00' L
End Str Type P6 C & G
Begin Str Transition to Type D46 C & G
TC Elev 3269.86 (Theor)

335 111+96.41-40.00' L
End Str Transition to Type D46 C & G
Begin Str Type D46 C & G
TC Elev 3270.01

25 111+72.50-8.00' L
End Str Type F66 C & G
Begin Str Type F66 C & G Curb Taper
TC Elev 3269.71

26 111+80.50-8.00' L
End Str Type F66 C & G Curb Taper
TC Elev 3269.92 (Theor)

336 116+51.25-40.00' L
End Str Type D46 C & G
Begin Str Transition to Type P6 C & G
TC Elev 3275.36

337 116+57.25-40.00' L
End Str Transition to Type P6 C & G
Begin Str Type P6 C & G
TC Elev 3275.39 (Theor)

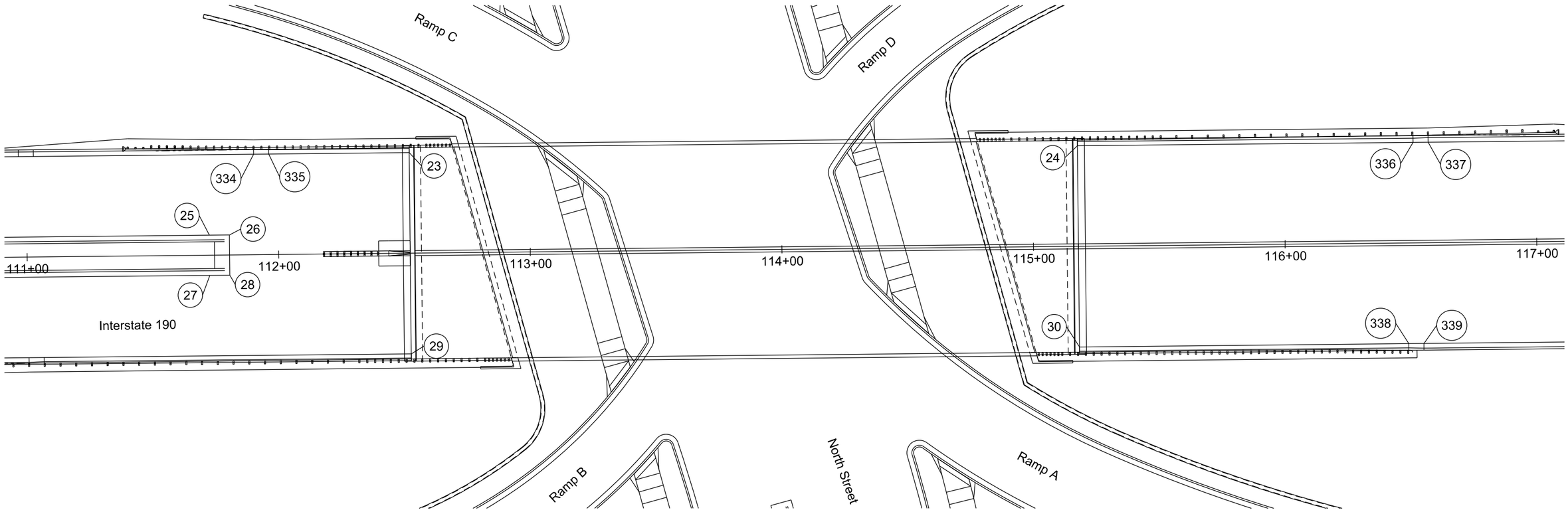

27 111+72.50-8.00' R
End Str Type F66 C & G
Begin Str Type F66 C & G Curb Taper
TC Elev 3269.71

28 111+80.50-8.00' R
End Str Type F66 C & G Curb Taper
TC Elev 3269.92 (Theor)

29 112+52.27-40.00' R
End Str Type D46 C & G
TC Elev 3270.77
(Match Approach Panel)

30 115+17.87-40.00' R
Begin Str Type D46 C & G
TC Elev 3271.94
(Match Approach Panel)

338 116+48.76-40.00' R
End Str Type D46 C & G
Begin Str Transition to Type F66 C & G
TC Elev 3275.34

339 116+54.76-40.00' R
End Str Transition to Type F66 C & G
Begin Str Type F66 C & G
TC Elev 3275.52

REGISTERED PROFESSIONAL ENGINEER
REG. NO. 8328
JODY W. PAGE
SOUTH DAKOTA
1 MAY 2015

HDR

Plot Scale - 1:40
Plotted From - rliggett
File - ...\111+00 Mainline.dgn

STATE OF SOUTH DAKOTA	PROJECT	SHEET	TOTAL SHEETS
	IM 1902(61)0	B132	B253

FOR BIDDING PURPOSES ONLY

Plotting Date: 05-05-2015

Curb & Gutter Layout
Mainline

31 117+44.75-40.00' L
End Str Type P6 C & G
Begin Str Transition to Type F66 C & G
TC Elev 3275.97 (Theor)

32 117+50.75-40.00' L
End Str Transition to Type F66 C & G
Begin Str Type F66 C & G
TC Elev 3276.00

33 120+00.00-40.00' L
End Str Type F66 C & G
Begin Str Type F611 C & G
TC Elev 3277.31

340 122+54.94-40.00' L
End Str Type F611 C & G
Begin Str Curb Taper
TC Elev 3280.92

34 122+60.94-40.00' L
End Str Curb Taper
TC Elev 3281.05 (Theor)

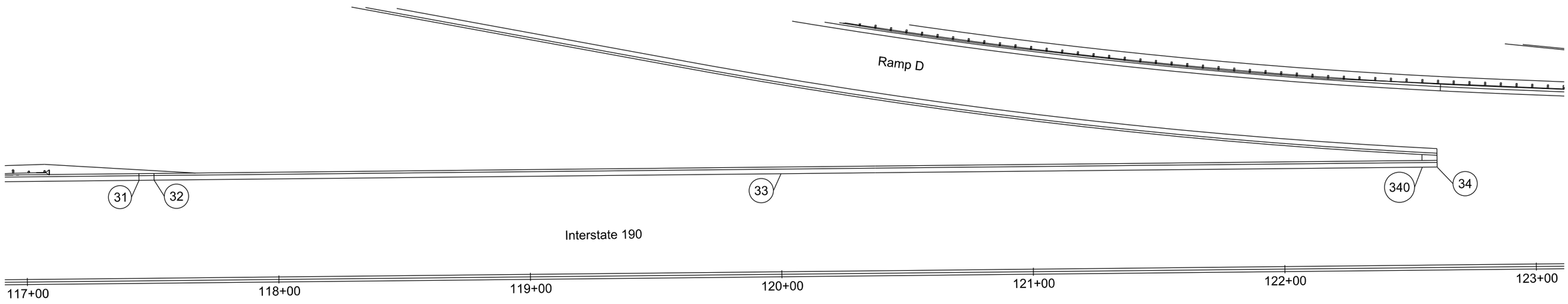

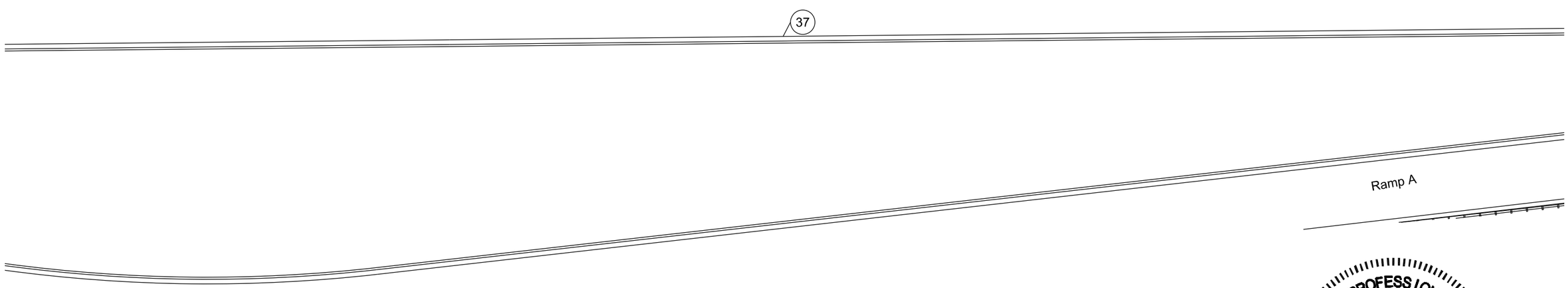

37 120+00.00-40.00' R
End Str Type F66 C & G
Begin Str Type F611 C & G
TC Elev 3277.31

REGISTERED PROFESSIONAL ENGINEER
REG. NO. 8328
JODY W. PAGE
SOUTH DAKOTA
7 MAY 2015

HDR

Plot Scale - 1:40

Plotted From - rliggett

File - ...\117+00 Mainline.dgn

STATE OF SOUTH DAKOTA	PROJECT	SHEET	TOTAL SHEETS
	IM 1902(61)0	B133	B253

Plotting Date: 05-05-2015

FOR BIDDING PURPOSES ONLY

Curb & Gutter Layout
Mainline

38 124+80.34-59.28' L
End Str Type D411 C & G
Begin 6704.4' Rad Type D411 C & G
TC Elev 3284.25

341 127+75.90-44.50' L
End 6704.4' Rad Type D411 C & G
Begin 6704.4' Rad Transition to Type P11 C & G
TC Elev 3287.23

342 127+81.93-44.20' L
End 6704.4' Rad Transition to Type P11 C & G
Begin 6704.4' Rad Type P11 C & G
TC Elev 3287.27 (Theor)

39 128+65.98-40.00' L
End 6704.4' Rad Type P11 C & G
Begin 6730' Rad Type P11 C & G
TC Elev 3287.68 (Theor)

40 128+70.05-40.00' L
End 6730' Rad Type P11 C & G
Begin 6730' Rad Transition to Type F611 C & G
TC Elev 3287.69

41 128+76.09-40.00' L
End 6730' Rad Transition to Type F611 C & G
Begin 6730' Rad Type F611 C & G
TC Elev 3287.86

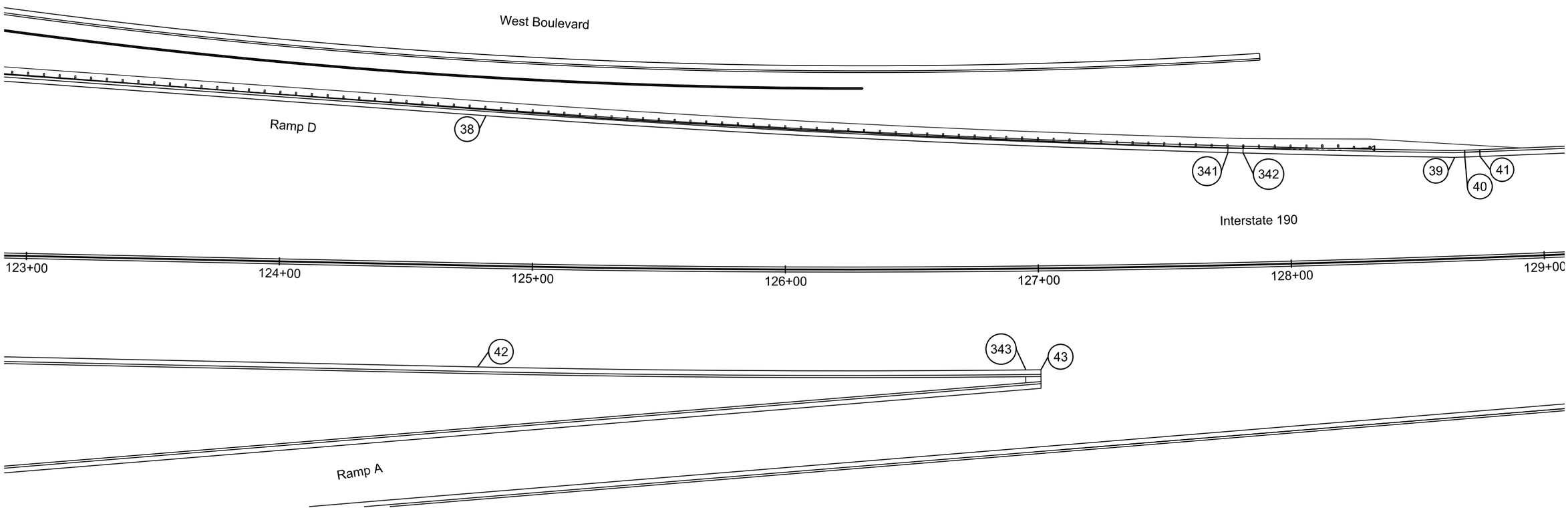

42 124+79.18-40.00' R
End Str Type F611 C & G
Begin 6810' Rad Type F611 C & G
TC Elev 3286.19

343 126+94.58-40.00' R
End 6810' Rad Type F611 C & G
Begin 6810' Rad Curb Taper
TC Elev 3289.06

43 127+00.53-40.00' R
End 6810' Rad Curb Taper
TC Elev 3289.10 (Theor)

REGISTERED PROFESSIONAL ENGINEER
REG. NO. 8328
JODY W. PAGE
SOUTH DAKOTA
1 MAY 2015

FDR

Plot Scale - 1:40
Plotted From - rlagett
File - ...\123+00 Mainline.dgn

STATE OF SOUTH DAKOTA	PROJECT	SHEET	TOTAL SHEETS
	IM 1902(61)0	B134	B253

FOR BIDDING PURPOSES ONLY

Plotting Date: 05-05-2015

Curb & Gutter Layout
Mainline

44 130+39.22-40.00' L
End 6730' Rad Type F611 C& G
Begin Str Type F611 C & G
TC Elev 3288.62

300 130+06.70-119.51' L
Begin 27.67' Rad Type B66 C & G
TC Elev 3288.82
(Match Existing)

301 130+24.62-135.96' L
End 27.67' Rad Type B66 C & G
Begin Str Type B66 C & G
TC Elev 3288.17

303 130+70.41-119.94' L
Begin 17.67' Rad Type B66 C & G
TC Elev 3290.66
(Match Existing)

305 130+88.12-119.58' L
End Str Type B66 C & G
TC Elev 3290.93
(Match Existing)

307 130+89.57-87.67' L
End Str Type B66 C & G
TC Elev 3292.16
(Match Existing)

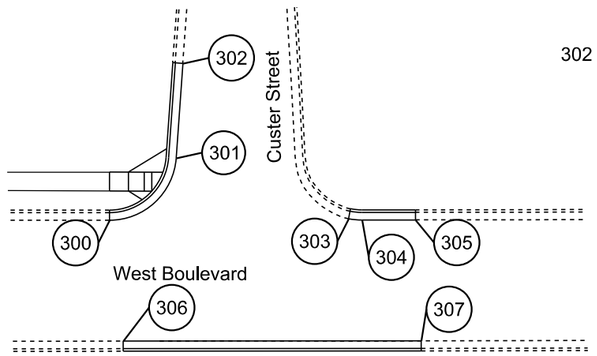

302 130+26.42-160.99' L
End Str Type B66 C & G
TC Elev 3285.87
(Match Existing)

304 130+73.96-119.58' L
End 17.67' Rad Type B66 C & G
Begin Str Type B66 C & G
TC Elev 3290.74

306 130+10.52-87.64' L
Begin Str Type B66 C & G
TC Elev 3290.41
(Match Existing)

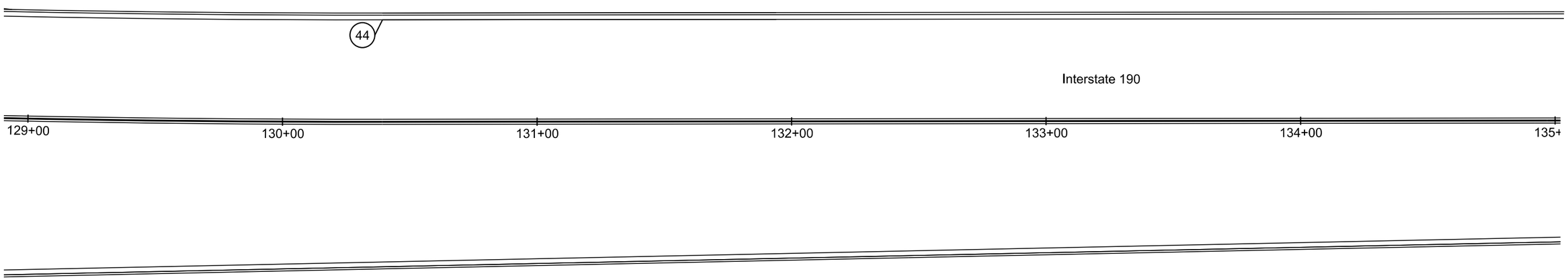

45 129+99.47-109.94' R
Begin Str Type B66 C & G
TC Elev 3293.37
(Match Existing)

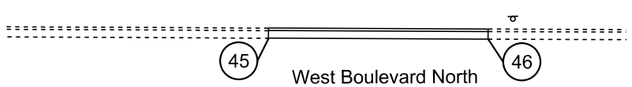

46 130+56.82-110.15' R
End Str Type B66 C & G
TC Elev 3293.53
(Match Existing)

REGISTERED PROFESSIONAL ENGINEER
REG. NO. 8328
JODY W. PAGE
SOUTH DAKOTA
1 MAY 2015

FDR

Plot Scale - 1:40
Plotted From - dlagett
File - ...\129+00 Mainline.dgn

STATE OF SOUTH DAKOTA	PROJECT	SHEET	TOTAL SHEETS
	IM 1902(61)0	B135	B253

Plotting Date: 05-05-2015

FOR BIDDING PURPOSES ONLY

Curb & Gutter Layout
Mainline

47 138+30.00-40.00' L
PI Str Type F611 C & G
TC Elev 3291.91

49 138+81.39-39.41' L
End Str Transition to Type D411 C & G
Begin Str Type D411 C & G
TC Elev 3292.33

282 139+28.61-39.00' L
End 14,139' Rad Type D411 C & G
Begin Str Type D411 C & G
TC Elev 3293.01

52 140+10.00-40.00' L
PI Str Type D411 C & G
TC Elev 3294.53

345 140+31.52-40.00' L
End Str Transition to Type P11 C & G
Begin Str Type B11 C & G
TC Elev 3295.02 (Theor)

48 138+75.41-39.23' L
End Str Type F611 C & G
Begin Str Transition to Type D411 C & G
TC Elev 3292.40

50 138+90.00-39.00' L
End Str Type D411 C & G
Begin 14,139' Rad Type D411 C & G
TC Elev 3292.44

51 139+50.00-39.00' L
PI Str Type D411 C & G
TC Elev 3293.36

344 140+25.52-40.00' L
End Str Type D411 C & G
Begin Str Transition to Type P11 C & G
TC Elev 3294.88

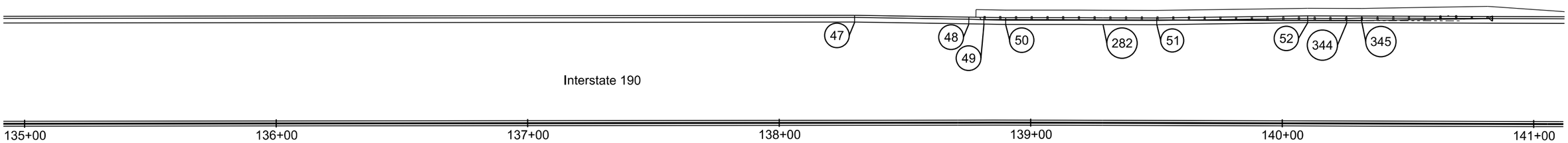

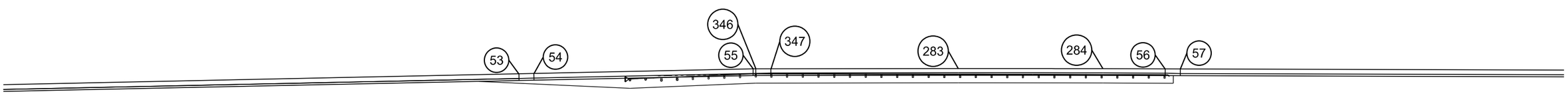

REGISTERED PROFESSIONAL ENGINEER
REG. NO. 8328
JODY W. PAGE
SOUTH DAKOTA
1 MAY 2015

53 136+96.35-41.86' R
End Str Type F611 C & G
Begin Str Transition to Type P11 C & G
TC Elev 3291.24

55 137+89.45-40.00' R
PI Str Type P11 C & G
TC Elev 3291.46 (Theor)

347 137+96.51-40.00' R
End Str Transition to Type D411 C & G
Begin Str Type D411 C & G
TC Elev 3291.51

284 139+28.61-40.00' R
End 14,060' Rad Type D411 C & G
Begin Str Type D411 C & G
TC Elev 3292.99

57 139+59.38-40.00' R
End Str Transition to Type F611 C & G
Begin Str Type F611 C & G
TC Elev 3293.66

54 137+02.35-41.74' R
End Str Transition to Type P11 C & G
Begin Str Type P11 C & G
TC Elev 3291.11 (Theor)

346 137+90.51-40.00' R
End Str Type P11 C & G
Begin Str Transition to Type D411 C & G
TC Elev 3291.47 (Theor)

283 138+70.99-40.00' R
End Str Type D411 C & G
Begin 14,060' Rad Type D411 C & G
TC Elev 3292.18

56 139+53.38-40.00' R
End Str Type D411 C & G
Begin Str Transition to Type F611 C & G
TC Elev 3293.40

Plot Scale - 1:40
Plotted From - dliggett
File - ...\135+00 Mainline.dgn

STATE OF SOUTH DAKOTA	PROJECT	SHEET	TOTAL SHEETS
	IM 1902(61)0	B136	B253

FOR BIDDING PURPOSES ONLY

Plotting Date: 05-05-2015

Curb & Gutter Layout
Mainline

58 141+19.64-40.00' L
End Str Type P11 C & G
Begin Str Transition to Type F611 C & G
TC Elev 3297.37 (Theor)

59 141+25.64-40.00' L
End Str Transition to Type F611 C & G
Begin Str Type F611 C & G
TC Elev 3297.70

348 146+68.64-40.00' L
End Str Type F611 C & G
Begin Str Curb Taper
TC Elev 3318.83

60 146+74.64-40.00' L
End Str Curb Taper
TC Elev 3319.07 (Theor)

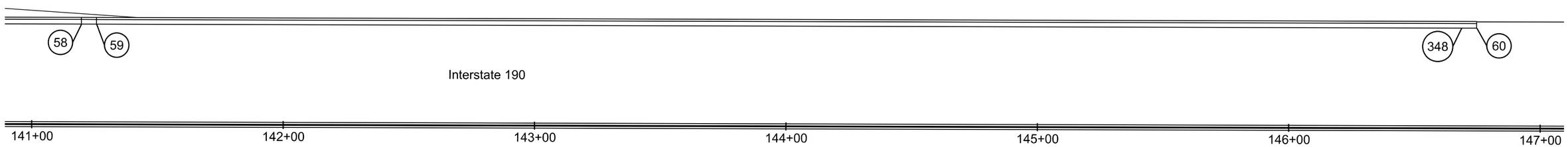

61 146+68.64-40.00' R
End Str Type F611 C & G
Begin Str Curb Taper
TC Elev 3318.83

61 146+74.64-40.00' R
End Str Curb Taper
TC Elev 3319.07 (Theor)

62 141+53.40-114.15' R
Begin Str Type B66 C & G
TC Elev 3315.45
(Match Existing)

63 143+79.95-113.86' R
End Str Type B66 C & G
TC Elev 3320.57
(Match Existing)

REGISTERED PROFESSIONAL ENGINEER
REG. NO. 8328
JODY W. PAGE
SOUTH DAKOTA
1 MAY 2015

Plot Scale - 1:40
Plotted From - dlagett
File - ...\141+00 Mainline.dgn

STATE OF SOUTH DAKOTA	PROJECT	SHEET	TOTAL SHEETS
	IM 1902(61)0	B137	B253

FOR BIDDING PURPOSES ONLY

Plotting Date: 05-07-2015

Curb & Gutter Layout
Ramps A and E

64 301+46.13-0.00' L/R
End 5' Rad Type B69 C & G
Begin 300' Rad Typ B69 C & G
TC Elev 3247.62

65 302+26.87 - 0.00' L/R
End 300' Rad Type B69 C & G
Begin 300' Rad Type B66 C & G
TC Elev 3247.31

66 302+65.35-0.00' L/R
End 300' Rad Type B66 C & G
Begin 600' Rad Type B66 C & G
TC Elev 3247.81

67 303+79.60-0.00' L/R
End 600' Rad Type B66 C & G
Begin 600' Rad Transition to Type F66 C & G
TC Elev 3252.38

68 303+85.60-0.00' L/R
End 600' Rad Transition to Type F66 C & G
Begin 600' Rad Type F66 C & G
TC Elev 3252.68

69 305+81.68-0.00' L/R
End 600' Rad Type F66 C & G
Begin Str Type F66 C & G
TC Elev 3262.39

74 350+81.40-3.94' L
End 5' Rad Type B69 C & G
Begin 103.54' Rad Type B69 C & G
TC Elev 3244.99

75 351+05.40 - 3.55' L
End 103.54' Rad Type B69 C & G
Begin 103.54' Rad Type B66 C & G
TC Elev 3245.69

76 351+40.09-3.00' L
End 103.54' Rad Type B66 C & G
Begin Str Type B66 C & G
TC Elev 3246.97

351 352+31.65-2.10' L
End Str Type B66 C & G
Begin Str Curb Taper
TC Elev 3251.39

77 352+37.64-2.04' L
End Str Curb Taper
TC Elev 3251.69 (Theor)

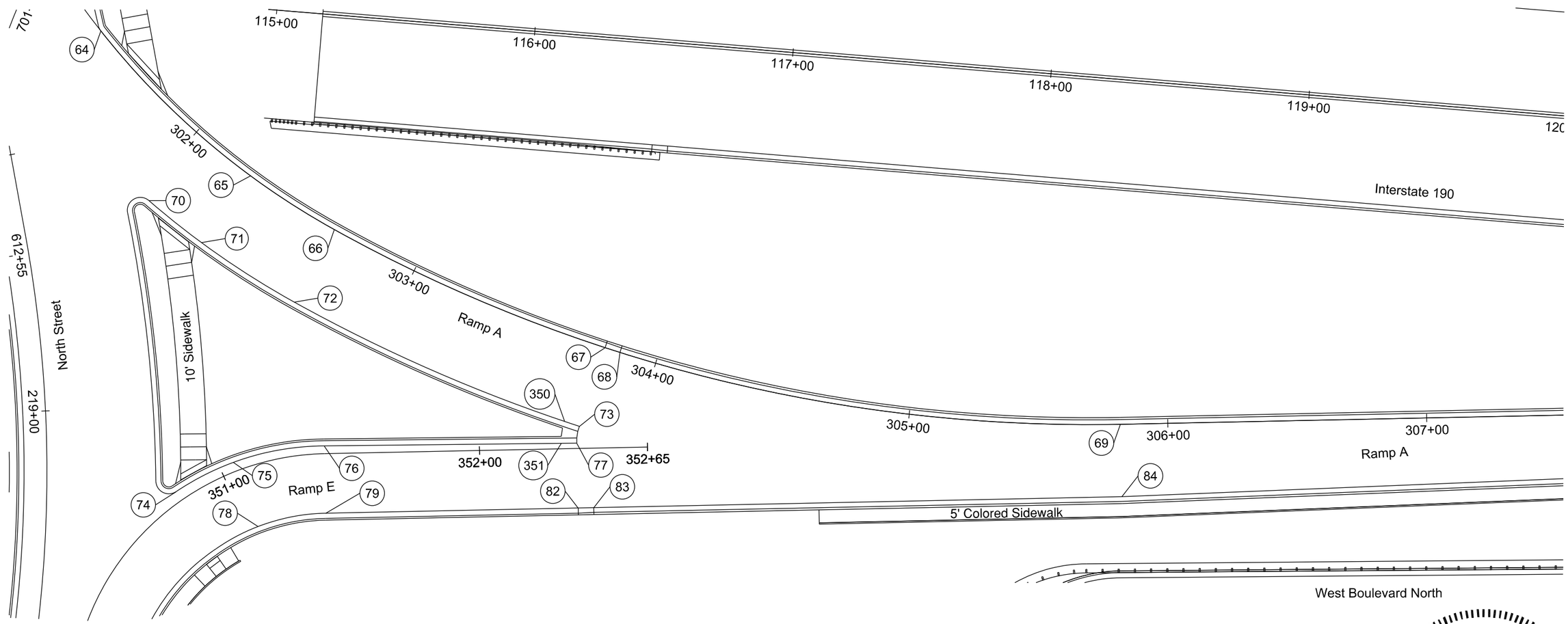

70 302+03.37-32.00' R
End 5' Rad Type B69 C & G
Begin 332' Rad Type B69 C & G
TC Elev 3246.72

71 302+26.87 - 32.00' R
End 332' Rad Type B69 C & G
Begin 332' Rad Type B66 C & G
TC Elev 3246.67

72 302+65.35-32.00' R
End 332' Rad Type B66 C & G
Begin 632' Rad Type B66 C & G
TC Elev 3247.17

350 303+73.95-32.00' R
End 632' Rad Type B66 C & G
Begin 632' Rad Curb Taper
TC Elev 3251.46

73 303+79.60-32.00' R
End 632' Rad Curb Taper
TC Elev 3251.74 (Theor)

78 351+05.40-23.00' R
End 77' Rad Type B69 C & G
Begin 77' Rad Type B66 C & G
TC Elev 3245.18

79 351+40.12-23.00' R
End 77' Rad Type B66 C & G
Begin Str Type B66 C & G
TC Elev 3246.45

82 352+37.64-23.00' R
End Str Type B66 C & G
Begin Str Transition to Type F66 C & G
TC Elev 3251.39

83 352+43.64-23.00' R
End Str Transition to Type F66 C & G
Begin Str Type F66 C & G
TC Elev 3251.73

84 305+82.00-27.99' R
PI Str Type F66 C & G
TC Elev 3261.83

REGISTERED PROFESSIONAL ENGINEER
REG. NO. 8328
JODY W. PAGE
SOUTH DAKOTA
1 MAY 2015

HDR

Plot Scale - 1:40
Plotted From - rfiggett
File - ...\11+00 Ramp A.dgn

STATE OF SOUTH DAKOTA	PROJECT	SHEET	TOTAL SHEETS
	IM 1902(61)0	B138	B253

FOR BIDDING PURPOSES ONLY

Plotting Date: 05-07-2015

Curb & Gutter Layout
Ramp A

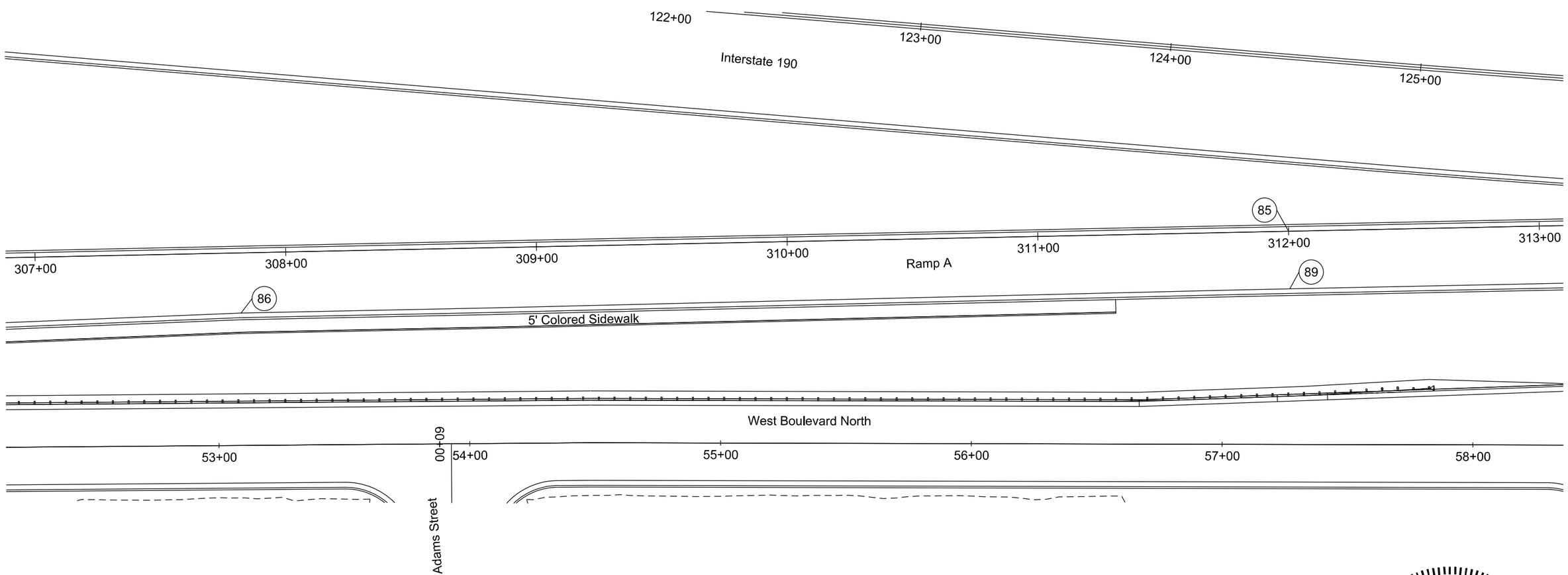

85 312+00.00-0.00' L/R
End Str Type F66 C & G
Begin Str Type F69 C & G
TC Elev 3286.15

86 307+81.68-24.00' R
PI Str Type F66 C & G
TC Elev 3271.74

89 312+00.00-23.00' R
End Str Type F66 C & G
Begin Str Type F69 C & G
TC Elev 3285.69

REGISTERED PROFESSIONAL ENGINEER
REG. NO. 8328
JODY W. PAGE
SOUTH DAKOTA
1 MAY 2015

HDR

Plot Scale - 1:40

Plotted From - rliggett

File - ...\17+00 RampA.dgn

STATE OF SOUTH DAKOTA	PROJECT	SHEET	TOTAL SHEETS
	IM 1902(61)0	B139	B253

FOR BIDDING PURPOSES ONLY

Plotting Date: 05-05-2015

Curb & Gutter Layout
Ramp A

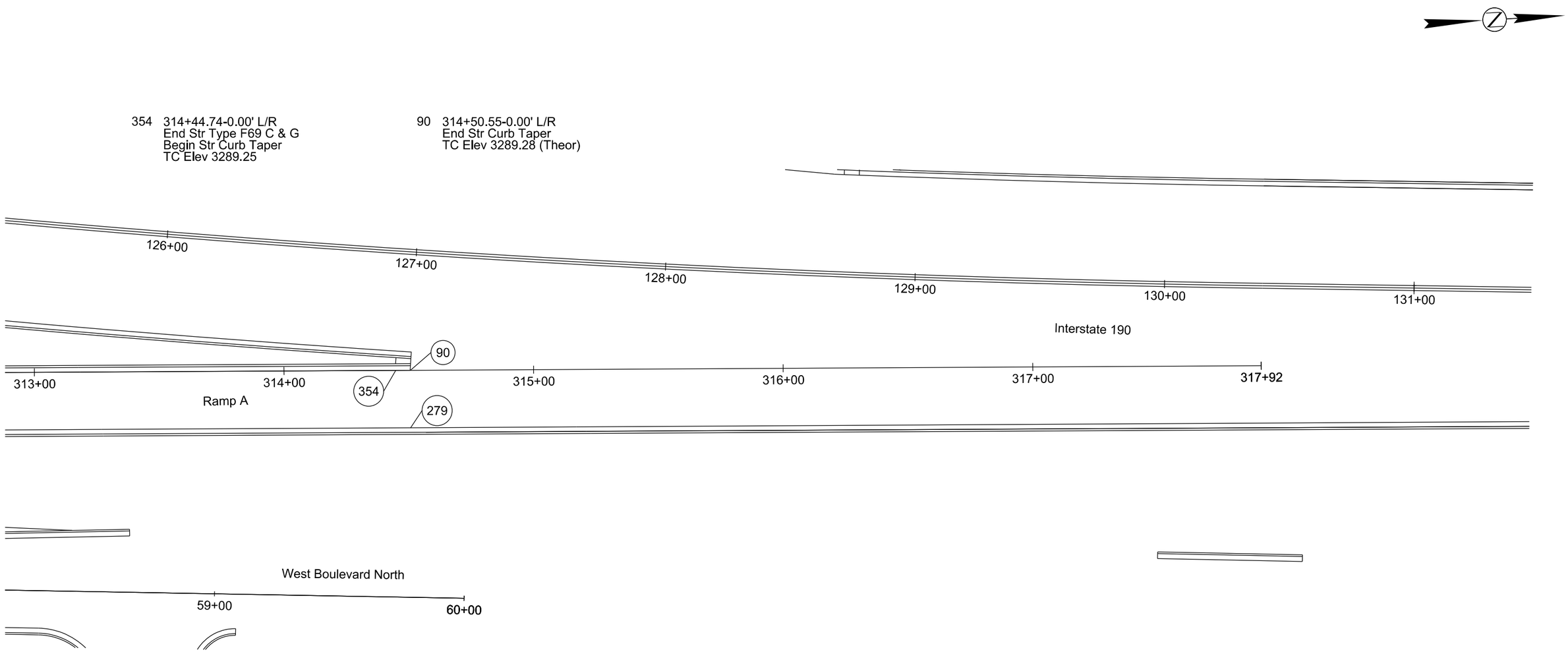

279 314+50.55-23.00' R
End Str Type F69 C & G
Begin Str Type F611 C & G
TC Elev 3289.83

REGISTERED PROFESSIONAL ENGINEER
REG. NO. 8328
JODY W. PAGE
SOUTH DAKOTA
7 MAY 2015

HDR

Plot Scale - 1:40

Plotted From - rliggett

File - ...\23+00 RampA.dgn

STATE OF SOUTH DAKOTA	PROJECT	SHEET	TOTAL SHEETS
	IM 1902(61)0	B140	B253

FOR BIDDING PURPOSES ONLY

Plotting Date: 06-11-2015

Rev. 06/11/2015 AJF

Curb & Gutter Layout
Ramp B

91 403+32.45-0.00' L/R
Begin Str Curb Taper
TC Elev 3248.86 (Theor)

355 403+38.22-0.00' L/R
End Str Curb Taper
Begin Str Type F66 C & G
TC Elev 3249.05

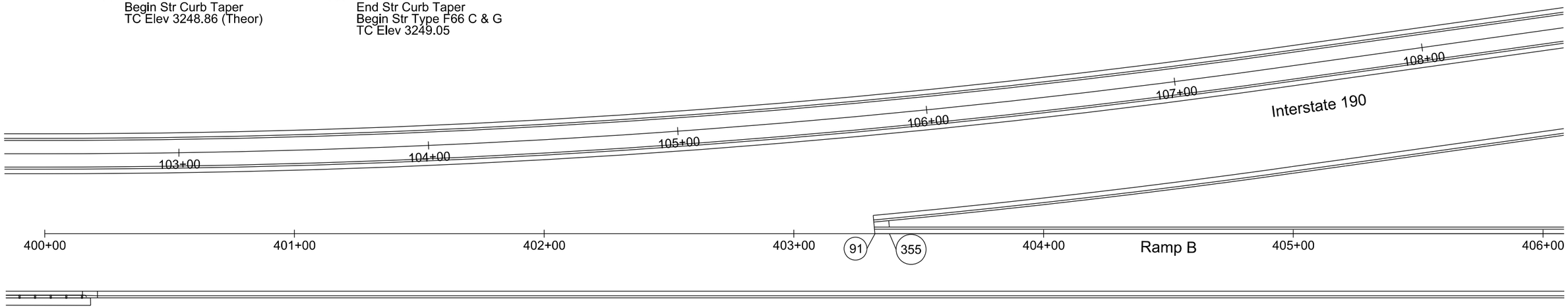

92 405+92.08-126.68' R
Begin Str Type B66 C & G
TC Elev 3236.38
(Match Existing)

93 405+92.13-77.67' R
End Str Type B66 C & G
Begin Transition to Str Type BL66 C & G
TC Elev 3239.28

310 405+98.13-77.67'R
End Str Transition to Type BL66 C & G
Begin Str Type BL66 C & G
TC Elev 3239.43

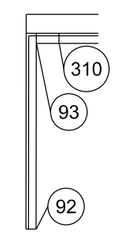

REGISTERED PROFESSIONAL ENGINEER
REG. NO. 8328
JODY W. PAGE
SOUTH DAKOTA
6-11-2015

HDR

Plot Scale - 1:40

Plotted From - rliggett

File - ...\30+00 Ramp B.dgn

STATE OF SOUTH DAKOTA	PROJECT	SHEET	TOTAL SHEETS
	IM 1902(61)0	B141	B253

FOR BIDDING PURPOSES ONLY

Plotting Date: 06-11-2015

Rev. 06/11/2015 AJF

Curb & Gutter Layout
Ramp B

94 409+24.61-0.00' L/R
End Str Type F66 C & G
Begin 192' Rad Type F66 C & G
TC Elev 3251.02

95 410+27.90-0.00' L/R
End 192' Rad Type F66 C & G
Begin 192' Rad Transition to Type B66 C & G
TC Elev 3247.62

96 410+33.90-0.00' L/R
End 192' Rad Transition to Type B66 C & G
Begin 192' Rad Type B66 C & G
TC Elev 3247.40

97 411+00.07-0.00' L/R
End 192' Rad Type B66 C & G
Begin 192' Rad Type B69 C & G
TC Elev 3246.23

98 411+44.42-0.00' L/R
End 192' Rad Type B69 C & G
Begin 5' Rad Type B69 C & G
TC Elev 3256.56

102 450+40.53-3.83' L
Begin Str Curb Taper
TC Elev 3247.29 (Theor)

357 450+46.60-3.72' L
End Str Curb Taper
Begin Str Type B66 C & G
TC Elev 3247.06

103 451+11.69-2.52' L
End Str Type B66 C & G
Begin Str Type B69 C & G
TC Elev 3244.93

104 451+35.38-4.16' L
End Str Type B69 C & G
Begin 5' Rad Type B69 C & G
TC Elev 3244.69

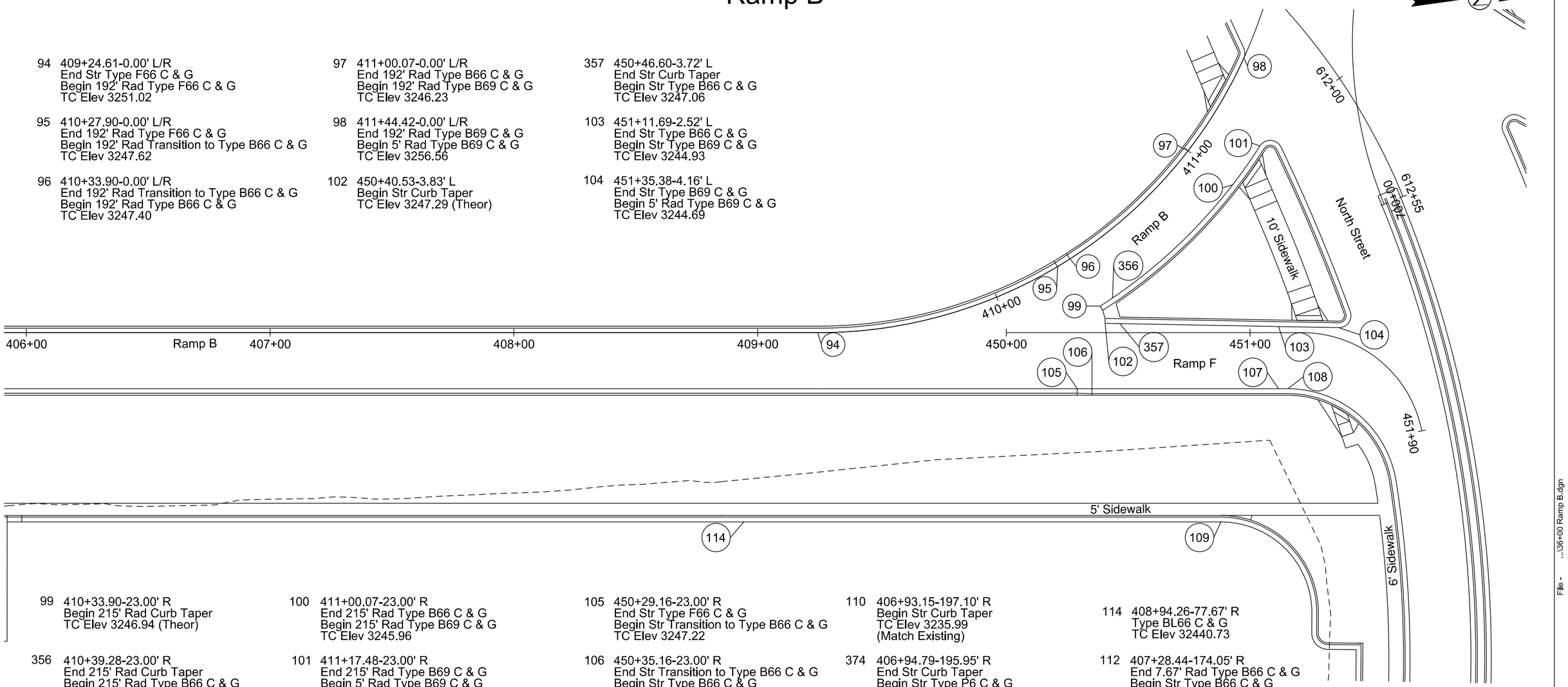

99 410+33.90-23.00' R
Begin 215' Rad Curb Taper
TC Elev 3246.94 (Theor)

356 410+39.28-23.00' R
End 215' Rad Curb Taper
Begin 215' Rad Type B66 C & G
TC Elev 3246.76

100 411+00.07-23.00' R
End 215' Rad Type B66 C & G
Begin 215' Rad Type B69 C & G
TC Elev 3245.96

101 411+17.48-23.00' R
End 215' Rad Type B69 C & G
Begin 5' Rad Type B69 C & G
TC Elev 3246.17

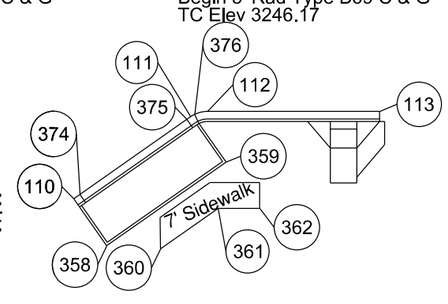

105 450+29.16-23.00' R
End Str Type F66 C & G
Begin Str Transition to Type B66 C & G
TC Elev 3247.22

106 450+35.16-23.00' R
End Str Transition to Type B66 C & G
Begin Str Type B66 C & G
TC Elev 3247.00

107 451+11.69-23.00' R
End Str Type B66 C & G
Begin Str Type B69 C & G
TC Elev 3244.53

108 451+15.49-23.00' R
End Str Type B69 C & G
Begin 45' Rad Type B69 C & G
TC Elev 3244.47

109 450+88.08-77.67' R
End Str Type BL66 C & G
Begin 37.33' Rad Type BL66 C & G
TC Elev 3239.57

110 406+93.15-197.10' R
Begin Str Curb Taper
TC Elev 3235.99
(Match Existing)

374 406+94.79-195.95' R
End Str Curb Taper
Begin Str Type P6 C & G
TC Elev 3236.02

375 407+23.03-176.15' R
End Str Type P6 C & G
Begin Str Curb Taper
TC Elev 3236.41

111 407+24.04-175.44' R
End Str Curb Taper
Begin 7.67' Rad Curb Taper
TC Elev 3236.41

376 407+25.07-174.83' R
End 7.67' Rad Curb Taper
Begin 7.67' Rad Type B66 C & G
TC Elev 3236.41

114 408+94.26-77.67' R
Type BL66 C & G
TC Elev 32440.73

112 407+28.44-174.05' R
End 7.67' Rad Type B66 C & G
Begin Str Type B66 C & G
TC Elev 3236.42

113 407+73.90-174.05' R
End Str Type B66 C & G
TC Elev 3236.85
(Match Existing)

358 407+01.86-209.52' R
Corner of Concrete Dumpster Pad
Elev 3235.61

359 407+33.39-187.42' R
Corner of Concrete Dumpster Pad
Elev 3236.00

360 407+16.07-210.31' R
Corner of 4" Sidewalk
SW Elev 3235.77

361 407+31.28-199.64' R
Corner of 4" Sidewalk
SW Elev 3236.00

362 407+42.23-199.64' R
Corner of 4" Sidewalk
SW Elev 3236.00

REGISTERED PROFESSIONAL ENGINEER
REG. NO. 8328
JODY W. PAGE
SOUTH DAKOTA
6-11-2015

Plot Scale - 1:40

Plotted From - rlisgett

File - ...\36+00 Ramp B.dgn

STATE OF SOUTH DAKOTA	PROJECT	SHEET	TOTAL SHEETS
	IM 1902(61)0	B142	B253

FOR BIDDING PURPOSES ONLY

Plotting Date: 05-07-2015

Curb & Gutter Layout
Ramp C

390 603+06.91-23.00' L
End 1817' Rad Type D46 C & G
Begin 1814.8' Rad Transition to Type P6 C & G
TC Elev 3245.49

391 603+12.99-23.00' L
End 1817' Rad Transition to Type P6 C & G
Begin 1817' Rad Type P6 C & G
TC Elev 3244.68 (Theor)

114 603+58.16-23.00' L
End 1817' Rad Type P6 C & G
Begin 1814.8' Rad Type P6 C & G
TC Elev 3247.30 (Theor)

392 604+01.72-23.73' L
End 1814.8' Rad Type P6 C & G
Begin 1814.8' Rad Transition to Type F66 C & G
TC Elev 3248.87 (Theor)

393 604+07.79-23.82' L
End 1814.8' Rad Transition to Type F66 C & G
Begin 1814.8' Rad Type F66 C & G
TC Elev 3249.19

115 605+91.91-26.90' L
End 1814.8' Rad Type F66 C & G
Begin Str Type F66 C & G
TC Elev 3252.43

116 603+43.75-0.00' L/R
Begin 1840' Rad Curb Taper
TC Elev 3247.63 (Theor)

363 603+49.51-0.00' L/R
End 1840' Rad Curb Taper
Begin 1840' Rad Type F66 C & G
TC Elev 3247.83

117 605+91.91-0.00' L/R
End 1840' Rad Type F66 C & G
Begin Str Type F66 C & G
TC Elev 3252.97

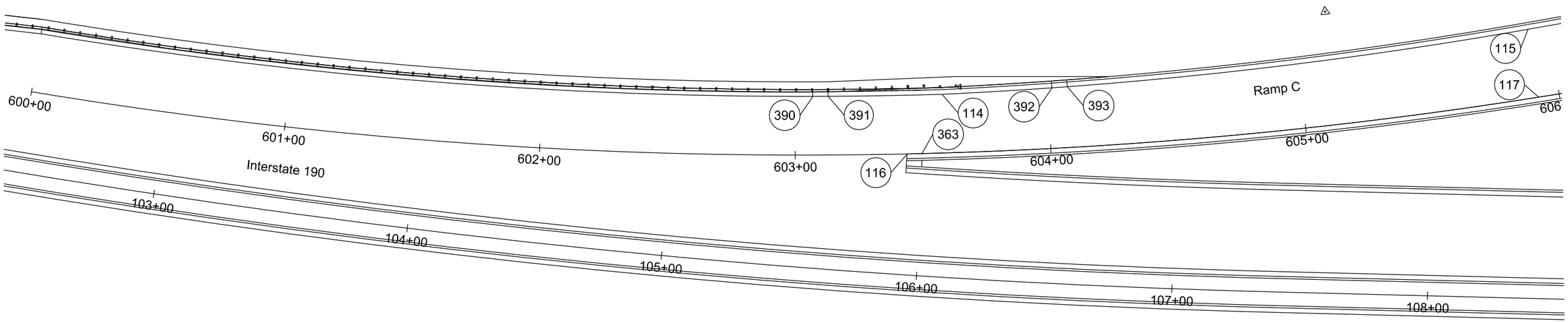

REGISTERED PROFESSIONAL ENGINEER
REG. NO. 8328
JODY W. PAGE
SOUTH DAKOTA
MAY 2015

HDR

Plot Scale - 1:40
Plotted From - rfiggett
File - ...\50+00 Ramp C.dgn

STATE OF SOUTH DAKOTA	PROJECT	SHEET	TOTAL SHEETS
	IM 1902(61)0	B143	B253

FOR BIDDING PURPOSES ONLY

Plotting Date: 05-07-2015

Curb & Gutter Layout
Ramp C and G

118 606+58.16-28.00' L
PI Str Type F66 C & G
TC Elev 3252.67

119 650+14.83-23.00' L
End Str Type F66 C & G
Begin Str Transition to Type B66 C & G
TC Elev 3251.08

120 650+20.83-23.00' L
End Str Transition to Type B66 C & G
Begin Str Type B66 C & G
TC Elev 3251.06

121 650+61.74-23.00' L
End Str Type B66 C & G
Begin 77' Rad Type B66 C & G
TC Elev 3250.22

125 609+21.92-32.00' L
Begin 432' Rad Curb Taper
TC Elev 3250.32 (Theor)

367 609+27.43-32.00' L
End 432' Rad Curb Taper
Begin 432' Rad Type B66 C & G
TC Elev 3250.21

126 610+32.25-32.00' L
End 432' Rad Type B66 C & G
Begin 432' Rad Type B69 C & G
TC Elev 3248.48

127 610+56.62-32.00' L
End 432' Rad Type B69 C & G
Begin 5' Rad Type B69 C & G
TC Elev 3248.20

128 607+58.16-0.00' L/R
End Str Type F66 C & G
Begin 400' Rad Tybe F66 C & G
TC Elev 3252.69

129 609+15.92-0.00' L/R
End 400' Rad Type F66 C & G
Begin 400' Rad Transition to Type B66 C & G
TC Elev 3249.81

130 609+21.92-0.00' L/R
End 400' Rad Transition to Type B66 C & G
Begin 400' Rad Type B66 C & G
TC Elev 3249.68

131 610+32.25-0.00' L/R
End 400' Rad Type B66 C & G
Begin 400' Rad Type B69 C & G
TC Elev 3247.90

280 610+51.29-0.00' L/R
End 400' Rad Type B69 C & G
Begin 264' Rad Type B69 C & G
TC Elev 3247.77

281 611+06.21-0.00' L/R
End 264' Rad Type B69 C & G
Begin 5' Rad Type B69 C & G
TC Elev 3247.49

REGISTERED PROFESSIONAL ENGINEER
REG. NO. 8328
JODY W. PAGE
SOUTH DAKOTA
1 MAY 2015

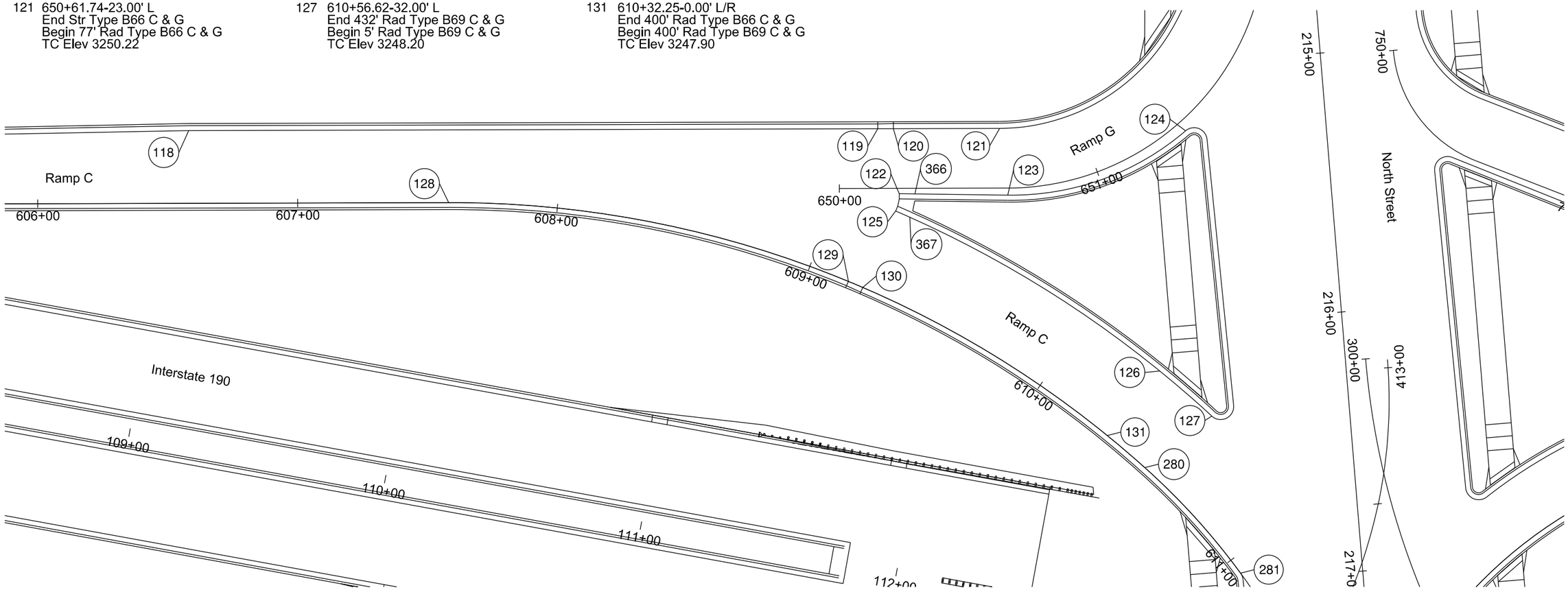

122 650+23.03-2.06' R
Begin Str Curb Taper
TC Elev 3250.46 (Theor)

366 650+29.04-2.15' R
End Curb Taper
Begin Str Type B66 C & G
TC Elev 3250.33

123 650+64.79-2.70' R
End Str Type B66 C & G
Begin 102.98' Rad Type B66 C & G
TC Elev 3249.67

124 651+36.77-3.94' R
End 103' Rad Type B66 C & G
Begin 5' Rad Type B66 C & G
TC Elev 3250.30

Plot Scale - 1:40
Plotted From - rliggett
File - ...\56+00 Ramp C.dgn

STATE OF SOUTH DAKOTA	PROJECT	SHEET	TOTAL SHEETS
	IM 1902(61)0	B144	B253

FOR BIDDING PURPOSES ONLY

Plotting Date: 05-05-2015

Curb & Gutter Layout
Ramps D and H

131 750+44.41-22.27' L
End 40' Rad Type B66 C & G
Begin Str Type B66 C & G
TC Elev 3251.55

132 752+44.30-23.00' L
End Str Type B66 C & G
Begin Str Transition to Type F66 C & G
TC Elev 3255.09

133 752+50.30-23.00' L
End Str Transition to Type F66 C & G
Begin Str Type F66 C & G
TC Elev 3255.22

134 705+35.00-23.00' L
End Str Type F66 C & G
Begin Str Type F69 C & G
TC Elev 3262.19

135 705+70.99-23.00' L
End Str Type F69 C & G
Begin Str Transition to Type D49 C & G
TC Elev 3263.81

136 705+76.99-23.00' L
End Str Transition to Type D49 C & G
Begin Str Type D49 C & G
TC Elev 3263.93

139 701+70.62-23.00' L
End 5' Rad Type B69 C & G
Begin 198' Rad Type B69 C & G
TC Elev 3248.72

140 701+93.44-23.00' L
End 198' Rad Type B69 C & G
Begin 198' Rad Type B66 C & G
TC Elev 3249.24

141 702+23.23-23.00' L
End 198' Rad Type B66 C & G
Begin 373' Rad Type B66 C & G
TC Elev 3250.08

369 703+24.71-23.00' L
End 373' Rad Type B66 C & G
Being 373' Rad Curb Taper
TC Elev 3253.63

142 703+30.30-23.00' L
End 373' Rad Curb Taper
TC Elev 3253.88 (Theor)

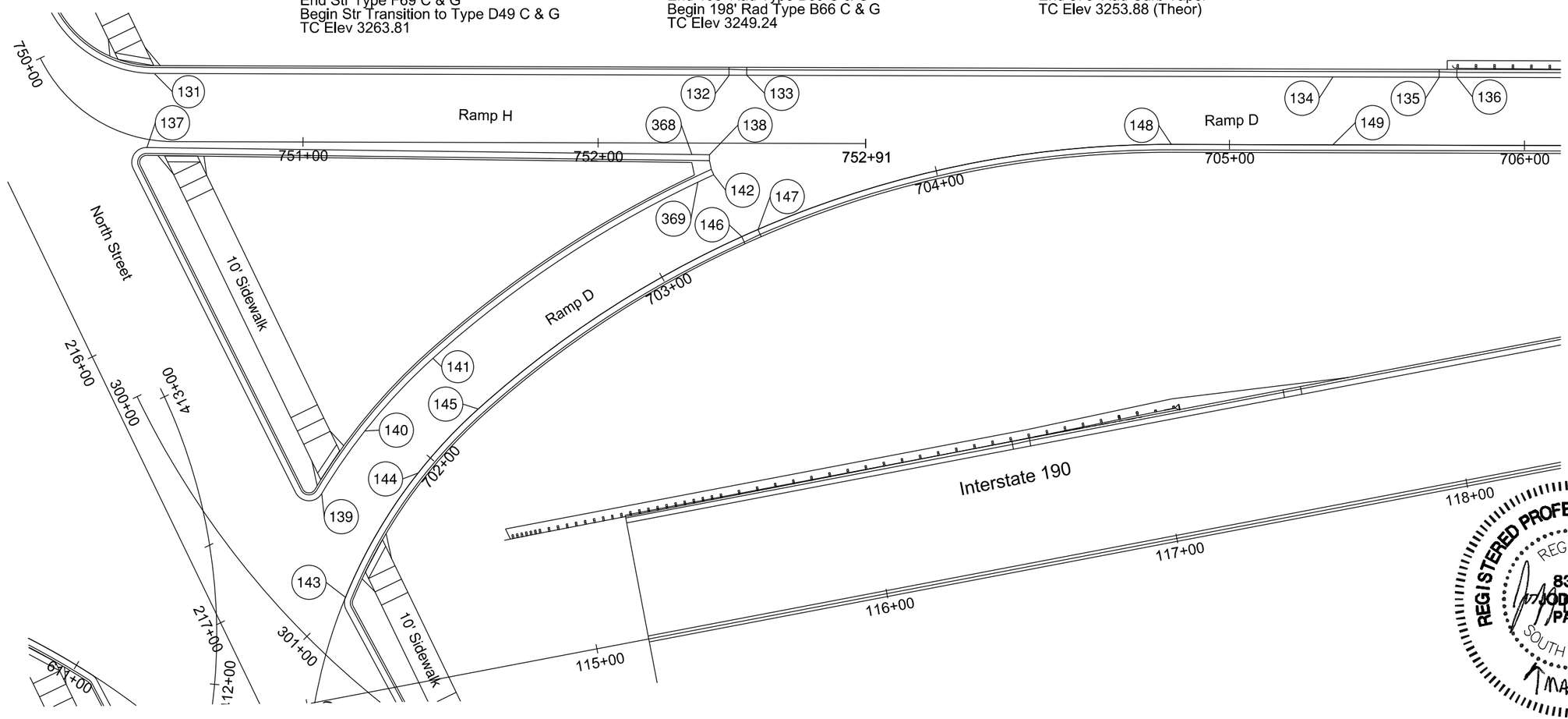

137 750+48.27-2.21' R
End 5' Rad Type B66 C & G
Begin Str Type B66 C & G
TC Elev 3250.76

368 752+31.75-3.90' R
End Str Type B66 C & G
Begin Str Curb Taper
TC Elev 3253.78

138 752+37.73-3.96' R
End Str Curb Taper
TC Elev 3254.05 (Theor)

143 701+44.54-0.00' L/R
End 5' Rad Type B69 C & G
Begin 175' Rad Type B69 C & G
TC Elev 3248.27

144 701+93.44-0.00' L/R
End 175' Rad Type B69 C & G
Begin 175' Rad Type B66 C & G
TC Elev 3248.96

145 702+23.22-0.00' L/R
End 175' Rad Type B66 C & G
Begin 350' Rad Type B66 C & G
TC Elev 3249.62

146 703+30.30-0.00' L/R
End 350' Rad Type B66 C & G
Begin 350' Rad Transition to Type F66 C & G
TC Elev 3253.42

147 703+36.30-0.00' L/R
End 350' Rad Transition to Type F66 C & G
Begin 350' Rad Type F66 C & G
TC Elev 3253.69

148 704+80.31-0.00' L/R
End 350' Rad Type F66 C & G
Begin Str Type F66 C & G
TC Elev 3260.18

149 705+35.00-0.00' L/R
End Str Type F66 C & G
Begin Str Type F69 C & G
TC Elev 3262.65

Plot Scale - 1:40

Plotted From - rfiggett

File - ...\71+00 RampD.dgn

STATE OF SOUTH DAKOTA	PROJECT	SHEET	TOTAL SHEETS
	IM 1902(61)0	B145	B253

FOR BIDDING PURPOSES ONLY

Plotting Date: 05-05-2015

Curb & Gutter Layout
Ramp D

150 707+25.41-23.00' L
End Str Type D49 C & G
Begin 2277' Rad Type D49 C & G
TC Elev 3270.62

151 710+25.34-23.00' L
End 2277' Rad Type D49 C & G
Begin 2277' Rad Type D411 C & G
TC Elev 3280.32

152 710+49.53-23.00' L
End 2277' Rad Type D411 C & G
Begin Str Type D411 C & G
TC Elev 3280.82

153 707+25.41-0.00' L/R
End Str Type F69 C & G
Begin 2300' Rad Type F69 C & G
TC Elev 3271.23

370 710+19.34-0.00' L/R
End 2300' Rad Type F69 C & G
Begin 2300' Rad Curb Taper
TC Elev 3280.78

154 710+95.04-0.00' L/R
End 2300' Rad Curb Taper
TC Elev 3280.90 (Theor)

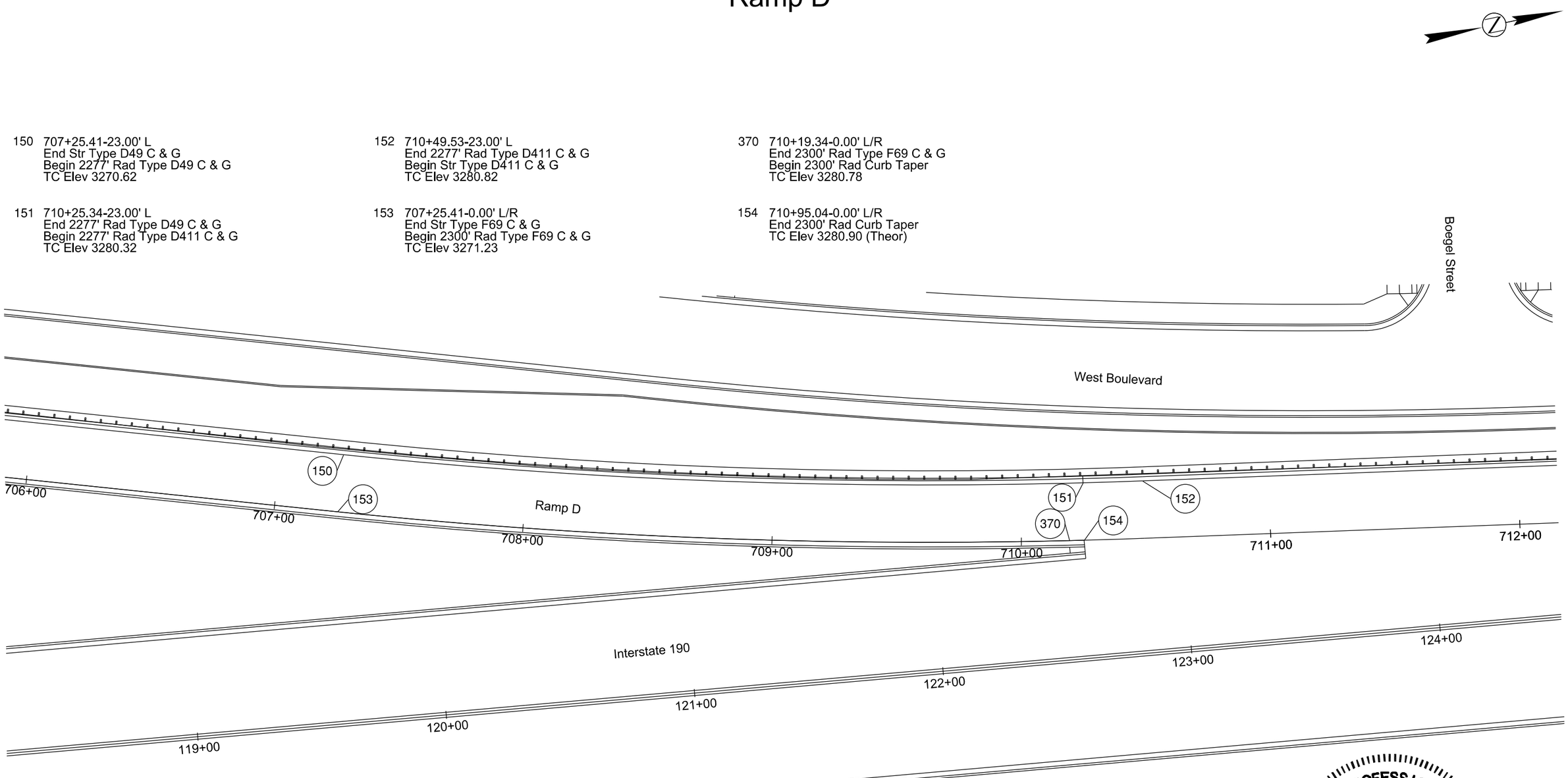

REGISTERED PROFESSIONAL ENGINEER
REG. NO. 8328
JODY W. PAGE
SOUTH DAKOTA
1 MAY 2015

HDR

Plot Scale - 1:40

Plotted From - rfiggett

File - ...\76+00 RampD.dgn

STATE OF SOUTH DAKOTA	PROJECT	SHEET	TOTAL SHEETS
	IM 1902(61)0	B146	B253

FOR BIDDING PURPOSES ONLY

Plotting Date: 05-05-2015

Curb & Gutter Layout
North Street

155 209+01.71-15.40' L
Begin Str Type B66 C & G
TC Elev 3252.11
(Match Existing)

156 209+87.98-15.40' L
PI Str Type B66 C & G
TC Elev 3255.38

157 210+53.83-16.13' L
End Str Type B66 C & G
Begin 507' Rad Type B66 C & G
TC Elev 3255.91

158 211+41.31-22.02' L
End 507' Rad Type B66 C & G
Begin 27.67' Rad Type B66 C & G
TC Elev 3258.13 (Theor)

159 212+36.28-26.48' L
End 27.67' Rad Type B66 C & G
Begin Str Type B66 C & G
TC Elev 3259.19

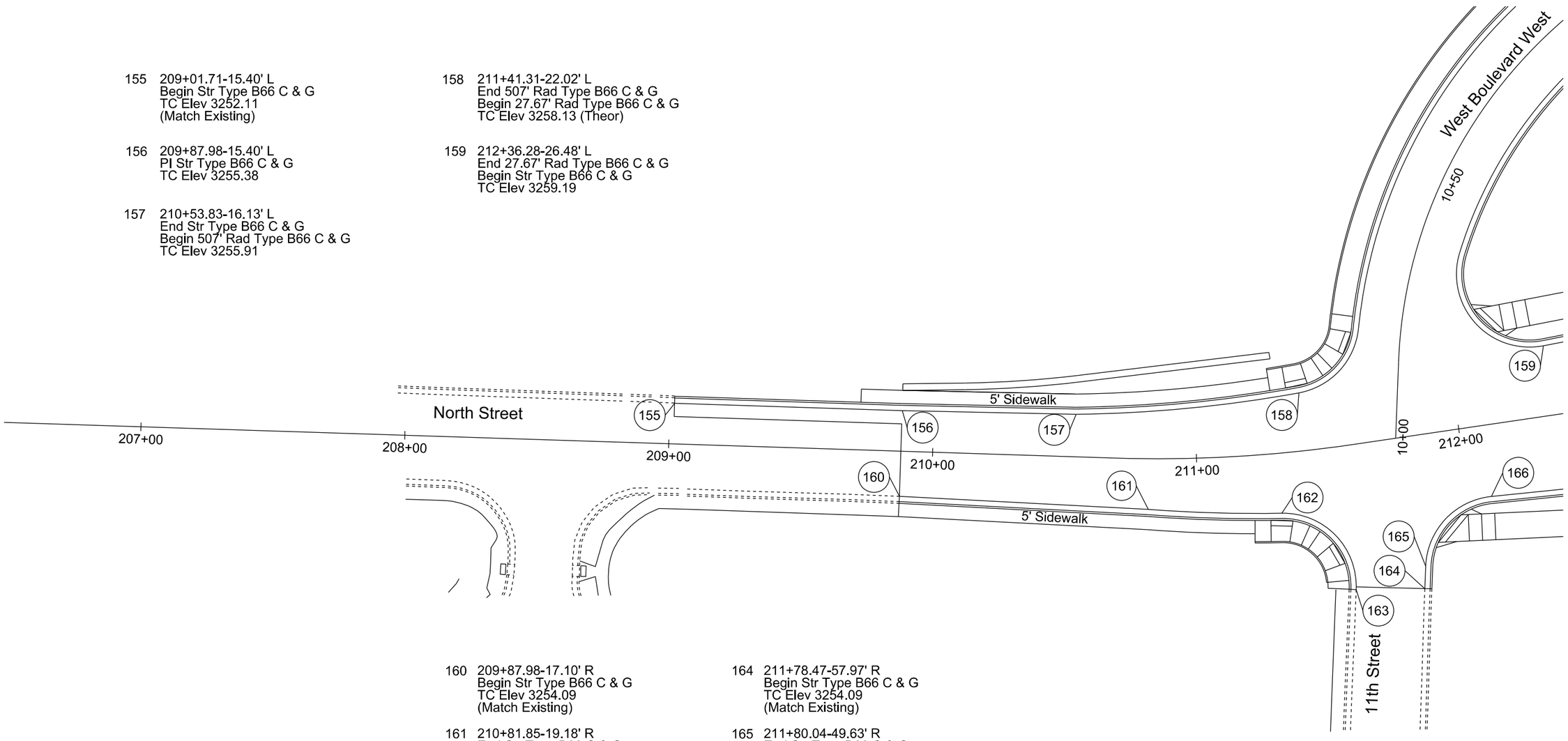

160 209+87.98-17.10' R
Begin Str Type B66 C & G
TC Elev 3254.09
(Match Existing)

161 210+81.85-19.18' R
End Str Type B66 C & G
Begin 524' Rad Type B66 C & G
TC Elev 3256.55

162 211+30.30-22.70' R
End 524' Rad Type B66 C & G
Begin 27.67' Rad Type B66 C & G
TC Elev 3257.58 (Theor)

163 211+53.36-54.60' R
End 27.67' Rad Type B66 C & G
TC Elev 3253.81
(Match Existing)

164 211+78.47-57.97' R
Begin Str Type B66 C & G
TC Elev 3254.09
(Match Existing)

165 211+80.04-49.63' R
End Str Type B66 C & G
Begin 27.67' Rad Type B66 C & G
TC Elev 3254.71

166 212+08.46-27.10' R
End 27.67' Rad Type B66 C & G
Begin Str Type B66 C & G
TC Elev 3258.16

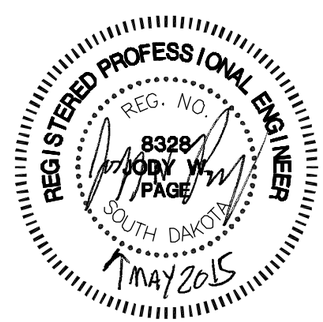

Plot Scale - 1:40

Plotted From - rliggett

File - ...\207+00 North.dgn

STATE OF SOUTH DAKOTA	PROJECT	SHEET	TOTAL SHEETS
	IM 1902(61)0	B147	B253

FOR BIDDING PURPOSES ONLY

Plotting Date: 05-07-2015

Curb & Gutter Layout
North Street

167 214+76.82-38.17' L
PI Str Type B66 C & G
TC Elev 3252.98

168 214+86.82-38.17' L
End Str Type B66 C & G
Begin 40' Rad Type B66 C & G
TC Elev 3252.59

169 215+48.76-40.23' L
End 5' Rad Type B66 C & G
Begin Str Type B66 C & G
TC Elev 3250.63

170 216+32.38-41.51' L
End Str Type B66 C & G
Begin Str Type B69 C & G
TC Elev 3249.10

171 216+71.41-42.10' L
End Str Type B69 C & G
Begin 5' Rad Type B69 C & G
TC Elev 3248.63

172 217+14.58-40.22' L
End 5' Rad Type B69 C & G
Begin Str Type B69 C & G
TC Elev 3248.10

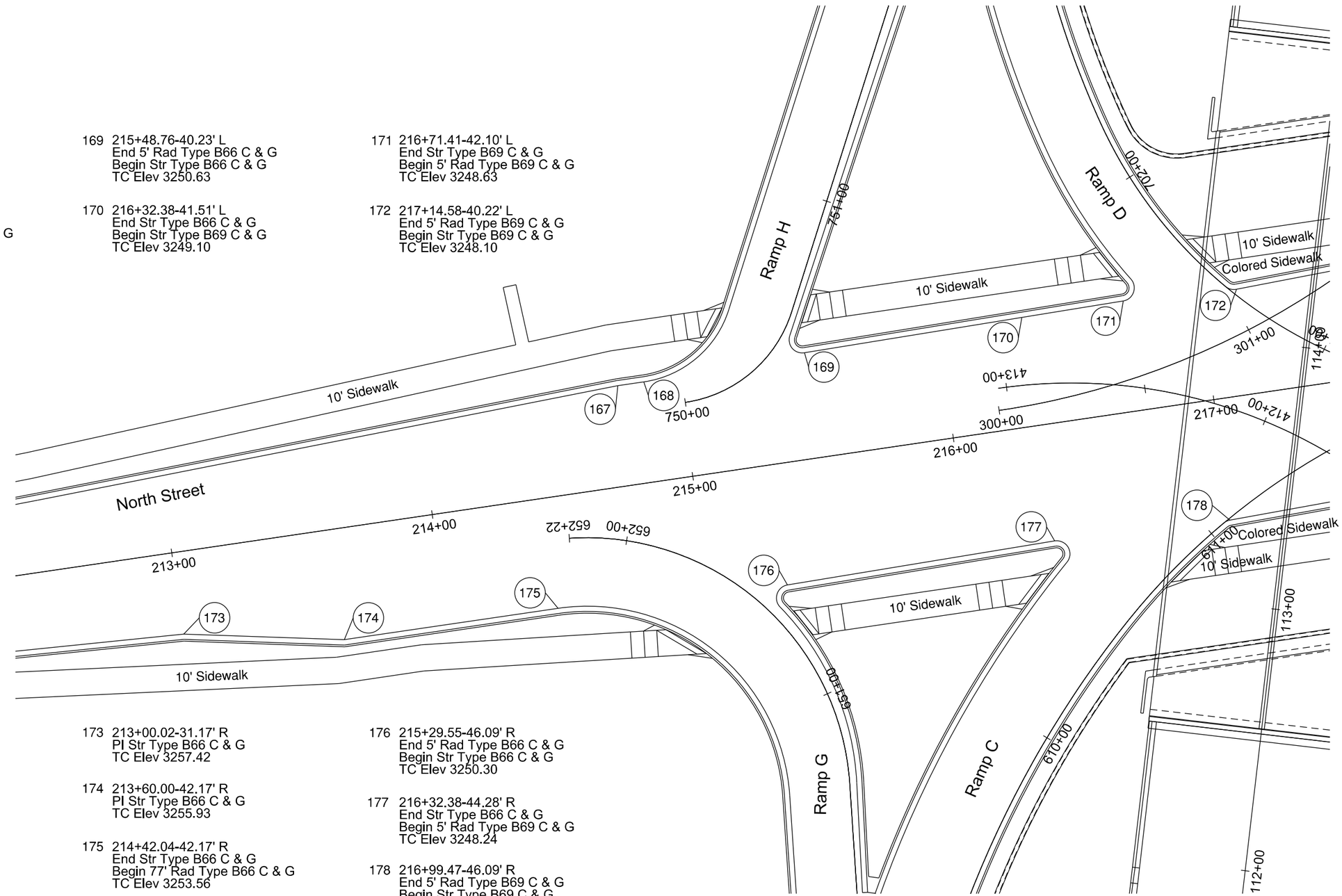

173 213+00.02-31.17' R
PI Str Type B66 C & G
TC Elev 3257.42

174 213+60.00-42.17' R
PI Str Type B66 C & G
TC Elev 3255.93

175 214+42.04-42.17' R
End Str Type B66 C & G
Begin 77' Rad Type B66 C & G
TC Elev 3253.56

176 215+29.55-46.09' R
End 5' Rad Type B66 C & G
Begin Str Type B66 C & G
TC Elev 3250.30

177 216+32.38-44.28' R
End Str Type B66 C & G
Begin 5' Rad Type B69 C & G
TC Elev 3248.24

178 216+99.47-46.09' R
End 5' Rad Type B69 C & G
Begin Str Type B69 C & G
TC Elev 3247.42

REGISTERED PROFESSIONAL ENGINEER
REG. NO. 8328
JODY W. PAGE
SOUTH DAKOTA
7 MAY 2015

Plot Scale - 1:40
Plotted From - rliggett
File - ...\212+00 North.dgn

FOR BIDDING PURPOSES ONLY

Curb & Gutter Layout
North Street

179 217+57.04-42.15' L
End Str Type B69 C & G
Begin 5' Rad Type B69 C & G
TC Elev 3247.61

180 218+30.18-40.34' L
End 5' Rad Type B69 C & G
Begin 557.8' Rad Type B69 C & G
TC Elev 3246.62

181 219+26.83-42.09' L
End 557.8' Rad Type B69 C & G
Begin 5' Rad Type B69 C & G
TC Elev 3244.92

182 219+97.24-62.58' L
Begin Str Type B66 C & G
TC Elev 3247.79
(Match Existing)

183 219+96.65-56.64' L
PI Str Type B66 C & G
TC Elev 3247.37

184 220+05.63-55.76' L
End Str Type B66 C & G
TC Elev 3247.32
(Match Existing)

185 220+00.31-38.17' L
End 77' Rad Type B69 C & G
Begin 548.17' Rad Type B69 C & G
TC Elev 3243.28

186 220+63.88-38.11' L
End 548.17' Rad Type B69 C & G
Begin 507' Rad Type B69 C & G
TC Elev 3241.85

190 221+76.90-10.05' L
End Str Type B69 C & G
Begin 532' Rad Type B69 C & G Curb Taper
TC Elev 3239.03

191 221+84.97-9.77' L
End 532' Rad Type B69 C & G Curb Taper
TC Elev 3238.86 (Theor)

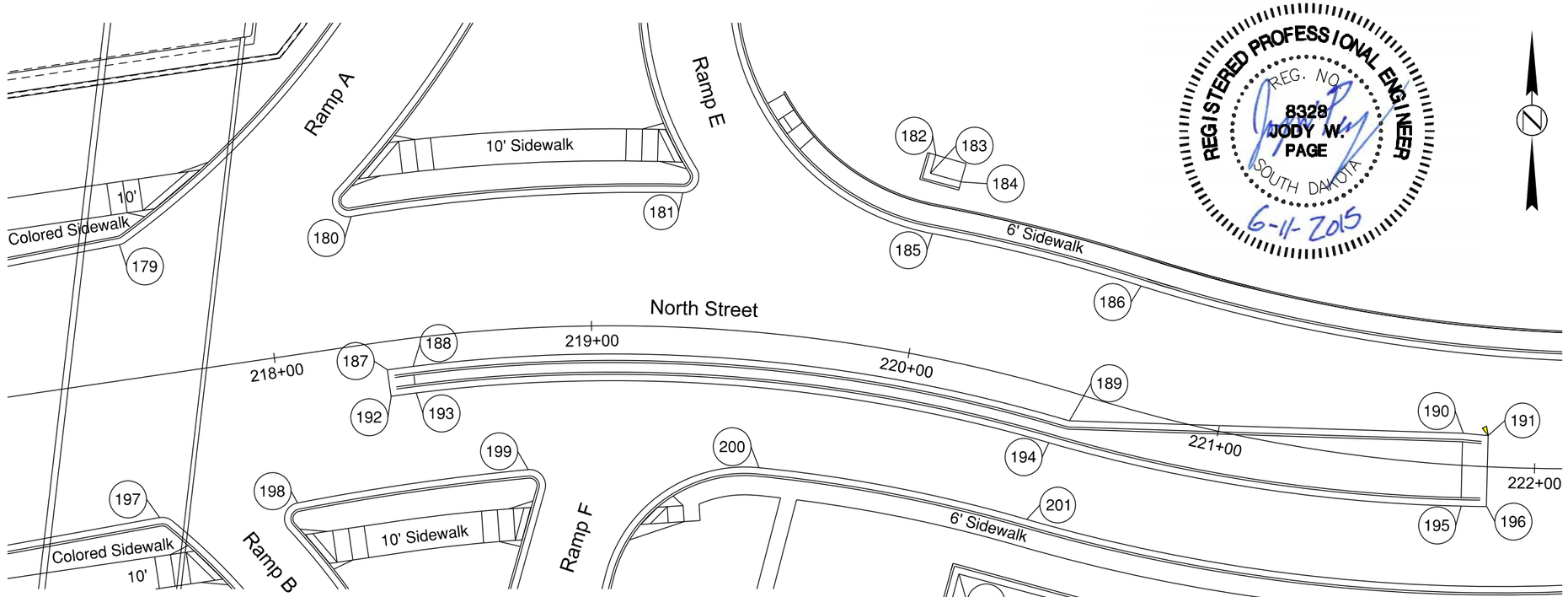

187 218+34.49-8.83' R
Begin 501.17' Rad Type B69 C & G Curb Taper
TC Elev 3246.44 (Theor)

188 218+42.70-8.83' R
End 501.17' Rad Type B69 C & G Curb Taper
Begin 501.17' Rad Type B69 C & G
TC Elev 3245.93

189 220+54.30-8.79' R
End 501.17' Rad Type B69 C & G
Begin Str Type B69 C & G
TC Elev 3241.59

192 218+34.49-17.17' R
Begin 492.83' Rad Type B69
C & G Curb Taper
TC Elev 3245.98 (Theor)

193 218+42.70-17.17' R
End 492.83' Rad Type B69 C & G Curb Taper
Begin 492.83' Rad Type B69 C & G
TC Elev 3245.85

194 220+49.90-17.17' R
End 492.83' Rad Type B69 C & G
Begin 510' Rad Type B69 C & G
TC Elev 3241.61

195 221+77.68-12.76' R
End 510' Rad Type B69 C & G
Begin 510' Rad Type B69 C & G Taper
TC Elev 3238.79

196 221+85.48-12.46' R
End 510' Rad Type B69 C & G Curb Taper
TC Elev 3238.63 (Theor)

197 217+57.06-44.21' R
End Str Type B69 C & G
Being 5' Rad Type B69 C & G
TC Elev 3246.74

198 218+00.52-45.97' R
End 5' Rad Type B69 C & G
Begin 752' Rad Type B69 C & G
TC Elev 3246.19

199 218+77.62-44.31' R
End 752' Rad Type B69 C & G
Begin 5' Rad Type B69 C & G
TC Elev 3245.04

200 219+56.61-42.17' R
End 45' Rad Type B69 C & G
Begin 467.83' Rad Type B69 C & G
TC Elev 3243.46

201 220+49.90-42.17' R
End 467.83' Rad Type B69 C & G
Beging 535' Rad Type B69 C & G
TC Elev 3241.36

202 220+14.17-82.31' R
End 37.33' Rad Type BL:66 C & G
Begin Str Type BL66 C & G
TC Elev 3239.27

203 220+23.72-82.36' R
End Str Type BL66 C & G
Begin 3.67' Rad Transition to Type B66 C & G
TC Elev 3239.37

204 220+31.82-75.86' R
End 3.67' Rad Transition to Type B66 C & G
Begin Str Type B66 C & G
TC Elev 3239.51

205 220+32.05-64.23' R
PI Str Type B66 C & G
TC Elev 3239.74

206 221+29.49-66.83' R
End Str Type B66 C & G
TC Elev 3236.96
(Match Existing)

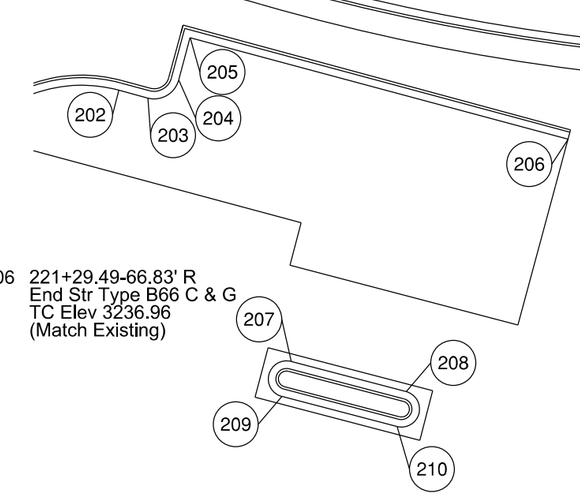

207 220+79.87-139.34' R
End 4.8' Rad Type B66 C & G
Begin Str Type B66 C & G
TC Elev 3236.06

208 221+04.51-140.15' R
End Str Type B66 C & G
Begin 4.8' Rad Type B66 C & G
TC Elev 3235.67

209 220+79.86-148.88' R
Begin 4.77' Rad Type B66 C & G
End Str Type B66 C & G
TC Elev 3236.07

210 221+04.14-149.68' R
End 4.77' Rad Type B66 C & G
Begin Str Type B66 C & G
TC Elev 3235.61

Plot Scale - 1:40
Plotted From - rliggett
File - ...\217+00 North.dgn

STATE OF SOUTH DAKOTA	PROJECT	SHEET	TOTAL SHEETS
	IM 1902(61)0	B149	B253

FOR BIDDING PURPOSES ONLY

Plotting Date: 06-05-2015 Rev. 06/05/2015 AJF

Curb & Gutter Layout
North Street

210 224+11.48-25.16' L
End 507' Rad Type B69 C & G
Begin Str Type B69 C & G
TC Elev 3238.01

211 224+37.21-25.00' L
End Str Type B69 C & G
Begin 27.67' Rad Fillet
TC Elev 3238.30 (Theor)

212 224+64.87-25.00' L
Fillet Corner
TP Elev 3237.69

213 224+64.87-53.08' L
End 27.67' Rad Fillet
TC Elev 3240.65
(Match Existing)

214 222+25.35-35.86' R
End 535' Rad Type B69 C & G
Begin 32.67' Rad Fillet
TC Elev 3237.68

215 222+56.35-34.56' R
Fillet Corner
TP Elev 3236.88

216 222+93.23-32.93' R
Fillet Corner
TP Elev 3236.58

217 223+18.15-31.89' R
End 32.67' Rad Fillet
Begin 535' Rad Type B69 C & G
TC Elev 3236.80

218 223+82.87-28.97' R
End 535' Rad Type B69 C & G
Begin Str Type B69 C & G
TC Elev 3236.71

219 224+39.08-26.48' R
End Str Type B69 C & G
Begin 27.67' Rad Fillet
TC Elev 3237.29 (Theor)

220 224+66.64-25.25' R
Fillet Corner
TP Elev 3237.77

221 224+67.96-55.00' R
End 27.67' Rad Fillet
TC Elev 3237.95
(Match Existing)

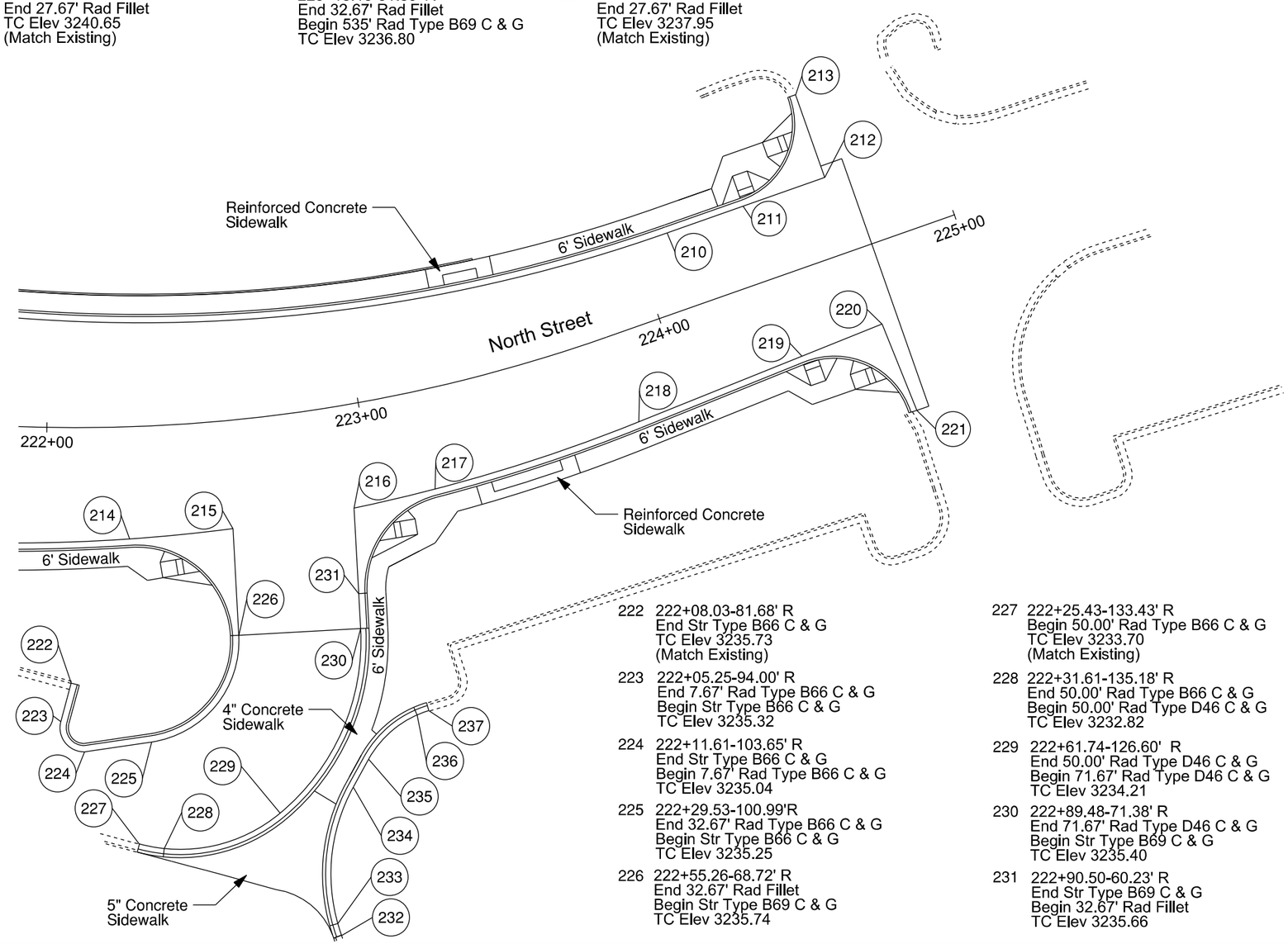

222 222+08.03-81.68' R
End Str Type B66 C & G
TC Elev 3235.73
(Match Existing)

223 222+05.25-94.00' R
End 7.67' Rad Type B66 C & G
Begin Str Type B66 C & G
TC Elev 3235.32

224 222+11.61-103.65' R
End Str Type B66 C & G
Begin 7.67' Rad Type B66 C & G
TC Elev 3235.04

225 222+29.53-100.99'R
End 32.67' Rad Type B66 C & G
Begin Str Type B66 C & G
TC Elev 3235.25

226 222+55.26-68.72' R
End 32.67' Rad Fillet
Begin Str Type B69 C & G
TC Elev 3235.74

227 222+25.43-133.43' R
Begin 50.00' Rad Type B66 C & G
TC Elev 3233.70
(Match Existing)

228 222+31.61-135.18' R
End 50.00' Rad Type B66 C & G
Begin 50.00' Rad Type D46 C & G
TC Elev 3232.82

229 222+61.74-126.60' R
End 50.00' Rad Type D46 C & G
Begin 71.67' Rad Type D46 C & G
TC Elev 3234.21

230 222+89.48-71.38' R
End 71.67' Rad Type D46 C & G
Begin Str Type B69 C & G
TC Elev 3235.40

231 222+90.50-60.23' R
End Str Type B69 C & G
Begin 32.67' Rad Fillet
TC Elev 3235.66

232 222+73.43-167.60' R
Begin 57.67' Rad Type BL66 C & G
TC Elev 3233.25
(Match Existing)

233 222+72.87-163.67' R
End 57.67' Rad Type BL66 C & G
Begin 57.67' Rad Type DL46 C &G
TC Elev 3233.37

234 222+81.21-121.16'R
End 57.67' Rad Type DL46 C & G
Begin Str Type DL46 C & G
TC Elev 3234.80

235 222+86.23-113.03' R
End Str Type DL46 C & G
Begin 32.67' Rad Type DL46 C&G
TC Elev 3235.11

236 223+00.76-101.60' R
End 32.67' Rad Type DL46 C & G
Begin 32.67' Rad Type B66 C&G
TC Elev 3235.82

237 223+04.04-100.92' R
End 37.67' Rad Type B66 C&G
TC Elev 3235.72
(Match Existing)

REGISTERED PROFESSIONAL ENGINEER
REG. NO. 8326
JODY W. PAGE
SOUTH DAKOTA
5 JUN 15

HDR

Plot Scale - 1:40
Plotted From - afageme
File - ...\222+00 North.dgn

STATE OF SOUTH DAKOTA	PROJECT	SHEET	TOTAL SHEETS
	IM 1902(61)0	B150	B253

FOR BIDDING PURPOSES ONLY

Plotting Date: 05-05-2015

Curb & Gutter Layout
West Boulevard

231 10+40.07-16.00' L
End 27.67' Rad Type B66 C & G
Begin 196' Rad Type B66 C & G
TC Elev 3259.13 (Theor)

232 12+06.58-16.00' L
End 196' Rad Type B66 C & G
Begin Str Type B66 C & G
TC Elev 3265.50

233 13+10.95-16.00' L
End Str Type B66 C & G
Begin 494' Rad Type B66 C & G
TC Elev 3267.43

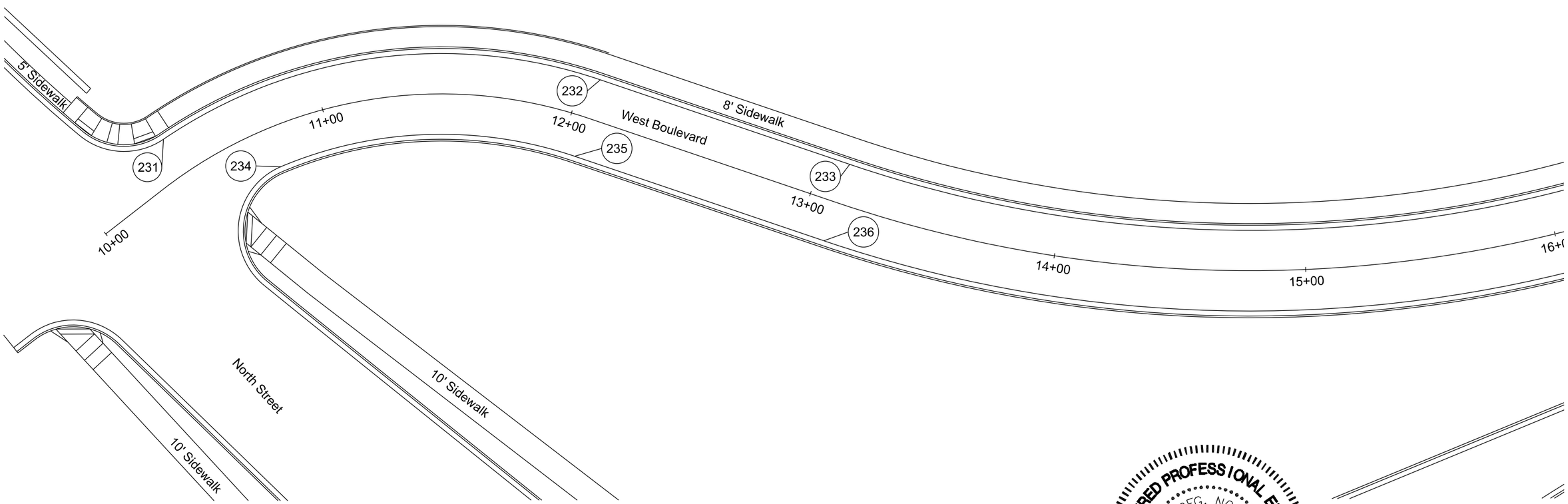

234 10+75.88-16.00' R
End 27.67' Rad Type B66 C & G
Begin 164' Rad Type B66 C & G
TC Elev 3259.76

235 12+06.58-16.00' R
End 164' Rad Type B66 C & G
Begin Str Type B66 C & G
TC Elev 3264.86

236 13+10.95-16.00' R
End Str Type B66 C & G
Begin 526' Rad Type B66 C & G
TC Elev 3266.80

REGISTERED PROFESSIONAL ENGINEER
REG. NO. 8328
JODY W. PAGE
SOUTH DAKOTA
MAY 2015

HDR

Plot Scale - 1:40
Plotted From - rliggett
File - ...\10+00_west.dgn

Curb & Gutter Layout
West Boulevard

237 16+77.66-16.00' L
End 494' Rad Type B66 C & G
Begin Str Type B66 C & G
TC Elev 3256.89

238 16+84.90-16.00' L
End Str Type B66 C & G
Begin Str Type P6 C & G
TC Elev 3256.88 (Theor)

239 17+04.90-16.00' L
End Str Type P6 C & G
Begin Str Type B66 C & G
TC Elev 3256.90 (Theor)

240 17+45.23-16.00' L
End Str Type B66 C & G
Begin 27.67' Rad Type B66 C & G
TC Elev 3257.23

241 30+43.59-16.00' L
End 27.67' Rad Type B66 C & G
Begin 116' Rad Type B66 C & G
TC Elev 3257.71

242 31+12.43-16.00' L
End 116' Rad Type B66 C & G
Begin Str Type B66 C & G
TC Elev 3260.81

243 31+13.00-16.00' L
End Type B66 C & G
Begin Type P6 C & G
TC Elev 3260.83 (Theor)

244 31+33.00-16.00' L
End Type P6 C & G
Begin Type B66 C & G
TC Elev 3261.76 (Theor)

245 31+65.00-16.00' L
End Str Type B66 C & G
TC Elev 3262.67
(Match Existing)

246 31+65.00-16.00' R
Begin Str Type B66 C & G
TC Elev 3262.77
(Match Existing)

247 31+30.89-16.00' R
End Type B66 C & G
Begin Type P6 C & G
TC Elev 3261.67 (Theor)

248 31+12.43-16.00' R
End Str Type P6 C & G
Begin 84' Rad Type P6 C & G
TC Elev 3260.79

249 31+10.89-16.00' R
End 84' Rad Type P6 C & G
Begin 84' Rad Type B66 C & G
TC Elev 3260.72 (Theor)

250 30+43.89-16.00' R
End 84' Rad Type B66 C & G
Begin 27.67' Rad Type B66 C & G
TC Elev 3257.73

251 18+32.57-16.00' L
End 27.67' Rad Type B66 C & G
Begin Str Type B66 C & G
TC Elev 3259.25

252 19+88.63-16.00' L
End Str Type B66 C & G
Begin 2484' Rad Type P6 C & G
TC Elev 3264.26 (Theor)

253 20+08.77-16.00' L
End 2484' Rad Type P6 C & G
Begin 2484' Rad Type B66 C & G
TC Elev 3264.90 (Theor)

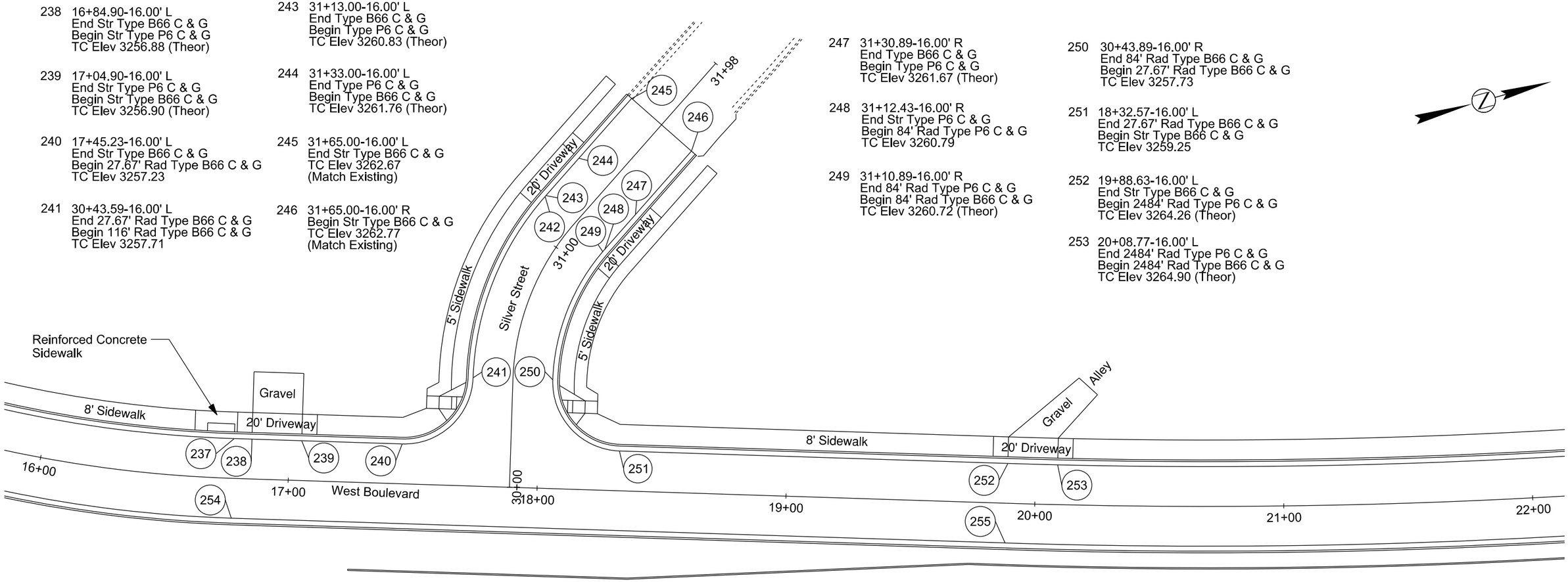

254 16+77.66-16.00' R
End 526' Rad Type B66 C & G
Begin Str Type B66 C & G
TC Elev 3256.89

255 19+88.63-16.00' R
End Str Type B66 C & G
Begin 2516' Rad Type B66 C & G
TC Elev 3264.26

REGISTERED PROFESSIONAL ENGINEER
REG. NO. 8328
JODY W. PAGE
SOUTH DAKOTA
21 MAY 15

STATE OF SOUTH DAKOTA	PROJECT	SHEET	TOTAL SHEETS
	IM 1902(61)0	B152	B253

FOR BIDDING PURPOSES ONLY

Plotting Date: 05-05-2015

Curb & Gutter Layout
West Boulevard

252 22+69.39-16.00' L
End 2484' Rad Type B66 C & G
Begin 27.67' Rad Type B66 C & G
TC Elev 3273.27

253 40+50.79-14.52' L
End 27.67' Rad Type B66 C & G
Begin 86' Rad Type B66 C & G
TC Elev 3272.92

372 41+50.00-14.00' L
End Str Type B66 C & G
TC Elev 3266.07
(Match Existing)

258 26+70.25-16.00' L
End 2484' Rad Type B66 C & G
Begin Str Type B66 C & G
TC Elev 3286.14

254 41+09.84-14.00' L
End 86' Rad Type B66 C & G
Begin Str Type B66 C & G
TC Elev 3267.50

257 23+54.95-16.00' L
End 27.67' Rad Type B66 C & G
Begin 2484' Rad Type B66 C & G
TC Elev 3276.02

259 26+75.18-15.61' L
End Str Type B66 C & G
TC Elev 3286.31
(Match Existing)

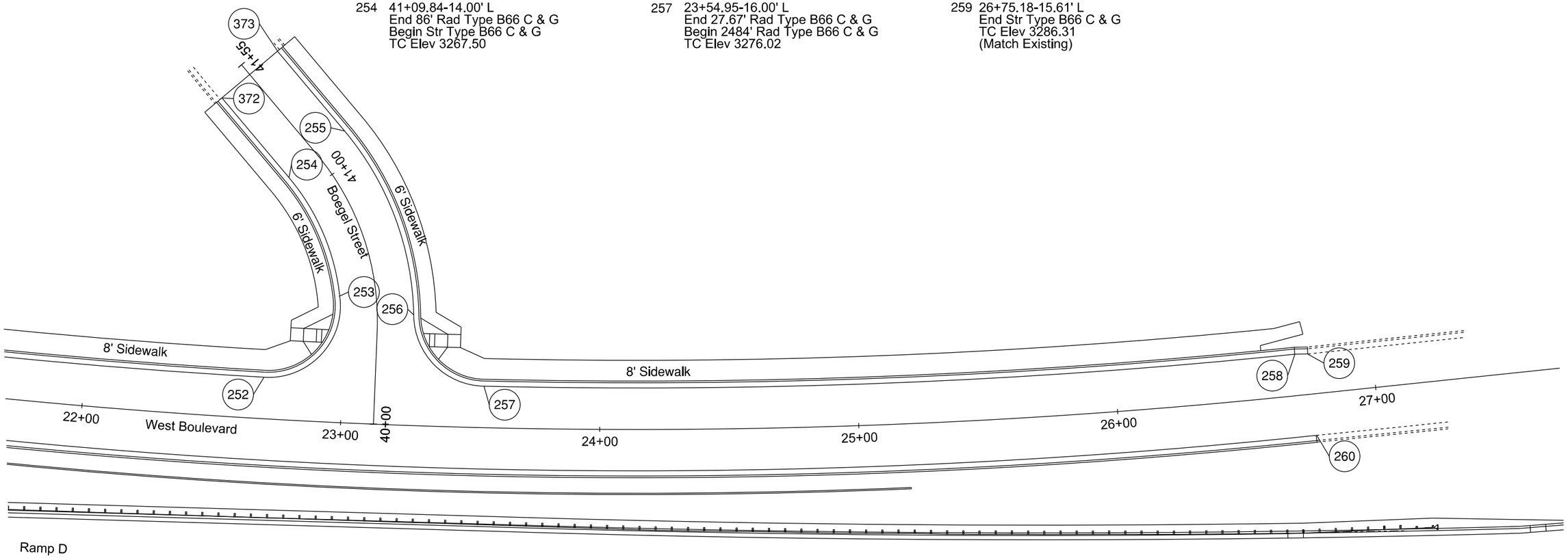

373 41+50.00-14.00' R
Begin Str Type B66 C & G
TC Elev 3266.07
(Match Existing)

255 41+09.84-14.00' R
End Str Type B66 C & G
Begin 114' Rad Type B66 C & G
TC Elev 3267.40

256 40+42.05-14.00' R
End 114' Rad Type B66 C & G
Begin 27.67' Rad Type B66 C & G
TC Elev 3273.35

260 26+75.39-16.00' R
End 2516' Rad Type B66 C & G
TC Elev 3285.47
(Match Existing)

REGISTERED PROFESSIONAL ENGINEER
REG. NO. 8328
JODY W. PAGE
SOUTH DAKOTA
7 MAY 2015

HDR

Plot Scale - 1:40

Plotted From - rliggett

File - ...\22+00_West.dgn

STATE OF SOUTH DAKOTA	PROJECT	SHEET	TOTAL SHEETS
	IM 1902(61)0	B153	B253

FOR BIDDING PURPOSES ONLY

Plotting Date: 05-22-2015

Rev. 05/21/2015 AJF

Curb & Gutter Layout
West Boulevard North

261 50+24.42-15.00' L
Begin Str Type B66 C & G
TC Elev 3285.07
(Match Existing)

262 50+30.42-15.00' L
End Str Type B66 C & G
Begin Str Type P6 C & G
TC Elev 3284.92 (Theor)

263 50+41.42-15.00' L
End Str Type P6 C & G
Begin Str Type B66 C & G
TC Elev 3284.73 (Theor)

264 50+48.92-15.00' L
End Str Type B66 C & G
Begin 57.5' Rad Type B66 C & G
TC Elev 3284.67

265 51+08.71-15.00' L
End 57.5' Rad Type B66 C & G
Begin Str Type B66 C & G
TC Elev 3286.12

297 61+07.00-11.30' L
Begin Str Type P6 C & G
TC Elev 3297.49
(Match Existing)

314 60+75.87-11.30' L
End Str Type P6 C & G
Begin Str Type B66 C & G
TC Elev 3298.24

272 60+71.68-11.30' L
PI Str Type B66 C & G
TC Elev 3298.14

273 60+39.75-14.68' L
End Str Type B66 C & G
Begin 27.67' Rad Type B66 C & G
TC Elev 3297.22

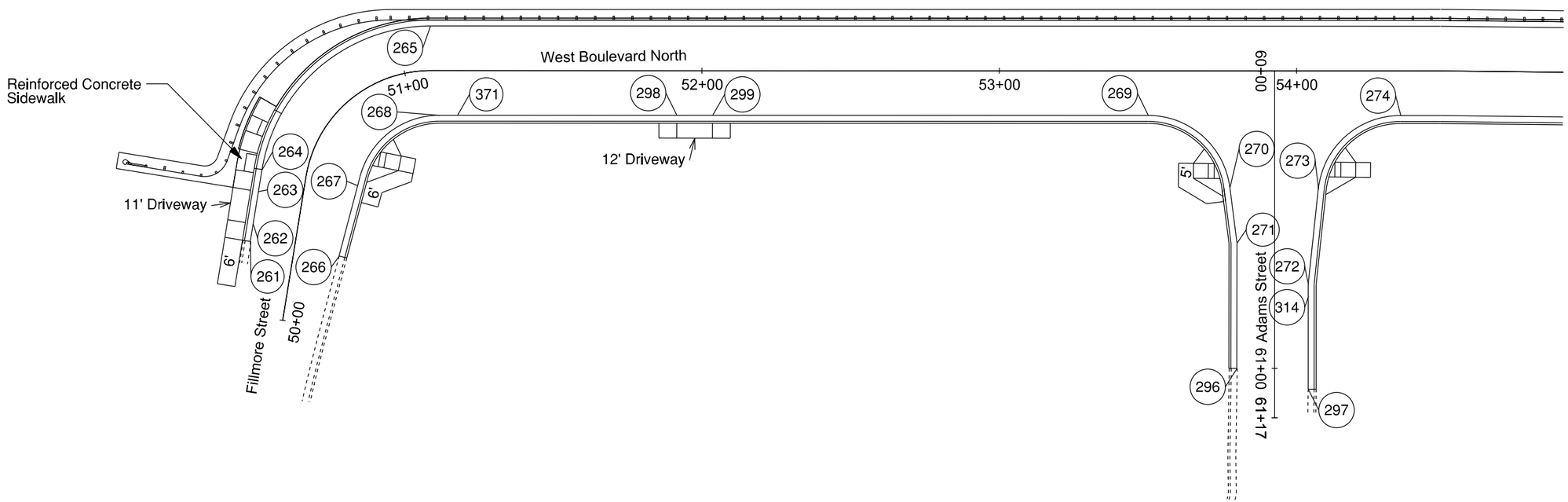

266 50+24.42-15.25' R
Begin Str Type BL66 C & G
TC Elev 3285.67
(Match Existing)

267 50+48.81-17.60' R
End Str Type BL66 C & G
Begin 27.67' Rad Type BL66 C & G
TC Elev 3285.32

268 51+11.77-15.00' R
End 27.67' Rad Type BL66 C & G
Begin Str Transition to Type B66 C & G
TC Elev 3286.87

371 51+17.77-15.00' R
End Str Transition to Type B66 C & G
Begin Str Type B66 C & G
TC Elev 3287.22

298 51+91.55-15.00' R
End Str Type B66 C & G
Begin Str Type P6 C & G
TC Elev 3292.39 (Theor)

299 52+03.55-15.00' R
End Str Type P6 C & G
Begin Str Type B66 C & G
TC Elev 3293.04 (Theor)

269 53+50.11-15.00' R
End Str Type B66 C & G
Begin 27.67' Rad Type B66 C & G
TC Elev 3295.87

270 60+39.16-15.09' R
End 27.67' Rad Type B66 C & G
Begin Str Type B66 C & G
TC Elev 3297.20

271 60+57.84-12.70' R
PI Str Type B66 C & G
TC Elev 3297.62

296 61+00.00-12.70' R
End Str Type B66 C & G
TC Elev 3296.72
(Match Existing)

274 54+35.03-15.00' R
End 27.67' Rad Type B66 C & G
Begin Str Type B66 C & G
TC Elev 3296.31

REGISTERED PROFESSIONAL ENGINEER
REG. NO. 8328
JODY W. PAGE
SOUTH DAKOTA
21 MAY 15

HDR

Plot Scale - 1:40

Plotted From - afageme

File - ...\19+00_WestN.dgn

STATE OF SOUTH DAKOTA	PROJECT	SHEET	TOTAL SHEETS
	IM 1902(61)0	B154	B253

FOR BIDDING PURPOSES ONLY

Plotting Date: 05-05-2015

Curb & Gutter Layout
West Boulevard North

275 56+66.92-15.00' L
PI Str Type B66 C & G
TC Elev 3296.89

276 58+64.75-22.56' L
End Transition to Type B66 C & G
TC Elev 3294.65
(Match Existing)

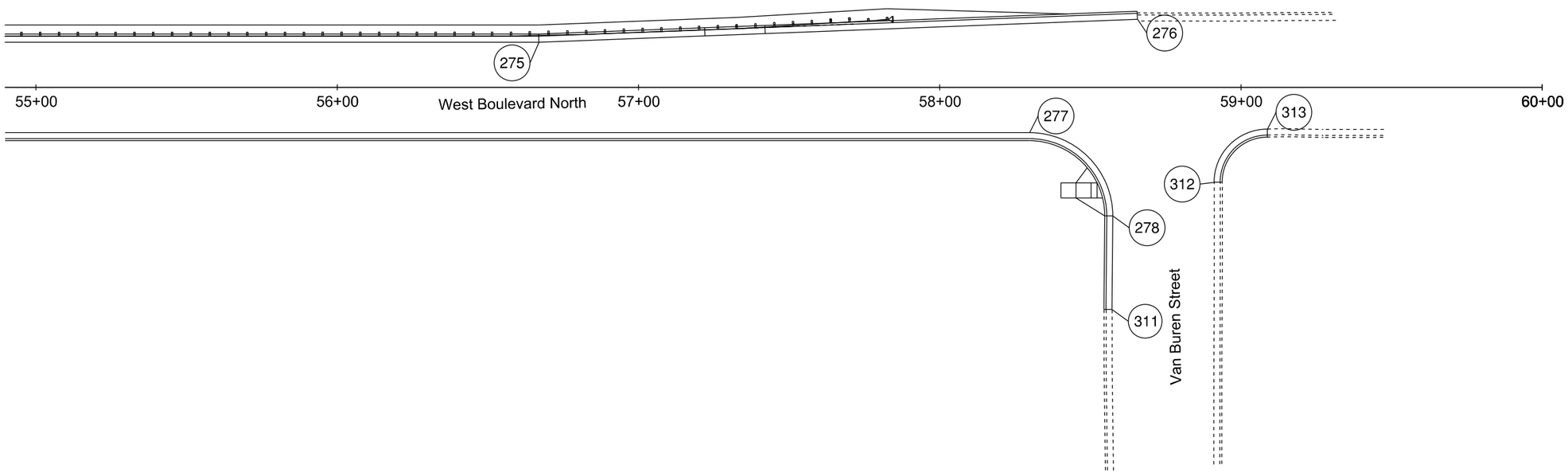

277 58+29.77-15.00' R
End Str Type B66 C & G
Begin 27.67' Rad Type B66 C & G
TC Elev 3298.19

278 58+57.44-42.62' R
End 27.67' Rad Type B66 C & G
Begin Str Type B66 c & G
TC Elev 3297.88

311 58+57.16-73.62' R
End Str Type B66 C & G
TC Elev 3299.85
(Match Existing)

312 58+91.04-31.45' R
Begin 17.67' Rad Type B66 C & G
TC Elev 3297.02
(Match Existing)

313 59+08.72-13.79' R
End 17.67' Rad Type B66 C & G
TC Elev 3296.07
(Match Existing)

REGISTERED PROFESSIONAL ENGINEER
REG. NO. 8328
JODY W. PAGE
SOUTH DAKOTA
7 MAY 2015

HDR

Plot Scale - 1:40

Plotted From - rliggett

File - ...\24+00_WestN.dgn

STATE OF SOUTH DAKOTA	PROJECT	SHEET	TOTAL SHEETS
	IM 1902(61)0	B155	B253

Plotting Date: 05-05-2015

Curb Ramp Details

FOR BIDDING PURPOSES ONLY

Ramp B

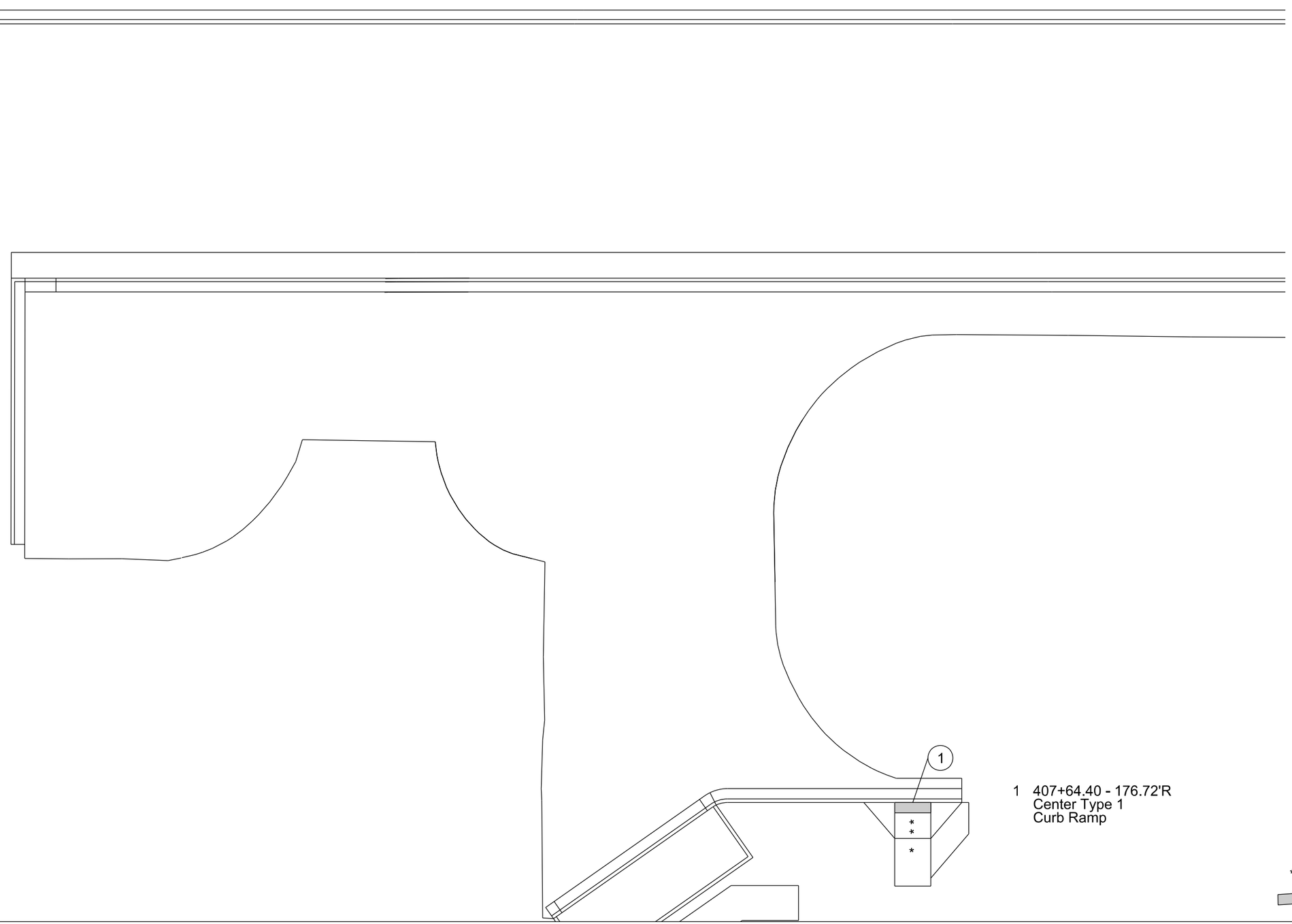

1 407+64.40 - 176.72'R
Center Type 1
Curb Ramp

REGISTERED PROFESSIONAL ENGINEER
REG. NO. 8328
JODY W. PAGE
SOUTH DAKOTA
1 MAY 2015

Legend
* Turning Space with a 2% maximum slope
* * Curb ramp with 8.3% maximum slope and 2% cross slope
Detectable Warning

Plot Scale - 1:20
Plotted From - rliggett
File - ...\36 Ramp B HC

STATE OF SOUTH DAKOTA	PROJECT	SHEET	TOTAL SHEETS
	IM 1902(61)0	B156	B253

Plotting Date: 05-05-2015

FOR BIDDING PURPOSES ONLY

Curb Ramp Details

1 211+40.52 - 24.64'L
Center Type 3
Curb Ramp

2 211+63.05 - 37.89'L
Center Type 3
Curb Ramp

3 212+16.05 - 39.10'L
Center Type 2
Curb Ramp

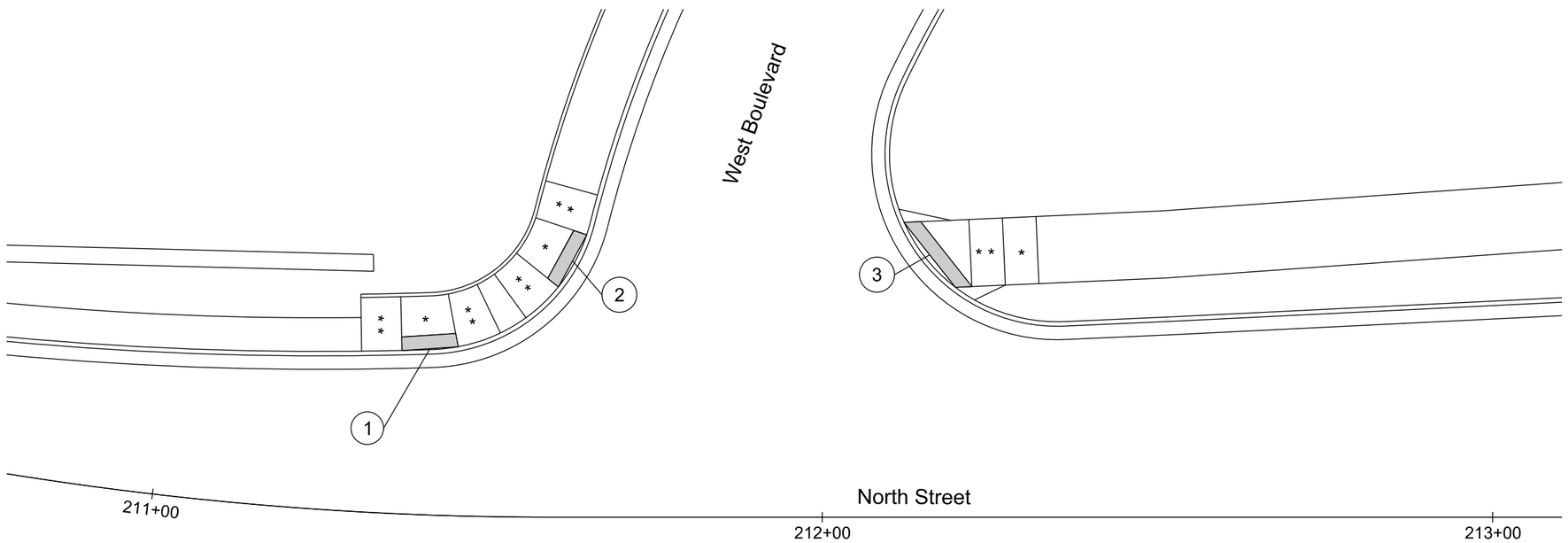

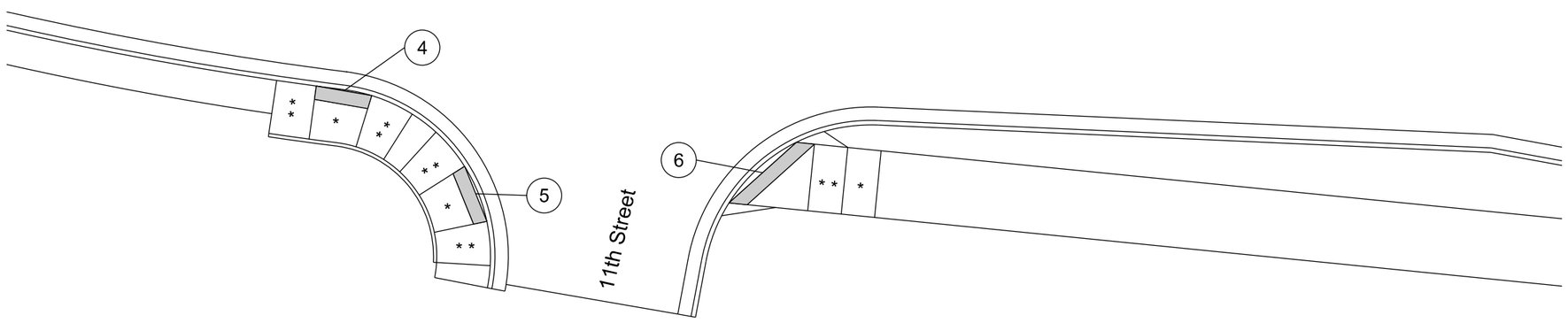

4 211+30.34 - 25.38'R
Center Type 3
Curb Ramp

5 211+49.15 - 40.13'R
Center Type 3
Curb Ramp

6 211+91.14 - 36.86'R
Center Type 2
Curb Ramp

REGISTERED PROFESSIONAL ENGINEER
REG. NO. 8328
JODY W. PAGE
SOUTH DAKOTA
7 MAY 2015

Legend
* Turning Space with a 2% maximum slope
* * Curb ramp with 8.3% maximum slope and 2% cross slope
Detectable Warning

HDR

Plot Scale - 1:20

Plotted From - rfiggett

File - ...\211 North HC

STATE OF SOUTH DAKOTA	PROJECT	SHEET	TOTAL SHEETS
	IM 1902(61)0	B157	B253

Plotting Date: 05-05-2015

FOR BIDDING PURPOSES ONLY

Curb Ramp Details

1 215+16.71 - 56.67'L
Center Type 2
Curb Ramp

2 215+51.85 - 56.67'L
Center Type 2
Curb Ramp

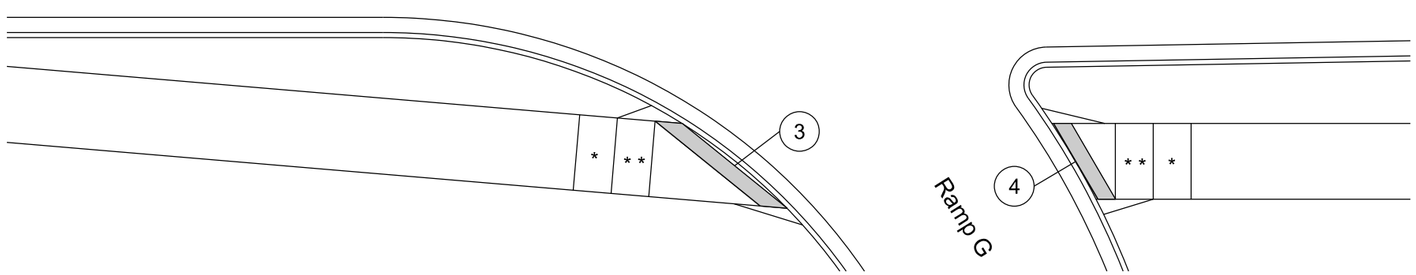

3 214+93.88.42 - 61.77'R
Center Type 2
Curb Ramp

4 215+33.47 - 61.17'R
Center Type 2
Curb Ramp

REGISTERED PROFESSIONAL ENGINEER
REG. NO. 8328
JODY W. PAGE
SOUTH DAKOTA
1 MAY 2015

Legend
* Turning Space with a 2% maximum slope
* * Curb ramp with 8.3% maximum slope and 2% cross slope
Detectable Warning

Plot Scale - 1:20
Plotted From - rliggett
File - ...\215 North HC

STATE OF SOUTH DAKOTA	PROJECT	SHEET	TOTAL SHEETS
	IM 1902(61)0	B158	B253

Plotting Date: 05-05-2015

FOR BIDDING PURPOSES ONLY

Curb Ramp Details

1 216+68.09 - 56.67'L
Center Type 2
Curb Ramp

2 217+02.17 - 56.67'L
Center Type 2
Curb Ramp

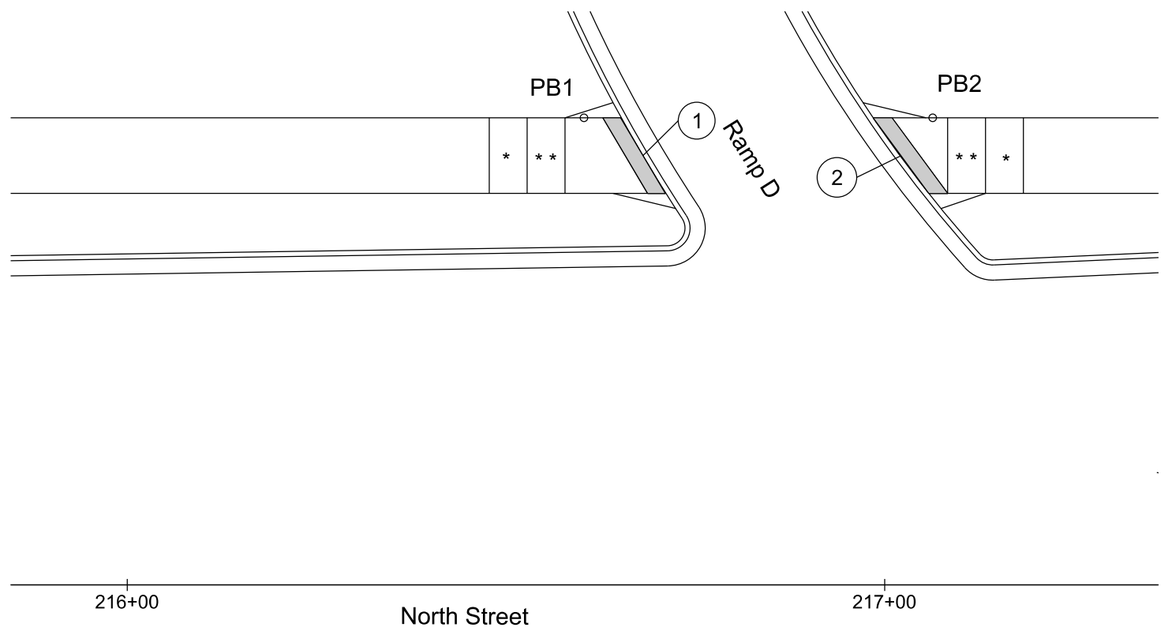

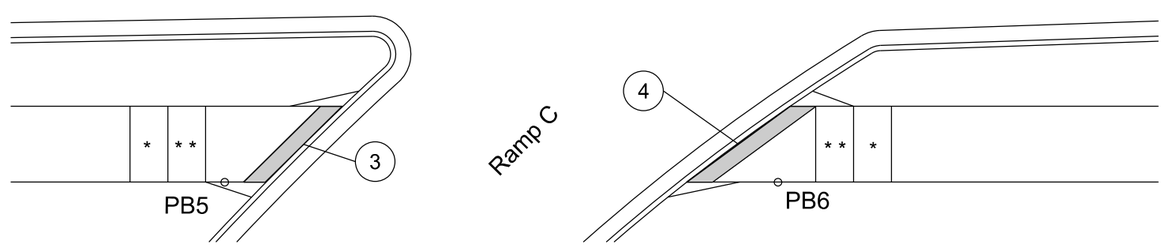

3 216+23.29 - 61.17'R
Center Type 2
Curb Ramp

4 216+80.72 - 61.17'R
Center Type 2
Curb Ramp

REGISTERED PROFESSIONAL ENGINEER
REG. NO. 8328
JODY W. PAGE
SOUTH DAKOTA
1 MAY 2015

Pedestrian Push Button (PB)

PB1: 216+60.31-61.67'L
PB2: 217+06.34-61.67'L
PB5: 216+12.87-66.17'R
PB6: 216+85.93-66.17'R

Legend

* Turning Space with a 2% maximum slope
* * Curb ramp with 8.3% maximum slope and 2% cross slope
Detectable Warning

HDR

Plot Scale - 1:20

Plotted From - rliggett

File - ...\216 North HC

STATE OF SOUTH DAKOTA	PROJECT	SHEET	TOTAL SHEETS
	IM 1902(61)0	B159	B253

Plotting Date: 05-05-2015

FOR BIDDING PURPOSES ONLY

Curb Ramp Details

1 217+77.83 - 56.65'L
Center Type 2
Curb Ramp

2 218+39.06 - 56.64'L
Center Type 2
Curb Ramp

3 219+23.85 - 56.66'L
Center Type 2
Curb Ramp

4 219+53.92 - 64.70'L
Center Type 3
Curb Ramp

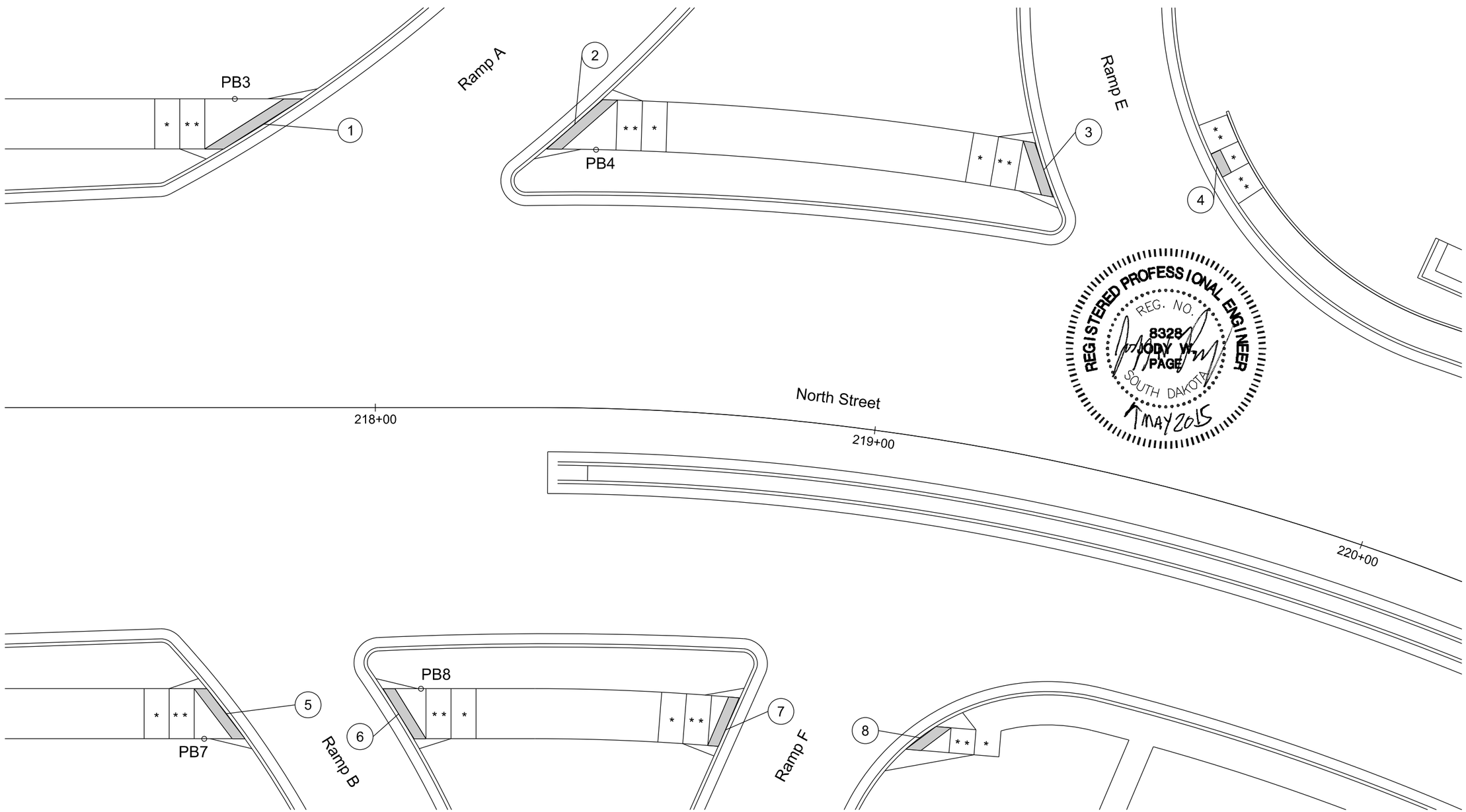

5 217+70.15 - 61.17'R
Center Type 2
Curb Ramp

6 218+04.65 - 61.18'R
Center Type 2
Curb Ramp

7 218+75.93 - 61.17'R
Center Type 2
Curb Ramp

8 219+19.59 - 59.36'R
Center Type 2
Curb Ramp

Pedestrian Push Button (PB)
PB3: 217+71.91-61.67'L
PB4: 218+42.98-51.67'L
PB7: 217+65.83-66.17'R
PB8: 218+09.12-56.17'R

Legend
* Turning Space with a 2% maximum slope
* * Curb ramp with 8.3% maximum slope and 2% cross slope
Detectable Warning

HDR

Plot Scale - 1:20
Plotted From - rliggett
File - ...\218 North HC

STATE OF SOUTH DAKOTA	PROJECT	SHEET	TOTAL SHEETS
	IM 1902(61)0	B160	B253

Curb Ramp Details

FOR BIDDING PURPOSES ONLY

Plotting Date: 06-04-2015

Rev. 06/05/2015 AJF

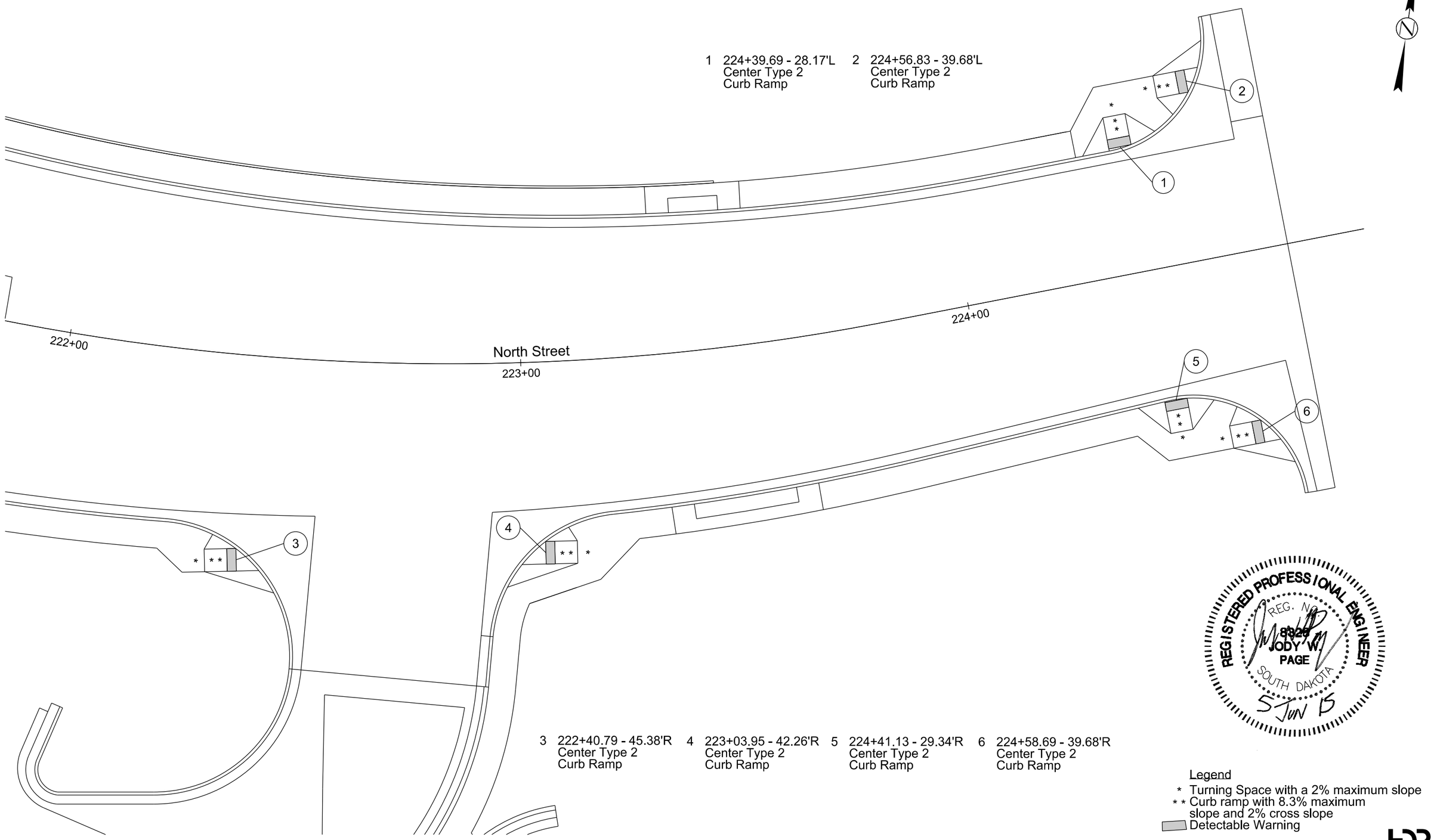

Legend

* Turning Space with a 2% maximum slope

* * Curb ramp with 8.3% maximum slope and 2% cross slope

Detectable Warning

HDR

Plot Scale - 1:20

Plotted From - rfiggett

File - ...\222 North HC

Curb Ramp Details

FOR BIDDING PURPOSES ONLY

STATE OF SOUTH DAKOTA	PROJECT	SHEET	TOTAL SHEETS
	IM 1902(61)0	B161	B253

Plotting Date: 05-05-2015

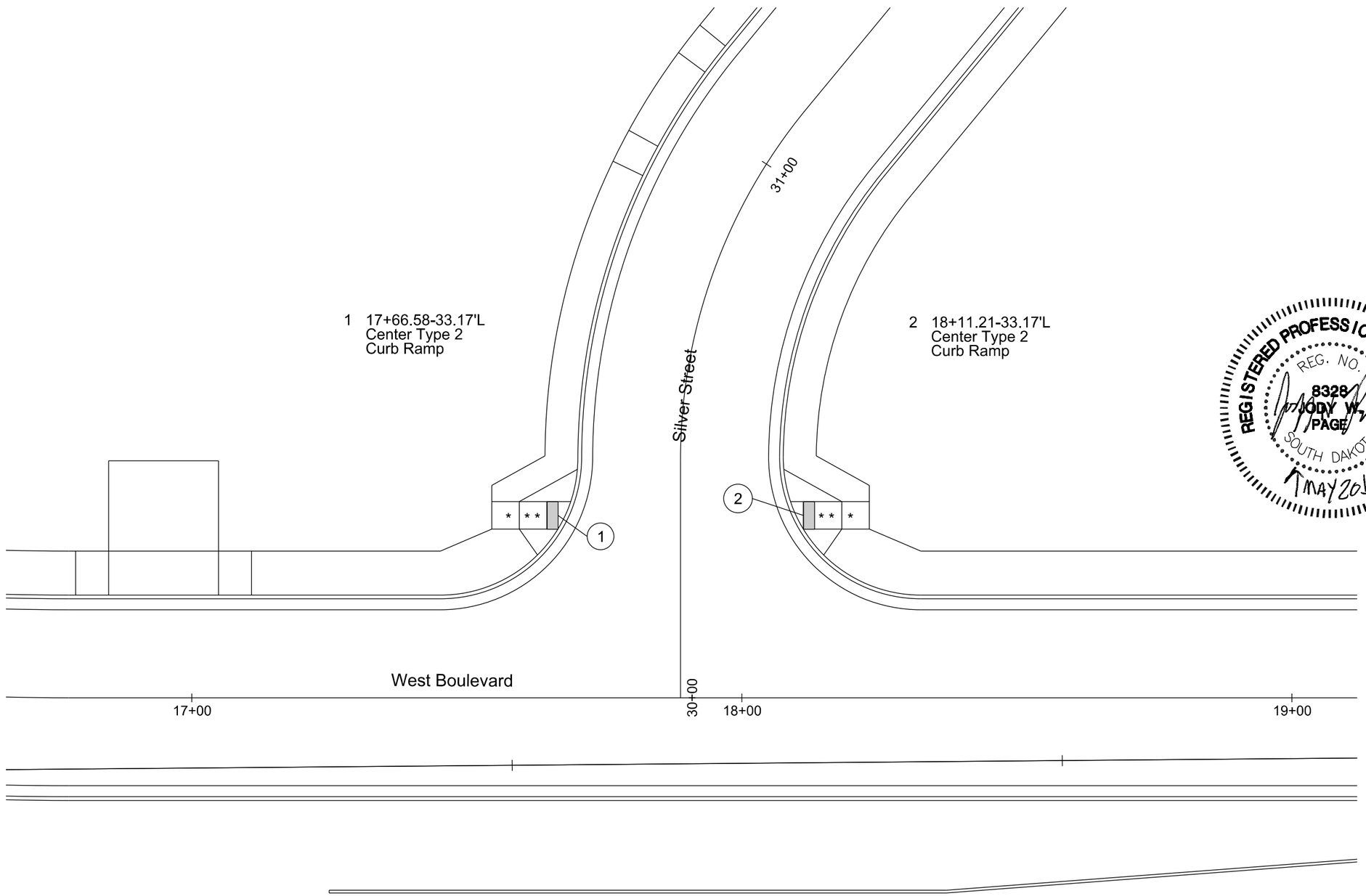

REGISTERED PROFESSIONAL ENGINEER
REG. NO. 8328
JODY W. PAGE
SOUTH DAKOTA
MAY 2015

Legend

* Turning Space with a 2% maximum slope

* * Curb ramp with 8.3% maximum slope and 2% cross slope

Detectable Warning

HDR

Plot Scale - 1:20

Plotted From - rliggett

File - ...\17 West HC

Curb Ramp Details

FOR BIDDING PURPOSES ONLY

STATE OF SOUTH DAKOTA	PROJECT	SHEET	TOTAL SHEETS
	IM 1902(61)0	B162	B253

Plotting Date: 05-05-2015

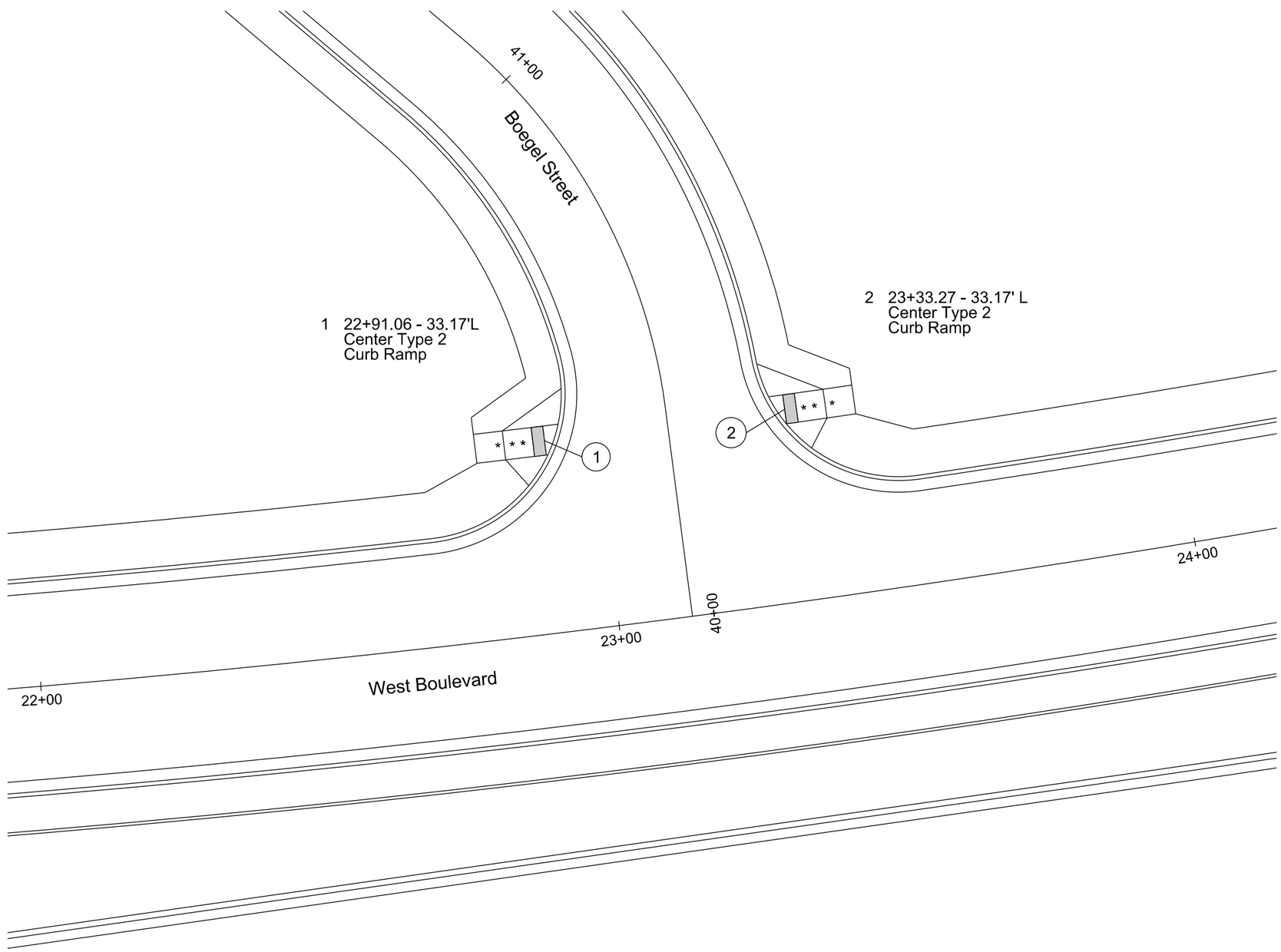

REGISTERED PROFESSIONAL ENGINEER
REG. NO. 8328
JODY W. PAGE
SOUTH DAKOTA
1 MAY 2015

Legend
* Turning Space with a 2% maximum slope
* * Curb ramp with 8.3% maximum slope and 2% cross slope
Detectable Warning

HDR

Plot Scale - 1:20
Plotted From - rliggett
File - ...\22 West HC

Curb Ramp Details

FOR BIDDING PURPOSES ONLY

STATE OF SOUTH DAKOTA	PROJECT	SHEET	TOTAL SHEETS
	IM 1902(61)0	B163	B253

Plotting Date: 05-05-2015

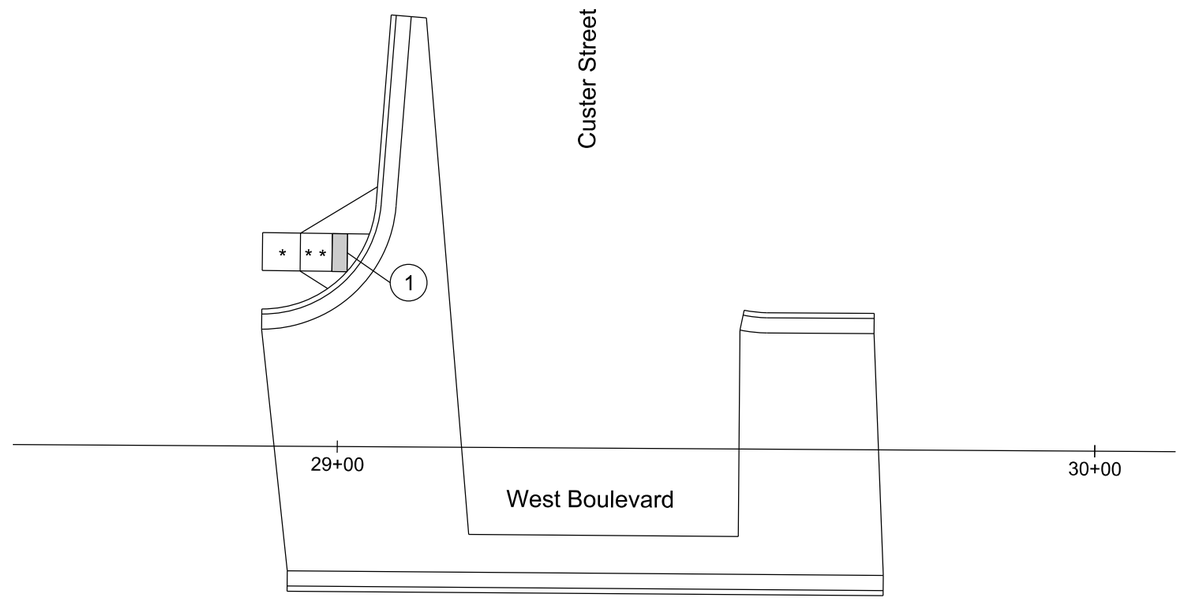

1 29+01.17 - 25.61' L
Center Type 2
Curb Ramp

REGISTERED PROFESSIONAL ENGINEER
REG. NO. 8328
JODY W. PAGE
SOUTH DAKOTA
7 MAY 2015

Legend
* Turning Space with a 2% maximum slope
* * Curb ramp with 8.3% maximum slope and 2% cross slope
Detectable Warning

HDR

Plot Scale - 1:20
Plotted From - rfiggett
File - ...\29 West HC.dgn

Curb Ramp Details

FOR BIDDING PURPOSES ONLY

STATE OF SOUTH DAKOTA	PROJECT	SHEET	TOTAL SHEETS
	IM 1902(61)0	B164	B253

Plotting Date: 05-05-2015

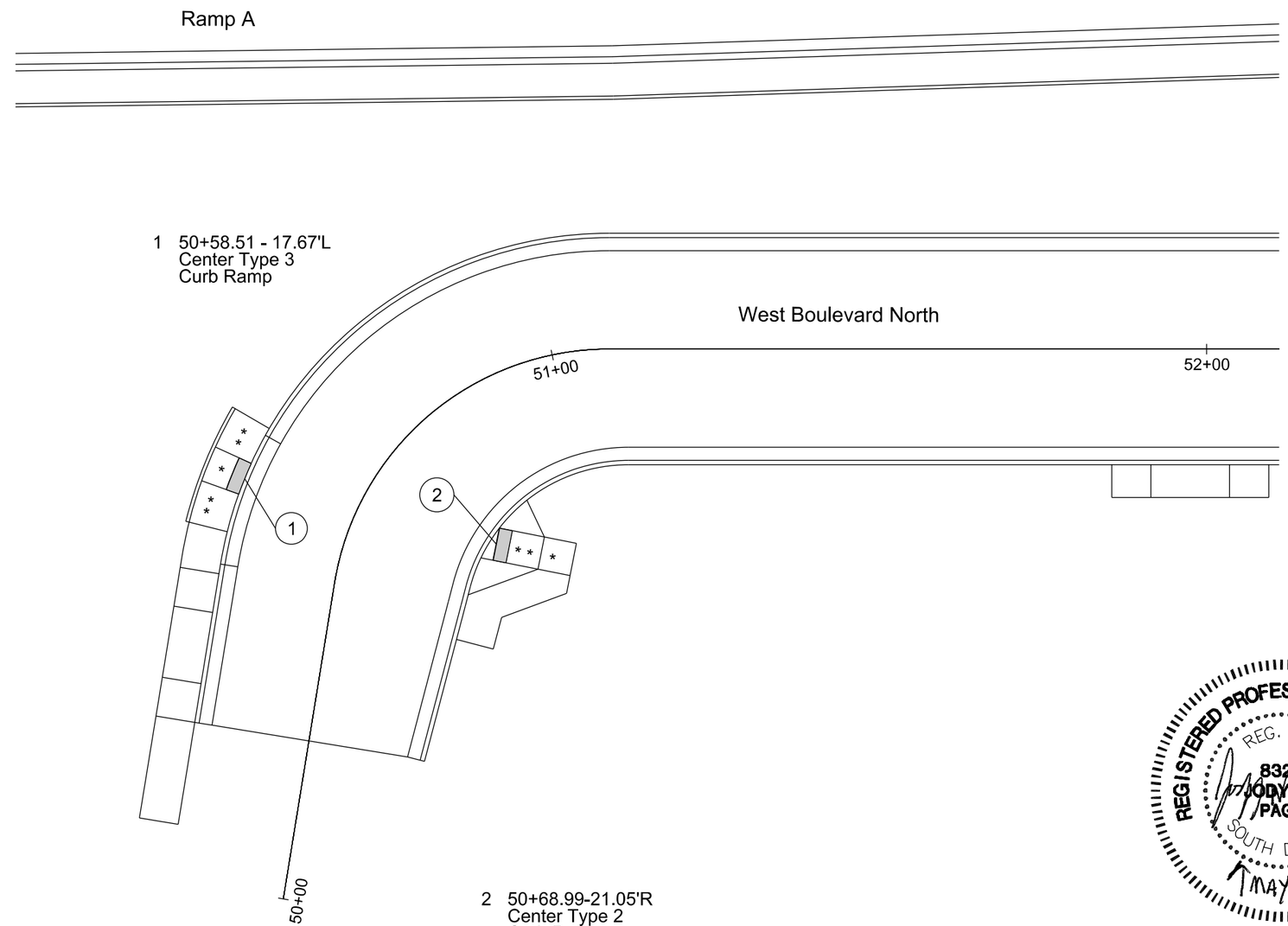

REGISTERED PROFESSIONAL ENGINEER
REG. NO. 8328
JODY W. PAGE
SOUTH DAKOTA
1 MAY 2015

Legend

* Turning Space with a 2% maximum slope

* * Curb ramp with 8.3% maximum slope and 2% cross slope

Detectable Warning

HDR

Plot Scale - 1:20

Plotted From - rliggett

File - ...\19 West N HC

Curb Ramp Details

FOR BIDDING PURPOSES ONLY

STATE OF SOUTH DAKOTA	PROJECT	SHEET	TOTAL SHEETS
	IM 1902(61)0	B165	B253

Plotting Date: 05-05-2015

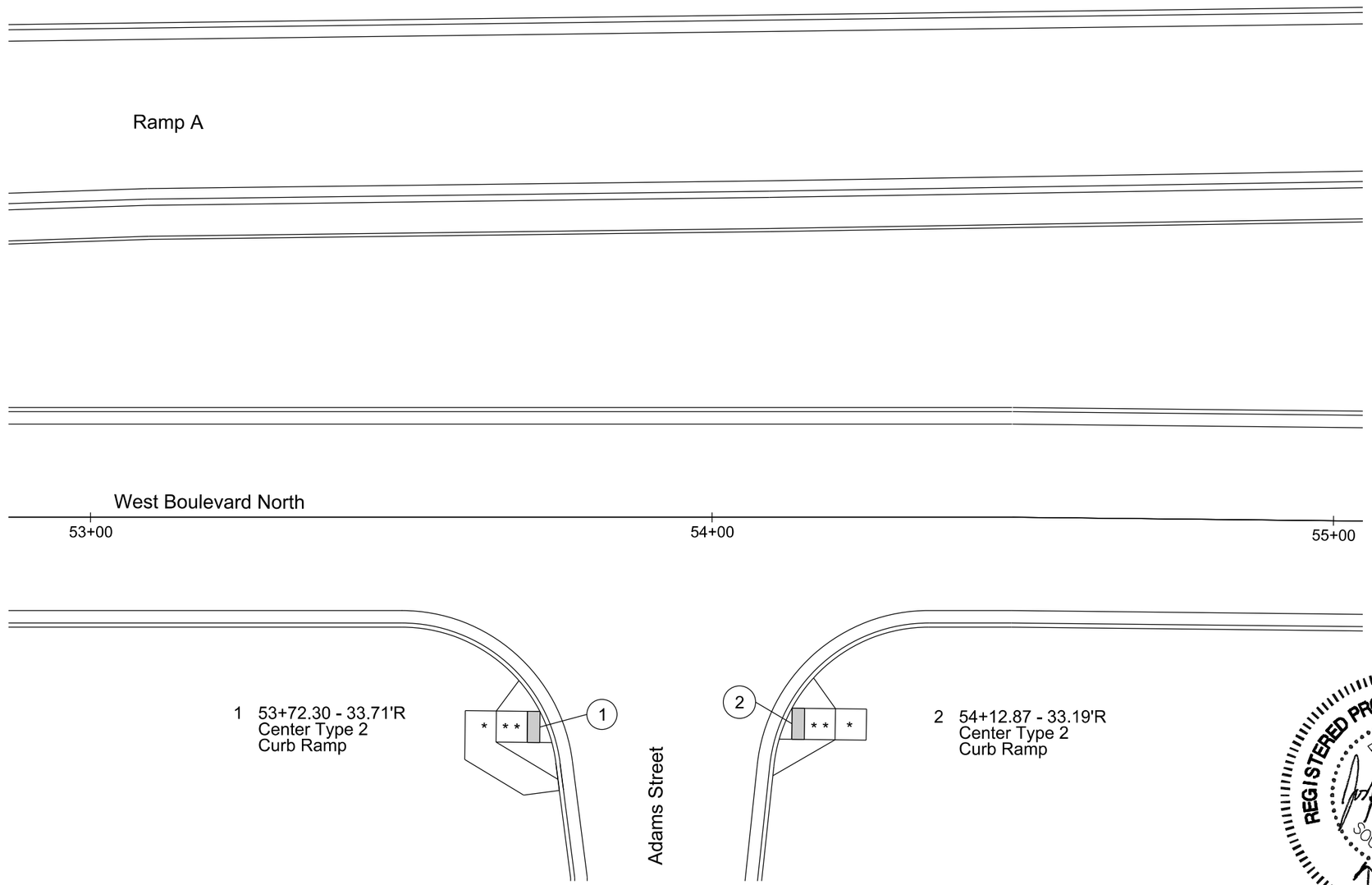

REGISTERED PROFESSIONAL ENGINEER
REG. NO. 8328
JODY W. PAGE
SOUTH DAKOTA
MAY 2015

Legend
* Turning Space with a 2% maximum slope
* * Curb ramp with 8.3% maximum slope and 2% cross slope
Detectable Warning

HDR

Plot Scale - 1:20

Plotted From - rfiggett

File - ...\22 West N HC

Curb Ramp Details

FOR BIDDING PURPOSES ONLY

STATE OF SOUTH DAKOTA	PROJECT	SHEET	TOTAL SHEETS
	IM 1902(61)0	B166	B253

Plotting Date: 05-05-2015

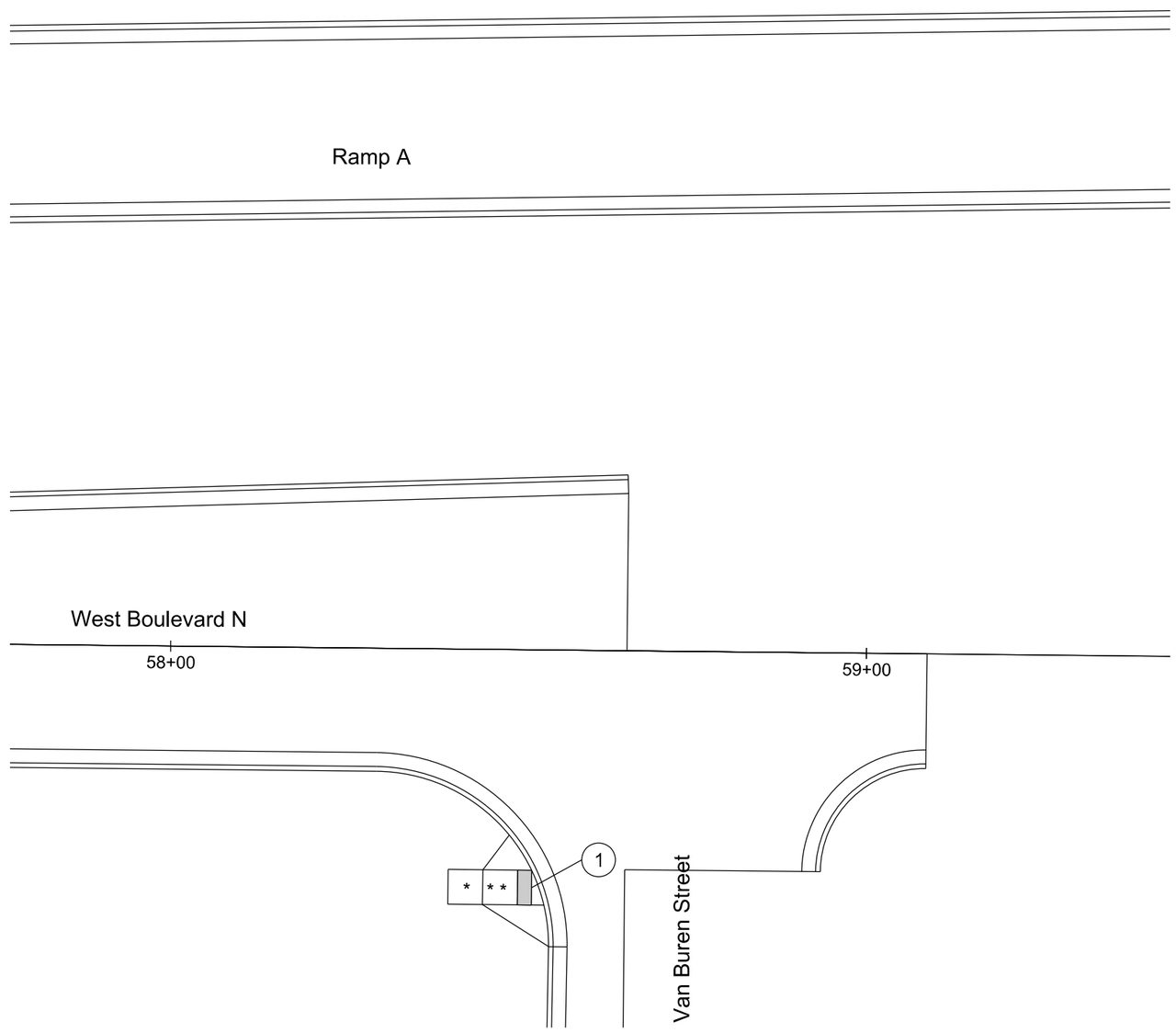

1 58+52.22 - 34.17'R
Center Type 2
Curb Ramp

REGISTERED PROFESSIONAL ENGINEER
REG. NO. 8328
JODY W. PAGE
SOUTH DAKOTA
1 MAY 2015

Legend

* Turning Space with a 2% maximum slope

* * Curb ramp with 8.3% maximum slope and 2% cross slope

Detectable Warning

HDR

Plot Scale - 1:20

Plotted From - rfiggett

File - ...\27 West N HC

STATE OF SOUTH DAKOTA	PROJECT	SHEET	TOTAL SHEETS
	IM 1902(61)0	B167	B253

FOR BIDDING PURPOSES ONLY

Plotting Date: 05-05-2015

Ramp Gore Layout
Ramp A and D

Notes:
Elevations shown top of pavement

REGISTERED PROFESSIONAL ENGINEER
REG. NO. 8328
JODY W. PAGE
SOUTH DAKOTA
1 MAY 2015

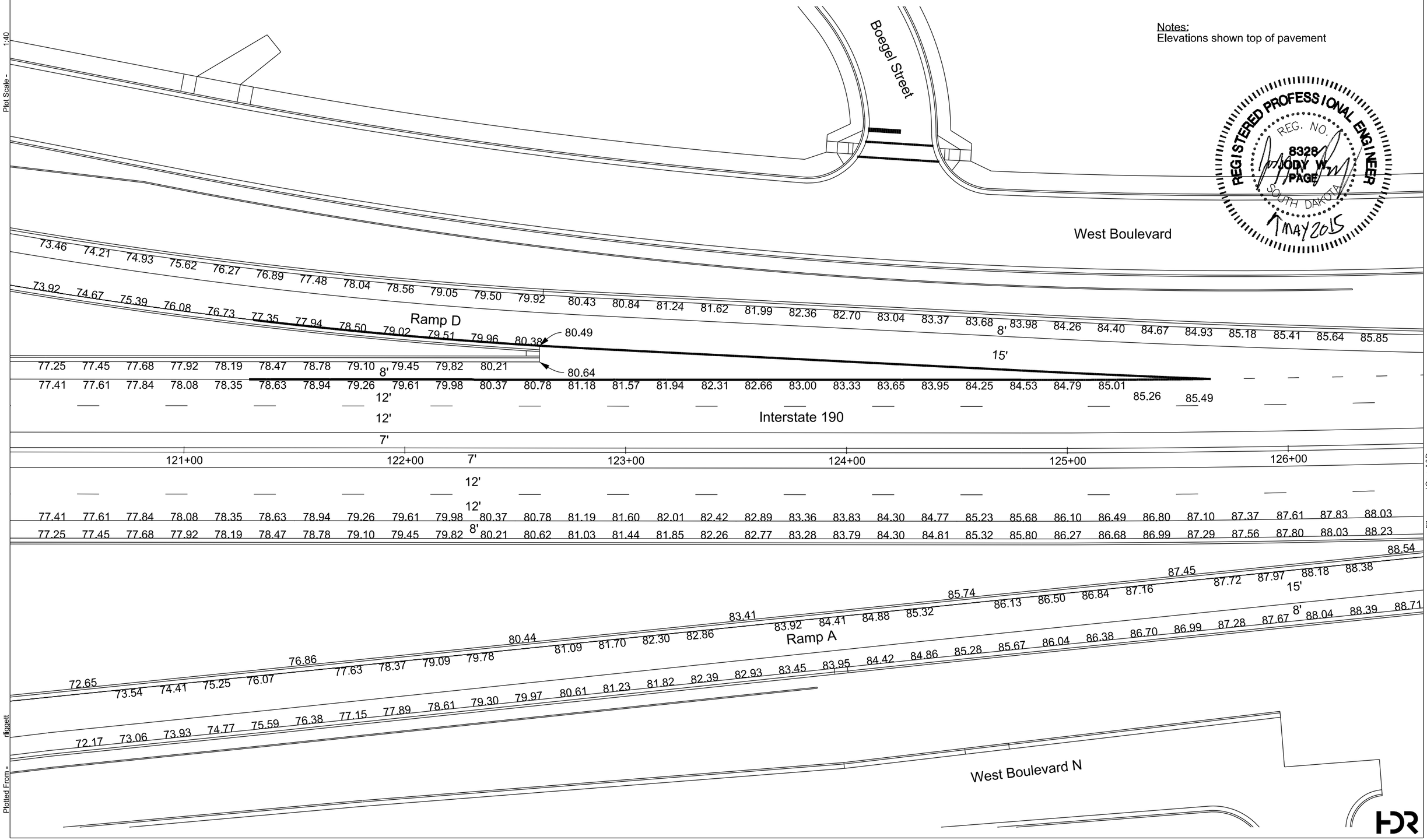

Plot Scale - 1:40

Plotted From - rliggett

File - ...\Gore A&D

STATE OF SOUTH DAKOTA	PROJECT	SHEET	TOTAL SHEETS
	IM 1902(61)0	B168	B253

FOR BIDDING PURPOSES ONLY

Plotting Date: 05-05-2015

Ramp Gore Layout
Ramp A and D

Notes:
Elevations shown are top of pavement

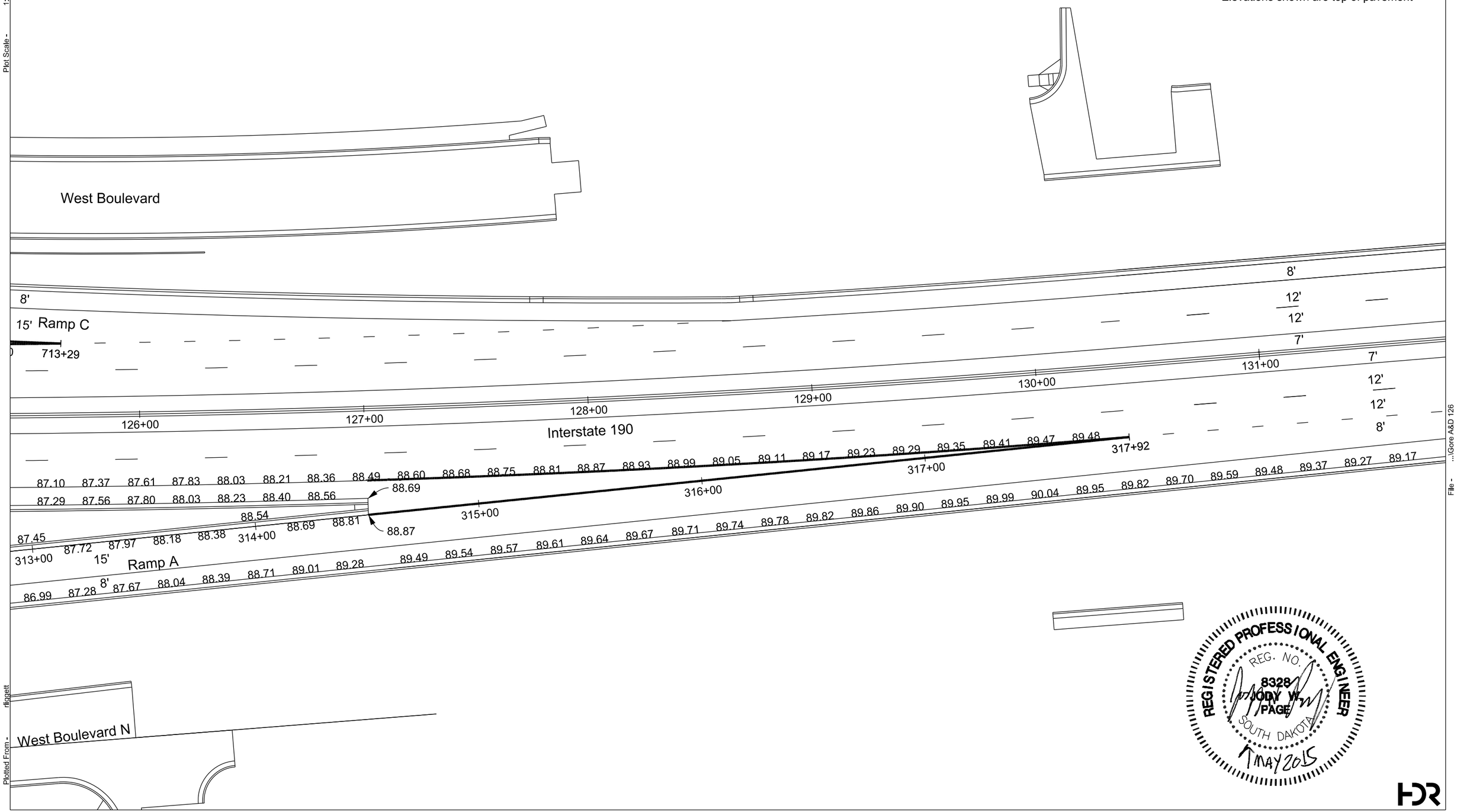

Plot Scale - 1:40

Plotted From - rfiggett

File - ...\Gore A&D 126

STATE OF SOUTH DAKOTA	PROJECT	SHEET	TOTAL SHEETS
	IM 1902(61)0	B169	B253

FOR BIDDING PURPOSES ONLY

Plotting Date: 05-05-2015

Ramp Gore Layout
Ramp B and C

Notes:
Elevations shown are top of pavement

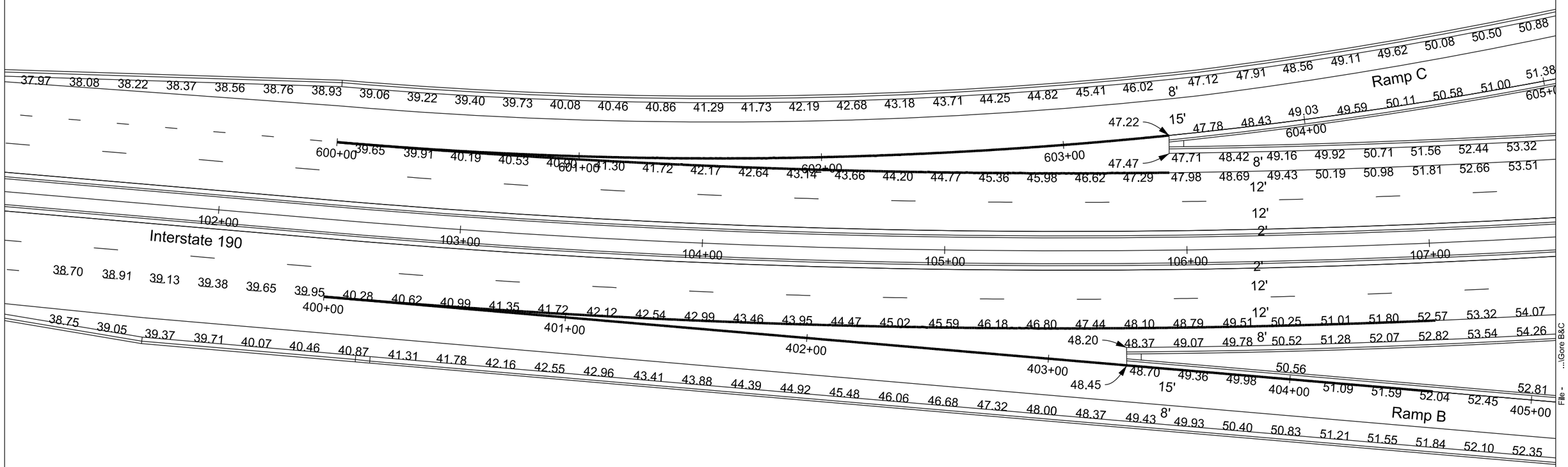

REGISTERED PROFESSIONAL ENGINEER
REG. NO. 8328
JODY W. PAGE
SOUTH DAKOTA
7 MAY 2015

HDR

Plot Scale - 1:40
Plotted From - rliggett
File - ...\Gore B&C

STATE OF SOUTH DAKOTA	PROJECT	SHEET	TOTAL SHEETS
	IM 1902(61)0	B170	B253

FOR BIDDING PURPOSES ONLY

Plotting Date: 05-05-2015

Guardrail Layout
Interstate 190

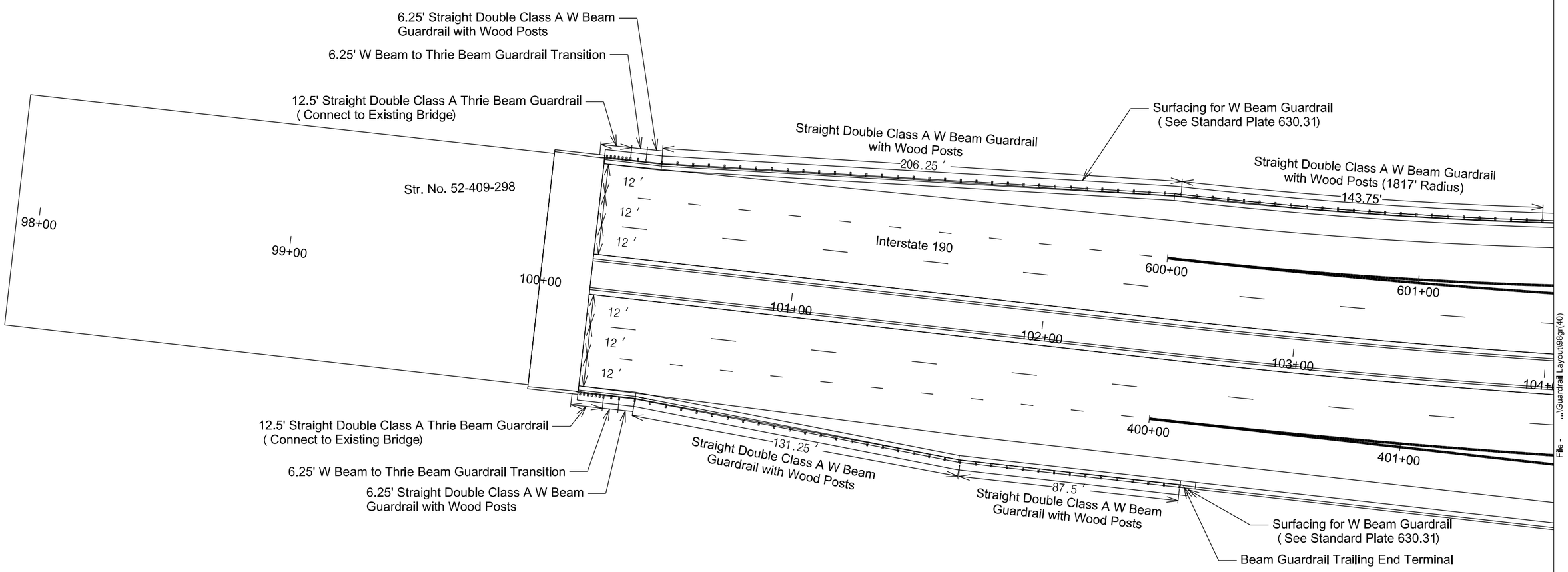

REGISTERED PROFESSIONAL ENGINEER
REG. NO. 8328
JODY W. PAGE
SOUTH DAKOTA
1 MAY 2015

HDR

Plot Scale - 1:40

Plotted From - rliggett

File - ...\Guardrail Layout98gr(40)

STATE OF SOUTH DAKOTA	PROJECT	SHEET	TOTAL SHEETS
	IM 1902(61)0	B171	B253

FOR BIDDING PURPOSES ONLY

Plotting Date: 05-05-2015

Guardrail Layout
Interstate 190

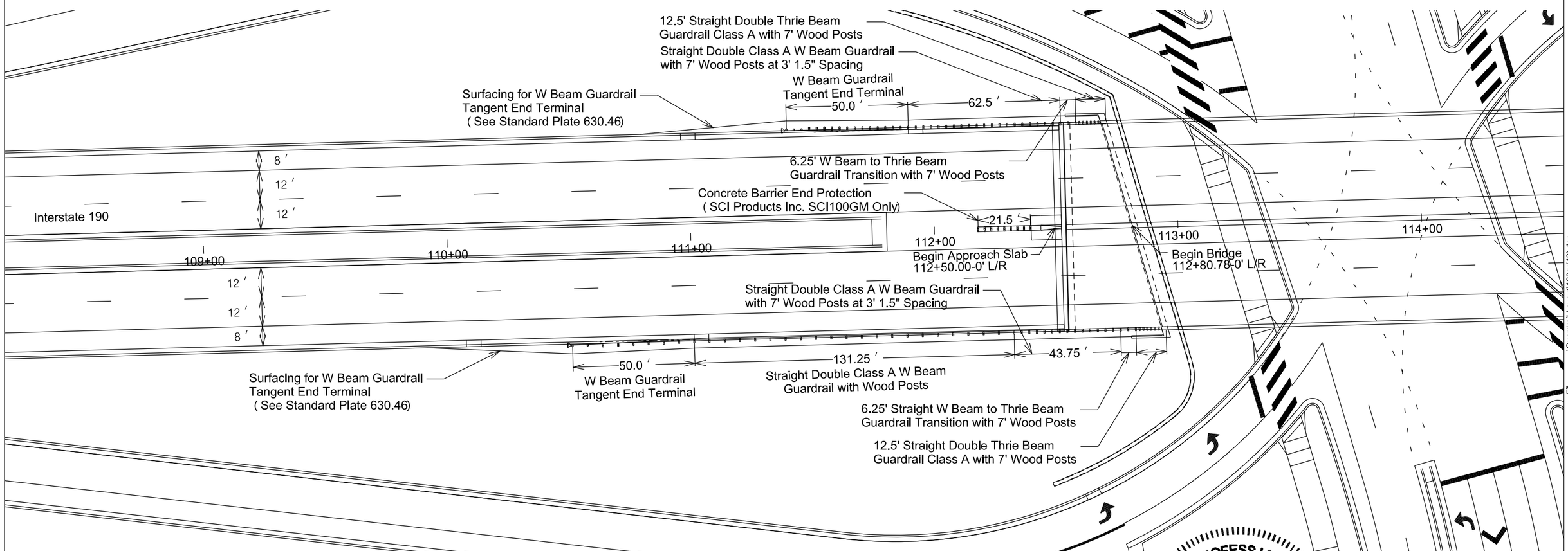

REGISTERED PROFESSIONAL ENGINEER
REG. NO. 8328
JODY W. PAGE
SOUTH DAKOTA
1 MAY 2015

HDR

Plot Scale - 1:40

Plotted From - rliggett

File - ...\Guardrail Layout(109gr(40).dgn

STATE OF SOUTH DAKOTA	PROJECT	SHEET	TOTAL SHEETS
	IM 1902(61)0	B172	B253

FOR BIDDING PURPOSES ONLY

Plotting Date: 05-05-2015

Guardrail Layout
Interstate 190

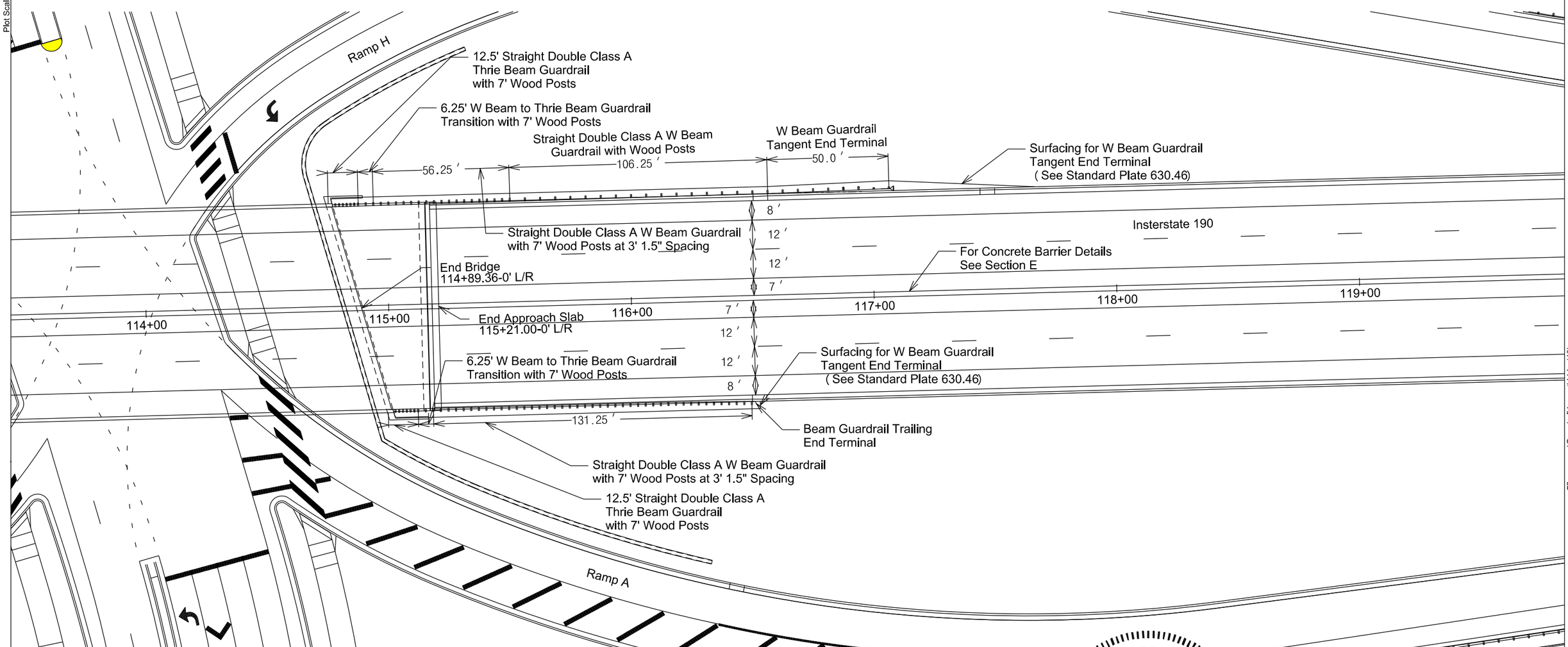

REGISTERED PROFESSIONAL ENGINEER
REG. NO. 8328
JODY W. PAGE
SOUTH DAKOTA
MAY 2015

HDR

Plot Scale - 1:40

Plotted From - rliggett

File - ...\Guardrail Layout\114gr(40)

STATE OF SOUTH DAKOTA	PROJECT	SHEET	TOTAL SHEETS
	IM 1902(61)0	B173	B253

FOR BIDDING PURPOSES ONLY

Plotting Date: 05-05-2015

Guardrail Layout
Interstate 190

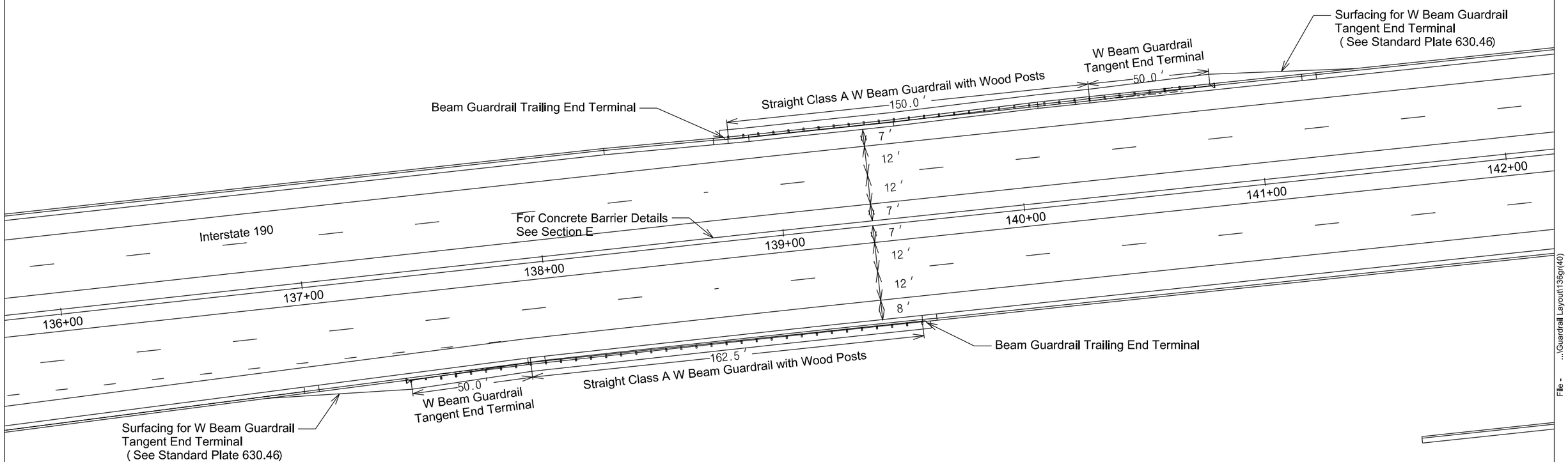

REGISTERED PROFESSIONAL ENGINEER
REG. NO. 8328
JODY W. PAGE
SOUTH DAKOTA
MAY 2015

HDR

Plot Scale - 1:40

Plotted From - rliggett

File - ...\Guardrail Layout\136gr(40)

STATE OF SOUTH DAKOTA	PROJECT	SHEET	TOTAL SHEETS
	IM 1902(61)0	B174	B253

FOR BIDDING PURPOSES ONLY

Plotting Date: 05-05-2015

Guardrail Layout
Interstate 190

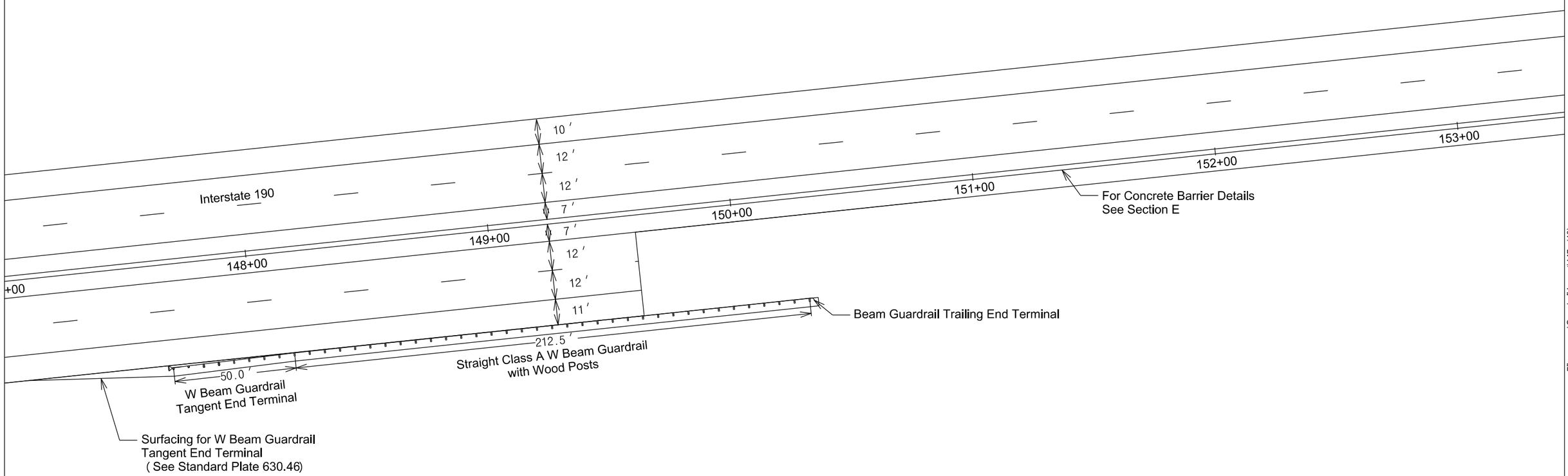

REGISTERED PROFESSIONAL ENGINEER
REG. NO. 8328
JODY W. PAGE
SOUTH DAKOTA
MAY 2015

HDR

Plot Scale - 1:40

Plotted From - rliggett

File - ...\Guardrail Layout\147gr(40)

STATE OF SOUTH DAKOTA	PROJECT	SHEET	TOTAL SHEETS
	IM 1902(61)0	B175	B253

FOR BIDDING PURPOSES ONLY

Plotting Date: 05-07-2015

Guardrail Layout
Ramp A & West Boulevard North

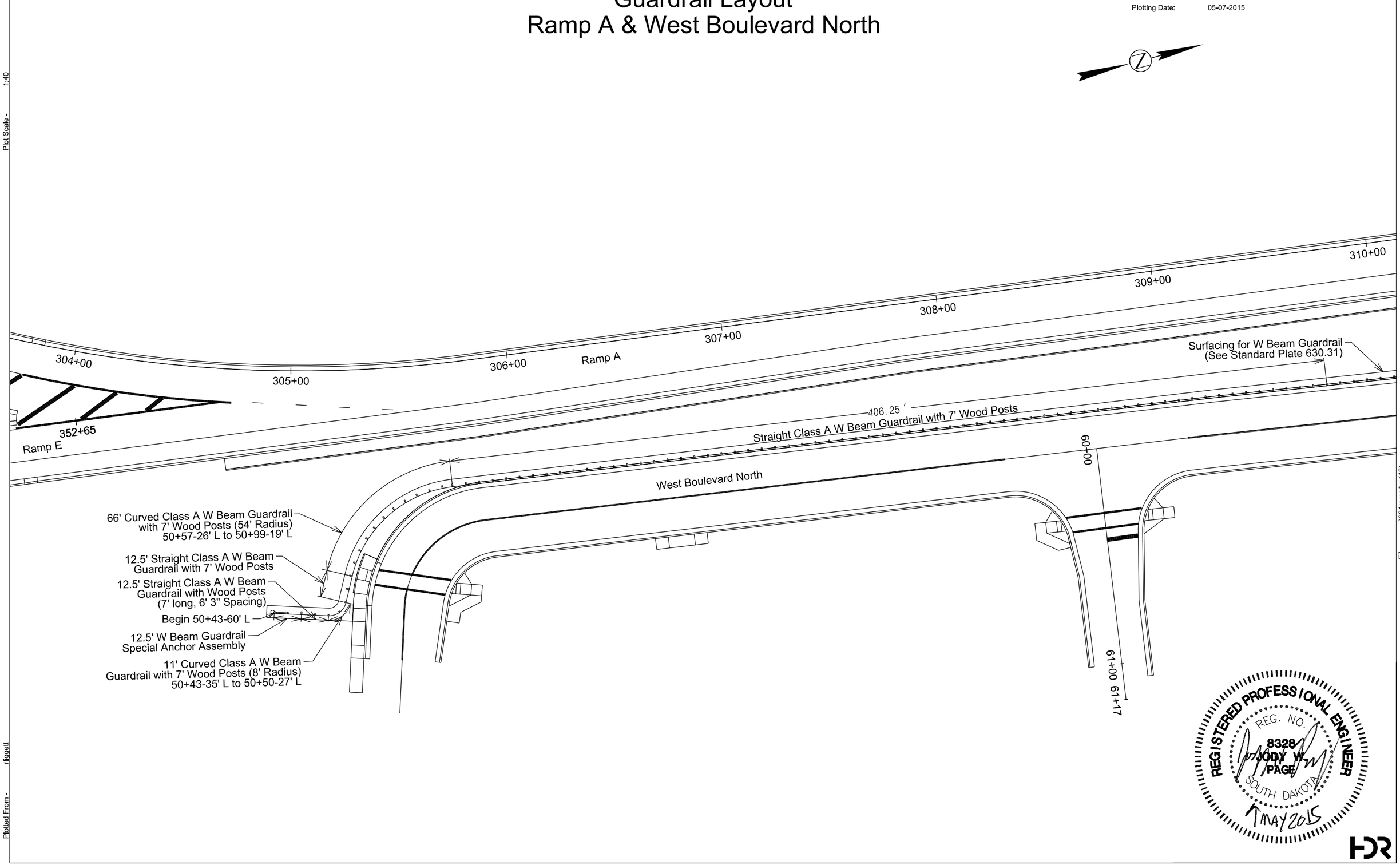

REGISTERED PROFESSIONAL ENGINEER
REG. NO. 8328
JODY W. PAGE
SOUTH DAKOTA
MAY 2015

HDR

Plot Scale - 1:40

Plotted From - rliggett

File - ...\304rampAgr(40)

STATE OF SOUTH DAKOTA	PROJECT	SHEET	TOTAL SHEETS
	IM 1902(61)0	B176	B253

FOR BIDDING PURPOSES ONLY

Plotting Date: 05-07-2015

Guardrail Layout
Ramp A & West Boulevard North

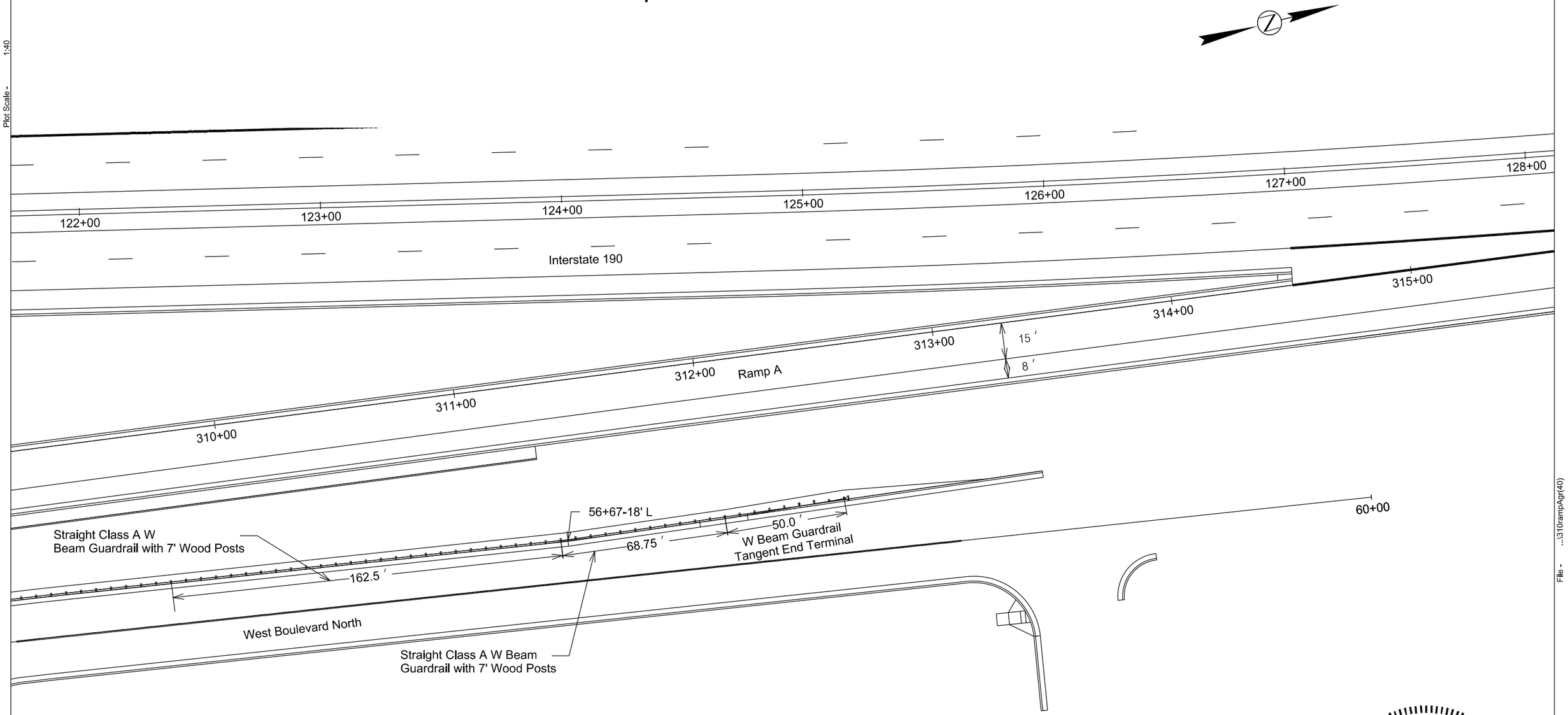

REGISTERED PROFESSIONAL ENGINEER
REG. NO. 8328
JODY W. PAGE
SOUTH DAKOTA
MAY 2015

HDR

Plot Scale - 1:40

Plotted From - rliggett

File - ...\310rampAgr(40)

STATE OF SOUTH DAKOTA	PROJECT	SHEET	TOTAL SHEETS
	IM 1902(61)0	B177	B253

FOR BIDDING PURPOSES ONLY

Plotting Date: 05-07-2015

Guardrail Layout
Ramp C

REGISTERED PROFESSIONAL ENGINEER
REG. NO. 8328
JODY W. PAGE
SOUTH DAKOTA
1 MAY 2015

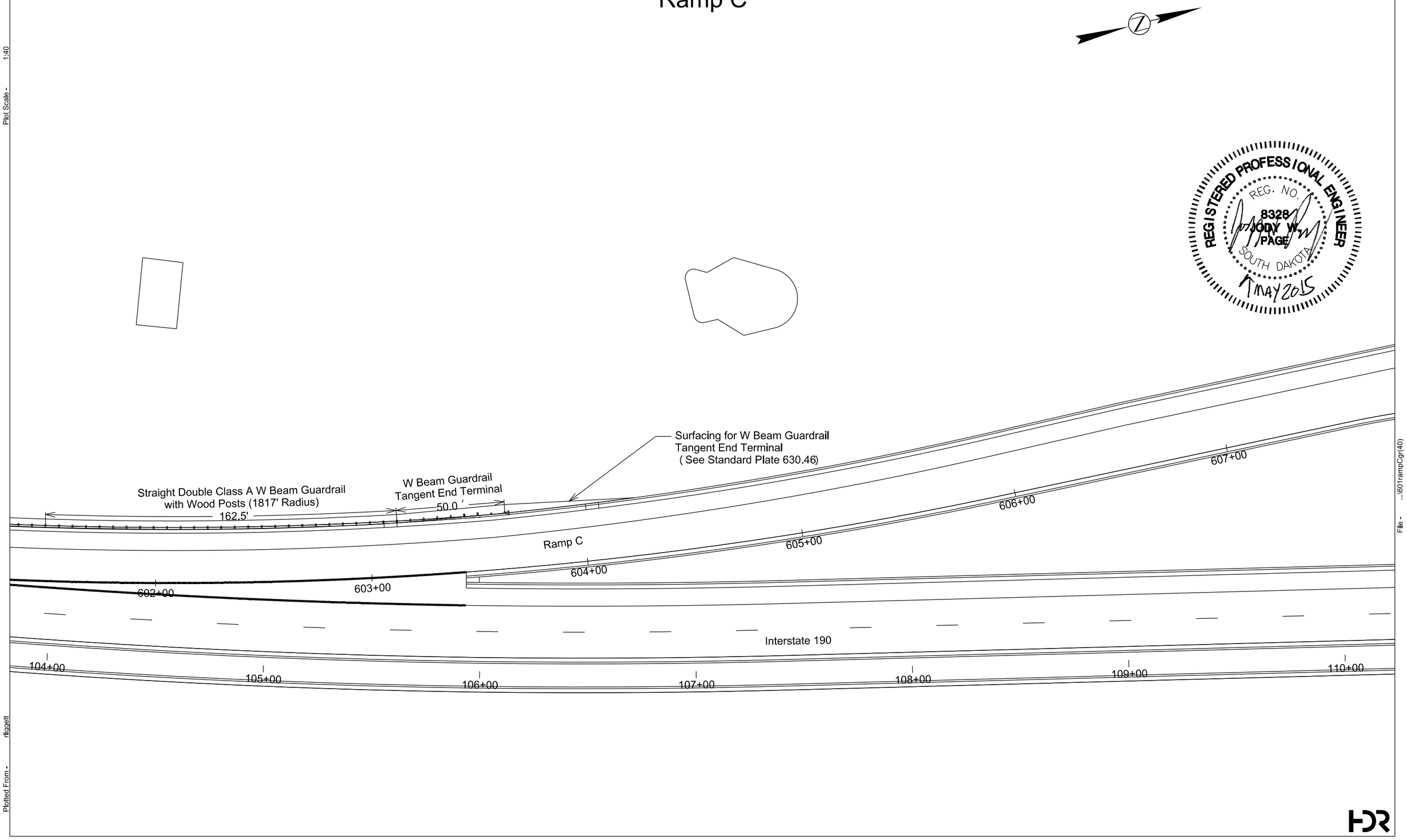

Plot Scale - 1:40

Plotted From - rliggett

File - ...\601rampCgr(40)

STATE OF SOUTH DAKOTA	PROJECT	SHEET	TOTAL SHEETS
	IM 1902(61)0	B178	B253

FOR BIDDING PURPOSES ONLY

Plotting Date: 05-05-2015

Guardrail Layout
Ramp D

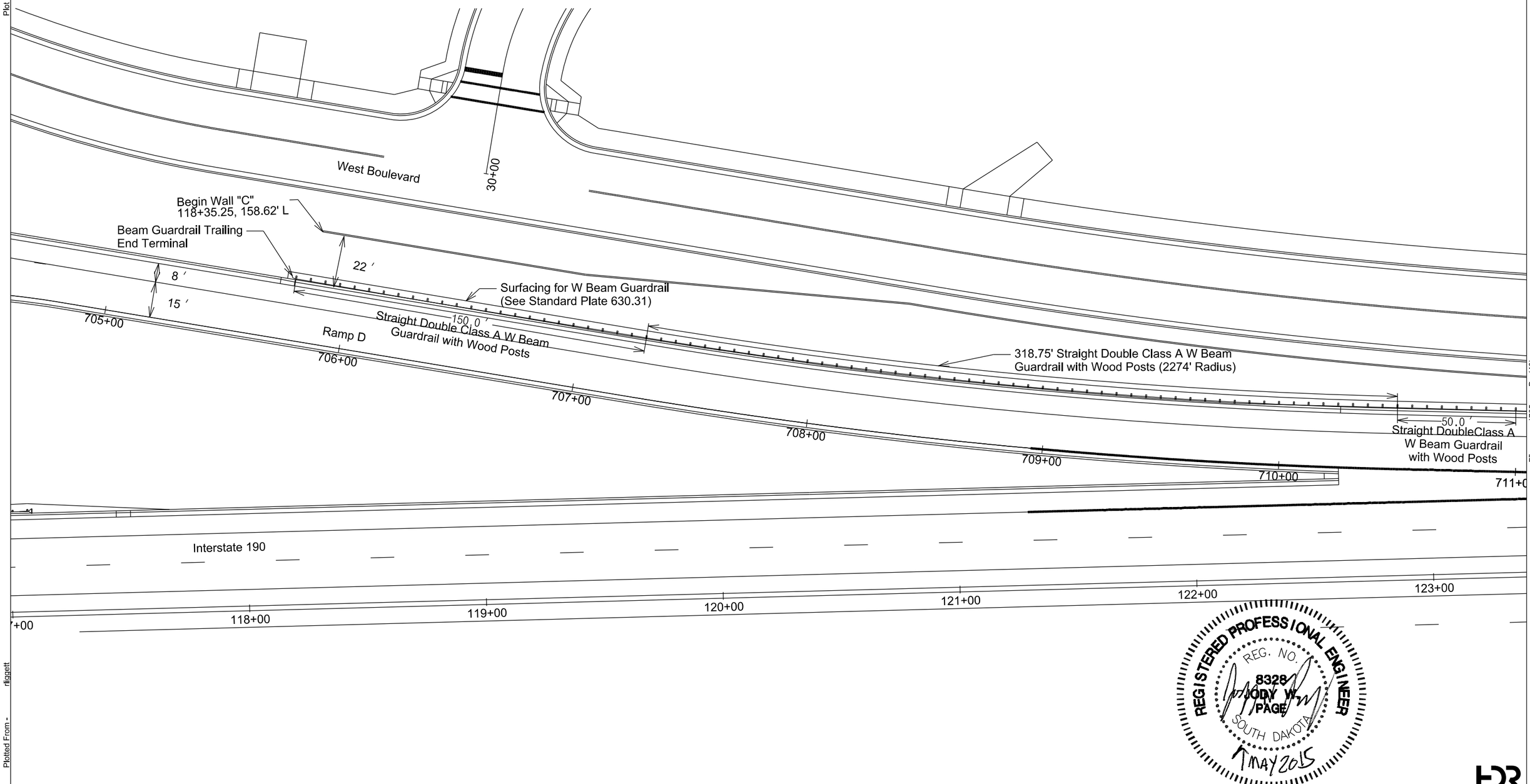

REGISTERED PROFESSIONAL ENGINEER
REG. NO. 8328
JODY W. PAGE
SOUTH DAKOTA
1 MAY 2015

HDR

Plot Scale - 1:40

Plotted From - rliggett

File - ...\705rampDgr(40)

STATE OF SOUTH DAKOTA	PROJECT	SHEET	TOTAL SHEETS
	IM 1902(61)0	B179	B253

FOR BIDDING PURPOSES ONLY

Plotting Date: 05-05-2015

Guardrail Layout
Ramp D

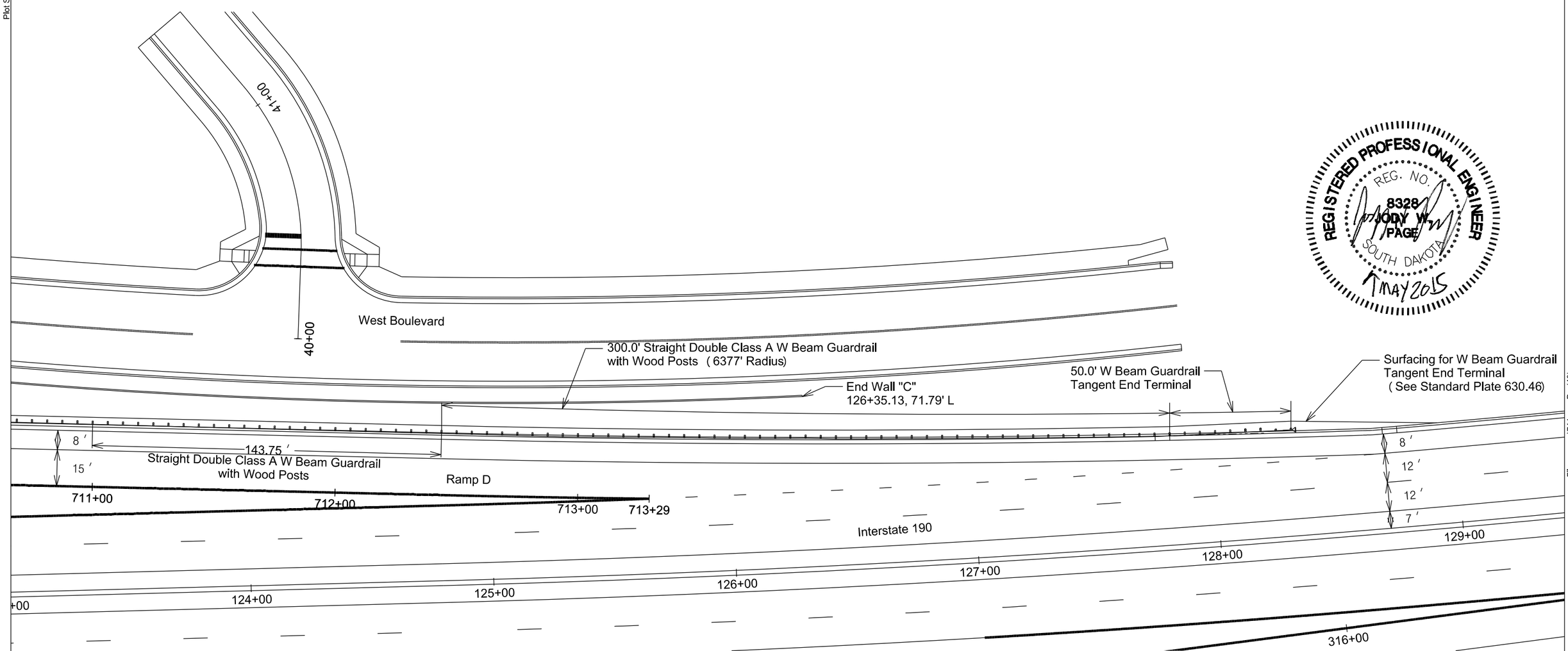

REGISTERED PROFESSIONAL ENGINEER
REG. NO. 8328
JODY W. PAGE
SOUTH DAKOTA
1 MAY 2015

Plot Scale - 1:40

Plotted From - rliggett

File - ...\711rampDgr(40)

HDR

STATE OF SOUTH DAKOTA	PROJECT	SHEET	TOTAL SHEETS
	IM 1902(61)0	B180	B253

Plotting Date: Jun-17-2015 Rev. 06/18/2015 AJF

FOR BIDDING PURPOSES ONLY

Sediment Basin Layout

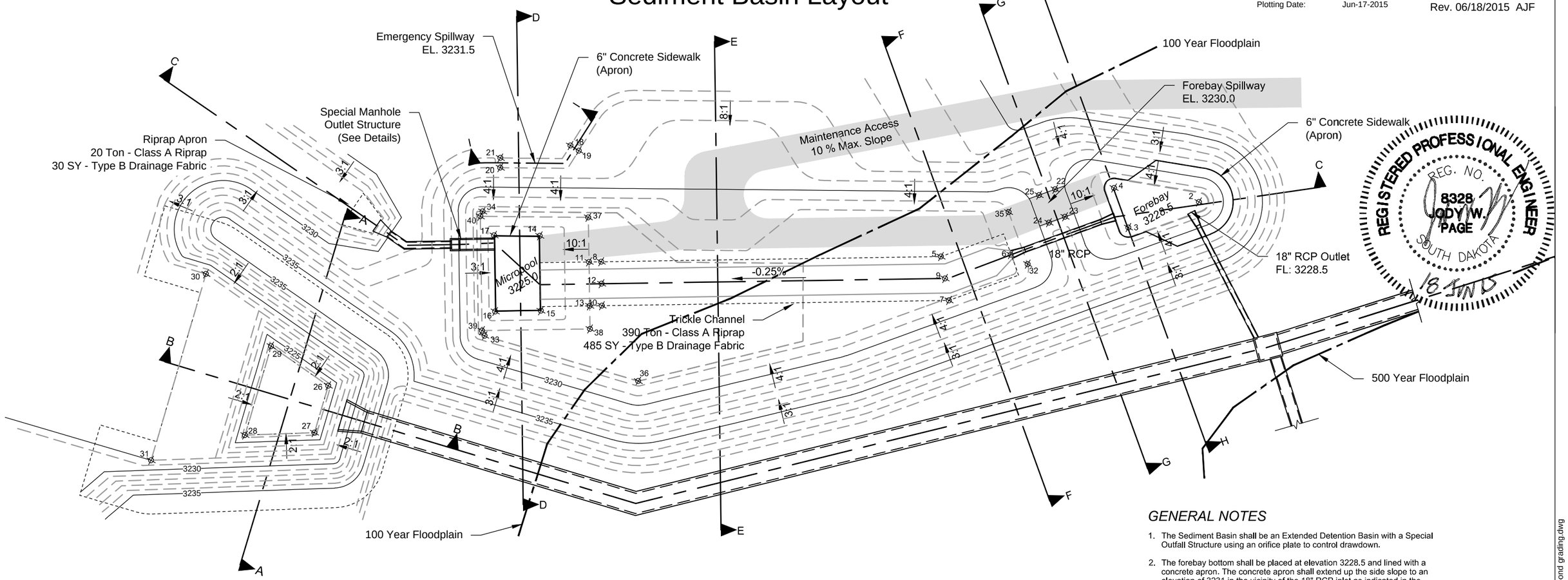

Point #	Northing	Easting	Elevation	Description
2	652843.2524	1206641.1599	3228.50	3.7' R
3	652812.6398	1206644.0027	3228.50	3.7' R
4	652811.0435	1206626.8141	3228.50	3.7' R
5	652735.3285	1206636.1178	3227.85	Edge of Trickle Channel
6	652763.1904	1206642.5691	3228.05	CL of Trickle Channel
7	652733.9868	1206654.3198	3227.85	Edge of Trickle Channel
8	652600.0651	1206603.0508	3227.50	Edge of Trickle Channel
9	652734.6576	1206645.2187	3227.10	CL of Trickle Channel
10	652595.7907	1206620.5359	3227.50	Edge of Trickle Channel
11	652595.2082	1206601.8634	3227.00	Edge of Trickle Channel
12	652597.9279	1206611.7933	3227.00	CL of Trickle Channel
13	652590.9337	1206619.3485	3227.00	Edge of Trickle Channel
14	652578.3901	1206586.4381	3225.00	Micropool
15	652571.1035	1206616.2447	3225.00	Micropool
16	652552.8899	1206611.7921	3225.00	Micropool

Point #	Northing	Easting	Elevation	Description
17	652560.2864	1206581.5361	3225.00	Micropool
18	652599.9169	1206553.8047	3231.50	Pond Spillway
19	652602.6420	1206556.7329	3231.50	Pond Spillway
20	652569.7424	1206555.3473	3231.50	Pond Spillway
21	652570.7879	1206551.4863	3231.50	Pond Spillway
22	652787.5651	1206621.2349	3230.00	Forebay Spillway
23	652788.6113	1206633.1782	3230.00	Forebay Spillway
24	652781.6412	1206633.8255	3230.00	Forebay Spillway
25	652780.5966	1206621.9004	3230.00	Forebay Spillway
26	652479.0042	1206624.0021	3223.50	Spillway
27	652468.7001	1206641.1334	3223.50	Spillway
28	652440.9307	1206634.9183	3223.50	Spillway
29	652460.4992	1206602.3842	3223.50	Spillway
30	652442.0857	1206567.0332	3228.00	Spillway
31	652401.0727	1206635.2202	3228.00	Spillway

Point #	Northing	Easting	Elevation	Description
32	652768.9186	1206648.0629	3230.00	10.0' R
33	652546.1722	1206620.3447	3230.00	10.0' R
34	652558.2628	1206570.8871	3230.00	10.0' R
35	652766.7276	1206625.4701	3230.00	10.0' R
36	652602.4355	1206654.1859	3228.00	10.0' R
37	652599.5418	1206584.1363	3227.00	Micropool
38	652588.6910	1206628.5224	3227.00	Micropool
39	652545.7068	1206618.0143	3227.00	Micropool
40	652556.8169	1206572.5676	3227.00	Micropool

Sediment Basin : Sta 496+00 to 501-00

EXC	8,865	EMB	1,856
		25%	464
WASTE			6,545
TOTAL	8,865		8,865

GENERAL NOTES

1. The Sediment Basin shall be an Extended Detention Basin with a Special Outfall Structure using an orifice plate to control drawdown.
2. The forebay bottom shall be placed at elevation 3228.5 and lined with a concrete apron. The concrete apron shall extend up the side slope to an elevation of 3231 in the vicinity of the 18" RCP inlet as indicated in the plans. All costs associated with installation of the concrete apron and an underlying 2" layer of aggregate base course shall be incidental to the contract unit price for 6" Concrete Sidewalk.
3. The micropool bottom shall be placed at elevation 3225.0 and lined with a concrete apron. All costs associated with installation of the concrete apron on the floor of the micropool and an underlying 2" layer of aggregate base course shall be incidental to the contract unit price for 6" Concrete Sidewalk.
4. The trickle channel shall be formed with a Class A riprap liner and filled with soil during installation. All costs associated with furnishing and installing the soil fill shall be incidental to the contract unit price for Class A Riprap.

ESTIMATED QUANTITIES

ITEM	UNIT	QUANTITY
Unclassified Excavation	Cu. Yd.	8865
6" Concrete Sidewalk	Sq. Ft.	1912
18" RCP, Furnish and Install	Ft.	86
18" RCP Flared End, Furnish and Install	Ea.	3
30" RCP, Furnish and Install	Ft.	28
30" RCP Flared End, Furnish and Install	Ea.	1
30" RCP Bend, Furnish and Install	Ea.	1
Class A Riprap	Ton	410
Type B Drainage Fabric	Sq. Yd.	515
Special Manhole	Ea.	1

Plot Scale - ViewportScale

Plotted From - AFAGERNE

File - pond grading.dwg

STATE OF SOUTH DAKOTA	PROJECT	SHEET	TOTAL SHEETS
	IM 1902(61)0	B181	B253

Plotting Date: May-7-2015

Sediment Basin Details

FOR BIDDING PURPOSES ONLY

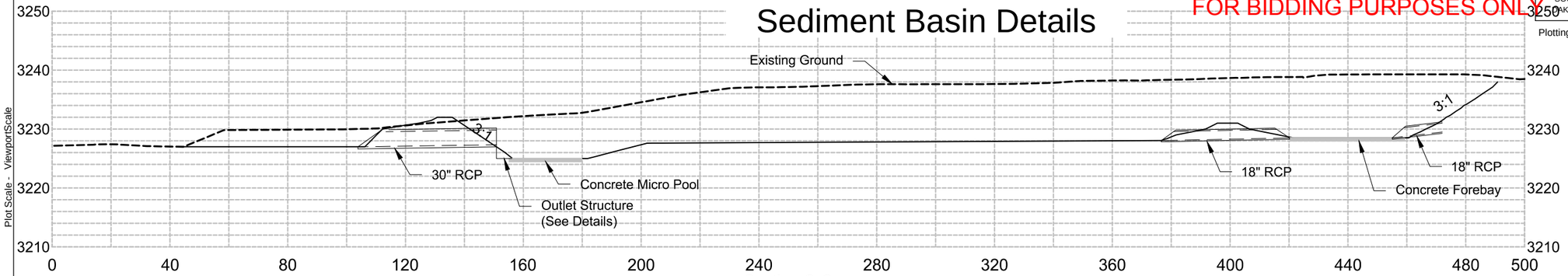

Section C-C

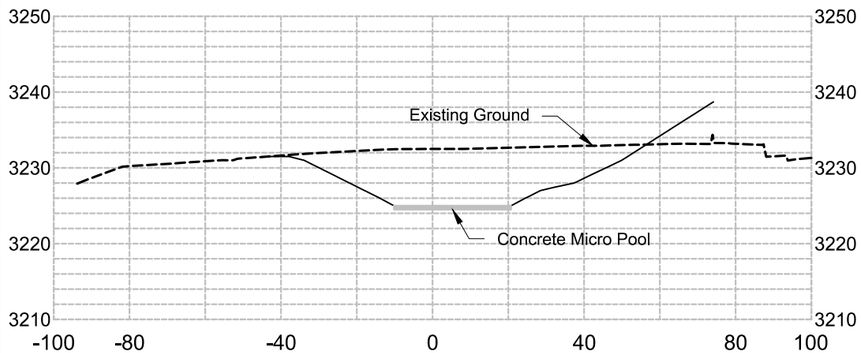

Section D-D

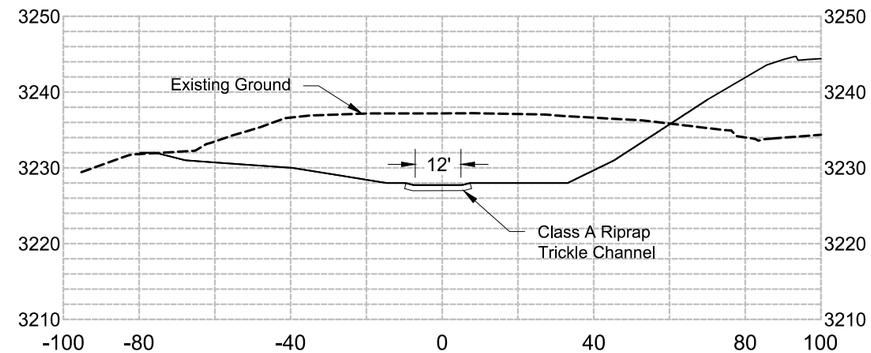

Section E-E

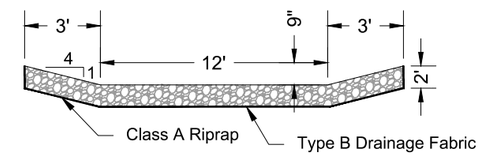

Trickle Channel

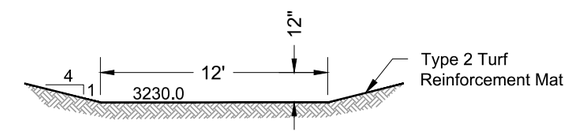

Forebay Spillway

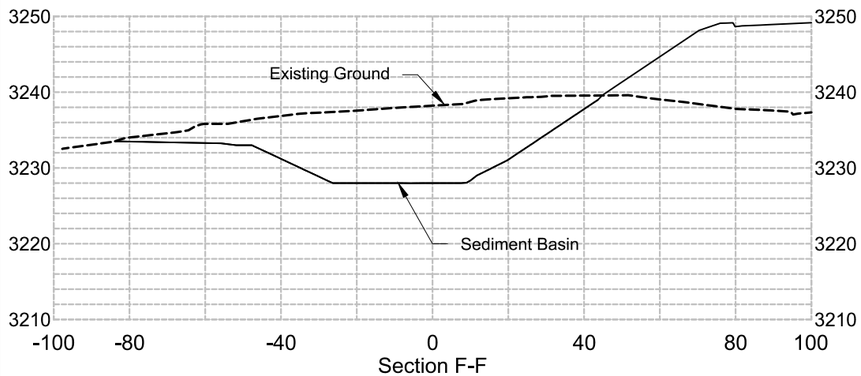

Section F-F

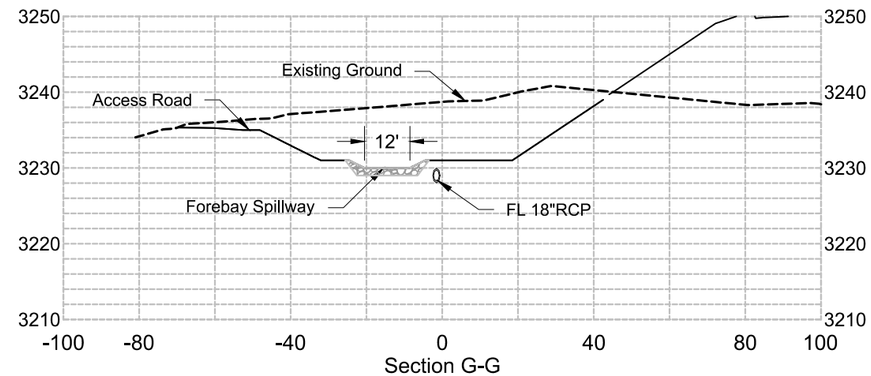

Section G-G

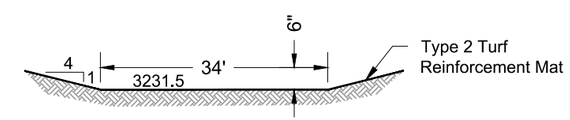

Emergency Spillway

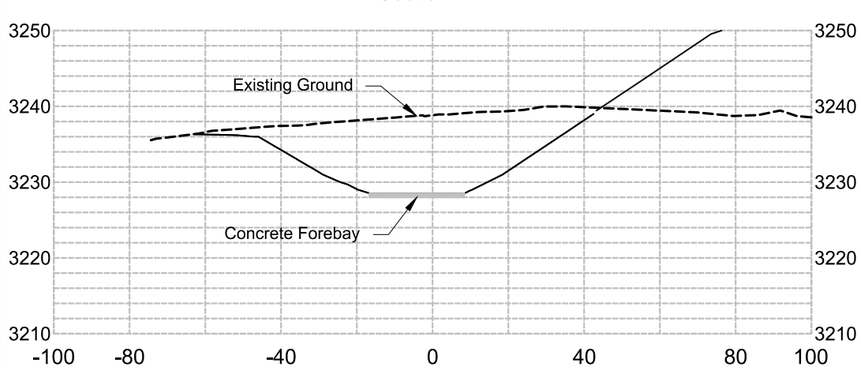

Section H-H

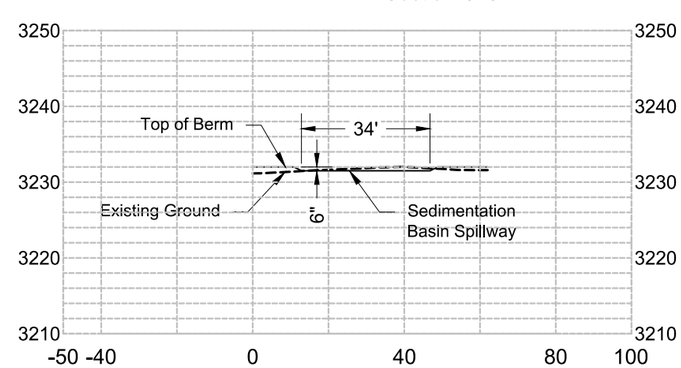

Section I-I

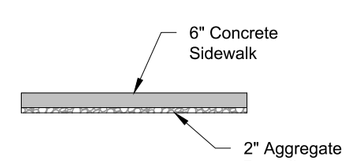

Forebay and Micropool
Concrete Apron

REGISTERED PROFESSIONAL ENGINEER
REG. NO. 8328
JODY W. PAGE
SOUTH DAKOTA
7 MAY 2015

HDR

Plot Scale - ViewportScale

Plotted From - RUGGETT

File - pond grading.dwg

STATE OF SOUTH DAKOTA	PROJECT	SHEET	TOTAL SHEETS
	IM 1902(61)0	B182	B253

FOR BIDDING PURPOSES ONLY

Plotting Date: May-5-2015

Sediment Basin Layout
Riprap Basin

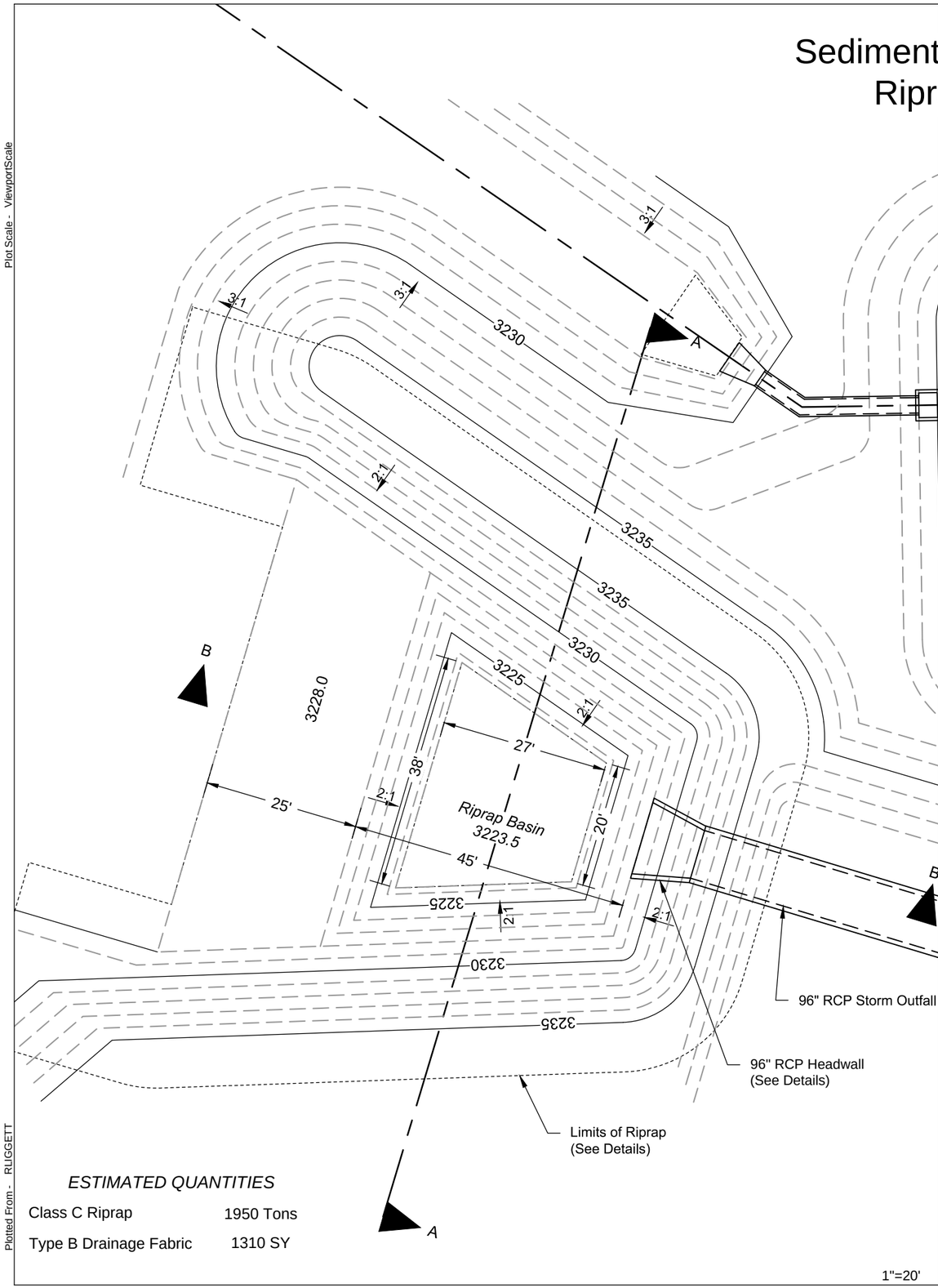

ESTIMATED QUANTITIES

Class C Riprap	1950 Tons
Type B Drainage Fabric	1310 SY

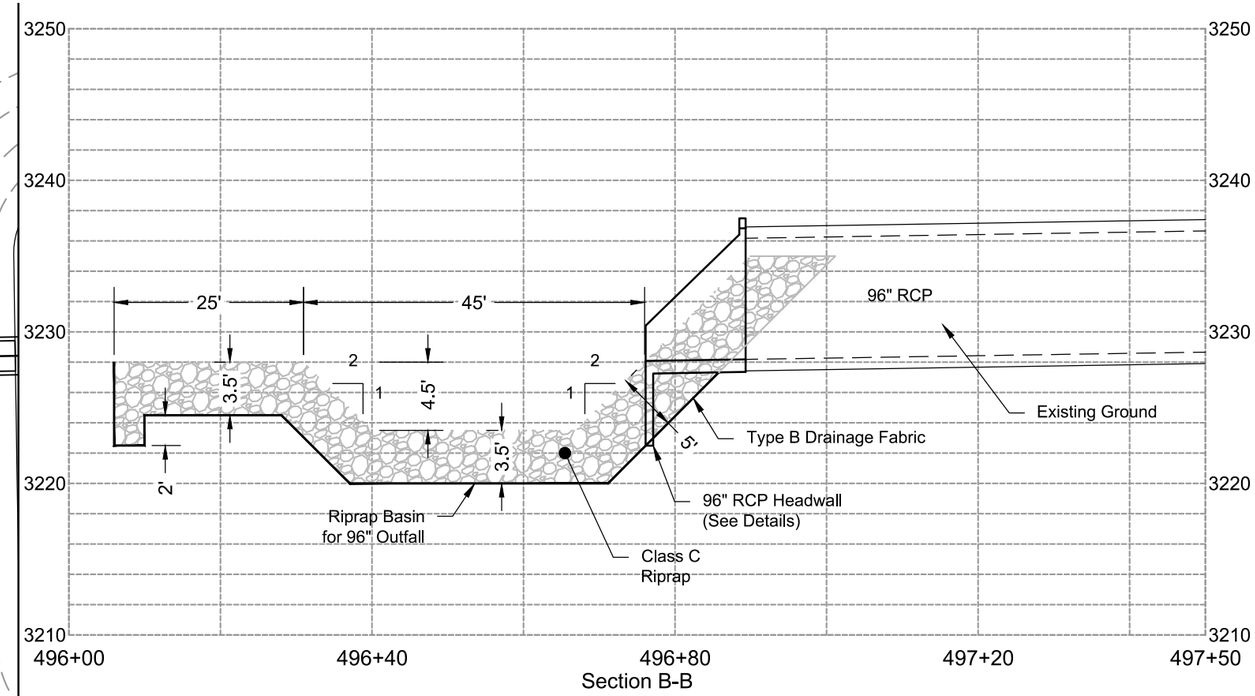

Section B-B

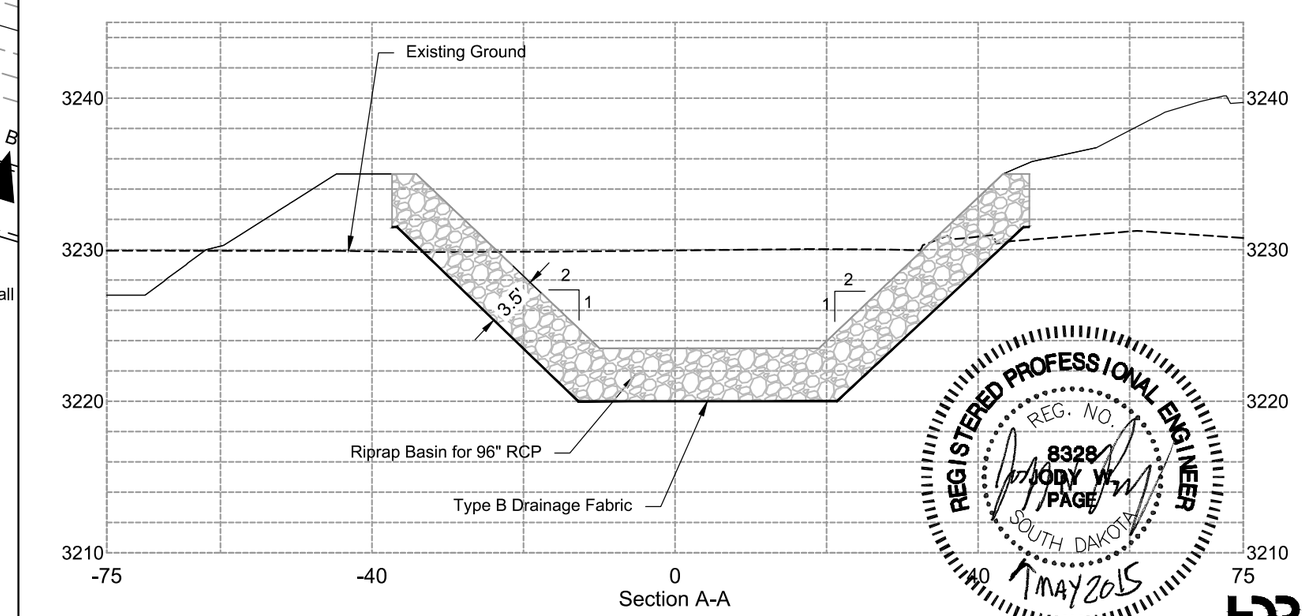

Section A-A

REGISTERED PROFESSIONAL ENGINEER
REG. NO. 8328
JODY W. PAGE
SOUTH DAKOTA
MAY 2015

HDR

Plot Scale - ViewportScale

Plotted From - RLIGGETT

File - pond grading.dwg

STATE OF SOUTH DAKOTA	PROJECT	SHEET	TOTAL SHEETS
	IM 1902(61)0	B183	B253

FOR BIDDING PURPOSES ONLY

Plotting Date: 05-08-2015

Sediment Basin Layout
Special Manhole 497+00.04 - 80.23' L

STRUCTURAL DETAILS

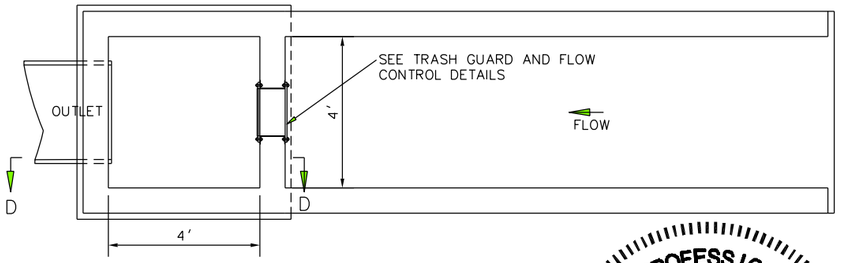

PLAN

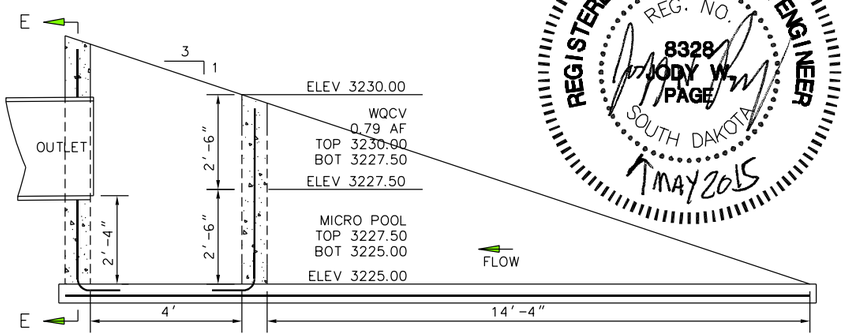

ELEVATION

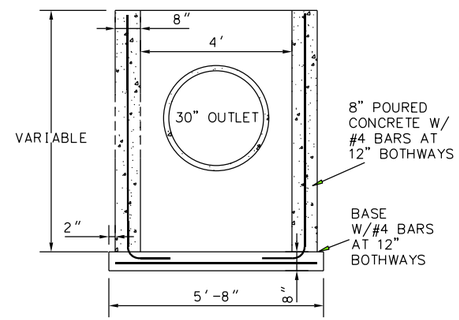

SECTION E-E

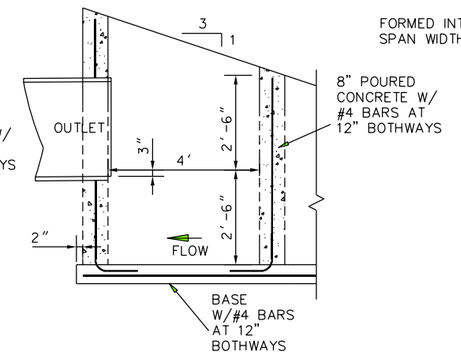

SECTION D-D

FLOW CONTROL PLATE

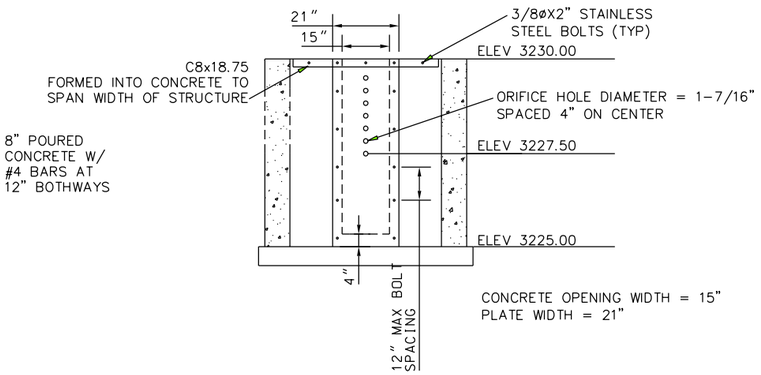

ORIFICE PERFORATION DETAIL

TRASH GUARD DETAILS

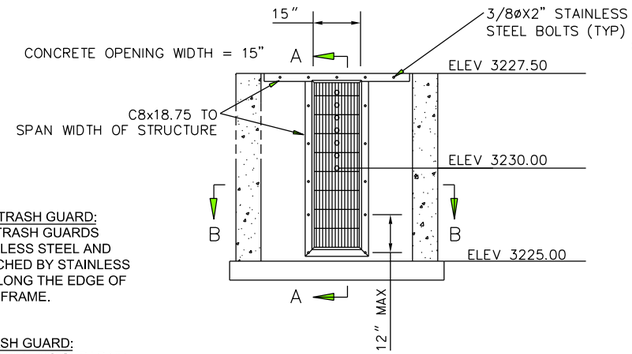

ELEVATION

ORIFICE PLATE TRASH GUARD:
WELL-SCREEN TRASH GUARDS SHALL BE STAINLESS STEEL AND SHALL BE ATTACHED BY STAINLESS STEEL BOLTS ALONG THE EDGE OF THE MOUNTING FRAME.

OVERFLOW TRASH GUARD:
SEE SPECAIL DETAIL; NO SEPARATE PAYMENT WILL BE MADE FOR THE OVERFLOW TRASH GUARD

TRASH GUARD DETAILS

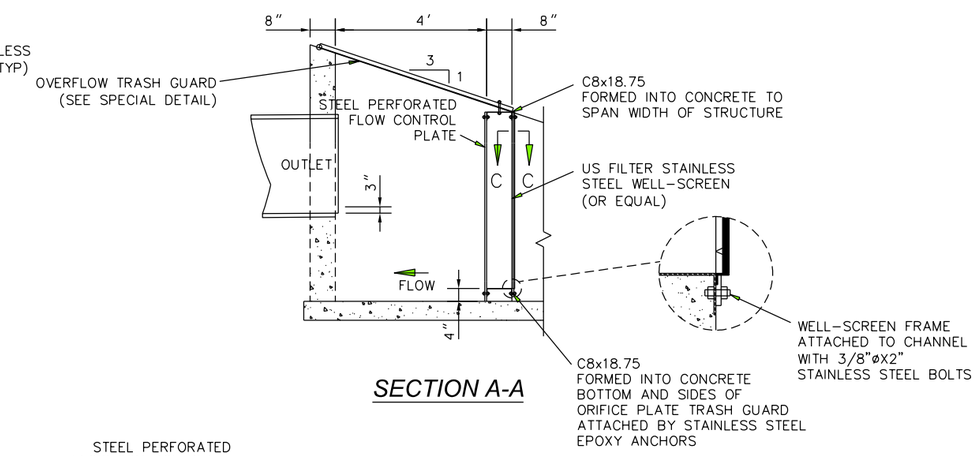

SECTION A-A

SPECIFICATIONS

1. Design Specifications: AASHTO LRFD Bridge Design Specifications 7th Edition.
2. Construction Specifications: South Dakota Standard Specifications for Roads and Bridges, 2004 Edition and required Provisions, Supplemental Specifications and Special Provisions.
3. Construction Specifications: AASHTO LRFD Bridge Construction Specifications, 3rd Edition and required Provisions, Supplemental Specifications and Special Provisions.

GENERAL NOTES

1. All Concrete shall be Class M6 conforming to Section 460.
2. Reinforcing steel shall conform to ASTM A615 Grade 60. Cut and bend reinforcing steel as required to place pipe(s) through the inlet wall.
3. Stainless Bolt steel shall conform to ASTM A316.
4. Angle steel shall conform to ASTM A36.
5. C-Shape steel shall conform to ASTM A36.

ESTIMATED QUANTITIES

ITEM	UNIT	QUANTITY
Special Manhole	Ea.	1

1. 6.5 Cu. Yd. Class M6 Concrete
2. 345 Lb. Reinforcing Steel
3. 1 Ea. Orifice Plate
4. 2 Ea. Trash Guard (for Orifice Plate and Overflow)

Items 1 thru 4 are approximate quantities contained in the above bid item and are for information only.

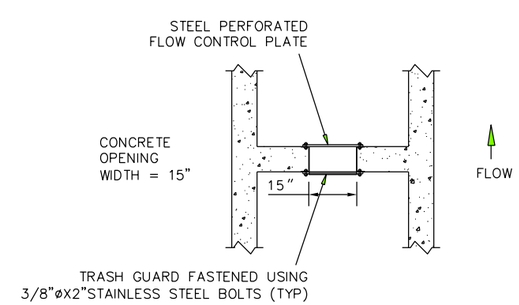

SECTION B-B PLAN VIEW

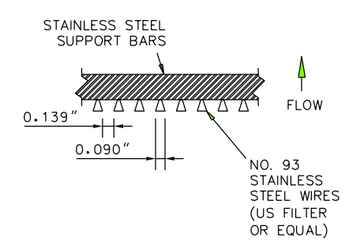

SECTION C-C

HDR

Plot Scale - 1:4

Plotted From - rfiggett

File - ...\Outlet Structure.dgn

REGISTERED PROFESSIONAL ENGINEER REG. NO. 8328 JODY W. PAGE SOUTH DAKOTA MAY 2015

FOR BIDDING PURPOSES ONLY

Special Manhole
Rebar Detail and Schedule

REINFORCING SCHEDULE

	Mk.	No.	Size	Length	Type	Bending Details
⌀	a1	18	4	13' - 2"	17	
	b1	7	4	19' - 8"	Str.	
	b2	4	4	5' - 0"	Str.	
✳	c	1	4	41' - 2"	17	
✳	c1	1	4	35' - 2"	17	
✳	c2	1	4	43' - 2"	17	
✳	c3	4	4	5' - 11"	17	
✳	d	2	4	5' - 2"	17A	
✳	d1	2	4	7'	17A	
✳	d2	2	4	9' - 10"	17A	
✳	d3	2	4	13' - 6"	17A	
✳	d4	2	4	9' - 9"	17A	
✳	d5	10	4	2' - 6"	17A	

NOTES:
All dimensions are out to out of bars.
⌀ See cutting diagram.
✳ Bend in field as necessary to fit.

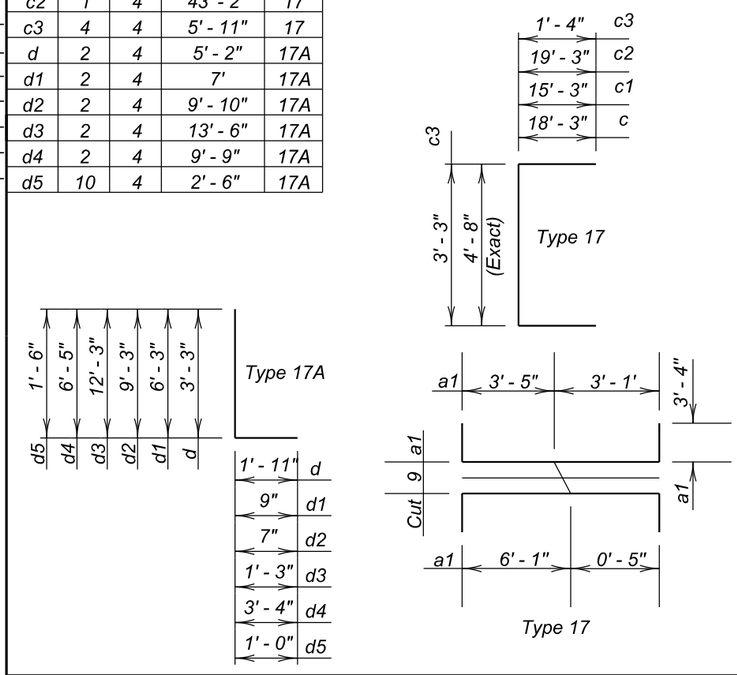

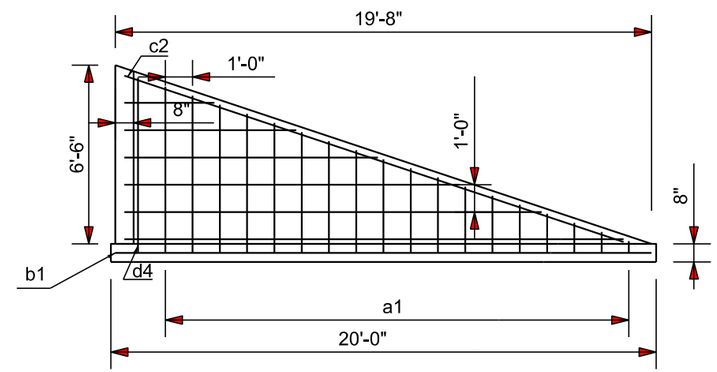

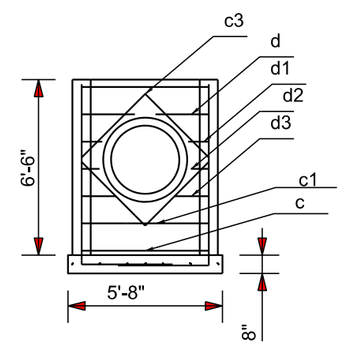

NOTES FOR OVERFLOW TRASHGUARD

SPECIFICATIONS

1. Design Specifications: AASHTO LRFD Bridge Design Specifications 7th Edition.
2. Construction Specifications: South Dakota Standard Specifications for Roads and Bridges, 2004 Edition and required Provisions, Supplemental Specifications and Special Provisions.
3. Construction Specifications: AASHTO LRFD Bridge Construction Specifications, 3rd Edition and required Provisions, Supplemental Specifications and Special Provisions.

GENERAL NOTES

1. All Concrete shall be Class M6 conforming to SDDOT Section 460.
2. Reinforcing steel shall conform to ASTM A615 Grade 60. Cut and bend reinforcing steel as required to place pipe(s) through the inlet wall.
3. Anchor Bolt steel shall conform to ASTM A108.
4. Pipe steel shall conform to ASTM A53 Grade B.
5. Plate steel shall conform to ASTM A36.
6. Bolts and plates galvanizing shall conform to ASTM A153/A153M (Hot-Dip).
7. Pipes galvanizing shall conform to ASTM A123/A123M.
8. All costs associated with excavation and backfill, furnishing and installing the reinforced concrete structure, trash guards, orifice plate, and all other materials, labor and fittings shown in this detail or as required to complete the work shall be incidental to the contract unit price per each for "Special Manhole".

Plot Scale - 1:20
Plotted From - rfiogett
File - ...\Special Manhole Rebar Sch.dgn

Overflow Trash Guard For Special Manhole

FOR BIDDING PURPOSES ONLY

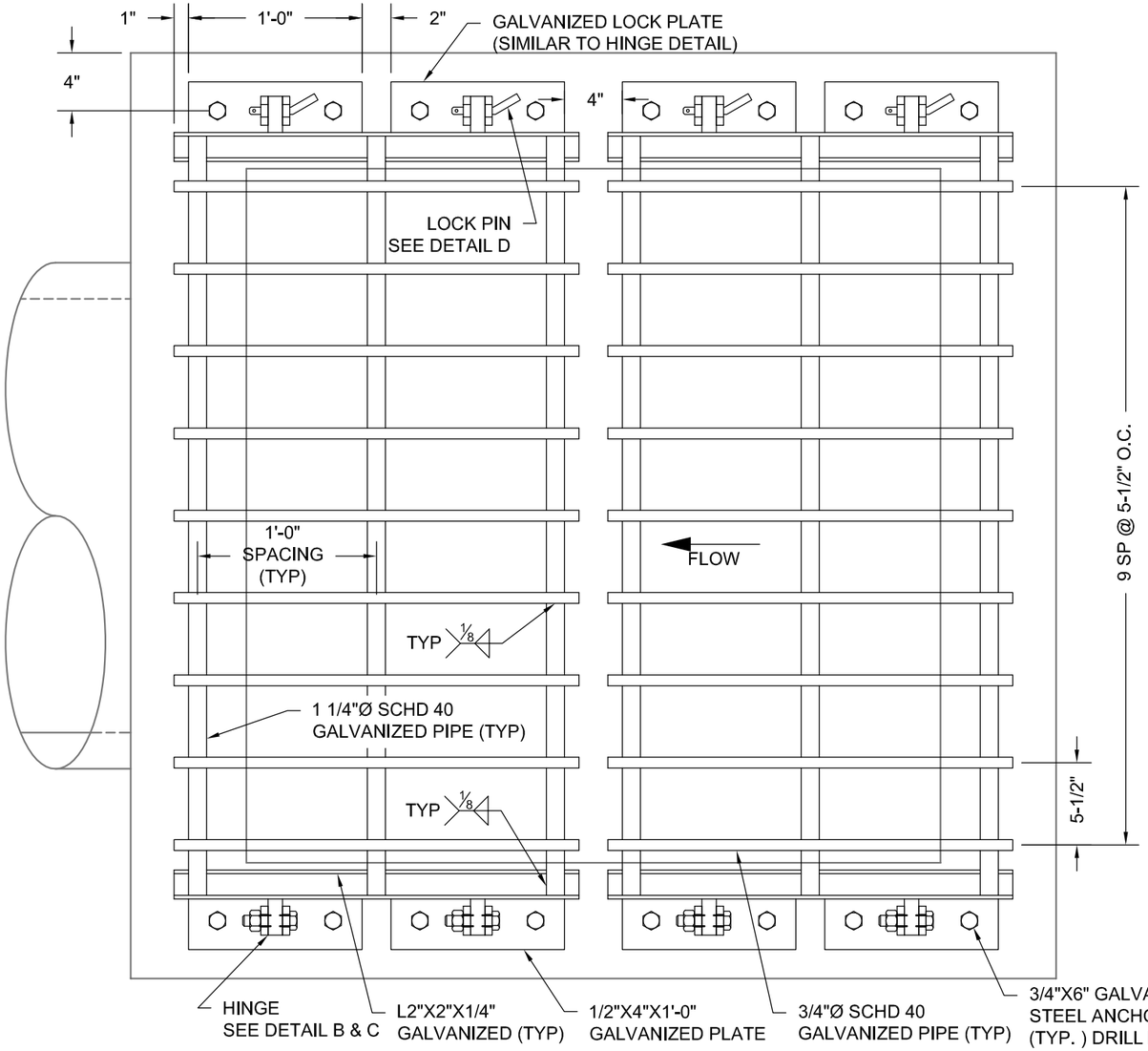

PLAN

NOT TO SCALE

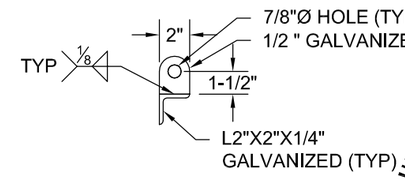

DETAIL A

NOT TO SCALE

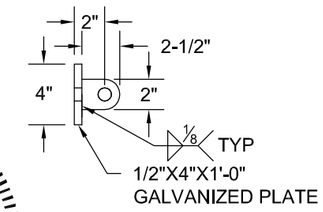

DETAIL B

NOT TO SCALE

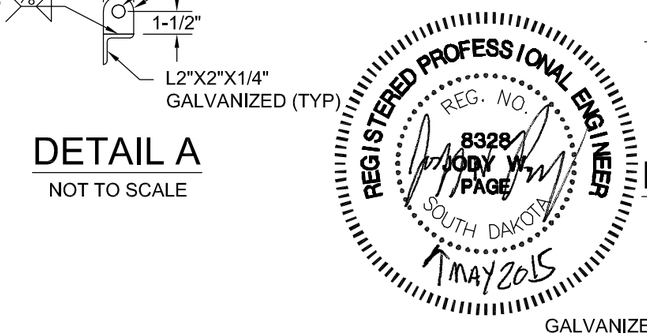

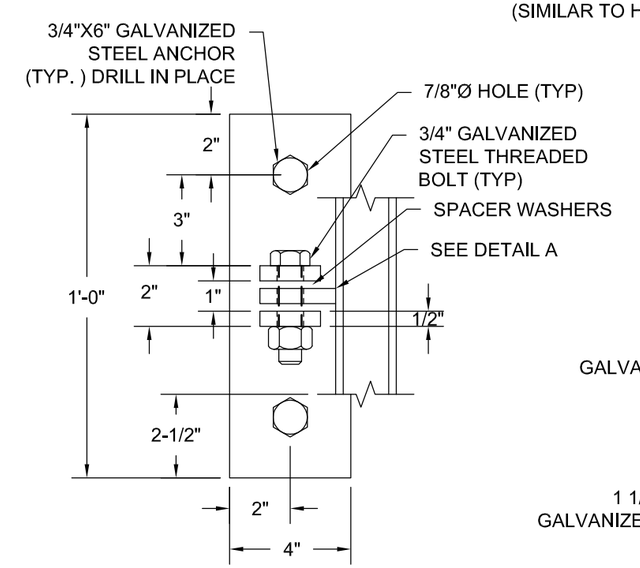

DETAIL C

NOT TO SCALE

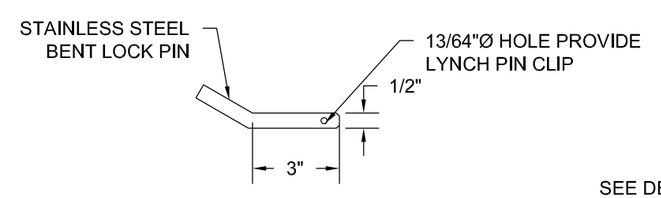

DETAIL D

NOT TO SCALE

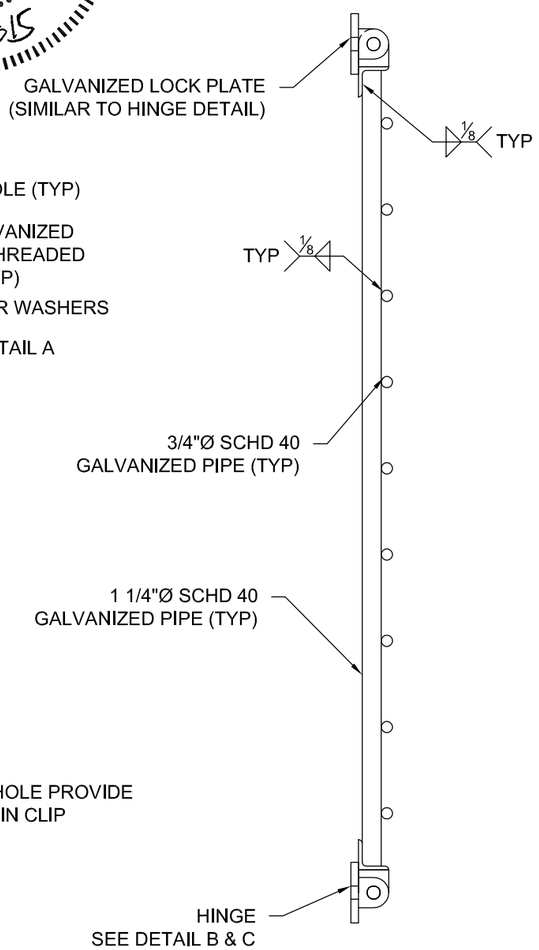

NOTES:

1. ASSEMBLY TO BE GALVANIZED AFTER WELDING AND FABRICATION

Plot Scale - ViewportScale
Plotted From - RLIGGETT
File - trash rack.dwg

Special Concrete Drainage Apron

FOR BIDDING PURPOSES ONLY

Basin Micropool
497+27.88-76.29' L
(Large Diameter Storm Pipe)

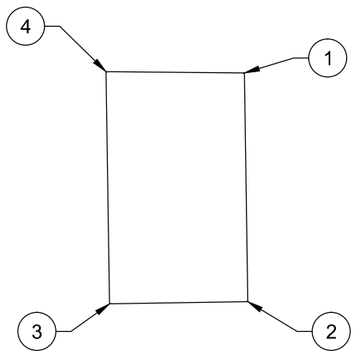

Sediment Basin Micropool

1 497+32.23 - 93.64' L
PI 6" Concrete Sidewalk
Top of Concrete Elev. 3225.00

2 497+41.52 - 64.40' L
PI 6" Concrete Sidewalk
Top of Concrete Elev. 3225.00

3 497+23.65 - 58.72' L
PI 6" Concrete Sidewalk
Top of Concrete Elev. 3225.00

4 497+14.22 - 88.41' L
PI 6" Concrete Sidewalk
Top of Concrete Elev. 3225.00

Basin Forebay
500+43.89-67.09' L
(Large Diameter Storm Pipe)

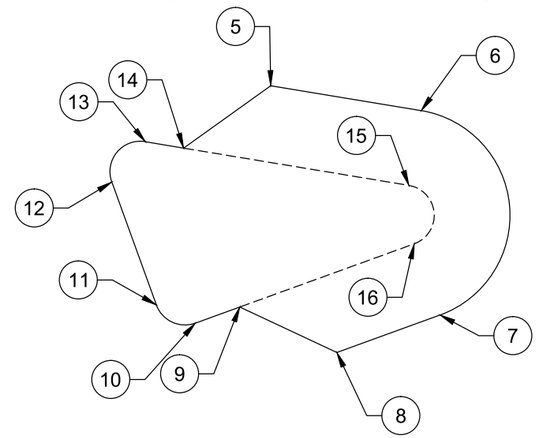

Sediment Basin Forebay

5 500+42.15 - 85.33' L
PI 6" Concrete Sidewalk
Top of Concrete Elev 3230.00

6 500+60.65 - 77.37' L
Begin 14' Rad 6" Concrete Sidewalk
Top of Concrete Elev 3230.00

7 500+56.59 - 60.53' L
End 14' Rad 6" Concrete Sidewalk
Top of Concrete Elev 3230.00

8 500+42.18 - 49.07' L
PI 6" Concrete Sidewalk
Top of Concrete Elev 3230.00

9 500+31.18 - 57.96' L
PI 6" Concrete Sidewalk
Top of Concrete Elev 3228.50

10 500+24.97 - 57.30' L
Begin 4' Rad 6" Concrete Sidewalk
Top of Concrete Elev 3228.50

Sediment Basin Forebay

11 500+20.57 - 60.86' L
End 4' Rad 6" Concrete Sidewalk
Top of Concrete Elev 3228.50

12 500+18.75 - 78.02' L
Begin 4' Rad 6" Concrete Sidewalk
Top of Concrete Elev 3228.50

13 500+24.31 - 82.12' L
End 4' Rad 6" Concrete Sidewalk
Top of Concrete Elev 3228.50

14 500+29.02 - 80.09' L
PI 6" Concrete Sidewalk
Top of Concrete Elev 3228.50

15 500+56.70 - 68.19' L
Begin 4' Rad 6" Concrete Sidewalk
Top of Concrete Elev 3228.50

16 500+55.54 - 60.53' L
End 4' Rad 6" Concrete Sidewalk
Top of Concrete Elev 3228.50

Concrete Drainage Apron Between End Sections
144+71.56-81.66' L
(I-190 Mainline)

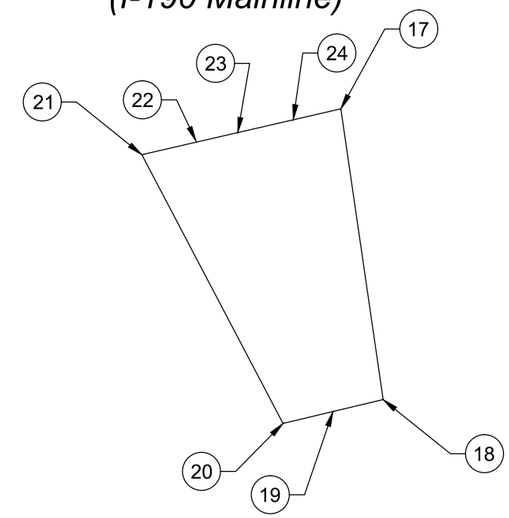

Concrete Drainage Apron Between End Sections

17 144+83.33 - 98.99' L
PI 6" Concrete Sidewalk
Top of Concrete Elev 3306.47 (Match Existing)

18 144+80.49 - 60.32' L
PI 6" Concrete Sidewalk
Top of Concrete Elev 3306.28 (Match Existing)

19 144+73.74 - 58.04' L
42" Flared End FL 3304.16

20 144+66.91 - 60.10' L
PI 6" Concrete Sidewalk
Top of Concrete Elev 3306.05 (Match Existing)

21 144+56.39 - 98.75' L.
PI 6" Concrete Sidewalk
Top of Concrete Elev 3306.53 (Match Existing)

22 144+63.68 - 101.06' L
48" Flared End FL 3304.00

23 144+69.37 - 93.90' L
42" Arch Flared End FL 3204.82 (Match Existing)

24 144+76.89 - 94.00' L
42" Arch Flared End FL 3204.80 (Match Existing)

REGISTERED PROFESSIONAL ENGINEER
REG. NO. 8328
JODY W. PAGE
SOUTH DAKOTA
MAY 2015

GENERAL NOTES

1. A 2" layer of aggregate base course shall be installed below the concrete as indicated in the typical section.
2. Payment for furnishing and installing the aggregate base course and the Special Concrete Drainage aprons shall be incidental to the contract unit price per square foot for 6" Concrete Sidewalk.

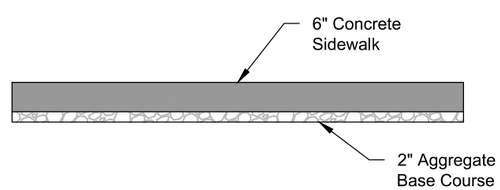

Typical Section

Plot Scale - ViewportScale
Plotted From - RUGGETT
File - pond grading.dwg

Special Concrete Headwall For 96" RCP
Station 496+89.33 - 0.00'

FOR BIDDING PURPOSES ONLY

STATE OF SOUTH DAKOTA	PROJECT	SHEET	TOTAL SHEETS
	IM 1902(61)0	B187	B253

Plotting Date: May-8-2015

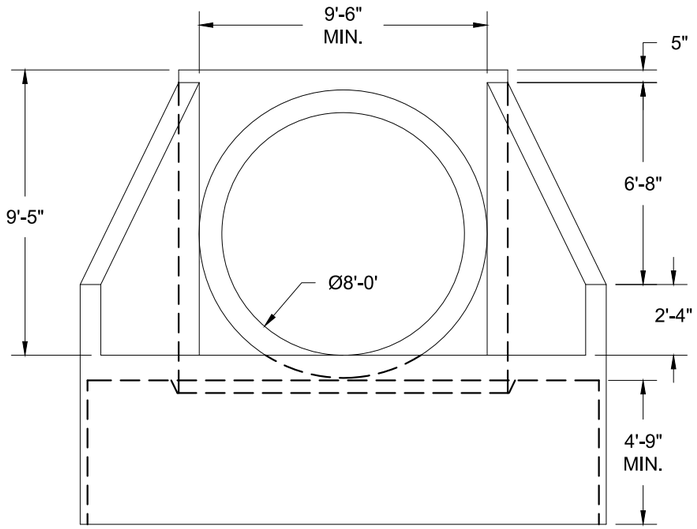

FRONT ELEVATION

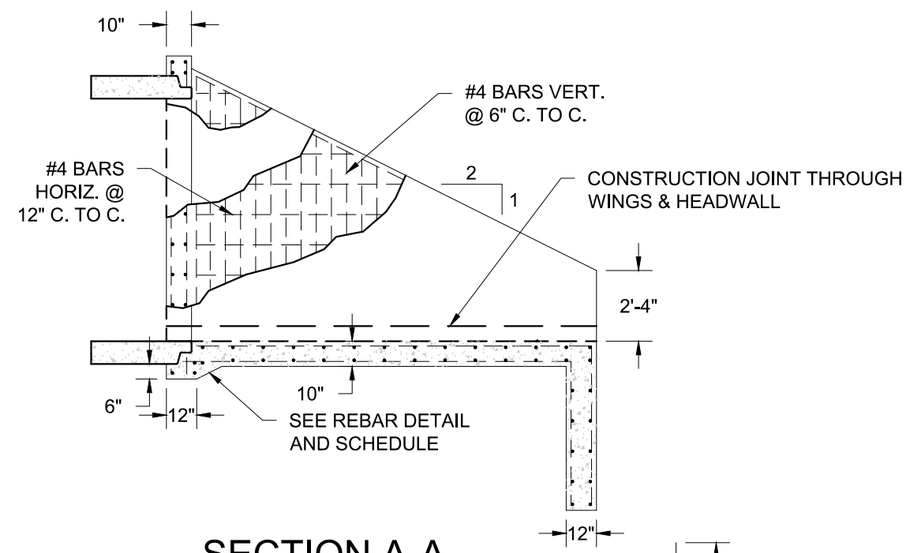

SECTION A-A

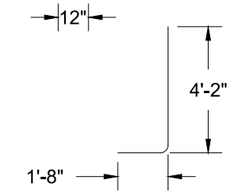

ADDITIONAL BAR DETAIL

ESTIMATED QUANTITIES		
ITEM	*UNIT*	*QUANTITY*
Class M6 Concrete	Cu. Yd.	15.4
Reinforcing Steel	Lbs.	1,699
Structure Excavation, Misc.	Cu. Yd.	55.8

SPECIFICATIONS:
1. Design Specifications: AASHTO LRFD Bridge Design Specifications 7th Edition.
2. Construction Specifications: South Dakota Standard Specifications for Roads and Bridges, 2004 Edition and required Provisions, Supplemental Specifications and Special Provisions.
3. Construction Specifications: AASHTO LRFD Bridge Construction Specifications, 3rd Edition and required Provisions, Supplemental Specifications and Special Provisions.

GENERAL NOTES:
1. All Concrete shall be Class M6 conforming to Section 460.
2. Reinforcing steel shall conform to ASTM A615 Grade 60.
3. The headwall shall be constructed for a 96" RCP outfall.
4. Alternate details will be allowed, subject to approval of the bridge construction engineer.
5. Allow 2 weeks for review and approval of alternatives.
6. Payment for the Special Concrete Headwall shall be based on the plan quantities of Class M6 Concrete and Reinforcing Steel.

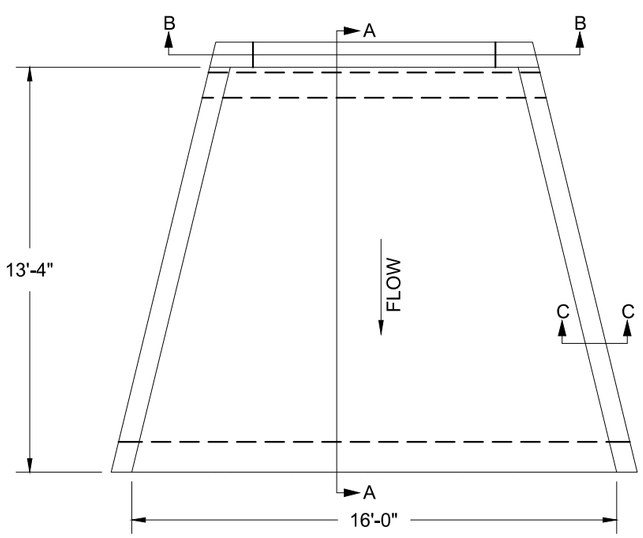

PLAN VIEW

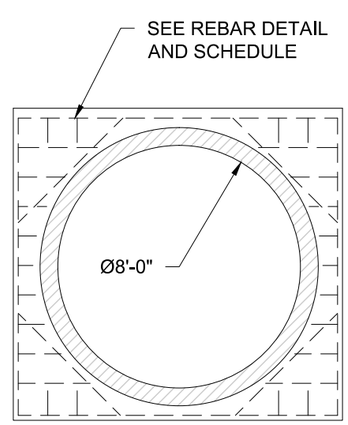

SECTION B-B

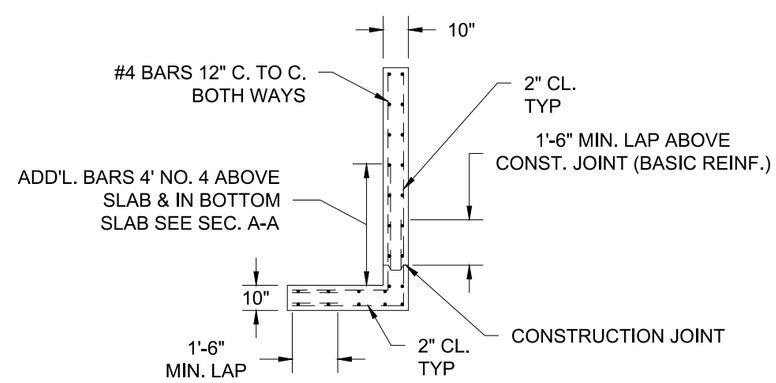

SECTION C-C

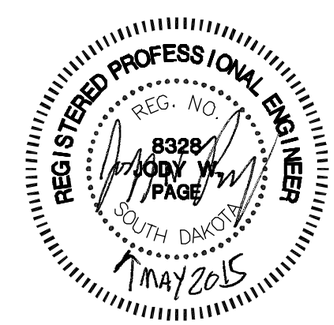

HDR

Plot Scale - ViewportScale

Plotted From - AFAGERNE

File - 96in headwall detail.dwg

FOR BIDDING PURPOSES ONLY

Special Concrete Headwall for 96" RCP
Rebar Detail and Schedule

REINFORCING SCHEDULE

	Mk.	No.	Size	Length	Type	Bending Details
⌀	a1	26	4	24' - 9"	17	
⌀	a2	26	4	23' - 9"	17	
✳	b1	1	4	29' - 6"	17	
✳	b2	1	4	28' - 6"	17	
✳	b3	4	4	8' - 4"	17	
✳	b4	4	4	6' - 4"	17	
	c1	8	4	10' - 3"	Str.	
	c2	10	4	10' - 10"	Str.	
✳	d1	2	4	4' - 8"	17A	
✳	d2	2	4	5' - 7"	17A	
✳	d3	2	4	7' - 0"	17A	
✳	d4	2	4	8' - 8"	17A	
✳	d5	2	4	12' - 8"	17A	
✳	d6	2	4	14' - 8"	17A	
✳	d7	2	4	15' - 3"	17A	
✳	d8	2	4	16' - 3"	17A	
✳	d9	2	4	3' - 8"	17A	
✳	d10	2	4	4' - 7"	17A	
✳	d11	2	4	6' - 0"	17A	
✳	d12	2	4	7' - 8"	17A	
✳	d13	2	4	11' - 8"	17A	
✳	d14	2	4	13' - 8"	17A	
✳	d15	2	4	14' - 3"	17A	
✳	d16	2	4	15' - 3"	17A	
✳	d17	2	4	10' - 8"	17A	
✳	d18	2	4	9' - 8"	17A	
✳	e1	6	4	27' - 8"		

NOTES:
All dimensions are out to out of bars.
⌀ See cutting diagram.
✳ Bend in field as necessary to fit.

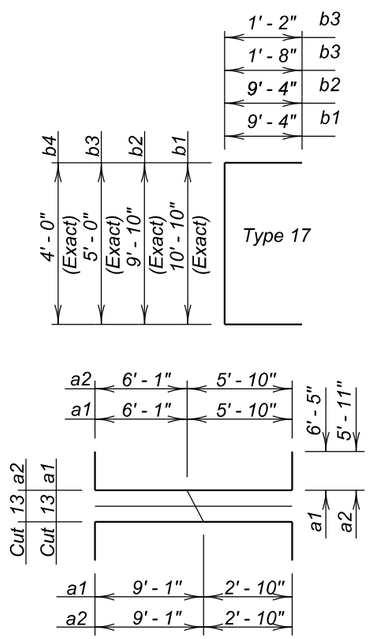

REINFORCING SCHEDULE

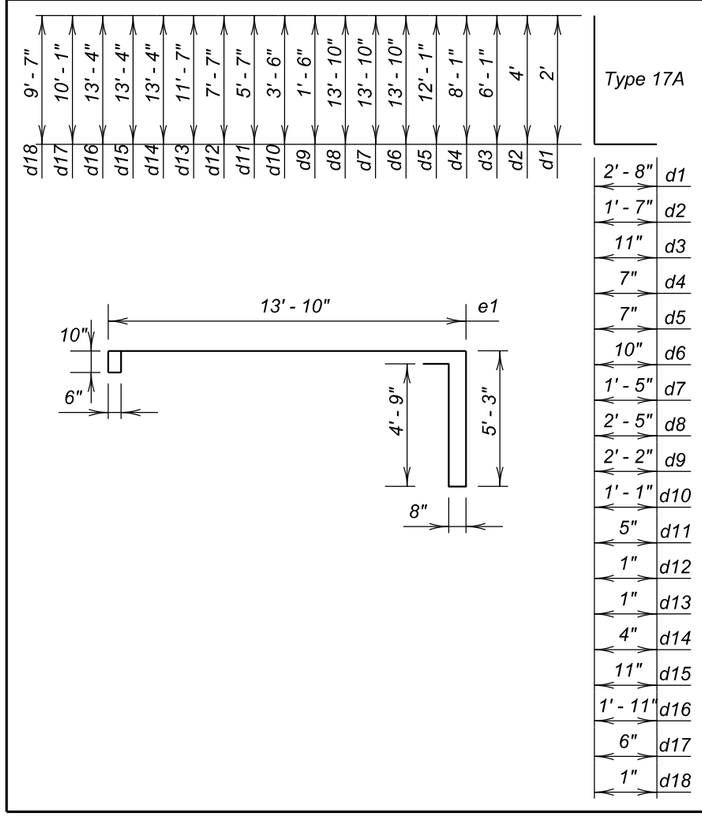

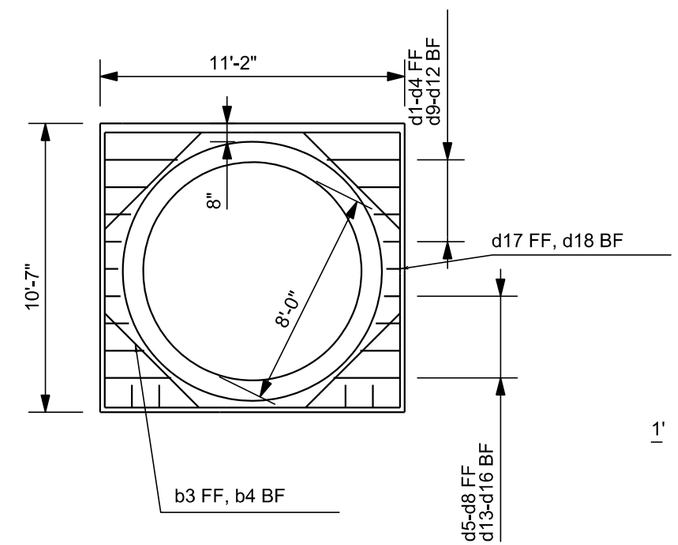

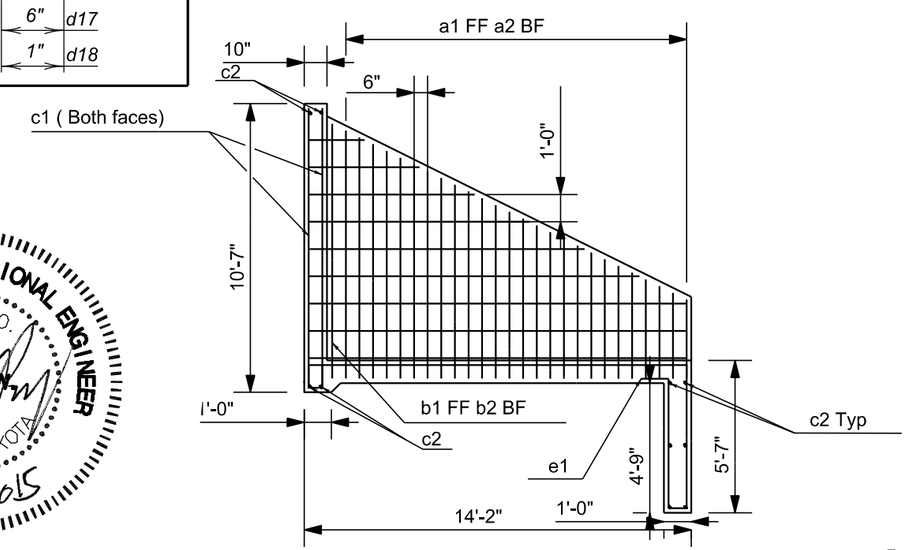

REGISTERED PROFESSIONAL ENGINEER
REG. NO. 8328
JODY W. PAGE
SOUTH DAKOTA
1 MAY 2015

Plot Scale - 1:20
Plotted From - rlagett
File - ...\96in Headwall Rebar Sch.dgn

Special Manhole Access Tee

FOR BIDDING PURPOSES ONLY

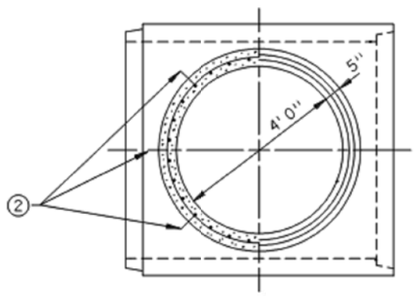

TOP VIEW

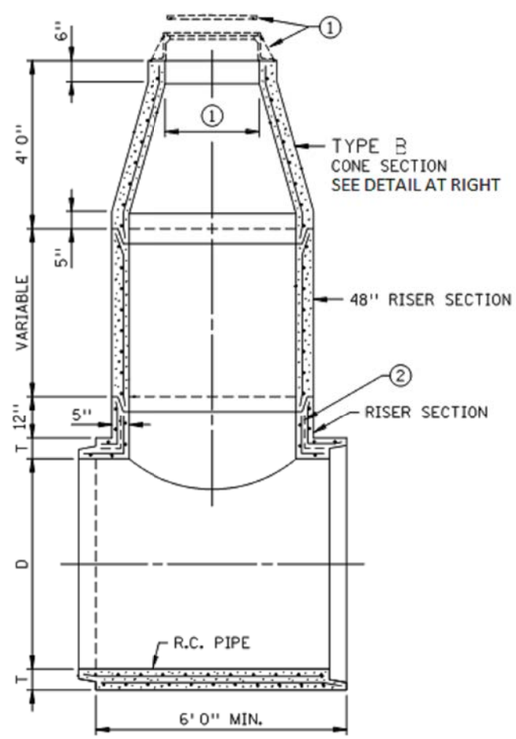

SECTIONAL VIEW

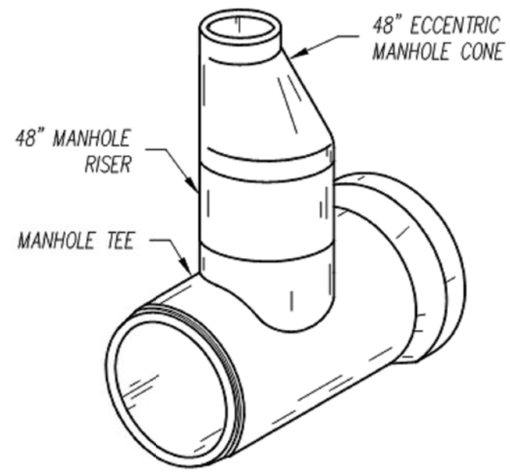

PERSPECTIVE VIEW

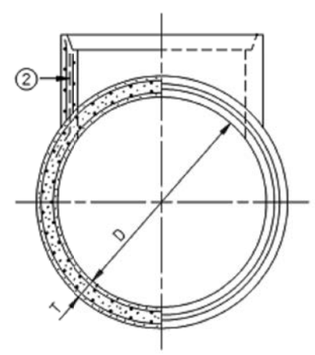

END VIEW

D = 90", T = 8.5"

GENERAL NOTES

1. 2'-3" nominal opening. Use Type A9 frame and lid. Use precast concrete adjusting ring where necessary. Casting and precast adjusting rings, when used, shall be set on full mortar beds.
2. When precast as a unit, place 8 equally spaced No.3 x 24" bars or wire mesh of equivalent area in location shown. When not precast as a unit, the existing steel in the pipe of the trunk shall be cut, bent, overlapped and fastened to the steel of the branch connection pipe before mortaring.
3. Steps will not be required.
4. Reinforcing: Single line steel wire fabric having an area of not less than 0.12 Sq. In. per foot of height.
5. Payment for the Special Access Tees shall be based on the required components RCP Tee, 48" Manhole Riser Section, and 48" Manhole Cone Section, and Type A9 Manole Frame and Lid. Concrete adjusting rings shall be incidental to the contract unit price for 48" Manhole Cone Section.

Note: The quanties shown below are estimates; the Contractor shall verify quantities in the field.

ESTIMATED QUANTITIES

ITEM	UNIT	QUANTITY
90"x90"x48" RCP Tee	Ea.	2
48" Manhole Riser Section	Ft.	3
48" Manhole Cone Section	Ft.	6
Type A9 Manhole Frame and Lid	Ea.	2

REGISTERED PROFESSIONAL ENGINEER
REG. NO. 8328
JODY W. PAGE
SOUTH DAKOTA
MAY 2015

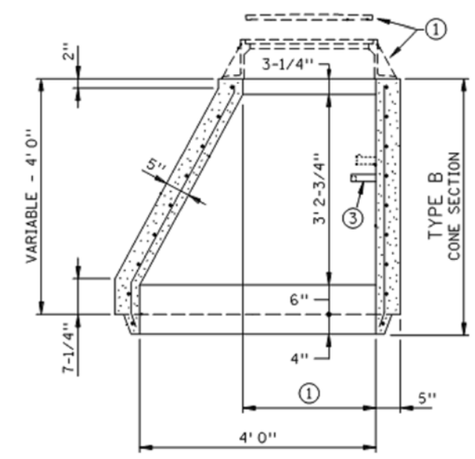

SECTIONAL VIEW
TYPE B CONE

Plot Scale - 1:4
Plotted From - rfiggett
File - ...\Manhole Tee Details.dgn

STATE OF SOUTH DAKOTA	PROJECT	SHEET	TOTAL SHEETS
	IM 1902(61)0	B190	B253

Plotting Date: 05-20-2015 Rev. 05/21/2015 AJF

FOR BIDDING PURPOSES ONLY

Special 3' X 6.5' TYPE B Reinforced Concrete Drop Inlet

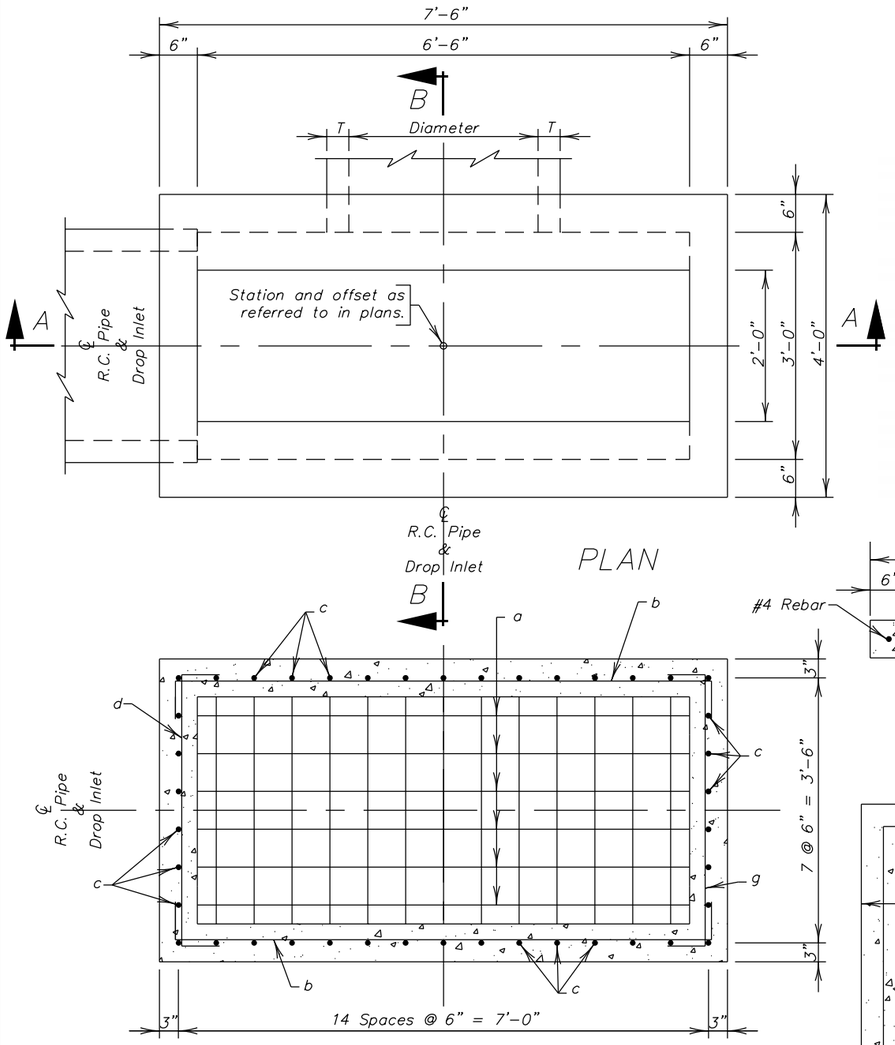

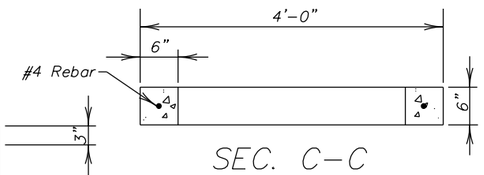

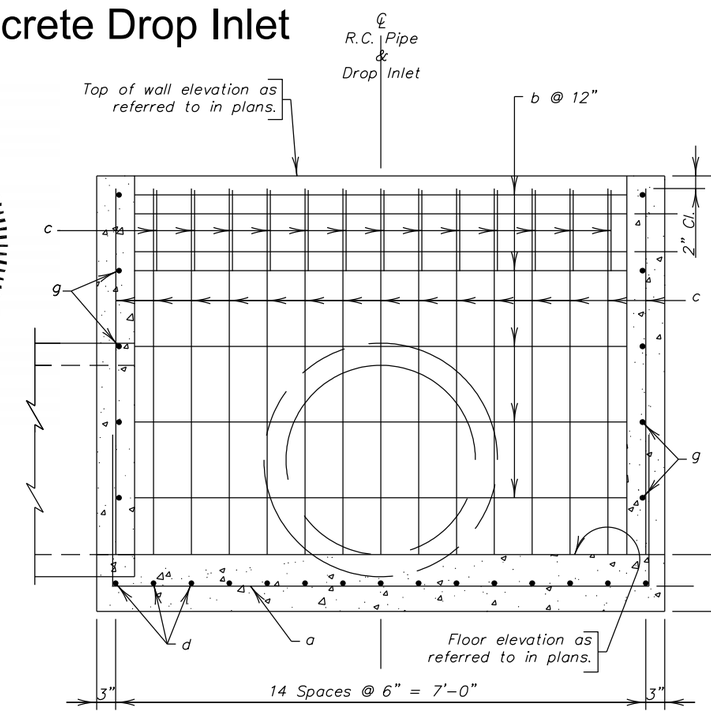

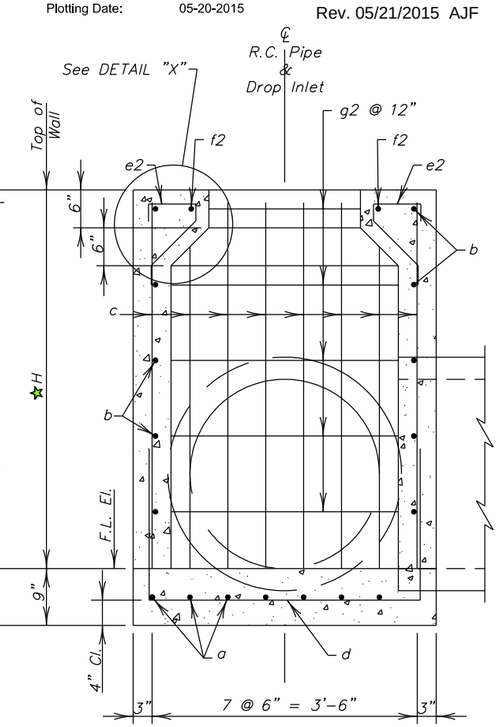

★Maximum H is 10'-0"

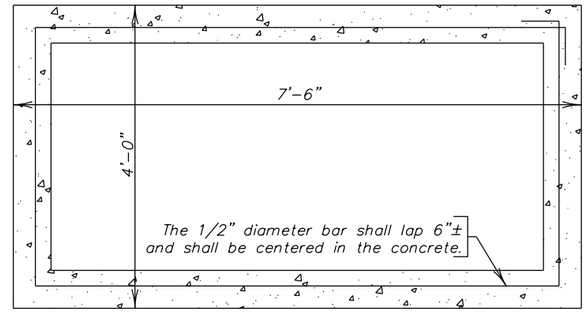

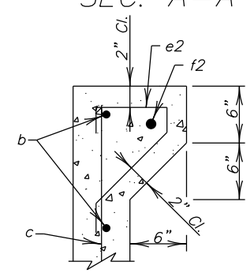

ESTIMATED QUANTITIES

ITEM	Unit	CONSTANT QUANTITY	VARIABLE QUANTITY
Class M6 Concrete	CuYd	1.01	0.39H
Reinforcing Steel	Lb	327	61.00H
Frame and Grate Assembly	Each	1	———
Precast Drop Inlet Collar	Each	1	———

GENERAL NOTES

Reduce total quantities of concrete by the amount of concrete displaced by the pipe. The total quantity of concrete shall be computed to the nearest hundredth of a cubic yard. The total quantity of reinforcing steel shall be computed to the nearest pound.

Drop inlets shown may be modified by the addition or omission of connecting pipes as shown on the layouts.

Reinforcing steel shall conform to ASTM A615 Grade 60. Cut and bend reinforcing steel as required to place pipe(s) throughout the drop inlet wall.

Use 2" clear cover on all reinforcing steel unless otherwise noted.

Precasting of reinforced drop inlets will be permissible. Prior to precasting, the Contractor shall submit details to the Engineer for approval.

Maximum pipe diameter shall not exceed 30 inches on the 4 foot side of the drop inlet.

The dimension of H is in feet.

Frames shall be a Neenah Foundry R-3295-2 or an approved equal.

The cost of furnishing and installing Precast Drop Inlet Collars, including labor, materials, and incidentals shall be incidental to the contract unit price per Each for "Precast Drop Inlet Collar".

PIPE DISPLACEMENT REDUCTIONS

R.C.Pipe Diameter Inches	T Inches	Class M6 Concrete CuYd
12	2	0.03
15	2¼	0.04
18	2½	0.05
24	3	0.09
30	3½	0.14
36	4	0.20
42	4½	0.26
48	5	0.34
54	5½	0.43

REINFORCING SCHEDULE

Mk.	No.	Size	Length	Type
a	8	6	11'-0"	17
b	2H	4	8'-0"	17
c	42	5	H-2"	Str.
d	15	6	7'-6"	17
e2	26	5	2'-6"	16A
f2	2	5	8'-0"	17
g	2H	4	4'-6"	17

BENDING DETAILS

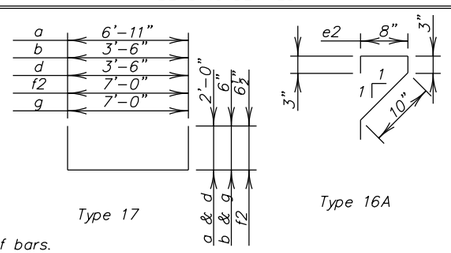

NOTE: All dimensions are out to out of bars.

HDR

Plot Scale - 1:2

Plotted From - rfiggett

File - ...\DBL B DETAIL.dgn

The elevations shown in these plans are based on the National Geodetic Survey (NGS) North American Vertical Datum of 1988 (NAVD88).

FOR BIDDING PURPOSES ONLY

STATE OF	PROJECT	SHEET NO.	TOTAL SHEETS
S.D.	IM 1902(61)0	B191	B253

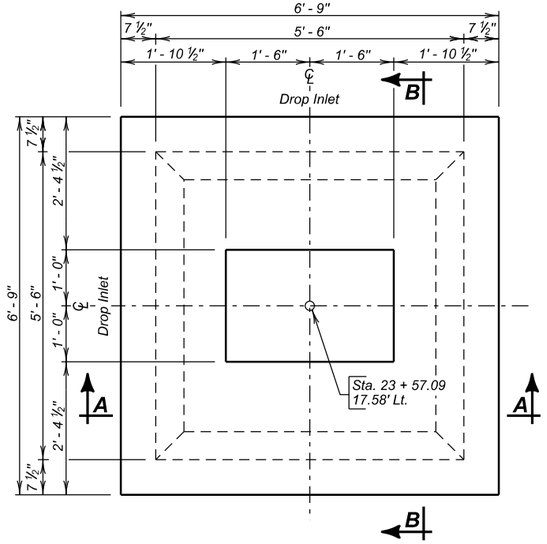

PLAN

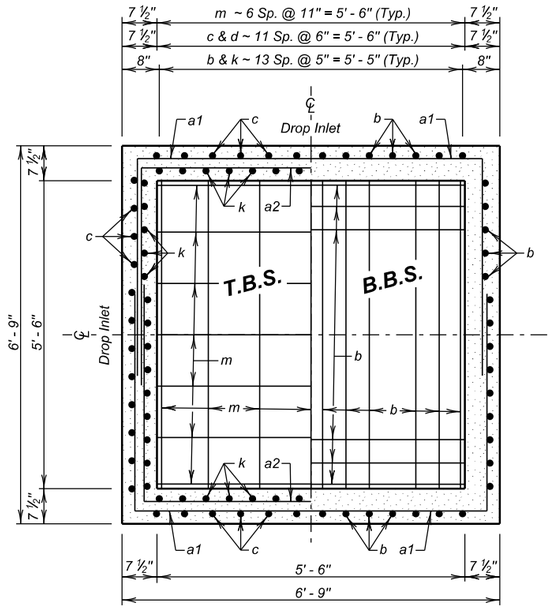

BOTTOM SECTION

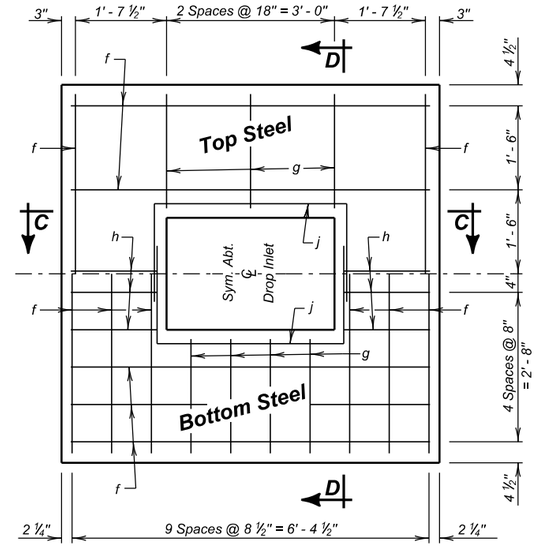

PLAN
(Cover)

REINFORCING SCHEDULE

Mk.	No.	Size	Length	Type
a1	18	4	14' - 3"	17
a2	18	4	13' - 6"	17
b	28	4	10' - 5"	17
c	48	5	14' - 1"	S17A
d	48	4	2' - 3"	S19
e	2	4	11' - 0"	17
f	18	4	6' - 3"	Str.
g	14	4	2' - 2"	Str.
h	10	4	1' - 6"	Str.
j	4	4	7' - 0"	17
k	56	4	13' - 6"	Str.
m	14	4	6' - 5"	Str.

Bending Details

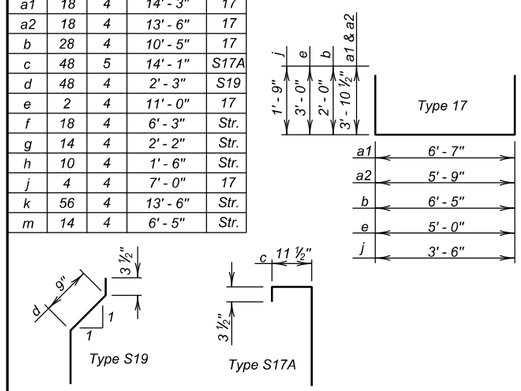

NOTE:
All dimensions are out to out of bars.

ESTIMATED QUANTITIES

	ITEM	UNIT	QUANTITY
✳	Class M6 Concrete	Cu. Yd.	10.0
	Reinforcing Steel	Lb.	2009
	Frame and Grate Assembly	Each	1

LEGEND FOR PLACING RE-STEEL

T.B.S. - Top of Bottom Slab
B.B.S. - Bottom of Bottom Slab
O.F.W. - Outside Face of Wall
I.F.W. - Inside Face of Wall

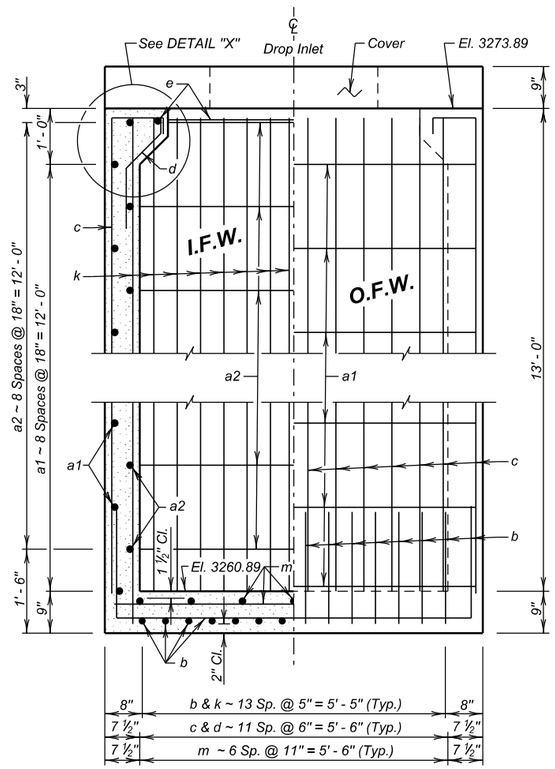

SEC. A - A

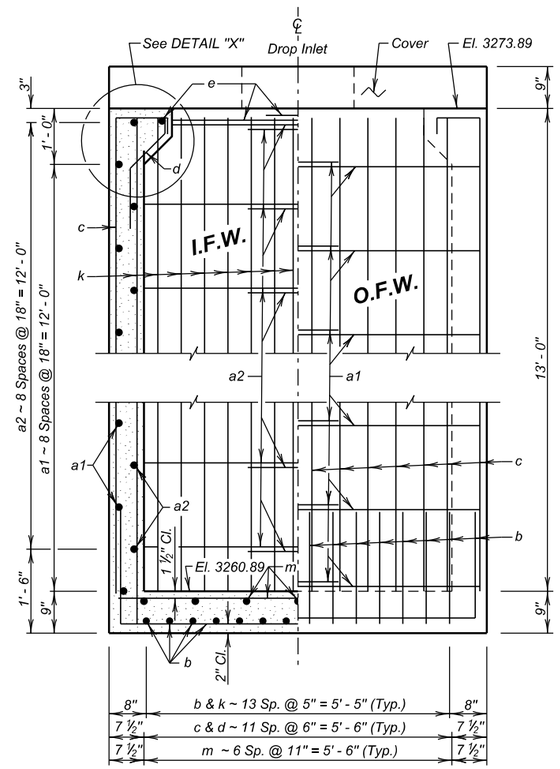

SEC. B - B

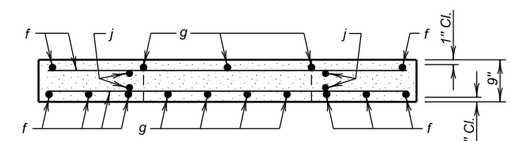

SEC. C - C

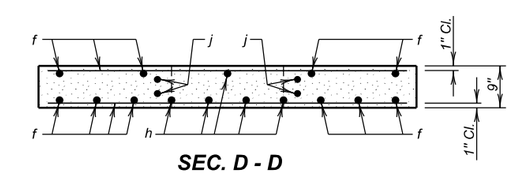

SEC. D - D

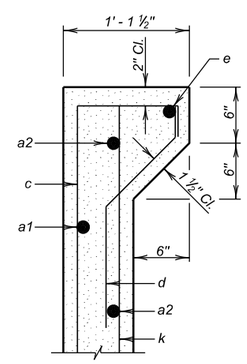

DETAIL "X"

PIPE DISPLACEMENT REDUCTIONS

R.C. Pipe Diameter (Inches)	Thickness of Pipe (Inches)	Class M6 Concrete (Cu. Yd.)
12	2	0.03
15	2 ¼	0.05
18	2 ½	0.07
24	3	0.11
30	3 ½	0.17
36	4	0.24
42	4 ½	0.33
48	5	0.42
54	5 ½	0.53

SPECIFICATIONS:

1. Design Specifications: AASHTO LRFD Bridge Design Specifications 2014 Edition.
2. Construction Specifications: South Dakota Standard Specifications for Roads and Bridges, 2004 Edition and required Provisions, Supplemental Specifications and Special Provisions.

GENERAL NOTES:

1. Design Live Load: HL-93 loading. No construction loading in excess of legal load was considered.
2. Design Material Strengths: Concrete f'c = 4000 p. s. i.
   Reinforcing Steel fy = 60000 p.s.i.
3. All concrete shall be Class M6 conforming to Section 462.
4. Reinforcing steel shall conform to ASTM A615 Grade 60. Cut and bend reinforcing steel as required to place pipe(s) through the inlet wall.
5. Use 1 inch clear cover on all reinforcing steel unless otherwise noted.
6. Precasting of reinforced drop inlet will be permissible. Prior to precasting, the contractor shall submit details to the Engineer for approval.
7. ✳ Reduce total quantities of concrete by the amount of concrete displaced by the pipes The total quantity of concrete shall be computed to the nearest hundredth of a cubic yard. The total quantity of reinforcing steel shall be computed to the nearest pound.

DETAILS

FOR

SPECIAL 5.5' X 5.5' TYPE B DROP INLET

STA. 23 + 57.09 - 17.58' LT. SEC. 35-T2N-R7E
PCN 1162 IM 1902(61)0

PENNINGTON COUNTY
S. D. DEPT. OF TRANSPORTATION
FEBRUARY 2015

PLANS BY :
OFFICE OF BRIDGE DESIGN, SOUTH DAKOTA DEPARTMENT OF TRANSPORTATION

DESIGNED BY	CK. DES. BY	DRAFTED BY	
BB	PW	BT	Kevin N. Goeden
PENN1162	1162TA01		BRIDGE ENGINEER

STATE OF	PROJECT	SHEET NO.	TOTAL SHEETS
S.D.	IM 1902(61)0	B192	B253

FOR BIDDING PURPOSES ONLY

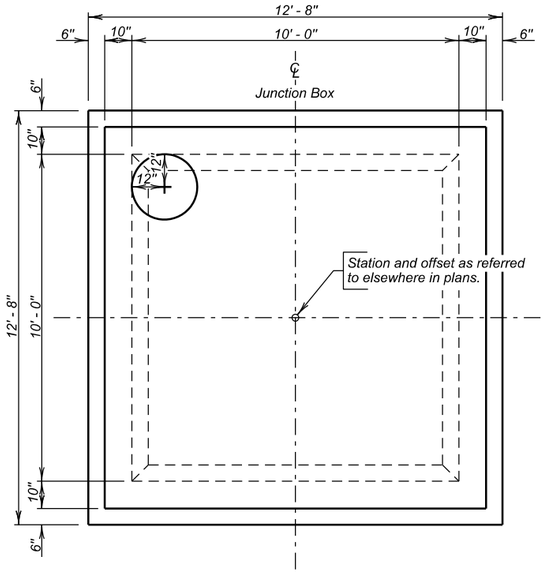

PLAN

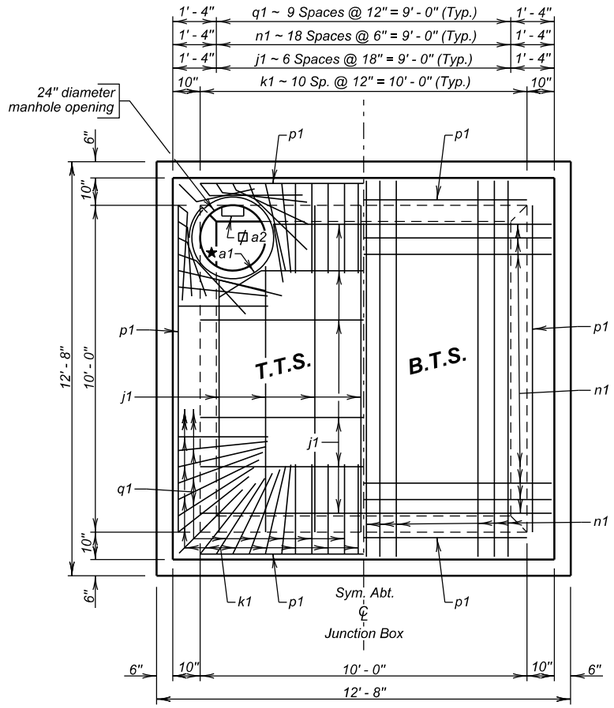

PLAN

PIPE DISPLACEMENT REDUCTIONS

R.C. Pipe Diameter (Inches)	Thickness of Pipe (Inches)	Class M6 Concrete (Cu. Yd.)
18" R.C.P.	2 ½	0.09
48" R.C.P.	5	0.56
60" R.C.P.	6	0.87
84" R.C.P.	8	1.68
90" R.C.P.	8 ½	1.92
96" R.C.P.	9	2.18

LEGEND FOR PLACING RE-STEEL

T.T.S. - Top of Top Slab
B.T.S. - Bottom of Top Slab
T.B.S. - Top of Bottom Slab
B.B.S. - Bottom of Bottom Slab
O.F.W. - Outside Face of Wall
I.F.W. - Inside Face of Wall

REINFORCING SCHEDULE

	Mk.	No.	Size	Length	Type
	a1	1	6	9' - 0"	T3
⌀	a2	13	-	-----	-
	h1	84	5	15' - 3"	17A
	j1	28	4	10' - 0"	Str.
	k1	44	5	20' - 0"	17
	m1	38	5	12' - 6"	Str
	n1	38	5	11 - 6"	Str.
	p1	112	4	10' - 0"	Str.
	q1	80	5	5' - 6"	17A
	q2	48	4	3 - 6"	17A

Bending Details

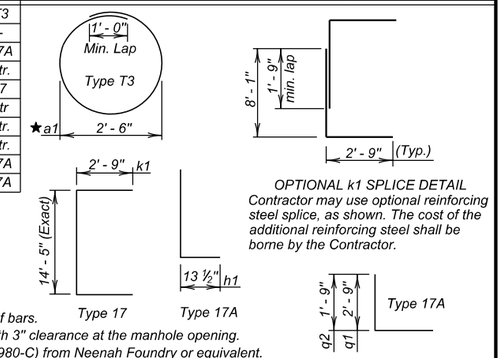

OPTIONAL k1 SPLICE DETAIL
Contractor may use optional reinforcing steel splice, as shown. The cost of the additional reinforcing steel shall be borne by the Contractor.

NOTES:
All dimensions are out to out of bars.
★ Locate in center of top slab with 3" clearance at the manhole opening.
⌀ Cast Iron Manhole Steps (R-1980-C) from Neenah Foundry or equivalent.

ESTIMATED QUANTITIES

	ITEM	UNIT	QUANTITY
✳	Class M6 Concrete	Cu. Yd.	27.3
	Reinforcing Steel	Lb.	4830

SPECIFICATIONS

1. Design Specifications: AASHTO LRFD Bridge Design Specifications, 2014 Edition.
2. Construction Specifications: South Dakota Standard Specifications for Roads and Bridges, 2004 Edition and required Provisions, Supplemental Specifications, and Special Provisions as included in the Proposal.

GENERAL NOTES

1. Design Live Load: HL-93. No construction loading in excess of legal load was considered.
2. The design of the Junction Box is based on 2 feet of fill.
3. All concrete shall be Class M6 conforming to Section 462.
4. Reinforcing steel shall conform to ASTM A615 Grade 60. Cut and bend reinforcing steel as required to place pipe(s) thru junction box wall.
5. Junction Box may be precast. If precast, submit a checked design (done by a South Dakota registered P.E.) and shop plans to the Office of Bridge Design for approval.
6. Use 1 inch clear cover on all reinforcing steel unless otherwise noted.
7. All exposed edges shall be chamfered ¾ inch.
8. Junction Box shown may be modified by the addition or omission of connecting pipes as noted elsewhere in the plans. All pipes entering Junction Box must fit between the inside face of walls.
9. The cost of furnishing and installing the manhole steps shall be incidental to the contract unit price per Lb. for "Reinforcing Steel".
10. ✳ Reduce total quantities of concrete by the amount of concrete displaced by the pipes. The total quantity of concrete shall be computed to the nearest hundredth of a cubic yard. The total quantity of reinforcing steel shall be computed to the nearest pound.
11. If precast eccentric manhole cone section is used, apply a thin layer of grout between precast cone section and the top of the junction box to assure uniform bearing. Wrap with filter fabric.

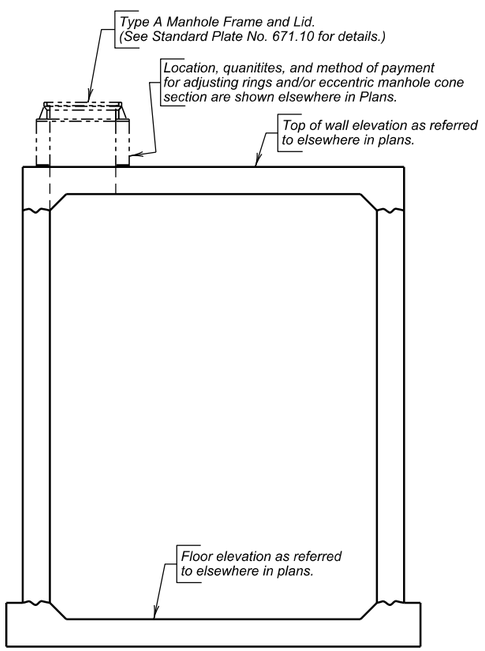

ELEVATION
(Cone section not shown.)

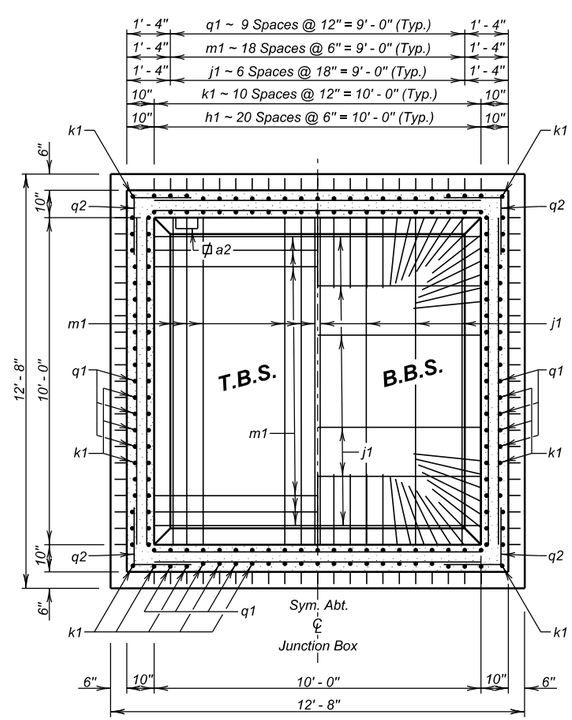

SEC. A - A

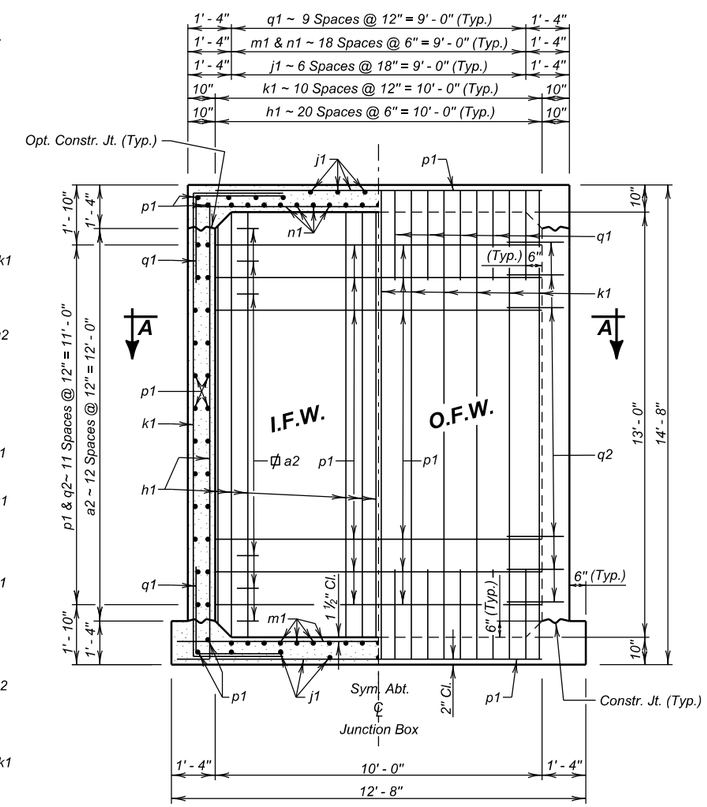

ELEVATION

PLANS BY :
OFFICE OF BRIDGE DESIGN, SOUTH DAKOTA DEPARTMENT OF TRANSPORTATION

DETAILS
FOR
SPECIAL 10' X 10' JUNCTION BOX

STA. 500 + 68.26 - 0.00' & SEC. 35-T2N-R7E
STA. 514 + 22.80 - 3.14' RT. IM 1902(61)0
PCN 1162

PENNINGTON COUNTY
S. D. DEPT. OF TRANSPORTATION
JANUARY 2015

DESIGNED BY	CK. DES. BY	DRAFTED BY	
PW	BB	BT	Kevin N. Goeden
PENN1162	1162TA01		BRIDGE ENGINEER

The elevations shown in these plans are based on the National Geodetic Survey (NGS) North American Vertical Datum of 1988 (NAVD88).

FOR BIDDING PURPOSES ONLY

STATE OF	PROJECT	SHEET NO.	TOTAL SHEETS
S.D.	IM 1902(61)0	B193	B253

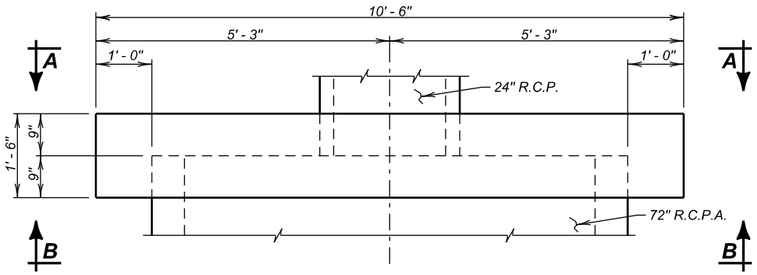

PLAN

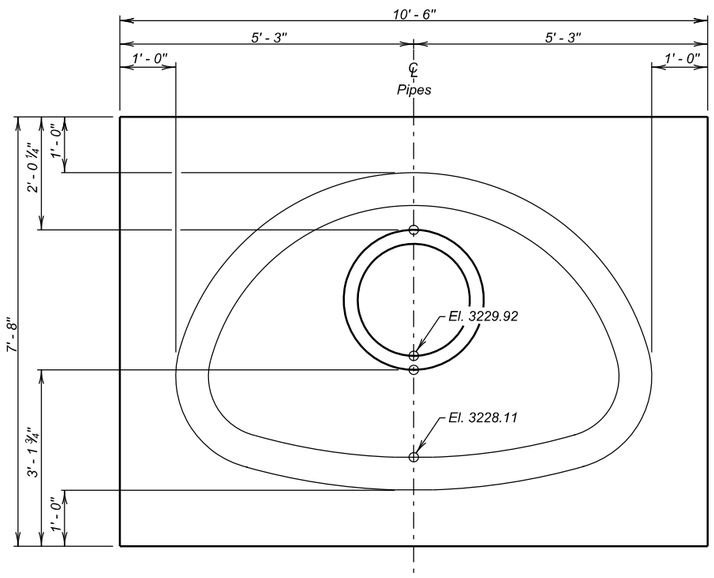

ELEVATION

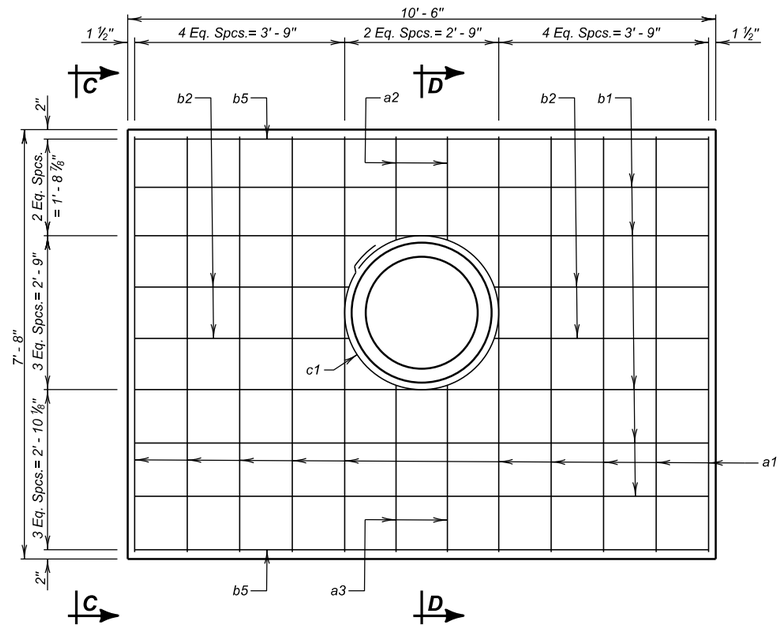

VIEW A - A

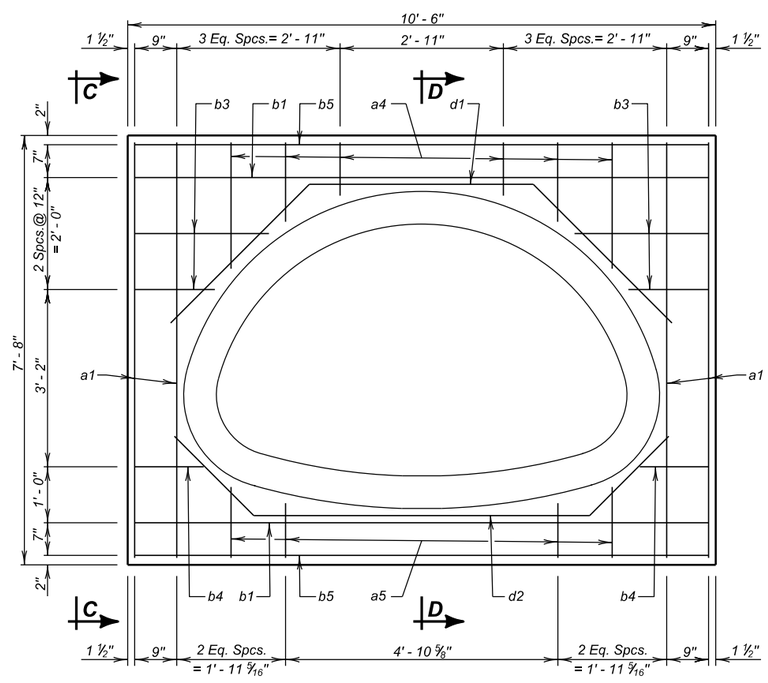

VIEW B - B

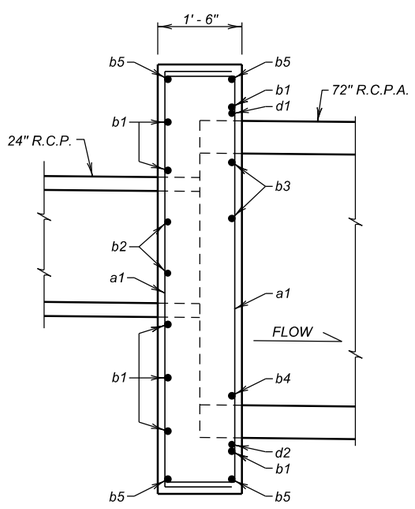

VIEW C - C

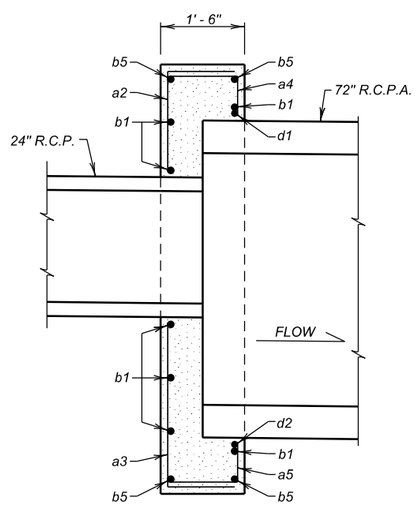

SEC. D - D

REINFORCING SCHEDULE

Mk.	No.	Size	Length	Type	Bending Details
a1	14	4	9' - 11"	17	
a2	2	4	4' - 4"	17	
a3	2	4	5' - 5"	17	
a4	3	4	5' - 9"	17	
a5	2	4	4' - 9"	17	
b1	7	4	10' - 3"	Str	
b2	4	4	3' - 9"	Str.	
b3	2	4	3' - 10"	Str.	
b4	2	4	1' - 3"	Str.	
b5	4	5	10' - 3"	Str.	
c1	1	4	9' - 2"	T3	
d1	1	4	11' - 0"	19B	
d2	1	4	10' - 0"	19B	

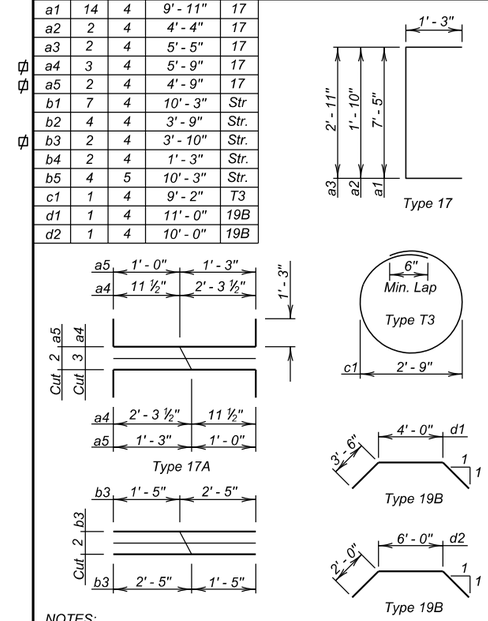

NOTES:
All dimensions are out to out of bars.
ϕ See cutting diagram.

ESTIMATED QUANTITIES

ITEM	UNIT	QUANTITY
Class M6 Concrete	Cu. Yd.	3.3
Reinforcing Steel	Lb.	252

SPECIFICATIONS

1. Design Specifications: AASHTO LRFD Bridge Design Specifications, 2014 Edition.
2. Construction Specifications: South Dakota Standard Specifications for Roads and Bridges, 2004 Edition and required Provisions, Supplemental Specifications, and Special Provisions as included in the Proposal.

GENERAL NOTES

1. Concrete shall be Class M6 in conformance with Section 462.
2. Reinforcing steel shall conform to ASTM A615 Grade 60.
3. Use 1 ½ inch clear cover on all reinforcing steel unless otherwise noted.
4. All exposed edges shall be chamfered ¾ inch.

DETAILS
FOR
C.I.P. CONCRETE HEADWALL (SPECIAL CONNECTION)

STA. 100 + 24.50 — SEC. 36-T2N-R7E
PCN 1162 — IM 1902(61)0

PENNINGTON COUNTY
S. D. DEPT. OF TRANSPORTATION
JANUARY 2015

PLANS BY :
OFFICE OF BRIDGE DESIGN, SOUTH DAKOTA DEPARTMENT OF TRANSPORTATION

DESIGNED BY	CK. DES. BY	DRAFTED BY	
PW	BB	BT	Kevin N. Goeden
PENN1162	1162TA01		BRIDGE ENGINEER

STATE OF SOUTH DAKOTA	PROJECT	SHEET	TOTAL SHEETS
	IM 1902(61)0	B194	B253

Plotting Date: 05-05-2015

FOR BIDDING PURPOSES ONLY

Walls "A" and "B" Foundation Preparation Area and Underdrain Layout

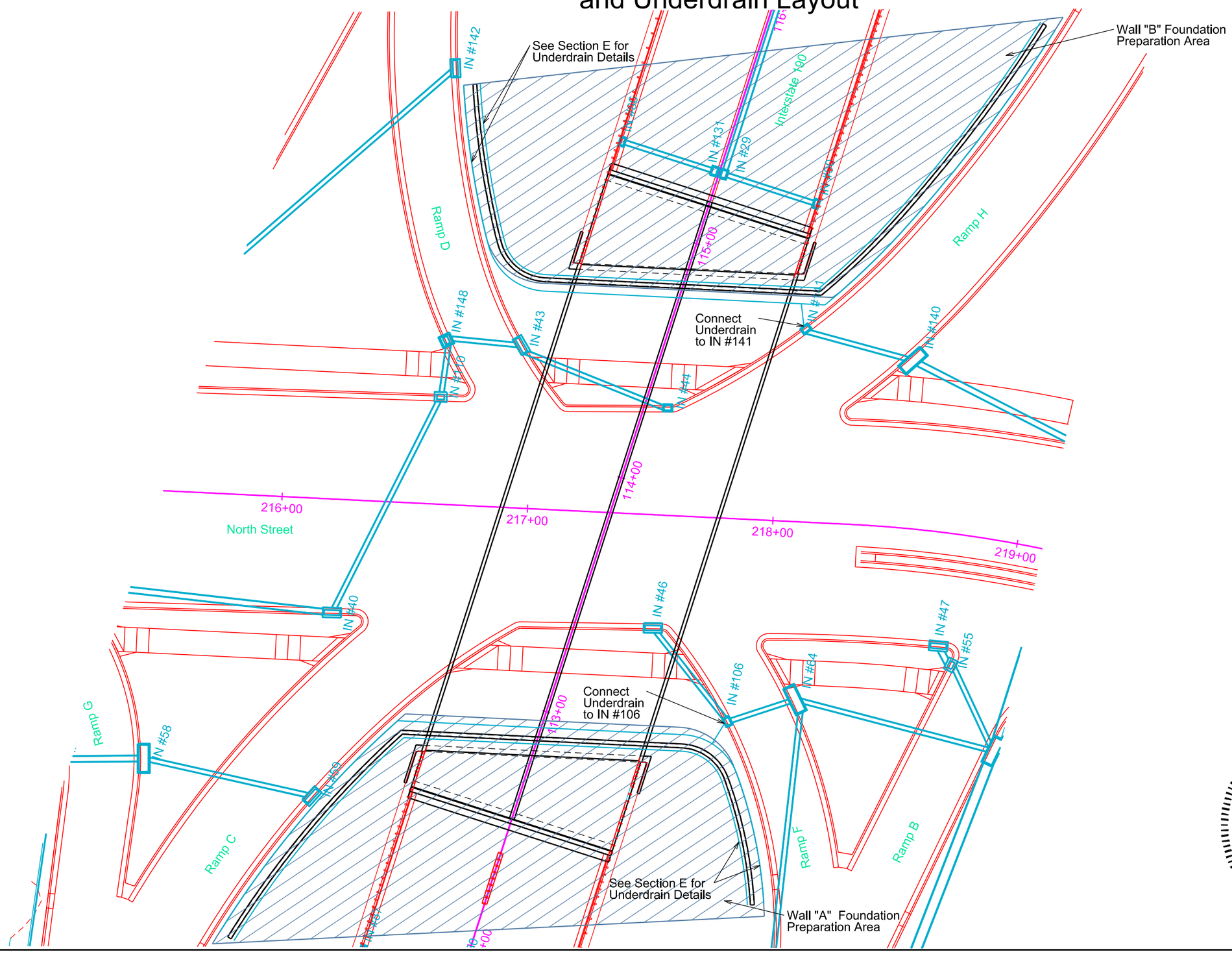

REGISTERED PROFESSIONAL ENGINEER
REG. NO. 8328
JODY W. PAGE
SOUTH DAKOTA
7 MAY 2015

HDR

Plot Scale - 1:40

Plotted From - dlippett

File - ...\Grading\Wall A & B Underdrain

STATE OF SOUTH DAKOTA	PROJECT	SHEET	TOTAL SHEETS
	IM 1902(61)0	B195	B253

Plotting Date: 05-21-2015 Rev. 05/21/2015 AJF

FOR BIDDING PURPOSES ONLY

Special Concrete Fillet and Riprap Apron

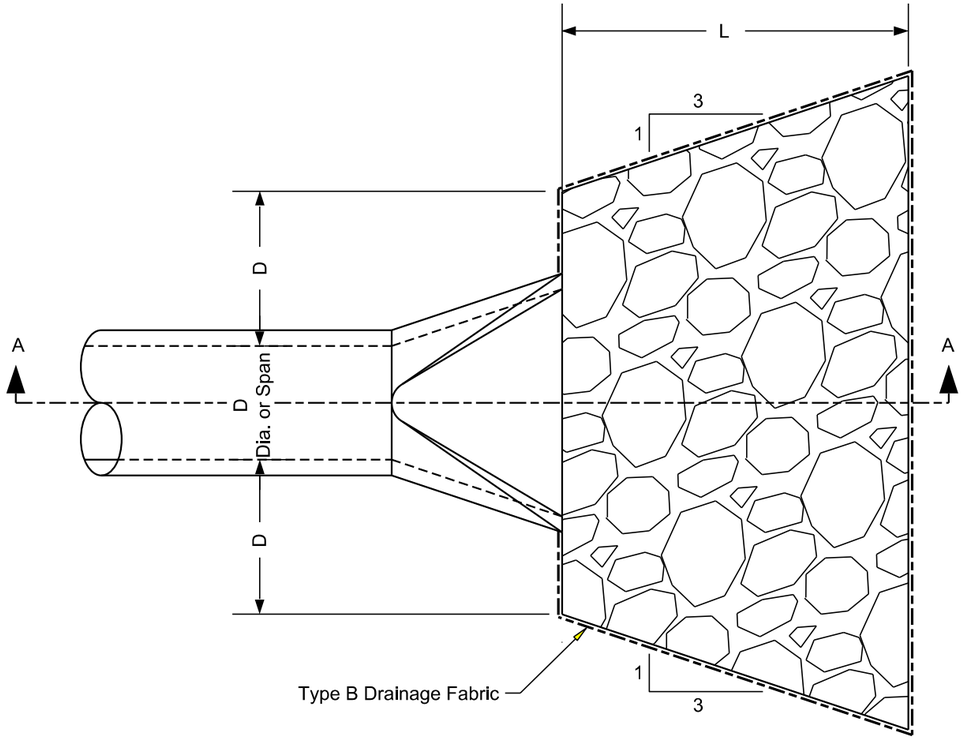

Plan View

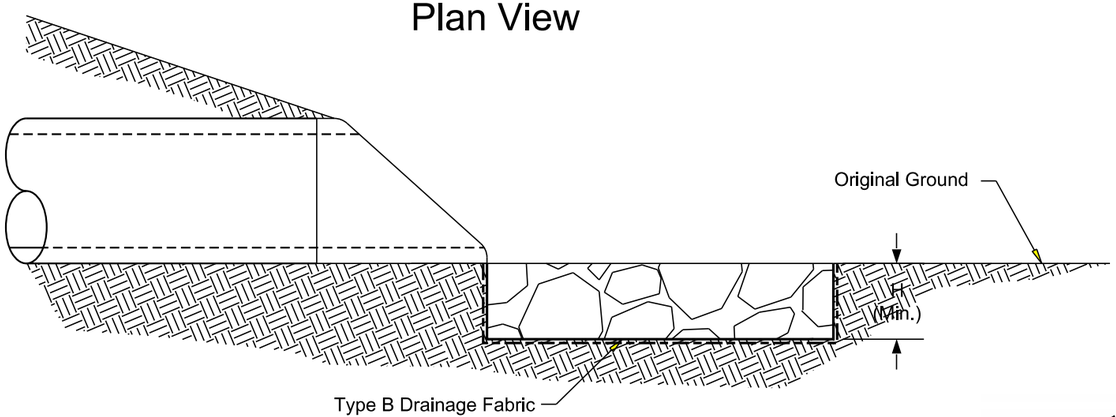

Section A-A

RIPRAP APRON						
Station / Offset	Diameter (D)	Length (L)	Height (H)	Riprap Type	Riprap Quantity	Type B Drainage Fabric
496+60 L	30"	12'	2.25'	A	20 Tons	30 Sy
129+98 L	42"	22'	3.5'	C	78 Tons	78 Sy
144+61 L	48"	12'	3.5'	C	40 Tons	46 SY

REGISTERED PROFESSIONAL ENGINEER
REG. NO. 8328
JODY W. PAGE
SOUTH DAKOTA
21 MAY 15

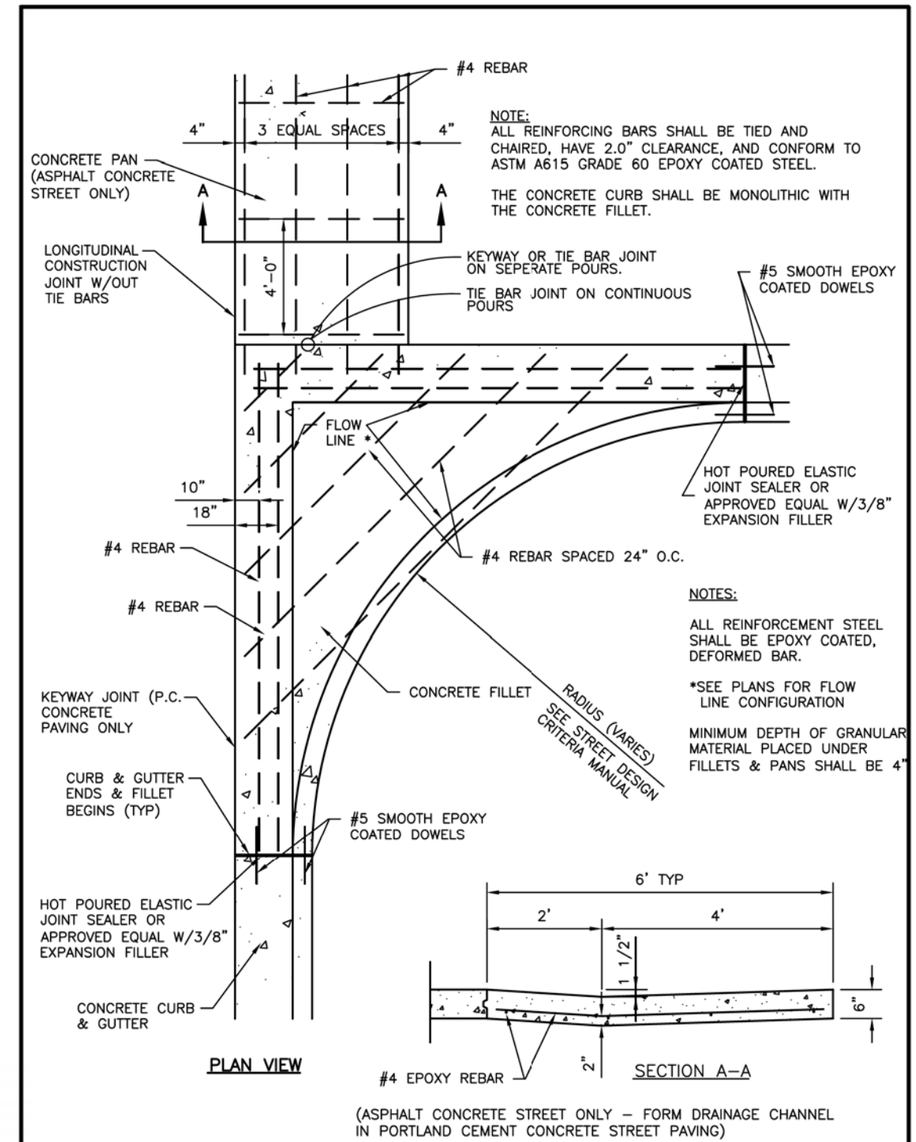

NOTE:
ALL REINFORCING BARS SHALL BE TIED AND CHAIRED, HAVE 2.0" CLEARANCE, AND CONFORM TO ASTM A615 GRADE 60 EPOXY COATED STEEL.

THE CONCRETE CURB SHALL BE MONOLITHIC WITH THE CONCRETE FILLET.

NOTES:

ALL REINFORCEMENT STEEL SHALL BE EPOXY COATED, DEFORMED BAR.

*SEE PLANS FOR FLOW LINE CONFIGURATION

MINIMUM DEPTH OF GRANULAR MATERIAL PLACED UNDER FILLETS & PANS SHALL BE 4"

(ASPHALT CONCRETE STREET ONLY – FORM DRAINAGE CHANNEL IN PORTLAND CEMENT CONCRETE STREET PAVING)

CITY OF RAPID CITY — PUBLIC WORKS DEPARTMENT

REINFORCED PORTLAND CEMENT CONCRETE FILLET & PAN

DATE: 5-1-07

SEC. SHT. 60-1

Plot Scale - 1:2

Plotted From - rfiagett

File - ...\Riprap Apron Special.dgn

HDR

FOR BIDDING PURPOSES ONLY

Special Type DL Concrete Curb and Gutter

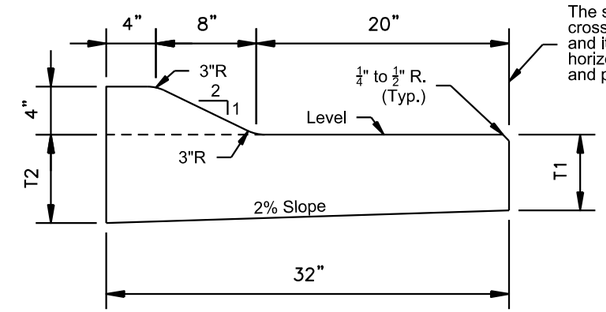

The stated radii on the plans and cross sections refer to this line and it shall also be the basis for horizontal linear foot measurment and payment.

Type	T1 (Inches)	T2 (Inches)	Cu. Yd. Per Lin. Ft.	Lin. Ft. Per Cu. Yd.
DL46	6	$6\frac{5}{8}$	0.056	18.0
DL47	7	$7\frac{5}{8}$	0.068	14.6
DL48	8	$8\frac{5}{8}$	0.077	13.0
DL48.5	8.5	$8\frac{7}{8}$	0.081	12.4
DL49	9	$9\frac{5}{8}$	0.085	11.8
DL49.5	9.5	$10\frac{1}{8}$	0.089	11.2
DL410	10	$10\frac{5}{8}$	0.093	10.7
DL410.5	10.5	$11\frac{1}{8}$	0.097	10.3
DL411	11	$11\frac{5}{8}$	0.101	9.9
DL411.5	11.5	$12\frac{1}{8}$	0.105	9.5
DL412	12	$12\frac{5}{8}$	0.110	9.1

GENERAL NOTES:
When concrete curb and gutter longitudinally adjoins new concrete pavement, the method of attachment shall be by one of the methods shown on Standard Plate 380.11.

See Standard Plate 650.90 for expansion and contraction joints in the curb and gutter.

STATE OF SOUTH DAKOTA	PROJECT	SHEET	TOTAL SHEETS
	IM 1902(61)0	B196	B253

Plotting Date: 05-05-2015

Special C.M.P. Slotted Drain

FOR BIDDING PURPOSES ONLY

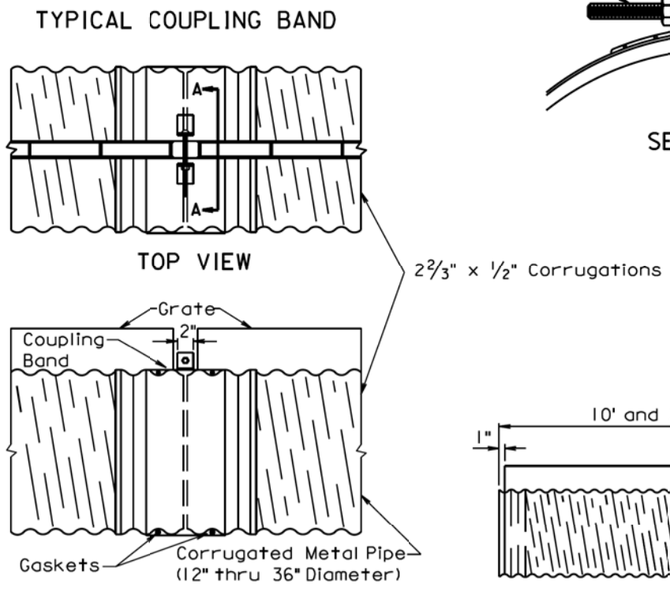

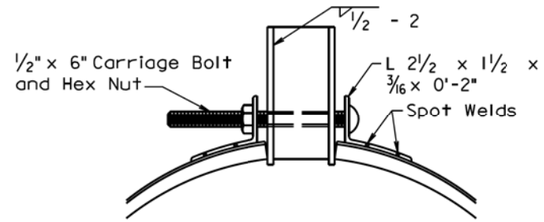

SECTION A-A

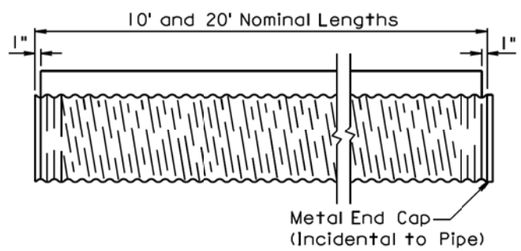

TYPICAL SECTION

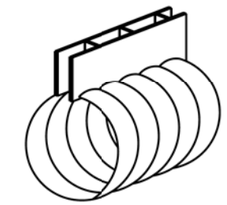

SLOTTED C.M.P. DRAIN

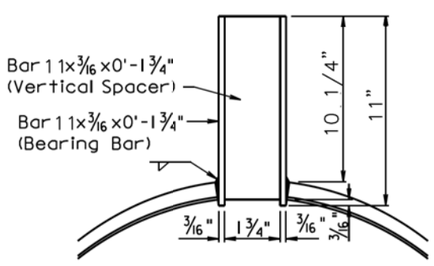

SECTION D-D

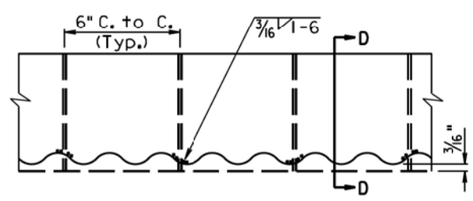

GRATE SLOT WELDING DETAIL

REGISTERED PROFESSIONAL ENGINEER
REG. NO. 8328
JODY W. PAGE
SOUTH DAKOTA
1 MAY 2015

GENERAL NOTES:

A typical length of Slotted Drain is twenty (20) feet. Installation should be in multiples of ten (10) feet unless situations dictate otherwise.

All Slotted Drain materials and hardware shall be galvanized.

Metal end caps shall be provided for the closed end of each installation. The end caps shall be the same gage as the pipe.

All joints and end caps shall be watertight.

Close riveted soldered annular or continuously welded helical pipe shall be used and shall be watertight.

Units on which the spelter coating has been burned by welding or otherwise damaged in fabrication or during installation shall be regalvanized or painted with one full brush coat of zinc-rich paint conforming to Military Specification Mil-P-21035 or with at zinc-dust, zinc-oxide paint conforming to Federal Specification TT-P-641-B, Type III. Prior to painting, the surface shall be properly cleaned and approved.

Two gaskets will be required for each coupling band or joint and shall be rendered watertight by methods approved by the Engineer.

The slot shall be covered with an acceptable material during paving operations and/or installation of curb and gutter.

Anchors shall be ½" Dia. x 3" galvanized bolts and nuts. The nuts shall be welded to the slot at two (2) foot spacing. Bolts shall be added just prior to installation to avoid damage.

A trapezoidal design for spacer bars, either vertical or slanted, may be an alternate for the vertical bars shown on the details. The Slotted Drain with slanted spacer bars shall be installed with the slanted spacer bars oriented toward the flow.

A Heel Guard (1/2 inch #13 expanded metal mesh) shall be furnished when called for in the plans and shall be welded to the grating before delivery to the project.

Slotted Drain will be measured along the centerline of the pipe. The length shall be the overall installed length from end to end including any coupling bands that may be between sections. The outlet pipe will be paid for as CMP and End Sections.

Slotted Drain will be paid for at the contract unit price per Foot of Slotted C.M.P. Payment will be full compensation for materials, labor, equipment, and incidentals required.

Plot Scale - 1:4

Plotted From - rlaggett

File - ...\Slotted Drain Special.dgn

HDR

CABLE HANDRAIL DETAIL

FOR BIDDING PURPOSES ONLY

Refer to plan sheets and general notes for handrail installation locations

STATE OF SOUTH DAKOTA	PROJECT	SHEET	TOTAL SHEETS
	IM 1902(61)0	B196A	B253

Plotting Date: 06-05-2015 Rev. 06/05/2015 AJF

Note: Cable Railing Details Are Shown For Information Only. Final Cable Railing Layout/Detail Shall Be per Manufacturer. Cable Railing System Shall Be Series 200 Aluminum Design Rail® As Manufactured By Feeney Architectural Products®, Or Approved Equal.

Cable shall be 1/8 inch diameter, Type 316 stainless steel, polished finished.

Posts, Cap Rail, and Intermediate Pickets shall be silver colored extruded aluminum.

Post attachments to the retaining wall or sidewalk shall be installed with no voids between the retaining wall and fasteners.

All materials, labor, equipment, etc. necessary to install Cable Handrail shall be paid at the contract unit price for "Cable Handrail".

Rail shall be designed for Pedestrian Railing loads in accordance with AASHTO LRFD Bridge Design Specifications, 2010, Section 13.8.2, summarized as follows:

Top Rail: Top rail to be designed for a uniform live load of 50 plf both transversely and vertically as well as a concentrated load of 200 lbs acting in any direction at any location. All loads to be applied acting simultaneously.
In-Fill Cables: In-fill cables shall be designed for a distributed live load of 15 psf acting normal to the plane of cables (vertical projection).
Posts: Posts and anchorage thereof shall be designed for a concentrated live load applied transversely to the center of gravity of the top rail of 200 lbs + 50 plf times the post spacing.

Rail Manufacturer shall provide calculations bearing the seal of a professional engineer registered in the State of South Dakota showing that the rail has been designed in accordance with the loads indicated above.

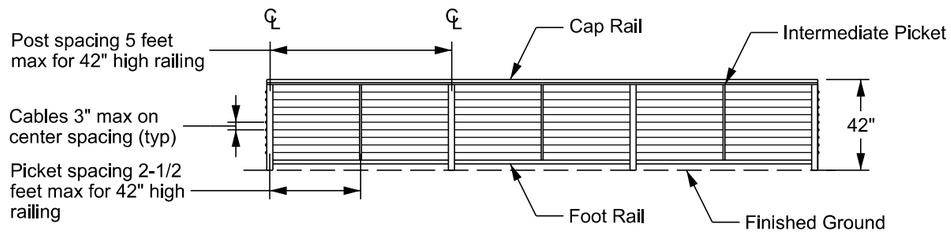

Railing: Horizontal cable infill (with foot rail) 42" high aluminum frame with foot rail

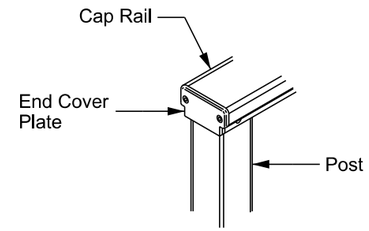

Cap Rail

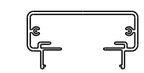

Typical Cap Rail Profile

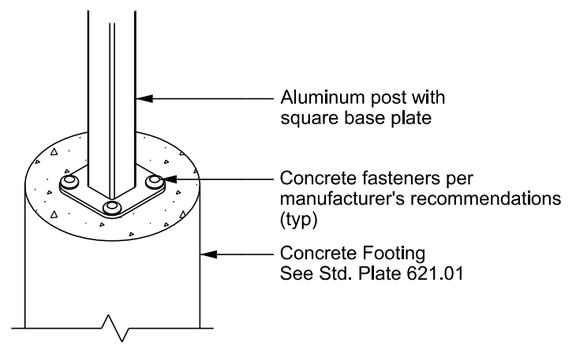

Post Attachment: Surface Mount

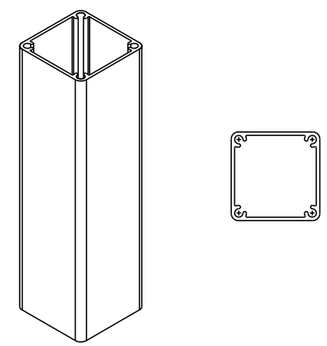

Standard Post

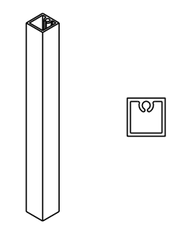

Standard Picket

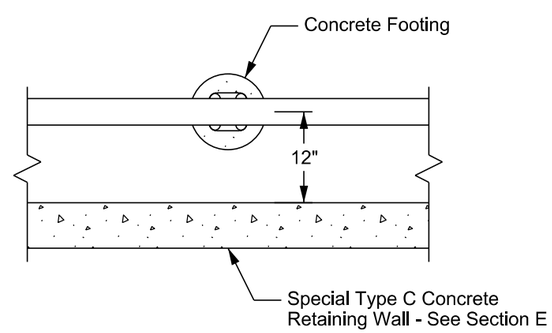

Cable Handrail Installation

Details by: Office of Road Design, South Dakota Department of Transportation

Plot Scale - 1:40

Plotted From - rlisgett

File - ...\Cable Handrail Detail.dgn

STATE OF SOUTH DAKOTA	PROJECT	SHEET	TOTAL SHEETS
	IM 1902(61)0	B197	B253

FOR BIDDING PURPOSES ONLY

Plotting Date: 05-19-2015

Rev. 05/21/2015 AJF

Interim Grading Layout
Phase 1A

Interim Grading (PHASE 1A)

EXC	140,310	NORTH ST	EMB	4,738	
			+25%	1,185	5,923
		STOCKPILE S	EMB	43,347	
			+25%	10,837	54,184
		STOCKPILE N	EMB	37,779	
			+25%	9,445	47,224
OUT OF BALANCE			WASTE	32,979	32,979
TOTAL	140,310			140,310	140,310

EXC	140,310	NORTH ST	PERM	5,923	
		STOCKPILE S	TEMP	22,212	
			PERM	31,972	
		STOCKPILE N	TEMP	41,850 ***	
			PERM	5,374	
OUT OF BALANCE			WASTE	32,979	
TOTAL	140,310			140,310	

*** ASSUMED STOCKPILE LOCATION FOR SELECT SUBGRADE TOPPING

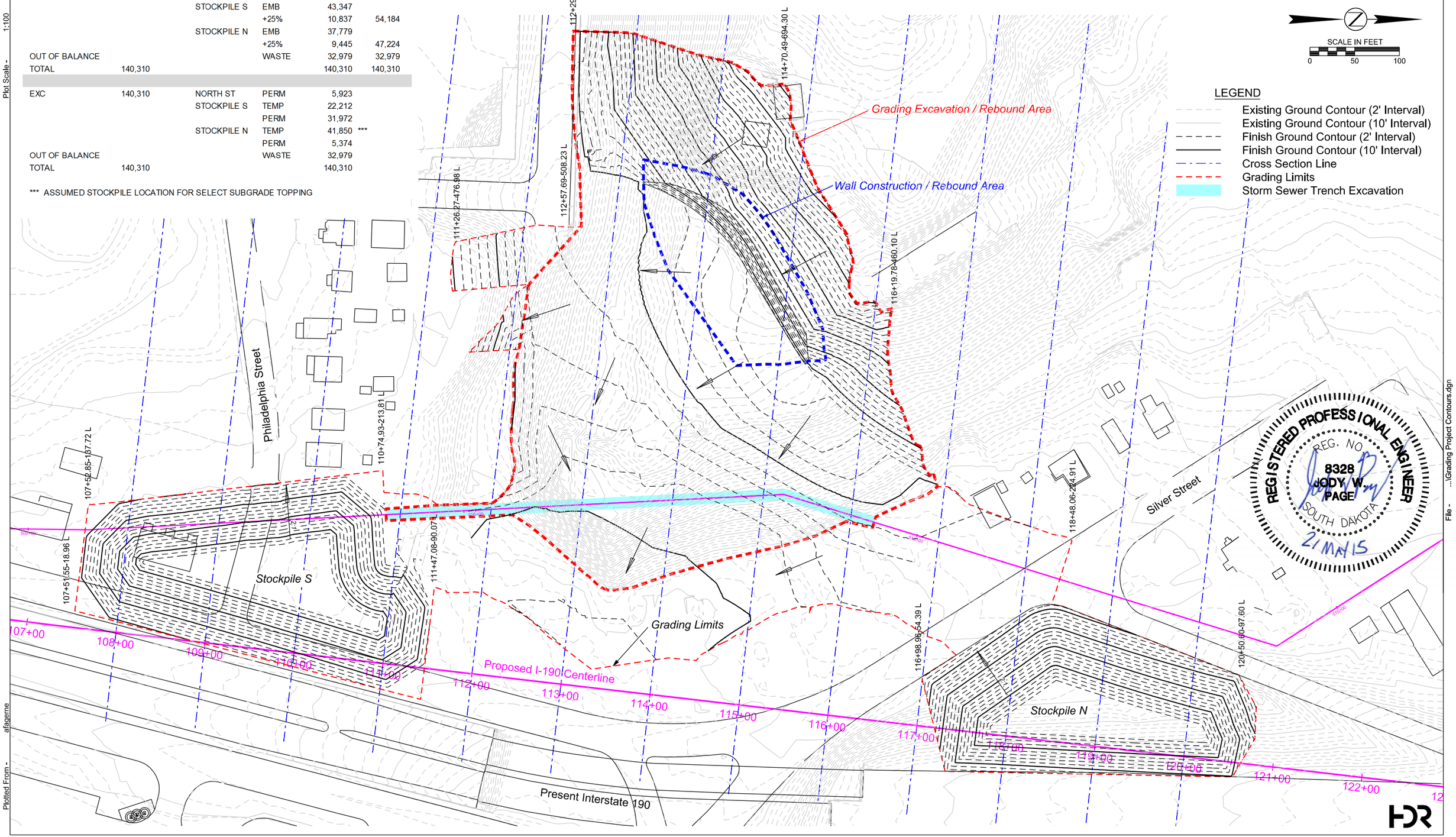

Plot Scale - 1:100

Plotted From - afagerne

File - ...\Grading Project Contours.dgn

STATE OF SOUTH DAKOTA	PROJECT	SHEET	TOTAL SHEETS
	IM 1902(61)0	B198	B253

Plotting Date: 05-05-2015

FOR BIDDING PURPOSES ONLY

Interim Grading Phase 1A
Cross Sections

REGISTERED PROFESSIONAL ENGINEER
REG. NO. 8328
JODY W. PAGE
SOUTH DAKOTA
1 MAY 2015

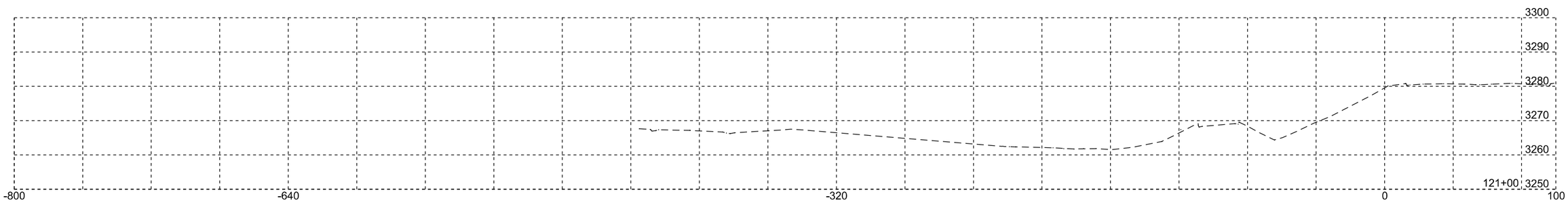

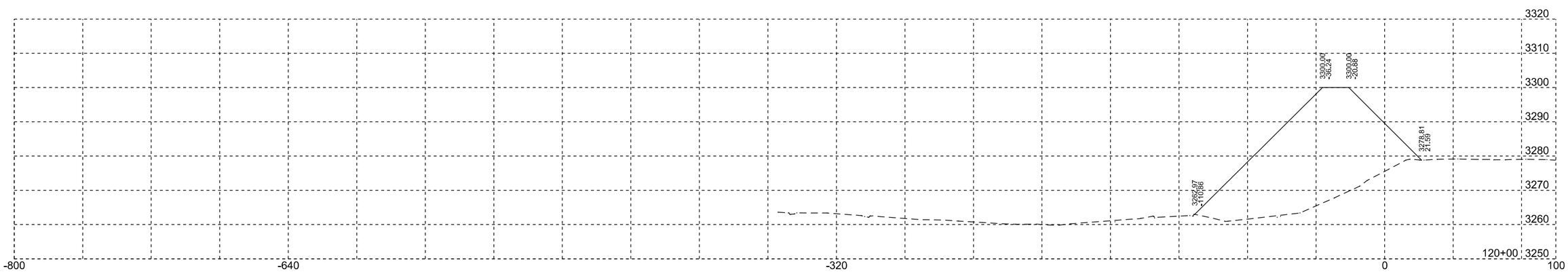

Horiz. 1"=60'
Vert. 1"=30'

Plot Scale - 1:60

Plotted From - rliggett

File - ...\Section_X\x1162u_Stockpile.DGN

STATE OF SOUTH DAKOTA	PROJECT	SHEET	TOTAL SHEETS
	IM 1902(61)0	B199	B253

Plotting Date: 05-05-2015

FOR BIDDING PURPOSES ONLY

Interim Grading Phase 1A
Cross Sections

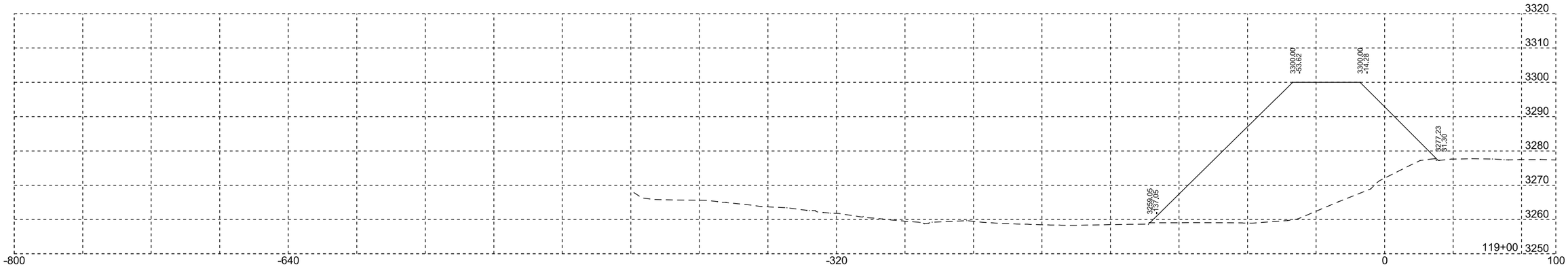

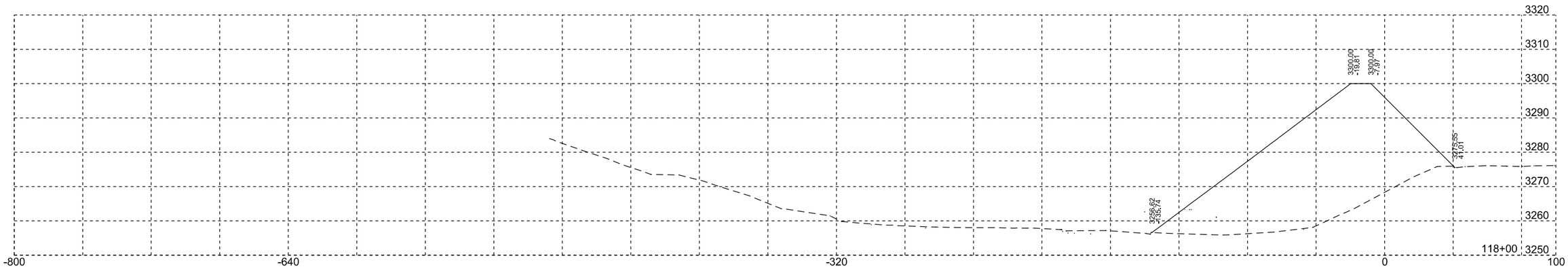

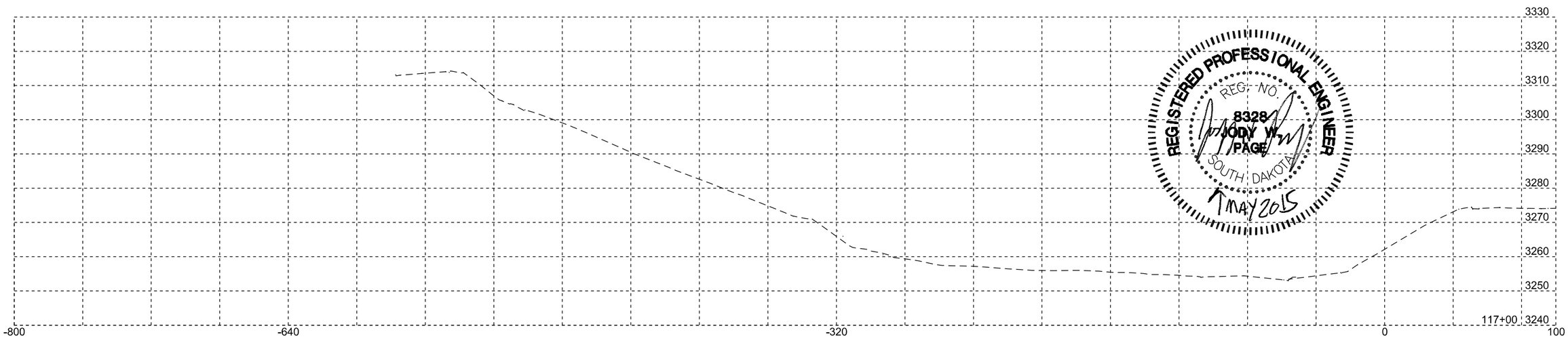

REGISTERED PROFESSIONAL ENGINEER
REG. NO. 8328
JODY W. PAGE
SOUTH DAKOTA
MAY 2015

Horiz. 1"=60'
Vert. 1"=30'

STATE OF SOUTH DAKOTA	PROJECT	SHEET	TOTAL SHEETS
	IM 1902(61)0	B200	B253

FOR BIDDING PURPOSES ONLY

Interim Grading Phase 1A
Cross Sections

Rev. 05/21/2015 AJF

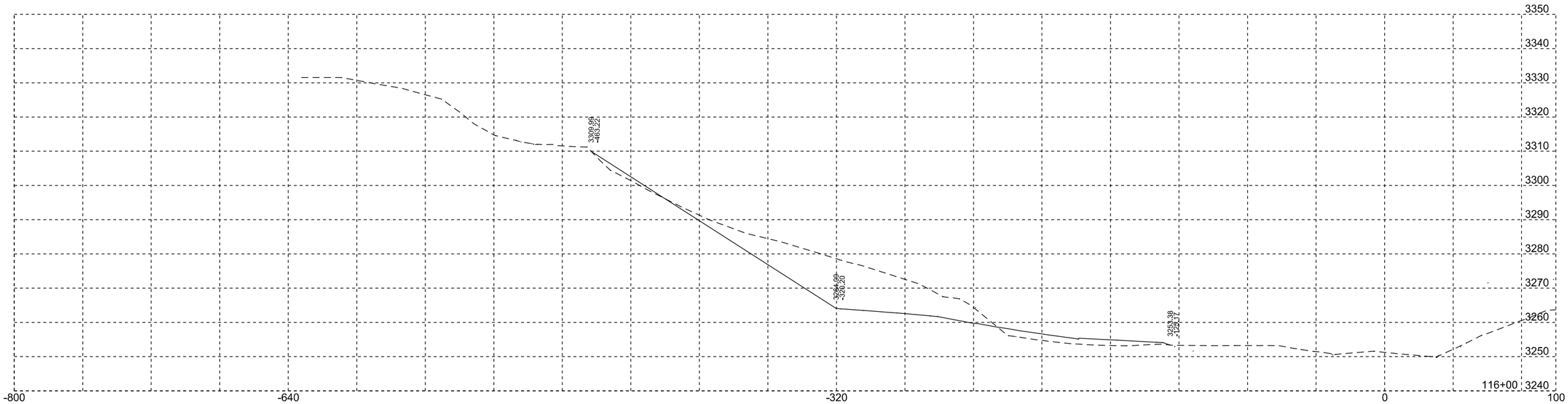

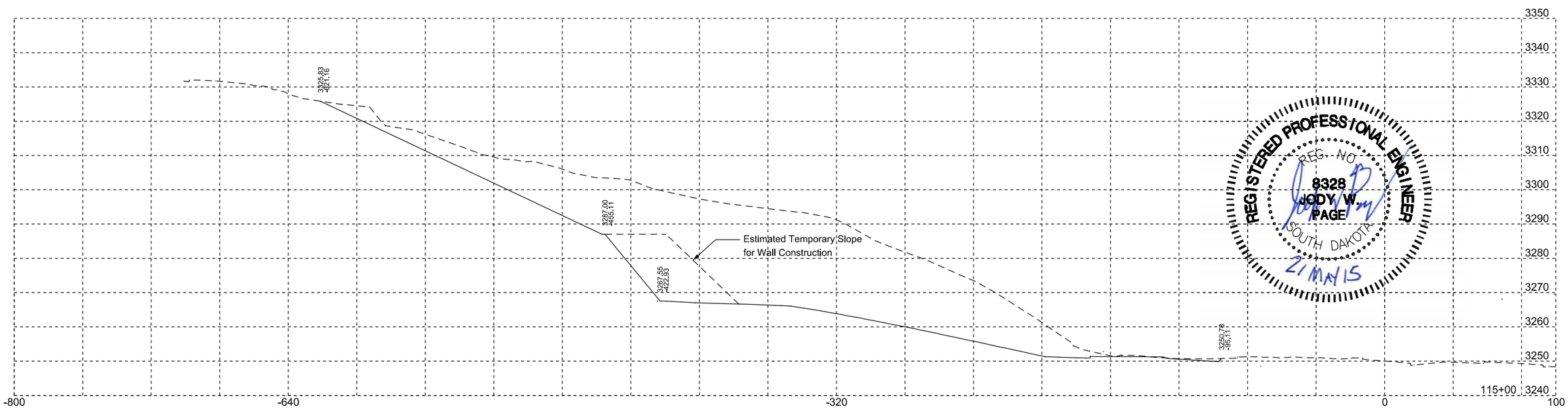

REGISTERED PROFESSIONAL ENGINEER
REG. NO.
8328
JODY W.
PAGE
SOUTH DAKOTA
21 MAY 15

Horiz. 1"=60'
Vert. 1"=30'

STATE OF SOUTH DAKOTA	PROJECT	SHEET	TOTAL SHEETS
	IM 1902(61)0	B201	B253

FOR BIDDING PURPOSES ONLY

Interim Grading Phase 1A
Cross Sections

Rev. 05/21/2015 AJF

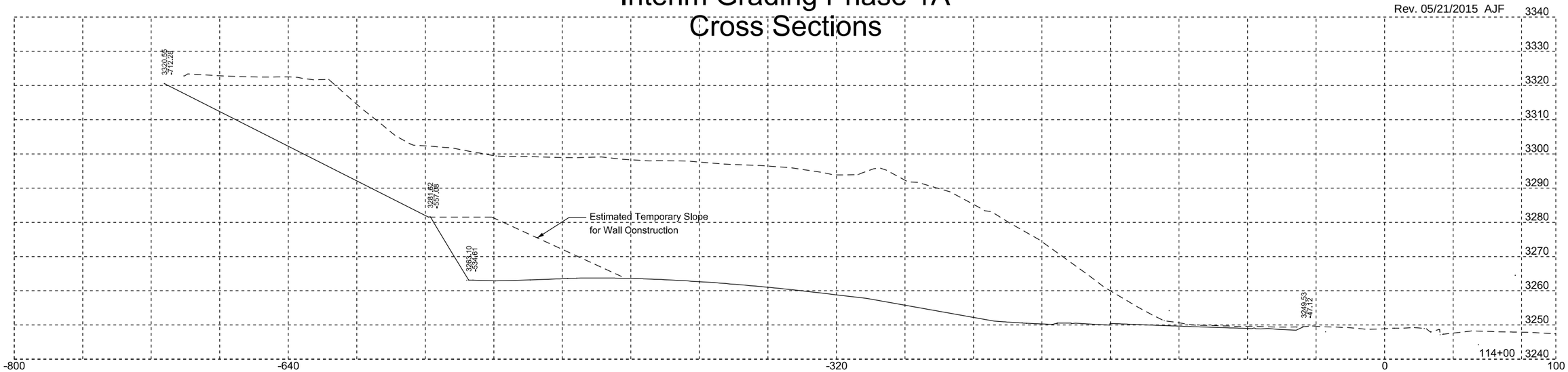

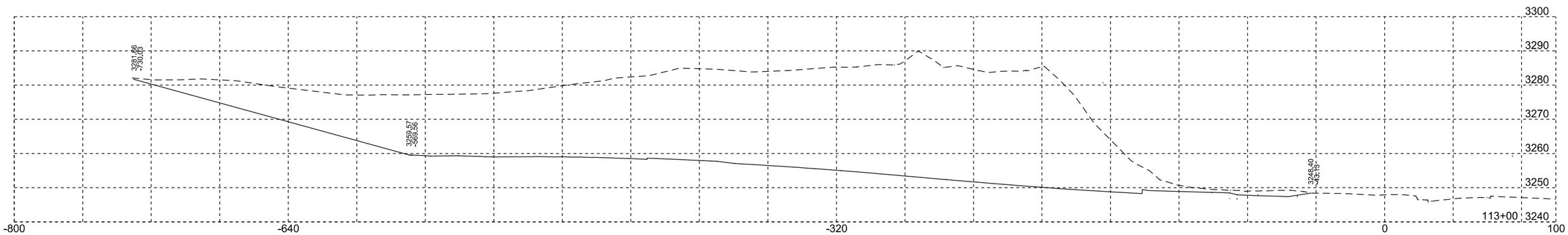

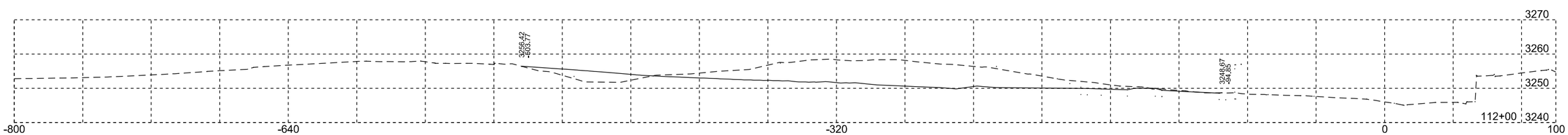

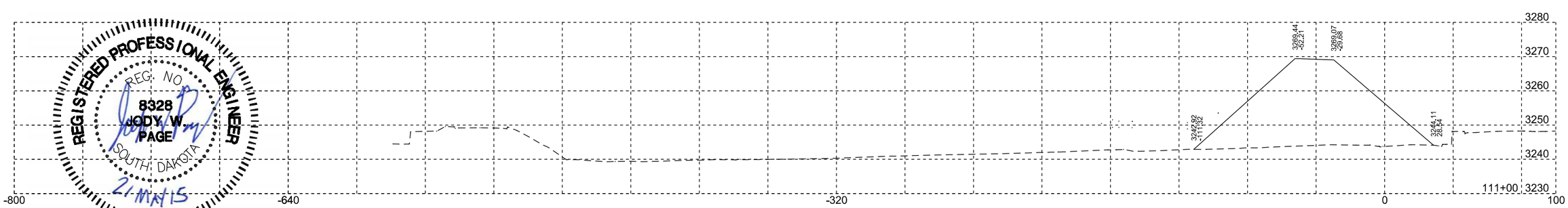

REGISTERED PROFESSIONAL ENGINEER
REG. NO
8328
JODY W.
PAGE
SOUTH DAKOTA
21 MAY 15

Horiz. 1"=60'
Vert. 1"=30'

STATE OF SOUTH DAKOTA	PROJECT	SHEET	TOTAL SHEETS
	IM 1902(61)0	B202	B253

FOR BIDDING PURPOSES ONLY

Plotting Date: 05-05-2015

Interim Grading Phase 1A
Cross Sections

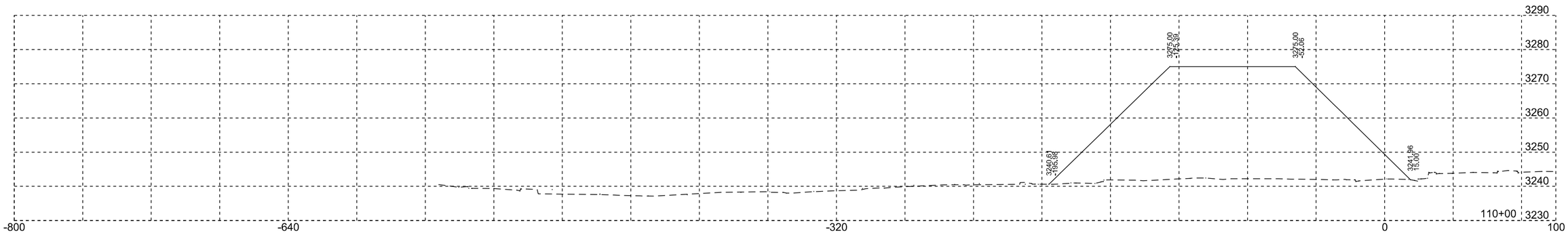

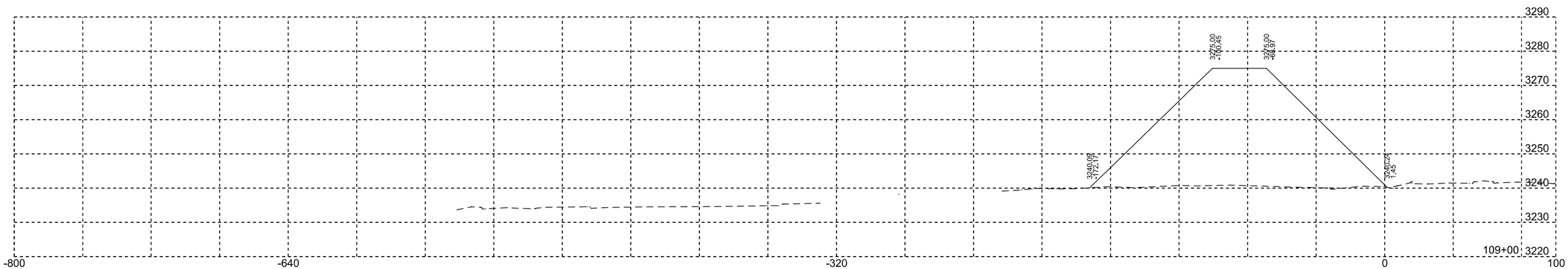

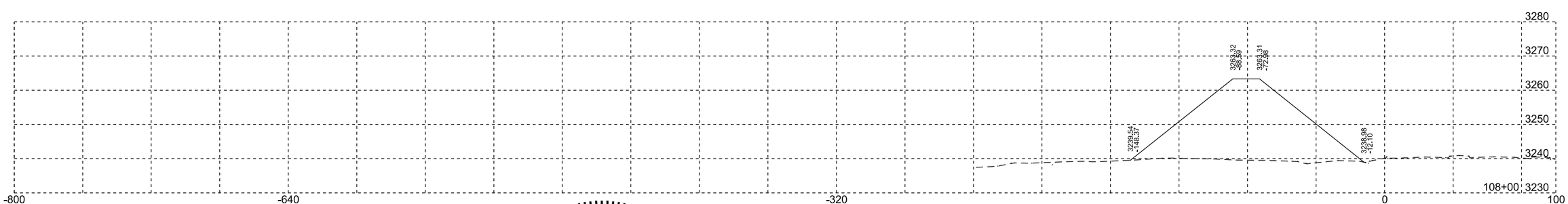

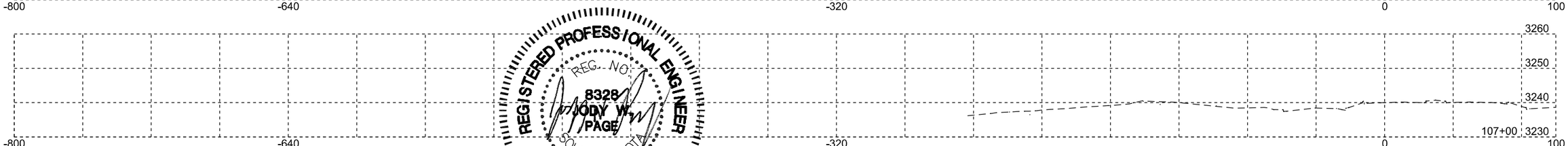

REGISTERED PROFESSIONAL ENGINEER
REG. NO.
8328
JODY W. PAGE
SOUTH DAKOTA
MAY 2015

Horiz. 1"=60'
Vert. 1"=30'

LONGITUDINAL CONSTRUCTION JOINT WITH TIE BARS
(Individually Formed)

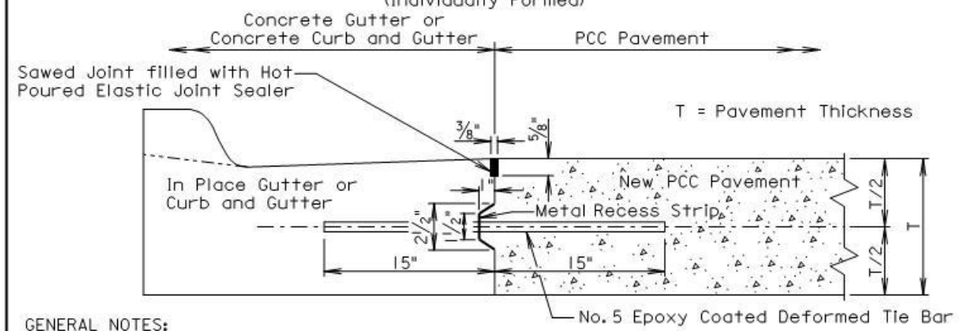

GENERAL NOTES:

No. 5 epoxy coated deformed tie bars shall be spaced 48 inches center to center. The keyway shown above is a female keyway.

The tie bars shall be placed a minimum of 15 inches from existing transverse contraction joints.

The keyway is optional and is not required. When concrete pavement is formed and a keyway is provided, a metal recess strip shall be used. When concrete pavement is slip formed, a metal recess strip is not required.

The transverse contraction joints in the concrete gutter or concrete curb and gutter shall be placed at each mainline PCC pavement transverse contraction joint. The transverse contraction joints in the concrete gutter or the concrete curb and gutter shall be 1½ inches deep if formed in fresh concrete using a suitable grooving tool. If a saw is used to cut the transverse contraction joints, then the depth of the joint shall be at least ¼ the thickness of the concrete gutter or concrete curb and gutter.

The term "In Place Gutter or Curb and Gutter" in the above drawing indicates that the in place concrete gutter and concrete curb and gutter was placed on the current project.

POURED MONOLITHICALLY

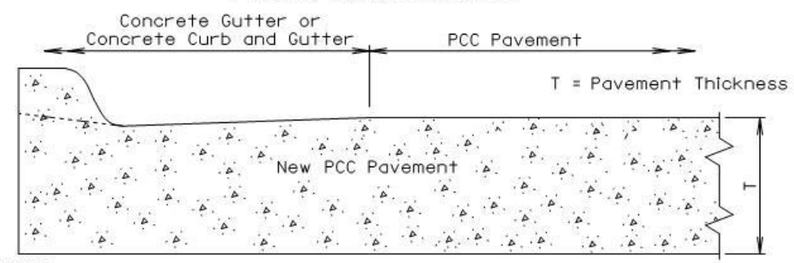

GENERAL NOTES:

The mainline curb and gutter may be placed monolithically with the PCC pavement if the mainline lane width is less than or equal to 12 feet. If this method of construction is used, the tie bars and the sawed joint between the curb and gutter and the PCC pavement shall be eliminated.

The gutter or curb and gutter shall be sawed transversely at each mainline transverse contraction joint. The transverse contraction joints in the gutter or curb and gutter shall be sawed and sealed same as the transverse contraction joints in the PCC pavement.

The slope of the gutter shall be the slope designated for the type of gutter or curb and gutter to be constructed. The bottom slope of the gutter or curb and gutter shall be constructed at the same slope as the mainline concrete pavement.

June 26, 2013

Published Date: 2nd Qtr. 2015	SDDOT	PCC PAVEMENT LONGITUDINAL CONSTRUCTION JOINTS WITH CONCRETE GUTTER OR CONCRETE CURB AND GUTTER	PLATE NUMBER 380.11
			Sheet 1 of 1

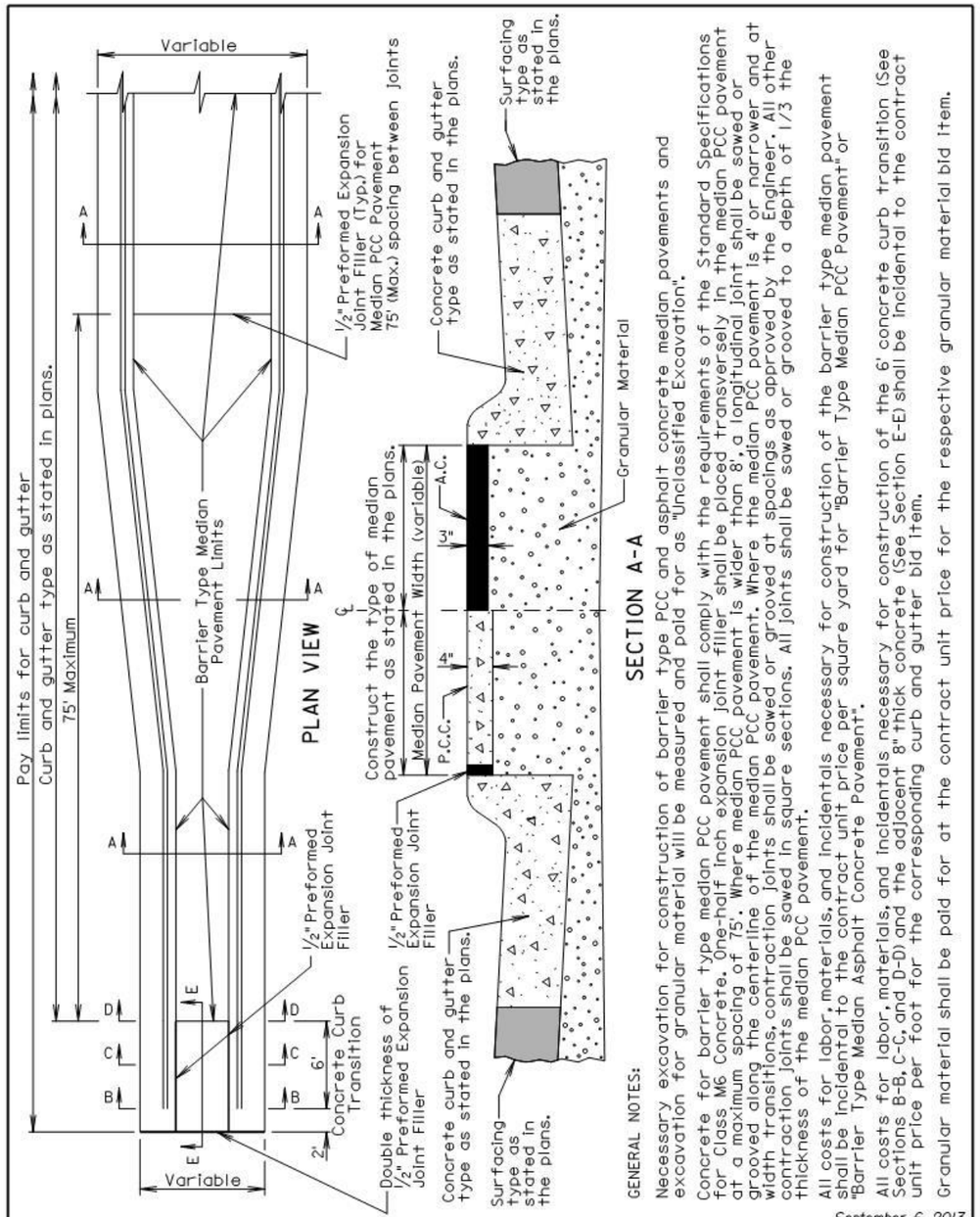

GENERAL NOTES:

Necessary excavation for construction of barrier type PCC and asphalt concrete median pavements and excavation for granular material will be measured and paid for as "Unclassified Excavation".

Concrete for barrier type median PCC pavement shall comply with the requirements of the Standard Specifications for Class M6 Concrete. One-half inch expansion joint filler shall be placed transversely in the median PCC pavement at a maximum spacing of 75'. Where median PCC pavement is wider than 8', a longitudinal joint shall be sawed or grooved along the centerline of the median PCC pavement is 4' or narrower and at width transitions, contraction joints shall be sawed or grooved at spacings as approved by the Engineer. All other contraction joints shall be sawed in square sections. All joints shall be sawed or grooved to a depth of 1/3 the thickness of the median PCC pavement.

All costs for labor, materials, and incidentals necessary for construction of the barrier type median pavement shall be incidental to the contract unit price per square yard for "Barrier Type Median PCC Pavement" or "Barrier Type Median Asphalt Concrete Pavement".

All costs for labor, materials, and incidentals necessary for construction of the 6' concrete curb transition (See Sections B-B, C-C, and D-D) and the adjacent 8" thick concrete (See Section E-E) shall be incidental to the contract unit price per foot for the corresponding curb and gutter bid item.

Granular material shall be paid for at the contract unit price for the respective granular material bid item.

September 6, 2013

Published Date: 2nd Qtr. 2015	SDDOT	BARRIER TYPE MEDIAN PAVEMENT	PLATE NUMBER 380.22
			Sheet 1 of 2

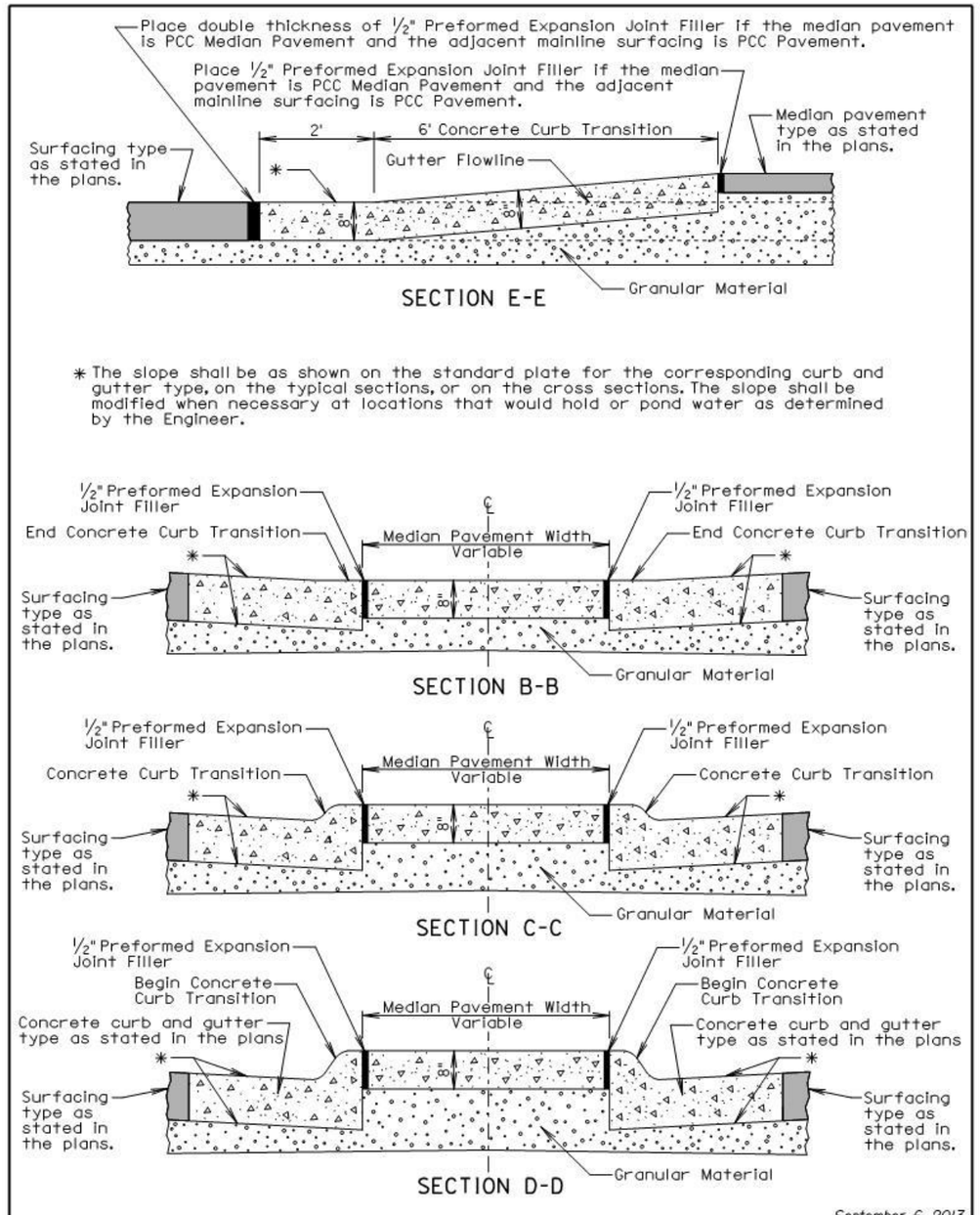

September 6, 2013

Published Date: 2nd Qtr. 2015	SDDOT	BARRIER TYPE MEDIAN PAVEMENT	PLATE NUMBER 380.22
			Sheet 2 of 2

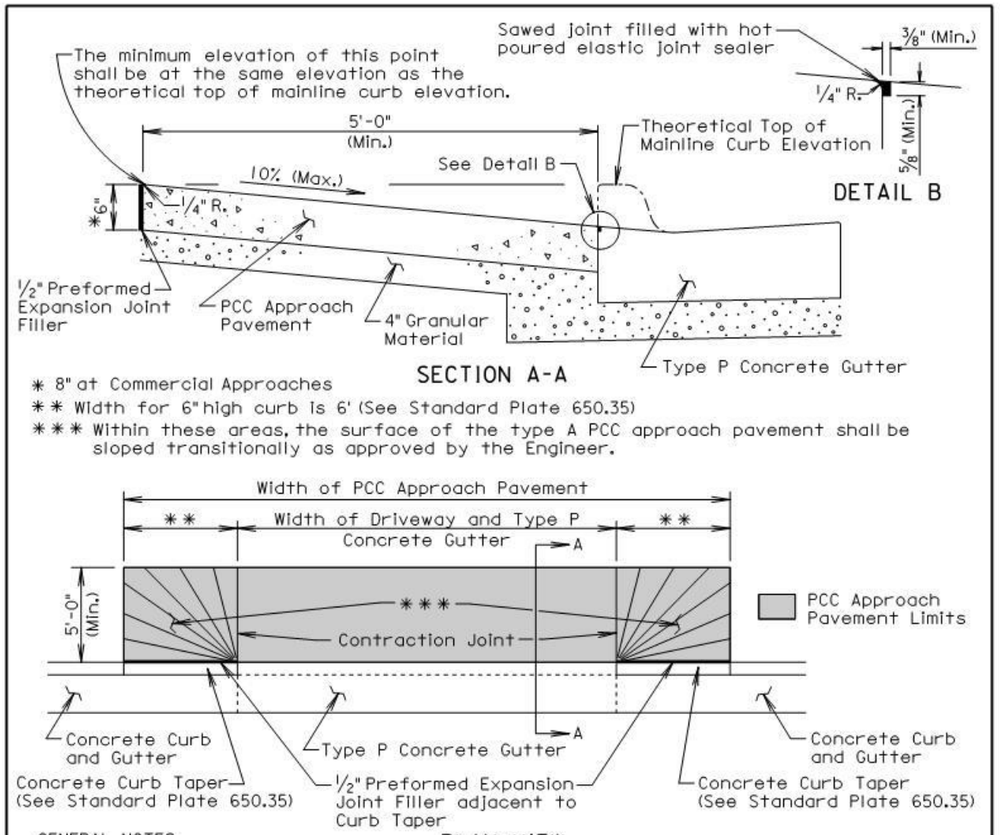

* 8" at Commercial Approaches

** Width for 6" high curb is 6' (See Standard Plate 650.35)

*** Within these areas, the surface of the type A PCC approach pavement shall be sloped transitionally as approved by the Engineer.

GENERAL NOTES:

The concrete for the type A PCC approach pavement and adjacent driveway shall comply with the requirements of the Standard Specifications for class M6 concrete unless otherwise stated in the plans.

Contraction joints in the type A PCC approach pavement shall be 1½ inches deep if formed in the fresh concrete using a suitable grooving tool. If a saw is used to cut the contraction joints, then the depth of the joint shall be at least ¼ the thickness of the approach pavement. Additional contraction joints not shown in the Plan View shall be spaced as follows:

One joint at the center of the approach for driveways 16' to 24' wide.
Two joints spaced at equal intervals for driveways greater than 24' to 40' wide.

All costs for furnishing and placing the type A PCC approach pavement and constructing the expansion and contraction joints including labor, equipment, and materials including the earthen backfill shall be incidental to the contract unit price per square yard for the corresponding PCC Approach Pavement bid item.

All costs for excavation required for placing the type A PCC approach pavement and granular material shall be incidental to the contract unit price per cubic yard for "Unclassified Excavation". All costs for furnishing and placing the granular material shall be incidental to the contract unit price per ton for the corresponding granular material bid item.

September 6, 2013

Published Date: 2nd Qtr. 2015	SDDOT	TYPE A PCC APPROACH PAVEMENT	PLATE NUMBER 380.40 Sheet 1 of 1

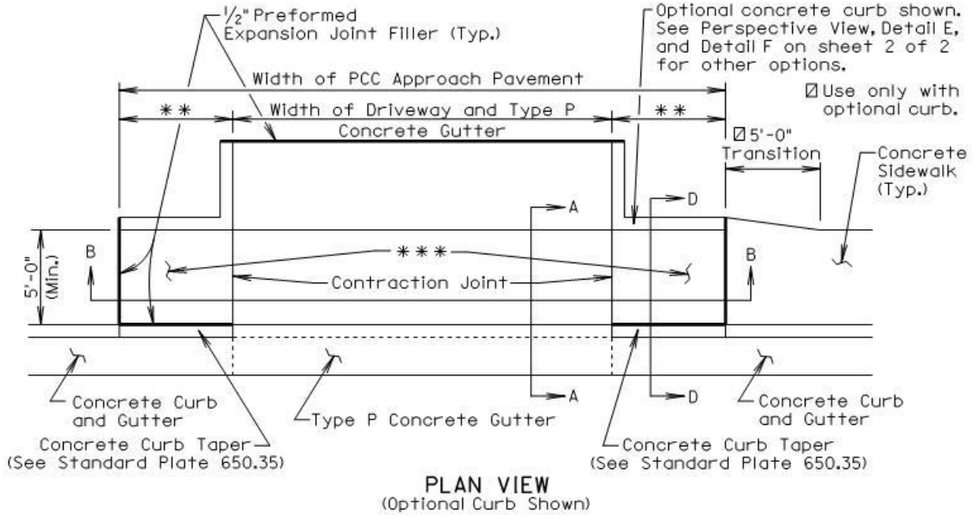

PLAN VIEW
(Optional Curb Shown)

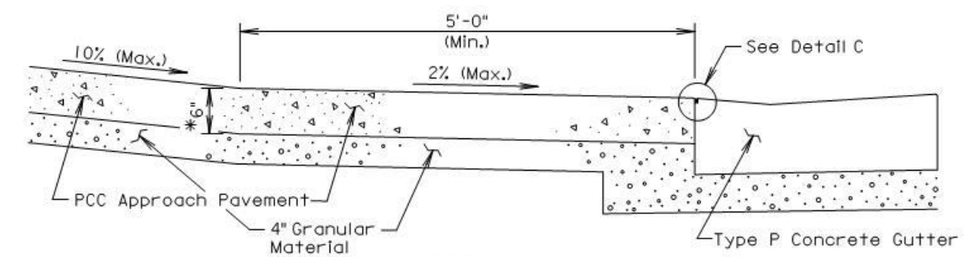

SECTION A-A

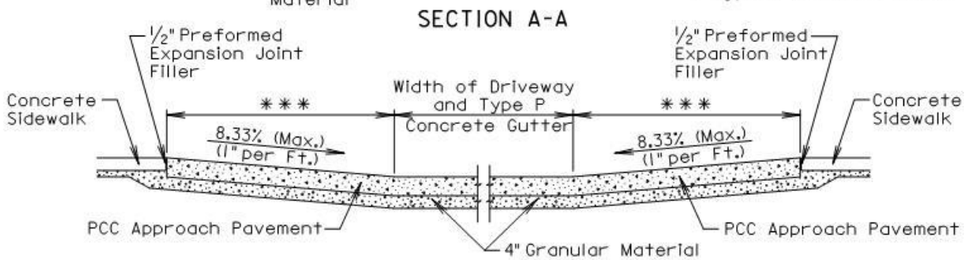

SECTION B-B

* 8" at Commercial Approaches

** Width for 6" high curb is 6' (See Standard Plate 650.35)

*** The slope of the type B PCC approach pavement in these areas shall match the slope of the concrete curb taper. The slope shall not be steeper than a 1" per foot slope.

September 6, 2013

Published Date: 2nd Qtr. 2015	SDDOT	TYPE B PCC APPROACH PAVEMENT	PLATE NUMBER 380.41
			Sheet 1 of 2

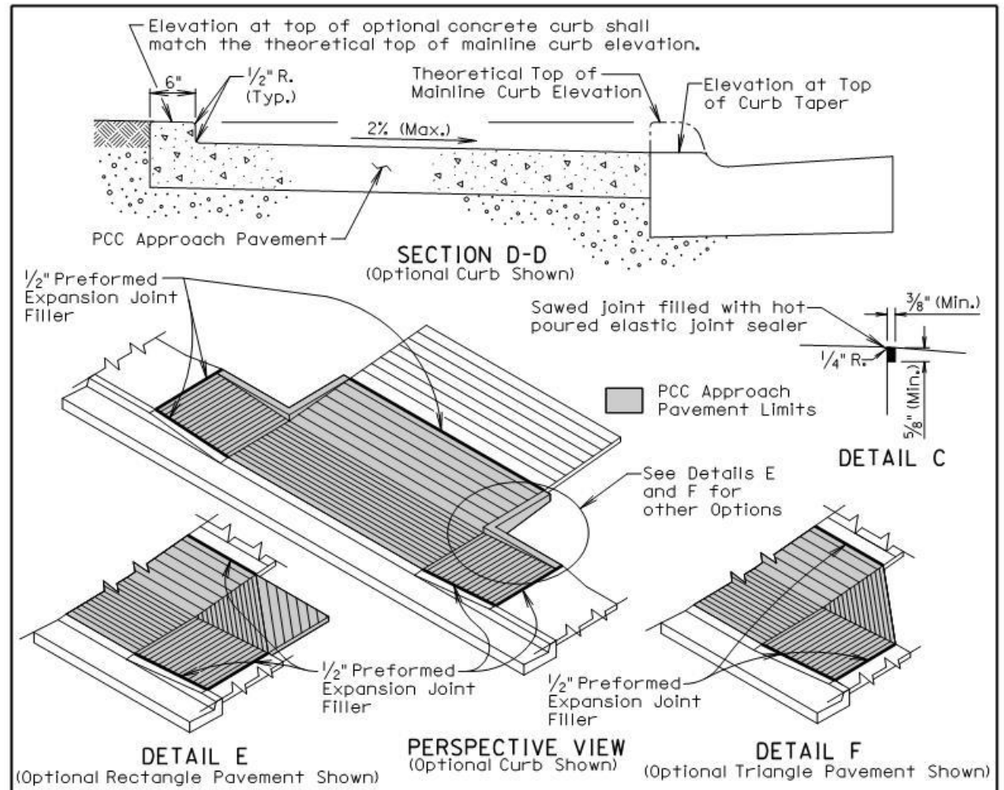

GENERAL NOTES:

Use the plan specified option for the pavement adjacent to the driveway and sidewalk. The options are shown above in the Perspective View, Detail E, and Detail F.

The concrete for the type B PCC approach pavement and adjacent driveway shall comply with the requirements of the Standard Specifications for class M6 concrete unless otherwise stated in the plans.

Contraction joints in the type B PCC approach pavement shall be 1½ inches deep if formed in the fresh concrete using a suitable grooving tool. If a saw is used to cut the contraction joints, then the depth of the joint shall be at least ¼ the thickness of the approach pavement. Additional contraction joints not shown in the Plan View shall be spaced as follows:

One joint at the center of the approach for driveways 16' to 24' wide.
Two joints spaced at equal intervals for driveways greater than 24' to 40' wide.

All costs for furnishing and placing the type B PCC approach pavement and constructing the expansion and contraction joints including labor, equipment, and materials including the earthen backfill shall be incidental to the contract unit price per square yard for the corresponding PCC Approach Pavement bid item.

All costs for excavation required for placing the type B PCC approach pavement and granular material shall be incidental to the contract unit price per cubic yard for "Unclassified Excavation". All costs for furnishing and placing the granular material shall be incidental to the contract unit price per ton for the corresponding granular material bid item.

September 6, 2013

Published Date: 2nd Qtr. 2015	SDDOT	TYPE B PCC APPROACH PAVEMENT	PLATE NUMBER 380.41
			Sheet 2 of 2

TOLERANCES IN DIMENSIONS

Diameter: ±1.5% for 24" Dia. or less and ±1% or 3/8" whichever is more for 27" Dia. or greater.
Diameters at Joints: ±3/16" for 30" Dia. or less and ±1/4" for 36" or greater.
Length of joint (j): ±1/4".
Wall thickness (T): not less than design T by more than 5% or 3/16", whichever is greater.
Laying length: shall not underrun by more than 1/2".

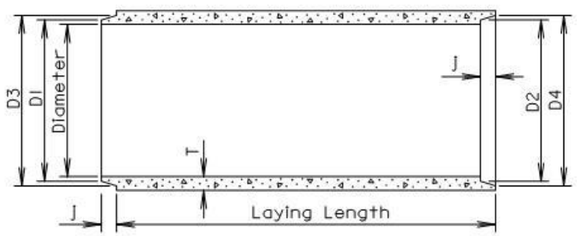

LONGITUDINAL SECTION

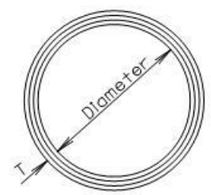

END VIEW

GENERAL NOTES:

Construction of R. C. P. shall conform to the requirements of Section 990 of the Standard Specifications for Roads and Bridges.

Not more than 2 four foot sections shall be permitted near the ends of any culvert. Four foot lengths shall be used only to secure the required length of culvert.

Diam. (in.)	Approx. Wt. /Ft. (lb.)	T (in.)	J (in.)	D1 (in.)	D2 (in.)	D3 (in.)	D4 (in.)
12	92	2	1 3/4	13 1/4	13 5/8	13 7/8	14 1/4
15	127	2 1/4	2	16 1/2	16 7/8	17 1/4	17 5/8
18	168	2 1/2	2 1/4	19 5/8	20	20 3/8	20 3/4
21	214	2 3/4	2 1/2	22 7/8	23 1/4	23 3/4	24 1/8
24	265	3	2 3/4	26	26 3/8	27	27 3/8
27	322	3 1/4	3	29 1/4	29 5/8	30 1/4	30 5/8
30	384	3 1/2	3 1/4	32 3/8	32 3/4	33 1/2	33 7/8
36	524	4	3 3/4	38 3/4	39 1/4	40	40 1/2
42	685	4 1/2	4	45 1/8	45 5/8	46 1/2	47
48	867	5	4 1/2	51 1/2	52	53	53 1/2
54	1070	5 1/2	4 1/2	57 7/8	58 3/8	59 3/8	59 7/8
60	1296	6	5	64 1/4	64 3/4	66	66 1/2
66	1542	6 1/2	5 1/2	70 5/8	71 1/8	72 1/2	73
72	1810	7	6	77	77 1/2	79	79 1/2
78	2098	7 1/2	6 1/2	83 3/8	83 7/8	85 5/8	86 1/8
84	2410	8	7	89 3/4	90 1/4	92 1/8	92 5/8
90	2740	8 1/2	7	95 3/4	96 1/4	98 1/8	98 5/8
96	2950	9	7	102 1/8	102 5/8	104 1/2	105
102	3075	9 1/2	7 1/2	109	109 1/2	111 1/2	112
108	3870	10	7 1/2	115 1/2	116	118	118 1/2

March 31, 2000

Published Date: 2nd Qtr. 2015

SDDOT

REINFORCED CONCRETE PIPE

PLATE NUMBER 450.01

Sheet 1 of 1

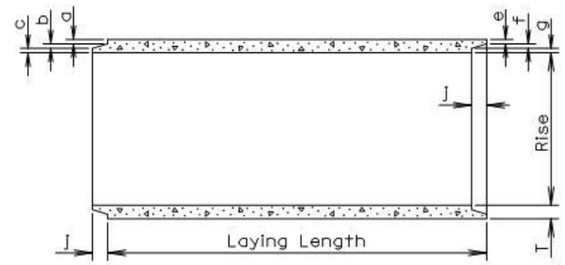

LONGITUDINAL SECTION

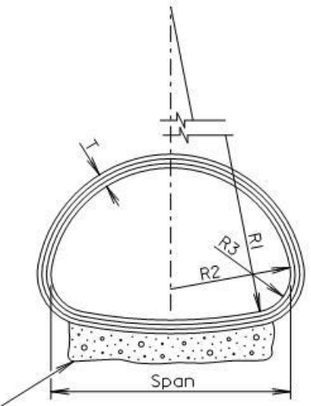

END VIEW

TOLERANCES IN DIMENSIONS

Radial dimensions at joints: ±1/8 " for 65" span or less and ±1/4 " for longer spans.
Rise and Span: ±2% of tabular values.
Length of Joint (J): ±1/4 ".
Wall thickness (T): not less than design T by more than 5% or 3/16", whichever is greater.
Laying length: shall not underrun by more than 1/2".

Gravel Bedding Material shall be supplied for 102" to 169" spans. It shall be placed to a thickness of 6" (min.) x 85% of the Span x Length of culvert and shall conform to the gradation requirements for gravel surfacing except material may be screened or may be plan provided material.

* Size (in.)	Approx. Wt./Ft. (lb.)	Rise (in.)	Span (in.)	T (in.)	a (in.)	b (in.)	c (in.)	J (in.)	e (in.)	f (in.)	g (in.)	R1 (in.)	R2 (in.)	R3 (in.)
18	170	13 1/2	22	2 1/2	1 3/8	3/8	3/4	2	1 1/8	3/8	1	27 1/2	13 3/4	5 1/4
24	320	18	28 1/2	3 1/2	1 5/8	1/2	1 3/8	3	1 3/8	1/2	1 5/8	40 11/16	14 3/4	4 5/8
30	450	22 1/2	36 1/4	4	1 13/16	5/8	1 9/16	3 1/2	1 9/16	5/8	1 13/16	51	18 3/4	6 1/8
36	600	26 5/8	43 3/4	4 1/2	2	3/4	1 3/4	4	1 3/4	3/4	2	62	22 1/2	6 1/2
42	740	31 5/16	51 1/8	4 1/2	2	3/4	1 3/4	4	1 3/4	3/4	2	73	26 1/4	7 3/4
48	890	36	58 1/2	5	2 1/4	3/4	2	5	2	3/4	2 1/4	84	30	8 7/8
54	1100	40	65	5 1/2	2 1/2	3/4	2 1/4	5	2 1/4	3/4	2 1/2	92 1/2	33 3/8	10
60	1400	45	73 1/2	6	3 5/16	3/4	1 15/16	5	2 3/4	3/4	2 1/2	105	37 1/2	11
72	1900	54	88	7	3 13/16	1	2 3/16	6	3 1/4	1	2 3/4	126	45	13 5/16
84	2500	62	102	8	4 1/8	1	2 7/8	6	3 1/2	1	3 1/2	162 1/2	52	14 1/2
96	3300	78	122 3/8	9	4 1/2	1	3 1/2	7	4	1	4	218	62	20
108	4200	88	138 1/2	10	5	1	4	7	4 1/2	1	4 1/2	269	70	22
120	5100	96 7/8	154	11	5 1/2	1	4 1/2	7	5	1	5	301 3/8	78	24
132	5100	106 1/2	168 3/4	10		1	4	7	4 1/2	1	4 1/2	329	85 5/8	26 7/8

* Equivalent Diameter of Circular R. C. P.

GENERAL NOTES:

Construction of R.C.P. Arch shall conform to the requirements of Section 990 of the Standard Specifications for Roads and Bridges. Not more than 2 four foot sections shall be permitted near the ends of any culvert. Four foot lengths shall be used only to secure the required length of culvert.

March 31, 2000

Published Date: 2nd Qtr. 2015

SDDOT

REINFORCED CONCRETE PIPE ARCH

PLATE NUMBER 450.02

Sheet 1 of 1

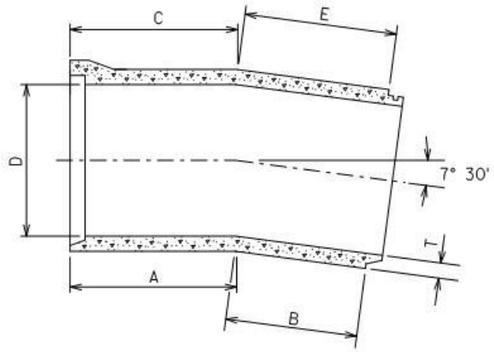

GENERAL NOTE:

Centerline laying length: 4'-0
Radius of Curve: 30.5'

D (in.)	T (in.)	A (in.)	B (in.)	C (in.)	E (in.)	Weight of Section (lbs.)
12	2	36 15/32	10 15/32	37 17/32	11 17/32	368
15	2 1/4	36 1/2	10 1/4	37 3/4	11 1/2	508
18	2 1/2	24 1/2	22	26	23 1/2	672
21	2 3/4	24 1/2	21 3/4	26 1/4	23 1/2	856
24	3	25 1/32	21 1/32	26 31/32	22 31/32	1060
27	3 1/4	25 1/32	20 25/32	27 7/32	22 31/32	1288
30	3 1/2	25 1/32	20 17/32	27 15/32	22 31/32	1536
33	3 3/4	24 15/16	20 7/16	27 9/16	23 1/16	1808
36	4	24 13/16	20 5/16	27 11/16	23 3/16	2096
42	4 1/2	24 27/32	19 27/32	28 5/32	23 5/32	2740
48	5	24 19/32	19 19/32	28 13/32	23 13/32	3468
54	5 1/2	24 5/8	19 1/8	29 11/32	23 3/8	4280
60	6	24 21/32	18 21/32	29 11/32	23 11/32	5184
66	6 1/2	24 11/16	18 3/16	29 13/16	23 5/16	6168
72	7	24 1/8	18 1/8	29 7/8	23 7/8	7240
84	8	24 1/4	17 1/4	30 3/4	23 3/4	9640
96	9	23 5/16	17 5/16	30 11/16	24 11/16	12400

March 31, 2000

Published Date: 2nd Qtr. 2015

SDDOT

REINFORCED CONCRETE PIPE LONG RADIUS BEND

PLATE NUMBER 450.04

Sheet 1 of 1

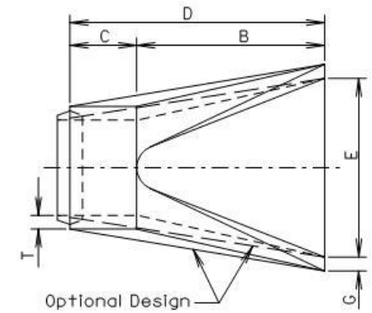

TOP VIEW

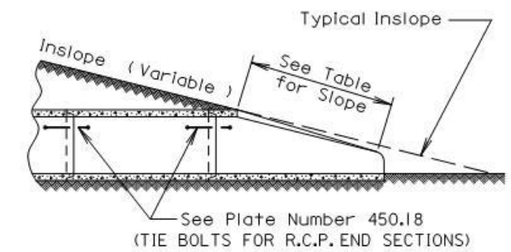

SLOPE DETAIL

GENERAL NOTES:

Lengths of concrete pipe shown on Plan Sheets are between flared Ends only.

Construction of R.C.P. Flared End shall conform to the requirements of Section 990 of the Standard Specifications for Roads and Bridges.

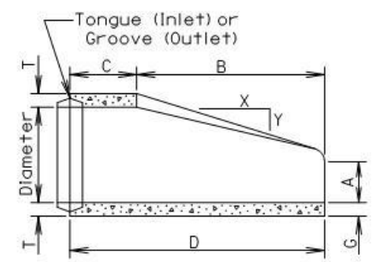

LONGITUDINAL SECTION

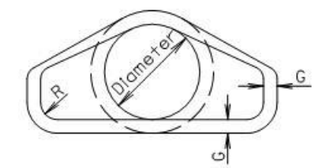

END VIEW

Dia. (in.)	Approx. Wt. of Section (lbs.)	Approx. Slope (X to Y)	T (in.)	A (in.)	B (in.)	C (in.)	D (in.)	E (in.)	G (in.)	R (in.)
12	530	2.4:1	2	4	24	48 7/8	72 7/8	24	2	1 1/2
15	740	2.4:1	2 1/4	6	27	46	73	30	2 1/4	1 1/2
18	990	2.3:1	2 1/2	9	27	46	73	36	2 1/2	1 1/2
21	1280	2.4:1	2 3/4	9	36	37 1/2	73 1/2	42	2 3/4	1 1/2
24	1520	2.5:1	3	9 1/2	43 1/2	30	73 1/2	48	3	1 1/2
27	1930	2.5:1	3 1/4	10 1/2	49 1/2	24	73 1/2	54	3 1/4	1 1/2
30	2190	2.5:1	3 1/2	12	54	19 3/4	73 3/4	60	3 1/2	1 1/2
36	4100	2.5:1	4	15	63	34 3/4	97 3/4	72	4	1 1/2
42	5380	2.5:1	4 1/2	21	63	35	98	78	4 1/2	1 1/2
48	6550	2.5:1	5	24	72	26	98	84	5	1 1/2
54	8240	2:1	5 1/2	27	65	33 1/4	98 1/4	90	5 1/2	1 1/2
60	8730	1.9:1	6	35	60	39	99	96	5	1 1/2
66	10710	1.7:1	6 1/2	30	72	27	99	102	5 1/2	1 1/2
72	12520	1.8:1	7	36	78	21	99	108	6	1 1/2
78	14770	1.8:1	7 1/2	36	90	21	111	114	6 1/2	1 1/2
84	18160	1.6:1	8	36	90 1/2	21	111 1/2	120	6 1/2	1 1/2
90	20900	1.5:1	8 1/2	41	87 1/2	24	111 1/2	132	6 1/2	6

March 31, 2000

Published Date: 2nd Qtr. 2015

SDDOT

R. C. P. FLARED ENDS

PLATE NUMBER 450.10

Sheet 1 of 1

Wall "t" (in.)	Rod Dia. (in.)	Pipe Sleeve Dia. (nominal)
≤ 3¼	⅝	¾
3½-6½	¾	1
≥ 7	1	1¼

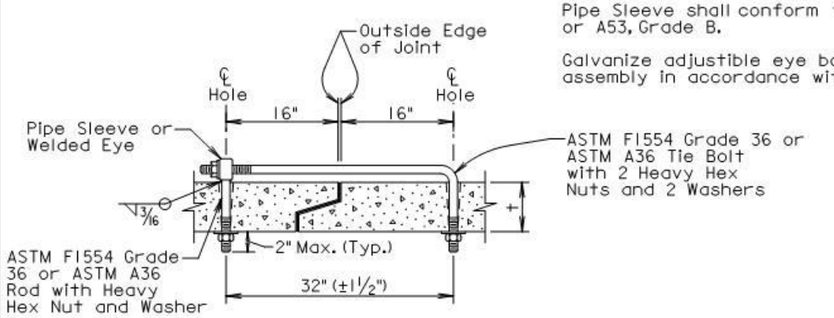

ADJUSTABLE EYE BOLT TIE

GENERAL NOTES:

Tie bolts shall conform to ASTM F1554 Grade 36 or ASTM A36. Nuts shall be heavy hex conforming to ASTM A563. Washers shall conform to ASTM F436.

Pipe Sleeve shall conform to ASTM A500 or A53, Grade B.

Galvanize adjustible eye bolt tie assembly in accordance with ASTM A153.

Pipe Dia. (in.)	"L" (in.)	Bolt Dia. (in.)
≤ 48	4	¾
> 48	6	1

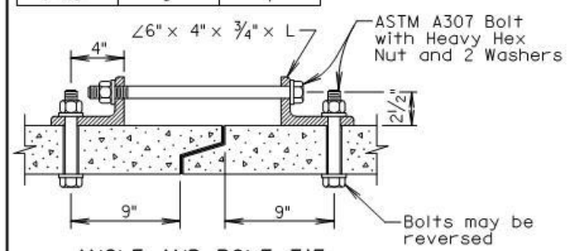

ANGLE AND BOLT TIE

GENERAL NOTES:

Angles shall conform to ASTM A36.

Bolts shall conform to ASTM A307. Nuts shall be heavy hex conforming to ASTM A563. Washers shall conform to ASTM F436.

Galvanize angles, bolts, nuts, and washers in accordance with ASTM A153.

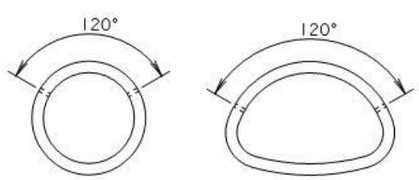

END VIEW "CIRCULAR"

END VIEW "ARCH"

GENERAL NOTES:

In lieu of the tie bolts detailed above other types of tie bolt connections may be installed as approved by the Office of Bridge Design.

All pipe sections of R.C.P. and R.C.P. Arch shall be tied with tie bolts except for pipe located between drop inlets, manholes, and junction boxes. All pipe sections of pipes that only enter or exit drop inlets, manhole, and junction boxes shall be tied with tie bolts.

There will be no separate measurement or payment for the tie bolts. The cost for furnishing and installing the tie bolts shall be incidental to the contract unit price per foot for the corresponding bid item for R.C.P. or R.C.P. Arch.

February 28, 2013

Published Date: 2nd Qtr. 2015 | SDDOT | TIE BOLTS FOR R.C.P. AND R.C.P. ARCH | PLATE NUMBER 450.18 | Sheet 1 of 1

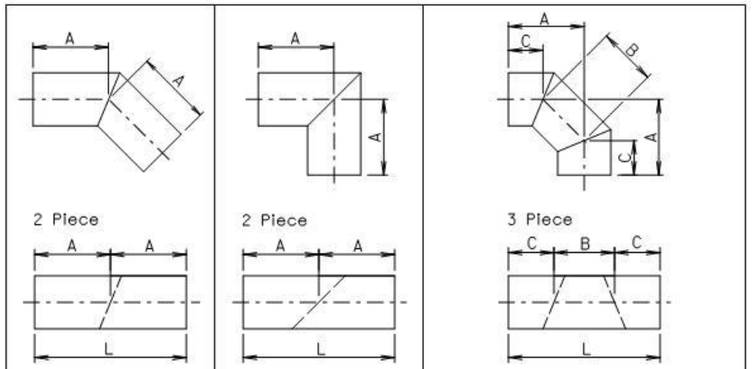

Diameter	A	L	Diameter	A	L	Diameter	A	B	C	L
Inches	Feet	Feet	Inches	Feet	Feet	Inches	Inches			Feet
12	1	2	12	2	4	12	25½	11	18½	4
15	1	2	15	2	4	15	26½	12	18	4
18	1	2	18	2	4	18	27	14	17	4
21	2	4	21	2	4	21	27	15	16½	4
24	2	4	24	2	4	24	27½	16	16	4
27	2	4	27	2	4	27	27½	17	15½	4
30	2	4	30	3	6	30	40	19	26½	6
33	2	4	33	3	6	33	40	20	26	6
36	2	4	36	3	6	36	40½	21	25½	6
42	2	4	42	3	6	42	41	23	24½	6
48	2	4	48	4	8	48	53½	26	35	8
54	3	6	54	4	8	54	54	28	34	8
60	3	6	60	4	8	60	54½	31	32½	8
66	3	6	66	4	8	66	54	33	31½	8
72	3	6	72	5	10	72	67½	36	42	10
78	3	6	78	5	10	78	68	39	40½	10
84	3	6	84	5	10	84	68½	41	39½	10
90	3	6	90	6	12	90	70	46	37	10
96	3	6	96	6	12	96	82	46	49	12

FABRICATED ELBOW LENGTHS FOR ALL CORRUGATIONS

GENERAL NOTES:

All dimensions shown are nominal.

L = Linear Feet of C.M.P. required to fabricate fitting.

June 26, 2001

Published Date: 2nd Qtr. 2015 | SDDOT | C.M.P. FABRICATED LENGTHS FOR ELBOWS | PLATE NUMBER 450.32 | Sheet 1 of 1

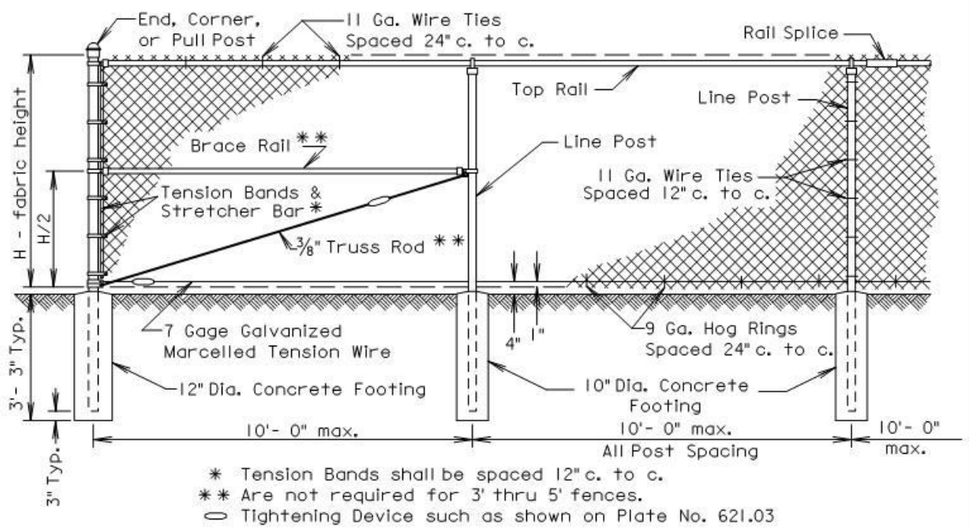

* Tension Bands shall be spaced 12" c. to c.
** Are not required for 3' thru 5' fences.
⬭ Tightening Device such as shown on Plate No. 621.03

Component	End, Corner & Pull Post		Line Post			Top & Brace Rail	
Type of Fabrication	Round Pipe Nominal	Roll Formed Steel	Round Pipe Nominal	"C" Section	H-Beam Steel	Round Pipe Nominal	Roll Formed Steel
Size	3.00" O. D.	3.5" x 3.5"	2.50" O. D.	1.875"x1.625"	2.25"x1.70"	1.625" O. D.	1.625"x1.25"
Weight (lb. / ft.)	5.79 or 4.64	5.14	3.65 or 3.12	2.34	3.43	2.27 or 1.84	1.35

GENERAL NOTES:

Specific details of manufacture of component parts of the complete fence construction shall be subject to the approval of the Engineer. Commercially available items produced specifically for the use intended shall be used wherever possible in the construction of the fence.

"H" (Height of Fabric) shall be as shown on the Plans. Fabric is available in the the following heights; 36", 42", 48", 60", 72", 84", 96", 108", 120", & 144". Fabric heights 60 inches and under shall be knuckled at both selvages. Fabric heights 72 inches and over shall be knuckled at one selvage and twisted at the other selvage.

Chain Link Fabric shall be 2" mesh, No. 9 gage galvanized wire securely fastened to Tension Wire, Line Post, Rails, Braces and Stretcher Bars spaced as shown hereon.

Fence may be constructed with either Round Pipe, "C" Section, "H" Beam, or roll Formed Steel components as shown in the table above. Line post may be Round Pipe, "C" Section, or "H" Beam. The Corner Post and Rails shall be either Round Pipe or Roll Formed Steel. The type of components used shall have prior approval by the Engineer before construction.

Where fence must cross small bodies of water (such as drainage areas or ponds) that could freeze during the winter, use 11 gage Hog Rings. Provide only two ties per Tension Wire and Top Rail between line posts.

A suitable method of rail splicing shall be used to allow for expansion and contraction while maintaining proper position of the Top Rail.

March 31, 2000

Published Date: 2nd Qtr. 2015

SDDOT

CHAIN LINK FENCE WITH TOP RAIL

PLATE NUMBER 621.01

Sheet 1 of 1

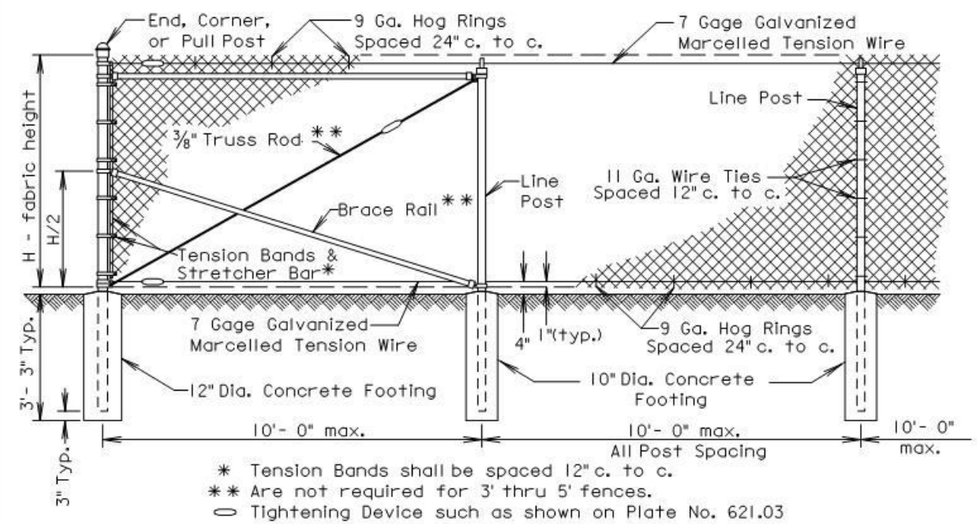

* Tension Bands shall be spaced 12" c. to c.
** Are not required for 3' thru 5' fences.
⬭ Tightening Device such as shown on Plate No. 621.03

Component	End, Corner & Pull Post		Line Post			Top & Brace Rail	
Type of Fabrication	Round Pipe Nominal	Roll Formed Steel	Round Pipe Nominal	"C" Section	H-Beam Steel	Round Pipe Nominal	Roll Formed Steel
Size	3.00" O. D.	3.5" x 3.5"	2.50" O. D.	1.875"x1.625"	2.25"x1.70"	1.625" O. D.	1.625"x1.25"
Weight (lb. / ft.)	5.79 or 4.64	5.14	3.65 or 3.12	2.34	3.43	2.27 or 1.84	1.35

GENERAL NOTES:

Specific details of manufacture of component parts of the complete fence construction shall be subject to the approval of the Engineer. Commercially available items produced specifically for the use intended shall be used wherever possible in the construction of the fence.

"H" (Height of Fabric) shall be as shown on the Plans. Fabric is available in the the following heights; 36", 42", 48", 60", 72", 84", 96", 108", 120", & 144". Fabric heights 60 inches and under shall be knuckled at both selvages. Fabric heights 72 inches and over shall be knuckled at one selvage and twisted at the other selvage.

Chain Link Fabric shall be 2" mesh, No. 9 gage galvanized wire securely fastened to Tension Wire, Line Post, Rails, Braces and Stretcher Bars spaced as shown hereon.

Fence may be constructed with either Round Pipe, "C" Section, "H" Beam, or roll Formed Steel components as shown in the table above. Line post may be Round Pipe, "C" Section, or "H" Beam. The Corner Post and Rails shall be either Round Pipe or Roll Formed Steel. The type of components used shall have prior approval by the Engineer before construction.

All post shall have a means to securely hold the top tension wire in position and allow for the removal and replacement of a post without damaging the top tension wire.

Where fence must cross small bodies of water (such as drainage areas or ponds) that could freeze during the winter, use 11 gage Hog Rings. Provide only two ties per Tension Wire and Top Rail between line posts.

March 31, 2000

Published Date: 2nd Qtr. 2015

SDDOT

CHAIN LINK FENCE WITH TENSION WIRED TOP

PLATE NUMBER 621.02

Sheet 1 of 1

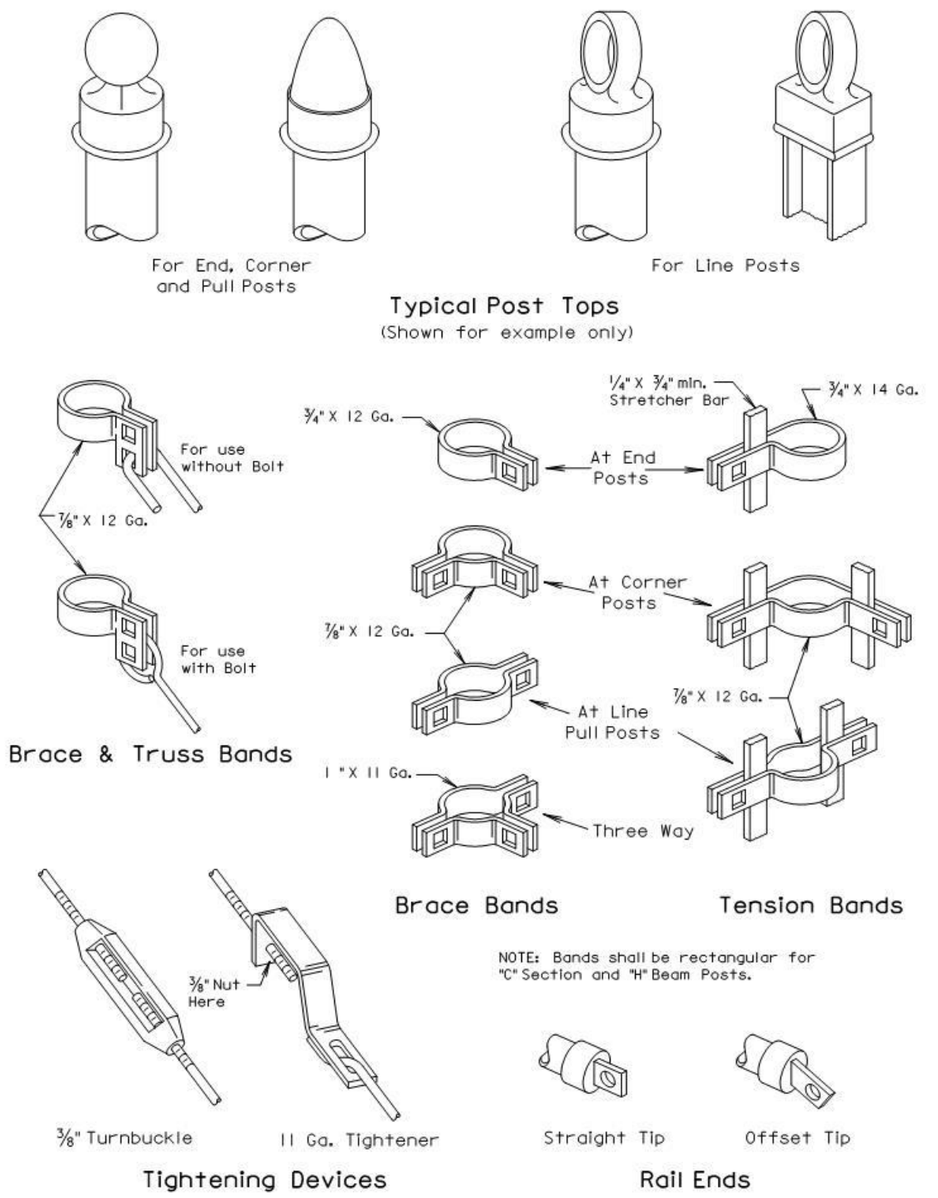

March 31, 2000

Published Date: 2nd Qtr. 2015 | SDDOT | HARDWARE FOR CHAIN LINK FENCE | PLATE NUMBER 621.03 | Sheet 1 of 1

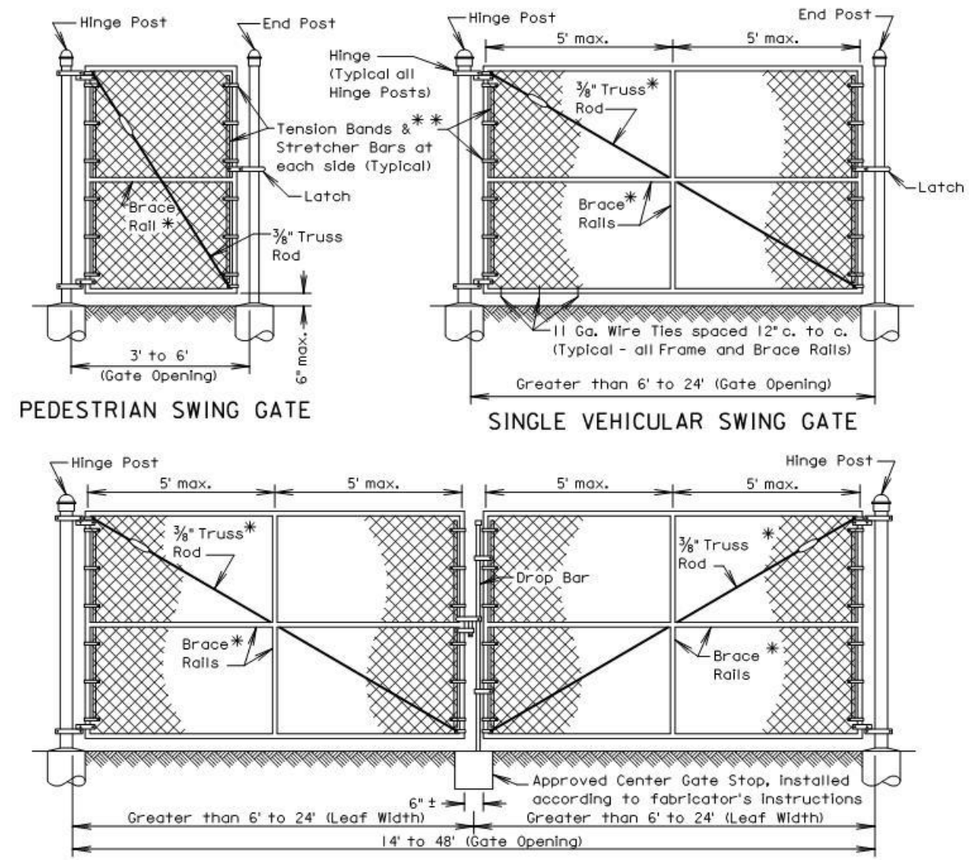

Gate Opening		Frame Pipe Nominal	Brace Rail - Pipe Nominal
Width [1]	Height [2]		
3' to 8'	3' to 6'	1.50"	1.50"
>8' to 23'	6'	1.90"	1.50"
>8' to 23'	> 6' to 12'	1.90"	1.90"

Gate Opening Width [1]	Hinge Post		Concrete Footing	
	Round Pipe Nominal	Roll Formed Steel	Depth	Diameter
3' to 6'	3.00"	3.50"X3.50"	36"	12"
> 6' to 13'	4.00"	—	42"	12"
> 13' to 18'	6.625"	—	48"	18"
> 18' to 23'	8.625"	—	48"	24"

NOTE: Gate frames may be constructed of bent or welded steel tubing installed according to fabricator's instructions and subject to the Engineer's approval.

* Are not required for gates 3' to 5' height or 5' or less in width.

** Tension Bands shall be spaced 12" c. to c.

⬭ Tightening Device such as shown on standard plate 621.03

1 Leaf width for Double Vehicular Swing Gate

2 Shall coincide with fence height

September 14, 2001

Published Date: 2nd Qtr. 2015 | SDDOT | SWING GATES FOR CHAIN LINK FENCE | PLATE NUMBER 621.10 | Sheet 1 of 1

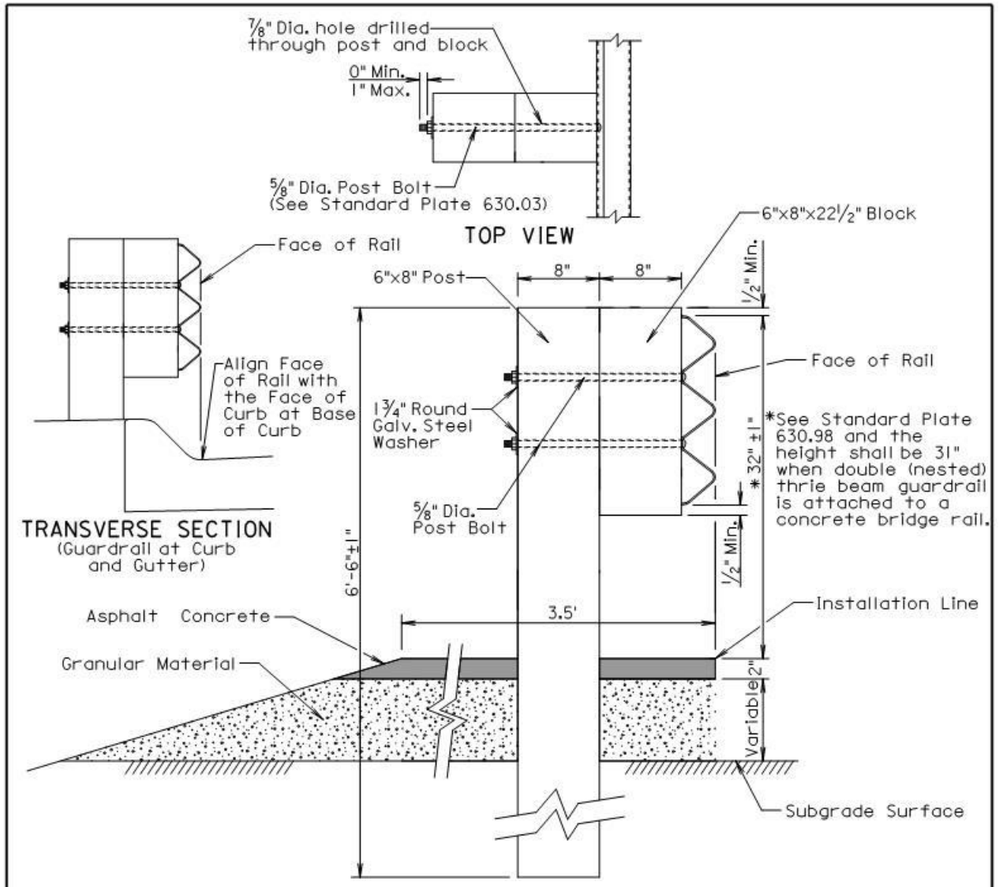

GENERAL NOTES:

Asphalt concrete shall be the same type used elsewhere on the project or shall be as specified in the plans. If asphalt concrete is not specified in the plans, the asphalt concrete shall conform to the SD Standard Specifications for "Asphalt Concrete Composite." For informational purposes, the Rate of Materials for the 3.5' wide section of asphalt concrete as shown above shall be 4.80 Tons per Station.

Granular material shall be the same type used elsewhere on the project or shall be as specified in the plans. If granular material type is not specified in the plans, the material shall conform to the SD Standard Specifications for "Base Course". The granular material shall be placed the same thickness as the mainline surfacing or as specified in the plans.

Surfacing and embankment quantities will be paid for separately and will NOT be incidental to the "Thrie Beam Guardrail" bid item.

The cross slope for the surfacing and subgrade surface shall be as specified in the plans (See Typical Sections and/or Cross Sections).

The top of posts and top of block shall have a true square cut. The top of post and top of block shall be flush.

December 23, 2010

Published Date: 2nd Qtr. 2015	SDDOT	THRIE BEAM GUARDRAIL POST INSTALLATION	PLATE NUMBER 630.01 Sheet 1 of 1

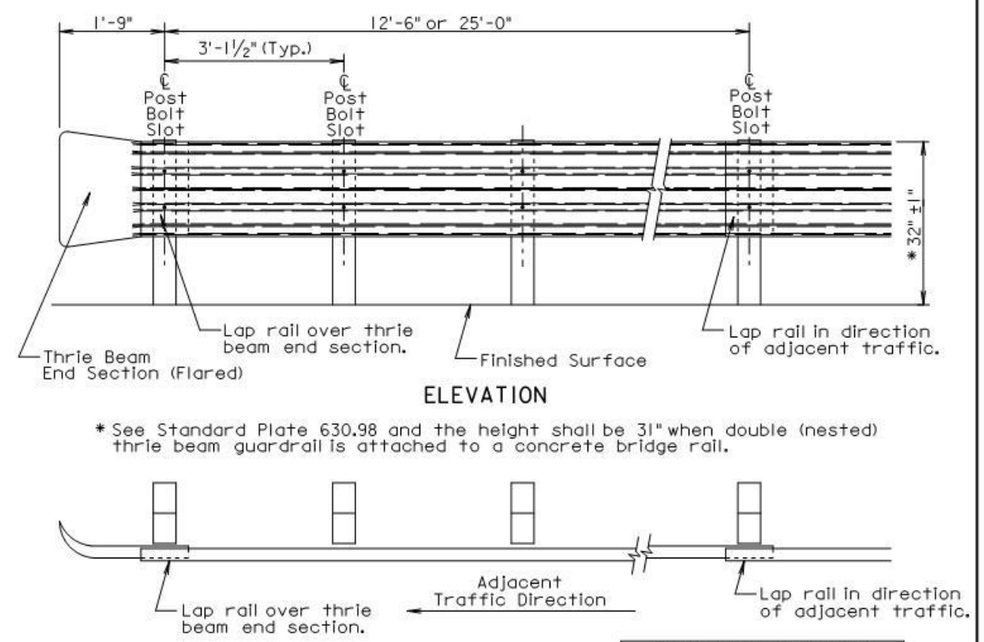

THRIE BEAM GUARDRAIL DEFLECTION CRITERIA	
POST SPACING	MAXIMUM DEFLECTION
6'-3"	2'-6"
3'-1 1/2"	1'-9"

For Informational Purposes Only

GENERAL NOTES:

All thrie beam rail shall be Type 1.

There will be no separate payment for furnishing and installing Thrie Beam End Sections (Flared) and Thrie Beam Terminal Connectors. All costs for the Thrie Beam End Sections (Flared) and Thrie Beam Terminal Connectors shall be incidental to the contract unit price per foot for the respective "Thrie Beam Guardrail" bid item.

Thrie beam rail section lengths may be 12'-6" and/or 25'-0". The combination of section lengths used shall be compatible with the total length of rail per site as shown in the plans.

Thrie Beam End Sections (Flared) shall only be used in a one way traffic situation. See Standard Plate 630.80 for Thrie Beam End Section (Flared) in the Beam Guardrail Trailing End Terminal.

All costs for constructing thrie beam guardrail including labor, equipment, and materials including all posts, blocks, steel beam rail, and hardware shall be incidental to the contract unit price per foot for the respective "Thrie Beam Guardrail" bid item.

Surfacing and embankment quantities will be paid for separately and will NOT be incidental to the "Thrie Beam Guardrail" bid item.

December 23, 2010

Published Date: 2nd Qtr. 2015	SDDOT	THRIE BEAM GUARDRAIL INSTALLATION	PLATE NUMBER 630.02 Sheet 1 of 1

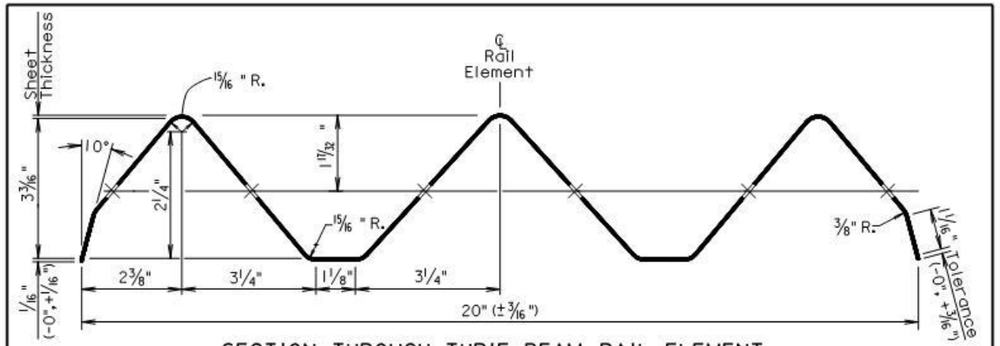

SECTION THROUGH THRIE BEAM RAIL ELEMENT

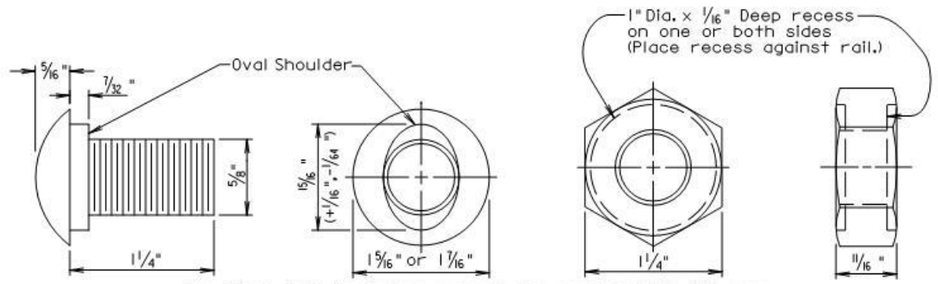

The Post Bolt is similar except the post bolt is 18" long.

SPLICE BOLT
(5/8" BUTTON HEAD BOLT AND RECESS NUT)

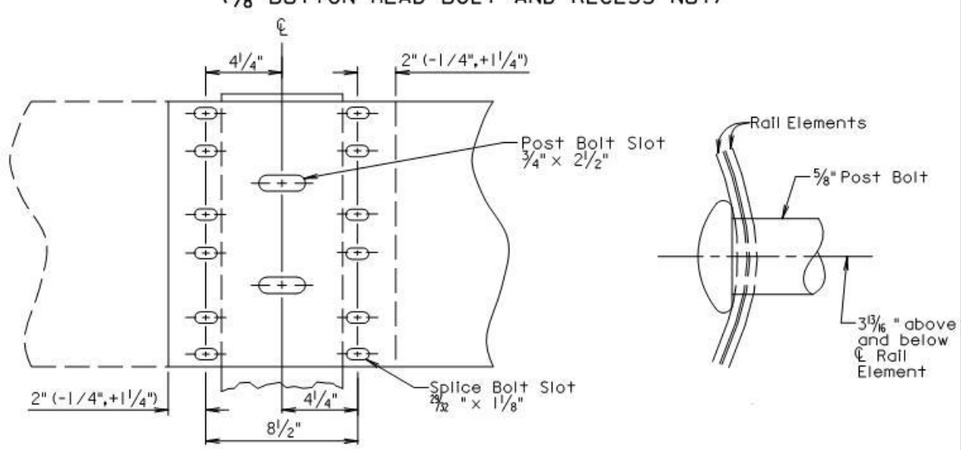

Lap in direction of traffic.

RAIL SPLICE

March 31, 2000

Published Date: 2nd Qtr. 2015	SDDOT	THRIE BEAM RAIL, RAIL SPLICE, AND HARDWARE	PLATE NUMBER 630.03 Sheet 1 of 1

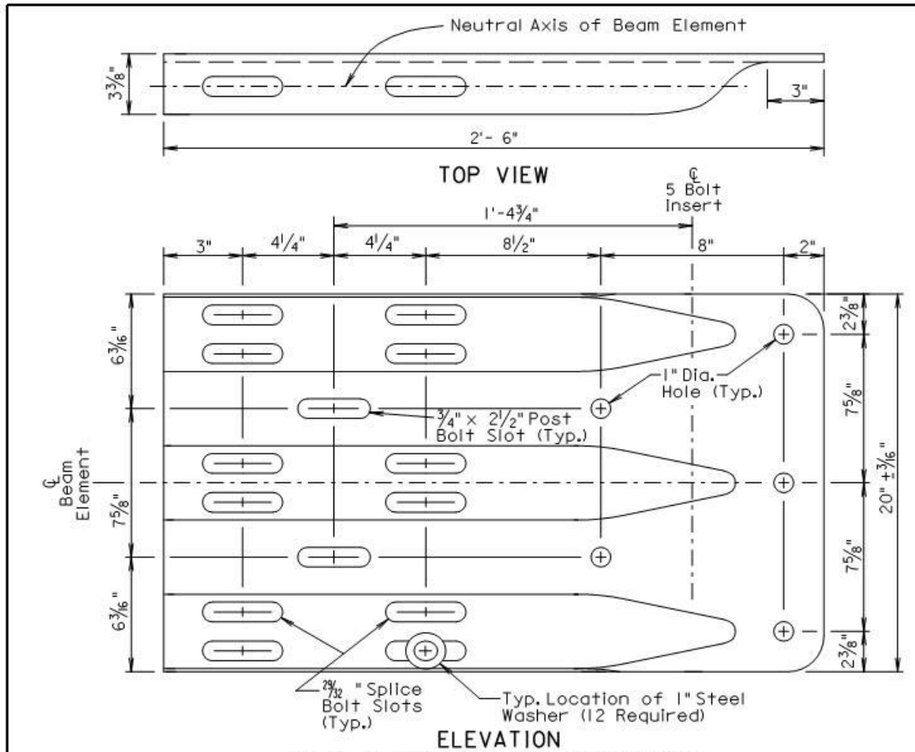

ELEVATION
THRIE BEAM TERMINAL CONNECTOR

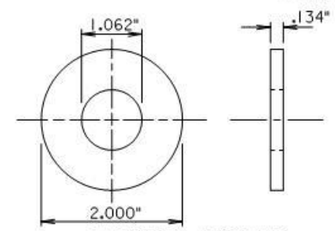

1" STEEL WASHER

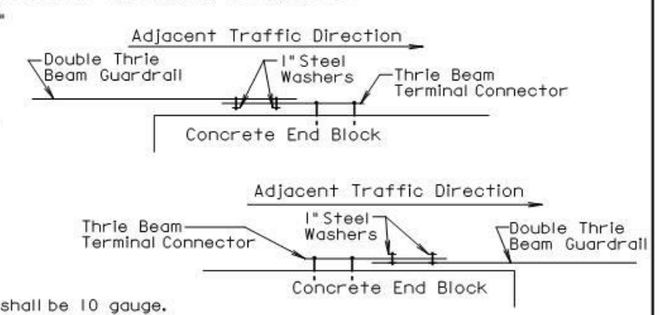

GENERAL NOTES:

Thrie Beam Terminal Connectors shall be 10 gauge.

When the thrie beam terminal connector is used to connect the rail to the bridge, 1" steel washers shall be used at the lap splice and the washers shall be in direct contact with the 3" slots of the thrie beam terminal connector. See the drawings above for the typical locations of the 1" steel washers.

There will be no separate payment for furnishing and installing the Thrie Beam Terminal Connector. All costs for the Thrie Beam Terminal Connector shall be incidental to the contract unit price per foot for the respective "Thrie Beam Guardrail" bid item.

September 14, 2001

Published Date: 2nd Qtr. 2015	SDDOT	THRIE BEAM TERMINAL CONNECTOR AND 1" STEEL WASHER	PLATE NUMBER 630.05 Sheet 1 of 1

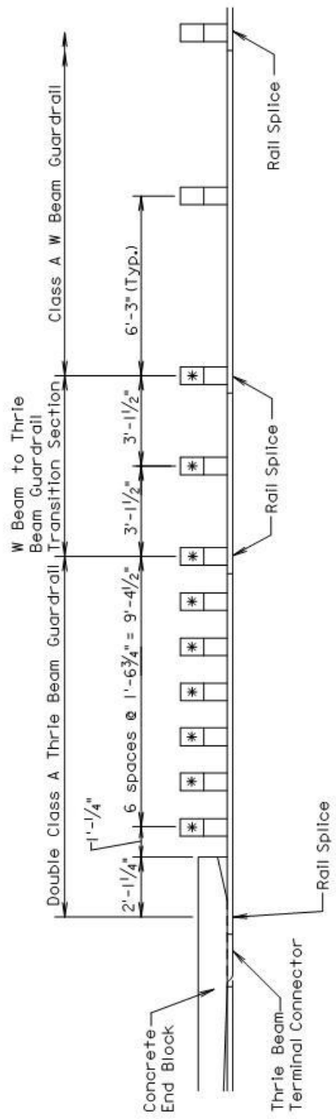

* 6" x 8" x 7' posts shall be used at these locations.

POST SPACING ARRANGEMENT FOR THRIE BEAM GUARDRAIL AT BRIDGE END

December 23, 2002

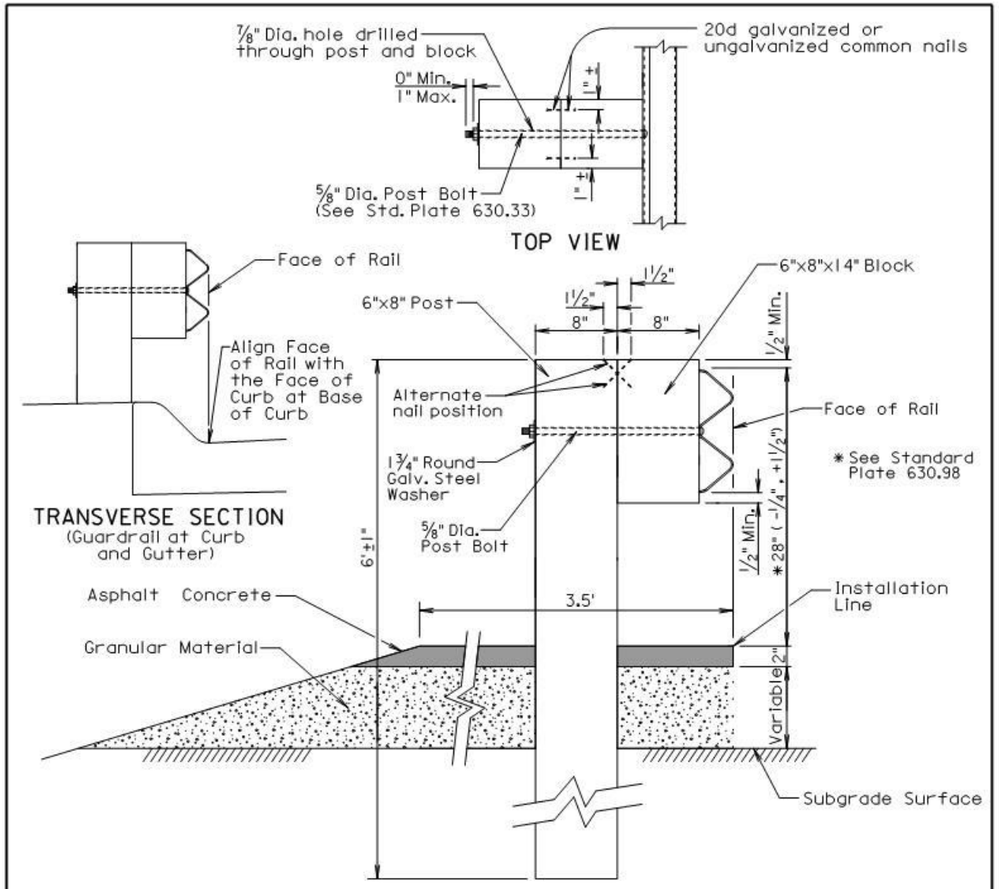

GENERAL NOTES:

Asphalt concrete shall be the same type used elsewhere on the project or shall be as specified in the plans. If asphalt concrete is not specified in the plans, the asphalt concrete shall conform to the SD Standard Specifications for "Asphalt Concrete Composite." For informational purposes, the Rate of Materials for the 3.5' wide section of asphalt concrete as shown above shall be 4.80 Tons per Station.

Granular material shall be the same type used elsewhere on the project or shall be as specified in the plans. If granular material type is not specified in the plans, the material shall conform to the SD Standard Specifications for "Base Course". The granular material shall be placed the same thickness as the mainline surfacing or as specified in the plans.

Surfacing and embankment quantities will be paid for separately and will NOT be incidental to the "W Beam Guardrail" bid item.

The cross slope for the surfacing and subgrade surface shall be as specified in the plans (See Typical Sections and/or Cross Sections).

The top of posts and top of block shall have a true square cut. The top of post and top of block shall be flush.

December 23, 2010

Published Date: 2nd Qtr. 2015	SDDOT	POST SPACING ARRANGEMENT FOR THRIE BEAM GUARDRAIL AT BRIDGE END	PLATE NUMBER 630.15 Sheet 1 of 1

Published Date: 2nd Qtr. 2015	SDDOT	W BEAM GUARDRAIL POST INSTALLATION	PLATE NUMBER 630.31 Sheet 1 of 1

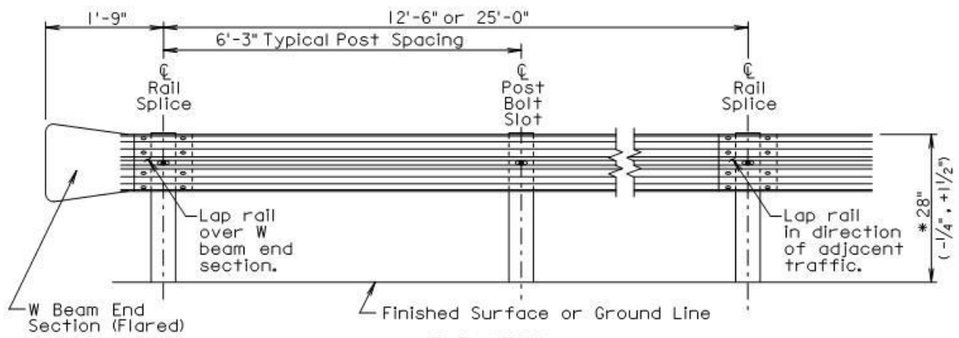

ELEVATION

*See Standard Plate 630.98

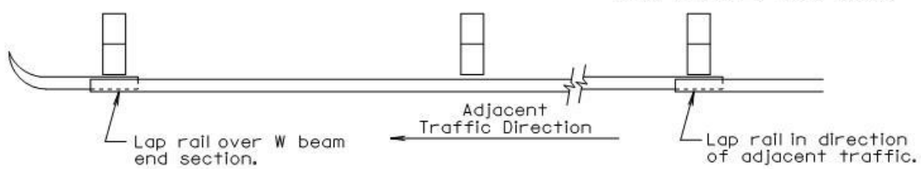

PLAN

W BEAM GUARDRAIL DEFLECTION CRITERIA	
POST SPACING	MAXIMUM DEFLECTION
6'-3"	5'-0"
3'-1 1/2"	3'-9"

For Informational Purposes Only

GENERAL NOTES:

All W beam rail shall be Type I.

There will be no separate payment for furnishing and installing W Beam End Sections (Flared) and W Beam Terminal Connectors. All costs for the W Beam End Sections (Flared) and W Beam Terminal Connectors shall be incidental to the contract unit price per foot for the respective "W Beam Guardrail" bid item.

W beam rail section lengths may be 12'-6" and/or 25'-0". The combination of section lengths used shall be compatible with the total length of rail per site as shown in the plans.

W Beam End Sections (Flared) shall only be used in a one way traffic situation. See Standard Plate 630.80 for W Beam End Section (Flared) in the Beam Guardrail Trailing End Terminal.

All costs for constructing W beam guardrail including labor, equipment, and materials including all posts, blocks, steel beam rail, and hardware shall be incidental to the contract unit price per foot for the respective "W Beam Guardrail" bid item.

Surfacing and embankment quantities will be paid for separately and will NOT be incidental to the "W Beam Guardrail" bid item.

December 16, 2014

Published Date: 2nd Qtr. 2015	SDDOT	W BEAM GUARDRAIL INSTALLATION	PLATE NUMBER 630.32 Sheet 1 of 1

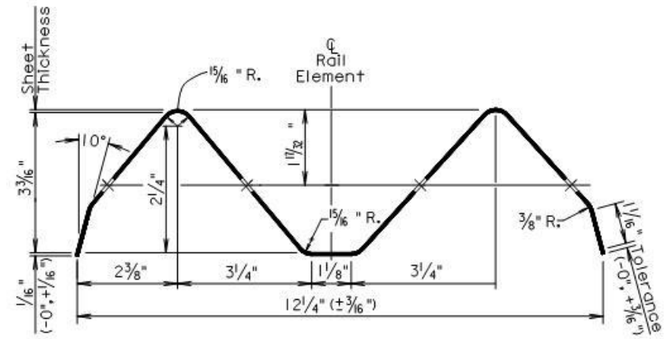

SECTION THROUGH W BEAM RAIL ELEMENT

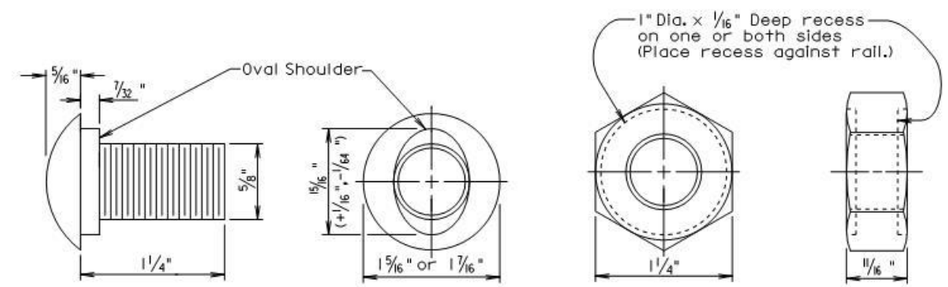

The Post Bolt is similar except the post bolt is 18" long.

SPLICE BOLT
(5/8" BUTTON HEAD BOLT AND RECESS NUT)

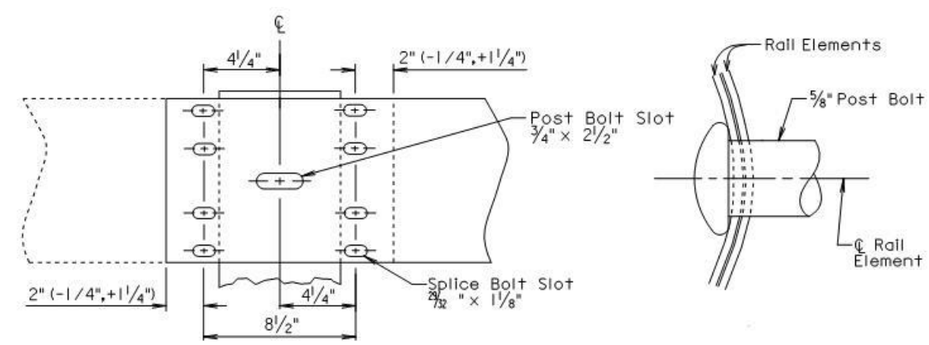

Lap in direction of traffic.

RAIL SPLICE

December 23, 2004

Published Date: 2nd Qtr. 2015	SDDOT	W BEAM RAIL, RAIL SPLICE, AND HARDWARE	PLATE NUMBER 630.33 Sheet 1 of 1

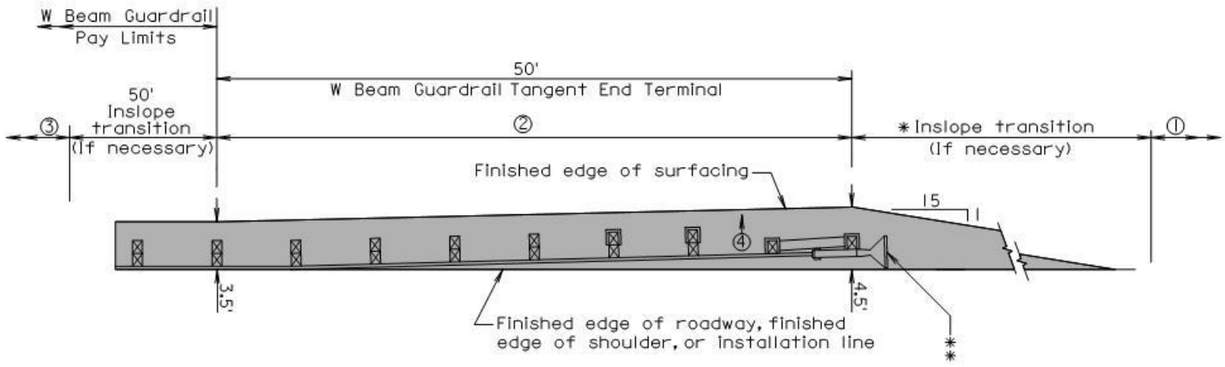

PLAN

2" Asphalt concrete surfacing with variable thickness granular material

① Same inslope as mainline inslope
② 4:1 inslope
③ 2:1 inslope or flatter, or inslope as specified in plans
④ Same slope as roadway cross slope

* The length of inslope transition varies with the amount of change between inslopes. The length of the transition shall change 100' for every whole number change in the inslope. For Example: If the inslope changes from a 5:1 to a 4:1 the length of the inslope transition would be 100'. If the inslope changes from a 6:1 to a 4:1 the length of the inslope transition would be 200'.

GENERAL NOTES:

The W beam guardrail tangent end terminal shall be installed according to the manufacturer's installation instructions.

**An adhesive object marker shall be placed on the end section buffer or extruder after placement of the end section buffer or extruder. The adhesive object marker dimensions may be 16" x 16" or other variation due to the shape of the end section buffer or extruder. A minimum of 256 square inches of object marker reflective sheeting area is required. The reflective sheeting shall be fluorescent yellow super or very high intensity. All costs for furnishing and installing the adhesive object marker shall be incidental to various contract items.

Asphalt concrete shall be the same type used elsewhere on the project or shall be as specified in the plans. If asphalt concrete is not specified in the plans, the asphalt concrete shall conform to the Specifications for "Asphalt Concrete Composite."

Granular material shall be the same type used elsewhere on the project or shall be as specified in the plans. If granular material type is not specified in the plans, the material shall conform to the Specifications for "Base Course". The granular material shall be placed the same thickness as the mainline surfacing or as specified in the plans.

Published Date: 2nd Qtr. 2015

SDDOT

EMBANKMENT AND SURFACING FOR W BEAM GUARDRAIL TANGENT END TERMINAL

PLATE NUMBER 630.46

Sheet 1 of 1

December 16, 2014

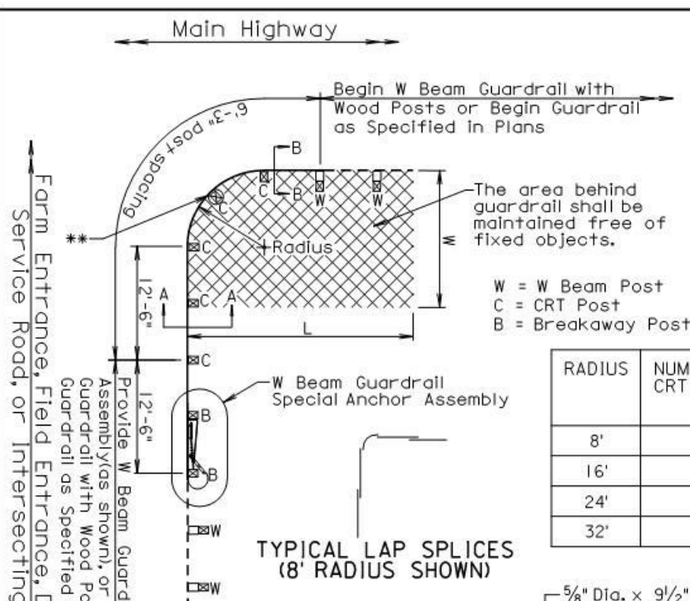

W = W Beam Post
C = CRT Post
B = Breakaway Post

TYPICAL LAP SPLICES
(8' RADIUS SHOWN)

GENERAL NOTES:

**The rail shall NOT be bolted to the CRT post at the center of the 8' radius nose only.

Washers shall not be used on the face of the rail under the 5/8" button head bolts connecting the rail to the Controlled Releasing Terminal (CRT) posts.

The curved guardrail sections shall be shop bent.

The W Beam Guardrail Special Anchor has not been tested as a crashworthy end treatment for approaching traffic on the intersecting roadway. Therefore, its use shall be limited to farm and field entrances, driveways, or service roads.

RADIUS	NUMBER OF CRT POSTS	*NUMBER AND LENGTH OF CURVED RAILS	REQUIRED AREA FREE OF FIXED OBJECTS (L x W)
8'	5	1 @ 12.5'	25' x 15'
16'	7	1 @ 25'	30' x 15'
24'	9	1 @ 25' and 1 @ 12.5'	40' x 20'
32'	11	2 @ 25'	50' x 20'

*The number of rails is based on a 90° intersection.

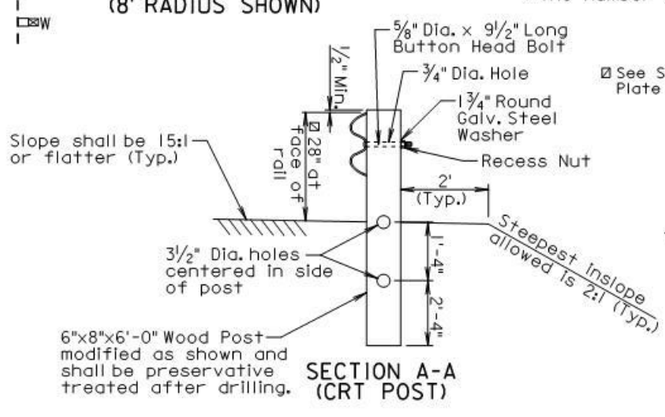

SECTION A-A
(CRT POST)

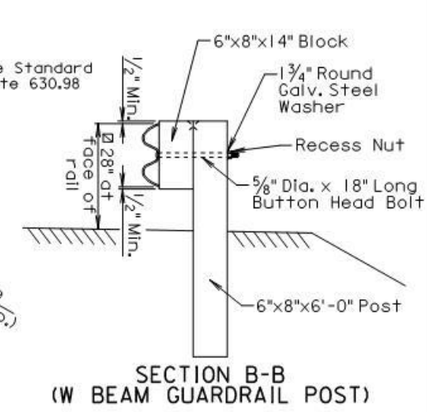

SECTION B-B
(W BEAM GUARDRAIL POST)

Published Date: 2nd Qtr. 2015

SDDOT

CURVED W BEAM GUARDRAIL TERMINAL

PLATE NUMBER 630.70

Sheet 1 of 4

June 26, 2012

FOR BIDDING PURPOSES ONLY

STATE OF SOUTH DAKOTA

PROJECT IM 1902(61)0

SHEET B216

TOTAL SHEETS B253

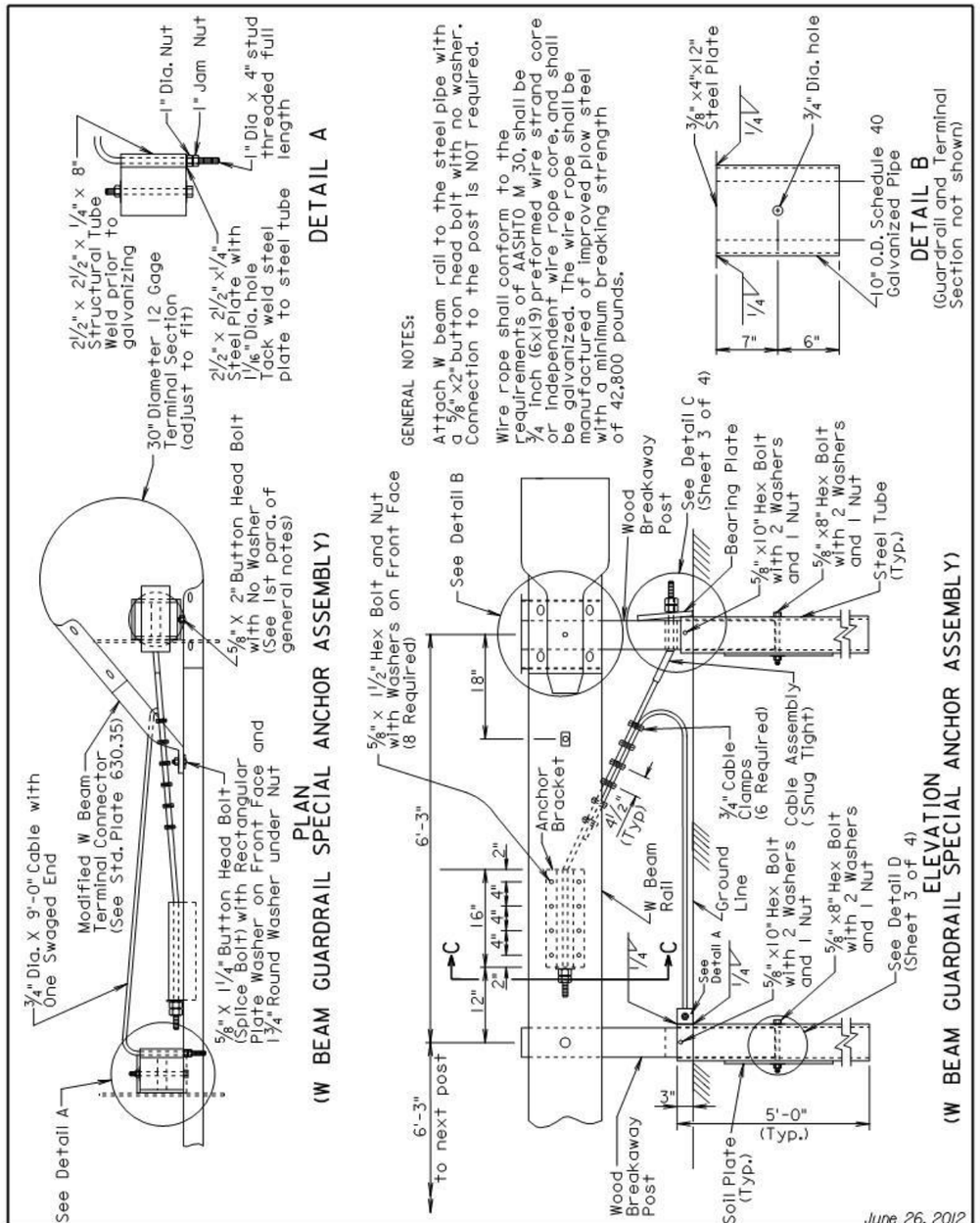

Published Date: 2nd Qtr. 2015 | SDDOT | CURVED W BEAM GUARDRAIL TERMINAL | PLATE NUMBER 630.70 | Sheet 2 of 4

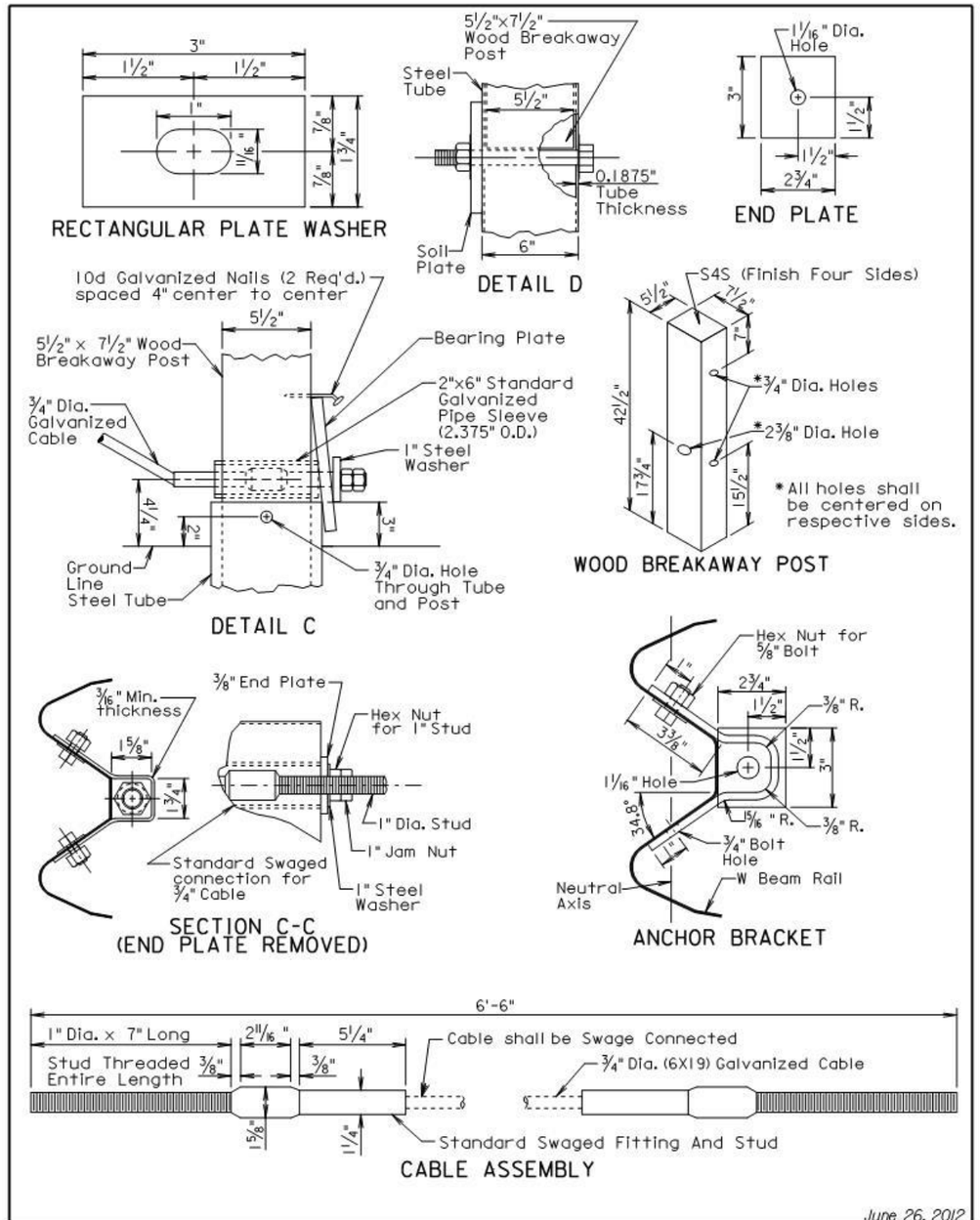

Published Date: 2nd Qtr. 2015 | SDDOT | CURVED W BEAM GUARDRAIL TERMINAL | PLATE NUMBER 630.70 | Sheet 3 of 4

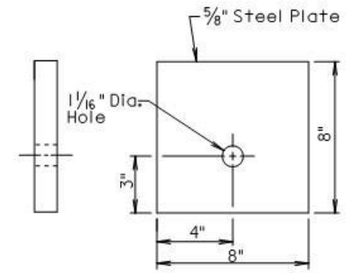

BEARING PLATE

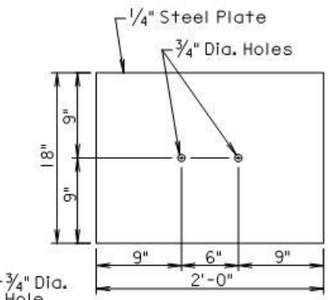

SOIL PLATE

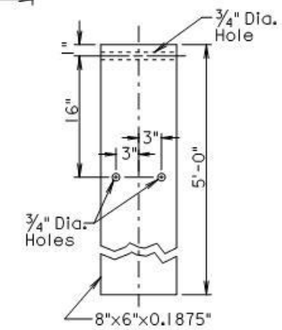

STEEL TUBE

GENERAL NOTES:

The wood breakaway post shall be S4S timber with a stress grade of 1200 psi and shall be grade marked or certified by a recognized association or agency which is certified by the Board of Review, American Lumber Standard Committee, to grade the species. It shall receive a preservative treatment in accordance with AASHTO designation M 133.

The bolts shall be in conformance with ASTM A 307 and the nuts shall be in conformance with ASTM A 563, Grade A or better. The bolts and nuts shall be galvanized in accordance with ASTM A 153.

All angles, channels, and plates shall conform to the requirements of ASTM A36 and the structural tubing shall conform to ASTM A 500. Welding shall meet the current requirements of the Structural Welding Code AWS D1.1. All structural steel shall be galvanized in accordance with ASTM A 123. Punching, drilling, cutting, or welding will NOT be permitted after galvanizing.

All costs for constructing the straight W beam guardrail portion of the curved W beam guardrail terminal including labor, equipment, and materials including all posts, blocks, steel beam rail, and hardware shall be incidental to the contract unit price per foot for "Straight Class A W Beam Guardrail with CRT Posts".

All costs for constructing the curved W beam guardrail portion of the curved W beam guardrail terminal including labor, equipment, and materials including all CRT posts, steel beam rail, and hardware shall be incidental to the contract unit price per foot for "Curved Class A W Beam Guardrail with CRT Posts".

All costs for constructing the W beam guardrail special anchor assembly including labor, equipment, hardware, and all components of the W beam guardrail special anchor assembly except the W beam rail shall be incidental to the contract unit price per each for "W Beam Guardrail Special Anchor Assembly". The 12'-6" length of W beam rail located within the W beam guardrail special anchor assembly shall be paid for per foot with the bid item "Straight Class A W Beam Guardrail with Wood Posts".

June 26, 2012

Published Date: 2nd Qtr. 2015	**SDDOT**	***CURVED W BEAM GUARDRAIL TERMINAL***	***PLATE NUMBER*** *630.70*
			Sheet 4 of 4

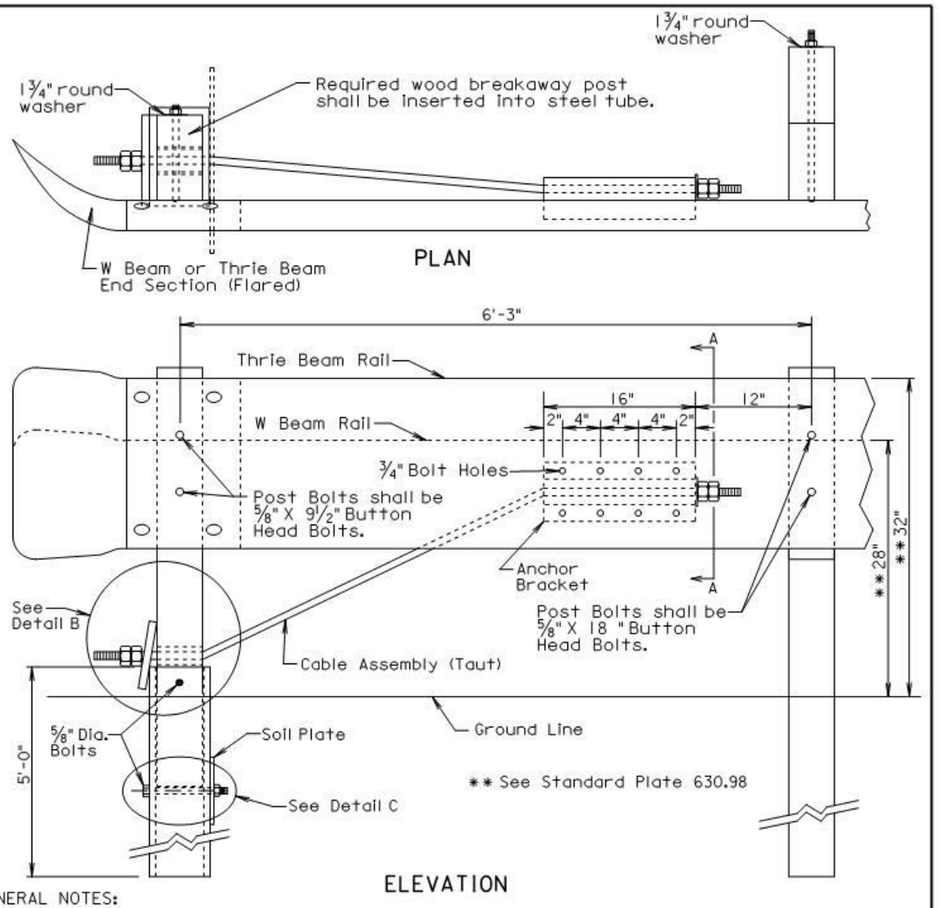

GENERAL NOTES:

All hardware shall be galvanized in accordance with ASTM A153.

The cable shall be ¾", Type II, with Class A coating in conformance with AASHTO M30.

The steel tube shall meet the requirements of ASTM Specification A500, Grade B, and shall be galvanized after fabrication in accordance with the requirements of AASHTO Specification M111.

The anchor bracket, soil plate, and bearing plate shall be fabricated from steel that meets ASTM A36 Specifications. They shall be galvanized after fabrication in accordance with ASTM A123.

Costs for constructing the beam guardrail trailing end terminal and furnishing the anchor bracket, cable assembly, steel tube, soil plate, bearing plate, pipe sleeve, wood breakaway post, and all hardware necessary to attach anchor bracket, cable assembly, steel tube, soil plate, bearing plate, pipe sleeve, and wood breakaway post shall be incidental to the contract unit price per each for "Beam Guardrail Trailing End Terminal".

Costs for the thrie beam or W beam guardrail and the thrie beam or W beam end sections (Flared) shall be incidental to the contract unit price per foot for the respective "Thrie Beam Guardrail" or "W Beam Guardrail" bid items.

June 26, 2010

Published Date: 2nd Qtr. 2015	SDDOT	BEAM GUARDRAIL TRAILING END TERMINAL	PLATE NUMBER 630.80
			Sheet 1 of 2

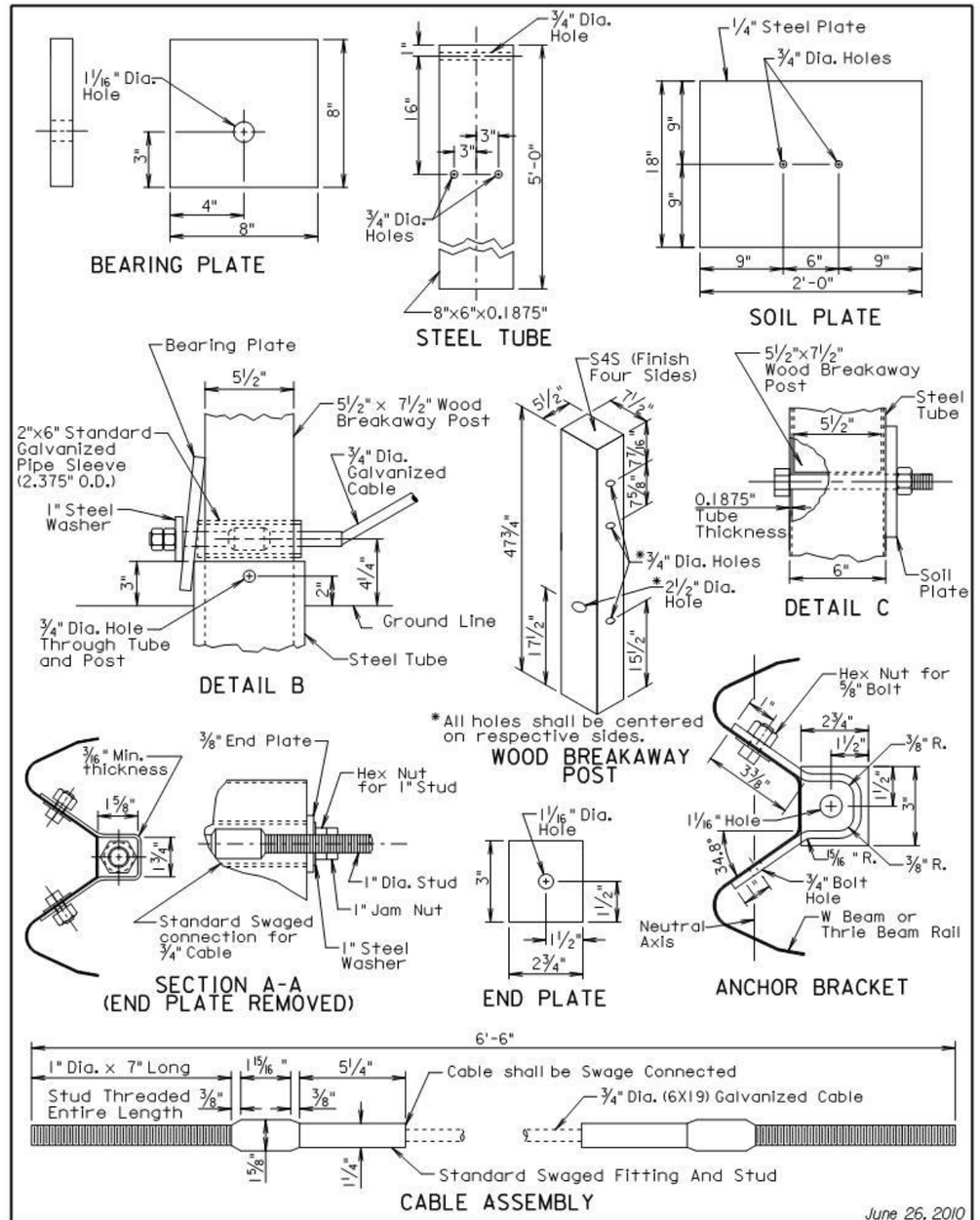

June 26, 2010

Published Date: 2nd Qtr. 2015	SDDOT	BEAM GUARDRAIL TRAILING END TERMINAL	PLATE NUMBER 630.80
			Sheet 2 of 2

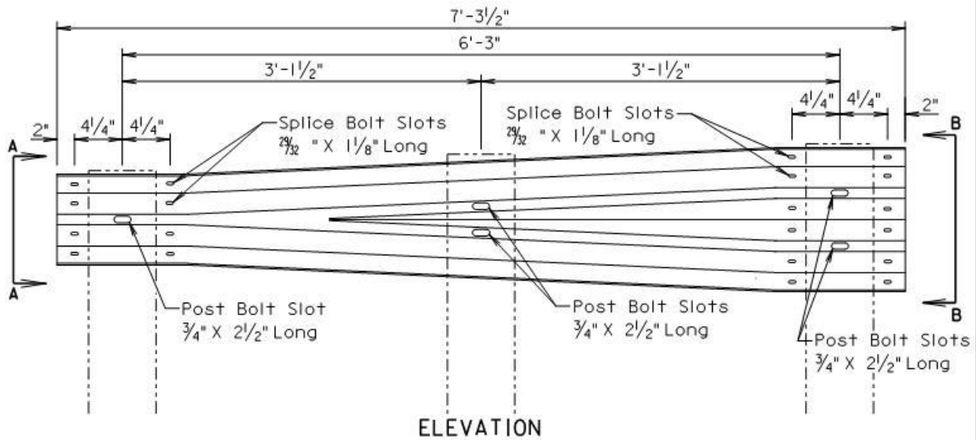

ELEVATION

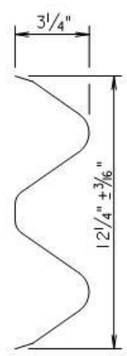

VIEW A-A

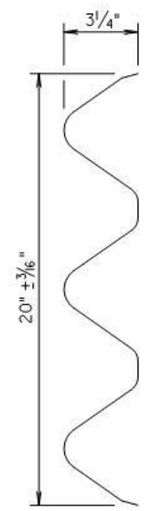

VIEW B-B

GENERAL NOTE:

All costs for constructing the W Beam to Thrie Beam Guardrail Transition including labor, equipment, and materials including two posts, two blocks, W beam to thrie beam transition section, and hardware shall be incidental to the contract unit price per each for "W Beam to Thrie Beam Guardrail Transition".

March 31, 2000

Published Date: 2nd Qtr. 2015	SDDOT	W BEAM TO THRIE BEAM GUARDRAIL TRANSITION SECTION	PLATE NUMBER 630.82 Sheet 1 of 1

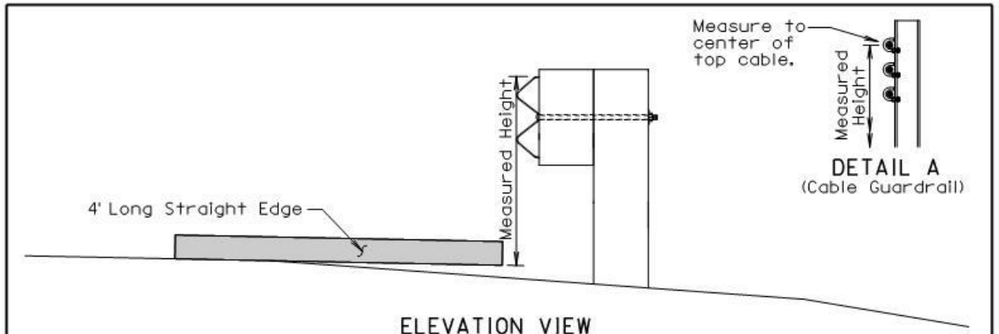

ELEVATION VIEW
(Guardrail Adjacent to Differential Slopes)

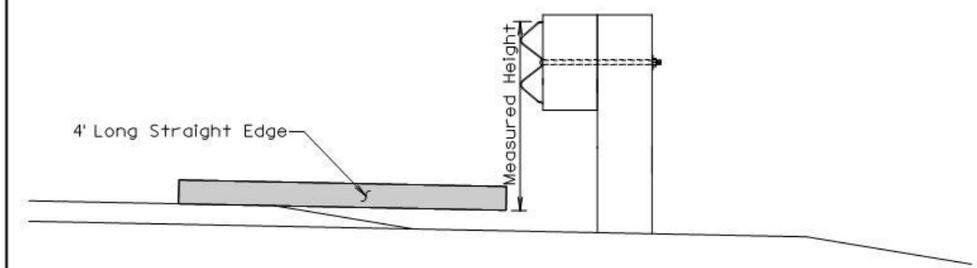

ELEVATION VIEW
(Guardrail Adjacent to Differential Surfacing Elevations)

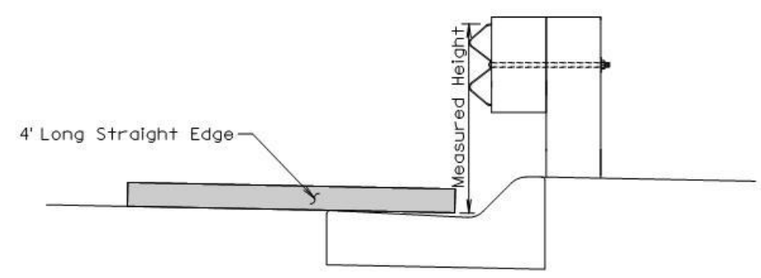

ELEVATION VIEW
(Guardrail at Curb and Gutter)

GENERAL NOTES:

The W Beam guardrail shown is for illustrative purpose. The guardrail height for all types of guardrail systems shall be measured in accordance with this standard plate.

When measuring height of cable guardrail or cable barrier the height shall be measured to the center of the top cable. See Detail A.

June 26, 2010

Published Date: 2nd Qtr. 2015	SDDOT	MEASURING GUARDRAIL HEIGHT	PLATE NUMBER 630.98 Sheet 1 of 1

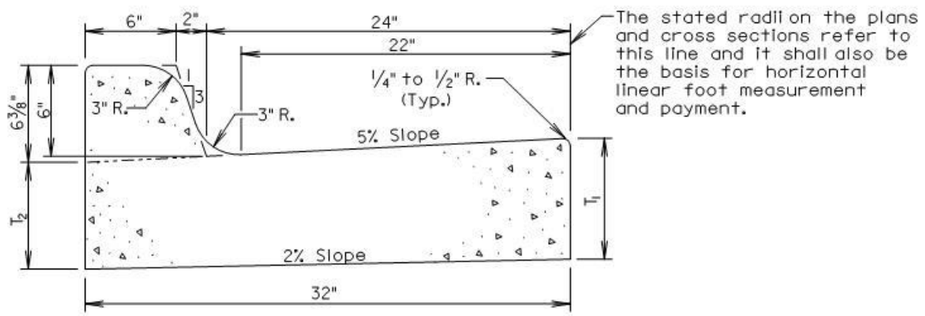

Type	T_1 (Inches)	T_2 (Inches)	Cu. Yd. Per Lin. Ft.	Lin. Ft. Per Cu. Yd.
B66	6	5 1/16	0.057	17.7
B67	7	6 1/16	0.065	15.4
B68	8	7 1/16	0.073	13.7
B68.5	8.5	7 9/16	0.077	13.0
B69	9	8 1/16	0.081	12.3
B69.5	9.5	8 9/16	0.085	11.7
B610	10	9 1/16	0.090	11.2
B610.5	10.5	9 9/16	0.094	10.7
B611	11	10 1/16	0.098	10.2
B611.5	11.5	10 9/16	0.102	9.8
B612	12	11 1/16	0.106	9.4

GENERAL NOTES:

When concrete curb and gutter longitudinally adjoins new concrete pavement, the method of attachment shall be by one of the methods shown on Standard Plate 380.11.

See Standard Plate 650.90 for expansion and contraction joints in the curb and gutter.

September 6, 2008

Published Date: 2nd Qtr. 2015

SDDOT

TYPE B CONCRETE CURB AND GUTTER

PLATE NUMBER 650.01

Sheet 1 of 1

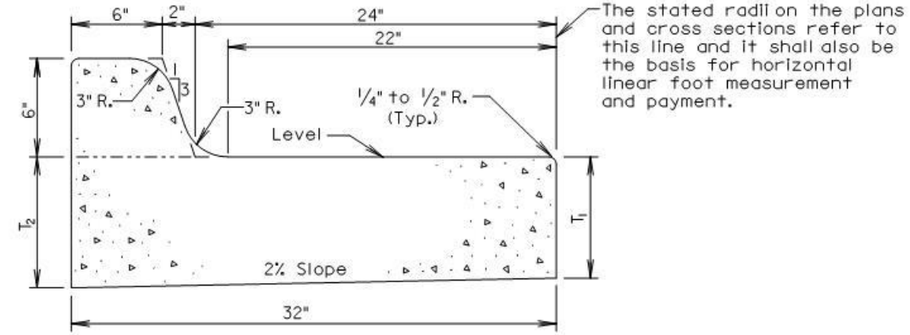

Type	T_1 (Inches)	T_2 (Inches)	Cu. Yd. Per Lin. Ft.	Lin. Ft. Per Cu. Yd.
BL66	6	6 5/8	0.063	15.9
BL67	7	7 5/8	0.071	14.1
BL68	8	8 5/8	0.080	12.5
BL68.5	8.5	9 1/8	0.084	11.9
BL69	9	9 5/8	0.088	11.4
BL69.5	9.5	10 1/8	0.092	10.9
BL610	10	10 5/8	0.096	10.4
BL610.5	10.5	11 1/8	0.100	10.0
BL611	11	11 5/8	0.104	9.6
BL611.5	11.5	12 1/8	0.108	9.3
BL612	12	12 5/8	0.112	8.9

GENERAL NOTES:

When concrete curb and gutter longitudinally adjoins new concrete pavement, the method of attachment shall be by one of the methods shown on Standard Plate 380.11.

See Standard Plate 650.90 for expansion and contraction joints in the curb and gutter.

September 6, 2006

Published Date: 2nd Qtr. 2015

SDDOT

TYPE BL CONCRETE CURB AND GUTTER

PLATE NUMBER 650.05

Sheet 1 of 1

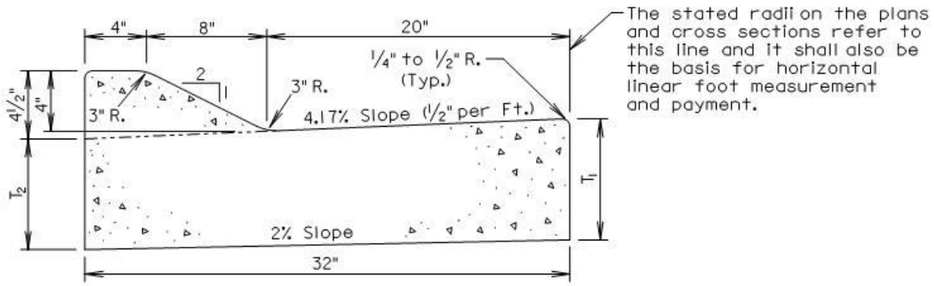

Type	T_1 (Inches)	T_2 (Inches)	Cu. Yd. Per Lin. Ft.	Lin. Ft. Per Cu. Yd.
D46	6	5 5/16	0.056	18.0
D47	7	6 5/16	0.064	15.7
D48	8	7 5/16	0.072	13.9
D48.5	8.5	7 13/16	0.076	13.1
D49	9	8 5/16	0.080	12.5
D49.5	9.5	8 13/16	0.084	11.9
D410	10	9 5/16	0.088	11.3
D410.5	10.5	9 13/16	0.093	10.8
D411	11	10 5/16	0.097	10.3
D411.5	11.5	10 13/16	0.101	9.9
D412	12	11 5/16	0.105	9.5

GENERAL NOTES:

When concrete curb and gutter longitudinally adjoins new concrete pavement, the method of attachment shall be by one of the methods shown on Standard Plate 380.11.

See Standard Plate 650.90 for expansion and contraction joints in the curb and gutter.

September 6, 2006

Published Date: 2nd Qtr. 2015

SDDOT

TYPE D CONCRETE CURB AND GUTTER

PLATE NUMBER 650.15

Sheet 1 of 1

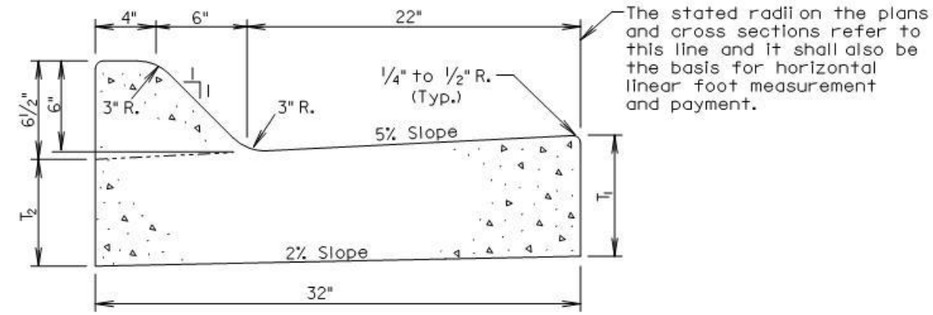

Type	T_1 (Inches)	T_2 (Inches)	Cu. Yd. Per Lin. Ft.	Lin. Ft. Per Cu. Yd.
F66	6	5 1/16	0.057	17.6
F67	7	6 1/16	0.065	15.4
F68	8	7 1/16	0.073	13.6
F68.5	8.5	7 9/16	0.077	12.9
F69	9	8 1/16	0.082	12.3
F69.5	9.5	8 9/16	0.086	11.7
F610	10	9 1/16	0.090	11.1
F610.5	10.5	9 9/16	0.094	10.7
F611	11	10 1/16	0.098	10.2
F611.5	11.5	10 9/16	0.102	9.8
F612	12	11 1/16	0.106	9.4

GENERAL NOTES:

When concrete curb and gutter longitudinally adjoins new concrete pavement, the method of attachment shall be by one of the methods shown on Standard Plate 380.11.

See Standard Plate 650.90 for expansion and contraction joints in the curb and gutter.

September 6, 2008

Published Date: 2nd Qtr. 2015

SDDOT

TYPE F CONCRETE CURB AND GUTTER

PLATE NUMBER 650.20

Sheet 1 of 1

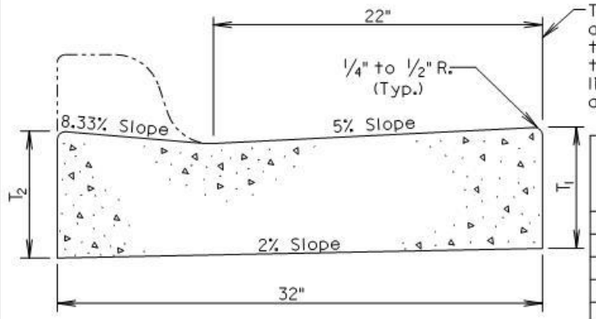

The stated radii on the plans and cross sections refer to this line and it shall also be the basis for horizontal linear foot measurement and payment.

TRANSVERSE SECTION

Type	T_1 (Inches)	T_2 (Inches)	Cu. Yd. Per Lin. Ft.	Lin. Ft. Per Cu. Yd.
P6	6	6 3/8	0.047	21.2
P7	7	7 3/8	0.055	18.1
P8	8	8 3/8	0.064	15.7
P8.5	8.5	8 7/8	0.068	14.8
P9	9	9 3/8	0.072	13.9
P9.5	9.5	9 7/8	0.076	13.2
P10	10	10 3/8	0.080	12.5
P10.5	10.5	10 7/8	0.084	11.9
P11	11	11 3/8	0.088	11.3
P11.5	11.5	11 7/8	0.092	10.8
P12	12	12 3/8	0.096	10.4

Type P Concrete Gutter Limits

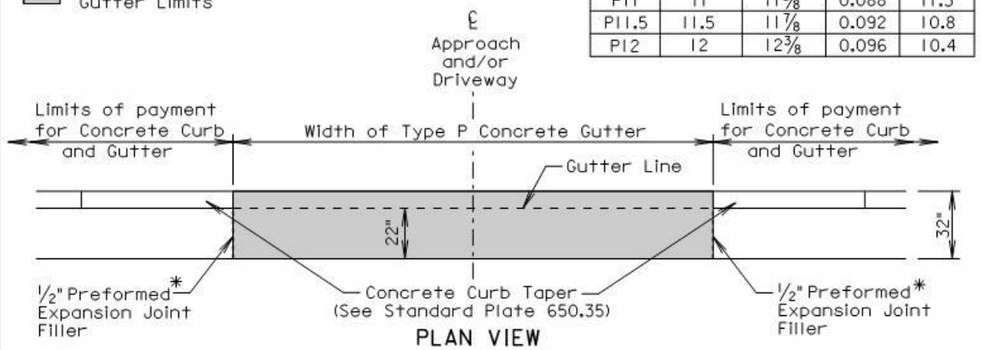

PLAN VIEW

* Joint will not be needed if concrete curb and gutter and type P concrete gutter is placed at the same time. If the 1/2" Preformed Expansion Joint Filler is provided, then the joint shall be sealed in accordance with standard plate 650.90.

GENERAL NOTES:

The concrete for the Type P Concrete Gutter shall comply with the requirements of the Standard Specifications for Class M6 Concrete.

When concrete gutter longitudinally adjoins new concrete pavement, the method of attachment shall be by one of the methods shown on Standard Plate 380.11.

Transverse contraction joints shall be constructed at 10' intervals in the concrete gutter except when concrete gutter is constructed adjacent to mainline PCC pavement. When concrete gutter is constructed adjacent to mainline PCC pavement, a transverse contraction joint shall be constructed in the concrete gutter at each mainline PCC pavement transverse contraction joint location.

When concrete gutter is placed monolithically with mainline PCC pavement, the transverse contraction joints in the concrete gutter shall be sawed and sealed the same as the transverse contraction joints in the mainline PCC pavement.

When concrete gutter is not placed monolithically with the mainline PCC pavement and when the adjacent mainline surfacing is not PCC concrete, the transverse contraction joints in the concrete gutter shall be 1 1/2 inches deep if formed in the fresh concrete using a suitable grooving tool. If a saw is used to cut the contraction joints, then the depth of the joint shall be at least 1/4 the thickness of the concrete.

September 6, 2013

Published Date: 2nd Qtr. 2015	SDDOT	TYPE P CONCRETE GUTTER	PLATE NUMBER 650.30 Sheet 1 of 1

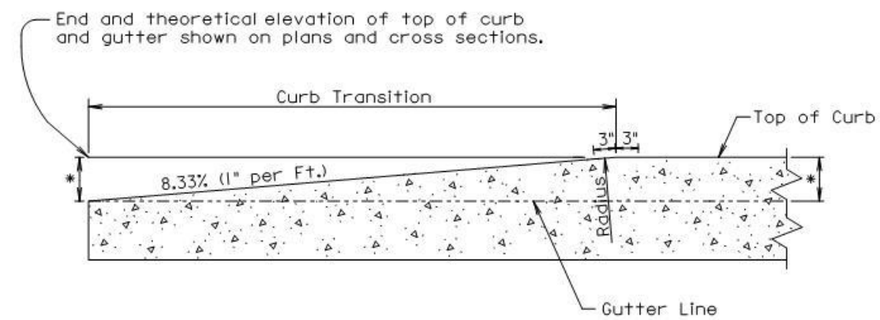

* Height of Curb

LONGITUDINAL SECTION OF CONCRETE CURB TAPER

September 14, 2005

Published Date: 2nd Qtr. 2015	SDDOT	CONCRETE CURB TAPER	PLATE NUMBER 650.35 Sheet 1 of 1

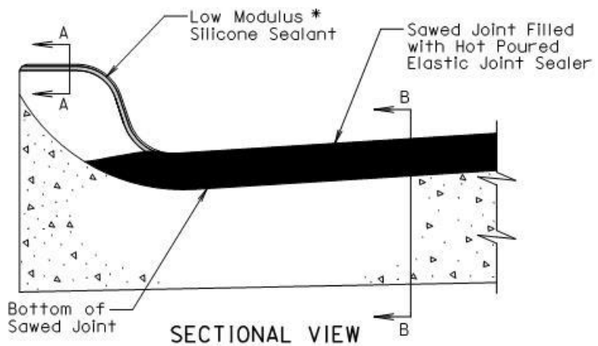

SECTIONAL VIEW
(Curb and Gutter Placed Monolithic with Adjacent Mainline PCC Pavement)

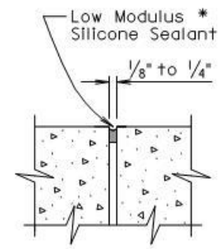

SECTION A-A

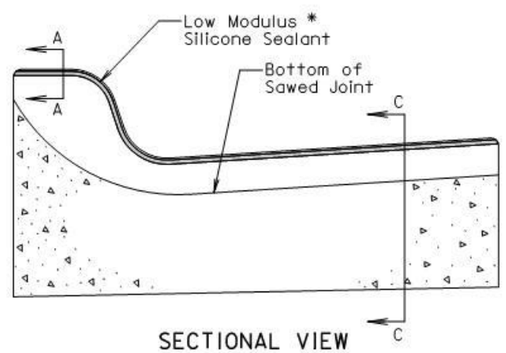

SECTIONAL VIEW
(Curb and Gutter not Placed Monolithic with Adjacent Mainline PCC Pavement or Mainline Surfacing is not PCC Pavement)

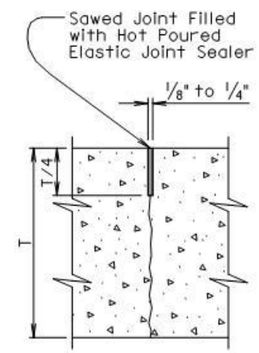

SECTION B-B

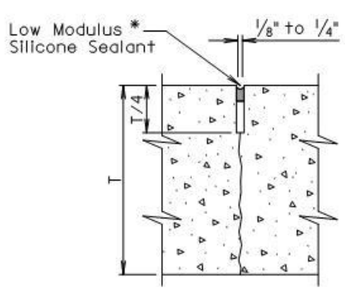

SECTION C-C

* The silicone sealant shall be placed such that it completely seals the joint and is bonded to the sides of the clean joint as approved by the Engineer.

September 6, 2013

Published Date: 2nd Qtr. 2015	SDDOT	JOINTS IN CONCRETE CURB AND GUTTER	PLATE NUMBER 650.90 Sheet 1 of 2

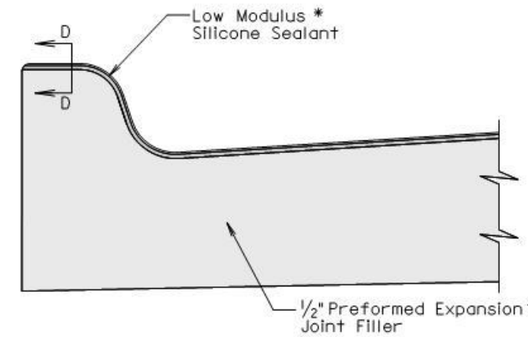

SECTIONAL VIEW
(Curb and Gutter at 1/2" Preformed Expansion Joint Filler Location)

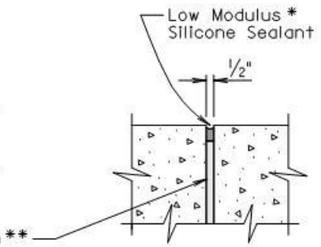

SECTION D-D

* The silicone sealant shall be placed such that it completely seals the joint and is bonded to the sides of the clean joint as approved by the Engineer.

GENERAL NOTES:

For illustrative reason, only the type B curb and gutter is shown.

** A 1/2" preformed expansion joint filler shall be placed transversely in the curb and gutter at the following locations:

1. At each junction between the radius return of curb and gutter and curb and gutter which is parallel to the project centerline.
2. At each junction between new curb and gutter and existing curb and gutter.

Transverse contraction joints shall be constructed at 10' intervals in the concrete curb and gutter except when the concrete curb and gutter is constructed adjacent to mainline PCC pavement. When concrete curb and gutter is constructed adjacent to mainline PCC pavement, a transverse contraction joint shall be constructed in the concrete curb and gutter at each mainline PCC pavement transverse contraction joint location.

When concrete curb and gutter is not placed monolithically with the mainline PCC pavement or when the adjacent mainline surfacing is not PCC concrete, the transverse contraction joints in the concrete curb and gutter shall be 1 1/2 inches deep if formed in the fresh concrete using a suitable grooving tool. If a saw is used to cut the contraction joints, then the depth of the joint shall be at least 1/4 the thickness of the concrete and the joint shall be sealed in accordance with the details shown above.

September 6, 2013

Published Date: 2nd Qtr. 2015	SDDOT	JOINTS IN CONCRETE CURB AND GUTTER	PLATE NUMBER 650.90 Sheet 2 of 2

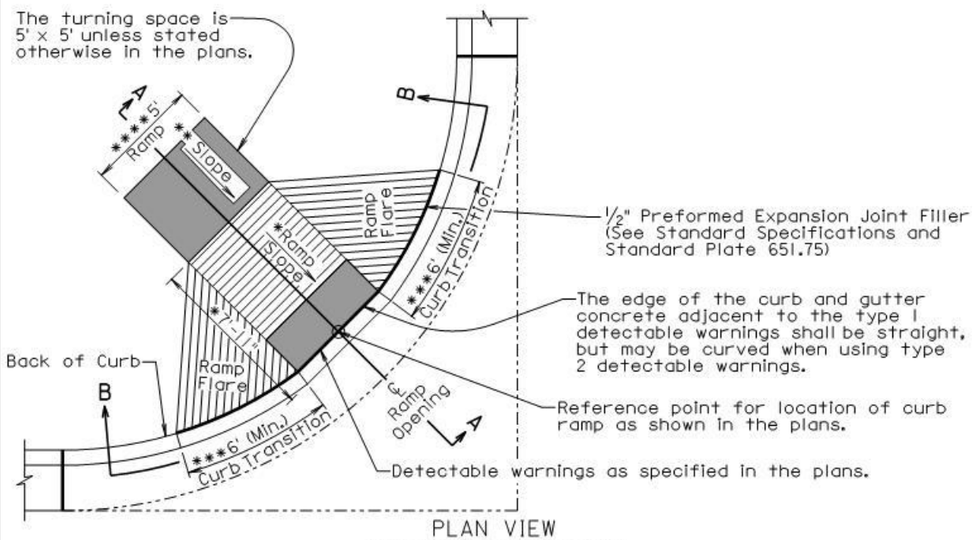

PLAN VIEW
(With 6'+ Curb Transition)

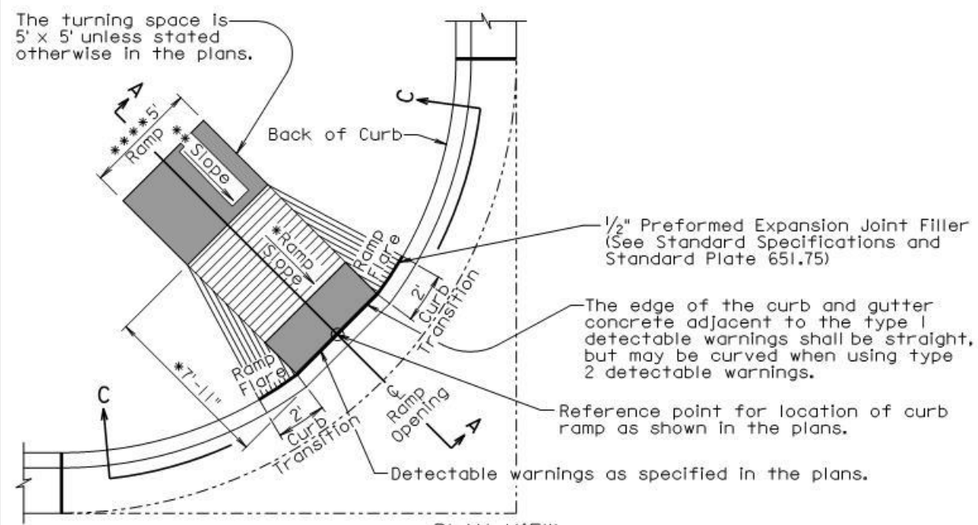

PLAN VIEW
(With 2' Curb Transition)

September 6, 2013

Published Date: 2nd Qtr. 2015	SDDOT	TYPE 1 CURB RAMP (PERPENDICULAR CURB RAMP)	PLATE NUMBER 651.01
			Sheet 1 of 3

The ramp slope shall be 12:1 (8.3%) maximum. The ramp length shall not exceed 15' unless stated otherwise in the plans. Ramp slopes are designed at 12:1 (8.3%) unless stated otherwise in the plans.

* The cross slope of the ramp shall not be steeper than 50:1 (2%).

The 7'-11" dimension was computed based on a flat roadway profile, a continuous 2% theoretical slope from top of theoretical curb to the top of ramp, and a 6" high curb. The dimension shall be adjusted based on the curb type shown in the plans, the roadway geometrics, and the sidewalk geometrics.

** The slope in the turning space shall not be steeper than 50:1 (2%) in any direction of pedestrian travel.

*** The curb transition shall be a minimum of 6' long, a maximum of 10' long, and the curb transition slope shall not be steeper than 10:1 (10%) unless stated otherwise in the plans.

**** The ramp width is 5' unless stated otherwise in the plans.

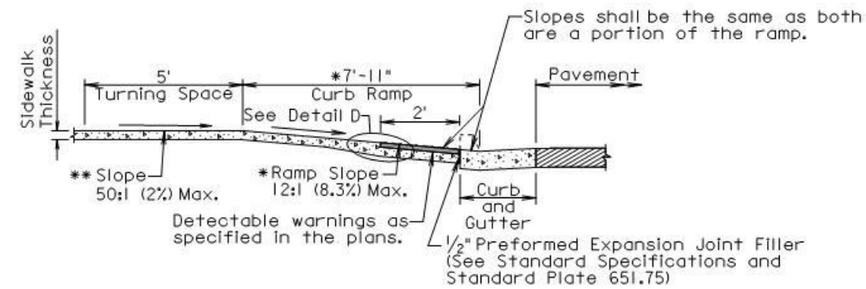

SECTION A-A

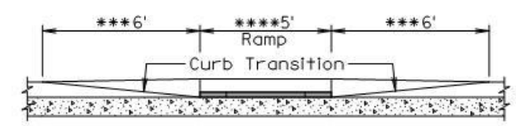

SECTIONAL VIEW B-B

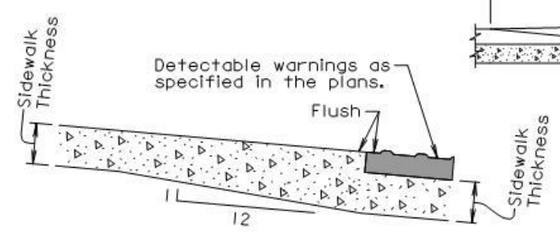

DETAIL D

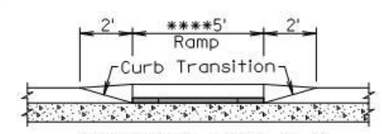

SECTIONAL VIEW C-C

September 6, 2013

Published Date: 2nd Qtr. 2015	SDDOT	TYPE 1 CURB RAMP (PERPENDICULAR CURB RAMP)	PLATE NUMBER 651.01
			Sheet 2 of 3

GENERAL NOTES:

For illustrative purpose only, type I detectable warnings are shown in the drawings.

For illustrative purpose only, PCC fillet sections are shown in the drawings. The curb ramp depicted on this standard plate may be used with a PCC fillet section, with curved curb and gutter, or with straight curb and gutter.

For illustrative purpose only, the curb ramp location is shown at the center of a PCC fillet section. The curb ramp shall be placed at the location stated in the plans.

Sidewalk shall not be placed adjacent to the ramp flares when a 2' curb transition is used unless shown otherwise in the plans.

* Care shall be taken to ensure a uniform grade on the ramp, free of sags and short grade changes.

Surface texture of the ramp shall be obtained by coarse brooming transverse to the slope of the ramp.

The normal gutter line profile shall be maintained through the area of the ramp.

Joints shall be sawed or tooled into the concrete adjacent to the detectable warnings to alleviate possible corner cracking.

Care shall be taken to ensure that the surface of the detectable warnings are clean and maintains a uniform color.

The detectable warnings shall be cut as necessary to fit the plan specified limits of the detectable warnings. Cost for cutting the detectable warnings shall be incidental to the corresponding detectable warning bid item.

There will be no separate payment for curb ramps. The curb ramp shall be measured and paid for at the contract unit price per square foot for the corresponding concrete sidewalk bid item. The square foot area of the detectable warnings shall be included in the measured and paid for quantity of sidewalk.

The curb transitions and ramp opening shall be measured and paid for at the contract unit price per foot for the corresponding curb and gutter bid item when curb and gutter is used. The curb transitions and ramp opening shall be measured and paid for at the contract unit price per square yard for the corresponding PCC fillet section bid item when a PCC fillet section is used.

The type I detectable warnings shall be measured to the nearest square foot. All costs for furnishing and installing the type I detectable warnings including labor, equipment, materials, and incidentals shall be paid for at the contract unit price per square foot for "Type I Detectable Warnings".

The type 2 detectable warnings shall be measured to the nearest square foot. All costs for furnishing and installing the type 2 detectable warnings including labor, equipment, and materials, including adhesive, necessary sealant or grout, and necessary grinding shall be paid for at the contract unit price per square foot for "Type 2 Detectable Warnings".

September 6, 2013

Published Date: 2nd Qtr. 2015	SDDOT	TYPE 1 CURB RAMP (PERPENDICULAR CURB RAMP)	PLATE NUMBER 651.01 Sheet 3 of 3

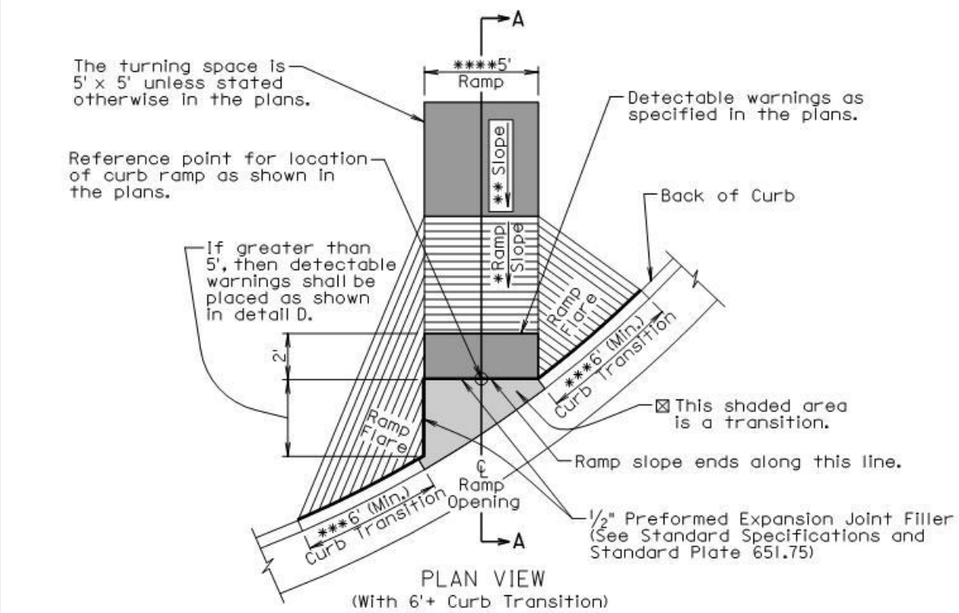

PLAN VIEW
(With 6'+ Curb Transition)

⊠ The slope within the transition area shall not be steeper than a 20:1 (5%). The concrete within the transition shall be placed monolithic with the curb and gutter or fillet section concrete. The concrete thickness within the transition shall be the same as the curb and gutter or fillet section concrete thickness.

*** The curb transition shall be a minimum of 6' long, a maximum of 10' long, and the curb transition slope shall not be steeper than a 10:1 (10%) unless stated otherwise in the plans.

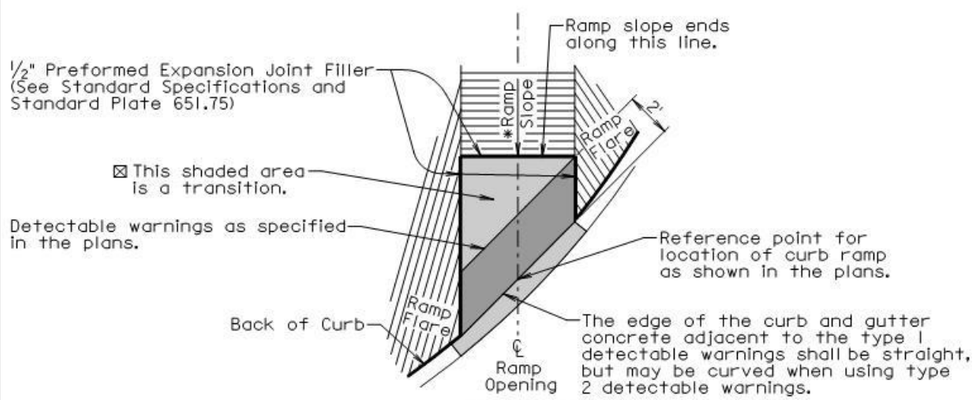

DETAIL D

September 6, 2013

Published Date: 2nd Qtr. 2015	SDDOT	TYPE 2 CURB RAMP (DIRECTIONAL CURB RAMP)	PLATE NUMBER 651.02 Sheet 1 of 3

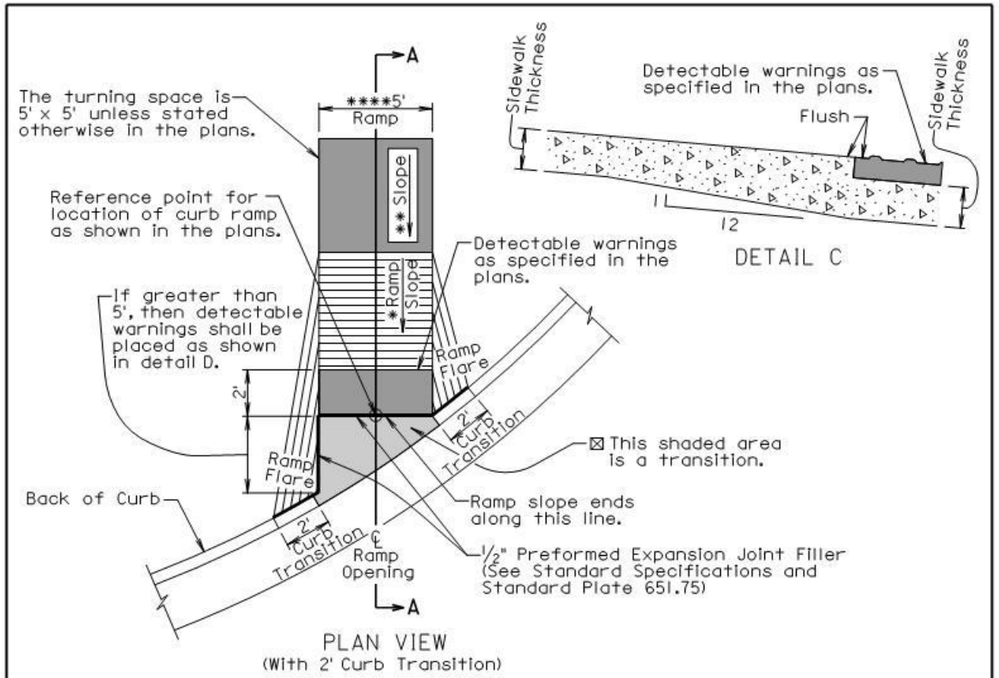

PLAN VIEW
(With 2' Curb Transition)

* The ramp slope shall be 12:1 (8.3%) maximum. The ramp length shall not exceed 15' unless stated otherwise in the plans. Ramp slopes are designed at 12:1 (8.3%) unless stated otherwise in the plans.

The cross slope of the ramp shall not be steeper than 50:1 (2%).

** The slope in the turning space shall not be steeper than a 50:1 (2%) in any direction of pedestrian travel.

**** The ramp width is 5' unless stated otherwise in the plans.

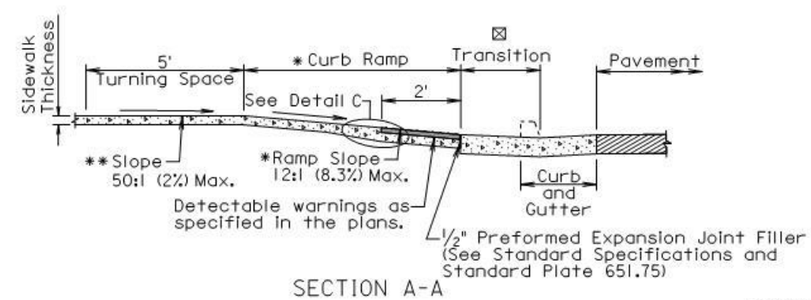

SECTION A-A

September 6, 2013

Published Date: 2nd Qtr. 2015	SDDOT	TYPE 2 CURB RAMP (DIRECTIONAL CURB RAMP)	PLATE NUMBER 651.02 Sheet 2 of 3

GENERAL NOTES:

For illustrative purpose only, type 1 detectable warnings are shown in the drawings.

The curb ramp depicted on this standard plate may be used with a PCC fillet section, with curved curb and gutter, or with straight curb and gutter. The curb ramp shall be placed at the location stated in the plans.

Sidewalk shall not be placed adjacent to the ramp flares when a 2' curb transition is used unless shown otherwise in the plans.

* Care shall be taken to ensure a uniform grade on the ramp, free of sags and short grade changes.

Surface texture of the ramp shall be obtained by coarse brooming transverse to the slope of the ramp.

The normal gutter line profile shall be maintained through the area of the ramp.

Joints shall be sawed or tooled into the concrete adjacent to the detectable warnings to alleviate possible corner cracking.

Care shall be taken to ensure that the surface of the detectable warnings are clean and maintains a uniform color.

The detectable warnings shall be cut as necessary to fit the plan specified limits of the detectable warnings. Cost for cutting the detectable warnings shall be incidental to the corresponding detectable warning bid item.

There will be no separate payment for curb ramps. The curb ramp shall be measured and paid for at the contract unit price per square foot for the corresponding concrete sidewalk bid item. The square foot area of the detectable warnings shall be included in the measured and paid for quantity of sidewalk.

The curb transitions and ramp opening shall be measured and paid for at the contract unit price per foot for the corresponding curb and gutter bid item when curb and gutter is used. The curb transitions and ramp opening shall be measured and paid for at the contract unit price per square yard for the corresponding PCC fillet section bid item when a PCC fillet section is used.

All costs for furnishing and installing the transition area at the base of the ramp shall be incidental to the contract unit price per foot for the corresponding curb and gutter bid item when curb and gutter is used and shall be incidental to the contract unit price per square yard for the corresponding PCC fillet section bid item when a PCC fillet section is used.

The type 1 detectable warnings shall be measured to the nearest square foot. All costs for furnishing and installing the type 1 detectable warnings including labor, equipment, materials, and incidentals shall be paid for at the contract unit price per square foot for "Type 1 Detectable Warnings".

The type 2 detectable warnings shall be measured to the nearest square foot. All costs for furnishing and installing the type 2 detectable warnings including labor, equipment, and materials, including adhesive, necessary sealant or grout, and necessary grinding shall be paid for at the contract unit price per square foot for "Type 2 Detectable Warnings".

September 6, 2013

Published Date: 2nd Qtr. 2015	SDDOT	**TYPE 2 CURB RAMP (DIRECTIONAL CURB RAMP)**	PLATE NUMBER 651.02
			Sheet 3 of 3

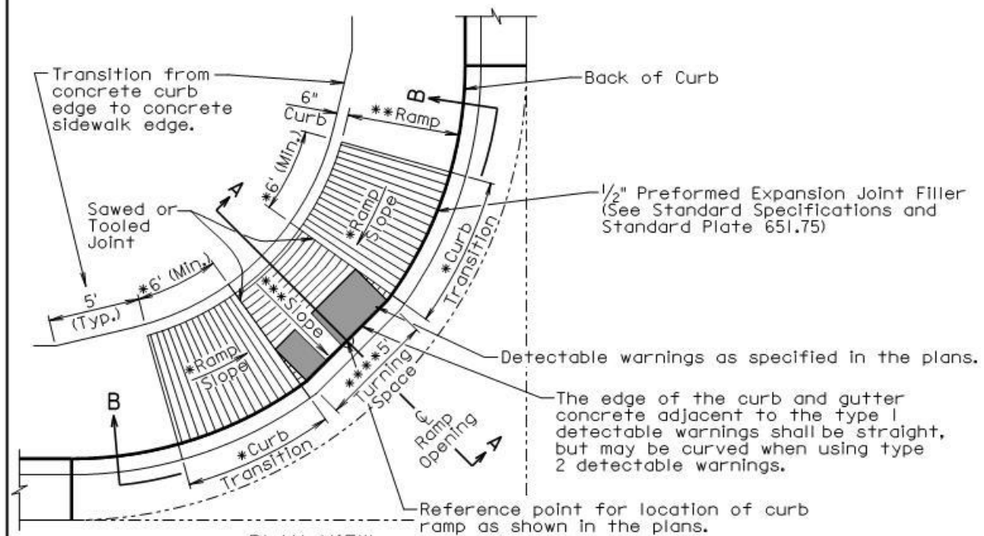

PLAN VIEW
(With Curved Curb and Gutter)

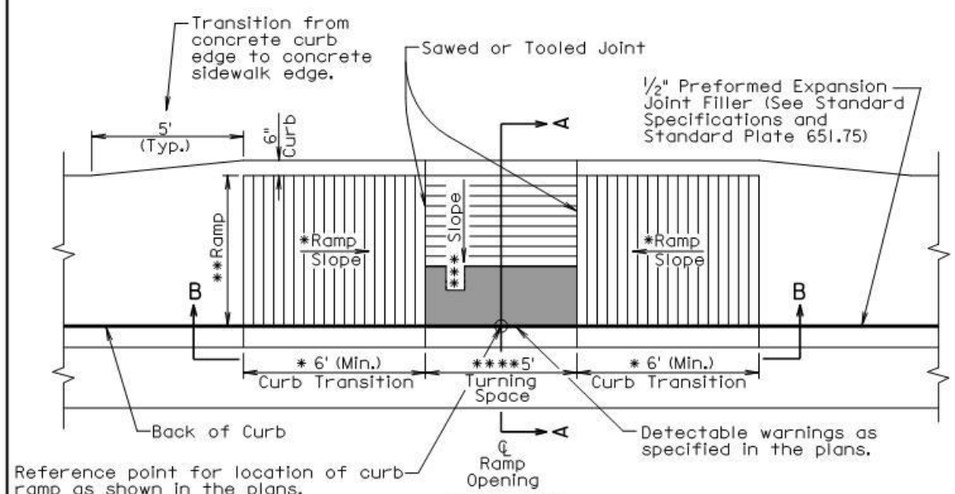

PLAN VIEW
(With Straight Curb and Gutter)

September 6, 2013

Published Date: 2nd Qtr. 2015	SDDOT	TYPE 3 CURB RAMP (PARALLEL CURB RAMP)	PLATE NUMBER 651.03
			Sheet 1 of 3

* The curb transition slope shall match the ramp slope. The ramp slope, at any location of the ramp, shall be 12:1 (8.3%) maximum. The ramp length shall not exceed 15' unless stated otherwise in the plans. Ramp slopes are designed at 12:1 (8.3%) unless stated otherwise in the plans. The minimum length of the curb transition shall be 6'.

** The ramp cross slope shall not be steeper than a 50:1 (2%) and the ramp width is 5' unless stated otherwise in the plans.

*** The slope in the turning space shall not be steeper than 50:1 (2%) in any direction of pedestrian travel.

**** The turning space is 5' x 5' unless stated otherwise in the plans.

☒ The curb height shall be 6" unless stated otherwise in the plans.

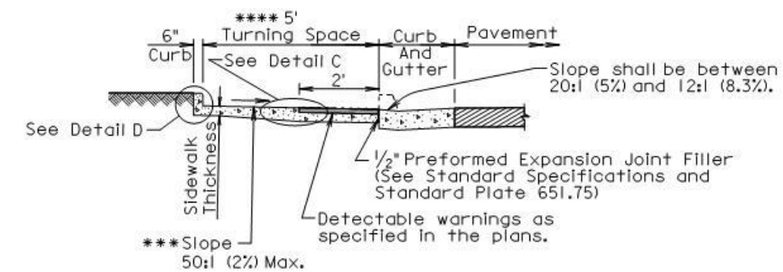

SECTION A-A

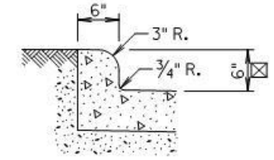

DETAIL D

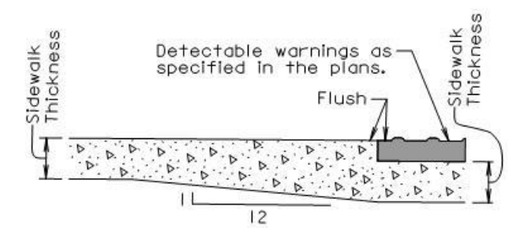

DETAIL C

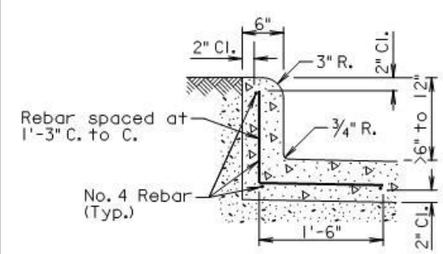

DETAIL D
(Use this detail when the curb height is greater than 6" and less than 12")

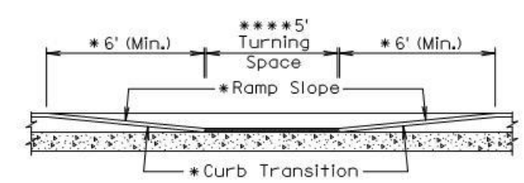

SECTIONAL VIEW B-B

September 6, 2013

Published Date: 2nd Qtr. 2015	SDDOT	TYPE 3 CURB RAMP (PARALLEL CURB RAMP)	PLATE NUMBER 651.03
			Sheet 2 of 3

GENERAL NOTES:

For illustrative purpose only, type I detectable warnings are shown in the drawings.

For illustrative purpose only, a PCC fillet section is shown in one of the drawings. The curb ramp depicted on this standard plate may be used with a PCC fillet section, with curved curb and gutter, or with straight curb and gutter.

The curb ramp shall be placed at the location stated in the plans.

Sidewalk adjacent to the curb ramp shall be as shown in the plans.

Care shall be taken to ensure a uniform grade on the ramp, free of sags and short grade changes.

Surface texture of the ramp shall be obtained by coarse brooming transverse to the slope of the ramp.

The normal gutter line profile shall be maintained through the area of the ramp.

Joints shall be sawed or tooled into the concrete adjacent to the detectable warnings to alleviate possible corner cracking (see plan view for joint location).

Care shall be taken to ensure that the surface of the detectable warnings are clean and maintains a uniform color.

The detectable warnings shall be cut as necessary to fit the plan specified limits of the detectable warnings. Cost for cutting the detectable warnings shall be incidental to the corresponding detectable warning bid item.

When curb height is greater than 6" and less than 12", reinforcing steel is required in accordance with the detail on sheet 2 of 3. The reinforcing steel shall conform to ASTM A615, Grade 60. Cost for furnishing and installing the reinforcing steel shall be incidental to the contract unit price per square foot for the corresponding concrete sidewalk bid item.

There will be no separate payment for curb ramps. The curb ramp shall be measured and paid for at the contract unit price per square foot for the corresponding concrete sidewalk bid item. The square foot area of the detectable warnings and the curb along the short radius shall be included in the measured and paid for quantity of sidewalk.

The curb transitions and ramp opening shall be measured and paid for at the contract unit price per foot for the corresponding curb and gutter bid item when curb and gutter is used. The curb transitions and ramp opening shall be measured and paid for at the contract unit price per square yard for the corresponding PCC fillet section bid item when a PCC fillet section is used.

The type I detectable warnings shall be measured to the nearest square foot. All costs for furnishing and installing the type I detectable warnings including labor, equipment, materials, and incidentals shall be paid for at the contract unit price per square foot for "Type I Detectable Warnings".

The type 2 detectable warnings shall be measured to the nearest square foot. All costs for furnishing and installing the type 2 detectable warnings including labor, equipment, and materials, including adhesive, necessary sealant or grout, and necessary grinding shall be paid for at the contract unit price per square foot for "Type 2 Detectable Warnings".

September 6, 2013

Published Date: 2nd Qtr. 2015	SDDOT	TYPE 3 CURB RAMP (PARALLEL CURB RAMP)	PLATE NUMBER 651.03 Sheet 3 of 3

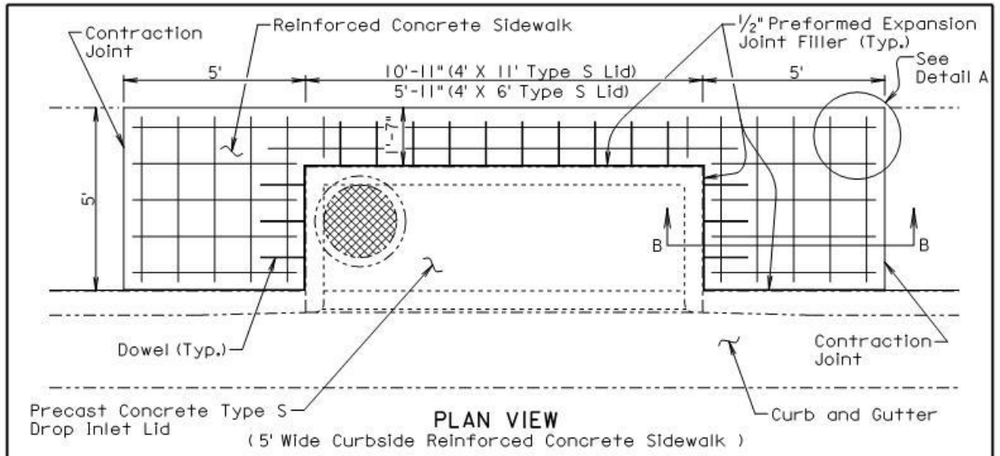

PLAN VIEW
(5' Wide Curbside Reinforced Concrete Sidewalk)

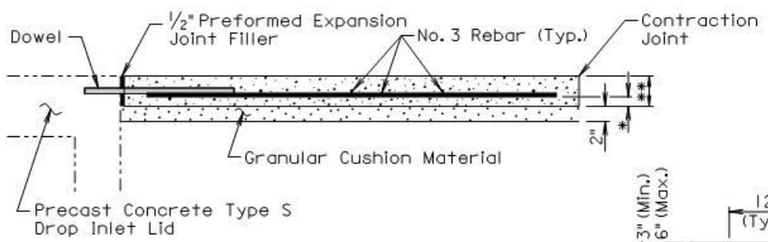

SECTION B-B

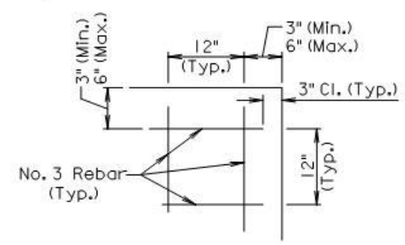

DETAIL A

** 4", 5", or 6" as specified elsewhere in the plans.

* 1⅝" for 4" sidewalk, 2⅛" for 5" sidewalk, and 2⅝" for 6" sidewalk.

GENERAL NOTES:

The precast concrete Type S lids shown are 4' X 11' for illustrative purpose.

The cross slope of the sidewalk and precast concrete type S drop inlet lid shall be as specified elsewhere in the plans.

The reinforcing steel shall conform to Section 1010 of the Standard Specifications. The Contractor shall be in conformance with the construction requirements of Section 480.3 of the Standard Specifications.

When lapping of reinforcing steel is necessary, the No. 3 rebar shall be lapped 12".

The reinforced concrete sidewalk shall conform to the requirements of Section 651 of the Standard Specifications.

All costs for constructing the reinforced concrete sidewalk including labor, equipment, tools, backfilling, furnishing and placing materials, including granular cushion, reinforcing steel, preformed expansion joint filler, and incidentals shall be included in the contract unit price per square foot for the corresponding reinforced concrete sidewalk bid item.

September 6, 2013

Published Date: 2nd Qtr. 2015	SDDOT	REINFORCED CONCRETE SIDEWALK ADJACENT TO PRECAST CONCRETE TYPE S DROP INLET LID	PLATE NUMBER 651.70 Sheet 1 of 2

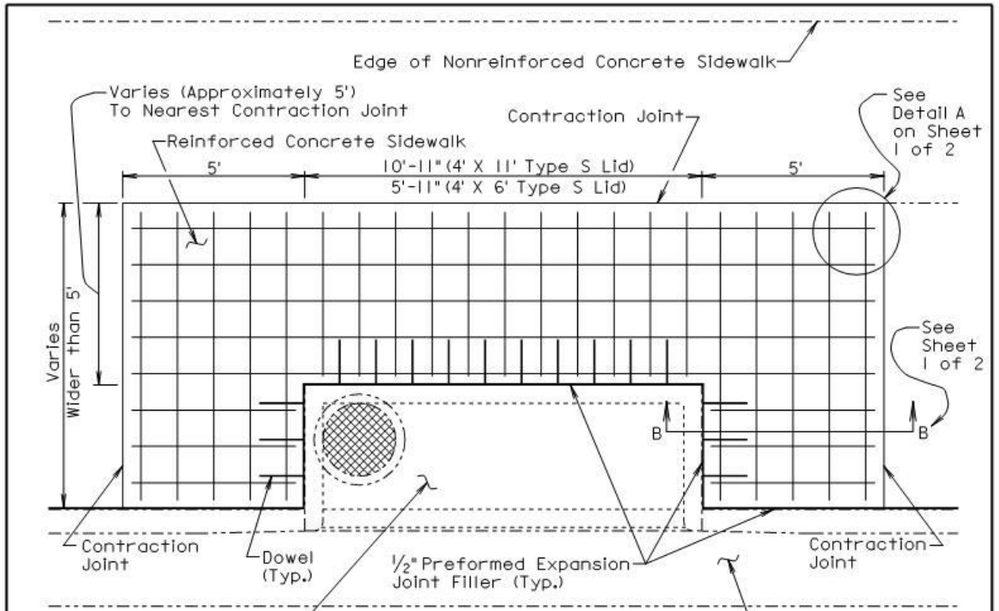

PLAN VIEW
(Curbside Reinforced Concrete Sidewalk Wider Than 5')

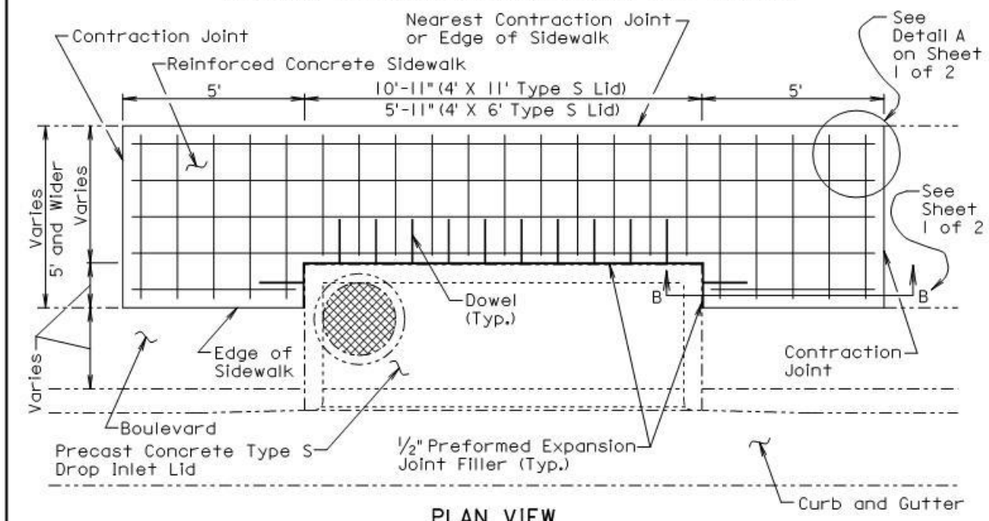

PLAN VIEW
(Reinforced Concrete Sidewalk With Boulevard)

September 6, 2013

Published Date: 2nd Qtr. 2015	SDDOT	REINFORCED CONCRETE SIDEWALK ADJACENT TO PRECAST CONCRETE TYPE S DROP INLET LID	PLATE NUMBER 651.70 Sheet 2 of 2

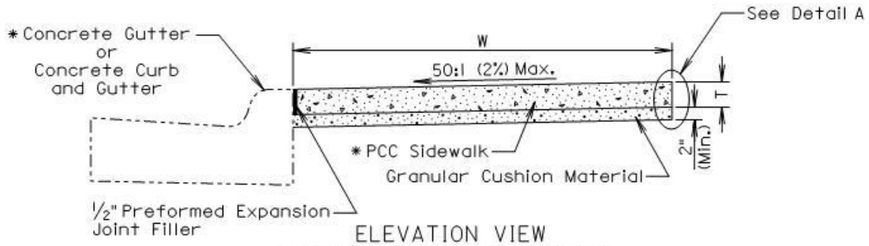

ELEVATION VIEW
(PCC Sidewalk without Boulevard)

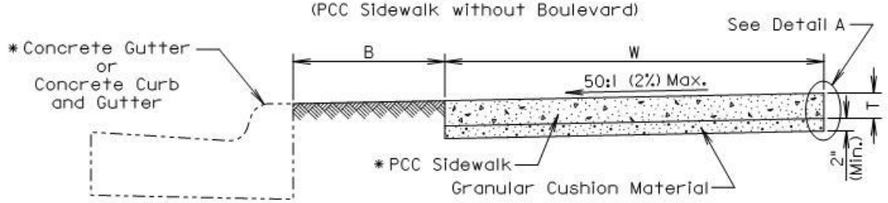

ELEVATION VIEW
(PCC Sidewalk with Boulevard)

B Width of boulevard as specified in the plans.
T Thickness of PCC sidewalk as specified in the plans.
W Width of PCC sidewalk as specified in the plans.
* Type as specified in the plans.

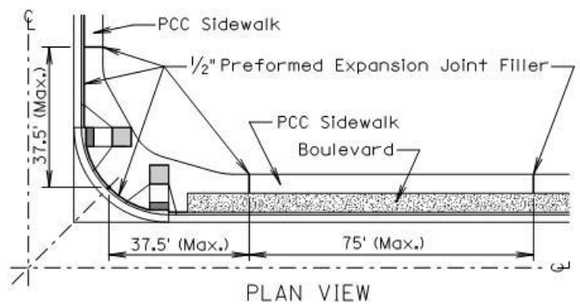

PLAN VIEW

GENERAL NOTES:

The PCC sidewalk shall be constructed in accordance with Section 651 of the Standard Specifications.

The maximum length between expansion joints in PCC sidewalk is 75 feet.

PCC sidewalk placed adjacent to intersection of roadways shall have an expansion joint placed transversely a maximum of 37.5 feet from the intersection. See PLAN VIEW.

An expansion joint in PCC sidewalk shall consist of a ½ inch thick preformed expansion joint filler material placed full depth and width of the PCC sidewalk.

** Large areas of PCC pavement adjacent to PCC sidewalk may require a different joint treatment than shown in the detail. If a different joint detail is necessary, plans will contain the joint detail and the Contractor shall construct the joint treatment in accordance with the plans.

August 31, 2013

Published Date: 2nd Qtr. 2015	SDDOT	PCC SIDEWALK	PLATE NUMBER 651.75
			Sheet 1 of 2

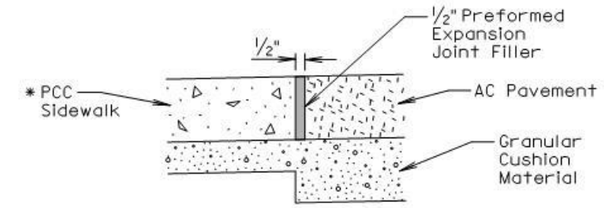

ELEVATION VIEW
(PCC sidewalk adjacent to asphalt concrete pavement)

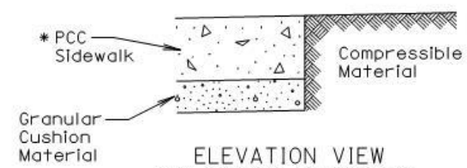

ELEVATION VIEW
(PCC sidewalk adjacent to earthen material, landscape rock, or other compressible materials)

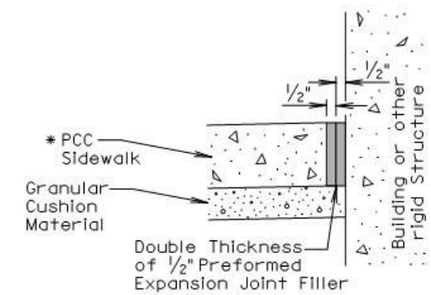

ELEVATION VIEW
(PCC sidewalk adjacent to building or other rigid structure)

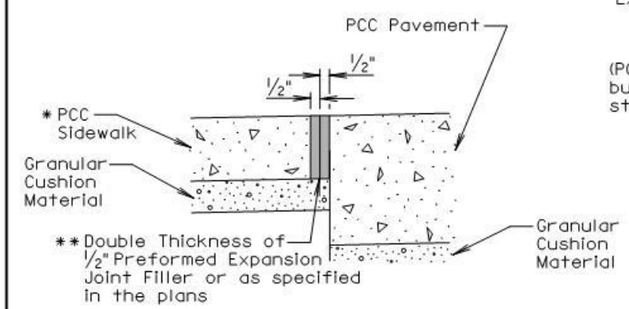

ELEVATION VIEW
(PCC sidewalk adjacent to PCC pavement)

Detail A
(Use Appropriate Detail(s))

August 31, 2013

Published Date: 2nd Qtr. 2015	SDDOT	PCC SIDEWALK	PLATE NUMBER 651.75
			Sheet 2 of 2

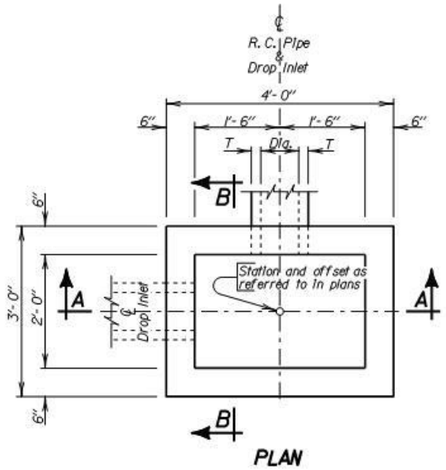

PLAN

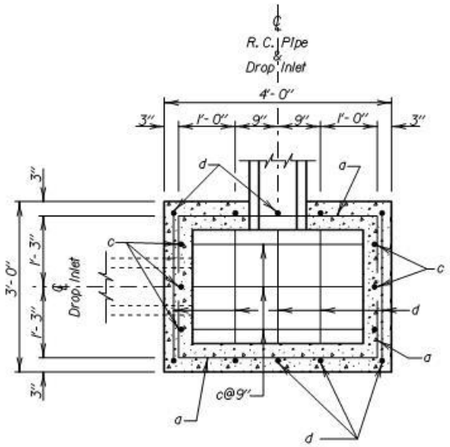

BOTTOM SECTION

ESTIMATED QUANTITIES			
ITEM	UNIT	CONSTANT QUANTITY	VARIABLE QUANTITY
✳ Class M6 Concrete	Cu Yd	0.26	0.22H
Reinforcing Steel	Lb	37	20.04H
Frame and Grate Assembly	Each	1	———

PIPE DISPLACEMENT REDUCTIONS		
R.C. Pipe Diameter Inches	T Inches	Class M6 Concrete Cu Yd
12	2	0.03
15	2 1/4	0.04
18	2 1/2	0.05
24	3	0.09
27	3 1/4	0.11

DROP INLETS FOR 12" TO 27" DIAMETER PIPE

GENERAL NOTES:

✳ Reduce total quantities of concrete by the amount of concrete displaced by the pipe. The total quantity of concrete shall be computed to the nearest hundredth of a cubic yard. The total quantity of reinforcing steel shall be computed to the nearest pound.

Drop inlets shown may be modified by the addition or omission of connecting pipes as shown on the layouts.

Reinforcing steel shall conform to ASTM A615 Grade 60. The b bars shall be lapped 12 inches. Cut and bend reinforcing steel as required to place pipe(s) through the drop inlet wall.

Pipe shall not enter through a corner of the drop inlet.

Use 2" clear cover on all reinforcing steel unless otherwise noted.

Precasting of reinforced drop inlets will be permissible. Prior to precasting, the Contractor shall submit details to the Engineer for approval.

Maximum pipe diameter shall not exceed 18 inches on the 3 foot wide side and shall not exceed 27 inches on the 4 foot wide side of the drop inlet.

The dimension of H is in feet.

December 23, 2009

Published Date: 2nd Qtr. 2015 | SDDOT | 2'X 3' TYPE B REINFORCED CONCRETE DROP INLET | PLATE NUMBER 670.01 | Sheet 1 of 2

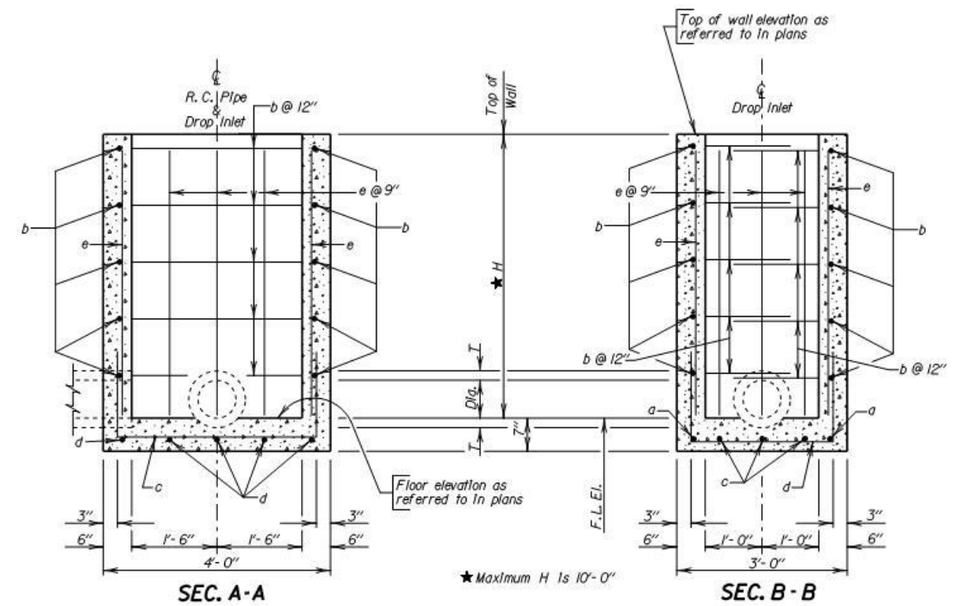

SEC. A-A

SEC. B-B

DROP INLETS FOR 12" TO 27" DIAMETER PIPE

REINFORCING SCHEDULE				
MK.	No.	Size	Length	Type
a	2	4	5'- 6"	17
b	2H	4	7'- 0"	17
c	3	4	6'- 6"	17
d	5	4	5'- 6"	17
e	16	4	H - 2"	Str.

Bending Details

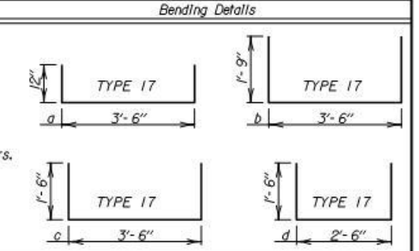

NOTE:
All dimensions are out to out of bars.

December 23, 2009

Published Date: 2nd Qtr. 2015 | SDDOT | 2'X 3' TYPE B REINFORCED CONCRETE DROP INLET | PLATE NUMBER 670.01 | Sheet 2 of 2

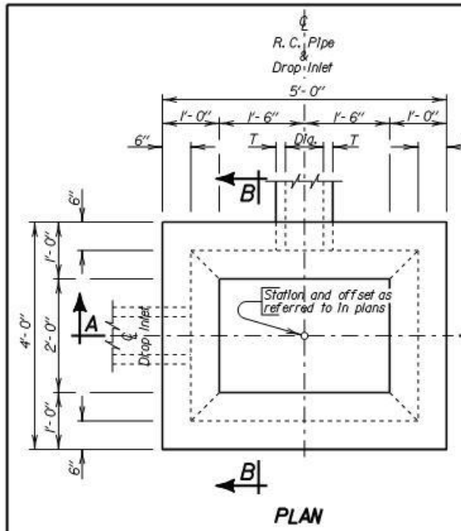

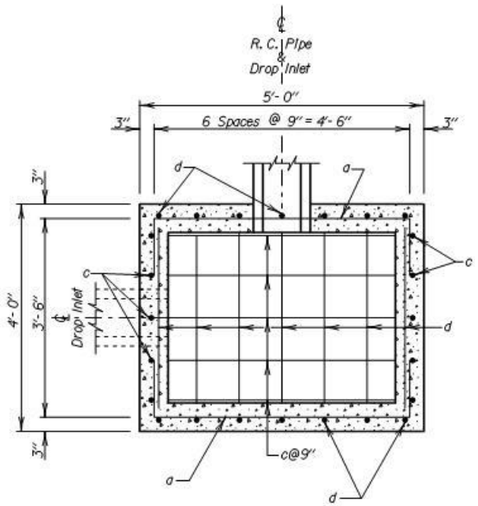

PIPE DISPLACEMENT REDUCTIONS		
R.C. Pipe Diameter Inches	T Inches	Class M6 Concrete Cu'd
12	2	0.03
15	2 1/4	0.04
18	2 1/2	0.05
24	3	0.09
30	3 1/2	0.14
36	4	0.20

ESTIMATED QUANTITIES			
ITEM	UNIT	CONSTANT QUANTITY	VARIABLE QUANTITY
✳ Class M6 Concrete	Cu'd	0.72	0.30H
Reinforcing Steel	Lb	98	32.06H
Frame and Grate Assembly	Each	1	———

DROP INLETS FOR 12" TO 36" DIAMETER PIPE

GENERAL NOTES:

✳ Reduce total quantities of concrete by the amount of concrete displaced by the pipe. The total quantity of concrete shall be computed to the nearest hundredth of a cubic yard. The total quantity of reinforcing steel shall be computed to the nearest pound.

Drop Inlets shown may be modified by the addition or omission of connecting pipes as shown on the layouts.

Reinforcing steel shall conform to ASTM A615 Grade 60. The b and f bars shall be lapped 12 inches. Cut and bend reinforcing steel as required to place pipe(s) through the drop inlet wall.

Pipe shall not enter through a corner of the drop inlet.

Use 2" clear cover on all reinforcing steel unless otherwise noted.

Precasting of reinforced drop inlets will be permissible. Prior to precasting, the Contractor shall submit details to the Engineer for approval.

Maximum pipe diameter shall not exceed 27 inches on the 4 foot wide side and shall not exceed 36 inches on the 5 foot wide side of the drop inlet.

The dimension of H is in feet.

December 23, 2009

Published Date: 2nd Qtr. 2015 | SDDOT | 3'X 4' TYPE B REINFORCED CONCRETE DROP INLET | PLATE NUMBER 670.02 | Sheet 1 of 2

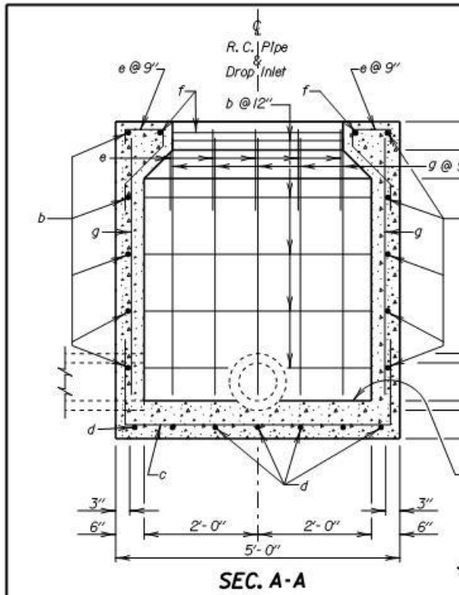

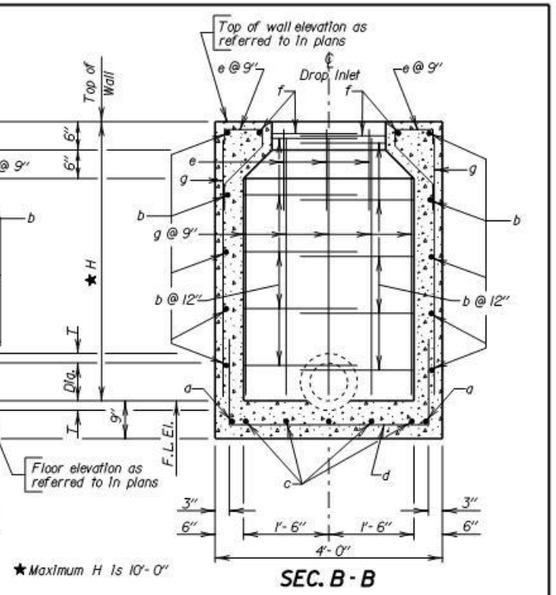

DROP INLETS FOR 12" TO 36" DIAMETER PIPE

REINFORCING SCHEDULE					
MK.	No.	Size	Length	Type	Bending Details
a	2	4	6'- 6"	17	
b	2H	4	9'- 0"	17	
c	5	4	7'- 6"	17	
d	7	4	6'- 6"	17	
e	16	4	2'- 6"	16A	
f	2	4	7'- 0"	17	
g	24	4	H - 2"	Str.	

NOTE:
All dimensions are out to out of bars.

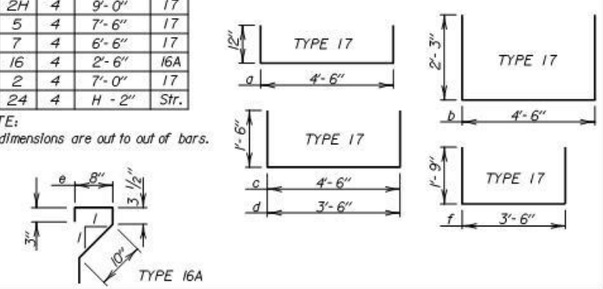

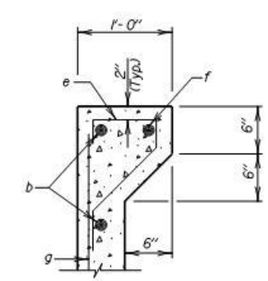

TYPICAL SEC. TOP OF WALL

December 23, 2009

Published Date: 2nd Qtr. 2015 | SDDOT | 3'X 4' TYPE B REINFORCED CONCRETE DROP INLET | PLATE NUMBER 670.02 | Sheet 2 of 2

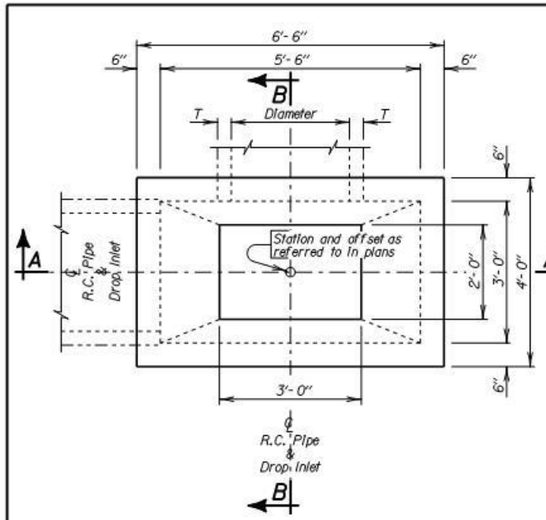

PLAN

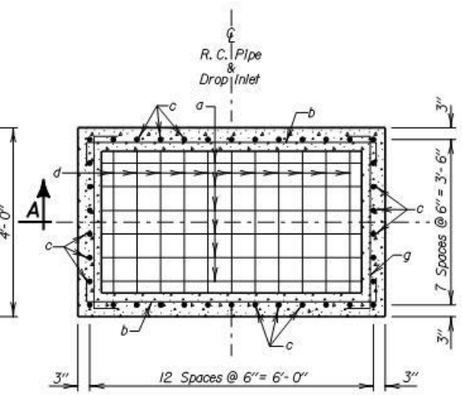

PLAN
(Bottom Steel)

PIPE DISPLACEMENT REDUCTIONS

R. C. Pipe Diameter Inches	T Inches	Class M6 Concrete Cu Yd
12	2	0.03
15	2 1/4	0.04
18	2 1/2	0.05
24	3	0.09
27	3 1/4	0.11
30	3 1/2	0.14
36	4	0.20
42	4 1/2	0.26
48	5	0.34
54	5 1/2	0.43

ESTIMATED QUANTITIES

ITEM	UNIT	CONSTANT QUANTITY	VARIABLE QUANTITY
✳ Class M6 Concrete	Cu Yd	1.01	0.35H
Reinforcing Steel	Lb	344	55.00H
Frame and Grate Assembly	Each	1	———

DROP INLETS FOR 12" TO 54" DIAMETER PIPE

GENERAL NOTES:

✳ Reduce total quantities of concrete by the amount of concrete displaced by the pipe. The total quantity of concrete shall be computed to the nearest hundredth of a cubic yard. The total quantity of reinforcing steel shall be computed to the nearest pound.

Drop inlets shown may be modified by the addition or omission of connecting pipes as shown on the layouts.

Reinforcing steel shall conform to ASTM A615 Grade 60. Cut and bend reinforcing steel as required to place pipe(s) through the drop inlet wall.

Pipe shall not enter through a corner of the drop inlet.

Use 2" clear cover on all reinforcing steel unless otherwise noted.

Precasting of reinforced drop inlets will be permissible. Prior to precasting, the Contractor shall submit details to the Engineer for approval.

Maximum pipe diameter shall not exceed 27 inches on the 4 foot wide side and shall not exceed 54 inches on the 6.5 foot wide side of the drop inlet.

The dimension of H is in feet.

December 23, 2009

Published Date: 2nd Qtr. 2015 | SDDOT | 3' X 5.5' TYPE B REINFORCED CONCRETE DROP INLET | PLATE NUMBER 670.03 | Sheet 1 of 2

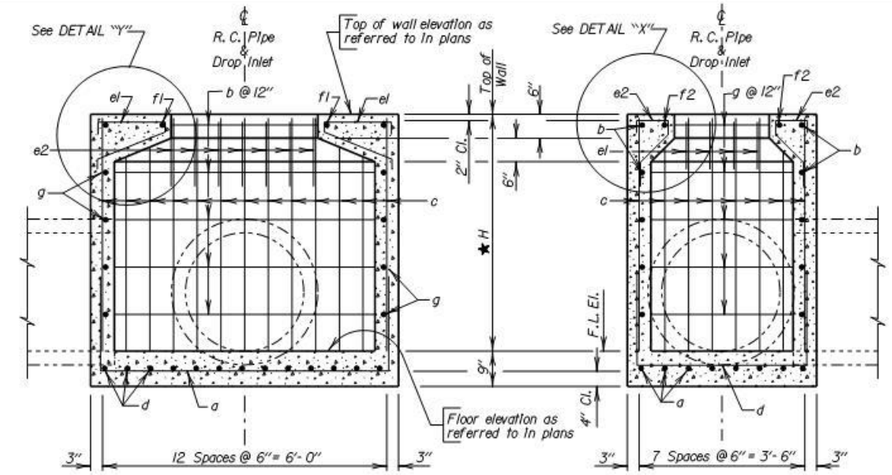

SEC. A-A

✱Maximum H is 10'- 0"

SEC. B - B

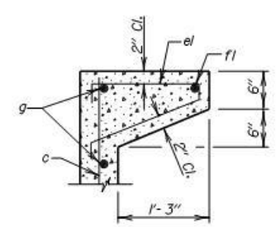

DETAIL "Y"

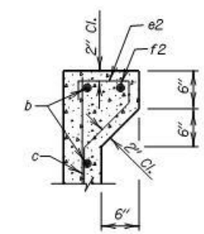

DETAIL "X"

DROP INLETS FOR 12" TO 54" DIAMETER PIPE

REINFORCING SCHEDULE

Mk.	No.	Size	Length	Type
a	8	6	10'- 0"	17
b	2H	4	7'- 0"	17
c	38	5	H- 2"	Str.
d	13	6	7'- 6"	17
e1	8	5	3'- 9"	16A
e2	14	5	2'- 6"	16A
f1	2	5	3'- 6"	17
f2	2	5	4'- 6"	17
g	2H	4	4'- 6"	17

Bending Details

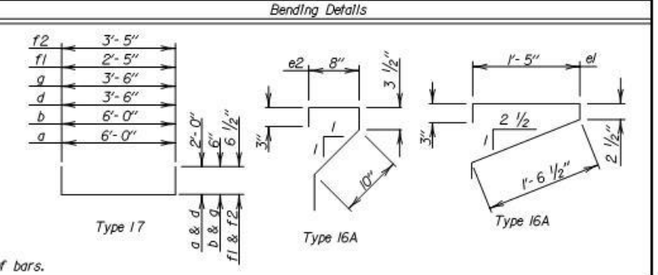

NOTE: All dimensions are out to out of bars.

December 23, 2009

Published Date: 2nd Qtr. 2015 | SDDOT | 3' X 5.5' TYPE B REINFORCED CONCRETE DROP INLET | PLATE NUMBER 670.03 | Sheet 2 of 2

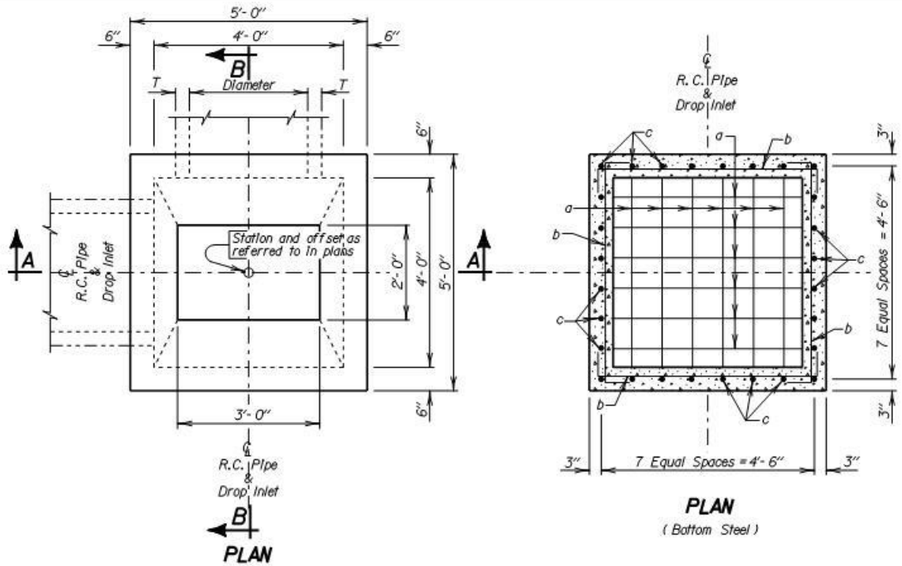

PIPE DISPLACEMENT REDUCTIONS		
R. C. Pipe Diameter Inches	T Inches	Class M6 Concrete Cu'd
12	2	0.03
15	2 1/4	0.04
18	2 1/2	0.05
24	3	0.09
30	3 1/2	0.14
36	4	0.20

ESTIMATED QUANTITIES			
ITEM	UNIT	CONSTANT QUANTITY	VARIABLE QUANTITY
* Class M6 Concrete	Cu'd	0.97	0.33H
Reinforcing Steel	Lb	207	43.90H
Frame and Grate Assembly	Each	1	——

DROP INLETS FOR 12" TO 36" DIAMETER PIPE

GENERAL NOTES:

* Reduce total quantities of concrete by the amount of concrete displaced by the pipe. The total quantity of concrete shall be computed to the nearest hundredth of a cubic yard. The total quantity of reinforcing steel shall be computed to the nearest pound.

Drop Inlets shown may be modified by the addition or omission of connecting pipes as shown on the layouts.

Reinforcing steel shall conform to ASTM A615 Grade 60. Cut and bend reinforcing steel as required to place pipe(s) through the drop inlet wall.

Pipe shall not enter through a corner of the drop inlet.

Use 2" clear cover on all reinforcing steel unless otherwise noted.

Precasting of reinforced drop inlets will be permissible. Prior to precasting, the Contractor shall submit details to the Engineer for approval.

Maximum pipe diameter shall not exceed 36 inches.

The dimension of H is in feet.

December 23, 2009

Published Date: 2nd Qtr. 2015	SDDOT	4' X 4' TYPE B REINFORCED CONCRETE DROP INLET	PLATE NUMBER 670.04 Sheet 1 of 2

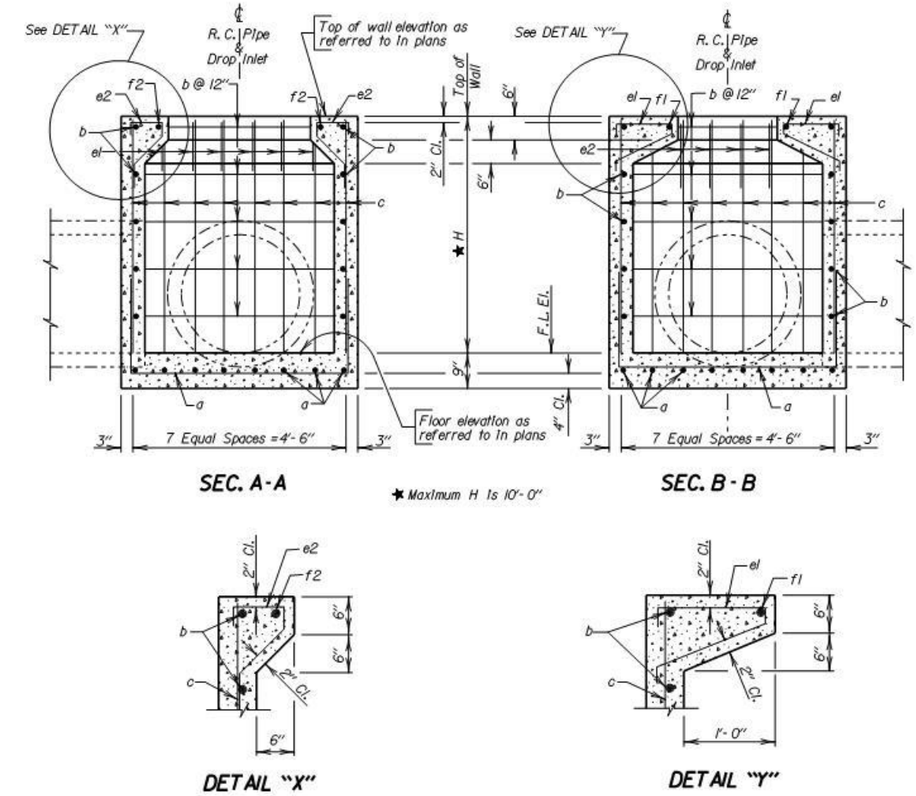

DROP INLETS FOR 12" TO 36" DIAMETER PIPE

REINFORCING SCHEDULE

Mk.	No.	Size	Length	Type
a	16	5	8'- 0"	17
b	4H	4	5'- 6"	17
c	28	5	H- 2"	Str.
el	12	5	3'- 3"	16A
e2	8	5	2'- 6"	16A
f1	2	5	4'- 6"	17
f2	2	5	3'- 6"	17

Bending Details

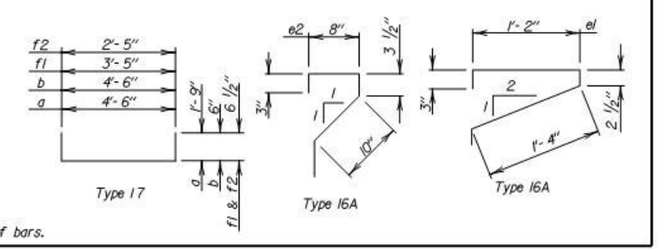

NOTE: All dimensions are out to out of bars.

December 23, 2009

Published Date: 2nd Qtr. 2015	SDDOT	4' X 4' TYPE B REINFORCED CONCRETE DROP INLET	PLATE NUMBER 670.04 Sheet 2 of 2

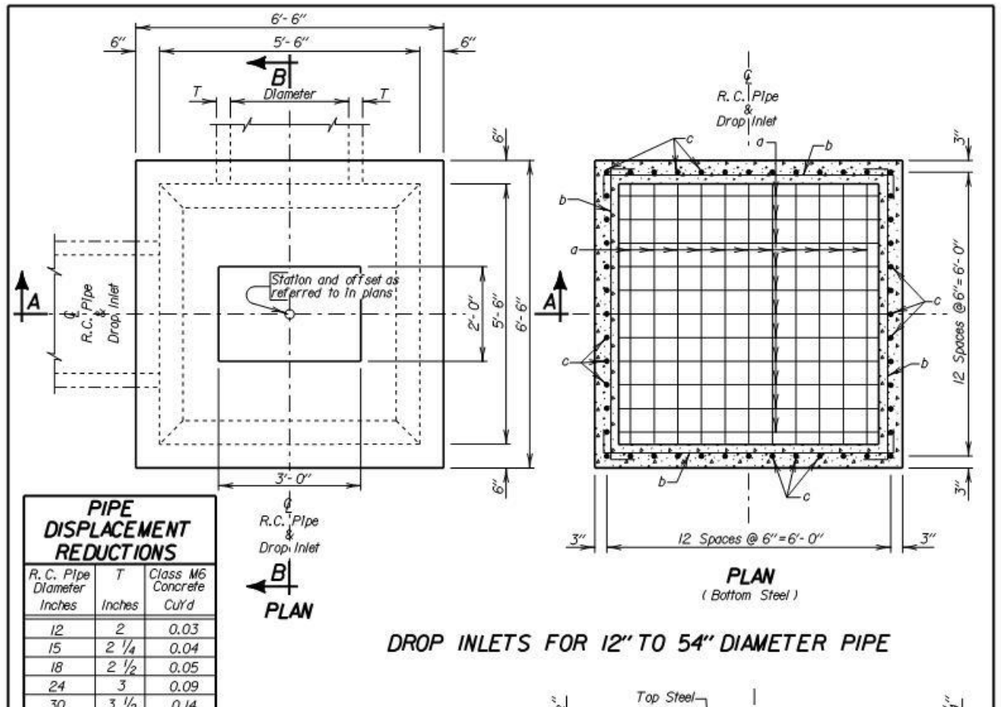

DROP INLETS FOR 12" TO 54" DIAMETER PIPE

PIPE DISPLACEMENT REDUCTIONS

R. C. Pipe Diameter Inches	T Inches	Class M6 Concrete Cu'd
12	2	0.03
15	2 1/4	0.04
18	2 1/2	0.05
24	3	0.09
30	3 1/2	0.14
36	4	0.20
42	4 1/2	0.26
48	5	0.34
54	5 1/2	0.43

ESTIMATED QUANTITIES

ITEM	UNIT	CONSTANT QUANTITY	VARIABLE QUANTITY
* Class M6 Concrete	Cu'd	2.13	0.44H
Reinforcing Steel	Lb	828	90.80H
Frame and Grate Assembly	Each	1	——

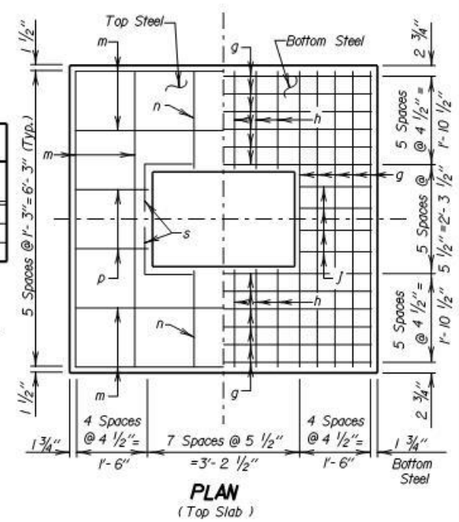

GENERAL NOTES:

* Reduce total quantities of concrete by the amount of concrete displaced by the pipe. The total quantity of concrete shall be computed to the nearest hundredth of a cubic yard. The total quantity of reinforcing steel shall be computed to the nearest pound.

Drop inlets shown may be modified by the addition or omission of connecting pipes as shown on the layouts.

Reinforcing steel shall conform to ASTM A615 Grade 60. Cut and bend reinforcing steel as required to place pipe(s) through the drop inlet wall.

Pipe shall not enter through a corner of the drop inlet.

Use 2" clear cover on all reinforcing steel unless otherwise noted.

Precasting of reinforced drop inlets will be permissible. Prior to precasting, the Contractor shall submit details to the Engineer for approval.

Maximum pipe diameter shall not exceed 54 inches.

Before the top slab is placed, grout shall be applied to all bearing surfaces.

The dimension of H is in feet.

December 23, 2009

Published Date: 2nd Qtr. 2015	SDDOT	5.5' X 5.5' TYPE B REINFORCED CONCRETE DROP INLET	PLATE NUMBER 670.06 Sheet 1 of 2

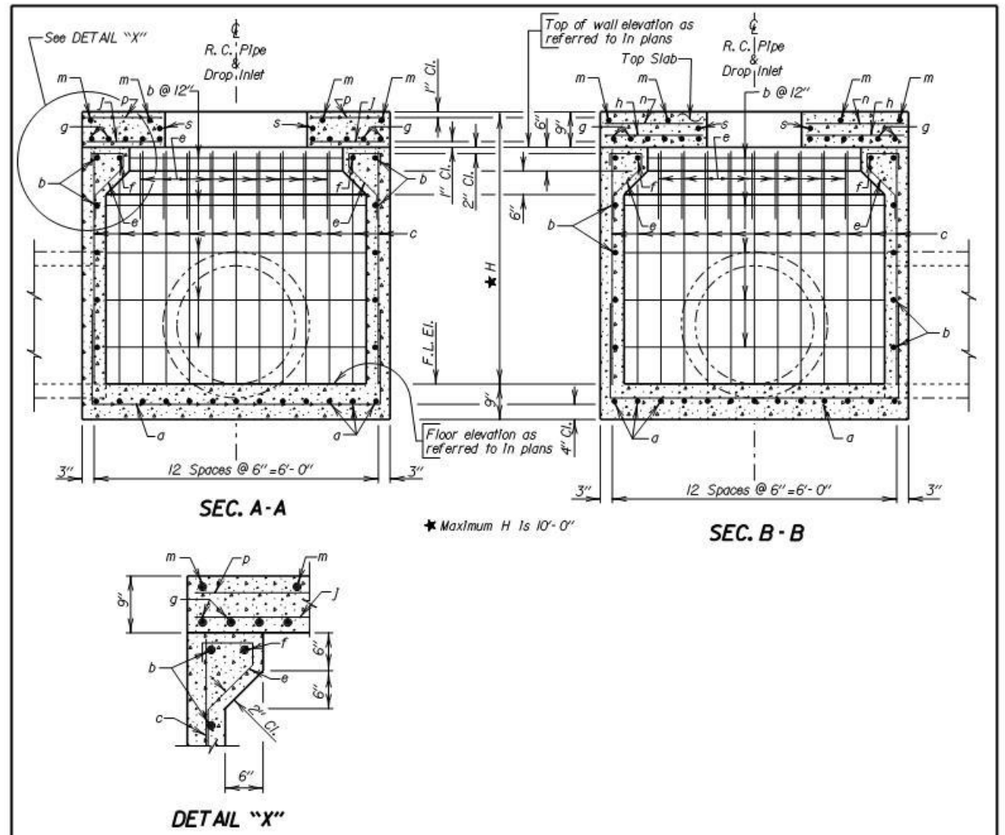

DROP INLETS FOR 12" TO 54" DIAMETER PIPE

REINFORCING SCHEDULE

Mk.	No.	Size	Length	Type
a	26	6	10'- 0"	17
b	4(H-1)	4	7'- 0"	17
c	48	6	H- 11"	Str.
e	36	5	2'- 6"	16A
f	4	5	6'- 0"	17
g	22	7	6'- 3"	Str.
h	12	7	2'- 0"	Str.
j	8	7	1'- 6"	Str.
m	8	4	6'- 3"	Str.
n	4	4	2'- 0"	Str.
p	4	4	1'- 6"	Str.
s	4	4	2'- 0"	17A

Bending Details

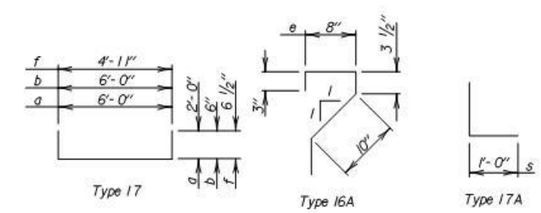

NOTE: All dimensions are out to out of bars.

December 23, 2009

Published Date: 2nd Qtr. 2015	SDDOT	5.5' X 5.5' TYPE B REINFORCED CONCRETE DROP INLET	PLATE NUMBER 670.06 Sheet 2 of 2

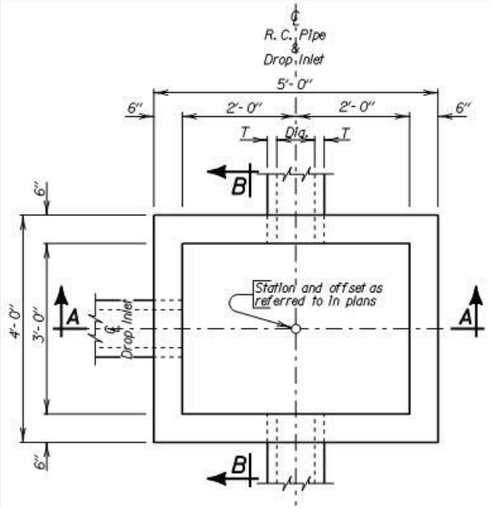

PLAN

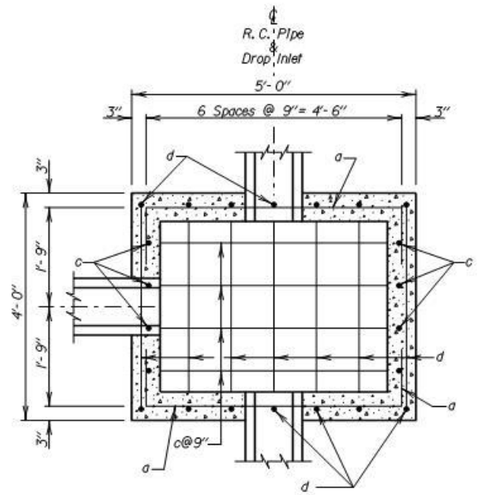

BOTTOM SECTION

PIPE DISPLACEMENT REDUCTIONS		
R.C. Pipe Diameter Inches	T Inches	Class M6 Concrete Cu Yd
12	2	0.03
15	2 1/4	0.04
18	2 1/2	0.05
24	3	0.09
30	3 1/2	0.14
36	4	0.20

ESTIMATED QUANTITIES			
ITEM	UNIT	CONSTANT QUANTITY	VARIABLE QUANTITY
✳ Class M6 Concrete	Cu Yd	0.43	0.29H
Reinforcing Steel	Lb	57	26.72H
Frame and Grate	Each	1	———

DROP INLETS FOR 12" TO 36" DIAMETER PIPE

GENERAL NOTES:

✳ Reduce total quantities of concrete by the amount of concrete displaced by the pipe. The total quantity of concrete shall be computed to the nearest hundredth of a cubic yard. The total quantity of reinforcing steel shall be computed to the nearest pound.

Drop inlets shown may be modified by the addition or omission of connecting pipes as shown on the layouts.

Reinforcing steel shall conform to ASTM A615 Grade 60. The b bars shall be lapped 12 inches. Cut and bend reinforcing steel as required to place pipe(s) through the drop inlet wall.

Pipe shall not enter through a corner of the drop inlet.

Use 2" clear cover on all reinforcing steel unless otherwise noted.

Precasting of reinforced drop inlets will be permissible. Prior to precasting, the Contractor shall submit details to the Engineer for approval.

Maximum pipe diameter shall not exceed 27 inches on the 4 foot wide side and shall not exceed 36 inches on the 5 foot wide side of the drop inlet.

The dimension of H is in feet.

December 23, 2009

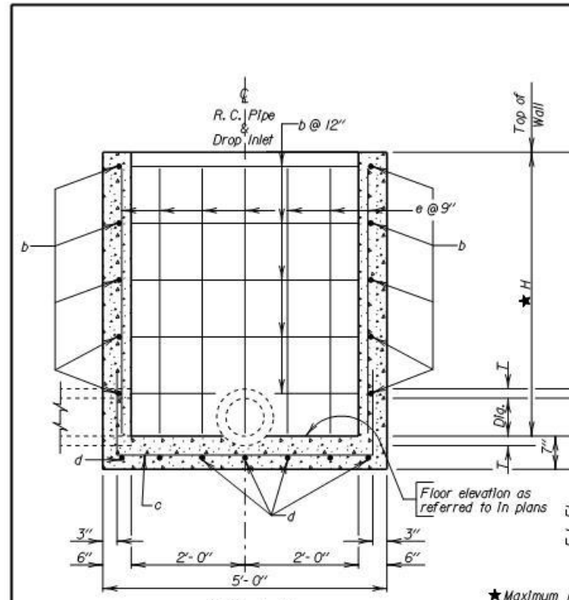

SEC. A-A

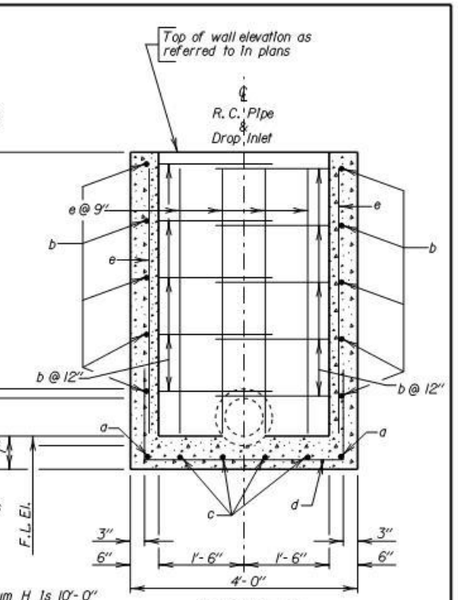

★ Maximum H is 10'-0"

SEC. B-B

DROP INLETS FOR 12" TO 36" DIAMETER PIPE

REINFORCING SCHEDULE				
Mk.	No.	Size	Length	Type
a	2	4	6'-6"	17
b	2H	4	9'-0"	17
c	4	4	7'-6"	17
d	7	4	6'-6"	17
e	22	4	H - 2"	Str.

Bending Details

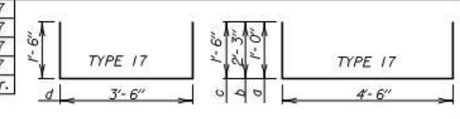

NOTE: All dimensions are out to out of bars.

December 23, 2009

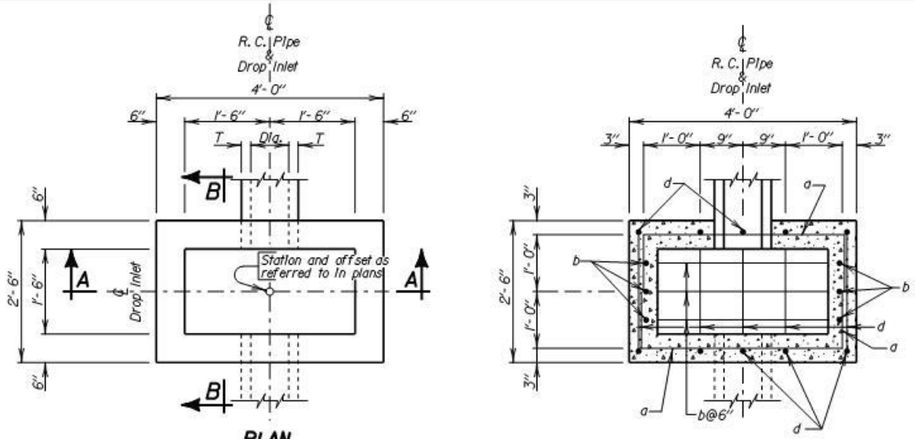

PLAN

BOTTOM SECTION

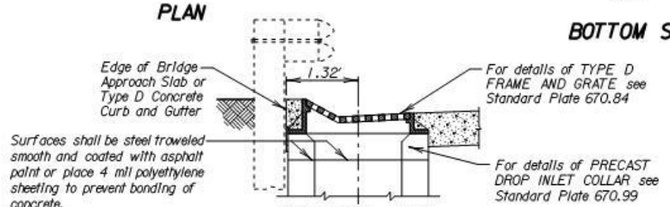

SECTIONAL VIEW

ESTIMATED QUANTITIES

ITEM	UNIT	CONSTANT QUANTITY	VARIABLE QUANTITY
✳ Class M6 Concrete	Cu Yd	0.22	0.20H
Reinforcing Steel	Lb	37	19.37H
Frame and Grate	Each	1	———

DROP INLETS FOR 12" TO 27" DIAMETER PIPE

GENERAL NOTES:

✳ Reduce total quantities of concrete by the amount of concrete displaced by the pipe. The total quantity of concrete shall be computed to the nearest hundredth of a cubic yard. The total quantity of reinforcing steel shall be computed to the nearest pound.

Drop inlets shown may be modified by the addition or omission of connecting pipes as shown on the layouts.

Reinforcing steel shall conform to ASTM A615 Grade 60. The b bars shall be lapped 12 inches. Cut and bend reinforcing steel as required to place pipe(s) through the drop inlet wall.

Pipe shall not enter through a corner of the drop inlet.

Use 2" clear cover on all reinforcing steel unless otherwise noted.

Precasting of reinforced drop inlets will be permissible. Prior to precasting, the Contractor shall submit details to the Engineer for approval.

Maximum pipe diameter shall not exceed 12 inches on the 2.5 foot wide side and shall not exceed 27 inches on the 4 foot wide side of the drop inlet.

The dimension of H is in feet.

PIPE DISPLACEMENT REDUCTIONS

R.C. Pipe Diameter Inches	T Inches	Class M6 Concrete Cu Yd
12	2	0.03
15	2 1/4	0.04
18	2 1/2	0.05
24	3	0.09
27	3 1/4	0.11

December 23, 2009

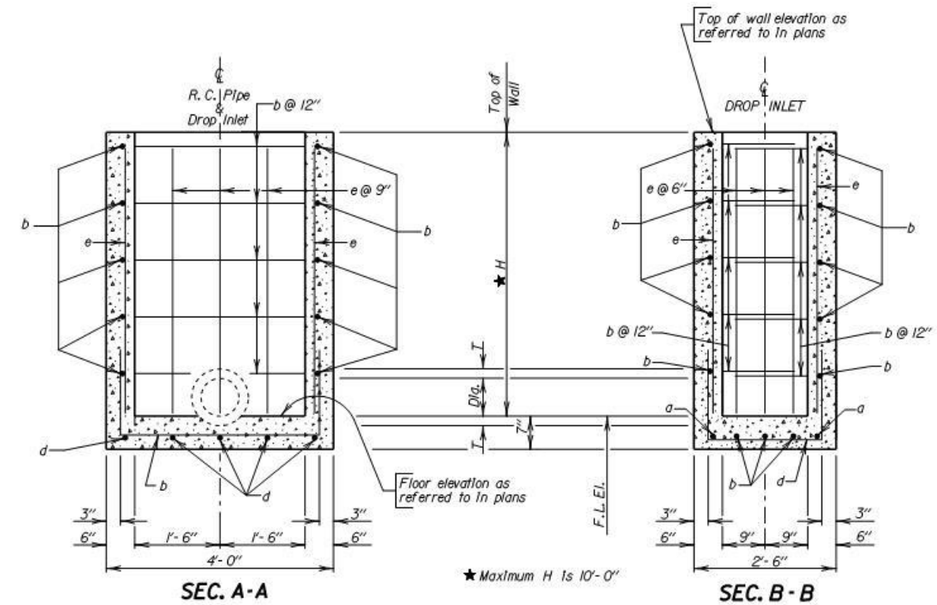

SEC. A-A

SEC. B-B

DROP INLETS FOR 12" TO 27" DIAMETER PIPE

REINFORCING SCHEDULE

MK.	No.	Size	Length	Type
a	2	4	5'- 6"	17
b	3+2H	4	6'- 6"	17
d	5	4	5'- 0"	17
e	16	4	H - 2"	Str.

Bending Details

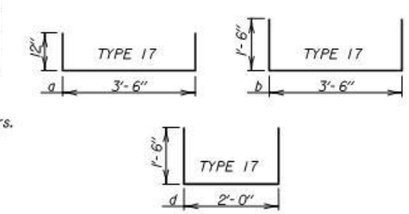

NOTE:
All dimensions are out to out of bars.

December 23, 2009

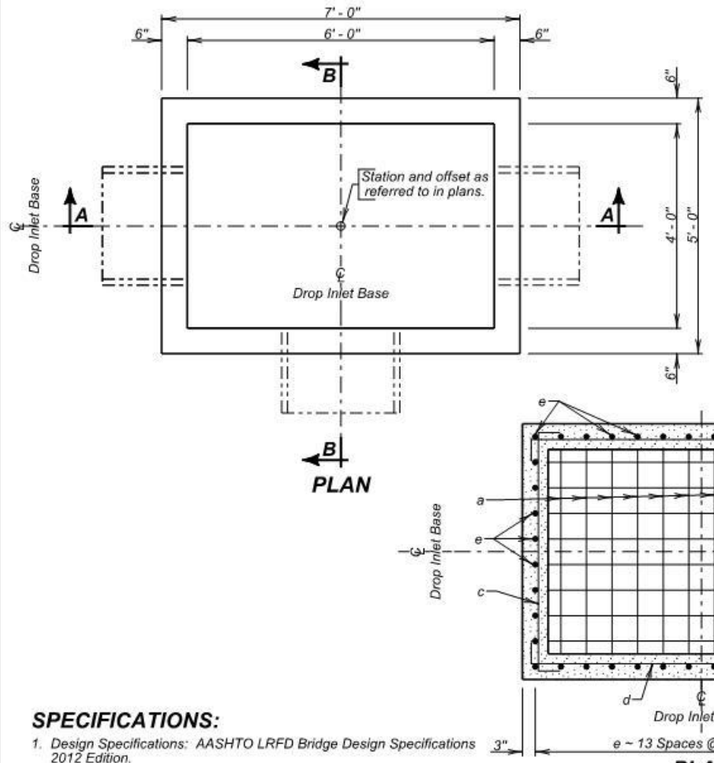

SPECIFICATIONS:

1. Design Specifications: AASHTO LRFD Bridge Design Specifications 2012 Edition.
2. Construction Specifications: South Dakota Standard Specifications for Roads and Bridges, 2004 Edition and required Provisions, Supplemental Specifications and/or Special Provisions.

GENERAL NOTES:

1. Design Live Load: HL-93 loading. No construction loading in excess of legal load was considered.
2. Base is intended for use with a Precast Concrete Type S Drop Inlet Lid, Standard Plate 670.38. Base may be precast. If precast base used, and details differ from that shown, the precast base must be on the current approved list. The current approved list is available through proper channels from the SDDOT Office of Bridge Design.
3. To qualify for addition to the approved list, submit a checked design, by South Dakota Registered Professional Engineers and shop plans to the Office of Bridge Design for approval. Design shall be in accordance with the current edition of the AASHTO LRFD Bridge Design Specifications.
4. ✳ Reduce total quantities of concrete by the amount of concrete displaced by the pipe. The total quantity of concrete shall be computed to the nearest hundredth of a cubic yard. The total quantity of reinforcing steel shall be computed to the nearest pound.
5. Inlets shown may be modified by the addition or omission of connecting pipes as shown on the layouts. Connecting pipes shall not enter the inlet through the corners.
6. Maximum R.C.P. diameter shall not exceed 36 inches (30 inches for R.C. Arch) on the 4-foot wide side and shall not exceed 54 inches (48 inches for R.C. Arch) on the 6-foot wide side of the Drop Inlet.
7. Reinforcing steel shall conform to ASTM A615 Grade 60. Cut and bend reinforcing steel as required to place pipe(s) through the inlet wall.
8. Use 1 inch clear cover on all reinforcing steel unless otherwise noted.
9. The dimension of H is in feet. Maximum H is 8 feet.

December 23, 2012

PIPE DISPLACEMENT REDUCTIONS

	Diameter (Inches)	Wall T (Inches)	Class M6 Concrete (Cu. Yd.)
R.C.P.	12	2	0.03
	15	2 ¼	0.04
	18	2 ½	0.05
	24	3	0.09
	30	3 ½	0.14
	36	4	0.20
	42	4 ½	0.26
	48	5	0.34
	54	5 ½	0.43
R.C. ARCH	18	2 ½	0.05
	24	3 ½	0.09
	30	4	0.14
	36	4 ½	0.19
	42	4 ½	0.24
	48	5	0.32

REINFORCING SCHEDULE

Mk.	No.	Size	Length	Type	Bending Details
a	14	5	9' - 6"	17	
b	10	5	11' - 6"	17	
c	2H	4	5' - 6"	17	
d	2H	4	7' - 6"	17	
e	44	4	H - 2"	Str.	

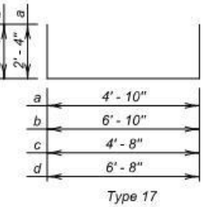

NOTE:
All dimensions are out to out of bars

ESTIMATED QUANTITIES

ITEM	UNIT	CONSTANT QUANTITY	VARIABLE QUANTITY
✳ Class M6 Concrete	Cu.Yd.	0.97	0.41H
Reinforcing Steel	Lb.	253.77	46.76H

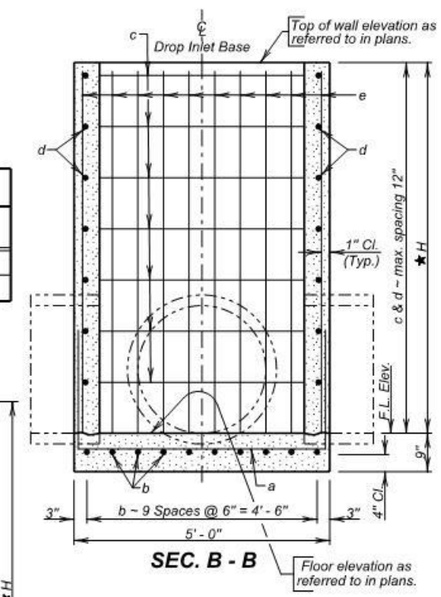

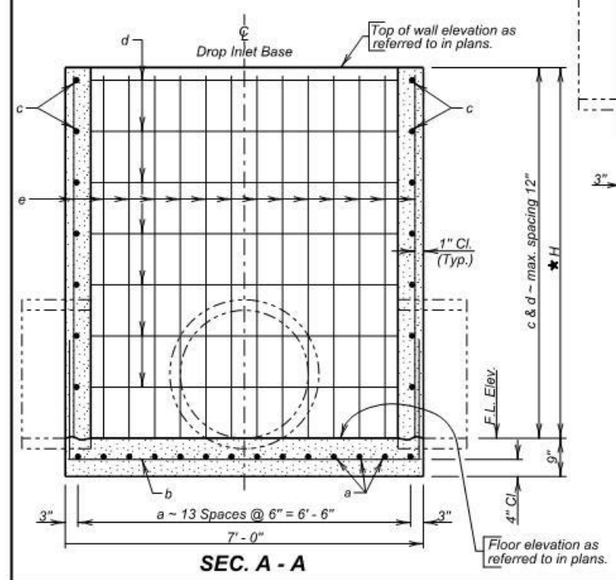

★ Maximum H is 8' - 0"

December 23, 2012

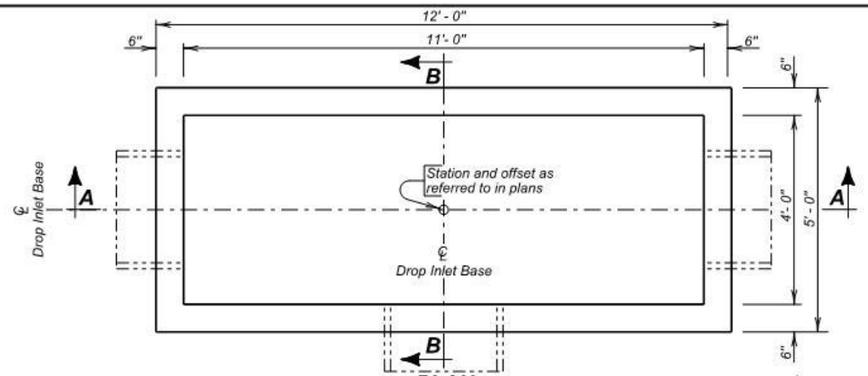

PLAN

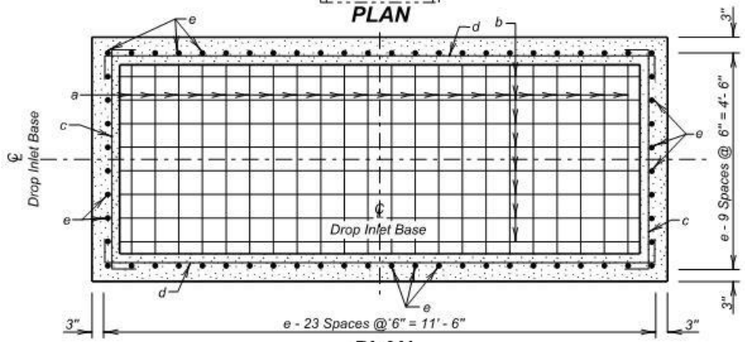

PLAN
(Bottom Steel)
(Pipe Not Shown)

SPECIFICATIONS:

1. Design Specifications: AASHTO LRFD Bridge Design Specifications 2012 Edition.
2. Construction Specifications: South Dakota Standard Specifications for Roads and Bridges, 2004 Edition and required Provisions, Supplemental Specifications and/or Special Provisions.

GENERAL NOTES:

1. Design Live Load: HL-93 loading. No construction loading in excess of legal load was considered.
2. Base is intended for use with a Precast Concrete Type S Drop Inlet Lid, Standard Plate 670.40. Base may be precast. If precast base used, and details differ from that shown, the precast base must be on the current approved list. The current approved list is available through proper channels from the SDDOT Office of Bridge Design.
3. To qualify for addition to the approved list, submit a checked design, by South Dakota Registered Professional Engineers and shop plans to the Office of Bridge Design for approval. Design shall be in accordance with the current edition of the AASHTO LRFD Bridge Design Specifications.
4. ✳ Reduce total quantities of concrete by the amount of concrete displaced by the pipe. The total quantity of concrete shall be computed to the nearest hundredth of a cubic yard. The total quantity of reinforcing steel shall be computed to the nearest pound.
5. Inlets shown may be modified by the addition or omission of connecting pipes as shown on the layouts. Connecting pipes shall not enter the inlet through the corners.
6. Maximum R.C.P. diameter shall not exceed 36 inches (30 inches for R.C. Arch) on the 4-foot wide side of the Drop Inlet.
7. Reinforcing steel shall conform to ASTM A615 Grade 60. Cut and bend reinforcing steel as required to place pipe(s) through the inlet wall.
8. Use 1 inch clear cover on all reinforcing steel unless otherwise noted.
9. The dimension of H is in feet. Maximum H is 8 feet.

December 23, 2012

Published Date: 2nd Qtr. 2015	SDDOT	4' X 11' TYPE S DROP INLET BASE	PLATE NUMBER 670.32
			Sheet 1 of 2

PIPE DISPLACEMENT REDUCTIONS

	Diameter (Inches)	Wall T (Inches)	Class M6 Concrete (Cu. Yd.)
R.C.P.	12	2	0.03
	15	2 ¼	0.04
	18	2 ½	0.05
	24	3	0.09
	30	3 ½	0.14
	36	4	0.20
	42	4 ½	0.26
	48	5	0.34
	54	5 ½	0.43
	60	6	0.52
R.C. ARCH	18	2 ½	0.05
	24	3 ½	0.09
	30	4	0.14
	36	4 ½	0.19
	42	4 ½	0.24
	48	5	0.32
	54	5 ½	0.39
	60	6	0.49
	72	7	0.70
	84	8	0.93

REINFORCING SCHEDULE

Mk.	No.	Size	Length	Type	Bending Details
a	24	5	9' - 6"	17	
b	10	5	16' - 6"	17	
c	2H	4	5' - 6"	17	
d	2H	4	12' - 6"	17	
e	64	4	H - 2"	Str.	

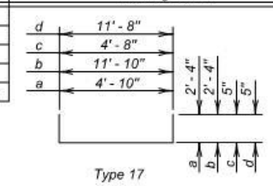

Type 17

NOTE:
All dimensions are out to out of bars.

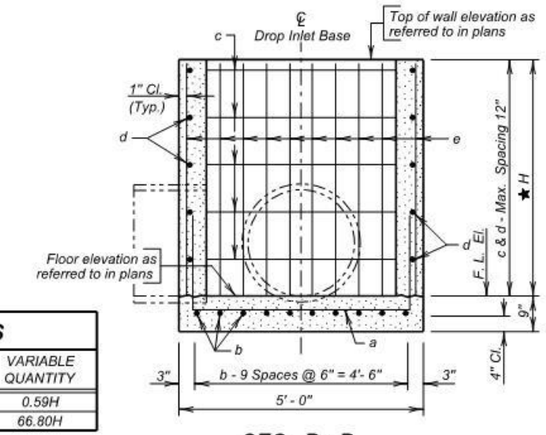

SEC. B - B

ESTIMATED QUANTITIES

ITEM	UNIT	CONSTANT QUANTITY	VARIABLE QUANTITY
✳ Class M6 Concrete	Cu. Yd.	1.67	0.59H
Reinforcing Steel	Lb.	402.77	66.80H

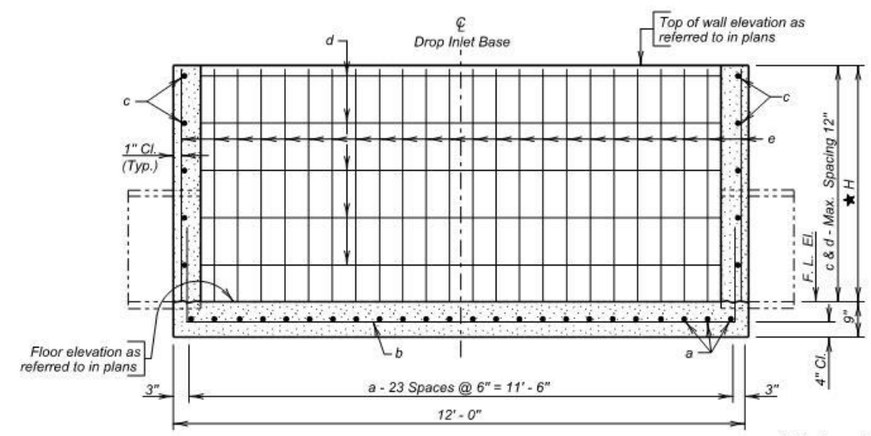

SEC. A - A

✱ Maximum H is 8' - 0"

December 23, 2012

Published Date: 2nd Qtr. 2015	SDDOT	4' X 11' TYPE S DROP INLET BASE	PLATE NUMBER 670.32
			Sheet 2 of 2

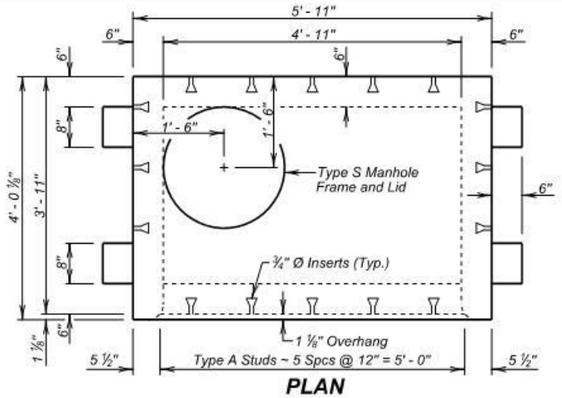

PLAN

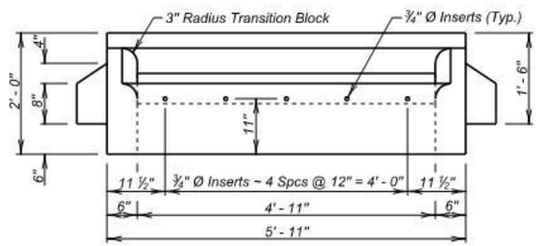

ELEVATION

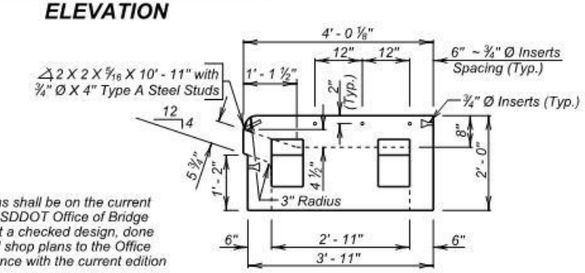

SIDE VIEW
(With Sidewalk Inserts)

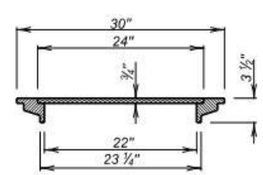

TYPICAL SECTION THROUGH TYPE S MANHOLE FRAME AND LID
(Weight 140 Lbs.)

GENERAL NOTES:

1. The Precast Concrete Type S Drop Inlet Lid and the shims shall be on the current approved list available through proper channels from the SDDOT Office of Bridge Design. To qualify for addition to the approved list, submit a checked design, done by South Dakota Registered Professional Engineers, and shop plans to the Office of Bridge Design for approval. Design shall be in accordance with the current edition of the AASHTO LRFD Bridge Design Specifications.
2. Design Live Load shall be HL - 93.
3. Concrete mix shall be as per fabricators design, however, minimum compressive strength shall not be less than 4500 psi. Type II Cement is required.
4. The Type S Manhole Frame and Lid shall conform to AASHTO M105, Class 30.
5. Structural Steel shall conform to ASTM A36. The ¾ inch diameter Headed Type A Steel Studs shall comform to Section 7 of the current edition of AWS DI. I Structural Steel Welding Code.
6. The ¾ inch diameter Concrete Inserts shall be galvanized or made of a corrosion resistant material. Provide ¾ inch diameter x 1' - 6" long dowels conforming to ASTM A615, Gr. 60 threaded to fit Inserts with each lid.
7. All costs associated with furnishing and installing the Precast Concrete Type S Drop Inlet Lid including the type S manhole frame and lid, shims, inserts, and dowels shall be included in the contract unit price per each for " 4' x 6' Precast Concrete Type S Drop Inlet Lid ".

December 23, 2012

Published Date: 2nd Qtr. 2015	SDDOT	4' X 6' PRECAST CONCRETE TYPE S DROP INLET LID	PLATE NUMBER 670.38
			Sheet 1 of 1

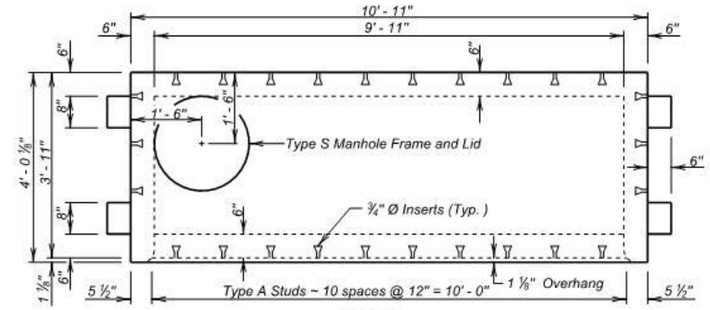

PLAN

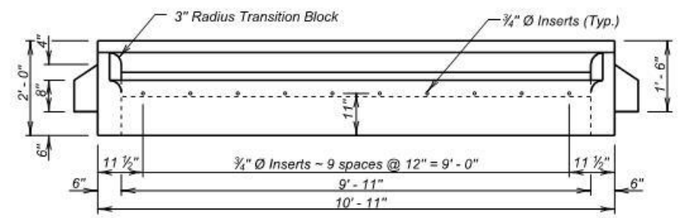

ELEVATION

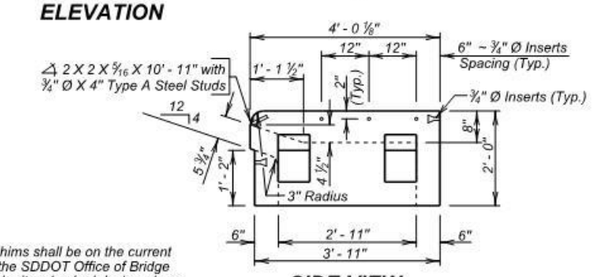

SIDE VIEW
(With Sidewalk Inserts)

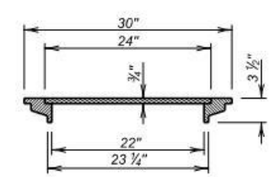

TYPICAL SECTION THROUGH TYPE S MANHOLE FRAME AND LID
(Weight 140 Lbs.)

GENERAL NOTES:

1. The Precast Concrete Type S Drop Inlet Lid and the shims shall be on the current approved list available through proper channels from the SDDOT Office of Bridge Design. To qualify for addition to the approved list, submit a checked design, done by South Dakota Registered Professional Engineers, and shop plans to the Office of Bridge Design for approval. Design shall be in accordance with the current edition of the AASHTO LRFD Bridge Design Specifications.
2. Design Live Load shall be HL - 93.
3. Concrete mix shall be as per fabricators design, however, minimum compressive strength shall not be less than 4500 psi. Type II Cement is required.
4. The Type S Manhole Frame and Lid shall conform to AASHTO M105, Class 30.
5. Structural Steel shall conform to ASTM A36. The ¾ inch diameter Headed Type A Steel Studs shall conform to Section 7 of the current edition of AWS D1. 1 Structural Steel Welding Code.
6. The ¾ inch diameter Concrete Inserts shall be galvanized or made of a corrosion resistant material. Provide ¾ inch diameter x 1' - 6" long dowels conforming to ASTM A615, Gr. 60 threaded to fit inserts with each lid.
7. All costs associated with furnishing and installing the Precast Concrete Type S Drop Inlet Lid including the type S manhole frame and lid, shims, inserts, and dowels shall be included in the contract unit price per each for " 4' x 11' Precast Concrete Type S Drop Inlet Lid ".

December 23, 2012

Published Date: 2nd Qtr. 2015	SDDOT	4' X 11' PRECAST CONCRETE TYPE S DROP INLET LID	PLATE NUMBER 670.40
			Sheet 1 of 1

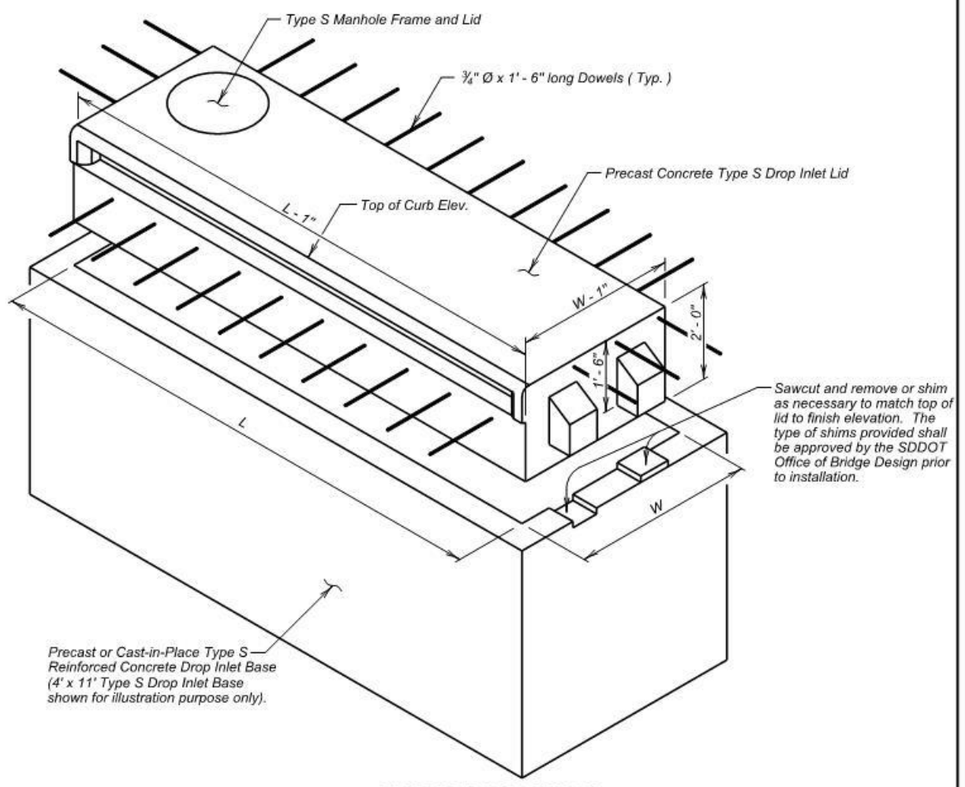

TYPE S DROP INLET

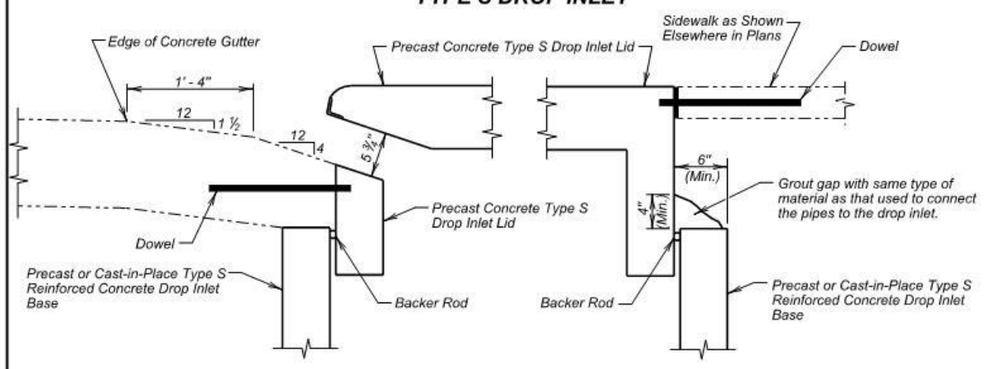

CONCRETE GUTTER DETAIL

GROUTING DETAIL
(Sides and Back, Adjacent to Sidewalk)

December 23, 2012

Published Date: 2nd Qtr. 2015	SDDOT	INSTALLATION DETAILS FOR PRECAST CONCRETE TYPE S DROP INLET LID	PLATE NUMBER 670.45 Sheet 1 of 2

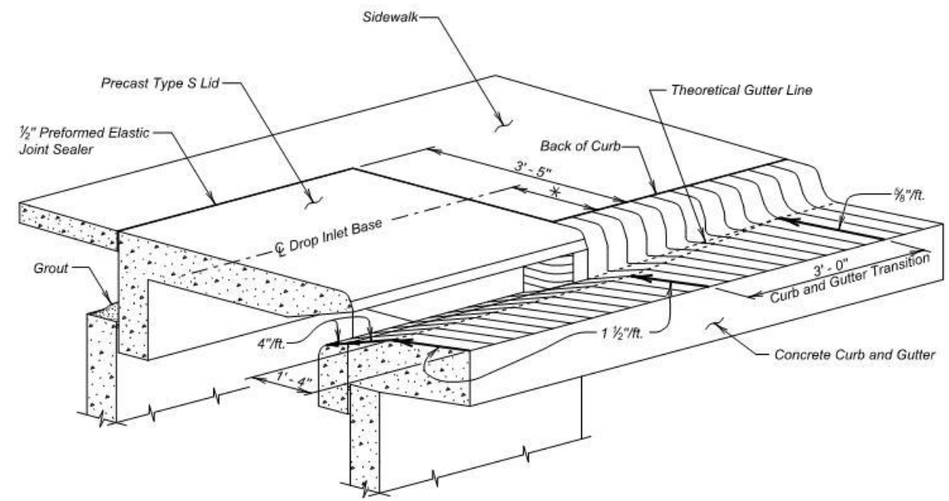

CURB AND GUTTER TRANSITION DETAILS

Drop Inlet Base Unit Size	✳ Distance
4' x 6'	1' - 5 ½"
4' x 11'	1' - 5 ½"
7' x 11'	2' - 11 ½"

GENERAL NOTES:

1. Dowels shall be used to anchor the precast concrete Type S drop inlet lid to the concrete gutter. See Standard Plate 670.38 or 670.40 as applicable. If there is sidewalk adjacent dowels shall be used to anchor the precast concrete Type S drop inlet lid to the sidewalk. If there is sidewalk adjacent to the drop inlet, the precast lid shall match the finish elevations and cross slopes of the sidewalk.
2. The sidewalk shall be steel reinforced when the sidewalk adjoins the precast lid. Refer to Standard Plate 651.70 for reinforced concrete sidewalk details.

December 23, 2012

Published Date: 2nd Qtr. 2015	SDDOT	INSTALLATION DETAILS FOR PRECAST CONCRETE TYPE S DROP INLET LID	PLATE NUMBER 670.45 Sheet 2 of 2

GENERAL NOTE:

Top of grate elevation shall be 0.04' below theoretical elevation of gutter.

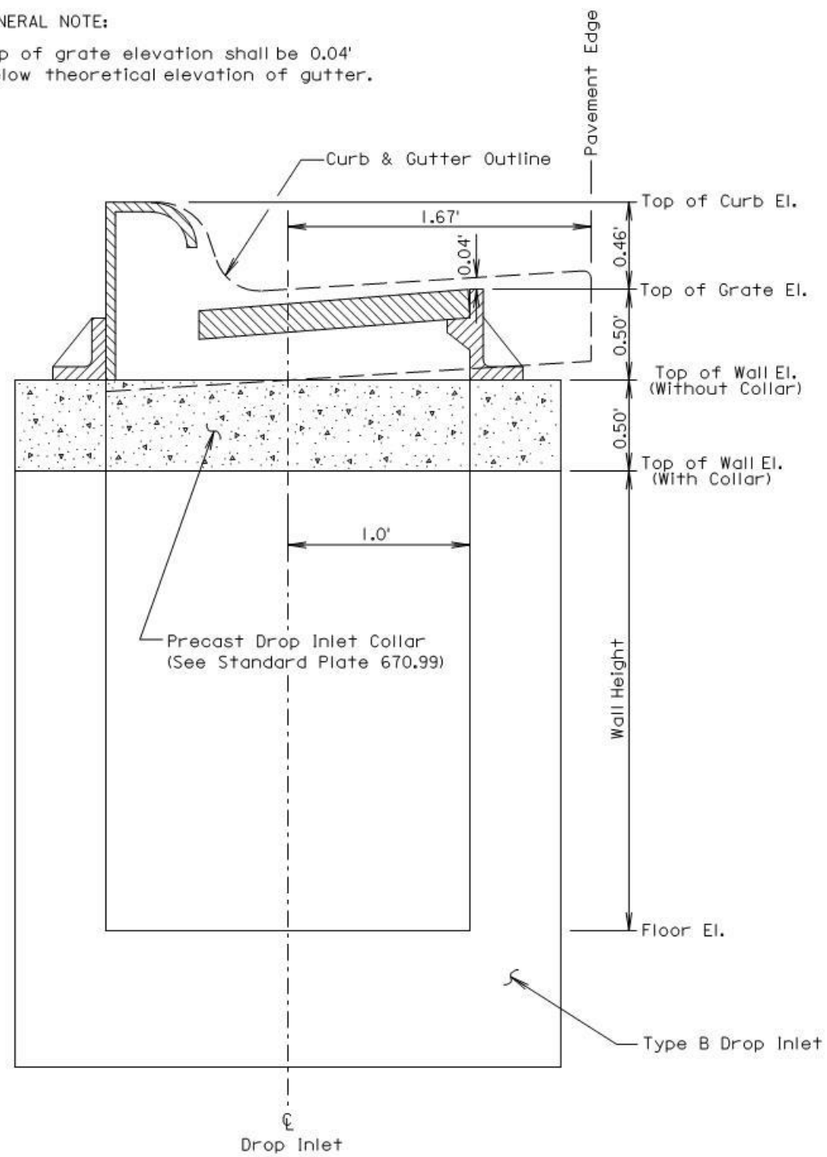

June 26, 2011

Published Date: 2nd Qtr. 2015	SDDOT	INSTALLATION OF TYPE B DROP INLET	PLATE NUMBER 670.75 Sheet 1 of 1

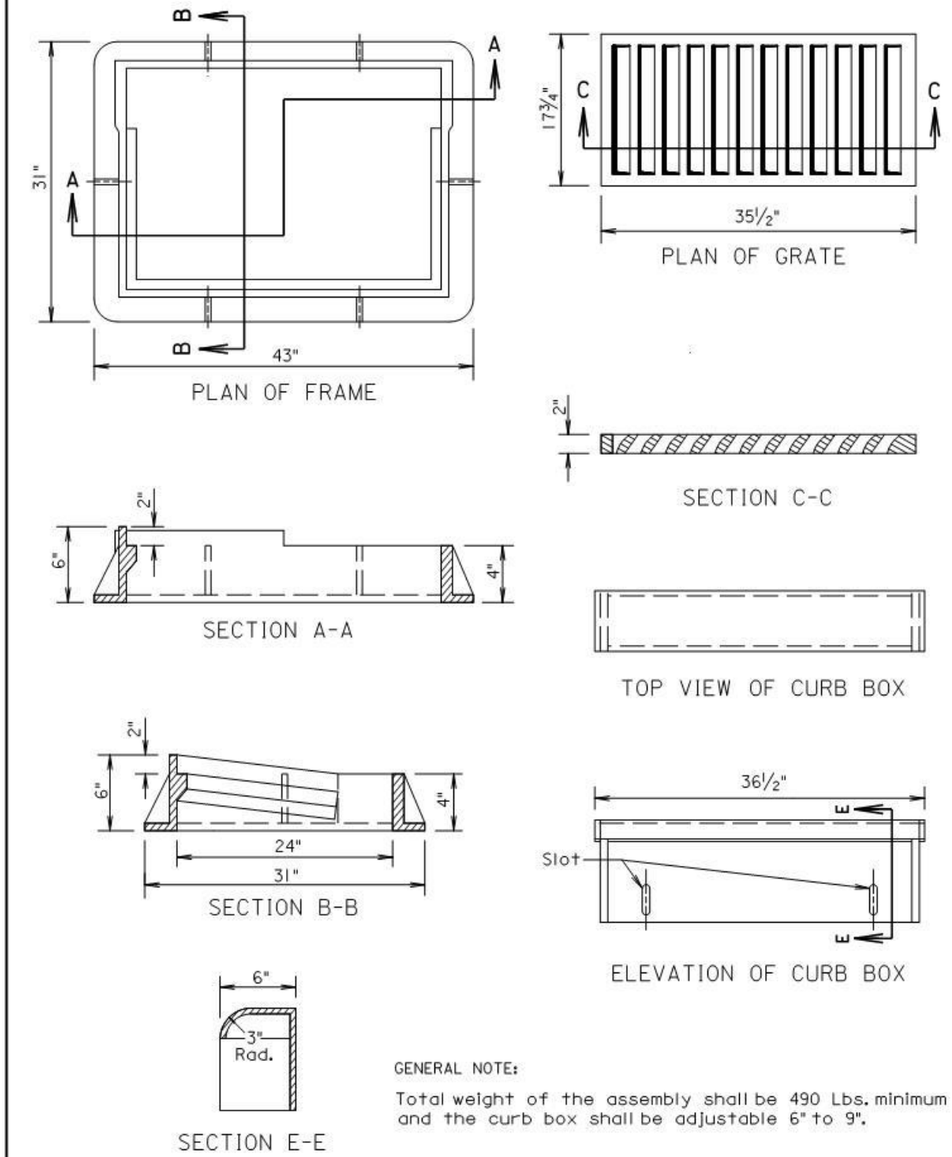

GENERAL NOTE:

Total weight of the assembly shall be 490 Lbs. minimum and the curb box shall be adjustable 6" to 9".

March 31, 2000

Published Date: 2nd Qtr. 2015	SDDOT	TYPE B FRAME AND GRATE ASSEMBLY	PLATE NUMBER 670.80 Sheet 1 of 1

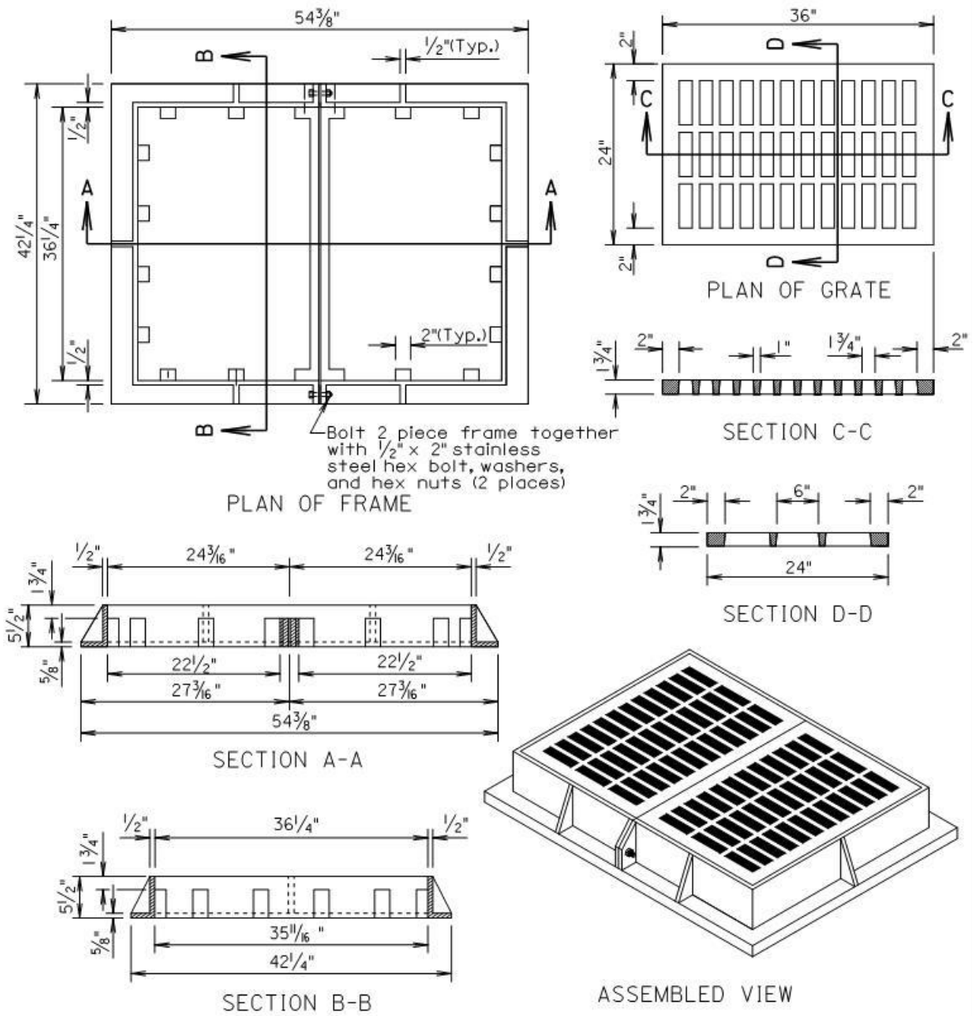

GENERAL NOTE:

The total weight of the frame and grate shall be 850 pounds minimum.

March 31, 2000

Published Date: 2nd Qtr. 2015	SDDOT	TYPE C FRAME AND GRATE	PLATE NUMBER 670.82 Sheet 1 of 1

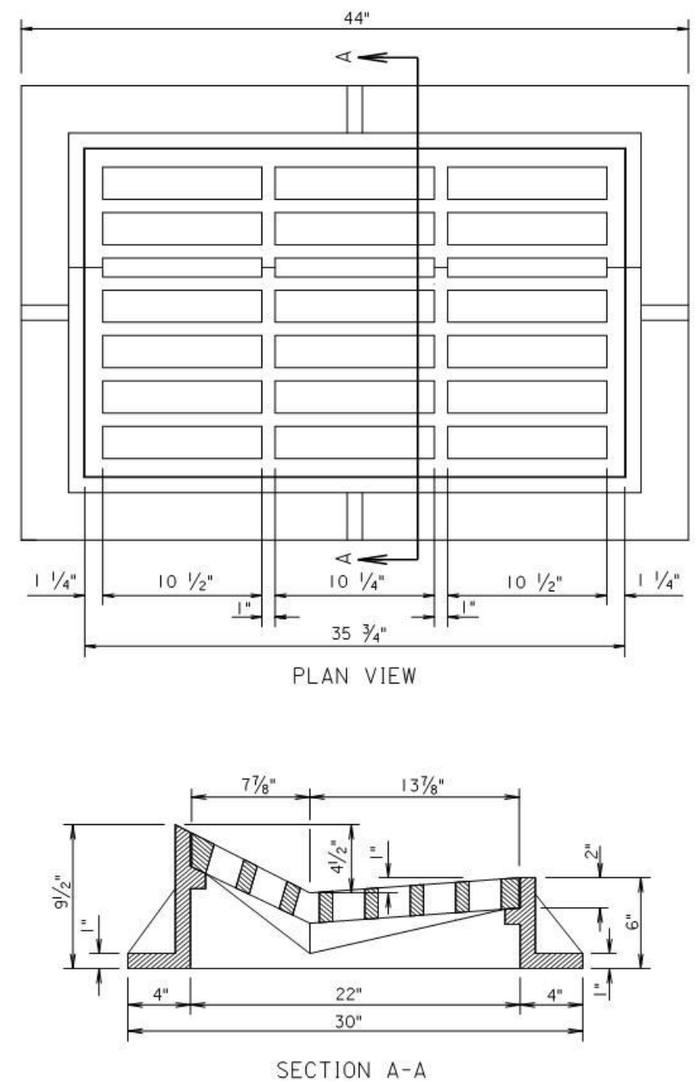

GENERAL NOTE:

The total weight of the frame and grate shall be 620 pounds minimum.

March 31, 2000

Published Date: 2nd Qtr. 2015	SDDOT	TYPE D FRAME AND GRATE	PLATE NUMBER 670.84 Sheet 1 of 1

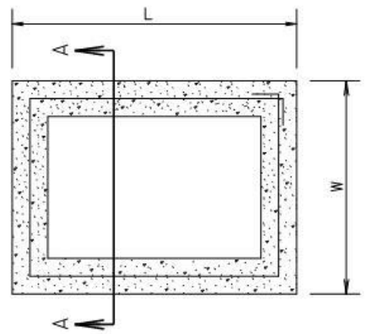

PLAN VIEW

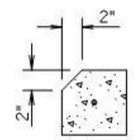

For Type D Drop Inlets only:
Use Precast Drop Inlet Collar with 2" chamfer on L sides only.

DETAIL B

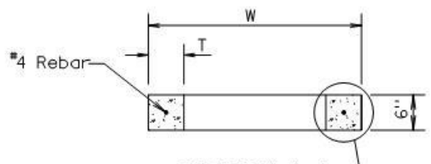

SECTION A-A

See Detail B (For Type D Drop Inlets Only)

INFORMATIONAL QUANTITIES					
FRAME AND GRATE TYPE	L Ft-In	W Ft-In	T In	CLASS M6 CONCRETE CuYd	REINFORCING STEEL Lb
TYPE B	4'-0"	3'-0"	6	0.11	9
TYPE C	5'-0"	4'-0"	6	0.15	11
TYPE D	4'-0"	2'-6"	6	0.10	8

GENERAL NOTES:

All reinforcing steel shall conform to ASTM A615, Grade 60.

The ½" diameter bar shall lap 6"± and shall be centered in the concrete.

The cost of furnishing and installing Precast Drop Inlet Collars, including labor, materials, and incidentals shall be incidental to the contract unit price per Each for "Precast Drop Inlet Collar".

March 31, 2000

Published Date: 2nd Qtr. 2015	SDDOT	PRECAST DROP INLET COLLAR	PLATE NUMBER 670.99 Sheet 1 of 1

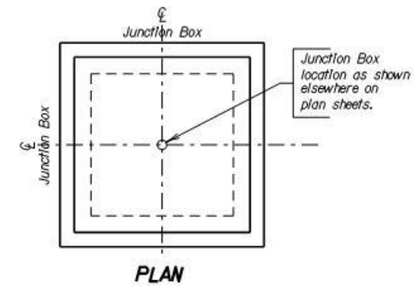

PLAN

SPECIFICATIONS

1. Design Specifications: AASHTO Specifications for Highway Bridges, 1996 Edition (Service Load).
2. Construction Specifications: South Dakota Standard Specifications for Roads and Bridges, Current Edition and required Provisions, Supplemental Specifications and/or Special Provisions as included in the Proposal.

DESIGN MIX OF CONCRETE

1. Mix shall be designed to produce a concrete having a minimum compressive strength of 4000 p.s.i. at 28 days.
2. Type II Cement is required.

GENERAL NOTES

1. Design Live Load: HS 20-44 and Alternate Loading. No construction loading in excess of legal Load was considered.
2. The design of the junction box is based on a maximum fill over the junction box of 5 feet.
3. Unit Stresses: Concrete fc=1600 p.s.i.
   Reinforcing Steel fs = 24000 p.s.i.
4. All reinforcing steel shall conform to ASTM A615 Grade 60.
5. All exposed edges shall be chamfered ¾".
6. Use 1" clear cover on all reinforcing steel except as shown.
7. The cost of furnishing and installing the manhole steps shall be incidental to the contract unit price per Lb. for "Reinforcing steel".
8. Reinforcing steel shall be cut and bent in field as necessary to fit pipe and manhole openings. (Pipe openings are not shown in these details.) Number, size and location of pipes entering junction box are shown elsewhere on plan sheets.
9. All pipes entering the junction box must fit between the inside faces of the walls.

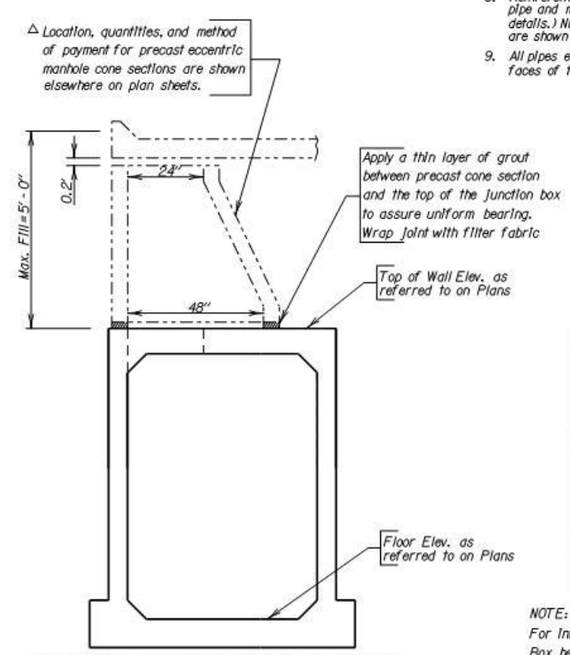

△ DETAIL OF CONNECTION BETWEEN PRECAST ECCENTRIC MANHOLE CONE SECTION AND JUNCTION BOX

ITEM	Class M6 Concrete	Reinforcing Steel
UNIT	Cu. Yd.	Lb.
H = 4'-0"	4.37	821
H = 4'-6"	4.61	846
H = 5'-0"	4.85	908
H = 5'-6"	5.10	933
H = 6'-0"	5.34	958
H = 6'-6"	5.58	1020
H = 7'-0"	5.82	1045
H = 7'-6"	6.06	1071
H = 8'-0"	6.30	1132

NOTE:
For informational purposes only, the estimated quantities for Junction Box height H are shown above. These quantities do not include quantity reduction for pipe openings, but do include the reduction for the 24" diameter manhole opening.

March 31, 2000

Published Date: 2nd Qtr. 2015	SDDOT	5'X 5' JUNCTION BOX	PLATE NUMBER 671.01 Sheet 1 of 3

REINFORCING SCHEDULE

	Mk.	No.	Size	Length	Type
H = 4'-0"	Φa1	1	6	9'-0"	T3
	Φa2	4	-	——	-
	h3	28	4	5'-9"	17A
	k3	48	4	8'-6"	17
	ml	18	5	6'-9"	Str.
	nl	18	5	5'-9"	Str.
	pl	52	4	5'-0"	Str.
	ql	8	4	3'-6"	17A
H = 4'-6"	Φa1	1	6	9'-0"	T3
	Φa2	4	-	——	-
	h4	28	4	6'-3"	17A
	k4	48	4	9'-0"	17
	ml	18	5	6'-9"	Str.
	nl	18	5	5'-9"	Str.
	pl	52	4	5'-0"	Str.
	ql	8	4	3'-6"	17A
H = 5'-0"	Φa1	1	6	9'-0"	T3
	Φa2	5	-	——	-
	h5	28	4	6'-9"	17A
	k5	48	4	9'-6"	17
	ml	18	5	6'-9"	Str.
	nl	18	5	5'-9"	Str.
	pl	60	4	5'-0"	Str.
	ql	12	4	3'-6"	17A
H = 5'-6"	Φa1	1	6	9'-0"	T3
	Φa2	5	-	——	-
	h6	28	4	7'-3"	17A
	k6	48	4	10'-0"	17
	ml	18	5	6'-9"	Str.
	nl	18	5	5'-9"	Str.
	pl	60	4	5'-0"	Str.
	ql	12	4	3'-6"	17A
H = 6'-0"	Φa1	1	6	9'-0"	T3
	Φa2	6	-	——	-
	h7	28	4	7'-9"	17A
	k7	48	4	10'-6"	17
	ml	18	5	6'-9"	Str.
	nl	18	5	5'-9"	Str.
	pl	60	4	5'-0"	Str.
	ql	12	4	3'-6"	17A
H = 6'-6"	Φa1	1	6	9'-0"	T3
	Φa2	6	-	——	-
	h8	28	4	8'-3"	17A
	k8	48	4	11'-0"	17
	ml	18	5	6'-9"	Str.
	nl	18	5	5'-9"	Str.
	pl	68	4	5'-0"	Str.
	ql	16	4	3'-6"	17A
H = 7'-0"	Φa1	1	6	9'-0"	T3
	Φa2	7	-	——	-
	h9	28	4	8'-9"	17A
	k9	48	4	11'-6"	17
	ml	18	5	6'-9"	Str.
	nl	18	5	5'-9"	Str.
	pl	68	4	5'-0"	Str.
	ql	16	4	3'-6"	17A

Bending Details

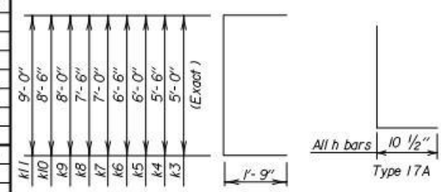

	Mk.	No.	Size	Length	Type
H = 7'-6"	Φa1	1	6	9'-0"	T3
	Φa2	7	-	——	-
	h10	28	4	9'-3"	17A
	k10	48	4	12'-0"	17
	ml	18	5	6'-9"	Str.
	nl	18	5	5'-9"	Str.
	pl	68	4	5'-0"	Str.
	ql	16	4	3'-6"	17A
H = 8'-0"	Φa1	1	6	9'-0"	T3
	Φa2	8	-	——	-
	h11	28	4	9'-9"	17A
	k11	48	4	12'-6"	17
	ml	18	5	6'-9"	Str.
	nl	18	5	5'-9"	Str.
	pl	76	4	5'-0"	Str.
	ql	20	4	3'-6"	17A

NOTE:
Φ Cast Iron Manhole Steps (R - 1980 - C) from Neenah Foundry or equivalant.

Φ Locate in center of top slab with 3" clearance at manhole opening.

All dimensions are out to out of bars.

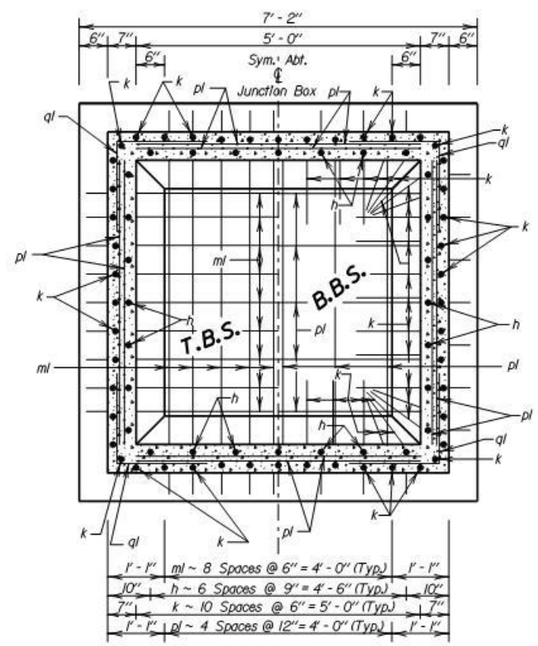

SEC. A-A

March 31, 2000

Published Date: 2nd Qtr. 2015

SDDOT

5'X 5' JUNCTION BOX

PLATE NUMBER 671.01

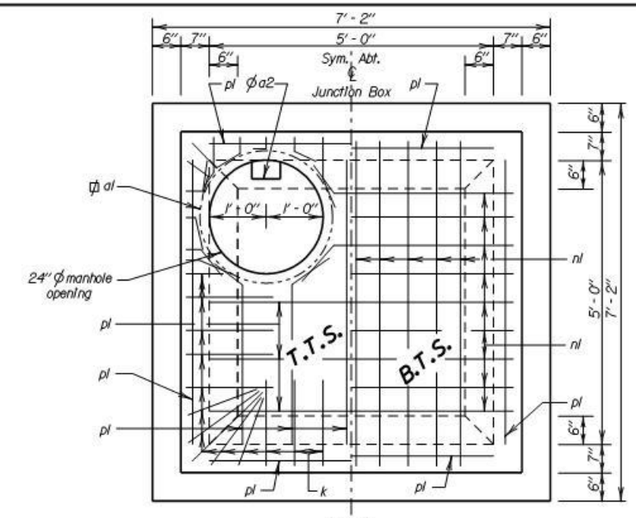

PLAN

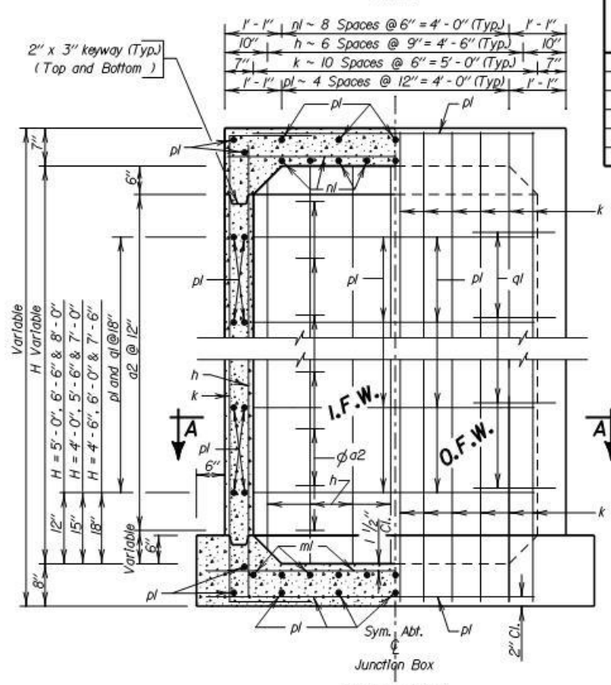

ELEVATION

LEGEND FOR PLACING RE-STEEL
T. T. S. - Top of Top Slab
B. T. S. - Bottom of Top Slab
T. B. S. - Top of Bottom Slab
B. B. S. - Bottom of Bottom Slab
O. F. W. - Outside Face of Wall
I. F. W. - Inside Face of Wall

March 31, 2000

Published Date: 2nd Qtr. 2015

SDDOT

5'X 5' JUNCTION BOX

PLATE NUMBER 671.01

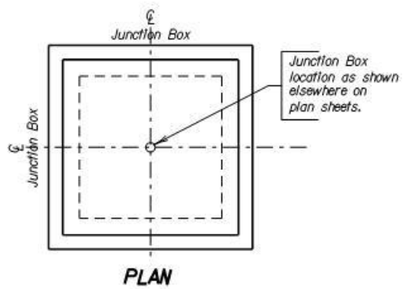

PLAN

SPECIFICATIONS

1. Design Specifications: AASHTO Specifications for Highway Bridges, 1996 Edition (Service Load).
2. Construction Specifications: South Dakota Standard Specifications for Roads and Bridges, Current Edition and required Provisions, Supplemental Specifications and/or Special Provisions as included in the Proposal.

DESIGN MIX OF CONCRETE

1. Mix shall be designed to produce a concrete having a minimum compressive strength of 4000 p.s.i. at 28 days.
2. Type II Cement is required.

GENERAL NOTES

1. Design Live Load: HS 20-44 and Alternate Loading. No construction loading in excess of legal Load was considered.
2. The design of the junction box is based on a maximum fill over the junction box of 5 feet.
3. Unit Stresses: Concrete fc=1600 p.s.i.
   Reinforcing Steel fs = 24000 p.s.i.
4. All reinforcing steel shall conform to ASTM A615 Grade 60.
5. All exposed edges shall be chamfered ¾".
6. Use 1" clear cover on all reinforcing steel except as shown.
7. The cost of furnishing and installing the manhole steps shall be incidental to the contract unit price per Lb. for "Reinforcing steel".
8. Reinforcing steel shall be cut and bent in field as necessary to fit pipe and manhole openings. (Pipe openings are not shown in these details.) Number, size and location of pipes entering junction box are shown elsewhere on plan sheets.
9. All pipes entering the junction box must fit between the inside faces of the walls.

△ Location, quantities and method of payment for precast eccentric manhole cone sections are shown elsewhere on plan sheets.

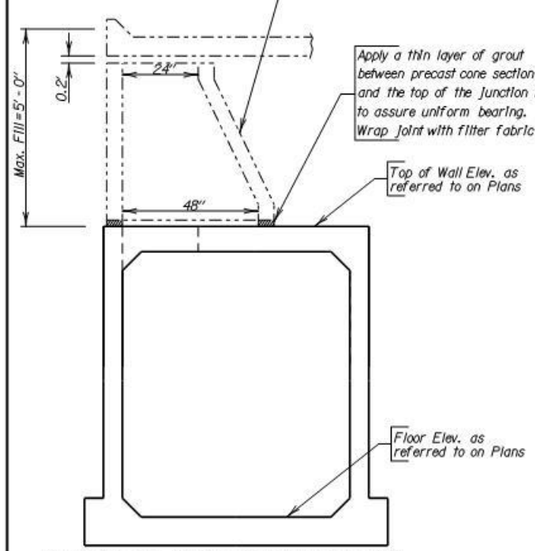

△ DETAIL OF CONNECTION BETWEEN PRECAST ECCENTRIC MANHOLE CONE SECTION AND JUNCTION BOX

ITEM	Class M6 Concrete	Reinforcing Steel
UNIT	Cu. Yd.	Lb.
H = 4'-0"	5.53	1186
H = 4'-6"	5.82	1215
H = 5'-0"	6.10	1286
H = 5'-6"	6.39	1316
H = 6'-0"	6.67	1345
H = 6'-6"	6.96	1416
H = 7'-0"	7.24	1445
H = 7'-6"	7.52	1475
H = 8'-0"	7.81	1545

NOTE:
For informational purposes only, the estimated quantities for Junction Box height H are shown above. These quantities do not include quantity reduction for pipe openings, but do include the reduction for the 24" diameter manhole opening.

March 31, 2000

REINFORCING SCHEDULE

	Mk.	No.	Size	Length	Type
H = 4'-0"	Φgl	1	6	9'-0"	T3
	Φg2	4	-	——	-
	h14	32	4	5'-9"	17A
	k14	56	4	8'-9"	17
	m2	22	6	7'-9"	Str.
	n2	22	6	6'-9"	Str.
	p2	56	4	6'-0"	Str.
	gl	8	4	3'-6"	17A
H = 4'-6"	Φgl	1	6	9'-0"	T3
	Φg2	4	-	——	-
	h15	32	4	6'-3"	17A
	k15	56	4	9'-3"	17
	m2	22	6	7'-9"	Str.
	n2	22	6	6'-9"	Str.
	p2	56	4	6'-0"	Str.
	gl	8	4	3'-6"	17A
H = 5'-0"	Φgl	1	6	9'-0"	T3
	Φg2	5	-	——	-
	h16	32	4	6'-9"	17A
	k16	56	4	9'-9"	17
	m2	22	6	7'-9"	Str.
	n2	22	6	6'-9"	Str.
	p2	64	4	6'-0"	Str.
	gl	12	4	3'-6"	17A
H = 5'-6"	Φgl	1	6	9'-0"	T3
	Φg2	5	-	——	-
	h17	32	4	7'-3"	17A
	k17	56	4	10'-3"	17
	m2	22	6	7'-9"	Str.
	n2	22	6	6'-9"	Str.
	p2	64	4	6'-0"	Str.
	gl	12	4	3'-6"	17A
H = 6'-0"	Φgl	1	6	9'-0"	T3
	Φg2	6	-	——	-
	h18	32	4	7'-9"	17A
	k18	56	4	10'-9"	17
	m2	22	6	7'-9"	Str.
	n2	22	6	6'-9"	Str.
	p2	64	4	6'-0"	Str.
	gl	12	4	3'-6"	17A
H = 6'-6"	Φgl	1	6	9'-0"	T3
	Φg2	6	-	——	-
	h19	32	4	8'-3"	17A
	k19	56	4	11'-3"	17
	m2	22	6	7'-9"	Str.
	n2	22	6	6'-9"	Str.
	p2	72	4	6'-0"	Str.
	gl	16	4	3'-6"	17A
H = 7'-0"	Φgl	1	6	9'-0"	T3
	Φg2	7	-	——	-
	h20	32	4	8'-9"	17A
	k20	56	4	11'-9"	17
	m2	22	6	7'-9"	Str.
	n2	22	6	6'-9"	Str.
	p2	72	4	6'-0"	Str.
	gl	16	4	3'-6"	17A
H = 7'-6"	Φgl	1	6	9'-0"	T3
	Φg2	7	-	——	-
	h21	32	4	9'-3"	17A
	k21	56	4	12'-3"	17
	m2	22	6	7'-9"	Str.
	n2	22	6	6'-9"	Str.
	p2	72	4	6'-0"	Str.
	gl	16	4	3'-6"	17A
H = 8'-0"	Φgl	1	6	9'-0"	T3
	Φg2	8	-	——	-
	h22	32	4	9'-9"	17A
	k22	56	4	12'-9"	17
	m2	22	6	7'-9"	Str.
	n2	22	6	6'-9"	Str.
	p2	80	4	6'-0"	Str.
	gl	20	4	3'-6"	17A

Bending Details

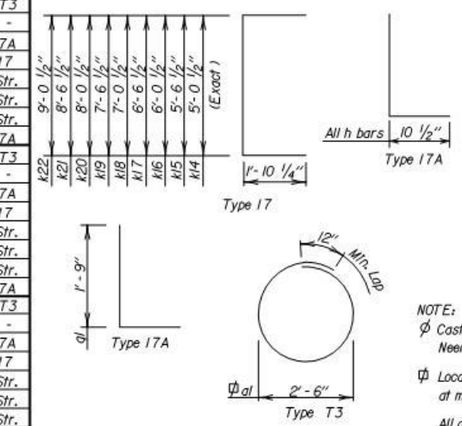

NOTE:
Φ Cast Iron Manhole Steps (R - 1980 - C) from Neenah Foundry or equivalant.

Φ Locate in center of top slab with 3" clearance at manhole opening.

All dimensions are out to out of bars.

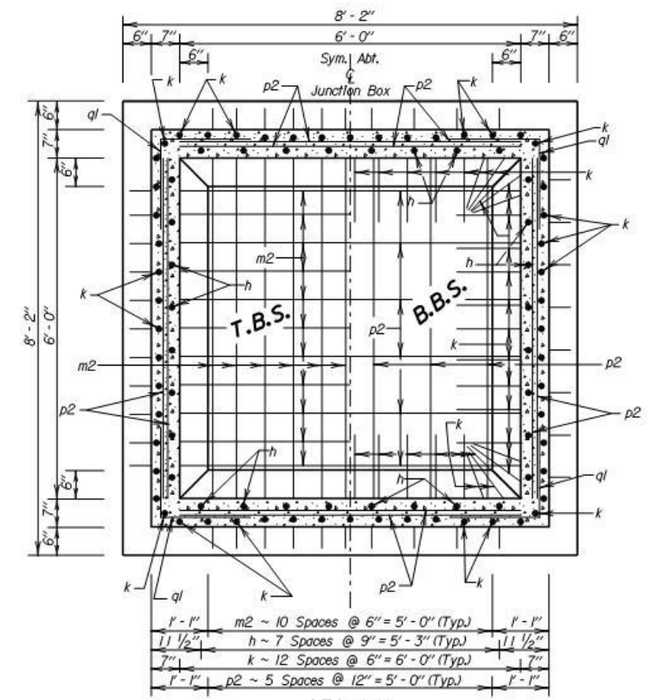

SEC. A-A

March 31, 2000

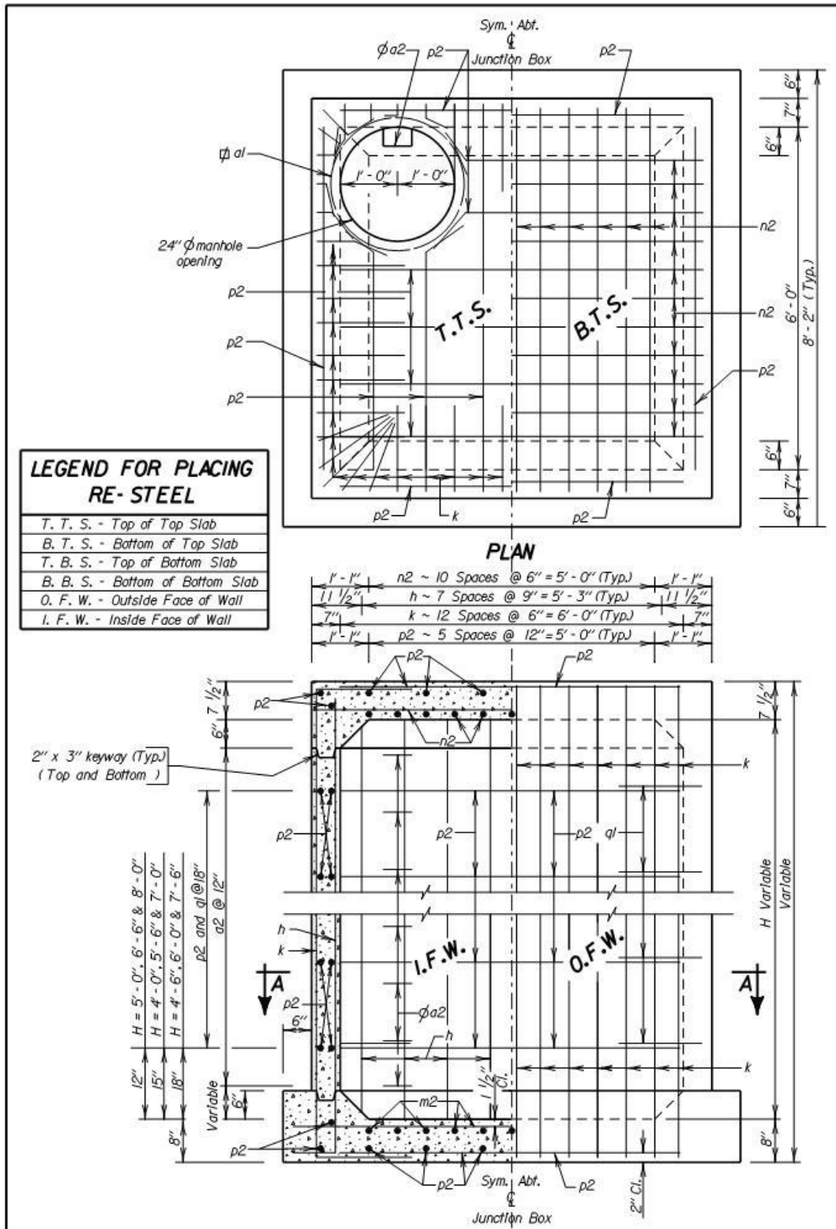

LEGEND FOR PLACING RE-STEEL

T. T. S. - Top of Top Slab
B. T. S. - Bottom of Top Slab
T. B. S. - Top of Bottom Slab
B. B. S. - Bottom of Bottom Slab
O. F. W. - Outside Face of Wall
I. F. W. - Inside Face of Wall

March 31, 2000

Published Date: 2nd Qtr. 2015	SDDOT	6' X 6' JUNCTION BOX	PLATE NUMBER 671.02 Sheet 3 of 3

SPECIFICATIONS

1. Design Specifications: AASHTO Specifications for Highway Bridges, 1996 Edition (Service Load).
2. Construction Specifications: South Dakota Standard Specifications for Roads and Bridges, Current Edition and required Provisions, Supplemental Specifications and/or Special Provisions as included in the Proposal.

DESIGN MIX OF CONCRETE

1. Mix shall be designed to produce a concrete having a minimum compressive strength of 4000 p.s.i. at 28 days.
2. Type II Cement is required.

GENERAL NOTES

1. Design Live Load: HS 20-44 and Alternate Loading. No construction loading in excess of legal Load was considered.
2. The design of the junction box is based on a maximum fill over the junction box of 5 feet.
3. Unit Stresses: Concrete fc=1600 p.s.i.
   Reinforcing Steel fs = 24000 p.s.i.
4. All reinforcing steel shall conform to ASTM A615 Grade 60.
5. All exposed edges shall be chamfered ¾".
6. Use 1" clear cover on all reinforcing steel except as shown.
7. The cost of furnishing and installing the manhole steps shall be incidental to the contract unit price per Lb. for "Reinforcing steel".
8. Reinforcing steel shall be cut and bent in field as necessary to fit pipe and manhole openings. (Pipe openings are not shown in these details.) Number, size and location of pipes entering junction box are shown elsewhere on plan sheets.
9. All pipes entering the junction box must fit between the inside faces of the walls.

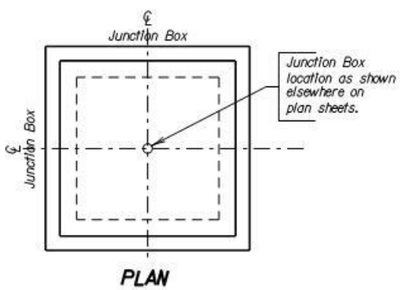

PLAN

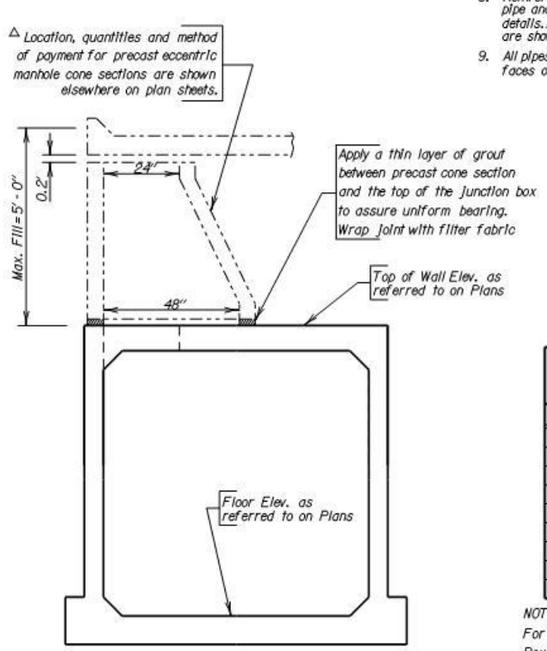

△DETAIL OF CONNECTION BETWEEN PRECAST ECCENTRIC MANHOLE CONE SECTION AND JUNCTION BOX

ITEM	Class M6 Concrete	Reinforcing Steel
UNIT	Cu. Yd.	Lb.
H = 4'-0"	7.09	1506
H = 4'-6"	7.42	1541
H = 5'-0"	7.75	1622
H = 5'-6"	8.08	1657
H = 6'-0"	8.40	1692
H = 6'-6"	8.73	1773
H = 7'-0"	9.06	1808
H = 7'-6"	9.39	1843
H = 8'-0"	9.71	1924

NOTE:
For informational purposes only, the estimated quantities for Junction Box height H are shown above. These quantities do not include quantity reduction for pipe openings, but do include the reduction for the 24" diameter manhole opening.

March 31, 2000

Published Date: 2nd Qtr. 2015 | SDDOT | 7'X 7' JUNCTION BOX | PLATE NUMBER 671.03 | Sheet 1 of 3

REINFORCING SCHEDULE

	Mk.	No.	Size	Length	Type
H = 4'-0"	Φgl	1	6	9'-0"	T3
	Φg2	4	-	——	-
	h25	40	4	5'-9"	17A
	k25	64	4	9'-3"	17
	m3	26	6	8'-9"	Str.
	n3	26	6	7'-9"	Str.
	p3	60	4	7'-0"	Str.
	gl	8	4	3'-6"	17A
H = 4'-6"	Φgl	1	6	9'-0"	T3
	Φg2	4	-	——	-
	h26	40	4	6'-3"	17A
	k26	64	4	9'-9"	17
	m3	26	6	8'-9"	Str.
	n3	26	6	7'-9"	Str.
	p3	60	4	7'-0"	Str.
	gl	8	4	3'-6"	17A
H = 5'-0"	Φgl	1	6	9'-0"	T3
	Φg2	5	-	——	-
	h27	40	4	6'-9"	17A
	k27	64	4	10'-3"	17
	m3	26	6	8'-9"	Str.
	n3	26	6	7'-9"	Str.
	p3	68	4	7'-0"	Str.
	gl	12	4	3'-6"	17A
H = 5'-6"	Φgl	1	6	9'-0"	T3
	Φg2	5	-	——	-
	h28	40	4	7'-3"	17A
	k28	64	4	10'-9"	17
	m3	26	6	8'-9"	Str.
	n3	26	6	7'-9"	Str.
	p3	68	4	7'-0"	Str.
	gl	12	4	3'-6"	17A
H = 6'-0"	Φgl	1	6	9'-0"	T3
	Φg2	6	-	——	-
	h29	40	4	7'-9"	17A
	k29	64	4	11'-3"	17
	m3	26	6	8'-9"	Str.
	n3	26	6	7'-9"	Str.
	p3	68	4	7'-0"	Str.
	gl	12	4	3'-6"	17A
H = 6'-6"	Φgl	1	6	9'-0"	T3
	Φg2	6	-	——	-
	h30	40	4	8'-3"	17A
	k30	64	4	11'-9"	17
	m3	26	6	8'-9"	Str.
	n3	26	6	7'-9"	Str.
	p3	76	4	7'-0"	Str.
	gl	16	4	3'-6"	17A
H = 7'-0"	Φgl	1	6	9'-0"	T3
	Φg2	7	-	——	-
	h31	40	4	8'-9"	17A
	k31	64	4	12'-3"	17
	m3	26	6	8'-9"	Str.
	n3	26	6	7'-9"	Str.
	p3	76	4	7'-0"	Str.
	gl	16	4	3'-6"	17A

Bending Details

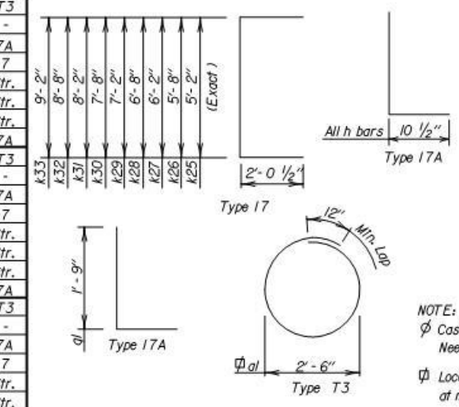

	Mk.	No.	Size	Length	Type
H = 7'-6"	Φgl	1	6	9'-0"	T3
	Φg2	7	-	——	-
	h32	40	4	9'-3"	17A
	k32	64	4	12'-9"	17
	m3	26	6	8'-9"	Str.
	n3	26	6	7'-9"	Str.
	p3	76	4	7'-0"	Str.
	gl	16	4	3'-6"	17A
H = 8'-0"	Φgl	1	6	9'-0"	T3
	Φg2	8	-	——	-
	h33	40	4	9'-9"	17A
	k33	64	4	13'-3"	17
	m3	26	6	8'-9"	Str.
	n3	26	6	7'-9"	Str.
	p3	84	4	7'-0"	Str.
	gl	20	4	3'-6"	17A

NOTE:
Φ Cast Iron Manhole Steps (R - 1980 - C) from Neenah Foundry or equivalant.

Φ Locate in center of top slab with 3" clearance at manhole opening.

All dimensions are out to out of bars.

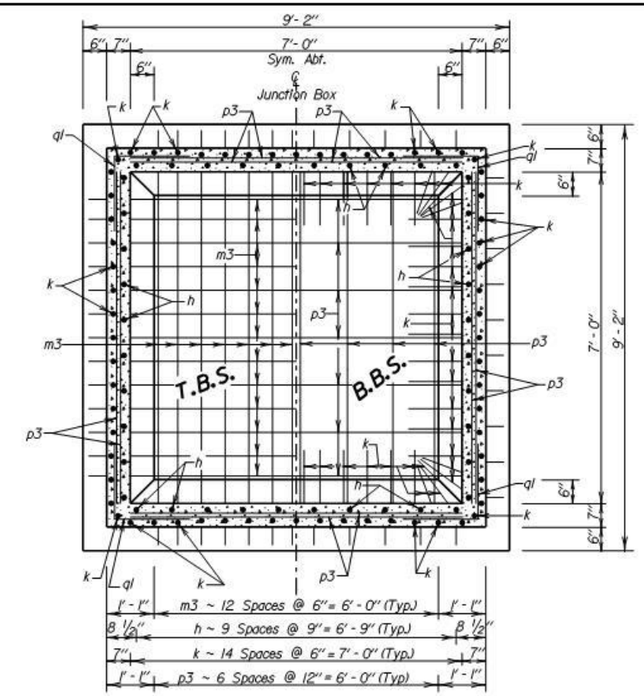

SEC. A-A

March 31, 2000

Published Date: 2nd Qtr. 2015 | SDDOT | 7'X 7' JUNCTION BOX | PLATE NUMBER 671.03 | Sheet 2 of 3

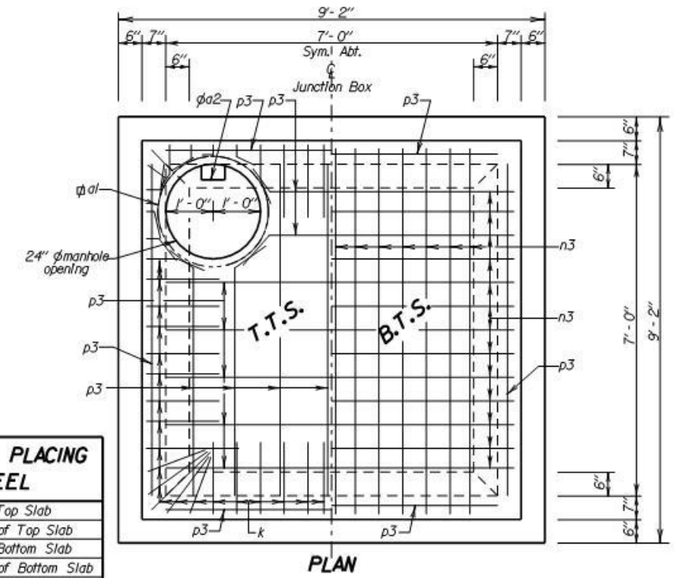

PLAN

LEGEND FOR PLACING RE-STEEL
T. T. S. - Top of Top Slab
B. T. S. - Bottom of Top Slab
T. B. S. - Top of Bottom Slab
B. B. S. - Bottom of Bottom Slab
O. F. W. - Outside Face of Wall
I. F. W. - Inside Face of Wall

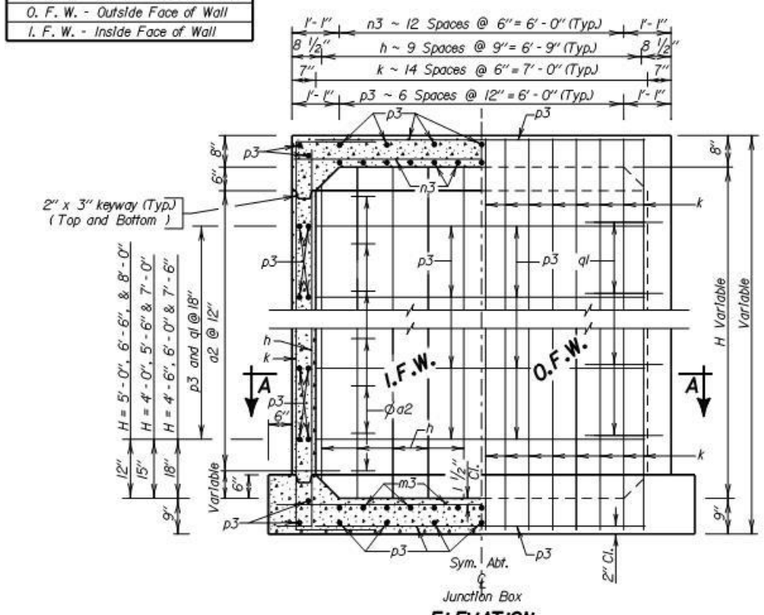

ELEVATION

March 31, 2000

Published Date: 2nd Qtr. 2015	SDDOT	7'X 7' JUNCTION BOX	PLATE NUMBER 671.03
			Sheet 3 of 3

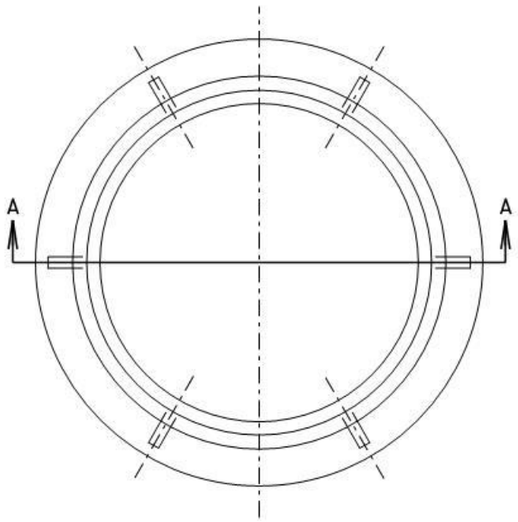

PLAN OF FRAME

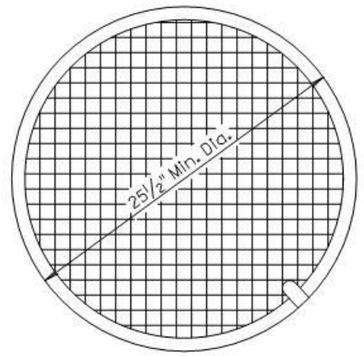

PLAN OF LID

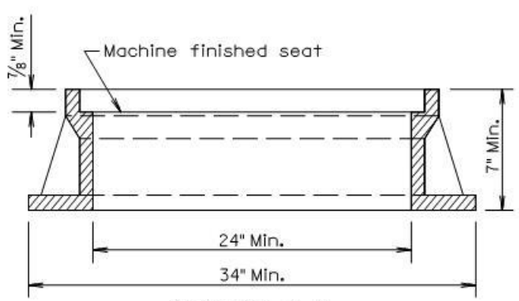

SECTION A-A

ASSEMBLED VIEW

TYPE	HEIGHT	MIN. WEIGHT
A7	7"	400Lbs.
A8	8"	440Lbs.
A9	9"	470Lbs.
A10	10"	480Lbs.

GENERAL NOTE:

Geometric pattern on top of lid other than that shown shall be approved by the Engineer.

March 31, 2000

Published Date: 2nd Qtr. 2015	SDDOT	TYPE A MANHOLE FRAME AND LID	PLATE NUMBER 671.10 Sheet 1 of 1

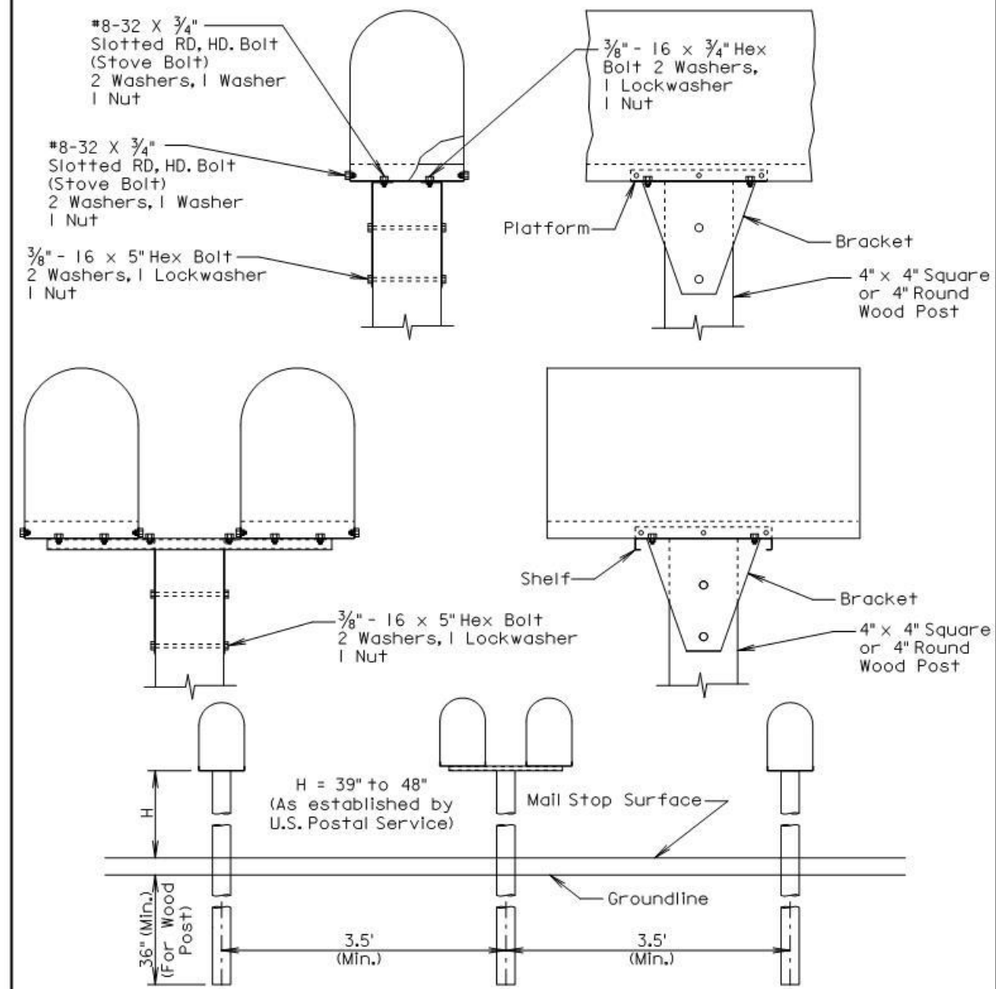

SPACING FOR MULTIPLE POST INSTALLATION

GENERAL NOTES:

The post support assemblies provided should be consistant throughout the project.

Single and double mailboxes may be in any sequence.

Post support assemblies shall be one from the approved products list, a 4"x4" or 4" round wood post, or an alternate post support assembly that meets the test level 3 crash testing requirements of NCHRP 350 or MASH.

Alternate mailbox support assemblies shall be approved by the Engineer prior to installation. The Contractor shall provide the Engineer written certification that the mailbox support assembly has met the crash testing requirements and will be installed in accordance with the manufacturer's installation instructions.

September 6, 2013

Published Date: 2nd Qtr. 2015	SDDOT	SINGLE AND DOUBLE MAILBOX ASSEMBLIES	PLATE NUMBER 900.02 Sheet 1 of 1

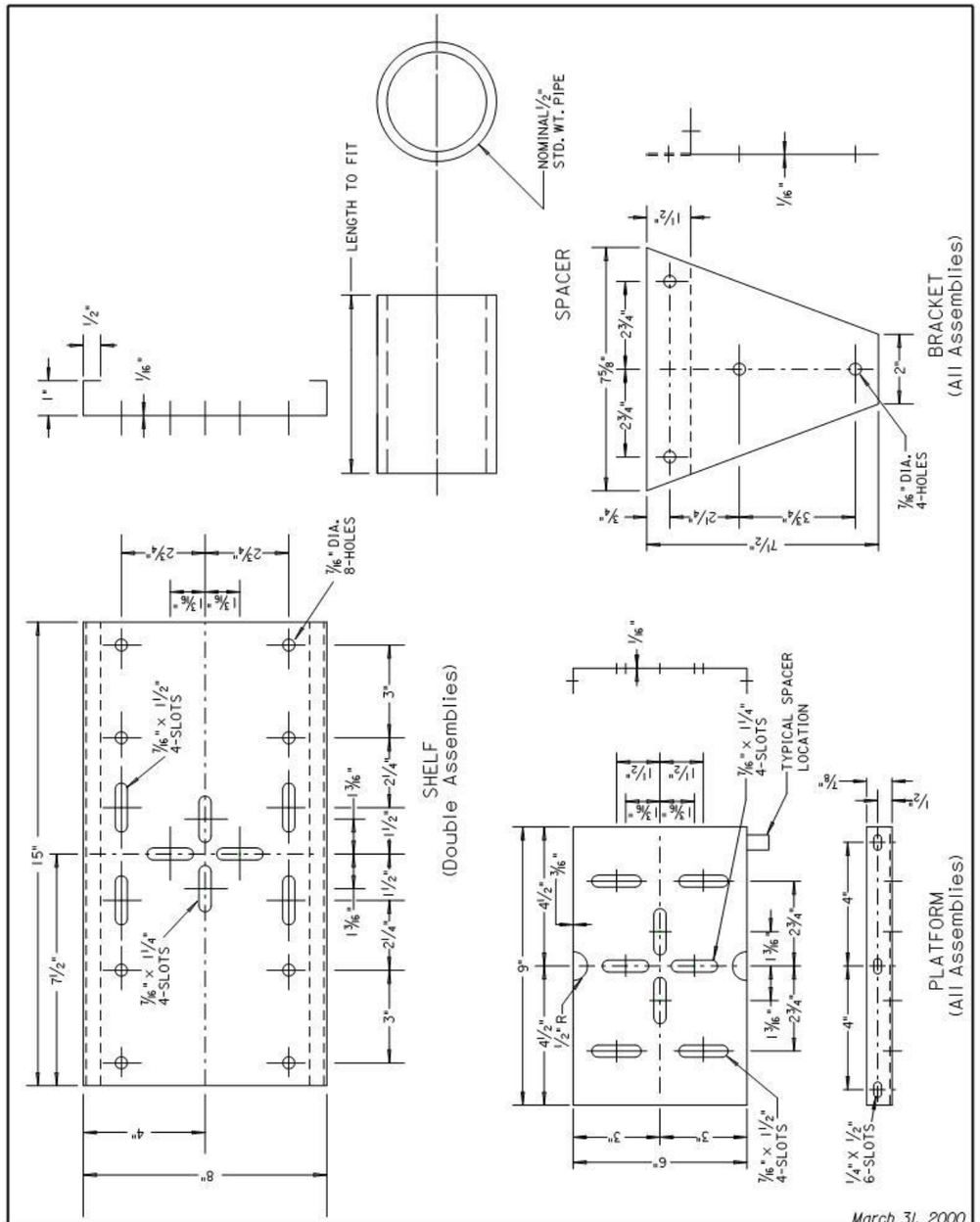

March 31, 2000

Published Date: 2nd Qtr. 2015	SDDOT	MAILBOX SUPPORT HARDWARE	PLATE NUMBER 900.03
			Sheet 1 of 1

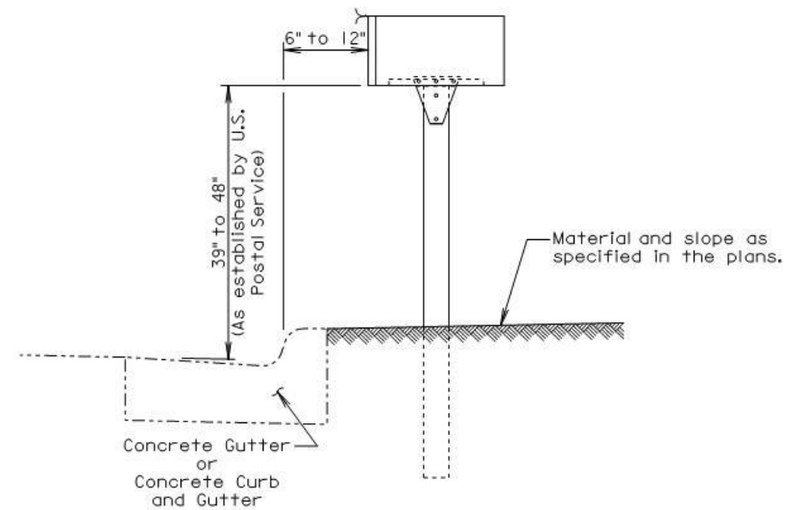

ELEVATION VIEW

GENERAL NOTES:

The post support assemblies provided should be consistant throughout the project.

Post support assemblies shall be one from the approved products list, a 4"x4" or 4" round wood post, or an alternate post support assembly that meets the test level 3 crash testing requirements of NCHRP 350 or MASH.

Alternate mailbox support assemblies shall be approved by the Engineer prior to installation. The Contractor shall provide the Engineer written certification that the mailbox support assembly has met the crash testing requirements and will be installed in accordance with the manufacturer's installation instructions.

February 10, 2014

Published Date: 2nd Qtr. 2015	SDDOT	MAILBOX ADJACENT TO CONCRETE GUTTER OR CONCRETE CURB AND GUTTER	PLATE NUMBER 900.05
			Sheet 1 of 1