FOR BIDDING PURPOSES ONLY

Section F: Surfacing Plans

INDEX OF SHEETS

F1 General Layout with Index
F2 - F14 Estimate of Quantities, Notes, Rates, and Tables
F15 - F16 In Place Typical Sections
F17 - F26 Typical Surfacing Sections
F27 - F43 PCC Pavement Joint Layouts
F44 - F45 I-190 Longitudinal Underdrains
F46 I-190 Longitudinal Underdrain Details
F47 - F58 Longitudinal Underdrains
F59 Longitudinal Underdrain Details
F60 - F61 Median Crossover Layouts
F62 - F73 Pavement Slope Layouts
F74 - F75 Manhole Box-Out Details
F76 Expansion Joint Special Details
F77 - F83 Standard Plates

END IM 1902(61)0
INTERSTATE 190
Station 155+33.00
14.87 Feet East & 4265.99 Feet North of the East Quarter of Section 35 - Township 2 North, Range 7 East

INTERSTATE 190
Station 154+00.00 - End Resurfacing

Sec. 26-T2N-R7E
Sec. 35-T2N-R7E

INTERSTATE 190
Station 149+60.00 - End Grading, Begin Resurfacing

END IM 1902(61)0
WEST BLVD.
Station 26+75.28 - End Grading

BEGIN IM 1902(61)0
WEST BLVD.
Station 10+24.43 - Begin Grading

BEGIN IM 1902(61)0
NORTH ST.
Station 209+01.71 - Begin Grading

BEGIN IM 1902(61)0
INTERSTATE 190
Station 100+20.00 = Station 70+19.00 on I 091-1(01). 465.08 Feet West & 1215.86 Feet South of the East Quarter of Section 35 - Township 2 North, Range 7 East
MRM = 0.12

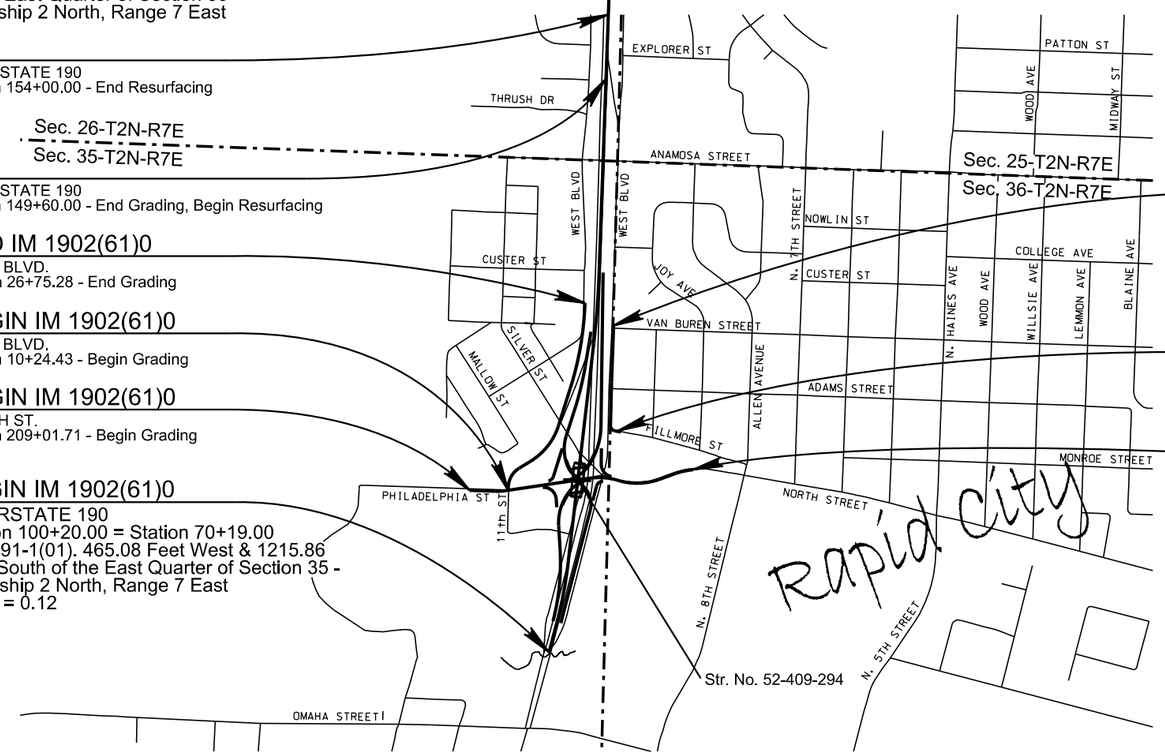

END IM 1902(61)0
WEST BLVD. NORTH
Station 58+65.61 - End Grading

BEGIN IM 1902(61)0
WEST BLVD. NORTH
50+24.42 - Begin Grading

END IM 1902(61)0
NORTH ST.
Station 224+72.00 - End Grading

Revised 06-08-2015 LLA

ESTIMATE OF QUANTITIES

	Bid Item Number	Item	Quantity	Unit
	009E3320	Checker	Lump Sum	LS
	120E0100	Unclassified Excavation, Digouts	50	CuYd
	120E6200	Water for Granular Material	803.8	MGal
*	120E6200	Water for Granular Material	1.9	MGal
	210E3000	Ordinary Roadway Shaping	0.010	Mile
	260E1010	Base Course	24,825.1	Ton
	260E1030	Base Course, Salvaged	26,042.9	Ton
*	260E1030	Base Course, Salvaged	162.7	Ton
	260E2030	Gravel Cushion, Salvaged	12,930.4	Ton
	260E2060	Gravel Cushion, Modified	2,597.6	Ton
	330E0010	MC-70 Asphalt for Prime	1.9	Ton
	330E0100	SS-1h or CSS-1h Asphalt for Tack	12.3	Ton
*	330E0100	SS-1h or CSS-1h Asphalt for Tack	0.1	Ton
	330E0210	SS-1h or CSS-1h Asphalt for Flush Seal	9.2	Ton
*	330E0210	SS-1h or CSS-1h Asphalt for Flush Seal	0.1	Ton
	330E2000	Sand for Flush Seal	174.5	Ton
*	330E2000	Sand for Flush Seal	0.7	Ton
	380E0050	8" Nonreinforced PCC Pavement	1,178.5	SqYd
	380E0070	9" Nonreinforced PCC Pavement	9,169.5	SqYd
	380E0110	11" Nonreinforced PCC Pavement	29,639.1	SqYd
	380E2564	4" Barrier Type Colored Median PCC Pavement	1,839.1	SqYd
	380E5010	Fast Track Concrete	408.7	SqYd
	380E6000	Dowel Bar	20,235	Each
	380E6110	Insert Steel Bar in PCC Pavement	418	Each
	634E0750	Temporary Concrete Barrier End Protection	2	Each
	634E0760	Temporary Concrete Barrier End Protection Module Set or Repair Kit	2	Each
*	680E0440	4" Slotted Corrugated Polyethylene Drainage Tubing	4,020	Ft
	680E0440	4" Slotted Corrugated Polyethylene Drainage Tubing	3,040	Ft
	680E2500	Porous Backfill	1,060.0	Ton
*	680E2500	Porous Backfill	590.6	Ton
*	831E0110	Type B Drainage Fabric	3,215	SqYd
	831E0400	Impermeable Plastic Membrane	116	SqYd

* - Denotes Non-Participating

ESTIMATE OF QUANTITIES – ALTERNATE A

	Bid Item Number	Item	Quantity	Unit
	320E0005	PG 58-34 Asphalt Binder	740.4	Ton
*	320E0005	PG 58-34 Asphalt Binder	2.4	Ton
*	320E1205	Class Q5R Hot Mixed Asphalt Concrete	57.0	Ton
	320E1205	Class Q5R Hot Mixed Asphalt Concrete	16,625.3	Ton
*	320E4000	Hydrated Lime	0.5	Ton
	320E4000	Hydrated Lime	164.7	Ton

* - Denotes Non-Participating

ESTIMATE OF QUANTITIES – ALTERNATE B

	Bid Item Number	Item	Quantity	Unit
	320E0005	PG 58-34 Asphalt Binder	676.4	Ton
*	320E0005	PG 58-34 Asphalt Binder	2.2	Ton
*	320E1205	Class Q5R Hot Mixed Asphalt Concrete	58.8	Ton
	320E1205	Class Q5R Hot Mixed Asphalt Concrete	17,074.6	Ton
*	320E4000	Hydrated Lime	0.5	Ton
	320E4000	Hydrated Lime	168.7	Ton

* - Denotes Non-Participating

SAWING IN EXISTING SURFACING

Where new Portland Cement Concrete Pavement (PCCP) or new asphalt concrete is placed adjacent to existing asphalt concrete or PCCP, the existing pavement shall be sawed full depth to a true line with a vertical face. No separate payment shall be made for sawing.

SURFACING THICKNESS DIMENSIONS

Plans tonnage will be applied even though the thickness may vary from that shown on the plans.

At those locations where material must be placed to achieve a required elevation, plans tonnage may be varied to achieve the required elevation.

UTILITIES

The Contractor shall contact the involved utility companies through South Dakota One Call (1-800-781-7474) prior to starting work. It shall be the responsibility of the Contractor to coordinate work with the utility owners to avoid damage to existing facilities.

Utilities are not planned to be affected on this project. If utilities are identified near the improvement area through the SD One Call Process as required by South Dakota Codified Law 49-7A and Administrative Rule Article 20:25, the Contractor shall contact the Engineer to determine modifications that will be necessary to avoid utility impacts.

CHECKING SPREAD RATES

The Contractor shall be responsible for checking the Gravel Cushion, Modified, Base Course, Gravel Cushion, Salvaged and Base Course, Salvaged spread rates and taking the weigh delivery tickets as the surfacing material arrives on the project and is placed onto the roadway.

The Contractor shall compute the required spread rates for each typical surfacing section and create a spread chart prior to the start of material delivery and placement. The Engineer will review and check the Contractor's calculations and spread charts. The station to station spread shall be written on each ticket as the surfacing material is delivered to the roadway.

At the end of each day's shift, the Contractor shall verify the following:

- All tickets are present and accounted for,
- The quantity summary for each item is calculated,
- The amount of material wasted if any,
- Each day's ticket summary is marked with the corresponding 'computed by',
- The ticket summary is initialed and certified that the delivered and placed quantity is correct.

All daily tickets and the summary by item shall be given to the Engineer no later than the following morning.

If the checker is not properly and accurately performing the required duties, the Contractor shall correct the problem or replace the checker with an individual capable of performing the duties to the satisfaction of the Engineer. Failure to do so will result in suspension of the work.

The Department will perform depth checks. The Contractor shall be responsible for placement of material to the correct depth unless otherwise directed by the Engineer. If the placed material is not within a tolerance of ±1/2 inch of the plan shown depth, the Contractor shall correct the problem at no additional cost to the Department. Excess material above the tolerance will not be paid for. Achieving the correct depth may require picking up and moving material or other action as required by the Engineer.

All costs for providing the Contractor furnished checker and performing all related duties shall be incidental to the contract lump sum price for "Checker". No allowances will be made to the contract lump sum price for Checker due to authorized quantity variations unless the quantities for the material being checked vary above or below the estimated quantities by more than 25 percent. Payment for the Checker shall then be increased or decreased by the same proportion as the placed material quantity bears to the estimated material quantity.

ORDINARY ROADWAY SHAPING

Ordinary Roadway Shaping shall be performed on the mainline from Sta. 149+60 to Sta. 154+00 in the southbound lanes in accordance with the Specifications.

Included in the Estimate of Surfacing Quantities are 7 M. Gallons of Water for Granular Material for shaping and recompaction.

UNCLASSIFIED EXCAVATION, DIGOUTS

Included in the Estimate of Quantities are 50 cubic yards of Unclassified Excavation, Digouts for the necessary removal of unstable material.

The Contractor must ensure any water that collects in the digouts can escape the subgrade. The Contractor can accomplish this by ensuring the digouts daylight to the inslope or a drain tube is placed at the bottom of the digouts and the outlet is placed at the closest available point.

BACKFILLING OF DIGOUTS

Included in the Estimate of Quantities are 100 tons of Gravel Cushion, Modified or Gravel Cushion, Salvaged and 1.2 Mgal of Water for Granular Material for backfilling of digouts of the existing surface at locations to be designated by the Engineer. Compaction of the Gravel Cushion, Modified or Gravel Cushion, Salvaged for the digouts shall be to the satisfaction of the Engineer.

MAINLINE CONSTRUCTION

Included in the Estimate of Quantities are 1,000 tons of Gravel Cushion, Modified or Gravel Cushion, Salvaged and 12 MGal of Water for Granular Material for mainline construction as required. The use of this material will be at the discretion of the Engineer.

CONSTRUCTION HAUL ROAD

Included in the Estimate of Quantities are 1,000 tons of Gravel Cushion, Modified or Gravel Cushion, Salvaged and 12 MGal of Water for Granular Material for the purpose of haul road construction. The use of this material will be at the discretion of the Contractor. Any additional construction and removal for the construction haul road shall be the Contractor's responsibility. The Contractor shall receive no additional compensation for this work.

Granular Material from the Construction Haul Road shall be removed during the Shoulder Shaping operation and may be reused as Base Course, Salvaged material.

SALVAGED MATERIAL

All salvaged asphalt mix and granular base material shall be used as Base Course, Salvaged or Gravel Cushion, Salvaged. An estimated 39,136 tons of material shall be stockpiled on the project site at locations approved by the Engineer. See Section B notes for Salvage and Stockpile Asphalt Mix and Granular Base Material for determining salvaged material. The quantity of salvaged material may vary from the plans.

No adjustment in the contract unit price for salvage material will be made because of a variation in salvaged material quantities.

RECLAIMED MATERIAL

PCC Pavement, Curb & Gutter, Concrete Median Barrier and PCC Sidewalk removed from within the project limits may be crushed and reused as Gravel Cushion, Salvaged or Base Course, Salvaged.

Granular Material removed from within the project limits may be reused as Base Course, Salvaged or Gravel Cushion, Salvaged.

Reclaimed material to be used as Base Course, Salvaged or Gravel Cushion, Salvaged on this project must meet plan note requirements and the Engineer's approval.

For informational purposes only, there is an estimated 36,108.9 cu.yds (68,246 tons) of granular material on this project that may be reused as Base Course, Salvaged or Gravel Cushion, Salvaged. Refer to the in place typical sections for location and depth of granular material. This quantity is based on a unit weight of 1.89 tons per cubic yard for the reclaimed granular aggregate. Stationing shown in this table is underlying plans stationing.

EXISTING 9" REINFORCED PCC PAVEMENT

The existing 9" Reinforced PCC Pavement is reinforced with welded wire fabric weighing not less than 60 lbs. per 100 sqft. Longitudinal wires to be #1 gauge – 6" C to C. Transverse wires to be #4 gauge -12" C to C..

Locations for concrete removal are provided in the "Table of Concrete Pavement Removal" in Section B.

Plans quantity will be the basis of measurement and payment for the removal of concrete pavement. For informational purposes only, there is an estimated 15,368 tons of PCC Pavement on this project that may be crushed and reused as Gravel Cushion, Salvaged. Refer to typical sections for location and depth of PCCP Removal. This quantity is based on a unit weight of 118 lbs. per cubic foot for the reclaimed concrete aggregate.

CLASS Q5R HOT MIXED ASPHALT CONCRETE

Asphalt concrete aggregates shall consist of salvaged asphalt concrete mix material (RAP) and virgin aggregate.

Virgin mineral aggregate shall be furnished by the Contractor.

Virgin mineral Aggregate for Class Q5R Hot Mixed Asphalt Concrete - Alternate A shall conform to the requirements of the Special Provision for Gyratory Controlled Quality Control/Quality Assurance Hot Mixed Asphalt Concrete Pavement for Class Q5 except for the following changes:

Mix Design Criteria:

Gyratory Compactive Effort:

	$N_{initial}$	N_{design}	$N_{maximum}$
Class Q5R	6	50	75

Virgin mineral Aggregate for Class Q5R Hot Mixed Asphalt Concrete - Alternate B shall consist of a minimum of 80 percent crushed limestone ledgerock and shall conform to the requirements of the Special Provision for Gyratory Controlled Quality Control/Quality Assurance Hot Mixed Asphalt Concrete Pavement for Class Q5 except for the following changes:

Mix Design Criteria:

Fine Aggregate Angularity:

	Minimum Uncompacted Void Content (%):
Class Q5R	43.0

Gyratory Compactive Effort:

	$N_{initial}$	N_{design}	$N_{maximum}$
Class Q5R	6	50	75

Voids in Mineral Aggregate (VMA):

	Minimum VMA (%):
Class Q5R	12.0

Pay Factor Attributes:

Air Voids:

	Air Voids (%):
Class Q5R	3.0 ±1.0

15,026 tons of Salvaged asphalt concrete mix material is available and shall be obtained from the stockpile site located in Section 5-T2N-R7E Meade County and may be used without further testing. The salvaged asphalt concrete mix material has been stockpiled since the summer of 2012 & 2013 and shall be crushed so that the maximum particle size in the cold feed will not exceed 1-1/2 inches (37.5 mm).

Screening or scalping of the RAP stockpile(s) will not be allowed.

The RAP material is royalty free to the Contractor.

The Class Q5R Asphalt Concrete shall include 20 percent salvaged asphalt concrete (RAP) in the mixture. Job mix formula tolerances for the RAP shall be ± 5 % from the target value.

All remaining requirements of the Special Provision for Class Q5 Hot Mixed Asphalt Concrete shall apply.

The asphalt concrete on the shoulders will not be compacted to a specified density. The shoulders shall be compacted using the same rolling pattern used on the adjacent mainline asphalt concrete or as directed by the Engineer.

FLUSH SEAL

Application of Flush Seal shall be completed within 10 working days following completion of the asphalt concrete surfacing.

Application of Flush Seal may be eliminated by the Engineer. If the paved surface remains tight, the Engineer shall notify the Contractor as soon as possible that the Flush Seal is unnecessary.

SAND FOR FLUSH SEAL

The sand application shall be placed over the entire width of the mainline pavement surface.

SUMMARY OF CLASS Q5R HOT MIXED ASPHALT CONCRETE – ALTERNATE A

Location	Class Q5R Hot Mixed Asphalt Concrete with Specified Density Compaction	Class Q5R Hot Mixed Asphalt Concrete without Specified Density Compaction
	(Tons)	(Tons)
I-190 Mainline		
Sta. 100+20 to Sta. 112+56.04 SB	2,438.6	---
Sta. 100+20 to Sta. 112+56.04 NB	2,462.6	---
Sta. 115+20.10 to Sta. 120+00 SB	937.0	---
Sta. 115+20.10 to Sta. 120+00 NB	937.0	---
I-190 Ramps		
Ramp A	993.0	---
Ramp B	668.8	---
Ramp C	736.2	---
Ramp D	302.4	---
Ramp E	192.2	---
Ramp F	119.4	---
Ramp G	194.4	---
Ramp H	269.0	---
Streets, Parking Areas, Approaches and Driveways		
North Street	1,530.6	---
West Boulevard	1,912.6	---
West Boulevard North	989.6	---
Howard Johnson's Entrance & Parking	---	42.2
Central High School Parking	---	708.4
Entrance to Central High School	---	65.8
West Alley	---	138.8
Philadelphia Street	---	42.0
Silver Street	---	190.2
Boegel Street	---	152.6
Adams Street	---	99.4
West Blvd. – Sta. 130+52 L	---	68.4
West Blvd N – Sta. 130+38 R	---	10.8
West Blvd N – Sta. 142+67 R	---	17.0
West Blvd N – Sta. 144+65 L	---	18.0
Additional City Pavement Areas	---	57.0
Median Crossovers	---	209.6
Guardrail Embankment	---	178.7
Totals:	14,683.4	1,998.9

Revised 06-08-2015 LLA

SUMMARY OF CLASS Q5R HOT MIXED ASPHALT CONCRETE – ALTERNATE B

Location	Class Q5R Hot Mixed Asphalt Concrete with Specified Density Compaction	Class Q5R Hot Mixed Asphalt Concrete without Specified Density Compaction
	(Tons)	(Tons)
I-190 Mainline		
Sta. 100+20 to Sta. 112+56.04 SB	2,504.8	---
Sta. 100+20 to Sta. 112+56.04 NB	2,529.0	---
Sta. 115+20.10 to Sta. 120+00 SB	962.3	---
Sta. 115+20.10 to Sta. 120+00 NB	962.3	---
I-190 Ramps		
Ramp A	1,019.8	---
Ramp B	686.8	---
Ramp C	756.2	---
Ramp D	310.8	---
Ramp E	197.4	---
Ramp F	122.4	---
Ramp G	199.8	---
Ramp H	276.4	---
Streets, Parking Areas, Approaches and Driveways		
North Street	1,572.0	---
West Boulevard	1,964.2	---
West Boulevard North	1,016.2	---
Howard Johnson's Entrance & Parking	---	43.4
Central High School Parking	---	727.6
Entrance to Central HS	---	67.4
West Alley	---	142.4
Philadelphia Street	---	43.4
Silver Street	---	195.8
Boegel Street	---	156.6
Adams Street	---	102.0
West Blvd. – Sta. 130+52 L	---	70.2
West Blvd N – Sta. 130+38 R	---	11.2
West Blvd N – Sta. 142+67 R	---	17.4
West Blvd N – Sta. 144+65 L	---	18.6
Additional City Pavement Areas	---	58.8
Median Crossovers	---	214.9
Guardrail Embankment	---	183.3
Totals:	15,080.4	2,053.0

BASE COURSE, SALVAGED

The Base Course, Salvaged shall be obtained from the stockpile site(s) provided by the Contractor from the material salvaged on this project and may be used without further quality and gradation testing.

Base Course, Salvaged taken from stockpile sites other than from the shoulder and inslope sites, shall be run over a 1 1/2 inch screen prior to placement.

All other requirements for Base Course, Salvaged shall apply.

ALKALI SILICA REACTIVITY -

Fine aggregate shall conform to Section 800.2 D. Alkali Silica Reactivity (ASR) Requirements.

Below is a list of known fine aggregate sources and the average corresponding 14 day expansion values:

Source	Location	Expansion Value
Bachman	Winner, SD	0.335*
Bitterman	Delmont, SD	0.316*
Concrete Materials	Corson, SD	0.170
Croell	Hot Springs, SD	0.089
Croell	Wasta, SD	0.212
Emme Sand & Gravel	Oneil, NE	0.217
Fisher S&G – Mickelson Pit	E. of Nisland, SD	0.129
Fisher S&G - Vallery Pit	Nisland, SD	0.110
Fisher S&G	Rapid City, SD	0.092
Fisher S&G	Spearfish, SD	0.053
Fisher S&G	Wasta, SD	0.159
Fuchs	Pickstown, SD	0.275*
Higman	Akron, IA	0.203
Higman	Hudson, SD	0.187
Hilde	Madison, SD	0.116
Jensen	Herried, SD	0.276*
L.G. Everist	Brookings, SD	0.186
L.G. Everist	Hawarden, IA	0.166
L.G. Everist	Summit, SD	0.178
Morris	Blunt, SD	0.192
Morris - Richards Pit	Onida, SD	0.188
Myrl & Roys - East Sioux Quarry	NE Sioux Falls, SD	0.214
Myrl & Roys - Nelson Pit	Sioux Falls, SD	0.156
Northern Concrete Agg.	Rauville, SD	0.113
Northern Concrete Agg.	Luverne, MN	0.133
Opperman - Gunvordahl Pit	Burke, SD	0.362*
Opperman - Cahoy Pit	Herrick, SD	0.307*
Opperman - Jones Pit	Burke, SD	0.321*
Opperman - Randall Pit	Pickstown, SD	0.239
Pete Lien & Sons	Creston, SD	0.158
Pete Lien & Sons	Oral, SD	0.129
Pete Lien & Sons	Wasta, SD	0.192
Thorpe Pit	Britton, SD	0.098
Wagner Building Supplies	Pickstown (Wagner), SD	0.241
Winter Brothers- Whitehead Pit	Brookings, SD	0.197

* These sources will require Type V cement in the concrete mix design and Class F (Modified) fly ash as specified.

The Department will use the running average of the last three known expansion test results or less for determining acceptability of source and the required Type of cement. These expansion results are reported in the preceding table. Additional testing, when requested by the Contractor, will be performed by the Department at the Contractor's expense.

The values listed in the table are intended for use in bidding. If a previously tested pit by SDDOT with acceptable test values (less than 0.250) is discovered after letting to require Type V cement (greater than 0.250) the Department will accept financial responsibility for the change from Type II to Type V cement.

Type II or Type V cement will not change the requirement for the fly ash. The cost for either type of cement shall be subsidiary to the contract item.

GRAVEL CUSHION, MODIFIED

Gravel Cushion, Modified shall be furnished by the Contractor and/or may be produced from the material removed from the project per the plan note requirements.

If the asphalt concrete removed from the project is used, the Contractor shall establish a percentage (± 5% tolerance) for each material to be blended during production of the Gravel Cushion, Modified. The stockpile(s) shall be uniformly blended at a Contractor furnished site.

Gravel Cushion, Modified shall conform to the following gradation:

Sieve	% Passing
Passing 1"	100%
Passing 3/4"	80-100%
Passing 1/2"	68-91%
Passing No. 4	46-70%
Passing No. 8	34-58%
Passing No. 40	13-35%
Passing No. 200	3.0-12.0%

All other requirements for Gravel Cushion shall apply.

8", 9" & 11" NONREINFORCED CONCRETE PAVEMENT

The fine aggregate shall be screened over a 1 inch square opening screen just prior to introduction into the concrete paving mix. The Contractor will screen all of the aggregate to prevent the incorporation of foreign materials (ie: mud balls) into the concrete mix.

Fine aggregate shall conform to Section 800.2 D., Alkali Silica Reactivity (ASR) Requirements, of the Specifications.

The transverse contraction joints shall be perpendicular to the centerline as detailed in the standard plates for PCC Pavement Dowel Bar Assembly for Transverse Contraction Joints and PCC Pavement Transverse Contraction Joint Spacing. In multilane areas the transverse contraction joints shall be perpendicular to the centerline and be in a straight line across the width of the pavement. In special situations the Engineer may pre-approve transverse contraction joints that do not meet these requirements. All nonconforming transverse contraction joints shall be removed at the Contractor's expense. Any method of placement that cannot produce these requirements shall not be allowed to continue.

There will be no direct payment for trimming of the Gravel Cushion, Modified. The trimming will be considered incidental to the related items required for PCC Pavement. Trimming shall be performed as required by Section 380.3 C. of the Specifications.

Automatic dowel bar inserters will not be allowed on this project.

A construction joint will be sawed whenever new concrete pavement is placed adjacent to existing concrete pavement.

Concrete used in Portland cement concrete pavement shall conform to the Special Provision for Contractor Furnished Mix Design for PCC Pavement.

Plot Scale - 1:200
Plotted From - tnpr18387
File - ...\pn\penn1162\NotesSectionF.dgn

8", 9" & 11" NONREINFORCED CONCRETE PAVEMENT - CONTINUED

The following locations shall be tested for smoothness with a Contractor furnished and operated 25 foot California style profilograph in accordance with Section 380.3 O.2. of the Specifications:

I-190 - Sta. 120+00 to Sta. 154+00 SBL Driving and Passing Lanes
I-190 - Sta. 120+00 to Sta. 149+60.00 NBL Driving and Passing Lanes

The concrete shall be placed with equipment operating from a preset grade line.

In addition to traditional field inspection of reinforcement, a Ground Penetrating Radar (GPR) unit may be used to verify reinforcement locations in the hardened concrete. The GPR may be used any time prior to the Acceptance of Field Work being issued. All costs related to corrective measures, including but not limited to concrete removal or cutting of reinforcement, price deducts, and delays to the project schedule shall be the responsibility of the Contractor.

11" NONREINFORCED PCC PAVEMENT

Location				NONREINFORCED PCC PAVEMENT
Sta.	to	Sta.	NB or SB	(SqYd)
I-190 Mainline				
120+00.00	to	122+60.94	SB	1,130.8
122+60.94	to	128+61.90	SB	3,611.0
128+61.90	to	138+30.00	SB	4,192.8
138+30.00	to	146+74.64	SB	3,647.0
146+74.94	to	149+60.00	SB	982.9
149+60.00	to	154+00.00	SB	1,515.6
*154+00.00	to	155+33.00	SB	103.4
120+00.00	to	127+00.53	NB	3,038.6
127+00.53	to	138+30.00	NB	6,328.8
138+30.00	to	146+74.64	NB	3,659.6
146+74.64	to	149+60.00	NB	982.9
*149+60.00	to	155+33.00	NB	445.7
		Total:		29,639.1

*Median pavement only

8" NONREINFORCED PCC PAVEMENT

Location			Ramp	NONREINFORCED PCC PAVEMENT
Sta	to	Sta.	NB or SB	(SqYd)
I-190 Outside Shoulder				
146+74.94	to	149+60.00	NB & SB	665.1
149+60.00	to	154+00.00	SB	513.3
		Total:		1,178.5

9" NONREINFORCED PCC PAVEMENT

Location				NONREINFORCED PCC PAVEMENT
Sta	to	Sta.	EB or WB	(SqYd)
North Street				
216+32.38	to	218+34.49	EB	722.8
218+34.49	to	221+85.48	EB	980.7
*221+85.48	to	224+72.00	EB	734.0
216+32.38	to	218+34.49	WB	1,220.1
218+34.49	to	221+85.48	WB	1,692.3
221+85.48	to	224+72.00	WB	1,018.4
I-190 Ramps			Ramp	
301+44.84	to	302+26.87	A	218.0
312+00.00	to	314+50.55	A	640.3
411+00.07	to	411+48.24	B	99.4
610+32.25	to	611+08.68	C	205.1
701+40.63	to	701+93.44	D	113.0
705+35.00	to	710+25.18	D	1,248.8
350+66.57	to	351+05.40	E	148.4
451+11.69	to	451+47.16	F	128.3
---	to	---	G	0.0
---	to	---	H	0.0
		Total:		9,169.5

*Does not include Fast Track Concrete at the West Entrance to Central High School

4" BARRIER TYPE COLORED MEDIAN PCC PAVEMENT

The color of the Colored Median Pavement shall match Kailua #677 by Davis Colors or equal as approved by the Engineer. The concrete shall be integrally colored per manufacturer recommendations. The surfaces shall be sealed according to the manufacturer's recommendations following the process. Joints and expansion material shall be required at regular intervals as approved by the Engineer. The cost of the coloring, sealing, jointing and expansion material shall be included the contract unit price per square yard for "4" Barrier Type Colored Median PCC Pavement."

TABLE OF 4" BARRIER TYPE COLORED MEDIAN PCC PAVEMENT

Location			Colored Median PCC Pavement Area
Sta	to	Sta.	(SqYd)
I-190 Mainline			
100+20.00	to	105+74.80	657.1
105+74.80	to	111+76.04	712.1
North Street			
218+34.49	to	220+49.90	198.5
220+49.90	to	221+85.23	271.4
		Total:	1,839.1

FAST TRACK CONCRETE

At specific locations (driveways, & blockouts) designated by the Engineer, Fast Tack Concrete may be used. The intent of the Fast Track Concrete is to ensure the new pavement can be opened to traffic within 24 hours after placement.

Fast Track Concrete shall be constructed according to plan details and Specifications for the 9" Nonreinforced PCC Pavement except as follows:

The Fast Track Concrete shall be designed to achieve a minimum compressive strength of 3800 psi in 24 hours. Use of a water reducer, accelerator, or a high range water reducer may be required to achieve the desired early strength. If any of these additives are used, they shall be compatible with all other ingredients of the mix. The minimum pounds of cement shall be 600 pounds per cubic yard of Type I, II, III, or V cement. In addition to the cement a minimum of 105 pounds per cubic yard of Fly Ash will be used in the mix. The coarse aggregate shall be a minimum of 53% of total aggregate weight per cubic yard. Coarse aggregate shall be crushed ledge rock, Size No. 1 or 15. The water cement ratio shall be as low as practical to achieve the desired results. The slump requirement will be limited to 4 inches maximum and the entrained air content shall be 4.5% to 7.0% after all admixtures are added and the concrete. The Contractor is responsible for the mix design used. The Contractor shall submit a mix design and supporting documentation to the Engineer for approval at least 2 weeks prior to use. The Department of Transportation's Office of Materials & Surfacing shall review and comment on the proposed mix design prior to its use.

FAST TRACK CONCRETE - CONTINUED

Fast Track Concrete shall be cured with Linseed Oil Base Emulsion Curing Compound. In addition, the concrete shall be immediately covered with a suitable insulation blanket consisting of a layer of closed cell polystyrene foam protected by at least one layer of plastic. The insulation blanket shall have an R-value of at least 0.5, as rated by the manufacturer. The insulation blanket shall be left in place, except for initial joint sawing operations, until the 3800 psi is attained. The initial contraction joint sawing shall be performed as soon as practical after placement to avoid random cracking.

The pavement may be opened to traffic, earlier than 24 hours, provided the compressive strength of 3800 psi has been attained. The final contraction joint sawing and sealing are not required at this time to open up pavement to traffic.

An estimated 29,639.1 square yards of 11" Nonreinforced PCC Pavement, 6,368.2 square yards of 9" Nonreinforced PCC Pavement, 1,178.5 square yards of 8" Nonreinforced PCC Pavement and 408.7 square yards of 9" Fast Track Concrete is to be used on this project. If more or less Fast Track Concrete is used, an equal amount shall be subtracted from or added to the total for 9" Nonreinforced PCC Pavement. All costs for Fast Track Concrete shall be incidental to the contract unit price per square yard for "Fast Track Concrete".

A double application of white pigmented membrane curing compound shall be used in accordance with the directions of the manufacturer.

TRANSVERSE CONTRACTION JOINTS

Silicone sealing operations shall be suspended per Specifications for seasonal restrictions (380.3 R.3). Hot poured elastic joint sealer may be temporarily placed during the seasonal restrictions of silicone sealing. If hot poured elastic joint sealer is used, it will be removed the following year and replaced with silicone sealant. All costs associated with the placement and removal of the hot poured elastic joint sealer, any additional joint cleaning, sawing, and traffic control shall be at the Contractor's expense with no additional payment.

BLOCKOUT AREAS

It is anticipated that there will be a minimum of 2 pavement blockouts (Entrance to Central High School and Entrance to Howard Johnsons).

TABLE OF DOWEL BARS

Location	1 ½" Bars	1 ¼" Bars
	Each	Each
I-190 Mainline, includes gore area		
Sta. 120+00 to Sta. 149+60 NB	6,434	---
Sta. 120+00 to Sta. 154+00 SB	7,156	---
I-190 Ramp		
Ramp A	---	622
Ramp B	---	119
Ramp C	---	174
Ramp D	---	879
Ramp E	---	128
Ramp F	---	133
North Street	---	4,551
Entrances		
Central High School	---	39
SUBTOTALS	13,590	6,645
TOTAL	20,235	

TIE BARS AND LONGITUDINAL JOINTS

The use of automatic tie bar inserters will only be allowed on the vertical edge of longitudinal construction joints. The use of automatic tie bar inserters will not be allowed on sawed longitudinal joints.

Tie bars shall be held in the specified position parallel to the slab surface and perpendicular to the centerline by a supporting device. Tie bars or tie bar baskets shall be securely staked to the roadbed and shall hold the bar at the correct spacing, alignment, and elevation. Tie bars shall be tied to at least one stake.

Tie bars will not require supports if inserted into the side of the pavement during slip form paving of the longitudinal construction joint operation. Failure to acquire the correct tie bar locations or position in the construction joint shall require the bars to be corrected and a change made to the operation which may include drilling and epoxy bars or other methods as approved by the Engineer.

The final position of each tie bar shall be within the following tolerances:

-- Vertical Placement: ± T/6 for any part of the tie bar (T = slab thickness)

-- Transverse Placement (side shift): ± 3 inches when measured perpendicular to the longitudinal joint line

If the tie bar does not meet the requirements and tolerances specified, corrective action shall be performed at the Contractor's expense to the satisfaction of the Engineer.

STEEL BAR INSERTION

The Contractor shall insert the Steel Bars (No. 5 x 24 inch epoxy coated deformed tie bars or 1¼ inch x 18 inch epoxy coated plain round dowel bars) into drilled holes in the existing concrete pavement. An epoxy resin adhesive must be used to anchor the steel bar in the drilled hole.

The steel bars shall be cut to the specified length by sawing or shearing and shall be free from burring or other deformations.

Epoxy resin adhesive shall be of the type intended for horizontal applications, and shall conform to the requirements of ASTM C 881, Type IV, Grade 3 (equivalent to AASHTO M235, Type IV, Grade 3).

The diameter of the drilled holes in the existing concrete pavement for the steel bars shall not be less than 1/8 inch nor more than 3/8 inch greater than the overall diameter of the steel bar. Holes drilled into the existing concrete pavement shall be located at mid-depth of the slab and true and normal. The drilled holes shall be blown out with compressed air using a device that will reach to the back of the hole to ensure that all debris or loose material has been removed prior to epoxy injection.

Mix the epoxy resin as recommended by the manufacturer and apply by an injection method approved by the Engineer. If an epoxy pump is utilized, it shall be capable of metering the components at the manufacturer's designated rate and be equipped with an automatic shut-off. The pump shall shut off when any of the components are not being metered at the designated rate. Fill the drilled holes 1/3 to 1/2 full of epoxy, or as recommended by the manufacturer, prior to insertion of the steel bar. Care shall be taken to prevent epoxy from running out of the horizontal holes prior to steel bar insertion. Rotate the steel bar during insertion to eliminate voids and ensure complete bonding of the bar. Insertion of the bars by the dipping method will not be allowed.

Cost for the epoxy resin adhesive, steel bars, drilling of holes, applying the adhesive, inserting the steel bars into the drilled holes and all other items incidental to the insertion of the steel bars shall be incidental to the contract unit price per each for INSERT STEEL BAR IN PCC PAVEMENT.

Epoxy coated plain round steel bars shall be inserted on 12 inch centers in the transverse joint. The first steel bar shall be placed a minimum of 3 inches and a maximum of 9 inches from the outside edge of the slab.

Epoxy coated deformed steel bars shall be inserted on 30 inch centers in the longitudinal joint and shall be placed a minimum of 15 inches from the existing transverse contraction joint.

TABLE OF STEEL BAR INSTALLATION

LOCATION	1-1/2" x 18" Plain Round Dowel Bars	No. 5 x 24" Deformed Tie Bars
I-190 Mainline		
Sta. 149+60 to Sta. 155+33 NBL	---	230
Sta. 149+60 NBL	42	---
Sta. 154+00 to Sta. 155+33 SBL	---	54
Sta. 154+00 SBL	42	---
North Street		
Sta. 224+72	50	---
Totals:	**134**	**284**

LOCATION OF CONCRETE PAVEMENT JOINTS

The location of joints, as shown on the "PCC Pavement Layout" sheets, are only approximate locations to be used as a guide in the final location of joints and to afford bidders a basis for estimating the construction costs of the joints. The final locations of the joints are to be designated by the Engineer during construction.

TINING

The surface of the I-190 mainline paving shall be longitudinally tined. All non string line machine tined areas shall be transverse tined. The surface of North Street paving shall be finished with a carpet drag finish.

MANHOLE BOX-OUT DETAILS

The Contractor shall construct box-outs for all manholes in the 9" and 11" Concrete Pavement according to the Box-Out Detail. Locations of Proposed Manholes and water valve boxes are shown on the Pavement Joint Layout Sheets.

I-190 UNDERDRAINS AND CUTOFF DRAINS

Mitigate the spring issues near Anamosa Street by replacing the existing underdrains with two underdrain systems paralleling I-190 from Station 130+24±.to Station 144+50±. A pair of cutoff drains will be installed in each set of lanes in conjunction with the mainline underdrains. After excavation of the undercut and reconstruction of the subgrade install the underdrains and associated cutoff drains as follows:

Southbound

Install a 4 inch underdrain approximately 1 foot behind the curb of I-190 from Station 130+24±, 45' Lt. to Station 144+50±, 45' Lt. The underdrain shall consist of 4 inch Slotted Corrugated Polyethylene Drainage Tubing placed in a 2 foot wide trench of variable depth. The Drainage Tubing shall be backfilled with Porous Backfill, base course, and fill material. The underdrain trench shall be graded to maintain a minimum of .01ft/ft or 1-% drop from beginning to outlet. The underdrain shall outlet into drop inlets located at approximately Station 130+24±, 41' Lt., Station 134+20±, 41' Lt., and Station 138+11±, 41' Lt. The underdrain tubing shall be inserted through the inlet wall a minimum of 6 inches above the flow line of the drop inlet. The underdrain/drop inlet junction shall be sealed with a poured concrete collar or other approved method to prevent migration of the porous backfill into the drop inlet.

A pair of cutoff drains shall be installed perpendicular to centerline and tee into the main underdrain at approximately Station 141+00± and Station 143+00±. The cutoff drains shall be installed in a 2 foot wide trench of variable depth. The depth of the trench will vary from 2 ½ feet at the median to approximately 3 feet at the intersection with the main underdrain. The trench shall be graded to maintain a minimum of .01ft/ft or 1-% drop from centerline to the longitudinal drain behind the left curb. Once the trench is excavated, Impermeable Plastic Membrane shall be placed on the trench bottom and against the downgrade side of the trench from the median to the back of curb. The upper limit of the membrane shall extend into the base course overlying the subgrade. The membrane shall be folded, not cut, to fit against the bottom and the downgrade side of the trench. This may be done by rolling out the membrane perpendicular to centerline, folding the membrane into the trench, and cutting off the excess membrane from the top of the trench. After the membrane is placed into the trench, place 4" Slotted Corrugated Polyethylene Drainage Tubing on top of the membrane in the center of the trench bottom. Using a snap coupler, tee the Slotted Tubing to the longitudinal drain and place in the center of the "unlined" trench and backfill both trenches with Porous Backfill. Replace base course and surfacing as needed.

Estimate of Quantities:

Impermeable Plastic Membrane	58 SqYd
4 inch Slotted Corrugated Polyethylene Drainage Tubing	1520 Feet
Porous Backfill	525 Tons

Northbound

Install a 4 inch underdrain approximately 1 foot behind the curb of I-190 from Station 130+24±, 45' Rt. to Station 144+50±,45' Rt. The underdrain shall consist of 4 inch Slotted Corrugated Polyethylene Drainage Tubing placed in a 2 foot wide trench of variable depth. The Drainage Tubing shall be backfilled with Porous Backfill, base course, and 1 foot of fill material. The underdrain trench shall be graded to maintain a minimum of .01ft/ft or 1-% drop from beginning to outlet. The underdrain shall outlet into drop inlets located at approximately Station 130+24±, 57' Rt., Station 134+22±, 49' Rt., and Station 138+08±, 41' Rt. The underdrain tubing shall be inserted through the inlet wall a minimum of 6 inches above the flow line of the drop inlet. The underdrain/drop inlet junction shall be sealed with a poured concrete collar or other approved method to prevent migration of the porous backfill into the drop inlet.

The cutoff drains shall be installed in a 2 foot wide trench of variable depth. The depth of the trench will vary from 2 ½ feet at the median to approximately 3 feet at the intersection with the main underdrain. The trench shall be graded to maintain a minimum of .01ft/ft or 1-% drop from centerline to the longitudinal drain behind the right curb. Once the trench is excavated, Impermeable Plastic Membrane shall be placed on the trench bottom and against the downgrade side of the trench from the median to the back of curb. The upper limit of the membrane shall extend into the base course overlying the subgrade. The membrane shall be folded, not cut, to fit against the bottom and the downgrade side of the trench. This may be done by rolling out the membrane perpendicular to centerline, folding the membrane into the trench, and cutting off the excess membrane from the top of the trench. After the membrane is placed into the trench, place 4" Slotted Corrugated Polyethylene Drainage Tubing on top of the membrane in the center of the trench bottom. Using a snap coupler, tee the Slotted Tubing to the longitudinal drain and place in the center of the "unlined" trench and backfill both trenches with Porous Backfill. Replace base course and surfacing as needed.

Estimate of Quantities:

Impermeable Plastic Membrane	58 SqYd
4 inch Slotted Corrugated Polyethylene Drainage Tubing	1520 Feet
Porous Backfill	535 Tons

General

The underdrains shall not be placed until the undercut has been excavated and the subgrade has been reconstructed to finished grade.

The drain locations and depths given are based on the best information available to the Geotechnical Engineering Activity. The actual field conditions may require that adjustments be made by the Project Engineer to provide for sufficient drainage. The Geotechnical Engineering Activity will be available for onsite assistance if necessary.

Care must be taken to insure that the membrane and drainage tubing are not damaged during construction. Sufficient cover material is to be placed over the cutoff drain before heavy equipment is allowed to work over the underdrain.

TEMPORARY CONCRETE BARRIER END PROTECTION

The Contractor shall furnish and install crash attenuators that meet the test level 3 crash testing requirements of NCHRP 350 or MASH at the ends of exposed concrete barriers. Crash attenuators shall be installed parallel to the roadway. The crash attenuator shall be attached to the concrete barrier with a transition that meets test level 3 requirements of NCHRP 350 or MASH at locations shown in the Table of Temporary Concrete Barrier End Protection. For bidirectional traffic, the transition shall be placed on both sides of the crash cushion and barrier.

The Contractor shall certify that the crash attenuator was installed according to the manufacturer's installation instructions and meets the test level 3 crash testing requirements of NCHRP 350 or MASH.

All costs for furnishing and installing the crash attenuator including transporting, initial setup, maintaining, removal, anchoring to the pavement, transitions to the concrete barrier(if required), materials, labor, equipment, and incidental items shall be paid for at the contract unit price per each for "Temporary Concrete Barrier End Protection".

Upon completion of the project, the crash attenuators and transitions shall remain the property of the Contractor.

Crash attenuators may need to be moved and reset to accommodate traffic flows after initial setup. All costs associated with removing the crash attenuator from initial placement and resetting at a new location shall be paid for at the contract unit price per each for "Remove and Reset Temporary Concrete Barrier End Protection." Additional payment will not be made for crash attenuators that are not immediately reset at a new location on the project and will be stored onsite until they are either reset or removed from the project as determined by the Engineer. Additional payment will not be made for minor adjustments.

The Contractor shall have replacement hardware/parts immediately available onsite for repairing the end protection to a condition that meets the Test Level 3 crash testing requirements of NCHRP 350 or MASH. The Contractor will be expected to repair the end protection within 24 hours after impact or damage. The Contractor shall supply two sets of replacement hardware/parts. One set of replacement hardware/parts is considered as the proper amount of materials to fix the crash attenuator after one vehicle hit. All costs for furnishing and delivering the replacement hardware/parts shall be incidental to the contract unit price per each for "Temporary Concrete Barrier End Module Set or Repair Kit". Payment will not be made for the Temporary Concrete Barrier End Module Set or Repair Kit in the event that repairs are not necessary.

TABLE OF TEMPORARY CONCRETE BARRIER END PROTECTION

Station	Location	Unidirectional/ Bidirectional	Quantity (Each)
152+72	Median	Bidirectional	1
155+33	Median	Bidirectional	1
		Total	2

UNDERDRAINS DESCRIPTION

Please refer to City of Rapid City Standard Specifications for Underdrains for city streets.

A. General

This work consists of subgrade drainage installations or repair of porous backfill and under-drain pipe or edge drain.

B. Related Work

Section 56 Concrete for Incidental Construction, Class M
Section 112 Select Granular Backfill
Section 202 Engineering Fabric

MATERIALS

A. Under-drain Pipe Trench Backfill Material

Under-drain Pipe Trench Backfill Material shall conform to the requirements of Section 112.

B. Under-drain Pipe or Tubing

1. Corrugated Polyethylene Drainage Tubing

Corrugated polyethylene drainage tubing, couplings, and fittings shall conform to the requirements of AASHTO M 252, except Section 6.4 is modified as follows:

The length of the individual slots on the four-inch to eight (4 – 8) inches diameter tubing shall not exceed 12 percent of the tubing inside nominal circumference.

Corrugated polyethylene drainage tubing for use as edge drain or subgrade drain shall be a prefabricated system utilizing polyethylene drainage tubing. It shall be a flexible composite capable of following an irregular trench wall.

Corrugated polyethylene pipe, couplings, and fittings shall conform to the requirements of AASHTO M 294.

Drainage tubing used as sub-drains or edge drains shall have cleanouts installed at the upper ends. In lieu of a cleanout, where directed or approved by the Engineer, a penetration into a storm sewer culvert, inlet or pipe will be acceptable. The distance between cleanouts shall not exceed 500 feet.

2. Profiled Wall PVC Pipe

In lieu of corrugated polyethylene tubing, a profiled wall PVC pipe may be substituted. PVC and fittings shall meet the physical requirement specified for polyethylene pipe and shall meet the material requirements of ASTM D 3034.

Drainage pipe used as sub-drains or edge drains shall have cleanouts installed at the upper ends. A penetration into a storm sewer culvert, inlet or pipe will be accepted in lieu of a cleanout, where direct by the Engineer. The distance between cleanouts shall not exceed 500 feet.

C. Drainage Fabric Material Drainage fabric material used to prevent soil migration into the under drain, shall conform to Section 202.

D. Concrete, where required, shall conform to the requirements of Class M5, Section 56.

E. Strip drain can be used as edge drain or subgrade drain with authorization of the Engineer. Strip drain used as edge drain or subgrade drain shall be a prefabricated system utilizing a ¾ in to 1 in thick by 12 in wide plastic double cuspated core wrapped on both sides with drainage fabric and having channels capable of accepting drainage water from both sides. It shall be a flexible composite capable of following an irregular trench wall.

CONSTRUCTION REQUIREMENTS

The trench to receive the under-drain shall be excavated to the lines shown on the plans or as staked by the Engineer. The trench bottom shall be shaped and tamped as required by the Engineer. Disposal of surplus excavation shall be made by the Contractor and shall be incidental to the under-drain construction.

Prior to placement of Under-drain Trench Backfill Material a layer of drainage fabric material shall be placed in the trench. The material shall be of sufficient width to totally wrap the bottom, sides and top of the Under-drain Pipe Trench Backfill Material and pipe or tubing. There shall be a minimum 12 inch overlap of drainage fabric material over the top of the Under-drain Pipe Trench Backfill Material. Longitudinal sections shall have a minimum 12 inch overlap end to end.

Prior to placement of perforated or corrugated under-drain pipe or tubing, a layer of Under-drain Pipe Trench Backfill Material shall be placed to the depth shown on the plans and shaped to receive the pipe or tubing.

Perforated under-drain pipe or tubing shall be laid with the symmetrically placed holes on the lower side. In outlet sections, the pipe or tubing shall be either non-perforated or the symmetrically placed holes shall be on the upper side. The sections shall be well bedded at all points throughout their entire length and securely bolted or banded together.

Under-drain Pipe Trench Backfill Material shall be placed without compaction, in one (1) foot layers. It shall be uniformly spread without segregation or contamination. Tarpaulins or other approved devices shall be used as guides to transport the backfill material from the hauling vehicle to the trench to prevent pulling dirt in with the backfill.

Satisfactory free and unobstructed outlets shall be provided for all drains. Where possible, all outlets shall have a twelve (12) inch free fall and shall be properly marked. All outlets to daylight shall be protected with a four-inch by four inch, six-foot guide post painted with two (2) coats of white paint. Outlets to underground storm sewer shall be sealed to the storm sewer with a concrete grout collar.

Drain installations and waste disposal shall be furnished and left in a neat appearing condition satisfactory to the Engineer.

METHOD OF MEASUREMENT

A. Under-drain Pipe Trench Backfill Material

Where a separate bid item for Under-drain Pipe Trench Backfill Material is included in the bid proposal, Under-drain Pipe Trench Backfill Material will be measured to the nearest one-tenth (0.1) ton utilizing certified weight tickets delivered to the Engineer or his representative within 48 hours of material delivery and placement. Excess material used to fill unauthorized or oversized trench widths or other dimensions will not be measured for payment.

B. Installed pipe quantities shall be determined by measuring from centerline to centerline of all pipe and fittings. Measurements shall be to the nearest whole foot.

BASIS OF PAYMENT

A. Under-drain Pipe Trench Backfill Material

Where a separate bid item for Under-drain Pipe Trench Backfill Material is included in the bid proposal, Under-drain Pipe Trench Backfill Material will be paid for at the contract unit price per ton. Where no such item is included, payment shall be incidental to the under-drain installation.

Payment for this item will include full compensation for furnishing the material, labor, equipment, and incidentals necessary.

B. Under-drain pipe or tubing will be paid for at the contract unit price per linear foot for the various types and classes of pipe or tubing and shall include pipe or tubing, necessary fittings, bands, bolts, wyes, elbows, gratings, lids, covers, guide posts, screens, breathers, excavation, backfilling, drainage fabric material, and handling waste disposal.

Estimate of Quantities:

North Street	
4 inch Slotted Corrugated Polyethylene Drainage Tubing	677 Feet
Type B Drainage Fabric	508 SqYd
Porous Backfill	88.8 Tons
West Boulevard	
4 inch Slotted Corrugated Polyethylene Drainage Tubing	2,768 Feet
Type B Drainage Fabric	2.235 SqYd
Porous Backfill	413.4 Tons
West Boulevard North	
4 inch Slotted Corrugated Polyethylene Drainage Tubing	575 Feet
Type B Drainage Fabric	472 SqYd
Porous Backfill	88.4 Tons

TABLE OF QUANTITIES – ALTERNATE A

LOCATION	WATER FOR GRANULAR MATERIAL	GRAVEL CUSHION, SALVAGED / GRAVEL CUSHION, MODIFIED	BASE COURSE, SALVAGED/ BASE COURSE	CLASS Q5R ASPHALT CONCRETE			PG 58-34 ASPHALT BINDER			ASPHALT FOR PRIME	HYDRATED LIME			ASPHALT FOR TACK		ASPHALT FOR FLUSH SEAL	SAND FOR FLUSH SEAL
				1st Lift	2nd Lift	Top Lift	1st Lift	2nd Lift	Top Lift		1st Lift	2nd Lift	Top Lift	2nd Lift	Top Lift		
Station to Station	(MGal)	(Ton)	(Ton)	(Ton)	(Ton)	(Ton)	(Ton)	(Ton)	(Ton)	(Ton)	(Ton)	(Ton)	(Ton)	(Ton)	(Ton)	(Ton)	(Ton)
I-190 Mainline SBL																	
100 + 20.00 to 105 + 93.14	49.1	---	4,092.3	509.6	509.6	339.7	22.7	22.7	15.1	---	5.0	5.0	3.4	0.6	0.6	0.6	12.1
105 + 93.14 to 112 + 52.27	42.0	---	3,502.2	404.9	404.9	269.9	18.0	18.0	12.0	---	4.0	4.0	2.7	0.5	0.5	0.5	9.6
115 + 17.87 to 120 + 00.00	28.0	---	2,335.5	351.4	351.4	234.2	15.7	15.7	10.4	---	3.5	3.5	2.3	0.4	0.4	0.4	8.4
120 + 00.00 to 122 + 60.94	4.2	346.0	---	---	---	---	---	---	---	---	---	---	---	---	---	---	---
122 + 60.94 to 128 + 61.90	12.8	1,064.0	---	---	---	---	---	---	---	---	---	---	---	---	---	---	---
128 + 61.90 to 138 + 30.00	15.5	1,288.8	---	---	---	---	---	---	---	---	---	---	---	---	---	---	---
138 + 30.00 to 146 + 74.64	13.5	1,121.7	---	---	---	---	---	---	---	---	---	---	---	---	---	---	---
146 + 74.64 to 149 + 60.00	6.3	527.2	---	---	---	---	---	---	---	---	---	---	---	---	---	---	---
149 + 60.00 to 154 + 00.00	9.8	812.9	---	---	---	---	---	---	---	---	---	---	---	---	---	---	---
154 + 00.00 to 155 + 33.00	0.4	31.0	---	---	---	---	---	---	---	---	---	---	---	---	---	---	---
I-190 Mainline NBL																	
100 + 20.00 to 105 + 74.80	48.6	---	4,051.6	506.4	506.4	337.5	22.6	22.6	15.0	---	5.0	5.0	3.3	0.6	0.6	0.6	12.0
105 + 74.80 to 112 + 52.27	43.3	---	3,610.4	417.1	417.1	278.1	18.6	18.6	12.4	---	4.1	4.1	2.8	0.5	0.5	0.5	9.9
115 + 17.87 to 120 + 00.00	30.8	---	2,568.9	351.4	351.4	234.2	15.7	15.7	10.4	---	3.5	3.5	2.3	0.4	0.4	0.4	8.4
120 + 00.00 to 127 + 00.53	11.2	932.8	---	---	---	---	---	---	---	---	---	---	---	---	---	---	---
127 + 00.53 to 138 + 30.00	22.6	1,881.3	---	---	---	---	---	---	---	---	---	---	---	---	---	---	---
138 + 30.00 to 146 + 74.64	13.5	1,124.9	---	---	---	---	---	---	---	---	---	---	---	---	---	---	---
146 + 74.64 to 149 + 60.00	6.3	527.2	---	---	---	---	---	---	---	---	---	---	---	---	---	---	---
149 + 60.00 to 155 + 33.00	1.6	133.7	---	---	---	---	---	---	---	---	---	---	---	---	---	---	---
I-190 Ramps																	
301 + 45.00 to 302 + 26.87	0.8	63.6	---	---	---	---	---	---	---	---	---	---	---	---	---	---	---
302 + 26.87 to 312 + 00.00	41.7	---	3,472.5	496.5	---	496.5	22.1	---	22.1	---	4.9	---	4.9	---	0.6	0.6	11.8
312 + 00.00 to 314 + 50.57	2.9	245.3	---	---	---	---	---	---	---	---	---	---	---	---	---	---	---
403 + 32.45 to 411 + 00.07	29.9	---	2,490.6	334.4	---	334.4	14.9	---	14.9	---	3.3	---	3.3	---	0.4	0.4	8.0
411 + 00.07 to 411 + 46.72	0.4	30.5	---	---	---	---	---	---	---	---	---	---	---	---	---	---	---
603 + 43.75 to 610 + 32.25	30.9	---	2,574.2	368.1	---	368.1	16.4	---	16.4	---	3.6	---	3.6	---	0.5	0.5	8.8
610 + 32.25 to 611 + 07.53	0.7	60.3	---	---	---	---	---	---	---	---	---	---	---	---	---	---	---
701 + 42.16 to 701 + 93.44	0.4	35.9	---	---	---	---	---	---	---	---	---	---	---	---	---	---	---
701 + 93.44 to 705 + 35.00	13.5	---	1,128.1	151.2	---	151.2	6.7	---	6.7	---	1.5	---	1.5	---	0.2	0.2	3.6
705 + 35.00 to 710 + 25.18	5.9	487.9	---	---	---	---	---	---	---	---	---	---	---	---	---	---	---
350 + 68.51 to 351 + 05.40	0.5	44.1	---	---	---	---	---	---	---	---	---	---	---	---	---	---	---
351 + 05.40 to 352 + 37.64	7.4	---	615.9	96.1	---	96.1	4.3	---	4.3	---	1.0	---	1.0	---	0.1	0.1	2.3
450 + 40.53 to 451 + 11.69	4.4	---	369.1	59.7	---	59.7	2.7	---	2.7	---	0.6	---	0.6	---	0.1	0.1	1.4
451 + 11.69 to 451 + 47.82	0.4	37.1	---	---	---	---	---	---	---	---	---	---	---	---	---	---	---
650 + 23.03 to 651 + 49.94	7.0	---	585.3	97.2	---	97.2	4.3	---	4.3	---	1.0	---	1.0	---	0.1	0.1	2.3
750 + 35.11 to 752 + 37.73	10.3	---	859.9	134.5	---	134.5	6.0	---	6.0	---	1.3	---	1.3	---	0.2	0.2	3.2
SubTotals this sheet:	516.6	10,796.2	32,256.5		10,250.6			456.7		0.0		101.4		8.2		5.2	101.8

Revised 06-08-2015 LLA

TABLE OF QUANTITIES – ALTERNATE A - CONTINUED

LOCATION	WATER FOR GRANULAR MATERIAL	GRAVEL CUSHION, SALVAGED / GRAVEL CUSHION, MODIFIED	BASE COURSE, SALVAGED/ BASE COURSE	CLASS Q5R ASPHALT CONCRETE			PG 58-34 ASPHALT BINDER			ASPHALT FOR PRIME	HYDRATED LIME			ASPHALT FOR TACK		ASPHALT FOR FLUSH SEAL	SAND FOR FLUSH SEAL
				1st Lift	2nd Lift	Top Lift	1st Lift	2nd Lift	Top Lift		1st Lift	2nd Lift	Top Lift	2nd Lift	Top Lift		
Station to Station	(MGal)	(Ton)	(Ton)	(Ton)	(Ton)	(Ton)	(Ton)	(Ton)	(Ton)	(Ton)	(Ton)	(Ton)	(Ton)	(Ton)	(Ton)	(Ton)	(Ton)
North Street																	
209 + 01.71 to 212 + 97.63	24.0	---	2,002.6	269.8	---	269.8	12.0	---	12.0	---	2.7	---	2.7	---	0.3	0.3	6.4
212 + 97.63 to 213 + 57.39	5.3	---	438.0	74.8	---	74.8	3.3	---	3.3	---	0.7	---	0.7	---	0.1	0.1	1.8
213 + 57.39 to 216 + 32.38	28.7	---	2,392.1	420.7	---	420.7	18.7	---	18.7	---	4.2	---	4.2	---	0.5	0.5	10.0
216 + 32.38 to 218 + 34.49	6.9	576.9	---	---	---	---	---	---	---	---	---	---	---	---	---	---	---
218 + 34.49 to 221 + 85.23	11.3	940.8	---	---	---	---	---	---	---	---	---	---	---	---	---	---	---
221 + 85.23 to 224 + 72.00	7.4	616.5	---	---	---	---	---	---	---	---	---	---	---	---	---	---	---
West Boulevard	70.5	---	5,872.6	956.3	---	956.3	42.6	---	42.6	---	9.5	---	9.5	---	1.2	1.2	22.7
West Boulevard North	36.6	---	3,048.6	494.8	---	494.8	22.0	---	22.0	---	4.9	---	4.9	---	0.6	0.6	11.8
Philadelphia Street		---	#	21.0	---	21.0	0.9	---	0.9	---	0.2	---	0.2	---	*	**	0.5
Silver Street	6.7	---	556.6	95.1	---	95.1	4.2	---	4.2	---	0.9	---	0.9	---	0.1	0.1	2.3
Boegel Street	5.7	---	471.4	76.3	---	76.3	3.4	---	3.4	---	0.8	---	0.8	---	0.1	0.1	1.8
Adams Street	3.4	---	282.3	49.7	---	49.7	2.2	---	2.2	---	0.5	---	0.5	---	0.1	0.1	1.2
West Alley	3.1	---	259.8	69.4	---	69.4	3.1	---	3.1	---	0.7	---	0.7	---	0.1	0.1	1.6
Entrance & Parking Area for Howard Johnson's	1.3	---	105.3	21.1	---	21.1	0.9	---	0.9	---	0.2	---	0.2	---	*	**	0.5
Entrance to Central High School West	3.8	---	318.5	32.9	---	32.9	1.5	---	1.5	---	0.3	---	0.3	---	*	**	0.8
Central High School Parking Area	18.8	---	1,567.9	354.2	---	354.2	15.8	---	15.8	---	3.5	---	3.5	---	0.4	0.4	8.4
West Blvd @ Sta. 130+52 Left	2.6	---	220.6	34.2	---	34.2	1.5	---	1.5	---	0.3	---	0.3	---	*	**	0.8
West Blvd North @ Sta. 130+38 Right	0.6	---	46.9	5.4	---	5.4	0.2	---	0.2	---	0.1	---	0.1	---	*	**	0.1
West Blvd North @ Sta. 142+67 Right	1.4	---	119.9	8.5	---	8.5	0.4	---	0.4	---	0.1	---	0.1	---	*	**	0.2
West Blvd @ Sta. 144+65 Left	0.5	---	45.0	9.0	---	9.0	0.4	---	0.4	---	0.1	---	0.1	---	*	**	0.2
Additional City Pavement Areas																	
North End of West Blvd	0.2	---	15.7	3.1	---	3.1	0.1	---	0.1	---	***	---	***	---	*	**	0.1
North End of West Blvd North	1.3	---	112.2	20.7	---	20.7	0.9	---	0.9	---	0.2	---	0.2	---	*	**	0.5
Van Buren Street	0.4	---	34.8	4.7	---	4.7	0.2	---	0.2	---	***	---	***	---	*	**	0.1
Backfilling of Dugouts	1.2	100.0	---	---	---	---	---	---	---	---	---	---	---	---	---	---	---
Mainline Construction	12.0	1,000.0	---	---	---	---	---	---	---	---	---	---	---	---	---	---	---
Construction Haul Road	12.0	1,000.0	---	---	---	---	---	---	---	---	---	---	---	---	---	---	---
Ordinary Roadway Shaping	7.0	---	---	---	---	---	---	---	---	---	---	---	---	---	---	---	---
Median Crossovers	4.7	---	395.0	78.6	78.6	52.4	3.6	3.6	2.3	---	0.7	0.7	0.7	0.1	0.1	0.1	1.9
SubTotals this sheet:	277.4	4,234.2	18,305.8		6,253.0			278.1		0.0		61.9		3.7		3.6	73.7

Revised 06-08-2015 LLA

TABLE OF QUANTITIES – ALTERNATE A - CONTINUED

LOCATION	WATER FOR GRANULAR MATERIAL	GRAVEL CUSHION, SALVAGED / GRAVEL CUSHION, MODIFIED	BASE COURSE, SALVAGED/ BASE COURSE	CLASS Q5R ASPHALT CONCRETE			PG 58-34 ASPHALT BINDER			ASPHALT FOR PRIME	HYDRATED LIME			ASPHALT FOR TACK		ASPHALT FOR FLUSH SEAL	SAND FOR FLUSH SEAL
Guardrail Embankment Quantities				1st Lift	2nd Lift	Top Lift	1st Lift	2nd Lift	Top Lift		1st Lift	2nd Lift	Top Lift	2nd Lift	Top Lift		
Station to Station	(MGal)	(Ton)	(Ton)	(Ton)	(Ton)	(Ton)	(Ton)	(Ton)	(Ton)	(Ton)	(Ton)	(Ton)	(Ton)	(Ton)	(Ton)	(Ton)	(Ton)
West Boulevard North																	
50+46.89 - 63.46' L to 58+42.51 - 24.38' L	2.0	---	164.1	---	---	36.9	---	---	1.6	0.4	---	---	0.4	---	0.1	0.1	---
I-190 Mainline SBL																	
Sta. 100+19.67 - 49.66' L to Sta. 106+71.79 - 82.03' L	1.3	---	106.2	---	---	23.9	---	---	1.1	0.3	---	---	0.2	---	0.1	0.1	---
Sta. 110+80.39 - 42.67' L to Sta. 112+68.54 - 45.67' L	0.4	---	32.1	---	---	7.2	---	---	0.3	0.1	---	---	0.1	---	*	**	---
Sta. 114+77.13 - 45.67' L to Sta. 117+67.24 - 42.67' L	0.6	---	49.0	---	---	11.0	---	---	0.5	0.1	---	---	0.1	---	*	**	---
Sta. 128+92.88 - 42.67' L to Sta. 118+20.27 - 141.83' L	3.3	274.1	---	---	---	40.4	---	---	1.8	0.4	---	---	0.4	---	0.1	0.1	---
Sta. 138+78.25 - 44.86' L to Sta. 141+41.54 - 42.67' L	0.8	68.2	---	---	---	10.0	---	---	0.4	0.1	---	---	0.1	---	*	**	---
I-190 Mainline NBL																	
Sta. 100+19.61 - 50.16' R to Sta. 102+64.32 - 60.72' R	0.5	---	40.8	---	---	9.2	---	---	0.4	0.1	---	---	0.1	---	*	**	---
Sta. 109+90.48 - 42.67' R to Sta. 112+93.01 - 45.67' R	0.6	---	51.2	---	---	11.5	---	---	0.5	0.1	---	---	0.1	---	*	**	---
Sta. 115+01.60 - 45.67' R to Sta. 116+51.98 - 45.67' R	0.3	---	25.0	---	---	5.7	---	---	0.3	0.1	---	---	0.1	---	*	**	---
Sta. 136+80.50 - 44.85' R to Sta. 139+56.63 - 45.67' R	0.9	71.3	---	---	---	10.5	---	---	0.5	0.1	---	---	0.1	---	*	**	---
Sta. 147+05.70 - 42.50' R to Sta. 150+31.78 - 46.00' R	1.0	84.0	---	---	---	12.4	---	---	0.6	0.1	---	---	0.1	---	*	**	---
Grand Totals:	805.7	15,528.0	51,030.7		16,682.3			742.8		1.9		165.2		12.4		9.3	175.5

* The total quantity of Asphalt for Tack (0.2 ton) in the asterisk marked locations is included in the Estimate of Quantities.

** The total quantity of Asphalt for Flush Seal (0.2 ton) in the double asterisk marked locations is included in the Estimate of Quantities.

*** The total quantity of Hydrated Lime (0.1 ton) in the triple asterisk marked locations is included in the Estimate of Quantities.

Granular material for Philadelphia Street approach is included in the North Street quantities.

TABLE OF QUANTITIES – ALTERNATE B

LOCATION	WATER FOR GRANULAR MATERIAL	GRAVEL CUSHION, SALVAGED / GRAVEL CUSHION, MODIFIED	BASE COURSE, SALVAGED/ BASE COURSE	CLASS Q5R ASPHALT CONCRETE			PG 58-34 ASPHALT BINDER			ASPHALT FOR PRIME	HYDRATED LIME			ASPHALT FOR TACK		ASPHALT FOR FLUSH SEAL	SAND FOR FLUSH SEAL
				1st Lift	2nd Lift	Top Lift	1st Lift	2nd Lift	Top Lift		1st Lift	2nd Lift	Top Lift	2nd Lift	Top Lift		
Station to Station	(MGal)	(Ton)	(Ton)	(Ton)	(Ton)	(Ton)	(Ton)	(Ton)	(Ton)	(Ton)	(Ton)	(Ton)	(Ton)	(Ton)	(Ton)	(Ton)	(Ton)
I-190 Mainline SBL																	
100 + 20.00 to 105 + 93.14	49.1	---	4092.3	523.4	523.4	349.0	20.7	20.7	13.8	---	5.2	5.2	3.5	0.6	0.6	0.6	12.1
105 + 93.14 to 112 + 52.27	42.0	---	3502.2	415.9	415.9	277.2	16.5	16.5	11.0	---	4.1	4.1	2.7	0.5	0.5	0.5	9.6
115 + 17.87 to 120 + 00.00	28.0	---	2335.5	360.9	360.9	240.5	14.3	14.3	9.5	---	3.6	3.6	2.4	0.4	0.4	0.4	8.4
120 + 00.00 to 122 + 60.94	4.2	346.0	---	---	---	---	---	---	---	---	---	---	---	---	---	---	---
122 + 60.94 to 128 + 61.90	12.8	1064.0	---	---	---	---	---	---	---	---	---	---	---	---	---	---	---
128 + 61.90 to 138 + 30.00	15.5	1288.8	---	---	---	---	---	---	---	---	---	---	---	---	---	---	---
138 + 30.00 to 146 + 74.64	13.5	1121.7	---	---	---	---	---	---	---	---	---	---	---	---	---	---	---
146 + 74.64 to 149 + 60.00	6.3	527.2	---	---	---	---	---	---	---	---	---	---	---	---	---	---	---
149 + 60.00 to 154 + 00.00	9.8	812.9	---	---	---	---	---	---	---	---	---	---	---	---	---	---	---
154 + 00.00 to 155 + 33.00	0.4	31.0	---	---	---	---	---	---	---	---	---	---	---	---	---	---	---
I-190 Mainline NBL																	
100 + 20.00 to 105 + 74.80	48.6	---	4051.6	520.0	520.0	346.6	20.6	20.6	13.7	---	5.1	5.1	3.4	0.6	0.6	0.6	12.0
105 + 74.80 to 112 + 52.27	43.3	---	3610.4	428.4	428.4	285.6	17.0	17.0	11.3	---	4.2	4.2	2.8	0.5	0.5	0.5	9.9
115 + 17.87 to 120 + 00.00	30.8	---	2568.9	360.9	360.9	240.5	14.3	14.3	9.5	---	3.6	3.6	2.4	0.4	0.4	0.4	8.4
120 + 00.00 to 127 + 00.53	11.2	932.8	---	---	---	---	---	---	---	---	---	---	---	---	---	---	---
127 + 00.53 to 138 + 30.00	22.6	1881.3	---	---	---	---	---	---	---	---	---	---	---	---	---	---	---
138 + 30.00 to 146 + 74.64	13.5	1124.9	---	---	---	---	---	---	---	---	---	---	---	---	---	---	---
146 + 74.64 to 149 + 60.00	6.3	527.2	---	---	---	---	---	---	---	---	---	---	---	---	---	---	---
149 + 60.00 to 155 + 33.00	1.6	133.7	---	---	---	---	---	---	---	---	---	---	---	---	---	---	---
I-190 Ramps																	
301 + 45.00 to 302 + 26.87	0.8	63.6	---	---	---	---	---	---	---	---	---	---	---	---	---	---	---
302 + 26.87 to 312 + 00.00	41.7	---	3472.5	509.9	---	509.9	20.2	---	20.2	---	5.0	---	5.0	---	0.6	0.6	11.8
312 + 00.00 to 314 + 50.57	2.9	245.3	---	---	---	---	---	---	---	---	---	---	---	---	---	---	---
403 + 32.45 to 411 + 00.07	29.9	---	2490.6	343.4	---	343.4	13.6	---	13.6	---	3.4	---	3.4	---	0.4	0.4	8.0
411 + 00.07 to 411 + 46.72	0.4	30.5	---	---	---	---	---	---	---	---	---	---	---	---	---	---	---
603 + 43.75 to 610 + 32.25	30.9	---	2574.2	378.1	---	378.1	15.0	---	15.0	---	3.7	---	3.7	---	0.5	0.5	8.8
610 + 32.25 to 611 + 07.53	0.7	60.3	---	---	---	---	---	---	---	---	---	---	---	---	---	---	---
701 + 42.16 to 701 + 93.44	0.4	35.9	---	---	---	---	---	---	---	---	---	---	---	---	---	---	---
701 + 93.44 to 705 + 35.00	13.5	---	1128.1	155.4	---	155.4	6.2	---	6.2	---	1.5	---	1.5	---	0.2	0.2	3.6
705 + 35.00 to 710 + 25.18	5.9	487.9	---	---	---	---	---	---	---	---	---	---	---	---	---	---	---
350 + 68.51 to 351 + 05.40	0.5	44.1	---	---	---	---	---	---	---	---	---	---	---	---	---	---	---
351 + 05.40 to 352 + 37.64	7.4	---	615.9	98.7	---	98.7	3.9	---	3.9	---	1.0	---	1.0	---	0.1	0.1	2.3
450 + 40.53 to 451 + 11.69	4.4	---	369.1	61.2	---	61.2	2.4	---	2.4	---	0.6	---	0.6	---	0.1	0.1	1.4
451 + 11.69 to 451 + 47.82	0.4	37.1	---	---	---	---	---	---	---	---	---	---	---	---	---	---	---
650 + 23.03 to 651 + 49.94	7.0	---	585.3	99.9	---	99.9	4.0	---	4.0	---	1.0	---	1.0	---	0.1	0.1	2.3
750 + 35.11 to 752 + 37.73	10.3	---	859.9	138.2	---	138.2	5.5	---	5.5	---	1.4	---	1.4	---	0.2	0.2	3.2
SubTotals this sheet:	516.6	10,796.2	32,256.5		10,528.0			417.2		0.0		104.0		8.2		5.2	101.8

Revised 06-08-2015 LLA

TABLE OF QUANTITIES – ALTERNATE B – CONTINUED

LOCATION	WATER FOR GRANULAR MATERIAL	GRAVEL CUSHION, SALVAGED / GRAVEL CUSHION, MODIFIED	BASE COURSE, SALVAGED/ BASE COURSE	CLASS Q5R ASPHALT CONCRETE			PG 58-34 ASPHALT BINDER			ASPHALT FOR PRIME	HYDRATED LIME			ASPHALT FOR TACK		ASPHALT FOR FLUSH SEAL	SAND FOR FLUSH SEAL
				1st Lift	2nd Lift	Top Lift	1st Lift	2nd Lift	Top Lift		1st Lift	2nd Lift	Top Lift	2nd Lift	Top Lift		
Station to Station	(MGal)	(Ton)	(Ton)	(Ton)	(Ton)	(Ton)	(Ton)	(Ton)	(Ton)	(Ton)	(Ton)	(Ton)	(Ton)	(Ton)	(Ton)	(Ton)	(Ton)
North Street																	
209 + 01.71 to 212 + 97.63	24.0	---	2002.6	277.0	---	277.0	11.0	---	11.0	---	2.7	---	2.7	---	0.3	0.3	6.4
212 + 97.63 to 213 + 57.39	5.3	---	438.0	76.9	---	76.9	3.0	---	3.0	---	0.8	---	0.8	---	0.1	0.1	1.8
213 + 57.39 to 216 + 32.38	28.7	---	2392.1	432.1	---	432.1	17.1	---	17.1	---	4.3	---	4.3	---	0.5	0.5	10.0
216 + 32.38 to 218 + 34.49	6.9	576.9	---	---	---	---	---	---	---	---	---	---	---	---	---	---	---
218 + 34.49 to 221 + 85.23	11.3	940.8	---	---	---	---	---	---	---	---	---	---	---	---	---	---	---
221 + 85.23 to 224 + 72.00	7.4	616.5	---	---	---	---	---	---	---	---	---	---	---	---	---	---	---
West Boulevard West	70.5	---	5872.6	982.1	---	982.1	38.9	---	38.9	---	9.7	---	9.7	---	1.2	1.2	22.7
West Boulevard North	36.6	---	3048.6	508.1	---	508.1	20.1	---	20.1	---	5.0	---	5.0	---	0.6	0.6	11.8
Philadelphia Street		---	#	21.7	---	21.7	0.9	---	0.9	---	0.2	---	0.2	---	*	**	0.5
Silver Street	6.7	---	556.6	97.9	---	97.9	3.9	---	3.9	---	1.0	---	1.0	---	0.1	0.1	2.3
Boegel Street	5.7	---	471.4	78.3	---	78.3	3.1	---	3.1	---	0.8	---	0.8	---	0.1	0.1	1.8
Adams Street	3.4	---	282.3	51.0	---	51.0	2.0	---	2.0	---	0.5	---	0.5	---	0.1	0.1	1.2
West Alley	3.1	---	259.8	71.2	---	71.2	2.8	---	2.8	---	0.7	---	0.7	---	0.1	0.1	1.6
Entrance & Parking Area for Howard Johnson's	1.3	---	105.3	21.7	---	21.7	0.9	---	0.9	---	0.2	---	0.2	---	*	**	0.5
Entrance to Central High School West	3.8	---	318.5	33.7	---	33.7	1.3	---	1.3	---	0.3	---	0.3	---	*	**	0.8
Central High School Parking Area	18.8	---	1567.9	363.8	---	363.8	14.4	---	14.4	---	3.6	---	3.6	---	0.4	0.4	8.4
West Blvd West @ Sta. 130+52 Left	2.6	---	220.6	35.1	---	35.1	1.4	---	1.4	---	0.3	---	0.3	---	*	**	0.8
West Blvd North @ Sta. 130+38 Right	0.6	---	46.9	5.6	---	5.6	0.2	---	0.2	---	0.1	---	0.1	---	*	**	0.1
West Blvd North @ Sta. 142+67 Right	1.4	---	119.9	8.7	---	8.7	0.3	---	0.3	---	0.1	---	0.1	---	*	**	0.2
West Blvd West @ Sta. 144+65 Left	0.5	---	45.0	9.3	---	9.3	0.4	---	0.4	---	0.1	---	0.1	---	*	**	0.2
Additional City Pavement Areas - Nonparticipating Bid Items																	
North End of West Blvd West	0.2	---	15.7	3.2	---	3.2	0.1	---	0.1	---	***	---	***	---	*	**	0.1
North End of West Blvd North	1.3	---	112.2	21.3	---	21.3	0.8	---	0.8	---	0.2	---	0.2	---	*	**	0.5
Van Buren Street	0.4	---	34.8	4.9	---	4.9	0.2	---	0.2	---	***	---	***	---	*	**	0.1
Backfilling of Dugouts	1.2	100.0	---	---	---	---	---	---	---	---	---	---	---	---	---	---	---
Mainline Construction	12.0	1,000.0	---	---	---	---	---	---	---	---	---	---	---	---	---	---	---
Construction Haul Road	12.0	1,000.0	---	---	---	---	---	---	---	---	---	---	---	---	---	---	---
Ordinary Roadway Shaping	7.0	---	---	---	---	---	---	---	---	---	---	---	---	---	---	---	---
Median Crossovers	4.7	---	395.0	80.6	80.6	53.7	3.3	3.3	2.0	---	0.7	0.7	0.7	0.1	0.1	0.1	1.9
SubTotals this sheet:	277.4	4,234.2	18,305.8	---	6,422.1	---	---	254.2	---	0.0	---	63.3	---	3.7		3.6	73.7

Plot Scale - 1:200
Plotted From - trpr18387
File - ...\prj\penn1162\NotesSectionF.dgn

Revised 06-08-2015 LLA

TABLE OF QUANTITIES – ALTERNATE B – CONTINUED

LOCATION	WATER FOR GRANULAR MATERIAL	GRAVEL CUSHION, SALVAGED / GRAVEL CUSHION, MODIFIED	BASE COURSE, SALVAGED/ BASE COURSE	CLASS Q5R ASPHALT CONCRETE			PG 58-34 ASPHALT BINDER			ASPHALT FOR PRIME	HYDRATED LIME			ASPHALT FOR TACK		ASPHALT FOR FLUSH SEAL	SAND FOR FLUSH SEAL
Guardrail Embankment Quantities				1st Lift	2nd Lift	Top Lift	1st Lift	2nd Lift	Top Lift		1st Lift	2nd Lift	Top Lift	2nd Lift	Top Lift		
Station to Station	(MGal)	(Ton)	(Ton)	(Ton)	(Ton)	(Ton)	(Ton)	(Ton)	(Ton)	(Ton)	(Ton)	(Ton)	(Ton)	(Ton)	(Ton)	(Ton)	(Ton)
West Boulevard North																	
50+46.89 - 63.46' L to 58+42.51 - 24.38' L	2.0	---	164.1	---	---	37.9	---	---	1.5	0.4	---	---	0.4	---	0.1	0.1	---
I-190 Mainline SBL																	
Sta. 100+19.67 - 49.66' L to Sta. 106+71.79 - 82.03' L	1.3	---	106.2	---	---	24.5	---	---	1.0	0.3	---	---	0.2	---	0.1	0.1	---
Sta. 110+80.39 - 42.67' L to Sta. 112+68.54 - 45.67' L	0.4	---	32.1	---	---	7.4	---	---	0.3	0.1	---	---	0.1	---	*	**	---
Sta. 114+77.13 - 45.67' L to Sta. 117+67.24 - 42.67' L	0.6	---	49.0	---	---	11.3	---	---	0.4	0.1	---	---	0.1	---	*	**	---
Sta. 128+92.88 - 42.67' L to Sta. 118+20.27 - 141.83' L	3.3	274.1	---	---	---	41.4	---	---	1.6	0.4	---	---	0.4	---	0.1	0.1	---
Sta. 138+78.25 - 44.86' L to Sta. 141+41.54 - 42.67' L	0.8	68.2	---	---	---	10.3	---	---	0.4	0.1	---	---	0.1	---	*	**	---
I-190 Mainline NBL																	
Sta. 100+19.61 - 50.16' R to Sta. 102+64.32 - 60.72' R	0.5	---	40.8	---	---	9.4	---	---	0.4	0.1	---	---	0.1	---	*	**	---
Sta. 109+90.48 - 42.67' R to Sta. 112+93.01 - 45.67' R	0.6	---	51.2	---	---	11.8	---	---	0.5	0.1	---	---	0.1	---	*	**	---
Sta. 115+01.60 - 45.67' R to Sta. 116+51.98 - 45.67' R	0.3	---	25.0	---	---	5.8	---	---	0.2	0.1	---	---	0.1	---	*	**	---
Sta. 136+80.50 - 44.85' R to Sta. 139+56.63 - 45.67' R	0.9	71.3	---	---	---	10.8	---	---	0.4	0.1	---	---	0.1	---	*	**	---
Sta. 147+05.70 - 42.50' R to Sta. 150+31.78 - 46.00' R	1.0	84.0	---	---	---	12.7	---	---	0.5	0.1	---	---	0.1	---	*	**	---
Grand Totals:	805.7	15,528.0	51,030.7		17,133.4			678.6		1.9		169.2		12.4		9.3	175.5

* The total quantity of Asphalt for Tack (0.2 ton) in the asterisk marked locations is included in the Estimate of Quantities.

** The total quantity of Asphalt for Flush Seal (0.2 ton) in the double asterisk marked locations is included in the Estimate of Quantities.

*** The total quantity of Hydrated Lime (0.1 ton) in the triple asterisk marked locations is included in the Estimate of Quantities.

Granular material for Philadelphia Street approach is included in the North Street quantities.

Plot Scale - 1:200
Plotted From - tnpr18387
File - ...\pr\penn1162\NotesSectionF.dgn

IN PLACE TYPICAL SECTIONS

FOR BIDDING PURPOSES ONLY

Note:

Underlying Plans Sta. 16+00.00 =
Plans Sta. 154+25.31

In Place Typical Sections are shown with Underlying Plans Stationing which runs from North to South

Salvage Asphalt Mix and Granular Base Material (Unclassified Excavation)

Sta. 20+65.31 to Sta. 25+25.00

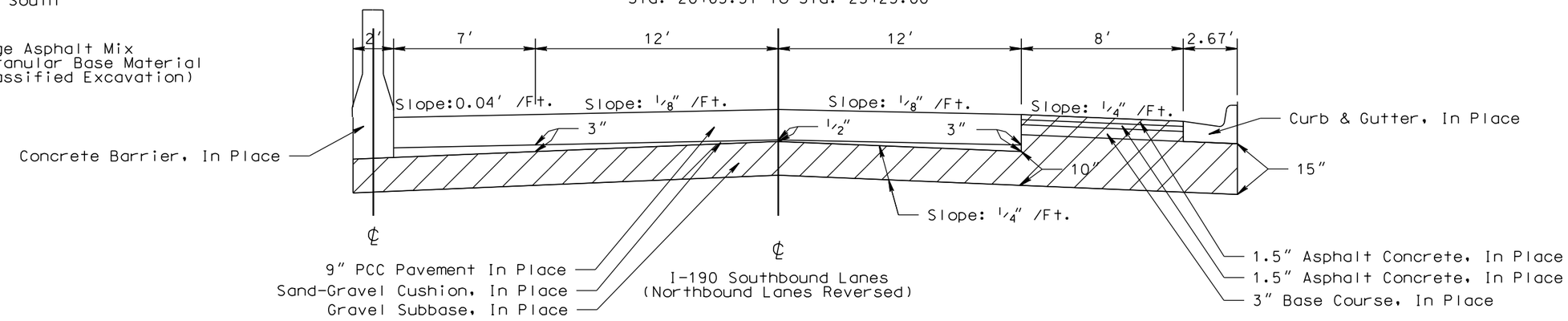

Sta. 25+25.00 to Sta. 31+04.40

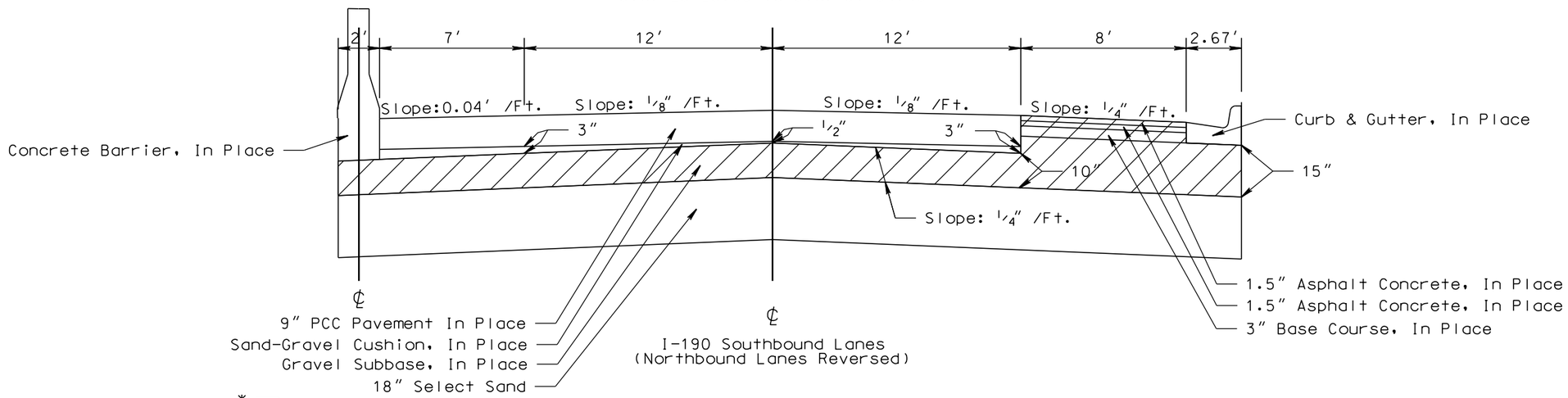

Sta. 31+04.40 to Sta. 53+80.00 Southbound Lanes
Sta. 31+04.40 to Sta. 54+14.32 Northbound Lanes

* Sta. 52+26.25
End Concrete Barrier
Begin Guardrail

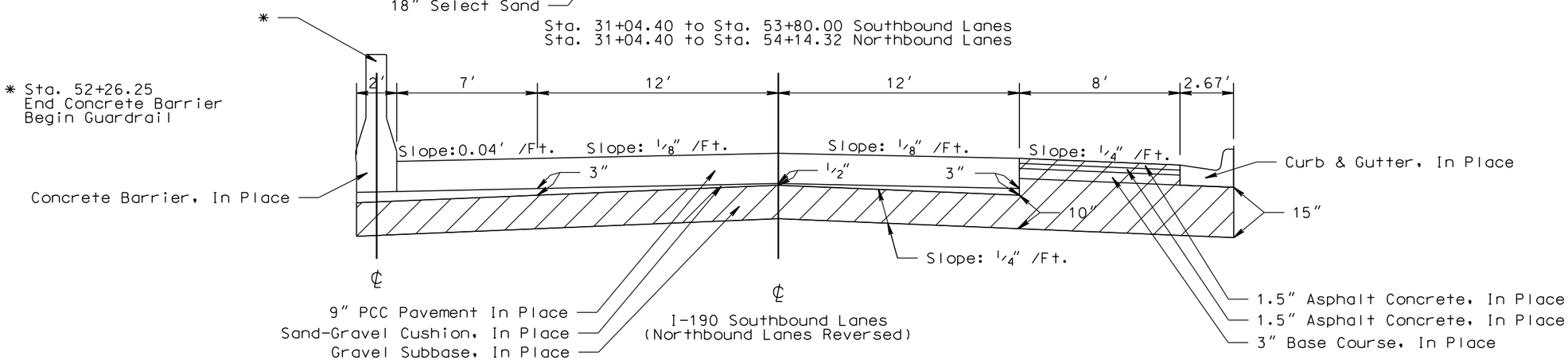

PLOT SCALE - 1:6.00001
PLOTTED FROM - TRPR18387
PLOT NAME - 15
FILE - ...\PENN1162\INPLACE TYPICALS.DGN

IN PLACE TYPICAL SECTIONS

FOR BIDDING PURPOSES ONLY

Note:

Underlying Plans Sta. 16+00.00 = Plans Sta. 154+25.31

In Place Typical Sections are shown with Underlying Plans Stationing which runs from North to South

Salvage Asphalt Mix and Granular Base Material (Unclassified Excavation)

Sta. 57+79.15 to 70+17.81

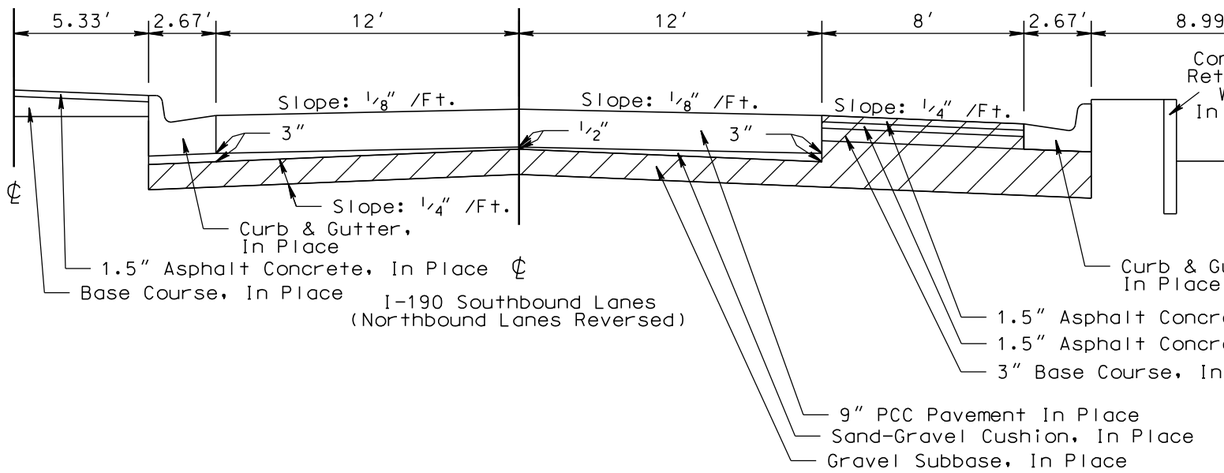

Sta. 55+33.75 to 68+04.40

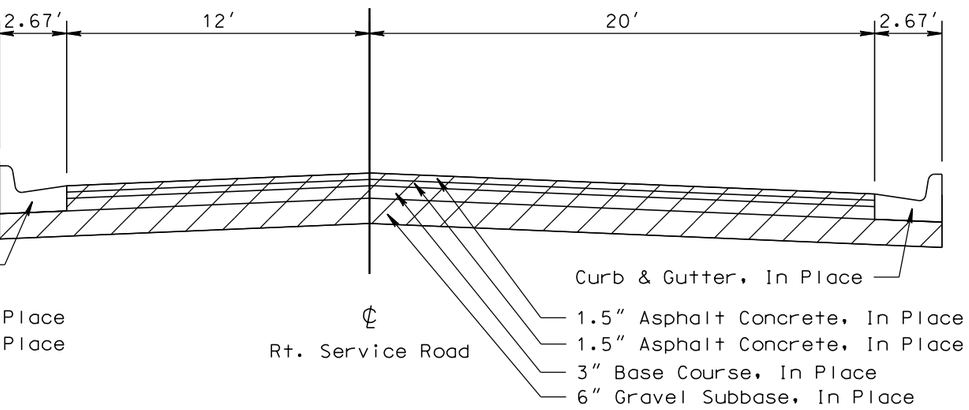

West Boulevard
Lt. Service Road - Sta. 44+12.70 to Sta. 55+22.77

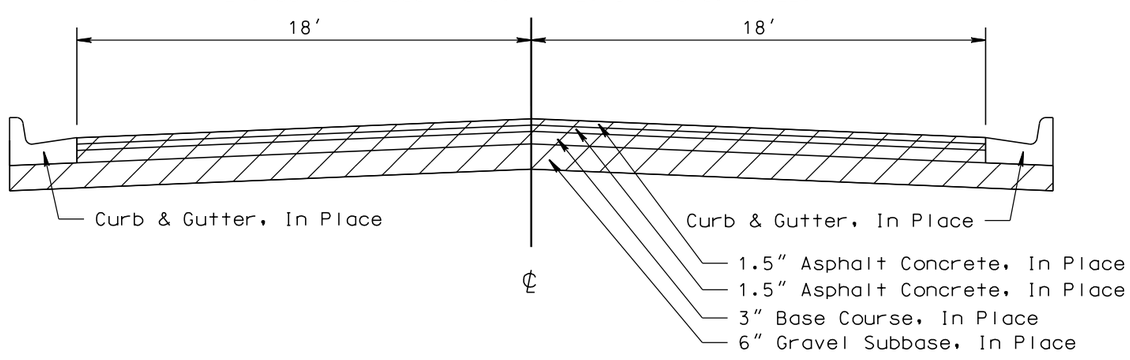

Sta. 42+32.70 to Sta. 55+33.75

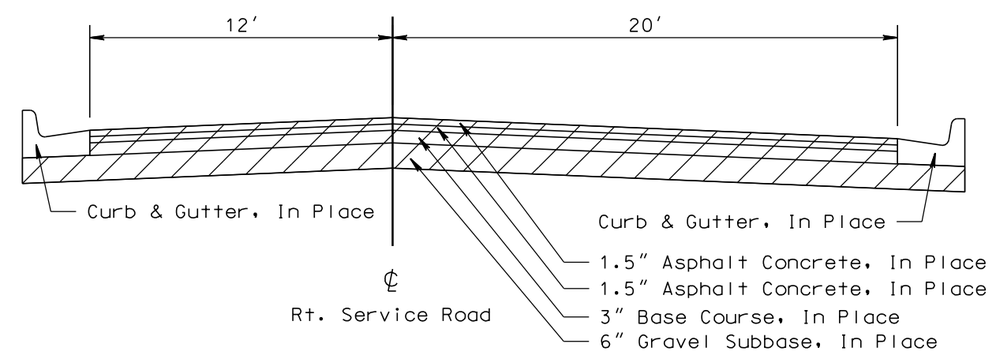

Lt. Service Road - Sta. 55+22.77 to Sta. 68+04.40

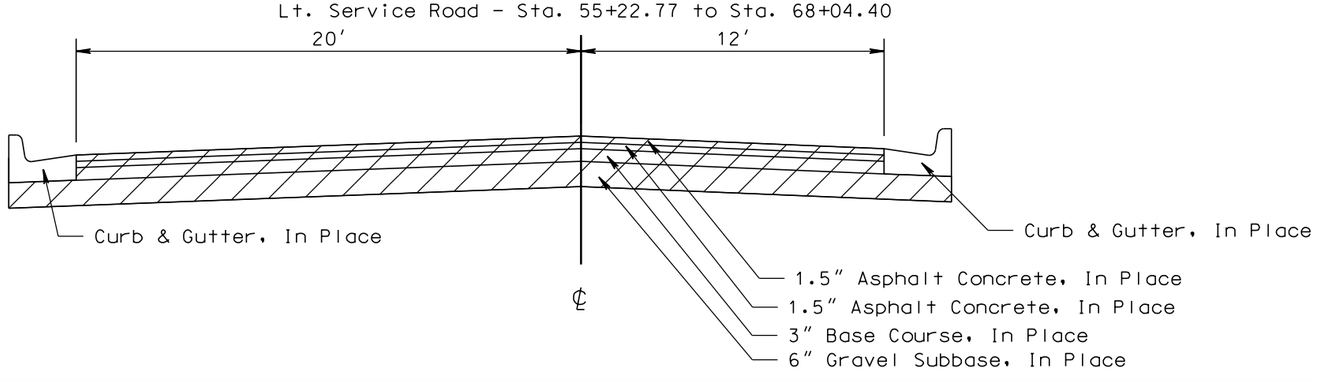

I-190 Ramps

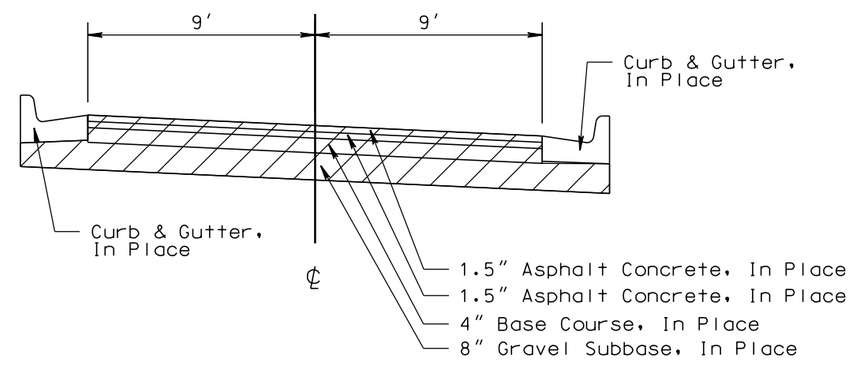

PLOT SCALE - 1:6.00001
PLOTTED FROM - TRPR18387
PLOT NAME - 16
FILE - ...\PENN1162\INPLACE TYPICALS.DGN

TYPICAL SURFACING SECTIONS

FOR BIDDING PURPOSES ONLY

STATE OF SOUTH DAKOTA	PROJECT	SHEET NO.	TOTAL SHEETS
	IM 1902(61)0	F17	F83

Plotting Date: 06/09/2015

Note:
Pavement Surface Cross Slope Varies
See Section B Superelevation Table and
Section F Pavement Slope Layout Sheets

Transitions:

Sta. 100+20.00 to Sta. 102+46.25
* 0' to 8'

Sta. 100+20.00 to Sta. 102+46.25
** 12' to 15'

Sta. 102+46.25 to Sta. 105+93.13
** 15' to 30.4'

Sta. 100+20.00 to Sta. 101+73.00
12.5' to 15'

Sta. 101+73.00 to Sta 102+46.25
15'

Sta. 102+46.25 to Sta. 105+74.80
15' to 30.4'

Sta. 105+74.80 to Sta. 105+93.13
30.4' to 32.2'

Sta. 100+20.00 to Sta. 101+73.00
0' to 8'

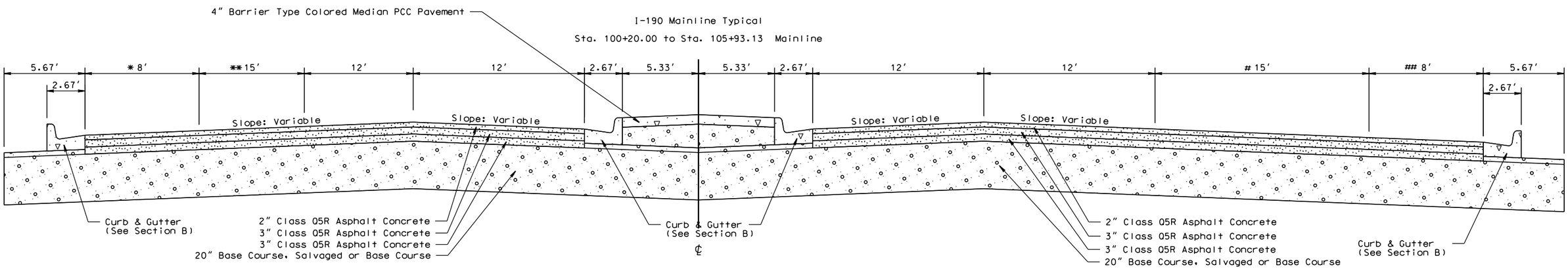

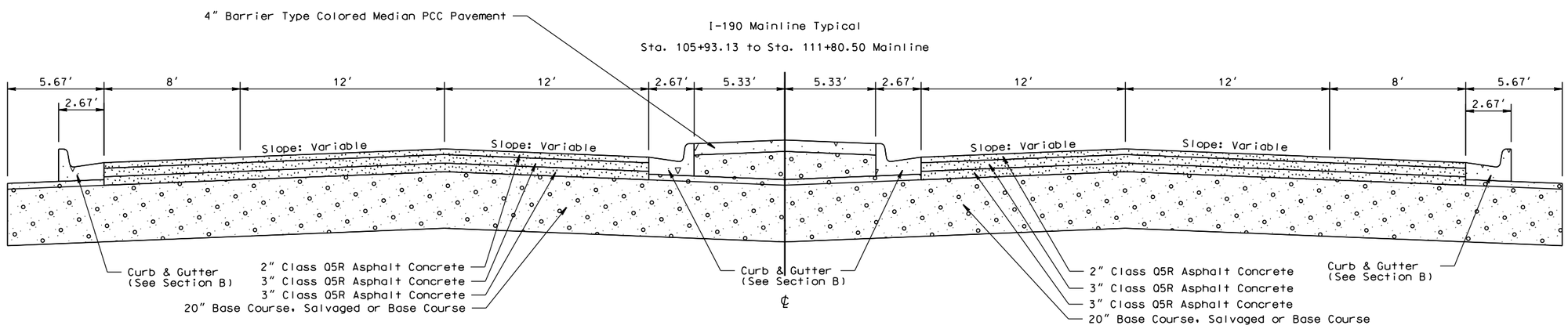

PLOTTED FROM - TRPR18387

FILE - ...\PENN1162\TYPICAL SECTIONS.DGN

PLOT NAME - 17

TYPICAL SURFACING SECTIONS

FOR BIDDING PURPOSES ONLY

STATE OF SOUTH DAKOTA	PROJECT	SHEET NO.	TOTAL SHEETS
	IM 1902(61)0	F18	F83

Plotting Date: 06/09/2015

Note:
Pavement Surface Cross Slope Varies
See Section B Superelevation Table and
Section F Pavement Slope Layout Sheets

Structure # 52-409-298
Sta. 112+52.57 to Sta. 115+17.87

I-190 Mainline Typical

Sta. 111+80.50 to Sta. 112+52.57 Mainline
Sta. 115+17.87 to Sta. 120+00.00 Mainline

Sta. 111+80.50 to Sta. 112+52.57
* No Concrete Barrier

Sta. 115+17.87 to Sta. 120+00.00
Temporary Barrier

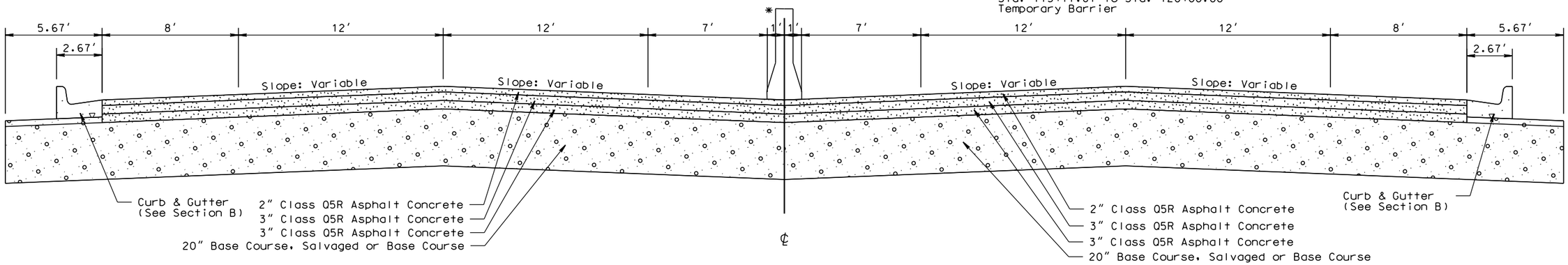

I-190 Mainline Typical

Sta. 120+00.00 to Sta. 122+60.94 Mainline

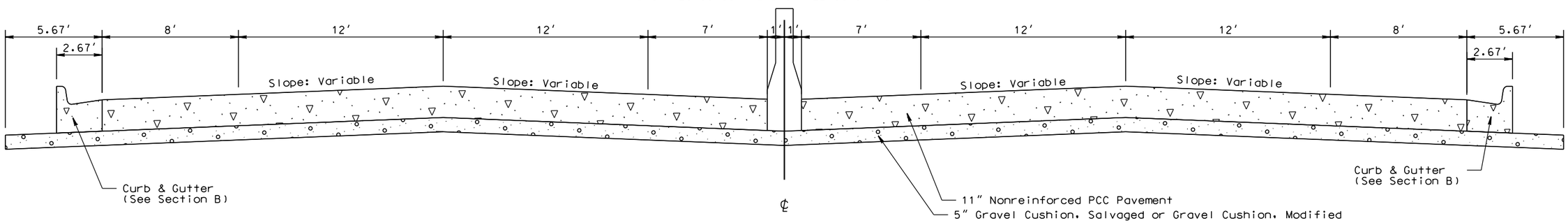

Transitions:

Sta. 125+65.26 to Sta. 128+65.98
* 15' to 0'

Sta. 122+60.94 to Sta. 125+65.26
Sta. 127+00.53 to Sta. 130+39.22
** 27.3 to 12'

Sta. 130+39.22 to Sta. 137+89.45
*** 15' to 0'

Sta. 138+30.00 to Sta. 138+90.00
8' to 7'

Sta. 139+50.00 to Sta. 140+10.00
#7' to 8'

I-190 Mainline Typical

Sta. 122+60.94 to Sta. 146+74.64 Mainline

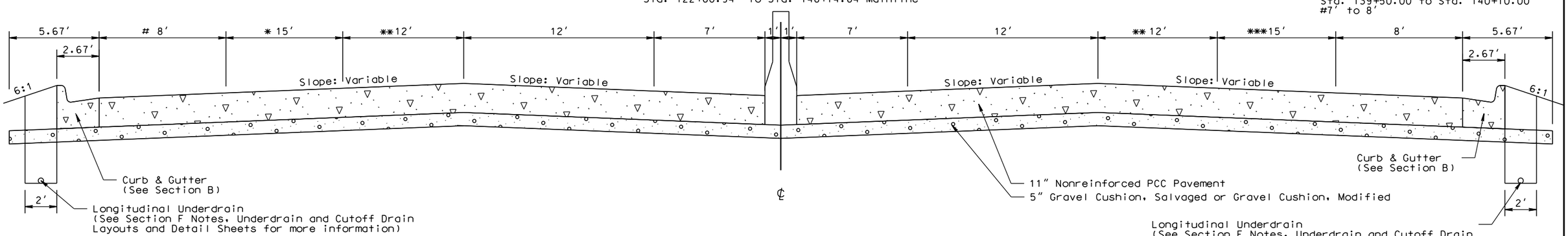

PLOT SCALE - 1:6.19298

PLOT NAME - 18

FILE - ...\PENN1162\TYPICAL SECTIONS.DGN

PLOTTED FROM - TRPR18387

TYPICAL SURFACING SECTIONS

FOR BIDDING PURPOSES ONLY

STATE OF SOUTH DAKOTA	PROJECT	SHEET NO.	TOTAL SHEETS
	IM 1902(61)0	F19	F83

Plotting Date: 06/09/2015

Note:
Pavement Surface Cross Slope Varies
See Section B Superelevation Table and
Section F Pavement Slope Layout Sheets

* Median width will transition
from 7' to 7.5' from Sta. 153+40 to Sta. 154+00
to match the existing median.

I-190 Mainline Typical

Sta. 146+74.64 to 154+00.00 Left Mainline
Sta. 146+74.64 to 149+60.00 Right Mainline

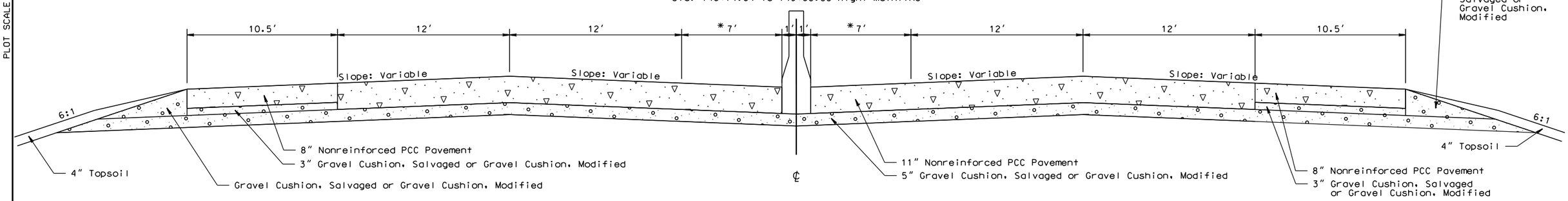

Transitions:

Sta. 304+73.33 to Sta. 305+81.52
* 15' to 20'

Sta. 305+81.68 to Sta. 311+81.66
* 20' to 15'

Sta. 304+73.33 to Sta. 305+81.68
** 17' to 8'

I-190 Ramp Typical

Sta. 301+45.00 to Sta. 302+26.87 Ramp A

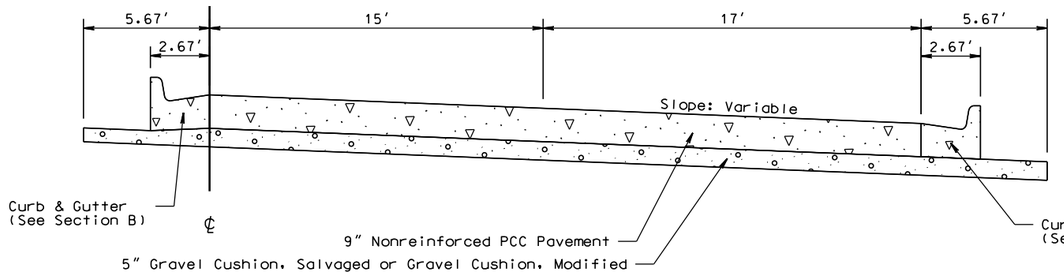

I-190 Ramp Typical

Sta. 302+26.87 to Sta. 312+00.00 Ramp A

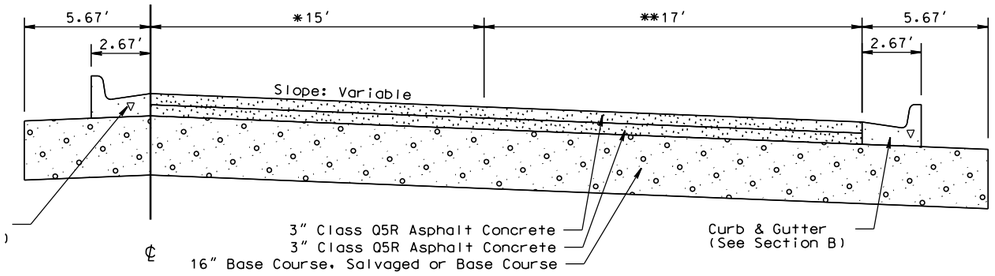

I-190 Ramp Typical

Sta. 312+00.00 to Sta. 314+50.57 Ramp A

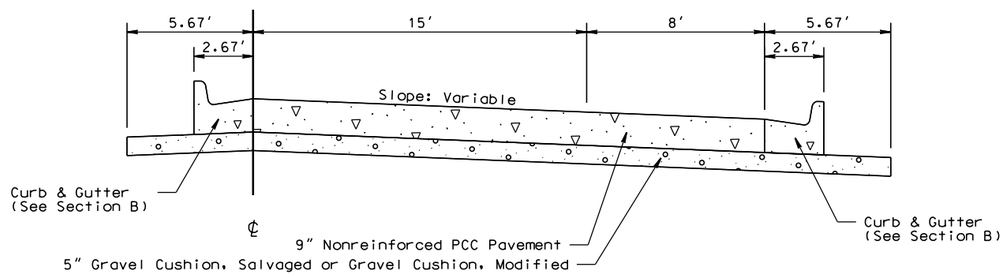

PLOT SCALE - 1:6.81228

PLOT NAME - 19

FILE - ...\PENN1162\TYPICAL SECTIONS.DGN

PLOTTED FROM - TRPR18387

TYPICAL SURFACING SECTIONS

FOR BIDDING PURPOSES ONLY

STATE OF SOUTH DAKOTA	PROJECT	SHEET NO.	TOTAL SHEETS
	IM 1902(61)0	F20	F83

Plotting Date: 06/09/2015

Note:
Pavement Surface Cross Slope Varies
See Section B Superelevation Table and
Section F Pavement Slope Layout Sheets

I-190 Ramp Typical

Sta. 403+32.45 to Sta. 411+00.07 Ramp B

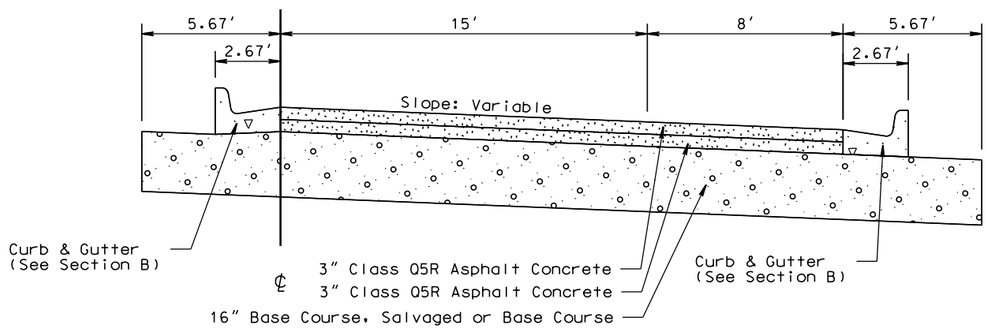

Transition:

606+58.30 to Sta. 608+12.64
✱ 13′ to 17′
Sta. 608+12.64 to 609+24.00
17′

I-190 Ramp Typical

Sta. 606+58.30 to Sta. 609+24.00 Ramp C

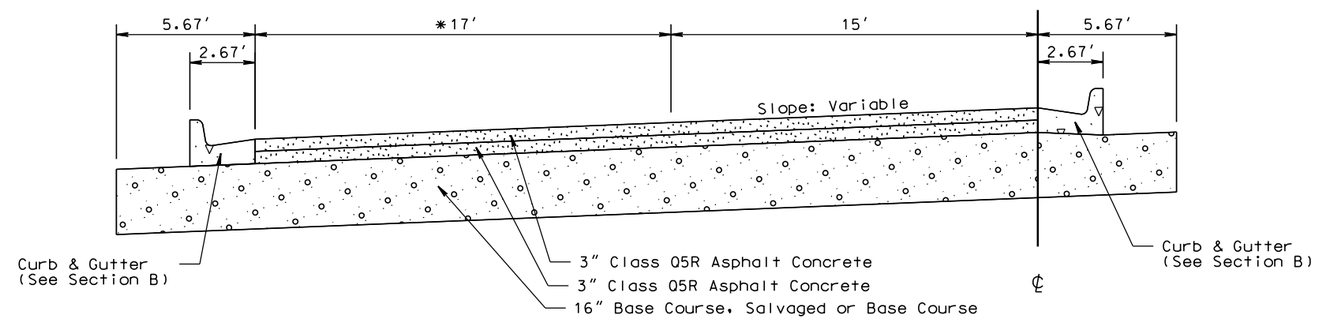

I-190 Ramp Typical

Sta. 411+00.07 to Sta. 411+46.72 Ramp B

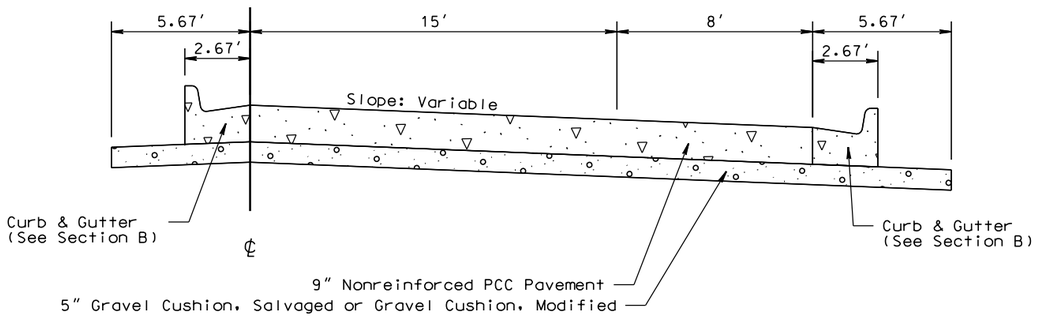

I-190 Ramp Typical

Sta. 609+24.00 to Sta. 610+32.25 Ramp C

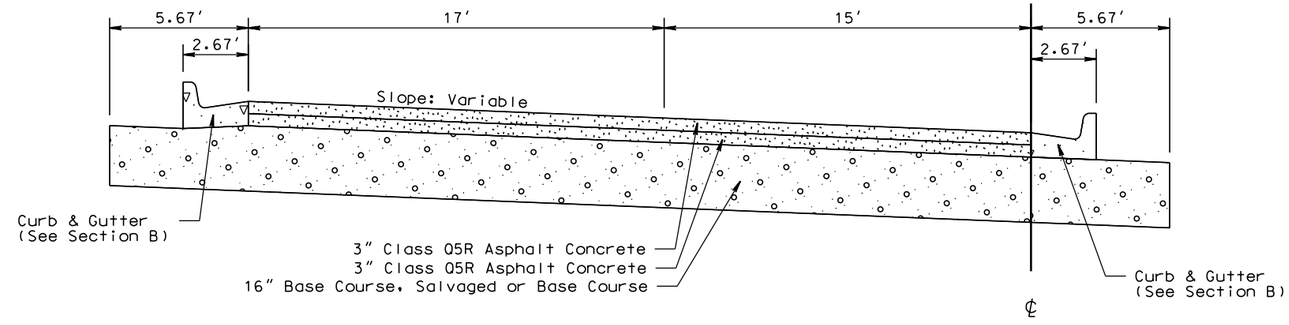

Transitions:

Sta. 603+58.30 to Sta. 606+58.30
✱ 15′ to 20′

I-190 Ramp Typical

Sta. 603+43.75 to Sta. 606+58.30 Ramp C

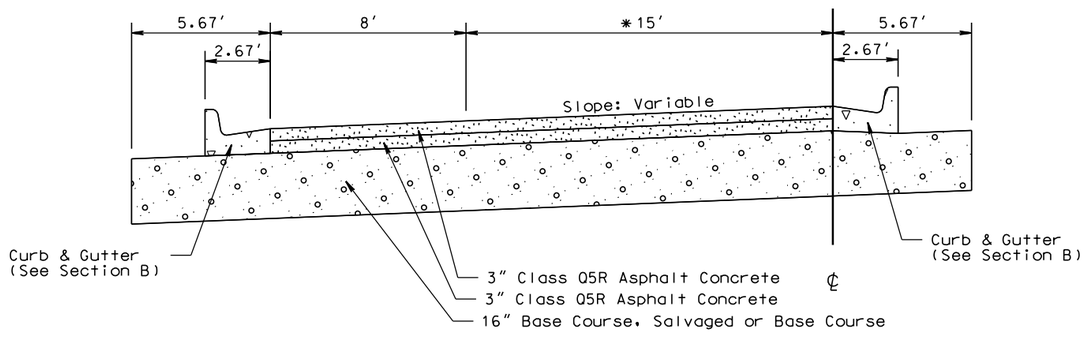

I-190 Ramp Typical

Sta. 610+32.25 to Sta. 611+07.53 Ramp C

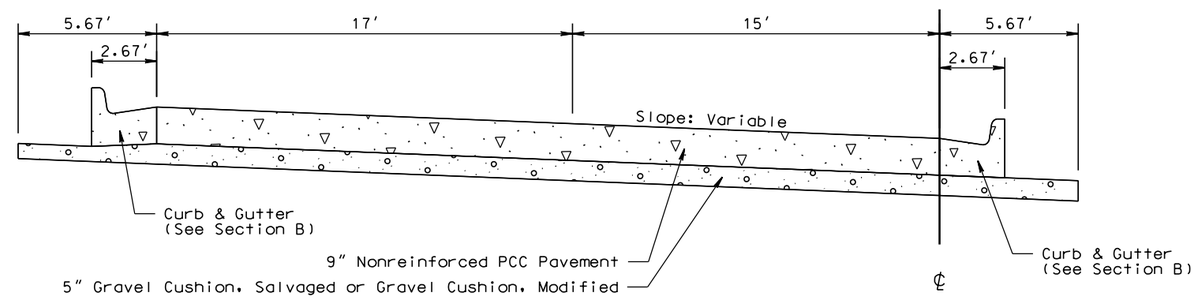

PLOT SCALE - 1:6.19298

PLOT NAME - 20

FILE - ...\PENN1162\TYPICAL SECTIONS.DGN

PLOTTED FROM - TRPR18387

TYPICAL SURFACING SECTIONS

FOR BIDDING PURPOSES ONLY

STATE OF SOUTH DAKOTA	PROJECT	SHEET NO.	TOTAL SHEETS
	IM 1902(61)0	F21	F83

Plotting Date: 06/09/2015

Note:
Pavement Surface Cross Slope Varies
See Section B Superelevation Table and
Section F Pavement Slope Layout Sheets

I-190 Ramp Typical

Sta. 701+42.16 to Sta. 701+93.44 Ramp D

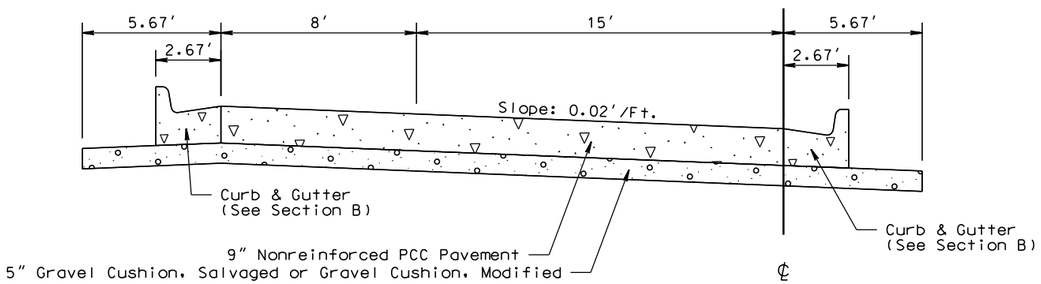

I-190 Ramp Typical

Sta. 705+35.00 to Sta. 710+25.18 Ramp D

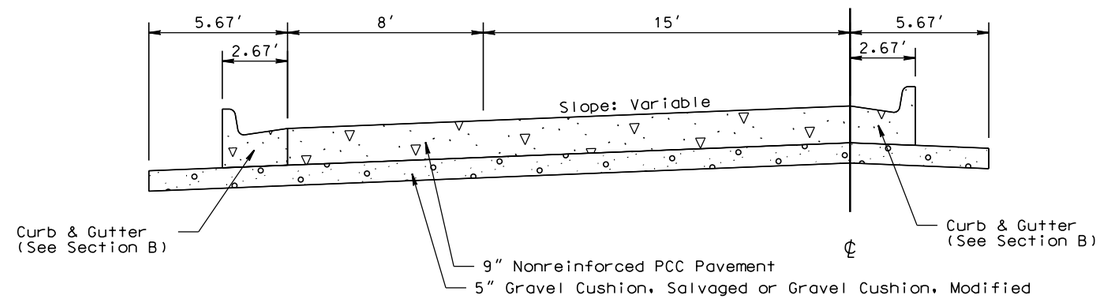

I-190 Ramp Typical

Sta. 701+93.44 to Sta. 703+00.00 Ramp D

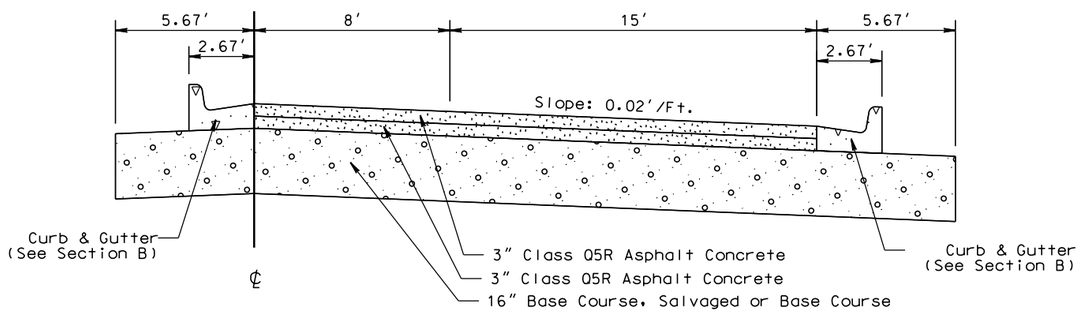

I-190 Ramp Typical

Sta. 703+00.00 to Sta. 705+35.00 Ramp D

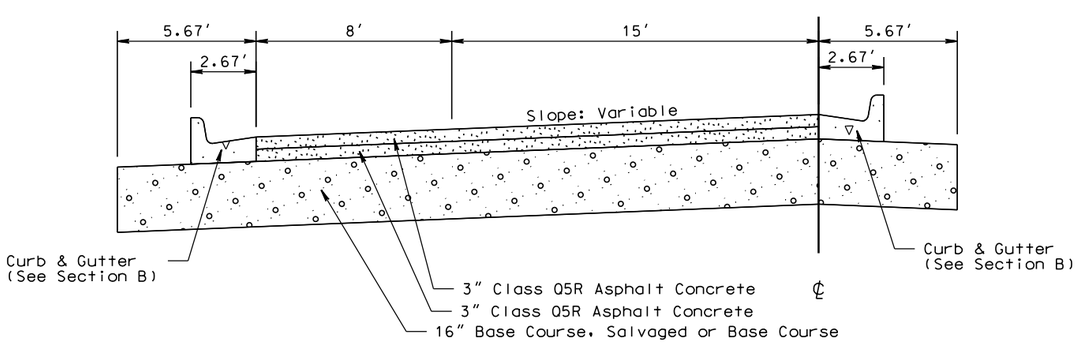

PLOT SCALE - 1:6.19298
PLOTTED FROM - TRPR18387
PLOT NAME - 21
FILE - ...\PENNI162\TYPICAL SECTIONS.DGN

TYPICAL SURFACING SECTIONS

FOR BIDDING PURPOSES ONLY

STATE OF SOUTH DAKOTA	PROJECT	SHEET NO.	TOTAL SHEETS
	IM 1902(61)0	F22	F83

Plotting Date: 06/09/2015

Note:
Pavement Surface Cross Slope Varies
See Section B Superelevation Table and
Section F Pavement Slope Layout Sheets

I-190 Ramp Typical

Sta. 350+68.51 to Sta. 351+05.40 Ramp E
Sta. 451+11.69 to Sta. 451+47.82 Ramp F

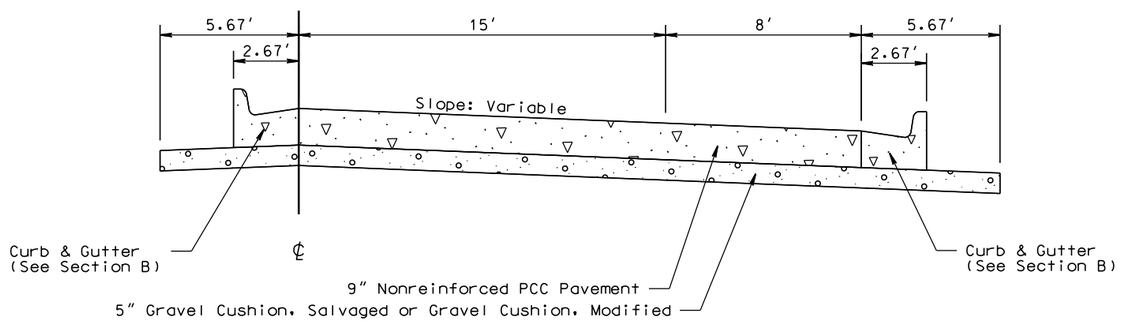

I-190 Ramp Typical

Sta. 650+23.03 to Sta. 651+49.94 Ramp G
Sta. 750+35.11 to Sta. 752+37.73 Ramp H

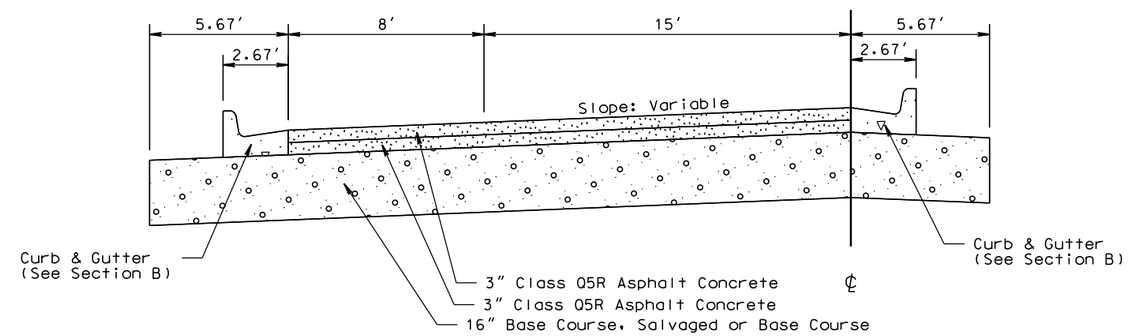

I-190 Ramp Typical

Sta. 351+05.40 to Sta. 352+37.64 Ramp E
Sta. 450+40.53 to Sta. 451+11.69 Ramp F

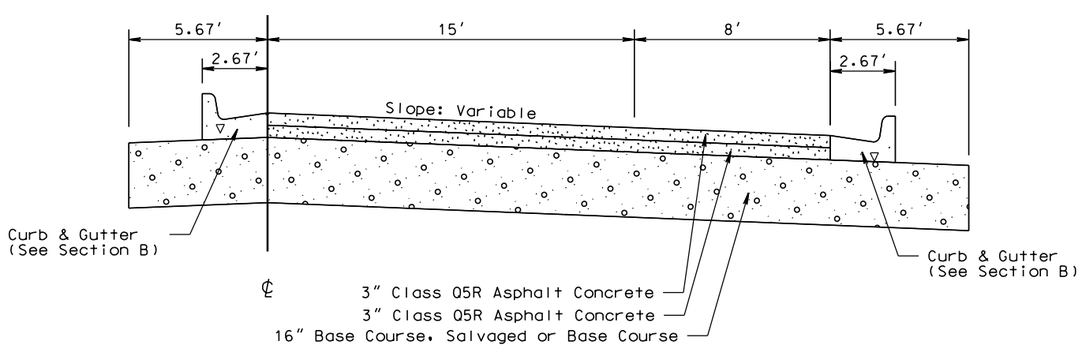

PLOT SCALE - 1:6.19298
PLOTTED FROM - TRPR18397
PLOT NAME - 22
FILE - ...\PENN1162\TYPICAL SECTIONS.DGN

Note:
Pavement Surface Cross Slope Varies
See Section B Superelevation Table and
Section F Pavement Slope Layout Sheets

TYPICAL SURFACING SECTIONS

FOR BIDDING PURPOSES ONLY

STATE OF SOUTH DAKOTA	PROJECT	SHEET NO.	TOTAL SHEETS
	IM 1902(61)0	F23	F83

Plotting Date: 06/09/2015

Underdrains
(See Section F Notes, Underdrain
Layouts and Detail Sheets for more information)

North Street Typical

Sta. 209+01.71 to Sta. 209+87.98

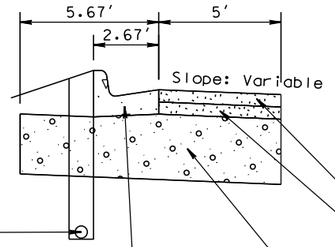

North Street Typical

Sta. 209+87.98 to Sta. 211+31.57

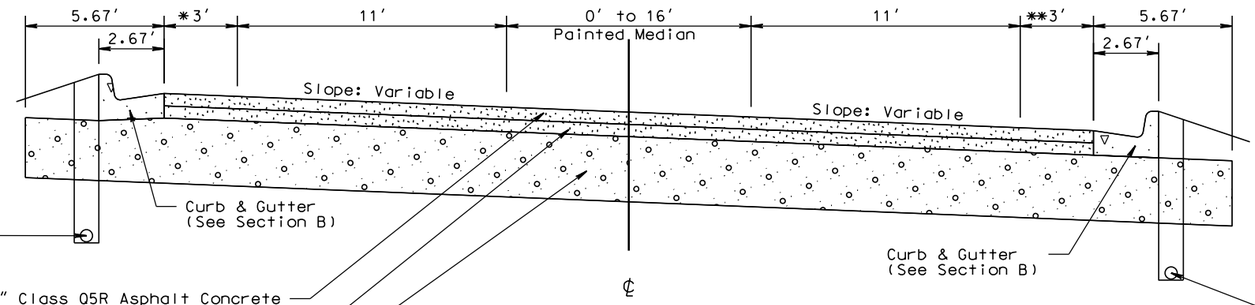

Transitions:

Sta. 209+87.98 to Sta. 210+53.97
* 5′ to 3′

Sta. 209+87.98 to Sta. 210+82.06
** 5′ to 3′

Underdrains
(See Section F Notes, Underdrain
Layouts and Detail Sheets for more information)

North Street Typical

Sta. 211+31.57 to Sta. 212+87.40

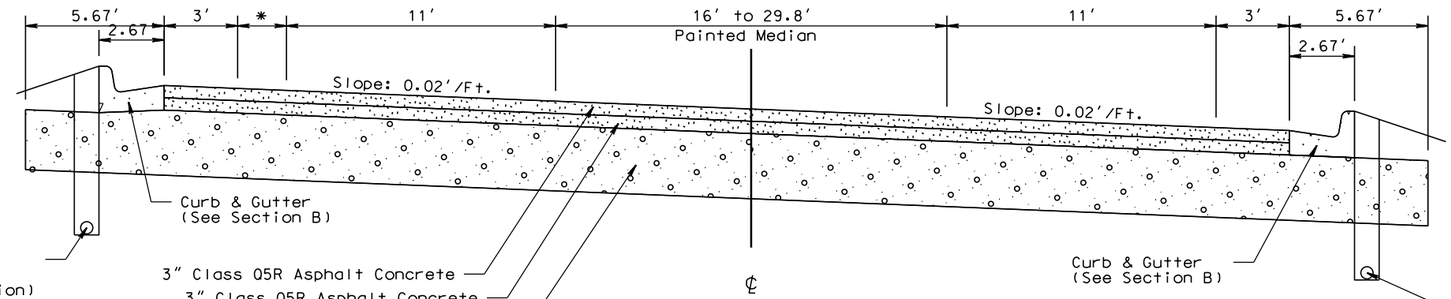

Transition:

Sta. 212+52.63 to Sta. 212+87.40
* 0′ to 2.3′

Underdrains
(See Section F Notes, Underdrain
Layouts and Detail Sheets for more information)

Underdrains
(See Section F Notes, Underdrain
Layouts and Detail Sheets for more information)

North Street Typical

Sta. 212+87.40 to Sta. 214+06.90

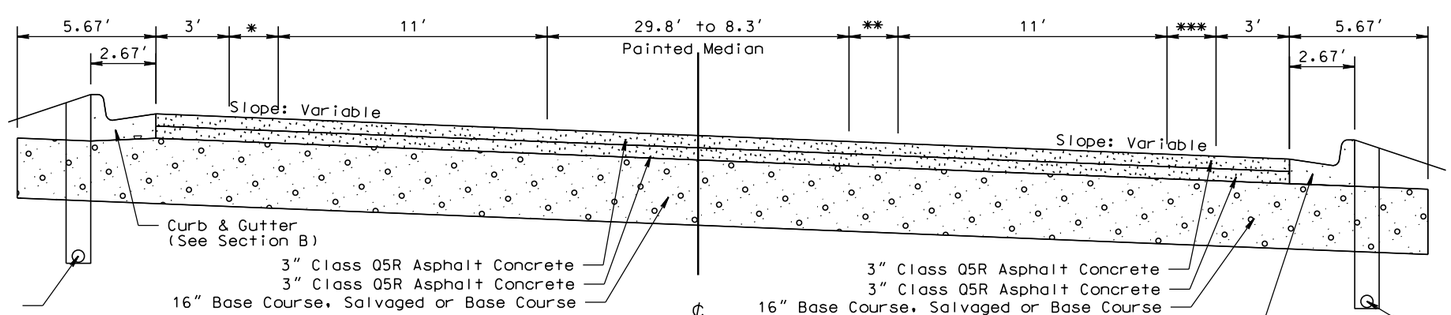

Transitions:

Sta. 212+87.40 to Sta. 214+06.90
* 1.7′ to 7.6′

Sta. 213+00.02 to Sta. 214+06.90
** 0′ to 22′

Sta. 213+00.02 to Sta. 213+60.00
*** 0′ to 11′

Underdrains
(See Section F Notes, Underdrain
Layouts and Detail Sheets for more information)

Underdrains
(See Section F Notes, Underdrain
Layouts and Detail Sheets for more information)

PLOT SCALE - 1:6.19298
PLOTTED FROM - TRPR19387
PLOT NAME - 23
FILE - ...\PENN1162\TYPICAL SECTIONS.DGN

TYPICAL SURFACING SECTIONS

FOR BIDDING PURPOSES ONLY

STATE OF SOUTH DAKOTA	PROJECT	SHEET NO.	TOTAL SHEETS
	IM 1902(61)0	F24	F83

Plotting Date: 06/09/2015

Note:
Pavement Surface Cross Slope Varies
See Section B Superelevation Table and
Section F Pavement Slope Layout Sheets

Note:

* Shoulder Width Varies
  See Curb & Gutter Layout

Transition

Sta. 214+06.90 to Sta. 214+76.82
** 7.6' to 11'

North Street Typical

Sta. 214+06.90 to Sta. 216+22.90

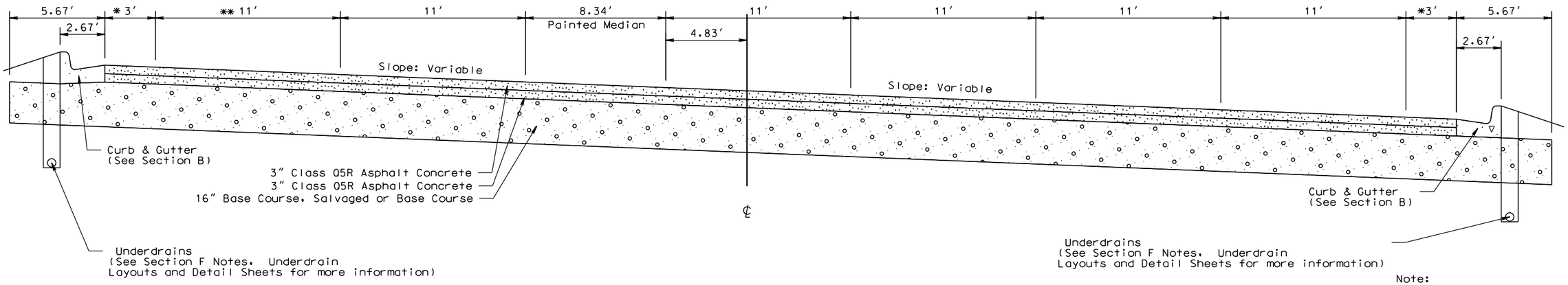

Note:

* Shoulder Width Varies
  See Curb & Gutter Layout

North Street Typical

Sta. 216+22.90 to Sta. 216+32.38

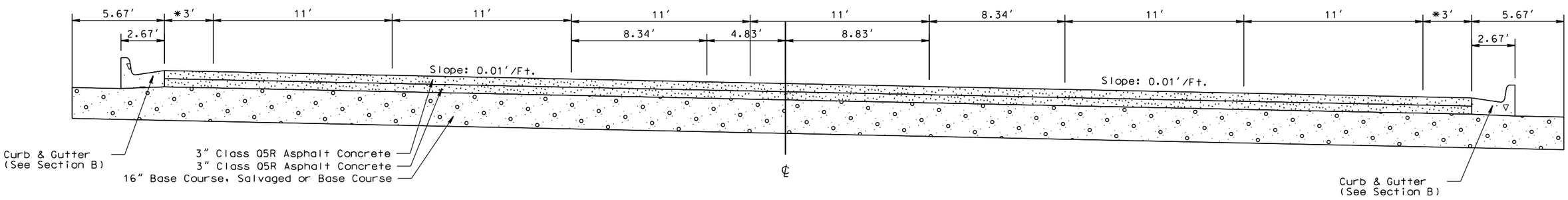

Note:

* Shoulder Width Varies
  See Curb & Gutter Layout

North Street Typical

Sta. 216+32.38 to Sta. 218+34.49

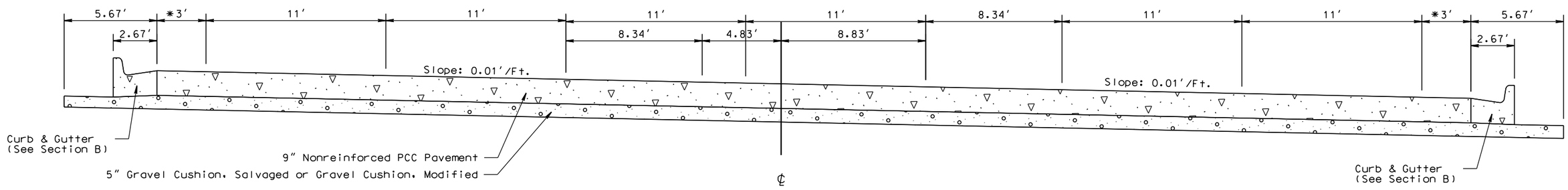

PLOT SCALE - 1:6.19298

PLOT NAME - 24

FILE - ...\PENN1162\TYPICAL SECTIONS.DGN

PLOTTED FROM - TRPR18387

TYPICAL SURFACING SECTIONS

FOR BIDDING PURPOSES ONLY

STATE OF SOUTH DAKOTA	PROJECT	SHEET NO.	TOTAL SHEETS
	IM 1902(61)0	F25	F83

Plotting Date: 06/09/2015

Note:
Pavement Surface Cross Slope Varies
See Section B Superelevation Table and
Section F Pavement Slope Layout Sheets

Note:
* Shoulder Width Varies
See Curb & Gutter Layout

North Street Typical

Sta. 218+34.49 to Sta. 219+48.49

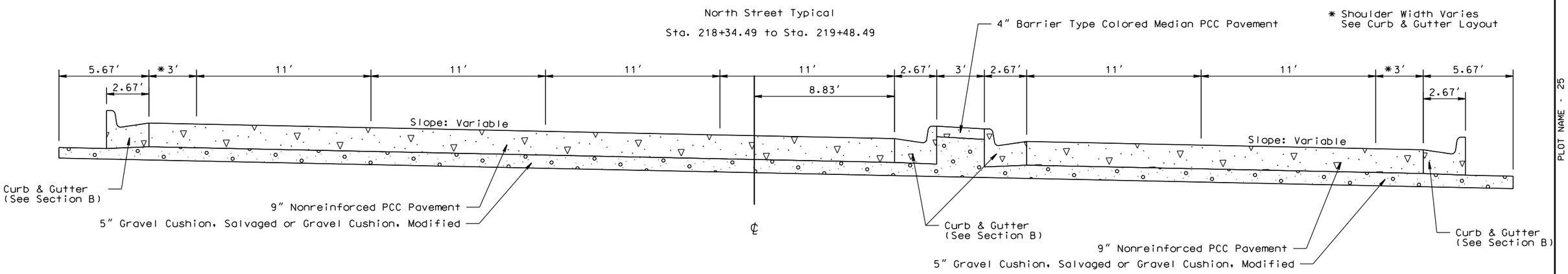

North Street Typical

Sta. 219+48.49 to Sta. 220+54.30

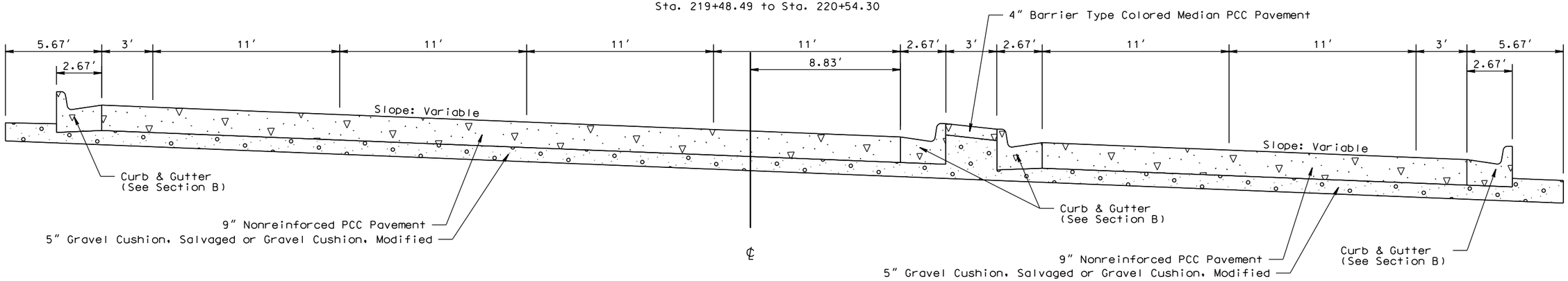

North Street Typical

Sta. 220+54.30 to Sta. 221+85.20

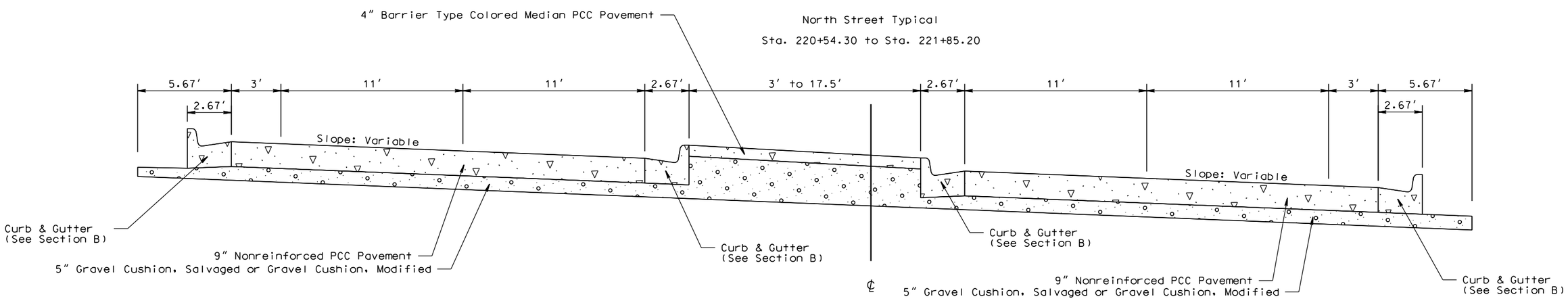

PLOT SCALE - 1:6.19298
PLOTTED FROM - TRPR18387
PLOT NAME - 25
FILE - ...\PENN1162\TYPICAL SECTIONS.DGN

FOR BIDDING PURPOSES ONLY

TYPICAL SURFACING SECTIONS

Note:
Pavement Surface Cross Slope Varies
See Section B Superelevation Table and
Section F Pavement Slope Layout Sheets

North Street Typical

Sta. 221+85.20 to Sta. 224+72.00

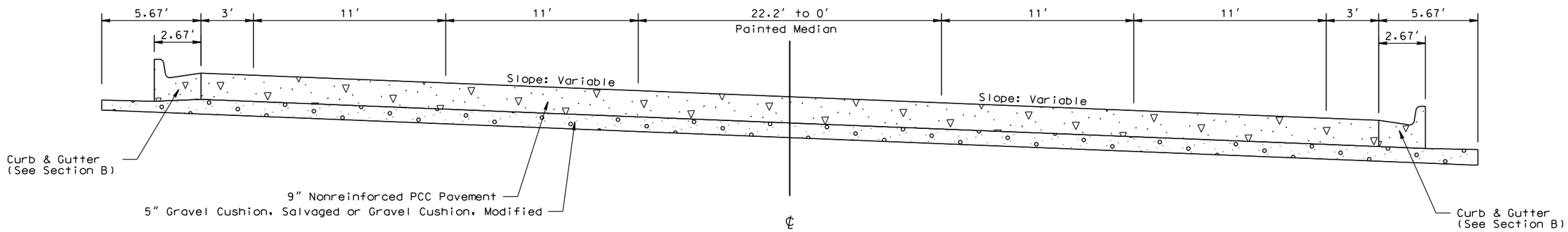

West Boulevard

Sta. 10+24.43 to Sta. 25+75.28

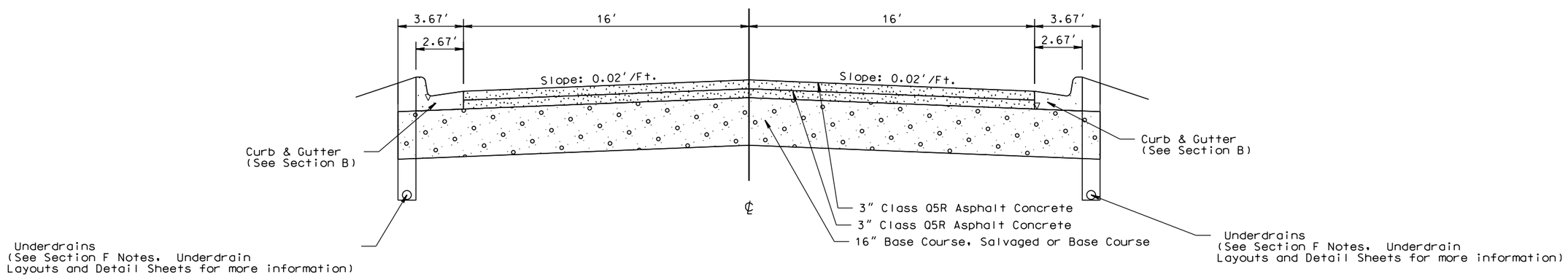

West Boulevard North

Sta. 50+24.42 to Sta. 58+65.61

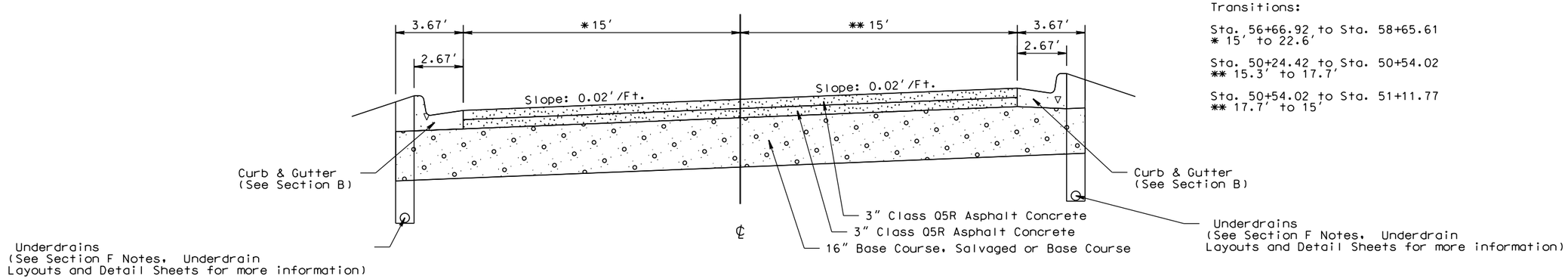

Transitions:

Sta. 56+66.92 to Sta. 58+65.61
* 15′ to 22.6′

Sta. 50+24.42 to Sta. 50+54.02
** 15.3′ to 17.7′

Sta. 50+54.02 to Sta. 51+11.77
** 17.7′ to 15′

PLOT SCALE - 1:6.19298
PLOTTED FROM - TRPR18387
PLOT NAME - 26
FILE - ...\PENN1162\TYPICAL SECTIONS.DGN

PCC PAVEMENT JOINT LAYOUT

FOR BIDDING PURPOSES ONLY

STATE OF SOUTH DAKOTA	PROJECT	SHEET	TOTAL SHEETS
	IM 1902(61)0	F27	F83

Plotting Date: 06/09/2015

Scale 1 Inch = 40 Feet
Sheet 1 of 17 Sheets

Areas adjacent to Curb and Gutter shall be placed monolithically with the Curb and Gutter.

NOTE:
In locations where light poles will be installed on the median barrier, see Section E and L plans for median pavement construction and reinforcement. Steel bars and dowel bars shall not be installed in these locations.

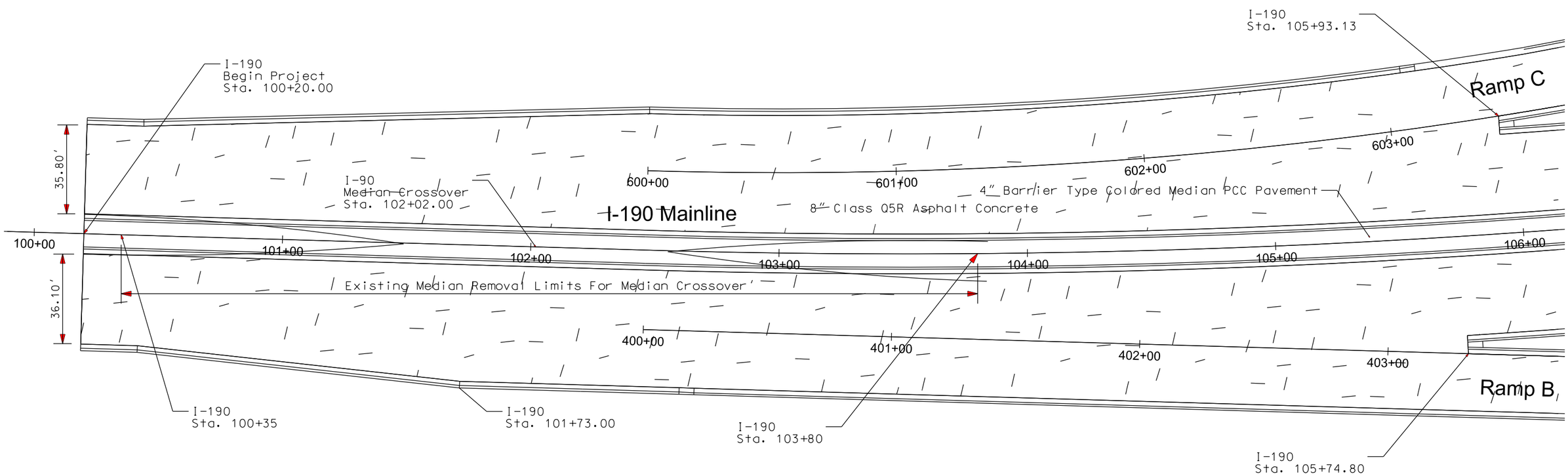

LEGEND:

Longitudinal Joint Without Tie Bars (Construction or Sawed) ——L——L——
Longitudinal Joint With Tie Bars (Construction or Sawed) ——LT——LT——
Transverse Contraction Joint — — — — — — — — — — — — — — — — — —
Steel Bar Installation in Longitudinal or Transverse Joint ——SB——SB——
Areas to be poured monolithically with adjacent slab (See Detail A)
Areas to be poured monolithically with adjacent curb and gutter (See Detail B)

Transverse contraction joints within these areas shall not have dowel bar assemblies. All other transverse contraction joints shall have dowel bar assemblies.

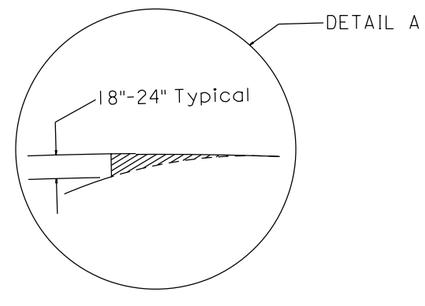

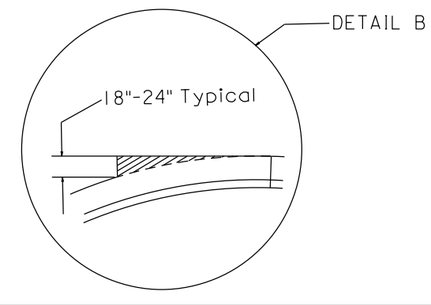

Plot Scale - 1:40
Plotted From - trpr18387
File - U:\ms\prjpenn11162\plan.dgn

PCC PAVEMENT JOINT LAYOUT

FOR BIDDING PURPOSES ONLY

STATE OF SOUTH DAKOTA	PROJECT	SHEET	TOTAL SHEETS
	IM 1902(61)0	F28	F83

Plotting Date: 06/09/2015

Scale 1 Inch = 40 Feet
Sheet 2 of 17 Sheets

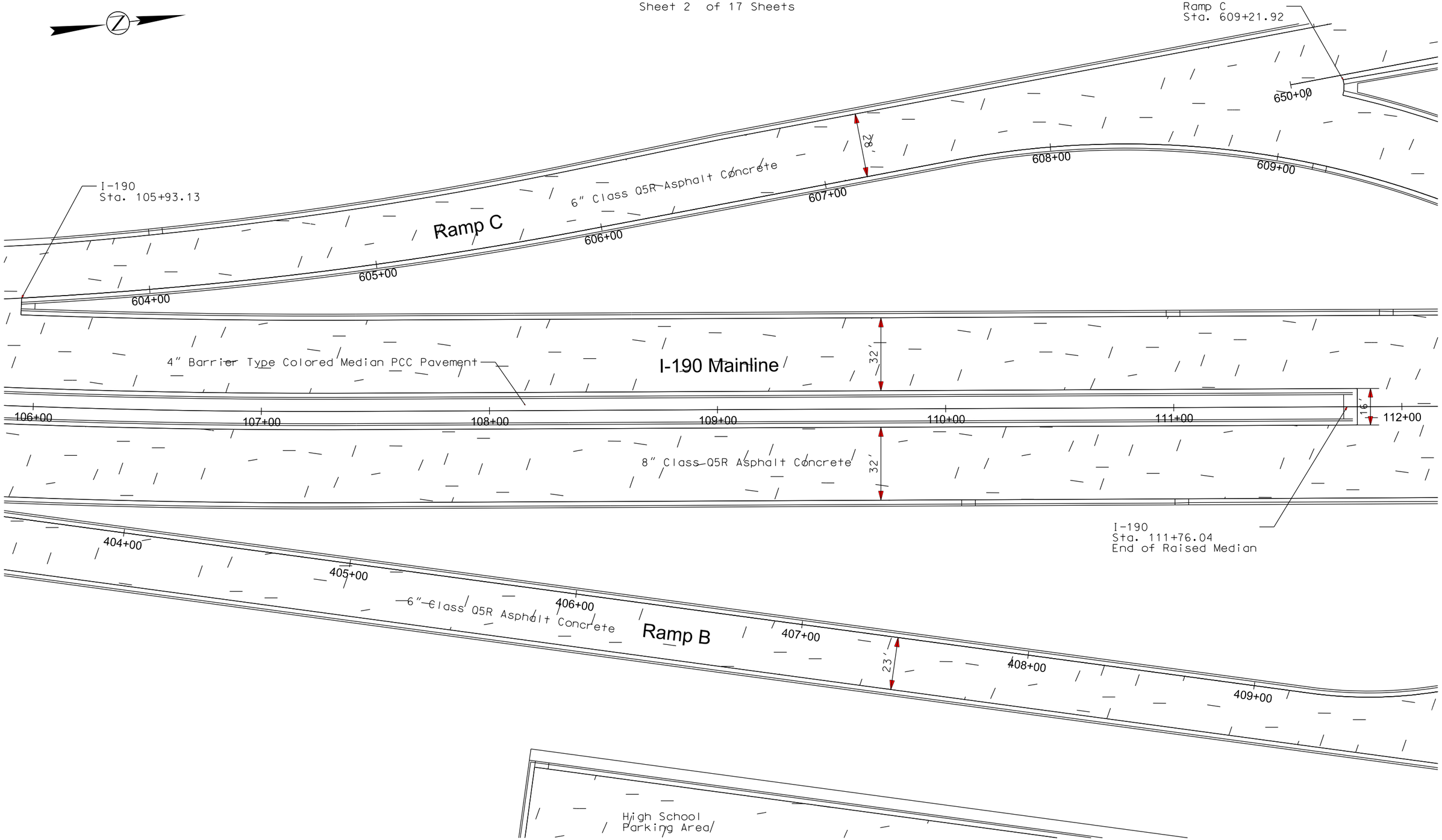

Plot Scale - 1:40

6" Class Q5R Asphalt Concrete

Plotted From - tnpr18387

File - U:\msi\prj\penn11162\plan.dgn

PCC PAVEMENT JOINT LAYOUT

FOR BIDDING PURPOSES ONLY

STATE OF SOUTH DAKOTA	PROJECT	SHEET	TOTAL SHEETS
	IM 1902(61)0	F29	F83

Plotting Date: 06/09/2015

Scale 1 Inch = 40 Feet
Sheet 3 of 17 Sheets

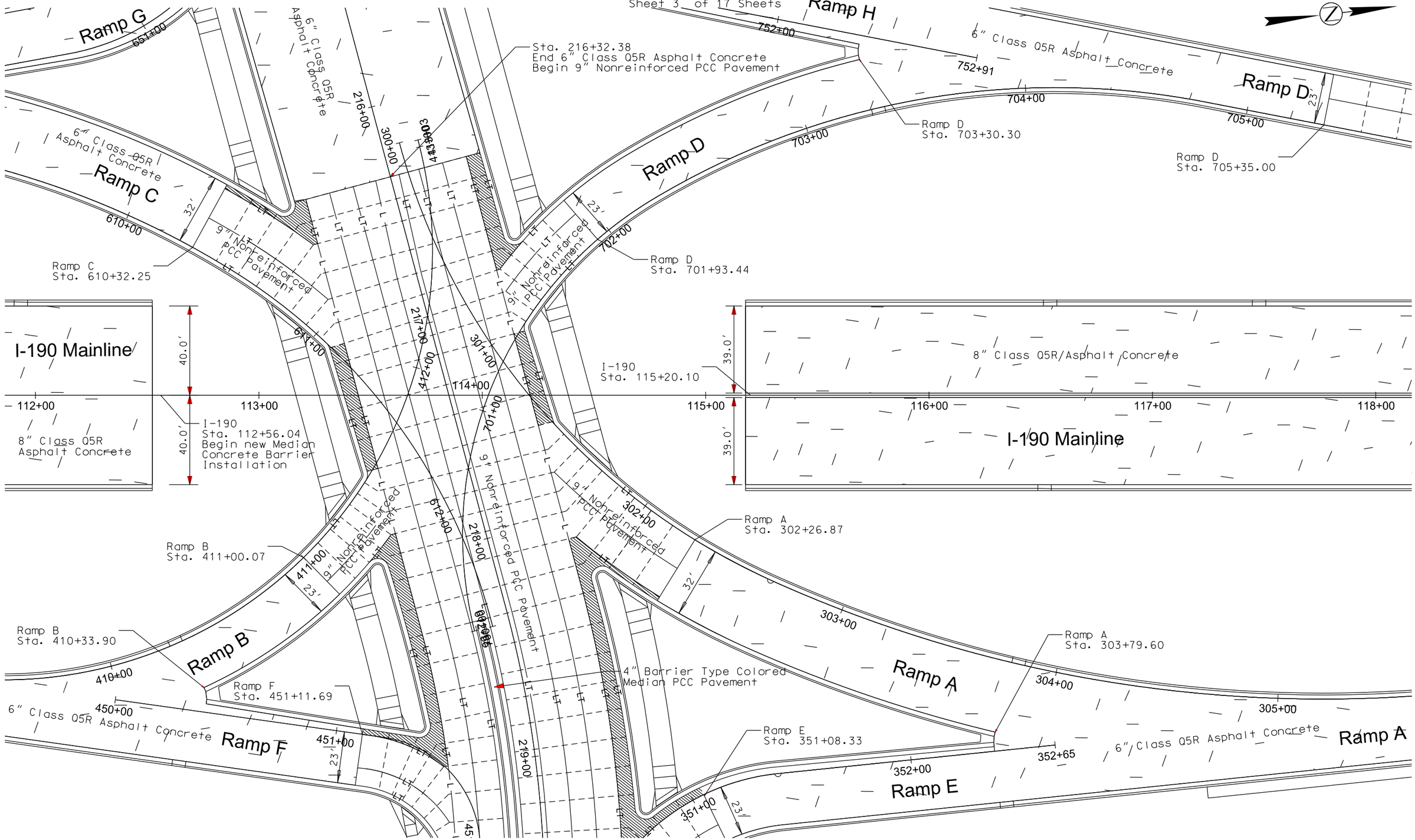

Plot Scale - 1:40

Plotted From - trpr18387

File - U:\ms\prj\penn1162\plan.dgn

PCC PAVEMENT JOINT LAYOUT

FOR BIDDING PURPOSES ONLY

STATE OF SOUTH DAKOTA	PROJECT	SHEET	TOTAL SHEETS
	IM 1902(61)0	F30	F83

Plotting Date: 06/09/2015

Scale 1 Inch = 40 Feet
Sheet 4 of 17 Sheets

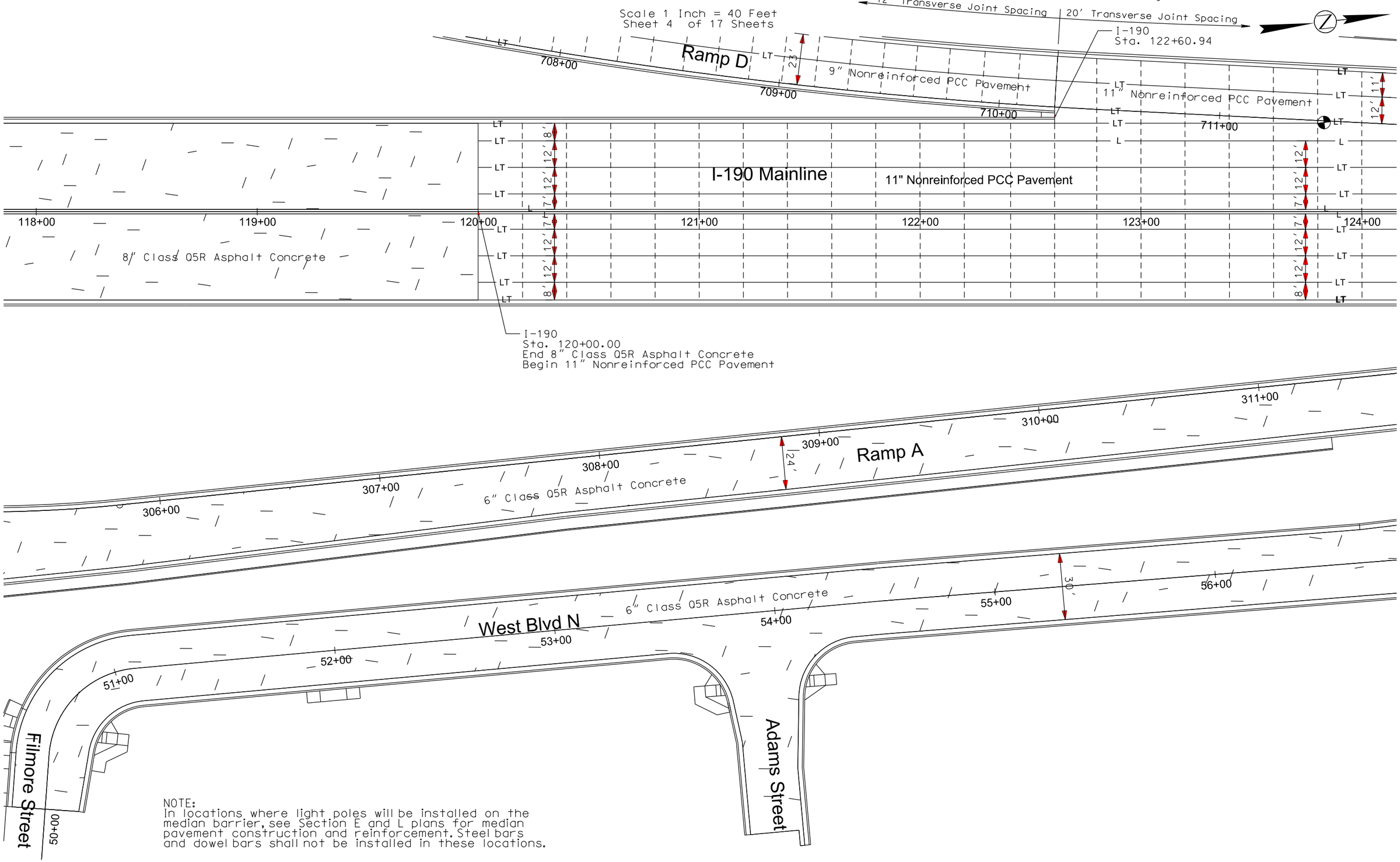

NOTE:
In locations where light poles will be installed on the median barrier, see Section E and L plans for median pavement construction and reinforcement. Steel bars and dowel bars shall not be installed in these locations.

Plot Scale - 1:40
Plotted From - trpr18387
File - U:\ms\prj\penn1162\plan.dgn

PCC PAVEMENT JOINT LAYOUT

FOR BIDDING PURPOSES ONLY

STATE OF SOUTH DAKOTA	PROJECT	SHEET	TOTAL SHEETS
	IM 1902(61)0	F31	F83

Plotting Date: 06/09/2015

Scale 1 Inch = 40 Feet
Sheet 5 of 17 Sheets

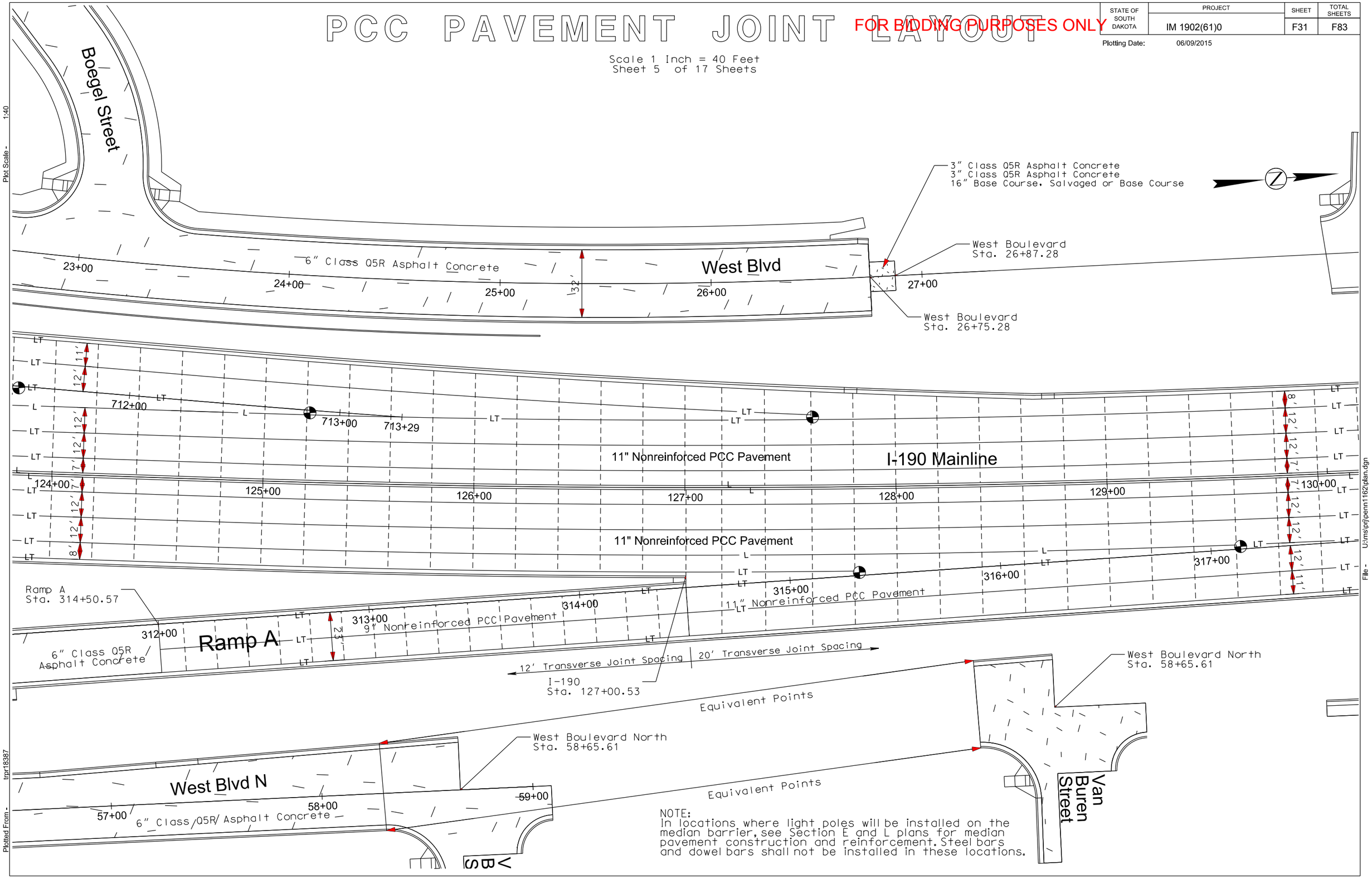

NOTE:
In locations where light poles will be installed on the median barrier, see Section E and L plans for median pavement construction and reinforcement. Steel bars and dowel bars shall not be installed in these locations.

Plot Scale - 1:40
Plotted From - trpr18387
File - U:\ms\prj\penn1162\plan.dgn

PCC PAVEMENT JOINT LAYOUT

FOR BIDDING PURPOSES ONLY

STATE OF SOUTH DAKOTA	PROJECT	SHEET	TOTAL SHEETS
	IM 1902(61)0	F32	F83

Plotting Date: 06/09/2015

Scale 1 Inch = 40 Feet
Sheet 6 of 17 Sheets

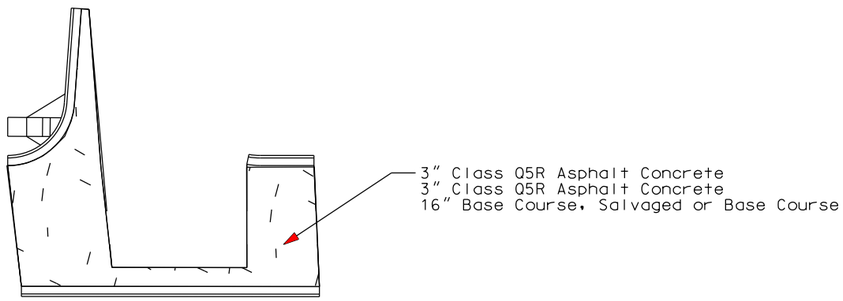

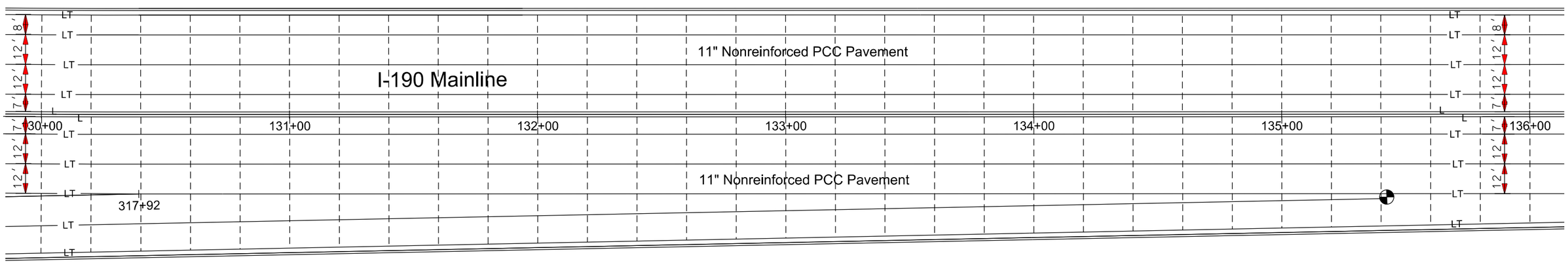

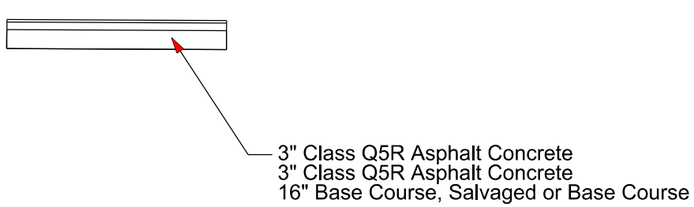

NOTE:
In locations where light poles will be installed on the median barrier, see Section E and L plans for median pavement construction and reinforcement. Steel bars and dowel bars shall not be installed in these locations.

Plot Scale - 1:40

Plotted From - trpr18387

File - U:\ms\prj\penn11162\plan.dgn

PCC PAVEMENT JOINT LAYOUT

FOR BIDDING PURPOSES ONLY

STATE OF SOUTH DAKOTA	PROJECT	SHEET	TOTAL SHEETS
	IM 1902(61)0	F33	F83

Plotting Date: 06/09/2015

Revised 06-08-2015 LLA

Scale 1 Inch = 40 Feet
Sheet 7 of 17 Sheets

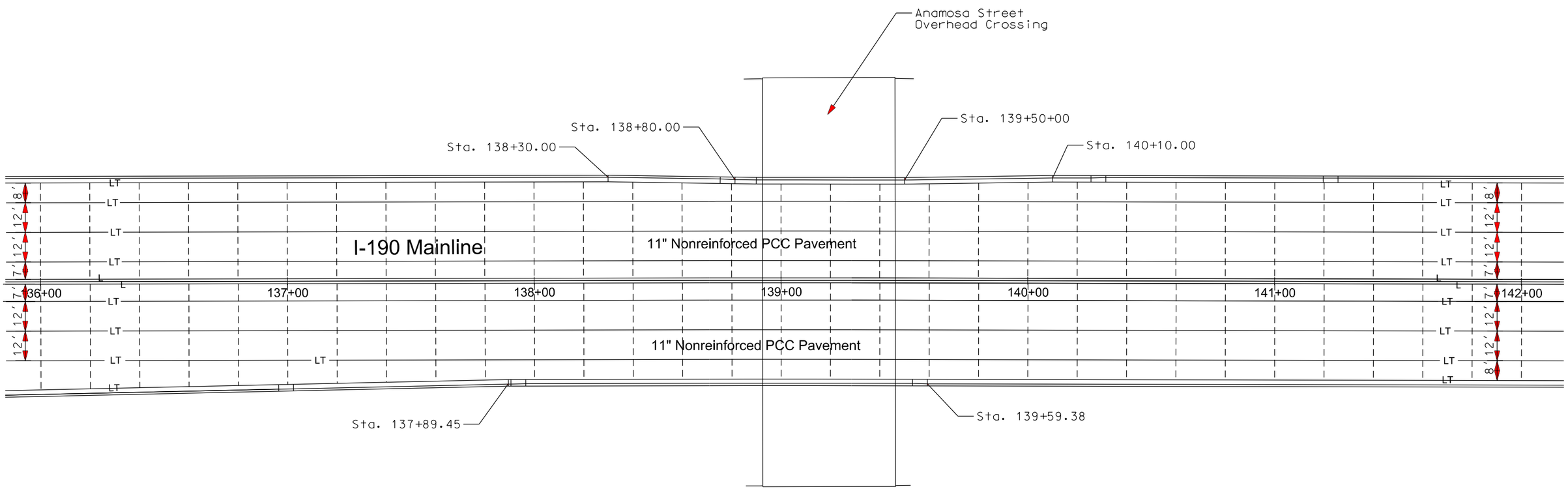

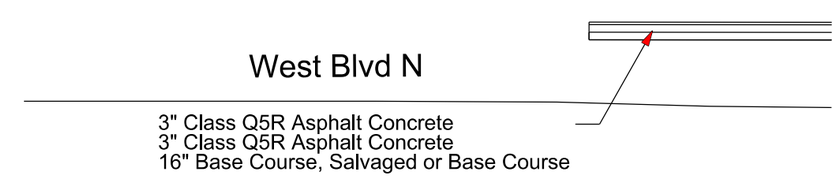

NOTE:
In locations where light poles will be installed on the median barrier, see Section E and L plans for median pavement construction and reinforcement. Steel bars and dowel bars shall not be installed in these locations.

Plot Scale - 1:40

Plotted From - trpr18387

File - U:\ms\prj\penn1162\plan.dgn

PCC PAVEMENT JOINT LAYOUT

FOR BIDDING PURPOSES ONLY

STATE OF SOUTH DAKOTA	PROJECT	SHEET	TOTAL SHEETS
	IM 1902(61)0	F34	F83

Plotting Date: 06/09/2015

Revised 06-08-2015 LLA

Scale 1 Inch = 40 Feet
Sheet 8 of 17 Sheets

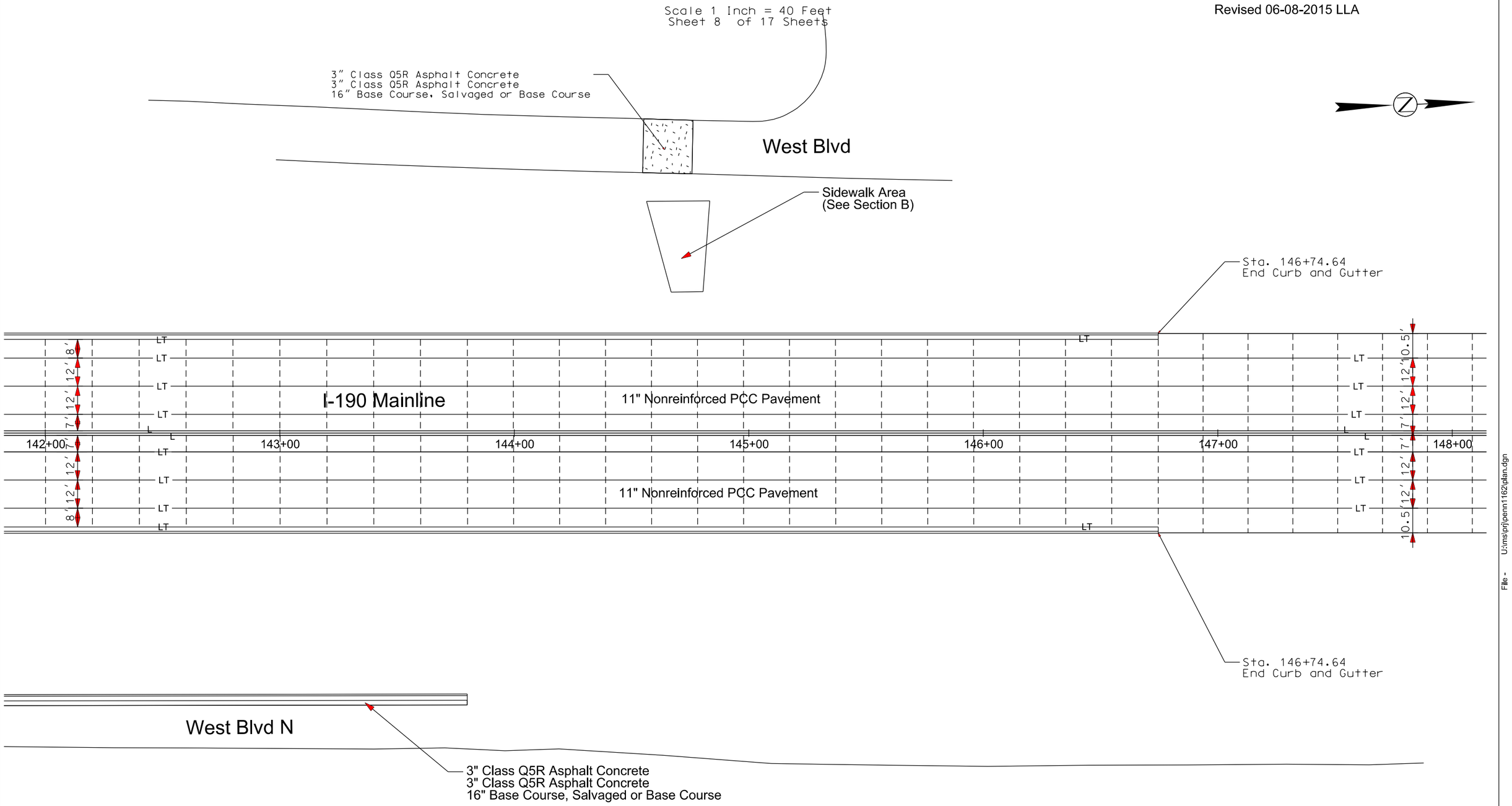

NOTE:
In locations where light poles will be installed on the median barrier, see Section E and L plans for median pavement construction and reinforcement. Steel bars and dowel bars shall not be installed in these locations.

Plot Scale - 1:40

Plotted From - trpr18387

File - U:\ms\prj\penn1162\plan.dgn

PCC PAVEMENT JOINT LAYOUT

FOR BIDDING PURPOSES ONLY

STATE OF SOUTH DAKOTA	PROJECT	SHEET	TOTAL SHEETS
	IM 1902(61)0	F35	F83

Plotting Date: 06/09/2015

Scale 1 Inch = 40 Feet
Sheet 9 of 17 Sheets

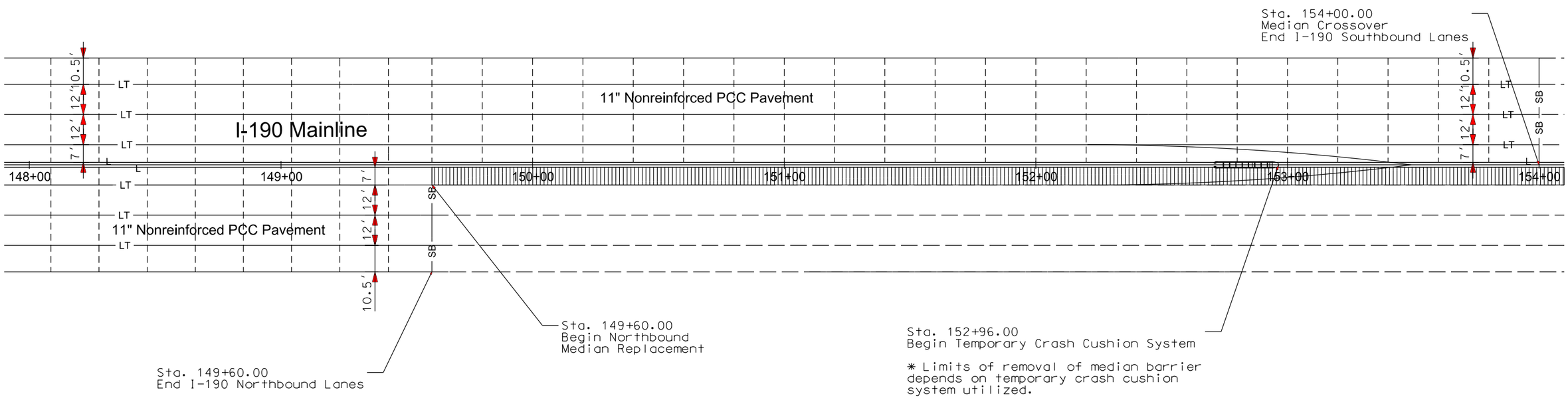

NOTE:
In locations where light poles will be installed on the median barrier, see Section E and L plans for median pavement construction and reinforcement. Steel bars and dowel bars shall not be installed in these locations.

Plot Scale - 1:40
Plotted From - trpr18387
File - U:\ms\prj\penn1162\plan.dgn

PCC PAVEMENT JOINT LAYOUT

FOR BIDDING PURPOSES ONLY

STATE OF SOUTH DAKOTA	PROJECT	SHEET	TOTAL SHEETS
	IM 1902(61)0	F36	F83

Plotting Date: 06/09/2015

Scale 1 Inch = 40 Feet
Sheet 10 of 17 Sheets

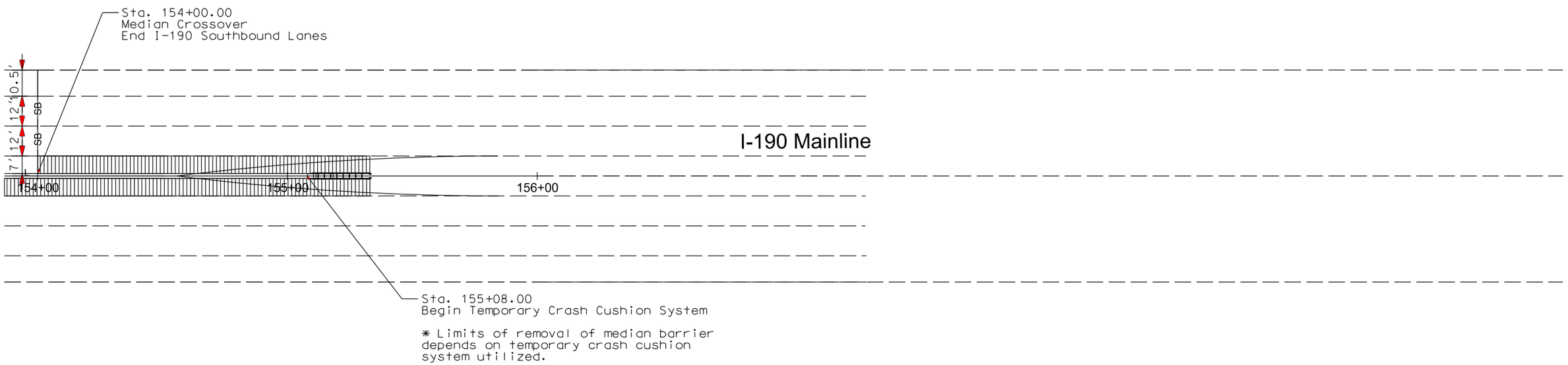

NOTE:
In locations where light poles will be installed on the median barrier, see Section E and L plans for median pavement construction and reinforcement. Steel bars and dowel bars shall not be installed in these locations.

Plot Scale - 1:40
Plotted From - trpr18387
File - U:\ms\prj\penn1162\plan.dgn

PCC PAVEMENT JOINT LAYOUT

FOR BIDDING PURPOSES ONLY

STATE OF SOUTH DAKOTA	PROJECT	SHEET	TOTAL SHEETS
	IM 1902(61)0	F37	F83

Plotting Date: 06/09/2015

Scale 1 Inch = 40 Feet
Sheet 11 of 17 Sheets

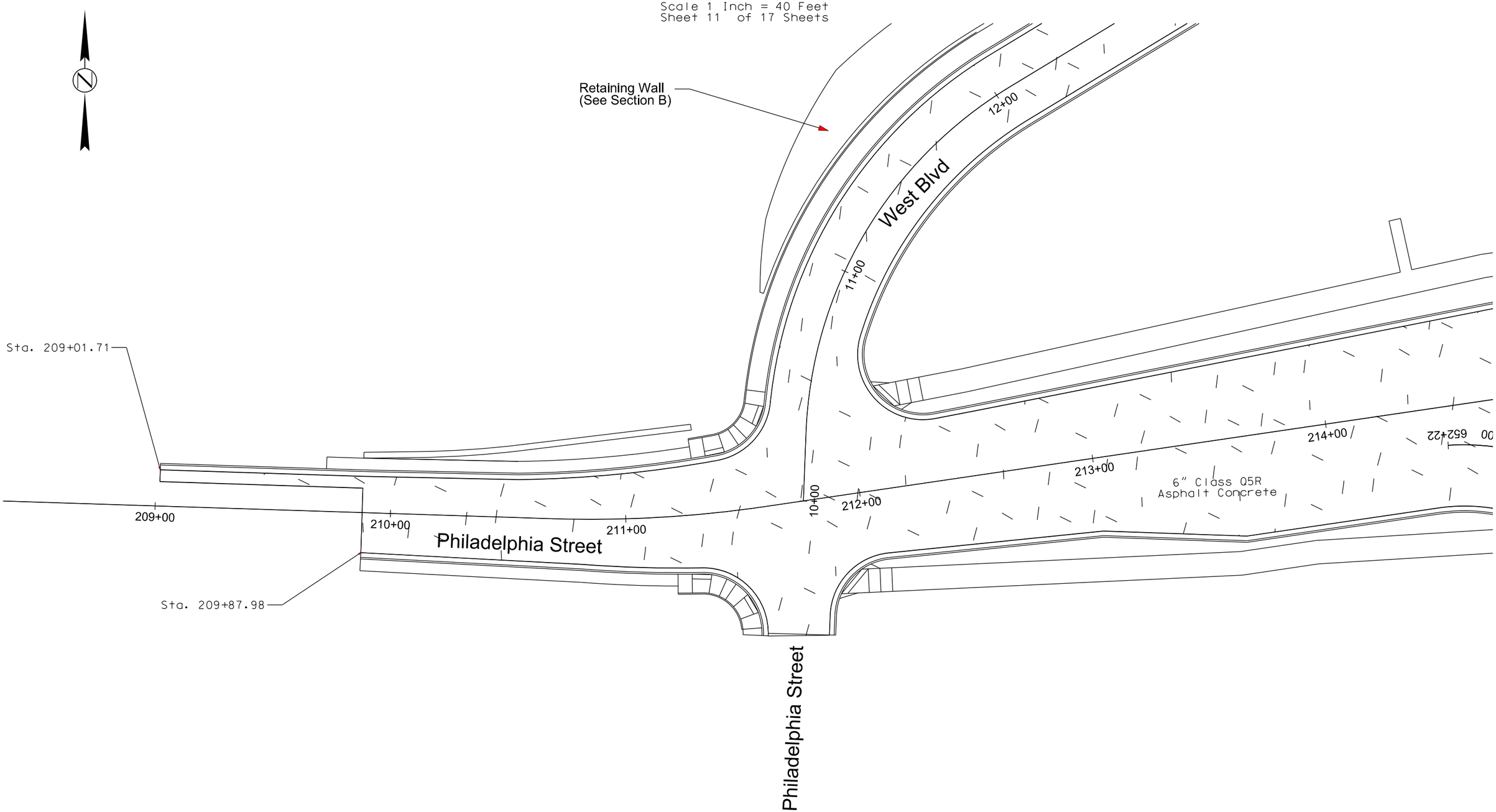

Plot Scale - 1:40

Plotted From - trpr18387

File - U:\ms\prj\penn1162\plan.dgn

PCC PAVEMENT JOINT LAYOUT

FOR BIDDING PURPOSES ONLY

STATE OF SOUTH DAKOTA	PROJECT	SHEET	TOTAL SHEETS
	IM 1902(61)0	F38	F83

Plotting Date: 06/09/2015

Scale 1 Inch = 40 Feet
Sheet 12 of 17 Sheets

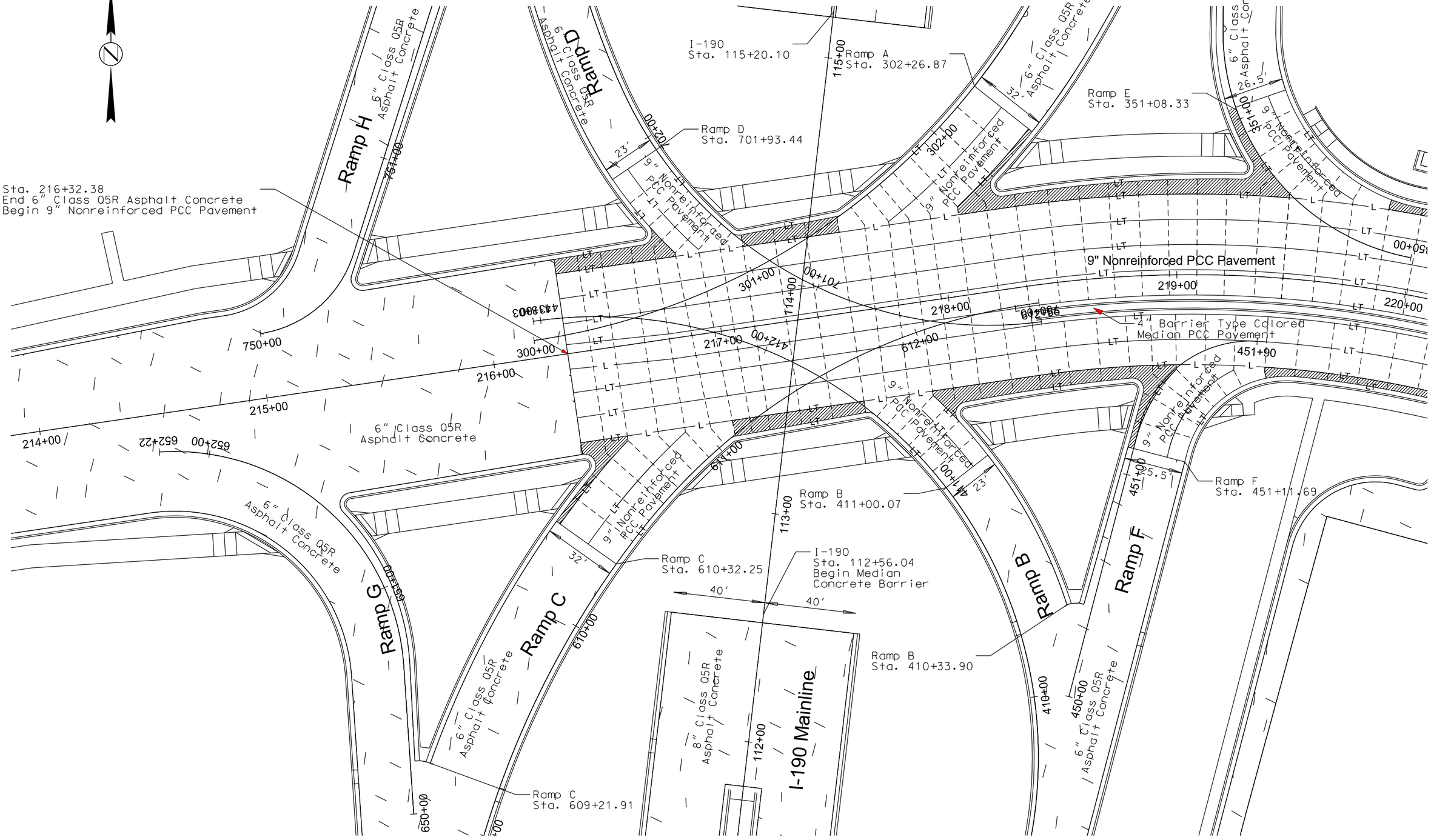

Plot Scale - 1:40

Plotted From - trpr18387

File - U:\ms\pj\pemn11162\plan.dgn

PCC PAVEMENT JOINT LAYOUT

FOR BIDDING PURPOSES ONLY

STATE OF SOUTH DAKOTA	PROJECT	SHEET	TOTAL SHEETS
	IM 1902(61)0	F39	F83

Plotting Date: 06/09/2015

Revised 06-08-2015 LLA

Scale 1 Inch = 40 Feet
Sheet 13 of 17 Sheets

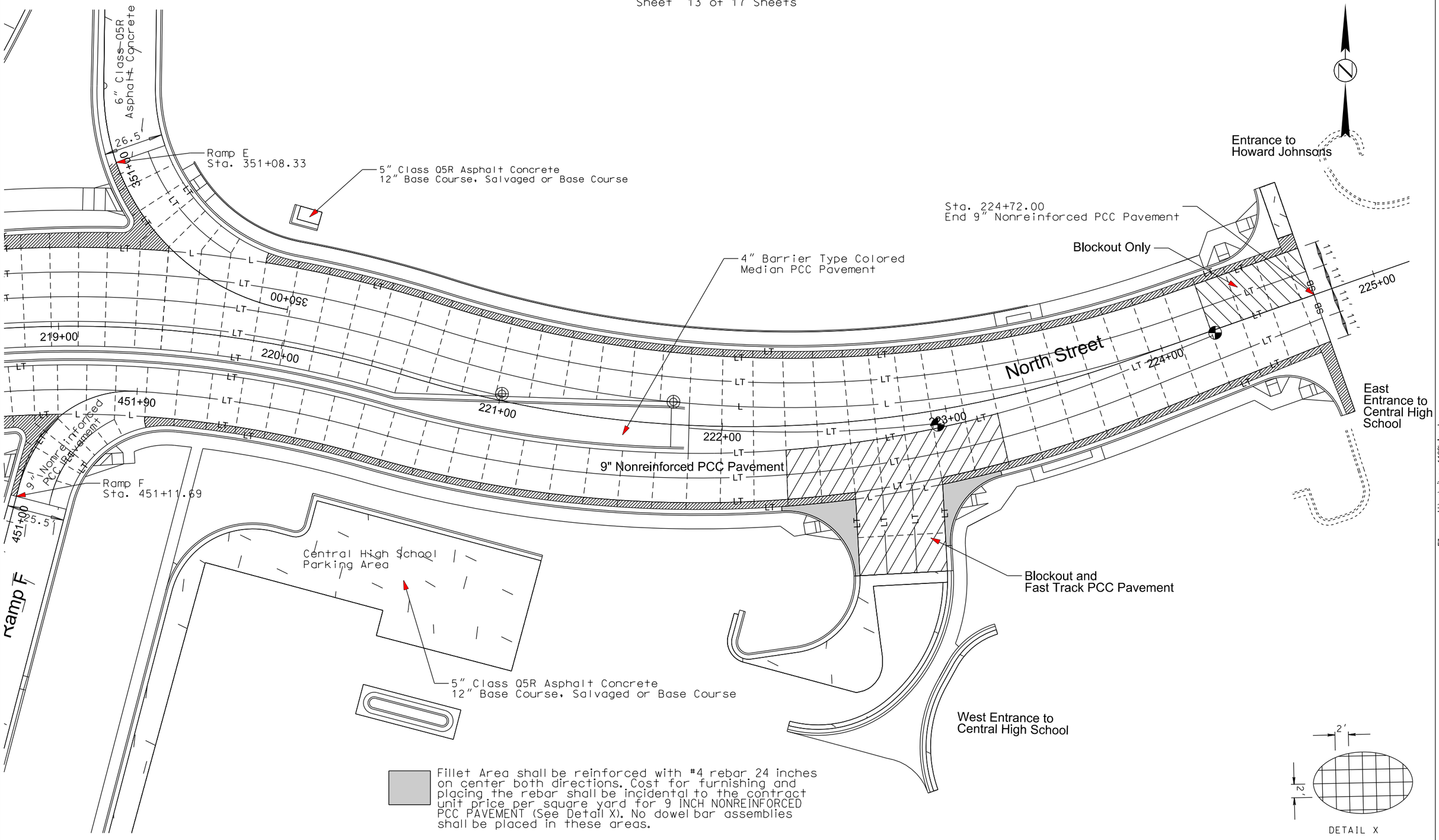

Fillet Area shall be reinforced with #4 rebar 24 inches on center both directions. Cost for furnishing and placing the rebar shall be incidental to the contract unit price per square yard for 9 INCH NONREINFORCED PCC PAVEMENT (See Detail X). No dowel bar assemblies shall be placed in these areas.

Plot Scale - 1:40

Plotted From - trpr18387

File - U:\ms\prj\penn11162\plan.dgn

PCC PAVEMENT JOINT LAYOUT

FOR BIDDING PURPOSES ONLY

STATE OF SOUTH DAKOTA	PROJECT	SHEET	TOTAL SHEETS
	IM 1902(61)0	F40	F83

Plotting Date: 06/09/2015

Scale 1 Inch = 40 Feet
Sheet 14 of 17 Sheets

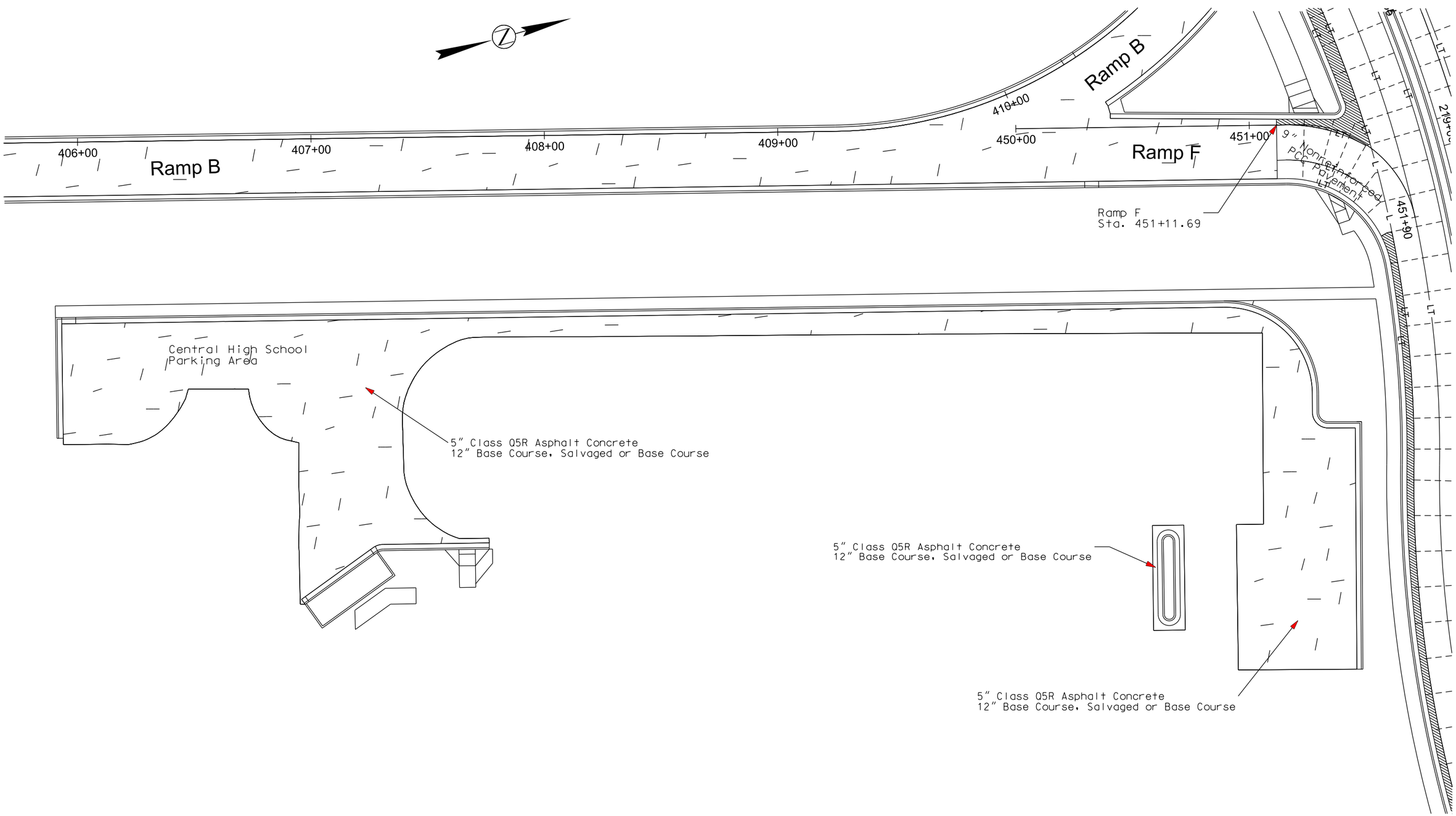

Plot Scale - 1:40

Plotted From - trpr18387

File - U:\msi\prj\penn11162\plan.dgn

PCC PAVEMENT JOINT LAYOUT

FOR BIDDING PURPOSES ONLY

STATE OF SOUTH DAKOTA	PROJECT	SHEET	TOTAL SHEETS
	IM 1902(61)0	F41	F83

Plotting Date: 06/09/2015

Scale 1 Inch = 40 Feet
Sheet 15 of 17 Sheets

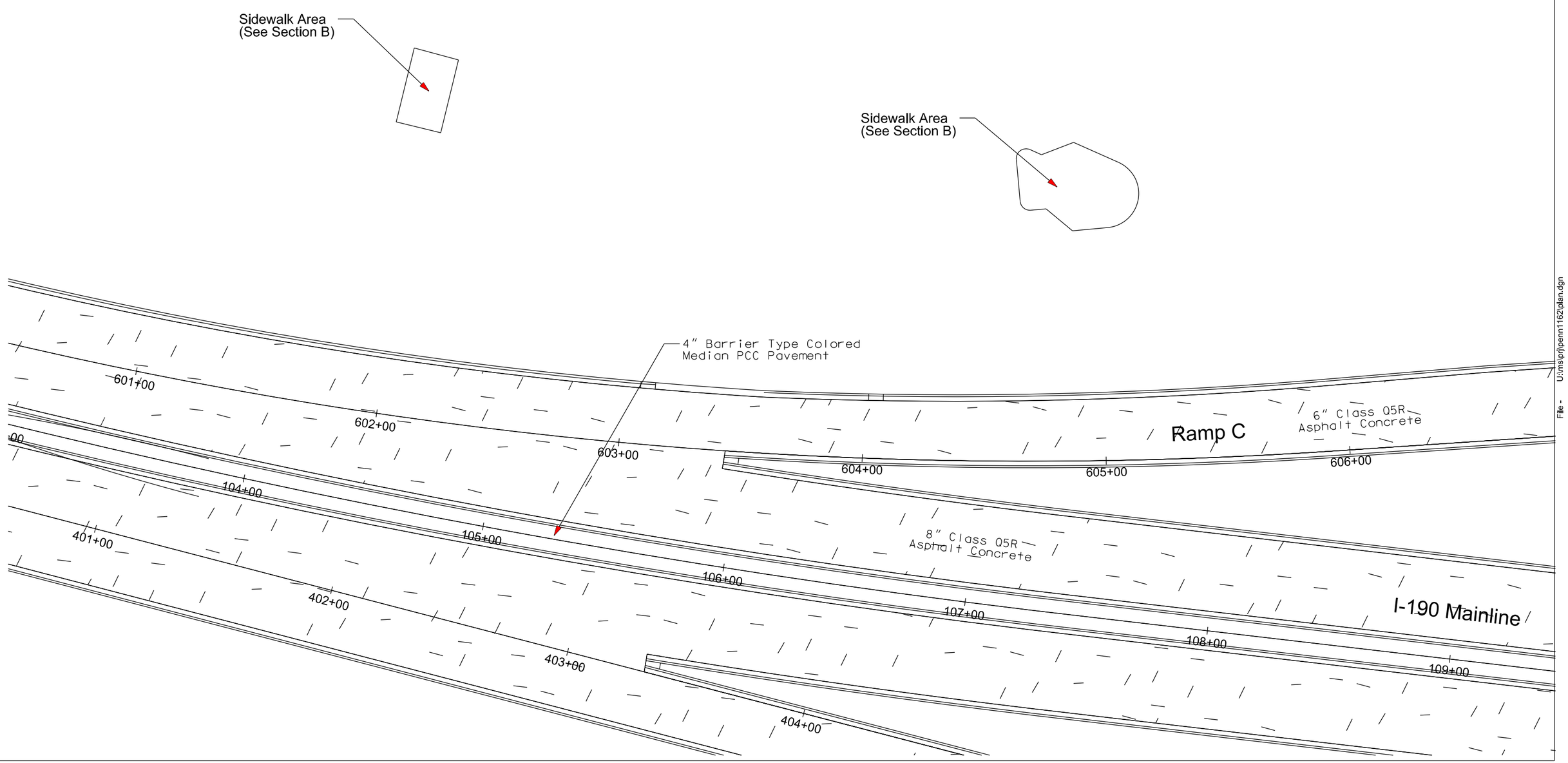

Plot Scale - 1:40

Plotted From - trpr18387

File - U:\ms\prj\pem\1162\plan.dgn

PCC PAVEMENT JOINT LAYOUT

FOR BIDDING PURPOSES ONLY

STATE OF SOUTH DAKOTA	PROJECT	SHEET	TOTAL SHEETS
	IM 1902(61)0	F42	F83

Plotting Date: 06/09/2015

Scale 1 Inch = 40 Feet
Sheet 16 of 17 Sheets

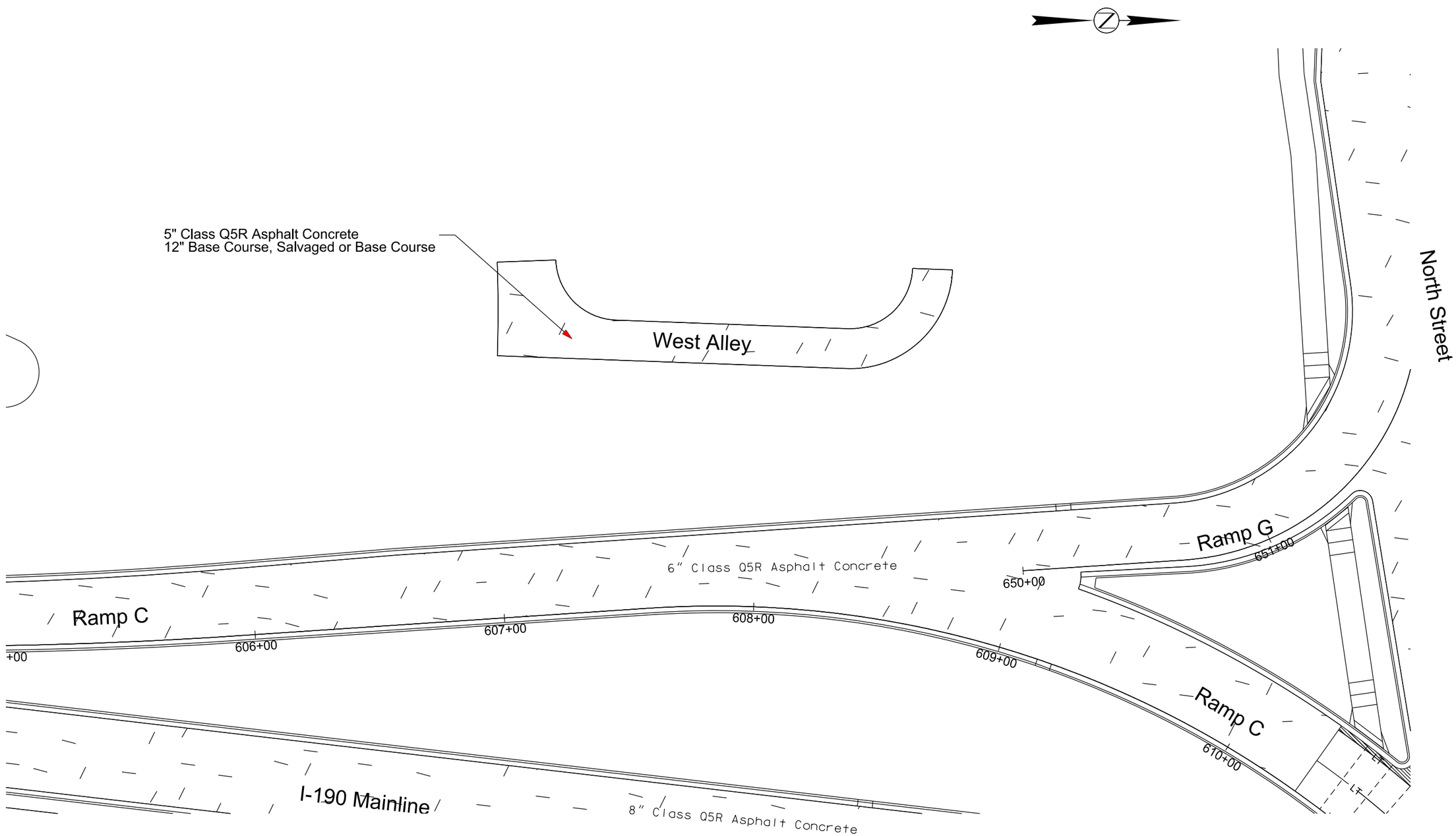

PLOT SCALE - 1:40

PLOT NAME - 42

FILE - U:\MS\PRJ\PENN1162\PLAN.DGN

PLOTTED FROM - TRPR19387

PCC PAVEMENT JOINT LAYOUT

FOR BIDDING PURPOSES ONLY

STATE OF SOUTH DAKOTA	PROJECT	SHEET	TOTAL SHEETS
	IM 1902(61)0	F43	F83

Plotting Date: 06/09/2015

Scale 1 Inch = 40 Feet
Sheet 17 of 17 Sheets

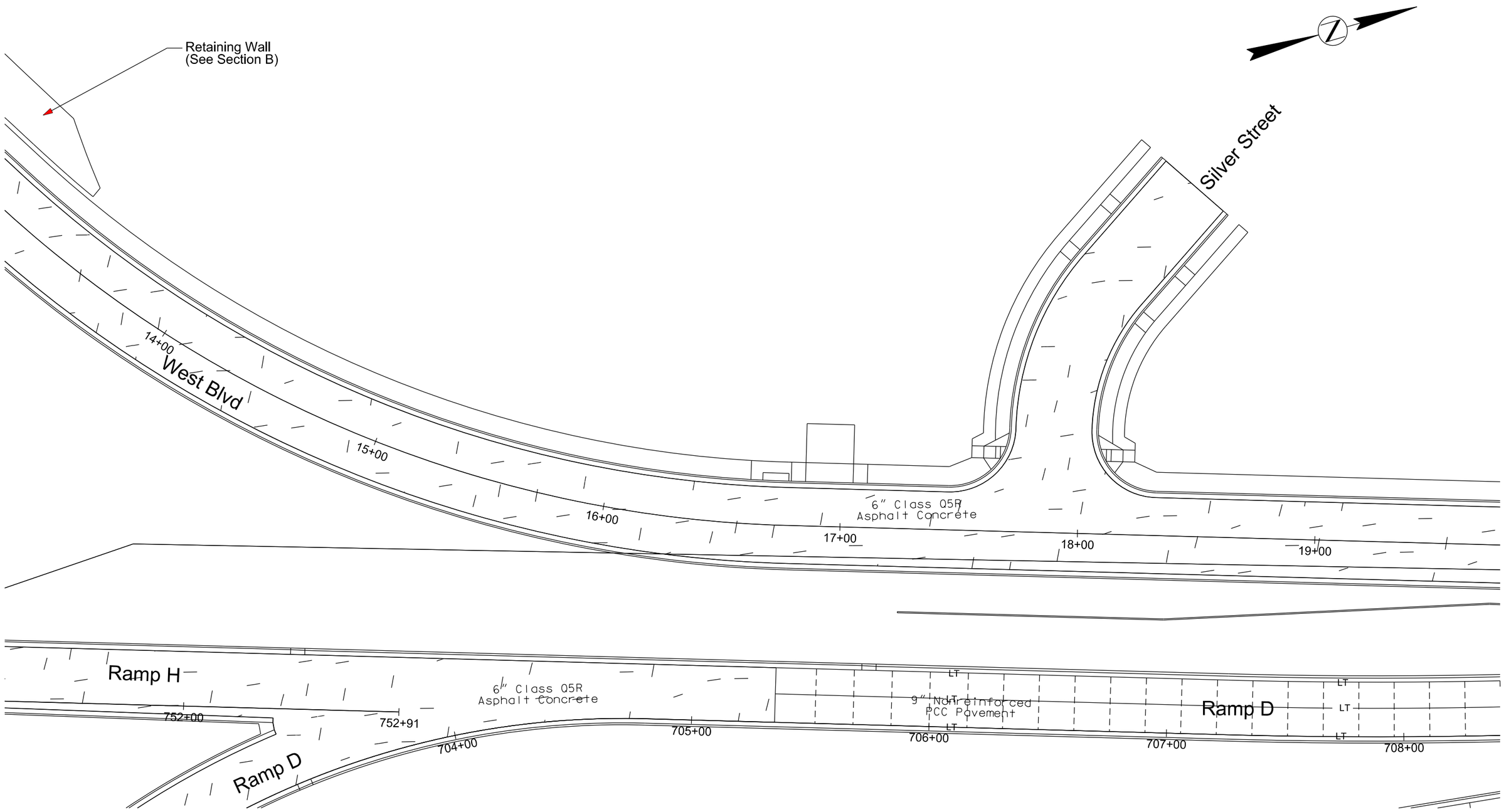

PLOT SCALE - 1:40

PLOTTED FROM - TRPR18387

PLOT NAME - 43

FILE - U:\MS\PRJ\PENNI162\PLAN.DGN

FOR BIDDING PURPOSES ONLY

LONGITUDINAL UNDERDRAINS AND CUTOFF DRAINS

I-190

Longitudinal Underdrains are tied into Storm Sewer Drop Inlets at some locations. See Section F plan notes and underdrain detail sheets for more details on longitudinal and cutoff drains.

See Sections B and Z for Storm Sewer Details.

Southbound Estimate of Quantities:

Impermeable Plastic Membrane	58 SqYd
4 inch Slotted Corrugated Polyethylene Drainage Tubing	1520 Feet
Porous Backfill	525 Tons

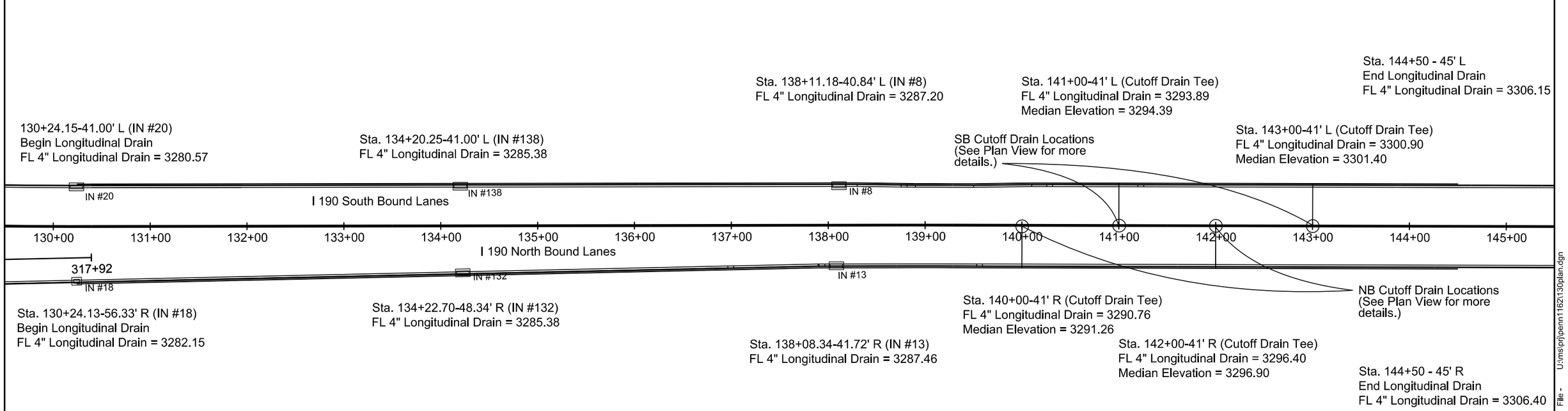

Northbound Estimate of Quantities:

Impermeable Plastic Membrane	58 SqYd
4 inch Slotted Corrugated Polyethylene Drainage Tubing	1520 Feet
Porous Backfill	535 Tons

Plot Scale - 1:100
Plotted From - tnpr18387
File - U:\ms\prj\pemn1162\130plan.dgn

LONGITUDINAL UNDERDRAIN PROFILES

FOR BIDDING PURPOSES ONLY

STATE OF SOUTH DAKOTA	PROJECT	SHEET	TOTAL SHEETS
	IM 1902(61)0	F45	F83

Plotting Date: 06/09/2015

I-190 NB Profile

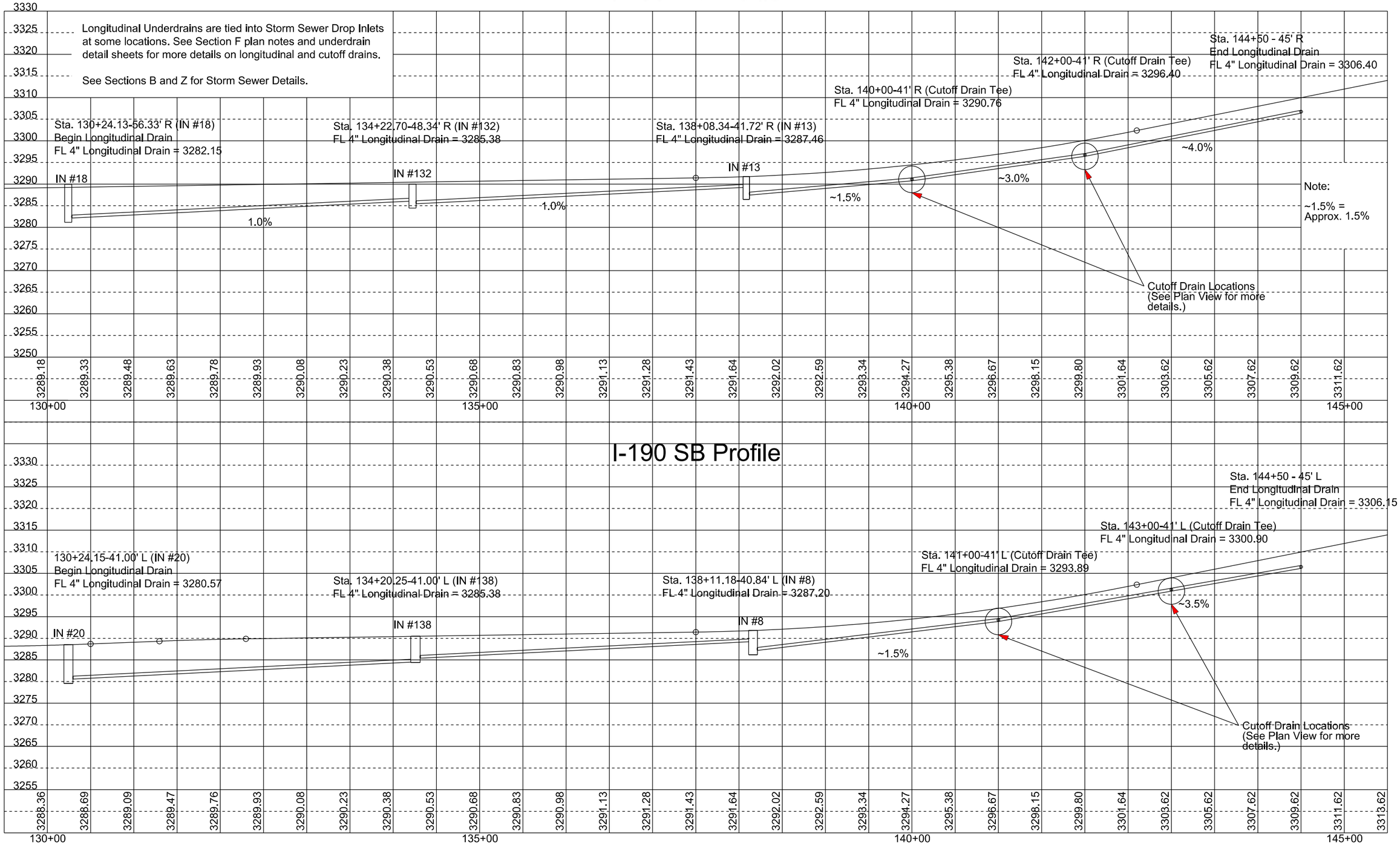

I-190 SB Profile

Plot Scale - 1:106

Plotted From - trpr18387

File - U:\ms\prj\penn1162\130pro.dgn

TYPICAL UNDERDRAIN INSTALLATION

I-190 LONGITUDINAL UNDERDRAINS STATION 130+24 to 144+50

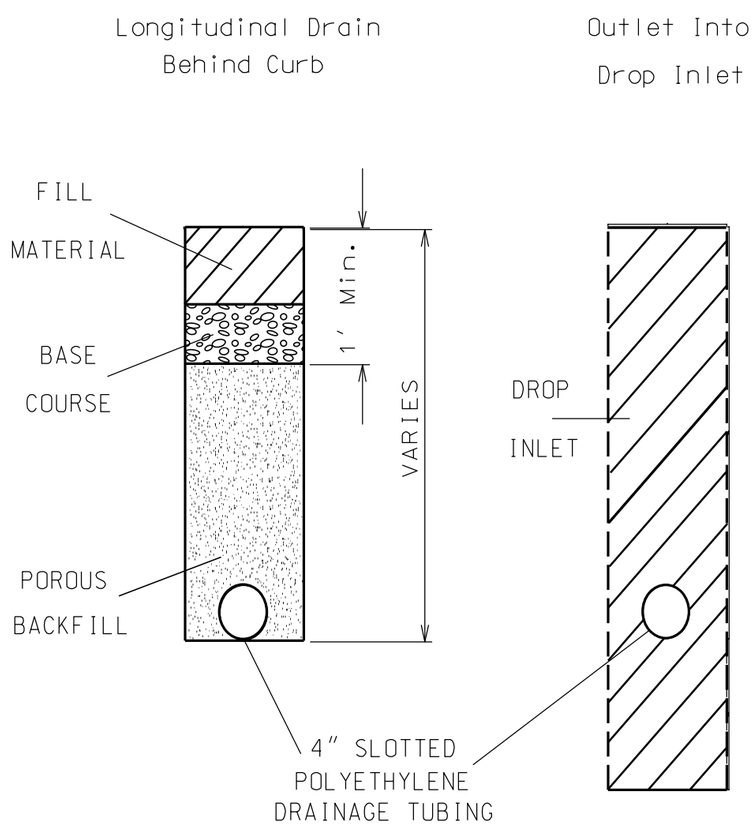

UNDERDRAINS SHALL BE CONSTRUCTED IN ACCORDANCE WITH SECTION 680 of the SPECIFICATONS

TYPICAL CUTOFF DRAIN INSTALLATION

I-190 SBL CUTOFF DRAINS STATION 141+00 & 143+00
I-190 NBL CUTOFF DRAINS STATION 140+00 & 142+00

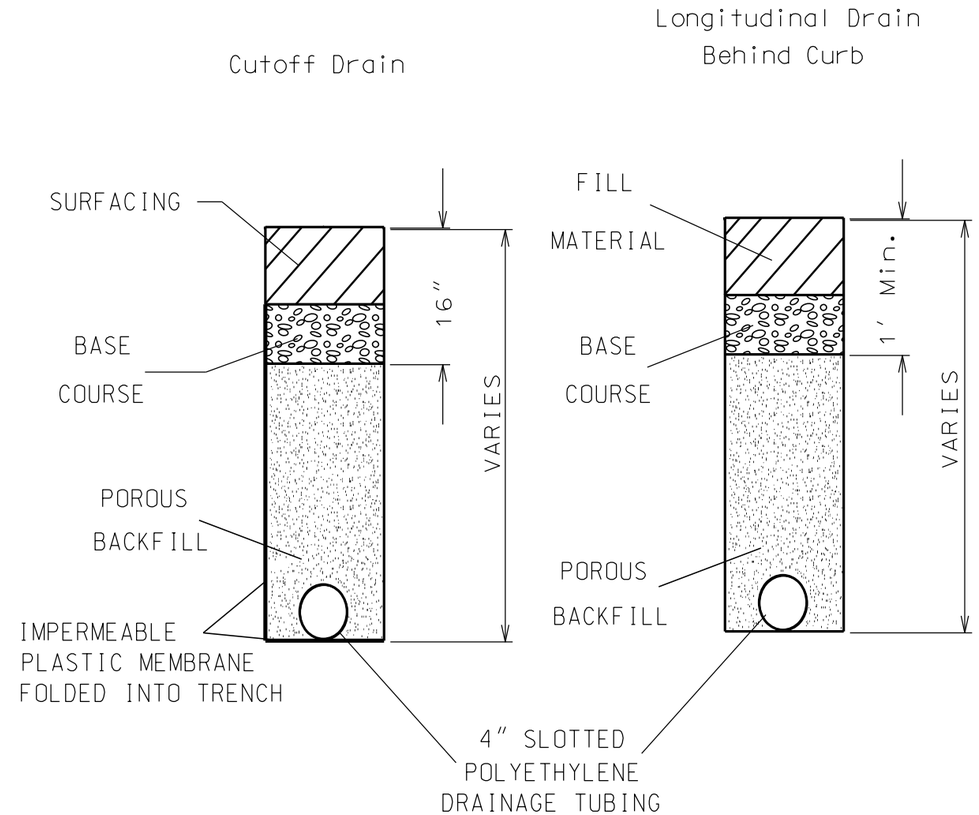

UNDERDRAINS SHALL BE CONSTRUCTED IN ACCORDANCE WITH SECTION 680 of the SPECIFICATONS

LONGITUDINAL UNDERDRAINS

FOR BIDDING PURPOSES ONLY

STATE OF SOUTH DAKOTA	PROJECT	SHEET	TOTAL SHEETS
	IM 1902(61)0	F47	F83

Plotting Date: 06/09/2015

North Street

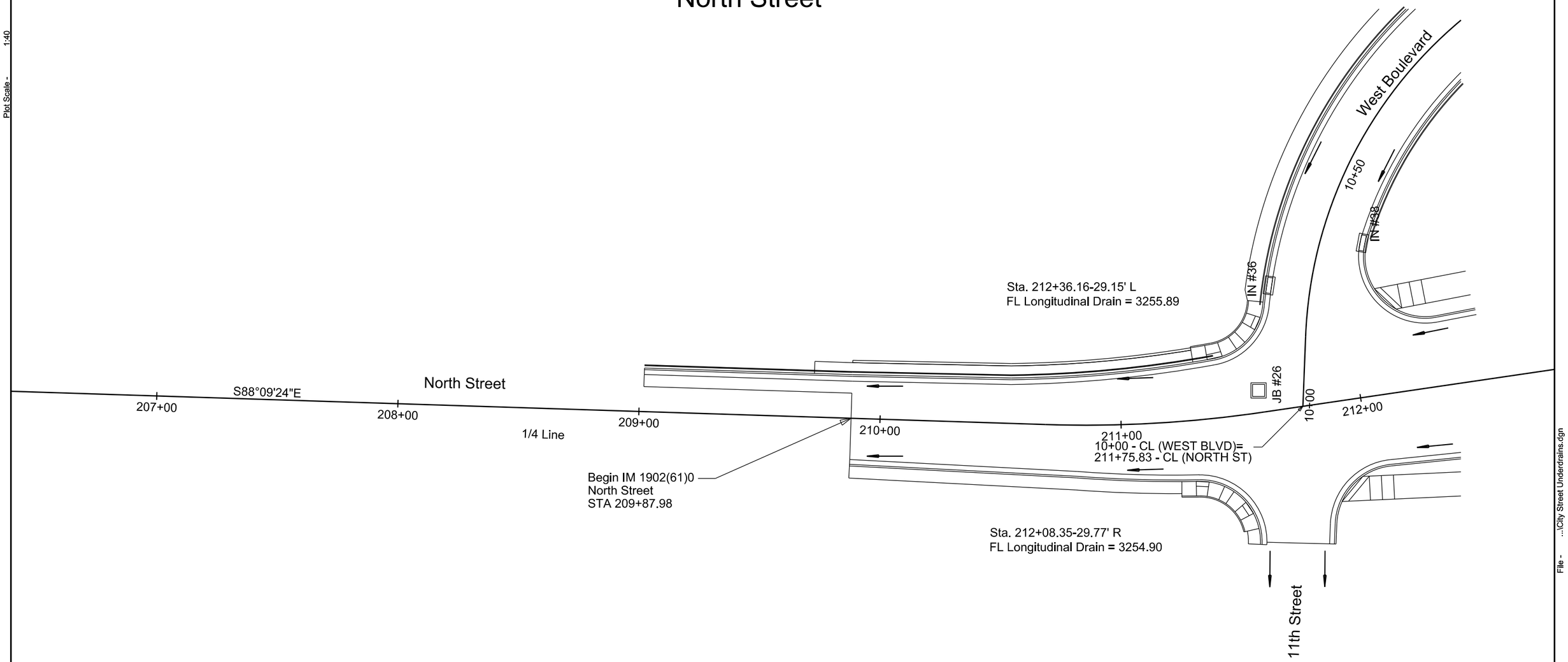

Sec. 35-T2N-R7E

Plot Scale - 1:40

Plotted From - tnpr18387

File - ...\City Street Underdrains.dgn

STATE OF SOUTH DAKOTA	PROJECT	SHEET	TOTAL SHEETS
	IM 1902(61)0	F48	F83

Plotting Date: 06/09/2015

LONGITUDINAL UNDERDRAINS

FOR BIDDING PURPOSES ONLY

North Street Profile

Longitudinal Underdrains are tied into Storm Sewer Drop Inlets.
See Section F plan notes and underdrain detail sheets for more details on longitudinal and cutoff drains.

See Sections B and Z for Storm Sewer Details.

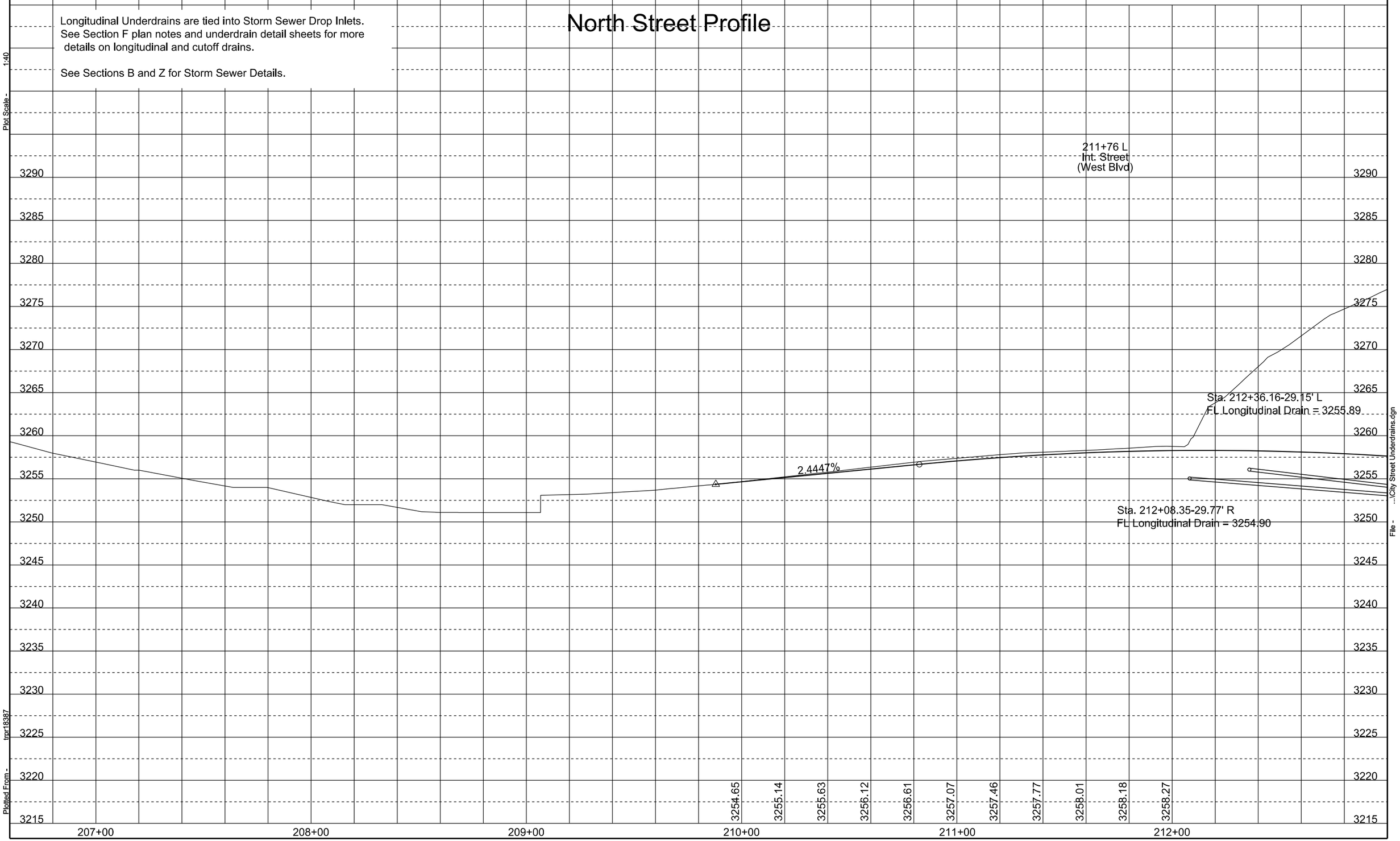

Plot Scale - 1:40

Plotted From - tmpr18387

File - ...\City Street Underdrains.dgn

LONGITUDINAL UNDERDRAINS

FOR BIDDING PURPOSES ONLY

STATE OF SOUTH DAKOTA	PROJECT	SHEET	TOTAL SHEETS
	IM 1902(61)0	F49	F83

Plotting Date: 06/09/2015

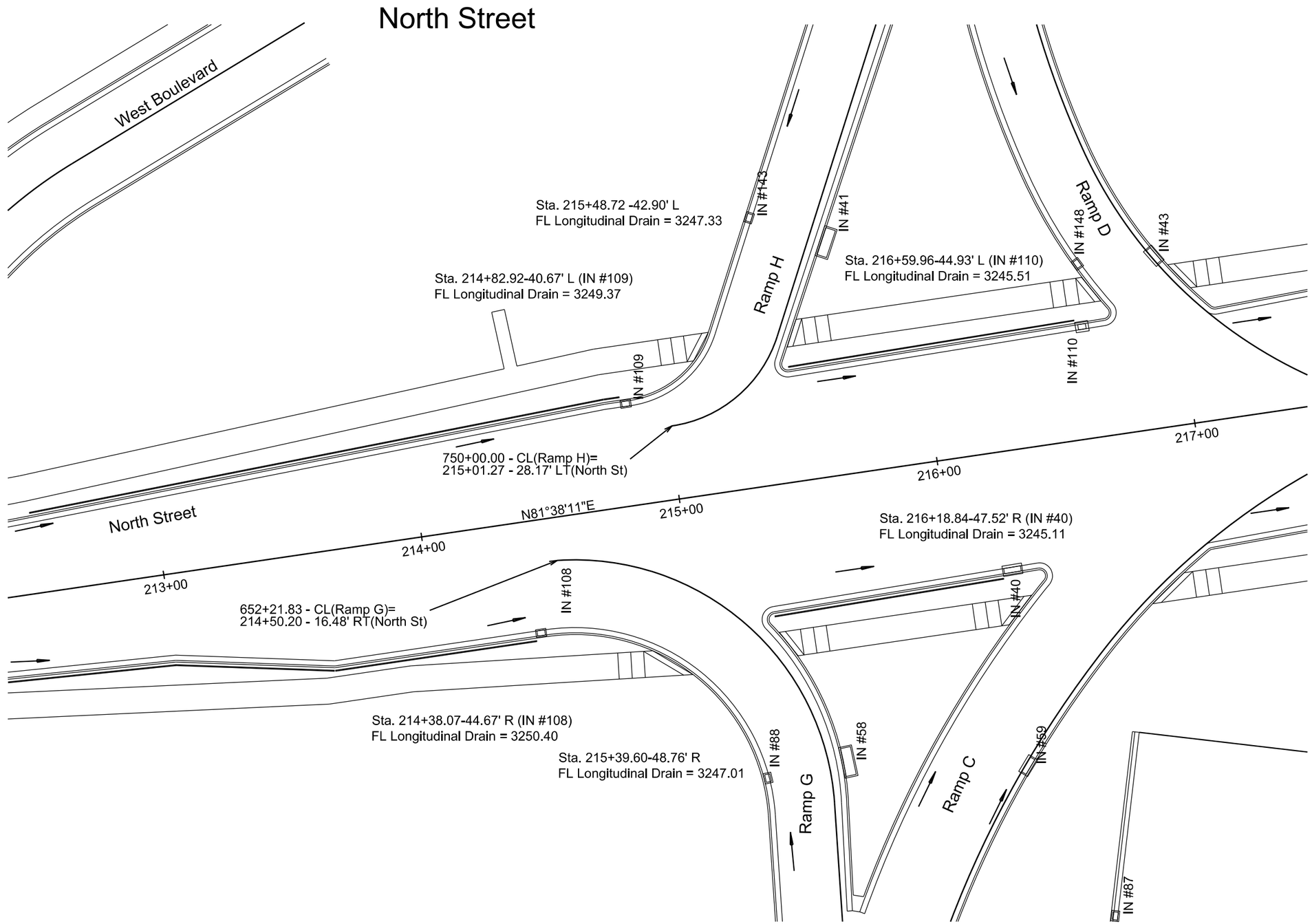

Sec. 35-T2N-R7E

Plot Scale - 1:40

Plotted From - tmp18387

File - ...\City Street Underdrains.dgn

STATE OF SOUTH DAKOTA	PROJECT	SHEET	TOTAL SHEETS
	IM 1902(61)0	F50	F83

Plotting Date: 06/09/2015

LONGITUDINAL UNDERDRAINS

FOR BIDDING PURPOSES ONLY

North Street Profile

Longitudinal Underdrains are tied into Storm Sewer Drop Inlets. See Section F plan notes and underdrain detail sheets for more details on longitudinal and cutoff drains.

See Sections B and Z for Storm Sewer Details.

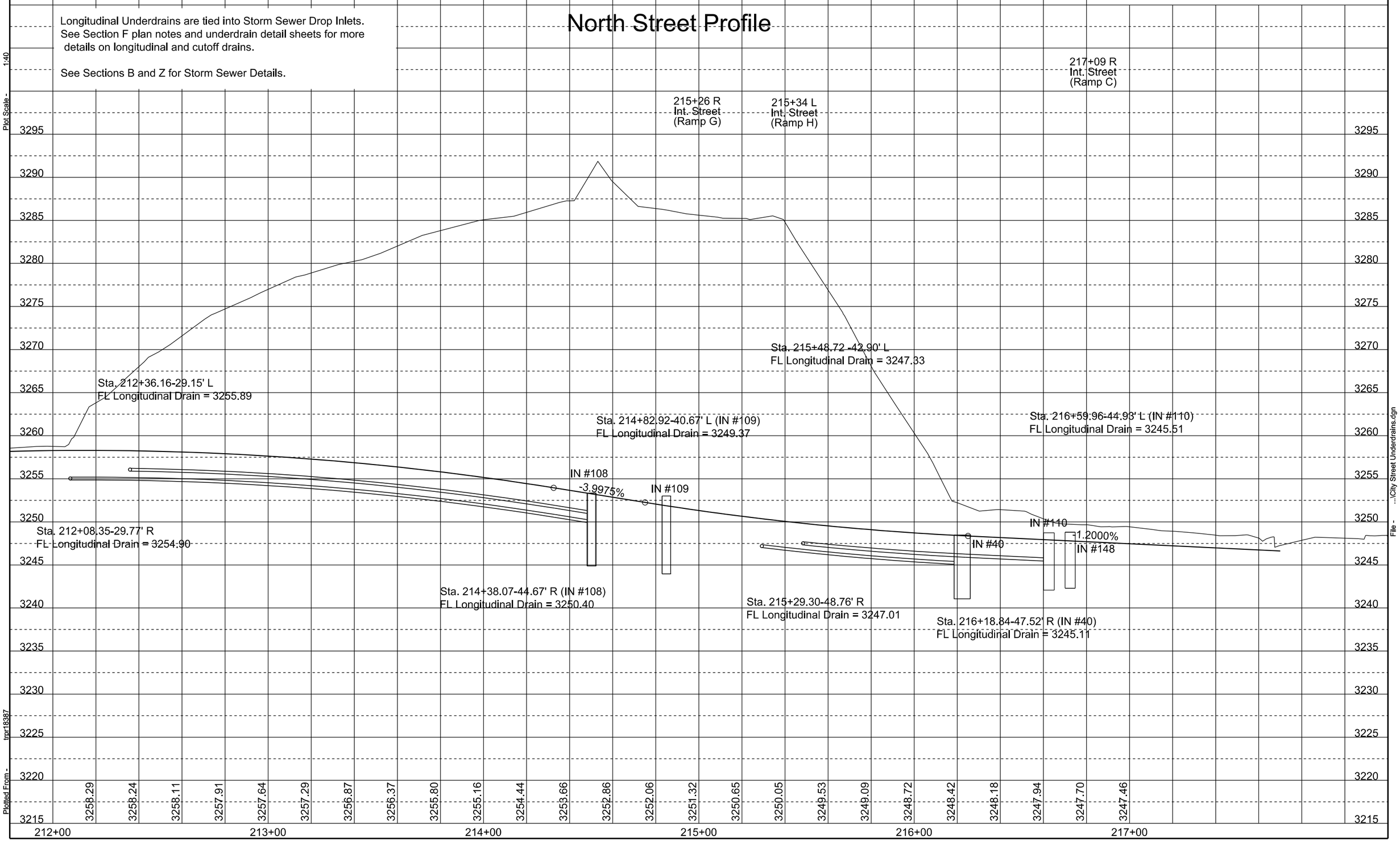

Plot Scale - 1:40

Plotted From - tpr18387

File - ...\City Street Underdrains.dgn

LONGITUDINAL UNDERDRAINS

FOR BIDDING PURPOSES ONLY

STATE OF SOUTH DAKOTA	PROJECT	SHEET	TOTAL SHEETS
	IM 1902(61)0	F51	F83

Plotting Date: 06/09/2015

West Boulevard

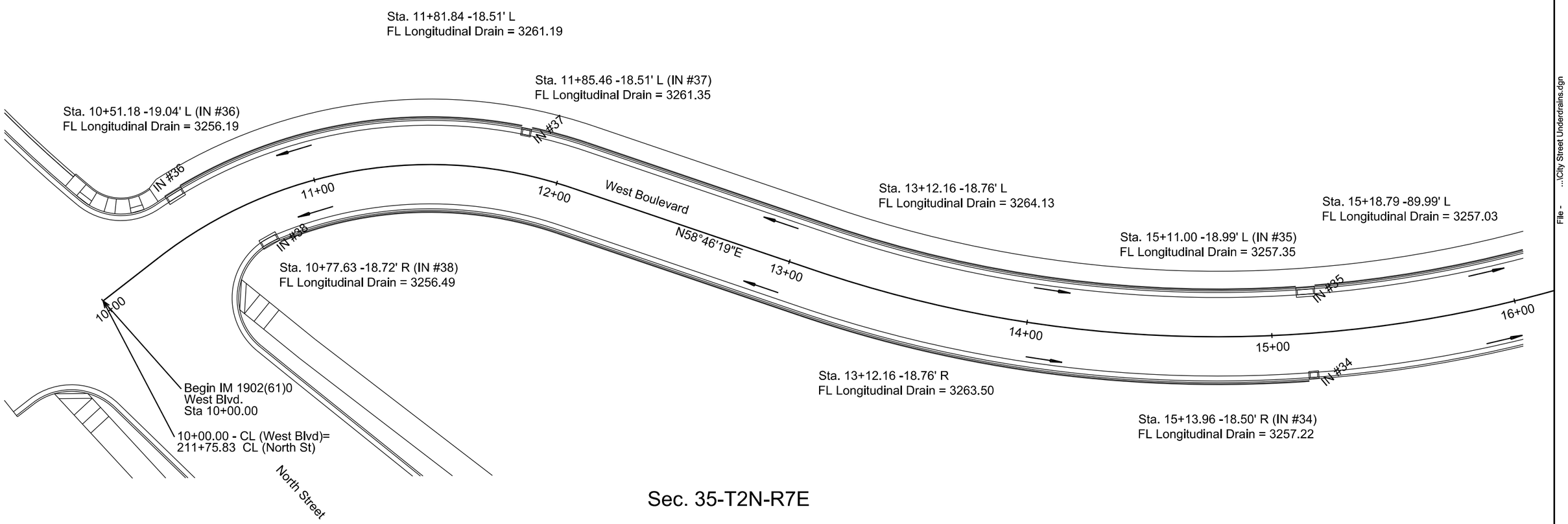

Sec. 35-T2N-R7E

Plot Scale - 1:40

Plotted From - tmpr18387

File - ...\City Street Underdrains.dgn

LONGITUDINAL UNDERDRAINS

FOR BIDDING PURPOSES ONLY

STATE OF SOUTH DAKOTA	PROJECT	SHEET	TOTAL SHEETS
	IM 1902(61)0	F52	F83

Plotting Date: 06/09/2015

West Boulevard Profile

Longitudinal Underdrains are tied into Storm Sewer Drop Inlets.
See Section F plan notes and underdrain detail sheets for more details on longitudinal and cutoff drains.

See Sections B and Z for Storm Sewer Details.

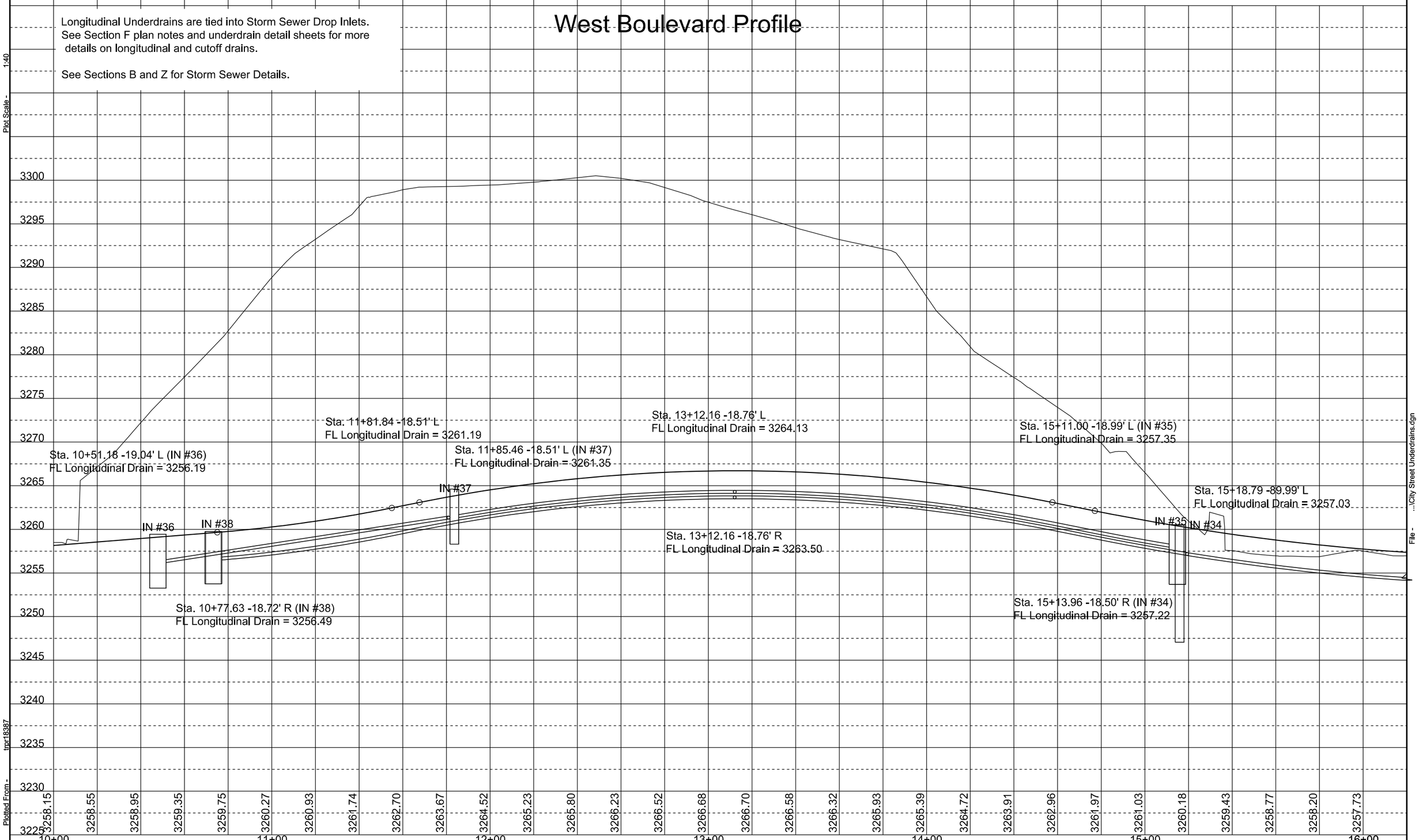

Plot Scale - 1:40

Plotted From - tpr18387

File - ...\City Street Underdrains.dgn

STATE OF SOUTH DAKOTA	PROJECT	SHEET	TOTAL SHEETS
	IM 1902(61)0	F53	F83

Plotting Date: 06/09/2015

LONGITUDINAL UNDERDRAINS

FOR BIDDING PURPOSES ONLY

West Boulevard

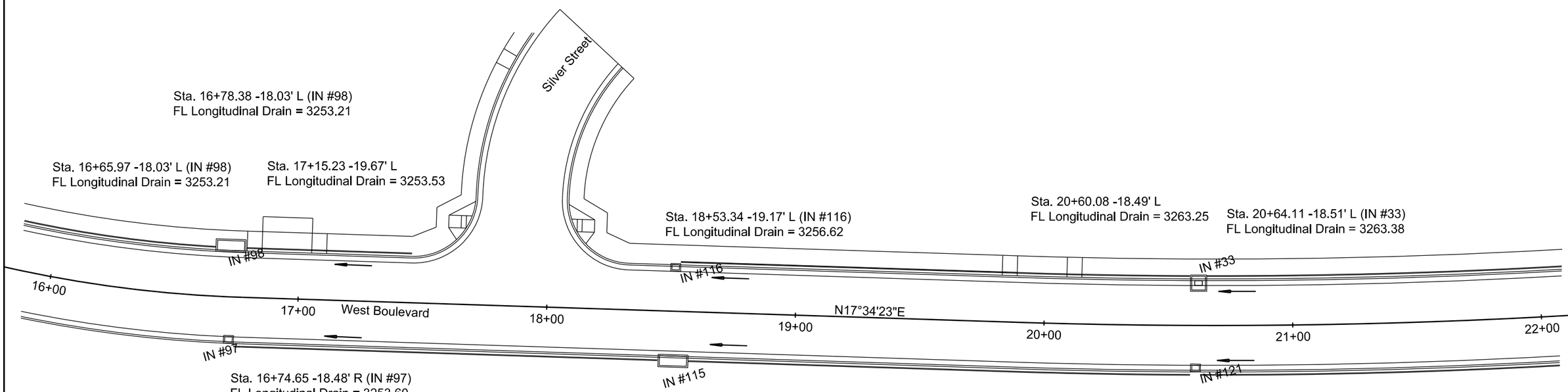

Plot Scale - 1:40

Plotted From - tnpr18387

File - ...\City Street Underdrains.dgn

STATE OF SOUTH DAKOTA	PROJECT	SHEET	TOTAL SHEETS
	IM 1902(61)0	F54	F83

Plotting Date: 06/09/2015

LONGITUDINAL UNDERDRAINS

FOR BIDDING PURPOSES ONLY

West Boulevard Profile

Longitudinal Underdrains are tied into Storm Sewer Drop Inlets. See Section F plan notes and underdrain detail sheets for more details on longitudinal and cutoff drains.

See Sections B and Z for Storm Sewer Details.

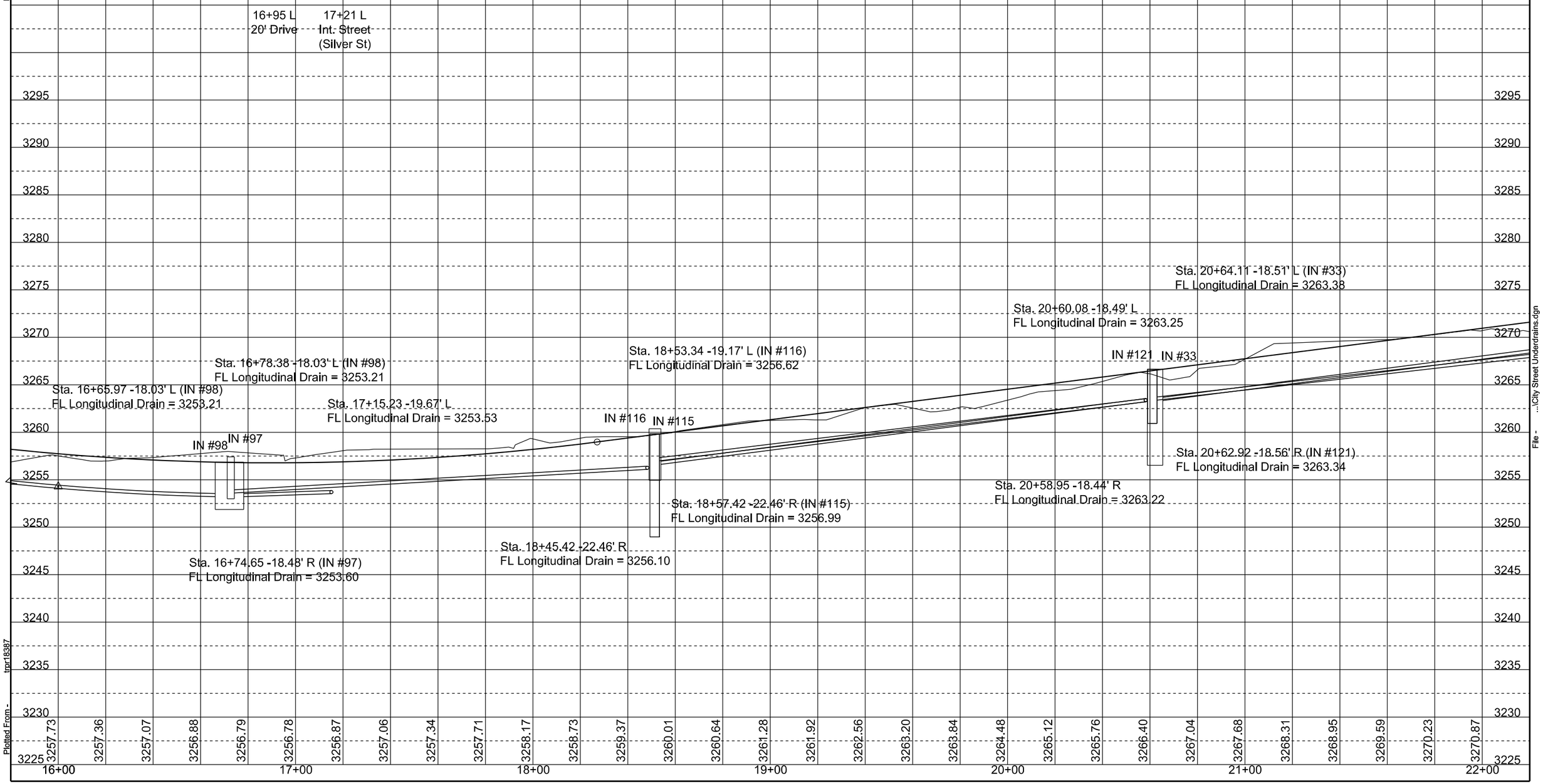

Plot Scale - 1:40

Plotted From - tpr18387

File - ...\City Street Underdrains.dgn

LONGITUDINAL UNDERDRAINS

FOR BIDDING PURPOSES ONLY

STATE OF SOUTH DAKOTA	PROJECT	SHEET	TOTAL SHEETS
	IM 1902(61)0	F55	F83

Plotting Date: 06/09/2015

West Boulevard

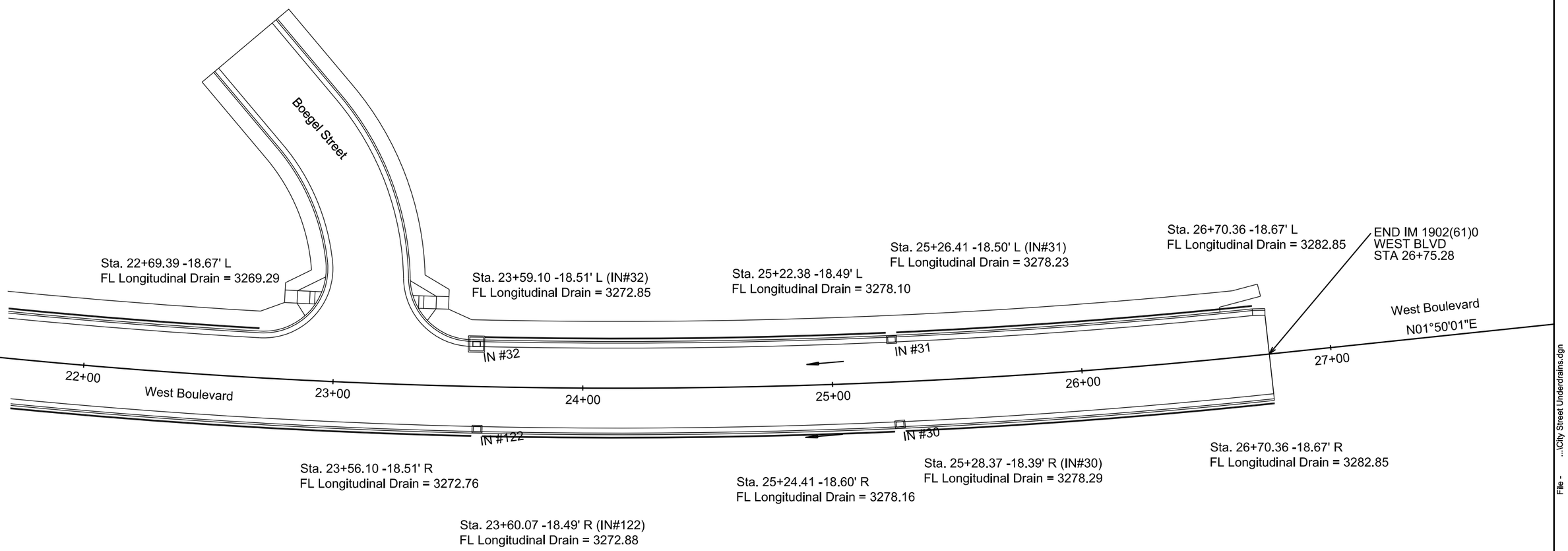

Plot Scale - 1:40

Plotted From - tmr18387

File - ...\City Street Underdrains.dgn

STATE OF SOUTH DAKOTA	PROJECT	SHEET	TOTAL SHEETS
	IM 1902(61)0	F56	F83

Plotting Date: 06/09/2015

LONGITUDINAL UNDERDRAINS

FOR BIDDING PURPOSES ONLY

West Boulevard Profile

Longitudinal Underdrains are tied into Storm Sewer Drop Inlets.
See Section F plan notes and underdrain detail sheets for more details on longitudinal and cutoff drains.

See Sections B and Z for Storm Sewer Details.

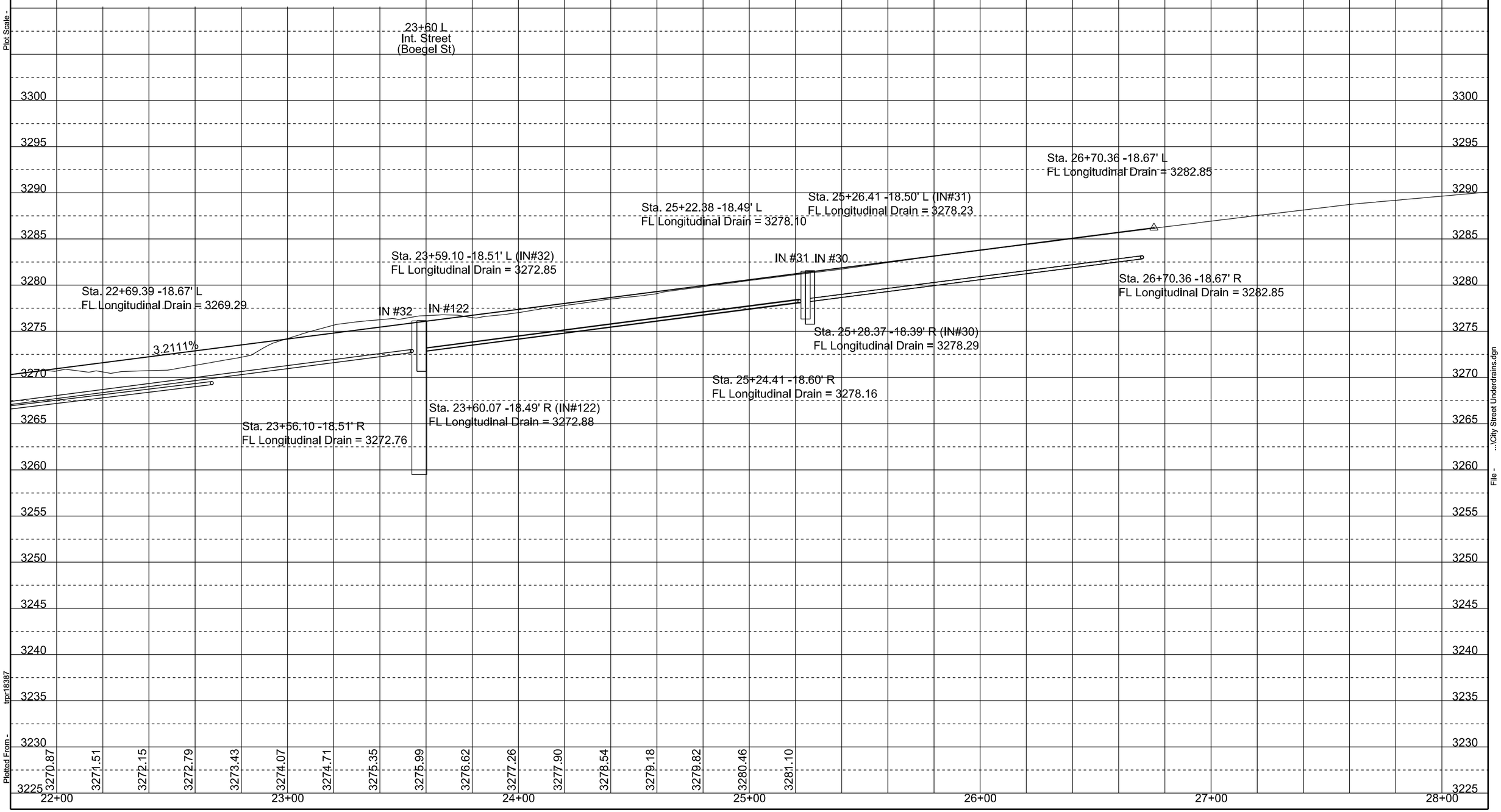

Plot Scale - 1:40

Plotted From - tpr18387

File - ...\City Street Underdrains.dgn

STATE OF SOUTH DAKOTA	PROJECT	SHEET	TOTAL SHEETS
	IM 1902(61)0	F57	F83

Plotting Date: 06/09/2015

LONGITUDINAL UNDERDRAINS

FOR BIDDING PURPOSES ONLY

West Boulevard North

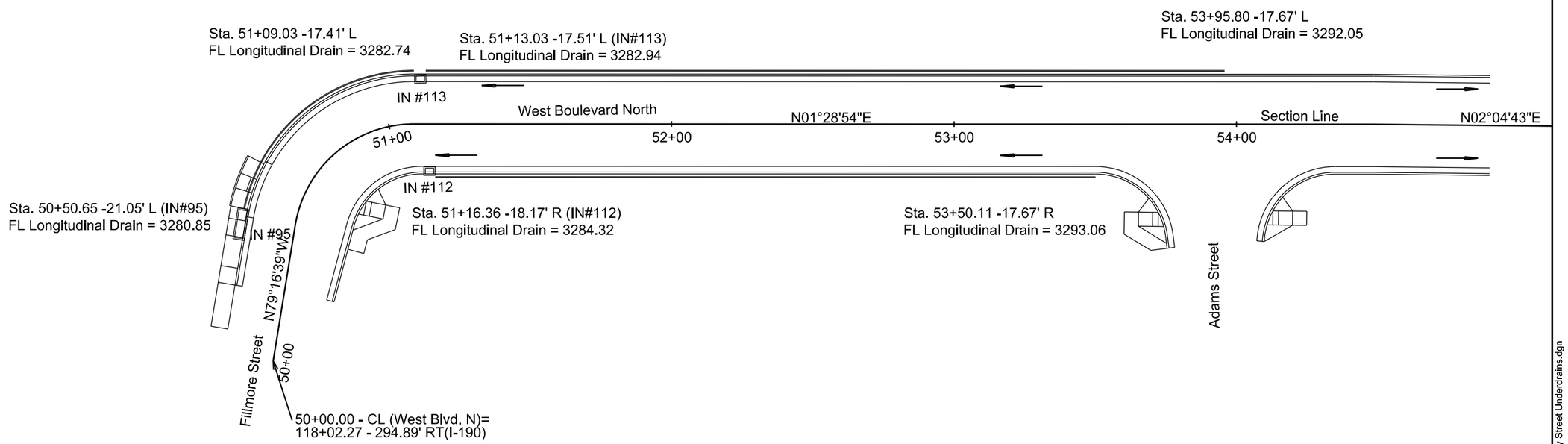

Sec. 36-T2N-R7E

Plot Scale - 1:40

Plotted From - tnpr18387

File - ...\City Street Underdrains.dgn

STATE OF SOUTH DAKOTA	PROJECT	SHEET	TOTAL SHEETS
	IM 1902(61)0	F58	F83

Plotting Date: 06/09/2015

LONGITUDINAL UNDERDRAINS

FOR BIDDING PURPOSES ONLY

West Boulevard North Profile

Longitudinal Underdrains are tied into Storm Sewer Drop Inlets.
See Section F plan notes and underdrain detail sheets for more details on longitudinal and cutoff drains.

See Sections B and Z for Storm Sewer Details.

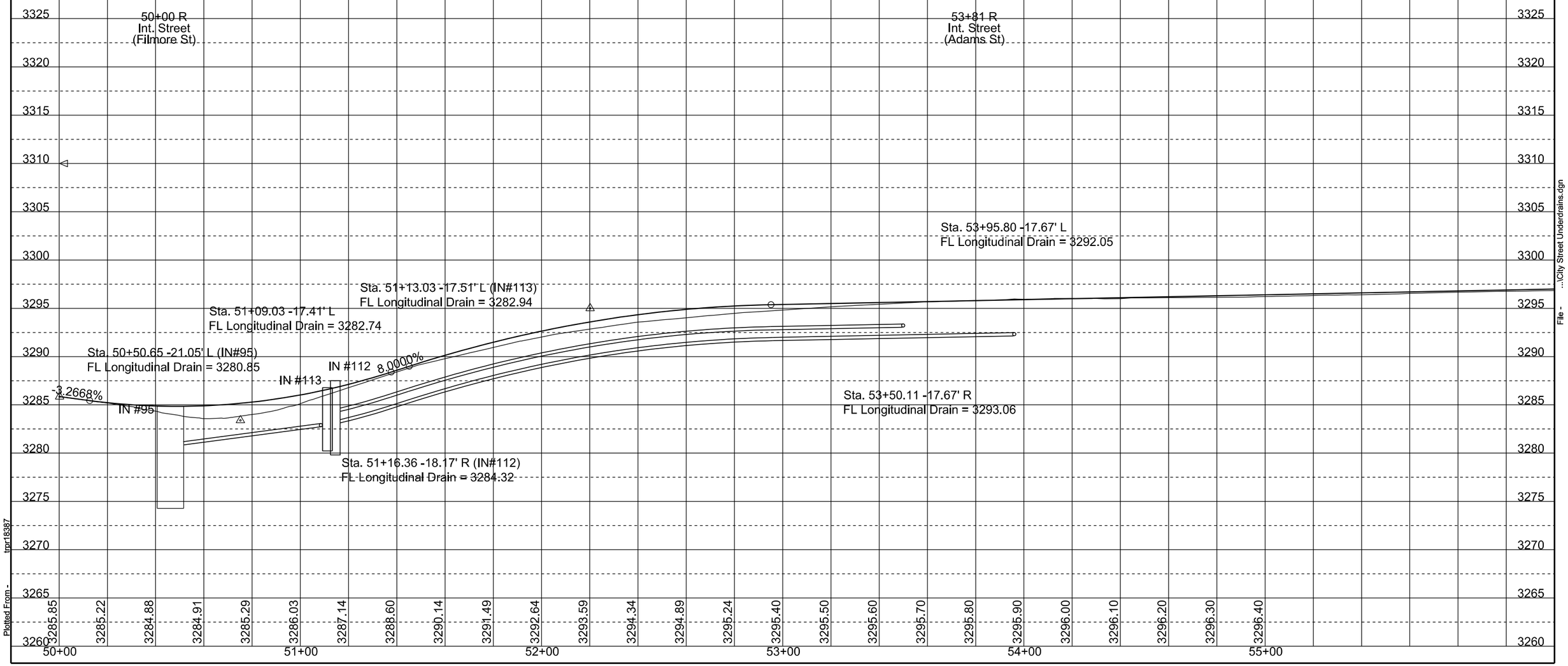

Plot Scale - 1:40

Plotted From - trpr18387

File - ...\City Street Underdrains.dgn

UNDERDRAIN SPECIAL DETAILS

FOR BIDDING PURPOSES ONLY

FOR CITY STREETS

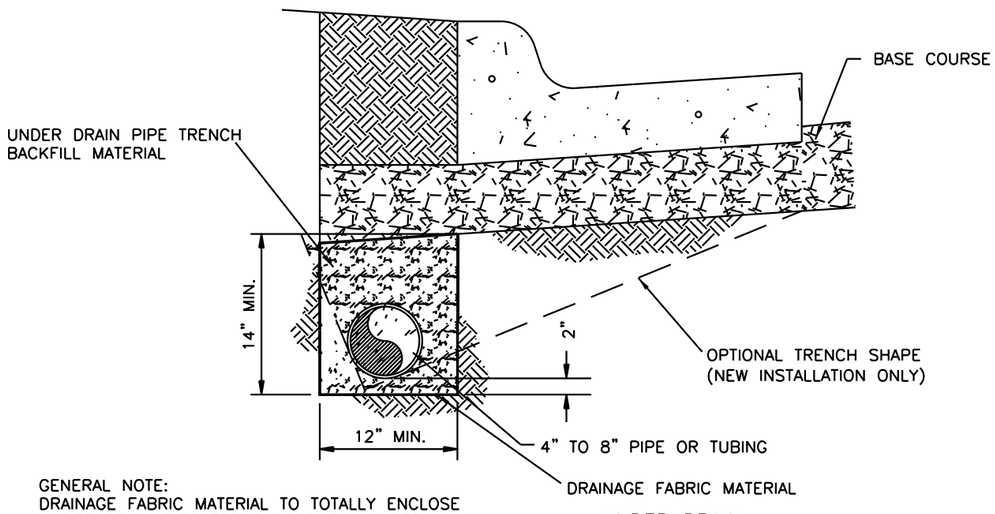

GENERAL NOTE:
DRAINAGE FABRIC MATERIAL TO TOTALLY ENCLOSE UNDER DRAIN PIPE TRENCH BACKFILL MATERIAL AND PIPE. PROVIDE 12" MIN. OVERLAP ON TOP AND 12" MIN. OVERLAP END-TO-END.

UNDER DRAIN
NEW CURB & GUTTER

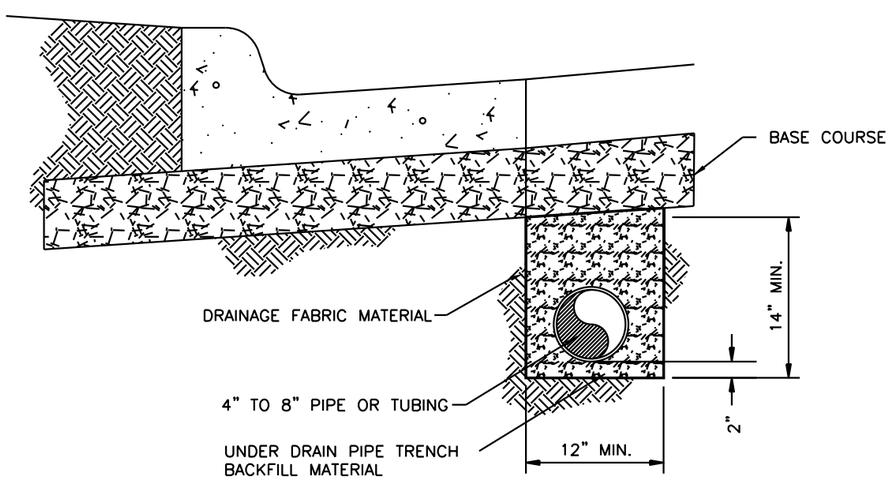

UNDER DRAIN
EXISTING CURB & GUTTER

PIPE UNDERDRAIN

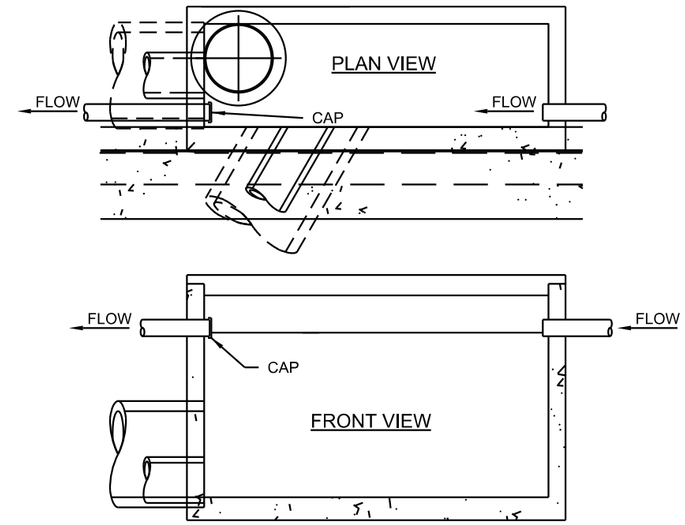

NOTE:
CONNECT UNDERDRAINS INTO INLET BY CONNECTING TO A PIPE SLEEVE PASSING THROUGH THE INLET WALL. (TYPICAL ALL CONNECTIONS)

TYPE "E" INLET CONNECTION

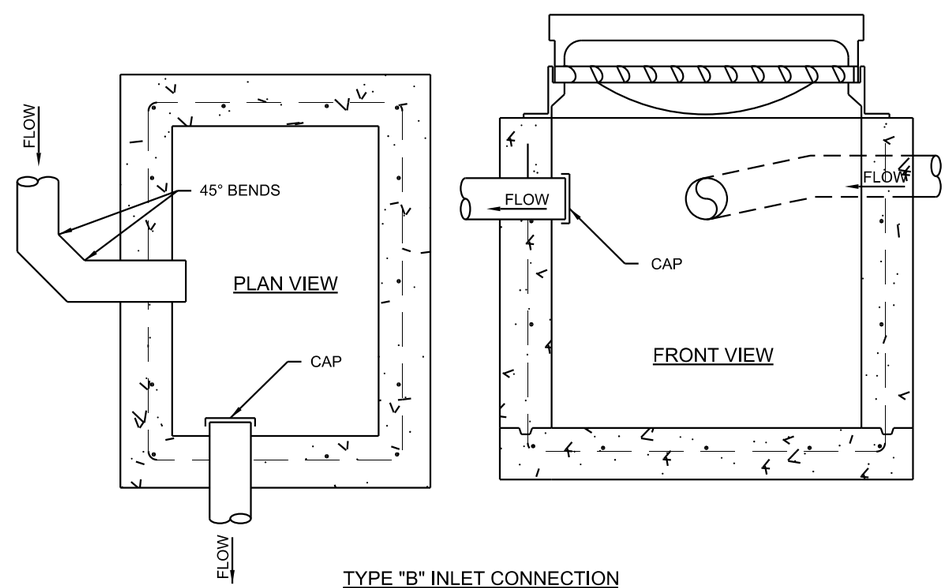

TYPE "B" INLET CONNECTION

PIPE UNDERDRAIN CONNECTION TO INLETS

PLOT SCALE - 1:1.1
PLOTTED FROM - TRPR18387
PLOT NAME - 59
FILE - ...\RAPID CITY UNDERDRAIN DETAILS.DGN

MEDIAN CROSSOVER LAYOUT

FOR BIDDING PURPOSES ONLY

STATE OF SOUTH DAKOTA	PROJECT	SHEET	TOTAL SHEETS
	IM 1902(61)0	F60	F83

Plotting Date: 06/09/2015

Scale 1 Inch = 40 Feet
Sheet 1 of 1 Sheets

Note:
At the conclusion of the project when median crossovers are no longer necessary. The raised median (Median Crossover Sta. 102+02) and the concrete barrier (Median Crossover Sta. 154+00) shall be installed as shown and detailed elsewhere in the project plans.

(See Section C plans for the sequence of operation)

Crossover at Sta. 102+02

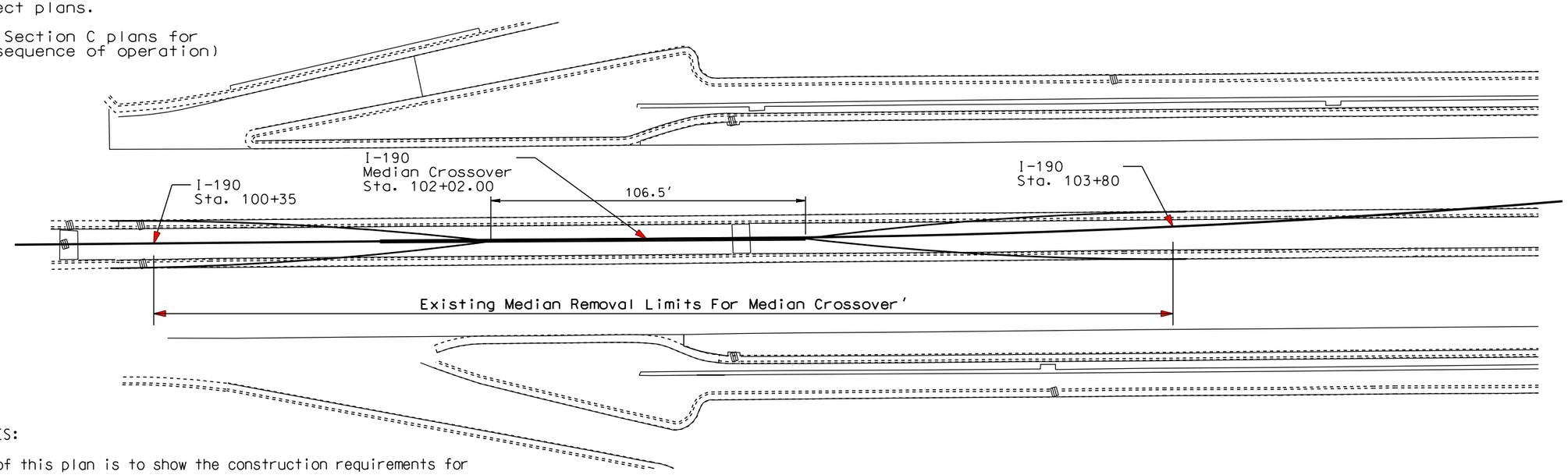

GENERAL NOTES:

The intent of this plan is to show the construction requirements for the median crossovers.

Construction of median crossovers shall conform to the requirement of Current Specifications.

Price bid for contract items shall be considered full compensation for furnishing all necessary materials and labor to construct the median crossover as detailed hereon.

Crossover at Sta. 154+00

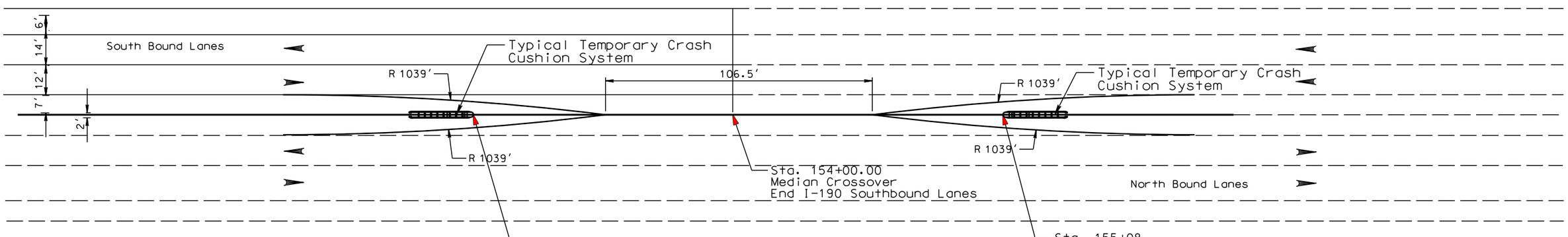

Sta. 152+96
Begin Temporary Crash Cushion System

* Limits of removal of median barrier depends on temporary crash cushion system utilized.

Sta. 155+08
Begin Temporary Crash Cushion System

* Limits of removal of median barrier depends on temporary crash cushion system utilized.

Plot Scale - 1:40.0001

Plotted From - tpr18387

File - ...\35 mph Median Crossover Layout RC.dgn

MEDIAN CROSSOVERS

FOR BIDDING PURPOSES ONLY

STATE OF SOUTH DAKOTA	PROJECT	SHEET	TOTAL SHEETS
	IM 1902(61)0	F61	F83

Plotting Date: 06/09/2015
Revised 05-26-2015 LLA

Median and Barrier Removal. (Unclassified Excavation)

PCC Removal

Median Removal
Median Crossover Sta. 102+02

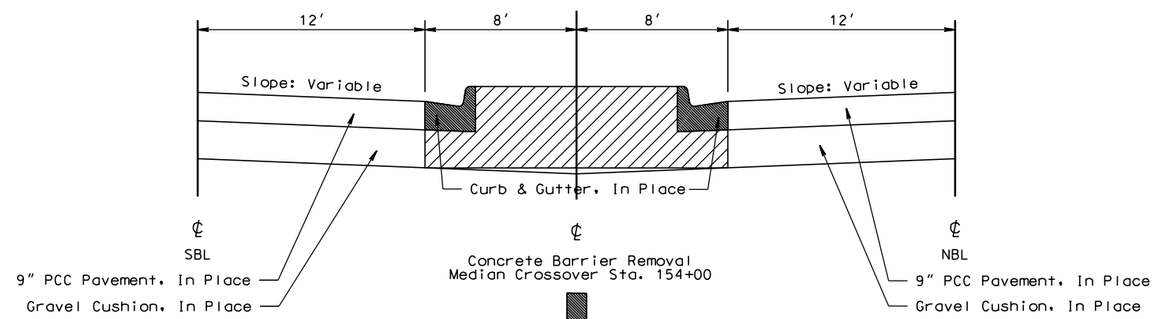

Concrete Barrier Removal
Median Crossover Sta. 154+00

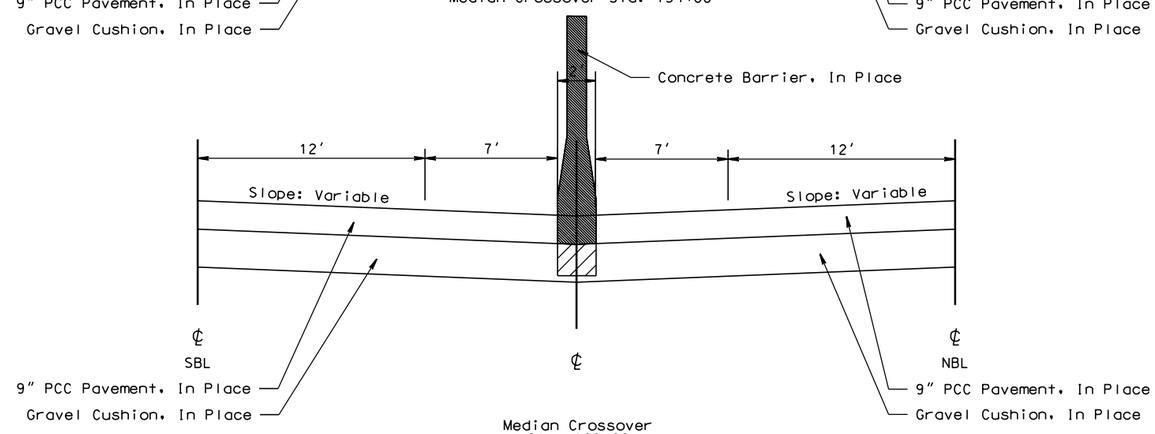

Median Crossover
Sta. 102+02

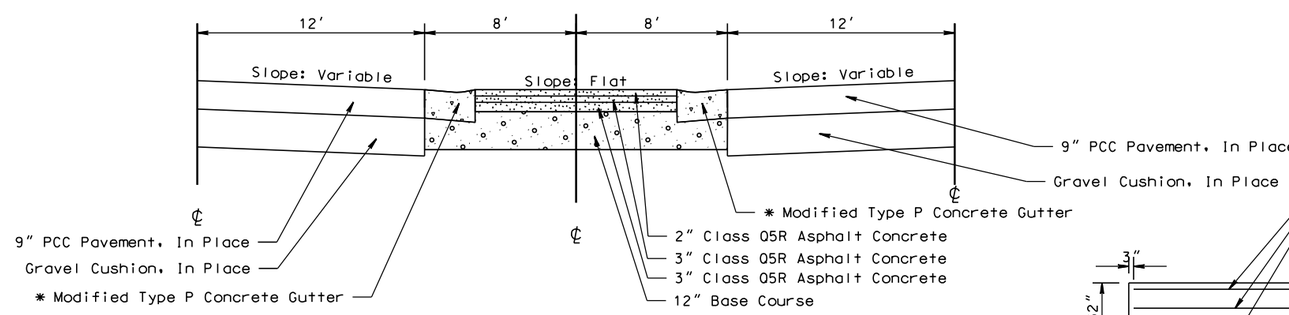

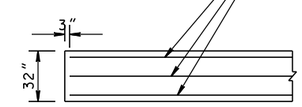

✱ Install 3 - # 5 Bars Full Length in Type P Concrete Gutter. See Standard Plate 650.30

The 8.33% slope for the back side of the gutter shall be changed to 5% which in turn will change the quantities for the P9 Concrete Gutter shown in the Standard Plate

Cost for furnishing and installing # 5 bars shall be incidental to the contract unit price per linear foot of Type P Curb & Gutter (See Section B for quantities)

Median Crossover
Sta. 154+00

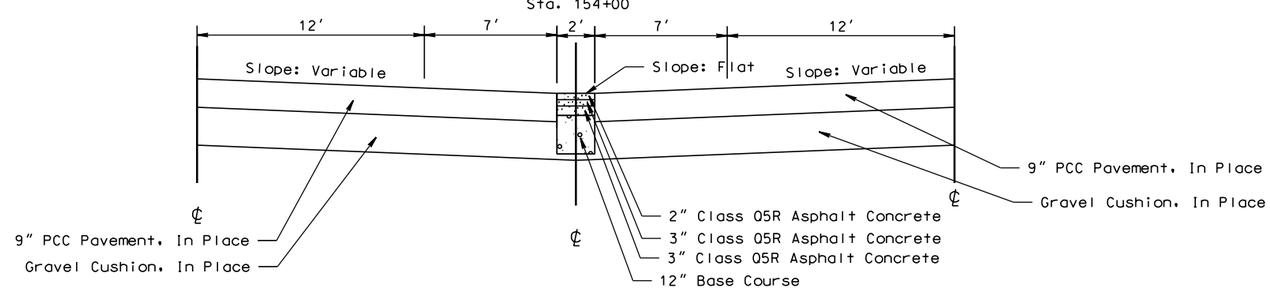

PLOT SCALE - 1:8

PLOTTED FROM - TRPR18387

PLOT NAME - 61

FILE - U:\MS\PRJ\PENN1162\MEDIAN.DGN

STATE OF SOUTH DAKOTA	PROJECT	SHEET	TOTAL SHEETS
	IM 1902(61)0	F62	F83

FOR BIDDING PURPOSES ONLY

Plotting Date: 05-07-2015

Pavement Slope Layout
Interstate

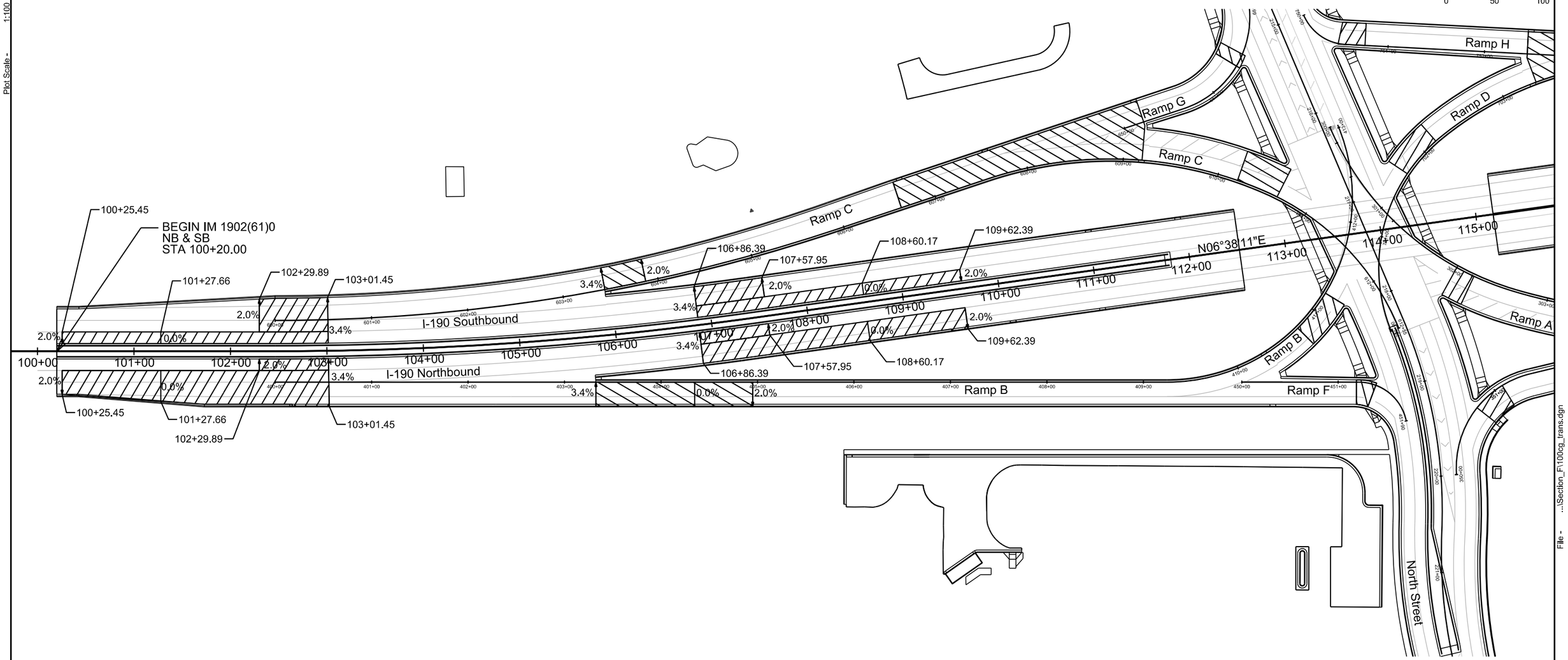

REGISTERED PROFESSIONAL ENGINEER
REG. NO.
8328
JODY W.
PAGE
SOUTH DAKOTA

HDR

Plot Scale - 1:100

Plotted From - rfiogett

File - ...\Section_F\100cg_trans.dgn

Pavement Slope Layout
Interstate

FOR BIDDING PURPOSES ONLY

STATE OF SOUTH DAKOTA	PROJECT	SHEET	TOTAL SHEETS
	IM 1902(61)0	F63	F83

Plotting Date: 05-07-2015

SCALE IN FEET
0 50 100

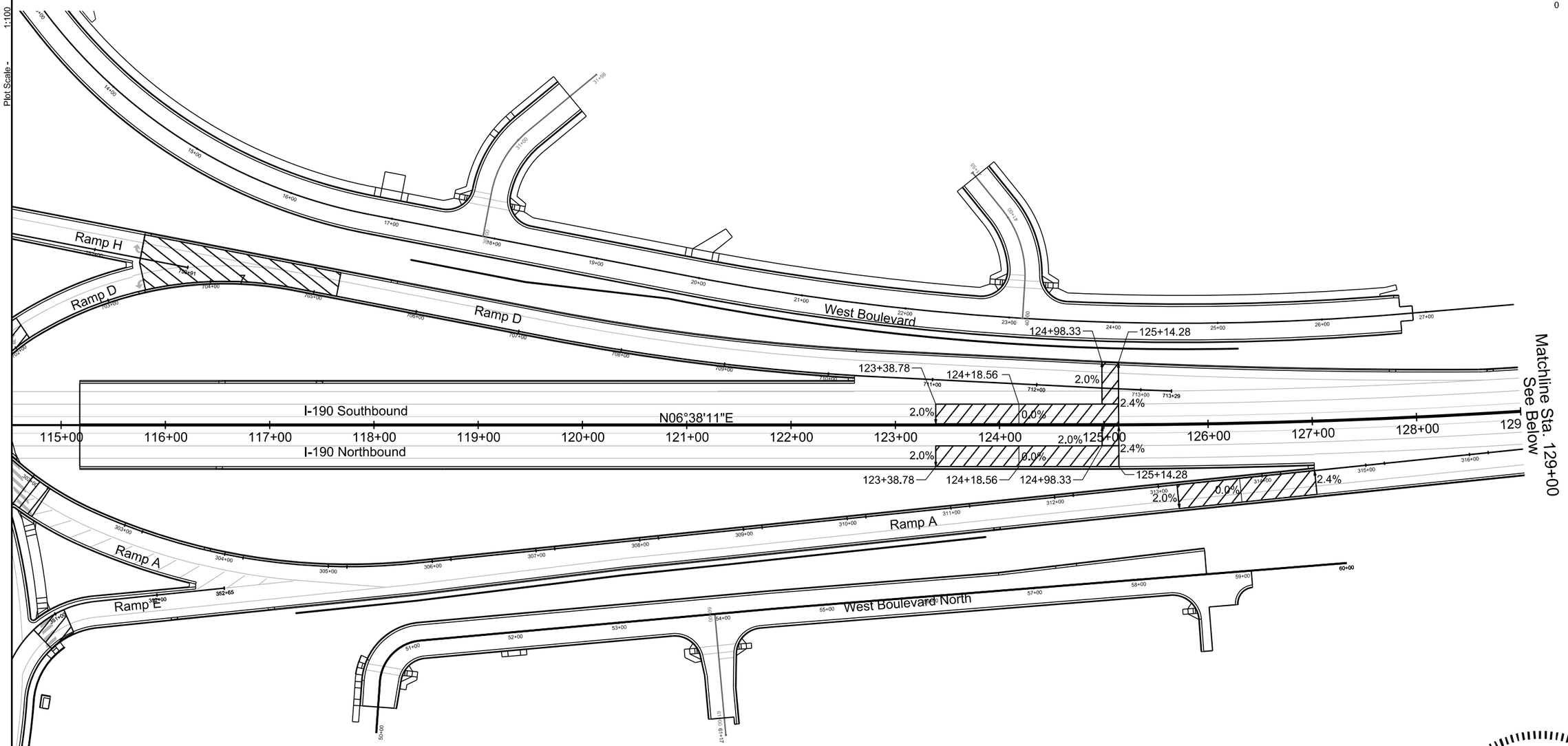

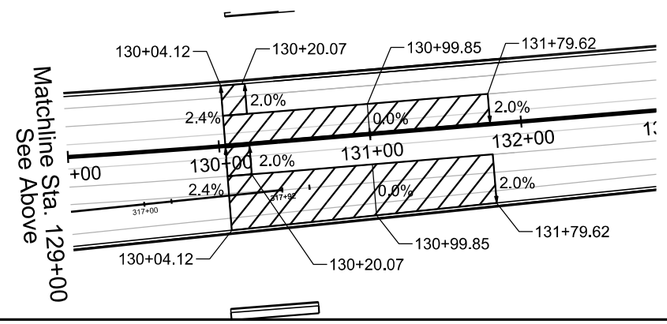

REGISTERED PROFESSIONAL ENGINEER
REG. NO.
8328
JODY W.
PAGE
SOUTH DAKOTA

HDR

Plot Scale - 1:100

Plotted From - rlagett

File - ...\Section_F\115cg_trans.dgn

STATE OF SOUTH DAKOTA	PROJECT	SHEET	TOTAL SHEETS
	IM 1902(61)0	F64	F83

Plotting Date: 05-07-2015

FOR BIDDING PURPOSES ONLY

Pavement Slope Layout
Ramps A & E

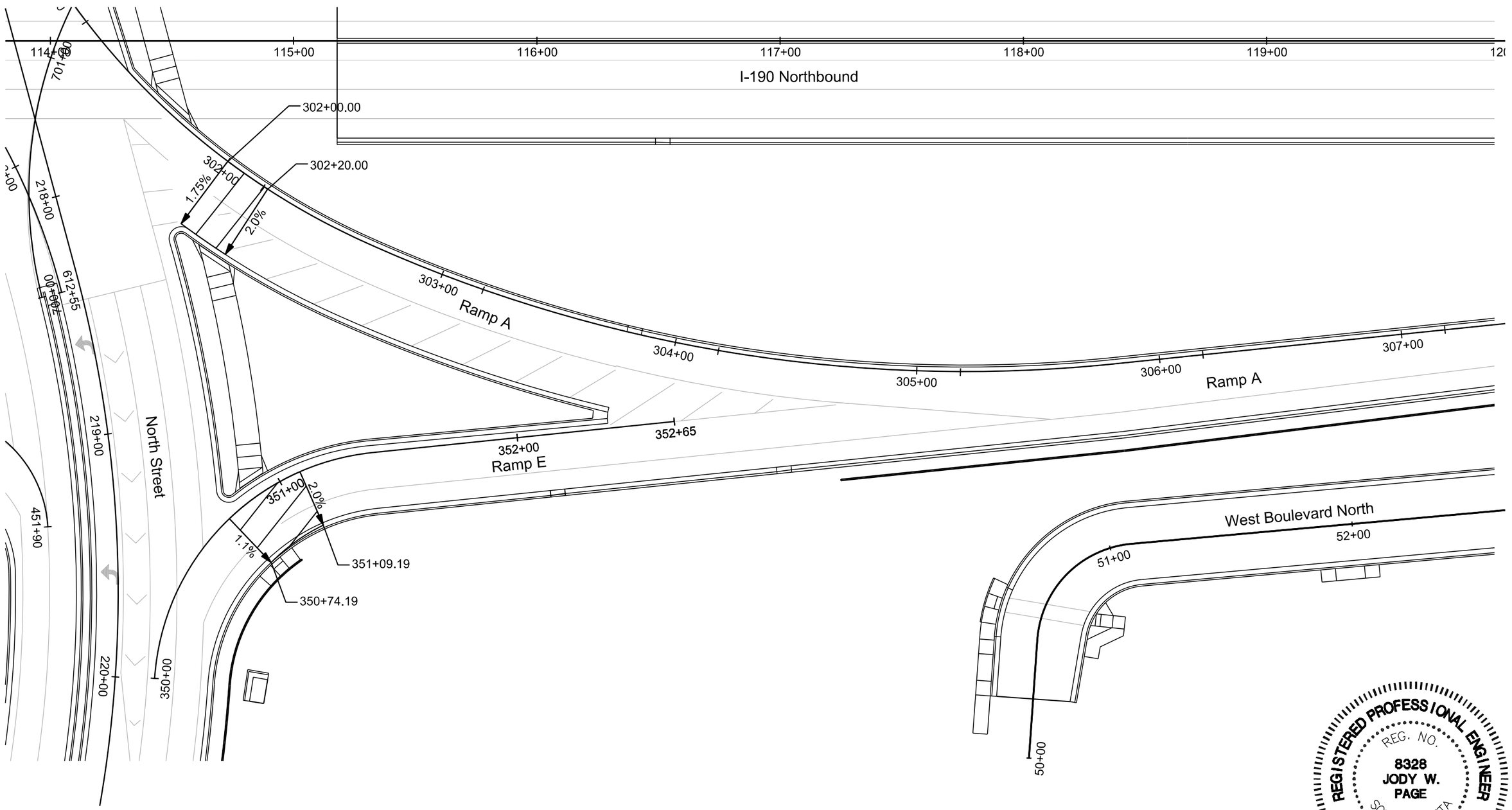

REGISTERED PROFESSIONAL ENGINEER
REG. NO.
8328
JODY W.
PAGE
SOUTH DAKOTA

HDR

Plot Scale - 1:40

Plotted From - rfiggett

File - ...\Section_F\11rampAcg_trans.dgn

STATE OF SOUTH DAKOTA	PROJECT	SHEET	TOTAL SHEETS
	IM 1902(61)0	F65	F83

FOR BIDDING PURPOSES ONLY

Plotting Date: 05-07-2015

Pavement Slope Layout
Ramp A

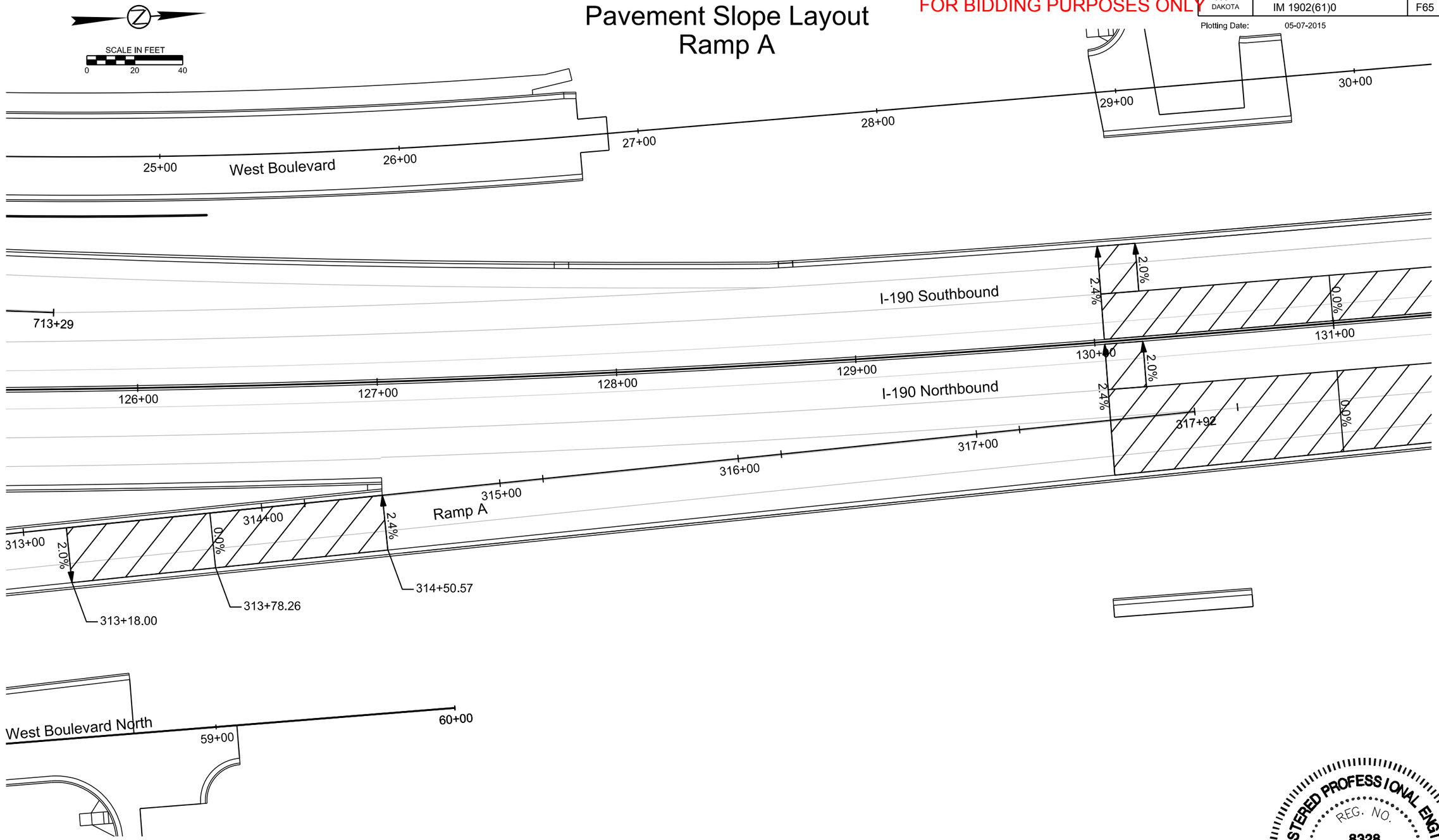

REGISTERED PROFESSIONAL ENGINEER
REG. NO.
8328
JODY W.
PAGE
SOUTH DAKOTA

HDR

Plot Scale - 1:40

Plotted From - rfiggett

File - ...\Section_F\23rampAcg_trans.dgn

STATE OF SOUTH DAKOTA	PROJECT	SHEET	TOTAL SHEETS
	IM 1902(61)0	F66	F83

Plotting Date: 05-07-2015

FOR BIDDING PURPOSES ONLY

Pavement Slope Layout
Ramp B

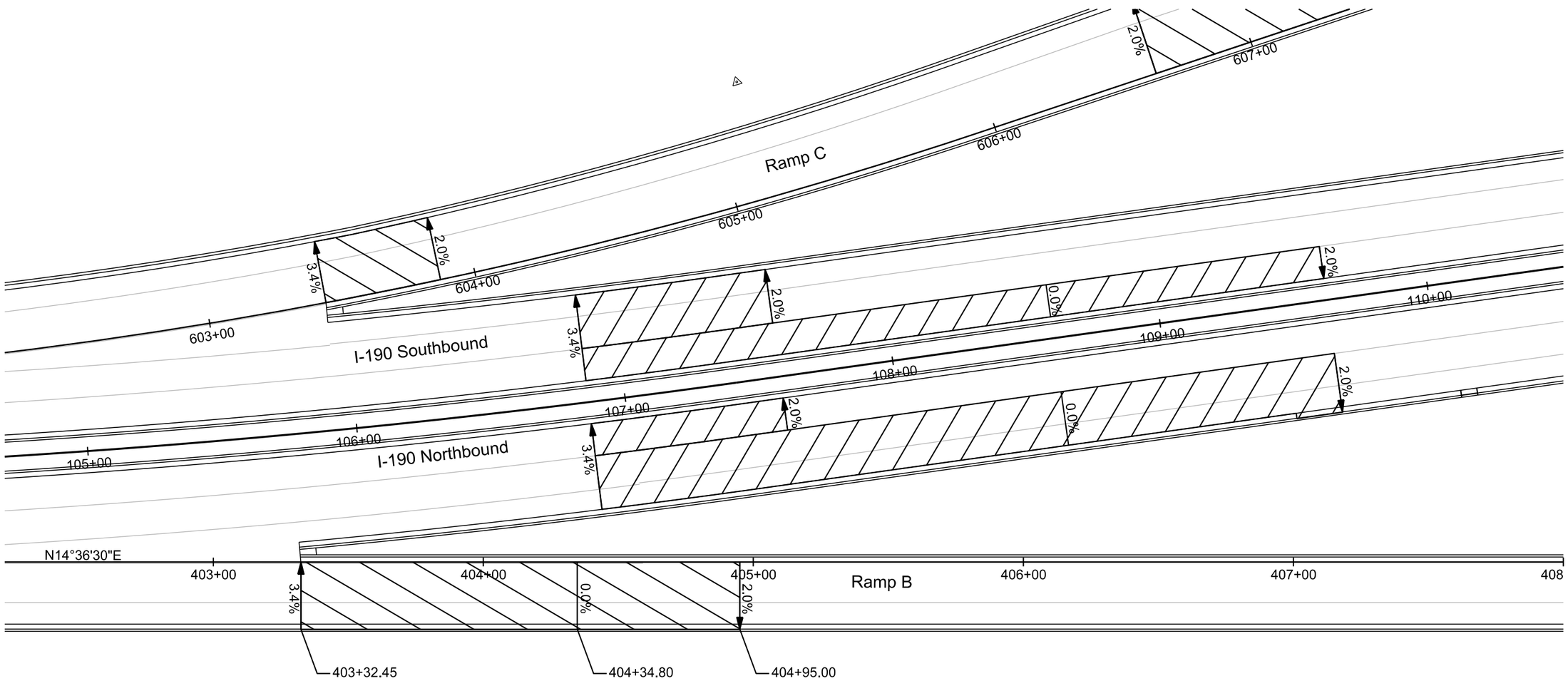

SCALE IN FEET
0 20 40

REGISTERED PROFESSIONAL ENGINEER
REG. NO. 8328
JODY W. PAGE
SOUTH DAKOTA

HDR

Plot Scale - 1:40
Plotted From - rlagett
File - ...\Section_F\30rampBcg_trans.dgn

STATE OF SOUTH DAKOTA	PROJECT	SHEET	TOTAL SHEETS
	IM 1902(61)0	F67	F83

Plotting Date: 05-07-2015

FOR BIDDING PURPOSES ONLY

Pavement Slope Layout
Ramp B & F

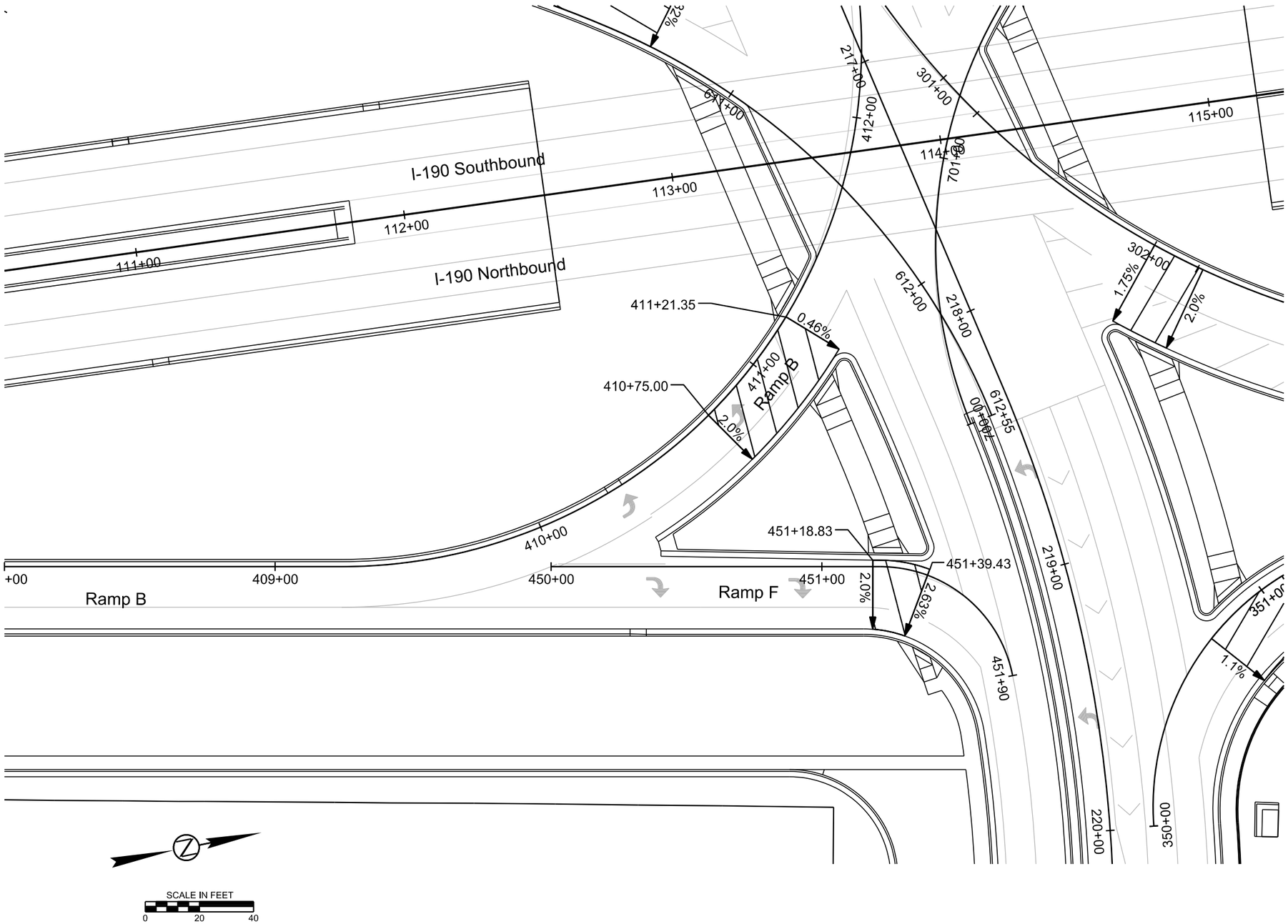

REGISTERED PROFESSIONAL ENGINEER
REG. NO.
8328
JODY W.
PAGE
SOUTH DAKOTA

HDR

Plot Scale - 1:40

Plotted From - rfiggett

File - ...\Section_F\38rampBcg_trans.dgn

STATE OF SOUTH DAKOTA	PROJECT	SHEET	TOTAL SHEETS
	IM 1902(61)0	F68	F83

Plotting Date: 05-07-2015

FOR BIDDING PURPOSES ONLY

Pavement Slope Layout
Ramp C

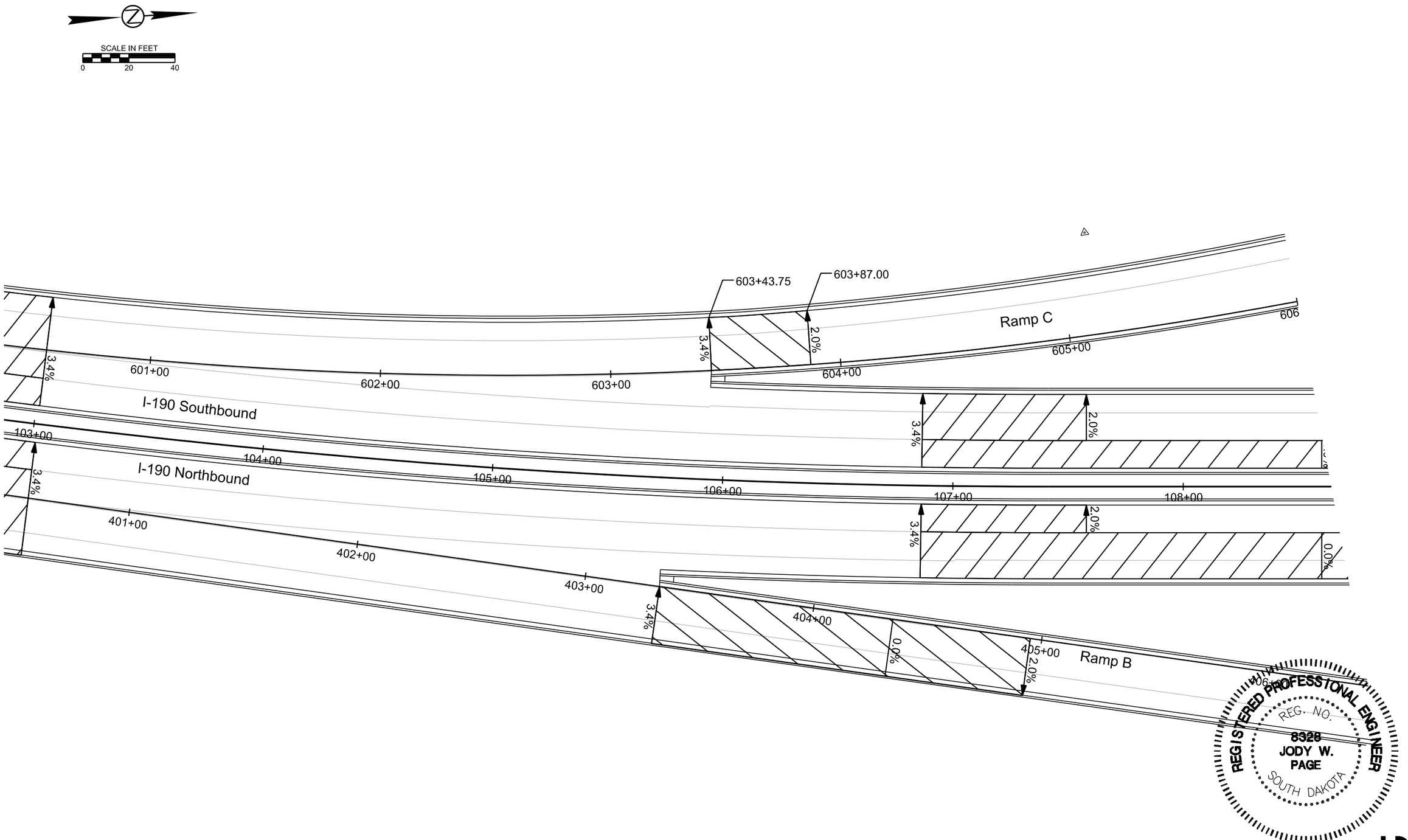

REGISTERED PROFESSIONAL ENGINEER
REG. NO.
8328
JODY W.
PAGE
SOUTH DAKOTA

HDR

Plot Scale - 1:40

Plotted From - rfiagett

File - ...\Section_F\50rampCcg_trans.dgn

STATE OF SOUTH DAKOTA	PROJECT	SHEET	TOTAL SHEETS
	IM 1902(61)0	F69	F83

Plotting Date: 05-07-2015

FOR BIDDING PURPOSES ONLY

Pavement Slope Layout
Ramp C & G

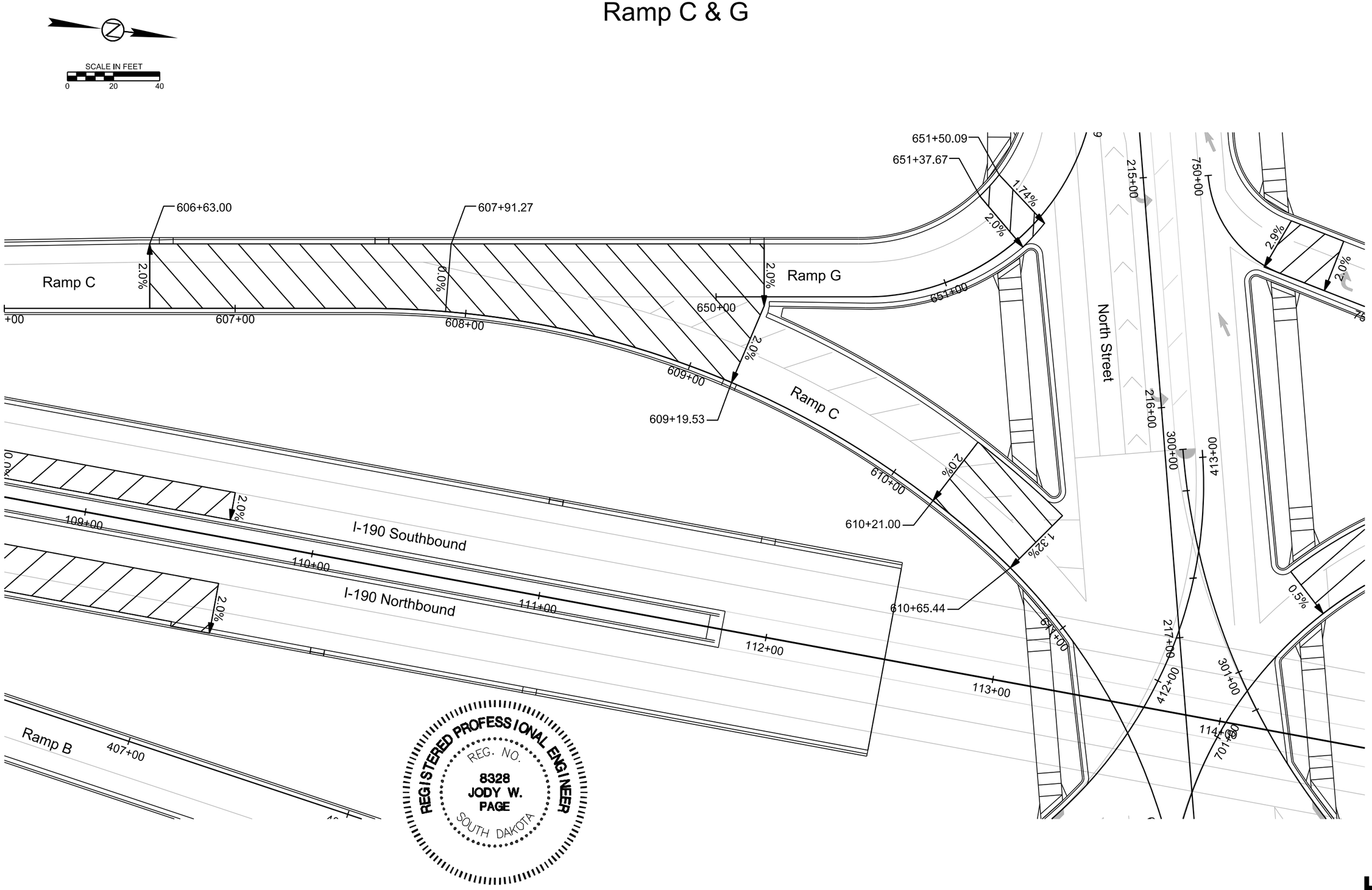

Plot Scale - 1:40

Plotted From - rliggett

File - ...\Section_F\56rampCcg_trans.dgn

STATE OF SOUTH DAKOTA	PROJECT	SHEET	TOTAL SHEETS
	IM 1902(61)0	F70	F83

Plotting Date: 05-07-2015

FOR BIDDING PURPOSES ONLY

Pavement Slope Layout
Ramps D & H

SCALE IN FEET
0 20 40

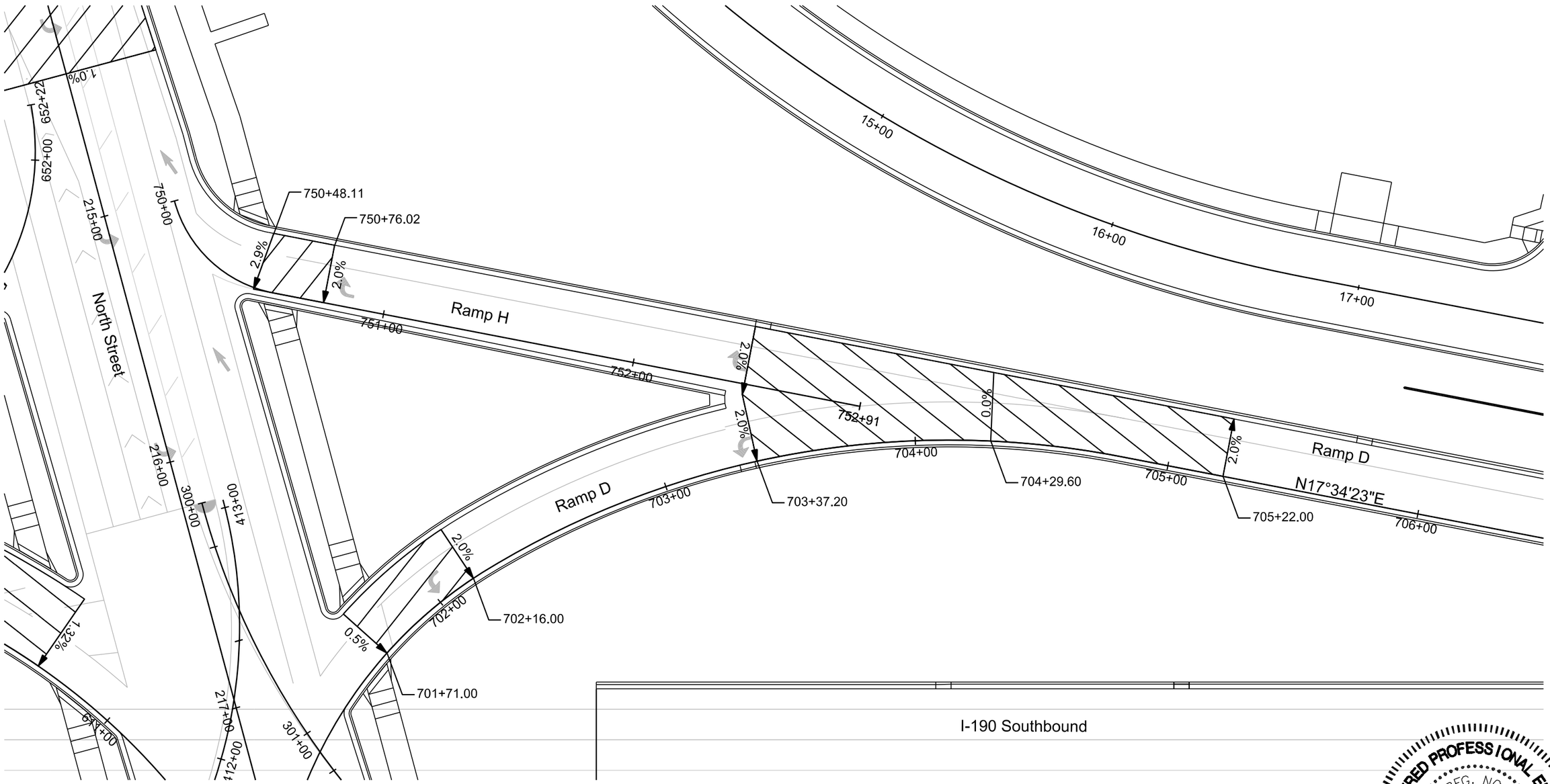

REGISTERED PROFESSIONAL ENGINEER
REG. NO. 8328
JODY W. PAGE
SOUTH DAKOTA

HDR

Plot Scale - 1:40

Plotted From - rlignett

File - ...\Section_F\71rampDcg_trans.dgn

STATE OF SOUTH DAKOTA	PROJECT	SHEET	TOTAL SHEETS
	IM 1902(61)0	F71	F83

Plotting Date: 05-07-2015

FOR BIDDING PURPOSES ONLY

Pavement Slope Layout
North Street

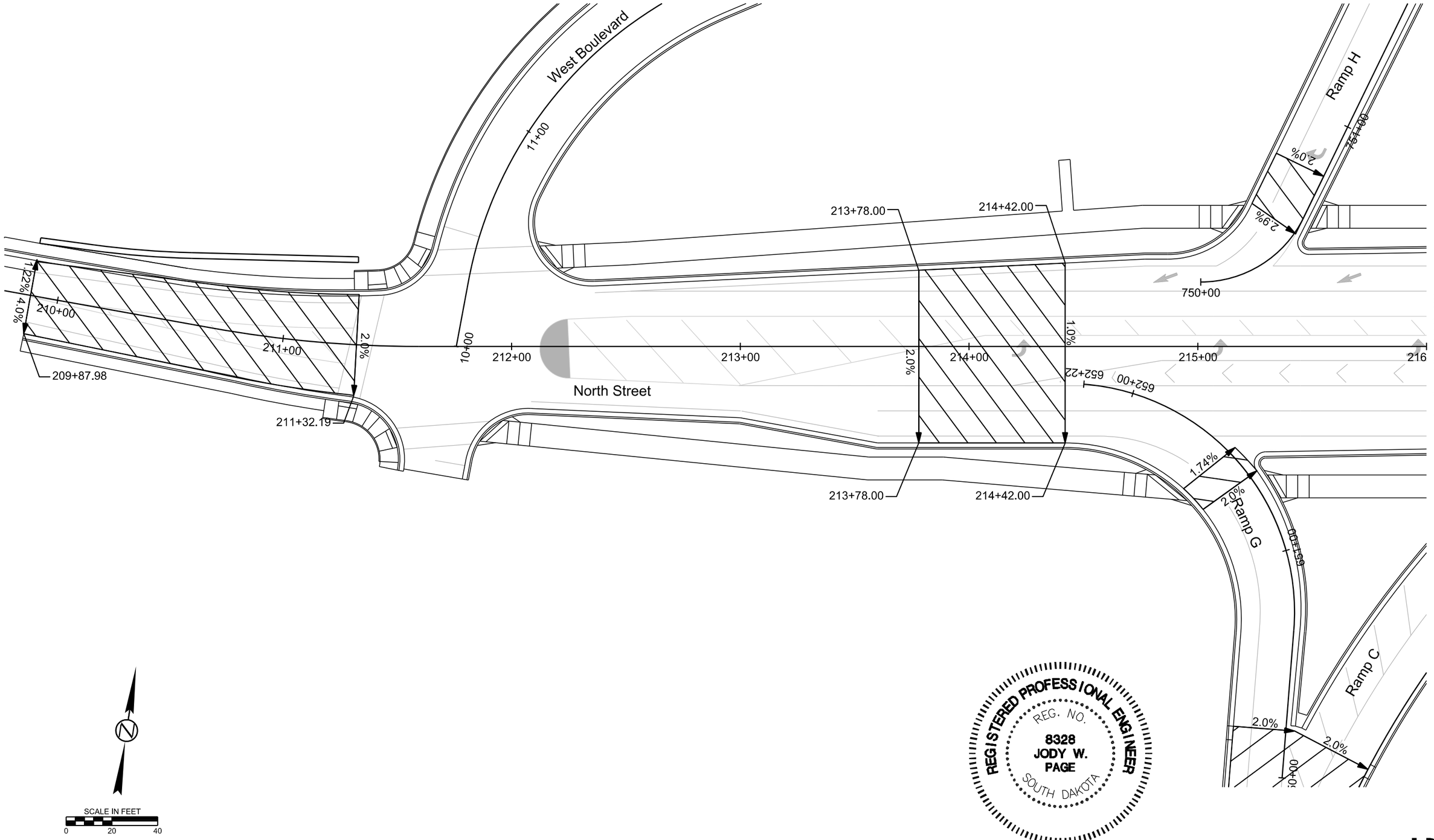

REGISTERED PROFESSIONAL ENGINEER
REG. NO.
8328
JODY W.
PAGE
SOUTH DAKOTA

Plot Scale - 1:40

Plotted From - rfiqnett

File - ...\Section_F\209northcg_trans.dgn

STATE OF SOUTH DAKOTA	PROJECT	SHEET	TOTAL SHEETS
	IM 1902(61)0	F72	F83

Plotting Date: 05-07-2015

FOR BIDDING PURPOSES ONLY

Pavement Slope Layout
North Street

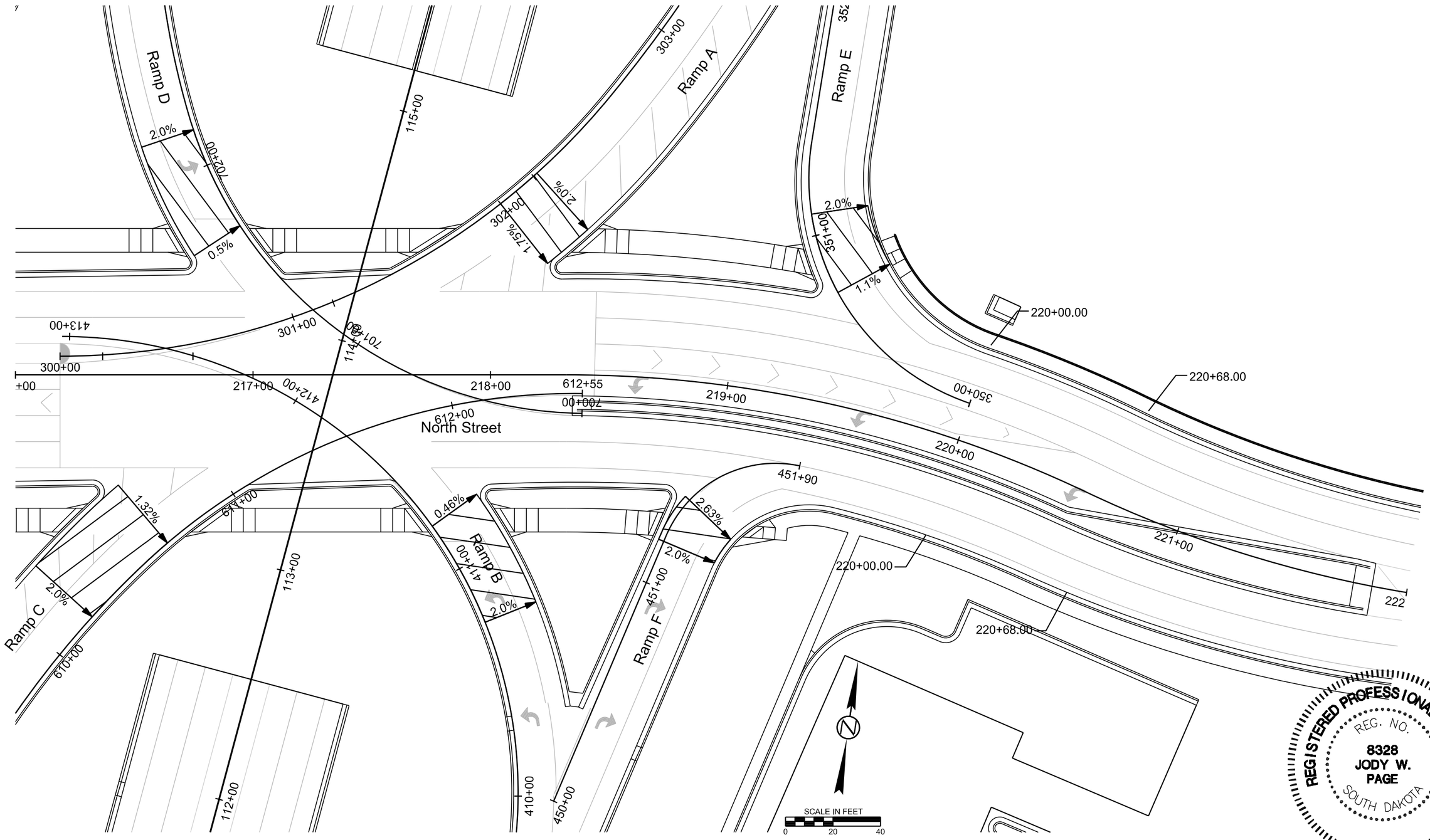

REGISTERED PROFESSIONAL ENGINEER
REG. NO.
8328
JODY W.
PAGE
SOUTH DAKOTA

HDR

Plot Scale - 1:40

Plotted From - rfiggett

File - ...\Section_F216northcg_trans.dgn

STATE OF SOUTH DAKOTA	PROJECT	SHEET	TOTAL SHEETS
	IM 1902(61)0	F73	F83

FOR BIDDING PURPOSES ONLY

Plotting Date: 06-18-2015

Rev. 06/18/2015 AJF

Pavement Slope Layout
North Street

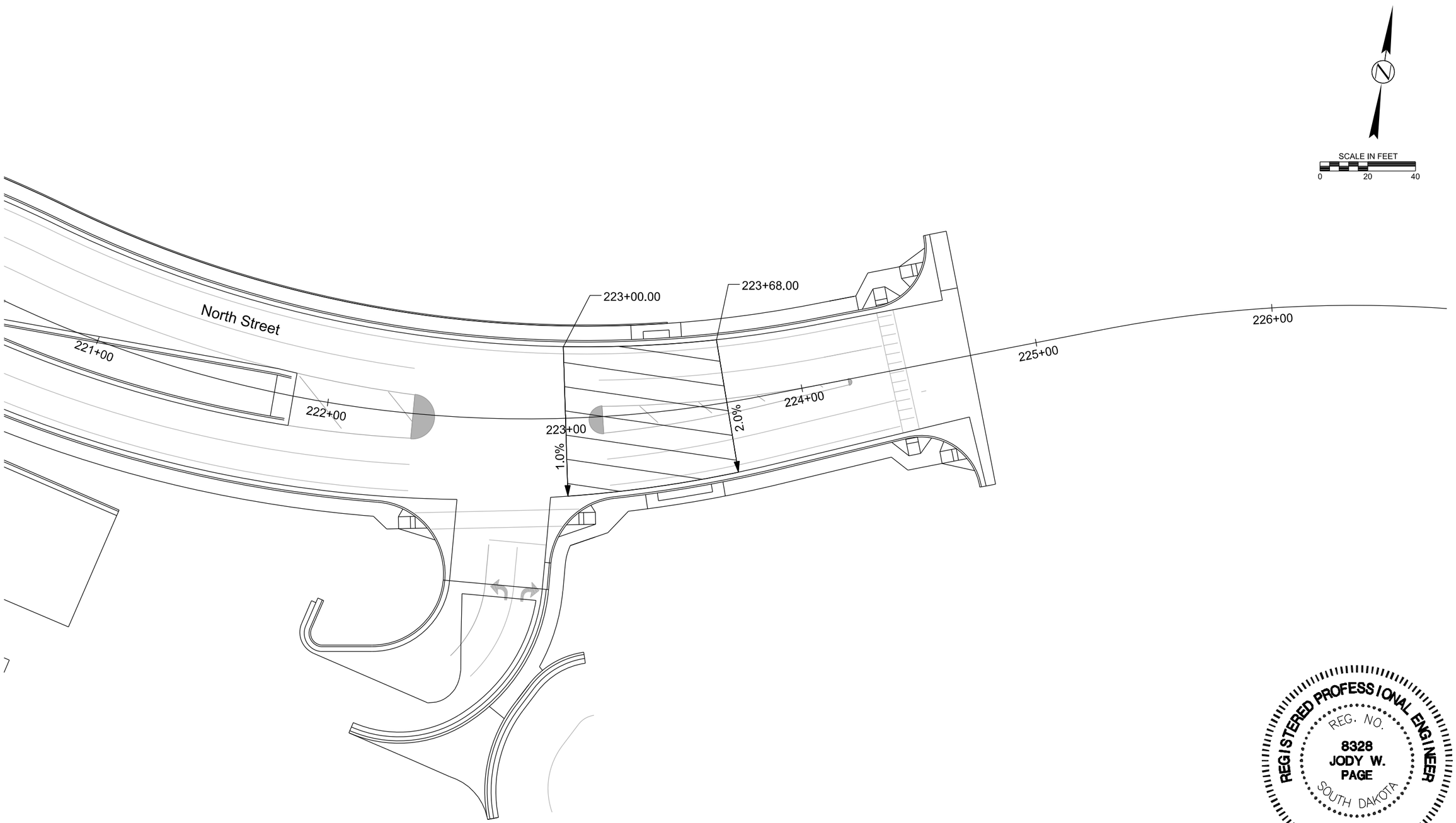

REGISTERED PROFESSIONAL ENGINEER
REG. NO.
8328
JODY W.
PAGE
SOUTH DAKOTA

HDR

Plot Scale - 1:40

Plotted From - afageme

File - ...\Section_F\221northcg_trans.dgn

FOR BIDDING PURPOSES ONLY

MANHOLE BOX - OUT DETAILS

REBAR LAYOUTS IN PCC PAVEMENT WITH BOX-OUTS

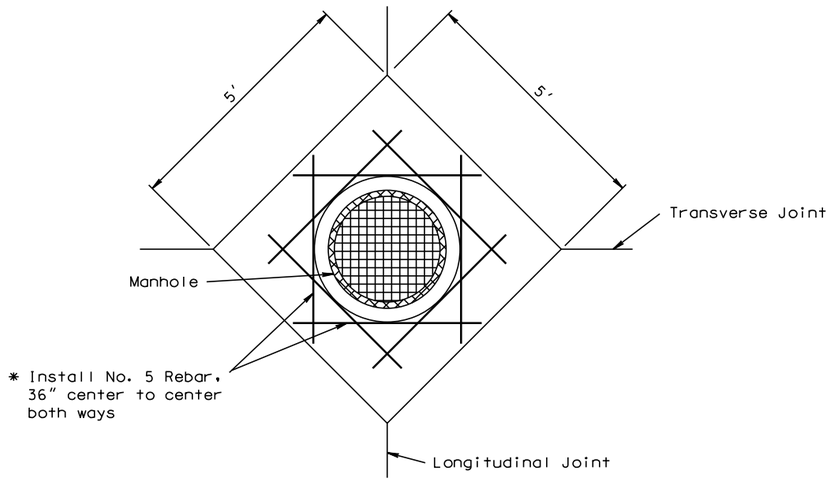

Where the utility access is intersected by the longitudinal and transverse joints

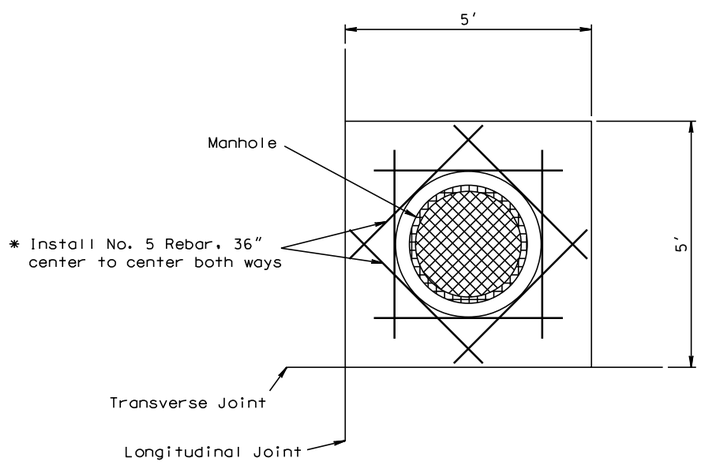

Where the utility access is offset from the longitudinal and transverse joints

REBAR LAYOUT IN PCC PAVEMENT WITH BOX-OUTS

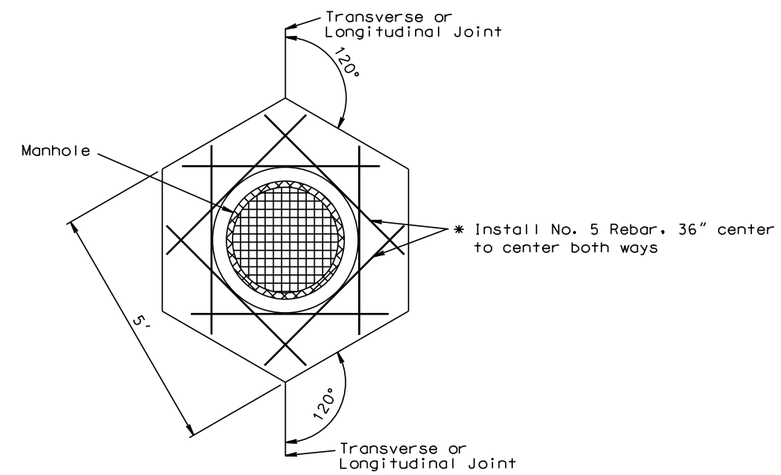

Where no Longitudinal or Transverse joints are present or at Longitudinal or Transverse joint.

* All rebar will be placed at the midpoint depth of the PCC Pavement. All cost associated with the installation of the rebar will be incidental to the contract unit price per square yard for the Nonreinforced PCC Pavement. When Box-Outs are used, the cost to construct them shall be incidental to the contract unit price per square yard for the Nonreinforced PCC Pavement

Plot Scale - 1:3.07676
Plotted From - tpr18387
File - ...\pemn1162\manhole detail.dgn

MANHOLE BOX – OUT DETAILS

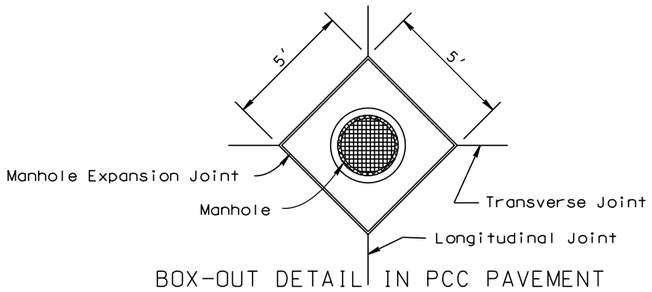

BOX-OUT DETAIL IN PCC PAVEMENT

Where the utility access is intersected
by the longitudinal and transverse joints

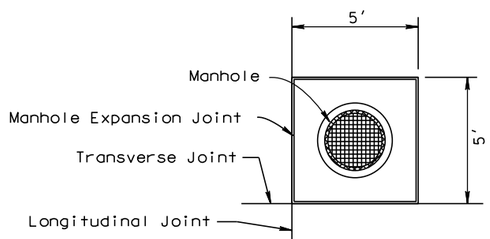

BOX-OUT DETAIL IN PCC PAVEMENT

Where the utility access is offset from
the longitudinal and transverse joints

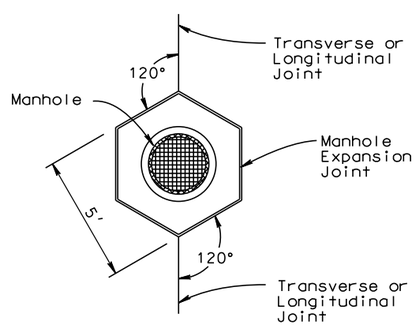

BOX-OUT DETAIL IN PCC PAVEMENT

Where no Longitudinal or Transverse joints are present
or at Longitudinal or Transverse joint.

MANHOLE EXPANSION JOINT DETAIL

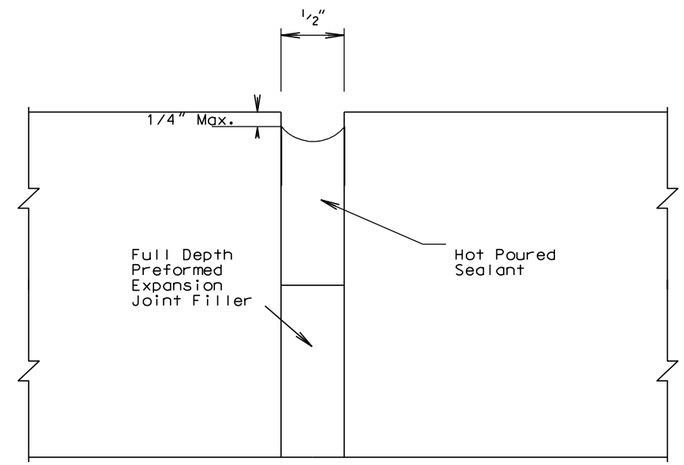

SPECIAL DETAILS

PCC PAVEMENT EXPANSION JOINT

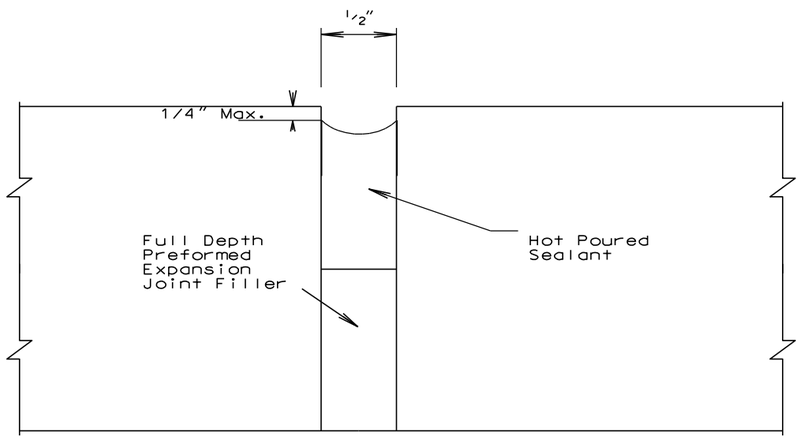

NOTE:

In locations where light poles will be installed on the median barrier, see Section E and L plans for median pavement construction and reinforcement. Steel bars and dowel bars shall not be installed in these locations.

PLOT SCALE - 1:1.6
PLOTTED FROM - TRPR18387
PLOT NAME - 64
FILE - ...\PCC PAVEMENT EXPANSION JOINT.DGN

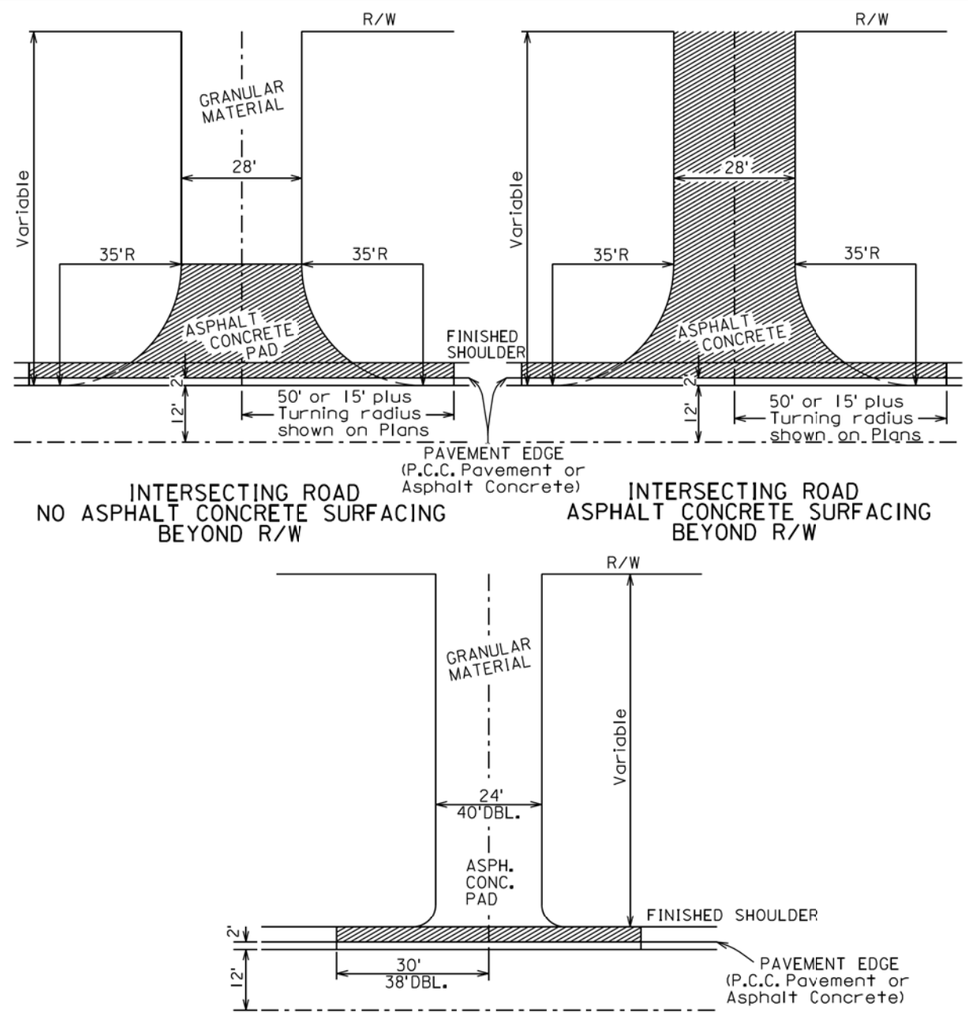

ENTRANCE

The surfacing details shown on this sheet are provided as a guide for surfacing these facilities. The precise construction limits for situations other than the standards shown will be determined by the Engineer, at the time of construction.

ROADWAY WITH SHOULDER

March 31, 2000

Published Date: 2nd Qtr. 2015	SDDOT	SURFACING OF INTERSECTING ROADS AND ENTRANCES	PLATE NUMBER 320.05
			Sheet 1 of 1

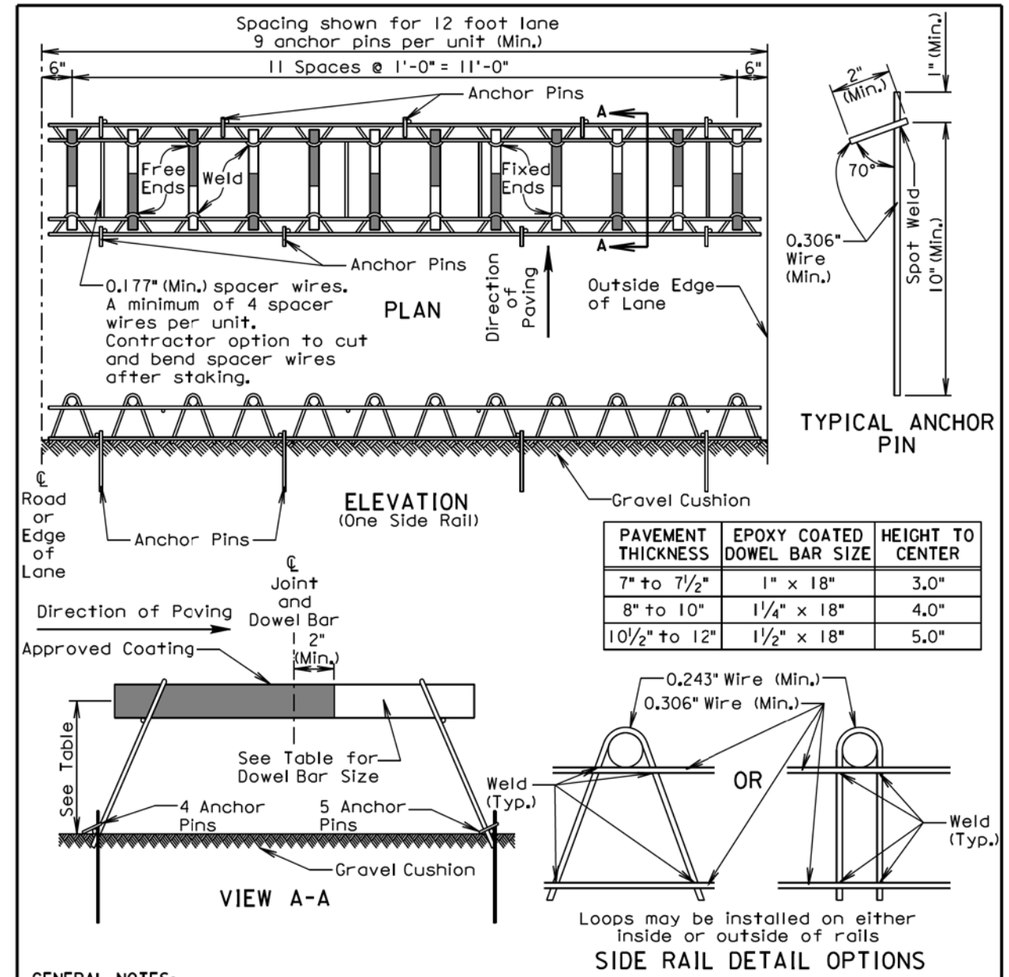

PAVEMENT THICKNESS	EPOXY COATED DOWEL BAR SIZE	HEIGHT TO CENTER
7" to 7½"	1" × 18"	3.0"
8" to 10"	1¼" × 18"	4.0"
10½" to 12"	1½" × 18"	5.0"

GENERAL NOTES:

Longitudinal joint tie bars shall be placed a minimum of 15 inches from the transverse contraction joint.

Centerline of individual dowel bars shall be parallel to top of subgrade ±1/8 inch in 18 inches and to all other dowel bars in the assembly ±1/16 inch in 18 inches.

Centerline of individual dowel bars shall be parallel to the centerline of the roadway ±1/2 inch in 18 inches.

The transverse contraction joints shall be sawed perpendicular to the centerline of the roadway and the dowel bars shall be centered on the sawed joint ±1 inch.

Supporting devices as shown on this sheet, or equivalent as approved by the Engineer, shall be used to maintain proper horizontal and vertical alignment of the dowel bars.

August 30, 2013

Published Date: 2nd Qtr. 2015	SDDOT	PCC PAVEMENT DOWEL BAR ASSEMBLY FOR TRANSVERSE CONTRACTION JOINTS 12 Bar Assembly on Granular Base Material	PLATE NUMBER 380.01
			Sheet 1 of 1

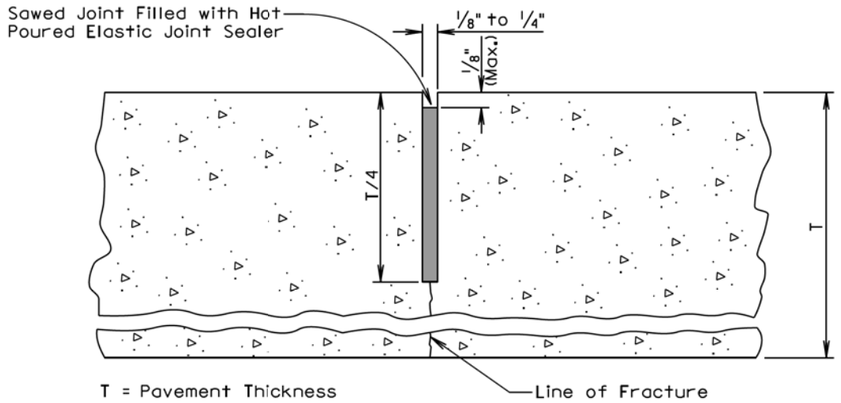

GENERAL NOTES:

The saw cut to control cracking shall be a minimum of 1/4 the thickness of the pavement.

All hot poured elastic joint sealer material spilled on the surface of the concrete pavement shall be removed as soon as the material has cooled. The extent of removal of material shall be to the satisfaction of the Engineer. All costs for removal of the spilled joint sealer material shall be borne by the Contractor.

June 26, 2013

Published Date: 2nd Qtr. 2015	SDDOT	PCC PAVEMENT TRANSVERSE CONTRACTION JOINT WITH OR WITHOUT DOWEL BAR ASSEMBLY	PLATE NUMBER 380.05 Sheet 1 of 1

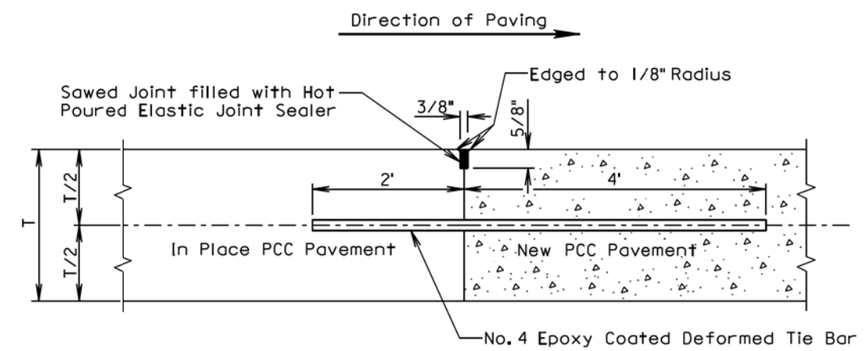

T = Pavement Thickness

GENERAL NOTES:

No. 4 epoxy coated deformed tie bars shall be spaced 12 inches center to center and shall be a minimum of 3 inches and a maximum of 6 inches from the pavement edges.

The minimum distance between a transverse construction joint with tie bars and an adjacent transverse contraction joint shall be 5 feet.

When a transverse construction joint is made, paving will not be allowed in this area for 12 hours.

A transverse construction joint may be placed in lieu of the transverse contraction joint when shown in the plans.

The term "In Place PCC Pavement" in the above drawing indicates that the in place PCC pavement was placed on the current project.

June 26, 2013

Published Date: 2nd Qtr. 2015	SDDOT	PCC PAVEMENT MID PANEL TRANSVERSE CONSTRUCTION JOINT	PLATE NUMBER 380.07 Sheet 1 of 1

DETAIL A
TRANSVERSE CONSTRUCTION JOINT WITH TIE BARS

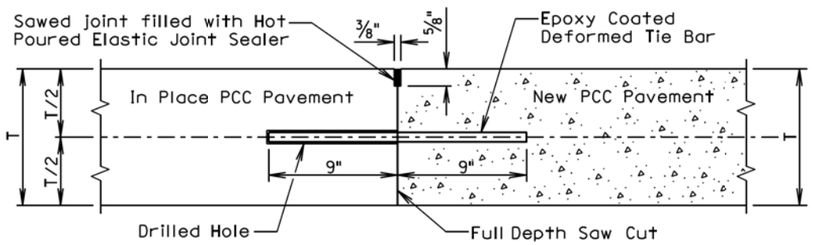

T = In Place PCC Pavement and New PCC Pavement Thickness

GENERAL NOTES:

The term "In Place PCC Pavement" in the above drawing indicates that the in place PCC pavement was placed on a previous project.

See sheet 2 of 2 of this standard plate to determine if Detail A shall be used.

The tie bars shall be embedded a minimum depth of 9 inches into the in place PCC pavement and anchored with an epoxy resin adhesive.

No. 9 epoxy coated deformed tie bars shall be used in 10 inch thickness and less PCC Pavement and No. 11 epoxy coated deformed tie bars shall be used in 10.5 inch thickness and greater PCC Pavement. The tie bar spacing shall be 18 inches center to center and shall be a minimum of 3 inches and a maximum of 9 inches from the pavement edges.

DETAIL B
TRANSVERSE CONSTRUCTION JOINT WITH DOWEL BARS

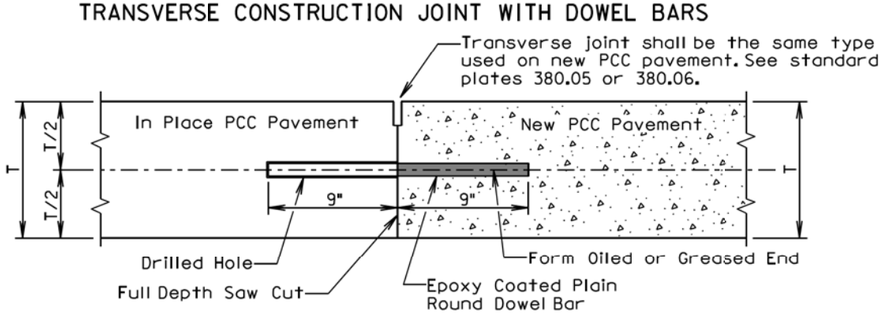

T = In Place PCC Pavement and New PCC Pavement Thickness

GENERAL NOTES:

The term "In Place PCC Pavement" in the above drawing indicates that the in place PCC pavement was placed on a previous project or current project.

See sheet 2 of 2 of this standard plate to determine if Detail B shall be used.

The plain round dowel bars shall be embedded a minimum depth of 9 inches into the in place PCC pavement and anchored with an epoxy resin adhesive.

The epoxy coated plain round dowel bar size, number, and spacing shall be the same as detailed on the corresponding dowel bar assembly standard plate (380.01, 380.02, 380.03, or 380.04). The epoxy coated plain round dowel bars shall be a minimum of 3 inches and a maximum of 6 inches from the pavement edges.

September 6, 2013

Published Date: 2nd Qtr. 2015	SDDOT	PCC PAVEMENT TRANSVERSE CONSTRUCTION JOINTS WITH TIE BARS OR DOWEL BARS	PLATE NUMBER 380.08
			Sheet 1 of 2

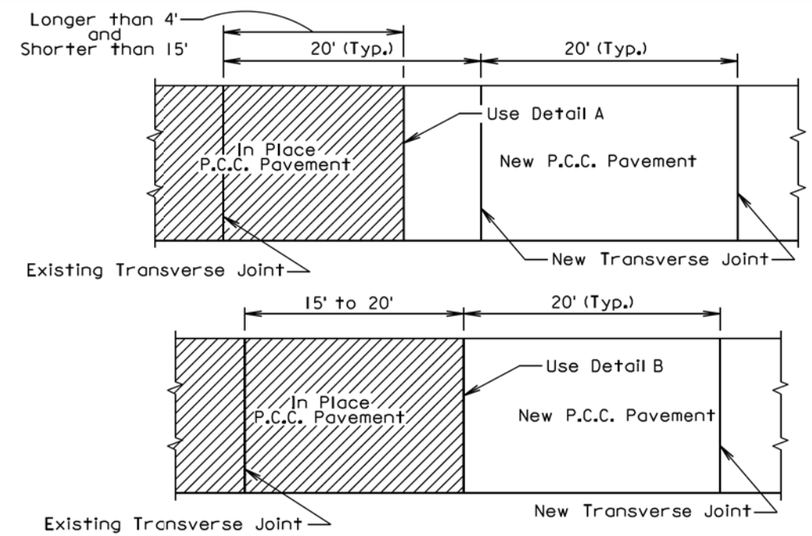

PLAN VIEW
(For typical transverse joint spacing of 20' on the current project)

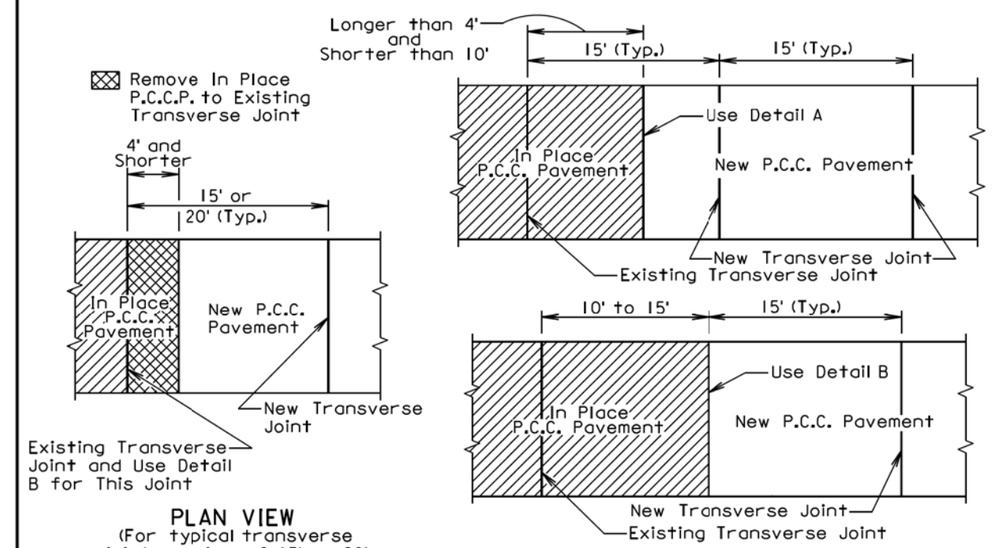

PLAN VIEW
(For typical transverse joint spacing of 15' or 20' on the current project)

PLAN VIEW
(For typical transverse joint spacing of 15' on the current project)

September 6, 2013

Published Date: 2nd Qtr. 2015	SDDOT	PCC PAVEMENT TRANSVERSE CONSTRUCTION JOINTS WITH TIE BARS OR DOWEL BARS	PLATE NUMBER 380.08
			Sheet 2 of 2

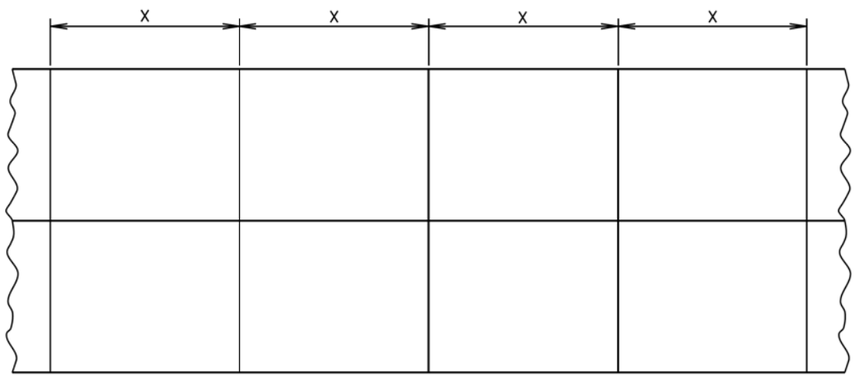

PCCP Thickness	Transverse Contraction Joint Spacing (X)
8" to 9.5"	15'
10" and Thicker	20'

August 31, 2013

Published Date: 2nd Qtr. 2015

SDDOT

PCC PAVEMENT TYPICAL CONTRACTION JOINT SPACING

PLATE NUMBER 380.09

Sheet 1 of 1

LONGITUDINAL CONSTRUCTION JOINT WITH TIE BARS

(DRILLED IN BARS)

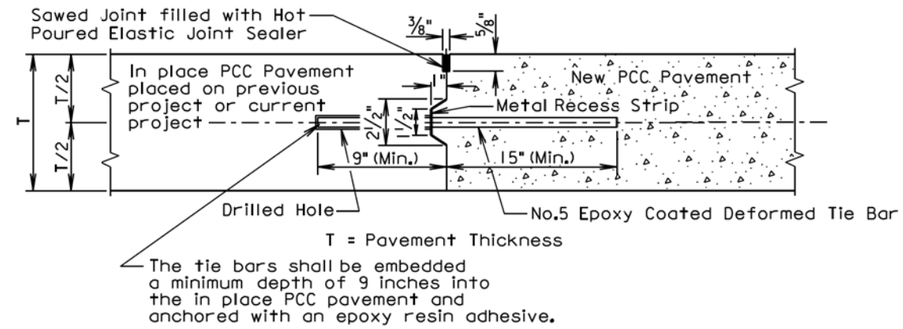

LONGITUDINAL CONSTRUCTION JOINT WITH TIE BARS

(INSERTED OR FORMED IN BARS)

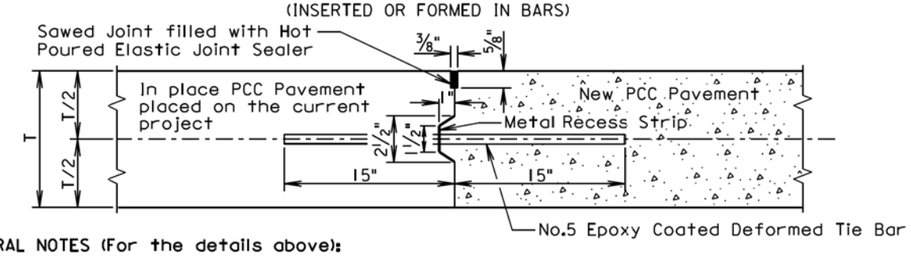

GENERAL NOTES (For the details above):

The epoxy coated deformed tie bars shall be spaced in accordance with the following tables:

Tie Bar Spacing 48" Maximum	
Transverse Contraction Joint Spacing	Number of Tie Bars
6.5' to 10'	2
10.5' to 14'	3
14.5' to 18'	4
18.5' to 22'	5

Tie Bar Spacing 30" Maximum	
Transverse Contraction Joint Spacing	Number of Tie Bars
5' to 7'	2
7.5' to 9.5'	3
10' to 12'	4
12.5' to 14.5'	5
15' to 17'	6
17.5' to 19.5'	7
20' to 22'	8

The tie bars shall be placed a minimum of 15 inches from transverse contraction joints.

The required number of tie bars as shown in the table shall be uniformly spaced within each panel. The uniformly spaced tie bars shall be spaced a maximum of 48 inches center to center for a female keyway and shall be spaced a maximum of 30 inches center to center for a vertical face and male keyway. The maximum tie bar spacing shall apply to tie bars within each panel.

The keyway illustrated in the above details depict a female keyway.

The keyway is optional and is not required. When concrete pavement is formed and a keyway is provided, a metal recess strip shall be used. When concrete pavement is slip formed, a metal recess strip is not required.

August 31, 2013

Published Date: 2nd Qtr. 2015

SDDOT

PCC PAVEMENT LONGITUDINAL JOINTS WITH TIE BARS

PLATE NUMBER 380.10

Sheet 1 of 2

PLOT SCALE - 1:200
PLOTTED FROM - TRPR19387
PLOT NAME - 68
FILE - ...\STANDARD PLATES\SP4.DGN

SAWED LONGITUDINAL JOINT WITH TIE BARS
(POURED MONOLITHICALLY)

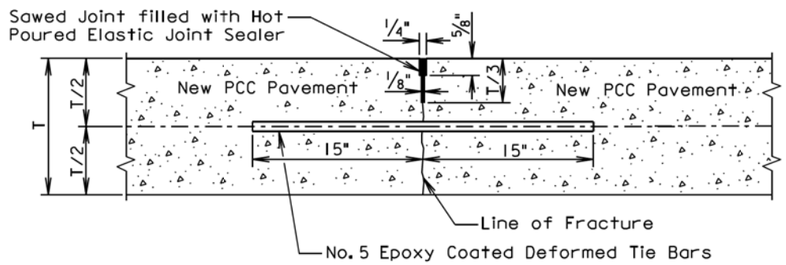

T = Pavement Thickness

GENERAL NOTES (For the detail above):

The epoxy coated deformed tie bars shall be spaced in accordance with the following table:

Tie Bar Spacing 48" Maximum	
Transverse Contraction Joint Spacing	Number of Tie Bars
6.5' to 10'	2
10.5' to 14'	3
14.5' to 18'	4
18.5' to 22'	5

The tie bars shall be placed a minimum of 15 inches from the transverse contraction joints.

The required number of tie bars as shown in the table shall be uniformly spaced within each panel with a maximum space of 48 inches center to center. The maximum tie bar spacing shall apply to tie bars within each panel.

The first saw cut to control cracking shall be a minimum of 1/3 the thickness of the pavement. Additional sawing for widening the saw cut to provide the width for the installation of the hot poured elastic joint sealer is necessary.

August 31, 2013

Published Date: 2nd Qtr. 2015	SDDOT	PCC PAVEMENT LONGITUDINAL JOINTS WITH TIE BARS	PLATE NUMBER 380.10
			Sheet 2 of 2

LONGITUDINAL CONSTRUCTION JOINT WITH TIE BARS
(Individually Formed)

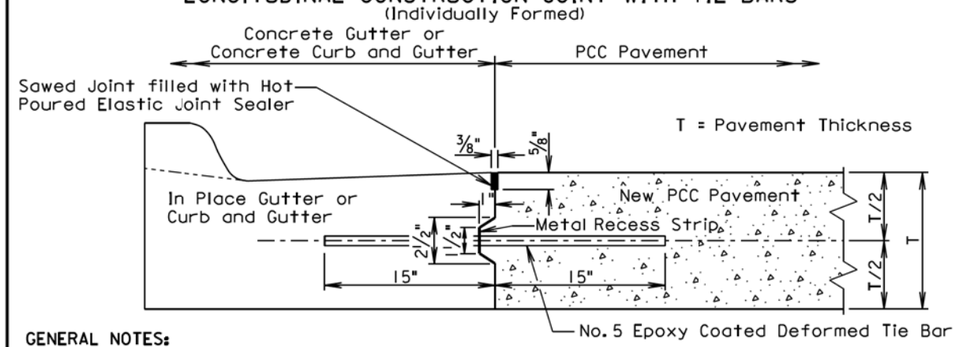

GENERAL NOTES:

No. 5 epoxy coated deformed tie bars shall be spaced 48 inches center to center. The keyway shown above is a female keyway.

The tie bars shall be placed a minimum of 15 inches from existing transverse contraction joints.

The keyway is optional and is not required. When concrete pavement is formed and a keyway is provided, a metal recess strip shall be used. When concrete pavement is slip formed, a metal recess strip is not required.

The transverse contraction joints in the concrete gutter or concrete curb and gutter shall be placed at each mainline PCC pavement transverse contraction joint. The transverse contraction joints in the concrete gutter or the concrete curb and gutter shall be 1 1/2 inches deep if formed in fresh concrete using a suitable grooving tool. If a saw is used to cut the transverse contraction joints, then the depth of the joint shall be at least 1/4 the thickness of the concrete gutter or concrete curb and gutter.

The term "In Place Gutter or Curb and Gutter" in the above drawing indicates that the in place concrete gutter and concrete curb and gutter was placed on the current project.

POURED MONOLITHICALLY

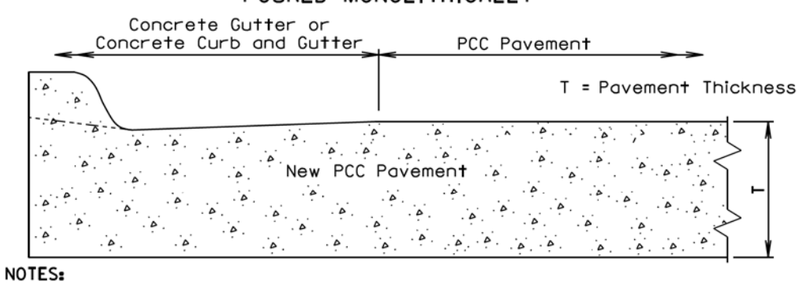

GENERAL NOTES:

The mainline curb and gutter may be placed monolithically with the PCC pavement if the mainline lane width is less than or equal to 12 feet. If this method of construction is used, the tie bars and the sawed joint between the curb and gutter and the PCC pavement shall be eliminated.

The gutter or curb and gutter shall be sawed transversely at each mainline transverse contraction joint. The transverse contraction joints in the gutter or curb and gutter shall be sawed and sealed same as the transverse contraction joints in the PCC pavement.

The slope of the gutter shall be the slope designated for the type of gutter or curb and gutter to be constructed. The bottom slope of the gutter or curb and gutter shall be constructed at the same slope as the mainline concrete pavement.

June 26, 2013

Published Date: 2nd Qtr. 2015	SDDOT	PCC PAVEMENT LONGITUDINAL CONSTRUCTION JOINTS WITH CONCRETE GUTTER OR CONCRETE CURB AND GUTTER	PLATE NUMBER 380.11
			Sheet 1 of 1

LONGITUDINAL CONSTRUCTION JOINT WITHOUT TIE BARS

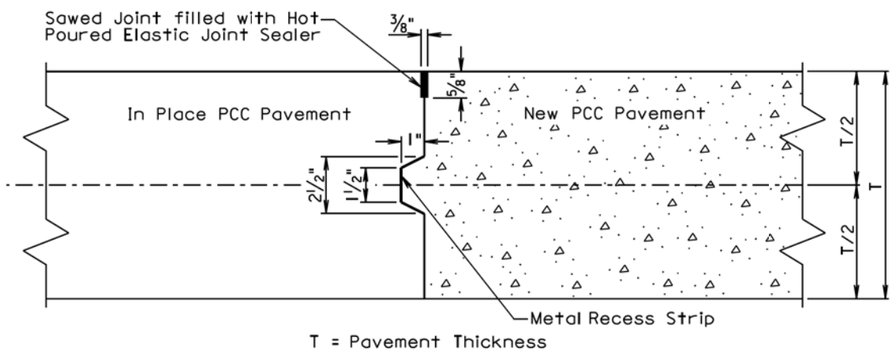

T = Pavement Thickness

GENERAL NOTES:

When concrete pavement is formed and a keyway is provided, a metal recess strip shall be used. When concrete pavement is slip formed, a metal recess strip is not required.

The term "In Place PCC Pavement" in the above drawing indicates that the in place PCC pavement was placed on the current project.

LONGITUDINAL CONSTRUCTION JOINT WITHOUT TIE BARS

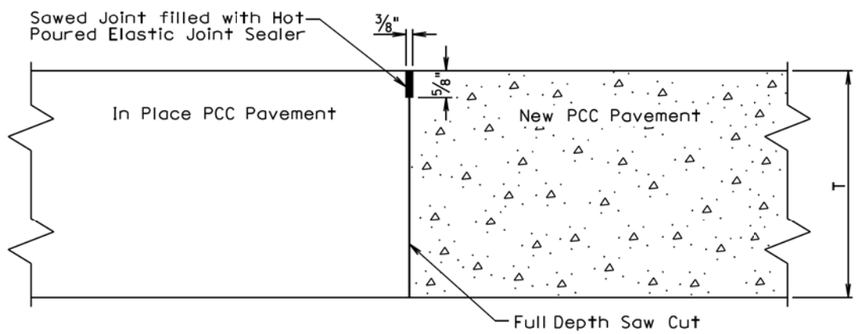

T = Pavement Thickness

GENERAL NOTE:

The term "In Place PCC Pavement" in the above drawing indicates that the in place PCC pavement was placed on a previous project.

September 14, 2001

Published Date: 2nd Qtr. 2015	SDDOT	PCC PAVEMENT LONGITUDINAL JOINTS WITHOUT TIE BARS	PLATE NUMBER 380.12
			Sheet 1 of 2

SAWED LONGITUDINAL JOINT WITHOUT TIE BARS

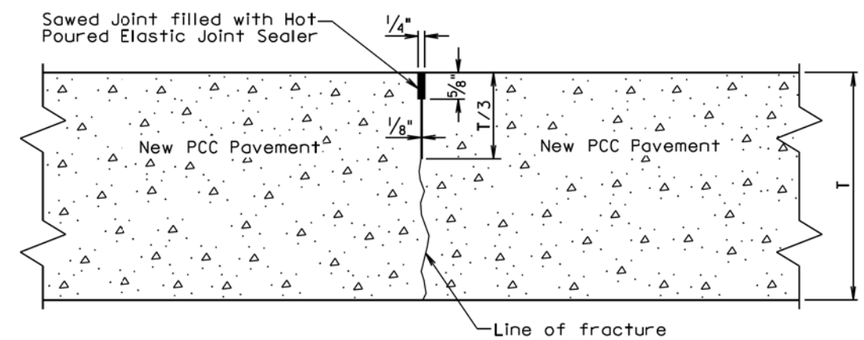

T = Pavement Thickness

GENERAL NOTE:

The first saw cut to control cracking shall be a minimum of 1/3 the thickness of the pavement. Additional sawing for widening the saw cut to provide the width for the installation of the hot poured elastic joint sealer will be necessary.

September 14, 2001

Published Date: 2nd Qtr. 2015	SDDOT	PCC PAVEMENT LONGITUDINAL JOINTS WITHOUT TIE BARS	PLATE NUMBER 380.12
			Sheet 2 of 2

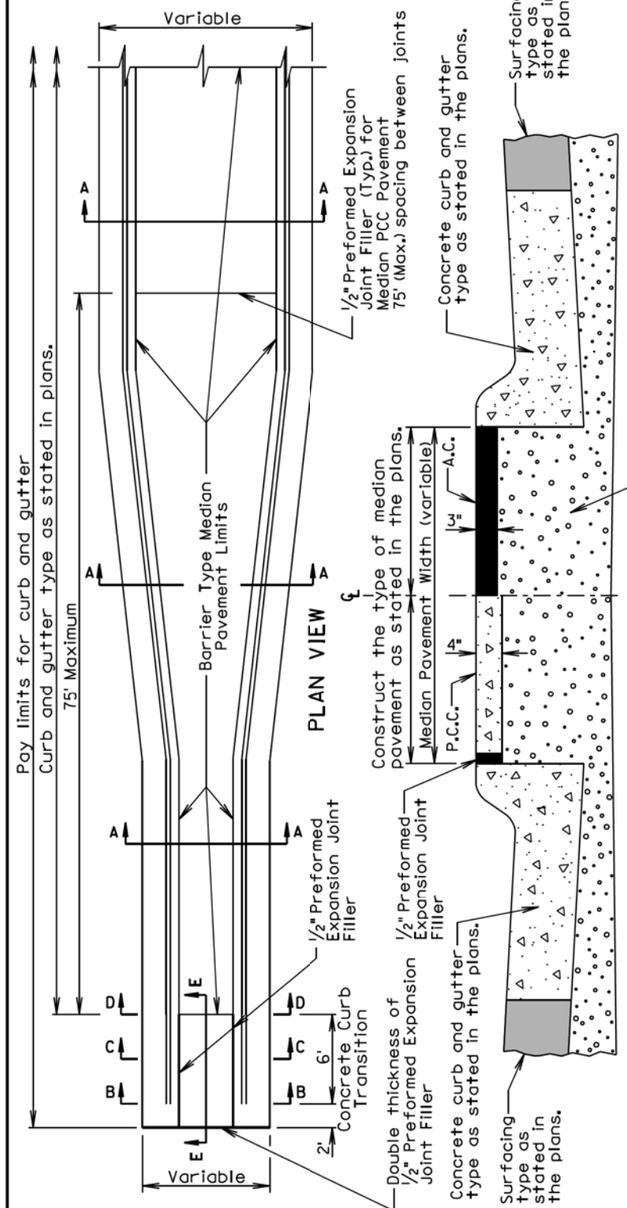

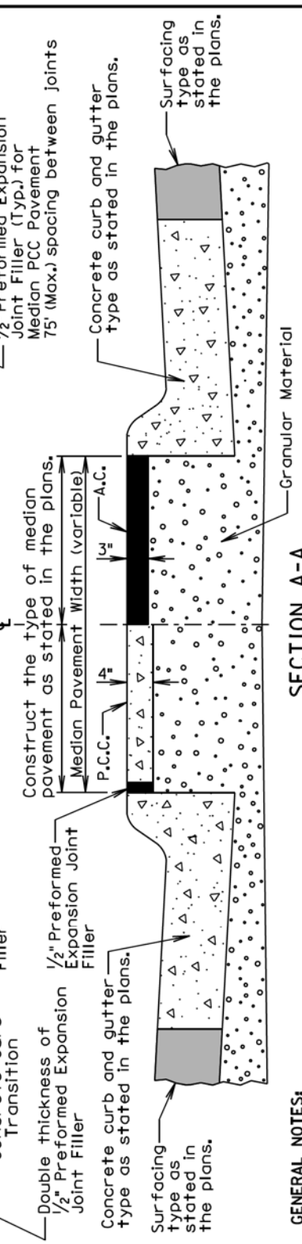

GENERAL NOTES:

Necessary excavation for construction of barrier type PCC and asphalt concrete median pavements and excavation for granular material will be measured and paid for as "Unclassified Excavation".

Concrete for barrier type median PCC pavement shall comply with the requirements of the Standard Specifications for Class M6 Concrete. One-half inch expansion joint filler shall be placed transversely in the median PCC pavement at a maximum spacing of 75'. Where median PCC pavement is wider than 8', a longitudinal joint shall be sawed or grooved along the centerline of the median PCC pavement. Where the median PCC pavement is 4' or narrower and at width transitions, contraction joints shall be sawed or grooved at spacings as approved by the Engineer. All other contraction joints shall be sawed or grooved to a depth of 1/3 the thickness of the median PCC pavement.

All costs for labor, materials, and incidentals necessary for construction of the barrier type median pavement shall be incidental to the contract unit price per square yard for "Barrier Type Median PCC Pavement" or "Barrier Type Median Asphalt Concrete Pavement".

All costs for labor, materials, and incidentals necessary for construction of the 6' concrete curb transition (See Sections B-B, C-C, and D-D) and the adjacent 8" thick concrete (See Section E-E) shall be incidental to the contract unit price per foot for the corresponding curb and gutter bid item.

Granular material shall be paid for at the contract unit price for the respective granular material bid item.

September 6, 2013

Published Date: 2nd Qtr. 2015

SDDOT

BARRIER TYPE MEDIAN PAVEMENT

PLATE NUMBER 380.22

Sheet 1 of 2

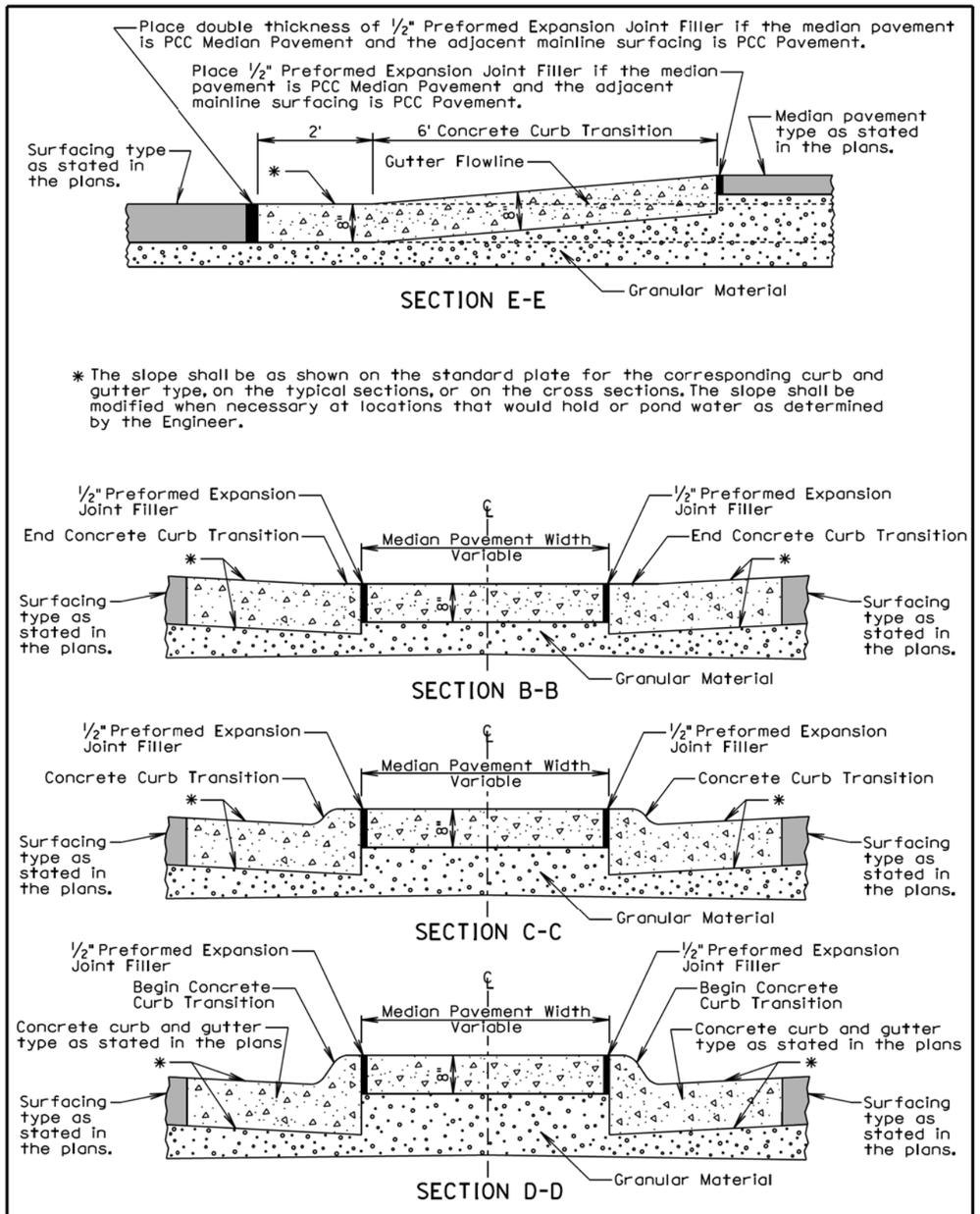

September 6, 2013

Published Date: 2nd Qtr. 2015

SDDOT

BARRIER TYPE MEDIAN PAVEMENT

PLATE NUMBER 380.22

Sheet 2 of 2