Section L: Signal & Lighting Plans

INDEX OF SHEETS

L1	General Layout w/ Index
L2-L13	Estimate with General Notes and Tables
L14	Signal Layouts
L15-L18	Luminaire Layouts
L19-L37	Conduit Layouts
L38-L40	Wiring Diagrams
L41	Signal Timing Diagram
L42-L51	Standard Plates

END IM 1902(61)0
INTERSTATE 190
Station 155+33.00
14.87 Feet East & 4265.99 Feet North of the East Quarter of Section 35 - Township 2 North, Range 7 East

INTERSTATE 190
Station 154+00.00 - End Resurfacing

Sec. 26-T2N-R7E
Sec. 35-T2N-R7E

INTERSTATE 190
Station 149+60.00 - End Grading, Begin Resurfacing

END IM 1902(61)0
WEST BLVD.
Station 26+75.28 - End Grading

BEGIN IM 1902(61)0
WEST BLVD.
Station 10+24.43 - Begin Grading

BEGIN IM 1902(61)0
NORTH ST.
Station 209+01.71 - Begin Grading

BEGIN IM 1902(61)0
INTERSTATE 190
Station 100+20.00 = Station 70+19.00 on I 091-1(01). 465.08 Feet West & 1215.86 Feet South of the East Quarter of Section 35 - Township 2 North, Range 7 East
MRM = 0.12

END IM 1902(61)0
WEST BLVD. NORTH
Station 59+08.72 - End Grading

BEGIN IM 1902(61)0
WEST BLVD. NORTH
50+24.42 - Begin Grading

END IM 1902(61)0
NORTH ST.
Station 224+72.00 - End Grading

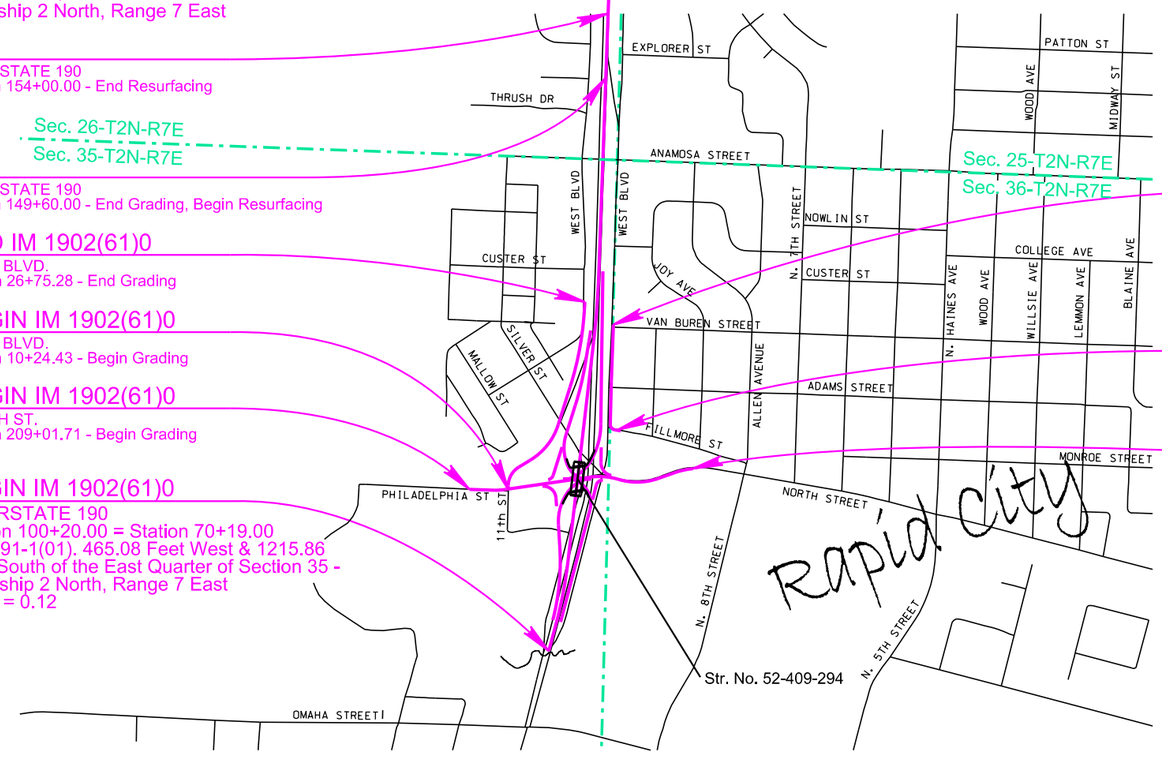

REGISTERED PROFESSIONAL ENGINEER
REG. NO. 8324
LANCE R. MCQUEEN
SOUTH DAKOTA
5-7-15

HDR

SECTION L ESTIMATE OF QUANTITIES

	Bid Item Number	Item	Quantity	Unit
	110E1510	Remove Luminaire Pole	47	Each
	110E1540	Remove Luminaire Pole Footing	47	Each
	451E5050	Trench 0' to 6' Deep	390	Ft
	635E0040	Breakaway Base Luminaire Pole with Arm, 40' Mounting Height	8	Each
	635E0050	Breakaway Base Luminaire Pole with Arm, 50' Mounting Height	20	Each
	635E0150	Breakaway Base Luminaire Pole with Twin Arms, 50' Mounting Height	4	Each
	635E0350	Breakaway Base Luminaire Pole with Top Twin Mount, 50' Mounting Height	6	Each
	635E0550	Fixed Base Luminaire Pole with Top Twin Mount, 50' Mounting Height	21	Each
	635E2000	Pedestal Signal Pole	6	Each
	635E3340	Roadway Luminaire, 400 Watt with Photoelectric Cell	36	Each
	635E3384	Post Top Luminaire, 400 Watt with Photoelectric Cell	54	Each
	635E3520	Under Bridge Deck Luminaire, 150 Watt	4	Each
	635E4030	3 Section Vehicle Signal Head	6	Each
	635E4080	3 Section Directional Vehicle Signal Head	10	Each
	635E5020	2' Diameter Footing	369.0	Ft
	635E5302	Type 2 Electrical Junction Box	58	Each
*	635E5303	Type 3 Electrical Junction Box	5	Each
*	635E5304	Type 4 Electrical Junction Box	2	Each
	635E5304	Type 4 Electrical Junction Box	10	Each
	635E5360	Surface Mounted Junction Box	6	Each
	635E5400	Electrical Service Cabinet	4	Each
	635E5420	Circuit Control Center	1	Each
	635E5430	Traffic Signal Controller	1	Each
	635E5515	Signal Head Battery Backup and Flash System	1	Each
	635E5530	Preformed Detector Loop	12	Each
	635E5550	Detector Unit	4	Each
	635E5562	Siren Emergency Vehicle Preemption System	1	Each
	635E5900	Pedestrian Push Button	8	Each
	635E5910	Pedestrian Push Button Pole	8	Each
	635E5922	Pedestrian Signal Head with Countdown Timer	8	Each
	635E5930	Pedestrian Crossing Sign	8	Each
	635E6200	Miscellaneous, Electrical	Lump Sum	LS
	635E8020	2" Rigid Galvanized Steel Conduit	420	Ft
	635E8110	1" Rigid Conduit, Schedule 40	240	Ft
	635E8120	2" Rigid Conduit, Schedule 40	10,090	Ft
	635E8130	3" Rigid Conduit, Schedule 40	1,530	Ft
	635E8140	4" Rigid Conduit, Schedule 40	120	Ft
	635E8150	5" Rigid Conduit, Schedule 40	150	Ft
	635E8220	2" Rigid Conduit, Schedule 80	3,505	Ft
*	635E8230	3" Rigid Conduit, Schedule 80	605	Ft
	635E8230	3" Rigid Conduit, Schedule 80	595	Ft
	635E8240	4" Rigid Conduit, Schedule 80	640	Ft
	635E8250	5" Rigid Conduit, Schedule 80	200	Ft
*	635E8415	1" Innerduct, SDR 13.5	5,925	Ft
	635E9011	1/C #1 AWG Copper Wire	765	Ft
	635E9012	1/C #2 AWG Copper Wire	31,725	Ft
	635E9014	1/C #4 AWG Copper Wire	6,435	Ft
	635E9016	1/C #6 AWG Copper Wire	22,740	Ft
*	635E9020	1/C #10 AWG Copper Wire	3,695	Ft
	635E9020	1/C #10 AWG Copper Wire	470	Ft
	635E9504	4/C #14 AWG Copper Tray Cable, K2	4,980	Ft
	635E9507	7/C #14 AWG Copper Tray Cable, K2	1,155	Ft
	635E9519	19/C #14 AWG Copper Tray Cable, K2	1,770	Ft
	635E9525	25/C #14 AWG Copper Tray Cable, K2	870	Ft
	635E9600	#16 AWG Copper Twisted Shielded Pair	1,635	Ft
	635E9710	2/C #10 AWG Copper Pole and Bracket Cable	5,810	Ft
*	635E9912	12 Strand Fiber Optic Cable	2,840	Ft

* - Denotes Non-Participating

SUPPLYING AS BUILT PLANS

If the traffic signal systems or roadway lighting systems are constructed differently than what is stated in the plans, the Contractor shall supply as built plans to the Engineer and a copy shall be sent to the Traffic Design Engineer. The as built plans may include conduit layouts, wiring diagrams, or other drawings depicting the changes from the original plans.

SHOP DRAWING AND CATALOG CUTS SUBMITTALS

The Contractor shall submit shop drawings and catalog cuts in accordance with Section 985 of the Specifications or in Adobe PDF format. PDF submittals shall be sent to the following email address:

Lance.McQueen@hdrinc.com

Upon review of the submittals, they will be sent by the Engineer to the following email addresses for concurrence of approvals or remarks:

Norris.Leone@state.sd.us
John.Less@state.sd.us
Pete.Longman@state.sd.us

REGISTERED PROFESSIONAL ENGINEER
REG. NO. 8324
LANCE R. MCQUEEN
SOUTH DAKOTA
5-21-15

ON-SITE INSPECTION

An on-site inspection of the traffic signals shall be conducted before acceptance of the project, once the traffic signals are completed and operational. The on-site inspection shall be conducted by the Region Traffic Engineer with the Contractor, City Traffic Engineer, and the Traffic Design Engineer.

MISCELLANEOUS, ELECTRICAL

The contract lump sum price for “Miscellaneous, Electrical” shall include all costs for the following work items:

- Removal of existing electrical junction boxes
- Removal of existing electrical wire and conduit
- Removal of existing service cabinet and meters
- Removal of existing irrigation controllers (4 Each)
- Connecting/tieing to existing conduits (2 Each)
- Connecting/tieing to existing junction boxes (2 Each)
- Conduit boring (approximately 60’)
- Installation of the transformer pad for the BHP transformer
- Keeping the existing roadway lighting in-service
- Wiring of the traffic signals
- Signal aiming
- Tree trimming (as needed)

REMOVE LUMINAIRE POLE

Existing luminaire poles shall be removed at the locations shown on the plans.

- The existing 400W cobra heads (approximately 75 of these) from the existing poles shall be salvaged and delivered to the City of Rapid City.
- The Contractor shall notify the City 5 days before the delivery of the salvaged heads. The City contact is Traffic Operations at (605) 394-4118.
- All existing luminaire poles and related items shall become property of the Contractor.

All costs for removal of the existing poles and salvage and delivery of the existing heads to the City shall be incidental to the contract unit price per each for “Remove Luminaire Pole”.

REMOVE LUMINAIRE POLE FOOTING

The footings of removed luminaire poles shall be removed by the Contractor to a minimum of 2’ below the ground surface. Restoration of the disturbed area shall be to the satisfaction of the Engineer.

All costs for removing the footings of the existing luminaire poles shall be incidental to the contract unit price per each for “Remove Luminaire Pole Footing”.

BLACK HILLS POWER TRANSFORMERS

Black Hills Power (BHP) shall furnish and install new transformers at the locations shown on the plans.

For the new transformer installed along the north side of North Street, west of the I-190 interchange, BHP shall furnish a fiberglass transformer pad for the Contractor to install. The transformer pad has approximate dimensions of 46” wide x 51” long x 36” tall. The Contractor shall coordinate with BHP for the location of the pad for the transformer to be placed on. All costs for this work shall be included in the contract lump sum price for “Miscellaneous, Electrical”.

Prior to connecting wire to the BHP transformers, or to disconnect power from an existing BHP transformer, the Contractor shall contact BHP field rep Louis Schwengler (#605-381-3872).

BLACK HILLS POWER WIRE

BHP shall furnish and install the wire to the new transformer. The Contractor shall be required to complete all trench work for this wire. Once the Contractor opens the trench and places the bedding material, the Contractor shall contact BHP for BHP to install the wire. Once BHP has completed the wire installation, the Contractor shall fill-in and compact the trench per the Specifications.

All costs for this trench work shall be included in the contract unit price per linear foot for “Trench 0' to 6' Deep”.

EXISTING ROADWAY LIGHTING SYSTEM

During the project, the Contractor shall keep the existing roadway lighting in-service as long as possible to maintain roadway lighting to the traffic that will be running thru and adjacent to the project. The Contractor shall also minimize the amount of time a project area is without roadway lighting. The Contractor shall review Section C for project phasing.

The Contractor shall communicate and coordinate with Black Hills Power and the City of Rapid City to determine the existing light system, circuits and wiring.

To achieve the requirements for the roadway lighting as discussed above, the Contractor shall be required to install the following items:

- temporary power (i.e. generators)
- temporary span wire systems
- temporary overhead cable
- temporary buried cable

All costs for this work shall be included in the contract lump sum price for “Miscellaneous, Electrical”.

TABLE OF FOOTING DATA FOR LUMINAIRE POLES

Site Designation	Footing Diameter	*Footing Depth	**Spiral Diameter	**Spiral Length	Vertical Reinforcement
IL1-IL6	2' - 0"	8' - 0"	1' - 8"	54' - 9"	8-#7 x 7' - 6"
IL7-IL27	Barrier Mounted. See Section E for details.				
AL1	2' - 0"	9' - 0"	1' - 8"	60' - 0"	8-#7 x 8' - 6"
AL2-AL5	2' - 0"	8' - 0"	1' - 8"	54' - 9"	8-#7 x 7' - 6"
BL1-BL4	2' - 0"	8' - 0"	1' - 8"	54' - 9"	8-#7 x 7' - 6"
CL1-CL2	2' - 0"	8' - 0"	1' - 8"	54' - 9"	8-#7 x 7' - 6"
CL3	2' - 0"	9' - 0"	1' - 8"	60' - 0"	8-#7 x 8' - 6"
DL1	2' - 0"	9' - 0"	1' - 8"	60' - 0"	8-#7 x 8' - 6"
DL2-DL3	2' - 0"	8' - 0"	1' - 8"	54' - 9"	8-#7 x 7' - 6"
NL1-NL9	2' - 0"	10' - 0"	1' - 8"	65' - 3"	8-#7 x 9' - 6"
WL1-WL8	2' - 0"	9' - 0"	1' - 8"	60' - 0"	8-#7 x 8' - 6"
S1-S6	2' - 0"	6' - 0"	1' - 8"	44' - 3"	8-#7 x 5' - 6"

*Footing depth shall be below ground level.
**The size of all spirals shall be #3.

SOILS INFORMATION

Cylindrical footings for luminaires along I-190 will be placed in either new or existing embankment fill sections. Groundwater is not anticipated to be encountered during construction of these footings.

Cylindrical footings for luminaires along Ramp A will be placed into both brown silt-clay with gravel and dark gray silt-clay (Mowry Shale). Groundwater is not anticipated to be in encountered during construction of these footings.

Cylindrical footings for luminaires along Ramp B will be placed into both new or existing embankment fill sections and brown silt-clay with gravel. Groundwater is not anticipated to be in encountered during construction of these footings.

Cylindrical footings for luminaires along Ramp C will be placed into both new or existing embankment fill sections and gray/brown silt-clay (Weathered Shale). Groundwater is not anticipated to be in encountered during construction of these footings.

Cylindrical footings for luminaires along Ramp D will be placed into either gray/brown silt-clay (Weathered Shale), brown silt-clay with gravel, or new existing embankment fill sections. Groundwater is not anticipated to be in encountered during construction of these footings.

Cylindrical footings for luminaires along North St. will be placed into either gray/brown silt-clay (Weathered Shale), dark gray silt-clay (Mowry Shale), or brown silt-clay with gravel. Groundwater is not anticipated to be in encountered during construction of these footings.

Cylindrical footings for luminaires along West Blvd. will be placed into either gray/brown silt-clay (Weathered Shale), dark gray silt-clay (Mowry Shale), brown silt-clay with gravel, or brown silt-clay with sand. Groundwater was encountered at depths within the cylindrical footings in borings placed north of West Blvd., Sta. 15+00.

During construction of the luminaire footings, concrete placement operations should closely follow excavation procedures. The longer the excavations are left open the more likely caving may occur. If caving soils are encountered during excavation, casing may be required to construct the cylindrical footings. All costs for the casings shall be incidental to the footing costs.

Concrete shall not be dropped through standing water. If water is present in the excavation it shall be removed prior to concrete placement or the concrete shall be tremied. If caving occurs during dewatering the concrete shall be placed through a tremie or by means of a casing.

If questions arise or additional information is needed concerning the cylindrical footings contact Geotechnical Engineering Activity in Pierre at 605-773-3401.

POLES

New poles shall be galvanized steel. Galvanizing shall be in accordance with AASHTO Specification M111 (ASTM A123). Steel pole material shall be in accordance with ASTM A36, A242, A570, A572, A607 or A595 Grade A or B. A595 material shall be limited to a 3/8 inch maximum thickness. Steel pole material with a thickness of 1/2 inch to 2 inches, shall satisfy Charpy V-Notch toughness test requirements of 15 ft. lb. at 40 degrees F. The SDDOT Office of Bridge Design shall be contacted for Charpy impact requirements for steel pole material thickness greater than 2 inches.

The steel pole-to-base-plate connection shall be a full-penetration groove-welded connection with a backing ring as described in Table 11.9.3.1-1, Section 4.5 of the current edition of the AASHTO Standard Specifications for Structural Supports for Highway Signs, Luminaires, and Traffic Signals.

Luminaire extension(s) shall have an 8 Ft. arm.

All poles shall have transformer bases, except for the poles that are installed on the concrete barrier on I-190.

The proposed luminaire poles along North St (NL1-NL9) and West Blvd (WL1-WL8) shall be manufactured to accommodate future banner hangers. The banner hangers and banners for these luminaire poles shall not be furnished or installed with this project.

- The future banner hangers are to be Banner Saver 2000 as manufactured by Millerbernd Manufacturing Company or approved equal.
- The future banner hangers are to be to the spacing, extended out from the pole, and to the height on the poles as shown in the figure below.
- The future banner hangers are to be spring loaded to flex in wind conditions.
- The future banner hangers are to be an integral part of the pole; however, they shall be removable for their replacement and maintenance. Adjustable clamps shall not be allowed to attach the future banner hangers to the pole.
- All costs for manufacturing the poles to accommodate the future banner hangers shall be incidental to the luminaire pole bid items.

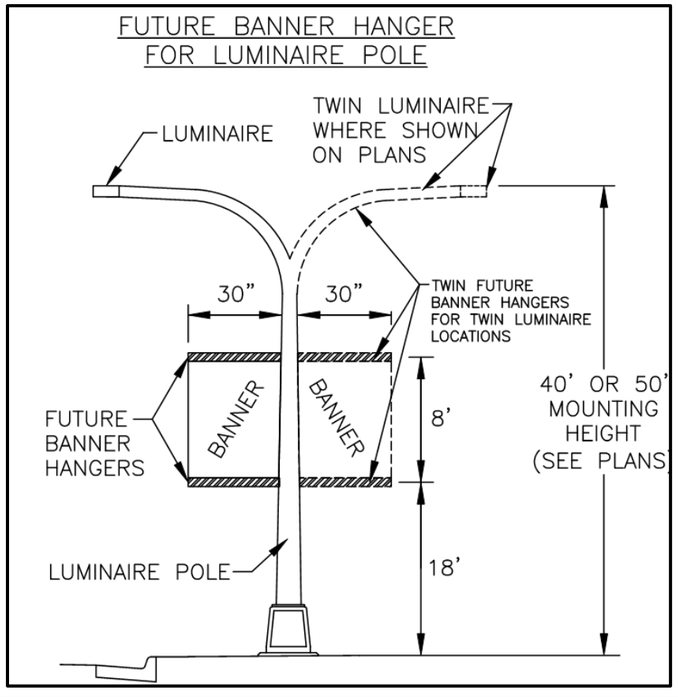

BREAKAWAY BASES

A statement is required, signed by a Professional Engineer registered in the State of South Dakota, certifying that the breakaway base devices meet the design requirements, including breakaway and structural adequacy, of the "AASHTO Specifications for Structural Supports for Highway Signs, Luminaires, and Traffic Signals". The physical testing procedures outlined in Section 8 of the Fifth Edition of the Aluminum Association's "Specifications for Aluminum Structures" may be used to establish service limits for structural adequacy certification of aluminum breakaway transformer bases and frangible couplings. If requested, test data of production samples to support the certification shall be provided.

BARRIER MOUNTED LUMINAIRE POLE

Luminaire Poles IL7-IL27 shall be median concrete barrier mounted poles. The pole bases shall be as shown on standard plate #635.16. See Section E of the plans for all other light pole mounting details.

REGISTERED PROFESSIONAL ENGINEER
REG. NO. 8324
LANCE R. MCQUEEN
SOUTH DAKOTA
5-21-15

HDR

FOR BIDDING PURPOSES ONLY

I-190 LUMINAIRES

The accepted design for the roadway luminaires shall provide 1.2 and greater average maintained foot-candles and a uniformity ratio (average maintained to minimum maintained foot-candles) of 3:1 and less using the following parameters:

IL1-IL3

Setback:	5.33 Ft.
Lamp Loss Factor (LLF):	0.7
Width of Lighted Area:	51 Ft.
Spacing:	205 Ft.
Configuration:	Median/One-Sided
Mounting Height:	50 Ft.
Lamp:	400W HPS

IL4-IL7

Setback:	5.33 Ft.
Lamp Loss Factor (LLF):	0.7
Width of Lighted Area:	35 Ft.
Spacing:	205 Ft.
Configuration:	Median/One-Sided
Mounting Height:	50 Ft.
Lamp:	400W HPS

IL8-IL12

Setback:	8.0 Ft.
Lamp Loss Factor (LLF):	0.7
Width of Lighted Area:	40 Ft.
Spacing:	195 Ft.
Configuration:	Median/One-Sided
Mounting Height:	50 Ft.
Lamp:	400W HPS

IL13-IL20

Setback:	8.0 Ft.
Lamp Loss Factor (LLF):	0.7
Width of Lighted Area:	55 Ft.
Spacing:	195 Ft.
Configuration:	Median/One-Sided
Mounting Height:	50 Ft.
Lamp:	400W HPS

IL21-IL27

Setback:	8.0 Ft.
Lamp Loss Factor (LLF):	0.7
Width of Lighted Area:	41 Ft.
Spacing:	212.5 Ft.
Configuration:	Median/One-Sided
Mounting Height:	50 Ft.
Lamp:	400W HPS

The following luminaires meet the requirements for this design:

a.) Cooper Lighting: Test No. ORL40SXXX4 High Pressure Sodium, Medium, semi-cutoff, Type III

b.) Halophane: Test No. G400HP00HDR High Pressure Sodium, Medium, semi-cutoff, Type III

Three copies of the isofootcandle charts and utilization curves shall be furnished to the Engineer for approval. The Contractor must get approval from the Engineer prior to installation of the luminaires.

The approved isofootcandle data for each case shall be used to determine the correct socket position at each site. Each luminaire shall be installed with its lamp socket in the proper position and in a level attitude.

RAMP LUMINAIRES

The accepted design for the roadway luminaires AL1-AL5, BL1-BL4, CL1-CL3, DL1-DL3 shall provide 1.2 and greater average maintained foot-candles and a uniformity ratio (average maintained to minimum maintained foot-candles) of 3:1 and less using the following parameters:

Setback:	6 Ft.
Lamp Loss Factor (LLF):	0.7
Width of Lighted Area:	28 Ft.
Spacing:	270 Ft.
Configuration:	One-Sided
Mounting Height:	50 Ft.
Lamp:	400W HPS

The following luminaires meet the requirements for this design:

a.) Cooper Lighting: Test No. OVY4S3E High Pressure Sodium, Medium, semi-cutoff, Type III

b.) Hubbell: Test No. HP03018 High Pressure Sodium, Medium, semi-cutoff, Type III

Three copies of the isofootcandle charts and utilization curves shall be furnished to the Engineer for approval. The Contractor must get approval from the Engineer prior to installation of the luminaires.

The approved isofootcandle data for each case shall be used to determine the correct socket position at each site. Each luminaire shall be installed with its lamp socket in the proper position and in a level attitude.

UNDER BRIDGE LUMINAIRES

The accepted design for the roadway luminaires UL1-UL4 shall provide 1.2 and greater average maintained foot-candles and a uniformity ratio (average maintained to minimum maintained foot-candles) of 3:1 and less using the following parameters:

Setback:	45 Ft.
Lamp Loss Factor (LLF):	0.7
Width of Lighted Area:	90 Ft.
Spacing:	55 Ft.
Configuration:	Opposite
Mounting Height:	20 Ft.
Lamp:	150W HPS

The following luminaires meet the requirements for this design:

a.) Halophane: Test No. MW15AHP00X High Pressure Sodium, Type IV

Three copies of the isofootcandle charts and utilization curves shall be furnished to the Engineer for approval. The Contractor must get approval from the Engineer prior to installation of the luminaires.

The approved isofootcandle data for each case shall be used to determine the correct socket position at each site. Each luminaire shall be installed with its lamp socket in the proper position and in a level attitude.

The proposed under bridge lights shall be mounted to the proposed abutment walls. The lights shall be installed with vandal guards.

See Section E for the locations of the lights. All costs for mounting the under bridge lights to the abutments shall be included in the contract price per each for "Under Bridge Deck Luminaire, 150 Watt".

REGISTERED PROFESSIONAL ENGINEER
REG. NO. 8324
LANCE R. MCQUEEN
SOUTH DAKOTA
5-7-15

NORTH STREET LUMINAIRES

The accepted design for the roadway luminaires NL1-NL9 shall provide 1.2 and greater average maintained foot-candles and a uniformity ratio (average maintained to minimum maintained foot-candles) of 3:1 and less using the following parameters:

Setback:	6 Ft.
Lamp Loss Factor (LLF):	0.7
Width of Lighted Area:	85 Ft.
Spacing:	225 Ft.
Configuration:	Opposite
Mounting Height:	50 Ft.
Lamp:	400W HPS

The following luminaires meet the requirements for this design:

a.) Cooper Lighting: Test No. OVY4S3E High Pressure Sodium, Medium, semi-cutoff, Type III

b.) Hubbell: Test No. HP03018 High Pressure Sodium, Medium, semi-cutoff, Type III

Three copies of the isofootcandle charts and utilization curves shall be furnished to the Engineer for approval. The Contractor must get approval from the Engineer prior to installation of the luminaires.

The approved isofootcandle data for each case shall be used to determine the correct socket position at each site. Each luminaire shall be installed with its lamp socket in the proper position and in a level attitude.

WEST BLVD LUMINAIRES

The accepted design for the roadway luminaires WL1-WL8 shall provide 0.8 and greater average maintained foot-candles and a uniformity ratio (average maintained to minimum maintained foot-candles) of 4:1 and less using the following parameters:

Setback:	10 Ft.
Lamp Loss Factor (LLF):	0.7
Width of Lighted Area:	36 Ft.
Spacing:	250 Ft.
Configuration:	One-Sided
Mounting Height:	40 Ft.
Lamp:	400W HPS

The following luminaires meet the requirements for this design:

a.) Cooper Lighting: Test No. OVY4S3E High Pressure Sodium, Medium, semi-cutoff, Type III

b.) Hubbell: Test No. HP03018 High Pressure Sodium, Medium, semi-cutoff, Type III

Three copies of the isofootcandle charts and utilization curves shall be furnished to the Engineer for approval. The Contractor must get approval from the Engineer prior to installation of the luminaires.

The approved isofootcandle data for each case shall be used to determine the correct socket position at each site. Each luminaire shall be installed with its lamp socket in the proper position and in a level attitude.

HDR

FOR BIDDING PURPOSES ONLY

TRAFFIC SIGNAL CONTROLLER

The controller shall be a solid state, digital, NEMA TS2 Type 1 from the approved product list and as approved by the South Dakota Department of Transportation Traffic Design Engineer in the Office of Road Design.

The controller shall be two through twelve phase controllers.

Vehicle detectors N1-N3, E1-E6, S1-S3, W1-W6 shall operate in the presence (non-locking) mode and shall have call delay timing capability. The call delay feature shall be inhibited by the controller. Set these detectors to 3 seconds delay.

The controller cabinet door shall be hinged on the right side.

Underside mounted LED light strips shall be installed on each shelf in the controller cabinet. An on/off switch that is turned on when the cabinet door is opened and turned off when the cabinet door is closed shall activate the lights. The switch shall be wired to place an input to the signal controller event or alarm log when the cabinet door is opened.

Digital timing shall be provided with a battery backup.

The controller shall flash all-red when in malfunction flash.

The interface panels shall be capable of inserting up to sixteen load switches.

The controller cabinet shall be pad mounted.

The controller shall be capable of programming by manual entry via the front panel keyboard, data downloading from a portable PC computer via null-modem cable, and data downloading from one controller to another using a serial port on each controller.

The controller shall be capable of operating coordinated by time-based, hardwire, and telemetry.

The controller cabinet shall be capable of placing vehicle and pedestrian calls into the controller. Placed calls shall provide for eight vehicle phases and four pedestrian phases. The placed calls for vehicle phases shall be capable of extending the associated vehicle phase by continuous or intermittent contact.

The controller shall have a copy function to copy all timing data from one phase to another. The controllers shall also permit copying all coordination pattern data from one pattern to another.

A Malfunction Management Unit (MMU) shall be installed in the cabinet and shall conform to the requirements of NEMA Standard TS-2 Section 4. The provided MMU shall have visual displays for programming and operational purposes. The MMU shall be a Reno MMU 1600GE or approved equal.

An Ethernet switch shall be installed in the cabinet. The switch shall be a Layer 2 Ethernet switch with two single mode, Gigabit, 10km SFPs fiber modules. The Ethernet switch shall be KUSA Traffic High Security Ethernet Switch, Model KY-3182RM as manufactured by KUSA Corporation or approved equal.

A sufficient quantity of BUS Interface Units shall be installed in the cabinet to provide communication between detectors, load switches, controller unit, etc. Each BUS Interface Unit shall conform to NEMA Standard TS-2, Section 8.

The controller shall have internal signal dimming.

The controller Solid State Flasher shall have dimming capability.

The Contractor is responsible for programming controllers with the signal timings provided in these plans.

All costs for constructing the concrete pad and footing, materials, labor, and furnishing and installing the controller cabinet shall be incidental to the contract unit price per each for “Traffic Signal Controller”.

CONTROLLER PROGRAMMING

The Contractor shall furnish the Road Design Office with a copy of the data programmed into the Controller prior to the full operation of the Controller for approval. The address is as follows:

John Less
Traffic Design Engineer
Office of Road Design
700 East Broadway
Pierre, SD 57501

BATTERY BACKUP AND FLASH SYSTEM

The proposed Battery Backup and Flash System shall be furnished, installed and paid for as discussed in the Special Provision for Signal Head Battery Backup and Flash System.

The Contractor shall furnish and install a cabinet that shall be installed on the side of the traffic signal controller cabinet to house the battery backup and flash system.

- The size of the side mounted cabinet shall be determined by the supplier of the traffic signal controller. The side mounted cabinet shall be of sufficient size to accommodate the battery backup and flash system, batteries and any associated components.
- The traffic signal controller cabinet base footing shall be extended to allow the battery backup cabinet to be set upon it.

All costs for furnishing and installing the side mounted cabinet, including extending the controller cabinet base to accommodate it, shall be incidental to the contract unit price per each for “Signal Head Battery Backup and Flash System”.

SIREN EMERGENCY VEHICLE PREEMPTION SYSTEM

The proposed Siren Emergency Vehicle Preemption System shall be furnished, installed and paid for as shown on the plans and as discussed in the Special Provision for Siren Emergency Vehicle Preemption System.

MULTICONDUCTOR CONTROL CABLE FOR SIGNAL CIRCUITS

The cable furnished for signal circuits shall be furnished with the number and size of the conductors shown in the plans and shall meet the specifications for either of the two types specified below.

1. General Purpose Control Cable with stranded copper conductors, ICEA S-61-402, PE-PV Insulated (20-10), 600 volts.

2. General Purpose Control Cable, with standard copper conductors, Aerial and Duct., IMSA 20-1, 600 volts.

The Conductor Jackets for the above cables shall be color coded in accordance with ICEA S-61-402 Method 1, Table K-2.

TRAFFIC SIGNAL CONTROL CABLE LABELS

Traffic signal cable shall be identified in hand holes, junction boxes, pedestal bases, electrical service cabinets, and controller cabinets as indicated on the Wiring Diagram. Labels shall be wrapped around traffic signal cable to indicate the signal pole and signal head that it is connected to. Labels shall be self-adhesive vinyl cloth with a preprinted legend. Traffic signal control cables to the poles shall be marked with a legend and shall be color coded as follows; northwest (blue), northeast (red), southeast (green), and southwest (orange).

TRAFFIC SIGNAL METER SOCKETS

The meter sockets provided for traffic signals by the Contractor shall be a 200 amp, positive by-pass.

SIGNAL BACKPLATES

Signal backplates shall extend not less than 5 inches from the edge of the signal head at the top, bottom, and sides. The bottom of the backplate on vehicle signal faces mounted directly above pedestrian signal indications shall be sized to permit the separate adjustment of the vehicle and pedestrian signal indication and may be less than 4 inches. All backplates shall have a flat black finish.

Signal backplates shall be polycarbonate.

SIGNAL AIMING

Signals shall be aimed and trees shall be trimmed such that all the signals for each approach shall be continuously visible for the minimum distance listed in the table in Section 4D.12 of the MUTCD.

SIGNALS ATTACHED TO PROPOSED BRIDGE

For the interchange of I-190 and North Street, signal heads shall be mounted to the proposed I-190 bridge for the signal heads shown on the plans. See Section E for the structural supports that have been provided to attach the signal heads to the bridge.

All costs to attach the signal heads to the bridge structural supports shall be incidental to the signal head bid items.

RGSC ATTACHED TO STRUCTURES

The proposed rigid galvanized steel conduit (RGSC) shown to be attached to the existing or proposed structures shall be attached to the structures in a manner meeting all electrical codes. The conduit connection system to the structures shall be corrosion resistant.

All costs for the connections to attach the RGSC to the structures shall be incidental to the conduit bid items.

REGISTERED PROFESSIONAL ENGINEER
REG. NO. 8324
LANCE R. MCQUEEN
SOUTH DAKOTA
5-21-15

HDR

FOR BIDDING PURPOSES ONLY

SURFACE MOUNTED JUNCTION BOXES

Surface mounted junction boxes shall comply with NEMA 4X stainless steel shall be UL-listed and, at a minimum, shall be sized according to Article 314 of the 2008 National Electrical Code. Stainless steel junction boxes shall have the cover held in place with a continuous hinge and kept closed with screws and clamps on the remaining three sides. The cover shall be removable by removing the pin with the continuous hinge. All seams shall be continuously welded. Gaskets shall be closed cell neoprene.

Surface Mounted Junction Boxes SM2, SM3, SM5 and SM6 shall have a fuse holder for underdeck luminaires.

Surface Mounted Junction Boxes SM1 AND SM4 shall be equipped with 3M 314 connectors having a minimum of 24 positions and be UL approved.

All conduit leading to and from the surface mounted junction boxes shall be rigid galvanized steel conduit (RGSC) that shall be attached to the existing or proposed structures. The conduit connection system to the structures shall be corrosion resistant.

All costs for the surface mounted junction box, fuse holders, and terminal blocks shall be incidental to the contract unit price per each for “Surface Mounted Junction Box”.

PHOTOCELL CONTROL BOX

A Photocell Control Box shall be installed at the proposed meter pedestal installed along North Street. It shall provide controls for the under bridge luminaires to allow them to turn on and off for night and day time.

The Photocell Control Box shall be mounted on top of the meter pedestal, to be in clear view of the sky. The Photocell Control Box shall be installed per the manufacturer’s specifications.

- The Photocell Control Box shall be a K4121M Photo Controls as manufactured by Intermatic or approved equal.

All costs for the Photocell Control Box shall be included in the contract unit price per each for “Circuit Control Center”.

- This shall include furnishing, installing, mounting to the meter pedestal and wire connections to provide a fully functional light control system for the under bridge luminaires.

PEDESTRIAN PUSH BUTTON

The pedestrian push button shall meet the following requirements:

General Requirements:

1. Shall be pressure activated with essentially no moving parts.
2. Shall be vandal resistant.
3. Shall activate with 3 lbs. force or less.
4. Shall have an LED that illuminates when the button is being pushed and remains illuminated until the pedestrian call is served.
5. Shall give a toned beep verification of button being pushed.
6. Shall have an operating life of 1 million actuations.
7. Shall be compatible with NEMA TS1 and TS2 controllers.

Housing:

1. Button housing shall be high impact cast or machined aluminum.
2. All switch electronics shall be sealed within the high impact cast or machined aluminum housing.
3. Shall have a gasket between the button housing and the mounting cup.

Electrical:

1. Operating Voltage: 15 to 24V DC or 12 to 24V AC.
2. On Resistance 10 Ohms (When the button is activated and placing a call).
3. Standby Current 10 micro amps typical.
4. Shall have built in surge protection.
5. Shall have a solid state electronic piezo switch rated for 1 million cycles with no moving plunger or moving electrical contacts.
6. Shall hold the call for a minimum of 5 seconds.
7. Requires only two conductors be run from the traffic signal cabinet to the push button to operate.
8. Six units wired in parallel on a single pedestrian isolator input shall not pull the input voltage of the pedestrian isolator down such that a false pedestrian call is placed in the controller.

REGISTERED PROFESSIONAL ENGINEER
REG. NO. 8324
LANCE R. MCQUEEN
SOUTH DAKOTA
5-7-15

HDR

FOR BIDDING PURPOSES ONLY

INNERDUCT

The innerduct conduit shall be orange in color and longitudinally ribbed on the inside wall.

The innerduct bid items shall include furnishing and installing the innerduct, as well as all work to seal the traffic interconnect conduit within the junction boxes. Innerduct ends shall be sealed using a mastic style tape wrapped around the end of the innerduct and fiber optic cable. If innerduct is empty, a heat shrinkable cap shall be installed over the end of the innerduct.

Innerduct conduit shall be sleeved in a Schedule 80 PVC conduit under all roadways (from back of curb to back of curb) or as shown in the plans. The PVC conduit shall be paid under its respective bid item.

All costs for the innerduct shall be included in the appropriate size bid item of “1” Innerduct, SDR 13.5”.

FIBER OPTIC CABLE TERMINATION ENCLOSURES

Fiber optic cable shall be terminated in a wall mounted termination enclosure. The termination enclosure shall be dust and moisture resistant. The size of the termination enclosure shall be adequate for the number of fibers to be used.

The termination enclosure shall be mounted in either the controller cabinet or the side mounted cabinet, as shown on the fiber cable wiring diagrams.

Termination enclosures shall be either Corning WIC-04P, Panduit FWME4 or approved equal.

LC type connectors shall be used for the fiber strand terminations.

All costs for the termination enclosures, fiber optic cable terminations and patch cords shall be incidental to the contract unit price per foot for “12 Strand Fiber Optic Cable”.

FIBER OPTIC CABLE

The fiber optic cable shall be a 12 strand fiber optic cable with 12 singlemode with each buffer containing six fibers. The buffer tubes shall be color coded according to EIA/TIA specifications.

Fiber optic cable provided on this project shall meet the latest applicable EIA/TIA Specifications for multimode and REA PE-90 Specifications for single mode. All fiber optic cable shall be rated for outdoor use.

Multimode optical cable shall have the following optical and physical characteristics:

1. Core diameter of 62.5 µm +/- 3µm.
2. Cladding diameter of 125µm +/- 2µm.
3. Numerical aperture of 0.275 +/- 0.015.
4. The fibers shall be coated with a UV Acrylate.
5. The fibers shall be strippable, using mechanical methods.
6. The attenuation coefficient of 3.8 dB per kilometer or less at 850nm and 1.2 dB per kilometer or less at 1300 nm.
7. The Information Transmission Capacity (ITC) or bandwidth, of the cable shall be greater than or equal to 160 MHz per kilometer at 850 nm and 600 MHz per kilometer at 1300nm.
8. One factory fusion splice per kilometer per fiber shall be allowed.

Singlemode optical cable shall have the following optical and physical characteristics:

1. Cladding diameter of 125µm +/- 2µm.
2. Zero dispersion slope shall be 0.092 ps/ (nm^2•km) or less.
3. Zero dispersion wavelength, 1300 to 1322 nm.
4. Cutoff wavelength, less than 1250 nm.
5. Maximum attenuation at 1310 nm shall be 0.4 dB per Kilometer.
6. The outside diameter shall be less than 22.1 nm.
7. One factory fusion splice per kilometer per fiber shall be allowed.

The fiber optic cable shall have a seven-core configuration, dielectric central strength member, and thermoplastic tubes. The minimum bending radii of the cable shall be 209.5 mm under a static load and 419.1 mm during installation. The installation tensile load rating shall be 2.7 kPa.

The cable core interstices shall be filled with water blocking material. If a gel compound is used, the gel compound shall be readily removable with a nontoxic solvent.

Fiber optic cable shall be terminated in the controller cabinet with a wall mounted distribution enclosure. The distribution enclosure shall be dust and moisture resistant. The size of the distribution enclosure shall be adequate for the number of fibers to be used. The distribution enclosure shall be mounted in the controller cabinet where it does not interfere with normal cabinet maintenance. The fiber optic cable shall be prepared in accordance with the manufacture’s recommendations and have sufficient length to reach the interface panel. Only fibers needed to operate the equipment plus two spare shall be terminated with ST connectors with less than 0.9 dB loss for multimode and FC-PC connectors with less than 0.4 dB loss for singlemode. The connector loss after 1000 matings shall be less than 0.2 dB. The connector return loss shall not be greater than 45 dB for singlemode and greater than 35 dB for multimode. All other fibers shall be capped and sealed in accordance with the manufacturer’s recommendations.

The fiber optic cable shall be installed in accordance with the manufacturer’s recommendations and the NEC. Slack cable shall be left in each controller and junction box. All junction boxes except for the junction at the controller shall have 6.5’ of slack. The junction box at the controller cabinet shall have 19.5’ of slack. Controller cabinets shall have 2’ of slack. Slack cable shall be coiled and tied in a minimum of three places around the coil. No splices shall be allowed in the fiber optic cable except in the controllers. Splices shall be of the epoxy/polish type.

The contractor shall test the fiber optic cable after the installation to verify the integrity of the fiber.

The supplier of the fiber optic cable shall supervise the installation and testing of the fiber optic cable. The supplier of the fiber optic cable shall provide training to personnel of the City in the installation and maintenance of the fiber optic cable.

The payment for supplying, installing, testing, and training of city personnel shall be incidental to the contract unit price per foot for “12 Strand Fiber Optic Cable”.

REGISTERED PROFESSIONAL ENGINEER
REG. NO. 8324
LANCE R. MCQUEEN
SOUTH DAKOTA
5-7-15

HDR

BRIDGE CONDUIT @ RAPID CREEK BRIDGE

At the existing bridge that crosses Rapid Creek @ I-190, the proposed 3" PVC Schedule 80 conduit shall be connected to the east side of this existing bridge edge as mentioned on the plans. The proposed innerduct and fiber cable shall be installed within this PVC conduit upon installation of the conduit on the side of the bridge.

On this sheet are images of the east side of this existing bridge at Rapid Creek. These images show general details of the proposed conduit location on this existing bridge.

The Contactor shall design a bracket/hanger connection system to connect this conduit to the existing bridge.

- The Contractor shall assume a bracket/hanger connection to the existing bridge shall be required every 5' along the proposed conduit.
- The bracket/hanger system shall be corrosion resistant.
- The Contractor shall submit shop drawings shall of the bracket/hanger system prior to its installation.
- All costs for this hanger/attachment system shall be incidental to the conduit bid items.

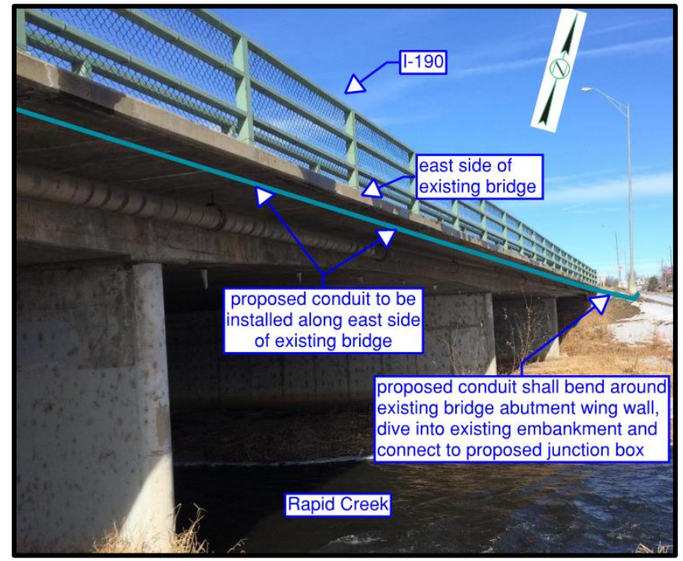

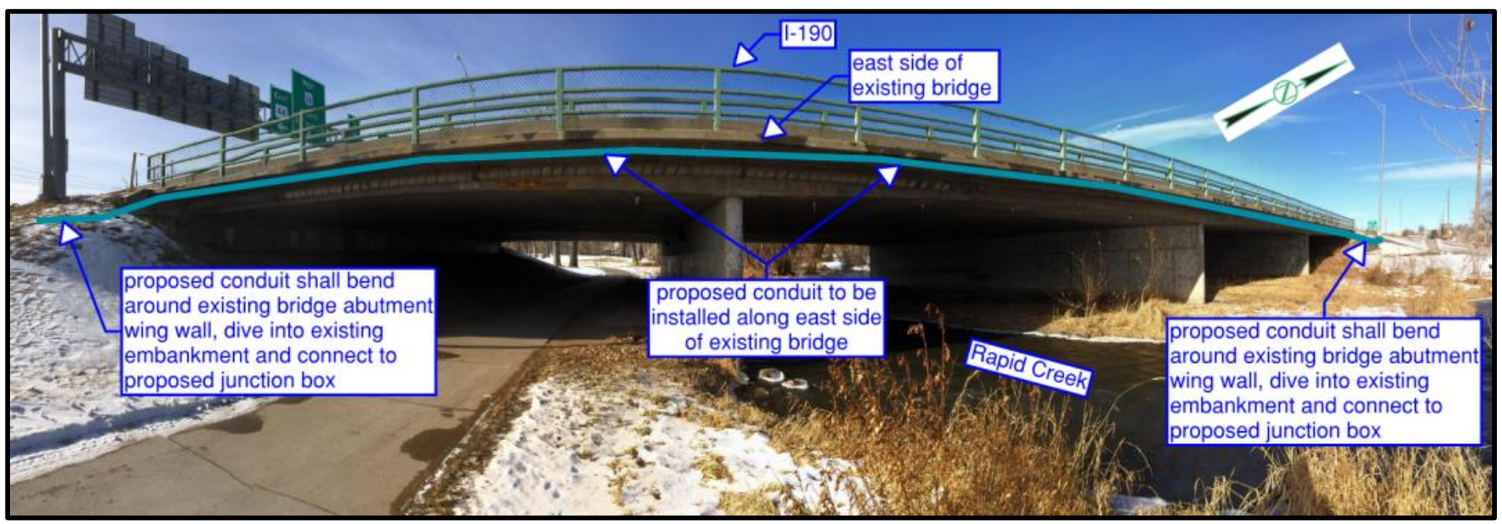

FOR BIDDING PURPOSES ONLY

STATE OF SOUTH DAKOTA	PROJECT	SHEET	TOTAL SHEETS
	IM 1902(61)0	L9	L51

Plotting Date: 5/7/2015

TABLE FOR CONDUIT & CABLE QUANTITIES

		Trench	Steel Conduit	PVC Conduit										Innerduct*	Cable														
		0'-6' Deep	RGSC	Sch 40					Sch 80					SDR 13.5*															
			2"	1"	2"	3"	4"	5"	2"	3" *	3"	4"	5"	1" *	1C #1	1C #2	1C #4	1C #6	1C #10*	1C #10	4C #14	7C #14	19C #14	25C #14	TSP	Pole & Bracket	12 Strand Fiber*	Conduit Boring**	PC***
Location to Location		(Ft)	(Ft)	(Ft)	(Ft)	(Ft)	(Ft)	(Ft)	(Ft)	(Ft)	(Ft)	(Ft)	(Ft)	(Ft)	(Ft)	(Ft)	(Ft)	(Ft)	(Ft)	(Ft)	(Ft)	(Ft)	(Ft)	(Ft)	(Ft)	(Ft)	(Ft)	(Ft)	(Ft)
Lighting																													
IL1	JL1								65									210								130			
JL1	JL2				215											660													
JL2	IL2								75									240								130			
JL2	JL3				205											645													
JL3	IL3								80									255								130			
JL3	CL1				240											750										65			
CL1	JL4								50							165													
JL4	IL4								75									240								130			
JL4	JL5				170											540													
JL5	IL5								60									195								130			
JL5	JL6				210												645												
JL6	IL6								60									195								130			
JL6	JL8				195												600												
JL8	IL7								65									210								130			
JL4	JL5A					285										1770													
JL5A	CL2				10													75								65			
JL5A	JL7					195										1200													
JL7	JL11										70					450													
JL11	CL3					15												75								130			
JL11	JL12										185					1170													
BL1	BL2				275													855								130			
BL2	BL3				275													855								65			
BL3	JL9				220													690											
JL9	BL4								50									180								65			
JL9	NL7				70													240								65			
NL7	JL15								145							450													
JL12	JL16A					150										930													
JL16A	DL1				10													75								130			
JL16A	JL17										55					360													
JL17	JL18A					260										1590													
JL18A	DL2				10													75								65			
JL18A	JL26A					275										1710													
JL26A	DL3				10													75								65			
JL26A	JL27								60							195													
JL16	IL8								60									195								130			
JL16	JL18				200												615												
JL18	IL9								60									195								130			
JL18	JL26				200												615												
JL26	IL10								60									195								130			
JL26	JL27				200											615													
JL27	IL11								60									195								130			
JL15	AL1				135											435										130			
AL1	JL19								70									225											
JL19	AL2				220													690								65			
AL2	AL3				275													855								65			
AL3	AL4				275													855								65			
AL4	JL29								50									165											
JL29	AL5				280													870								65			

REGISTERED PROFESSIONAL ENGINEER
REG. NO. 9324
LANCE R. MCQUEEN
SOUTH DAKOTA
5-7-15

HDR

FOR BIDDING PURPOSES ONLY

STATE OF SOUTH DAKOTA	PROJECT	SHEET	TOTAL SHEETS
	IM 1902(61)0	L10	L51

Plotting Date: 5/7/2015

TABLE FOR CONDUIT & CABLE QUANTITIES

		Trench	Steel Conduit	PVC Conduit										Innerduct*	Cable														
		0'-6' Deep	RGSC	Sch 40					Sch 80					SDR 13.5*															
			2"	1"	2"	3"	4"	5"	2"	3" *	3"	4"	5"	1" *	1C #1	1C #2	1C #4	1C #6	1C #10*	1C #10	4C #14	7C #14	19C #14	25C #14	TSP	Pole & Bracket	12 Strand Fiber*	Conduit Boring**	PC***
Location to Location		(Ft)	(Ft)	(Ft)	(Ft)	(Ft)	(Ft)	(Ft)	(Ft)	(Ft)	(Ft)	(Ft)	(Ft)	(Ft)	(Ft)	(Ft)	(Ft)	(Ft)	(Ft)	(Ft)	(Ft)	(Ft)	(Ft)	(Ft)	(Ft)	(Ft)	(Ft)	(Ft)	(Ft)
JL26A	JL28				220											675													
JL28	IL12								90									285								130			
JL28	JL30				200											630													
JL30	IL13								80									255								130			
JL30	JL31				200											615													
JL31	IL14								70									225								130			
JL31	JL33				200															200									
JL33	IL15								60									195								130			
JL33	JL34				200												615												
JL34	IL16								60									195								130			
JL34	JL35				200												615												
JL35	IL17								60									195								130			
JL35	JL36				200												615												
JL36	IL18								60									195								130			
JL36	JL37				200												615												
JL37	IL19								60									195								130			
JL37	JL38				200												615												
JL38	IL20								60									195								130			
JL38	JL39				60												195												
JL39	ESM1		30													120	120												
Transformer	LC3		50												270														
LC3	EUL2																	720											
LC3	ESM1															300	300												
ESM1	EUL1																	150											
JL39	JL40				165											525												60	
JL40	IL21								60									195								130			
JL40	JL41				220											675													
JL41	IL22								60									195								130			
JL41	JL42				210											645													
JL42	IL23								60									195								130			
JL42	JL43				230											705													
JL43	IL24								60									195								130			
JL43	JL44				220											675													
JL44	IL25								60									195								130			
JL44	JL45				220											675													
JL45	IL26								60									195								130			
JL45	JL46				220											675													
JL46	IL27								60									195								130			
IL27	JL47								10											20									
JL47	EJL20				215															215									

REGISTERED PROFESSIONAL ENGINEER
REG. NO. 8724
LANCE R. MCQUEEN
SOUTH DAKOTA
5-7-15

HDR

FOR BIDDING PURPOSES ONLY

STATE OF SOUTH DAKOTA	PROJECT	SHEET	TOTAL SHEETS
	IM 1902(61)0	L11	L51

Plotting Date: 5/7/2015

TABLE FOR CONDUIT & CABLE QUANTITIES

		Trench	Steel Conduit	PVC Conduit										Innerduct*	Cable															
		0'-6' Deep	RGSC	Sch 40					Sch 80					SDR 13.5*																
			2"	1"	2"	3"	4"	5"	2"	3" *	3"	4"	5"	1" *	1C #1	1C #2	1C #4	1C #6	1C #10*	1C #10	4C #14	7C #14	19C #14	25C #14	TSP	Pole & Bracket	12 Strand Fiber*	Conduit Boring**	PC***
Location to Location		(Ft)	(Ft)	(Ft)	(Ft)	(Ft)	(Ft)	(Ft)	(Ft)	(Ft)	(Ft)	(Ft)	(Ft)	(Ft)	(Ft)	(Ft)	(Ft)	(Ft)	(Ft)	(Ft)	(Ft)	(Ft)	(Ft)	(Ft)	(Ft)	(Ft)	(Ft)	(Ft)	(Ft)
JL20	NL1				20															25						65			
NL1	NL2				135				65									630								65			
NL2	JL21								100									345											
JL21	NL3					190										615										65			
NL3	JL22					30										105													
JL22	LC1						60	55								630		420											
LC1	Transformer					30									165														
Transformer	JL24A	220																											
JL24A	JL25A											65																	
JL25A	Alley-Way Pole	170																											
LC2	Transformer					30									165														
LC2	JL23						60	55								840													
JL23	JL12											140				1740													
JL22	NL4								115									375								65			
JL22	JL12A											180				1110		1110											
JL12A	NL5				10													75								65			
JL12A	JL14											160				990		990											
JL14	JL13				45													150											
JL13	SM2		30															120											
SM2	UL3		20															60								10			
SM2	SM3		50															165											
SM3	UL4		20															60								10			
JL14	JL10								145									465											
JL10	SM6		30															120											
SM6	UL2		20															60								10			
SM6	SM5		50															165											
SM5	UL1		20															60								10			
JL14	JL15									140						870		435											
JL15	NL6				10													75								65			
JL15	JL48				180				110									885											
JL48	NL8								55									195								130			
JL48	NL9				235													735								65			
NL9	east								70																				
JL21	WL1				50											180										55			
WL1	WL2				220											690										55			
WL2	JL24				165											510													
JL24	JL25								60							210													
JL25	WL3				80											270										55			
WL3	WL4				140				125							810										55			
WL4	WL5				225				30							795										55			
WL5	WL6				190				75							810										55			
WL6	WL7				265													825								55			
WL7	WL8				280													870								55			
WL8	JL32				10															10									

REGISTERED PROFESSIONAL ENGINEER
REG. NO. 8324
LANCE R. MCQUEEN
SOUTH DAKOTA
5-7-15

FOR BIDDING PURPOSES ONLY

STATE OF SOUTH DAKOTA	PROJECT	SHEET	TOTAL SHEETS
	IM 1902(61)0	L12	L51

Plotting Date: 5/7/2015

TABLE FOR CONDUIT & CABLE QUANTITIES

Location to Location		Trench	Steel Conduit	PVC Conduit										Innerduct*	Cable														
		0'-6' Deep	RGSC	Sch 40					Sch 80					SDR 13.5*															
			2"	1"	2"	3"	4"	5"	2"	3" *	3"	4"	5"	1" *	1C #1	1C #2	1C #4	1C #6	1C #10*	1C #10	4C #14	7C #14	19C #14	25C #14	TSP	Pole & Bracket	12 Strand Fiber*	Conduit Boring**	PC***
		(Ft)	(Ft)	(Ft)	(Ft)	(Ft)	(Ft)	(Ft)	(Ft)	(Ft)	(Ft)	(Ft)	(Ft)	(Ft)	(Ft)	(Ft)	(Ft)	(Ft)	(Ft)	(Ft)	(Ft)	(Ft)	(Ft)	(Ft)	(Ft)	(Ft)	(Ft)	(Ft)	(Ft)
Innerduct																													
Omaha St controller	EJF1																		25								35		
EJF1	EJF2													305					305								315		
EJF2	JF3									240				480					240								300		
JF3	JF4													960					480								495		
JF4	JF5													910					455								465		
JF5	JF6													910					455								515		
JF6	JF9									80				1110					1110										
JF6	JF7									120				340					170								185		
JF7	JF8									165				850					425								485		
JF8	Controller													60					30								45		
Signals - conduit																													
SC1	Transformer					30																							
SC1	JS1					40																							
JS1	Controller							40																					
JS1	JS2												200																
JS2	S1				15																								
JS2	PB1			25																									
JS2	JS3				20																								
JS2	JS4				30																								
JS2	JS5											95																	
JS5	S2				15																								
JS5	PB2			25																									
JS5	PB3			40																									
JS5	JS6				25																								
JS6	SM1		30																										
SM1	A2 signals		20																										
JS5	JS7				75																								
JS7	SM4		30																										
SM4	A1 signals		20																										
JS5	JS8								140																				
JS8	S3				20																								
JS8	PB4			25																									
JS8	JS9				25																								
JS10	S4				15																								
JS10	PB5			20																									
JS10	JS11								130																				
JS11	JS5										145																		
JS11	S5				15																								
JS11	PB6			35																									
JS11	PB7			45																									
JS11	JS12				75																								
JS11	JS13								110																				
JS13	S6				20																								
JS13	PB8			25																									

REGISTERED PROFESSIONAL ENGINEER
REG. NO. 8324
LANCE R. MCQUEEN
SOUTH DAKOTA
5-7-15

HDR

FOR BIDDING PURPOSES ONLY

STATE OF SOUTH DAKOTA	PROJECT	SHEET	TOTAL SHEETS
	IM 1902(61)0	L13	L51

Plotting Date: 5/7/2015

TABLE FOR CONDUIT & CABLE QUANTITIES

		Trench	Steel Conduit	PVC Conduit										Innerduct*	Cable														
		0'-6' Deep	RGSC	Sch 40					Sch 80					SDR 13.5*															
			2"	1"	2"	3"	4"	5"	2"	3" *	3"	4"	5"	1" *	1C #1	1C #2	1C #4	1C #6	1C #10*	1C #10	4C #14	7C #14	19C #14	25C #14	TSP	Pole & Bracket	12 Strand Fiber*	Conduit Boring**	PC***
Location to Location		(Ft)	(Ft)	(Ft)	(Ft)	(Ft)	(Ft)	(Ft)	(Ft)	(Ft)	(Ft)	(Ft)	(Ft)	(Ft)	(Ft)	(Ft)	(Ft)	(Ft)	(Ft)	(Ft)	(Ft)	(Ft)	(Ft)	(Ft)	(Ft)	(Ft)	(Ft)	(Ft)	(Ft)
Signals - cable																													
SC1	Transformer														165														
SC1	Controller																270												
Controller	JS3																								270				
Controller	JS4																								280				
Controller	JS9																								515				
Controller	JS12																								570				
Controller	PB1																				275								
Controller	PB2																				375								
Controller	PB3																				385								
Controller	PB4																				520								
Controller	PB5																				640								
Controller	PB6																				530								
Controller	PB7																				540								
Controller	PB8																				635								
Controller	S1																						260						
Controller	S2																							360					
Controller	S3																					515							
Controller	S4																					640							
Controller	S5																							510					
Controller	S6																						635						
Controller	A1																						460						1160
Controller	A2																						415						1130
	S1																				45								
	S2																				75								
	S3																				15								
	S4																				15								
	S5																				75								
	S6																				45								
	A1																				455								
	A2																				355								
	Total:	390	420	240	10090	1530	120	150	3505	605	595	640	200	5925	765	31725	6435	22740	3695	470	4980	1155	1770	870	1635	5810	2840	60	2290

*Non-Partipating Quantities

**Incidental to the contract lump sum price for "Miscellaneous, Electrical"

***Incidental to the contract lump sum price for "Siren Emergency Vehicle Preemption System"

REGISTERED PROFESSIONAL ENGINEER
REG. NO. 8724
LANCE R. MCQUEEN
SOUTH DAKOTA
5-7-15

HDR

SIGNAL LAYOUT

FOR BIDDING PURPOSES ONLY

North Street

STATE OF SOUTH DAKOTA	PROJECT	SHEET	TOTAL SHEETS
	IM 1902(61)0	L14	L51

Plotting Date: 05-07-2015

REGISTERED PROFESSIONAL ENGINEER
REG. NO. 8324
LANCE R. MCQUEEN
SOUTH DAKOTA
5-7-15

BRIDGE CLEARANCE HEIGHT NOTE:
DUE TO THE BRIDGE CLEARANCE HEIGHT, ALL OF THE PEDESTAL SIGNAL POLES (S1-S6) SHALL HAVE A MAXIMUM HEIGHT OF 14'-6" FROM THE TOP OF PAVEMENT TO THE TOP OF THE SIGNAL HEADS.

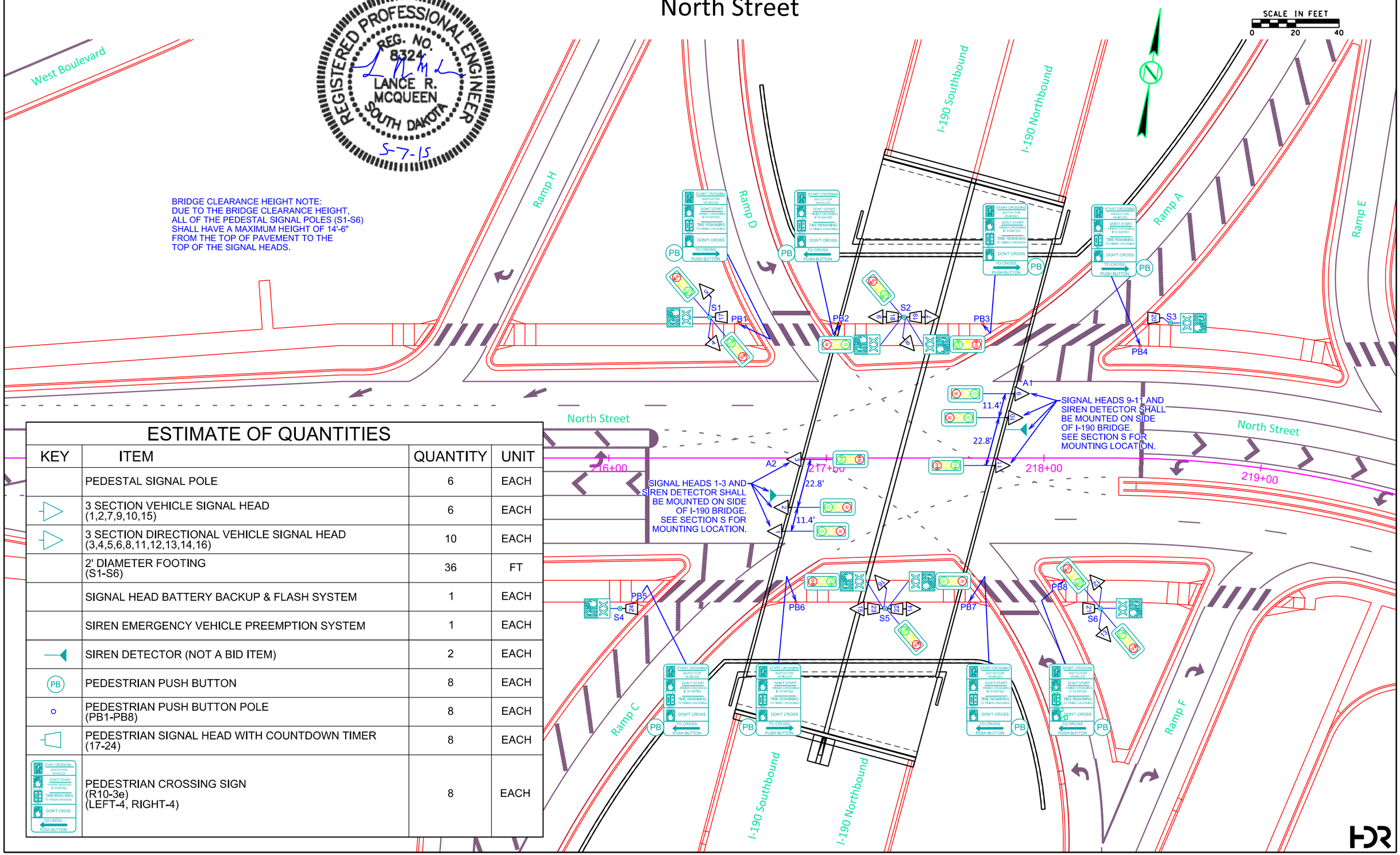

ESTIMATE OF QUANTITIES

KEY	ITEM	QUANTITY	UNIT
	PEDESTAL SIGNAL POLE	6	EACH
	3 SECTION VEHICLE SIGNAL HEAD (1,2,7,9,10,15)	6	EACH
	3 SECTION DIRECTIONAL VEHICLE SIGNAL HEAD (3,4,5,6,8,11,12,13,14,16)	10	EACH
	2' DIAMETER FOOTING (S1-S6)	36	FT
	SIGNAL HEAD BATTERY BACKUP & FLASH SYSTEM	1	EACH
	SIREN EMERGENCY VEHICLE PREEMPTION SYSTEM	1	EACH
	SIREN DETECTOR (NOT A BID ITEM)	2	EACH
PB	PEDESTRIAN PUSH BUTTON	8	EACH
	PEDESTRIAN PUSH BUTTON POLE (PB1-PB8)	8	EACH
	PEDESTRIAN SIGNAL HEAD WITH COUNTDOWN TIMER (17-24)	8	EACH
	PEDESTRIAN CROSSING SIGN (R10-3e) (LEFT-4, RIGHT-4)	8	EACH

LUMINAIRE LAYOUT

I-190

FOR BIDDING PURPOSES ONLY

STATE OF SOUTH DAKOTA	PROJECT	SHEET	TOTAL SHEETS
	IM 1902(61)0	L15	L51

Plotting Date: 05-07-2015

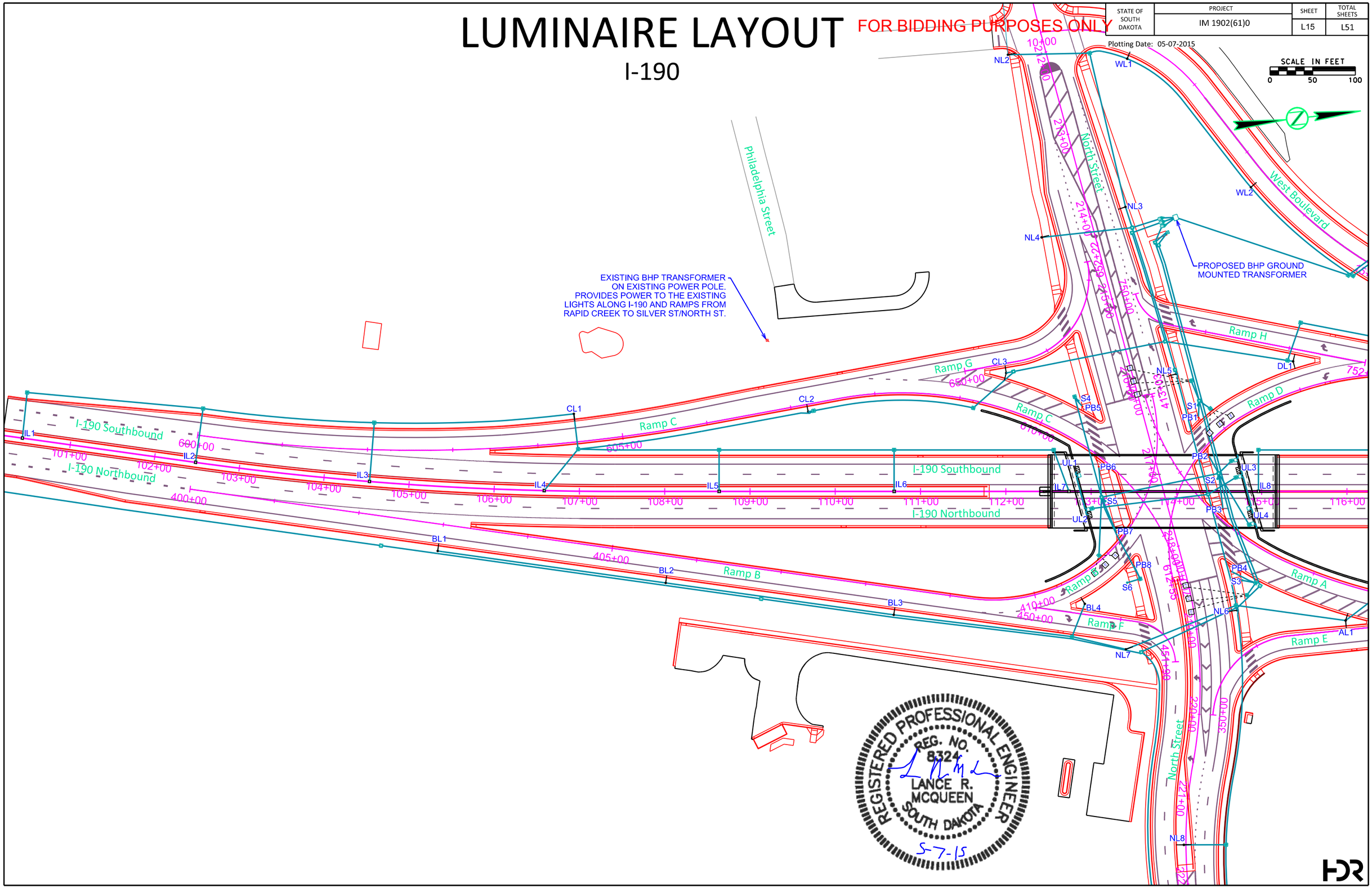

LUMINAIRE LAYOUT

FOR BIDDING PURPOSES ONLY

I-190

STATE OF SOUTH DAKOTA	PROJECT	SHEET	TOTAL SHEETS
	IM 1902(61)0	L16	L51

Plotting Date: 05-07-2015

SCALE IN FEET 0 50 100

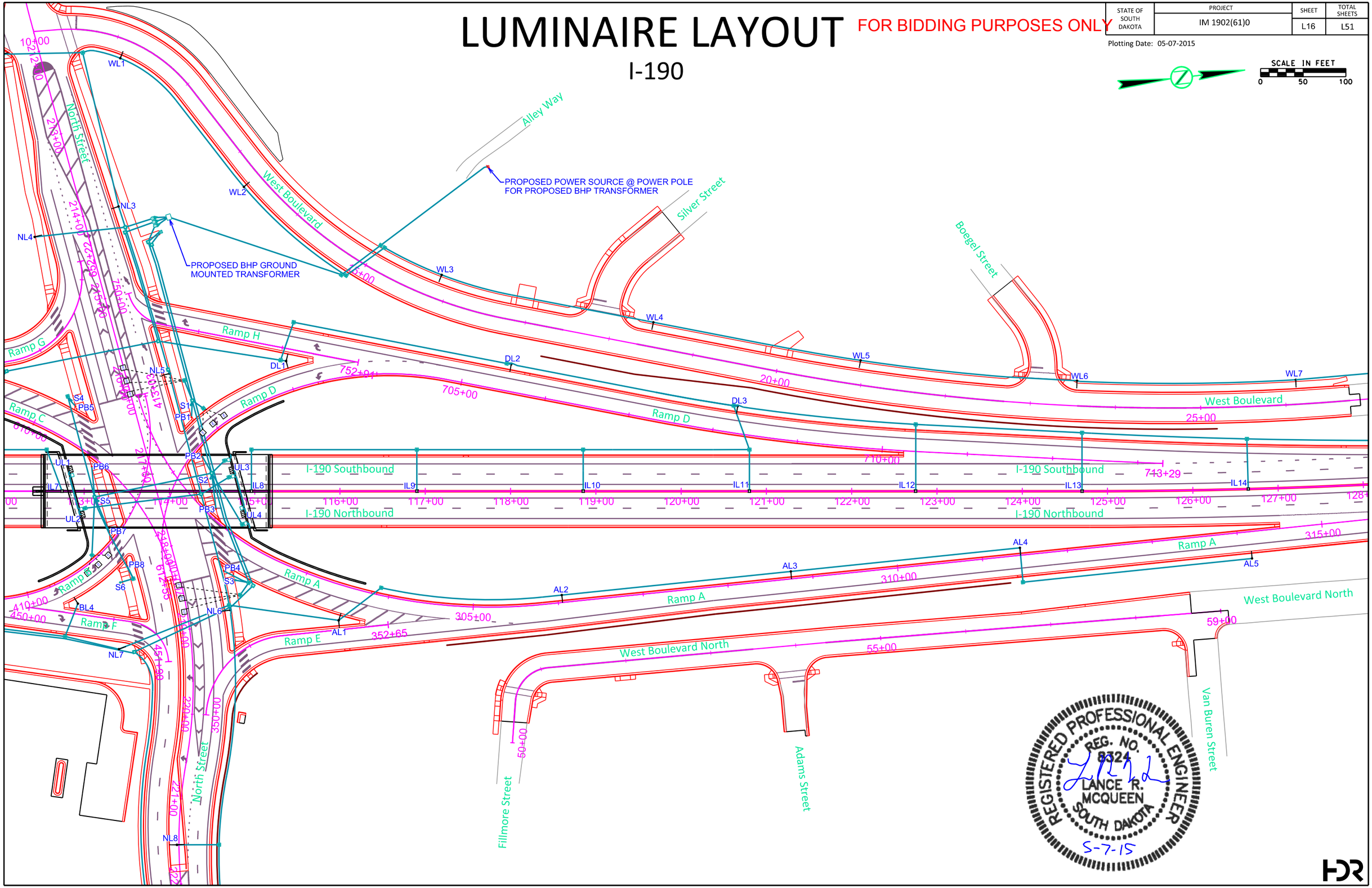

REGISTERED PROFESSIONAL ENGINEER
REG. NO. 8324
LANCE R. MCQUEEN
SOUTH DAKOTA
5-7-15

LUMINAIRE LAYOUT

FOR BIDDING PURPOSES ONLY

I-190

STATE OF SOUTH DAKOTA	PROJECT	SHEET	TOTAL SHEETS
	IM 1902(61)0	L17	L51

Plotting Date: 05-07-2015

SCALE IN FEET 0 50 100

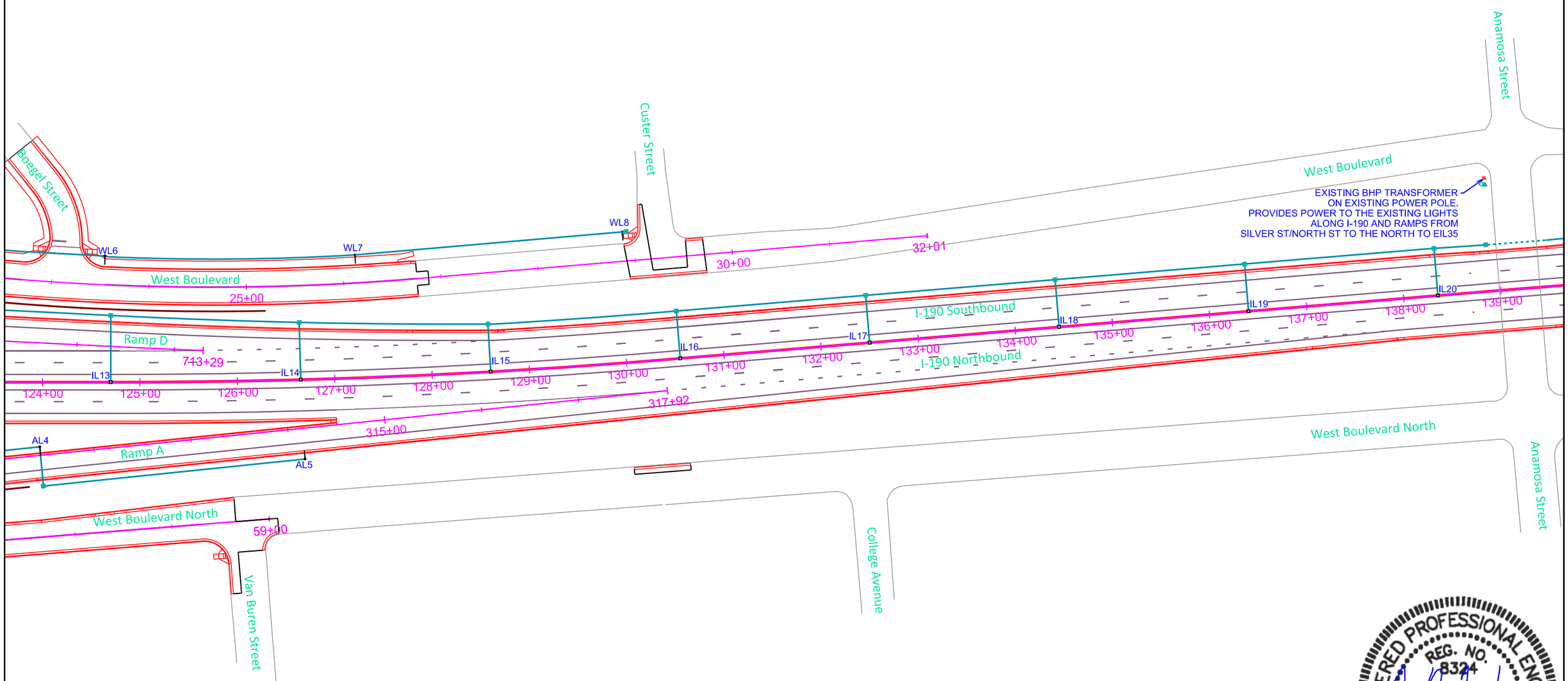

REGISTERED PROFESSIONAL ENGINEER
REG. NO. 8324
LANCE R. MCQUEEN
SOUTH DAKOTA
5-7-15

HDR

LUMINAIRE LAYOUT

I-190

FOR BIDDING PURPOSES ONLY

STATE OF SOUTH DAKOTA	PROJECT	SHEET	TOTAL SHEETS
	IM 1902(61)0	L18	L51

Plotting Date: 05-07-2015

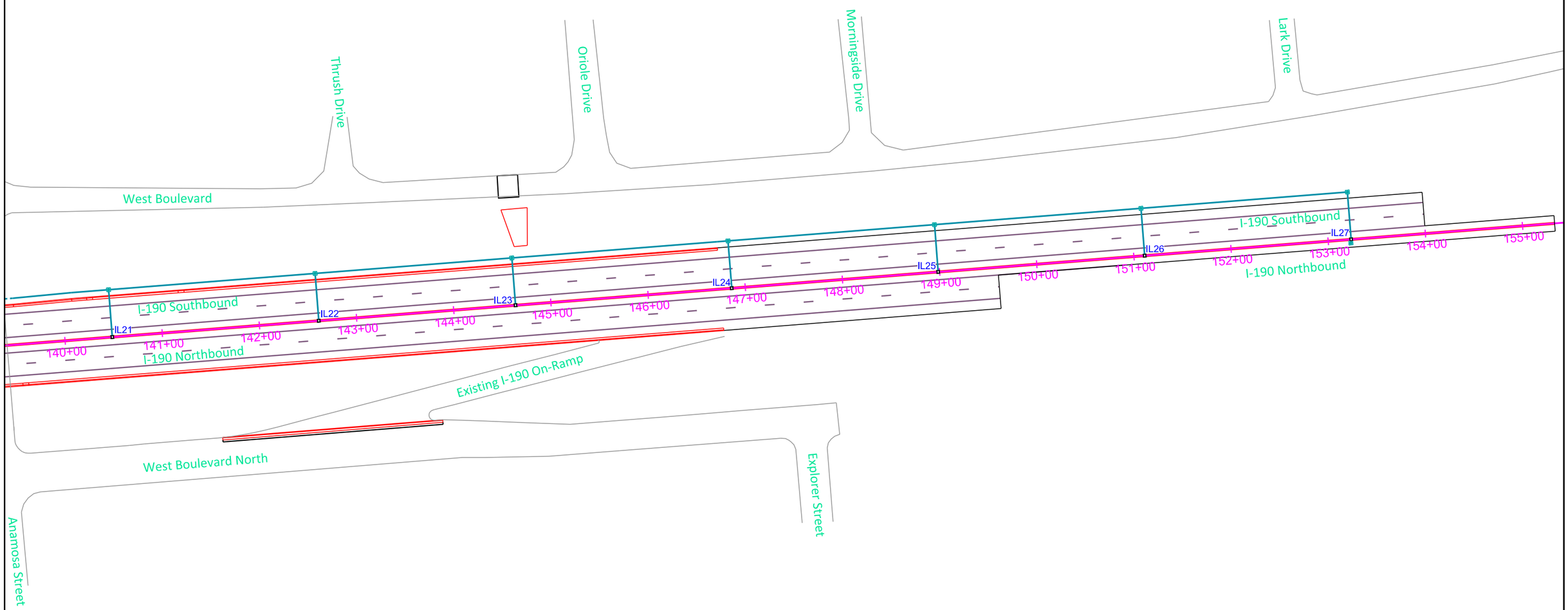

REGISTERED PROFESSIONAL ENGINEER
REG. NO. 9324
LANCE R. MCQUEEN
SOUTH DAKOTA
5-7-15

HDR

CONDUIT LAYOUT

FOR BIDDING PURPOSES ONLY

I-190

STATE OF SOUTH DAKOTA	PROJECT	SHEET	TOTAL SHEETS
	IM 1902(61)0	L19	L51

Plotting Date: 05-07-2015

ESTIMATE OF QUANTITIES

KEY	ITEM	QUANTITY	UNIT
	TRENCH 0'-6' DEEP (for #2 15KV Cable installed by BHP)	390	FT
	BREAKAWAY BASE LUMINAIRE POLE, 40' MOUNTING HEIGHT W/ 8' ARM (WL1-WL8)	8	EACH
	BREAKAWAY BASE LUMINAIRE POLE, 50' MOUNTING HEIGHT W/ 8' ARM (AL2-AL5, BL1-BL4, CL1-CL2, DL2-DL3, NL1-NL7, NL9)	20	EACH
	BREAKAWAY BASE LUMINAIRE POLE WITH TWIN ARMS, 50' MOUNTING HEIGHT W/ 8' ARMS (AL1, CL3, DL1, NL8)	4	EACH
	BREAKAWAY BASE LUMINAIRE W/ TOP TWIN MOUNT 50' MOUNTING HEIGHT (IL1-IL6)	6	EACH
	FIXED BASE LUMINAIRE W/ TOP TWIN MOUNT 50' MOUNTING HEIGHT (MOUNTED TO MEDIAN BARRIER) (SEE SECTION E FOR BARRIER MOUNTING DETAILS) (IL7-IL27)	21	EACH
	ROADWAY LUMINAIRE, 400 WATT WITH PHOTOELECTRIC CELL (AL1-AL5, BL1-BL4, CL1-CL3, DL1-DL3, NL1-NL9, WL1-WL8)	36	EACH
	POST TOP LUMINAIRE, 400 WATT WITH PHOTOELECTRIC CELL (IL1-IL27)	54	EACH
	UNDER BRIDGE DECK LUMINAIRE, 150 WATT (UL1-UL4)	4	EACH
	2' DIAMETER FOOTING (IL1-IL6, AL1-AL5, BL1-BL4, CL1-CL3, DL1-DL3, NL1-NL9, WL1-WL8)	333	FT
	TYPE 2 ELECTRICAL JUNCTION BOX (JL1-JL11, JL13, JL16-JL21, JL24-JL48, JS3, JS4, JS6-JS10, JS12, JS13) (JL5A, JL16A, JL18A, JL24A, JL25A, JL26A)	58	EACH
	* TYPE 3 ELECTRICAL JUNCTION BOX (JF3-JF5, JF7, JF9)	* 5	EACH
	* TYPE 4 ELECTRICAL JUNCTION BOX (JF6, JF8)	* 2	EACH
	TYPE 4 ELECTRICAL JUNCTION BOX (JL12, JL12A, JL14, JL15, JL22, JL23, JS1, JS2, JS5, JS11)	10	EACH
	SURFACE MOUNTED JUNCTION BOX (SM1-SM6)	6	EACH
	ELECTRICAL SERVICE CABINET (LC1, LC2, LC3, SC1)	4	EACH
M	METER SOCKET (NOT A BID ITEM)	3	EACH
	CIRCUIT CONTROL CENTER	1	EACH
2" RG SC	2" RIGID GALVANIZED STEEL CONDUIT	420	FT
1" SCH 40	1" RIGID CONDUIT, SCHEDULE 40	240	FT
2" SCH 40	2" RIGID CONDUIT, SCHEDULE 40	10,090	FT
3" SCH 40	3" RIGID CONDUIT, SCHEDULE 40	1530	FT
4" SCH 40	4" RIGID CONDUIT, SCHEDULE 40	120	FT
5" SCH 40	5" RIGID CONDUIT, SCHEDULE 40	150	FT
2" SCH 80	2" RIGID CONDUIT, SCHEDULE 80	3505	FT
* 3" SCH 80	* 3" RIGID CONDUIT, SCHEDULE 80	* 605	FT
3" SCH 80	3" RIGID CONDUIT, SCHEDULE 80	595	FT
4" SCH 80	4" RIGID CONDUIT, SCHEDULE 80	640	FT
5" SCH 80	5" RIGID CONDUIT, SCHEDULE 80	200	FT
ID 1"	* 1" INNERDUCT, SDR 13.5	* 5925	FT
#1	1/C #1 AWG COPPER WIRE	765	FT
#2	1/C #2 AWG COPPER WIRE	31,725	FT
#4	1/C #4 AWG COPPER WIRE	6435	FT
#6	1/C #6 AWG COPPER WIRE	22,740	FT
#10	* 1/C #10 AWG COPPER WIRE	* 3695	FT
#10	1/C #10 AWG COPPER WIRE	470	FT
	2/C #10 AWG COPPER POLE AND BRACKET CABLE	5810	FT
12 Fiber	* 12 STRAND FIBER OPTIC CABLE	* 2840	FT
	CONDUIT BORING (NOT A BID ITEM)	60	FT
	* DENOTES NON-PARTICIPATING QUANTITY		

REMOVAL ITEMS

KEY	ITEM	QUANTITY	UNIT
	REMOVE EXISTING LUMINAIRE POLE (50' MOUNTING HEIGHT W/ TWIN ARM AND LUMINAIRE) (EIL8-EIL30, EIL32-EIL36) (50' MOUNTING HEIGHT W/ ARM AND LUMINAIRE) (EIL5-EIL7, EIL31, EL1-EL15)	47	EACH
	REMOVE EXISTING LUMINAIRE POLE FOOTING (2' DIAMETER) (EIL5-EIL36, EL1-EL15)	47	EACH
	REMOVE EXISTING ELECTRICAL JUNCTION BOX (EJL2-ELJ19, EJL21)	19*	EACH
RG SC	REMOVE EXISTING 1.5" RIGID GALVANIZED STEEL CONDUIT	LUMP SUM*	LS
SCH 80	REMOVE EXISTING 2" RIGID CONDUIT, SCHEDULE 80	LUMP SUM*	LS
#4	REMOVE EXISTING 1/C #4 AWG COPPER WIRE	LUMP SUM*	LS
#6	REMOVE EXISTING 1/C #6 AWG COPPER WIRE	LUMP SUM*	LS
#10	REMOVE EXISTING 1/C #10 AWG COPPER WIRE	LUMP SUM*	LS

*INCLUDED IN THE BID ITEM "MISCELLANEOUS, ELECTRICAL"

EXISTING ITEMS

KEY	ITEM
	LUMINAIRE POLE
	ELECTRICAL JUNCTION BOX
RG SC	1.5" RIGID GALVANIZED STEEL CONDUIT
RG SC	2" RIGID GALVANIZED STEEL CONDUIT
SCH 40	2" RIGID CONDUIT, SCHEDULE 40
SCH 40	5" RIGID CONDUIT, SCHEDULE 40
SCH 80	2" RIGID CONDUIT, SCHEDULE 80
SCH 80	3" RIGID CONDUIT, SCHEDULE 80
#4	1/C #4 AWG COPPER WIRE
#6	1/C #6 AWG COPPER WIRE
#10	1/C #10 AWG COPPER WIRE
TSP	TWISTED SHIELD PAIR CABLE
Fiber	FIBER OPTIC CABLE

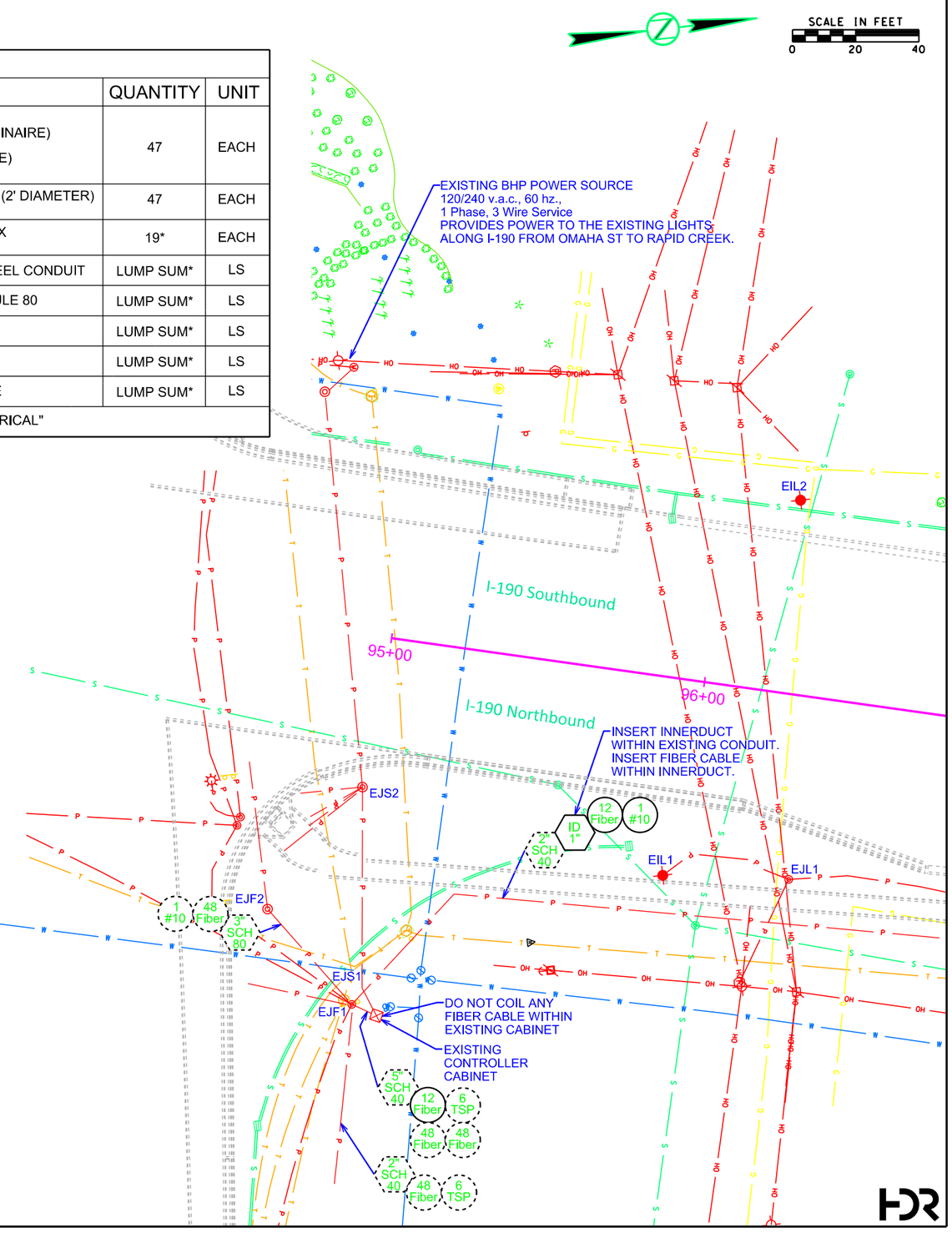

REGISTERED PROFESSIONAL ENGINEER
REG. NO. 8324
LANCE R. MCQUEEN
SOUTH DAKOTA
5-7-15

CONDUIT LAYOUT

FOR BIDDING PURPOSES ONLY

I-190

STATE OF SOUTH DAKOTA	PROJECT	SHEET	TOTAL SHEETS
	IM 1902(61)0	L20	L51

Plotting Date: 05-07-2015

SCALE IN FEET 0 20 40

PROPOSED ITEM LOCATIONS	
ITEM	STATION-OFFSET
JF3	100+00.62 - 65.11' RT
JL1	100+41.30 - 53.72' LT
IL1	102+48.31 - 0.00' RT

REMOVAL ITEMS
EIL5
EIL6

REGISTERED PROFESSIONAL ENGINEER REG. NO. 8324 LANCE R. MCQUEEN SOUTH DAKOTA 5-7-15

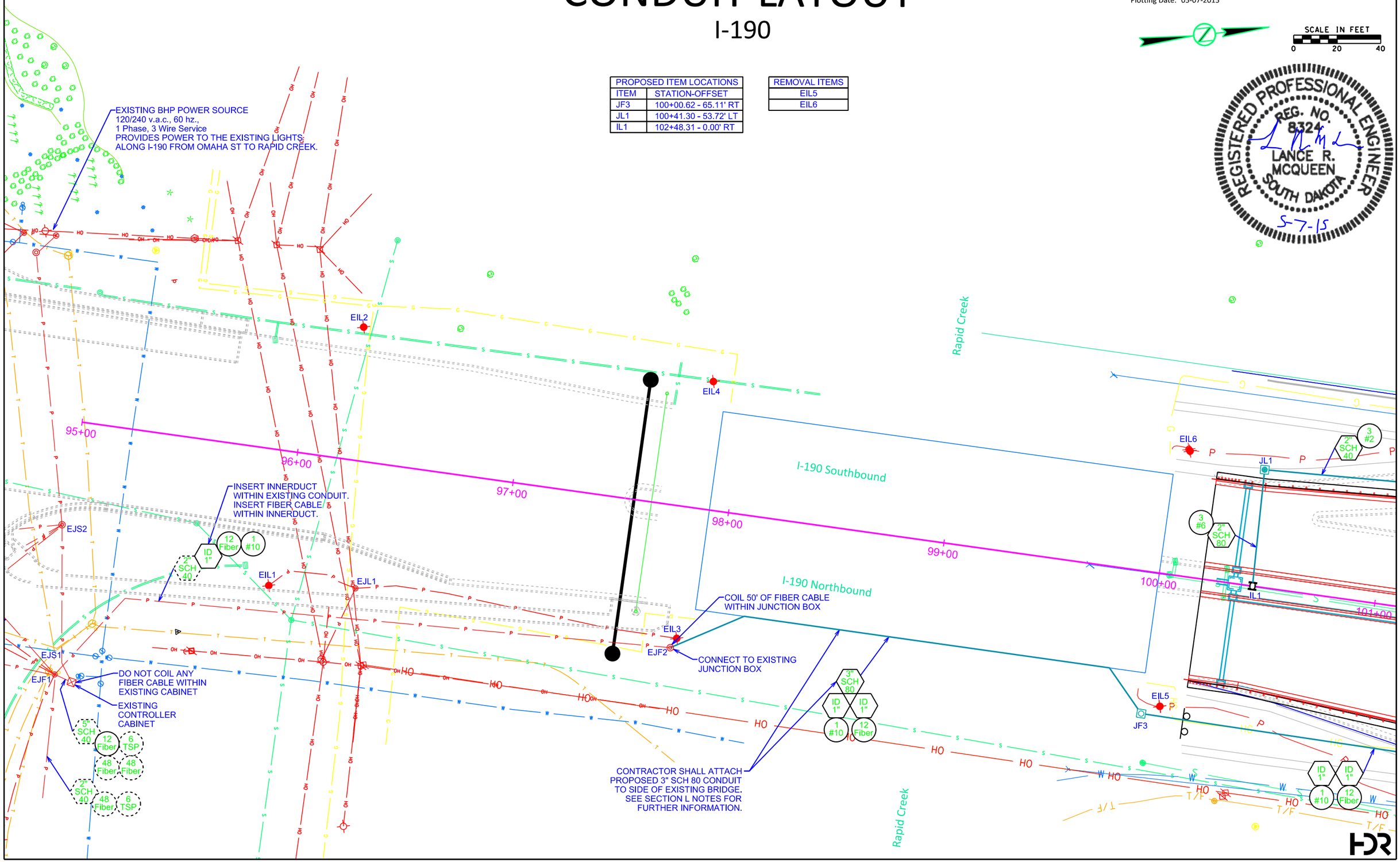

CONDUIT LAYOUT

I-190

FOR BIDDING PURPOSES ONLY

STATE OF SOUTH DAKOTA	PROJECT	SHEET	TOTAL SHEETS
	IM 1902(61)0	L21	L51

Plotting Date: 05-07-2015

SCALE IN FEET 0 20 40

PROPOSED ITEM LOCATIONS			
ITEM	STATION-OFFSET	ITEM	STATION-OFFSET
IL2	102+48.31 - 0.00' RT	JL2	102+48.28 - 63.67' LT
IL3	104+53.45 - 0.00' RT	JL3	104+53.42 - 69.19' LT
IL4	106+58.59 - 0.00' RT	JL4	106+97.74 - 49.26' LT
BL1	105+37.93 - 75.87' RT	JF4	104+72.61 - 74.02' RT
CL1	106+92.10 - 90.69' LT		

REMOVAL ITEMS
EIL7
EIL8
EIL9
EIL10
EIL11
EIL12
EIL13

REGISTERED PROFESSIONAL ENGINEER
REG. NO. 8324
LANCE R. MCQUEEN
SOUTH DAKOTA
5-7-15

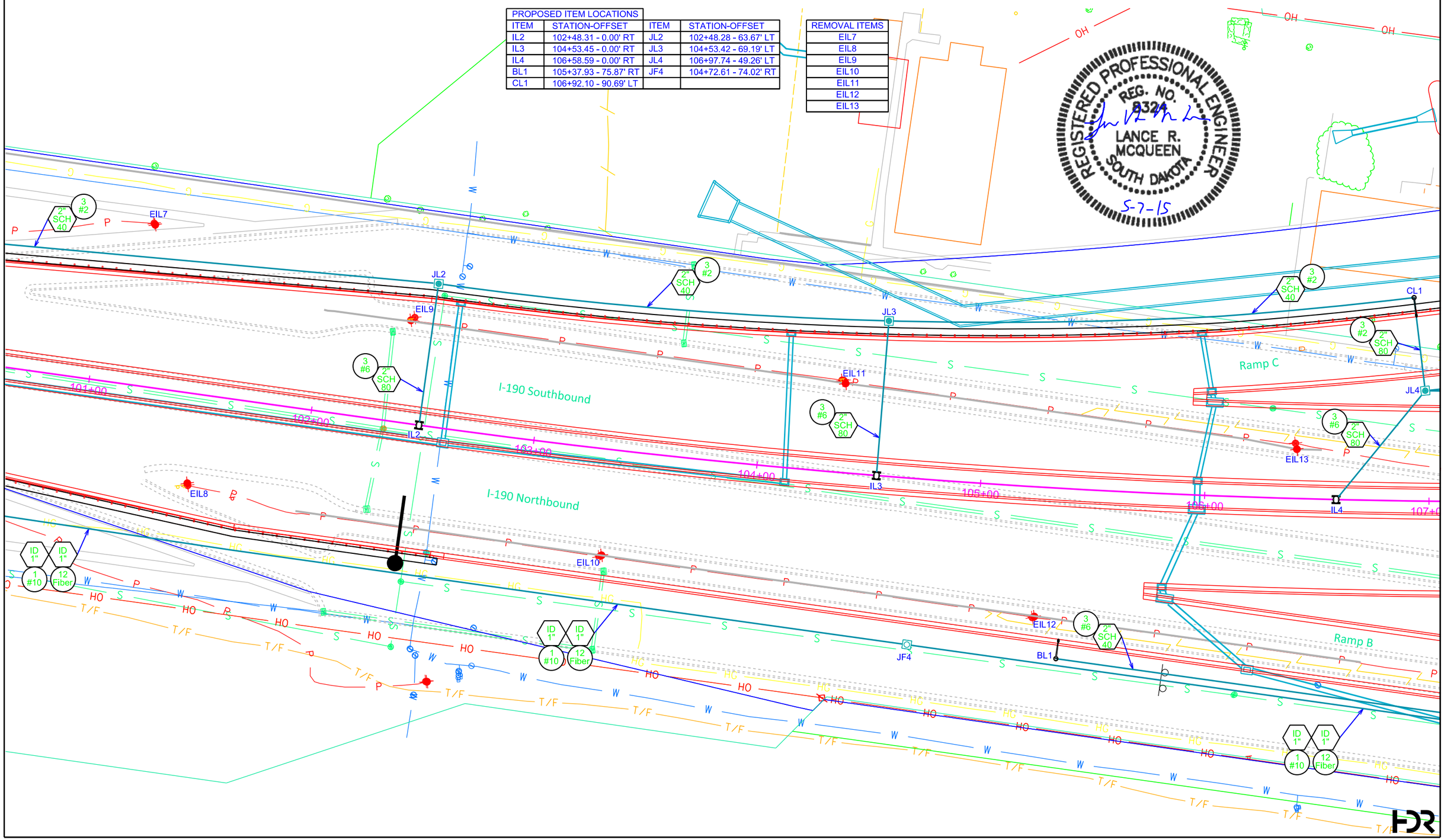

CONDUIT LAYOUT

I-190

FOR BIDDING PURPOSES ONLY

STATE OF SOUTH DAKOTA	PROJECT	SHEET	TOTAL SHEETS
	IM 1902(61)0	L22	L51

Plotting Date: 05-07-2015

REGISTERED PROFESSIONAL ENGINEER
REG. NO. 8324
LANCE R. MCQUEEN
SOUTH DAKOTA
5-7-15

EXISTING BHP TRANSFORMER ON EXISTING POWER POLE. TO BE REMOVED BY BHP. PROVIDES POWER TO THE EXISTING LIGHTS ALONG I-190 AND RAMPS FROM RAPID CREEK TO SILVER ST/NORTH ST.

ALL POWER WIRE FROM THE EXISTING BHP TRANSFORMER TO THE EXISTING LIGHT POLES SHALL BE REMOVED BY THE CONTRACTOR.

PROPOSED ITEM LOCATIONS			
ITEM	STATION-OFFSET	ITEM	STATION-OFFSET
IL5	108+63.72 - 0.00' RT	JL5	108+63.72 - 48.55' LT
IL6	110+68.87 - 0.00' RT	JL5A	109+74.48 - 94.61' LT
BL2	108+01.10 - 107.36' RT	JL6	110+68.87 - 48.67' LT
BL3	110+68.49 - 144.81' RT	JL7	111+61.76 - 97.89' LT
CL2	109+68.17 - 93.45' LT	JL11	112+08.77 - 140.59' LT
CL3	112+00.39 - 138.93' LT	JF5	109+13.01 - 126.07' RT

REMOVAL ITEMS
EIL14
EIL15
EIL16
EIL17
EIL18

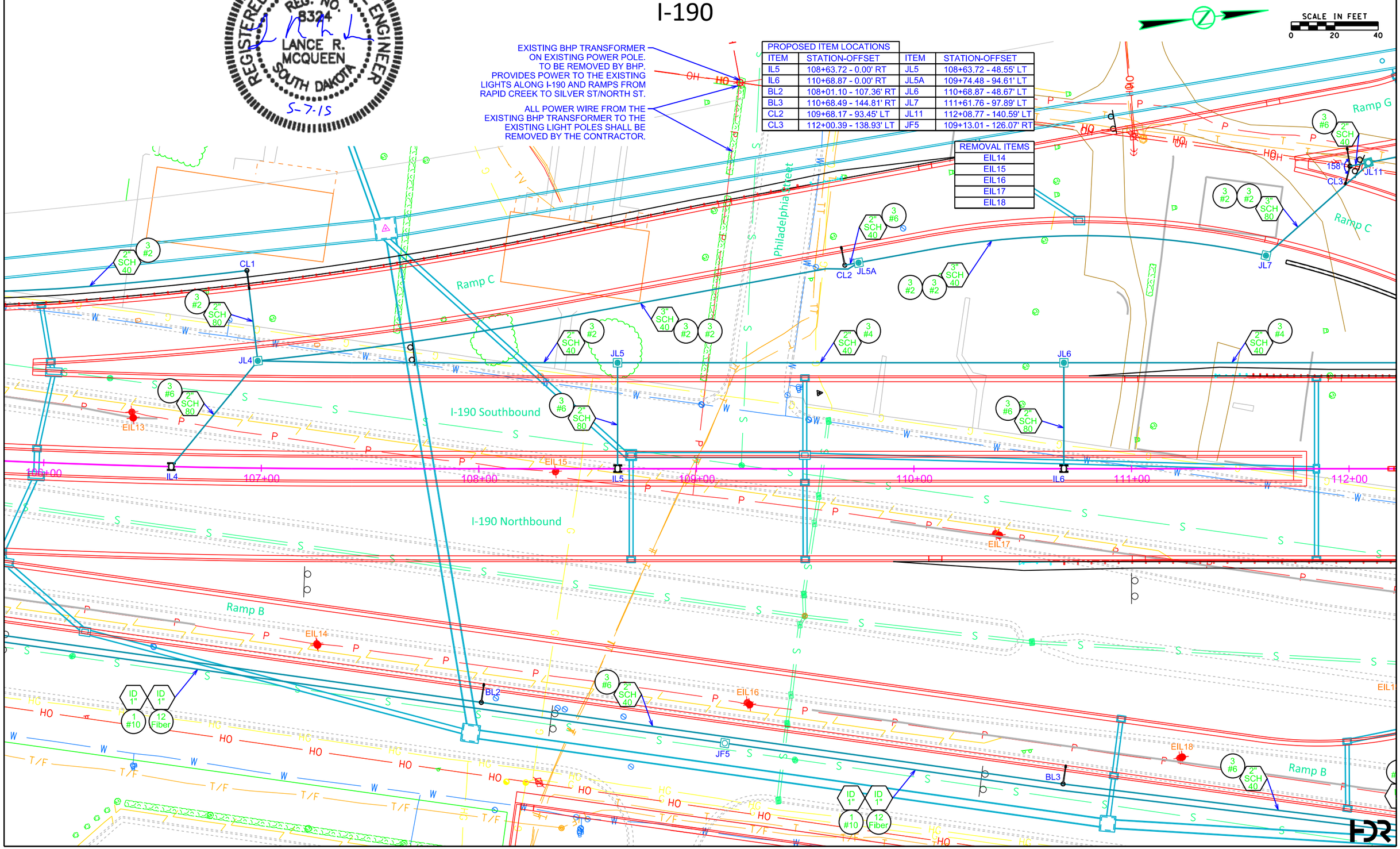

STATE OF SOUTH DAKOTA	PROJECT	SHEET	TOTAL SHEETS
	IM 1902(61)0	L23	L51

FOR BIDDING PURPOSES ONLY

Plotting Date: 05-07-2015

CONDUIT LAYOUT

I-190

REGISTERED PROFESSIONAL ENGINEER
REG. NO. 8724
LANCE R. MCQUEEN
SOUTH DAKOTA
5-7-15

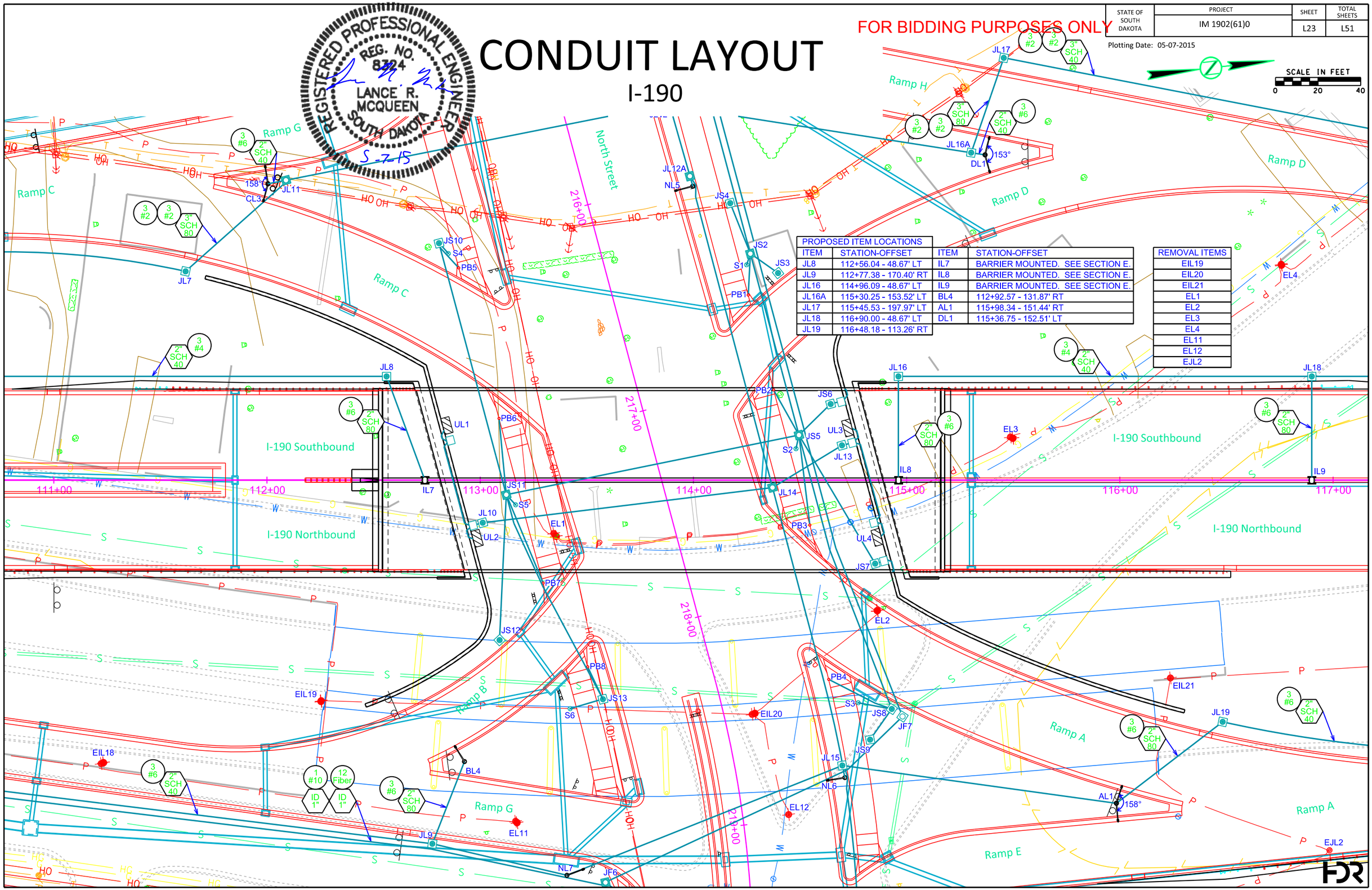

PROPOSED ITEM LOCATIONS			
ITEM	STATION-OFFSET	ITEM	STATION-OFFSET
JL8	112+56.04 - 48.67' LT	IL7	BARRIER MOUNTED. SEE SECTION E.
JL9	112+77.38 - 170.40' RT	IL8	BARRIER MOUNTED. SEE SECTION E.
JL16	114+96.09 - 48.67' LT	IL9	BARRIER MOUNTED. SEE SECTION E.
JL16A	115+30.25 - 153.52' LT	BL4	112+92.57 - 131.87' RT
JL17	115+45.53 - 197.97' LT	AL1	115+98.34 - 151.44' RT
JL18	116+90.00 - 48.67' LT	DL1	115+36.75 - 152.51' LT
JL19	116+48.18 - 113.26' RT		

REMOVAL ITEMS
EIL19
EIL20
EIL21
EL1
EL2
EL3
EL4
EL11
EL12
EJL2

CONDUIT LAYOUT

FOR BIDDING PURPOSES ONLY

I-190

STATE OF SOUTH DAKOTA	PROJECT	SHEET	TOTAL SHEETS
	IM 1902(61)0	L24	L51

Plotting Date: 05-07-2015

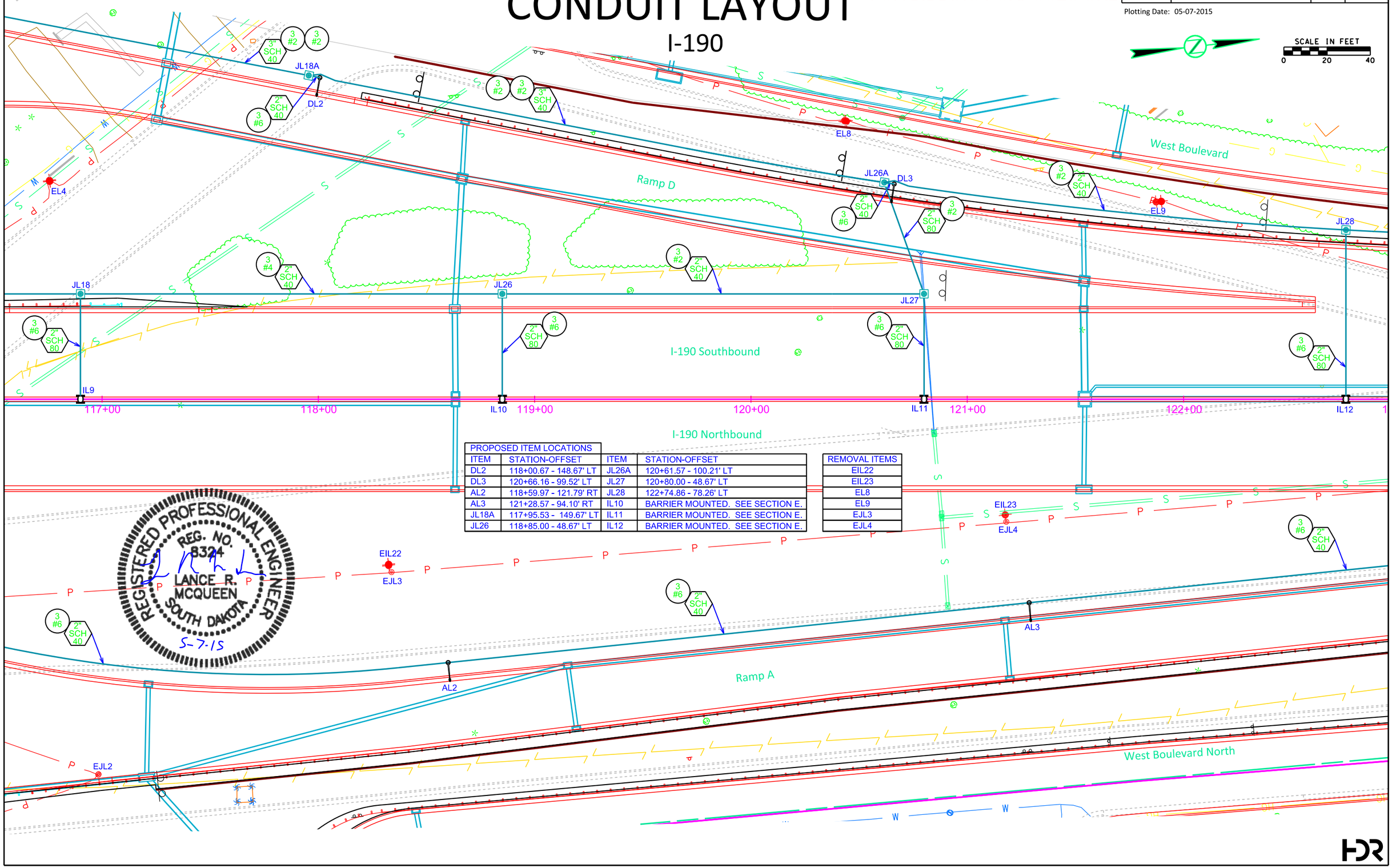

PROPOSED ITEM LOCATIONS			
ITEM	STATION-OFFSET	ITEM	STATION-OFFSET
DL2	118+00.67 - 148.67' LT	JL26A	120+61.57 - 100.21' LT
DL3	120+66.16 - 99.52' LT	JL27	120+80.00 - 48.67' LT
AL2	118+59.97 - 121.79' RT	JL28	122+74.86 - 78.26' LT
AL3	121+28.57 - 94.10' RT	IL10	BARRIER MOUNTED. SEE SECTION E.
JL18A	117+95.53 - 149.67' LT	IL11	BARRIER MOUNTED. SEE SECTION E.
JL26	118+85.00 - 48.67' LT	IL12	BARRIER MOUNTED. SEE SECTION E.

REMOVAL ITEMS
EIL22
EIL23
EL8
EL9
EJL3
EJL4

REGISTERED PROFESSIONAL ENGINEER
REG. NO. 8324
LANCE R. MCQUEEN
SOUTH DAKOTA
5-7-15

CONDUIT LAYOUT

I-190

FOR BIDDING PURPOSES ONLY

STATE OF SOUTH DAKOTA	PROJECT	SHEET	TOTAL SHEETS
	IM 1902(61)0	L25	L51

Plotting Date: 05-07-2015

REGISTERED PROFESSIONAL ENGINEER
REG. NO. 8324
LANCE R. MCQUEEN
SOUTH DAKOTA
5-7-15

SCALE IN FEET
0 20 40

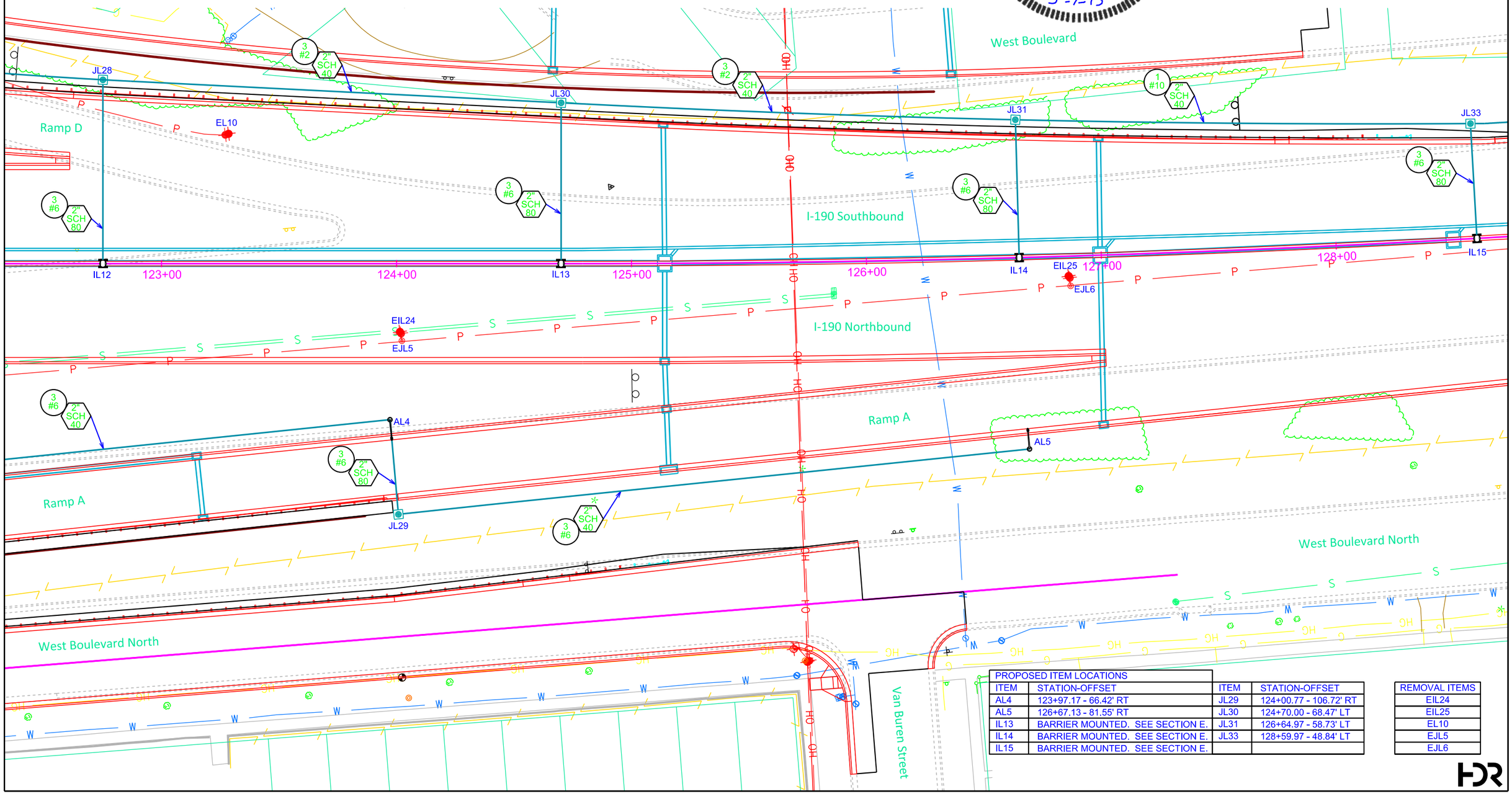

PROPOSED ITEM LOCATIONS			
ITEM	STATION-OFFSET	ITEM	STATION-OFFSET
AL4	123+97.17 - 66.42' RT	JL29	124+00.77 - 106.72' RT
AL5	126+67.13 - 81.55' RT	JL30	124+70.00 - 68.47' LT
IL13	BARRIER MOUNTED. SEE SECTION E.	JL31	126+64.97 - 58.73' LT
IL14	BARRIER MOUNTED. SEE SECTION E.	JL33	128+59.97 - 48.84' LT
IL15	BARRIER MOUNTED. SEE SECTION E.		

REMOVAL ITEMS
EIL24
EIL25
EL10
EJL5
EJL6

HDR

CONDUIT LAYOUT

I-190

FOR BIDDING PURPOSES ONLY

STATE OF SOUTH DAKOTA	PROJECT	SHEET	TOTAL SHEETS
	IM 1902(61)0	L26	L51

Plotting Date: 05-07-2015

SCALE IN FEET 0 20 40

REGISTERED PROFESSIONAL ENGINEER REG. NO. 8324 LANCE R. MCQUEEN SOUTH DAKOTA 5-7-15

PROPOSED ITEM LOCATIONS	
ITEM	STATION-OFFSET
JL34	130+55.00 - 48.67' LT
JL35	132+50.00 - 48.67' LT
JL36	134+45.00 - 48.53' LT
IL16	BARRIER MOUNTED. SEE SECTION E.
IL17	BARRIER MOUNTED. SEE SECTION E.
IL18	BARRIER MOUNTED. SEE SECTION E.

REMOVAL ITEMS
EIL26
EIL27
EJL7
EJL8

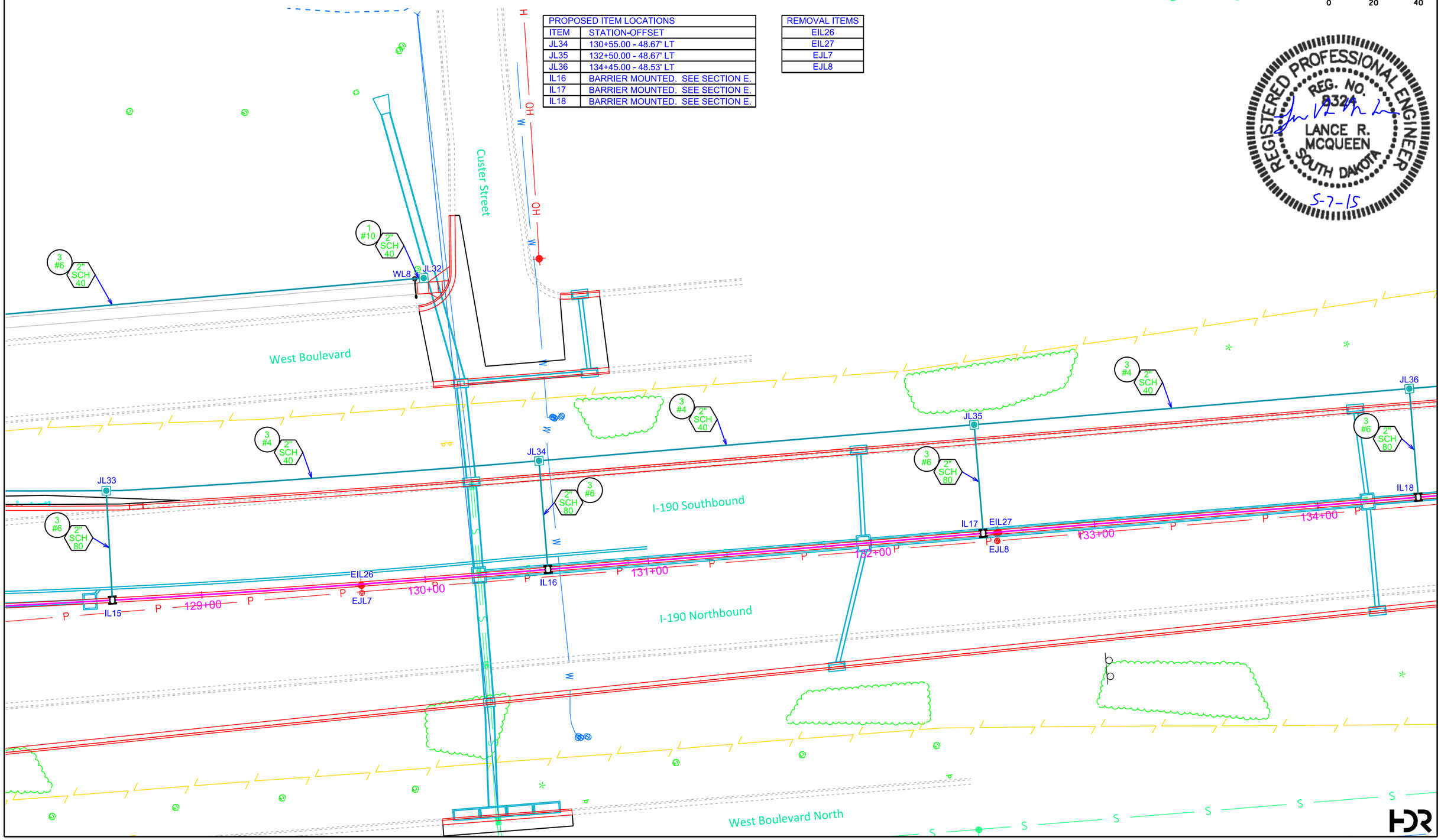

CONDUIT LAYOUT

FOR BIDDING PURPOSES ONLY

I-190

STATE OF SOUTH DAKOTA	PROJECT	SHEET	TOTAL SHEETS
	IM 1902(61)0	L27	L51

Plotting Date: 05-07-2015

PROPOSED ITEM LOCATIONS	
ITEM	STATION-OFFSET
JL37	136+40.00 - 48.67' LT
JL38	138+35.00 - 48.59' LT
JL39	138+88.15 - 47.70' LT
IL19	BARRIER MOUNTED. SEE SECTION E.
IL20	BARRIER MOUNTED. SEE SECTION E.
LC3	138+92.3 - 110.00' LT

REMOVAL ITEMS
EIL28
EIL29
EJL9
EJL10
EJL11
EJL12

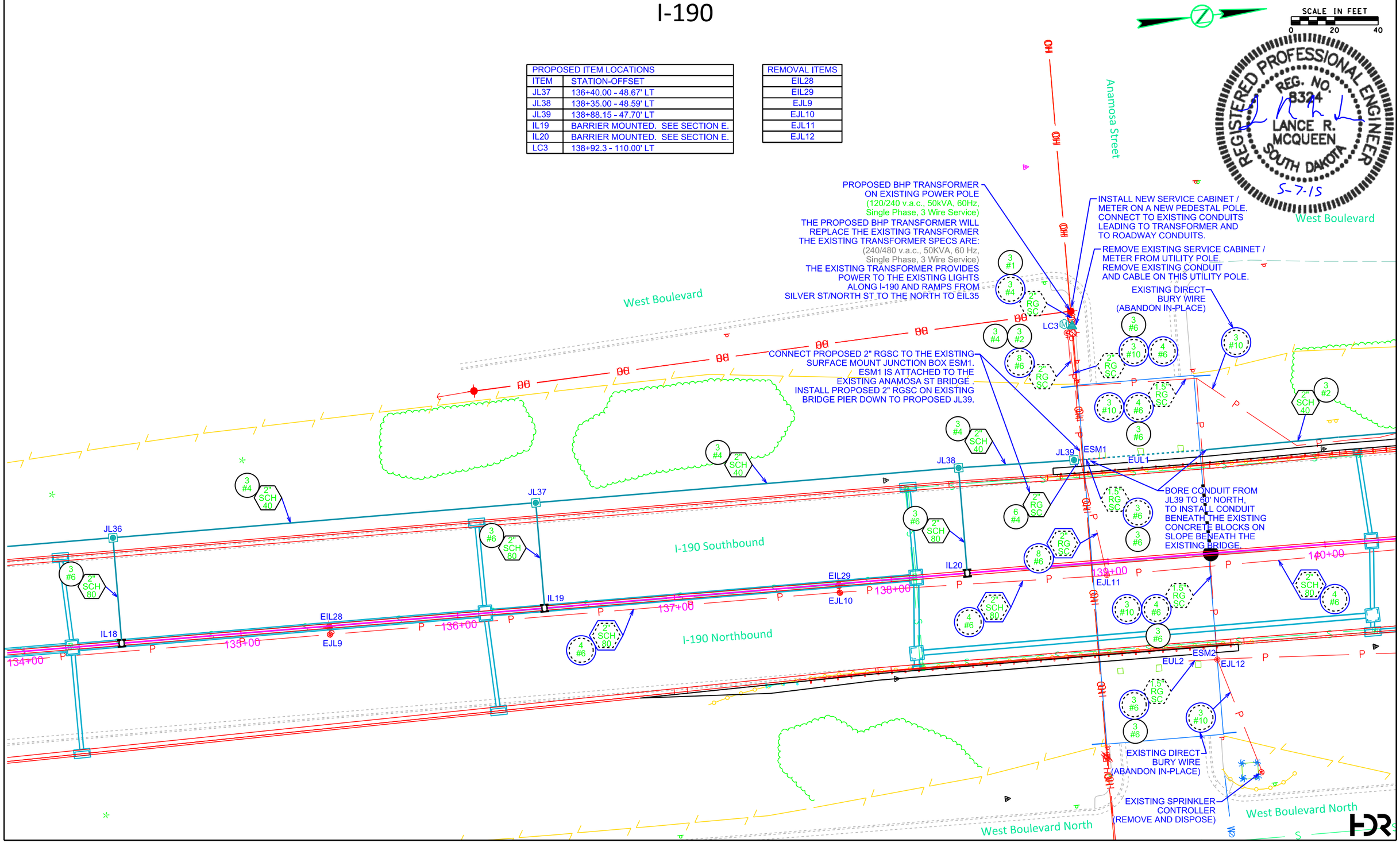

CONDUIT LAYOUT

FOR BIDDING PURPOSES ONLY

STATE OF SOUTH DAKOTA	PROJECT	SHEET	TOTAL SHEETS
	IM 1902(61)0	L28	L51

Plotting Date: 05-07-2015

I-190

PROPOSED ITEM LOCATIONS	
ITEM	STATION-OFFSET
JL40	140+48.50 - 48.67' LT
JL41	142+61.03 - 48.67' LT
JL42	144+63.50 - 48.67' LT
IL21	BARRIER MOUNTED. SEE SECTION E.
IL22	BARRIER MOUNTED. SEE SECTION E.
IL23	BARRIER MOUNTED. SEE SECTION E.

REMOVAL ITEMS
EIL30
EIL31
EIL32
EIL33
EJL13
EJL14
EJL15
EJL16

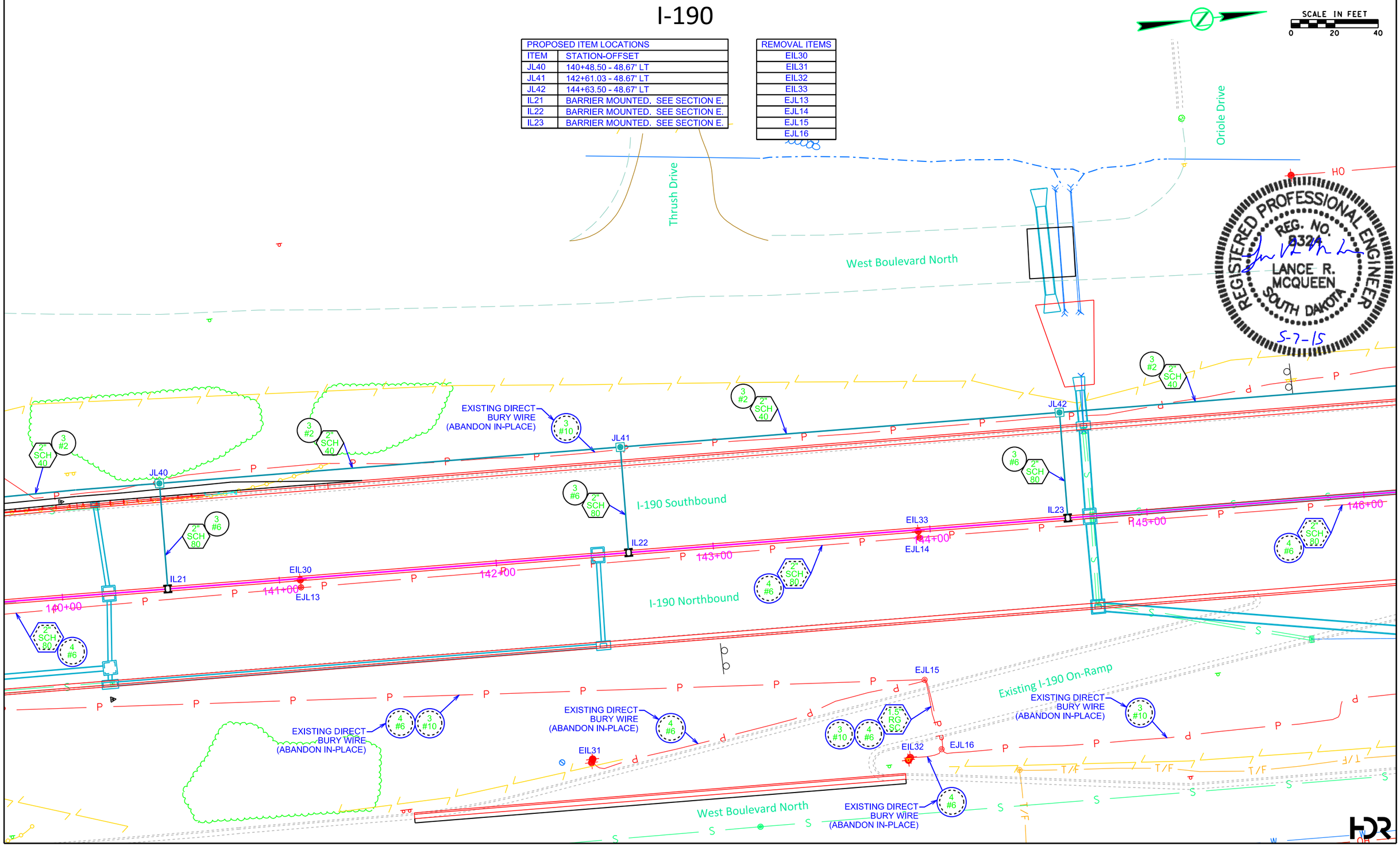

CONDUIT LAYOUT

I-190

FOR BIDDING PURPOSES ONLY

STATE OF SOUTH DAKOTA	PROJECT	SHEET	TOTAL SHEETS
	IM 1902(61)0	L29	L51

Plotting Date: 05-07-2015

SCALE IN FEET 0 20 40

PROPOSED ITEM LOCATIONS	
ITEM	STATION-OFFSET
JL43	146+86.00 - 48.67' LT
JL44	148+98.54 - 48.67' LT
JL45	151+11.04 - 48.67' LT
IL24	BARRIER MOUNTED. SEE SECTION E.
IL25	BARRIER MOUNTED. SEE SECTION E.
IL26	BARRIER MOUNTED. SEE SECTION E.

REMOVAL ITEMS
EIL34
EIL35
EJL17
EJL18

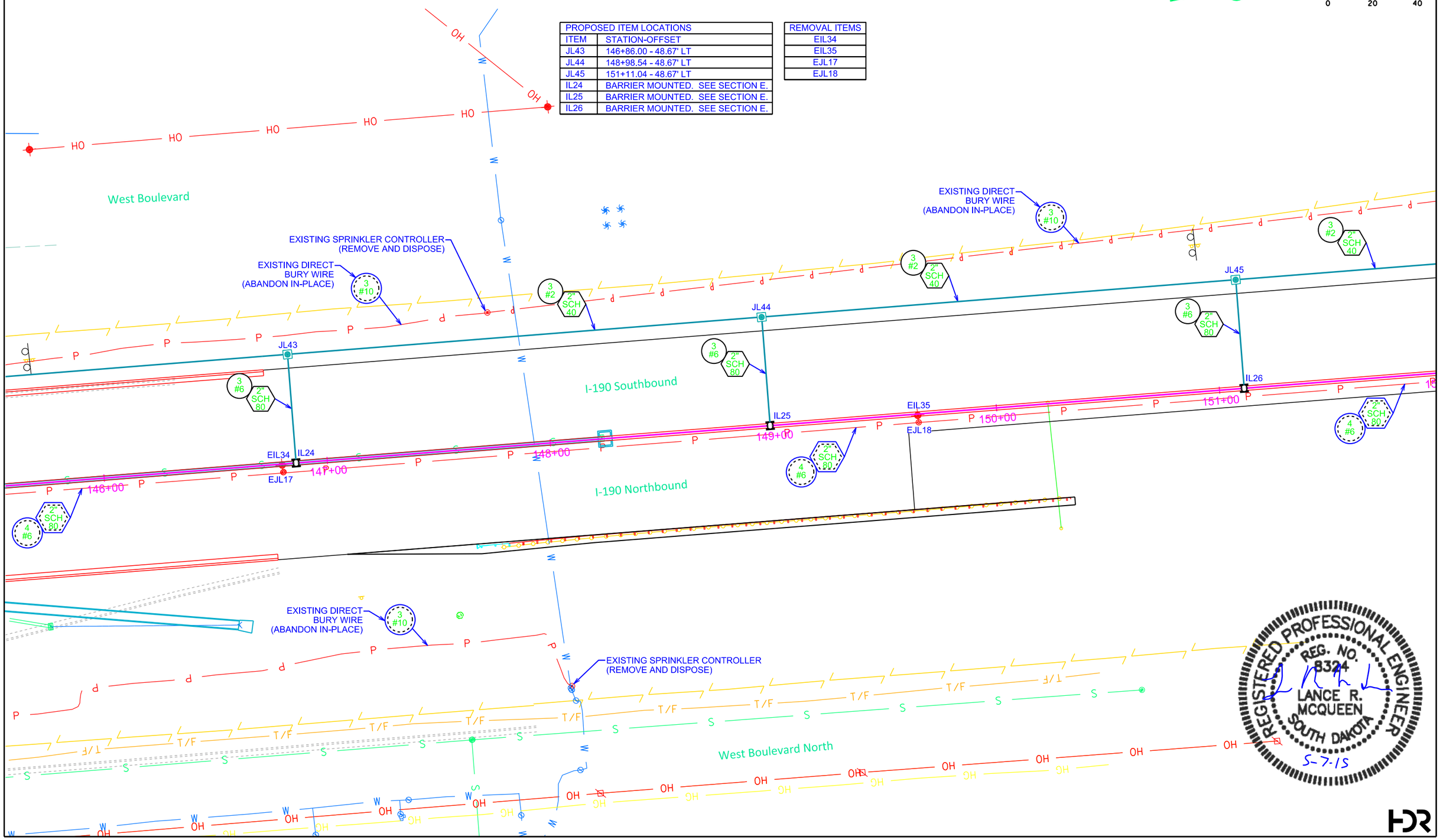

CONDUIT LAYOUT

I-190

FOR BIDDING PURPOSES ONLY

STATE OF SOUTH DAKOTA	PROJECT	SHEET	TOTAL SHEETS
	IM 1902(61)0	L30	L51

Plotting Date: 05-07-2015

SCALE IN FEET 0 20 40

PROPOSED ITEM LOCATIONS	
ITEM	STATION-OFFSET
JL46	153+23.50 - 48.67' LT
JL47	153+22.93 - 3.69' RT
IL27	BARRIER MOUNTED. SEE SECTION E.

REMOVAL ITEMS
EIL36
EJL19

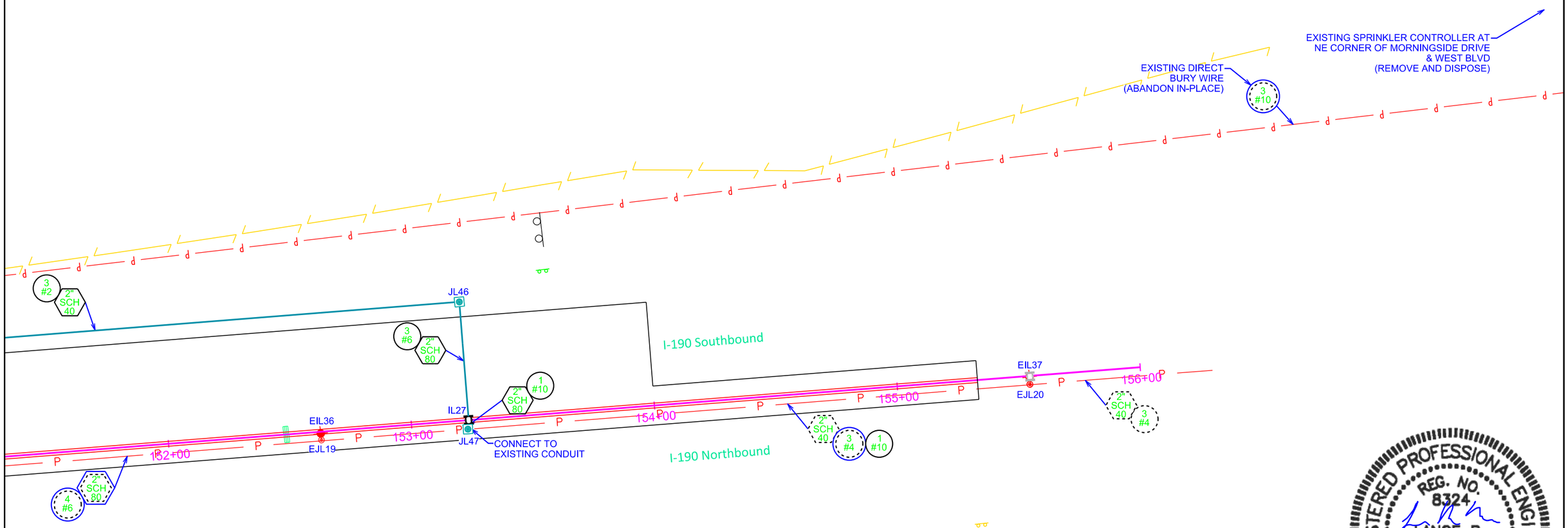

REGISTERED PROFESSIONAL ENGINEER
REG. NO. 8324
LANCE R. MCQUEEN
SOUTH DAKOTA
5-7-15

HDR

CONDUIT LAYOUT

North Street

FOR BIDDING PURPOSES ONLY

STATE OF SOUTH DAKOTA	PROJECT	SHEET	TOTAL SHEETS
	IM 1902(61)0	L31	L51

Plotting Date: 05-07-2015

SCALE IN FEET 0 20 40

PROPOSED ITEM LOCATIONS	
ITEM	STATION-OFFSET
JL20	209+89.65 - 28.31' RT
JL21	212+14.75 - 49.16' LT
NL1	210+02.22 - 28.65' RT
NL2	211+91.61 - 43.94' RT

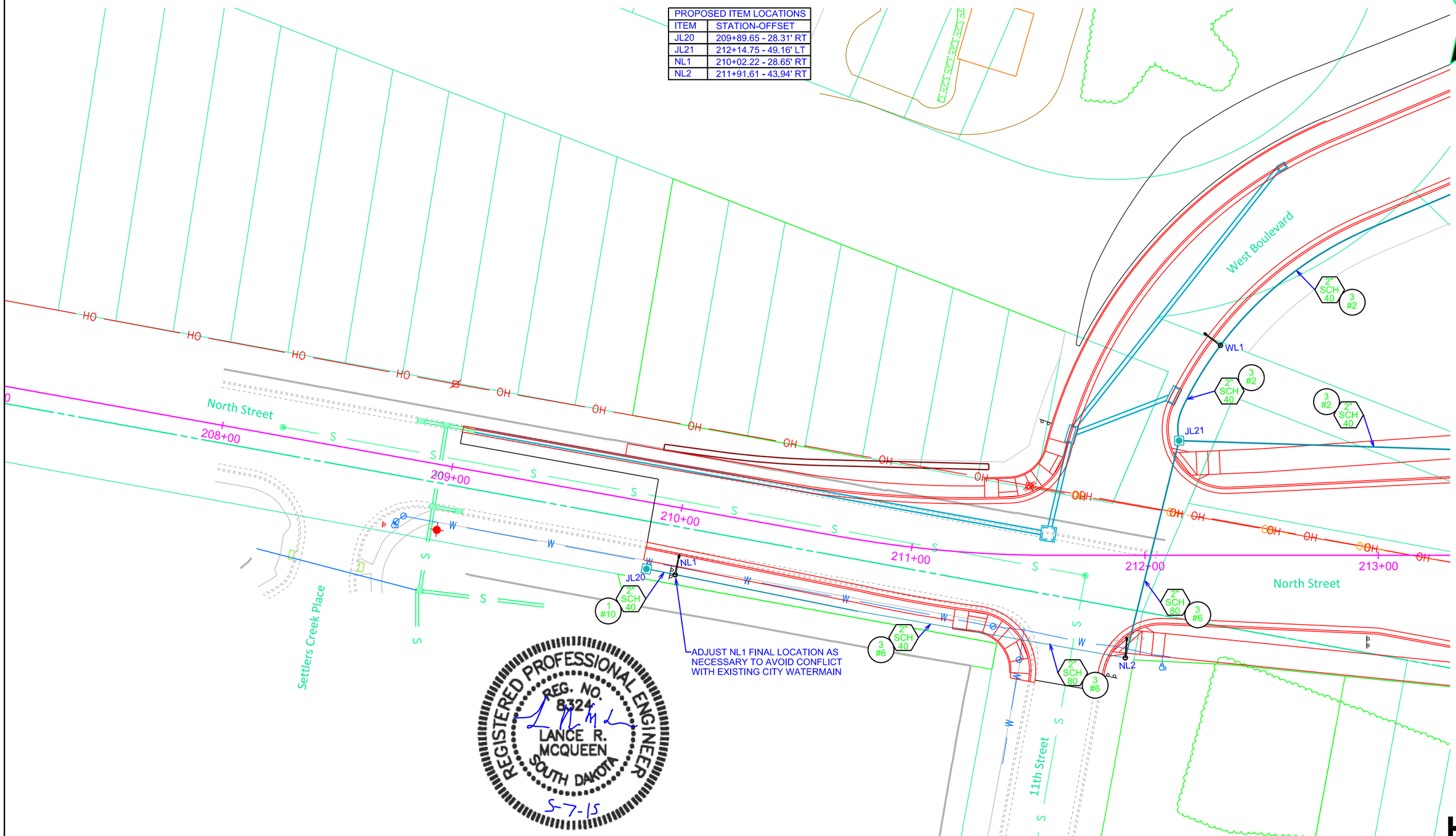

CONDUIT LAYOUT

North Street

FOR BIDDING PURPOSES ONLY

STATE OF SOUTH DAKOTA	PROJECT	SHEET	TOTAL SHEETS
	IM 1902(61)0	L32	L51

Plotting Date: 05-07-2015

REGISTERED PROFESSIONAL ENGINEER
REG. NO. 8324
LANCE R. MCQUEEN
SOUTH DAKOTA
5-7-15

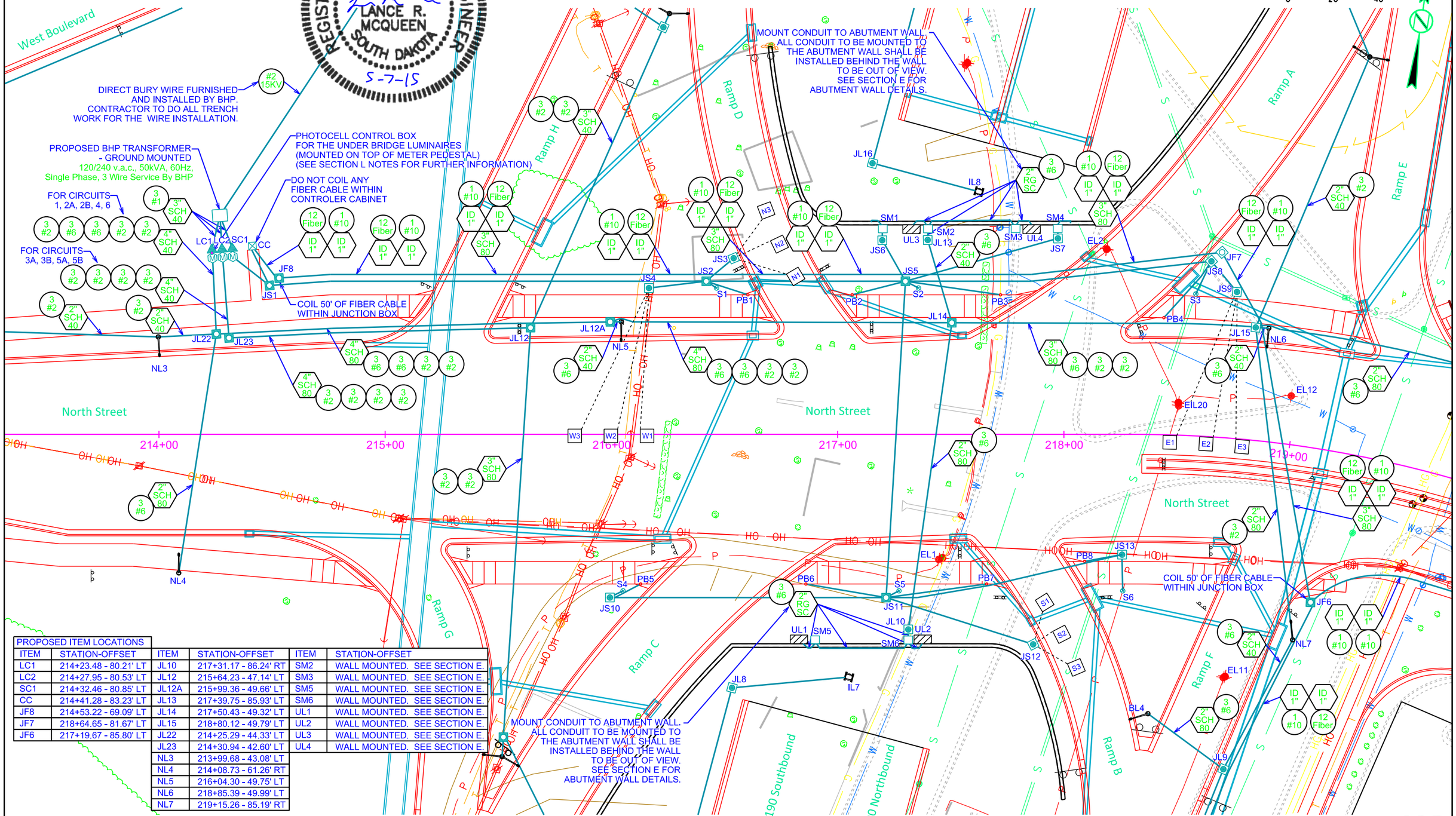

PROPOSED ITEM LOCATIONS					
ITEM	STATION-OFFSET	ITEM	STATION-OFFSET	ITEM	STATION-OFFSET
LC1	214+23.48 - 80.21' LT	JL10	217+31.17 - 86.24' RT	SM2	WALL MOUNTED. SEE SECTION E.
LC2	214+27.95 - 80.53' LT	JL12	215+64.23 - 47.14' LT	SM3	WALL MOUNTED. SEE SECTION E.
SC1	214+32.46 - 80.85' LT	JL12A	215+99.36 - 49.66' LT	SM5	WALL MOUNTED. SEE SECTION E.
CC	214+41.28 - 83.23' LT	JL13	217+39.75 - 85.93' LT	SM6	WALL MOUNTED. SEE SECTION E.
JF8	214+53.22 - 69.09' LT	JL14	217+50.43 - 49.32' LT	UL1	WALL MOUNTED. SEE SECTION E.
JF7	218+64.65 - 81.67' LT	JL15	218+80.12 - 49.79' LT	UL2	WALL MOUNTED. SEE SECTION E.
JF6	217+19.67 - 85.80' LT	JL22	214+25.29 - 44.33' LT	UL3	WALL MOUNTED. SEE SECTION E.
		JL23	214+30.94 - 42.60' LT	UL4	WALL MOUNTED. SEE SECTION E.
		NL3	213+99.68 - 43.08' LT		
		NL4	214+08.73 - 61.26' RT		
		NL5	216+04.30 - 49.75' LT		
		NL6	218+85.39 - 49.99' LT		
		NL7	219+15.26 - 85.19' RT		

HDR

SIGNAL CONDUIT LAYOUT

FOR BIDDING PURPOSES ONLY

STATE OF SOUTH DAKOTA	PROJECT	SHEET	TOTAL SHEETS
	IM 1902(61)0	L33	L51

Plotting Date: 05-07-2015

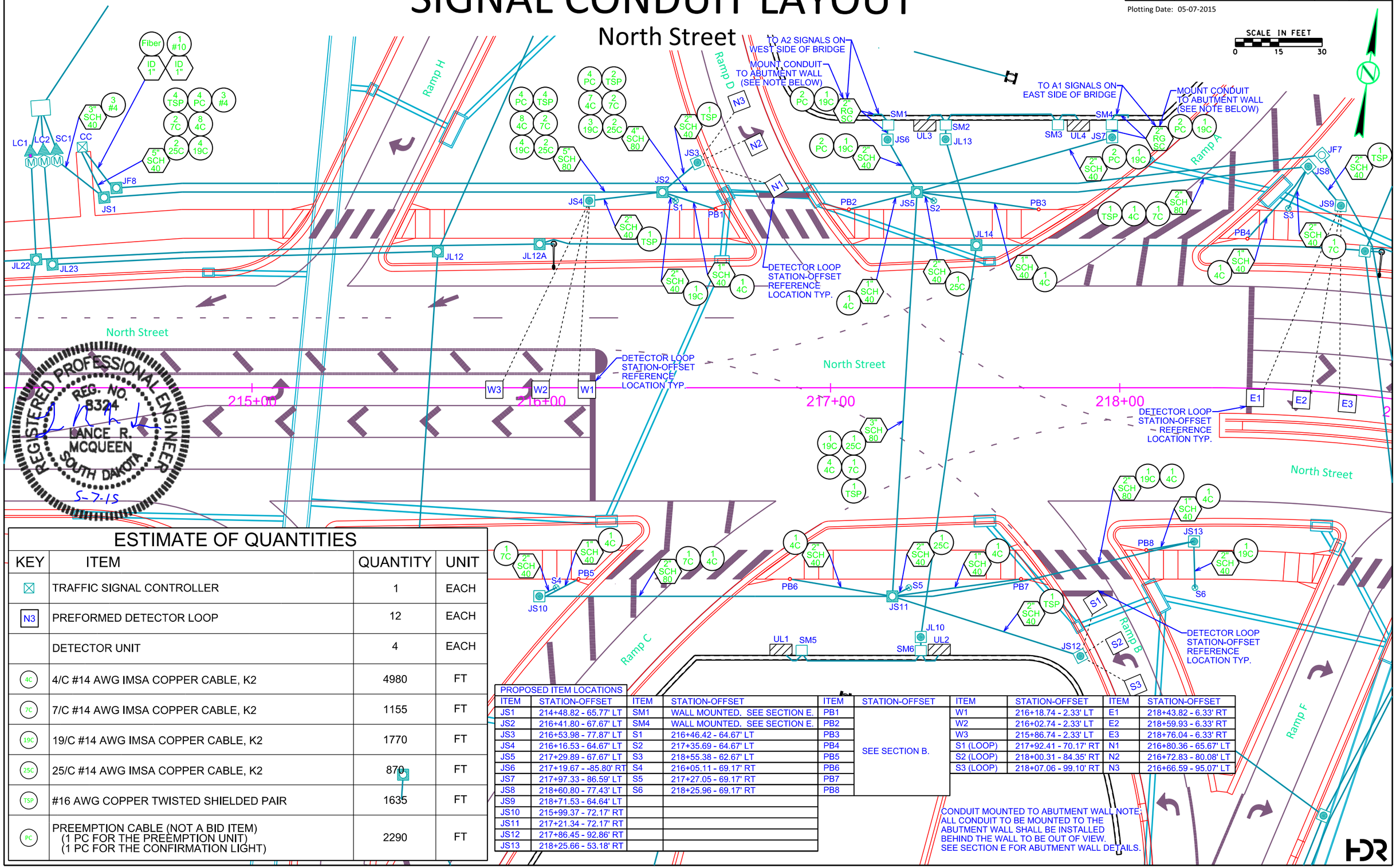

ESTIMATE OF QUANTITIES

KEY	ITEM	QUANTITY	UNIT
☒	TRAFFIC SIGNAL CONTROLLER	1	EACH
N3	PREFORMED DETECTOR LOOP	12	EACH
	DETECTOR UNIT	4	EACH
4C	4/C #14 AWG IMSA COPPER CABLE, K2	4980	FT
7C	7/C #14 AWG IMSA COPPER CABLE, K2	1155	FT
19C	19/C #14 AWG IMSA COPPER CABLE, K2	1770	FT
25C	25/C #14 AWG IMSA COPPER CABLE, K2	870	FT
TSP	#16 AWG COPPER TWISTED SHIELDED PAIR	1635	FT
PC	PREEMPTION CABLE (NOT A BID ITEM) (1 PC FOR THE PREEMPTION UNIT) (1 PC FOR THE CONFIRMATION LIGHT)	2290	FT

PROPOSED ITEM LOCATIONS

ITEM	STATION-OFFSET	ITEM	STATION-OFFSET	ITEM	STATION-OFFSET	ITEM	STATION-OFFSET	ITEM	STATION-OFFSET
JS1	214+48.82 - 65.77' LT	SM1	WALL MOUNTED. SEE SECTION E.	PB1	SEE SECTION B.	W1	216+18.74 - 2.33' LT	E1	218+43.82 - 6.33' RT
JS2	216+41.80 - 67.67' LT	SM4	WALL MOUNTED. SEE SECTION E.	PB2		W2	216+02.74 - 2.33' LT	E2	218+59.93 - 6.33' RT
JS3	216+53.98 - 77.87' LT	S1	216+46.42 - 64.67' LT	PB3		W3	215+86.74 - 2.33' LT	E3	218+76.04 - 6.33' RT
JS4	216+16.53 - 64.67' LT	S2	217+35.69 - 64.67' LT	PB4		S1 (LOOP)	217+92.41 - 70.17' RT	N1	216+80.36 - 65.67' LT
JS5	217+29.89 - 67.67' LT	S3	218+55.38 - 62.67' LT	PB5		S2 (LOOP)	218+00.31 - 84.35' RT	N2	216+72.83 - 80.08' LT
JS6	217+19.67 - -85.80' RT	S4	216+05.11 - 69.17' RT	PB6		S3 (LOOP)	218+07.06 - 99.10' RT	N3	216+66.59 - 95.07' LT
JS7	217+97.33 - 86.59' LT	S5	217+27.05 - 69.17' RT	PB7					
JS8	218+60.80 - 77.43' LT	S6	218+25.96 - 69.17' RT	PB8					
JS9	218+71.53 - 64.64' LT								
JS10	215+99.37 - 72.17' RT								
JS11	217+21.34 - 72.17' RT								
JS12	217+86.45 - 92.86' RT								
JS13	218+25.66 - 53.18' RT								

CONDUIT MOUNTED TO ABUTMENT WALL NOTE:
ALL CONDUIT TO BE MOUNTED TO THE ABUTMENT WALL SHALL BE INSTALLED BEHIND THE WALL TO BE OUT OF VIEW.
SEE SECTION E FOR ABUTMENT WALL DETAILS.

HDR

CONDUIT LAYOUT

FOR BIDDING PURPOSES ONLY

North Street

STATE OF SOUTH DAKOTA	PROJECT	SHEET	TOTAL SHEETS
	IM 1902(61)0	L34	L51

Plotting Date: 05-07-2015

SCALE IN FEET 0 20 40

PROPOSED ITEM LOCATIONS	
ITEM	STATION-OFFSET
JL48	221+54.37 - 46.97' LT
JF9	224+49.89 - 47.08' RT
NL8	221+54.11 - 2.43' RT
NL9	224+00.21 - 35.80' LT

REMOVAL ITEMS
EL13
EL14
EL15
EJL21

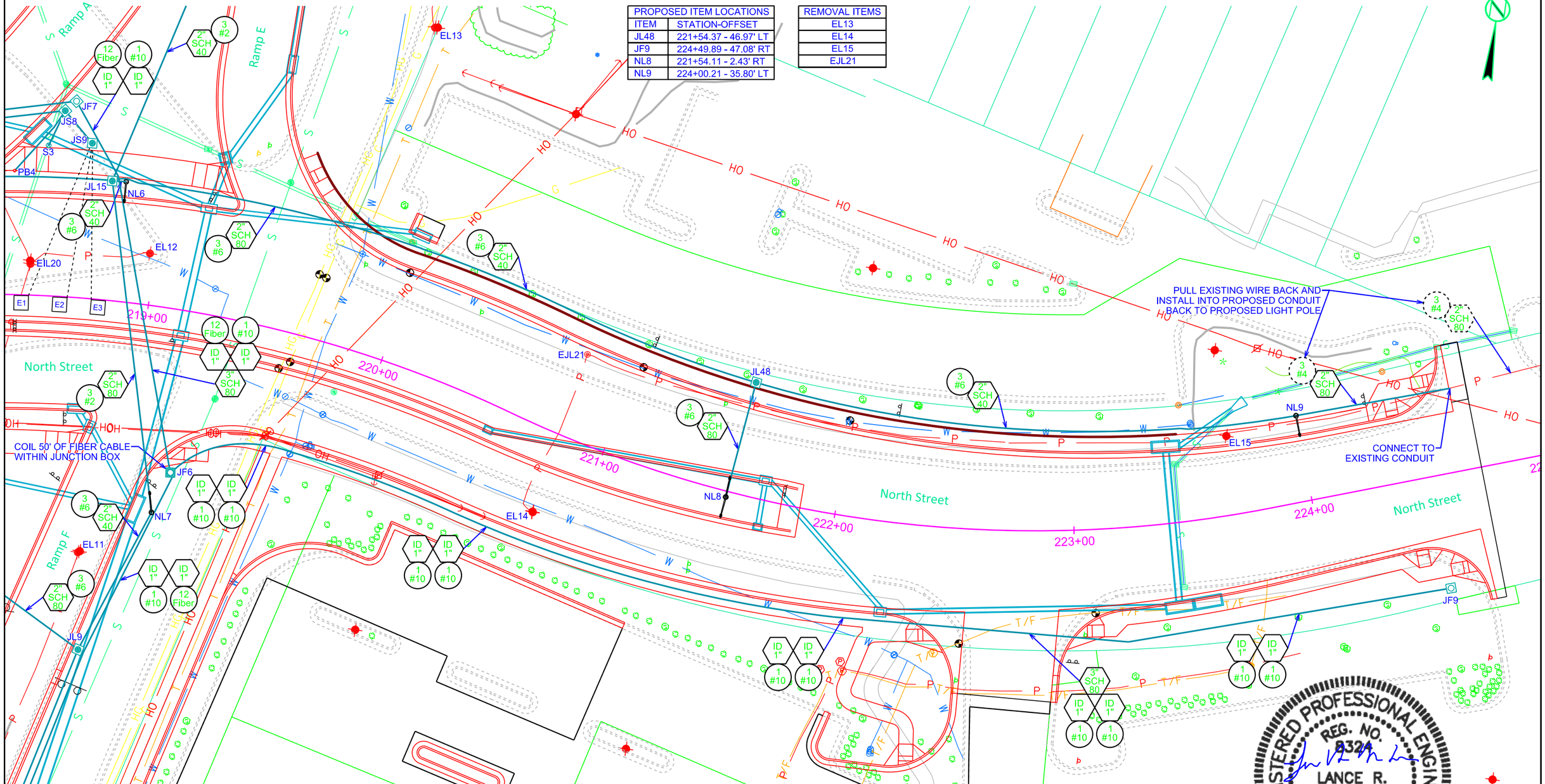

REGISTERED PROFESSIONAL ENGINEER
REG. NO. 8324
LANCE R. MCQUEEN
SOUTH DAKOTA
5-7-15

HDR

CONDUIT LAYOUT

West Boulevard

FOR BIDDING PURPOSES ONLY

STATE OF SOUTH DAKOTA	PROJECT	SHEET	TOTAL SHEETS
	IM 1902(61)0	L35	L51

Plotting Date: 05-07-2015

SCALE IN FEET
0 20 40

ITEM	STATION-OFFSET	ITEM	STATION-OFFSET
WL1	11+11.80 - 22.67' RT	JL24	14+86.95 - 22.67' RT
WL2	13+34.50 - 22.67' RT	JL25	15+08.76 - 28.67' LT
WL3	15+87.45 - 28.67' LT	JL24A	14+82.08 - 25.10' RT
		JL25A	15+03.16 - 28.67' LT

REMOVAL ITEMS
EL5

REGISTERED PROFESSIONAL ENGINEER
REG. NO. 8324
LANCE R. MCQUEEN
SOUTH DAKOTA
5-7-15

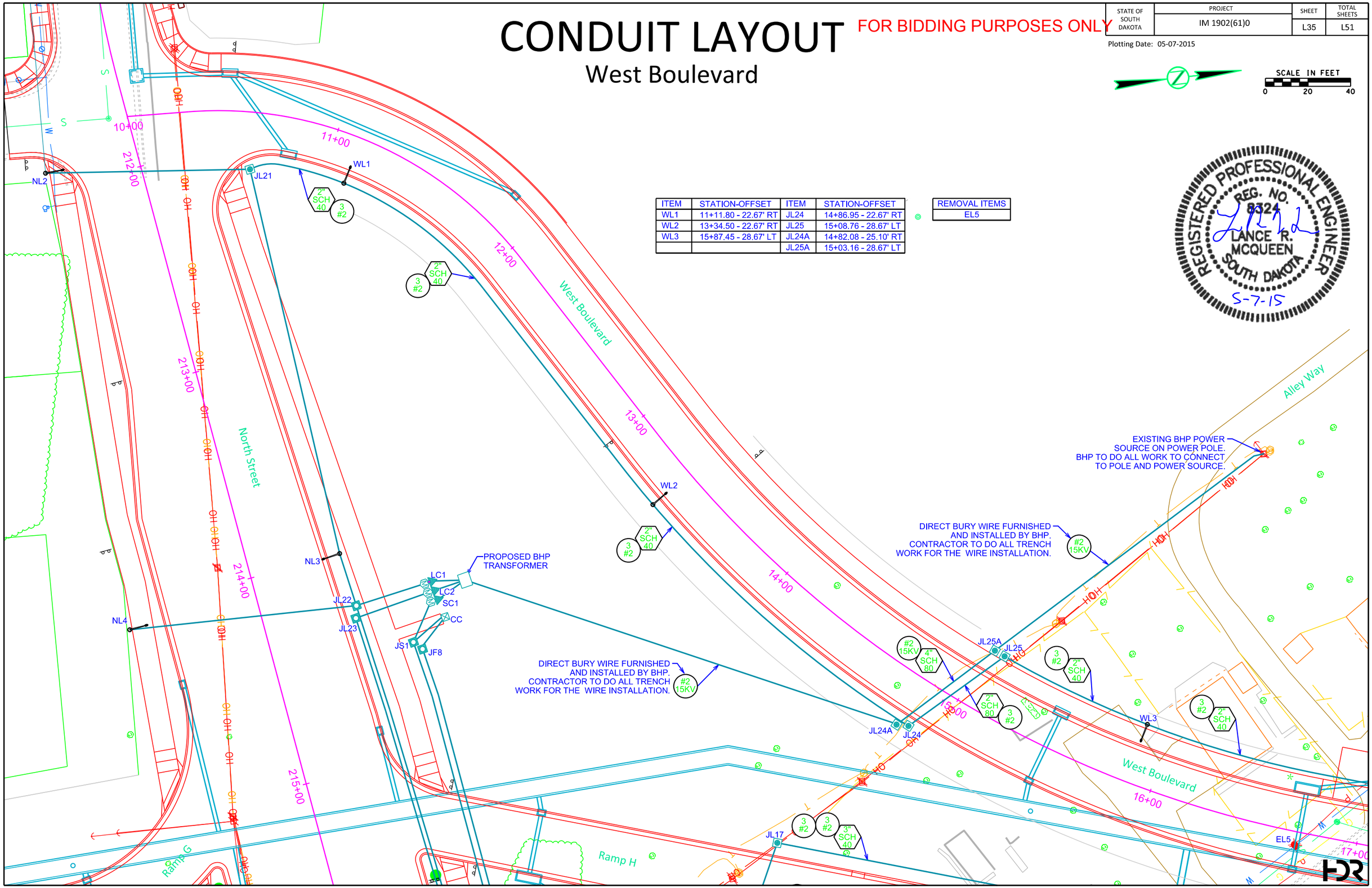

CONDUIT LAYOUT

FOR BIDDING PURPOSES ONLY

West Boulevard

STATE OF SOUTH DAKOTA	PROJECT	SHEET	TOTAL SHEETS
	IM 1902(61)0	L36	L51

Plotting Date: 05-07-2015

SCALE IN FEET 0 20 40

PROPOSED ITEM LOCATIONS	
ITEM	STATION-OFFSET
WL4	18+47.28 - 28.67' LT
WL5	20+95.55 - 28.67' LT

REMOVAL ITEMS
EL6
EL7

REGISTERED PROFESSIONAL ENGINEER REG. NO. 8724 LANCE R. MCQUEEN SOUTH DAKOTA 5-7-15

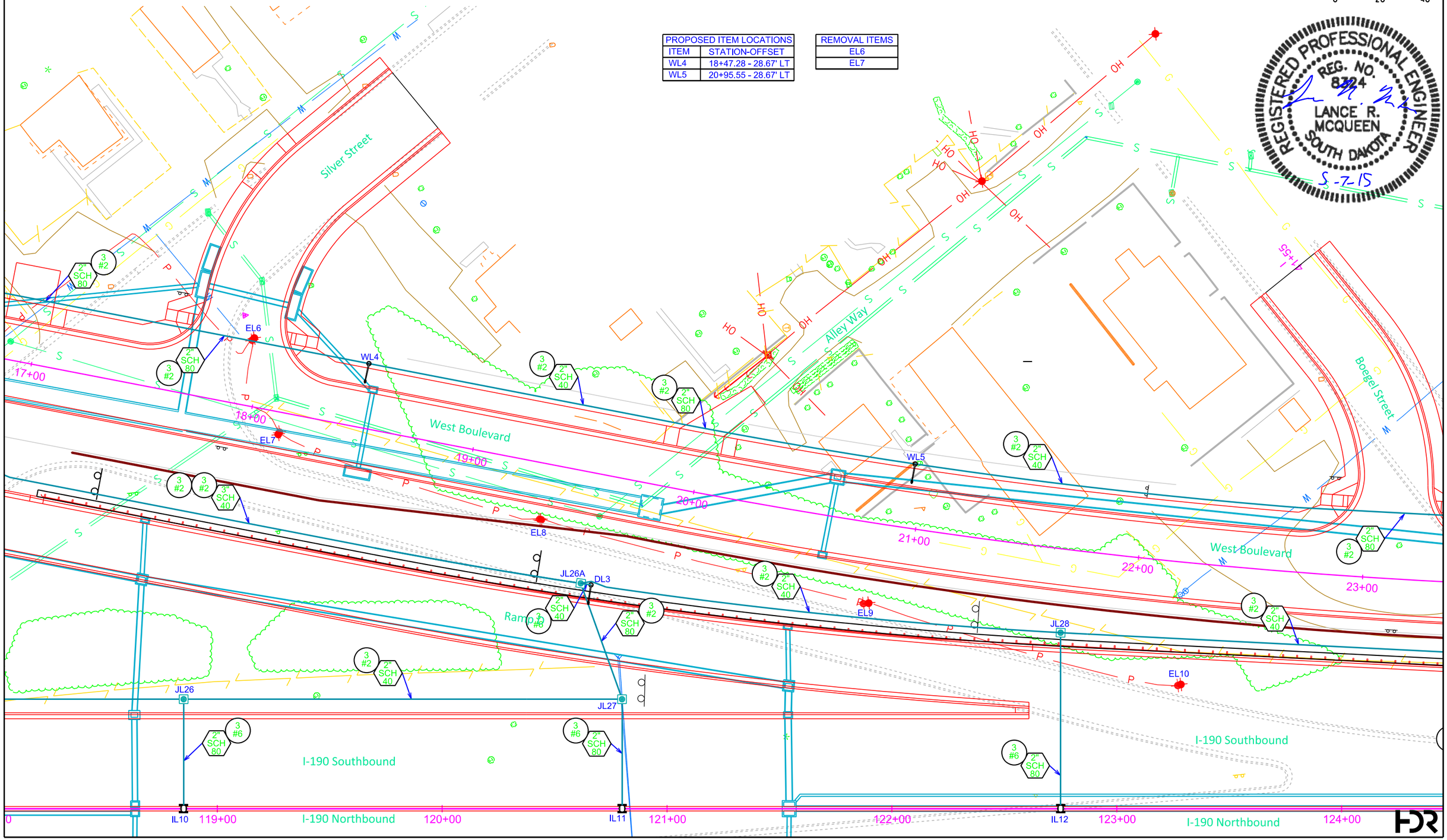

CONDUIT LAYOUT

West Boulevard

FOR BIDDING PURPOSES ONLY

STATE OF SOUTH DAKOTA	PROJECT	SHEET	TOTAL SHEETS
	IM 1902(61)0	L37	L51

Plotting Date: 05-07-2015

SCALE IN FEET
0 20 40

REGISTERED PROFESSIONAL ENGINEER
REG. NO. 8324
LANCE R. MCQUEEN
SOUTH DAKOTA
5-7-15

ITEM	STATION-OFFSET
WL6	23+53.51 - 29.45' LT
WL7	26+13.23 - 28.67' LT
WL8	28+89.14 - 30.13' LT
JL32	28+93.12 - 30.12' LT

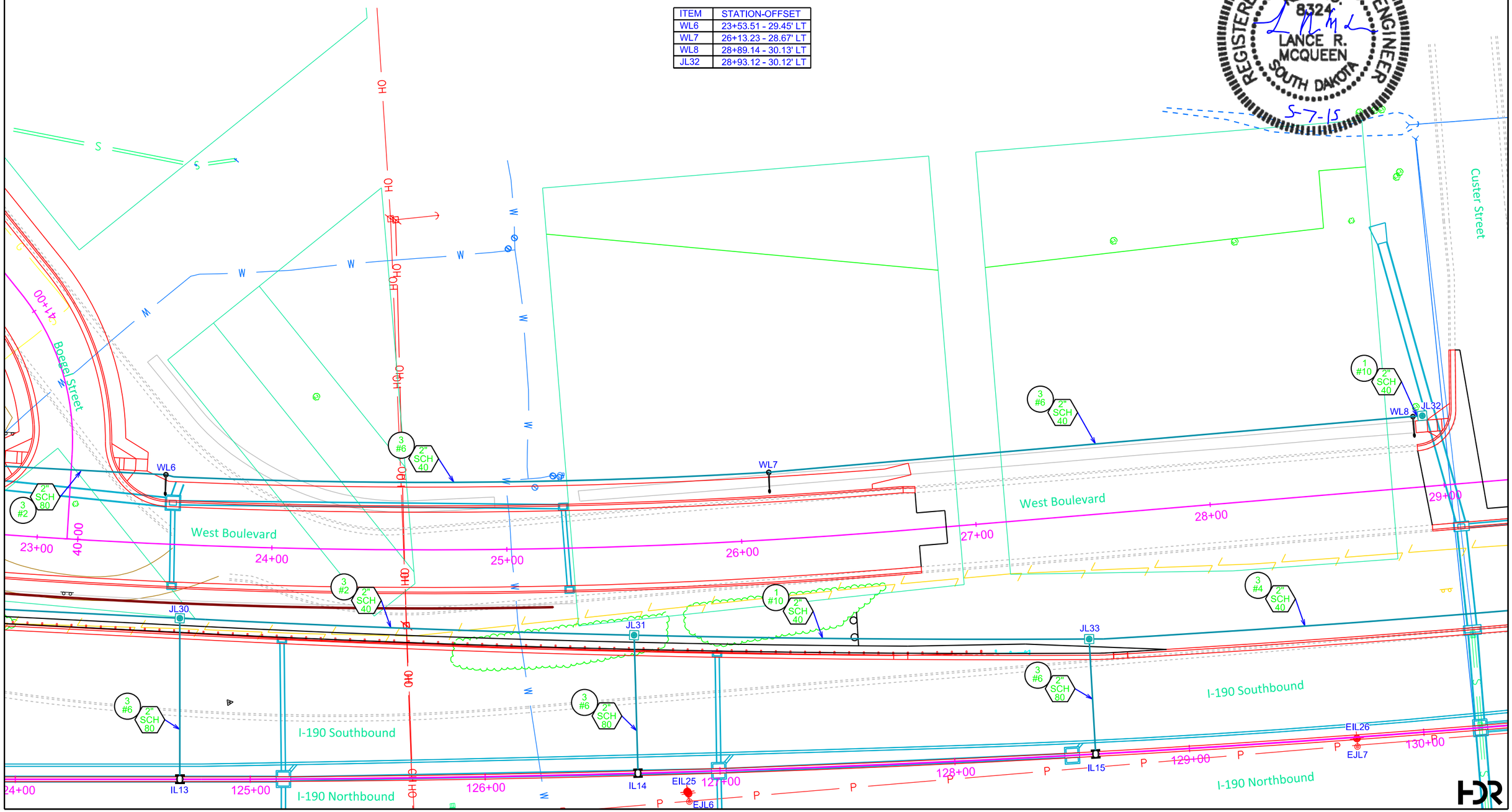

WIRING DIAGRAM

North Street Signals

FOR BIDDING PURPOSES ONLY

STATE OF SOUTH DAKOTA	PROJECT	SHEET	TOTAL SHEETS
	IM 1902(61)0	L38	L51

Plotting Date: 05-07-2015

NOTE:
ALL CIRCUITS SHALL BE BONDED IN ACCORDANCE WITH THE NATIONAL ELECTRICAL CODE. QUANTITIES FOR BONDING CONDUCTORS ARE NOT INCLUDED IN THESE PLANS.

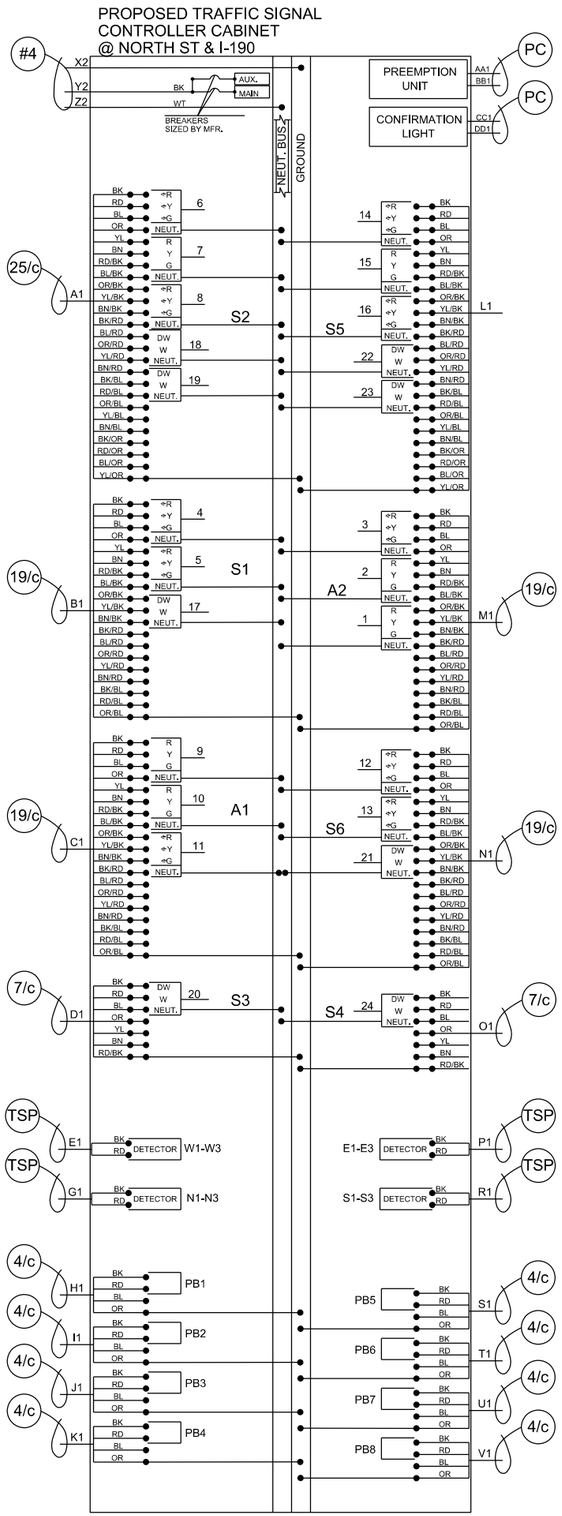

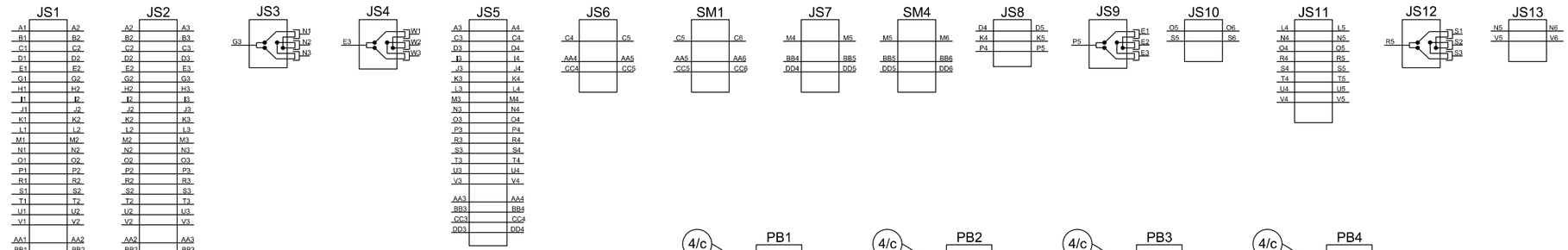

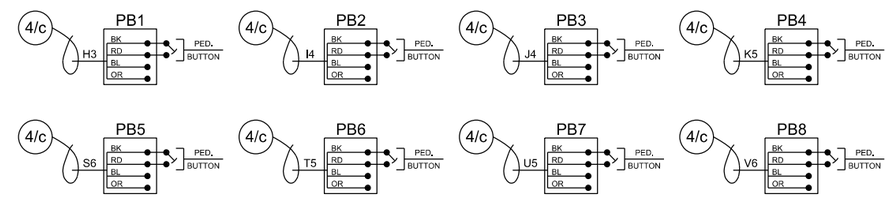

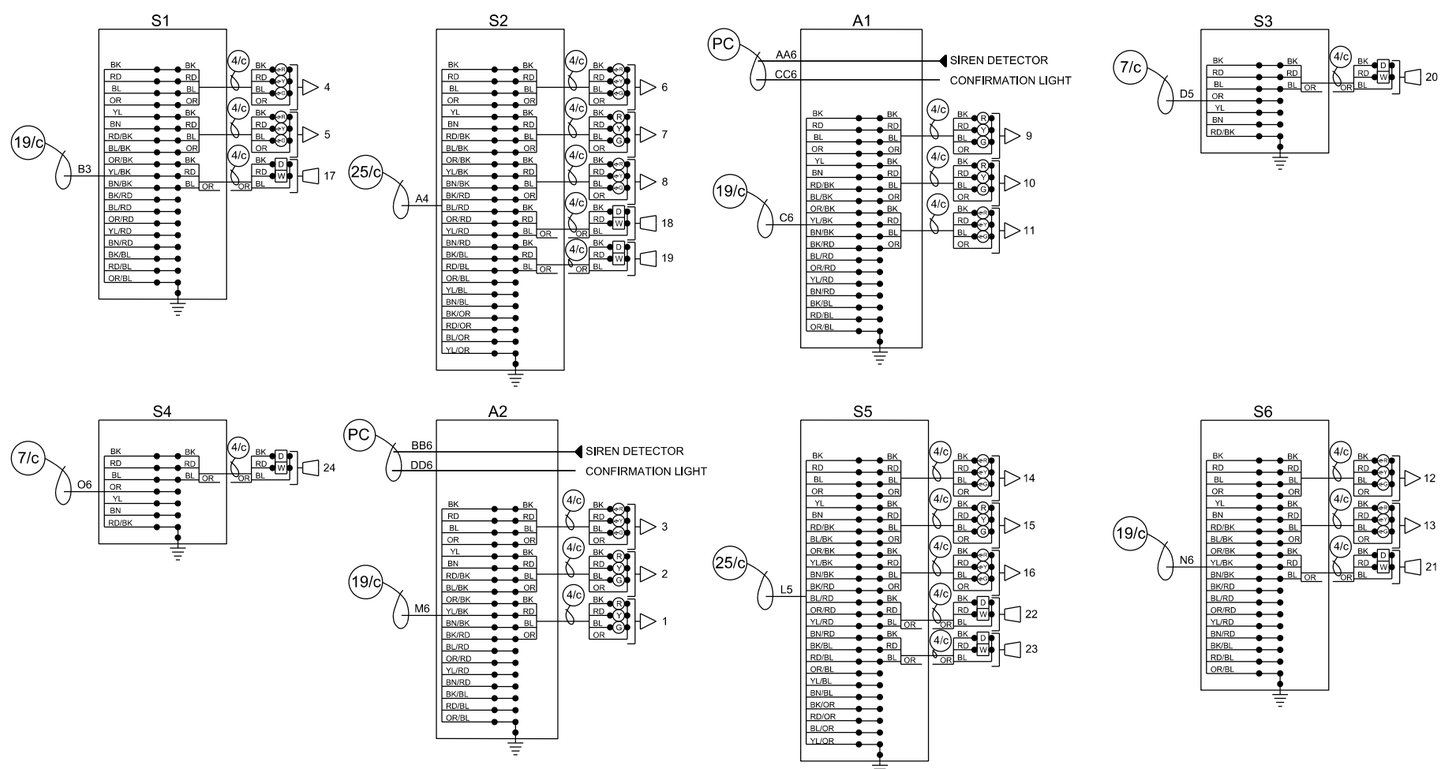

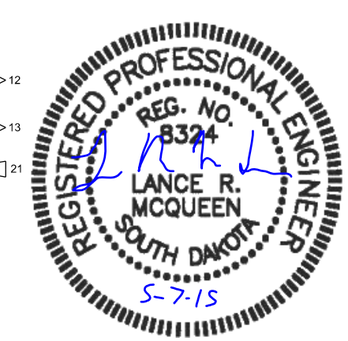

STATE OF SOUTH DAKOTA	PROJECT	SHEET	TOTAL SHEETS
	IM 1902(61)0	L39	L51

FOR BIDDING PURPOSES ONLY

Plotting Date: 05-07-2015

WIRING DIAGRAM

I-190, North Street and West Boulevard Luminaires

NOTE:
ALL CIRCUITS SHALL BE BONDED IN ACCORDANCE WITH THE NATIONAL ELECTRICAL CODE. QUANTITIES FOR BONDING CONDUCTORS ARE NOT INCLUDED IN THESE PLANS.

LEGEND:

- LUMINAIRE: 400 WATT HPS LAMP
- LUMINAIRE: 150 WATT HPS LAMP
- FUSE: 6 AMP. NON-TIME DELAY OR 2 8/10 AMP. DUAL ELEMENT
- FUSE: 5 AMP. NON-TIME DELAY OR 2 1/4 AMP. DUAL ELEMENT

REGISTERED PROFESSIONAL ENGINEER
REG. NO. 8324
LANCE R. MCQUEEN
SOUTH DAKOTA
5-7-15

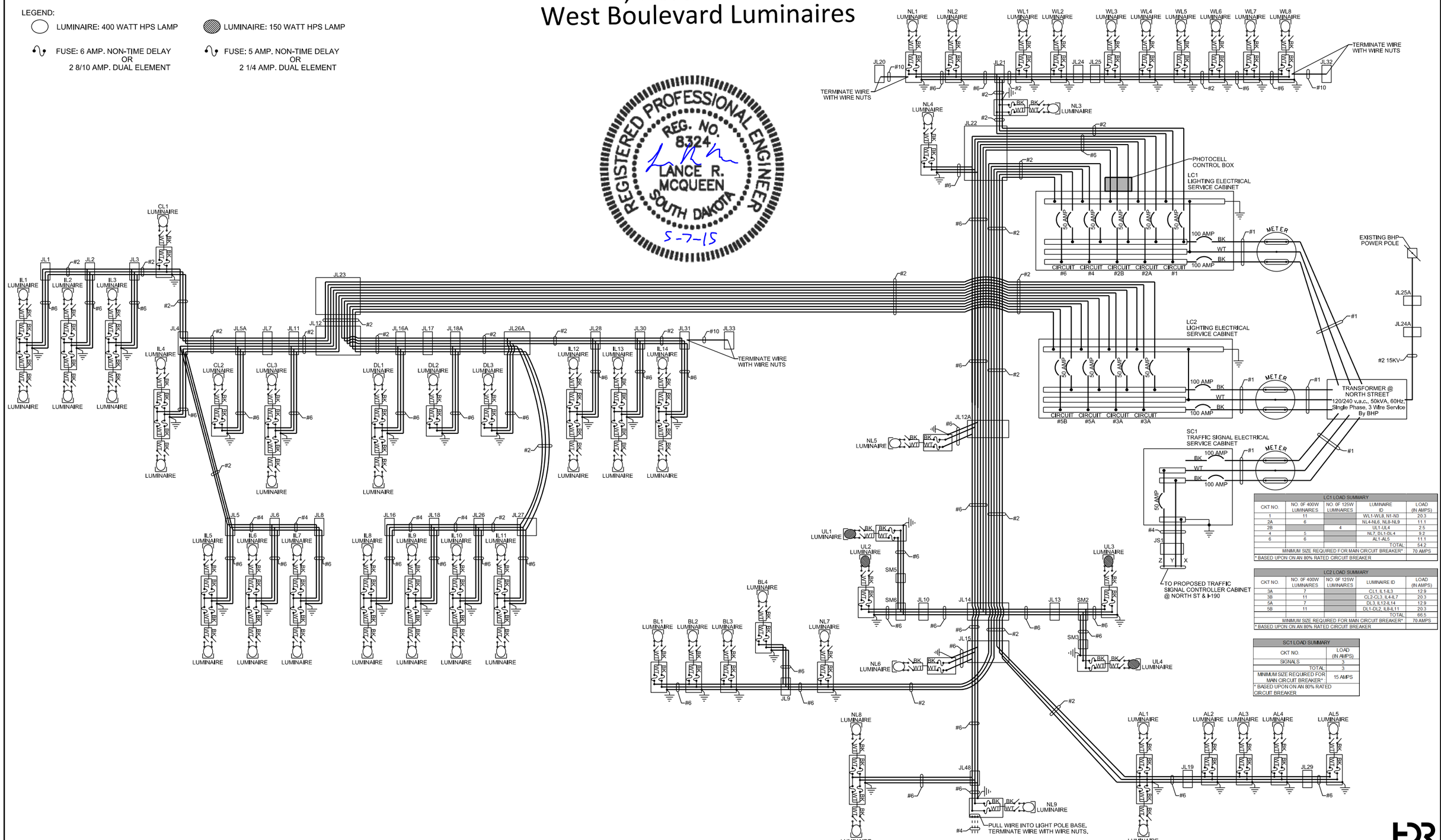

LC1 LOAD SUMMARY				
CKT NO.	NO. OF 400W LUMINAIRES	NO. OF 125W LUMINAIRES	LUMINAIRE ID	LOAD (IN AMPS)
1	11		WL1-WL8, N1-N3	20.3
2A	6		NL4-NL6, NL8-NL9	11.1
2B		4	UL1-UL4	2.5
4	5		NL7, DL1-DL4	9.2
6	6		AL1-AL5	11.1
			TOTAL	54.2
MINIMUM SIZE REQUIRED FOR MAIN CIRCUIT BREAKER*				70 AMPS
* BASED UPON ON AN 80% RATED CIRCUIT BREAKER				

LC2 LOAD SUMMARY				
CKT NO.	NO. OF 400W LUMINAIRES	NO. OF 125W LUMINAIRES	LUMINAIRE ID	LOAD (IN AMPS)
3A	7		CL1, IL1-IL3	12.9
3B	11		CL2-CL3, IL4-IL7	20.3
5A	7		DL3, IL12-IL14	12.9
5B	11		DL1-DL2, IL8-IL11	20.3
			TOTAL	66.5
MINIMUM SIZE REQUIRED FOR MAIN CIRCUIT BREAKER*				70 AMPS
* BASED UPON ON AN 80% RATED CIRCUIT BREAKER				

SC1 LOAD SUMMARY	
CKT NO.	LOAD (IN AMPS)
SIGNALS	3
TOTAL	3
MINIMUM SIZE REQUIRED FOR MAIN CIRCUIT BREAKER*	15 AMPS
* BASED UPON ON AN 80% RATED CIRCUIT BREAKER	

STATE OF SOUTH DAKOTA	PROJECT	SHEET	TOTAL SHEETS
	IM 1902(61)0	L40	L51

FOR BIDDING PURPOSES ONLY

Plotting Date: 05-07-2015

NOTE:
ALL CIRCUITS SHALL BE BONDED IN ACCORDANCE WITH THE NATIONAL ELECTRICAL CODE. QUANTITIES FOR BONDING CONDUCTORS ARE NOT INCLUDED IN THESE PLANS.

WIRING DIAGRAM

I-190 Luminaires @ Anamosa Street

LEGEND:

- LUMINAIRE: 400 WATT HPS LAMP
- EXISTING LUMINAIRE: 250 WATT HPS LAMP
- FUSE: 6 AMP. NON-TIME DELAY OR 2 8/10 AMP. DUAL ELEMENT
- EXISTING FUSE: 5 AMP. NON-TIME DELAY OR 2 1/4 AMP. DUAL ELEMENT

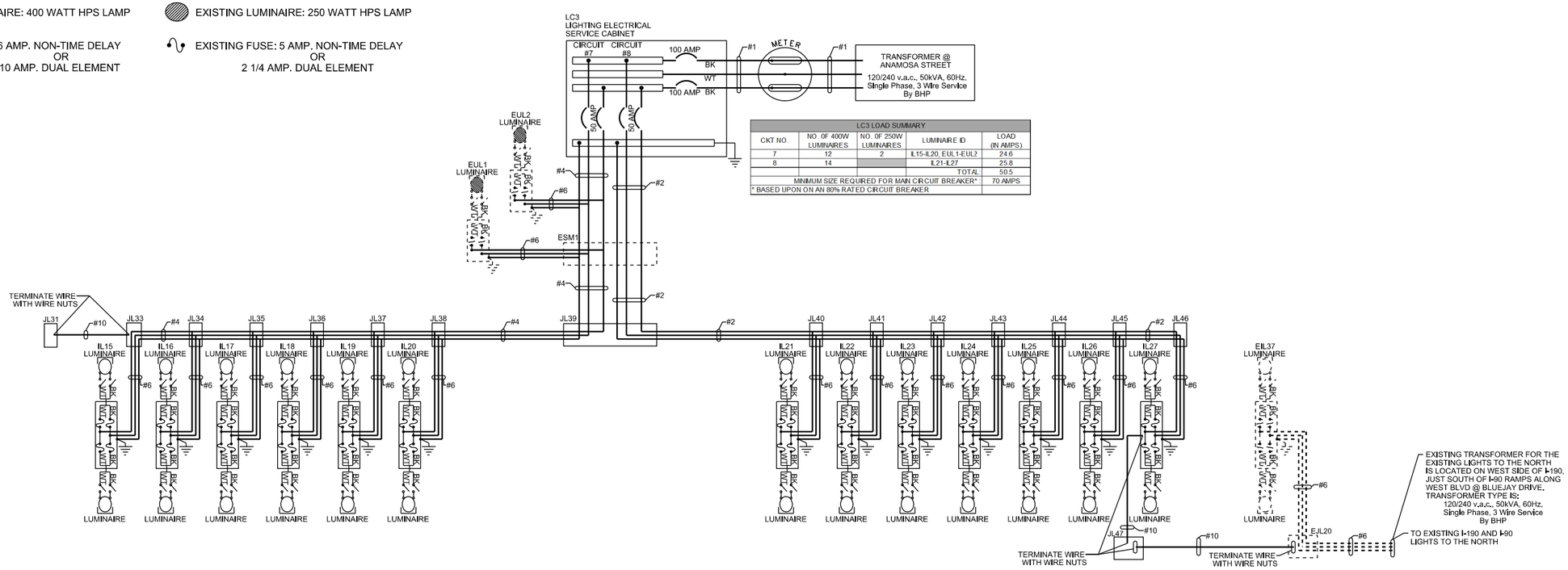

LC3 LOAD SUMMARY				
CKT NO.	NO. OF 400W LUMINAIRES	NO. OF 250W LUMINAIRES	LUMINAIRE ID	LOAD (IN AMPS)
7	12	2	IL15-IL20, EUL1-EUL2	24.6
8	14		IL21-IL27	25.8
			TOTAL:	50.5
MINIMUM SIZE REQUIRED FOR MAIN CIRCUIT BREAKER* :				70 AMPS
* BASED UPON ON AN 80% RATED CIRCUIT BREAKER				

WIRING DIAGRAM

Fiber Optic Cable

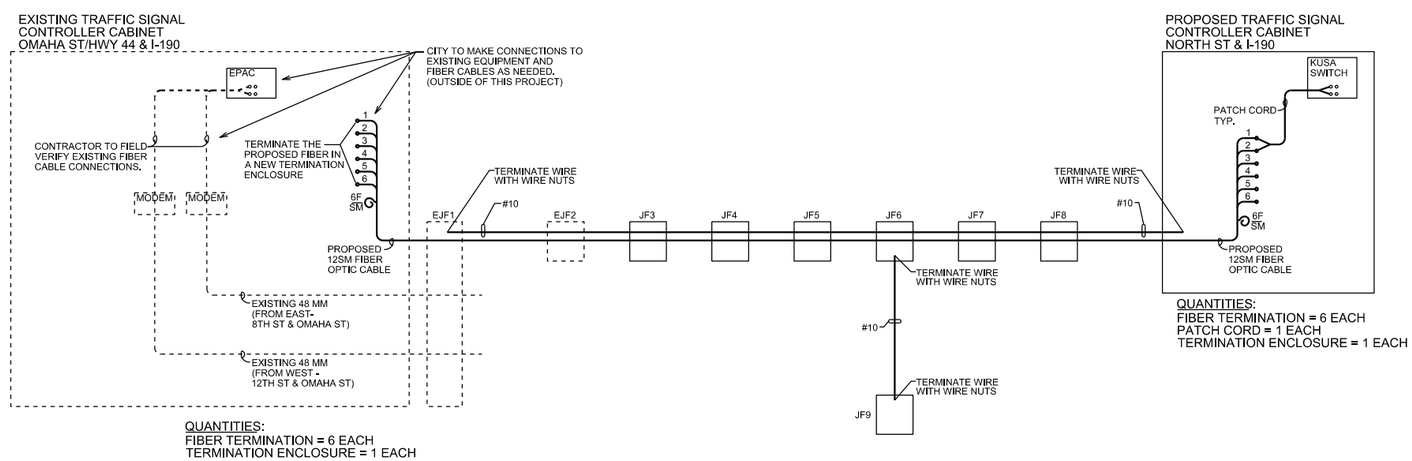

QUANTITIES:
FIBER TERMINATION = 6 EACH
TERMINATION ENCLOSURE = 1 EACH

QUANTITIES:
FIBER TERMINATION = 6 EACH
PATCH CORD = 1 EACH
TERMINATION ENCLOSURE = 1 EACH

STATE OF SOUTH DAKOTA	PROJECT	SHEET	TOTAL SHEETS
	IM 1902(61)0	L41	L51

Plotting Date: 05-07-2015

SIGNAL TIMING DIAGRAM

FOR BIDDING PURPOSES ONLY

North Street Signals

PHASING, SEQUENCING & TIMING

INTERVALS / SIGNALS	1	2	3	4	5	6	7	8	9	10	11	12	13	14	15	16	FLASH DISPLAY
WESTBOUND LEFT - HEADS 11,14	<G	<Y	<G	<Y	<R	<R	<R	<R	<R	<R	<R	<R	<R	<R	<R	<R	<YELLOW
WESTBOUND - HEADS 7,9,10	R	R	G	G	R	R	G	Y	R	G	G	Y	R	R	R	R	YELLOW
EASTBOUND LEFT - HEADS 3, 6	<G	<Y	<R	<R	<G	<Y	<R	<R	<R	<R	<R	<R	<R	<R	<R	<R	<YELLOW
EASTBOUND - HEADS 1,2,15	R	R	R	R	G	G	G	Y	R	G	G	Y	R	R	R	R	YELLOW
E.B. & W.B. PEDS - HEADS 17,18,19,20,21,22,23,24	DW	DW	DW	DW	DW	DW	DW	DW	DW	W	FDW	DW	DW	DW	DW	DW	NO DISPLAY
NORTHBOUND LEFT - HEADS 4,8,13	<R	<R	<R	<R	<R	<R	<R	<R	<R	<R	<R	<R	<R	<G	<Y	<R	<RED
SOUTHBOUND LEFT - HEADS 5,12,16	<R	<R	<R	<R	<R	<R	<R	<R	<R	<R	<R	<R	<R	<G	<Y	<R	<RED
SEQUENCE	A -OR- -OR-						B -OR-							C			FLASH DISPLAY FOR FAILURE MODE ONLY - NO NIGHT FLASH
PHASES	1&5		1&6		2&5		2&6			2&6 W/PED				4&8			
MOVEMENTS																	

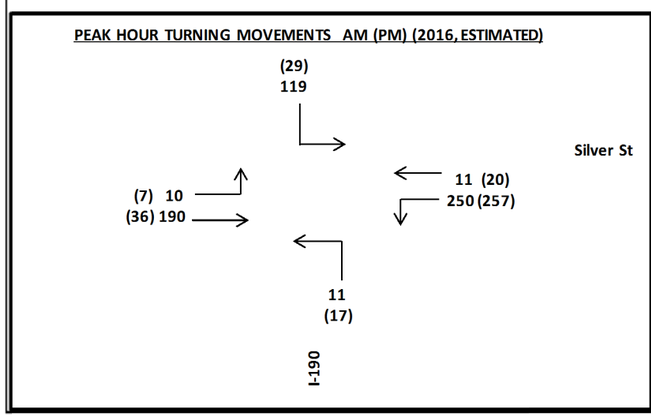

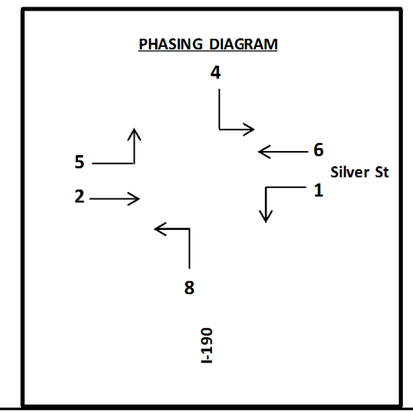

CONTROLLER TIMINGS (FREE OPERATION)

PHASE	1	2	4	5	6	8
MOVEMENT						
MIN GREEN	6	14	4	6	14	4
PASSAGE TIME	4	4	3	4	4	3
MAXIMUM 1	18	26	7	18	26	7
MAXIMUM 2	18	26	7	18	26	7
RECALL		MIN			MIN	
YELLOW CHANGE	4	4	5	4	4	5
RED CLEARANCE		4	2		4	2
WALK		7			7	
PED CLEARANCE		14			14	

DETECTOR SETTINGS

DETECTOR LABEL	DETECTOR TYPE	DETECTOR OPERATION: CALL/EXTEND	CALL ONLY	EXTEND ONLY	PHASE CALLED	PHASE EXTENDED
N1	PREFORMED	X			4	4
N2	PREFORMED	X			4	4
N3	PREFORMED	X			4	4
S1	PREFORMED	X			8	8
S2	PREFORMED	X			8	8
S3	PREFORMED	X			8	8
E1	PREFORMED	X			1	1
E2	PREFORMED	X			1	1
E3	PREFORMED	X			1	1
W1	PREFORMED	X			5	5
W2	PREFORMED	X			5	5
W3	PREFORMED	X			5	5

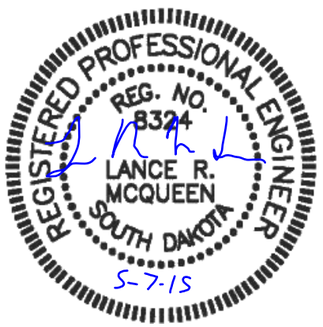

HDR

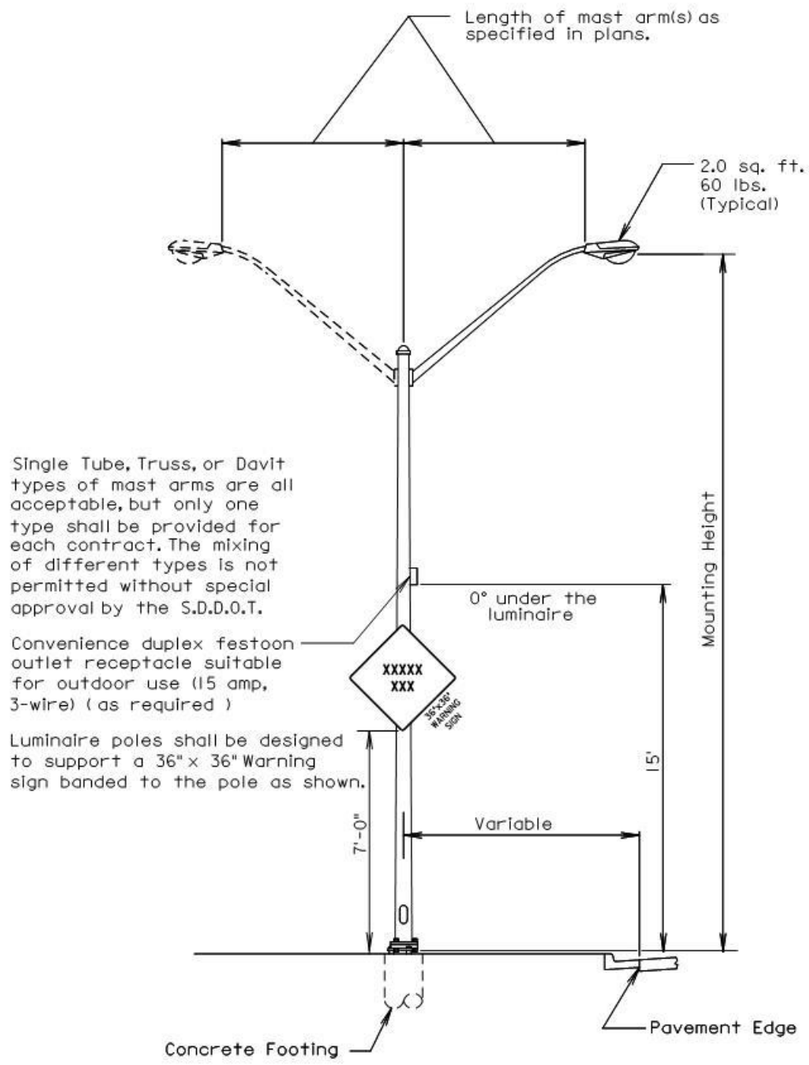

March 31, 2000

Published Date: 2nd Qtr. 2015	SDDOT	STEEL ROADWAY LUMINAIRE POLE WITH MAST ARM(S)	PLATE NUMBER 635.01 Sheet 1 of 1

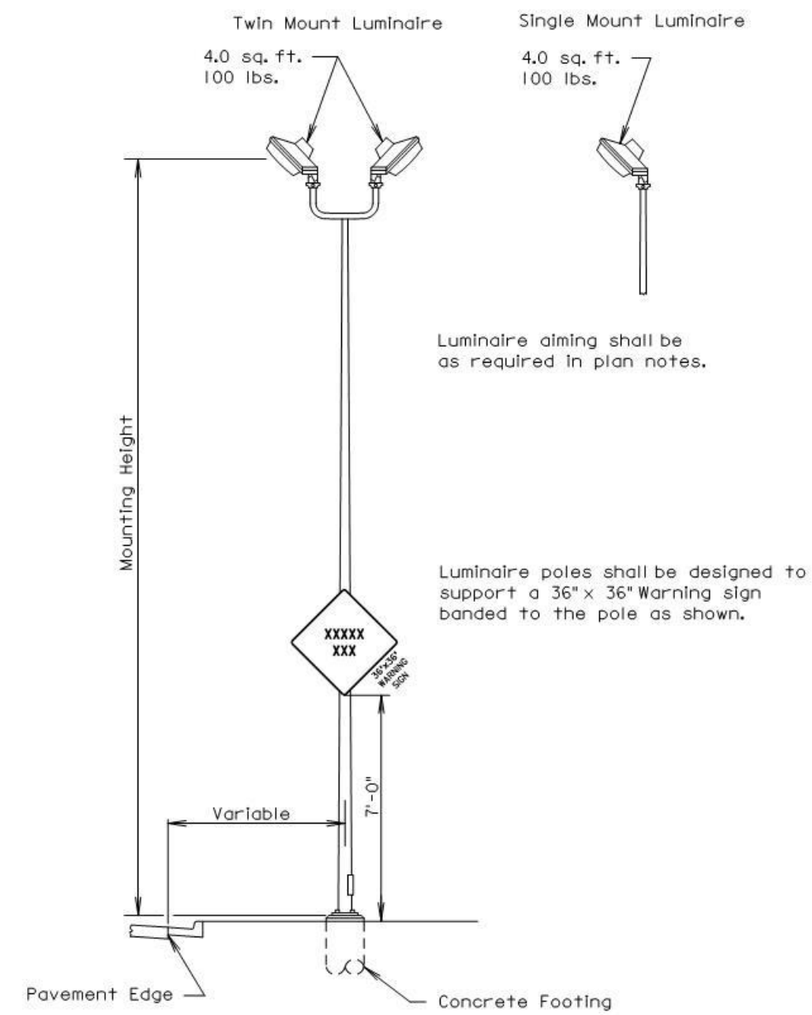

March 31, 2000

Published Date: 2nd Qtr. 2015	SDDOT	STEEL ROADWAY LUMINAIRE POLE FOR POST TOP MOUNTED LUMINAIRE	PLATE NUMBER 635.02 Sheet 1 of 1

HDR

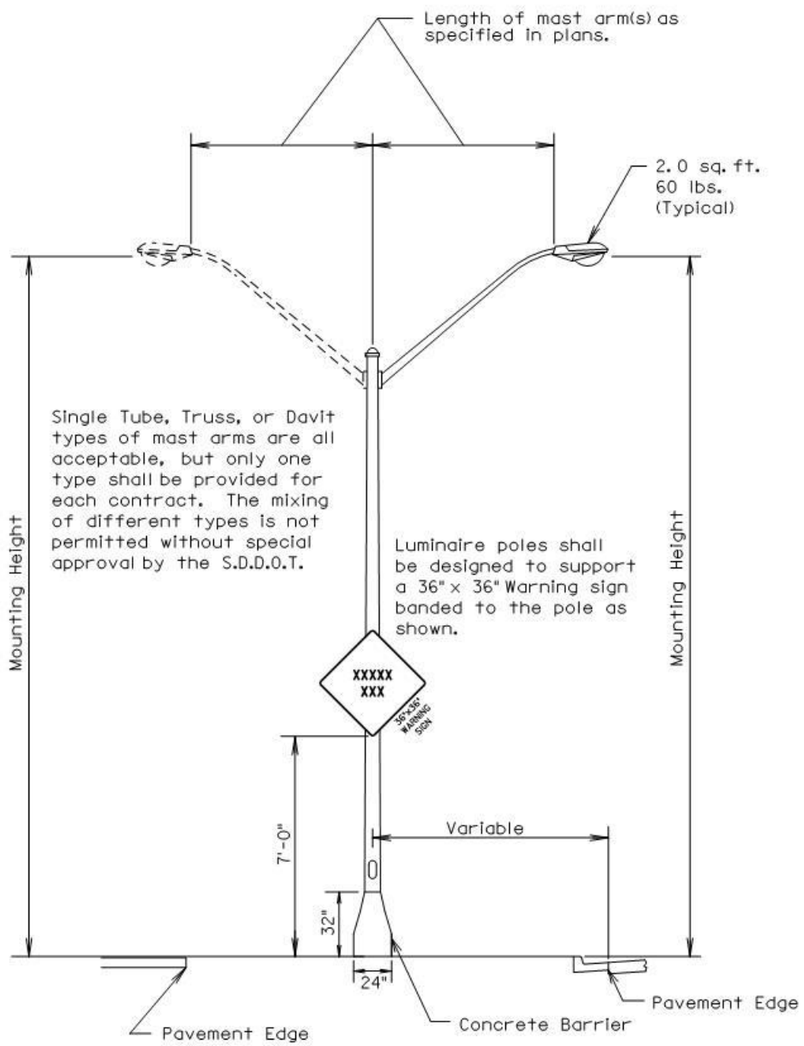

March 31, 2000

Published Date: 2nd Qtr. 2015	SDDOT	STEEL ROADWAY LUMINAIRE POLE FOR CONCRETE BARRIER MOUNT	PLATE NUMBER 635.03 Sheet 1 of 1

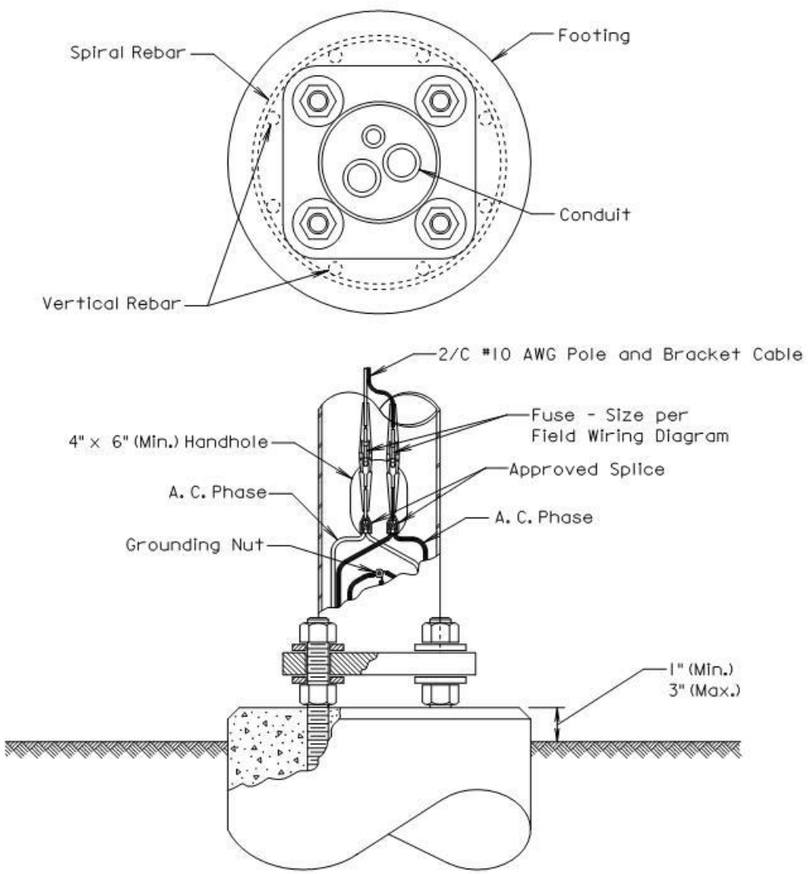

GENERAL NOTES:

Base details are provided for example only and are not intended to be a complete design.

Connectors shall be breakaway type.

June 26, 2013

Published Date: 2nd Qtr. 2015	SDDOT	ROADWAY LUMINAIRE POLE FIXED BASE	PLATE NUMBER 635.16 Sheet 1 of 1

HDR

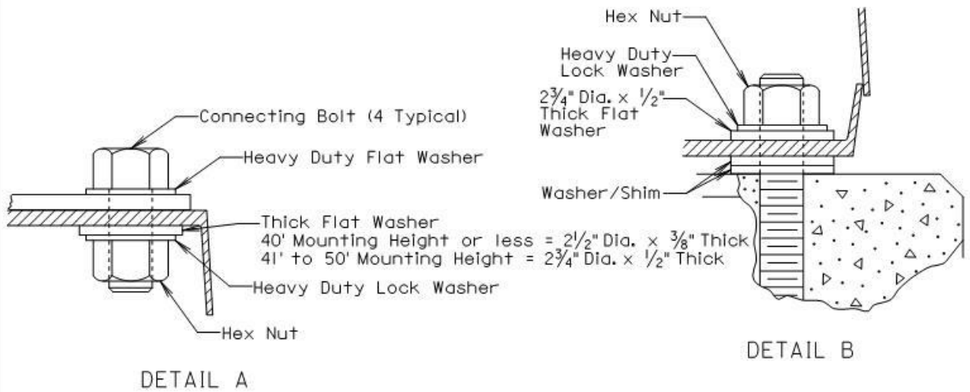

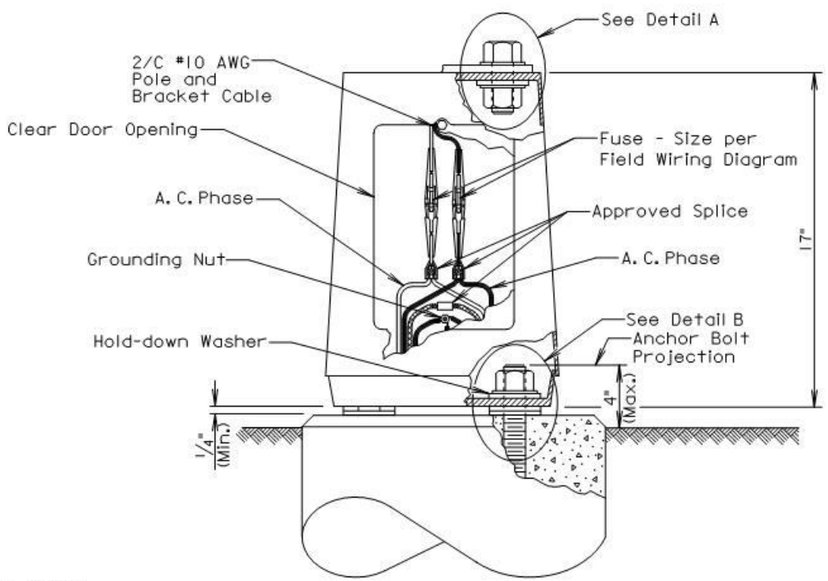

GENERAL NOTES:

Base details are provided for example only and are not intended to be a complete design.

Connectors shall be breakaway type.

The Contractor shall install "U" shaped shims or round flat washers if shimming is necessary to install the light poles plumb and level. The washers and shims shall be installed around the anchor bolts.

June 26, 2013

Published Date: 2nd Qtr. 2015	SDDOT	ROADWAY LUMINAIRE POLE BREAKAWAY TRANSFORMER BASE	PLATE NUMBER 635.21 Sheet 1 of 1

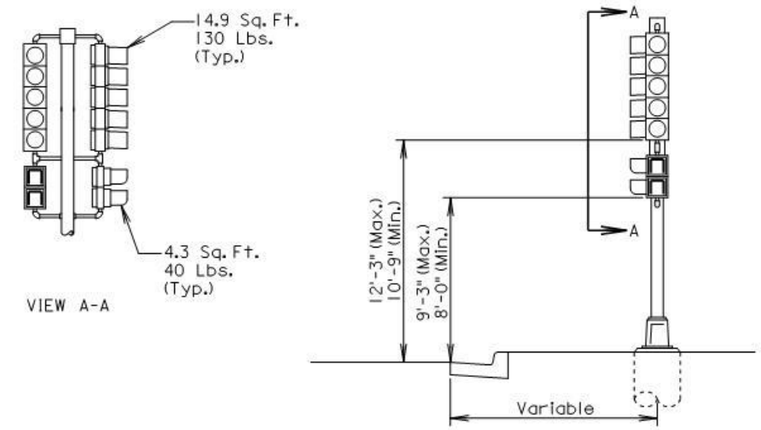

GENERAL NOTE:

The signal heads are shown with backplates removed so that the mounting hardware is visible.

October 15, 2007

Published Date: 2nd Qtr. 2015	SDDOT	SIGNAL POLE (PEDESTAL)	PLATE NUMBER 635.30 Sheet 1 of 1

HDR

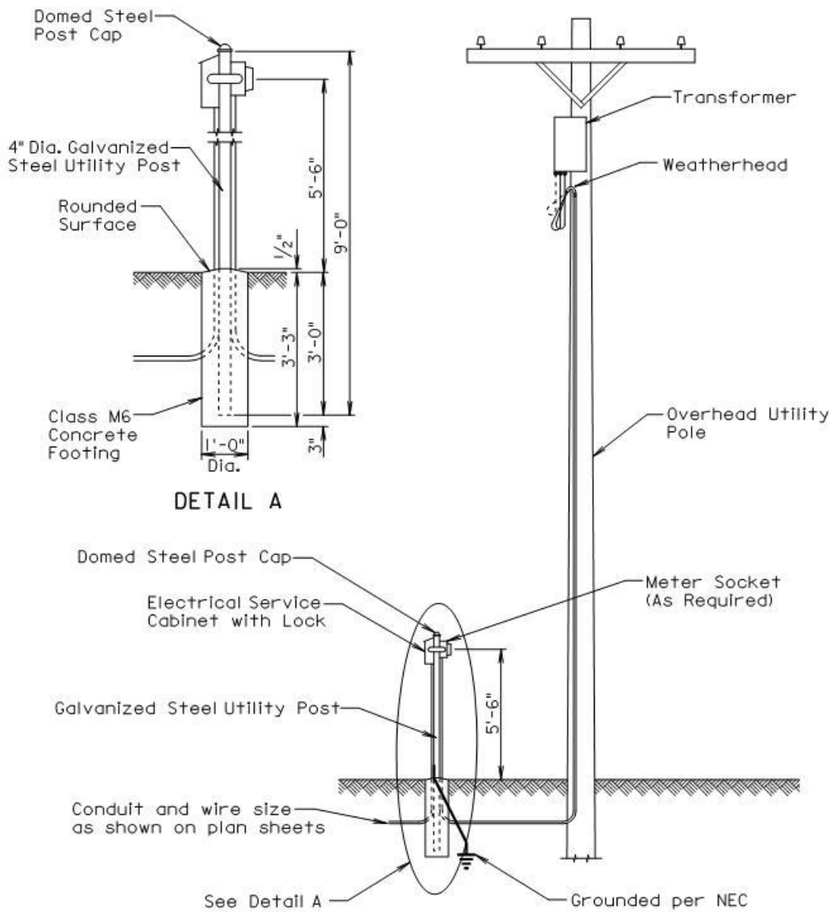

ELEVATION

GENERAL NOTES:

The concrete for the post footing shall be class M6 concrete.

The 4" diameter galvanized steel utility post shall be 9' long and shall be in conformance with AASHTO Standard Specifications M181. The post shall be Type I and either Grade I or Grade 2. The domed steel post cap shall be in conformance with AASHTO Standard Specifications M181 and shall be Type I.

The Contractor shall contact and coordinate his/her work with the Utility Companies regarding hookup requirements, fees, materials, and equipment necessary.

All costs for furnishing and installing all materials from the electrical service cabinet to the transformer including labor, equipment, hookup fees, all items within the cabinet, post, concrete footing, post cap, meter socket if required, conduit, and incidentals shall be incidental to the contract unit price per each for "Electrical Service Cabinet".

June 26, 2006

Published Date: 2nd Qtr. 2015	SDDOT	GALVANIZED STEEL UTILITY POST WITH OVERHEAD UTILITY POLE	PLATE NUMBER 635.35 Sheet 1 of 1

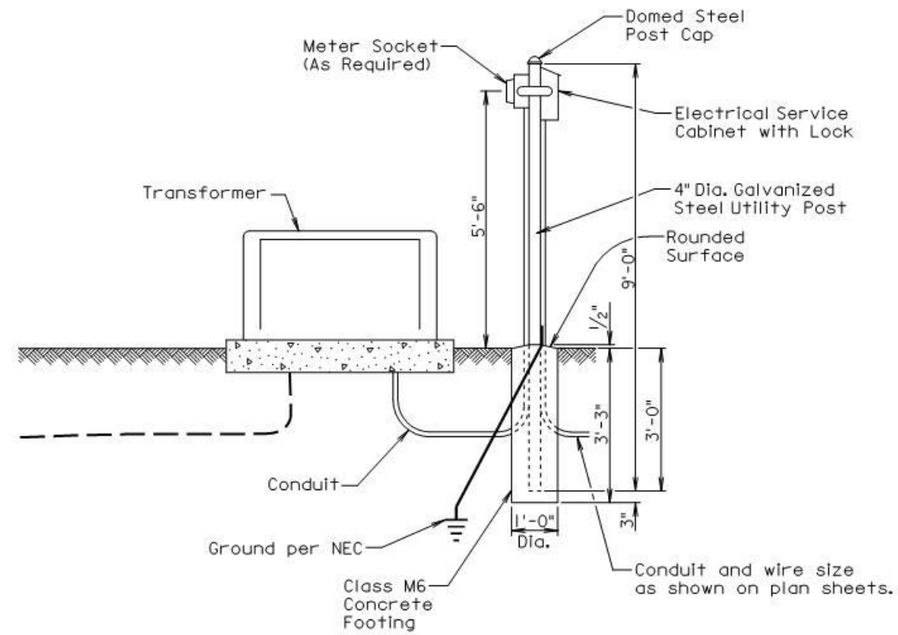

ELEVATION

GENERAL NOTES:

The concrete for the post footing shall be class M6 concrete.

The 4" diameter galvanized steel utility post shall be 9' long and shall be in conformance with AASHTO Standard Specifications M181. The post shall be Type I and either Grade I or Grade 2. The domed steel post cap shall be in conformance with AASHTO Standard Specifications M181 and shall be Type I.

The Contractor shall contact and coordinate his/her work with the Utility Companies regarding hookup requirements, fees, materials, and equipment necessary.

All costs for furnishing and installing all materials from the electrical service cabinet to the transformer including labor, equipment, hookup fees, all items within the cabinet, post, concrete footing, post cap, meter socket if required, conduit, and incidentals shall be incidental to the contract unit price per each for "Electrical Service Cabinet".

June 26, 2006

Published Date: 2nd Qtr. 2015	SDDOT	SERVICE FROM PAD MOUNTED TRANSFORMER WITH METER ON A GALVANIZED STEEL UTILITY POST	PLATE NUMBER 635.41 Sheet 1 of 1

HDR

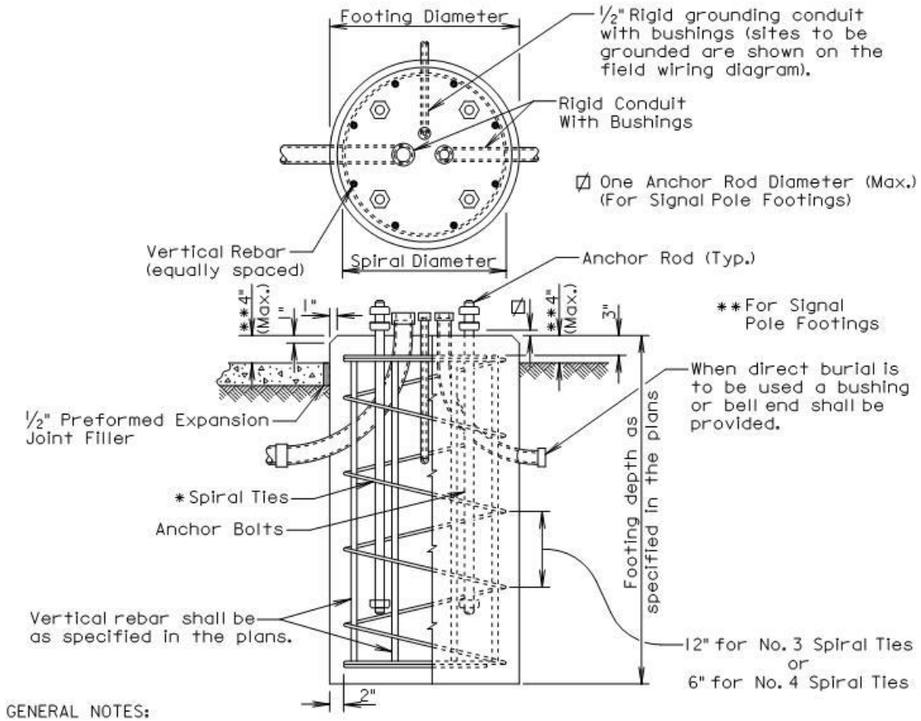

GENERAL NOTES:

* The tie sizes are specified in the plans. Circular ties may be used in lieu of the spiral ties. The No. 3 ties shall be spaced 12 inches apart except for the top two which shall be spaced 6 inches apart. The No. 4 ties shall be spaced 6 inches apart except for the top two which shall be spaced 3 inches apart. The ties shall be lapped 18 inches and the laps shall be staggered around the cage.

Spiral ties shall have 1-1/2 extra turns at each end.

See section 985 of the Standard Specifications for footing materials.

Conduits and bushings may project 2½ inches to 6 inches above footing for fixed base poles but shall not project above the slip plane or fracture plane for breakaway poles.

Conduits shall be sealed water-tight during all phases of construction until poles are in place.

The anchor rods shall fit inside the reinforcing steel cage. If the anchor rods designed by the Pole Manufacturer do not fit, contact the Office of Bridge Design for footing redesign. No additional payment will be made for the redesigned footing.

Costs of conduit and conduit bushings shown on footing detail shall be incidental to the footing bid item(s).

The pole shall not be installed until the concrete has attained design strength (4000 psi).

The contour of the area surrounding the breakaway pole shall be flat, though not necessarily level for a distance of 5 feet in all directions. The Contractor may be required to provide finish grading at some breakaway pole locations.

September 6, 2013

Published Date: 2nd Qtr. 2015	SDDOT	POLE FOOTING	PLATE NUMBER 635.55 Sheet 1 of 1

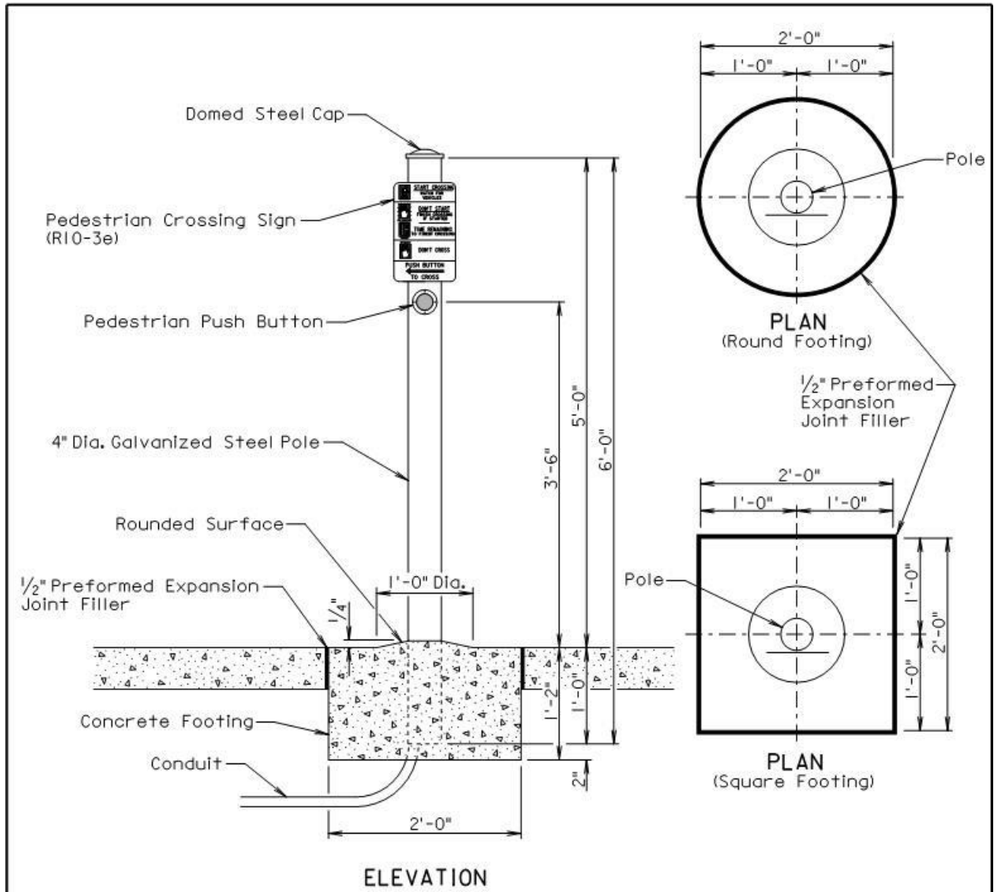

GENERAL NOTES:

The Contractor shall install either the round or the square concrete footing. For informational purpose, the quantity of concrete for one footing is 0.14 cubic yards for the round footing and 0.17 cubic yards for the square footing.

The concrete for the footing shall be class M6 concrete.

The 4" diameter galvanized steel pole shall be 6' long and shall be in conformance with AASHTO Standard Specifications M181. The pole shall be Type 1 and either Grade 1 or Grade 2. The domed steel pole cap shall be in conformance with AASHTO Standard Specifications M181 and shall be Type 1.

All costs for furnishing and installing the pedestrian push button pole including labor, equipment, and materials including the pole, concrete footing, steel cap, and the conduit in the footing shall be incidental to the contract unit price per each for "Pedestrian Push Button Pole".

February 14, 2010

Published Date: 2nd Qtr. 2015	SDDOT	PEDESTRIAN PUSH BUTTON POLE	PLATE NUMBER 635.57 Sheet 1 of 1

HDR

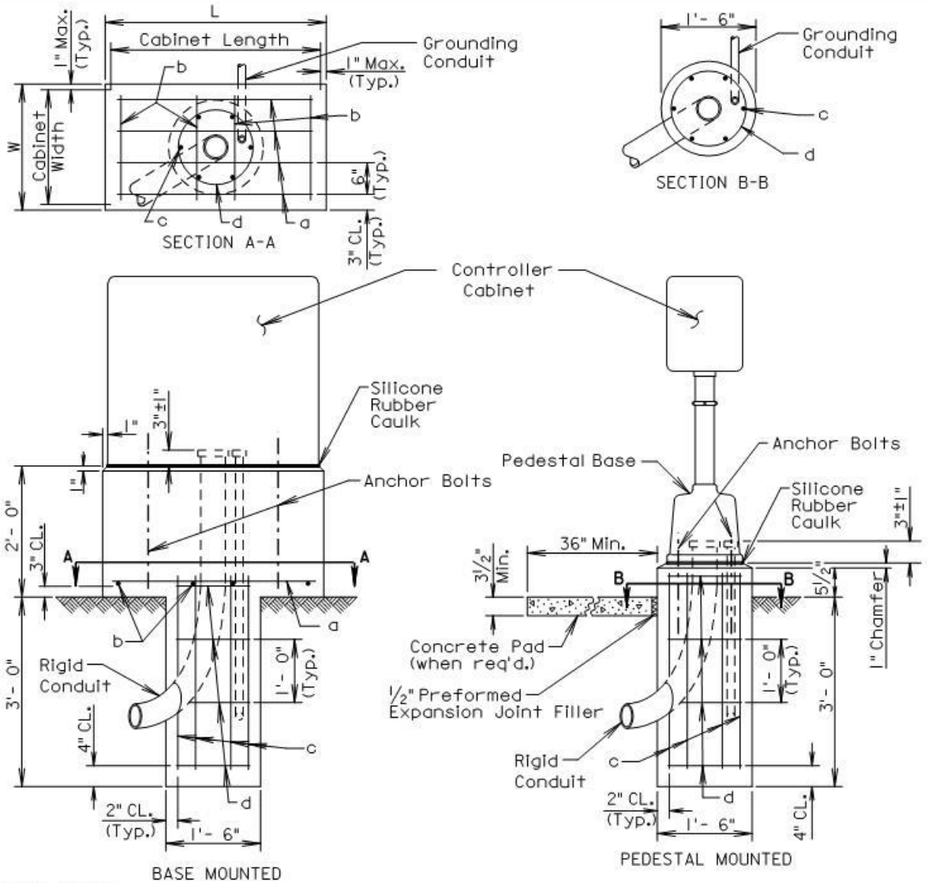

GENERAL NOTES:

The above ground portion of the footing shall conform to the base of the controller to the satisfaction of the Engineer.

Conduits shall be sealed and water-tight until the conductor cables are installed.

If the controller is not located within or adjacent to an existing sidewalk, the Contractor shall provide a concrete pad as directed by the Engineer.

Anchor bolts and related hardware shall conform to the controller manufacturer's requirements and recommendations.

A continuous bead of silicone rubber caulk shall provide a weather-tight seal between the base and the concrete.

Reinforcing Schedule (for one footing)

Mk.	No.	Size	Length	Type	Bending Detail
a	*	3	L - 4"	Str.	
b	*	3	W - 4"	Str.	
c	6	6	3'- 0"	Str.	
d	4	3	4'- 0"	T3	Type T3

Note: Dimensions are out to out of bar

* Vary number of bars as required by footing size.

March 31, 2000

Published Date: 2nd Qtr. 2015	SDDOT	CONTROLLER CABINET AND FOOTING	PLATE NUMBER 635.60 Sheet 1 of 1

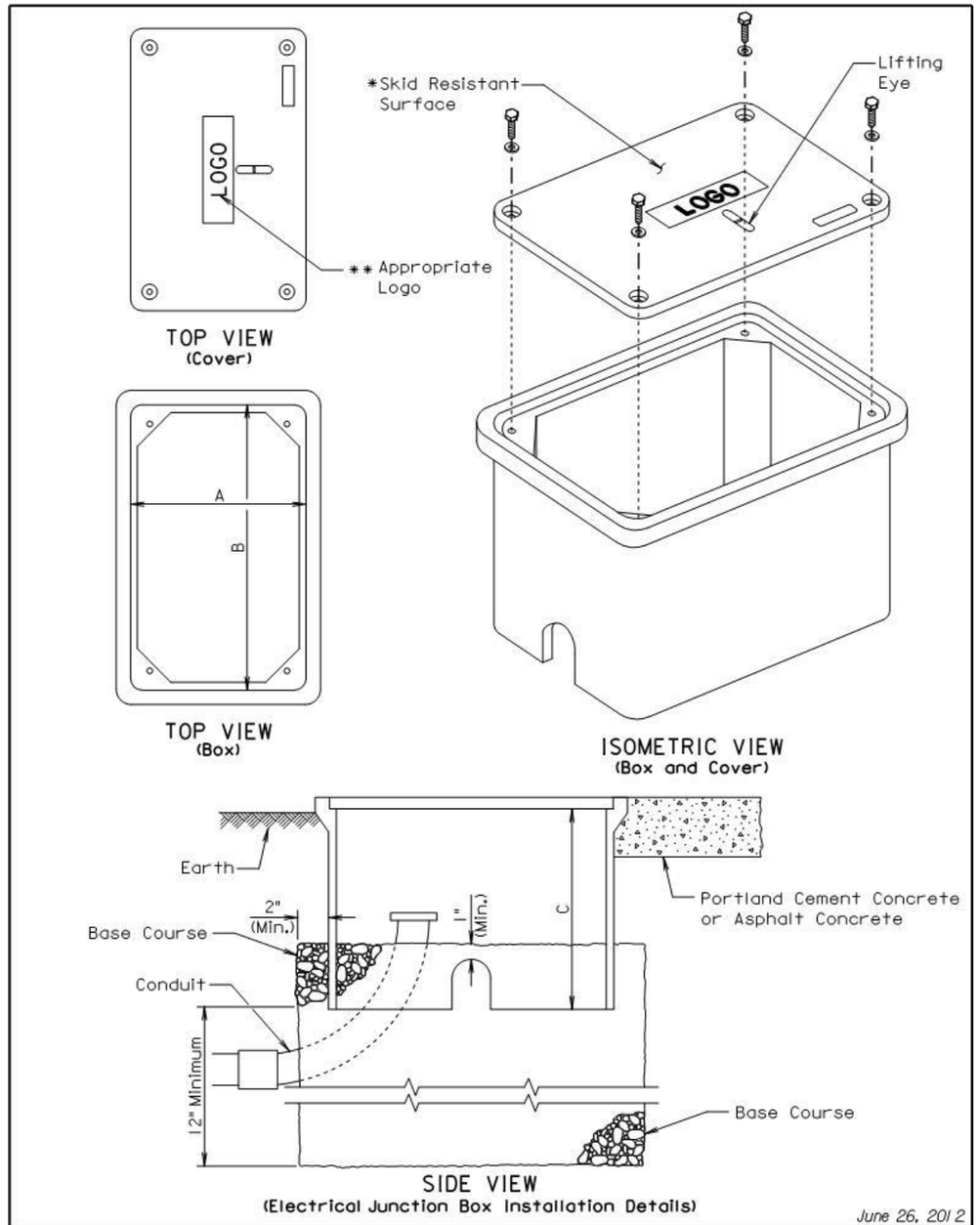

June 26, 2012

Published Date: 2nd Qtr. 2015	SDDOT	ELECTRICAL JUNCTION BOXES TYPE 1 THROUGH TYPE 4	PLATE NUMBER 635.65 Sheet 1 of 2

ELECTRICAL JUNCTION BOX

TYPE	DESCRIPTION	DIMENSIONS		
		A	B	C
1	Open Bottom with Gasket	11"-15"	18"-21"	18" (Min.)
2	Open Bottom with Gasket	13"-18"	23"-28"	18" (Min.)
3	Open Bottom with Gasket	17"-22"	24"-30"	18" (Min.)
4	Open Bottom with Gasket	28"-33"	36"-48"	24" (Min.)

GENERAL NOTES:

The cover shall be gasketed with a minimum of two stainless steel bolts and washers.

The cover shall have a lifting eye.

* The surface of the cover shall have a minimum wet and dry coefficient of friction value of 0.5 as determined by ASTM F 609.

** The cover of the junction box shall have the appropriate logo in one inch size letters and shall be recessed. When the junction box contains cables or wires for a traffic signal then the logo shall be "Signal". When the junction box contains lighting conductors then the logo shall be "Lighting".

The electrical junction boxes shall comply with the American National Standards Institute (ANSI)/Society of Cable Telecommunications Engineers (SCTE) 77 2007 Specification for Underground Enclosure Integrity. The loading requirement for all the electrical junction boxes shall be Tier 8 of ANSI/SCTE 77 2007.

The electrical junction boxes shall be UL listed.

June 26, 2012

Published Date: 2nd Qtr. 2015	SDDOT	ELECTRICAL JUNCTION BOXES TYPE 1 THROUGH TYPE 4	PLATE NUMBER 635.65 Sheet 2 of 2

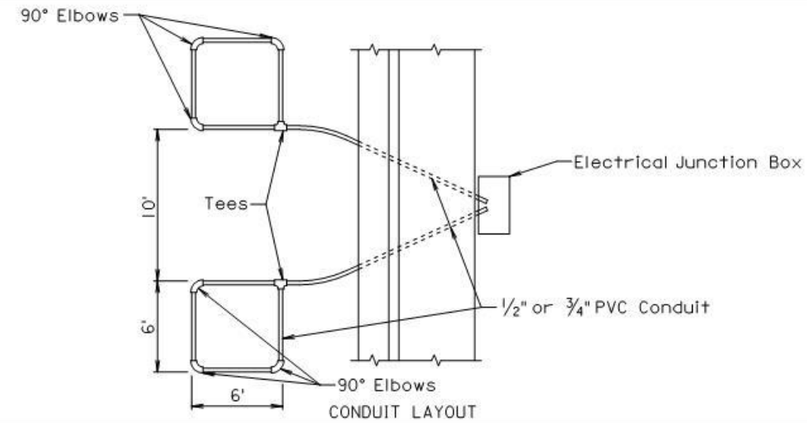

CONDUIT LAYOUT

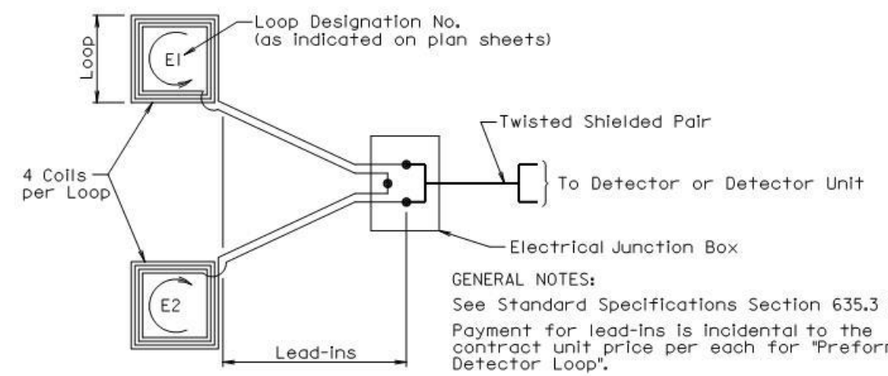

GENERAL NOTES:

See Standard Specifications Section 635.3 O.

Payment for lead-ins is incidental to the contract unit price per each for "Preformed Detector Loop".

WIRING DIAGRAM

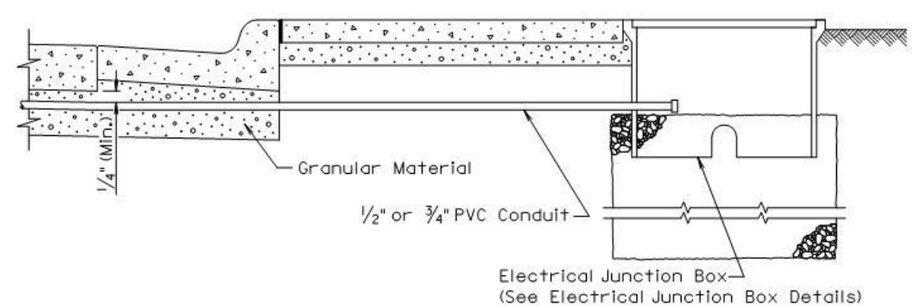

LEAD-IN DETAIL

February 14, 2011

Published Date: 2nd Qtr. 2015	SDDOT	PREFORMED DETECTOR LOOP	PLATE NUMBER 635.70 Sheet 1 of 1

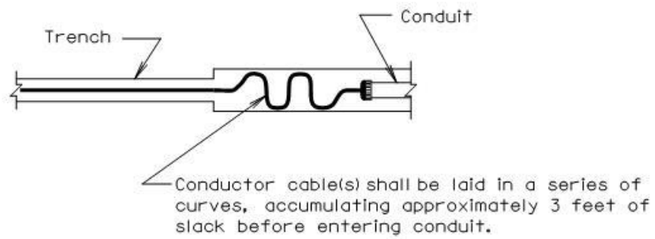

PLAN VIEW

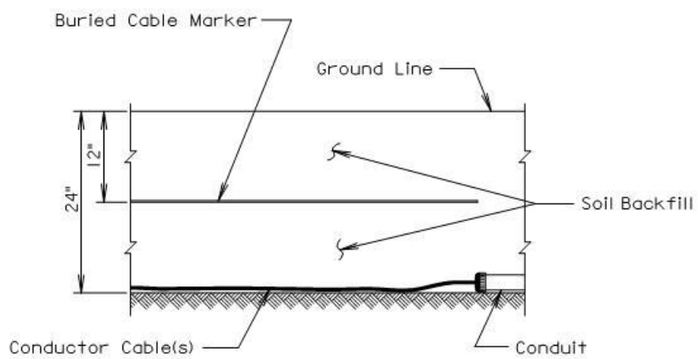

SECTION VIEW

GENERAL NOTE:

The Buried Cable Marker shall be plastic, approximately 6" wide, and shall be capable of sustaining a minimum of a 350% tolerance of elongation without tearing. The Buried Cable Marker shall have a life expectancy approximately equal to that of the conductor(s) beneath it. A phrase indicating the presence of a buried electric circuit below shall be printed in a contrasting color on the cable marker. The Buried Cable Marker shall be subject to approval by the Engineer. All costs associated with furnishing and installing the Buried Cable Marker shall be incidental to the contract unit price per Foot for the bid item used for the electrical conductor.

March 31, 2000

Published Date: 2nd Qtr. 2015	SDDOT	DIRECT BURIAL INSTALLATION OF CONDUCTOR CABLE(S)	PLATE NUMBER 635.75 Sheet 1 of 1

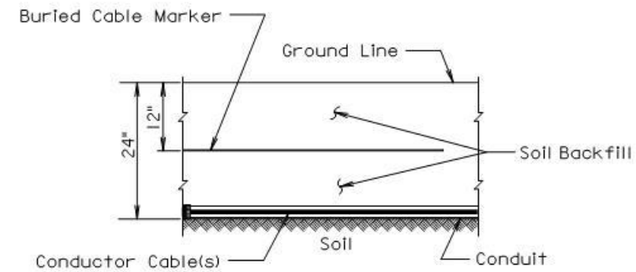

SECTION VIEW

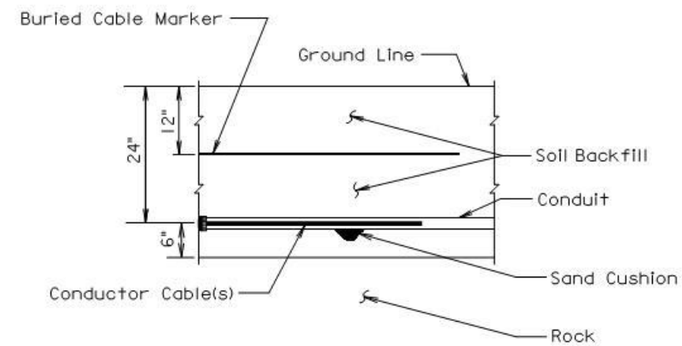

SECTION VIEW

GENERAL NOTE:

The Buried Cable Marker shall be plastic, approximately 6" wide, and shall be capable of sustaining a minimum of a 350% tolerance of elongation without tearing. The Buried Cable Marker shall have a life expectancy approximately equal to that of the conductor(s) beneath it. A phrase indicating the presence of a buried electric circuit below shall be printed in a contrasting color on the cable marker. The Buried Cable Marker shall be subject to approval by the Engineer. All costs associated with furnishing and installing the Buried Cable Marker shall be incidental to the contract unit price per Foot for the bid item used for the electrical conductor.

March 31, 2000

Published Date: 2nd Qtr. 2015	SDDOT	CONDUIT INSTALLATION	PLATE NUMBER 635.76 Sheet 1 of 1

HDR

Step 1. Strip loop wires and lead-in cable.

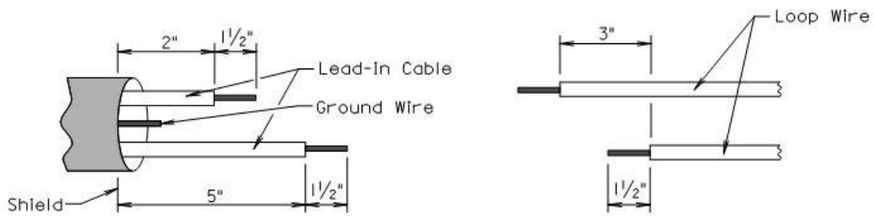

Step 2. Connect and solder.

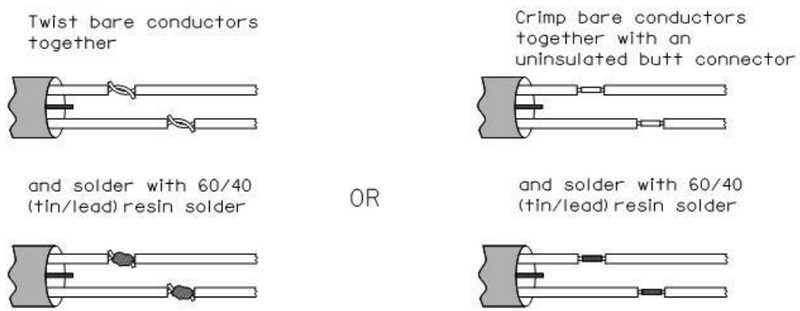

Step 3. Insulate each solder joint seperately.

Step 4. Environmentally seal total splice against weather, moisture and abrasion. Methods for environmentally sealing the splice include heat-shrinkable tubing, special sealing kits, special forms to be filled by sealant, and tape and coating.

June 20, 2000

Published Date: 2nd Qtr. 2015 | SDDOT | DETECTOR LOOP WIRE SPLICING | PLATE NUMBER 635.77 | Sheet 1 of 1

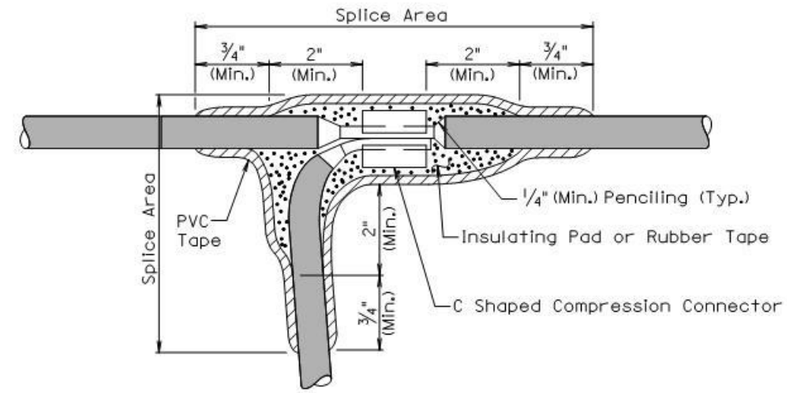

TYPE C SPLICE
(Between 1 free end and 1 through conductor)

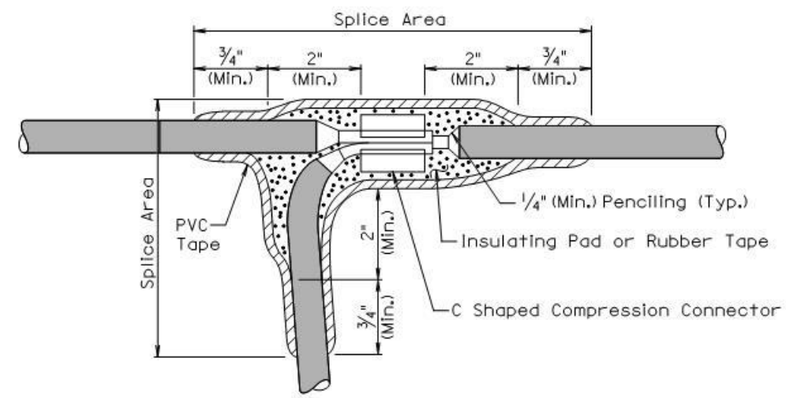

TYPE T SPLICE
(For 3 free ends)

February 14, 2010

Published Date: 2nd Qtr. 2015 | SDDOT | WIRE SPLICING FOR LIGHTING (LOW VOLTAGE CIRCUITS (0 to 600 V)) | PLATE NUMBER 635.80 | Sheet 1 of 2

HDR

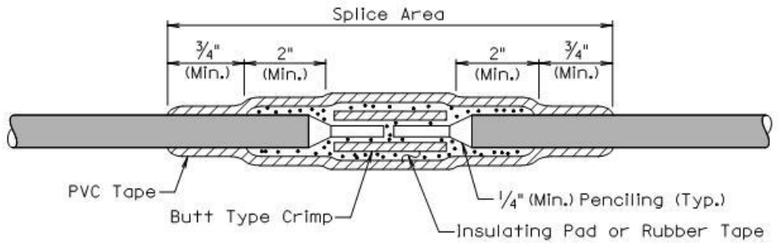

TYPE S SPLICE
(Between 2 free ends)

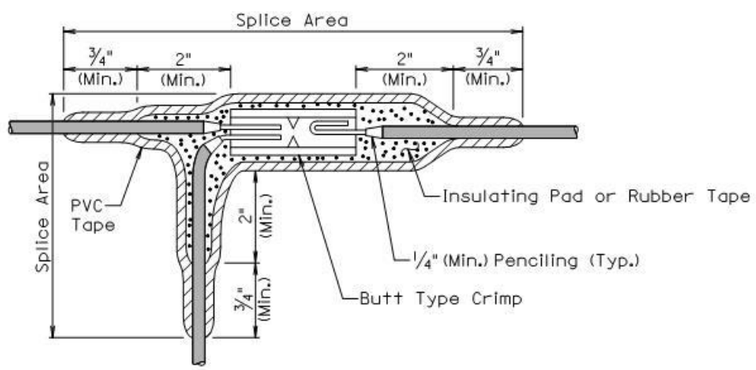

TYPE ST SPLICE
(For 3 free ends)

GENERAL NOTES:

The splice shall be environmentally sealed for protection from weather, moisture, and abrasion in accordance with the method stated below.

The rubber tapes shall be rolled after application.

Method for insulating splice area:

1. The splice area shall be completely covered with electrical insulating coating and dried.
2. Apply two layers of 1/8" minimum thickness electrical insulating pad or two layers of half lapped synthetic oil resistant self fusing rubber tape.
3. Three layers of half lapped polyvinyl chloride tape shall be applied.
4. The entire splice area shall be covered with electrical insulating coating and dried.

February 14, 2010

Published Date: 2nd Qtr. 2015	SDDOT	WIRE SPLICING FOR LIGHTING (LOW VOLTAGE CIRCUITS (0 to 600 V))	PLATE NUMBER 635.80
			Sheet 2 of 2

GENERAL NOTES:

Tree Trimming shall be done in accordance with proper tree trimming practices. The underside of each branch to be removed shall have a groove sawed through the bark (1/2" Min. depth) before any sawing is started on the top side of the branch.

Tree trimming shall be applied around each light source installed within the limits of the project.

The tree trimming limits as shown on this sheet represents the minimum amount of trimming required. Additional tree trimming required shall be as directed by the Engineer. The City shall maintain the limits of tree trimming once a year.

All foliage and branches shall be removed from the limits defined below by the Completion Date of the project.

Costs for Tree Trimming for Roadway Lighting shall be incidental to the various contract bid items.

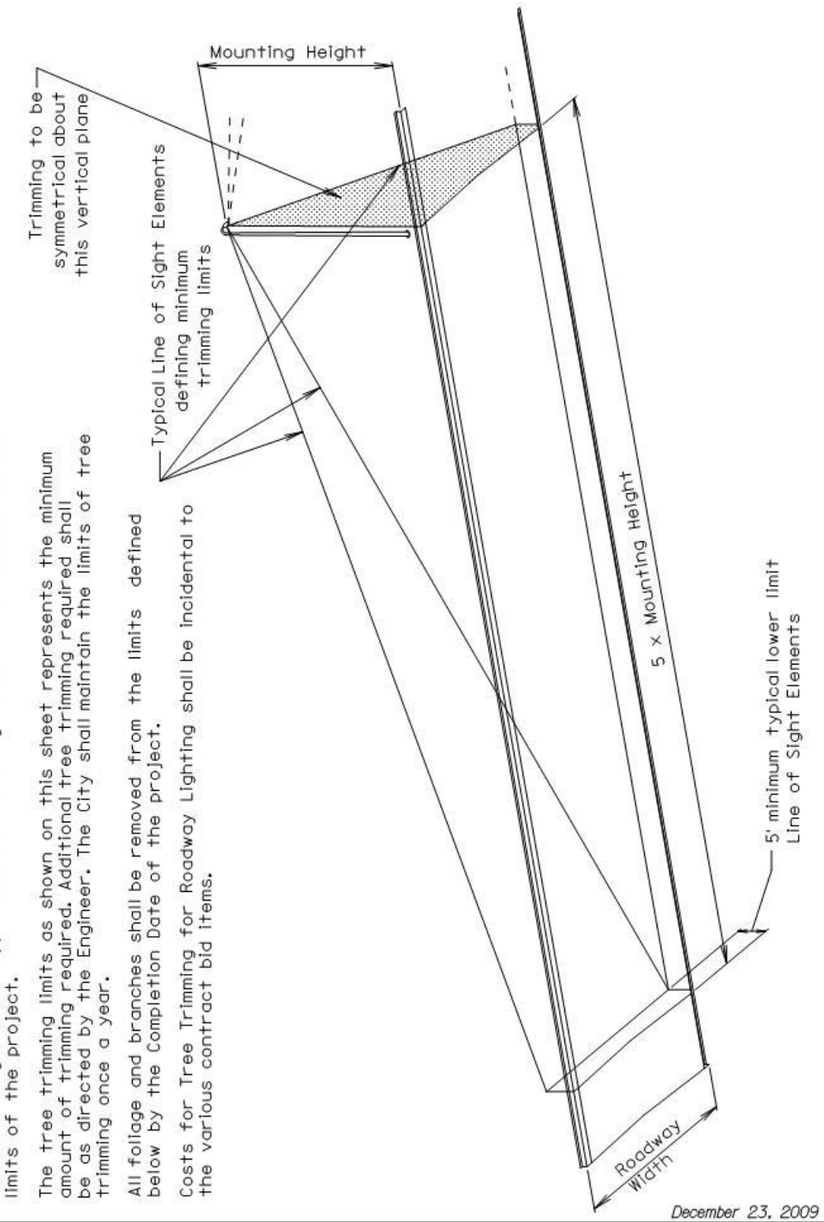

December 23, 2009

Published Date: 2nd Qtr. 2015	SDDOT	TREE TRIMMING FOR ROADWAY LIGHTING	PLATE NUMBER 635.99
			Sheet 1 of 1

HDR