FOR BIDDING PURPOSES ONLY

Section S: Permanent Signing Plans

INDEX OF SHEETS

S1	General Layout w/ Index
S2-S4	Estimate of Quantities and General Notes
S5-S7	Table of Existing Signing
S8-S17	Table of Permanent Signing
SS18-S23	Existing Signing Layouts
S24-S37	Proposed Signing Layouts
S38-S51	Standard Details
S52-S56	Sign Panel Details
S57-S59	Sign Cross Sections

END IM 1902(61)0
INTERSTATE 190
Station 155+33.00
14.87 Feet East & 4265.99 Feet North
of the East Quarter of Section 35 -
Township 2 North, Range 7 East

INTERSTATE 190
Station 154+00.00 - End Resurfacing

Sec. 26-T2N-R7E
Sec. 35-T2N-R7E

INTERSTATE 190
Station 149+60.00 - End Grading, Begin Resurfacing

END IM 1902(61)0
WEST BLVD.
Station 26+75.28 - End Grading

BEGIN IM 1902(61)0
WEST BLVD.
Station 10+24.43 - Begin Grading

BEGIN IM 1902(61)0
NORTH ST.
Station 209+01.71 - Begin Grading

BEGIN IM 1902(61)0
INTERSTATE 190
Station 100+20.00 = Station 70+19.00
on I 091-1(01). 465.08 Feet West & 1215.86
Feet South of the East Quarter of Section 35 -
Township 2 North, Range 7 East
MRM = 0.12

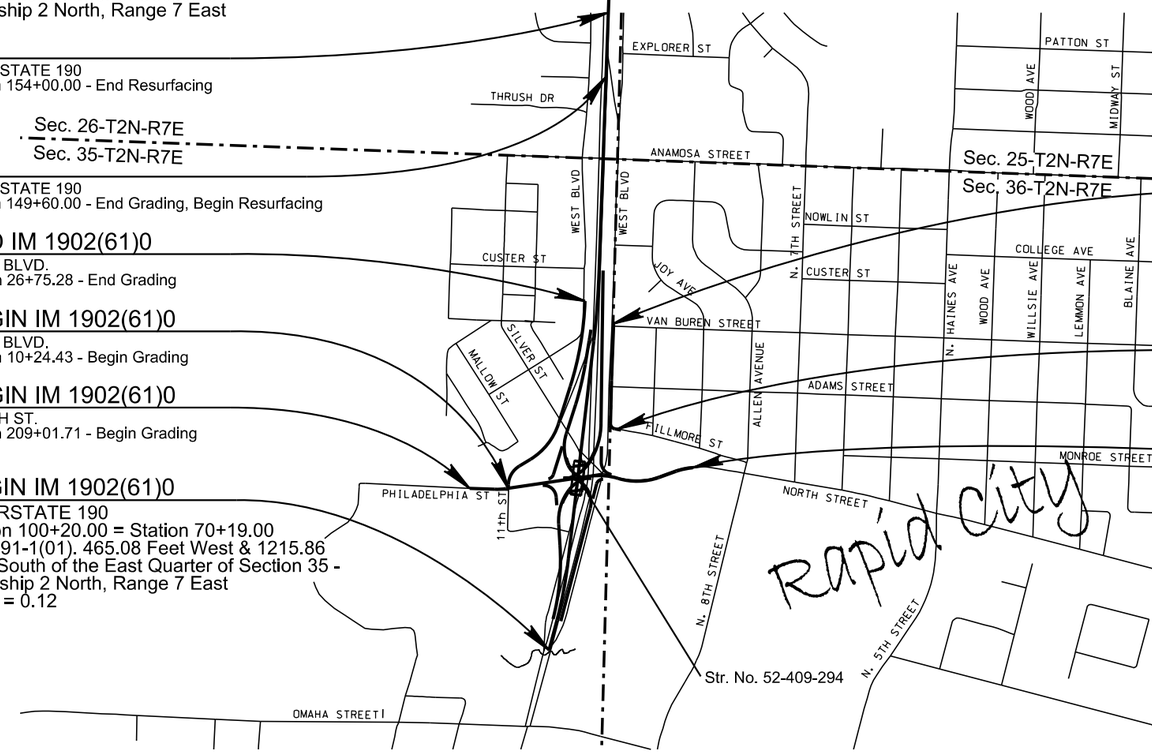

END IM 1902(61)0
WEST BLVD. NORTH
Station 58+65.61 - End Grading

BEGIN IM 1902(61)0
WEST BLVD. NORTH
50+24.42 - Begin Grading

END IM 1902(61)0
NORTH ST.
Station 224+72.00 - End Grading

REGISTERED PROFESSIONAL ENGINEER
REG. NO. 8328
JODY W. PAGE
SOUTH DAKOTA
7 MAY 2015

HDR

SECTION S ESTIMATE OF QUANTITIES

Bid Item Number	Item	Quantity	Unit
110E0100	Remove Concrete Footing(s)	Lump Sum	LS
110E0135	Remove Delineator	14	Each
110E5020	Salvage Traffic Sign	152	Each
110E5030	Salvage Extruded Panel Sign	14	Each
632E0010	1.25' Diameter Breakaway Support Concrete Footing	196.0	Ft
632E0014	1.75' Diameter Breakaway Support Concrete Footing	10.0	Ft
632E0058	2.25' Diameter Fixed Support Concrete Footing	176.0	Ft
632E0060	2.5' Diameter Fixed Support Concrete Footing	4.0	Ft
632E1210	S3x5.7 Steel Post	22.0	Ft
632E1225	W6x12 Steel Post	27.4	Ft
632E1320	2.0"x2.0" Perforated Tube Post	397.5	Ft
632E1340	2.5"x2.5" Perforated Tube Post	775.5	Ft
632E2004	4"x8" Amber Delineator with 1.12 Lb/Ft Post	16	Each
632E2024	4"x8" White Delineator with 1.12 Lb/Ft Post	67	Each
632E2207	4" Tubular White Delineator Reflector	20	Each
632E2520	Type 2 Object Marker	2	Each
632E3103	Extruded Aluminum Sign, Removable Copy High Intensity	691.5	SqFt
632E3203	Flat Aluminum Sign, Nonremovable Copy High Intensity	165.5	SqFt
632E3205	Flat Aluminum Sign, Nonremovable Copy Super/Very High Intensity	574.8	SqFt
632E3520	Remove, Salvage, Relocate, and Reset Traffic Sign	11	Each
632E5020	Overhead Cantilever Sign Support	1	Each
632E5055	Mast Arm Sign Support	2	Each

RAMPS DELINEATION TABLE

STATION	SPACING	QUANTITY (EACH)			
		4"x8"		TYPE 2 OM	TUBULAR
		YELLOW	WHITE	YELLOW	WHITE
		632E2004	632E2024	632E2520	632E2207
EXIT 1C I-190 TO RAMP B MAINLINE					
105+82 TO 107+85	50'	4		1	
100+00 TO 105+82	100'		3		
EXIT 1C I-190 TO RAMP B					
400+00 TO 410+43	100'	4	11		3
RAMP A TO I-190					
302+06 TO 317+90	100		16		5
RAMP A TO I-190 MAINLINE					
131+35 TO 137+41	100		7		
RAMP C TO I-190					
600+75 TO 610+54	100		10		6
RAMP C TO I-190 MAINLINE					
100+00 TO 102+25	100		3		
EXIT 1C I-190 TO RAMP D MAINLINE					
126+20 TO 131+30	100		5		
120+48 TO 122+61	50	4		1	
EXIT 1C I-190 TO RAMP D					
701+75 TO 712+90	100	4	12		6
TOTALS		16	67	2	20

SPECIFIC BUSINESS LOGO PANELS

New business signs shall be furnished by the business owner and installed by the Contractor. The Contractor will not furnish the business signs.

On new business signs, rivets shall be spaced on 9" + 1" centers. Rivets shall be placed 1/4" to 1/2" from the edges of the sign. Interior rivets are also required on the sign face. The interior rivets shall be measured from the edge of the sign as follows:

Sign Size	Vertical Spacing	Horizontal Spacing
48"x36"	1' ±	1' ±
60"x36"	1' ±	1'-8" ±

Interior rivets are not required for business signs 30"x 18" or less in size.

The business signs shall be positioned on the logo sign panels as detailed in these plans. Business signs smaller than indicated above shall be centered horizontally and top justified within the above sizes, and the rivet positions adjusted accordingly. Business signs shall be attached to the extruded aluminum panels with rivets, beginning along the top of the business sign. Business sign mounting holes should be marked on the new extruded aluminum panels, and 11/64" holes drilled in the new panels. Aluminum shavings shall be removed and the logo panel surface shall be clean and free of defects prior to installing the business signs.

Any business signs damaged, destroyed or lost by the Contractor shall be replaced by the business owner at the Contractor's expense. On new logo sign panels, business signs are considered removable copy, and costs to remove, stockpile, and reinstall business signs, or install new business signs, shall be incidental to the contract unit price per square foot for Extruded Aluminum Sign, Removable Copy High Intensity.

SCOPE OF PERMANENT SIGN WORK

The permanent sign work includes, but is not limited to, the following:

A. Items to be removed by the Contractor:
1. Existing permanent signs.
2. Existing fixed and breakaway sign posts, including sign bridges.
3. Fixed and breakaway concrete sign footings.

B. Items to be furnished and installed by the Contractor:
1. Breakaway and fixed steel post sign supports with concrete footings.
2. Breakaway wood and steel post sign supports.
3. Flat sheet aluminum signs.
4. Extruded aluminum signs, removable legend, side trim moldings and border.
5. Delineators and object markers.

REGISTERED PROFESSIONAL ENGINEER
REG. NO. 8328
JODY W. PAGE
SOUTH DAKOTA
7 MAY 2015

TWO POST FIXED SIGN SUPPORT TABLE

SIGN NUMBER	SIGN DESCRIPTION	SITE LOCATION	POST SIZE	FOOTING DIMENSIONS		POST BASE PLATE DIMENSIONS			ANCHOR BOLT SIZE			LONGITUDINAL STEEL		SPIRAL STEEL	
											MINIMUM				
				DIA.	DEPTH	A	E	THICK.	DIA.	LENGTH	EMBEDMENT	QTY-SIZE	LENGTH	DIA.	LENGTH
SB-103	EXIT 1C / NORTH ST / CIVIC CENTER	I-190 SB	W6x12	1'-9"	5'-0"	13"	13"	3/4"	1"	33"	20"	8 - #7 Bars	3'-8"	1'-8"	33'-9"

REMOVAL AND SALVAGE OF EXISTING SIGNS

1. Removal and Salvage of Existing Signs:

The Contractor shall remove and salvage the existing signs listed in the Sign Removal Tables. Stationing shown is approximate. The signs are extruded aluminum signs with removable copy legend or a 0.063" aluminum overlay riveted to extruded aluminum panels, or flat aluminum signs with nonremovable copy.

Extruded Aluminum Panel Signs

The Contractor shall securely support the sign and remove the clips holding the extruded aluminum sign to the supports. The aluminum overlay and extruded aluminum panels shall be removed and handled as one unit. All salvaged signs that are not immediately relocated and reset shall be neatly stockpiled, so they are not damaged.

Flat Aluminum Signs

For single post sign assemblies, the Contractor may remove and salvage the flat aluminum sign(s), post, and footing (if present), as one unit. For multiple post assemblies, the Contractor shall remove the sign(s) first, and remove the posts and footings (if present), separately.

2. Miscellaneous Sign Related Items:

The existing footings for fixed base sign posts shall be removed entirely or broken down a minimum of 1 foot below the surface of the final grade at topsoil elevation.

The Contractor shall separate signs from supports prior to stockpiling. Salvaged signs shall be neatly stockpiled. Salvaged galvanized steel posts shall be adequately labeled with the Station from which they were removed, and neatly stockpiled. Salvaged mounting hardware shall be returned to the SDDOT.

Salvaged posts, signs, sign materials, overlays, delineators and object markers shall become the property of the State and shall be removed, hauled and neatly stacked at the Department of Transportation Rapid City Area South Maintenance Yard as approved by the Engineer. Bob Smith (605-381-7174) shall be contacted by the Contractor prior to taking salvaged items to the DOT yard.

Extruded aluminum sign panels, sign overlays, sign sheeting or posts damaged due to improper handling shall be replaced in-kind at the Contractor's expense.

All nuts, bolts, and miscellaneous mounting hardware salvaged from existing signs shall not be reused.

3. Payment for Sign Related Work:

The cost for removal and salvage of extruded aluminum panel sign assemblies, including posts, overhead mounted signs, miscellaneous hardware, landscaping and reseeding, shall be incidental to the contract unit price per each for Salvage Extruded Panel Sign.

Cost to break down or remove existing extruded panel sign concrete footings shall be incidental to the contract lump sum price for Remove Concrete Footing(s).

REMOVAL AND SALVAGE OF EXISTING SIGNS (CONT)

The cost for removal and salvage flat aluminum sign assemblies, including posts and footings, utility or light pole mounted signs, overhead mounted signs, miscellaneous hardware, landscaping and reseeding, shall be incidental to the contract unit price per each for Salvage Traffic Sign.

The cost for removal and salvage of delineators, object markers, and posts shall be incidental to the contract unit price per Each for Remove Delineator.

GUARDRAIL DELINEATION

The Contractor shall furnish and install guardrail delineation for wood post w-beam and steel post cable guardrail. See Section B for quantities and payment information.

TYPE 2 OBJECT MARKERS

Cost for yellow 8"x 24" Type 2 Object Marker with 2.0 lb/ft post shall be incidental to the contract unit price per each for Type 2 Object Marker.

SIGN AND SUPPORT SHOP DRAWINGS

The Contractor shall provide sign and support shop drawings to the Engineer for review by the Rapid City Region Traffic Office and Bridge Design Office, prior to fabrication. Adobe PDF electronic files are preferred.

CONDUIT INSTALLATION

The Contractor shall not use a machine requiring flowing water for installation of conduit under streets or roadways unless specifically permitted by the Engineer.

UTILITIES

The Contractor shall be responsible for contacting utility companies for locating service. Underground utilities may be in place near some sign locations.

SIGN POSTS

The plan post lengths shall be field verified by the Contractor prior to installation. Wood post and direct drive post lengths listed in the Post Sizes and Quantities section of the Sign Installation tables include 3 or 4 ft./post buried length, and shall be cut to the proper sign height where necessary.

2", 2 ¼" and 2 ½" square perforated tube post shall be fabricated from 12 gauge or 10 gauge galvanized steel. Anchor posts shall be 4 ft in length. Two-piece anchor post systems are required for 2" and 2 ¼" square steel perforated tube post anchor stub posts. Heavy duty 7 gauge galvanized steel anchor stub posts that do not require stiffener sleeves are required for 2 ½" square steel perforated tube post non slip base post installations. Anchor wings are required for signs greater than 6 sq. ft. in total size.

The Contractor shall provide block-outs or shall core holes 6"-9" in diameter, or as specified by the Engineer, in concrete where sign posts are to be installed. The Contractor shall backfill each hole with cold mix asphalt concrete after the sign post has been installed, to the satisfaction of the Engineer.

Post length quantities for Stop signs with street signs attached include an additional 22" of length to enable the City of Rapid City to attach the street signs above the Stop and One Way signs.

Multi-directional surface mount sign bases shall be Kleen Break type or equivalent.

All breakaway sign supports shall comply with NCHRP 350 or MASH crash-worthy requirements.

Costs for sign supports shall be included in the respective contract unit price per foot for the post and footing size indicated. Costs for telescoped reinforced square steel perforated tube posts and anchor stub posts shall be incidental to the respective contract unit price per foot for the post size indicated, and are not included in the Estimate of Quantities.

SHOP DRAWING AND CATALOG CUTS SUBMITTALS

Shop plans shall be required as specified by the Specifications. In lieu of paper copies, shop plans may be submitted electronically in Adobe PDF. Send shop plan submittals to the Office of Bridge Design.

SUPPLYING AS BUILT PLANS

If the roadway signing is constructed other than what is stated in the plans, the Contractor shall supply as built plans to the Engineer.

ACCEPTANCE OF SIGN INSTALLATIONS

Final acceptance of completed signs will be considered on a sign by sign basis in accordance with Section 5.16 of the Standard Specifications.

POLE MOUNTED SIGNS

Signs that are mounted on overhead sign support poles, signal poles, or luminaire poles shall be attached with high strength stainless steel bands or galvanized pole clamps. Signs mounted on sign supports shall be installed with Astro-brac, or equivalent, formed tube sign mounting brackets and shall be attached as recommended by the manufacturer.

SIGN LEGEND, BORDER AND BACKGROUND

All sign materials shall comply with Section 982 of the Specifications.

All sign legend, border and background sheeting material shall meet or exceed standards for ASTM D 4956 classified Type IV high intensity prismatic sheeting or Type XI very high intensity microprismatic sheeting, as indicated in the plans. Removable copy sheeting material on overhead mounted signs shall meet or exceed standards for ASTM D 4956 classified Type XI very high intensity microprismatic sheeting. Sheeting material on all yellow object markers and delineation, and warning signs designated DG shall be fluorescent yellow in color and meet or exceed standards for ASTM D 4956 classified Type XI very high intensity microprismatic sheeting.

All delineator sheeting material shall meet or exceed standards for ASTM D 4956 classified Type XI super/very high intensity microprismatic sheeting.

All auxiliary signs for M1-5 State Route Marker signs shall have green borders with black legend and symbols on white background.

Adhesive copy applied directly to sheeted extruded aluminum sign panel background may be substituted for removable copy, if approved by the Engineer. Direct applied adhesive copy located on panel seams shall be neatly cut at the seams and securely adhered to the panels. Direct applied adhesive copy may not be substituted for removable copy on specific business logo panels with the two following exceptions:

Exit number legend on combination service logo signs.

Service type and exit number legend on non-combination service logo signs, including service legend on ramp signs.

All sign sheeting shall conform to AASHTO DESIGNATION:M 268.

Unless otherwise specified in the plans:

1. All upper case letters, lower case letters and all numerals shall be Series "E" Modified.

2. The border on all signs 3 feet or less in height shall be 1 inch wide. The border on all signs 4 feet or more in height shall be 2 inches wide.

3. The corner radii on all signs 3 feet or less in height shall be 3 inches. The corner radii on all signs greater than 3 feet and less than 6 feet in height shall be 6 inches. The corner radii on all signs 6 feet or more in height shall be 12 inches. The sign height, sign width, legend height and symbol sizes are specified herein.

The side trim moldings shall be painted with a color that matches the color of the sign background sheeting. The color coat shall be preceded by a zinc chromatic primer. Paints shall be approved by the Engineer prior to use.

The finish-coat color required on new Extruded Aluminum guide signs is interstate green. The finish-coat color required on new Extruded Aluminum motorist service (logo) signs is interstate blue.

CONCRETE FOOTINGS

1. Sign Footings (Class M6)

The exposed portion of fixed base concrete footings shall be formed to provide a uniform diameter section and half-inch chamfer on the grout pad as shown on the footing details. The amount of exposed concrete footings on the up-slope side of the footing shall not be greater than 3 inches as shown on the footing details.

Footings for breakaway signs shall be below ground as shown on the footing details and need not be formed.

2. Cantilever, Mast Arm Footings

New concrete footings shall be installed a minimum of 10 ft from old footings greater than 4 ft in depth that have been completely removed, or 5 ft from old footings 4 ft or less in depth that have been completely removed or have been broken down approximately 1 ft below ground level. The Contractor may adjust new footing locations to comply with the indicated minimum distances if lateral plan offset is maintained, with the approval of the Engineer.

Extreme care should be used to make certain that the footings are constructed in accordance with the plan sheets, and the finished ground line at all footings are per the details shown on the plan sheets. Disturbed areas within the grading project limits shall be seeded in accordance with Section D – Erosion Control Plans. Disturbed areas outside the grading project limits shall be seeded to the satisfaction of the Engineer. The cost of seeding outside the grading project limits shall be incidental to the contract unit price per foot for the various Concrete Footing items.

3. Shop Plans

Prior to fabrication, the Contractor shall submit shop plans to the Department for the Department's review and approval. The Contractor shall send an email with the shop plans attached as a PDF and comprehensive design calculations for the sign support structure (including anchor bolts), signed and sealed by a SD Registered Engineer to the project Engineer, the Region Traffic Engineer, and the Bridge Construction Engineer. Upon request, the project Engineer will provide the Contractor the appropriate email addresses. The Contractor shall not begin fabrication prior to the Department's review and final approval of shop plans. Within 4 weeks of receiving the initial shop plans, the Bridge Construction Engineer will send the Department's approval or one reviewed copy of the shop plans to the Contractor and submitter with changes to the design marked. The Contractor will make the necessary changes, if any, to the shop plans. The Contractor will then send the Bridge Construction Engineer and project Engineer an email with the final approved shop plans as a PDF for distribution in the Department.

DATE DETAILS

The Contractor shall furnish and affix a date decal to each new sign installed. Date decals shall be self-adhesive weather resistant stickers with removable paper backing, approximately 2" X 2" in size. The date decal shall display the last two digits of the year the sign was manufactured (as illustrated) with black numerals on a white background.

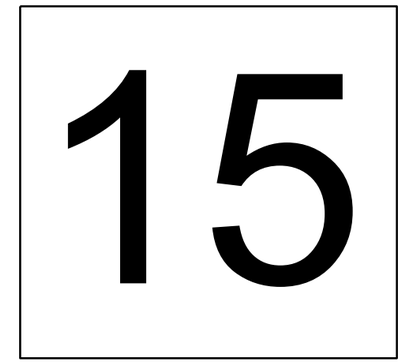

One decal shall be placed in the extreme lower left corner of the front of each extruded aluminum panel sign, or the extreme lower left corner of the back of each flat aluminum sign.

Sign supports or other obstructions shall not block the view of the date decal upon completion of the sign installation.

All costs for furnishing and installing of date decals on new signs shall be incidental to the contract unit price per square foot for Flat Aluminum Sign, Nonremovable Copy, High Intensity or Super/Very High Intensity.

REGISTERED PROFESSIONAL ENGINEER
REG. NO. 8328
RODY W. PAGE
SOUTH DAKOTA
3 JUN 15

Plot Scale - 1:200
Plotted From - afageme
File - ...\Design\Section_S\Notes_03.dgn

SIGN REMOVAL TABLE

FOR BIDDING PURPOSES ONLY

STATE OF SOUTH DAKOTA	PROJECT	SHEET	TOTAL SHEETS
	IM 1902(61)0	S5	S59

Plotting Date: 04-22-2015

STATIONING	SIGNS DESCRIPTION	SIGNS SIZE (FT)	REMOVAL FA 110ES020	REMOVAL EA 110ES030	POSTS TYPE	POSTS FIXED*	POSTS BREAKAWAY*	REMOVE CONC FOOTING 110E0100
I-190 NB			Each	Each		Each	Each	LS
100+91		36 X 36	1		U-CHAN	1		
101+47		-		1	I-BEAM		2	2
103+36		48 X 48	1		U-CHAN	1		
105+27		48 X 60	1		-			
107+26		36 X 18	1		-			
		45 X 36	1					
		36 X 18	1					
		36 X 36	1					
150+24		-		1	OH			
		-		1				
		-		1				
		-		1				
153+63		48 X 60	1		PIPE	1		
-		48 X 48	1		PIPE	1		
		30 X 30	1					
-		48 X 60	1		PIPE	1		
-		-		1	OH			
		-		1				
		-		1				
		-		1				
I-190 NB SUBTOTAL			11	8		5	2	2

STATIONING	SIGNS DESCRIPTION	SIGNS SIZE (FT)	REMOVAL FA 110ES020	REMOVAL EA 110ES030	POSTS TYPE	POSTS FIXED*	POSTS BREAKAWAY*	REMOVE CONC FOOTING 110E0100
I-190 SB								
130+14		-		1	I-BEAM		2	2
130+14		-		1				
123+54		-		1	I-BEAM		2	2
122+64		48 X 48	1		U-CHAN	1		
106+50	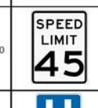	48 X 60	1		-			
104+38		30 X 30	1		-			
		30 X 12	1					
102+44		30 X 30	1		-			
		30 X 12	1					
101+93		-		1	U-CHAN	3		
I-190 SB SUBTOTAL			6	4		4	4	4

STATIONING	SIGNS DESCRIPTION	SIGNS SIZE (FT)	REMOVAL FA 110ES020	REMOVAL EA 110ES030	POSTS TYPE	POSTS FIXED*	POSTS BREAKAWAY*	REMOVE CONC FOOTING 110E0100
I-190 NB OFF-RAMP								
101+71		42 X 30	1		PIPE		1	
102+03		48 X 48	1		PIPE		1	
31+91		12 X 18	1		-			
31-91	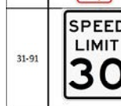	24 X 30	1		-			
33+89		36 X 36	1		U-CHAN	1		
		30 X 18	1					
		24 X 30	1					
35+52	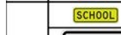	24 X 8	1		U-CHAN	1		
		24 X 30	1					
		24 X 10	1					
		12 X 18	1					
36+02		30 X 30	1		-			
		30 X 30	1		-			
36+14		30 X 30	1		U-CHAN	2		
36+41		24 X 30	1		U-CHAN	1		
		12 X 18	1					
36+41	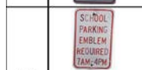	12 X 18	1		U-CHAN	1		
		24 X 24	1					
I-190 NB OFF-RAMP SUBTOTAL			18	0		6	2	0

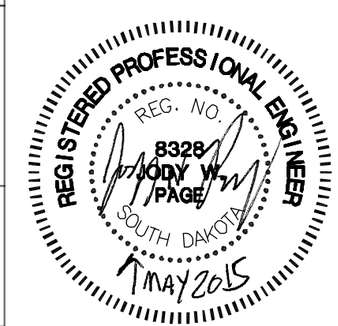

NOTES

FA = Salvage Flat Aluminum Signs

EA = Salvage Extruded Aluminum Panel Signs

Plot Scale - 1:200

Plotted From - ahengel

File - ...\Section_S\Existing_Tabs_01.dgn

SIGN REMOVAL TABLE

FOR BIDDING PURPOSES ONLY

Plotting Date: 04-22-2015

STATIONING	SIGNS DESCRIPTION	SIZE (FT)	REMOVAL FA 110E5020	REMOVAL EA 110E5030	POSTS TYPE	POSTS FIXED*	POSTS BREAKAWAY*	REMOVE CONC FOOTING 110E0100
I-190 NB OFF-RAMP								
36+56	ONE WAY	36 X 12	1		U-CHAN	1		
37+05	ANY TIME	12 X 18	1		U-CHAN	1		
37+10	ANY TIME	12 X 18	1		PIPE	1		
38+19	DO NOT ENTER	30 X 30	1		U-CHAN	2		
38+22	DO NOT ENTER	30 X 30	1		PIPE	1		
38+79	SPEED LIMIT 5 MPH.	24 X 30	1		SQ-CHAN	1		
	VISITOR PARKING	12 X 18	1					
	THIS IS A TOBACCO FREE CAMPUS	12 X 18	1					
38+97	ONE WAY	36 X 12	1		-			
39+19	ONE WAY	36 X 12	1		PIPE	1		
	STOP	30 X 30	1					
	TEXT MOST [illegible]	24 X 18	1					
39+77	VISITOR & CITY TOUR INFO	-	1		-			
	CIVIC CENTER	-	1					
40+29	ANY TIME	12 X 18	1		U-CHAN	1		
40+42	ANY TIME	12 X 18	1		U-CHAN	1		
40+54	DO NOT ENTER	30 X 30	1		-			
40+70	STOP	30 X 30	1		SQ-CHAN	1		
	ALL WAY	18 X 6	1					
	DO NOT ENTER	30 X 30	1					
	ONE WAY	36 X 12	1					
	ONE WAY	36 X 12	1					
I-190 NB OFF-RAMP SUBTOTAL			22	0		11	0	0

STATIONING	SIGNS DESCRIPTION	SIZE (FT)	REMOVAL FA 110E5020	REMOVAL EA 110E5030	POSTS TYPE	POSTS FIXED*	POSTS BREAKAWAY*	REMOVE CONC FOOTING 110E0100
I-190 NB ON-RAMP								
12+38	Silver St	30 X 9	1		SQ-CHAN	1		
12+81	STOP	30 X 30	1		SQ-CHAN	1		
	ALL WAY	18 X 6	1					
13+07	SPEED LIMIT 25	24 X 30	1		-			
13+45		36 X 36	1		SQ-CHAN	1		
	AHEAD	30 X 18	1					
15+69	W Blvd N	-	1		PIPE	1		
	W Blvd N	-	1					
	STOP	30 X 30	1					
15+88	ANY TIME	12 X 18	1		U-CHAN	1		
17+11		30 X 30	1		SQ-CHAN	1		
17+23	ANY TIME	12 X 18	1		U-CHAN	1		
18+84	Adams St	-	1		U-CHAN	1		
	Adams St	-	1					
	West Blvd	-	1					
	West Blvd	-	1					
	STOP	30 X 30	1					
23+11	SPEED LIMIT 25	24 X 30	1		-			
23+20	SPEED LIMIT 25	24 X 30	1		SQ-CHAN	1		
23+62	SPEED LIMIT 25	24 X 30	1		U-CHAN	1		
23+71	Van Buren St	-	1		SQ-CHAN	1		
	Van Buren St	-	1					
	West Blvd	-	1					
	West Blvd	-	1					
	STOP	30 X 30	1					
I-190 NB ON-RAMP SUBTOTAL			25	0		11	0	0

STATIONING	SIGNS DESCRIPTION	SIZE (FT)	REMOVAL FA 110E5020	REMOVAL EA 110E5030	POSTS TYPE	POSTS FIXED*	POSTS BREAKAWAY*	REMOVE CONC FOOTING 110E0100
I-190 SB OFF-RAMP								
79+50		30 X 30	1		-			
78+91		-		1	I-BEAM		2	2
77+98	WRONG WAY	42 X 30	1		-			
76+86	ONE WAY	36 X 12	1		SQ-CHAN		2	
	ONE WAY	36 X 12	1					
	DO NOT ENTER	30 X 30	1					
76+78	STOP	30 X 30	1		-			
	WARNING	12 X 18	1					
	WARNING	12 X 18	1					
76+16	ONE WAY	36 X 12	1		SQ-CHAN		2	
	ONE WAY	36 X 12	1					
	DO NOT ENTER	30 X 30	1					
	STOP	30 X 30	1					
I-190 SB OFF-RAMP SUBTOTAL			12	1		0	6	2

REGISTERED PROFESSIONAL ENGINEER
REG. NO. 8328
JODY W. PAGE
SOUTH DAKOTA
1 MAY 2015

NOTES

FA = Salvage Flat Aluminum Signs

EA = Salvage Extruded Aluminum Panel Signs

HDR

SIGN REMOVAL TABLE

FOR BIDDING PURPOSES ONLY

Plotting Date: 04-22-2015

STATIONING	SIGNS DESCRIPTION	SIGNS SIZE (FT)	REMOVAL FA 110ES020	REMOVAL EA 110ES030	POSTS TYPE	POSTS FIXED*	POSTS BREAKAWAY*	REMOVE CONC FOOTING 110ED100
I-190 SB ON-RAMP								
62+39	STOP	30 X 30	1		PIPE		1	
61+49	SPEED LIMIT 25	24 X 30	1		-			
57+03	SPEED LIMIT 25	24 X 30	1		SQ-CHAN		1	
56+59	Philidelphia St	-	1		SQ-CHAN		1	
	Philidelphia St	-	1					
	W Blvd N	-	1					
	W Blvd N	-	1					
	STOP	30 X 30	1					
I-190 SB ON-RAMP SUBTOTAL			8	0		0	3	0

STATIONING	SIGNS DESCRIPTION	SIGNS SIZE (FT)	REMOVAL FA 110ES020	REMOVAL EA 110ES030	POSTS TYPE	POSTS FIXED*	POSTS BREAKAWAY*	REMOVE CONC FOOTING 110ED100
WEST BLVD W								
28+97	Custer St	-	1		-			
	Custer St	-	1					
	W Blvd N	-	1					
	W Blvd N	-	1					
24+04	Boegel St	-	1		U-CHAN	1		
	Boegel St	-	1					
	W Blvd N	-	1					
	W Blvd N	-	1					
218+44	STOP	30 X 30	1		SQ-CHAN	1		
218+37	VISITOR & CITY TOUR INFO ←	-		1	-			
218+50	STOP	30 X 30	1		-			
	ALL WAY	18 X 6	1					
219+82	North St	-	1		SQ-CHAN	1		
	North St	-	1					
	W Blvd N	-	1					
	W Blvd N	-	1					
	STOP	30 X 30	1					
	ALL WAY	18 X 6	1					
220+31	RIGHT LANE MUST TURN RIGHT	30 X 30	1		SQ-CHAN	1		
220+25		36 X 36	1		SQ-CHAN	1		
	AHEAD	30 X 18	1					
220+82	VISITOR & CITY TOUR INFO ↑	-	1		-			
	CIVIC CENTER ↑	-	1					
	FIREARM & DRUG FREE ZONE	24 X 30	1					
W BLVD W SUBTOTAL			23	1		5	0	0

STATIONING	SIGNS DESCRIPTION	SIGNS SIZE (FT)	REMOVAL FA 110ES020	REMOVAL EA 110ES030	POSTS TYPE	POSTS FIXED*	POSTS BREAKAWAY*	REMOVE CONC FOOTING 110ED100
WEST BLVD W								
222+21	SCHOOL	24 X 8	1		SQ-CHAN		1	
	SPEED LIMIT 15	24 X 30	1					
	WHEN FLASHING	24 X 10	1					
221+44	I-90	24 X 12	1		SQ-CHAN		1	
		24 X 24	1					
		21 X 15	1					
	RIGHT LANE MUST TURN RIGHT	30 X 30	1					
222+03	HERE FOR PEDESTRIANS	36 X 36	1		SQ-CHAN		1	
222+21	HERE FOR PEDESTRIANS	36 X 36	1		SQ-CHAN		1	
222+55	SPEED LIMIT 5 M.P.H.	24 X 30	1		PIPE		1	
	THIS IS A TOBACCO FREE CAMPUS	12 X 18	1					
223+03	STOP	30 X 30	1		SQ-CHAN		1	
		24 X 18	1					
223+71	RIGHT LANE MUST TURN RIGHT	30 X 30	1		-			
	AHEAD	30 X 18	1					
224+61	SPEED LIMIT 5 M.P.H.	24 X 30	1		SQ-CHAN		1	
	THIS IS A TOBACCO FREE CAMPUS	12 X 18	1					
225+20	STOP	30 X 30	1		SQ-CHAN		1	
		24 X 18	1					
W BLVD W SUBTOTAL			19	0		0	8	0
PROJECT TOTAL			144	14		42	25	8

REGISTERED PROFESSIONAL ENGINEER
REG. NO. 8328
JODY W. PAGE
SOUTH DAKOTA
7 MAY 2015

NOTES

FA = Salvage Flat Aluminum Signs

EA = Salvage Extruded Aluminum Panel Signs

HDR

Plot Scale - 1:200
Plotted From - ahengel
File - ...\Section_S\Existing_Tabs_03.dgn

SIGN INSTALLATION TABLE

FOR BIDDING PURPOSES ONLY

Plotting Date: 04-22-2015

SIGN DATA											POST DATA															FOOTING DATA				
						SIGN AREA (SQ. FT.)										POST SIZES AND QUANTITIES					FOOTING DIAMETER AND QUANTITIES (FT)				
																					BREAKAWAY		FIXED			
SIGN #	STATION	DESCRIPTION	SIGN CODE	SIGN SIZE (FT)		EA	FA	DG	OFFSET RIGHT/LEFT OVERHEAD	POST LENGTHS (ABOVE GROUND)		FIXED OR BREAK-AWAY	(N)EW OR (R)EUSE POST			E1-5 S3X5.7	W6X12	2" x 12 GA	2 1/2" x 12 GA	2 1/2" x 12 GA Telescoped w/ 2 1/4" x 12 GA	1'-3"	2'-0"	2'-3"	2'-6"	FOOTING LENGTH(S)
						632E3103	632E3203	632E3205		INSIDE	OUTSIDE		IN	MID	OUT	632E1210	632E1225	632E1320	632E1340	632E1340	632E0010	632E0014	632E0058	632E0060	
I-190 NB																										
NB-101	97+56		R2-1	4	X 5		20		71.5' R	***		F	R													
NB-102	97+56		E1-5P	9.5	X 2.5	23.75			OVERHEAD	***		F	R													
			ADVANCE GUIDE SIGN	13.5	X 8.5	114.75																				
NB-103	100+20		INFORMATIONAL	10.5	X 5	52.5			67' R	13'-6"		S	N	N	N					40.5	12				4'-0"
NB-104	102+46.25		E1-5P	9.5	X 2.5	23.75			OVERHEAD	***			N			11									
			EXIT DIRECTIONAL SIGN	13	X 8	104																				
NB-105	107+20		E5-1A	6	X 5	30			52' R	13'-6"		S	N		N					29	8				4'-0"
NB-106	111+00		M3-1I	3	X 1.5		4.5		55' R	13'-0"		S	N		N					26	8				4'-0"
			M1-1I	3.75	X 3		11.25																			
			M3-2	3	X 1.5		4.5																			
			M1-4	3	X 3		9																			
NB-107	125+00		W4-1R	4	X 4			16	52' R	14'-6"		S	N							14.5	4				4'-0"
NB-108	133+00		M3-1	3	X 1.5		4.5		65' R	13'-0"		S	N		N					26	8				4'-0"
			M1-1	3.75	X 3		11.25																			
			M3-2	3	X 1.5		4.5																			
			M1-4	3	X 3		9																			
NB-109	143+00		R2-1	4	X 5		20		52' R	13'-6"		S	N		N				27		8				4'-0"
				SUBTOTAL, THIS PAGE		348.75	98.5	16								11	0	0	27	136	48	0	0	0	

NOTES

EA = Extruded Aluminum Panel Signs With Removable Copy

FA = Flat Aluminum Signs With Non-Removable Copy - High Intensity Sheeting

DG = Flat Aluminum Signs With Non-Removable Copy - Fluorescent Very High Intensity Sheeting

Plot Scale - 1:200
Plotted From - ahengel
File - ...\Section_S\Proposed_Tabs_01.dgn

SIGN INSTALLATION TABLE

FOR BIDDING PURPOSES ONLY

STATE OF SOUTH DAKOTA	PROJECT	SHEET	TOTAL SHEETS
	IM 1902(61)0	S9	S59

Plotting Date: 04-22-2015

SIGN DATA															POST DATA									FOOTING DATA				
							SIGN AREA (SQ. FT.)								POST SIZES AND QUANTITIES					FOOTING DIAMETER AND QUANTITIES (FT)				
																				BREAKAWAY		FIXED		
SIGN #	STATION	DESCRIPTION	SIGN CODE	SIGN SIZE (FT)			EA	FA	DG	OFFSET RIGHT/LEFT OVERHEAD	POST LENGTHS (ABOVE GROUND)		FIXED OR BREAK-AWAY	(N)EW OR (R)EUSE POST			E1-5 S3X5.7	W6X12	2" x 12 GA	2 1/2" x 12 GA	2 1/2" x 12 GA Telescoped w/ 2 1/4" x 12 GA	1'-3"	2'-0"	2'-3"	2'-6"	FOOTING LENGTH(S)
							632E3103	632E3203	632E3205		INSIDE	OUTSIDE		IN	MID	OUT	632E1210	632E1225	632E1320	632E1340	632E1340	632E0010	632E0014	632E0058	632E0060	
I-190 SB																											
SB-101	107+70		W4-3R	4	X	4			16	52' L	14'-6"		S	N							14.5	4				4'-0"
SB-102	120+90		E5-1a	4	X	5	20			52.5' L	13'-6"		S	N		N					27	8				4'-0"
SB-103	127+61		E1-5P	9.5	X	2.5	23.75			58' L	14'-0"	13'-4"	S	N		N	11	27.33					10		5'-0"
			EXIT DIRECTION SIGN	12.5	X	8	100																			
SB-104	145+71		M3-3a	3	X	1.5		4.5		56' L	13'-0"		S	N		N					26	8				4'-0"
			M1-1	3.75	X	3		11.25																		
			M3-4	3	X	1.5		4.5																		
			M1-4	3	X	3		9																		
RAMP A																											
RA-101	302+06		R4-8	2	X	2.5		5		38' R	11'-0"		F	N					11					4		4'-0"
RAMP B																											
RB-101	403+45		W3-3	4	X	4			16	34.5' R	14'-6"		S	N							14.5	4				4'-0"
RB-102	406+00		LOGO	9	X	5.5	49.5			35.5' R	14'-0"		S	N	N	N					42	12				4'-0"
RB-103	408+00		GUIDE	10	X	5	50			35.5' R	13'-6"		S	N	N	N					40.5	12				4'-0"
RB-104	410+30		R5-1a	3.5	X	2.5		8.75		7' L	11'-0"		F	N						11				4		4'-0"
RB-105	410+40		W12-1	4	X	4			16	30' R	14'-6"		S	N							14.5	4				4'-0"
RB-106	411+44		R6-1R	4.5	X	1.5		6.75		9' L	9'-6"		F	N					9.5					4		4'-0"
		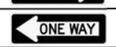	R6-1L	4.5	X	1.5		6.75																		
SUBTOTAL, THIS PAGE							243.25	56.5	48								11	27.33	20.5	11	179	52	10	12	0	

NOTES

EA = Extruded Aluminum Panel Signs With Removable Copy

FA = Flat Aluminum Signs With Non-Removable Copy - High Intensity Sheeting

DG = Flat Aluminum Signs With Non-Removable Copy - Fluorescent Very High Intensity Sheeting

Plot Scale - 1:200

Plotted From - ahengel

File - ...\Section_S\Proposed_Tabs_02.dgn

HDR

SIGN INSTALLATION TABLE

FOR BIDDING PURPOSES ONLY

Plotting Date: 04-22-2015

SIGN DATA										POST DATA													FOOTING DATA				
					SIGN AREA (SQ. FT.)								POST SIZES AND QUANTITIES					FOOTING DIAMETER AND QUANTITIES (FT)				
																		BREAKAWAY		FIXED		
SIGN #	STATION	DESCRIPTION	SIGN CODE	SIGN SIZE (FT)	EA	FA	DG	OFFSET RIGHT/LEFT OVERHEAD	POST LENGTHS (ABOVE GROUND)	FIXED OR BREAK-AWAY	(N)EW OR (R)EUSE POST	E1-5 S3X5.7	W6X12	2" x 12 GA	2 1/2" x 12 GA	2 1/2" x 12 GA Telescoped w/ 2 1/4" x 12 GA	1'-3"	2'-0"	2'-3"	2'-6"	FOOTING LENGTH(S)
					632E3103	632E3203	632E3205		INSIDE / OUTSIDE		IN / MID / OUT	632E1210	632E1225	632E1320	632E1340	632E1340	632E0010	632E0014	632E0058	632E0060	
RAMP B (CONTINUED)																					
RB-107	411+16		R10-6L	2 X 3		6		8' L	11'-6"	F	N			11.5					4		4'-0"
			R5-1	2.5 X 2.5		6.25															
RB-108	410+94		R10-6L	2 X 3		6		32' R	11'-6"	F	N			11.5					4		4'-0"
			R5-1	2.5 X 2.5		6.25															
RAMP C																					
RC-101	610+53		R4-8	2 X 2.5		5		39' L	11'-0"	F	N			11					4		4'-0"
RAMP D																					
RD-101	701+97		R10-6R	2 X 3		6		28' L	11'-6"	F	N			11.5					4		4'-0"
			R5-1	2.5 X 2.5		6.25															
RD-102	701+80		R10-6L	2 X 3		6		5' R	11'-6"	F	N			11.5					4		4'-0"
			R5-1	2.5 X 2.5		6.25															
RD-103	701+61		R6-1L	3 X 1		3		18' R	9'-6"	F	N			9.5					4		4'-0"
		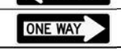	R6-1R	3 X 1		3															
				SUBTOTAL, THIS PAGE	0	60	0					0	0	66.5	0	0	0	0	24	0	

NOTES

EA = Extruded Aluminum Panel Signs With Removable Copy

FA = Flat Aluminum Signs With Non-Removable Copy - High Intensity Sheeting

DG = Flat Aluminum Signs With Non-Removable Copy - Fluorescent Very High Intensity Sheeting

REGISTERED PROFESSIONAL ENGINEER
REG. NO. 8328
JODY W. PAGE
SOUTH DAKOTA
MAY 2015

HDR

Plot Scale - 1:200

Plotted From - ahengel

File - ...\Section_S\Proposed_Tabs_03.dgn

SIGN INSTALLATION TABLE

FOR BIDDING PURPOSES ONLY

Plotting Date: 04-22-2015

SIGN DATA											POST DATA													FOOTING DATA				
					SIGN AREA (SQ. FT.)									POST SIZES AND QUANTITIES					FOOTING DIAMETER AND QUANTITIES (FT)				
																			BREAKAWAY		FIXED		
SIGN #	STATION	DESCRIPTION	SIGN CODE	SIGN SIZE (FT)	EA	FA	DG	OFFSET RIGHT/LEFT OVERHEAD	POST LENGTHS (ABOVE GROUND)	FIXED OR BREAK-AWAY	(N)EW OR (R)EUSE POST			E1-5 S3X5.7	W6X12	2" x 12 GA	2 1/2" x 12 GA	2 1/2" x 12 GA Telescoped w/ 2 1/4" x 12 GA	1'-3"	2'-0"	2'-3"	2'-6"	FOOTING LENGTH(S)
					632E3103	632E3203	632E3205		INSIDE / OUTSIDE		IN	MID	OUT	632E1210	632E1225	632E1320	632E1340	632E1340	632E0010	632E0014	632E0058	632E0060	
RAMP D (CONTINUED)																												
RD-105	702+82		R5-1a	3.5 X 2.5		8.75		5' R	11'-0"	F	N						11				4		4'-0"
RD-106	710+00		W3-3	4 X 4			16	36' L	14'-6"	S	N							14.5	4				4'-0"
RD-107	706+00		GUIDE	10 X 5	50			36' L	13'-6"	S	N	N	N					40.5	12				4'-0"
RD-108	706+00	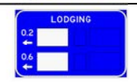	LOGO	9 X 5.5	49.5			36' L	14'-0"	S	N	N	N					42	12				4'-0"
RAMP E																												
RE-101	353+31		R1-2	3 X 3		2.7		29.5' R	13'-0"	F	N					13					4		4'-0"
RAMP F																												
RF-101	451+09		R6-1L	3 X 1		3		9' L	14'-0"	F	N					14					4		4'-0"
			R1-2	3 X 3		2.7																	
RF-102	451+21		R6-1L	3 X 1		3		29' R	14'-0"	F	N					14					4		4'-0"
			R5-1	2.5 X 2.5		6.25																	
RF-103	451+29		R6-1L	3 X 1		3			9'-6"	F	N					9.5					4		4'-0"
RF-104	450+32		R5-1a	3.5 X 2.5		8.75		31' R	11'-0"	F	N						11				4		4'-0"
RAMP G																												
RG-101	649+45		R1-2	3 X 3		2.7		29.4' L	13'-0"	F	N					13					4		4'-0"
RAMP H																												
RH-101	750+48		R6-1R	3 X 1		3		29' L	14'-0"	F	N					14					4		4'-0"
			R1-2	3 X 3		2.7																	
RH-102	750+71	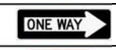	R6-1R	3 X 1		3		8' R	14'-0"	F	N					14					4		4'-0"
			R5-1	2.5 X 2.5		6.25																	
RH-103	703+20		W12-1	4 X 4			16	29' L	14'-6"	S	N							14.5	4				4'-0"
				SUBTOTAL, THIS PAGE	99.5	55.8	32							0	0	91.5	22	111.5	32	0	36	0	

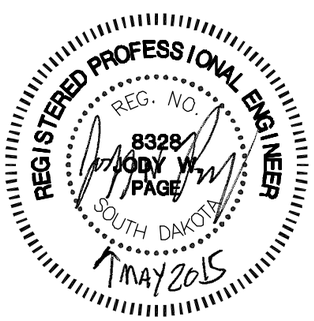

NOTES

EA = Extruded Aluminum Panel Signs With Removable Copy

FA = Flat Aluminum Signs With Non-Removable Copy - High Intensity Sheeting

DG = Flat Aluminum Signs With Non-Removable Copy - Fluorescent Very High Intensity Sheeting

Plot Scale - 1:200
Plotted From - ahengel
File - ...\Section_S\Proposed_Tabs_04.dgn

SIGN INSTALLATION TABLE

FOR BIDDING PURPOSES ONLY

Plotting Date: 04-22-2015

SIGN DATA										POST DATA											FOOTING DATA				
					SIGN AREA (SQ. FT.)									POST SIZES AND QUANTITIES					FOOTING DIAMETER AND QUANTITIES (FT)				
																			BREAKAWAY		FIXED		
SIGN #	STATION	DESCRIPTION	SIGN CODE	SIGN SIZE (FT)	EA	FA	DG	OFFSET RIGHT/LEFT OVERHEAD	POST LENGTHS (ABOVE GROUND)	FIXED OR BREAK-AWAY	(N)EW OR (R)EUSE POST			E1-5 S3X5.7	W6X12	2" x 12 GA	2 1/2" x 12 GA	2 1/2" x 12 GA Telescoped w/ 2 1/4" x 12 GA	1'-3"	2'-0"	2'-3"	2'-6"	FOOTING LENGTH(S)
					632E3103	632E3203	632E3205		INSIDE / OUTSIDE		IN	MID	OUT	632E1210	632E1225	632E1320	632E1340	632E1340	632E0010	632E0014	632E0058	632E0060	
RAMP H (CONTINUED)																								
RH-104	750+54		R6-1R	4.5 X 1.5		6.75		16' R	9'-6"	F	N					9.5					4		4'-0"
			R6-1L	4.5 X 1.5		6.75																	
RH-105	751+71		R5-1a	3.5 X 2.5		8.75		9' R	11'-0"	F	N						11				4		4'-0"
NORTH STREET																								
NS-101	210+00		M2-1	1.75 X 1.25		2.1875		28' R	14'-0"	F	N		N				28				8		4'-0"
			M1-1	2.5 X 2		5																	
			M1-4	2 X 2		4																	
NS-102	211+86		CUSTOM	3.5 X 1		3.5		51' R	12'-6"	S	N							12.5	4				4'-0"
			CUSTOM	3 X 1		3																	
			R1-1	3 X 3		7.5																	
NS-103	224+30		M2-1	1.75 X 1.25		2.1875		37' L	14'-0"	F	N		N				28				8		4'-0"
			M1-1	2 X 2		4																	
			M1-4	2 X 2		4																	
NS-104	212+95		M3-1l	2 X 1		2		63' R	37' R	S	N							13	4				4'-0"
			M1-1	2.5 X 2		5																	
			M5-2L	1.75 X 1.25		2.1875																	
			M3-2	2 X 1		2																	
			M1-4	2 X 2		4																	
			M5-2L	1.75 X 1.25		2.1875																	
				SUBTOTAL, THIS PAGE	0	75	0							0	0	9.5	67	25.5	8	0	24	0	

NOTES

EA = Extruded Aluminum Panel Signs With Removable Copy

FA = Flat Aluminum Signs With Non-Removable Copy - High Intensity Sheeting

DG = Flat Aluminum Signs With Non-Removable Copy - Fluorescent Very High Intensity Sheeting

Plot Scale - 1:200

Plotted From - ahengel

File - ...\Section_S\Proposed_Tabs_05.dgn

HDR

SIGN INSTALLATION TABLE

FOR BIDDING PURPOSES ONLY

Plotting Date: 04-22-2015

SIGN DATA										POST DATA															FOOTING DATA				
					SIGN AREA (SQ. FT.)								POST SIZES AND QUANTITIES								FOOTING DIAMETER AND QUANTITIES (FT)				
																					BREAKAWAY		FIXED		
SIGN #	STATION	DESCRIPTION	SIGN CODE	SIGN SIZE (FT)	EA	FA	DG	OFFSET RIGHT/LEFT OVERHEAD	POST LENGTHS (ABOVE GROUND)		FIXED OR BREAK-AWAY	(N)EW OR (R)EUSE POST			E1-5 S3X5.7	W6X12	2" x 12 GA	2 1/2" x 12 GA	2 1/2" x 12 GA Telescoped w/ 2 1/4" x 12 GA	1'-3"	2'-0"	2'-3"	2'-6"	FOOTING LENGTH(S)
					632E3103	632E3203	632E3205		INSIDE	OUTSIDE		IN	MID	OUT	632E1210	632E1225	632E1320	632E1340	632E1340	632E0010	632E0014	632E0058	632E0060	
NORTH STREET (CONTINUED)																									
NS-105	213+70		M3-1I	2 X 1		2		62.5' R	13'-0"		S	N							13	4				4'-0"
			M1-1	2.5 X 2		5																		
			M5-1RI	1.75 X 1.25		2.1875																		
			M3-4	2 X 1		2																		
			M1-4	2 X 2		4																		
			M5-1R	1.75 X 1.25		2.1875																		
NS-106	215+36		M3-1	2 X 1		2		52' R	13'-0"		S	N							13	4				4'-0"
			M1-1	2.5 X 2		5																		
			M6-2RI	1.75 X 1.25		2.1875																		
			M3-4	2 X 1		2																		
			M1-4	2 X 2		4																		
			M6-2R	1.75 X 1.25		2.1875																		
NS-107	216+05		W4-2R	3 X 3			9	50' L									MOUNT TO LUMINAIRE							
NS-108	217+01		R3-5L	2.5 x 3		7.5		O.C.									MOUNT TO SIGNAL ARM							
NS-109	217+67		R3-5L	2.5 x 3		7.5		O.C.									MOUNT TO SIGNAL ARM							
SUBTOTAL, THIS PAGE					0	49.75	9								0	0	0	0	26	8	0	0	0	

NOTES

EA = Extruded Aluminum Panel Signs With Removable Copy

FA = Flat Aluminum Signs With Non-Removable Copy - High Intensity Sheeting

DG = Flat Aluminum Signs With Non-Removable Copy - Fluorescent Very High Intensity Sheeting

REGISTERED PROFESSIONAL ENGINEER
REG. NO. 8328
JODY W. PAGE
SOUTH DAKOTA
1 MAY 2015

HDR

Plot Scale - 1:200

Plotted From - ahengel

File - ...\Section_S\Proposed_Tabs_06.dgn

SIGN INSTALLATION TABLE

FOR BIDDING PURPOSES ONLY

Plotting Date: 04-22-2015

SIGN #	STATION	DESCRIPTION	SIGN CODE	SIGN SIZE (FT)	SIGN AREA (SQ. FT.) EA	FA	DG	OFFSET RIGHT/LEFT OVERHEAD	POST LENGTHS (ABOVE GROUND) INSIDE	OUTSIDE	FIXED OR BREAK-AWAY	(N)EW OR (R)EUSE POST IN	MID	OUT	POST SIZES AND QUANTITIES E1-5 S3X5.7	W6X12	2" x 12 GA	2 1/2" x 12 GA	2 1/2" x 12 GA Telescoped w/ 2 1/4" x 12 GA	FOOTING DIAMETER AND QUANTITIES (FT) BREAKAWAY 1'-3"	2'-0"	FIXED 2'-3"	2'-6"	FOOTING LENGTH(S)
					632E3103	632E3203	632E3205								632E1210	632E1225	632E1320	632E1340	632E1340	632E0010	632E0014	632E0058	632E0060	
NORTH STREET (CONTINUED)																								
NS-110	216+10		M3-1I	2 X 1		2		50.5' R	13'-0"		S	N		N			26			8				4'-0"
			M1-1	2.5 X 2		5																		
			M6-2LI	1.75 X 1.25		2.1875																		
			M3-2	2 X 1		2																		
			M1-4	2 X 2		4																		
			M6-2L	1.75 X 1.25		2.1875																		
NS-111	218+45		M3-3I	2 X 1		2		13' R	13'-0"		S	N		N			26			8				4'-0"
			M1-1	2.5 X 2		5																		
			M6-2LI	1.75 X 1.25		2.1875																		
			M3-4	2 X 1		2																		
			M1-4	2 X 2		4																		
			M6-2L	1.75 X 1.25		2.1875																		
			R4-7	2 X 2.5		5																		
NS-112	219+12		R6-1R	3 X 1		3		13.5' R	9'-5"		F	N					9.5					4		4'-0"
NS-113	219+19		M3-3I	2 X 1		2		48.5' L	13'-0"		S	N		N			26			8				4'-0"
			M1-1	2.5 X 2		5																		
			M6-2RI	1.75 X 1.25		2.1875																		
			M3-3I	2 X 1		2																		
			M1-1	2 X 2		4																		
			M6-2R	1.75 X 1.25		2.1875																		
			SUBTOTAL, THIS PAGE		0	60.125	0								0	0	87.5	0	0	24	0	4	0	

NOTES

EA = Extruded Aluminum Panel Signs With Removable Copy

FA = Flat Aluminum Signs With Non-Removable Copy - High Intensity Sheeting

DG = Flat Aluminum Signs With Non-Removable Copy - Fluorescent Very High Intensity Sheeting

Plot Scale - 1:200
Plotted From - ahengel
File - ...\Section_S\Proposed_Tabs_07.dgn

SIGN INSTALLATION TABLE

FOR BIDDING PURPOSES ONLY

Plotting Date: 04-22-2015

SIGN DATA										POST DATA															FOOTING DATA				
					SIGN AREA (SQ. FT.)								POST SIZES AND QUANTITIES					FOOTING DIAMETER AND QUANTITIES (FT)											
																		BREAKAWAY		FIXED									
SIGN #	STATION	DESCRIPTION	SIGN CODE	SIGN SIZE (FT)	EA	FA	DG	OFFSET RIGHT/LEFT OVERHEAD	POST LENGTHS (ABOVE GROUND)	FIXED OR BREAK-AWAY	(N)EW OR (R)EUSE POST	E1-5 S3X5.7	W6X12	2" x 12 GA	2 1/2" x 12 GA	2 1/2" x 12 GA Telescoped w/ 2 1/4" x 12 GA	1'-3"	2'-0"	2'-3"	2'-6"	FOOTING LENGTH(S)
					632E3103	632E3203	632E3205		INSIDE / OUTSIDE		IN / MID / OUT	632E1210	632E1225	632E1320	632E1340	632E1340	632E0010	632E0014	632E0058	632E0060	
NORTH STREET (CONTINUED)																					
NS-114	221+05		M3-3I	2 x 1		2		51' L	13'-0"	S	N					13	4				4'-0"
			M1-1	2.5 x 2		5															
			M5-1RI	1.75 x 1.25		2.1875															
			M3-2	2 x 1		2															
			M1-4	2 x 2		4															
			M5-1R	1.75 x 1.25		2.1875															
NS-115	221+78		R4-7	2 x 2.5		5		6' L	11	F	N			11						4	4'-0"
NS-116	222+22		M3-3I	2 x 1		2		47' L	13'-0"	S	N					13	4				4'-0"
			M1-1	2.5 x 2		5															
			M5-2LI	1.75 x 1.25		2.1875															
			M3-4	2 x 1		2															
			M1-4	2 x 2		4															
			M5-2L	1.75 x 1.25		2.1875															
NS-117	223+00		R1-1	3 x 3		7.5		51' R	11'-5"	F	N				11.5				4		4'-0"
WEST BLVD NORTH																					
WB-101	50+92		W1-6R	4 x 2			8	21' L	10'-6"	F	N			10.5					4		4'-0"
WB-102	50+77		W1-6L	4 x 2			8	21' L	10'-6"	F	N				10.5				4		4'-0"
WB-103	50+27		R1-5a	3 x 4		12		21' R	12'-6"	F	N / N				25				8		4'-0"
WB-104	51+00		STREET NAME	4 x 1	REMOVE AND RESET			23' R	9'-6"	F	N				9.5				4		4'-0"
			STREET NAME	4.5 x 1	REMOVE AND RESET																
SUBTOTAL, THIS PAGE					0	59.25	16					0	0	21.5	56.5	26	8	0	24	4	

NOTES

EA = Extruded Aluminum Panel Signs With Removable Copy

FA = Flat Aluminum Signs With Non-Removable Copy - High Intensity Sheeting

DG = Flat Aluminum Signs With Non-Removable Copy - Fluorescent Very High Intensity Sheeting

Plot Scale - 1:200
Plotted From - ahengel
File - ...\Section_S\Proposed_Tabs_08.dgn

SIGN INSTALLATION TABLE

FOR BIDDING PURPOSES ONLY

Plotting Date: 04-22-2015

SIGN DATA											POST DATA													FOOTING DATA				
							SIGN AREA (SQ. FT.)									POST SIZES AND QUANTITIES					FOOTING DIAMETER AND QUANTITIES (FT)				
																					BREAKAWAY		FIXED		
SIGN #	STATION	DESCRIPTION	SIGN CODE	SIGN SIZE (FT)			EA	FA	DG	OFFSET RIGHT/LEFT OVERHEAD	POST LENGTHS (ABOVE GROUND)		FIXED OR BREAK-AWAY	(N)EW OR (R)EUSE POST			E1-5 S3X5.7	W6X12	2" x 12 GA	2 1/2" x 12 GA	2 1/2" x 12 GA Telescoped w/ 2 1/4" x 12 GA	1'-3"	2'-0"	2'-3"	2'-6"	FOOTING LENGTH(S)
							632E3103	632E3203	632E3205		INSIDE	OUTSIDE		IN	MID	OUT	632E1210	632E1225	632E1320	632E1340	632E1340	632E0010	632E0014	632E0058	632E0060	
WEST BLVD NORTH (CONTINUED)																												
WB-105	51+09		R1-5a	3	X	4		12		21' L	12'-6"		F	N		N				25				8		4'-0"
WB-106	51+20		CUSTOM	1	X	1.5		1.5		20.5' R	10'-0"		F	N					10					4		4'-0"
WB-107	52+35		CUSTOM	1	X	1.5		1.5		20.5' R	10'-0"		F	N					10					4		4'-0"
WB-108	53+50		CUSTOM	1	X	1.5		1.5		20.5' R	10'-0"		F	N					10					4		4'-0"
WB-109	53+95		W1-7	4	X	2			8	18' L	10'-6"		F	N						10.5				4		4'-0"
WB-110	54+34		W11-2	2.5	X	2.5		6.25		20' L	12'-6"		F	N					12.5					4		4'-0"
WB-111	54+30	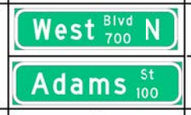	STREET NAME STREET NAME	4 4	X X	1 1	REMOVE AND RESET REMOVE AND RESET			23' L	9'-6"		F	N						9.5				4		4'-0"
WB-112	55+00		W1-1L	2.5	X	2.5			6.25	19' L	12'-6"		F	N					12.5					4		4'-0"
WB-113	57+50		R2-1	2	X	2.5		5		23' L	11'-0"		F	N					11					4		4'-0'
WB-114	58+83		W1-7	4	X	2			8	27' L	10'-6"		F	N						10.5				4		4'-0"
WB-115	59+00		STREET NAME STREET NAME R1-1	4 5.5 3	X X X	1 1 3	REMOVE AND RESET REMOVE AND RESET	7.5		26' R	12'-6"		S	N							12.5	4				4'-0"
WB-116	54+13		R1-1	3	X	3		7.5		48' R	11'-5"		F	N						11.5				4		4'-0"
SUBTOTAL, THIS PAGE							0	42.75	22.25								0	0	66	67	12.5	4	0	48	0			

NOTES

EA = Extruded Aluminum Panel Signs With Removable Copy

FA = Flat Aluminum Signs With Non-Removable Copy - High Intensity Sheeting

DG = Flat Aluminum Signs With Non-Removable Copy - Fluorescent Very High Intensity Sheeting

Plot Scale - 1:200

Plotted From - ahennel

File - ...\Section_S\Proposed_Tabs_09.dgn

SIGN INSTALLATION TABLE

FOR BIDDING PURPOSES ONLY

Plotting Date: 04-22-2015

SIGN DATA										POST DATA															FOOTING DATA				
					SIGN AREA (SQ. FT.)								POST SIZES AND QUANTITIES					FOOTING DIAMETER AND QUANTITIES (FT)											
																		BREAKAWAY		FIXED									
SIGN #	STATION	DESCRIPTION	SIGN CODE	SIGN SIZE (FT)	EA	FA	DG	OFFSET RIGHT/LEFT OVERHEAD	POST LENGTHS (ABOVE GROUND)		FIXED OR BREAK-AWAY	(N)EW OR (R)EUSE POST			E1-5 S3X5.7	W6X12	2" x 12 GA	2 1/2" x 12 GA	2 1/2" x 12 GA Telescoped w/ 2 1/4" x 12 GA	1'-3"	2'-0"	2'-3"	2'-6"	FOOTING LENGTH(S)
					632E3103	632E3203	632E3205		INSIDE	OUTSIDE		IN	MID	OUT	632E1210	632E1225	632E1320	632E1340	632E1340	632E0010	632E0014	632E0058	632E0060	
WEST BLVD																													
WB-201	10+41		STREET NAME	4 X 1	REMOVE AND RESET			29' L	12'-6"		S	N							12.5	4				4'-0"
			STREET NAME	3.5 X 1	REMOVE AND RESET																				
			R1-1	2.5 X 2.5		5.2																			
WB-202	13+00		R2-1	2 X 2.5		5		21' R	11'-0"		F	N					11					4		4'-0'
WB-203	13+50		W3-1	2.5 X 2.5			6.25	30.5" L	12'-6"		F	N					12.5					4		4'-0"
WB-204	17+60		CUSTOM	4 X 1		4		50' L	12'-6"		S	N							12.5	4				4'-0"
			CUSTOM	3.5 X 1		3.5																			
			R1-1	2.5 X 2.5		5.2																			
WB-205	17+90		W1-7	4 X 2			8	20' R	10'-6"		F	N						10.5				4		4'-0"
WB-206	22+01		R2-1	2 X 2.5		5		30' L	11'-0"		F	N					11					4		4'-0'
WB-207	22+84		CUSTOM	4 X 1		4		47' L	12'-6"		S	N							12.5	4				4'-0"
			CUSTOM	4 X 1		4																			
			R1-1	2.5 X 2.5		5.2																			
WB-208	23+15		W1-7	4 X 2			8	23' R	10'-6"		F	N						10.5				4		4'-0"
SUBTOTAL, THIS PAGE					0	41.1	22.25								0	0	34.5	21	37.5	12	0	20	0	
TOTAL, PROJECT					691.5	598.775	165.5								22	27.33	397.5	271.5	554	196	10	192	4	

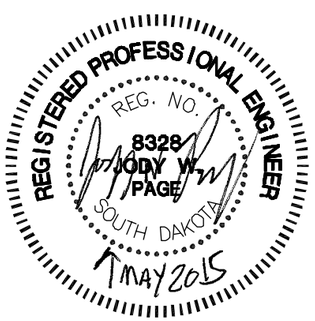

NOTES

EA = Extruded Aluminum Panel Signs With Removable Copy

FA = Flat Aluminum Signs With Non-Removable Copy - High Intensity Sheeting

DG = Flat Aluminum Signs With Non-Removable Copy - Fluorescent Very High Intensity Sheeting

Plot Scale - 1:200
Plotted From - ahengel
File - ...\Section_S\Proposed_Tabs_10.dgn

Existing Signing Layout

I-190

FOR BIDDING PURPOSES ONLY

STATE OF SOUTH DAKOTA	PROJECT	SHEET	TOTAL SHEETS
	IM 1902(61)0	S18	S59

Plotting Date: 04-22-2015

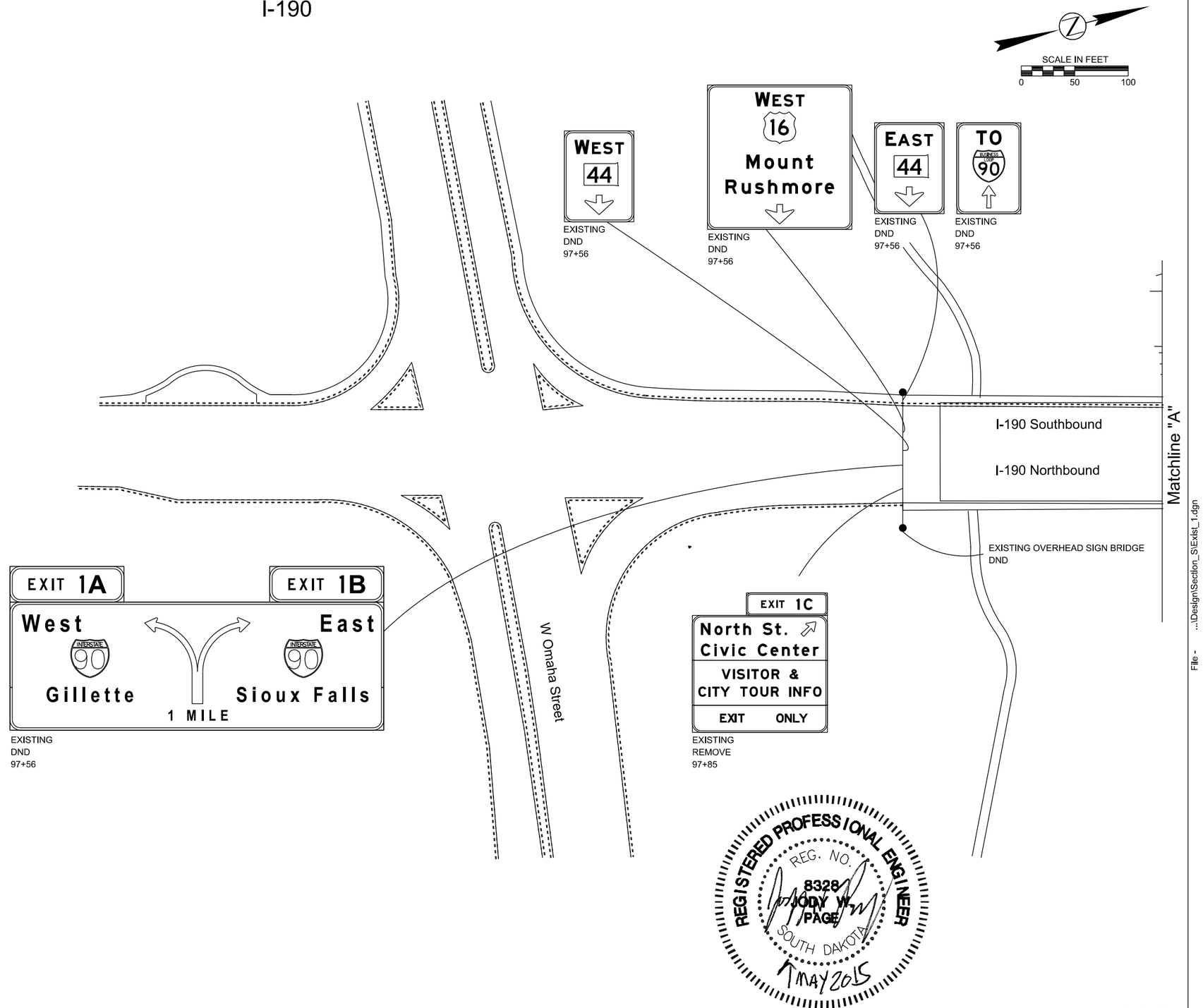

Plot Scale - 1:99.9998

Plotted From - ahengel

File - ...\Design\Section_S\Exist_1.dgn

Existing Signing Layout

I-190

FOR BIDDING PURPOSES ONLY

STATE OF SOUTH DAKOTA	PROJECT	SHEET	TOTAL SHEETS
	IM 1902(61)0	S19	S59

Plotting Date: 04-22-2015

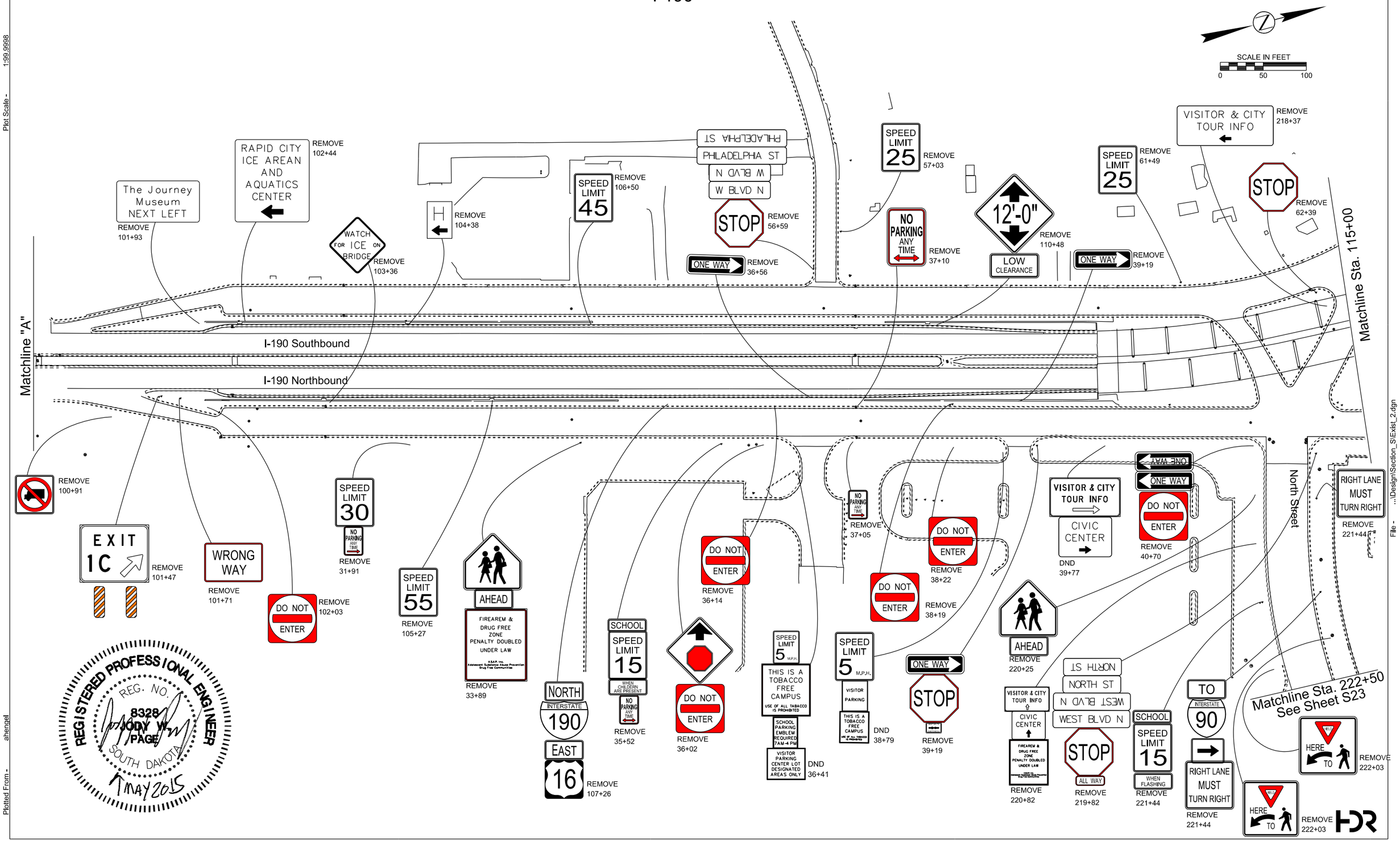

Plot Scale - 1:99.9998

Plotted From - ahengel

File - ...\Design\Section_S\Exist_2.dgn

Existing Signing Layout

I-190, Silver Street, and West Boulevard

FOR BIDDING PURPOSES ONLY

STATE OF SOUTH DAKOTA	PROJECT	SHEET	TOTAL SHEETS
	IM 1902(61)0	S20	S59

Plotting Date: 04-22-2015

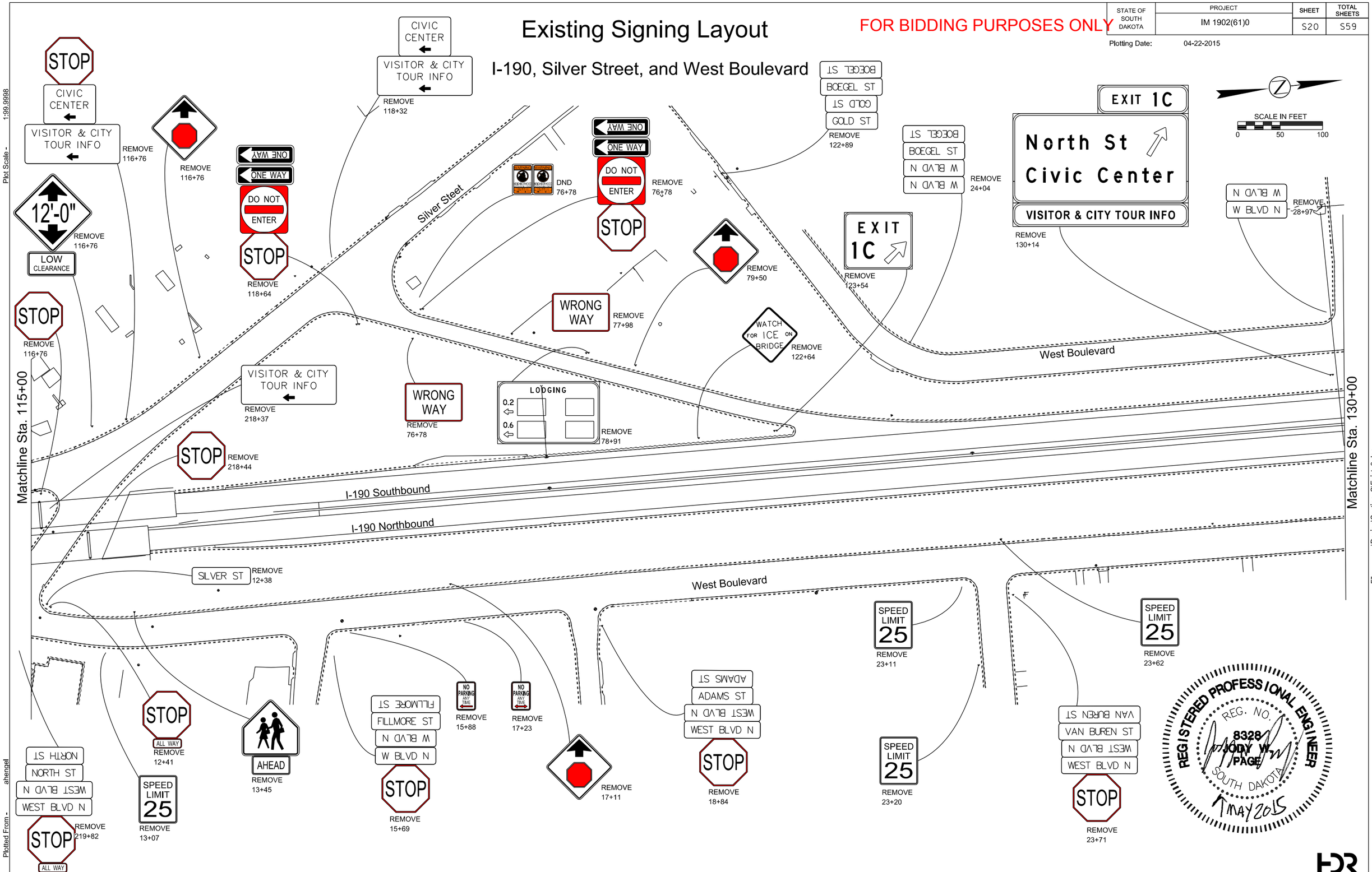

Plot Scale - 1:99.9998

Plotted From - ahengel

File - ...\Design\Section_S1Exist_3.dgn

HDR

STATE OF SOUTH DAKOTA	PROJECT	SHEET	TOTAL SHEETS
	IM 1902(61)0	S21	S59

Existing Signing Layout

FOR BIDDING PURPOSES ONLY

Plotting Date: 04-22-2015

I-190

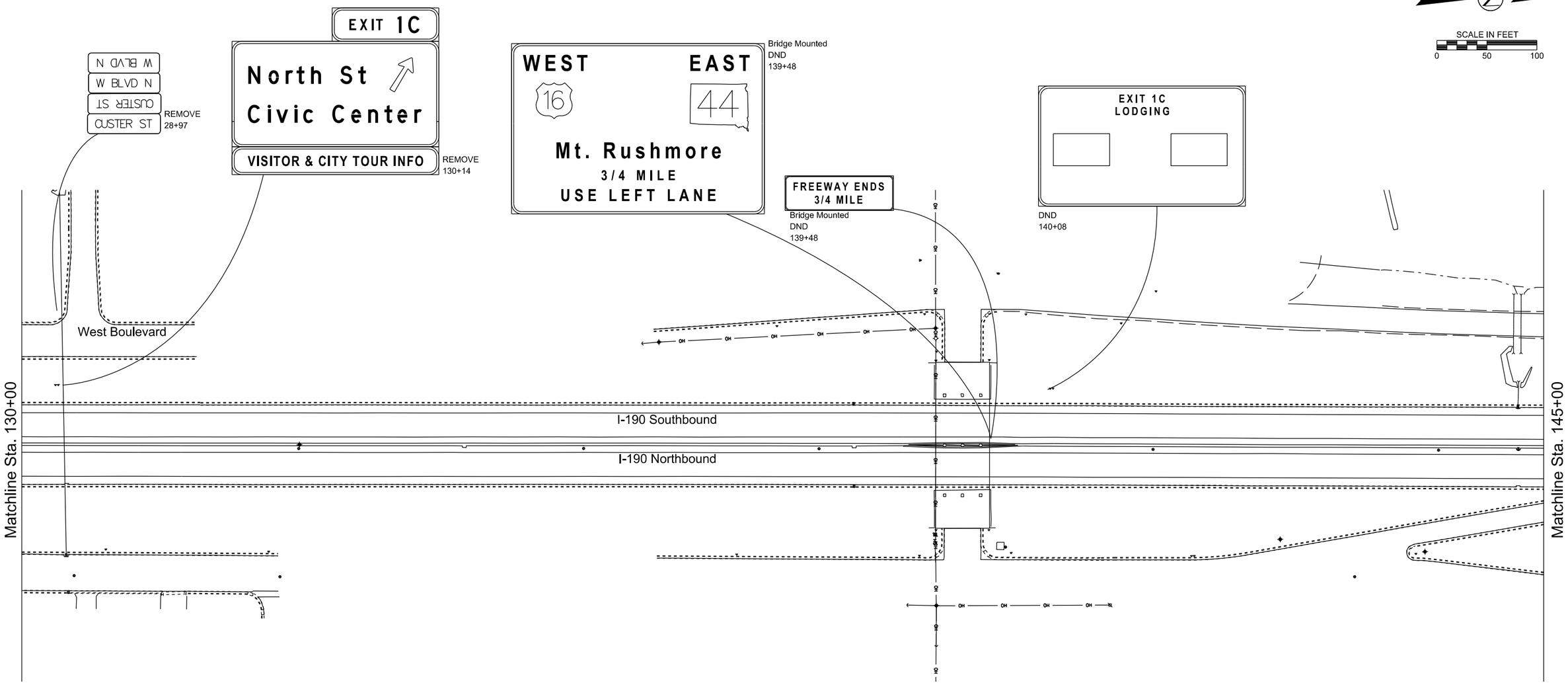

REGISTERED PROFESSIONAL ENGINEER
REG. NO. 8328
JODY W. PAGE
SOUTH DAKOTA
1 MAY 2015

HDR

Plot Scale - 1:99.9998

Plotted From - ahengel

File - ...\Design\Section_SI\Exist_4.dgn

STATE OF SOUTH DAKOTA	PROJECT	SHEET	TOTAL SHEETS
	IM 1902(61)0	S22	S59

Plotting Date: 04-22-2015

Existing Signing Layout

FOR BIDDING PURPOSES ONLY

I-190

SCALE IN FEET
0 50 100

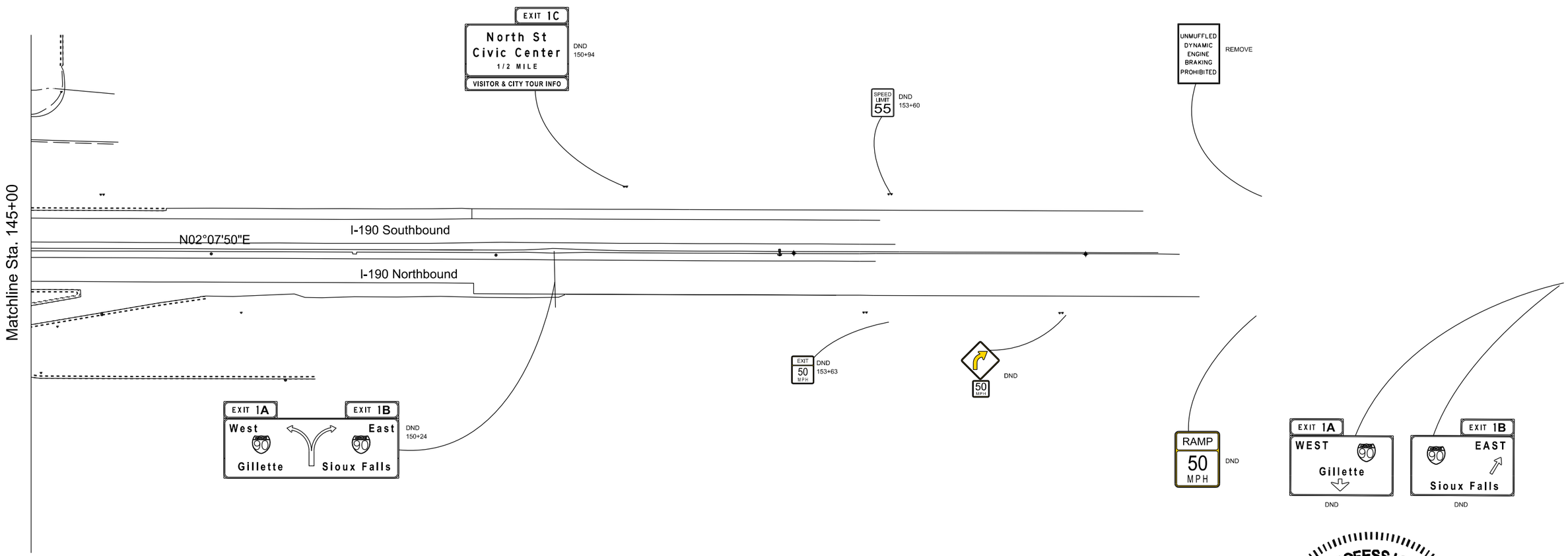

REGISTERED PROFESSIONAL ENGINEER
REG. NO. 8328
JODY W. PAGE
SOUTH DAKOTA
7 MAY 2015

HDR

Plot Scale - 1:99.9998

Plotted From - ahengel

File - ...\Design\Section_SI\Exist_5.dgn

STATE OF SOUTH DAKOTA	PROJECT	SHEET	TOTAL SHEETS
	IM 1902(61)0	S23	S59

Plotting Date: 04-22-2015

Existing Signing Layout

FOR BIDDING PURPOSES ONLY

I-190

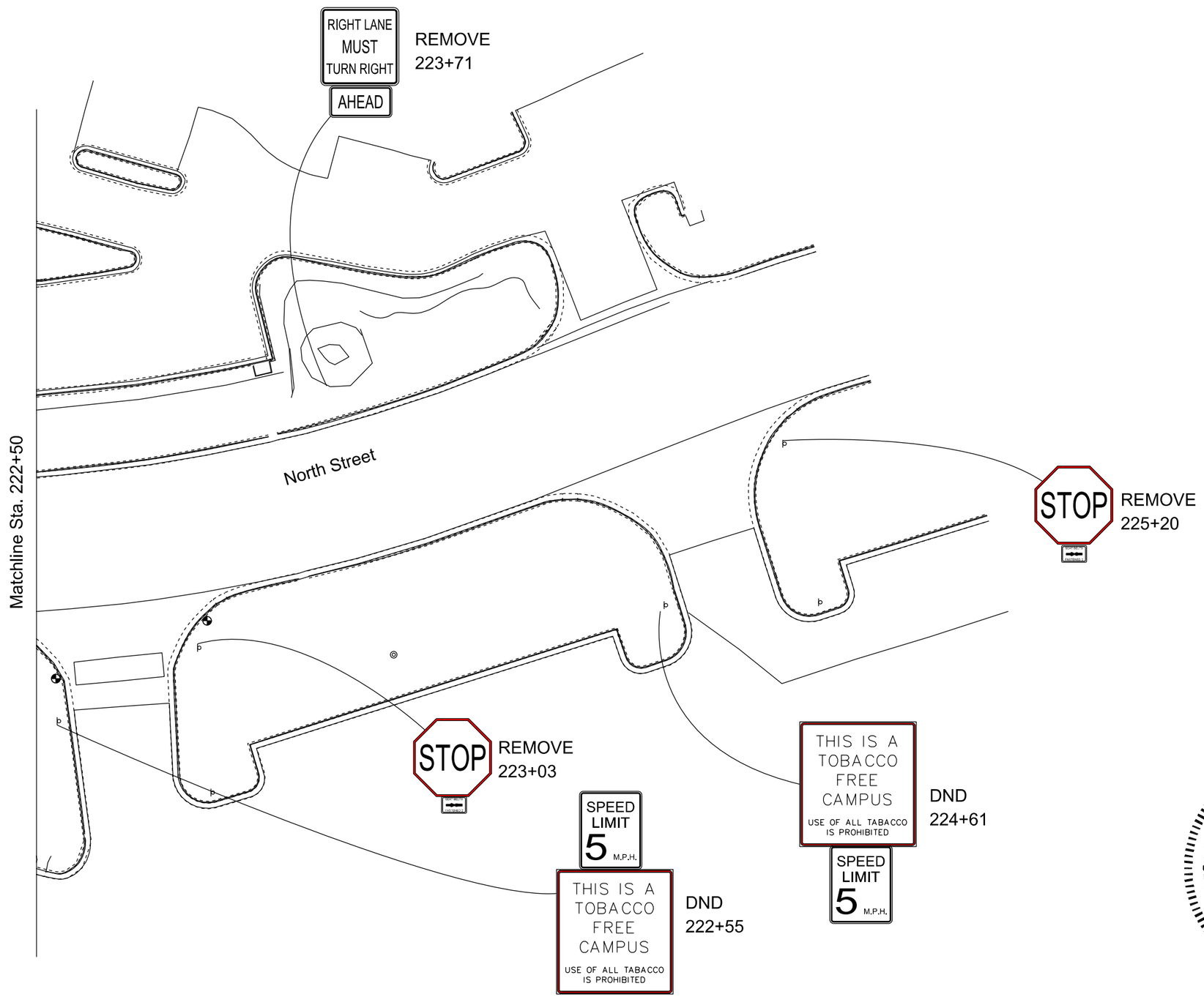

SCALE IN FEET
0 20 40

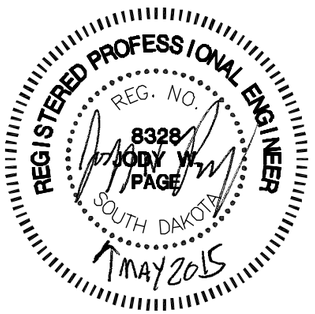

HDR

Plot Scale - 1:39.9999

Plotted From - ahengel

File - ...\Design\Section_SIExist_6.dgn

Permanent Signing Layout

I-190

FOR BIDDING PURPOSES ONLY

STATE OF SOUTH DAKOTA	PROJECT	SHEET	TOTAL SHEETS
	IM 1902(61)0	S24	S59

Plotting Date: 04-22-2015

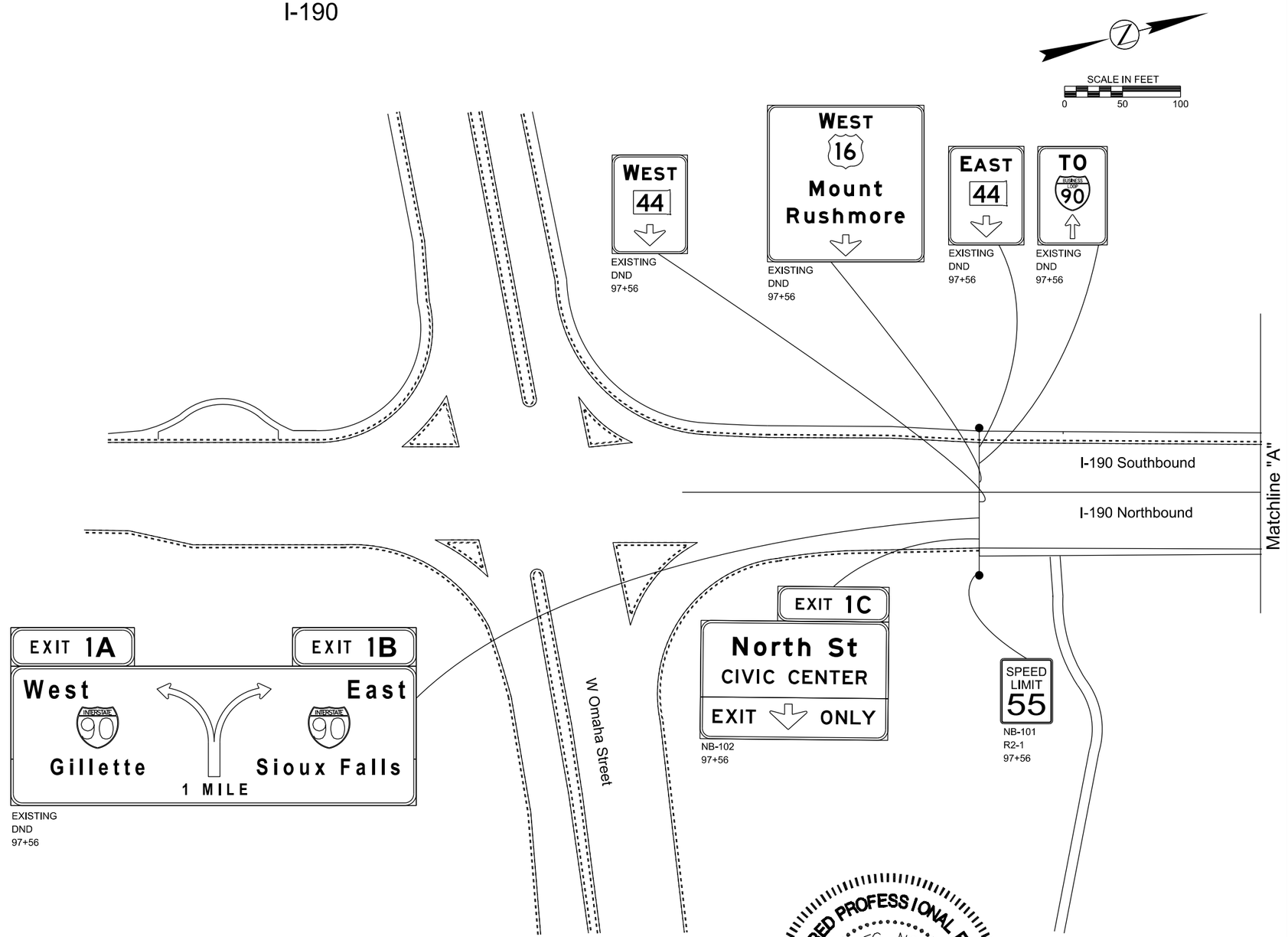

REGISTERED PROFESSIONAL ENGINEER
REG. NO. 8328
JODY W. PAGE
SOUTH DAKOTA
1 MAY 2015

- Type 2 Object Marker
- 4"x4" Delineator
- 4"x8" Delineator
- 4" Tubular Delineator

See sheets S29 to S37 for signs on North Avenue and West Boulevard.

Plot Scale - 1:99.9998

Plotted From - ahengel

File - ...\Design\Section_SII-190_1.dgn

Permanent Signing Layout

I-190

FOR BIDDING PURPOSES ONLY

STATE OF SOUTH DAKOTA	PROJECT	SHEET	TOTAL SHEETS
	IM 1902(61)0	S25	S59

Plotting Date: 04-22-2015

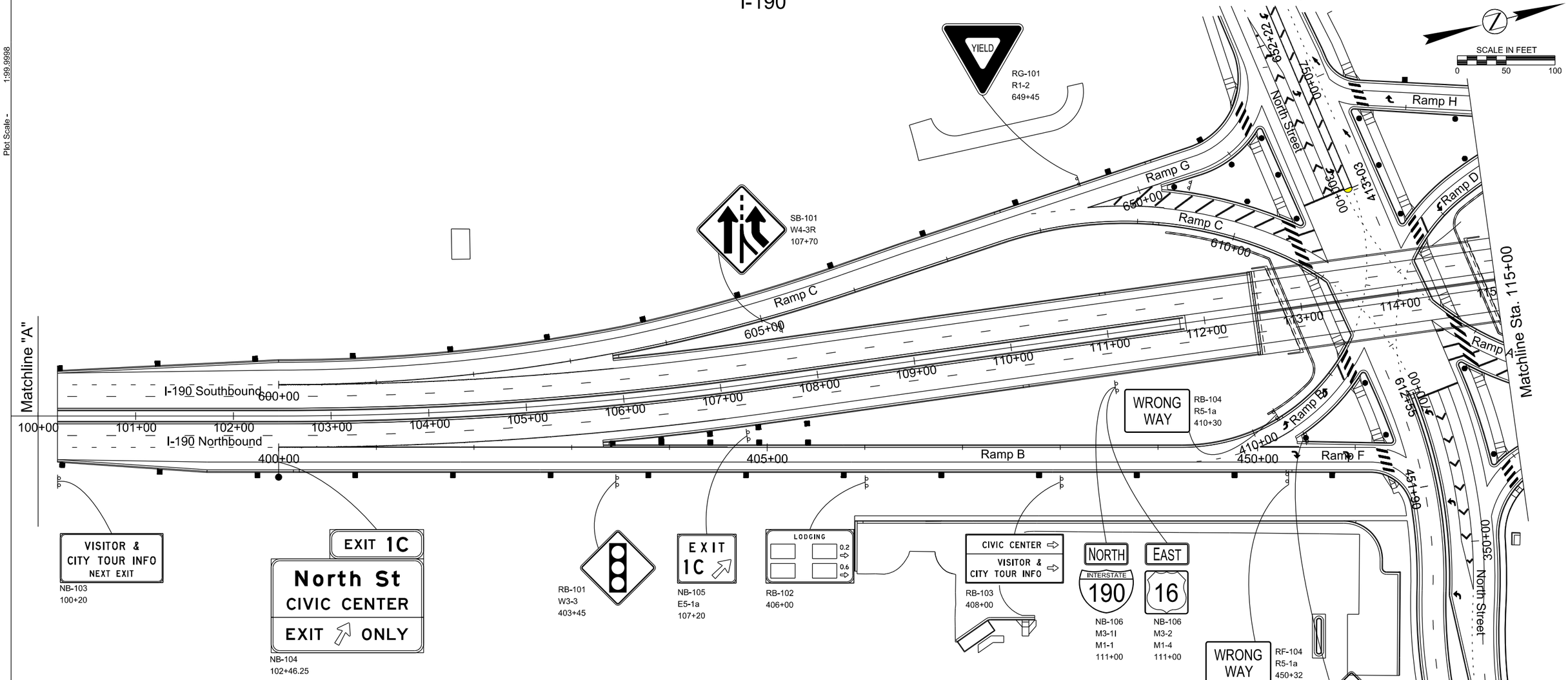

REGISTERED PROFESSIONAL ENGINEER
REG. NO. 8328
JODY W. PAGE
SOUTH DAKOTA
1 MAY 2015

- Type 2 Object Marker
- 4"x4" Delineator
- 4"x8" Delineator
- 4" Tubular Delineator

See sheets S29 to S37 for signs on North Avenue and West Boulevard.

HDR

Plot Scale - 1:99.9998

Plotted From - ahengel

File - ...\DesignSection_SI\I-190_2.dgn

Permanent Signing Layout

FOR BIDDING PURPOSES ONLY

STATE OF SOUTH DAKOTA	PROJECT	SHEET	TOTAL SHEETS
	IM 1902(61)0	S26	S59

Plotting Date: 04-22-2015

I-190

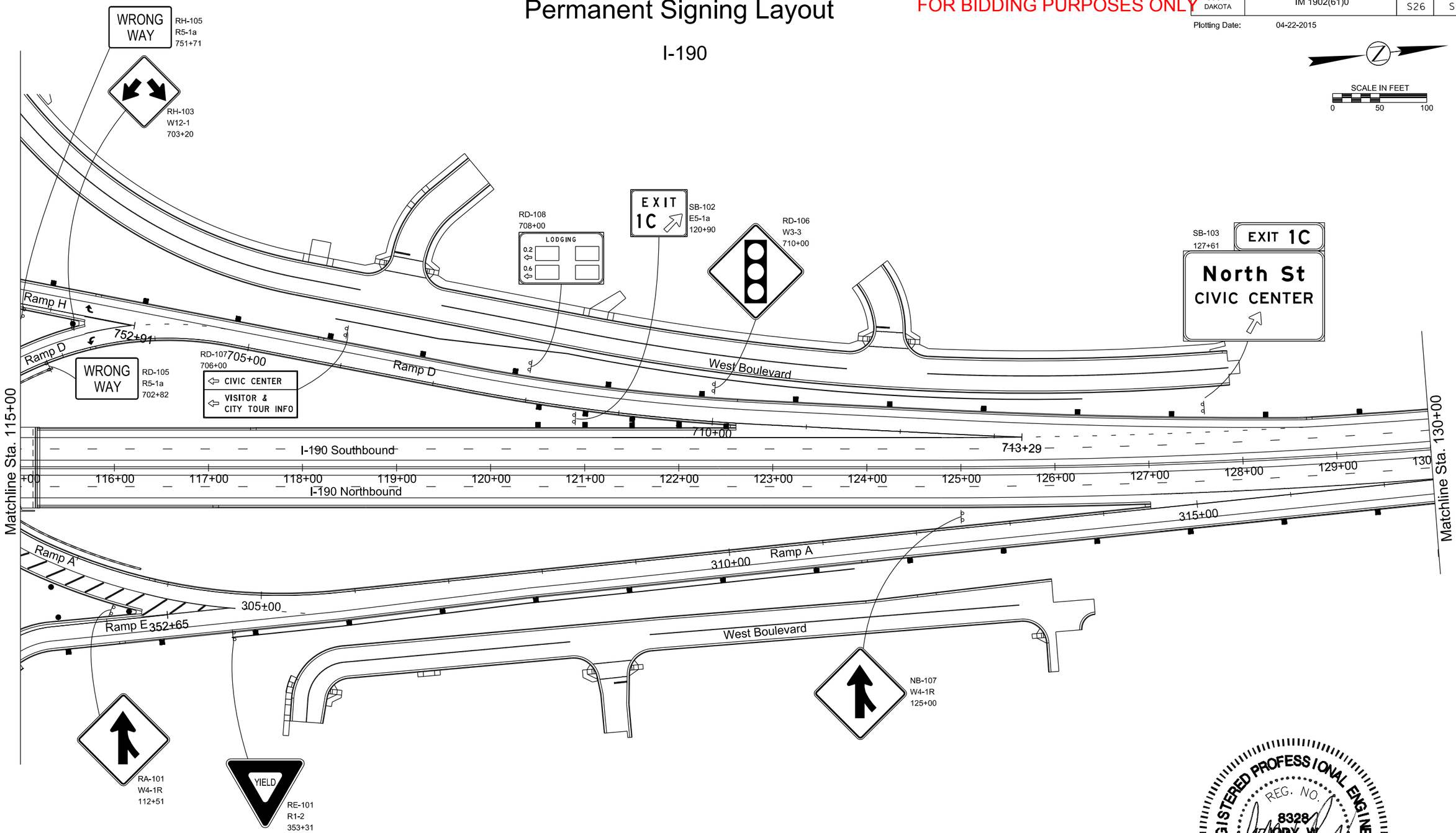

- Type 2 Object Marker
- 4"x4" Delineator
- 4"x8" Delineator
- 4" Tubular Delineator

See sheets S29 to S37 for signs on North Avenue and West Boulevard.

REGISTERED PROFESSIONAL ENGINEER
REG. NO. 8328
JODY W. PAGE
SOUTH DAKOTA
1 MAY 2015

HDR

Plot Scale - 1:99.9998

Plotted From - ahengel

File - ...\Design\Section_SII-190_3.dgn

Permanent Signing Layout

FOR BIDDING PURPOSES ONLY

STATE OF SOUTH DAKOTA	PROJECT	SHEET	TOTAL SHEETS
	IM 1902(61)0	S27	S59

Plotting Date: 04-22-2015

I-190

SCALE IN FEET
0 50 100

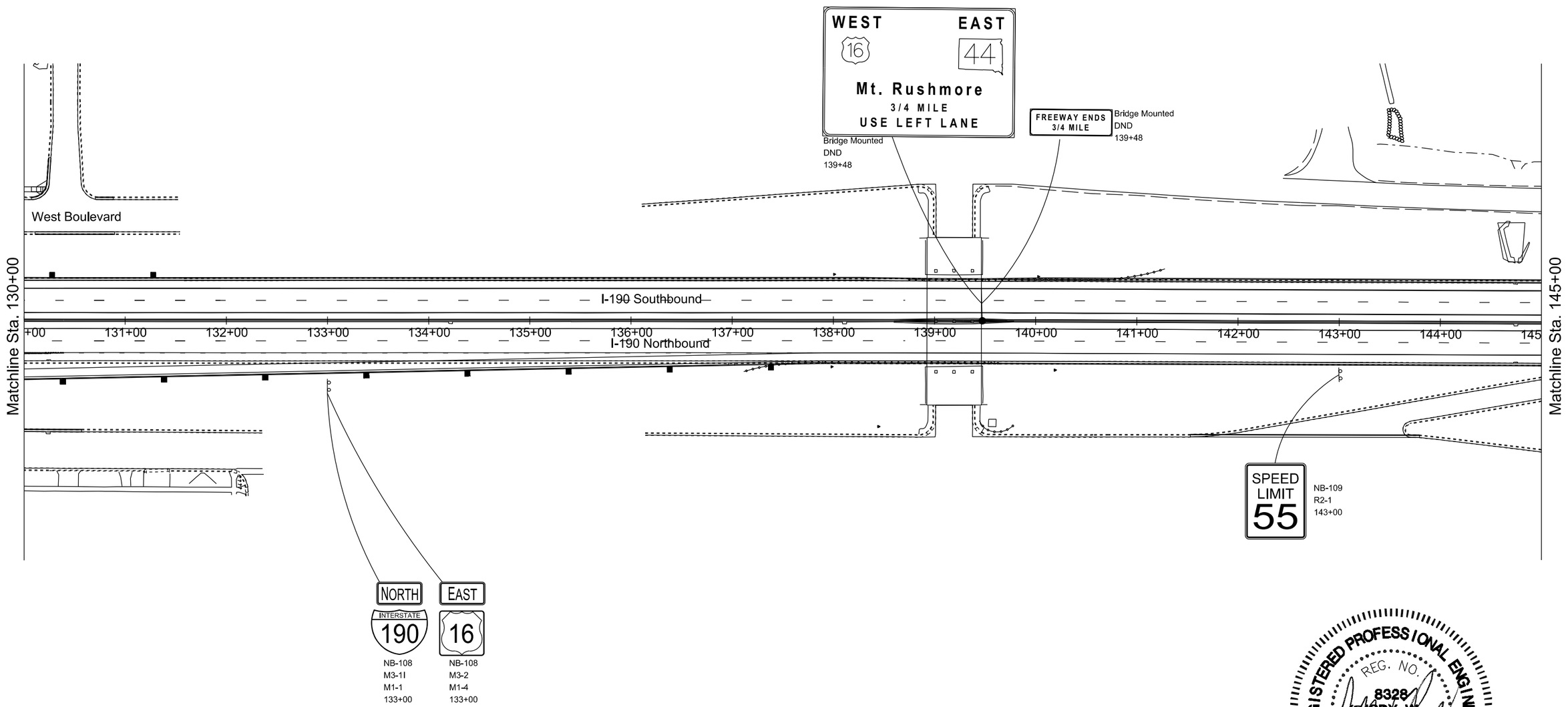

- Type 2 Object Marker
- 4"x4" Delineator
- 4"x8" Delineator
- 4" Tubular Delineator

See sheets S29 to S37 for signs on North Avenue and West Boulevard.

REGISTERED PROFESSIONAL ENGINEER
REG. NO. 8328
JODY W. PAGE
SOUTH DAKOTA
7 MAY 2015

HDR

Plot Scale - 1:99.9998
Plotted From - ahengel
File - ...\Design\Section_SI-190_4.dgn

STATE OF SOUTH DAKOTA	PROJECT	SHEET	TOTAL SHEETS
	IM 1902(61)0	S28	S59

Plotting Date: 04-22-2015

Permanent Signing Layout

FOR BIDDING PURPOSES ONLY

I-190

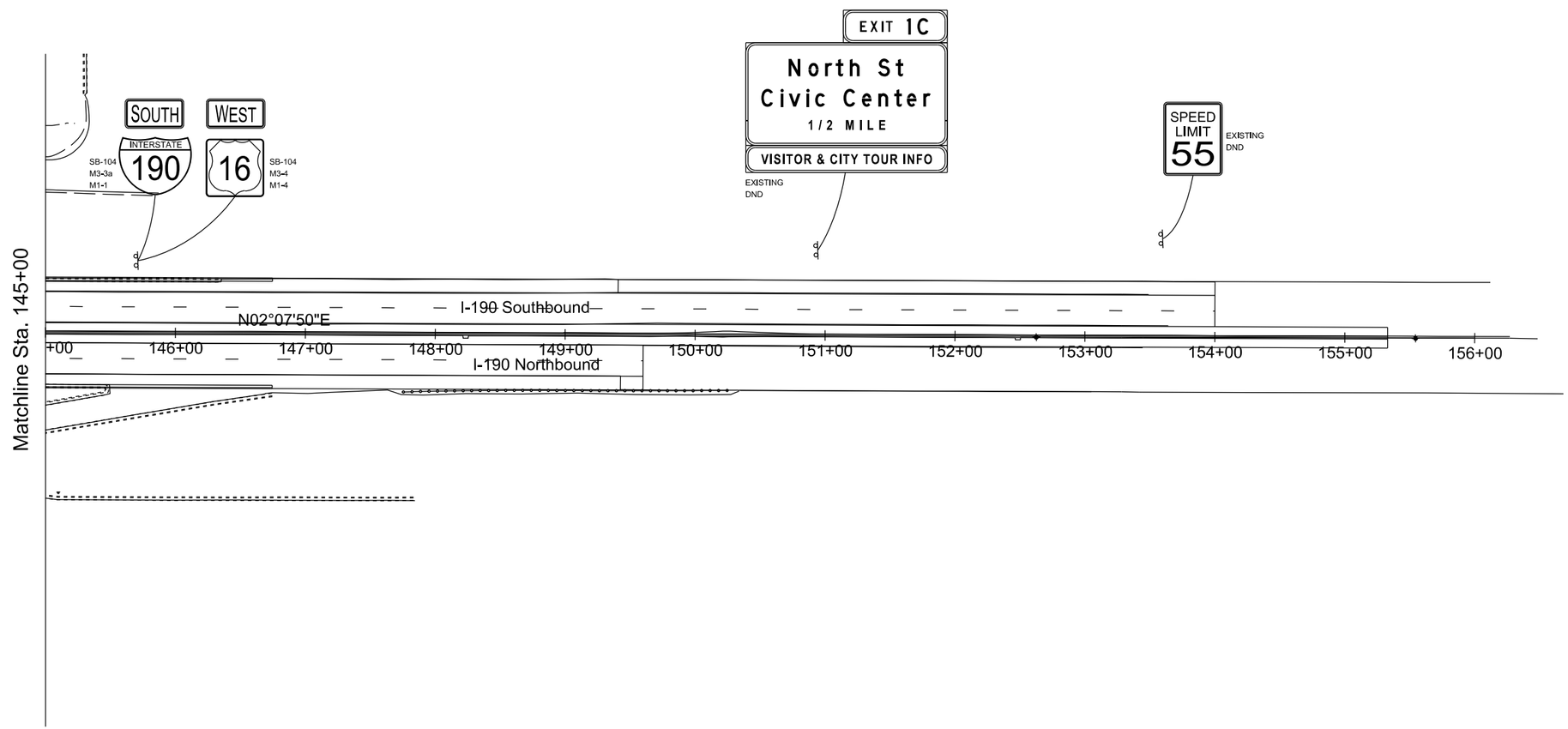

- Type 2 Object Marker
- 4"x4" Delineator
- 4"x8" Delineator
- 4" Tubular Delineator

See sheets S29 to S37 for signs on North Avenue and West Boulevard.

REGISTERED PROFESSIONAL ENGINEER
REG. NO. 8328
JODY W. PAGE
SOUTH DAKOTA
MAY 2015

HDR

Plot Scale - 1:99.9998

Plotted From - ahengel

File - ...\Design\Section_S\I-190_5.dgn

STATE OF SOUTH DAKOTA	PROJECT	SHEET	TOTAL SHEETS
	IM 1902(61)0	S29	S59

Plotting Date: 04-22-2015

FOR BIDDING PURPOSES ONLY

Permanent Signing Layout

North Street

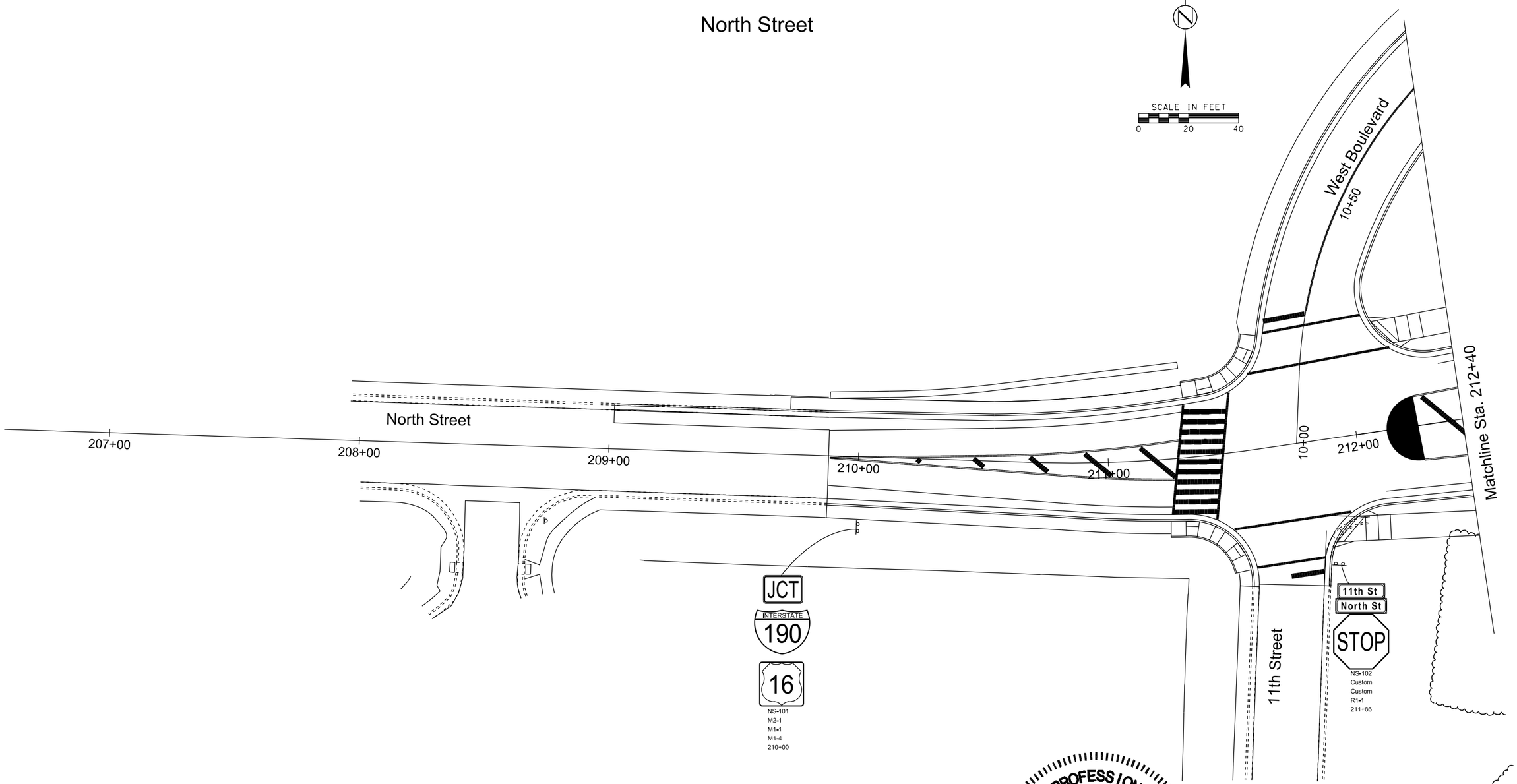

REGISTERED PROFESSIONAL ENGINEER
REG. NO. 8328
JODY W. PAGE
SOUTH DAKOTA
1 MAY 2015

- Type 2 Object Marker
- 4"x4" Delineator
- 4"x8" Delineator
- 4" Tubular Delineator

Plot Scale - 1:39.9999

Plotted From - ahengel

File - ...\Section_S\North_Street_1.dgn

Permanent Signing Layout

FOR BIDDING PURPOSES ONLY

STATE OF SOUTH DAKOTA	PROJECT	SHEET	TOTAL SHEETS
	IM 1902(61)0	S30	S59

Plotting Date: 04-22-2015

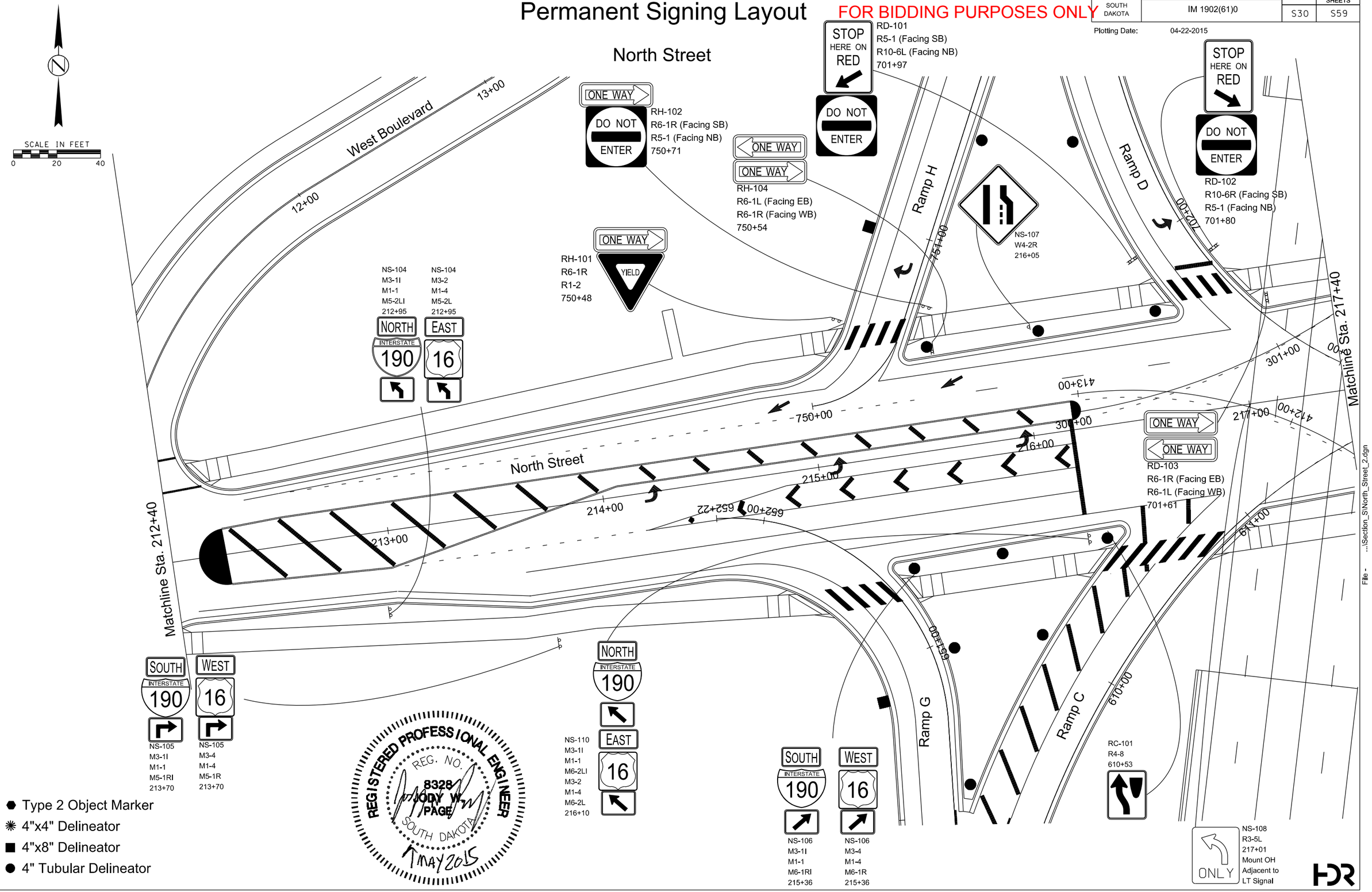

Plot Scale - 1:39.9999

Plotted From - ahengel

File - ...\Section_S\North_Street_2.dgn

Permanent Signing Layout

FOR BIDDING PURPOSES ONLY

STATE OF SOUTH DAKOTA	PROJECT	SHEET	TOTAL SHEETS
	IM 1902(61)0	S31	S59

Plotting Date: 04-22-2015

North Street

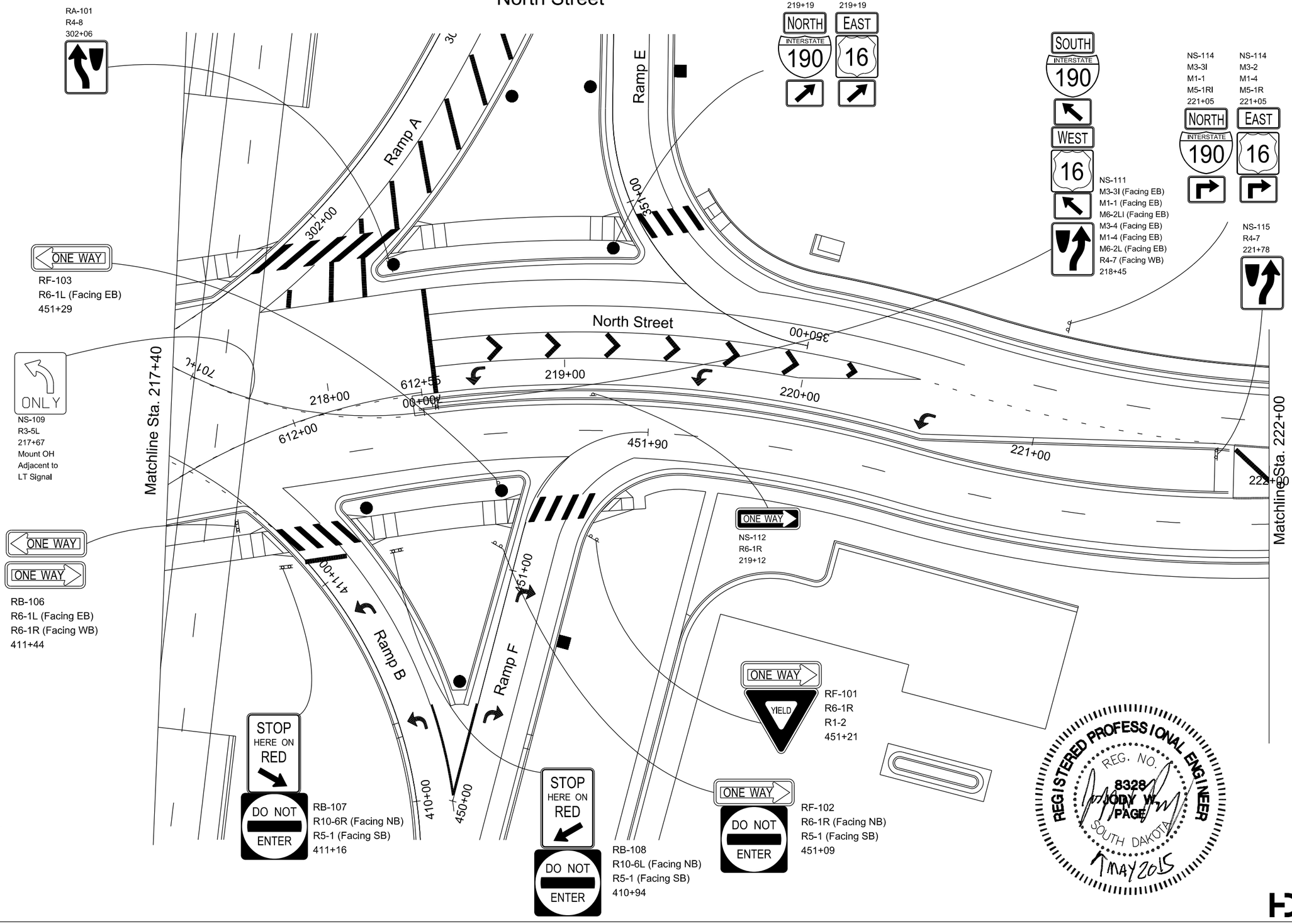

- Type 2 Object Marker
- 4"x4" Delineator
- 4"x8" Delineator
- 4" Tubular Delineator

Plot Scale - 1:39.9999

Plotted From - ahengel

File - ...\Section_S\North_Street_3.dgn

Permanent Signing Layout

FOR BIDDING PURPOSES ONLY

STATE OF SOUTH DAKOTA	PROJECT	SHEET	TOTAL SHEETS
	IM 1902(61)0	S32	S59

Plotting Date: 06-05-2015

Rev. 06/05/2015 AJF

North Street

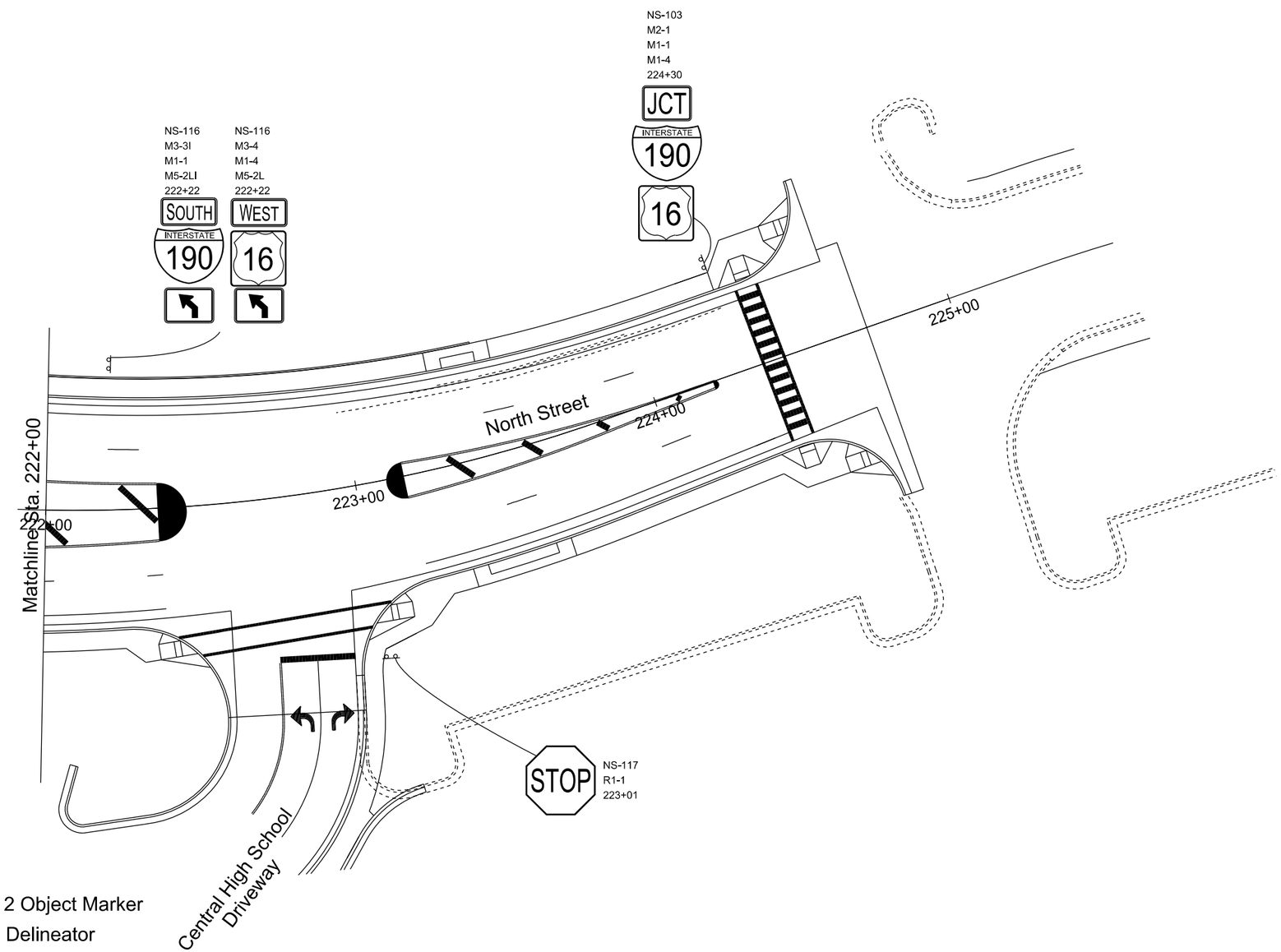

SCALE IN FEET
0 20 40

- Type 2 Object Marker
- 4"x4" Delineator
- 4"x8" Delineator
- 4" Tubular Delineator

REGISTERED PROFESSIONAL ENGINEER
REG. NO. 8326
JODY W. PAGE
SOUTH DAKOTA
5 JUN 15

HDR

Plot Scale - 1:40

Plotted From - afagerne

File - ...\Section_S\North_Street_4.dgn

STATE OF SOUTH DAKOTA	PROJECT	SHEET	TOTAL SHEETS
	IM 1902(61)0	S33	S59

FOR BIDDING PURPOSES ONLY

Plotting Date: 04-22-2015

Permanent Signing Layout

West Boulevard

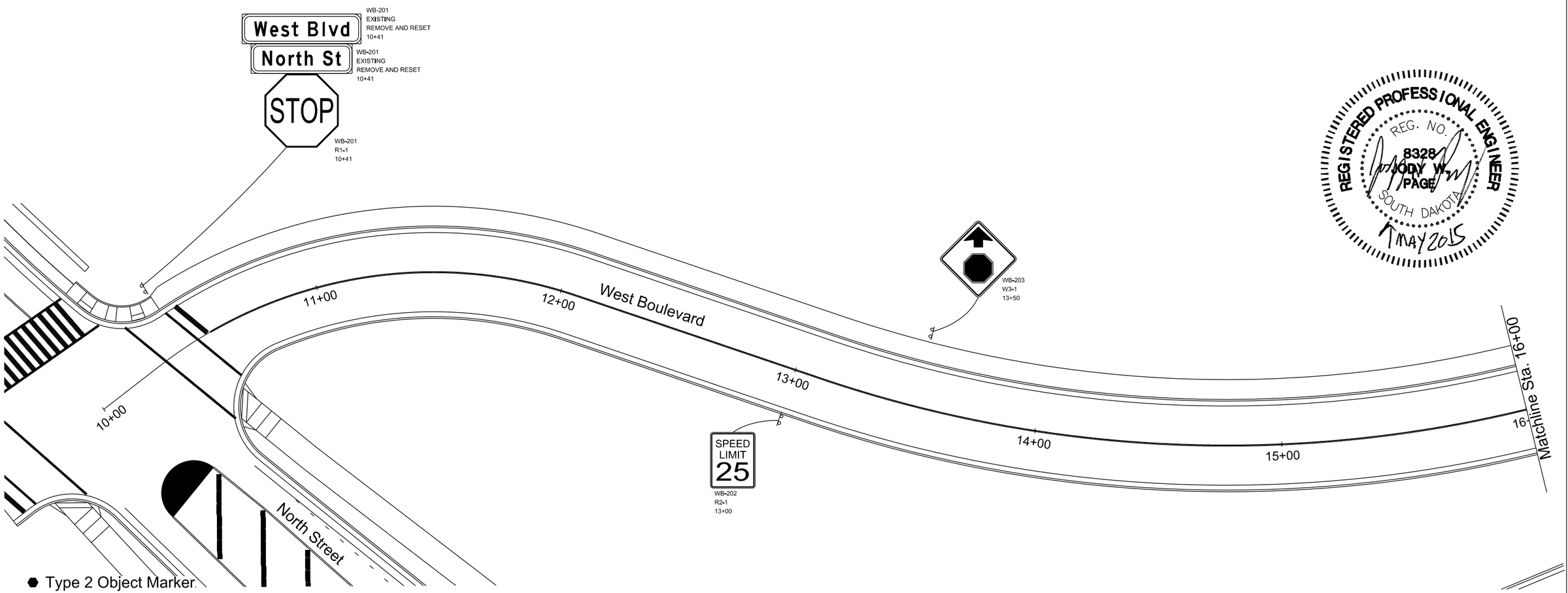

REGISTERED PROFESSIONAL ENGINEER
REG. NO. 8328
JODY W. PAGE
SOUTH DAKOTA
MAY 2015

- Type 2 Object Marker
- 4"x4" Delineator
- 4"x8" Delineator
- 4" Tubular Delineator

HDR

Plot Scale - 1:39.9999

Plotted From - ahengel

File - ...\Section_S\West_Blvd_1.dgn

STATE OF SOUTH DAKOTA	PROJECT	SHEET	TOTAL SHEETS
	IM 1902(61)0	S34	S59

FOR BIDDING PURPOSES ONLY

Plotting Date: 04-22-2015

Permanent Signing Layout

West Boulevard

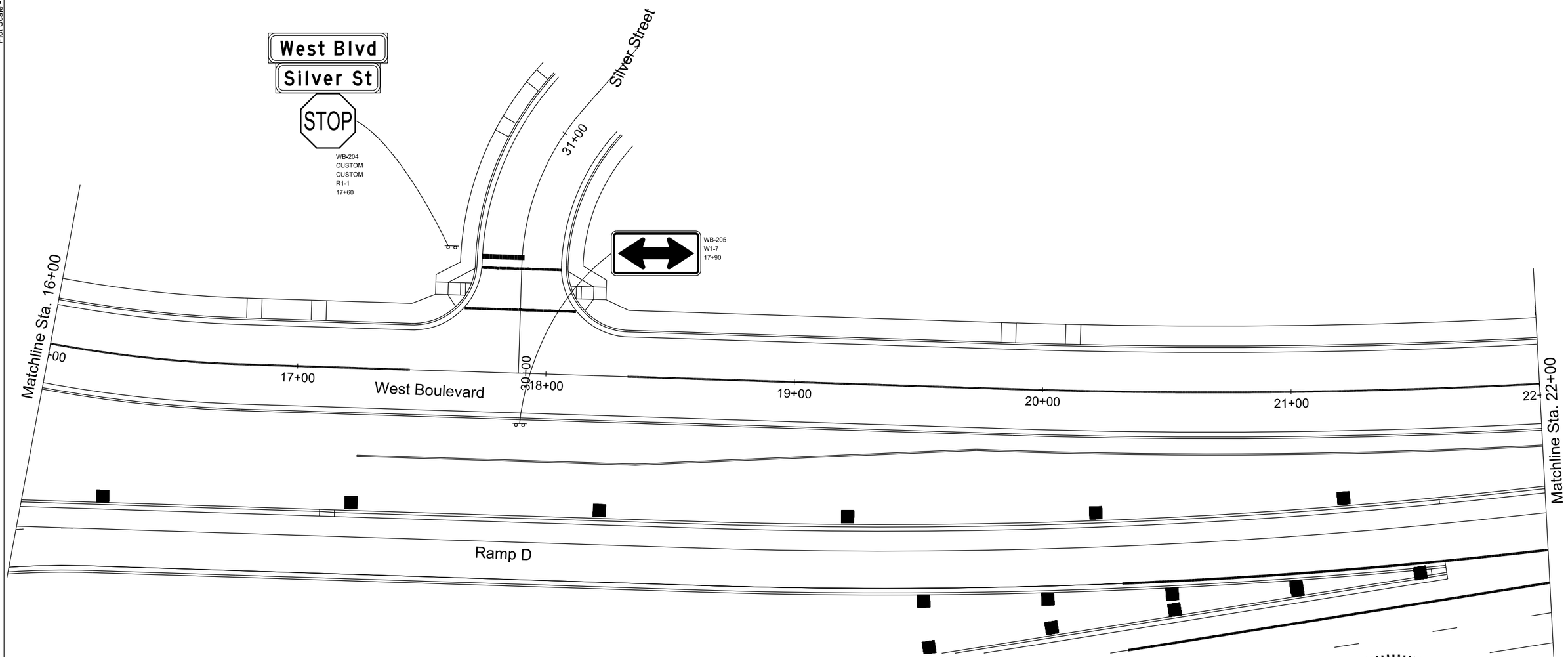

- Type 2 Object Marker
- 4"x4" Delineator
- 4"x8" Delineator
- 4" Tubular Delineator

REGISTERED PROFESSIONAL ENGINEER
REG. NO. 8328
JODY W. PAGE
SOUTH DAKOTA
MAY 2015

HDR

Plot Scale - 1:39.9999

Plotted From - ahengel

File - ...\Section_S\West_Blvd_2.dgn

Permanent Signing Layout

FOR BIDDING PURPOSES ONLY

STATE OF SOUTH DAKOTA	PROJECT	SHEET	TOTAL SHEETS
	IM 1902(61)0	S35	S59

Plotting Date: 04-22-2015

West Boulevard

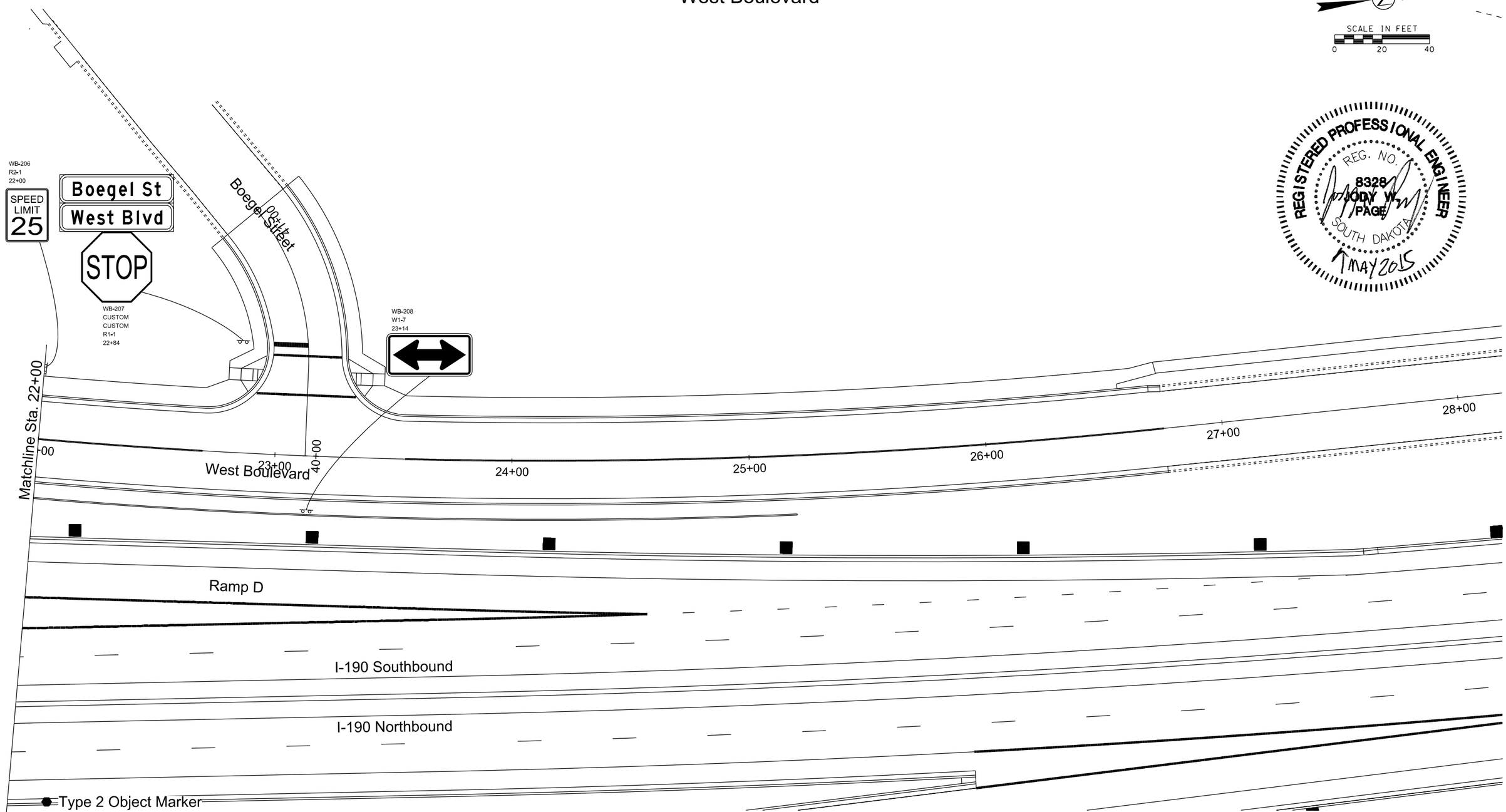

REGISTERED PROFESSIONAL ENGINEER
REG. NO. 8328
JODY W. PAGE
SOUTH DAKOTA
7 MAY 2015

Plot Scale - 1:39.9999

Plotted From - ahengel

File - ...\Section_S\West_Blvd_3.dgn

FOR BIDDING PURPOSES ONLY

STATE OF SOUTH DAKOTA	PROJECT	SHEET	TOTAL SHEETS
	IM 1902(61)0	S36	S59

Plotting Date: 04-22-2015

Permanent Signing Layout

West Boulevard North

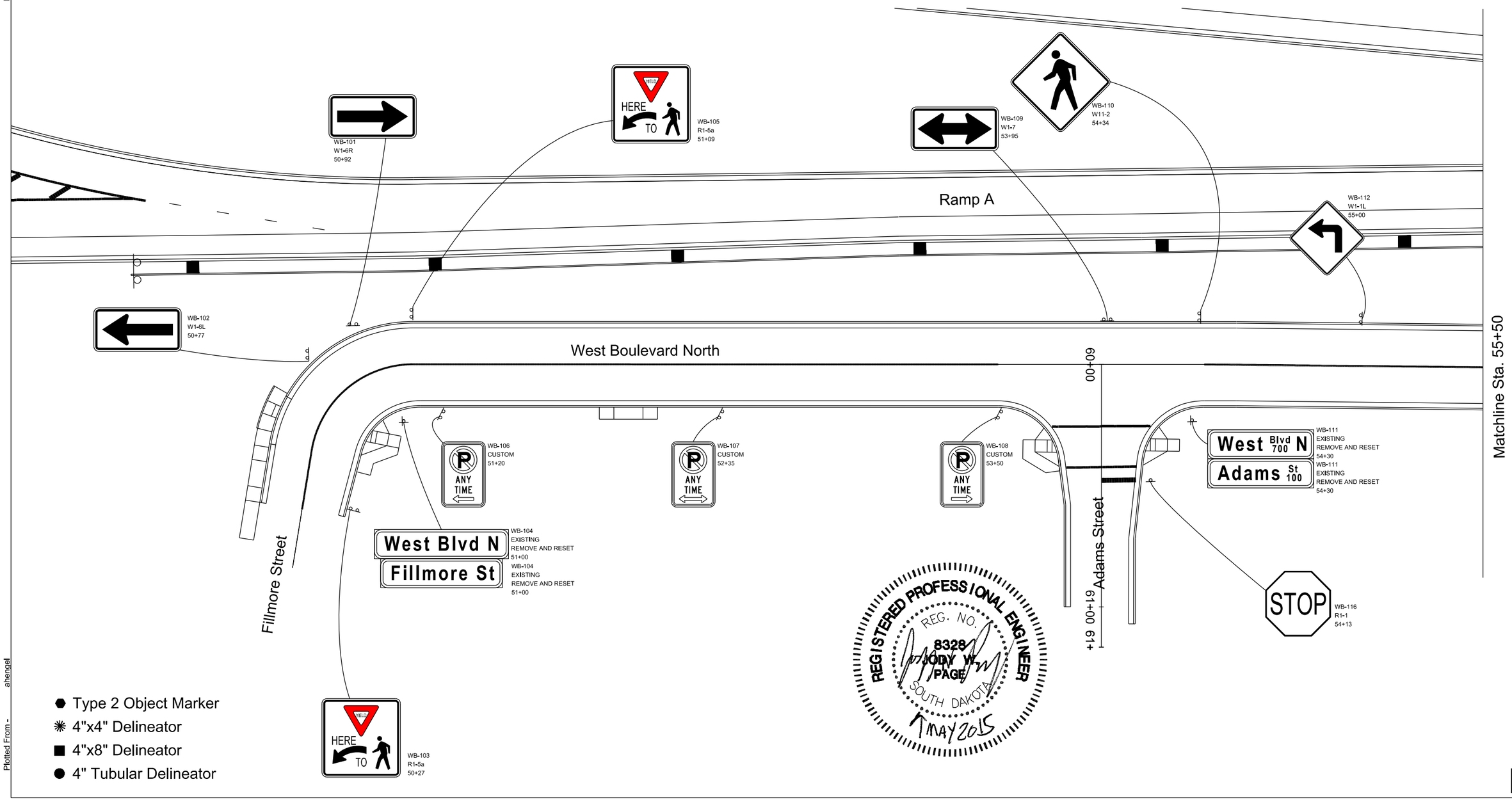

- Type 2 Object Marker
- 4"x4" Delineator
- 4"x8" Delineator
- 4" Tubular Delineator

Plot Scale - 1:39.9999

Plotted From - ahengel

File - ...\Section_S\West_Blvd_N_1.dgn

STATE OF SOUTH DAKOTA	PROJECT	SHEET	TOTAL SHEETS
	IM 1902(61)0	S37	S59

FOR BIDDING PURPOSES ONLY

Plotting Date: 04-22-2015

Permanent Signing Layout

West Boulevard North

SCALE IN FEET
0 20 40

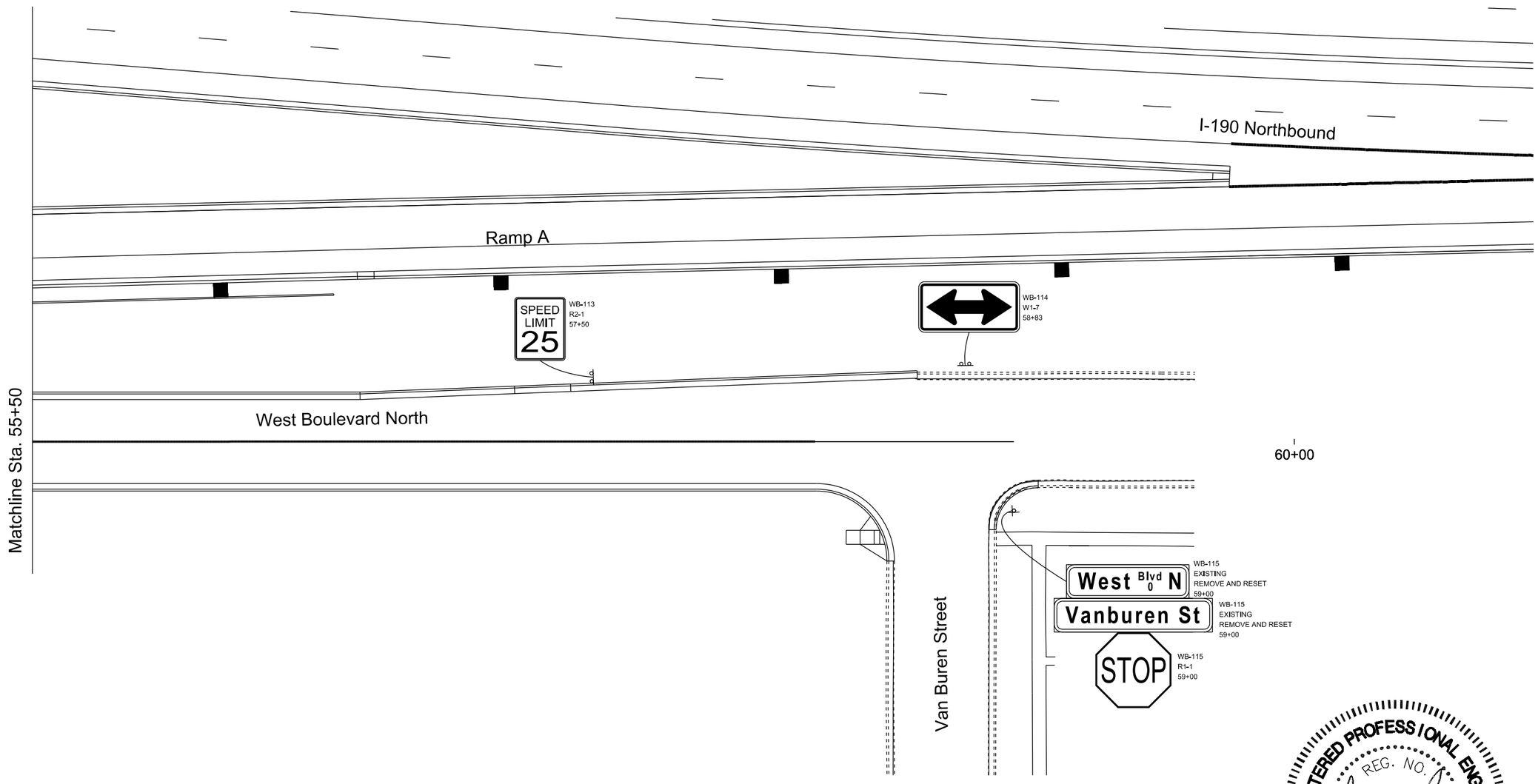

REGISTERED PROFESSIONAL ENGINEER
REG. NO. 8328
JODY W. PAGE
SOUTH DAKOTA
1 MAY 2015

- Type 2 Object Marker
- 4"x4" Delineator
- 4"x8" Delineator
- 4" Tubular Delineator

Plot Scale - 1:39.9999
Plotted From - ahengel
File - ...\Section_S\West_Blvd_N_2.dgn

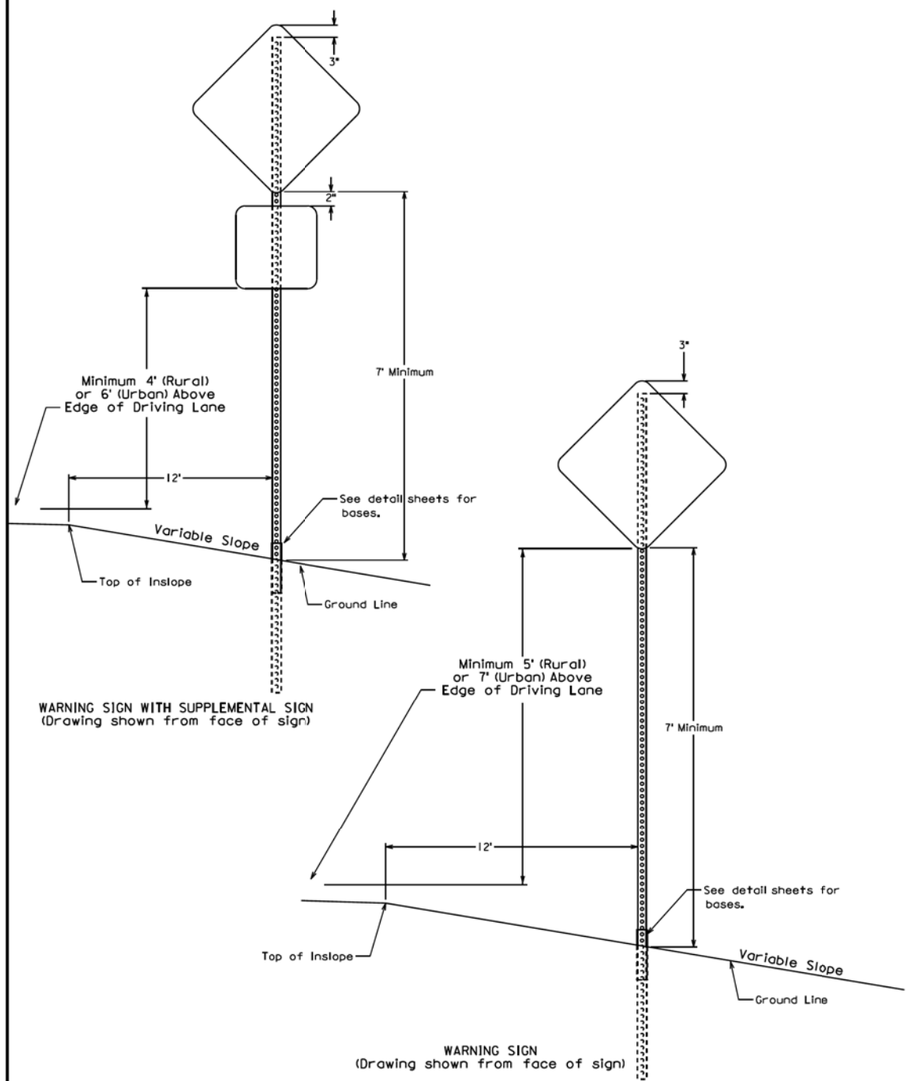

December 9, 2013

SDDOT	30" WARNING SIGNS (Typical Sign Detail)	SPECIAL DETAIL L01
		Sheet 1 of 1

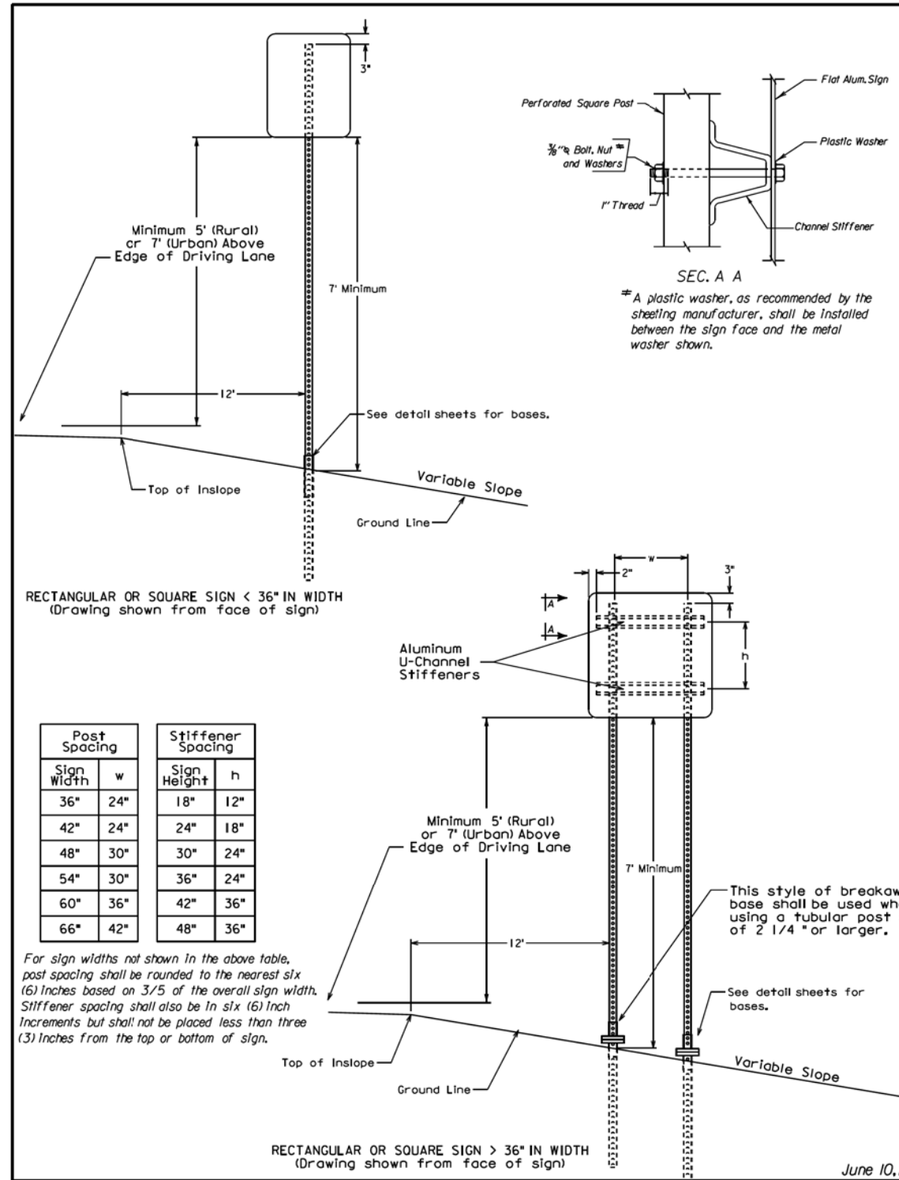

Post Spacing	
Sign Width	w
36"	24"
42"	24"
48"	30"
54"	30"
60"	36"
66"	42"

Stiffener Spacing	
Sign Height	h
18"	12"
24"	18"
30"	24"
36"	24"
42"	36"
48"	36"

For sign widths not shown in the above table, post spacing shall be rounded to the nearest six (6) inches based on 3/5 of the overall sign width. Stiffener spacing shall also be in six (6) inch increments but shall not be placed less than three (3) inches from the top or bottom of sign.

June 10, 2013

SDDOT	SQUARE OR RECTANGULAR SIGNS (Typical Sign and Stiffener Details)	SPECIAL DETAIL L03
		Sheet 1 of 1

Plot Scale - 1:200
Plotted From - ahengel
File - ...\Standard_Detail_01.dgn

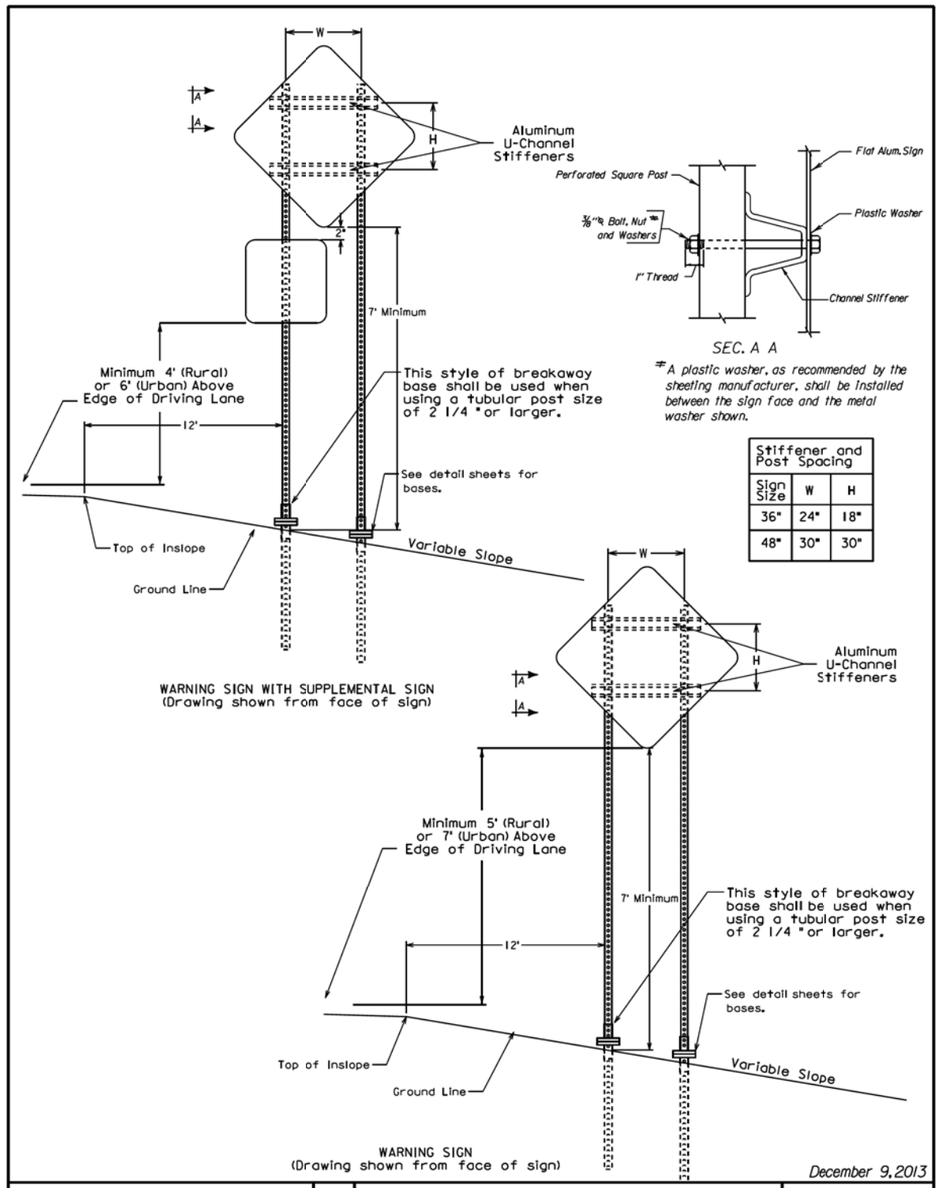

Stiffener and Post Spacing		
Sign Size	W	H
36"	24"	18"
48"	30"	30"

December 9, 2013

SDDOT	36" AND 48" WARNING SIGNS (Typical Sign and Stiffener Detail)	SPECIAL DETAIL L02 Sheet 1 of 1

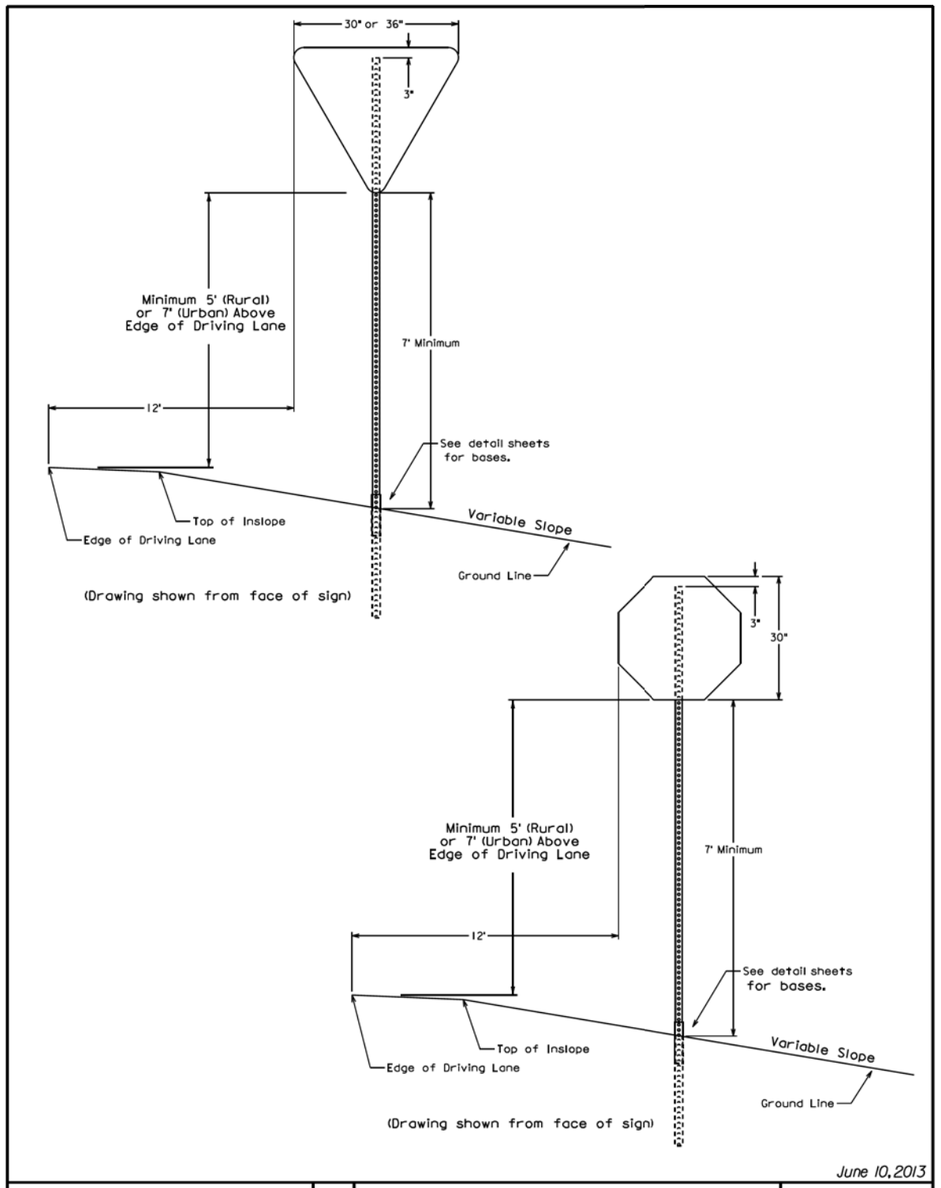

June 10, 2013

SDDOT	30" STOP OR 30"-36" YIELD (Typical Sign Details)	SPECIAL DETAIL L06 Sheet 1 of 1

W1-8 Single Mount Detal

View from Face

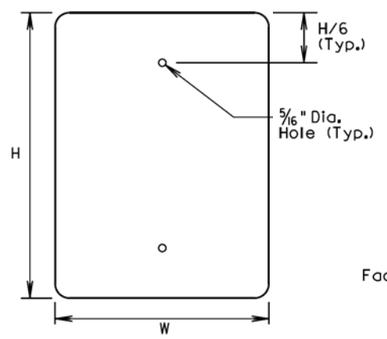

W1-8 Double Mount Detal

View from Top

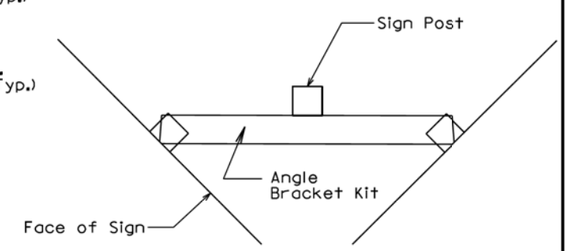

NOTE: The first Chevron shall be placed within 50' of begining of curve from each direction of travel and shall be mounted as a single mount installation. All intermediate installations shall be mounted as a double mount installation with approach angle adjusted such that 3 sign faces are visible at all times when traveling through the curve.

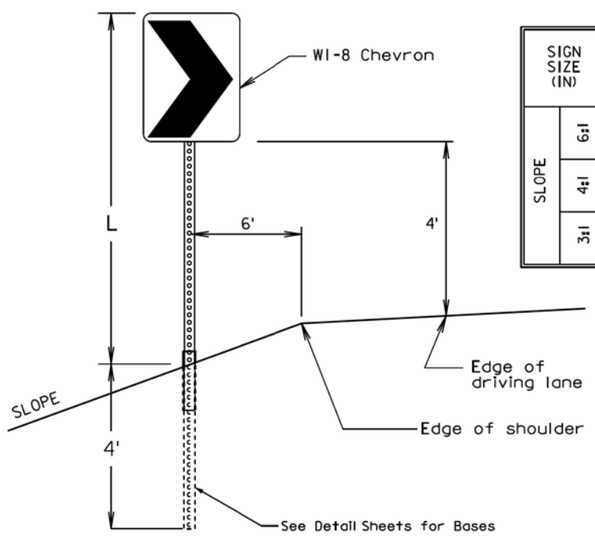

SIGN SIZE (IN)		12x18	18x24	24x30	30x36	36x48
		POST LENGTH L (FT)				
SLOPE	6:1	6½	7	7½	8	9
	4:1	7	7½	8	8½	9½
	3:1	7½	8	8½	9	10

February 25, 2013

SDDOT	CHEVRON SIGN (Typical Erection Details)	SPECIAL DETAIL L09
		Sheet 1 of 1

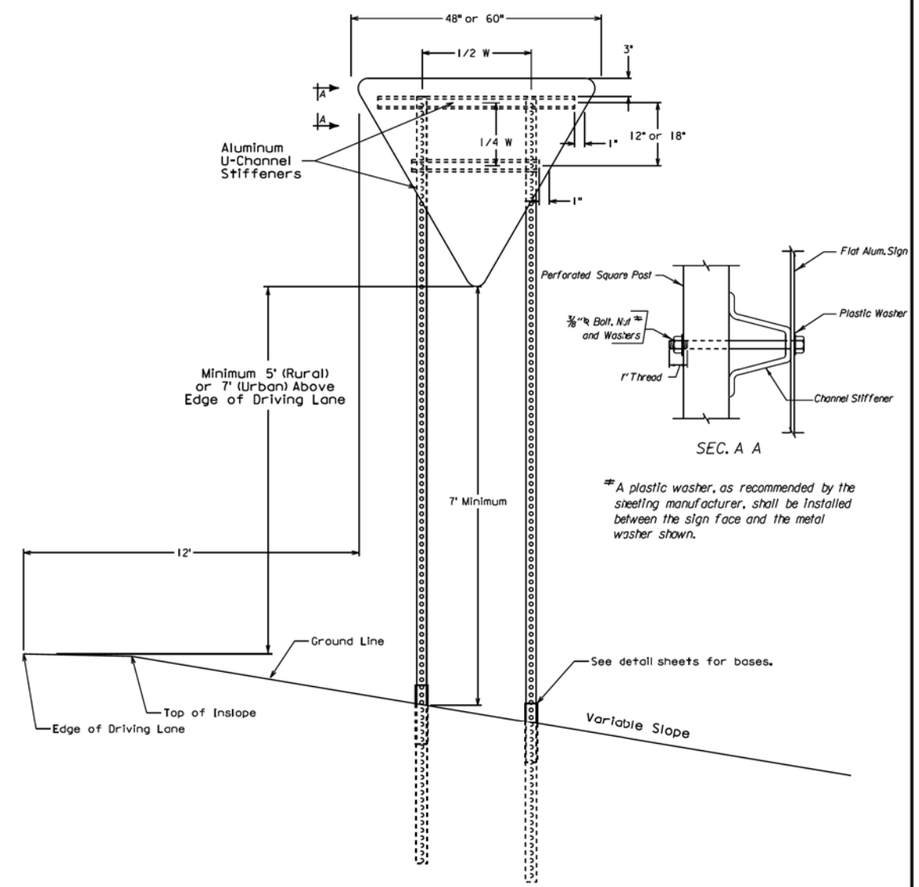

*A plastic washer, as recommended by the sheeting manufacturer, shall be installed between the sign face and the metal washer shown.

(Drawing shown from face of sign)

June 10, 2013

SDDOT	48" OR 60" YIELD SIGN (Typical Sign and Stiffener Details)	SPECIAL DETAIL L05
		Sheet 1 of 1

Plot Scale - 1:200
Plotted From - ahengel
File - ...\Standard_Detail_03.dgn

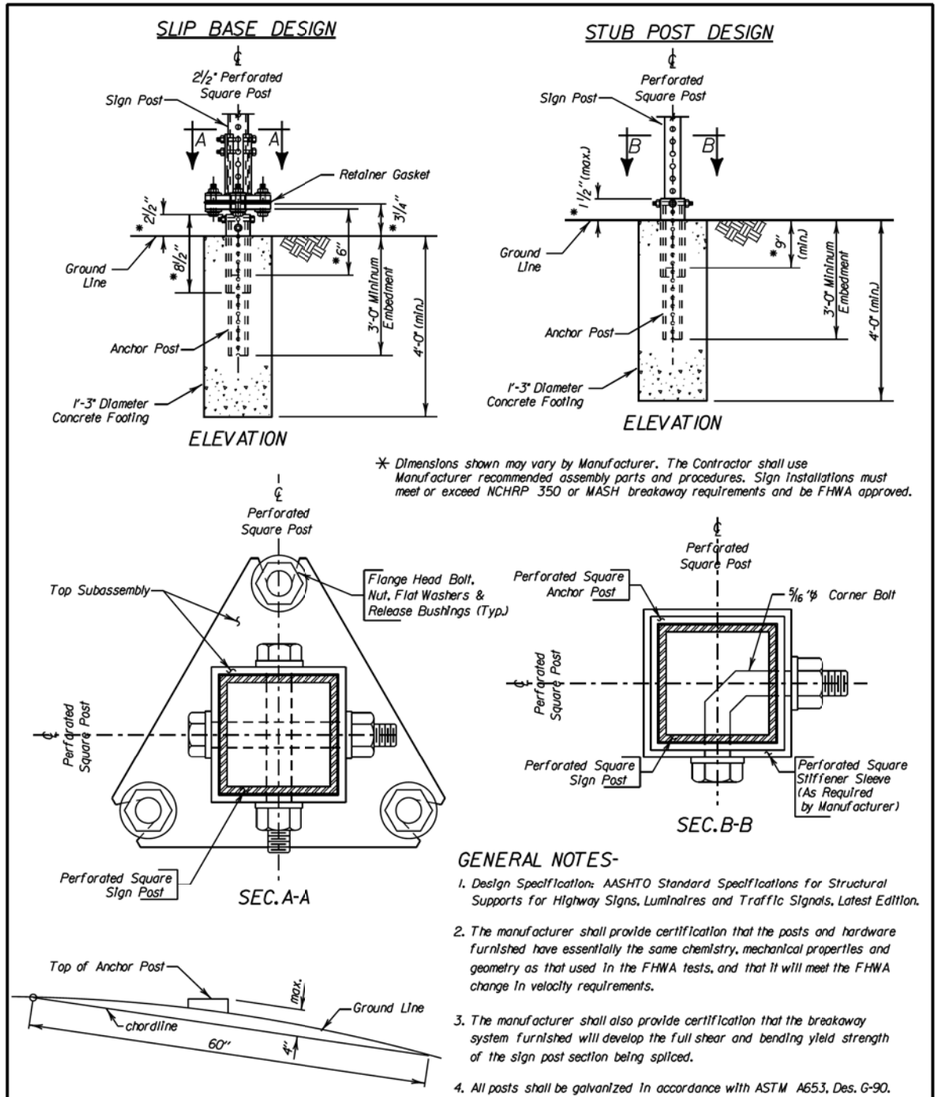

* Dimensions shown may vary by Manufacturer. The Contractor shall use Manufacturer recommended assembly parts and procedures. Sign installations must meet or exceed NCHRP 350 or MASH breakaway requirements and be FHWA approved.

BREAKAWAY SUPPORT STUB CLEARANCE DIAGRAM

NOTE: The top of anchor post shall NOT extend more than 4" max.

GENERAL NOTES-

1. Design Specification: AASHTO Standard Specifications for Structural Supports for Highway Signs, Luminaires and Traffic Signals, Latest Edition.
2. The manufacturer shall provide certification that the posts and hardware furnished have essentially the same chemistry, mechanical properties and geometry as that used in the FHWA tests, and that it will meet the FHWA change in velocity requirements.
3. The manufacturer shall also provide certification that the breakaway system furnished will develop the full shear and bending yield strength of the sign post section being spliced.
4. All posts shall be galvanized in accordance with ASTM A653, Des. G-90.
5. All hardware shall be galvanized in accordance with ASTM A153.

July 24, 2012

	SDDOT	**BREAKAWAY SIGN SUPPORTS** **Perforated Steel Post w/Concrete Footings**	SPECIAL DETAIL L20 Sheet 1 of 1

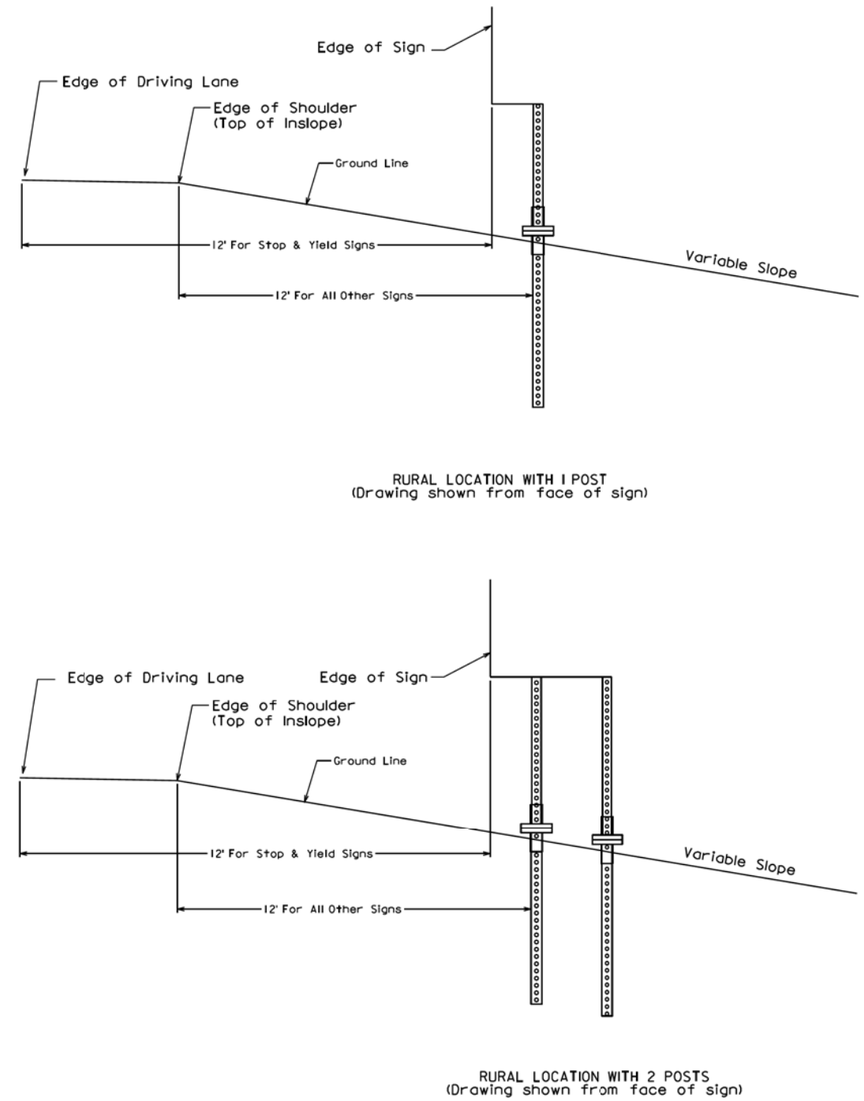

June 10, 2013

	SDDOT	**LATERAL OFFSET** **(Typical Rural Sign Installations)**	SPECIAL DETAIL L23 Sheet 1 of 1

Plot Scale - 1:200
Plotted From - ahengel
File - ...\Standard_Detail_04.dgn
HDR

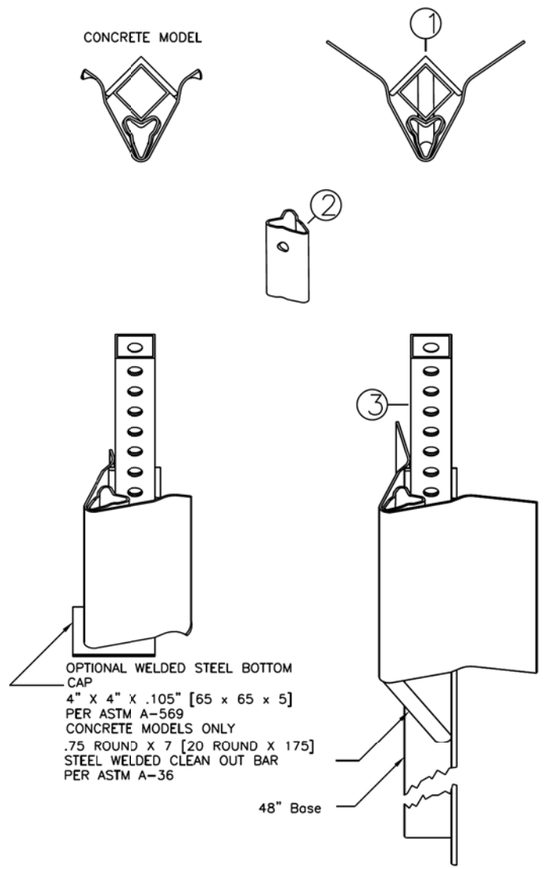

February 25, 2013

SDDOT

TUBULAR POST BASE DETAILS
(Typical Flush Mount Breakaway Installation)

SPECIAL DETAIL L22

Sheet 1 of 1

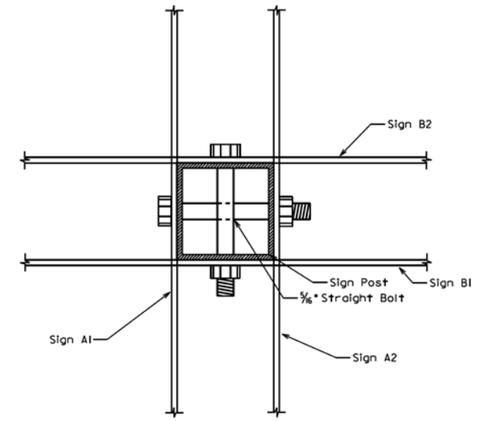

SEC. A-A

A plastic washer, as recommended by the sheeting manufacturer, shall be installed between the sign face and the bolt head and also between the sign and the nut.

NOTE: Sign assembly may be mounted above Yield or Stop sign - refer to plan note or Table of Permanent Signing for specific locations. When mounting above another sign, 2" of verticle clearance shall be maintained between signs.

Back-to-back signs over 24" in width shall be bolted/riveted to each other with at least one connector on each end of sign.

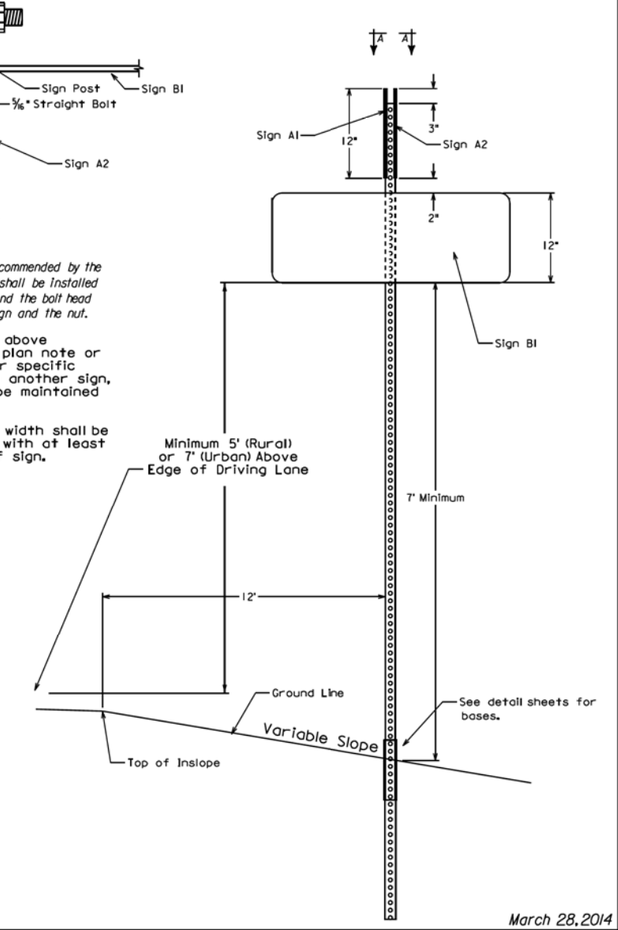

March 28, 2014

SDDOT

STREET NAME SIGN
(Typical Sign and Stiffener Details)

SPECIAL DETAIL L10

Sheet 1 of 1

Plot Scale - 1:200
Plotted From - ahengel
File - ...\Standard_Detail_05.dgn
HDR

SIGN BASE DETAILS FOR A 2" SIGN POST

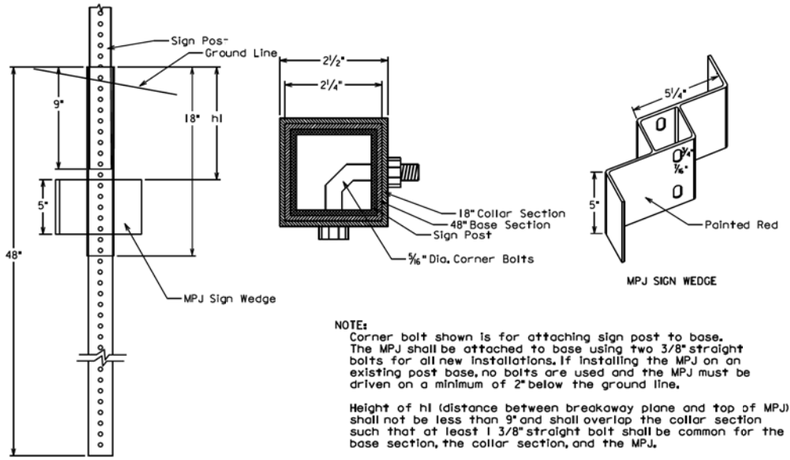

NOTE:
Corner bolt shown is for attaching sign post to base. The MPJ shall be attached to base using two 3/8" straight bolts for all new installations. If installing the MPJ on an existing post base, no bolts are used and the MPJ must be driven on a minimum of 2" below the ground line.

Height of hi (distance between breakaway plane and top of MPJ) shall not be less than 9" and shall overlap the collar section such that at least 1 3/8" straight bolt shall be common for the base section, the collar section, and the MPJ.

SIGN BASE DETAILS FOR A 2½" SIGN POST

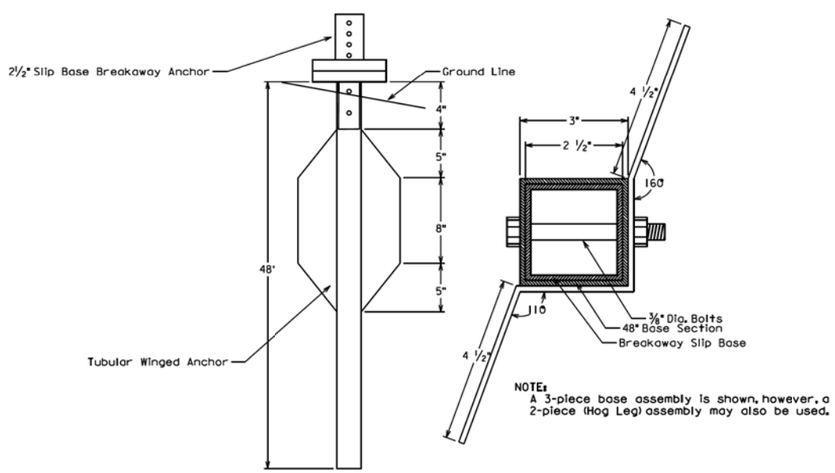

NOTE:
A 3-piece base assembly is shown, however, a 2-piece (Hog Leg) assembly may also be used.

March 28, 2014

SDDOT	**TUBULAR POST BASE DETAILS (Typical Soil Installation)**	SPECIAL DETAIL L21
		Sheet 1 of 1

ERECTION DETAILS FOR INTERSTATE HIGHWAY SIGNS

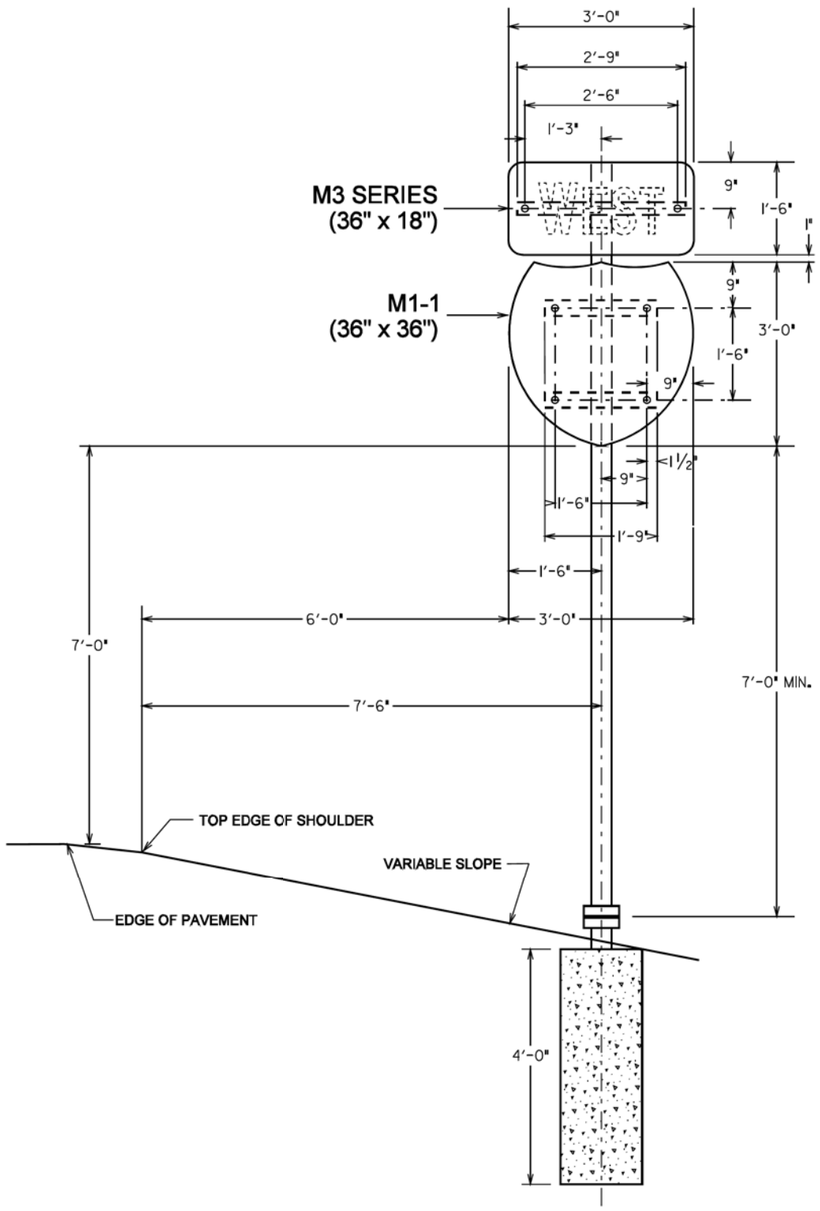

CARDINAL DIRECTION INTERSTATE
ROUTE MARKER ASSEMBLY

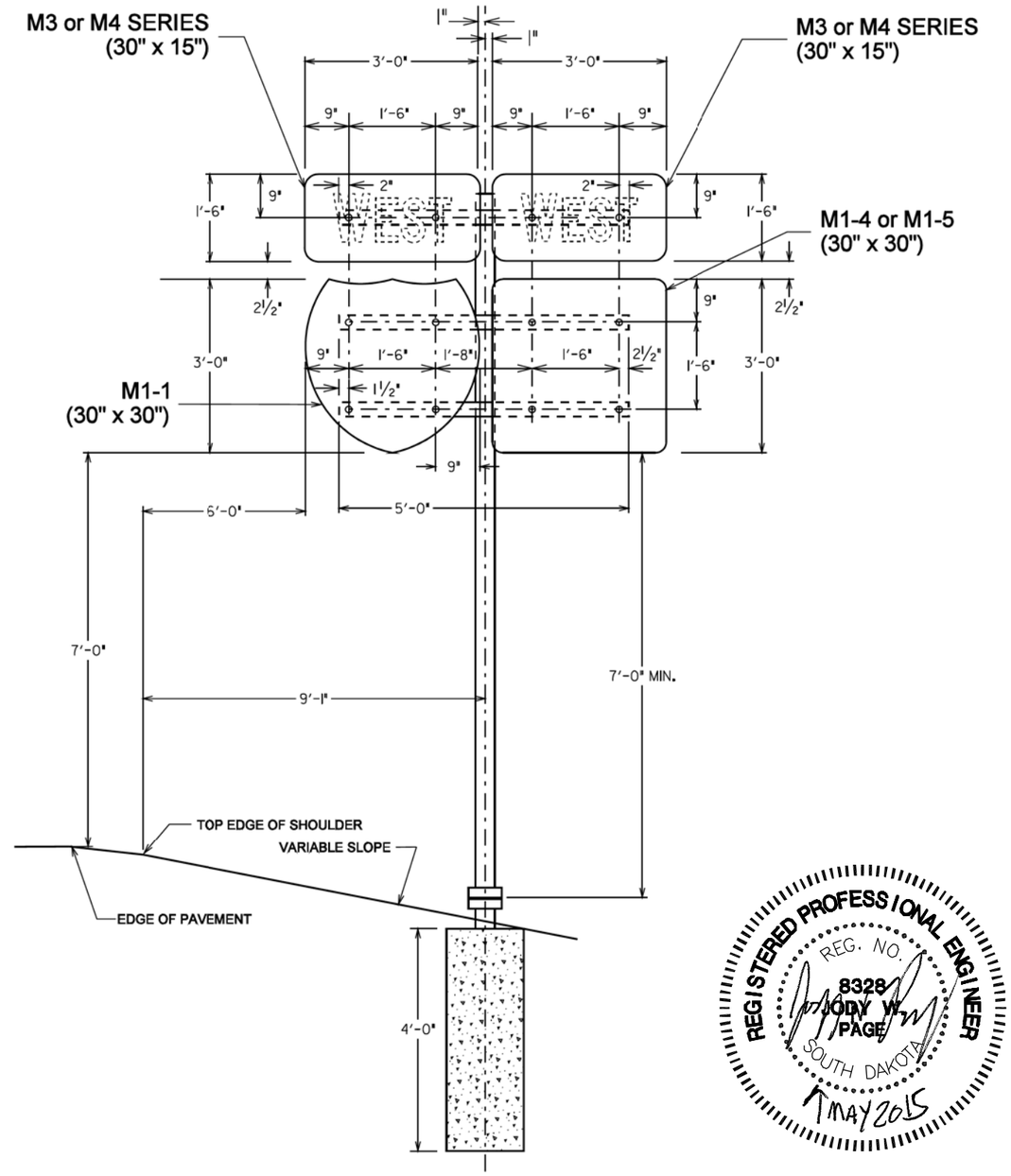

INTERSTATE MAINLINE COMBINATION
ROUTE MARKER ASSEMBLY

Plot Scale - 1:200
Plotted From - ahenzel
File - ...\Standard_Detail_07.dgn

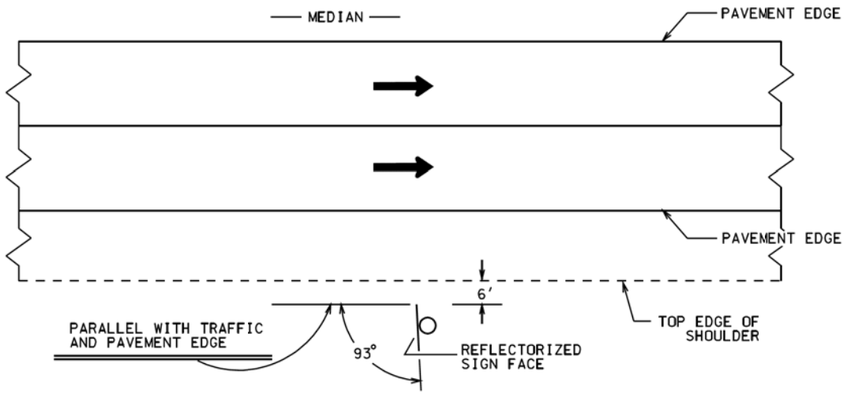

ANGLE OF SHOULDER MOUNTED REFLECTORIZED SIGNS TO APPROACHING TRAFFIC

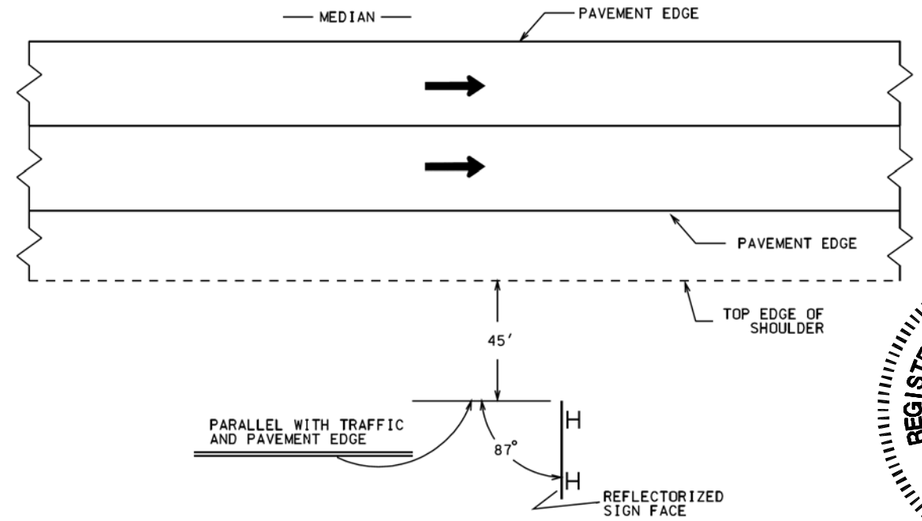

ANGLE OF APPROACHING TRAFFIC TO REFLECTORIZED SIGNS ERECTED OUT 45 FEET FROM THE TOP EDGE OF ASPHALT SHOULDER

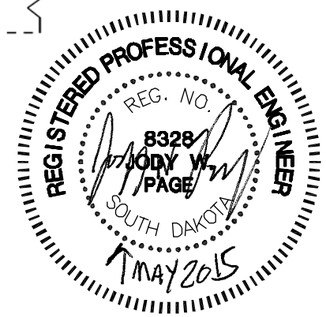

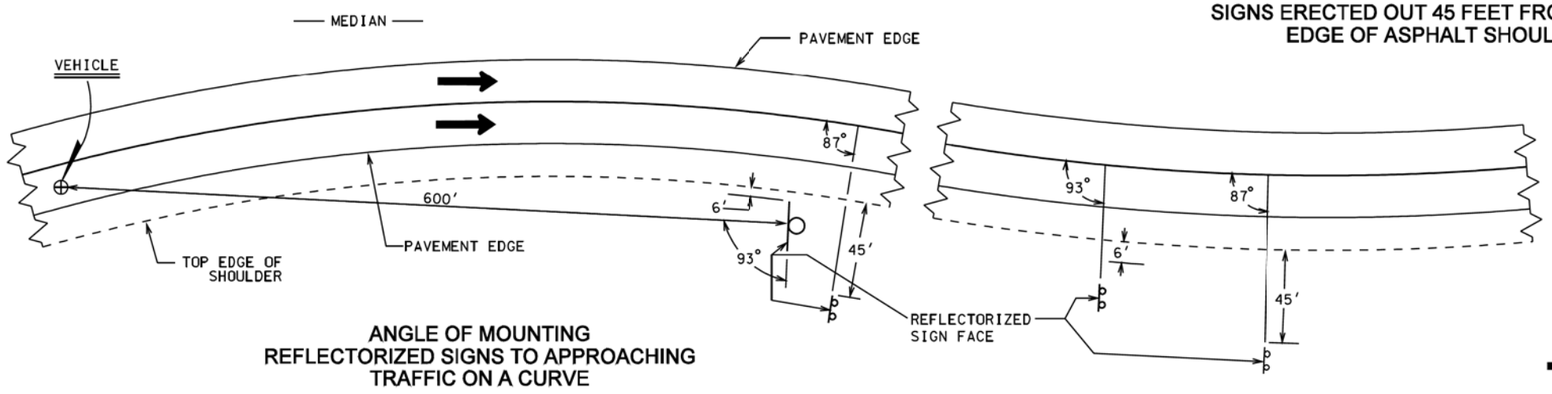

ANGLE OF MOUNTING REFLECTORIZED SIGNS TO APPROACHING TRAFFIC ON A CURVE

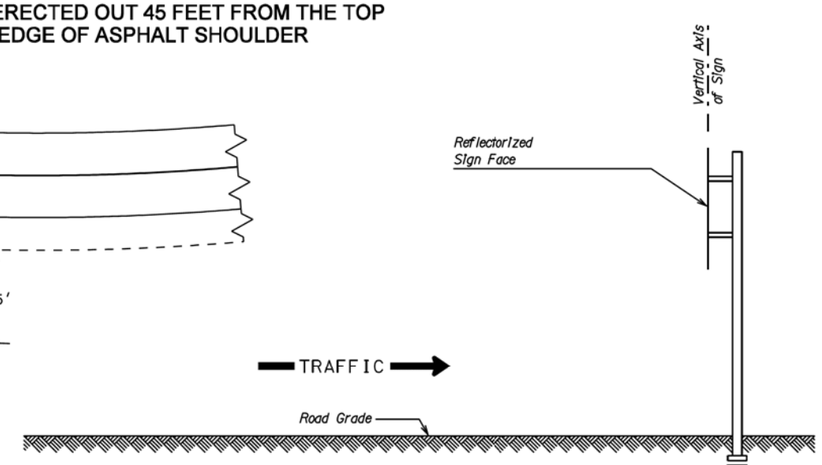

ANGLE OF OVERHEAD MOUNTED REFLECTORIZED SIGNS

NOTE:

Shoulder mounted signs shall be erected so the sign face is truly vertical and at 93° away from the center of the lane which the sign serves.

Signs mounted 45 feet from top edge of asphalt shoulder shall be erected so the sign face is truly vertical and at 87° to the roadway at the point of sign stationing shown on the plans.

At curved alignments, shoulder mounted signs (excluding signs mounted out 45' from edge of shoulder) shall be erected so the sign face is truly vertical and the horizontal axis is at an angle of 93° away from a straight line between the sign and a point 600 ft. in advance of the sign on the nearest driving lane.

NOTE:

Overhead signs shall be erected in accordance with the following requirements:

a) Where the road grade approaching the sign is + 2.0 % or greater, position the sign so the vertical axis is parallel to a plumb line and the horizontal axis is at right angles to the road (see exception for bridge mounted signs).

b) Where the road grade approaching the sign is less than + 2.0 %, position the sign so that the horizontal axis is at a right angle to the road (see exception) and the sign face vertical axis is inclined to face upward at a rate of 1/8 inch per foot of vertical sign surface for each one percent the road grade differs from + 2.0 %.

EXCEPTION:

Signs on bridges shall be installed as detailed in the "Sign Bracket Details" for each bridge.

SIGN ANGLES FOR INTERSTATE HIGHWAY SIGNS SOUTH DAKOTA DEPARTMENT OF TRANSPORTATION

HDR

Plot Scale - 1:200
Plotted From - ahengel
File - ...\Standard_Detail_08.dgn

SITE LOCATION	POST SIZE	FOOTING DIMENSIONS		STUB POST LENGTH	LONGITUDINAL STEEL QUANTITIES			# SPIRAL STEEL QUANTITIES	
		DIA.	DEPTH		NO.	SIZE	LENGTH	DIA.	LENGTH

SEE SIGN INSTALLATION TABLE

Spirals - Use 12" pitch and 1 ½ extra turns at each end. Use 1 ½ turns for lap at splice as required, or weld as approved by the Office of Bridge Design, Spirals may be smooth bars, Bar length shown does not include Splices. Dimensions are out to out of bars.

NOTE: The above is a Site Specific data entry table and the inserted information is the responsibility of the Region Traffic Engineer.

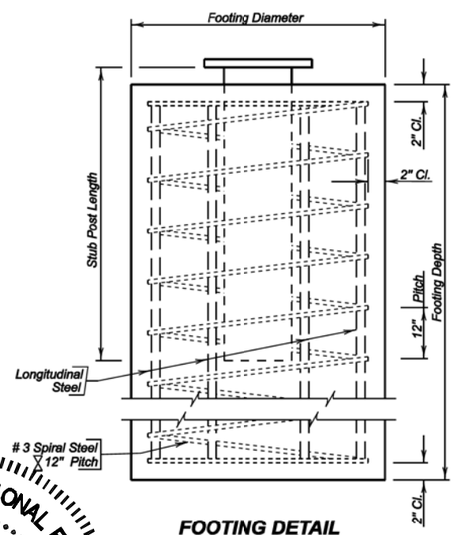

FOOTING DETAIL

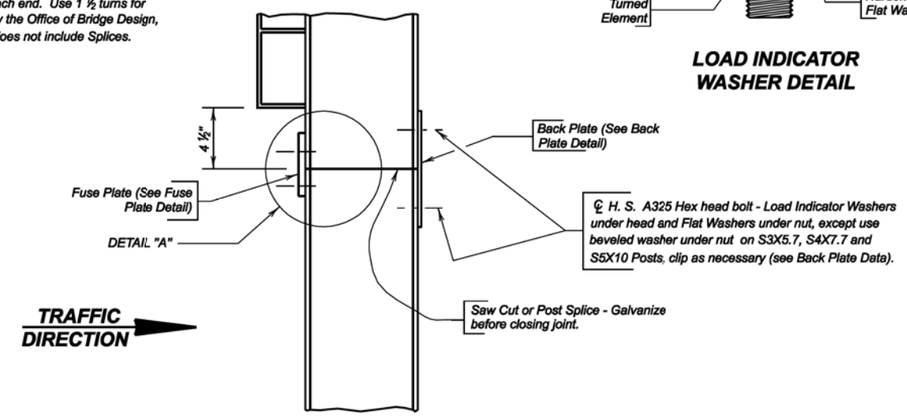

FUSE & BACK PLATE INSTALLATION

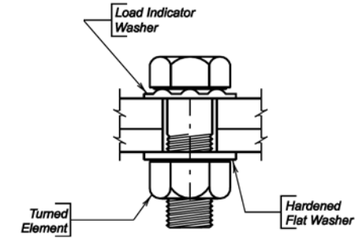

LOAD INDICATOR WASHER DETAIL

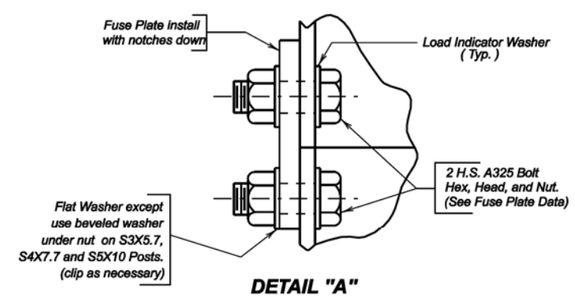

DETAIL "A"

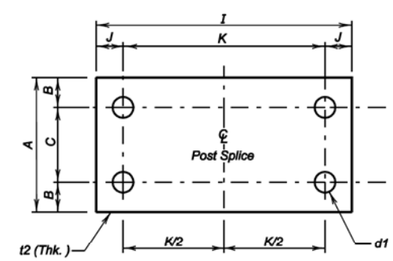

BACK PLATE DETAIL

NOTES-

1. Design Specification: AASHTO Standard Specifications for Structural Supports for Highway Signs, Luminaires and Traffic Signals, 2001 Edition with 2003 Interims.
2. Concrete Footings shall be Class M6 - fc = 4000 p. s. i.
3. Structural Steel shall comform to ASTM A36.
4. All Reinforcing Steel, except spirals, shall conform to ASTM 615 Grade 60.
5. Spiral Reinforcing Steel may be fabricated from cold drawn wire ASTM A82, or hot rolled plain or dsformed bars conforming to the strength requirements of ASTM A615, Grade 60.
6. All Bolts and Nuts shall conform to ASTM A325 except that ½" diameter bolts may conform to either ASTM A325 or ASTM A449. Washers shall conform to ASTM F436. All hardware shall be galvanized in accordance with ASTM A153.
7. All structural steel including Posts and Post Stubs shall be galvanized in accordance with ASTM A123.
8. All Bolt Holes shall be drilled. All plate cuts shall preferably be saw cuts. However, Flame Cutting will be permitted providing all edges are ground smooth (metal projecting beyond the plane of the plate face will NOT be allowed).
9. All welding and weld inspection shall be in accordance with the latest edition of AWS D 1.1 Structural Welding Code.

PROCEDURE FOR ASSEMBLING SLIP BASE-

1. Place galvanized Sheet Metal Diaphrams on top of the lower slip plate.
2. Connect main post to Stub Post with clean unlubricated bolts and nuts with one Hardened Washer on each bolt between slip plates.
3. Plumb post by adding shims between slip plates.
4. Tighten bolts to a practical maximum, using a 12" - 15" wrench in order to bed surfaces and clean threads. DO NOT TIGHTEN TO PROOF LOAD.
5. Loosen all bolts and retighten in increments, using a systematic order, until each bolt has been tightened to the specified torque corresponding to the post size used (See Slip Base Plate Data). Tighten bolts only to the torque specified. DO NOT OVERTIGHTEN. Check torque on each bolt after entire sign has been erected.

ASSEMBLY OF FRICTION FUSE PLATES, BACK PLATES AND STIFFENERS-

1. High strength bolts shall be tightened so as to obtain a residual tension by the use of load indicator washers.
2. High strength bolts may be tightened by the "Turn of the Nut" method as provided in Section 11.5.6.4.4 of the AASHTO Standard Specifications for Highway Bridges in lieu of #1 above.

SHOP PLANS-

The fabricator shall initially submit two (2) copies of the shop plans to the Office of Bridge Design for review. One reviewed copy will be sent back to the fabricator who will then make changes, if any, and then send the Office of Bridge Design six (6) final approved copies for distribution.

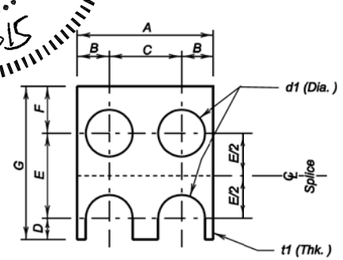

FUSE PLATE DETAIL

REGISTERED PROFESSIONAL ENGINEER
REG. NO. 8328
JODY W. PAGE
SOUTH DAKOTA
1 MAY 2015

TABLE 1 - FUSE PLATE DATA

Post Size	A	B	C	D	E	F	G	d1	t1	Bolt Size
S3X5. 7	2 5/8"	9/16"	1 1/2"	1/2"	1 1/2"	1 1/8"	3 1/8"	5/8" ø	1/4"	1/2" ø
S4X7. 7	2 5/8"	9/16"	1 1/2"	1/2"	1 1/2"	1 1/8"	3 1/8"	5/8" ø	1/4"	1/2" ø
S5X10	3"	11/16"	1 5/8"	5/8"	2 1/4"	1 1/8"	4"	3/4" ø	3/8"	5/8" ø
W6X12	4"	15/16"	2 1/8"	5/8"	2 1/2"	1 3/8"	4 1/2"	3/4" ø	3/8"	5/8" ø
W6X15	6"	1 3/8"	3 1/4"	5/8"	2 1/2"	1 3/8"	4 1/2"	3/4" ø	3/8"	5/8" ø
W6X20	6"	1 3/8"	3 1/4"	5/8"	2 1/2"	1 3/8"	4 1/2"	3/4" ø	3/8"	5/8" ø
W8X18	5 1/4"	1 5/16"	2 5/8"	3/4"	2 1/2"	1 3/8"	4 5/8"	7/8" ø	1/2"	3/4" ø
W8X21	5 1/4"	1 5/16"	2 5/8"	3/4"	2 1/2"	1 3/8"	4 5/8"	7/8" ø	1/2"	3/4" ø
W8X24	6 1/2"	1 1/2"	3 1/2"	7/8"	3"	1 5/8"	5 1/2"	1" ø	9/16"	7/8" ø
W8X28	6 1/2"	1 9/16"	3 3/8"	7/8"	3"	1 3/4"	5 5/8"	1" ø	1/2"	7/8" ø
W8X31	8"	1 5/8"	4 3/4"	1"	3 1/2"	2"	6 1/2"	1 1/8" ø	5/8"	1" ø
W10X33	8"	1 7/8"	4 1/4"	1 1/8"	4 1/2"	2 1/4"	7 7/8"	1 1/4" ø	3/4"	1 1/8" ø

TABLE 5 - BACK PLATE DATA

Post Size	A	B	C	J	K	I	d1	t2	Bolt Size
S3X5. 7	2 5/8"	9/16"	1 1/2"	1 1/4"	4 1/2"	7"	5/8" ø	1/4"	1/2" ø
S4X7. 7	2 5/8"	9/16"	1 1/2"	1 1/4"	4 1/2"	7"	5/8" ø	1/4"	1/2" ø
S5X10	3"	11/16"	1 5/8"	1 1/4"	4 3/4"	7 1/4"	3/4" ø	1/4"	5/8" ø
W6X12	4"	15/16"	2 1/8"	1 1/4"	4 3/4"	7 1/4"	3/4" ø	1/4"	5/8" ø
W6X15	6"	1 3/8"	3 1/4"	1 1/4"	5 1/4"	7 3/4"	3/4" ø	1/4"	5/8" ø
W6X20	6"	1 3/8"	3 1/4"	1 1/4"	5 1/4"	7 3/4"	3/4" ø	1/4"	5/8" ø
W8X18	5 1/4"	1 5/16"	2 5/8"	1 3/8"	5 3/4"	8 1/2"	7/8" ø	1/4"	3/4" ø
W8X21	5 1/4"	1 5/16"	2 5/8"	1 3/8"	5 3/4"	8 1/2"	7/8" ø	1/4"	3/4" ø
W8X24	6 1/2"	1 1/2"	3 1/2"	1 5/8"	6"	9 1/4"	1" ø	5/16"	7/8" ø
W8X28	6 1/2"	1 9/16"	3 3/8"	1 3/4"	6"	9 1/2"	1" ø	3/8"	7/8" ø
W8X31	8"	1 5/8"	4 3/4"	2"	6 1/2"	10 1/2"	1 1/8" ø	3/8"	1" ø
W10X33	8"	1 7/8"	4 1/4"	2 1/2"	7"	1'- 0"	1 1/4" ø	7/16"	1 1/8" ø

ERECTION DETAILS
FOR
TWO-POST ONE-DIRECTION BREAKAWAY SIGN SUPPORTS
S. D. DEPT. OF TRANSPORTATION
DECEMBER 1994

Plot Scale - 1:200
Plotted From - ahenrel
File - ...\Standard_Detail_09.dgn

NOTE-
Sign face details shown are those for extruded aluminum panels.
See Erection Details for SHEET ALUMINUM SIGNS for mounting flat sheet sign face.

△ Mounting height as recommended by latest edition of AASHTO ROADSIDE DESIGN GUIDE.

ϕ Clear distance as recommended by latest edition of MANUAL ON UNIFORM TRAFFIC CONTROL DEVICES.

NOTE - N = Number of Stiffeners to be used
H = Vertical dimension of sign
L = Horizontal dimension of Main Sign

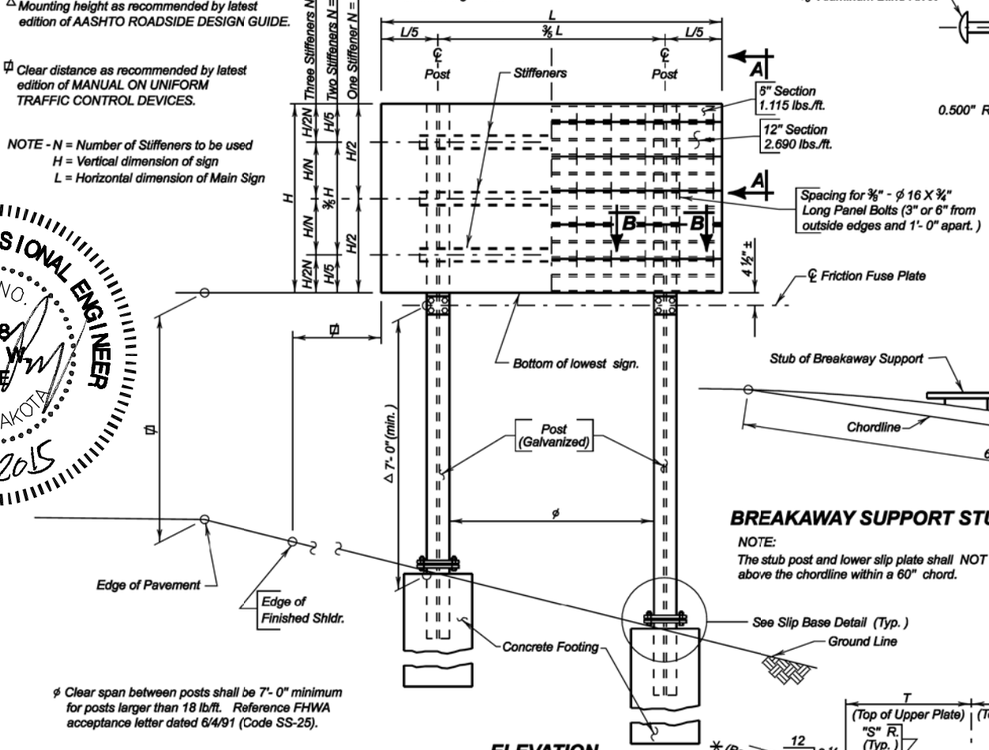

ϕ Clear span between posts shall be 7'- 0" minimum for posts larger than 18 lb/ft. Reference FHWA acceptance letter dated 6/4/91 (Code SS-25).

ELEVATION

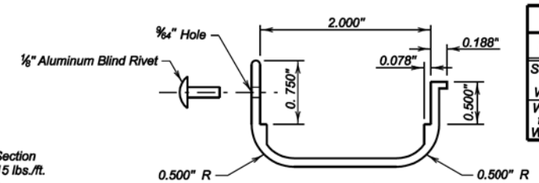

SIDE TRIM MOLDING

Side Trim Molding is required on all vertical edges of extruded panels. They shall be fastened at a minimum of one (1) rivet per panel.

STIFFENER DATA

Post	Stiffener	a	b	c	d	Bolt (A325)	Plate Thk.
S3X5. 7 thru W8X21	C3X5	10 1/2"	5"	1 1/4"	8"	5/8" ϕ	5/16"
W8X24 thru W10x33	C5X6. 7	13 1/2"	6"	1 1/2"	10 1/2"	7/8" ϕ	3/8"

STIFFENER NOTES-

1. Stiffeners must always be used on Two Post Breakaway signs regardless of type of sign face employed.
2. Number of stiffeners used, N, shall be as follows:
   If H < = 2' - 0" then N = 1
   if 2' - 0" < H < = 8' - 0" then N = 2
   if 8' - 0" < H < = 15' - 0" then N = 3

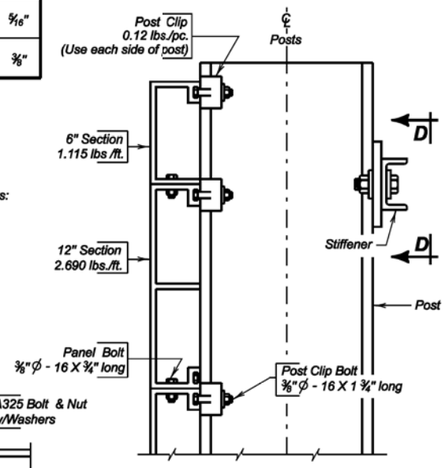

SEC. A - A

BREAKAWAY SUPPORT STUB CLEARANCE DIAGRAM

NOTE:
The stub post and lower slip plate shall NOT extend more than 4" max. above the chordline within a 60" chord.

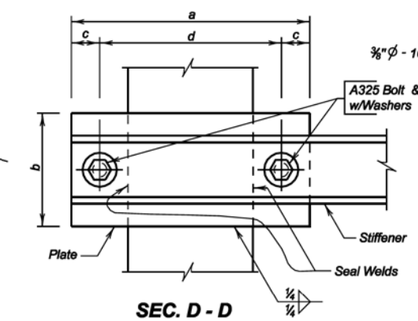

SEC. D - D

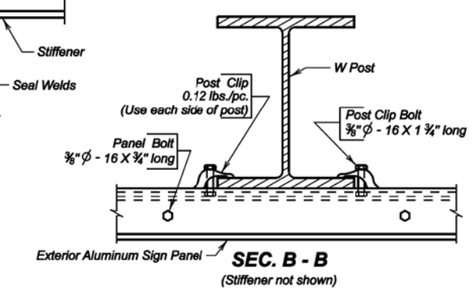

SEC. B - B

(Stiffener not shown)

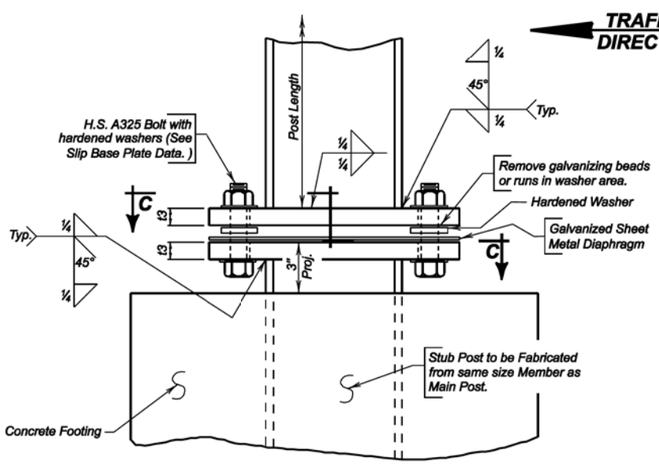

≠ See Erection Details for SLIP BASE ALTERNATE.

≠ SLIP BASE DETAIL

TRAFFIC DIRECTION

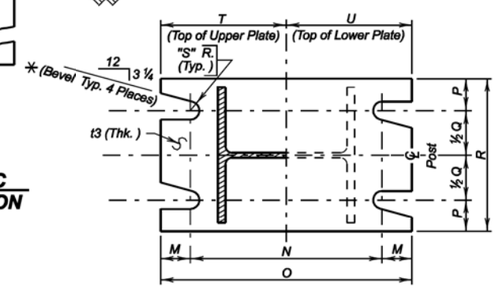

SEC. C - C

✳ NOTE:
Above Bevel is for Sign on Right Shoulder. Plate Bevels are Opposite hand for Sign on Left Shoulder.

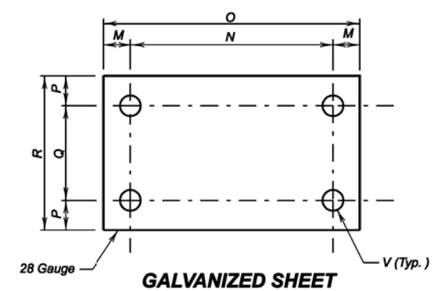

GALVANIZED SHEET METAL DIAPHRAGM

TABLE 3 - SHEET METAL DIAPHRAGM DATA

Post Size	M	N	O	P	Q	R	V
S3X5. 7	3/4"	6"	7 1/2"	3/4"	1 1/2"	3"	5/8"
S4X7. 7	3/4"	6"	7 1/2"	3/4"	1 1/2"	3"	5/8"
S5X10	7/8"	7 1/4"	9"	3/4"	2"	3 1/2"	3/4"
W6X12	7/8"	8 1/4"	10"	7/8"	2 3/4"	4 1/2"	3/4"
W6X15	1 1/8"	8 1/2"	10 3/4"	1 1/4"	4"	6 1/2"	7/8"
W6X20	1 1/8"	10"	1'- 0 1/4"	1 1/4"	4"	6 1/2"	7/8"
W8X18	1 1/8"	10 1/2"	1'- 0 3/4"	1 1/4"	3 1/2"	6"	7/8"
W8X21	1 1/4"	11 1/4"	1'- 1 3/4"	1 1/4"	3 1/2"	6"	1"
W8X24	1 1/2"	11"	1'- 2"	1 5/8"	4 1/4"	7 1/2"	1"
W8X28	1 5/8"	11 1/4"	1'- 2 1/2"	1 5/8"	4 1/4"	7 1/2"	1 1/8"
W8X31	1 3/4"	11 1/4"	1'- 2 3/4"	1 7/8"	5 1/4"	9"	1 1/8"
W10X33	1 3/4"	1'- 2"	1'- 5 1/2"	1 7/8"	5 1/4"	9"	1 1/8"

TABLE 4 - SLIP BASE PLATE DATA

Post Size	M	N	O	P	Q	R	S	T	U	t3	Bolt Size	Bolt Torque
S3X5. 7	3/4"	6"	7 1/2"	3/4"	1 1/2"	3"	9/32"	3 3/4"	3 3/4"	5/8"	1/2" ϕ	142" - #
S4X7. 7	3/4"	6"	7 1/2"	3/4"	1 1/2"	3"	9/32"	3 3/4"	3 3/4"	5/8"	1/2" ϕ	142" - #
S5X10	7/8"	7 1/4"	9"	3/4"	2"	3 1/2"	11/32"	4 1/2"	4 1/2"	7/8"	5/8" ϕ	345" - #
W6X12	7/8"	8 1/4"	10"	7/8"	2 3/4"	4 1/2"	11/32"	5"	5"	7/8"	5/8" ϕ	345" - #
W6X15	1 1/8"	8 1/2"	10 3/4"	1 1/4"	4"	6 1/2"	13/32"	5 3/8"	5 3/8"	1"	3/4" ϕ	554" - #
W6X20	1 1/8"	10"	1'- 0 1/4"	1 1/4"	4"	6 1/2"	13/32"	6 1/8"	6 1/8"	1"	3/4" ϕ	554" - #
W8X18	1 1/8"	10 1/2"	1'- 0 3/4"	1 1/4"	3 1/2"	6"	13/32"	6 3/8"	6 3/8"	1"	3/4" ϕ	554" - #
W8X21	1 1/4"	11 1/4"	1'- 1 3/4"	1 1/4"	3 1/2"	6"	15/32"	6 7/8"	6 7/8"	1"	7/8" ϕ	645" - #
W8X24	1 1/2"	11"	1'- 2"	1 5/8"	4 1/4"	7 1/2"	15/32"	7"	7"	1"	7/8" ϕ	645" - #
W8X28	1 5/8"	11 1/4"	1'- 2 1/2"	1 5/8"	4 1/4"	7 1/2"	17/32"	7 1/4"	7 1/4"	1 1/8"	1" ϕ	735" - #
W8X31	1 3/4"	11 1/4"	1'- 2 3/4"	1 7/8"	5 1/4"	9"	17/32"	7 3/8"	7 3/8"	1 1/8"	1" ϕ	735" - #
W10X33	1 3/4"	1'- 2"	1'- 5 1/2"	1 7/8"	5 1/4"	9"	17/32"	8 3/4"	8 3/4"	1 1/4"	1" ϕ	735" - #

NOTE: Diaphragm need not be regalvanized after cutting to size and drilling of holes.

REGISTERED PROFESSIONAL ENGINEER
REG. NO. 8328
JODY W. PAGE
SOUTH DAKOTA
MAY 2015

ERECTION DETAILS
FOR
TWO-POST ONE-DIRECTION BREAKAWAY SIGN SUPPORTS

S. D. DEPT. OF TRANSPORTATION
DECEMBER 1994

Plot Scale - 1:200
Plotted From - ahengel
File - ...\Standard_Detail_10.dgn

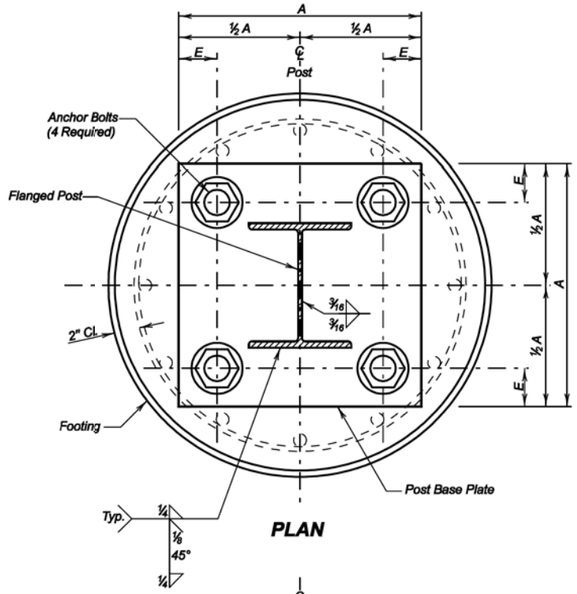

PLAN

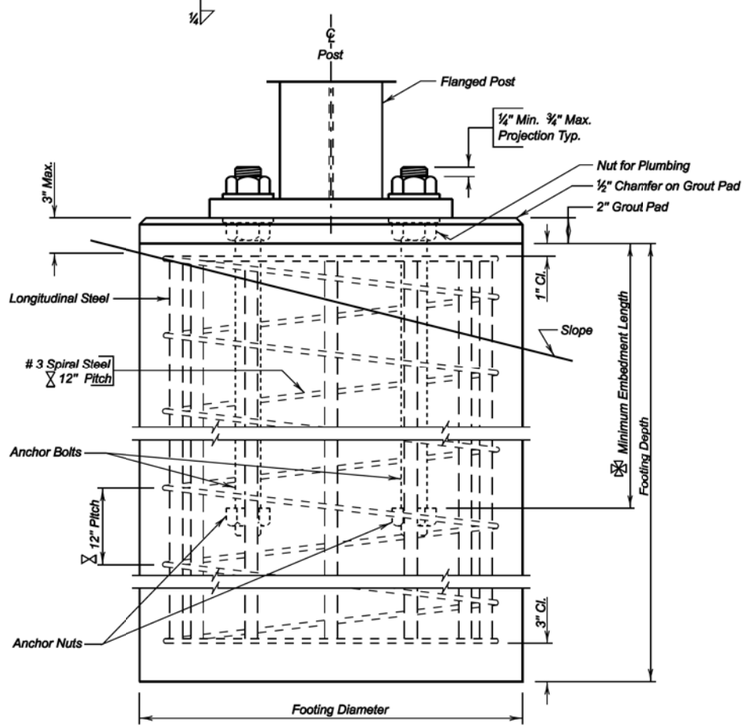

FOOTING DETAIL

SITE LOCATION	POST SIZE	FOOTING DIMENSIONS		POST BASE PLATE DIMENSIONS			ANCHOR BOLT SIZE			LONGITUDINAL STEEL QUANTITIES			# SPIRAL STEEL QUANTITIES	
		DIA.	DEPTH	"A"	"E"	THICK.	DIA.	LENGTH	✠ MINIMUM EMBEDMENT	NO.	SIZE	LENGTH	DIA.	LENGTH
SEE SIGN INSTALLATION TABLE														

NOTE: The above is a Site Specific data entry table and the inserted information is the responsibility of the Region Traffic Engineer.

Spirals - Use 12" pitch and 1 ½ extra turns at each end. Use 1 ½ turns for lap at splice as required, or weld as approved by the Office of Bridge Design, Spirals may be smooth bars, Bar length shown does not include Splices.

✠ See Footing Detail

Dimensions are out to out of bars.

NOTES-

✳ 1. Design Specification: AASHTO Standard Specifications for Structural Supports for Highway Signs, Luminaires and Traffic Signals, 2001 Edition with 2003 Interims.

2. Concrete Footings shall be Class M6 - fc = 4000 p.s.i.

3. Structural Steel shall comform to ASTM A36.

4. All Reinforcing Steel, except spirals, shall conform to ASTM A615 Grade 60.

5. Spiral Reinforcing Steel may be fabricated from cold drawn wire ASTM A82, or hot rolled plain or deformed bars conforming to the strength requirements of ASTM A615, Grade 60.

6. All Anchor Bolts shall conform to ASTM A307 having a minimum yield stress of 36000 p.s.i. Anchor Bolts shall be cleaned to remove any oil from the threading process before galvanizing.

7. Anchor Bolts shall have 7" thread length on both ends.

8. All nuts shall conform to ASTM A563, DH. All nuts shall be heavy hex. All washers shall conform to ASTM F436.

9. All structural steel including the Steel Posts shall be galvanized according to ASTM A123. The Nuts, Washers and 10" of one end of the Anchor Bolts shall be galvanized according to ASTM A153.

10. All Bolt Holes shall be drilled. All plate cuts shall preferably be Saw Cuts, however, Flame Cutting will be permitted providing all edges are ground smooth (metal projecting beyond the plane of the plate face will NOT be allowed).

11. All welding and weld inspection shall be in accordance with the latest edition of AWS D1.1 Structural Welding Code.

SHOP PLANS-

The fabricator shall initially submit two (2) copies of the shop plans to the Office of Bridge Design for review. One reviewed copy will be sent back to the fabricator who will then make changes, if any, and then send the Office of Bridge Design six (6) final approved copies for distribution.

REGISTERED PROFESSIONAL ENGINEER
REG. NO. 8328
JODY W. PAGE
SOUTH DAKOTA
MAY 2015

ERECTION DETAILS
FOR
FIXED SIGN SUPPORTS
S. D. DEPT. OF TRANSPORTATION
DECEMBER 1994

Plot Scale - 1:200
Plotted From - ahengel
File - ...\Standard_Detail_11.dgn

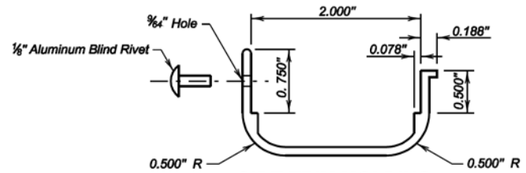

SIDE TRIM MOLDING

Side Trim Molding is required on all vertical edges of extruded panels. They shall be fastened at a minimum of one (1) rivet per panel.

NOTE- P = Number of Posts to be used
H = Vertical dimension of sign
L = Horizontal dimension of Main Sign

NOTE- 2 stiffeners are required when H is 8'- 0" or less.
3 stiffeners are required when H is more than 8'- 0".

△ Clear distance as recommended by latest edition of AASHTO ROADSIDE DESIGN GUIDE.

Φ Mounting height as recommended by latest edition of MANUAL ON UNIFORM TRAFFIC CONTROL DEVICES.

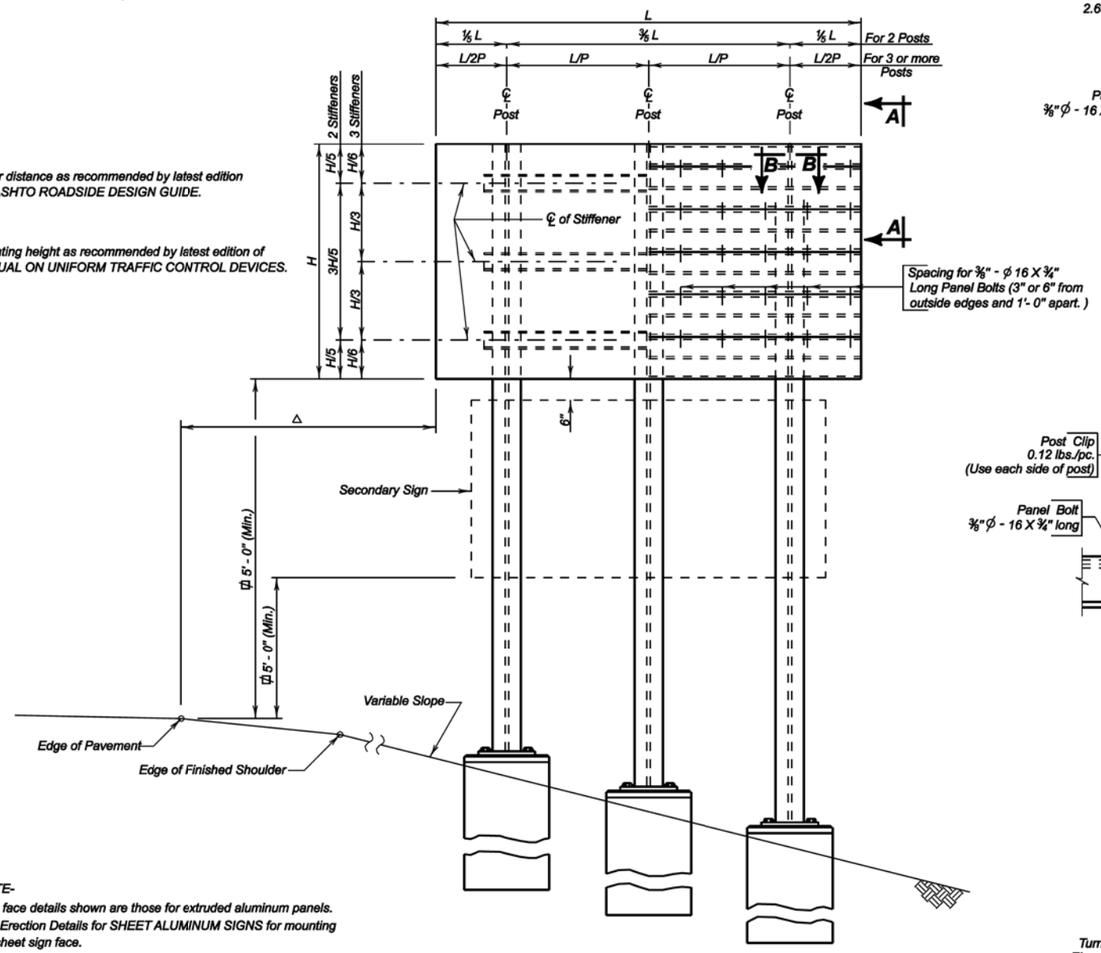

NOTE-
Sign face details shown are those for extruded aluminum panels.
See Erection Details for SHEET ALUMINUM SIGNS for mounting flat sheet sign face.

ELEVATION

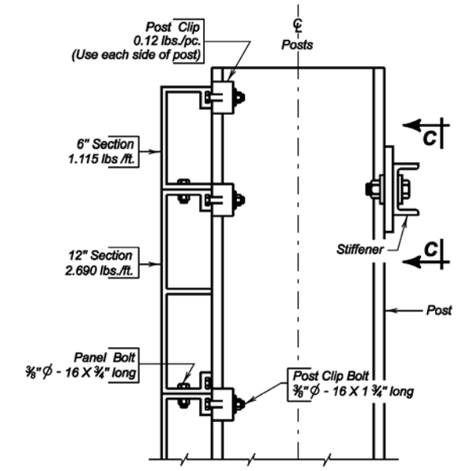

SEC. A - A

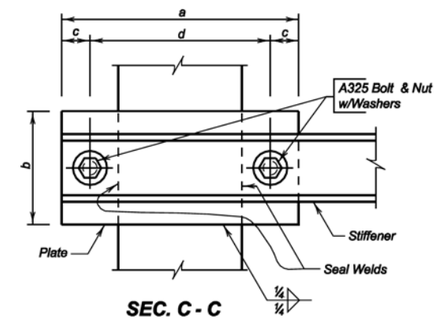

SEC. C - C

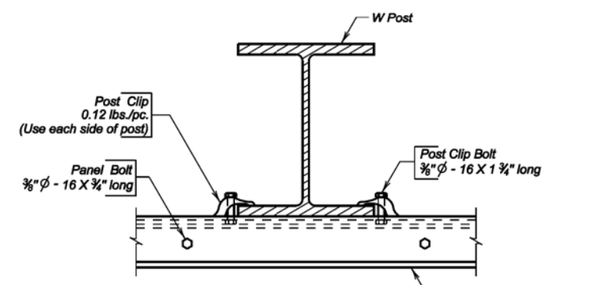

SEC. B - B
(Stiffener not shown)

STIFFENER DATA							
Post	Stiffener	a	b	c	d	Bolt (A325)	Plate Thk.
S3X5. 7 thru W8X21	C3X5	10 1/2"	5"	1 1/4"	8"	5/8" ϕ	5/16"
W8X24 thru W10x45	C5X6. 7	13 1/2"	6"	1 1/2"	10 1/2"	7/8" ϕ	3/8"

STIFFENER BOLTING PROCEDURE-

1. High strength bolts shall be tightened so as to obtain a minimum residual tension by the use of load indicator washers.
2. High strength bolts may be tightened by the "Turn of the Nut" method as provided in Section 11.5.6.4.4 of the AASHTO Standard Specifications for Highway Bridges in lieu of #1 above.

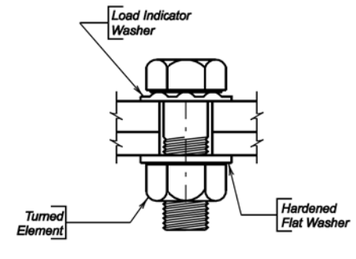

LOAD INDICATOR WASHER DETAIL

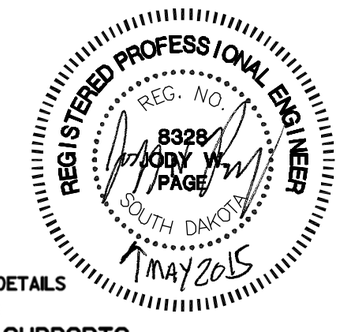

ERECTION DETAILS
FOR
FIXED SIGN SUPPORTS
S. D. DEPT. OF TRANSPORTATION
DECEMBER 1994

Plot Scale - 1:200
Plotted From - ahengel
File - ...\Standard_Detail_12.dgn

FOR BIDDING PURPOSES ONLY

TYPICAL SIGN AND STIFFENER DETAILS

REGISTERED PROFESSIONAL ENGINEER
REG. NO. 8328
JODY W. PAGE
SOUTH DAKOTA
1 MAY 2015

SINGLE POST BREAKAWAY SIGN SUPPORT

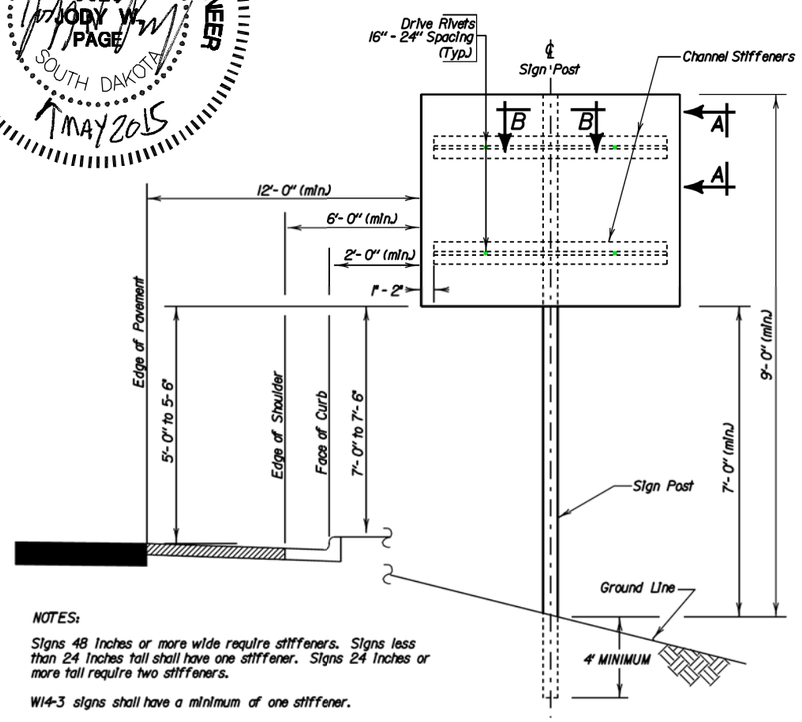

NOTES:

Signs 48 inches or more wide require stiffeners. Signs less than 24 inches tall shall have one stiffener. Signs 24 inches or more tall require two stiffeners.

W14-3 signs shall have a minimum of one stiffener.

DIRECT DRIVE OR ANCHOR STUB POST

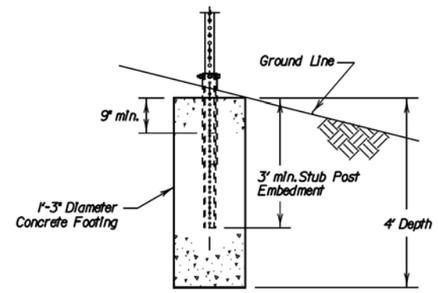

BREAKAWAY ANCHOR STUB POST BASE WITH CONCRETE FOOTING

NOTE: Square steel perforated tube post with breakaway anchor stub post base, as per Manufacturer.

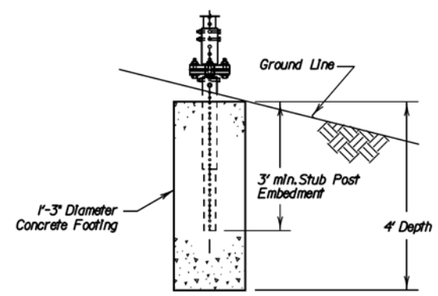

BREAKAWAY SLIP BASE WITH CONCRETE FOOTING

NOTE: Square steel perforated tube post with breakaway slip base, as per Manufacturer.

TWO POST BREAKAWAY SIGN SUPPORTS

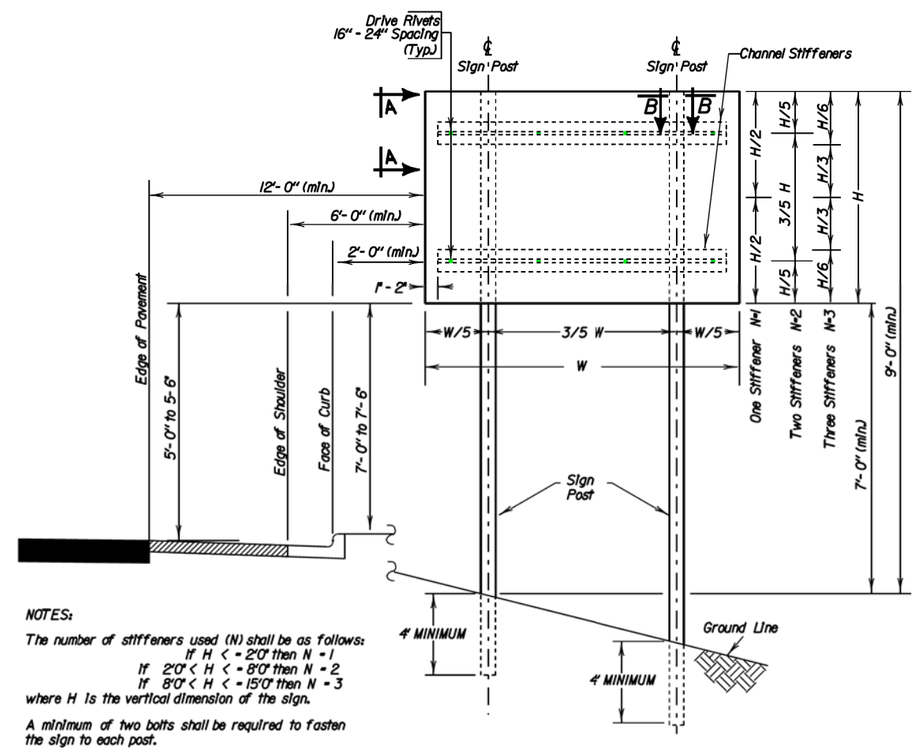

NOTES:

The number of stiffeners used (N) shall be as follows:
If H < = 2'0" then N = 1
If 2'0" < H < = 8'0" then N = 2
If 8'0" < H < = 15'0" then N = 3
where H is the vertical dimension of the sign.

A minimum of two bolts shall be required to fasten the sign to each post.

DIRECT DRIVE OR ANCHOR STUB POST

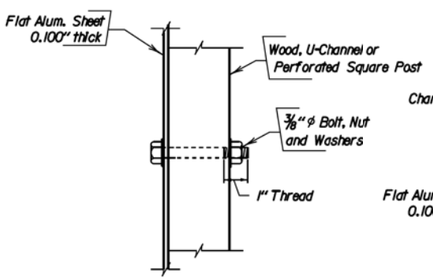

FLAT ALUMINUM

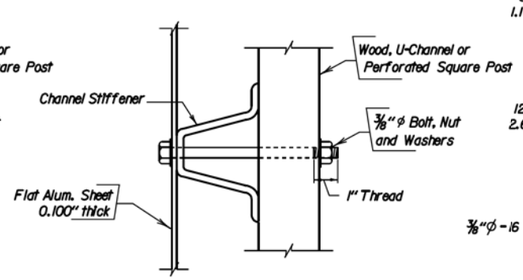

SEC. A-A

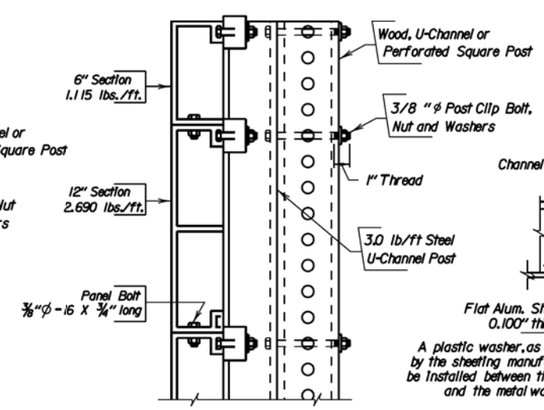

EXTRUDED PANEL

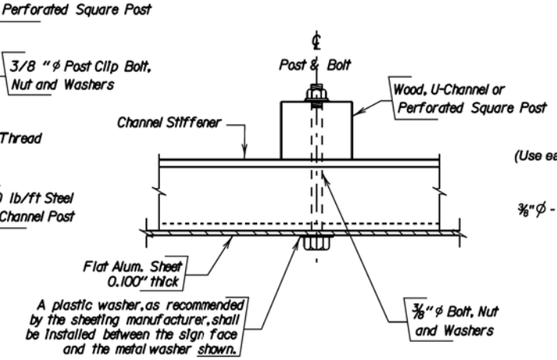

FLAT ALUMINUM

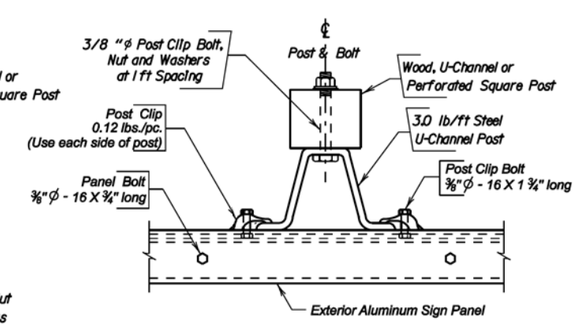

EXTRUDED PANEL

SEC. B-B

Sign installations must meet or exceed NCHRP 350 or MASH breakaway requirements and be FHWA approved.

HDR

Plot Scale - 1:200
Plotted From - ahengel
File - ...\Standard_Detail_13.dgn

FOR BIDDING PURPOSES ONLY

STATE OF SOUTH DAKOTA	PROJECT	SHEET	TOTAL SHEETS
	IM 1902(61)0	S51	S59

Plotting Date: 04-22-2015

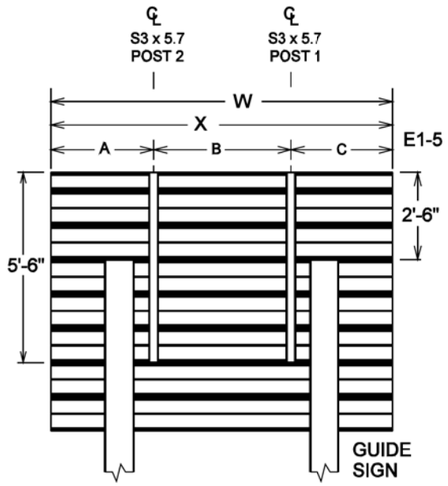

Brace Posts Case 1

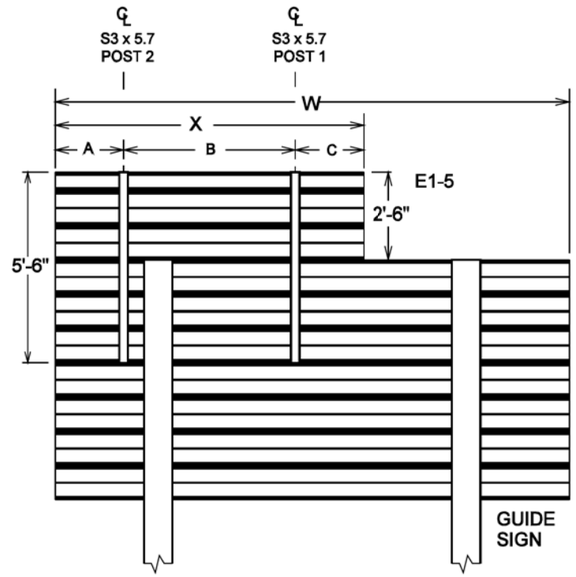

Brace Posts Case 2

BRACE POST LOCATION TABLE					
	E1-5 WIDTH (X)	SIGN WIDTH (W)	A **	B	C
CASE 1*	9'-6"	9'-6"	2'-6"	4'-6"	2'-6"
		10'-0"	2'-9"	4'-6"	2'-3"
		11'-0"	2'-9"	4'-9"	2'-0"
	11'-0"	11'-0"	2'-9"	5'-6"	2'-9"
CASE 2	9'-6"	12'-0" to 13'-0"	1'-9"	5'-9"	2'-0"
		14'-0" and up	2'-0"	5'-6"	2'-0"
	11'-0"	12'-0"	1'-9"	7'-0"	2'-3"
		13'-0" and up	2'-0"	7'-0"	2'-0"

* The brace posts may be omitted if the sign posts extend to the top of the E1-5 sign, if specified in the plans.

** The A dimension may be adjusted (1" max.) to allow room for post clips.

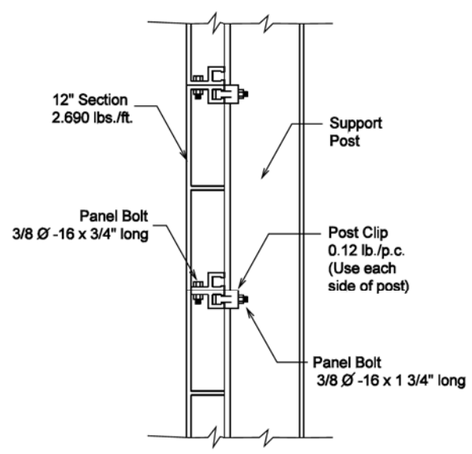

Section A-A

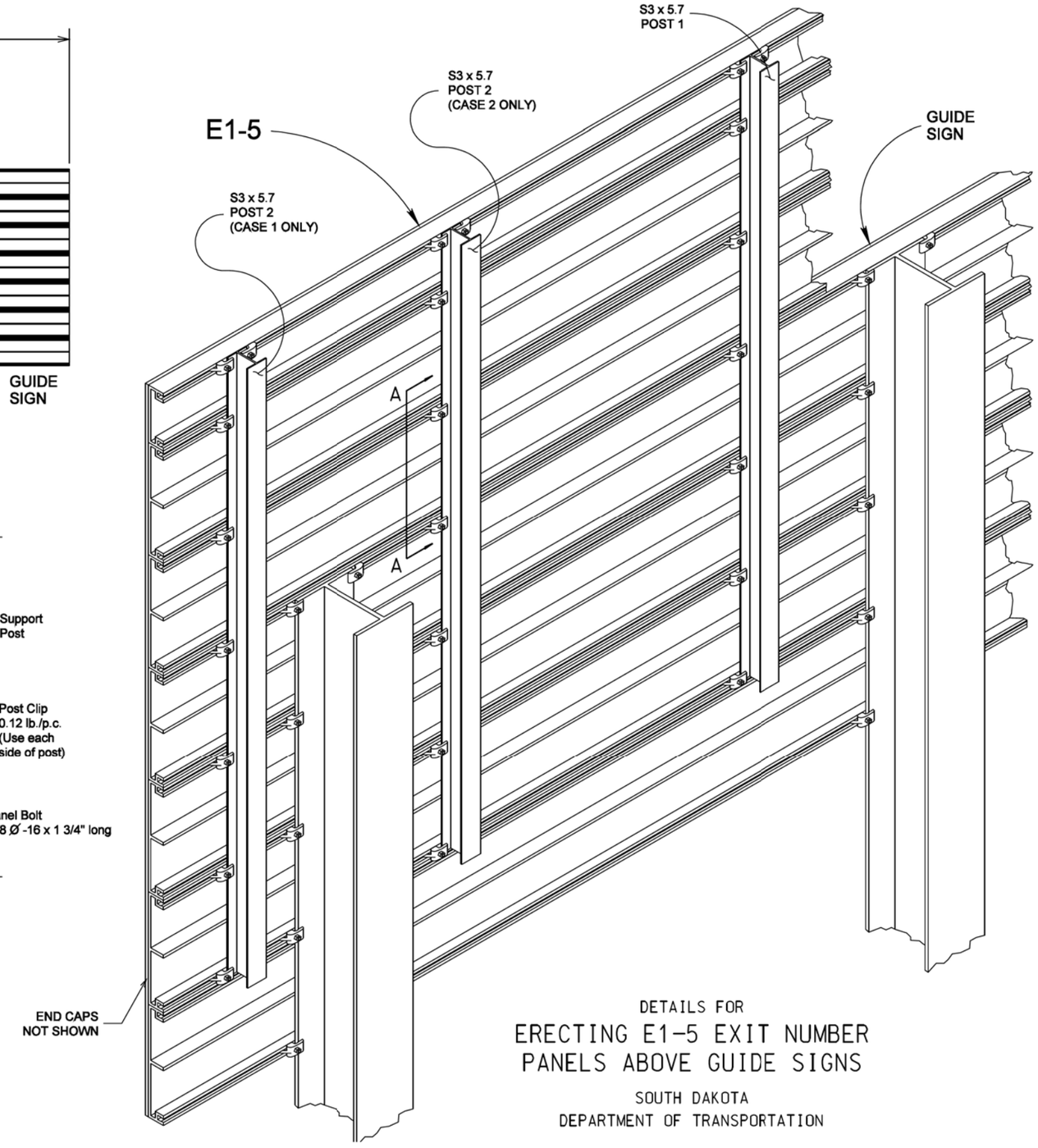

REGISTERED PROFESSIONAL ENGINEER
REG. NO. 8328
JODY W. PAGE
SOUTH DAKOTA
1 MAY 2015

DETAILS FOR
ERECTING E1-5 EXIT NUMBER PANELS ABOVE GUIDE SIGNS

SOUTH DAKOTA
DEPARTMENT OF TRANSPORTATION

HDR

Plot Scale - 1:200
Plotted From - ahengel
File - ...\Standard_Detail_14.dgn

FOR BIDDING PURPOSES ONLY

Sign Panel Details

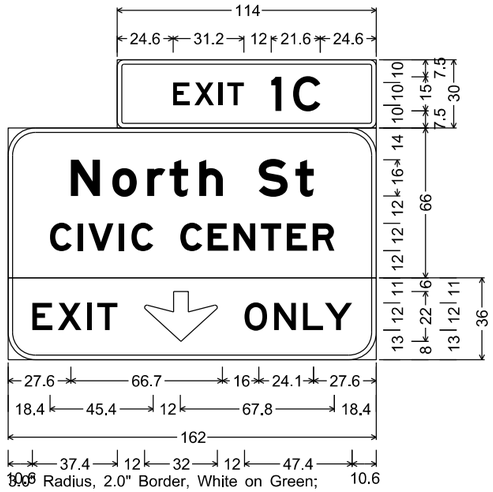

3.0" Radius, 2.0" Border, White on Green;
[EXIT 1C] E;
12.0" Radius, 2.0" Border, White on Green;
[North St] E Mod; [CIVIC CENTER] E Mod;
12.0" Radius, 2.0" Border, Black on Yellow;
[EXIT] E; Down Arrow 22.0" 270°; [ONLY] E;
Table of letter and object lefts.

E 24.6	X 34.0	I 44.7	T 48.4	1 67.8	C 77.5	
N 27.6	o 45.8	r 61.2	t 71.1	h 84.1	S 110.3	t 126.4
C 18.4	I 30.4	V 35.3	I 48.8	C 54.2		
	C 75.8	E 87.8	N 99.2	T 111.3	E 122.6	R 134.0
E 10.6	X 21.9	I 34.7	T 39.2	⇩ 60.0		
	O 104.0	N 117.1	L 129.7	Y 139.4		

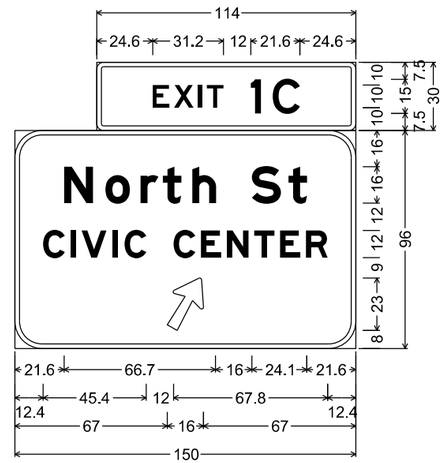

3.0" Radius, 2.0" Border, White on Green;
[EXIT 1C] E;
12.0" Radius, 2.0" Border, White on Green;
[North St] E Mod;
[CIVIC CENTER] E Mod;
Arrow 80 - 25.0" 60°;
Table of letter and object lefts.

E 24.6	X 34.0	I 44.7	T 48.4	1 67.8	C 77.5	
N 21.6	o 39.8	r 55.2	t 65.1	h 78.1	S 104.3	t 120.4
C 12.4	I 24.4	V 29.3	I 42.8	C 48.2		
	C 69.8	E 81.8	N 93.2	T 105.3	E 116.6	R 128.0
⇗ 67.0						

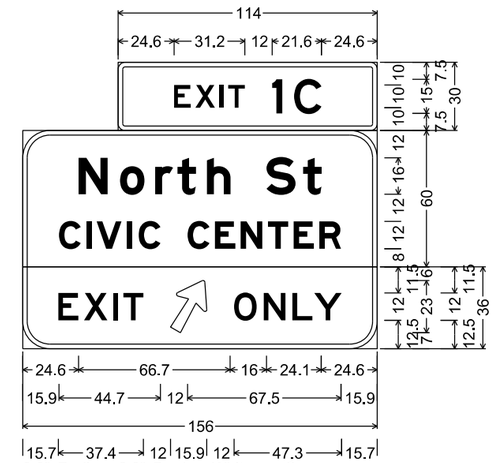

3.0" Radius, 2.0" Border, White on Green;
[EXIT 1C] E;
12.0" Radius, 2.0" Border, White on Green;
[North St] E Mod; [CIVIC CENTER] E;
12.0" Radius, 2.0" Border, Black on Yellow;
[EXIT] E; Arrow 80 - 25.0" 60°; [ONLY] E;
Table of letter and object lefts.

E 24.6	X 34.0	I 44.7	T 48.4	1 67.8	C 77.5	
N 24.6	o 42.8	r 58.2	t 68.1	h 81.1	S 107.3	t 123.4
C 15.9	I 28.0	V 32.5	I 45.9	C 51.0		
	C 72.6	E 84.6	N 95.9	T 107.9	E 119.2	R 130.5
E 15.7	X 26.9	I 39.7	T 44.3	⇗ 65.1		
	O 93.0	N 106.0	L 118.7	Y 128.3		

SIGN NUMBER	NB-102	
WIDTH x HEIGHT	13'-6" x 8'-6" / 9'-6" x 2'-6"	
BORDER WIDTH	2.0"	
CORNER RADIUS	3.0" / 12.0"	
ARROW(S)	32" x 22" (E11-1)	
MOUNTING	OVERHEAD	
BACKGROUND	TYPE:	Type IV High Intensity Type XI Very High Intensity
	COLOR:	Green / Fluorescent Yellow
LEGEND / BORDER	TYPE:	Type XI Very High Intensity / Opaque
	COLOR:	White Reflective Black Opaque

SIGN NUMBER	SB-103	
WIDTH x HEIGHT	12'-6" x 8'-0" / 9'-6" x 2'-6"	
BORDER WIDTH	2.0"	
CORNER RADIUS	3.0" / 12.0"	
ARROW(S)	16" x 23"	
MOUNTING	GROUND	
BACKGROUND	TYPE:	Type IV High Intensity
	COLOR:	Green
LEGEND / BORDER	TYPE:	Type XI High Intensity
	COLOR:	White Reflective

SIGN NUMBER	NB-105	
WIDTH x HEIGHT	13'-0" x 8'-0" / 9'-6" x 2'-6"	
BORDER WIDTH	2.0"	
CORNER RADIUS	3.0" / 12.0"	
ARROW(S)	16" x 23"	
MOUNTING	OVERHEAD	
BACKGROUND	TYPE:	Type IV High Intensity Type XI Very High Intensity
	COLOR:	Green / Fluorescent Yellow
LEGEND / BORDER	TYPE:	Type XI Very High Intensity / Opaque
	COLOR:	White Reflective Black Opaque

Plot Scale - 1:200
Plotted From - ahengel
File - ...\Sign_Panel_Detail_01.dgn

FOR BIDDING PURPOSES ONLY

Sign Panel Details

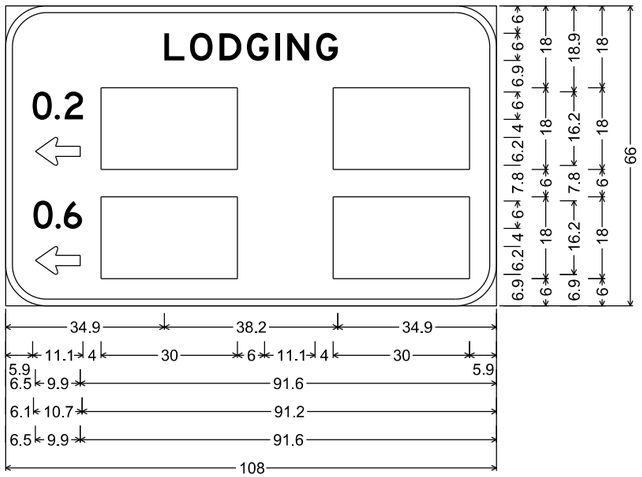

9.0" Radius, 1.5" Border, White on Blue;
[LODGING] E; [0.2] D;
Standard Arrow Custom 9.9" X 6.1" 180°; [0.6] D;
Standard Arrow Custom 9.9" X 6.1" 180°; Rectangle Blue;
Rectangle Blue; Rectangle Blue; Rectangle Blue;
Table of letter and object lefts.

L 34.9	O 40.5	D 47.1	G 53.1	I 59.4	N 62.0	G 68.3

0 5.9	. 10.9	2 12.9	▭ 21.0	▭ 72.1

⇦ 6.5	▭ 72.1

0 6.1	. 11.1	6 12.8	▭ 21.0

⇦ 6.5

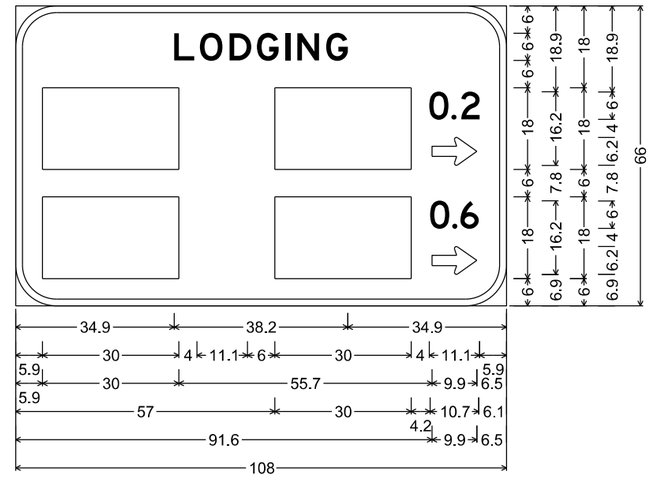

9.0" Radius, 1.5" Border, White on Blue;
[LODGING] E; Rectangle Blue; Rectangle Blue;
Rectangle Blue; Rectangle Blue; [0.2] D;
Standard Arrow Custom 9.9" X 6.1" 0°; [0.6] D;
Standard Arrow Custom 9.9" X 6.1" 0°;
Table of letter and object lefts.

L 34.9	O 40.5	D 47.1	G 53.1	I 59.4	N 62.0	G 68.3

▭ 5.9	▭ 57.0	0 91.0	. 96.0	2 98.1

▭ 5.9	⇨ 91.6

▭ 57.0	0 91.2	. 96.2	6 97.9

⇨ 91.6

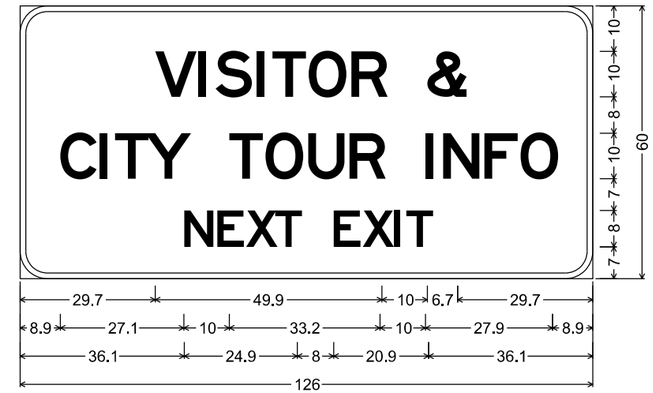

6.0" Radius, 1.3" Border, White on Blue;
[VISITOR &] D; [CITY TOUR INFO] D; [NEXT EXIT] D;
Table of letter and object lefts.

V 29.7	I 39.1	S 43.0	I 52.1	T 55.5	O 63.5	R 72.9	& 89.6	

C 8.9	I 17.5	T 20.9	Y 27.6	T 46.0	O 54.0	U 63.4	R 72.5	I 89.2	N 93.1	F 102.1	O 110.1	

N 36.1	E 43.4	X 49.8	T 56.1	E 69.0	X 75.4	I 82.3	T 85.0	

REGISTERED PROFESSIONAL ENGINEER
REG. NO. 8328
JODY W. PAGE
SOUTH DAKOTA
MAY 2015

SIGN NUMBER	RB-102	
WIDTH x HEIGHT	9'-0" x 5'-6"	
BORDER WIDTH	1.5"	
CORNER RADIUS	9.0"	
ARROW(S)	11.5" x 4"	
MOUNTING	GROUND	
BACKGROUND	TYPE:	Type IV High Intensity
	COLOR:	Blue
LEGEND / BORDER	TYPE:	Type IV High Intensity
	COLOR:	White

SIGN NUMBER	RB-102	
WIDTH x HEIGHT	9'-0" x 5'-6"	
BORDER WIDTH	1.5"	
CORNER RADIUS	9.0"	
ARROW(S)	11.5" x 4"	
MOUNTING	GROUND	
BACKGROUND	TYPE:	Type IV High Intensity
	COLOR:	Blue
LEGEND / BORDER	TYPE:	Type IV High Intensity
	COLOR:	White

SIGN NUMBER	NB-104	
WIDTH x HEIGHT	10'-6" x 5'-0"	
BORDER WIDTH	1.25"	
CORNER RADIUS	6.0"	
ARROW(S)	-	
MOUNTING	GROUND	
BACKGROUND	TYPE:	Type IV High Intensity
	COLOR:	Blue
LEGEND / BORDER	TYPE:	Type IV High Intensity
	COLOR:	White

Plot Scale - 1:200
Plotted From - ahengel
File - ...\Sign_Panel_Detail_02.dgn

FOR BIDDING PURPOSES ONLY

Sign Panel Details

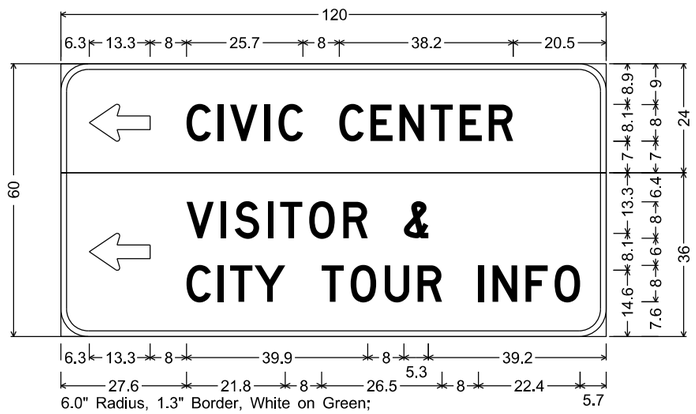

6.0" Radius, 1.3" Border, White on Green;
Standard Arrow Custom 13.4" X 8.1" 180°; [CIVIC CENTER] D;
6.0" Radius, 1.3" Border, White on Blue;
Standard Arrow Custom 13.4" X 8.1" 180°; [VISITOR &] D;
[CITY TOUR INFO] D;
Table of letter and object lefts.

⇦ 6.3	C 27.6	I 34.5	V 37.3	I 44.8	C 47.9	C 61.3	E 68.1	N 74.5	T 81.4	E 87.8	R 94.1	
⇦ 6.3	V 27.6	I 35.1	S 38.3	I 45.5	T 48.3	O 54.6	R 62.1	& 75.5				
C 27.6	I 34.5	T 37.3	Y 42.6	T 57.4	O 63.8	U 71.3	R 78.5	I 91.9	N 95.0	F 102.3	O 108.6	

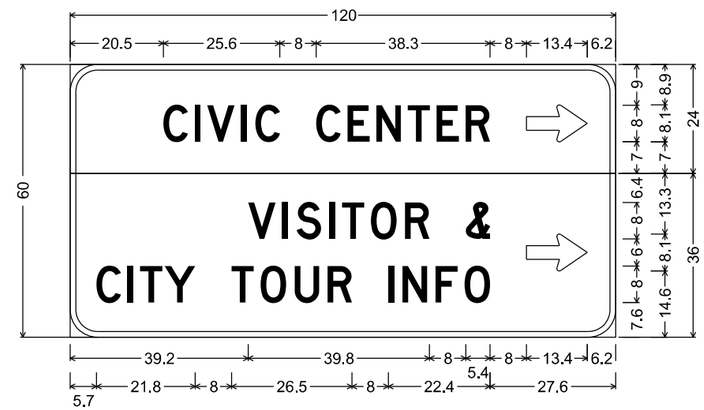

6.0" Radius, 1.3" Border, White on Green;
[CIVIC CENTER] D; Standard Arrow Custom 13.4" X 8.1" 0°;
6.0" Radius, 1.3" Border, White on Blue;
[VISITOR &] D; [CITY TOUR INFO] D;
Standard Arrow Custom 13.4" X 8.1" 0°;
Table of letter and object lefts.

C 20.5	I 27.4	V 30.1	I 37.6	C 40.8	C 54.1	E 61.0	N 67.4	T 74.3	E 80.6	R 87.0	⇨ 100.4	
V 39.2	I 46.7	S 49.8	I 57.0	T 59.8	O 66.2	R 73.7	& 87.0	⇨ 100.4				
C 5.7	I 12.6	T 15.4	Y 20.7	T 35.5	O 41.9	U 49.4	R 56.6	I 70.0	N 73.1	F 80.4	O 86.8	

SIGN NUMBER	RD-108	
WIDTH x HEIGHT	9'-0" x 5'-6"	
BORDER WIDTH	1.25"	
CORNER RADIUS	6.0"	
ARROW(S)	11.5" x 4"	
MOUNTING	GROUND	
BACKGROUND	TYPE:	Type IV High Intensity
	COLOR:	Blue
LEGEND / BORDER	TYPE:	Type IV High Intensity
	COLOR:	White

SIGN NUMBER	RB-108	
WIDTH x HEIGHT	9'-0" x 5'-6"	
BORDER WIDTH	1.25"	
CORNER RADIUS	6.0"	
ARROW(S)	11.5" x 4"	
MOUNTING	GROUND	
BACKGROUND	TYPE:	Type IV High Intensity
	COLOR:	Blue
LEGEND / BORDER	TYPE:	Type IV High Intensity
	COLOR:	White

REGISTERED PROFESSIONAL ENGINEER
REG. NO. 8328
JODY W. PAGE
SOUTH DAKOTA
MAY 2015

HDR

Plot Scale - 1:200
Plotted From - ahengel
File - ...\Sign_Panel_Detail_03.dgn

Sign Panel Details

FOR BIDDING PURPOSES ONLY

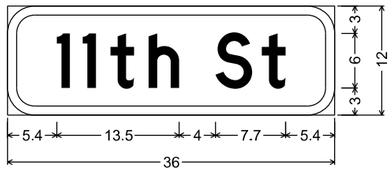

3.0" Radius, 1.0" Border, White on Green;
[11th] D; [St] D;

SIGN NUMBER	NS-102	
WIDTH x HEIGHT	3'-0" x 1'-0"	
BORDER WIDTH	1.0"	
CORNER RADIUS	3.0"	
ARROW(S)	-	
MOUNTING	GROUND	
BACKGROUND	TYPE:	Type IV High Intensity
	COLOR:	Green
LEGEND / BORDER	TYPE:	Type IV High Intensity
	COLOR:	White

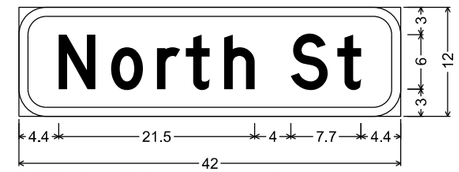

3.0" Radius, 1.0" Border, White on Green;
[North] D; [St] D;

SIGN NUMBER	NS-102	
WIDTH x HEIGHT	3'-6" x 1'-0"	
BORDER WIDTH	1.0"	
CORNER RADIUS	3.0"	
ARROW(S)	-	
MOUNTING	GROUND	
BACKGROUND	TYPE:	Type IV High Intensity
	COLOR:	Green
LEGEND / BORDER	TYPE:	Type IV High Intensity
	COLOR:	White

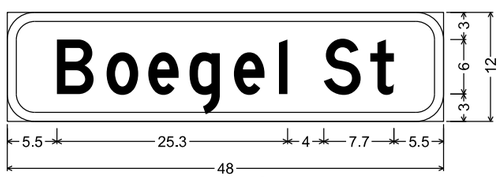

3.0" Radius, 1.0" Border, White on Green;
[Boegel] D; [St] D;

SIGN NUMBER	WB-207	
WIDTH x HEIGHT	4'-0" x 1'-0"	
BORDER WIDTH	1.0"	
CORNER RADIUS	3.0"	
ARROW(S)	-	
MOUNTING	GROUND	
BACKGROUND	TYPE:	Type IV High Intensity
	COLOR:	Green
LEGEND / BORDER	TYPE:	Type IV High Intensity
	COLOR:	White

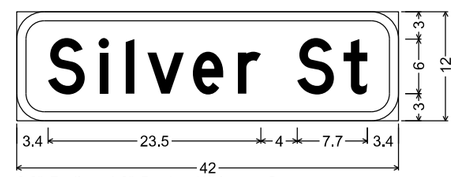

3.0" Radius, 1.0" Border, White on Green;
[Silver] D; [St] D;

SIGN NUMBER	WB-204	
WIDTH x HEIGHT	3'-6" x 1'-0"	
BORDER WIDTH	1.0"	
CORNER RADIUS	3.0"	
ARROW(S)	-	
MOUNTING	GROUND	
BACKGROUND	TYPE:	Type IV High Intensity
	COLOR:	Green
LEGEND / BORDER	TYPE:	Type IV High Intensity
	COLOR:	White

HDR

Plot Scale - 1:200
Plotted From - ahengel
File - ...\Sign_Panel_Detail_04.dgn

Sign Panel Details

FOR BIDDING PURPOSES ONLY

STATE OF SOUTH DAKOTA	PROJECT	SHEET	TOTAL SHEETS
	IM 1902(61)0	S56	S59

Plotting Date: 04-22-2015

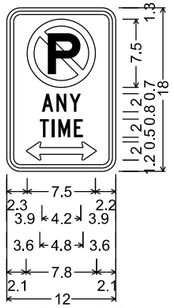

1.5" Radius, 0.4" Border, 0.4" Indent, Red on White;
[ANY] C;
[TIME] C;
Double Headed Arrow Custom - 7.8" 0°;

SIGN NUMBER	WB-107	
WIDTH x HEIGHT	1'-0" x 1'-6"	
BORDER WIDTH	0.4"	
CORNER RADIUS	1.5"	
ARROW(S)	-	
MOUNTING	GROUND	
BACKGROUND	TYPE:	Type IV High Intensity
	COLOR:	White
LEGEND / BORDER	TYPE:	Type IV High Intensity
	COLOR:	Red

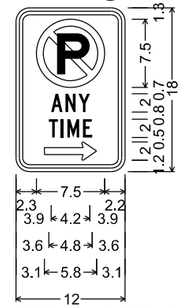

1.5" Radius, 0.4" Border, 0.4" Indent, Red on White;
[ANY] C;
[TIME] C;
Standard Arrow Custom 5.8" X 2.0" 0°;

SIGN NUMBER	WB-108	
WIDTH x HEIGHT	1'-0" x 1'-6"	
BORDER WIDTH	0.4"	
CORNER RADIUS	1.5"	
ARROW(S)	-	
MOUNTING	GROUND	
BACKGROUND	TYPE:	Type IV High Intensity
	COLOR:	White
LEGEND / BORDER	TYPE:	Type IV High Intensity
	COLOR:	Red

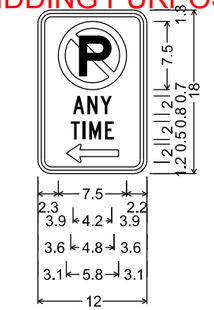

1.5" Radius, 0.4" Border, 0.4" Indent, Red on White;
[ANY] C;
[TIME] C;
Standard Arrow Custom 5.8" X 2.0" 180°;

SIGN NUMBER	WB-106	
WIDTH x HEIGHT	1'-0" x 1'-6"	
BORDER WIDTH	0.4"	
CORNER RADIUS	1.5"	
ARROW(S)	-	
MOUNTING	GROUND	
BACKGROUND	TYPE:	Type IV High Intensity
	COLOR:	White
LEGEND / BORDER	TYPE:	Type IV High Intensity
	COLOR:	Red

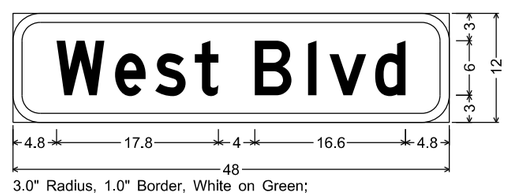

3.0" Radius, 1.0" Border, White on Green;
[West] D; [Blvd] D;

SIGN NUMBER	WB-201 and WB-204	
WIDTH x HEIGHT	4'-0" x 1'-0"	
BORDER WIDTH	1.0"	
CORNER RADIUS	3.0"	
ARROW(S)	-	
MOUNTING	GROUND	
BACKGROUND	TYPE:	Type IV High Intensity
	COLOR:	Green
LEGEND / BORDER	TYPE:	Type IV High Intensity
	COLOR:	White

HDR

Plot Scale - 1:200

Plotted From - ahengel

File - ...\Sign_Panel_Detail_05.dgn

STATE OF SOUTH DAKOTA	PROJECT	SHEET	TOTAL SHEETS
	IM 1902(61)0	S57	S59

Plotting Date: 04-22-2015

FOR BIDDING PURPOSES ONLY

Sign Cross Sections

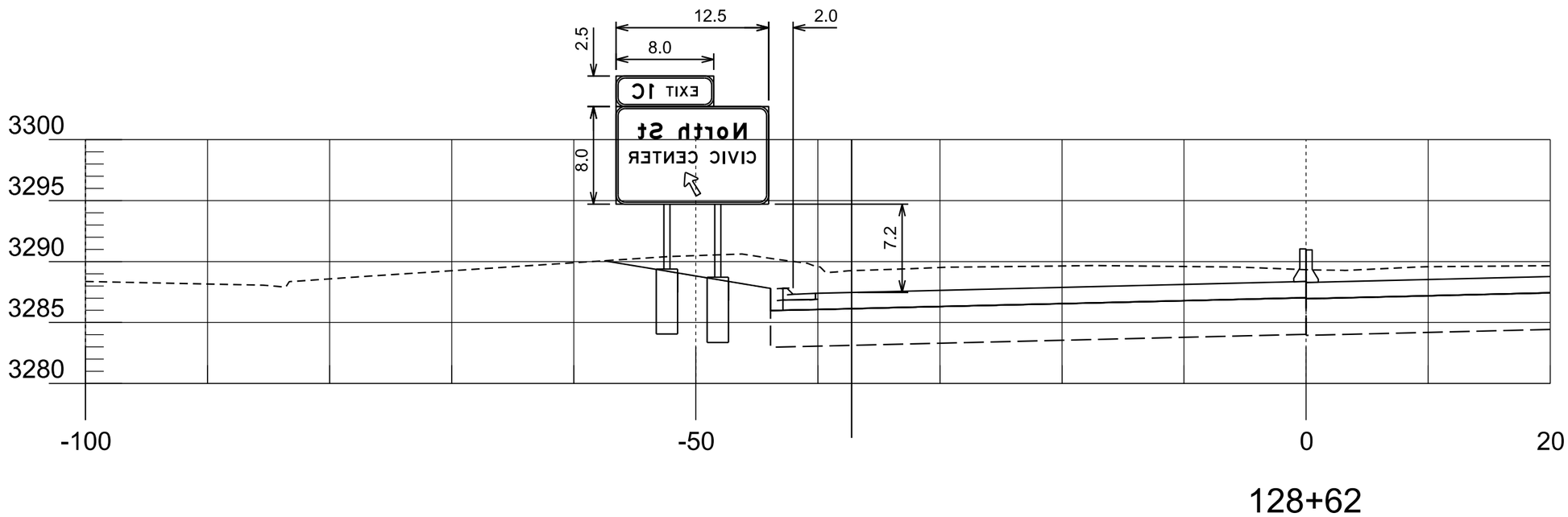

REGISTERED PROFESSIONAL ENGINEER
REG. NO. 8328
JODY W. PAGE
SOUTH DAKOTA
MAY 2015

HDR

Plot Scale - 1:9.99998

Plotted From - ahennel

File - ...\Section_S\Cross_Section_01.dgn

FOR BIDDING PURPOSES ONLY

Sign Cross Sections

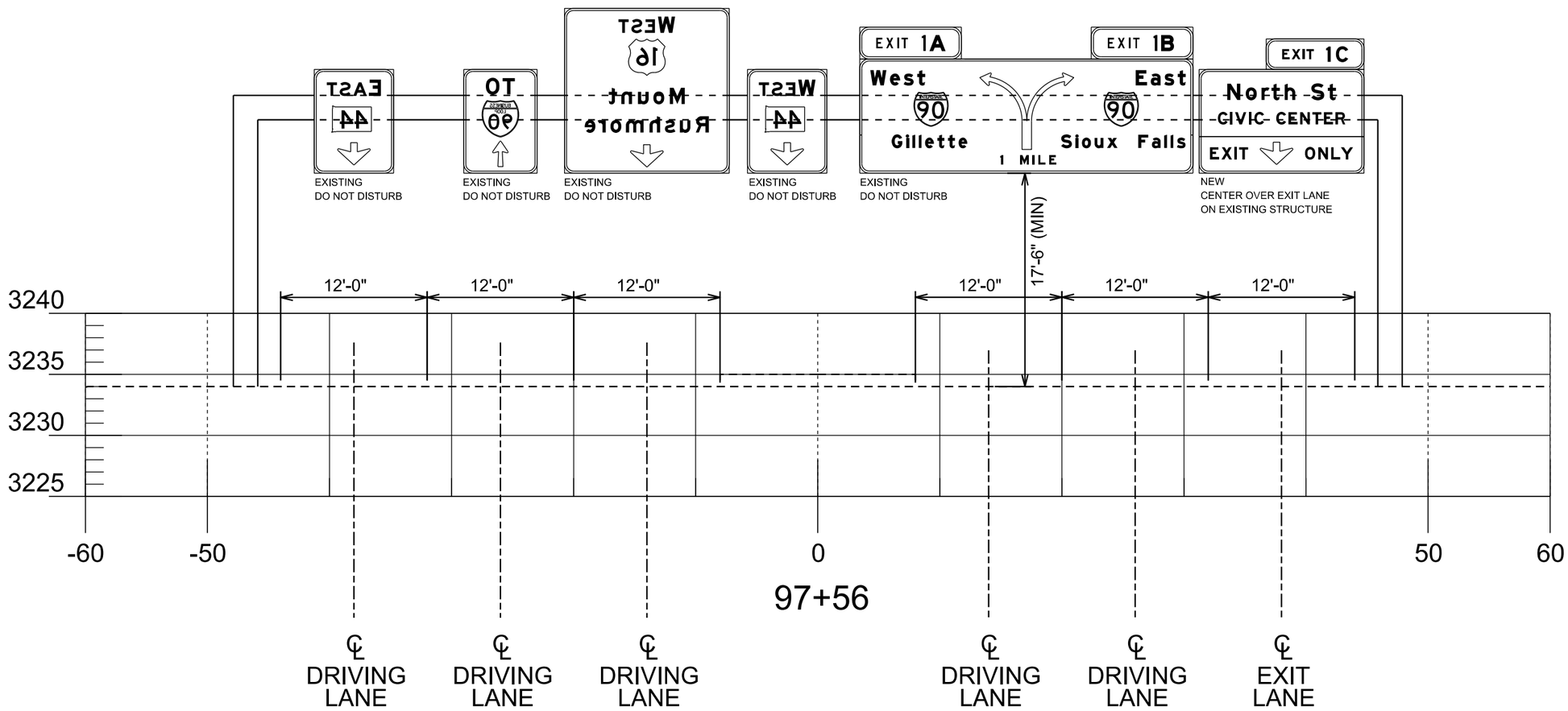

Plot Scale - 1:9.99998
Plotted From - ahengel
File - ...\Section_S\Cross_Section_02.dgn

STATE OF SOUTH DAKOTA	PROJECT	SHEET	TOTAL SHEETS
	IM 1902(61)0	S59	S59

Plotting Date: 04-22-2015

FOR BIDDING PURPOSES ONLY

Sign Cross Sections

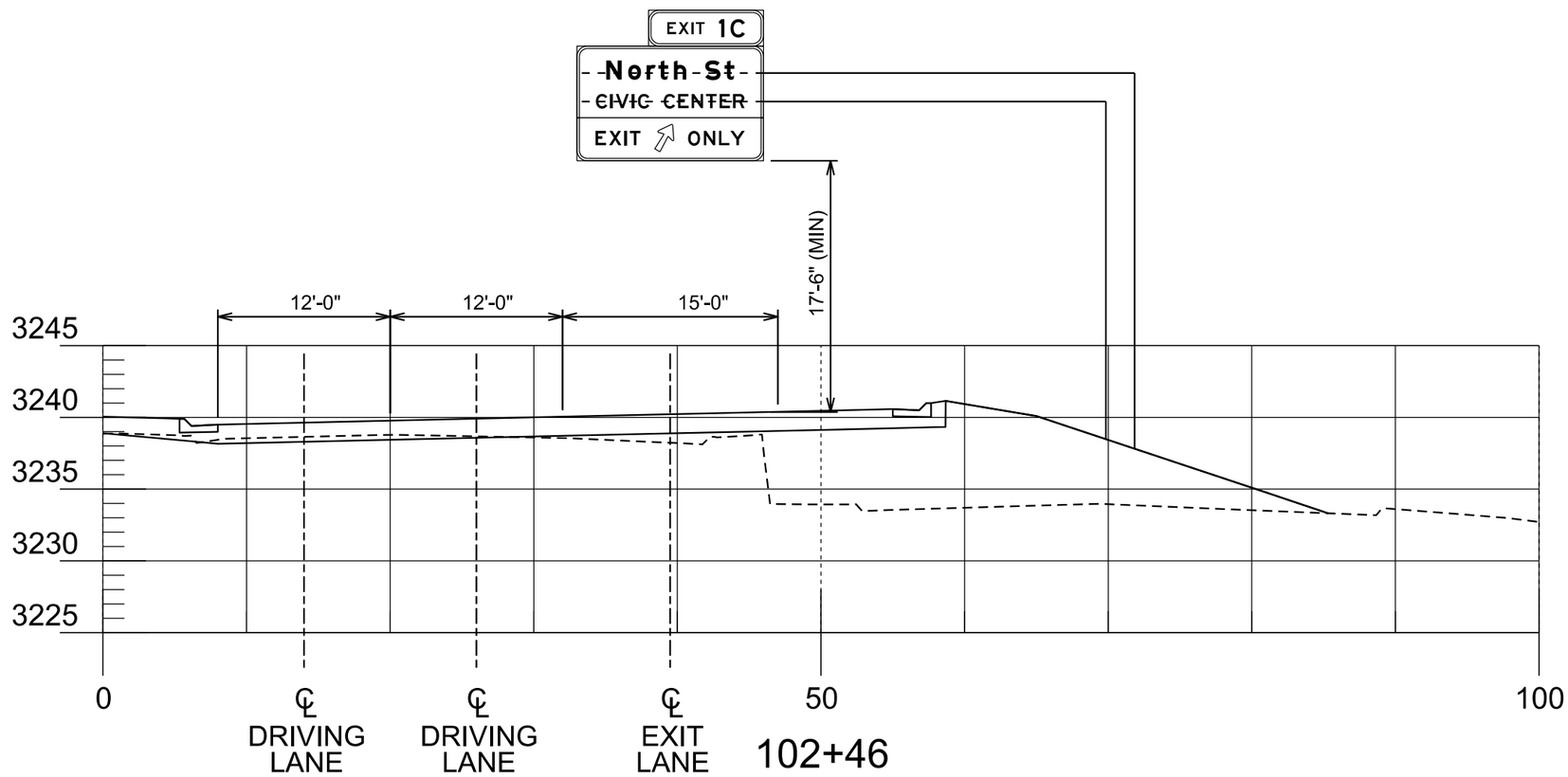

REGISTERED PROFESSIONAL ENGINEER
REG. NO. 8328
JODY W. PAGE
SOUTH DAKOTA
1 MAY 2015

HDR

Plot Scale - 1:9.99998

Plotted From - ahengel

File - ...\Section_S\Cross_Section_03.dgn