SECTION B: GRADING PLANS

STATE OF SOUTH DAKOTA	PROJECT	SHEET	TOTAL SHEETS
	IM 0901(38)40	B1	B114

Plotting Date: 08/30/2016

INDEX OF SHEETS

B1 General Layout W/Index
B2-B14 Estimate With General Notes
B15-B16 Table of Pipe Estimate
B17 Table of Fence Estimate
B18-B20 Borrow Pit Sheets
B21-B26 Typical Sections
B27-B30 Horizontal Alignment Sheets
B31 Control Data Sheet
B32 Topography Symbology & Legend
B33-B57 Plan & Profile Sheets
B58-B59 Intersection Layout Sheets
B60-B67 Guardrail Layout Seets
B68-B77 Gore layout Sheets
B78 Specail Detail Sheet
B79-B114 Standard Plates

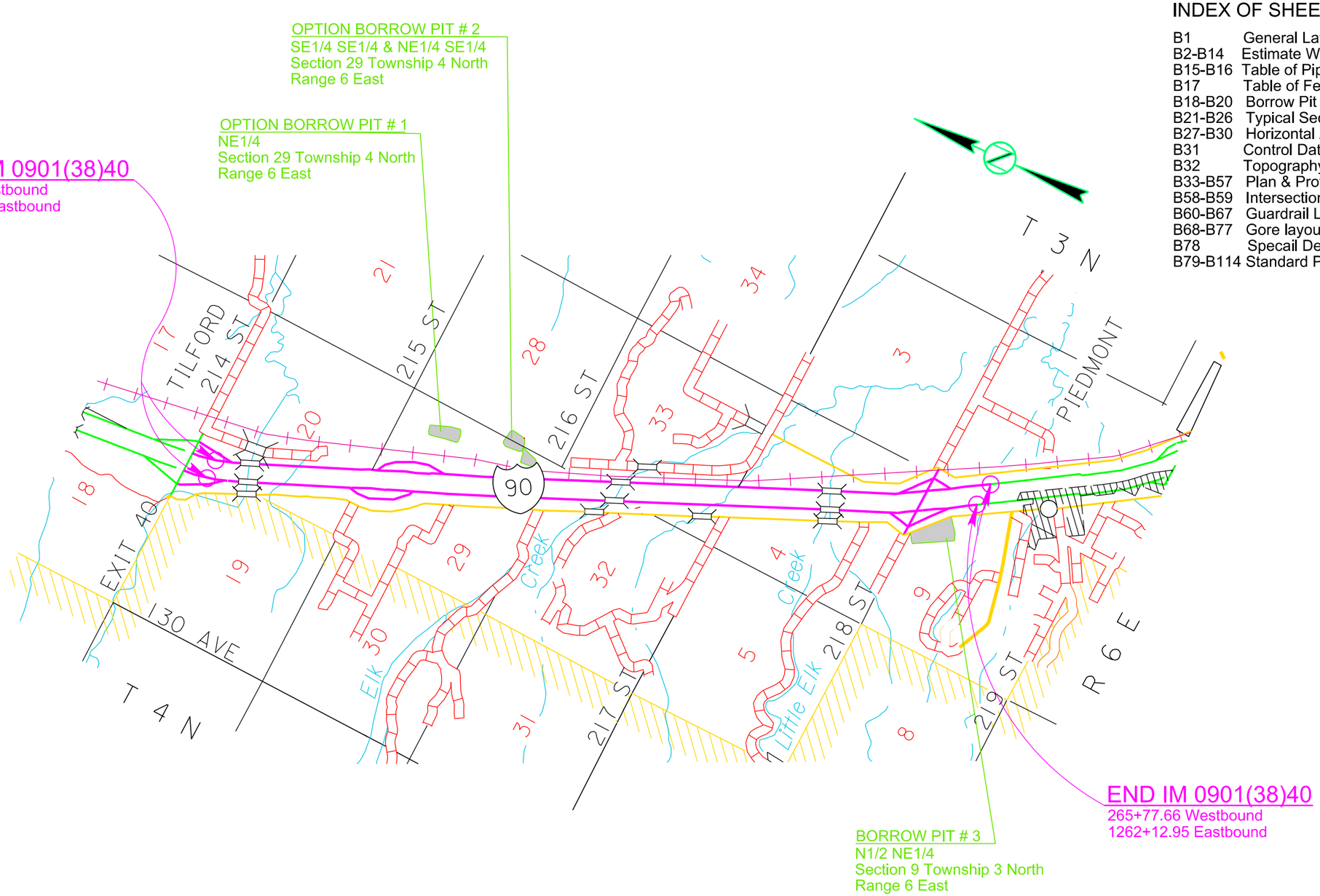

Plot Scale - 1:200

Plotted From - tpp17192

File - U:\rdprj\meade5580\Titleb.dgn

SECTION B ESTIMATE OF QUANTITIES

BID ITEM NUMBER	ITEM	QUANTITY	UNIT
009E0010	Mobilization	Lump Sum	LS
009E3230	Grade Staking	24.902	Mile
009E3250	Miscellaneous Staking	12.475	Mile
009E3280	Slope Staking	12.268	Mile
009E3290	Structure Staking	14	Each
009E3300	Three Man Survey Crew	100.0	Hour
009E4300	Construction Schedule, Category III	Lump Sum	LS
009E4330	Project Management, Category III	Lump Sum	LS
100E0100	Clearing	Lump Sum	LS
110E0400	Remove Drop Inlet	11	Each
110E0600	Remove Fence	1,608	Ft
110E0700	Remove 3 Cable Guardrail	2,059	Ft
110E0705	Remove 1 Cable Guardrail	13,278	Ft
110E0730	Remove Beam Guardrail	250.0	Ft
110E0740	Remove 3 Cable Guardrail Anchor Assembly	8	Each
110E0745	Remove 3 Cable Guardrail Slip Base Anchor Assembly	3	Each
110E1100	Remove Concrete Pavement	148,172.7	SqYd
110E1150	Remove Concrete Median Barrier	1,875	Ft
110E4000	Salvage Crash Cushion	1	Each
110E4100	Salvage 3 Cable Guardrail	972	Ft
110E4290	Salvage Beam Guardrail	5,762.5	Ft
110E4370	Salvage W Beam Guardrail Flared End Terminal	2	Each
110E4380	Salvage W Beam Guardrail Tangent End Terminal	10	Each
110E6230	Remove W Beam Guardrail for Reset	212.5	Ft
110E7510	Remove Pipe End Section for Reset	4	Each
120E0010	Unclassified Excavation	840,888	CuYd
120E0300	Borrow Unclassified Excavation	131,928	CuYd
120E0500	Option Borrow Excavation	212,885	CuYd
120E1000	Muck Excavation	20,812	CuYd
120E1100	Unclassified/Rock Excavation	23,855	CuYd
120E2000	Undercutting	383,933	CuYd
120E6100	Water for Embankment	11,186.0	MGal
240E0010	Obliterate Old Road	66	Sta
250E0020	Incidental Work, Grading	Lump Sum	LS
270E0040	Salvage and Stockpile Asphalt Mix and Granular Base Material	162,889.0	Ton
421E0100	Pipe Culvert Undercut	264	CuYd
450E0122	18" RCP Class 2, Furnish	402	Ft
450E0130	18" RCP, Install	402	Ft
450E0142	24" RCP Class 2, Furnish	1,504	Ft
450E0150	24" RCP, Install	1,504	Ft
450E0162	30" RCP Class 2, Furnish	194	Ft
450E0170	30" RCP, Install	194	Ft
450E0182	36" RCP Class 2, Furnish	638	Ft
450E0190	36" RCP, Install	638	Ft

SECTION B ESTIMATE OF QUANTITIES (continued)

BID ITEM NUMBER	ITEM	QUANTITY	UNIT
450E0700	RCP Tee, Furnish	2	Each
450E0701	RCP Tee, Install	2	Each
450E1200	RCP Increaser, Furnish	3	Each
450E1201	RCP Increaser, Install	3	Each
450E2028	36" RCP Flared End, Furnish	2	Each
450E2029	36" RCP Flared End, Install	2	Each
450E2200	24" RCP Sloped End, Furnish	7	Each
450E2201	24" RCP Sloped End, Install	7	Each
450E2204	30" RCP Sloped End, Furnish	4	Each
450E2205	30" RCP Sloped End, Install	4	Each
450E2207	36" RCP Sloped End with Bars, Furnish	1	Each
450E2208	36" RCP Sloped End, Furnish	1	Each
450E2209	36" RCP Sloped End, Install	2	Each
450E2304	18" RCP Safety End, Furnish	9	Each
450E2307	18" RCP Safety End, Install	9	Each
450E2308	24" RCP Safety End, Furnish	12	Each
450E2311	24" RCP Safety End, Install	12	Each
450E3032	36" RCP Arch Class 2, Furnish	164	Ft
450E3040	36" RCP Arch, Install	164	Ft
450E4512	36" RCP Arch Flared End, Furnish	4	Each
450E4513	36" RCP Arch Flared End, Install	4	Each
450E4739	12" CMP 16 Gauge, Furnish	36	Ft
450E4740	12" CMP, Install	36	Ft
450E4759	18" CMP 16 Gauge, Furnish	246	Ft
450E4760	18" CMP, Install	246	Ft
450E5010	18" CMP Elbow, Furnish	4	Each
450E5011	18" CMP Elbow, Install	4	Each
450E5203	12" CMP Flared End, Furnish	2	Each
450E5204	12" CMP Flared End, Install	2	Each
450E5211	18" CMP Flared End, Furnish	4	Each
450E5212	18" CMP Flared End, Install	4	Each
450E5406	18" CMP Safety End, Furnish	3	Each
450E5407	18" CMP Safety End, Install	3	Each
450E8009	18" RCP to CMP Transition, Furnish	1	Each
450E8010	18" Pipe Transition, Install	1	Each
450E9001	Reset Pipe End Section	4	Each
451E1006	6" PVC Sewer Pipe	550	Ft
451E6080	Adjust Water Valve Box	2	Each
462E0100	Class M6 Concrete	11.4	CuYd
480E0100	Reinforcing Steel	1,717	Lb
600E0300	Type III Field Laboratory	1	Each
620E0020	Type 2 Right-of-Way Fence	19,075	Ft
620E0160	Type 6s Right-of-Way Fence	259	Ft
620E0510	Type 1 Temporary Fence	2,750	Ft

SECTION B ESTIMATE OF QUANTITIES (continued)

BID ITEM NUMBER	ITEM	QUANTITY	UNIT
620E0515	Type 1A Temporary Fence	7,900	Ft
620E1020	2 Post Panel	42	Each
620E1030	3 Post Panel	26	Each
628E1500	Concrete Barrier End Protection	1	Each
628E1510	Concrete Barrier End Protection Module Set or Repair Kit	2	Each
629E0100	3 Cable Guardrail	4,196	Ft
629E0300	3 Cable Guardrail Slip Base Anchor Assembly	13	Each
629E2000	1 Cable Guardrail	5,110	Ft
630E0110	Straight Double Class A Thrie Beam Guardrail with Wood Posts	600.0	Ft
630E1010	Straight Class A W Beam Guardrail with Wood Posts	2,112.5	Ft
630E2000	W Beam to Thrie Beam Guardrail Transition	32	Each
630E2015	W Beam Guardrail Flared End Terminal	6	Each
630E2020	W Beam Guardrail Tangent End Terminal	12	Each
630E2030	W Beam Guardrail Breakaway Cable Terminal	12	Each
630E2110	Beam Guardrail Post and Block	34	Each
630E5160	Reset W Beam Rail	212.5	Ft
650E4415	Type D411.5 Concrete Curb and Gutter	13	Ft
670E3200	Type D Frame and Grate	12	Each
670E4120	Type L Median Drain	5	Each
670E4200	Type M Median Drain	10	Each
670E5400	Precast Drop Inlet Collar	12	Each
671E7015	Remove and Reset Manhole	1	Each
671E8000	Reconstruct Manhole	3	Each
700E0210	Class B Riprap	236.6	Ton
720E1010	PVC Coated Bank and Channel Protection Gabion	15.0	CuYd
831E0110	Type B Drainage Fabric	355	SqYd
998E0100	Railroad Protective Insurance	Lump Sum	LS

Plot Scale - 1:200
Plotted From - tmpr13418
File - ...\prj\mead5580\NotesSectionB.dgn

GRADING OPERATIONS

Water for Embankment is estimated at the rate of 10 gallons of water per cubic yard of Embankment minus Waste.

The estimated cubic yards of excavation and/or embankment required to construct outlet ditches, ditch blocks, and approaches are included in the earthwork balance notes on the profile sheets.

Special ditch grades and other sections of the roadway different than the typical section(s) shall be constructed to the limits shown on the cross sections. If significant changes to the cross sections are necessary during construction, the Engineer shall contact the Designer for the proposed change.

Generally, all shallow inlet and outlet ditches as noted on the plan sheets shall be cut with a 10-foot wide bottom with 5:1 backslopes. However, the Engineer may direct the Contractor to adjust the ditch width for proper alignment with the drainage structure.

Temporary fence and/or permanent fence shall be placed ahead of the grading operation unless otherwise directed by the Engineer.

On superelevated curves the grade referred to on the profile is the centerline grade elevation prior to calculating superelevation.

A copy of the soils profile is available for review at the Rapid City Region or the Rapid City Area offices.

RAILROAD CROSSING AT STATION 199+35 (XR236)

A separate highway-rail grade crossing project will be constructed by RCPE for the crossing at station 199+35 (XR236). The contracted railroad work will include: new crossing surface and highway-rail grade signals. The grading contractor shall coordinate his work activities with RCPE at the preconstruction meeting.

TEMPORARY CONSTRUCTION RAILROAD CROSSING FOR BORROW

The temporary construction railroad crossing for borrow shall require a right of entry permit from RCP&E. The Contractor shall be required to complete the right of entry application that has been started by the SDDOT. The Contractor shall be responsible for any fees associated with the right of entry application.

TYPE III FIELD LABORATORY

The lab shall be equipped with an internet connection such as DSL, cable modem, or other approved service. The internet connection shall be provided with a multi-port wireless router. The internet connection shall be a minimum speed of 512 Kb unless limited by job location and approved by the DOT. Prior to installing the wireless router the Contractor shall submit the wireless router's technical data to the Area Office to check for compatibility with the state's computer equipment. The internet connection is intended for state personnel usage only. The Contractor's personnel are prohibited from using the internet connection unless pre-approved by the Project Engineer.

The Contractor shall submit a copy of each monthly bill for calls charged to this phone at the end of each month. The Project Engineer will then audit the bills to ensure all calls are legitimate and then initiate a Construction Change Order (CCO) to reimburse the Contractor for the actual phone calls made, including local and long distance calls. Reimbursement will not be made for fees associated with the purchase, installation, disconnection, monthly line charges, and incidentals involved in the installation, maintenance, and disconnection of the phone (including attachments). These items shall be incidental to the contract unit price per each for "Type III Field Laboratory".

UTILITIES

The Contractor shall be aware that the existing utilities shown in the plans were surveyed prior to the design of this project and might have been relocated or replaced by a new utility facility prior to construction of this project, might be relocated or replaced by a new utility facility during the construction of this project, or might not require adjustment and may remain in its current location. The Contractor shall contact each utility owner and confirm the status of all existing and new utility facilities. The utility contact information is provided elsewhere in the plans or bidding documents.

The Contractor shall coordinate with Black Hills Power when grading near the overhead pole at station 214+37-71' L. Black Hills Power shall remove the two guy wires and anchors, allowing the contractor to grade around the pole. Black Hills Power shall support the overhead wire with bucket trucks and remove the pole allowing the contractor to complete the grading. Black Hills Power shall install a new pole, anchor and guy wires. Black Hills Power shall be contacted no less than ten (10) business days prior to grading being performed near this pole.

OBLITERATING OLD ROAD

The Contractor shall obliterate the existing roadway at the locations listed in the Table of Obliterating Old Road.

The Contractor shall obliterate the existing roadway in accordance with Section 240 of the Specifications when the existing roadway is not being removed in accordance with the template section.

The earthwork necessary for obliterating the existing road shall be accomplished to such an extent that placing topsoil and seeding can be done in a satisfactory manner. Quantities of topsoil, fertilizing, mulching, and seeding for the obliterated sections of the old road are included in the Section D - Erosion and Sediment Control Plans Estimate of Quantities.

TABLE OF OBLITERATING OLD ROAD

Station to	Station	L/R	Length (Sta)
240+00	255+81 (WB)	L	16
265+77.67	315+64 (WB)	L	50
		Total:	66

MAINTENANCE CROSSOVERS

Maintenance crossovers shall be constructed as shown in the plans. The maintenance crossovers noted with "Retain" are maintenance crossovers at the same location and approximately the same elevation as the existing crossovers; therefore small quantities of excavation or embankment are required at these locations. The maintenance crossover subgrade shall be constructed to conform to the details on Standard Plate 120.04.

Excavation quantities for the maintenance crossovers are included in the earthwork balance notes on the profile sheets.

TABLE OF MAINTENANCE CROSSOVERS

Station	Type
29+00 WB	Construct
112+41 WB	Construct
217+40 WB	Retain

INSLOPE TRANSITIONS

Inslope transitions will be required at various drainage structures and pipe locations. Refer to Standard Plate 120.05 for details.

TABLE OF INSLOPE TRANSITIONS AT PIPE CULVERTS OR REINFORCED CONCRETE BOX CULVERTS

Station	L/R	Type
10+02.49 WB	L	1
1007+20.03 EB	R	1
47+55.18 WB	L	1
112+14.54 WB	L	1
1112+30.97 EB	R	2
174+35.43 WB	L	1
1174+51.90 EB	R	1
182+17.45 WB	L	1
257+38.93 WB	L	1
0+64 Exit 44 Ramp B	L & R	2

Plot Scale - 1:200
Plotted From - trgr13418
File - ...\prj\mead5580\NotesSectionB.dgn

SHRINKAGE FACTOR: Embankment +16.5% to +40%

TABLE OF EXCAVATION QUANTITIES BY BALANCES

Station	to Station	Excavation (CuYd)	Exc/Rock (CuYd)	* Undercut (CuYd)	* Muck Exc. (CuYd)	* Option Borrow Exc. (CuYd)	* Borrow Exc. (CuYd)	Total Excavation (CuYd)	Out-of-Balance Exc. (CuYd)	** Waste (CuYd)	** Dead Haul (CuYdSta)	** Option Borrow Haul (CuYdSta)	** Borrow Haul (CuYdSta)	** Haul (CuYdSta)	** Out-of-Balance Exc. Haul (CuYdSta)
WB															
10+00	108+45.27	8,225		67,557	14,758	91,233		181,733			1,866,800	4,422,200		200	
108+45.27	200+00.00	49,038		53,303	1.977	86,283		190,813	212		763,400	6,039,300		100	200
200+00.00	234+72.68	5,325		16,627	4,077		39,255	65,284			314,000		841,500	100	
234+72.68	265+77.67	25,291		19,004			12,938	57,233			103,500		62,000	49,600	
EB															
1010+00.00	1060+99.98	4,259		39,406				63,358	19,693					17,300	#666,200
1060+99.98	1071+42.28	415		7,536				14,161	6,210					100	#43,700
1071+42.28	1147+98.68	39,561		60,544				111,853	11,748					65,200	#648,000
1147+98.68	1244+65.10	19,105		56,932			30,915	169,880	62,928		154,600		496,000	2,300	#2,193,400
1244+35.10	1262+12.95	6,721		15,481				22,022						8,600	
Exit 40 Ramp B		1,259		4,241		5,139		10,639			485,600	35,500		100	
Exit 40 Ramp C		29,536		7,444				36,979		19,693				112,900	
Rest Area (Ramp A)		2,748		3,164		15,394		21,306		0	723,600	77,900		100	
Rest Area (Ramp B)		0		2,471		3,336		5,807		0	113,400	10,900			
Rest Area (Ramp C)		0	18,976					23,855		16,670				34,500	
Rest Area (Ramp D)		340		1,836				3,348	1172	0				100	#17,000
Exit 44 (Ramp A)		8,836		3,018			9,043	20,897		0	72,400		135,700	18,000	
Exit 44 (Ramp B)		4,812		2,116			34,977	41,903		0	349,800		326,600	700	
Exit 44 (Ramp C)		45,326		6,723				52,049		38,279				149,100	
Exit 44(Ramp D)		20,462		5,720				26,182		11,402				34,300	
XR236		21,879		10,810				32,688		14,000				23,800	
XR1118 Cul-de-sac		50						50							
XR1177 Cul-de-sac		100					600	700			36,000		100		
XR275 Cul-de-sac		0					200	200			9,000				
DR141		3,334						3,334		3,014					
Totals:		296,622	18,976	383,933	20,812	201,385	127,928	1,155,324	101,963	103,058	4,992,100	10,585,800	1,861,900	517,100	3,568,500

* The quantities for these items are in the Estimate of Quantities under their respective bid items. # Quantity includes CuYdSta that it take to haul the Out of Balance Exc to from one balance to the other.
** The quantities for these items are for information only.

TABLE OF UNCLASSIFIED EXCAVATION

Excavation	296,622
Undercut	383,933
Topsoil	73,398
Exc. for RCBC Installation	700
Salvaged Asphalt Mix and Granular Base Material (from cut sections)	77,821
Salvaged Asphalt Mix and Granular Base Material (from fill sections)	7,864
Salvaged Asphalt Mix and Granular Base Material (from off-alignment roadways, Sta. 1265+12.95 to 1271+39.33 EB, Sta 265+77.67 to 271+07.01 WB, & XR3 or exit 40 crossroad see section F)	550
Total	840,888

TABLE OF ROCK/UNCLASSIFIED EXCAVATION

Excavation/Rock	18,976
Undercut	4,879
Total	23,855

TABLE OF OPTION BORROW EXCAVATION

	(CuYd)
Option Borrow Excavation	201,385
Topsoil in Option Borrow Pits	11,500
Total:	212,885

TABLE OF BORROW EXCAVATION

	(CuYd)
Borrow Excavation	127,928
Topsoil in Borrow Pits	4,000
Total:	131,928

Plot Scale - 1:200
Plotted From - tmpr13418
File - ...\brjmead5580\NotesSectionB.dgn

PROCEDURES FOR DETERMINING UNCLASSIFIED EXCAVATION QUANTITY

When plan quantities are used for payment, the Unclassified Excavation quantity shall be used for final payment.

The following paragraphs are general earthwork information and information in regards to computing the Unclassified Excavation quantity when final cross sections are taken in the field:

The Unstable Material Excavation quantity is included in the Excavation quantity listed in the Table of Unclassified Excavation. When finaling a project, the Unstable Material Excavation quantity shall be added to the Excavation quantity to compute the Unclassified Excavation quantity.

Out-of-Balance Excavation is material obtained from waste generated from excavation from other balances. The quantity of Out-of-Balance Excavation is included in the Excavation quantity in the balance where it is excavated and is paid for once as Unclassified Excavation.

The Topsoil quantity in the Table of Unclassified Excavation is an estimate. When finaling a project, the total quantity of field measured Topsoil shall be used in place of the estimated Topsoil quantity. The quantity of Topsoil from the cuts will be paid for twice as Unclassified Excavation, as it will be in both the Excavation and Topsoil quantities. This will be full compensation for Excavation, which includes necessary undercutting to provide space for placement of topsoil.

The Excavation quantities from individual balances and the Table of Unclassified Excavation have been reduced by the volume of in place surfacing that will be removed and/or salvaged.

Salvaged Asphalt Mix and Granular Base Material shall be paid for once as Unclassified Excavation. As shown in the Table of Unclassified Excavation, the estimated quantity of 7,864 cubic yards of Salvaged Asphalt Mix and Granular Base Material from fill sections and 550 cubic yards of Salvaged Asphalt Mix and Granular Base Material from off-alignment roadways or obliterated old roads shall be added to the Excavation quantity to determine the Unclassified Excavation quantity. When finaling a project, the quantities of Salvaged Asphalt Mix and Granular Base Material from fill sections and off-alignment roadways will not be adjusted according to field measurements. The quantity of Salvaged Asphalt Mix and Granular Base Material from cut sections will not be added to the Excavation quantity as it is already in the cuts on the final cross sections.

The volume of in place Concrete Surfacing removed will NOT be paid for as Unclassified Excavation.

The Excavation quantities from individual balances and the table above have been reduced by the volume of in place concrete pavement that will be removed.

When finaling a project, the estimated quantity of 32,299 cubic yards of Concrete Pavement removed from the cut sections shall be subtracted from the Unclassified Excavation quantity for final payment. The quantity of Concrete Pavement from cut sections subtracted from the Unclassified Excavation quantity shall be plans quantity and will not be adjusted according to field measurements.

HAUL

Included in the Table of Excavation Quantities by Balances are Dead Haul, Option Borrow Haul, Out-of-Balance Haul, and Haul. They are not pay items and are for informational purposes only. Haul was not estimated for moving Contractor Furnished Borrow Excavation. The mass haul diagram is available as part of the bid package for use in figuring this haul.

Dead Haul: Estimated quantity (CuYdSta) for moving borrow excavation material or option borrow excavation material from the borrow or option borrow site to the centerline mainline station listed in the Table of Borrow Pits.

Borrow Haul: Estimated quantity (CuYdSta) for moving borrow excavation material from the centerline mainline station listed in the Table of Borrow Pits to the locations where it is needed throughout the earthwork balance.

Option Borrow Haul: Estimated quantity (CuYdSta) for moving option borrow excavation material from the centerline mainline station listed in the Table of Borrow Pits to the locations where it is needed throughout the earthwork balance.

Out-of-Balance Haul: Estimated quantity (CuYdSta) for moving material from an earthwork balance to another earthwork balance.

Haul: Estimated quantity (CuYdSta) for moving unclassified excavation material to the locations where it is needed throughout the earthwork balance.

For Purpose of Extra Haul Computations:

Average Haul = (Haul + Out-of-Balance Haul)/Unclassified Excavation = 4,085,600/836,627 = 4.9 Sta.

Average Option Borrow Haul = (Option Borrow Haul + Dead Haul)/Total Option Borrow Excavation = 14,538,600/201,385 = 72.2 Sta.

Average Borrow Haul = (Borrow Haul + Dead Haul)/Total Borrow Excavation = 2,901,100/127,928 = 22.7 Sta.

UNDERCUTTING

In all cut sections the earthen subgrade shall be undercut 3 feet below the earthen subgrade surface. The undercut material or other suitable material, as directed by the Engineer, shall then be replaced and compacted to the density specified for the section being constructed.

Shallow embankment sections, fills less than 3 feet in height measured at the finished subgrade shoulders, shall be undercut to ensure a minimum 3 foot height of earth embankment for the entire width of roadbed. The upper 6 inches of undercut material that consists of topsoil with a high humus content shall be used as topsoil, placed in the fill slopes outside the shoulders of the earthen subgrade, or placed in the lower portion (below 4 foot depth) in fills which are greater than 4 feet in height. The remaining undercut soil and soil obtained from adjacent excavation (excluding the upper 6 inches) shall then be replaced and compacted to the density specified for the section being constructed.

An exception to the undercut requirements shall be made in sections that encounter in place rock. Cut sections made through in place rock shall be excavated to the top of the subgrade surface only. Shallow embankment sections (as described above) placed over in place rock with less than 3 feet of soil cover shall be excavated to the surface of the rock prior to placing any fill. Gypsum will not be considered rock in this case and will be excavated to the undercut depth required.

The plan shown quantity will be the basis of payment. However, if there are additional areas of undercut other than what is shown in the plans, the Engineer shall direct removal of these areas and the additional areas will be measured according to the Engineer.

TABLE OF UNDERCUTTING

Station	to Station	Quantity (CuYd)
WB Lanes		
10+00	40+00	20,782
40+00	70+00	17,809
70+00	100+00	22,588
100+00	130+00	22,966
130+00	160+00	9,526
160+00	190+00	21,364
190+00	220+00	15,017
220+00	250+00	17,187
250+00	265+77.67	9,251
EB Lanes		
1010+00	1040+00	23,643
1040+00	1070+00	22,183
1070+00	1100+00	26,439
1100+00	1130+00	25,182
1130+00	1160+00	13,366
1160+00	1190+00	25,921
1190+00	1220+00	17,798
1220+00	1250+00	14,236
1250+00	1262+12.95	11,132
Exit 40 Ramp B		4,241
Exit 40 Ramp C		7,444
Rest Area (Ramp A)		3164
Rest Area (Ramp B)		2,471
Rest Area (Ramp C)		4,879
Rest Area (Ramp D)		1,836
Exit 44 (Ramp A)		3,018
Exit 44 (Ramp B)		2,116
Exit 44 (Ramp C)		6,723
Exit 44(Ramp D)		5,720
XR236		10,810
DR141		0
	Total:	388,812

Plot Scale - 1:200
Plotted From - trgr13418
File - ...\prj\mead5580\NotesSectionB.dgn

UNSTABLE MATERIAL EXCAVATION

The areas of unstable material excavation are drawn on the cross sections with a normal depth of 2 feet. The estimated quantity of 25,595 cubic yards of unstable material excavation shall be paid for at the contract unit price per cubic yard for "Unclassified Excavation".

All areas designated as Unstable shall be excavated. The unstable material excavated on this project shall be placed outside the subgrade shoulder in fill sections or stockpiled and used as topsoil.

Field measurement of unstable material excavation shall not be made. However, if there are additional areas of unstable material excavation other than what is shown in the plans, the Engineer shall direct removal of these areas and the additional areas will be measured according to the Engineer.

TABLE OF UNSTABLE MATERIAL EXCAVATION

Station	to	Station	L/R	Depth (Ft)	Quantity (CuYd)
58+00		62+00 WB	L	2	1,806
104+00		117+00 WB	L	2	2,962
155+00		160+00 WB	L	2	1,164
175+00		190+00 WB	L	2	4,583
233+00		242+00 WB	L	2	1,994
253+00		258+00 WB	L	2	2,300
1090+00		1107+00 EB	R	2	2,850
1233+00		1242+00 EB	R	2	868
Exit 40		Ramp A			
8+00		9+00	L	2	228
Rest Area		Ramp A			
0+00		10+25	L	2	3,530
Exit 44		Ramp B			
7+00		14+70	L	2	3,310
				Total:	25,595

MUCK EXCAVATION

The areas of muck excavation are drawn on the cross sections with a normal depth of 3 feet. The estimated quantity of 20,812 cubic yards of muck excavation shall be paid for at the contract unit price per cubic yard for "Muck Excavation".

Muck excavation consists of the removal of highly organic and/or highly saturated material from the designated areas shown on the cross sections. Highly organic muck material shall not be used in the embankment but may be used as topsoil. Non-organic muck material may be used as embankment outside of the fill subgrade shoulder if it is properly handled and dried prior to placement in the embankment.

Field measurement of muck excavation will not be made unless the Engineer orders additional excavation, or when the Engineer determines, in accordance with Section 120.3 A.1. of the Specifications, that the classification of excavation be changed.

If the areas designated as muck excavation can be removed with similar equipment and procedures as used for unclassified excavation, the material shall be measured and paid for as "Unclassified Excavation".

TABLE OF MUCK EXCAVATION

Station	to	Station	L/R	Depth (Ft)	Quantity (CuYd)
45+00		58+00 WB	L	3	7,550
87+00		104+00 WB	L	3	7,208
160+00		175+00 WB	L	3	6,054
				Total:	20,812

SALVAGE AND STOCKPILE ASPHALT MIX AND GRANULAR BASE MATERIAL

An estimated 162,889 tons (86,184.7 Cubic Yards) of asphalt mix and granular base material shall be salvaged from the entire length of the existing highway (including ramps) and stockpiled at a site furnished by the Contractor and satisfactory to the Engineer.

Salvage material shall be processed to provide material meeting the following gradation:

% Passing	Sieve Size
100	2 inch (50.0 mm)
70-100	1 inch (25.0 mm)

The quantity of salvage asphalt mix and granular base material may vary from the plans. No adjustment will be made to the contract unit price for variations of the quantity of "Salvage and Stockpile Asphalt Mix and Granular Base Material."

BORROW PITS

Temporary fence shall be erected after completion of pit operations at option borrow pits 1 and 2. Estimated fence quantities are included on the fence estimate sheet.

TABLE OF BORROW PITS

Site	Station	L/R	Dead Haul Distance (Sta)	Borrow Exc. (CuYd)	Option Borrow Exc. (CuYd)	Dead Haul (CuYdSta)
1	108+50	L	25		70,000	1,750,000
2(1)	108+50	L	5.5		55,000	302,500
2(2)	108+50	L	11		52,516	577,700
2(2)	Ex 40 (B)	L	94.5		5,139	485,600
2(2)	RA (A)	L	47		15,394	723,600
2(2)	RA (B)	L	34		3,336	113,400
3	Ex44 (A)	R	10	9,043		72,400
3	EX 44 (B)	R	10	34,977		349,800
3	235+00	R	8	52,193		417,500
3	1238+00	R	5	30,915		154,600
3	XR1117	R		600		36,000
3	XR275	R		200		9,000
			Totals:	127,928	201,385	4,992,100

Stations in the above table are not pit locations, but stations where the borrow is interjected into the earthwork balance for haul calculations.

The quantities listed in the above table for Dead Haul are for information only. The Dead Haul quantities are also included in the Table of Excavation Quantities by Balances.

The quantities listed in the above table for Borrow Excavation and Option Borrow Excavation are also included in the Table of Excavation Quantities by Balances.

Gypsum from the borrow pits will not be allowed to construct the roadway embankment. Any gypsum encountered during the excavation of the borrow pits shall be disposed of by the Contractor in an area approved by the Engineer at no additional cost to the state.

EXCAVATION FOR REINFORCED CONCRETE BOX CULVERT INSTALLATION

Included in the quantity of "Unclassified Excavation" are 700 cubic yards of excavation for installation of reinforced concrete box culverts.

All work necessary to excavate a trench for installation of reinforced concrete box culverts including labor, equipment, and incidentals shall be incidental to the contract unit price per cubic yard for "Unclassified Excavation". Payment for excavation of reinforced concrete box culverts shall be based only on plans quantity and measurement of these excavation quantities during construction shall not be performed.

The excavation quantities for installation of reinforced concrete box culverts are not included with the earthwork balance quantities on the plans profile sheets. The quantities computed for excavation of the reinforced concrete box culverts are based on the limits shown in the drawing below.

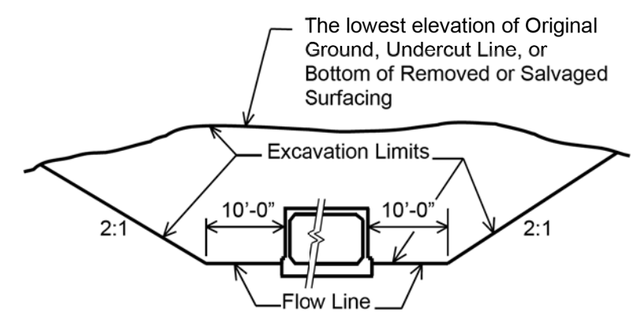

Plot Scale - 1:200
Plotted From - trgr13418
File - ...\prj\mead5580\NotesSections8.dgn

TABLE OF EXCAVATION FOR REINFORCED CONCRETE BOX CULVERT INSTALLATION

Station	Quantity (CuYd)
10+02 WB	100
7+20 Exit 40 Ramp B	50
47+55 WB	100
112+14 WB	65
174+35 WB	70
1174+51 EB	200
182+17 WB	70
257+39 WB	45
Total:	700

TABLE OF PIPE CULVERT UNDERCUT

The Table of Pipe Culvert Undercut is intended to be used to establish an estimated quantity of Pipe Culvert Undercut for bidding purposes only. The table includes undercut for 36 inch and larger pipe culverts. The depth of undercut is an estimate and the actual depth necessary shall be determined during construction. Pipes shown may or may not require undercutting and pipes not shown may require undercutting. The Engineer will determine which pipe shall be undercut in accordance with Section 421 of the Specifications.

Station	Undercut Depth (Ft)	Quantity (CuYd)
56+61 WB	1	37.5
1056+77 EB	1	35.0
189+64 WB	1	13.0
1189+91 EB	1	12.0
219+62 WB	1	37.5
1219+79 EB	1	32.5
254+55 WB	1	18.0
254+76 WB	1	18.0
0+64 Ex 44 B	1	27.5
197+85 XR236	1	32.5
	Total:	263.5

The table contains the rate of pipe culvert undercut per foot of pipe length and should be used as an aid in determining the actual amount of undercut to be performed during construction. The table is derived from the drawing below and conforms to the Specifications. When calculating pipe culvert undercut, the length of pipe ends should be included in the overall pipe length.

Storm sewer and approach pipes do not require undercutting unless specified otherwise in these plans.

Pipe Diameter (In)	Round Pipe Undercut Rate for 1' Depth (CuYd/Ft)	Arch Pipe Undercut Rate for 1' Depth (CuYd/Ft)
24	0.2407	0.2577
30	0.2623	0.2847
36	0.2840	0.3110
42	0.3056	0.3337
48	0.3272	0.3596
54	0.3488	0.3827
60	0.3704	0.4105
66	0.3920	---
72	0.4136	0.4630
78	0.4352	---
84	0.4568	0.5123
90	0.4784	---

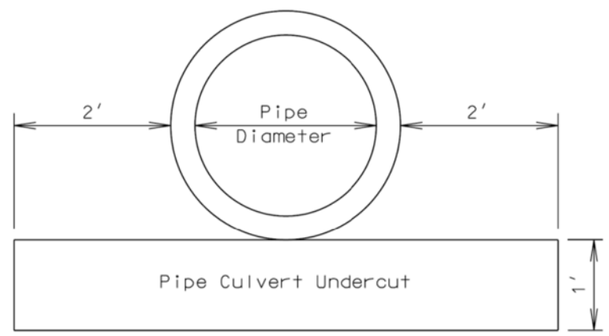

ROADWAY AND EMBANKMENT CONSTRUCTION

Blasting may be required to excavate the Minnekahta Limestone within the Rest Area Ramp C Excavation. Other cut sections may encounter large boulders and/or beds of limestone, gypsum, sandstone, siltstone, and claystone ledgerock at depth but should be able to be excavated using conventional methods.

Excavation Quantities have been established for both Unclassified/Rock Excavation and Unclassified Excavation to account for the differing geologic members that will be encountered during grading operations. Blasting may be required to excavate inplace rock of the Minnekahta Limestone from the Rest Area Ramp C Excavation. All materials excavated from this area shall be paid for as Unclassified/Rock Excavation. The remaining materials except those classified as Muck Excavation encountered during the construction of this project, regardless of their nature or the manner in which they are excavated, will be considered Unclassified Excavation.

Prospective bidders are encouraged to review the geology report completed by the SDDOT Geotechnical Engineering Activity as well as observe the project conditions in the field. The geology report is available at the Rapid City Area Office.

PLACEMENT OF MASSIVE ROCK WITHIN EMBANKMENT

As per Section 120.3 B.2 of the Standard Specifications, any rock in excess of 3 feet in any dimension that is placed in the embankment will be positioned outside of the finished subgrade shoulder and covered with a minimum of 2 feet of embankment. These rocks will be placed individually and spaced far enough apart to allow for compaction equipment to compact the embankment directly adjacent to the rock.

USE OF GYPSUM

A 2 foot seam of gypsum was noted during the subsurface investigation at Station 7+30–270' R of Exit 44 Ramp C, The seam was found approximately at elevation 3556. Although gypsum may be found in other location on the project, the area with highest probability of encountering gypsum is in the excavation near Exit 44 Ramp C.

It is estimated that the total amount of gypsum in the project excavation will be less than 5%. Gypsum may be included in the embankment provided that the gypsum is cobble size or smaller and is mixed sufficiently with soil to hinder the migration of water through the fill. Large chunks or boulders of gypsum produced during excavation should be compacted in the lower portion of fills that are over 4 feet in height. If such fills are not available, the boulders or large chunks should be disposed of by the Contractor in an area approved by the Engineer.

BLASTING OPERATIONS

The Contractor shall exercise utmost care so as not to endanger life or property while using explosives.

Before any drilling operations in preparation for blasting are started, the Contractor shall furnish the Engineer a detailed plan of operations showing the method proposed for the prevention of damage. In order to ensure adequate protection, the plan may be modified to meet the conditions that may develop. The Contractor shall also consider the location of adjacent structures in preparation of this plan.

Blasting operations shall be conducted under the most careful supervision. Ordinarily only light shooting shall be permitted. In using explosives, the Contractor shall adopt precautions that will prevent damage to surrounding objects. The Contractor shall use suitable mats or other approved means to smother the blasts as directed by the Engineer. Nothing herein shall release the Contractor from full responsibility for damage or injury resulting from the use of explosives.

When using explosives, the Contractor shall adopt precautions which will prevent damage to landscape features and other surrounding objects, and which will prevent the scattering of rocks, stumps or other debris outside the finished roadway slopes. When directed by the Engineer, trees within an area designated to be cleared shall be left as protective screen for surrounding vegetation during blasting operations. Trees left as a protective screen shall be removed and disposed of after blasting has been completed.

Plot Scale - 1:200
Plotted From - tmpr13418
File - ...\pr\mead5580\NotesSectionB.dgn

BLASTING OPERATIONS (continued)

Blasting may be required near the following list of Rest Area and house. This list is not considered to be a complete listing of areas of concern; also, blasting may not be required near all of the listed locations. These house locations are included in order to indicate that good blasting control and observation will be required on the project.

Station	L/R
1067+00 (EB)	R
1068+00 (EB)	R

All costs associated with the blasting operations shall be incidental to the contract unit price per cubic yard for "Unclassified/Rock Excavation".

A. BLASTING CONSULTANT

The Contractor shall retain a recognized blasting consultant to assist in the blast and pre-shear design. The blast design shall include both the controlled and production blasting. The consultant shall be an expert in the field of drilling and blasting who derives his primary source of income from providing education in an institution of higher education and/or specialized blasting and/or blasting consultant services. The consultant shall not be an employee of the Contractor, explosives manufacturer, or explosives distributor.

B. PRE-BLAST CONDITION SURVEY

The Contractor shall arrange for a pre-blast survey of any nearby buildings, structures, or utilities that may potentially be at risk from blasting damage. The survey method used shall be acceptable to the Contractor's insurance company. The Contractor shall be responsible for any damage resulting from blasting. The pre-blast survey records shall be made available to the Engineer for review. Occupants of local buildings shall be notified by the Contractor prior to the commencement of blasting.

C. VIBRATION CONTROL AND MONITORING

When blasting near buildings, structures, or utilities which may be subject to damage from blast induced ground vibrations, the ground vibrations shall be controlled by the use of properly designed delay sequences and allowable charge weights per delay. Allowable charge weights per delay shall be based on vibration levels which will not cause damage, and shall be established by carrying out trial blasts and measuring vibration levels. The trial blasts shall be carried out in conformance with blasting test sections, and modified as required to limit ground vibrations to a level which will not cause damage.

Whenever vibration damage to adjacent structures is possible, the Contractor shall monitor each blast with an approved seismograph located, as approved, between the blast area and the closest structure subject to blast damage. The seismograph used shall be capable of recording particle velocity for the three mutually perpendicular components of vibration in the range generally found with controlled blasting.

Peak particle velocity of each component shall not be allowed to exceed the safe limits of the nearest structure subject to vibration damage. The Contractor shall employ a qualified vibration specialist to establish safe vibration limits. The vibration specialist shall also interpret the seismograph records to insure that the seismograph data will be effectively utilized in the control of the blasting operations with respect to the existing structures. The vibration specialist used shall be subject to the Engineer's approval.

Data recorded for each shot shall be furnished to the Engineer prior to the next blast and shall include the following:

1. Identification of instrument used.
2. Name of Qualified observer and interpreter.
3. Distance and direction of recording station from blast area.
4. Type of ground at recording station and material on which the instrument is sitting.
5. Maximum particle velocity in each component.
6. A dated and signed copy of photographic records of seismograph readings.

SALVAGED ITEMS

All salvaged items noted on the plans shall be salvaged for future highway use and hauled to the Department of Transportation's Sturgis Maintenance Yard as directed by the Engineer. Care shall be taken not to damage the structural properties of the items during dismantling and transporting. All broken concrete and materials not salvaged shall be disposed of in accordance with the Specifications. All costs for salvaging and transporting the items shall be incidental to the contract lump sum price for "Incidental Work, Grading". Before preparing his/her bid, the Contractor shall make a visual inspection of the project to verify the extent of the work and material involved.

REMOVAL OF EXISTING CONCRETE PAVEMENT

Existing asphalt concrete and/or existing asphalt concrete patch work that was placed above the existing concrete pavement is included in the quantity for "Remove Concrete Pavement". The Contractor shall dispose of the concrete pavement and asphalt concrete at a site approved by the Engineer.

The existing P.C.C. Pavement is typically 24 feet wide and is reinforced with welded wire fabric. The welded wire fabric weighs not less than 61 pounds per 100 square feet. The longitudinal wires are No. 1 gauge and are spaced 6 inches center to center and the transverse wires are No. 4 gauge and are spaced 12 inches center to center.

The existing contraction joints are spaced at approximately 46.5 feet.

TABLE OF CONCRETE PAVEMENT REMOVAL

Station	to	Station	(SqYd)
10+00		270+07.01 WB	70,796.1
1010+00		1270+39.33 EB	73,884.6
10+30.28		17+13.91 Rest Area Ramp A	1,367.3
24+63.48		28+12.76 Rest Area Ramp B	698.6
20+18.23		24+99.48 Rest Area Ramp C	962.5
7+97.10		10+28.89 Rest Area Ramp B	463.6
			148,172.7

INCIDENTAL WORK, GRADING

Station	L/R	Remarks
18+73 (WB)	R	Take Out 18"-124' RCP & 1 Flared End
10+91 (RampC)	L	Take Out 18" 56' RCP & 2 End Sections
10+97-(RampC)	R	Take Out 18"-69' RCP & 2 End Sections
40+90 (WB)	49'R	Take Out 18"- 56' RCP & 2 Safety Ends
1043+12 (EB)		Take Out 18"-42' RCP
1048+69 (EB)		Take Out 18"- 41' RCP & Plug Pipe
48+69 (WB)		Take Out 18"- 125' RCP & 2- Flared Ends
56+60 (WB)		Take Out 24"-85' RCP & 1 End Section
1056+77(EB)		Take Out 30" to 36" Increaser, and 30"-103' RCP &1-End Section
1057+88(EB)	50'R	Take Out 24"-54' RCP & 2 End Sections
1068+41-74' to 1070+24-12'(EB)	R	Take Out 6"- 180' PVC Sewer Line
70+07-61'to 71+34-150' (WB)	L	Take Out 6"- 155' PVC Sewer Line
7+60 (Ramp A)		Take Out 18"-72' RCP & 2 End Sections
14+73 (Ramp D)	R	Clean out Pipe End
1070+24-12' R (EB) to 70+07-61' L (WB)		Take Out 6"- 185' PVC Sewer Line
0+40 (Ramp B)		Take Out 18"-56' RCP & 2 End Sections
83+69 (WB)		Take Out 24"-71' RCP & End Section
116+67 (WB)		Take Out 18'-72' RCP & End Section
1116+84 (EB)		Take Out 18'-70' RCP & End Section
138+56-53'R to 140+38-53'R (WB)		Take Out 18"-176' RCP & End Section
140+38-53'R to 20'L(WB)		Take Out 18"-64' RCP & End Section
160+65 (WB)		Take Out 24"-72' RCP & End Section
1160+82 (EB)		Take Out 24"-68' RCP & End Section
207+91-16' L to 52'R (WB)		Take Out 18"-66' RCP & End Section
207+91-52'R to 209+75-57'R (WB)		Take Out 18"-178' RCP & End Section
2+68 (Ramp D)		Take Out 18"- 42' RCP & 2 End Sections
219+62 (WB)		Take Out 24"- 80' RCP & 1 End Section
1219+79 (EB)		Take Out 24"- 66' RCP & 1 End Section and 24"- 36" Increaser
1234+85 (EB)		Remove End Sections and Plug Pipe
1238+35 (EB)		Remove End Sections and Plug Pipe
267+12 - 32' to 103'	L	Take Out 18"-28' RC Pipe & 36"-52' RCP & 1 - 36"x 36"x18"x18" RC Cross Pipe & 1 - 30" to 36" RC Pipe Increaser & 2-18" RC Safety Ends & 1 - 36" RC Flared End

Plot Scale - 1:200
Plotted From - trgr13418
File - ...\prj\mead5580\NotesSectionB.dgn

TABLE OF DROP INLET REMOVAL

All costs for removal of the frame and grate assembly shall be incidental to the contract unit price per each for "Remove Drop Inlet".

Station	L/R	Quantity (Each)
1043+12 (EB)	2'L & 6'R	2
1048+68 (EB)	0'R & 4' R	2
56+61 (WB)	56' R	1
83+69 (WB)	R	1
116+67 (WB)	R	1
140+38 (WB)	R	1
160+65 (WB)	R	1
207+92 (WB)	R	1
219+62 (WB)	R	1
	Total:	11

CORRUGATED METAL PIPE

Corrugated metal pipes shall have 2 ⅔-inch X ½-inch corrugations for 42-inch and smaller round pipe and 48-inch and smaller arch pipe unless otherwise stated in the plans. Corrugated metal pipes shall have 3-inch X 1-inch or 5-inch X 1-inch corrugations for 48-inch and larger round pipe and 54-inch and larger arch pipe unless otherwise stated in the plans.

The gauge of the corrugated metal elbows, and ends shall match the thickest gauge of corrugated metal pipe it is connected to.

PIPE FOR APPROACHES, INTERSECTING ROADS, AND DOWNSPOUTS

Class II reinforced concrete pipe, high density polyethylene pipe, corrugated polypropylene pipe, or steel reinforced polyethylene pipe may be substituted for corrugated metal pipe at approaches and intersecting roads at no additional cost to the State.

If corrugated metal pipes are provided, the pipes shall be as specified in the CORRUGATED METAL PIPE note.

High density polyethylene pipe may be substituted for 36 inch and smaller pipe downspouts at no additional cost to the State. All necessary connections, transitions, and anchoring methods shall be in accordance with the manufacturer's recommendations and be approved by the Engineer. Bedding and backfill material and installation procedures shall conform to the manufacturer's design requirements.

If high density polyethylene pipe, corrugated polypropylene pipe, or steel reinforced polyethylene pipe are provided, then the end sections shall be metal, be compatible, and conform to the type of end section as shown in the plans.

REINFORCED CONCRETE PIPE

High sulfate levels are likely to be encountered on this project. The type of cement shall be either a type V or a type II with 20% Class F Modified Fly Ash substituted for cement in accordance with section 605. The Water/Cementitious material ratio shall not exceed 0.45 as defined in section 460.3.A. The Mix shall be as per fabricator's design, however minimum compressive strength shall not be less than 4500 psi at 28 days. The pipe must be marked in an acceptable way to designate meeting the requirements for sulfate resistance.

CONCRETE PIPE CONNECTIONS

Pipe connections to existing pipes, manholes, and drop inlets shall be done by breaking a hole into the existing structure and inserting the pipe. A concrete collar shall then be poured around the pipe in the area of the connection.

When it is not possible to use a normal pipe joint (male-female ends), connections to existing pipe shall be made by placing a 2' wide by 6" thick M6 concrete collar around the outside of the connection. The concrete collar shall be reinforced with 6x6 W2.9 x W2.9 wire mesh.

All costs for constructing the concrete collars including materials and labor shall be incidental to the contract unit price per foot for the corresponding pipe bid item.

TEMPORARY PIPE CONNECTION

Open excavation within 30' of the driving lane will not be allow during nighttime hours. A 4:1 or flatter slope shall be maintained in this area during nighttime and non-work hours.

DROP INLETS

The plan shown quantities of the drop inlet components such as Class M6 Concrete, Reinforcing Steel, Type C Frame and Grate, Type D Frame and Grate, and Precast Drop Inlet Collar will be the basis of payment for these items.

If additions or reductions to the number of drop inlets are ordered by the Engineer, payment for the components required to construct the drop inlets will be made at the contract unit prices for the components of the drop inlets.

TABLE OF DROP INLETS AND QUANTITIES

Station	L / R	Drop Inlet Size	Drop Inlet Type	Class M6 Concrete (CuYd)	Reinf Steel (Lb)	Precast Drop Inlet Collar (Each)	Frame and Grate/Lid Type
142+25.25	L	1.5'x3'	D	1.02	154	1	D
142+25.25	R	1.5'x3'	D	0.87	129	1	D
1142+42.00	L	1.5'x3'	D	0.97	142	1	D
1142+42.00	R	1.5'x3'	D	0.92	142	1	D
206+13.00	L	1.5'x3'	D	1.16	173	1	D
206+13.00	R	1.5'x3'	D	0.90	133	1	D
1206+29.42	L	1.5'x3'	D	0.81	121	1	D
1206+29.42	R	1.5'x3'	D	0.72	116	1	D
237+98.00	L	1.5'x3'	D	0.78	117	1	D
238+01.00	R	1.5'x3'	D	1.00	152	1	D
1238+33.23	L	1.5'x3'	D	1.15	171	1	D
1238+33.23	R	1.5'x3'	D	1.12	167	1	D
			Totals:	11.42	1717	12	

Total Type D Frame and Grate 12

RECONSTRUCT MANHOLES

The Contractor shall reconstruct manholes in accordance with Section 671 of the Standard Specifications at the locations listed in the table below. Before preparing his/her bid, the Contractor shall make a visual inspection of the project to verify the extent of the work and material involved. The existing manhole frame and lids shall be salvaged and reset. The elevation of the lid shall be set at the same elevation of the adjacent new pavement or surrounding ground.

All manhole frames, lids, and rings that are cracked or broken due to carelessness of the Contractor shall be replaced with new manhole frames, lids, and rings that conform with the Specifications at the Contractor's expense. Manholes shall be adjusted to the satisfaction of the Engineer. All costs involved in adjusting the manholes shall be incidental to the contract unit price per each for "Reconstruct Manhole".

The Engineer may direct adjustment of manholes that were not included in these plans. Payment for adjusting manholes that were not included in the plans will be at the contract unit price per each for "Reconstruct Manhole".

TABLE OF RECONSTRUCT MANHOLES

Station	Adjustment
1070+24 – 34'R (EB)	+1.5'
70+07 – 61' L (WB)	+3.0'
9+24 – 33' L Rest Area Ramp A	+ 2.5'

Plot Scale - 1:200
Plotted From - trgr13418
File - ...\prj\mead5580\NotesSection6.dgn

TABLE OF REMOVE AND RESET MANHOLE

Station	Quantity (Each)
1070+24–24'R to 34'R (EB)	1

TABLE FOR ADJUSTMENT OF WATER VALVES

Station	L/R	Type of Adjustment
9+19 Rest Area Ramp A	L	Raise 2.5'
9+27 Rest Area Ramp A	L	Raise 2.5'

PRECAST MEDIAN DRAINS

The Type L and Type M Median Drains shall be precast.

TABLE OF PRECAST TYPE L MEDIAN DRAINS

(Quantities Shown for Information Only)

Station	L/R	Class M6 Concrete (CuYd)	Reinforcing Steel (Lb)	Type L Frame and Grate Assembly (Each)
41+00 (WB)	R	0.84	139	1
1059+16.41(WB)	R	0.90	146	1
1093+00 (EB)	L	0.87	140	1
127+00 (WB)	R	0.89	141	1
0+00 Rest Area B	R	0.69	130	1
	Totals:	4.19	696	5

TABLE OF PRECAST TYPE M MEDIAN DRAINS

(Quantities Shown for Information Only)

Station	L/R	Class M6 Concrete (CuYd)	Reinforcing Steel (Lb)	Type M Frame and Grate Assembly (Each)
20+05 (WB)	R	1.29	162	1
49+50 (WB)	R	1.18	149	1
59+13 (WB)	R	1.32	165	1
112+00 (WB)	R	1.21	153	1
160+00 (WB)	R	1.24	156	1
174+11 (WB)	R	1.25	157	1
184+00 (WB)	R	1.26	157	1
192+00 (WB)	R	1.25	157	1
219+75 (WB)	R	1.32	165	1
251+50 (WB)	R	1.17	148	1
	Totals:	12.49	1569	10

TABLE OF PVC COATED BANK AND CHANNEL PROTECTION GABIONS

Station	L/R	Quantity (CuYd)	Type B Drainage Fabric (SqYd)
1176+86 EB	R	4.5	15
1237+26 EB	R	4.5	15
198+13 (XR236)	R	6.0	19
	Total:	15.0	49

TABLE OF RIPRAP AND DRAINAGE FABRIC

Station	L/R	Class B Riprap (Ton)	Type B Drainage Fabric (SqYd)
112+00 (WB)	L	124.6	160
1174+00 (EB)	R	112.0	146
	Totals:	236.6	306

TABLE OF TYPE D11.5 CONCRETE CURB AND GUTTER

Station	to	Station	L/R	Quantity (Ft)
237+89.21		238+02 (WB)	L	12.8
			Total:	12.8

TEMPORARY FENCE

The Contractor shall verify the location of the temporary fence with the landowner prior to installation of the fence.

BRACE PANELS FOR ROW FENCE

The E-Z Brace or an approved equal may be utilized as an alternate horizontal brace in the brace panels if approved by the Engineer. The E-Z Brace shall be attached to each wood post utilizing two 5/16" x 3" lag screws. Holes of appropriate diameter, based on wood post condition, shall be drilled before placement of lag screws. The following are contacts regarding the E-Z Brace:

Roger Papka
E-Z Brace
1160 Karen St.
Watertown, SD 57201
605-881-6142

Dennis Mack
E-Z Brace
108 18th St. NE
Watertown, SD 57201
605-881-4990

PERMANENT CONCRETE BARRIER END PROTECTION

The Contractor shall provide one of the products from the list below or an approved equal that meets the test level 3 crash testing requirements of MASH. Only one type of crash cushion shall be used on a project; however, if conditions warrant a need for using more than one type of crash cushion on a project, then it shall be as approved by the Engineer.

Product	Manufacturer
SCI100GM	Work Area Protection Corp. a division of Stabler Companies Inc. St. Charles, IL Phone: 1-630-377-9100 www.workareaprotection.com
QUADGARD M10 Narrow System (2' Width)	Energy Absorption Systems, Inc. Chicago, IL Phone: 1-312-467-6750 http://www.energyabsorption.com

The anchoring pad for the crash cushion shall at a minimum be an 8 inch thick PCC pavement that meets the requirements of Class M6 concrete. The pad shall be in accordance with the Manufacturer's recommendations if the pad needs to have thicker pavement and/or a footing.

Documentation on the crash cushion, which includes the drawing details of the crash cushion, details for the transition to the concrete barrier, and details for the concrete anchoring pad, shall be provided to the Project Engineer at the pre-construction meeting.

The crash cushion shall be attached to the concrete barrier with a transition that meets test level 3 requirements of NCHRP 350 or MASH at locations shown below in the Table of Permanent Concrete Barrier End Protection. For bidirectional traffic, the transition shall be placed on both sides of the crash cushion and barrier.

The Contractor shall certify that the crash cushion was installed according to the manufacturer's installation instructions.

All costs for furnishing and installing the crash cushion including the anchoring pad, anchors for connection to the pad, transitions to the concrete barrier(if required), materials, labor, equipment, and incidental items shall be paid for at the contract unit price per each for "Concrete Barrier End Protection".

The Contractor shall supply two extra sets of modules or replacement kits required for resetting the crash cushion and shall be delivered to the DOT Region Shop in Rapid City. One set of modules or one replacement kit is considered as the proper amount of materials to fix the cushion after one vehicle hit. All costs for furnishing and delivering the extra sets of modules or replacement kits shall be incidental to the contract unit price per each for "Concrete Barrier End Protection Module Set or Repair Kit".

TABLE OF PERMANENT CONCRETE BARRIER END PROTECTION

Station	Location	Unidirectional/ Bidirectional	Quantity (Each)
1259+44	R	Bidirectional	1
		Total	1

Plot Scale - 1:200
Plotted From - tpp17192
File - ...\pr\meade5580\Notes\SectionB.dgn

TABLE OF GUARDRAIL

Location	Remove 3 Cable Guardrail (Ft)	Remove 3 Cable Guardrail Anchor Assembly (Each)	Remove 3 Cable Guardrail Slip Base Anchor Assembly (Each)	Remove Beam Guardrail (Ft)	Remove W Beam Guardrail For Reset (Ft)	Remove Concrete Median Barrier (Ft)	Salvage 3 Cable Guardrail (Ft)	Salvage W Beam Guardrail Tangent End Terminal (Each)	Salvage W Beam Guardrail Flared End Terminal (Each)	Salvage Beam Guardrail (Ft)	3 Cable Guardrail (Ft)	3 Cable Guardrail Slip Base Anchor Assembly (Each)	Reset W Beam Rail (Ft)	Beam Guardrail Post and Block (Each)	Straight Double Class A Thrie Beam Guardrail with Wood Posts (Ft)	Straight Class A W Beam Guardrail with Wood Posts (Ft)	W Beam to Thrie Beam Guardrail Transition (Each)	W Beam Guardrail Flared End Terminal (Each)	W Beam Guardrail Tangent End Terminal (Each)	W Beam Guardrail Breakaway Cable Terminal (Each)
8+72 to 12+34 WB	362	2																		
Structure No. 47-069-510																				
Begin Bridge Lt.								1		81					12.5	37.5	1		1	
Begin Bridge Rt.								1		56					12.5	100	1		1	
End Bridge Lt.								1		81					12.5	50	1		1	
End Bridge Rt.								1		81					12.5	37.5	1		1	
1030+92 to 1054+52 R(EB)						1875				736										
Structure No. 47-080-534																				
Begin Bridge Lt.								*1		144					12.5	125	1		1	
Begin Bridge Rt.				25					*1	274					12.5	112.5	1	1		
End Bridge Lt.										205	311	1			12.5	25	1			1
End Bridge Rt.				25						141	375	1			12.5	25	1			1
Structure No. 47-080-535																				
Begin Bridge Lt.				25						141	375	1			12.5	25	1			1
Begin Bridge Rt.										205					12.5	112.5	1	1		
End Bridge Lt.				25	112.5			*1		281			112.5	18		137.5			1	
End Bridge Rt.								*1		144					12.5	125	1		1	
1172+00 to 1174+78 R(EB)										275										
Structure No. 47-085-545																				
Begin Bridge Lt.								*1		144					12.5	125	1		1	
Begin Bridge Rt.				25					*1	244					12.5	112.5	1	1		
End Bridge Lt.										206					12.5	250	1	1		
End Bridge Rt.				25						141	375	1			12.5	25	1			1
Structure No. 47-085-546																				
Begin Bridge Lt.				25						141	375	1			12.5	25	1			1
Begin Bridge Rt.										177	311	1			12.5	25	1			1
End Bridge Lt.				25	100			*1		256			100	16		87.5			1	
End Bridge Rt.								*1		144					12.5	125	1		1	
Structure No. 47-088-550																				
Begin Bridge Lt.	441	1									279	1			12.5	25	1			1
Begin Bridge Rt.	281	1	1				311			81	343	1			12.5	25	1			1
End Bridge Lt.	645	1								151	503	1			12.5	150	1			1
End Bridge Rt.				25						188	295	1			12.5	62.5	1			1
Structure No. 47-088-551																				
Begin Bridge Lt.				25						170	327	1			12.5	37.5	1			1
Begin Bridge Rt.	330	1								150	327	1			12.5	25	1			1
End Bridge Lt.		1	1				250			81		1								
End Bridge Rt.		1	1				411			81										
XR236																				
194+37 to 197+52-L															150	50	4	1	1	
194+62 to 197+77-R															150	50	4	1	1	
1259+40 to 1262+52 (EB)										562.5										
Totals:	2,059	8	3	250	212.5	1,875	972	10	2	5,762.5	4,196	13	212.5	34	600	2,112.5	32	6	12	12

* Contractor shall salvage the wood posts and blocks for these items and shall become the property of the State. The wood posts and blocks shall be neatly stacked with the other items of the end terminals.

Plot Scale - 1:200
Plotted From - tmp17192
File - ...\brjimead5580\NotesSectionB.dgn

CONCRETE BARRIER AND BEAM GUARDRAIL 1259+40 to 1262+52 (EB)

Salvage of the beam guardrail is included in the table of guardrail. Salvage of the CAT End Section is not included in the table of guardrail. All items of the CAT End Section shall become the property of the State and shall be removed, hauled, and neatly stacked at the SDDOT Sturgis Maintenance Yard as approved by the Engineer.

Payment for removing, hauling, and stacking the CAT End Section items shall be incidental to the contract unit price per foot for “Salvage Crash Cushion”.

Extension of the Concrete Barrier is included in Section E.

TABLE OF 1 CABLE GUARDRAIL

Location Station	Remove 1 Cable Guardrail (Ft)	1 Cable Guardrail (Ft)
1043+00 to 1056+92 - R		1,192
1079+00 to 1103+46 - R	2,446	2,446
1106+46 to 1117+60 - R	1,114	0
1117+60 to 1139+19 - R	2,130	0
1144+20 to 1172+00 - R	2,780	0
1176+65 to 1204+53 - R	2,788	0
1202+33 to 1206+51 - R	0	417
1207+82 to 1218+37 - R	0	1,055
1209+80 to 1230+00 - R	2,020	0
1245+05 to 1259+40 - R	0	0
Totals:	13,278	5,110

SALVAGE BEAM GUARDRAIL

Steel beam rail, end terminals, and hardware items shall become the property of the State and shall be removed, hauled, and neatly stacked at the SDDOT Sturgis Maintenance Yard as approved by the Engineer. Posts and blocks shall become the property of the Contractor (except where noted in the Table of Guardrail) and shall be removed from the project limits.

Payment for removing, hauling, and stacking the guardrail items shall be incidental to the contract unit price per foot for “Salvage Beam Guardrail”.

SALVAGE 3 CABLE GUARDRAIL

The cables, posts, and hardware items shall become the property of the State and shall be removed, hauled, and neatly stacked at SDDOT Sturgis Maintenance Yard as approved by the Engineer. Anchor assemblies shall become the property of the Contractor and shall be removed from the project limits.

Payment for removing, hauling, and stacking the salvaged guardrail items except for the anchor assemblies shall be incidental to the contract unit price per foot for “Salvage 3 Cable Guardrail”.

TABLE OF SUPERELEVATION

I90 WB

Station	to	Station		
0+93.31		0+93.31	-	Normal Crown Section
0+93.31		3+67.81	-	Superelevation Transition
3+67.81		10+00.00	-	5662’ Radius Curve Left 0.0379’/’ Superelevation Rate Point of Rotation at Centerline
10+00.00		10+70.00	-	Superelevation Transition
10+70.00		18+31.16	-	4140’ Radius Curve Left 0.0480’/’ Superelevation Rate Point of Rotation at Centerline
18+31.16		21+53.66	-	Superelevation Transition
21+53.66		224+42.05	-	Normal Crown Section
224+42.05		227+82.55	-	Superelevation Transition
227+82.55		231+66.10	-	3690’ Radius Curve Left 0.0520’/’ Superelevation Rate Point of Rotation at 12’ Right of Centerline
231+66.10		235+06.60	-	Superelevation Transition
235+06.60		265+77.67	-	Normal Crown Section

I90 EB

Station	to	Station		
1008+21.88		1009+99.13	-	Normal Crown Section
1009+99.13		1010+50	-	Superelevation Transition
1010+50		1011+00.00	-	5750’ Radius Curve Left 0.0294’/’ Superelevation Rate Point of Rotation at Centerline
1011+00.00		1011+50.00	-	Superelevation Transition
1011+50.00		1022+21.81	-	5930’ Radius Curve Left 0.0360’/’ Superelevation Rate Point of Rotation at Centerline
1022+21.81		1025+75.81	-	Superelevation Transition
1025+75.81		1224+66.38	-	Normal Crown Section
1224+66.38		1228+06.88	-	Superelevation Transition
1228+06.88		1231+39.50	-	3690’ Radius Curve Left 0.0520’/’ Superelevation Rate Point of Rotation at 12’ Left of Centerline
1231+39.50		1234+80.00	-	Superelevation Transition
1234+80.00		1262+12.95	-	Normal Crown Section

Exit 40 Ramp B

Station	to	Station		
0+00.00		6+74.65	-	Normal Crown Section
6+74.65		7+46.65	-	Superelevation Transition
7+46.65		14+57.11	-	1510’ Radius Curve Left 0.0500’/’ Superelevation Rate Point of Rotation at Centerline
14+57.11		15+29.11	-	Superelevation Transition
15+29.11		20+68.74	-	Normal Crown Section

Exit 40 Ramp C

Station	to	Station		
0+00.00		8+65.00	-	Normal Crown Section
6+65.00		9+13.00	-	Superelevation Transition
9+13.00		10+95.00	-	2300’ Radius Curve Right 0.0400’/’ Superelevation Rate Point of Rotation at Centerline
10+95.00		12+39.00	-	Superelevation Transition
12+39.00		15+50.00	-	Normal Crown Section
15+50.00		16+25.00	-	Superelevation Transition
16+25.00		19+81.37	-	Match I90 EB Curve Left 0.0360’/’ Superelevation Rate Point of Rotation at Centerline

Rest Area Ramp A

Station	to	Station		
0+00.00		0+00.00	-	Normal Crown Section
0+00.00		0+48.00	-	Superelevation Transition
0+48.00		4+50.00	-	2300’ Radius Curve Left 0.0400’/’ Superelevation Rate Point of Rotation at Centerline
4+50.00		6+10.00	-	Superelevation Transition
6+10.00		9+58.71	-	1910’ Radius Curve Right 0.0240’/’ Superelevation Rate Point of Rotation at Centerline
9+58.71		9+72.82	-	Superelevation Transition
9+72.82		10+25.00	-	Reverse Crown Section

Rest Area Ramp B

Station	to	Station		
0+00.00		0+00.00	-	Reverse Crown Section
0+00.00		2+50.45	-	Superelevation Transition
2+50.45		4+95.07	-	1510’ Radius Curve Left 0.0500’/’ Superelevation Rate Point of Rotation at Centerline
4+95.07		6+95.72	-	Superelevation Transition
6+95.72		6+75.11	-	Normal Crown Section

Rest Area Ramp C

Station	to	Station		
0+00.00		1+91.71	-	Reverse Crown Section
1+91.71		3+92.44	-	Superelevation Transition
3+92.44		8+36.00	-	2300’ Radius Curve Right 0.0400’/’ Superelevation Rate Point of Rotation at Centerline
8+36.00		8+84.00	-	Superelevation Transition
8+84.00		8+84.00		Normal Crown Section

Plot Scale - 1:200
Plotted From - tpp17192
File - ...\pn\meade5580\NotesSectionB.dgn

TABLE OF SUPERELEVATION (continued)

Rest Area Ramp D

Station	to	Station		
5+91.90		5+91.90	-	Normal Crown Section
5+91.90		6+63.90	-	Superelevation Transition
6+63.90		9+11.68	-	1510' Radius Curve Right 0.0500'/' Superelevation Rate Point of Rotation at Centerline
9+11.68		10+33.27	-	Superelevation Transition
10+33.27		10+50.00		Reverse Crown Section

Exit 44 Ramp A

Station	to	Station		
0+00.00		1+26.96	-	Normal Crown Section
1+26.96		1+74.96	-	Superelevation Transition
1+74.96		5+79.97	-	2300' Radius Curve Left 0.0400'/' Superelevation Rate Point of Rotation at Centerline
5+79.97		6+27.97	-	Superelevation Transition
6+27.97		16+30.00	-	Normal Crown Section

Exit 44 Ramp B

Station	to	Station		
0+00.00		8+88.17	-	Normal Crown Section
8+88.17		9+36.17	-	Superelevation Transition
9+36.17		10+59.06	-	2319' Radius Curve Left 0.0400'/' Superelevation Rate Point of Rotation at Centerline
10+59.06		11+07.06	-	Superelevation Transition
11+07.06		14+69.89	-	Normal Crown Section

Exit 44 Ramp C

Station	to	Station		
0+00.00		5+45.48	-	2240' Radius Curve Left 0.0200'/' Superelevation Rate Point of Rotation at Centerline
5+45.48		6+17.48	-	Superelevation Transition
6+17.48		9+54.38	-	Normal Crown Section
9+54.38		10+02.38	-	Superelevation Transition
10+02.38		14+24.21	-	2300' Radius Curve Right 0.0400'/' Superelevation Rate Point of Rotation at Centerline
14+24.21		14+72.21	-	Superelevation Transition
14+72.21		14+72.21	-	Normal Crown Section

Exit 44 Ramp D

Station	to	Station		
0+40.00		6+06.85	-	Normal Crown Section
6+06.85		6+54.85	-	Superelevation Transition
6+54.85		8+94.50	-	2319' Radius Curve Right 0.0400'/' Superelevation Rate Point of Rotation at Centerline
8+94.50		9+42.50	-	Superelevation Transition
9+42.50		13+42.00	-	Normal Crown Section
13+42.00		14+40.00	-	Superelevation Transition
14+40.00		16+88.41	-	1080' Radius Curve Left 0.0340'/' Superelevation Rate Point of Rotation at Centerline
16+88.41		17+53.81	-	Superelevation Transition
17+53.81		17+75.00	-	Reverse Crown Section

TABLE OF CONSTRUCTION STAKING

(See Special Provision for Contractor Staking)

Roadway and Description	Begin Station	End Station	Number of Lanes	Length (Ft)	Grade Staking: Length (Mile)	Grade Staking: Lane Factor	Grade Staking: *Sets of Stakes	Grade Staking: **Grade Staking Quantity (Mile)	Miscellaneous Staking Quantity (Mile)	Slope Staking Quantity (Mile)	Structure Staking Quantity (Each)
Exit 40 Ramp B (AC Pavement)	8+00	13+39	1	539	0.102	1	1	0.102	0.102	0.102	
Exit 40 Ramp B (PCCP)	13+39	20+68.74	1	729.74	0.138	1	2	0.276	0.138	0.138	
I90 WB 2 Lanes (PCCP)	10+00	49+86	2	3,986	0.741	1	2	1.482	0.741	0.741	
I90 WB (Transition from 2 Lanes to 3 Lanes PCCP)	49+86	54+86	3	500	0.095	1.5	2	0.285	0.095	0.095	
I90 WB 3 Lanes (PCCP)	54+86	62+16.47	3	730.47	0.138	1.5	2	0.414	0.138	0.138	
Rest Area Ramp A	0+00	10+25	1	1025	0.194	1	2	0.388	0.194	0.194	
I90 WB 2 Lanes (PCCP)	62+16.47	86+85	2	2,468.53	0.468	1	2	0.936	0.468	0.468	
Rest Area Ramp B	0+00	6+75.11	1	675.11	0.128	1	2	0.256	0.128	0.128	
I90 WB (3 Lanes PCCP)	86+85	90+40	3	355	0.067	1.5	2	0.202	0.067	0.067	
I90 WB (Transition from 3 Lanes to 2 Lanes PCCP)	90+40	92+40	3	200	0.038	1.5	2	0.114	0.038	0.038	
I90 WB 2 Lane (PCCP)	90+40	140+53.80	2	5,013.8	0.950	1	2	1.900	0.950	0.950	
I90 WB (Bridge)	140+53.80	142+13.30									1
I90 WB 2 Lane (PCCP)	142+13.30	206+24.93	2	6,411.63	1.214	1	2	2.428	1.214	1.214	
I90 WB (Bridge)	206+24.93	207+75.43									1
I90 WB 2 Lane (PCCP)	207+75.43	209+65	2	189.57	0.036	1	2	0.072	0.036	0.036	
I90 WB (Transition from 2 Lanes to 3 Lanes PCCP)	209+65	214+65	3	500	0.095	1.5	2	0.285	0.095	0.095	
I90 WB 3 Lanes (PCCP)	214+65	220+80	3	615	0.117	1.5	2	0.351	0.117	0.117	
Exit 44 Ramp A (PCCP)	0+00	4+44.02	1	444.02	0.084	1	2	0.168	0.084	0.084	
Exit 44 Ramp A (AC Pavement)	4+44.02	16+29.05	1	1,185.03	0.224	1	1	0.224	0.224	0.224	
I90 WB 2 Lane (PCCP)	220+80	235+52.90	2	1,472.9	0.279	1	2	0.558	0.279	0.279	
I90 WB (Bridge)	235+55.65	237+53.63									1
I90 WB 2 Lane (PCCP)	237+56.39	252+10.35	2	1,453.98	0.275	1	2	0.550	0.275	0.275	
Exit 44 Ramp B (AC Pavement)	0+26.56	9+40.89	1	914.33	0.173	1	1	0.173	0.173	0.173	
Exit 44 Ramp B (PCCP)	9+40.89	14+69.89	1	529	0.100	1	2	0.200	0.100	0.100	
I90 WB (Transition from 3 Lanes to 2 Lanes PCCP)	252+10.35	254+10.35	3	200	0.038	1.5	2	0.114	0.038	0.038	
I90 WB 2 Lane (PCCP)	254+10.35	265+77.67	2	1,167.32	0.221	1	2	0.442	0.221	0.221	
I90 WB 2 Lane (PCCP)	265+77.67	270+07.01	2	429.34	0.0813	1	2	0.162			

Plot Scale - 1:200
Plotted From - tmpr13418
File - ...\prj\mead5580\NotesSectionB.dgn

TABLE OF CONSTRUCTION STAKING (continued)

					Grade Staking						
Roadway and Description	Begin Station	End Station	Number of Lanes	Length (Ft)	Length (Mile)	Lane Factor	*Sets of Stakes	**Grade Staking Quantity (Mile)	Miscellaneous Staking Quantity (Mile)	Slope Staking Quantity (Mile)	Structure Staking Quantity (Each)
I90 WB (AC Overlay)	270+07.01	271+07.01	2	100	0.019	1	1		0.019		
I90 WB (RCBC Extension)	10+02.49										1
I90 Exit 40 Ramp B (RCBC Extension)	7+20.03										1
I90 WB (RCBC Extension)	47+55.18										1
I90 WB (RCBC Extension)	112+14.54										1
I90 WB (RCBC Extension)	174+35.43										1
I90 WB (RCBC Extension)	182+17.45										1
I90 WB (RCBC Extension)	257+38.93										1
Exit 40 Ramp C (AC Pavement)	0+15	16+60.35	1	1,645.35	0.312	1	1	0.312	0.312	0.312	
Exit 40 Ramp C (PCCP)	16+60.35	19+81.37	1	321.02	0.061	1	2	0.122	0.061	0.061	
I90 EB 2 Lane (PCCP)	1010+00	1021+38.77	2	2138.77	0.405	1	2	0.810	0.405	0.405	
I90 EB 3 Lane (PCCP)	1021+38.77	1025+70	3	431.23	0.082	1.5	2	0.246	0.082	0.082	
I90 EB (Transition from 3 Lanes to 2 Lanes PCCP)	1025+70	1030+70	3	500	0.095	1.5	2	0.285	0.095	0.095	
I90 EB 2 Lane (PCCP)	1030+70	1049+14.99	2	1844.99	0.349	1	2	0.788	0.349	0.349	
Rest Area Ramp D (PCCP)	5+91.90	10+50	1	458.10	0.087	1	2	0.174	0.087	0.087	
I90 EB (Transition from 2 Lanes to 3 Lanes PCCP)	1049+14.99	1051+14.99	3	200	0.038	1.5	2	0.114	0.038	0.038	
I90 EB 3 Lane (PCCP)	1051+14.99	1054+66.59	3	351.60	0.067	1.5	2	0.201	0.067	0.067	
I90 EB 2 Lane (PCCP)	1054+66.59	1077+85.19	2	2,318.60	0.439	1	2	0.878	0.439	0.439	
Rest Area Ramp C	0+00	8+84	1	884	0.167	1	2	0.335	0.167	0.167	
I90 EB 3 Lane (PCCP)	1077+85.19	1085+26.35	3	741.16	0.140	1.5	2	0.420	0.140	0.140	
I90 EB (Transition from 3 Lanes to 2 Lanes PCCP)	1085+26.35	1090+26.35	3	500	0.095	1.5	2	0.285	0.095	0.095	
I90 EB 2 Lane (PCCP)	1090+26.35	1140+70.23	2	5,043.88	0.955	1	2	1.910	0.955	0.955	
I90 EB (Bridge)	1140+70.23	1142+29.73									1
I90 EB 2 Lane (PCCP)	1142+29.73	1206+41.33	2	6,411.6	1.214	1	2	2.428	1.214	1.214	
I90 EB (Bridge)	1206+41.33	1207+91.83						0			1
I90 EB 2 Lane (PCCP)	1207+91.83	1235+11.73	2	2,719.9	0.515	1	2	1.030	0.515	0.515	
I90 EB (Bridge)	1235+14.49	1237+12.47									1
Exit 44 Ramp D	0+40.00	7+69.34	1	729.34	0.138	1	2	0.276	0.138	0.138	
Exit 44 Ramp D	7+69.34	17+69.43	1	1,000.9	0.189	1	1	0.189	0.189	0.189	
I90 EB 2 Lane (PCCP)	1237+15.22	1249+25	2	1,209.78	0.229	1	2	0.458	0.229	0.229	
I90 EB 3 Lane (PCCP)	1249+25	1256+12.30	3	687.3	0.130	1.5	2	0.390	0.130	0.130	
I90 EB (Transition from 3 Lanes to 2 Lanes PCCP)	1256+12.30	1261+12.30	3	500	0.095	1.5	2	0.285	0.095	0.095	
I90 EB 2 Lane (PCCP)	1261+12.30	1262+12.95	2	100.65	0.019	1	2	0.038	0.019	0.019	
I90 EB 2 Lane (PCCP)	1262+12.95	1270+39.33	2	826.38	0.157	1	2	0.314			
I90 EB (AC Overlay)	1270+39.33	1271+39.33	2	100	0.019	1	2		0.019		
XR3	0+02.45	4+88.03	2	488.03	485.58	1	1		0.092		
XR3	7+14	11+19.50	2	405.50	0.077	1	1		0.077		
XR236	188+00	206+00	2	1,800	0.341	1	1	0.341	0.341	0.341	
XR1118 Cul-de-sac	0+00	3+37	1	337	0.064	1	1	0.064	0.064	0.064	
XR1177 Cul-de-sac	0+12	2+17	2	205	0.039	1	1	0.039	0.039	0.039	
XR275 Cul-de-sac	0+20.28	1+55.35	1	135.07	0.026	1	1	0.026	0.026	0.026	
XR300 Cul-de-sac	0+00	3+26.33	1	326.33	0.062	1	1	0.062	0.062	0.062	
I90 EB (RCBC Extension)	1174+51.90										1
							Totals:	24.902	12.475	12.268	14

* 1 = Blue Top Stakes Only (Asphalt Concrete Pavement)
2 = Blue Top and Paving Hub Stakes (PCC Pavement)

** Grade Staking Quantity = (Length) x (Lane Factor) x (Sets of Stakes)

Plot Scale - 1:200
Plotted From - tnpr13418
File - ...\prj\meade5580\NotesSectionB.dgn

PIPE QUANTITIES

STATE OF SOUTH DAKOTA	PROJECT	SHEET	TOTAL SHEETS
	IM 0901(38)40	B15	B114

Plotting Date: 08/30/2016 Revised 8-30-2016 (BT)

	Reinforced Concrete																									CMP								PVC	
	Circular				Safety Ends		Sloped Ends				Flared Ends		Increaser			RCP to CMP Outlet Transition			Tee	RC Arch Pipe		Arch Flared Ends		Reset Pipe End Section		Circular		Safety Ends		Flared Ends		Elbows		Circular	
Station Offset (L/R)	18" Cl. 2 Ft	24" Cl. 2 Ft	30" Cl. 2 Ft	36" Cl. 2 Ft	18" Each	24" Each	24" Each	30" Each	36" Each	36" with Bars Each	36" Each		24" to 30" Each	24" to 36" Each	30" to 36" Each		18" Each		36" x 24" Each	36" Cl. 2 Ft		36" Each			36" Each	12" 16 Ga Ft	18" 16 Ga Ft	18" Each		12" Each	18" Each	18" 10° Each	18" 15° Each		6" Sewer Pipe Ft
11+00 (Exit 40 Ramp C)		68				2																													
18+74 (WB)	124				1																														
19+90 to 20+05 - 49' R (WB)		12																																	
41+00 (WB)		102				1																													
49+50 (WB)		132				1																													
56+61 (WB)				120					1						1																				
1056+77 (EB)				112						1																									
59+00 to 59+13 - 56' R (WB)		10																																	
59+00-88'L to 60'R (WB)			132					1											1																
1059+16.41-52' L to 41' R (EB)		86											1																						
10+39 (RA Ramp D)		52					1																												
0+00 (Rest Area Ramp B)	50				1																														
2+50 (Rest Area Ramp C)		60				2																													
8+50 (Rest Area Ramp A)		94					2																												
1068+41-74'R to 1070+24-34'R (EB)																																			188
1070+24-34'R (EB) to 70+07-61'L (WB)																																			207
70+07-61'L (WB) to 9+24-33'L (RA Ramp A)																																			155
1093+00 EB		100				1																													
112+00 to112+12 -56' R (WB)		10																																	
127+00 WB		102				1																													
142+25.25 -21.62' L to 54.4'L (WB)	26				1																														
1142+42-21.62'R to 52'R (EB)	24				1																														
160+00 WB		108				1																													
174+11 to 174+28-56'R (WB)		16																																	
0+88 (XR1177)																											38	2							
1176+44-225' R to 1176+86-108' R (EB)																											116	1			1	2			
184+00 WB		114				1																													
189+64 WB				38																					1										
1189+81 EB				34																					1										
192+00 WB		116				1																													
206+13-21.62'L to 68'L (WB)	42				1																														
1206+29.42-21.62'R to 41'R (EB)	12				1																														
217+40-56' R (WB)	42				2																														
219+62-72' L to 60' R (WB)				116							1			1					1																
219+62 to 219+75-56'R (WB)		10																																	
1219+79-52' L to 62' R (EB)				106							1																								
237+95-21.62'L to 53'R (WB)	68				1																														
Sub Totals:	388	1192	132	526	9	11	3	1	1	1	2		1	1	1				2	0		0			2	0	154	3		0	1	2			550

Plot Scale - 1:200

Plotted From - trpr17192

File - ...\rd\prj\mead5530\TablePipe.dgn

PIPE QUANTITIES

STATE OF SOUTH DAKOTA	PROJECT	SHEET	TOTAL SHEETS
	IM 0901(38)40	B16	B114

Plotting Date: 08/30/2016 Revised 8-30-2016 (BT)

	Reinforced Concrete																									CMP								PVC	
	Circular				Safety Ends		Sloped Ends				Flared Ends		Increaser			RCP to CMP Outlet Transition			Tee	RC Arch Pipe		Arch Flared Ends		Reset Pipe End Section		Circular		Safety Ends		Flared Ends		Elbows		Circular	
Station Offset (L/R)	18" Cl. 2 Ft	24" Cl. 2 Ft	30" Cl. 2 Ft	36" Cl. 2 Ft	18" Each	24" Each	24" Each	30" Each	36" Each	36" with Bars Each	36" Each		24" to 30" Each	24" to 36" Each	30" to 36" Each		18" Each		36" x 24" Each	36" Cl. 2 Ft		36" Each			36" Each	12" 16 Ga Ft	18" 16 Ga Ft	18" Each		12" Each	18" Each	18" 10° Each	18" 15° Each		6" Sewer Pipe Ft
1237+26-21.62'R to 100'R(EB)	14																1										58				1		2		
17+00 (Exit 44 Ramp D)			58					2																											
1+00 (Exit 44 Ramp C)		58					2																												
0+64 (Exit 44 Ramp B)																				74		2													
197+85 (XR236)																				90		2													
198+85(XR236)		90					2																												
251+50 (WB)		164				1																													
254+55 WB - L				56																					1										
254+76 WB - L				56																					1										
267+12 WB - L			4					1																											
1+15 (XR300 Cul-de-sac)																											34				2				
0+50 (XR1118)																										36				2					
Sub Totals:	14	312	62	112	0	1	4	3	0	0	0		0	0	0		1		0	164		4			2	36	92	0		2	3	0	2		0
Totals:	402	1504	194	638	9	12	7	4	1	1	2		1	1	1		1		2	164		4			4	36	246	3		2	4	2	2		550

Plot Scale - 1:200

Plotted From - trpr17192

File - ...\rd\pr\imead5580\TablePipe.dgn

FENCE QUANTITIES

STATE OF SOUTH DAKOTA	PROJECT	SHEET	TOTAL SHEETS
	IM 0901(38)40	B17	B114

Plotting Date: 08/17/2016 Revised 8/16/16 RTG

Station to Station		Side (L/R)	Right-of-Way Fence Type 2 (Ft)			Type 6S (Ft)		Temporary Fence Type 1 (Ft)	Type 1A (Ft)		Post Panels 2 Post Panel (Each)	3 Post Panel (Each)		Gates 16' Barbed Wire Gate (Each)	24' Barbed Wire Gate (Each)				Remove Fence (Ft)
1068+72 EB	1079+00 EB	R	1028								2	1							
1103+47 EB	1115+06 EB	R	1159									2							
1115+06 EB	1117+55 EB	R				259						1							
1117+55 EB	1140+11 EB	R	2256								1	1							
1143+61 EB	1174+90 EB	R	3182					2750			10	2		1					
1176+00 EB	1191+23 EB	R	1698								6	4			1				
1191+23 EB	1202+72 EB	R	1149								1	2							
1218+37 EB	1233+05 EB	R	1526								2	4							
1232+94 EB	1245+05 EB	R	1373								3	2							1428
11+00 WB	60+91 WB	L	5000								7	6							
206+38 WB	206+56 WB	L	113								2								
206+60 WB	207+43 WB	L	121								2								
257+06 WB	275+43 WB	L																	180
301+62 WB	304+80 WB	L	470								6	1							
Borrow Pit 1									3300										
Borrow Pit 2									4600										
		TOTALS:	19075			259		2750	7900		42	26		1	1				1608

Post Type and Sequence:
Right-of-way fence shall be constructed using alternate wood and steel posts except as noted.

Plot Scale - 1:200

Plotted From - tnpr17192

File - ...\rd\prj\mead5580\TableFence.dgn

PIT INFORMATION SHEET
BORROW

STATE OF SOUTH DAKOTA	PROJECT	SHEET	TOTAL SHEETS
		B18	B114

Plotting Date: 08/09/2016

PIT NO. Option Borrow Pit No. 1

PROJECT NO. IM 0901(138)40, PCN 5580 COUNTY Meade

LOCATION Part of NE1/4 SEC. 29 TOWNSHIP 4 N RANGE 6 E

PIT OWNER Clair Hagen & Darlene Hagen ADDRESS Piedmont, SD

AVERAGE DEPTH OF MATERIAL 5.0 Ft. AVERAGE DEPTH OF TOPSOIL 4 Inches

MATERIAL AVAILABLE 70,000 CU. YARDS. ESTIMATED CU. YARDS OF TOPSOIL 6,000

2,500 Ft. DEADHAUL TO STATION 108+50 - Lt (WBL)

TYPICAL SECTION

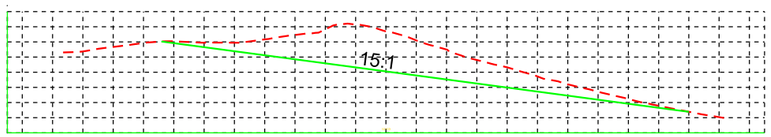

Section A - A

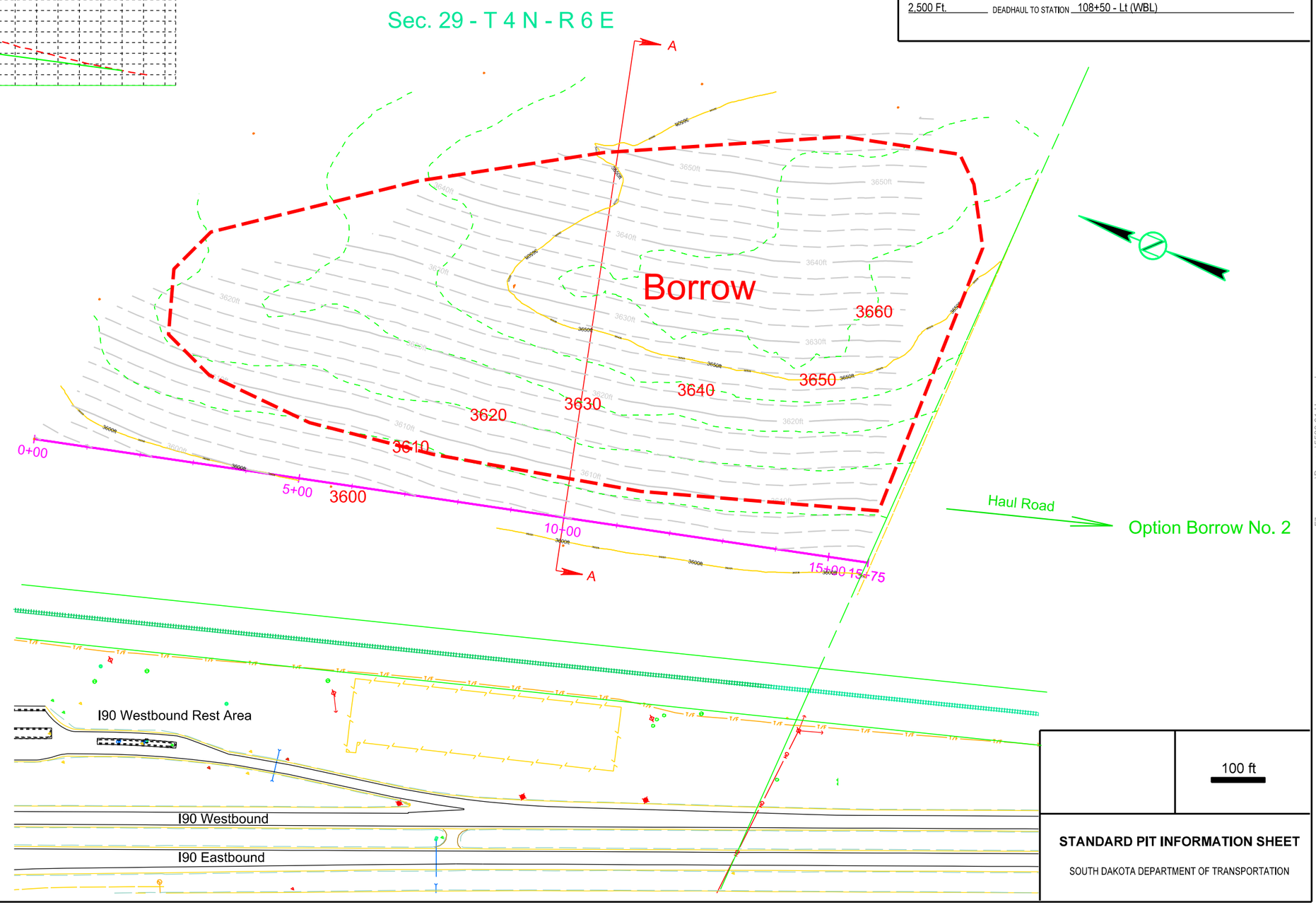

LAB ANALYSIS
(See Option Borrow No. 2)

STANDARD PIT INFORMATION SHEET

SOUTH DAKOTA DEPARTMENT OF TRANSPORTATION

Plot Scale - 1:200

Plotted From - tpp17192

File - ...\Borrow\5580 01 Hagen.dgn

PIT INFORMATION SHEET
BORROW

STATE OF SOUTH DAKOTA	PROJECT	SHEET	TOTAL SHEETS
		B19	B114

Plotting Date: 08/09/2016

PIT NO. Option Borrow Pit No. 2

PROJECT NO. IM 0901(38)40, PCN 5580 COUNTY Meade

LOCATION Part of SE4 SE4 SEC. 29 TOWNSHIP 4 N RANGE 6 E

LOCATION Part of NE4 SE4 SEC. 29 TOWNSHIP 4 N RANGE 6 E

PIT OWNER Ry-Ranch Company, LLC ADDRESS Piedmont, SD

AVERAGE DEPTH OF MATERIAL 7.7' / 6.0' AVERAGE DEPTH OF TOPSOIL 4"

MATERIAL AVAILABLE 55,000 / 85,000 CU. YARDS. ESTIMATED CU. YARDS OF TOPSOIL 7,500

550 / 1,100 Ft. DEADHAUL TO STATION 1108+50-Lt.

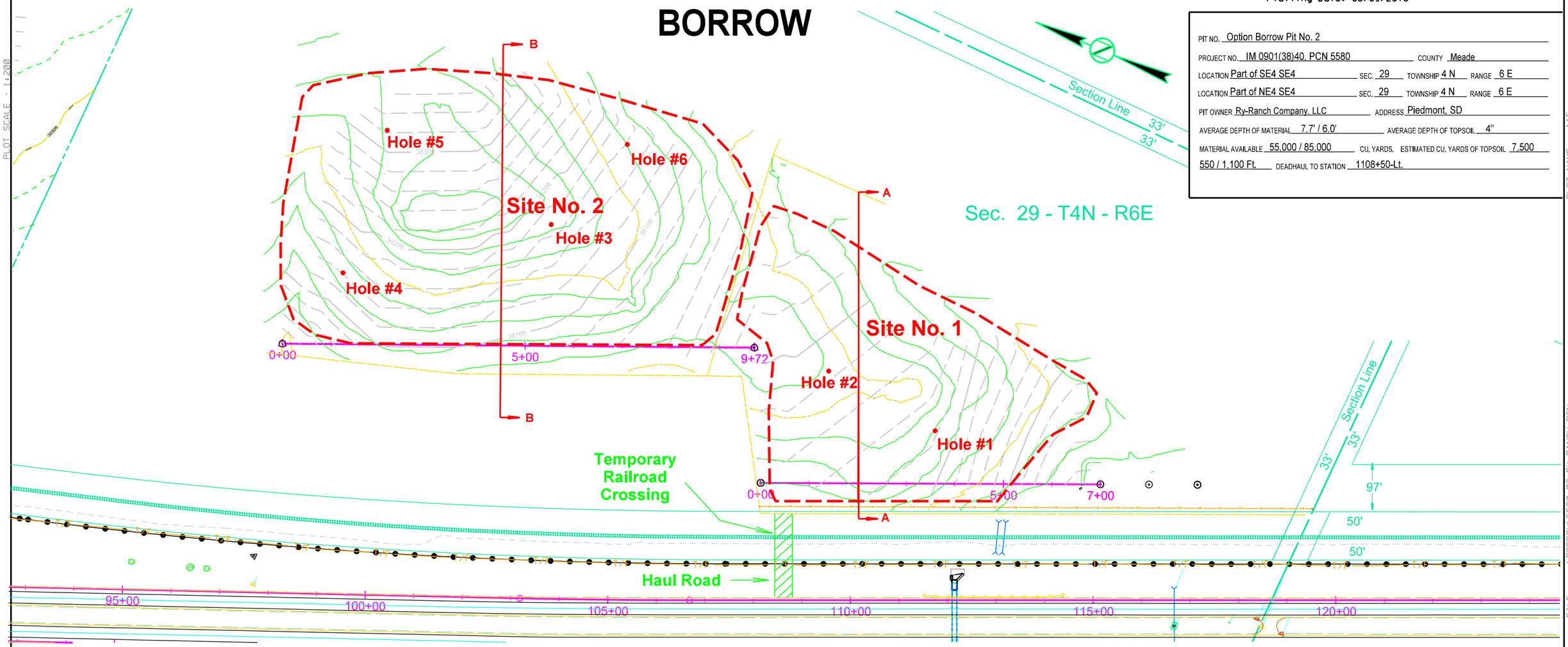

LAB ANALYSIS

HOLE#	1	1	2	2	3	4	4	5	5	6
DEPTH	1.5'-4'	4'-9'	0.5'-4.5'	4.5'-6'	0.5'-3'	0.5'-6'	6'-7'	1.5'-4'	4'-12'	1'-4'
wt. cu.ft.	87.1	93.3	88.7	94.9	91.9	98.4	101.1	94.2	97.4	87.1
% passing 3/8	100.0	86.7	99.1	87.9	51.8	100.0	100.0	99.4	89.9	100.0
% passing # 4	100.0	86.7	99.1	87.7	51.5	99.9	100.0	99.4	89.9	100.0
% passing # 10	100.0	86	99.1	87.6	50.9	99.9	96.3	98.9	88.3	100.0
% coarse sand	1.1	3.3	2.3	4.1	6.7	11.3	28.4	5.6	4.9	1.1
% fine sand	4.4	6.1	7.8	4.9	11.6	12.4	8.1	11.2	8.0	4.5
% silt	50.5	49.1	59.3	50.5	27.6	56.2	40.5	60.3	48.9	50.4
% clay	44.0	27.6	29.7	28.0	5.1	20.0	19.3	21.8	26.5	44.0
% passing # 40	98.9	82.8	96.8	83.4	44.3	88.6	67.8	93.3	83.4	98.9
% passing # 200	94.5	76.6	89.1	78.5	32.6	76.2	59.8	82.1	75.4	94.4
% coarse & fine sand	5.5	9.5	10.1	9.0	18.3	23.7	36.5	16.8	12.9	5.6
liquid limit	36	33	33	32	0	0	26	31	34	36
liquid plastic limit	18	21	23	20	0	0	19	25	19	19
P. I.	18	12	11	12	NP	NP	7	6	16	17
Texture Classification	Silt Clay	Clay Silt	Clay Silt	Clay Silt	Gravelly Silty Sand	Clay Silt	Sandy Silt	Clay Silt	Clay Silt	Silt Clay
AASHTO CLASS.	A-6	A-6	A-6	A-6	A-2-4	A-4	A-4	A-4	A-6	A-6
GP Index	11	9	8	9	0	8	5	8	10	11
Field Color	red brown	red brown	red brown	red brown	tan	red brown	red brown	red brown	red brown	red brown

Note: Gypsum encountered at bottom of individual test holes.

TYPICAL SECTION

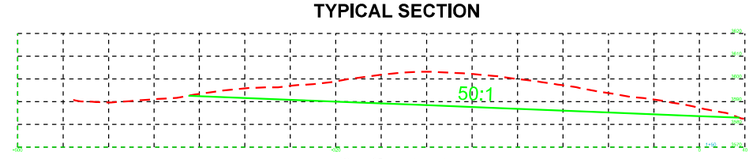

Section A - A

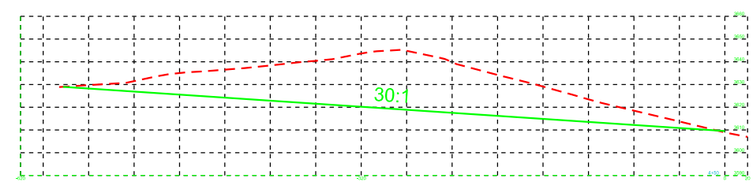

Section B - B

100 ft

STANDARD PIT INFORMATION SHEET

SOUTH DAKOTA DEPARTMENT OF TRANSPORTATION

PLOT SCALE - 1:200
PLOT NAME - 115
FILE - ...\BORROW\5580 02 RY RANCH.DGN
PLOTTED FROM - TRPR17192

STATE OF SOUTH DAKOTA	PROJECT	SHEET	TOTAL SHEETS
		B20	B114

Plotting Date: 08/09/2016

PIT INFORMATION SHEET
BORROW

PIT NO. BORROW PIT NO. 3

PROJECT NO. IM 0901(38)40, PCN 5580 COUNTY MEADE

LOCATION N1/2 NE1/4 SEC. 9 TOWNSHIP 3 N RANGE 6 E

PIT OWNER STATE OF SOUTH DAKOTA ADDRESS PIERRE, SD

AVERAGE DEPTH OF MATERIAL 15.5' AVERAGE DEPTH OF TOPSOIL 4"

MATERIAL AVAILABLE 200,000 CU. YARDS. ESTIMATED CU. YARDS OF TOPSOIL 4,250

500 FT DEADHAUL TO STATION 1238+00

TYPICAL SECTION

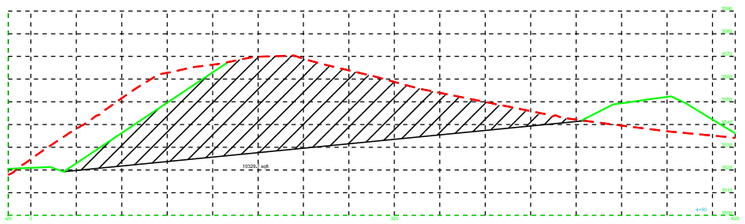

Section A - A

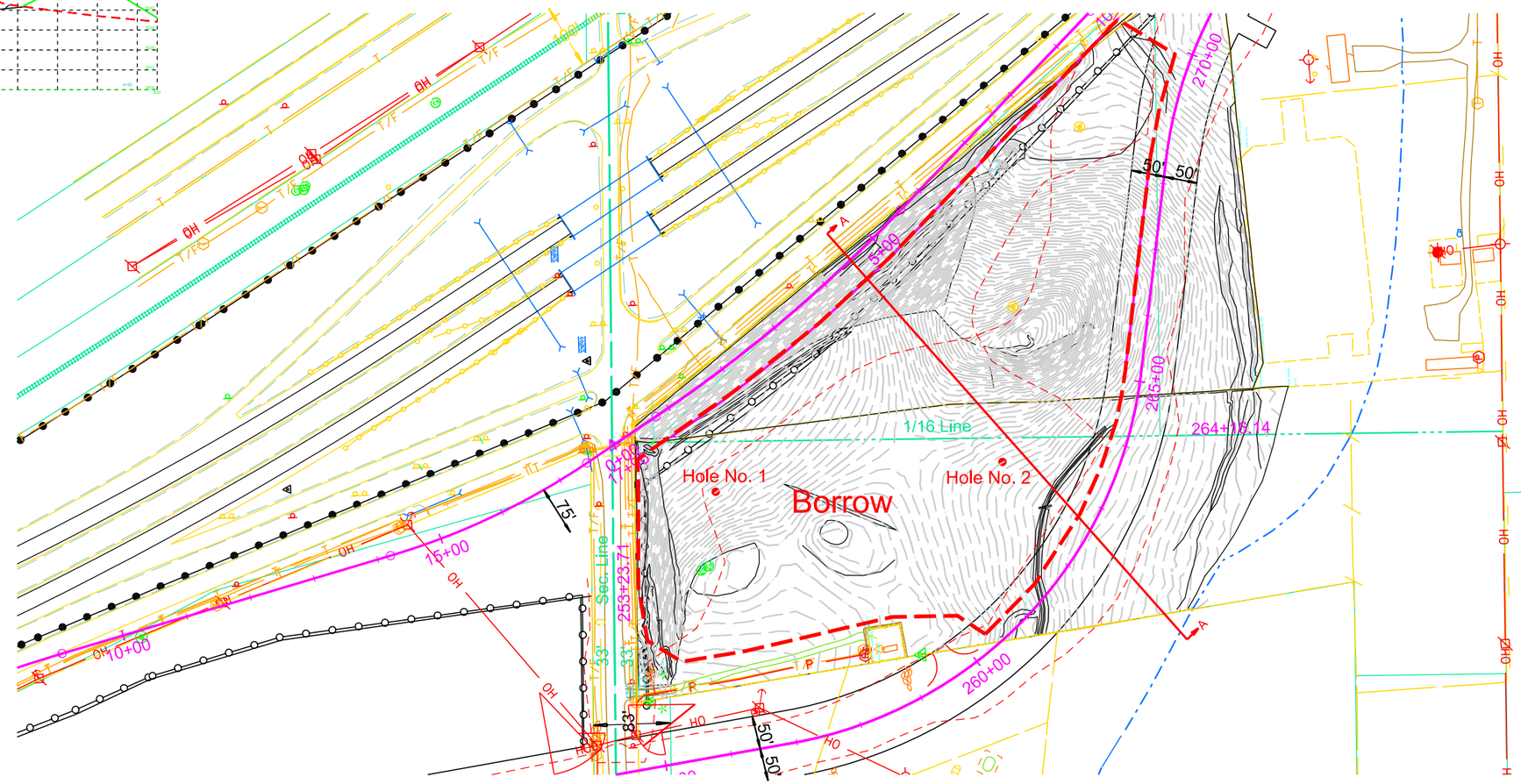

LAB ANALYSIS

HOLE #	01	02	02	02
DEPTH	6"-13'	3"-6'	6'-12.5'	12.5'-15'
wt. cu. ft.	69.9	70.2	80.8	83.2
% passing 3/8	100.0	100.0	83.8	67.7
% passing #4	99.9	100.0	83.6	67.2
% passing #10	100.0	99.8	82.8	66.2
% coarse sand	5.6	0.6	5.4	5.9
% fine sand	10.3	6.3	12.7	9.5
% silt	50.3	54.9	39.9	30.9
% clay	33.5	37.9	24.8	19.9
% passing #40	94.1	99.2	77.5	60.3
% passing #200	83.9	92.8	64.8	50.8
% coarse & fine sand	15.9	7.0	18.1	15.4
liquid limit	42	38	27	25
liquid plastic limit	24	21	16	15
P.I.	18	17	11	9
texture classification	SILT CLAY	SILTY CLAY	CLAY SILT	GRAVELLY SILTY SAND
HRB	A-7-6	A-6	A-6	A-4

INVESTIGATION LOG

Hole #	Depth (ft.)	Color	Soil Type	Remarks
1	0.0 - 0.5'	Light Brown	Clay	
	0.5 – 13.0'	Reddish Brown	Silty Clay	

Hole #	Depth (ft.)	Color	Soil Type	Remarks
2	0.0 - 0.3'	Brown	Topsoil	
	0.3 - 6.0'	Brown	Silty Clay	
	6.0 – 12.5'	Reddish Brown	Clay Silt	w/occasional gravel
	12.5 – 15.0'	Reddish Brown	Gravelly Silty Sand	boulders at 14.5'

Sec. 4 - T3N - R6E

Sec. 9 - T3N - R6E

Test pits indicate varying amounts of gravel and gravelly clay over red silty clay and sandy silt (Spearfish Formation).

100 ft

STANDARD PIT INFORMATION SHEET

SOUTH DAKOTA DEPARTMENT OF TRANSPORTATION

PLOT SCALE - 1:200
PLOT NAME - 116
FILE ....\BORROW\5580 03 SDDOT.DGN
PLOTTED FROM - TRPR17192

TYPICAL GRADING SECTION

STATE OF SOUTH DAKOTA	PROJECT	SHEET	TOTAL SHEETS
	IM 0901(38)40	B21	B114

Plotting Date: 08/04/2016

EB

110+00.00 to 1262+12.95

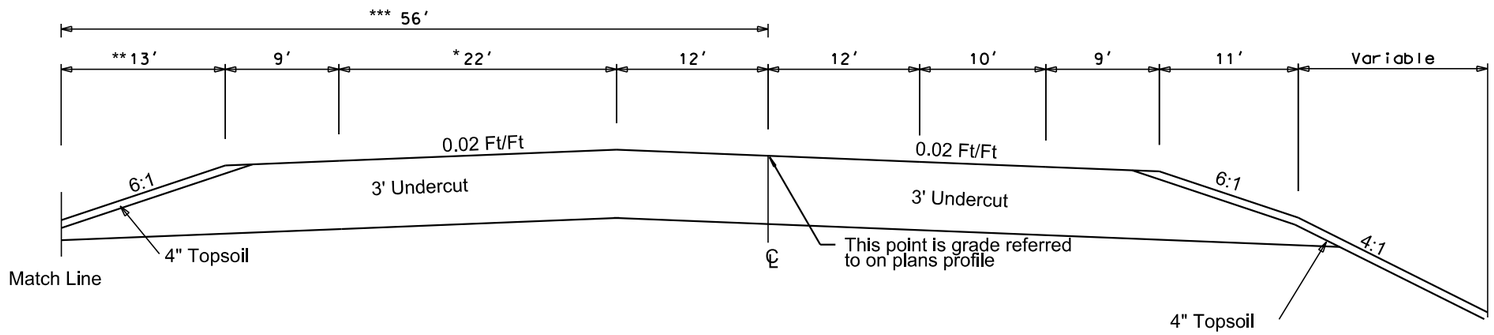

* 110+00 to 122+00 - 4'
122+00 to 122+50 - 4' to 6'
122+50 to 124+65 - 6'
124+65 to 125+15 - 6' to 22'
1252+17.57 to 1252+67.57 - 22' to 6'

** 110+00 to 125+15 - Variable
1252+17.57 to 1252+67.57 - 22' to 6'

*** 110+00 to 125+15 - Variable
1252+17.57 to 1262+12.30 - Variable

WB

10+00.00 to 265+77.66

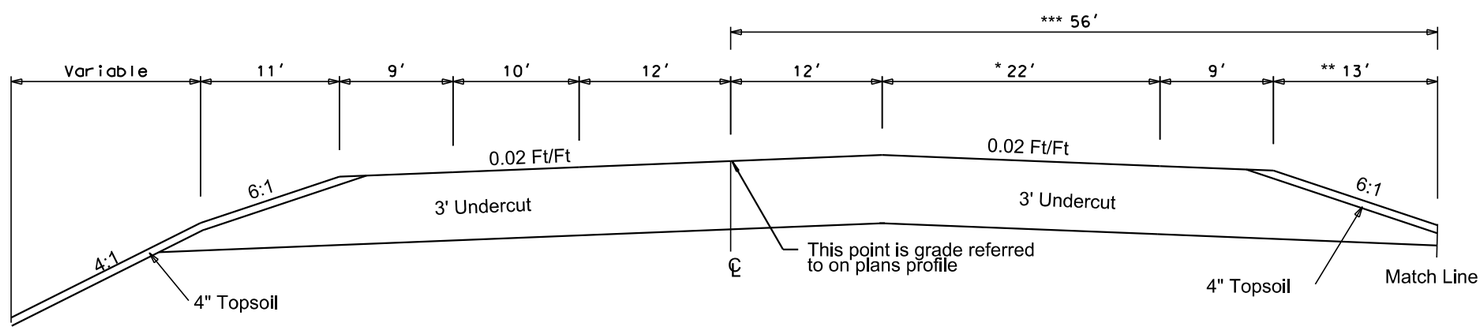

* 10+00 to 22+00 - 4'
22+00 to 22+50 - 4' to 6'
22+50 to 24+50 - 6'
24+50 to 25+00 - 6' to 22'
251+85.34 to 252+35.34 - 22' to 6'
252+35.34 to 265+77.66 - 6'

** 10+00 to 25+00 - Variable
** 251+85.34 to 252+77.66 - Variable

*** 10+00 to 21+50 - Variable
*** 251+85.34 to 265+77.66 - Variable

Plot Scale - 1:200
Plot Name - 18
File - U:\rd\prj\mead5580\typ.dgn
Plotted From - trpr17192

TYPICAL GRADING SECTION

STATE OF SOUTH DAKOTA	PROJECT	SHEET	TOTAL SHEETS
	IM 0901(38)40	B22	B114

Plotting Date: 08/04/2016

Exit 40 Ramp B
Station 8+00.00 to 21+08.78

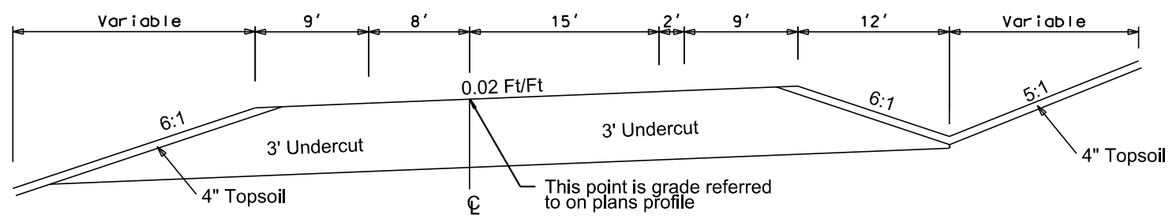

Exit 40 Ramp C
Station 0+15.00 to 19+81.37

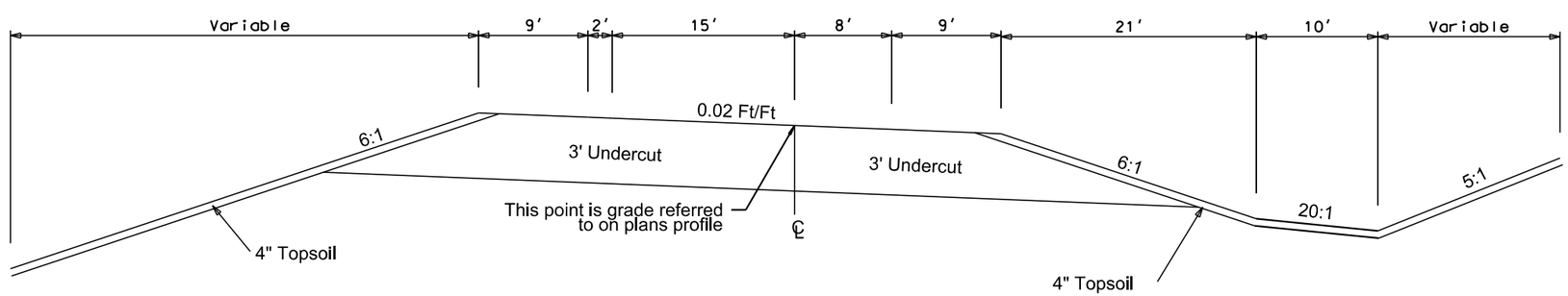

PLOT SCALE - 1:200
PLOT NAME - 19
FILE - U:\RD\PRJ\ME\D05580\TYP.DGN
PLOTTED FROM - TRPR17192

TYPICAL GRADING SECTION

STATE OF SOUTH DAKOTA	PROJECT	SHEET	TOTAL SHEETS
	IM 0901(38)40	B23	B114

Plotting Date: 08/04/2016

Rest Area Ramp A
Station 0+00.00 to 10+25.00

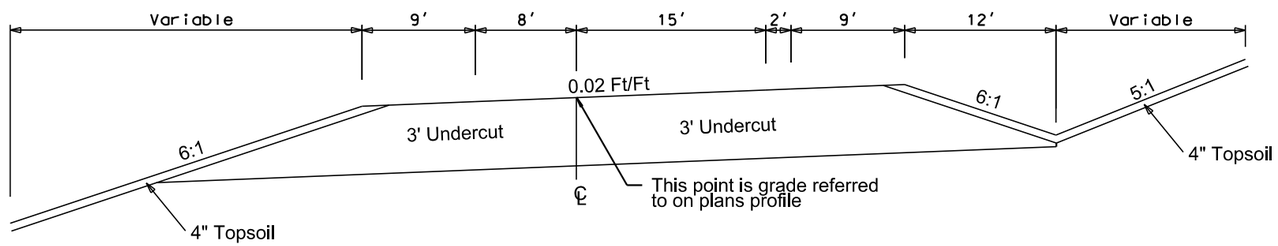

Rest Area Ramp B
Station 0+00.00 to 6+25.11

* 4:1 0+00 to 2+00

6:1 3+00 to 6+25.11

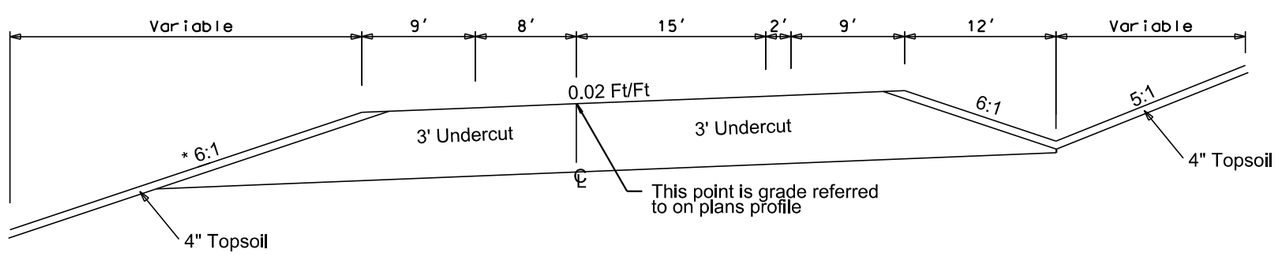

PLOT SCALE - 1:200
PLOT NAME - 20
FILE - U:\RD\PRJ\MEA05580\TYP.DGN
PLOTTED FROM - TRPR17192

TYPICAL GRADING SECTION

STATE OF SOUTH DAKOTA	PROJECT	SHEET	TOTAL SHEETS
	IM 0901(38)40	B24	B114

Plotting Date: 08/04/2016

Rest Area Ramp C
Station 0+00.00 to 8+84.00

Rest Area Ramp D
Station 5+91.90 to 10+50.00

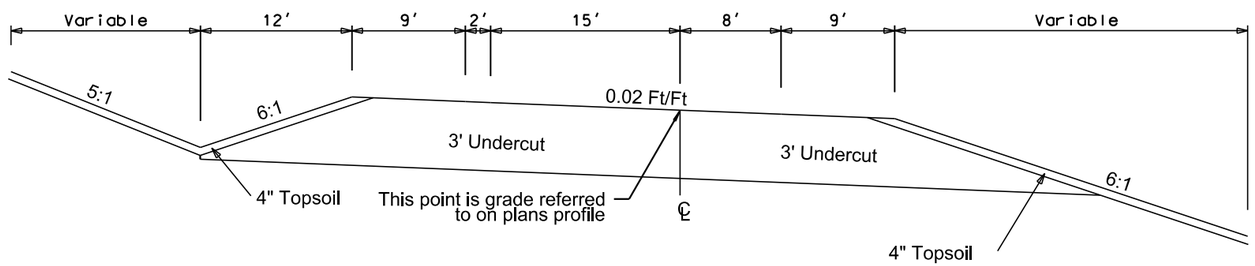

PLOT SCALE - 1:200
PLOTTED FROM - TRPR17192
PLOT NAME - 21
FILE - U:\RD\PRJ\MEA05580\TYP.DGN

TYPICAL GRADING SECTION

STATE OF SOUTH DAKOTA	PROJECT	SHEET	TOTAL SHEETS
	IM 0901(38)40	B25	B114

Plotting Date: 08/04/2016

Ramp A
Station 0+00.00 to 16+37.00

Ramp B
Station 0+20.00 to 14+69.89

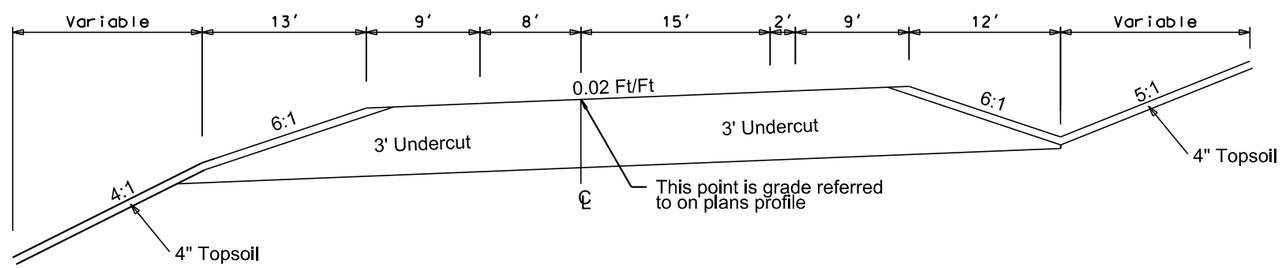

PLOT SCALE - 1:200
PLOTTED FROM - TRPR17192
PLOT NAME - 22
FILE - U:\RD\PRJ\MEAD5580\TYP.DGN

TYPICAL GRADING SECTION

STATE OF SOUTH DAKOTA	PROJECT	SHEET	TOTAL SHEETS
	IM 0901(38)40	B26	B114

Plotting Date: 08/04/2016

Ramp C
Station 0+25.00 to 14+61.66

Ramp D
Station 0+00.00 to 17+95.69

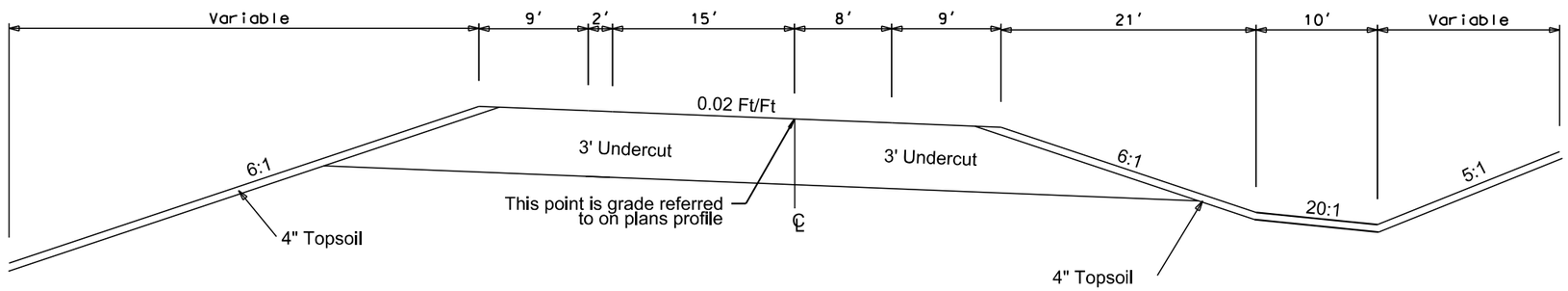

XR236
Station 188+00 to 206+00

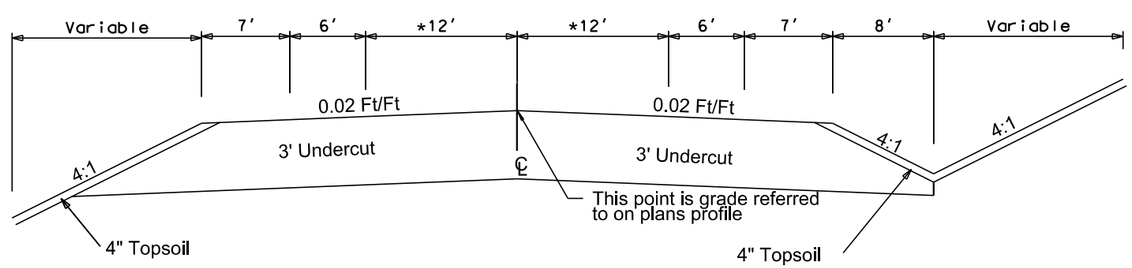

* 191+72.5 to 192+95 transition from 12' to 18'
192+95 to 198+20 -18'
198+20 to 199+42.5 transition from 18' to 12'

PLOT SCALE - 1:200
PLOT NAME - 23
FILE - U:\RD\PRJ\ME\D05580\TYP.DGN
PLOTTED FROM - TRPR17192

HORIZONTAL ALIGNMENT DATA

STATE OF SOUTH DAKOTA	PROJECT	SHEET	TOTAL SHEETS
	IM 0901(38)40	B27	B114

Plotting Date: 08/09/2016

I90 Eastbound Lanes

Type	Station			Northing	Easting
POB	1003+00.11			189259.855	1069702.750
		TL= 0.01	S 4°20'03" E		
PC	1003+00.12			189259.848	1069702.750
PI	1006+50.05	R = 5750.00	Delta = 6°57'55" L	188910.913	1069729.196
PT	1009+99.13			188567.759	1069797.760
		TL= 0.01	S 11°17'58" E		
PI	1009+99.13			188567.752	1069797.762
		TL= 87.60	S 11°17'58" E		
PC	1010+86.73			188481.853	1069814.925
PI	1016+91.75	R = 5930.00	Delta = 11°39'04" L	187888.558	1069933.470
PT	1022+92.60			187331.428	1070169.389
		TL= 4869.32	S 22°57'02" E		
PC	1071+61.92			182847.554	1072068.110
PI	1073+35.84	R = 15700.00	Delta = 1°16'10" R	182687.400	1072135.928
PT	1075+09.75			182525.782	1072200.182
		TL= 2824.82	S 21°40'52" E		
PC	1103+34.57			179900.806	1073243.785
PI	1105+09.49	R = 15700.00	Delta = 1°16'36" L	179738.265	1073308.405
PT	1106+84.39			179577.204	1073376.631
		TL= 12054.39	S 22°57'28" E		
PC	1227+38.78			168477.610	1078078.469
PI	1229+99.08	R = 3690.00	Delta = 8°04'14" L	168237.920	1078180.003
PT	1232+58.53			168014.858	1078314.182
		TL= 1959.39	S 31°01'41" E		
PC	1252+17.92			166335.829	1079324.167
PI	1255+40.45	R = 15756.00	Delta = 2°20'44" L	166059.445	1079490.420
PT	1258+62.90			165790.097	1079667.845
		TL= 350.42	S 33°22'25" E		
POE	1262+13.32			165497.462	1079860.608

I90 Westbound Lanes

Type	Station			Northing	Easting
POB	3+00.00			189274.602	1069771.932
		TL= 12.91	S 4°19'41" E		
PC	3+12.91			189261.724	1069772.907
PI	6+56.88	R = 5662.00	Delta = 6°57'10" L	188918.738	1069798.865
PT	10+00.00			188581.416	1069866.152
		TL= 52.45	S 11°16'51" E		
PC	10+52.45			188529.980	1069876.412
PI	14+75.52	R = 4140.00	Delta = 11°40'10" L	188115.090	1069959.172
PT	18+95.66			187725.514	1070124.139
		TL= 5251.06	S 22°57'02" E		
PC	71+46.72			182890.116	1072171.714
PI	73+20.67	R = 15700.00	Delta = 1°16'11" R	182729.930	1072239.546
PT	74+94.61			182568.280	1072303.812
		TL= 2824.12	S 21°40'51" E		
PC	103+18.73			179943.949	1073347.145
PI	104+93.68	R = 15700.00	Delta = 1°16'37" L	179781.376	1073411.777
PT	106+68.62			179620.284	1073480.017
		TL= 12045.83	S 22°57'28" E		
PC	227+14.45			168528.571	1078178.516
PI	229+74.76	R = 3690.00	Delta = 8°04'14" L	168288.881	1078280.050
PT	232+34.20			168065.819	1078414.229
		TL= 2090.20	S 31°01'41" E		
PC	253+24.41			166274.694	1079491.643
PI	255+44.50	R = 50012.00	Delta = 0°30'15" R	166086.093	1079605.092
PT	257+64.59			165896.501	1079716.877
		TL= 41.20	S 30°31'26" E		
PC	258+05.79			165861.013	1079737.801
PI	259+48.03	R = 49988.00	Delta = 0°19'34" L	165738.486	1079810.044
PT	260+90.26			165616.372	1079882.982
		TL= 487.74	S 30°51'00" E		
PI	265+78.01			165197.639	1080133.092
		TL= 379.59	S 30°34'53" E		
PI	269+57.60			164870.845	1080326.215
		TL= 2242.16	S 30°35'16" E		
PC	291+99.76			162940.680	1081467.151
PI	299+29.34	R = 5635.00	Delta = 14°45'16" L	162312.620	1081838.402
PT	306+50.84			161799.819	1082357.364
		TL= 1222.29	S 45°20'32" E		
POE	318+73.14			160940.702	1083226.802

The coordinates shown on this sheet are based on the South Dakota State Plane Coordinate System. North Zone (NAD 83/96) SF = 0.99987445

Plot Scale - 1:200
Plotted From - tnpr17192
File - ...\rdprj\mead5580\DataHoriz.dgn

HORIZONTAL ALIGNMENT DATA

STATE OF SOUTH DAKOTA	PROJECT	SHEET	TOTAL SHEETS
	IM 0901(38)40	B28	B114

Plotting Date: 08/09/2016

Exit 40 Ramp B

Type	Station			Northing	Easting
POB	0+00.00			189225.894	1070184.328
		TL= 713.05	S 8°41'28" W		
PC	7+13.05			188521.030	1070076.581
PI	11+00.46	R = 1510.00	Delta = 28°46'45" L	188138.069	1070018.041
PT	14+71.51			187774.228	1070151.102
		TL= 637.27	S 20°05'17" E		
POE	21+08.79			187175.722	1070369.983

Exit 40 Ramp C

Type	Station			Northing	Easting
POB	0+00.00			188615.903	1069597.334
POB	0+00.00			189259.288	1069268.770
		TL= 19.46	S 2°33'44" W		
PC	0+19.46			189239.847	1069267.900
PI	0+83.27	R = 230.00	Delta = 31°00'34" L	189176.106	1069265.047
PT	1+43.94			189120.005	1069295.441
		TL= 759.63	S 28°26'50" E		
PC	9+03.57			188452.093	1069657.290
PI	10+13.98	R = 2300.00	Delta = 5°29'48" R	188355.015	1069709.883
PT	11+24.22			188253.345	1069752.936
		TL= 1011.33	S 22°57'02" E		
POE	21+35.55				

Rest Area (Ramp A)

Type	Station			Northing	Easting
POB	0+00.00			183756.074	1071831.083
		TL= 50.32	S 22°57'02" E		
PC	0+50.32			183709.738	1071850.704
PI	2+90.85	R = 2300.00	Delta = 11°56'25" L	183488.248	1071944.495
PT	5+29.64			183290.955	1072082.082
		TL= 8.22	S 34°53'27" E		
PC	5+37.86			183284.214	1072086.783
PI	7+58.70	R = 1910.00	Delta = 13°11'28" R	183103.066	1072213.111
PT	9+77.60			182897.871	1072294.766
		TL= 142.19	S 21°41'59" E		
POE	11+19.78			182765.758	1072347.339

Rest Area (Ramp B)

Type	Station			Northing	Easting
POB	0+00.00			182103.667	1072585.689
POB	0+00.00			182152.608	1072575.456
		TL= 58.76	S 11°48'33" E		
PC	0+58.76			182095.088	1072587.482
PI	1+29.85	R = 3130.00	Delta = 2°36'08" R	182025.506	1072602.030
PT	2+00.91			181955.334	1072613.404
		TL= 7.42	S 9°12'25" E		
PC	2+08.33			181948.014	1072614.591
PI	3+73.35	R = 1510.00	Delta = 12°28'26" L	181785.116	1072640.995
PT	5+37.07			181631.767	1072701.961
		TL= 138.04	S 21°40'51" E		
POE	6+75.11				

Rest Area (Ramp C)

Type	Station			Northing	Easting
POB	0+00.00			183039.749	1071866.314
		TL= 86.17	S 22°54'35" E		
PC	0+86.17			182960.379	1071899.858
PI	1+58.35	R = 766.00	Delta = 10°45'59" L	182893.890	1071927.957
PT	2+30.11			182833.821	1071967.981
		TL= 133.54	S 33°40'34" E		
PC	3+63.64			182722.695	1072042.027
PI	6+05.28	R = 2300.00	Delta = 11°59'42" R	182521.607	1072176.014
PT	8+45.15			182297.064	1072265.285
		TL= 780.00	S 21°40'52" E		
POE	16+25.15			181572.245	1072553.449

Rest Area (Ramp D)

Type	Station			Northing	Easting
POB	0+00.00			184948.778	1071165.304
		TL= 240.30	S 20°05'17" E		
PI	2+40.30			184723.096	1071247.838
		TL= 390.00	S 22°57'02" E		
PC	6+30.30			184363.968	1071399.913
PI	7+88.36	R = 1510.00	Delta = 11°57'06" R	184218.416	1071461.548
PT	9+45.28			184063.256	1071491.704
		TL= 74.39	S 10°59'56" E		
PC	10+19.67			183990.232	1071505.897
PI	12+19.31	R = 1910.00	Delta = 11°56'04" L	183794.256	1071543.987
PT	14+17.51			183610.393	1071621.780
		TL= 55.45	S 22°56'00" E		
POE	14+72.96			183559.328	1071643.385

The coordinates shown on this sheet are based on the South Dakota State Plane Coordinate System. North Zone (NAD 83/96) SF = 0.99987445

Plot Scale - 1:200
Plotted From - tnpr17192
File - ...\rdtpp\mead5580\DataHoriz.dgn

HORIZONTAL ALIGNMENT DATA

STATE OF SOUTH DAKOTA	PROJECT	SHEET	TOTAL SHEETS
	IM 0901(38)40	B29	B114

Plotting Date: 08/09/2016

Exit 44 (Ramp A)

Type	Station			Northing	Easting
POB	0+00.00			169122.131	1077953.146
		TL= 165.36	S 22°57'28" E		
PC	1+65.36			168969.871	1078017.644
PI	3+78.07	R = 2300.00	Delta = 10°34'03" L	168774.010	1078100.612
PT	5+89.57			168596.688	1078218.091
		TL= 721.95	S 33°31'31" E		
PC	13+11.51			167994.844	1078616.826
PI	13+91.87	R = 3130.00	Delta = 2°56'29" R	167927.852	1078661.209
PT	14+72.20			167858.670	1078702.097
		TL= 185.60	S 30°35'02" E		
POE	16+57.80			167698.893	1078796.528

Exit 44(Ramp B)

Type	Station			Northing	Easting
POB	0+00.00			167698.893	1078796.528
		TL= 30.60	S 30°35'02" E		
PC	0+30.60			167672.551	1078812.097
PI	1+92.68	R = 3130.00	Delta = 5°55'44" R	167533.014	1078894.566
PT	3+54.48			167385.705	1078962.181
		TL= 572.09	S 24°39'18" E		
PC	9+26.57			166865.769	1079200.832
PI	9+97.64	R = 2319.00	Delta = 3°30'38" L	166801.180	1079230.478
PT	10+68.66			166738.528	1079264.023
		TL= 401.24	S 28°09'57" E		
POE	14+69.90			166384.805	1079453.416

Exit 44 (Ramp C)

Type	Station			Northing	Easting
POB	0+00.00			167720.448	1078235.304
		TL= 76.90	S 31°05'44" E		
PC	0+76.90			167654.599	1078275.019
PI	3+19.33	R = 2240.00	Delta = 12°21'14" L	167447.004	1078400.227
PT	5+59.88			167271.005	1078566.949
		TL= 413.70	S 43°26'58" E		
PC	9+73.58			166970.663	1078851.461
PI	12+23.88	R = 2300.00	Delta = 12°25'17" R	166788.955	1079023.591
PT	14+72.21			166574.475	1079152.607
		TL= 292.93	S 31°01'41" E		
POE	17+65.14				

Exit 44 (Ramp D)

Type	Station			Northing	Easting
POB	0+00.00			169418.634	1077666.815
		TL= 645.25	S 20°05'43" E		
PC	6+45.25			168812.666	1077888.512
PI	7+74.84	R = 2319.00	Delta = 6°23'49" R	168690.963	1077933.038
PT	9+04.16			168565.058	1077963.726
		TL= 515.91	S 13°41'54" E		
PC	14+20.07			168063.822	1078085.899
PI	15+85.31	R = 1080.00	Delta = 17°23'50" L	167903.285	1078125.028
PT	17+48.01			167761.791	1078210.368
		TL= 48.28	S 31°05'44" E		
POE	17+96.29			167720.448	1078235.304

XR 236 (Deerview Road)

Type	Station			Northing	Easting
POB	179+23.39			167772.432	1076881.755
		TL= 2026.62	S 87°48'02" E		
PI	199+50.01			167694.655	1078906.883
		TL= 2127.45	S 87°33'29" E		
PI	220+77.46			167604.006	1081032.400
		TL= 1622.54	S 88°02'03" E		
POE	237+00.00			167548.345	1082653.987

XR275 (CULDESAC)

Type	Station			Northing	Easting
POB	0+00.00			164546.420	1080993.725
		TL= 19.01	S 70°35'05" W		
PC	0+19.01			164540.102	1080975.799
PI	0+38.42	R = 50.00	Delta = 42°26'19" L	164533.649	1080957.490
PRC	0+56.04			164516.532	1080948.333
PRC	3+02.40			164578.165	1080936.686
PI	3+31.19	R = 50.00	Delta = 59°52'03" L	164559.485	1080958.594
PT	3+54.64			164569.056	1080985.747

XR300 (CULDESAC)

Type	Station			Northing	Easting
PC	0+00.00			162219.550	1082536.196
PI	0+34.57	R = 50.00	Delta = 69°19'31" L	162220.851	1082501.647
PT	0+60.50			162188.987	1082488.231
		TL= 10.00	S 22°49'54" W		
PC	0+70.50			162179.770	1082484.351
PRC	3+07.20			162244.821	1082458.668
PI	3+16.89	R = 50.00	Delta = 21°55'15" L	162240.870	1082467.508
PT	3+26.33			162240.506	1082477.185

The coordinates shown on this sheet are based on the South Dakota State Plane Coordinate System. North Zone (NAD 83/96) SF = 0.99987445

Plot Scale - 1:200
Plotted From - tnpr17192
File - ...\rd\prj\mead5580\DataHoriz.dgn

HORIZONTAL ALIGNMENT DATA

STATE OF SOUTH DAKOTA	PROJECT	SHEET	TOTAL SHEETS
	IM 0901(38)40	B30	B114

Plotting Date: 08/09/2016

XR1118 (CULDESAC)

Type	Station			Northing	Easting
PC	0+00.00			178537.028	1073599.396
PI	0+24.22	R = 50.00	Delta = 51°41'02" L	178536.694	1073623.609
PRC	0+45.10			178555.485	1073638.884
PRC	2+92.39			178493.491	1073638.029
PI	3+16.60	R = 50.00	Delta = 51°41'02" L	178512.696	1073623.278
PT	3+37.49			178513.030	1073599.064

XR1118

Type	Station			Northing	Easting
POB	0+00.00			178525.729	1073548.491
		TL= 129.20	S 89°12'34" E		
PI	1+29.20			178523.947	1073677.683
		TL= 98.37	S 89°12'34" E		
POE	2+27.58			178522.589	1073776.046

XR1177

Type	Station			Northing	Easting
POB	0+00.00			173135.987	1075747.618
		TL= 217.10	N 89°56'43" E		
POE	2+17.10			173136.195	1075964.714

XR1177 (CULDESAC)

Type	Station			Northing	Easting
POB	0+00.00			173144.998	1075758.916
		TL= 60.07	N 87°04'58" E		
PI	0+60.07			173148.055	1075818.913
		TL= 17.33	N 89°56'43" E		
PC	0+77.40			173148.072	1075836.242
PI	1+01.62	R = 50.00	Delta = 51°41'02" L	173148.095	1075860.459
PRC	1+22.51			173167.109	1075875.454
PRC	3+69.79			173105.109	1075875.514
PI	3+94.01	R = 50.00	Delta = 51°41'02" L	173124.095	1075860.481
PT	4+14.90			173124.072	1075836.265
		TL= 50.19	S 89°56'43" W		
PI	4+65.09			173124.024	1075786.071
		TL= 27.14	S 89°56'43" W		
POE	4+92.23			173123.998	1075758.934

DR141

Type	Station			Northing	Easting
POB	0+00.00			176401.930	1074549.661
		TL= 35.44	S 63°42'35" E		
PC	0+35.44			176386.234	1074581.433
PI	1+04.19	R = 150.00	Delta = 49°14'53" L	176355.782	1074643.073
PT	1+64.37			176382.599	1074706.379
		TL= 213.64	N 67°02'32" E		
POE	3+78.01			176465.930	1074903.097

XR3 (Exit 40 Crossroad)

Type	Station			Northing	Easting
POB	0+00.00			189264.650	1069139.686
		TL= 1000.01	S 87°51'10" E		
POE	10+00.01			189227.180	1070138.993

The coordinates shown on this sheet are based on the South Dakota State Plane Coordinate System. North Zone (NAD 83/96) SF = 0.99987445

Plot Scale - 1:200
Plotted From - trpr17192
File - ...\rdprj\mead5580\DataHoriz.dgn

CONTROL DATA

STATE OF SOUTH DAKOTA	PROJECT	SHEET	TOTAL SHEETS
	IM 0901(38)40	B31	B114

Plotting Date: 08/04/2016

Number	Station & Offset	Align.	Description	N	E	Elevation
CP#06		WB	(71'South and 78' East of 269+57) REBAR IN ASPHALT	164800.0138	1080403.8439	3484.89
CP#07	240+98-155'L	WB	REBAR NORTHEAST OF WESTBOUND OFF RAMP	167404.6717	1078992.3842	3509.50
CP#08	194+05-37'L	XR236	MRM I90 - 44.66	167752.5181	1078363.9743	3516.06
CP#09	1230+27-12'R	EB	REBAR BETWEEN EXIT 44 EASTBOUND OFF RAMP AND EASTBOUND LANES	168212.9159	1078193.6313	3529.67
CP #10	1217+75-58'L	EB	REBAR IN MEDIAN CROSSOVER WEST OF EXIT 44	169388.0241	1077755.7540	3527.19
CP #11	210+43-66'L	WB	MRM 90-44.1 USGS E. OF WBL @ LITTLE ELK CREEK	170092.9114	1077587.1854	3515.86
CP #12 BM #17	1206+84-102'R	EB	REBAR AND CAP W. OF SERVICE RD. IN CREEK BOTTOM MRM 44.05	170329.8813	1077182.7240	3513.27
CP #13 BM #16	206+92-103'L	WB	REBAR AND CAP BETWEEN R/R STR. AND WBL STR. IN CREEK BOTTOM MRM 44.05	170430.8021	1077484.9099	3509.04
CP #14 USGS BENCH	162+40-73'L	WB	MRM I90 43.24	174518.9034	1075720.1613	3514.78
CP #15 BM#14	1141+43-127'R	EB	REBAR AND CAP W. OF SERVICE RD. STR. CREEK BOTTOM MRM 42.815	176343.0458	1074608.6198	3542.21
CP #16 BM#15	141+36-61'L	WB	REBAR AND CAP CREEK BOTTOM BETWEEN R/R STR. & WBL STR. MRM 42.815	176451.4126	1074888.8994	3538.19
CP #17 USGS BENCH	139+34-77'L	WB	MRM I90-42.8 E. OF WBL N. OF STR. BACKSLOPE ELK CREEK	176643.9228	1074824.8514	3546.99
CP #19 USGS BENCH	52+64-88'L	WB	MRM I90-41.13	184657.9802	1071519.1056	3570.72
CP #20 BM #13	7+75-34'R	WB	REBAR AND CAP MEDIAN DITCH BLOCK S. OF STR.MRM40.32	188797.2142	1069792.8748	3618.79
CP48	221+17-24'R	XR236	REBAR /ALUM CAP ON HILL DEERVIEW RD ACROSS FROM CEMETARY (cap missing)	167578.6720	1081071.2670	3519.40

The coordinates shown on this sheet are based on the South Dakota State Plane Coordinate System.
North Zone (NAD 83/96) SF = 0. 0.99987445
The elevations shown on this sheet are based on NAVD 88.

Plot Scale - 1:200
Plotted From - tnpr17192
File - ...\prj\mead5580\DataControl.dgn

LEGEND

STATE OF SOUTH DAKOTA	PROJECT	SHEET	TOTAL SHEETS
	IM 0901(38)40	B32	B114

Plotting Date: 08/04/2016

Anchor
Antenna
Approach
Assumed Corner
Azimuth Marker
BBQ Grill/ Fireplace
Bearing Tree
Bench Mark
Box Culvert
Bridge
Brush
Buildings
Bulk Tank
Cattle Guard
Cemetery
Centerline
Cistern
Clothes Line
Commercial Sign Double Face
Commercial Sign One Post
Commercial Sign Overhead
Commercial Sign Two Post
Concrete Symbol
Creek Edge
Curb/Gutter
Curb
Dam Grade/Dike/Levee
Deck Edge
Ditch Block
Doorway Threshold
Drainage Profile
Drop Inlet
Edge Of Asphalt
Edge Of Concrete
Edge Of Gravel
Edge Of Other
Edge Of Shoulder
Elec. Trans./Power Jct. Box
Environmental Sensitive Site — ESS —
Fence Barbwire
Fence Chainlink
Fence Electric
Fence Misc.
Fence Rock
Fence Snow
Fence Wood
Fence Woven
Fire Hydrant
Flag Pole
Flower Bed
Gas Valve Or Meter
Gas Pump Island
Grain Bin
Guardrail
Guide Sign One Post
Guide Sign Two Post
Gutter
Guy Pole
Haystack

Hedge
Highway R.O.W. Marker
Interstate Close Gate
Iron Pin
Irrigation Ditch
Lake Edge
Lawn Sprinkler
Mailbox
Manhole Electric
Manhole Gas
Manhole Misc
Manhole Sanitary Sewer
Manhole Storm Sewer
Manhole Telephone
Manhole Water
Merry-Go-Round
Microwave Radio Tower
Misc. Line
Misc. Property Corner
Misc. Post
Overhang Or Encroachment
Overhead Utility Line — OH —
Parking Meter
Pipe With End Section
Pipe With Headwall
Pipe Without End Section
Playground Slide
Playground Swing
Power And Light Pole
Power And Telephone Pole
Power Meter
Power Pole
Power Pole And Transformer
Power Tower Structure
Propane Tank
Property Pipe
Property Pipe With Cap
Property Stone
Public Telephone
Railroad Crossing Signal
Railroad Milepost Marker
Railroad Profile
Railroad R.O.W. Marker
Railroad Signs
Railroad Switch
Railroad Track
Railroad Trestle
Rebar
Rebar With Cap
Reference Mark
Regulatory Sign One Post
Regulatory Sign Two Post
Retaining Wall
Riprap
River Edge
Rock And Wire Baskets
Rockpiles
Satellite Dish
Septic Tank

Shrub Tree
Sidewalk
Sign Face
Sign Post
Slough Or Marsh
Spring
Stream Gauge
Street Marker
Subsurface Utility Exploration Test Hole
Telephone Fiber Optics — T/F —
Telephone Junction Box
Telephone Pole
Television Cable Jct Box
Television Tower
Test Wells/Bore Holes
Traffic Signal
Trash Barrel
Tree Belt
Tree Coniferous
Tree Deciduous
Tree Stumps
Triangulation Station
Underground Electric Line — P —
Underground Gas Line — G —
Underground High Pressure Gas Line — HG —
Underground Sanitary Sewer — S —
Underground Storm Sewer — S —
Underground Tank
Underground Telephone Line — T —
Underground Television Cable — TV —
Underground Water Line — W —
Warning Sign One Post
Warning Sign Two Post
Water Fountain
Water Hydrant
Water Meter
Water Tower
Water Valve
Water Well
Weir Rock
Windmill
Wingwall
Witness Corner

State and National Line
County Line
Section Line
Quarter Line
Sixteenth Line
Property Line
Construction Line
R. O. W. Line
New R. O. W. Line
Cut and Fill Limits
Control of Access
New Control of Access
Proposed ROW (After Property Disposal)

Drainage Arrow

Remove Concrete Pavement
Remove Concrete Driveway Pavement
Remove Asphalt Concrete Pavement
Remove Concrete Sidewalk
Remove Concrete Approach Pavement
Remove Concrete Median Pavement

Remove Concrete Curb
Remove Concrete Curb and Gutter
Remove Concrete Gutter

Detectable Warning
Pedestrian Push Button Pole and 30" x 48" Clear Space with 1.5% slope

Plot Scale - 1:200
Plotted From - tmpr17192
File - U:\drp\jmead5580\Legend.dgn

STATE OF SOUTH DAKOTA	PROJECT	SHEET	TOTAL SHEETS
	IM 0901(38)40	B33	B114

Plotting Date: 08/04/2016

10+00 (WB)
Retain STR. 47-070-511
RCBC

7+20 (Ramp B)
Retain Str. 47-071-511
RCBC

0+14 (Ramp C)
Retain RCBC

10+02.49 (WBL) (2.11 sq mi)
Install 3-8' x 6' Box
Culvert Extension
(See Section E)

7+20.03 (Exit 40 Ramp B) (2.11 sq mi)
Install 3-8' x 6' Box
Culvert Extension
(See Section E)

11+00 (Exit 40 Ramp C)
Install 24" - 68' RCP
& 2 Safety Ends

18+77-81' L (WB)
Retain 18"-50' RCP
& 1 Flared End

18+73 R (WB)
Take Out 18"-124' RCP
& 1 Flared End

18+74 (WB) (2.5 ac)
Skew 2° 30' LHF
Install 18" - 124' RCP
& 1 Safety End

19+91 (WB)
Retain 72"-306' RCP
& 2 Flared Ends

19+90 to 20+05 - 49' R (2.8 ac)
Install 24"- 12' RCP
(Between Median Drain & Existing Pipe)

20+05 - 49' R (WB)
Install Type M Median Drain
and Frame & Grate Assembly

10+91-38'L(Ramp C)
Take Out 18"-56' RCP
& 2 End Sections
(Incidental Work, Grading)

10+97-32'R (Ramp C)
Take Out 18"-69' RCP
& 2 End Sections
(Incidental Work, Grading)

Begin IM 0901(38)40 (Westbound)
Station 10+00.00

TILFORD

Sec. 20 - T4N - R6E

Clair D Hagan & Darlene Hagan
Parcel CA1
Omitted

Begin Grading (Exit 40 Ramp B)
Station 8+00.00

WB
PI 14+75.52
N 188115.09
E 1069959.17
Del 11°40'10" L
Dc 1°23'02"
T 423.06'
L 843.20'
R 4140.00'

Ramp B
PI 11+00.46
N 188138.07
E 1070018.04
Del 28°46'45" L
Dc 3°47'40"
T 387.41'
L 758.46'
R 1510.00'

LPN HOLDINGS PROPERTY

OUTLOT D

Lot 2

Alley

LOT B

16+99.45-75'L (WB)
Begin New Control
of Access

New Clover Place Center Line

Section Line

Section Line

WB
PI 6+56.88
N 188918.74
E 1069798.86
Del 6°57'10" L
Dc 1°00'43"
T 343.97'
L 687.09'
R 5662.00'

Exit 40 Ramp B

S 8°41'28" W

11+00 L (WB)
Begin Type 2

3 PP

2 PP

3 PP

I 90 Westbound

I 90 Eastbound

S 11°16'51" E

S 11°17'58" E

S 22°57'02" E

S 4°19'41" E

S 4°20'03" E

Ramp C
PI 0+83.27
N 189176.11
E 1069265.05
Del 31°00'34" L
Dc 24°54'40"
T 63.81'
L 124.48'
R 230.00'

Center Street

EB
PI 1006+50.05
N 188910.91
E 1069729.20
Del 6°57'55" L
Dc 0°59'47"
T 349.94'
L 699.01'
R 5750.00'

Exit 40 Ramp C

S 28°26'50" E

S 2°33'44" W

New Service Road Center Line

LOT A

Section Line

1/4 Line

OUTLOT C

CITY LIMITS

EB
PI 1009+99.13
N 188567.15
E 1069797.76
Del 0°00'00"R

Ramp C
PI 10+13.98
N 188355.01
E 1069709.88
Del 5°29'48"R
Dc 2°29'28"
T 110.41'
L 220.65'
R 2300.00'

EB
PI 1016+91.75
N 187888.56
E 1069933.47
Del 11°39'04" L
Dc 0°57'58"
T 605.02'
L 1205.87'
R 5930.00'

Sec. 19 - T4N - R6E

Begin Grading (Exit 40 Ramp C)
Station 0+15.00

Begin IM 0901(38)40 (Eastbound)
Station 1010+00.00

PLOT SCALE - 1:200

PLOTTED FROM - TRPR17192

PLOT NAME - 30

FILE - U:\RDV\PRJ\MEAD5580\0001.DGN

STATE OF SOUTH DAKOTA	PROJECT	SHEET	TOTAL SHEETS
	IM 0901(38)40	B34	B114

Plotting Date: 08/04/2016

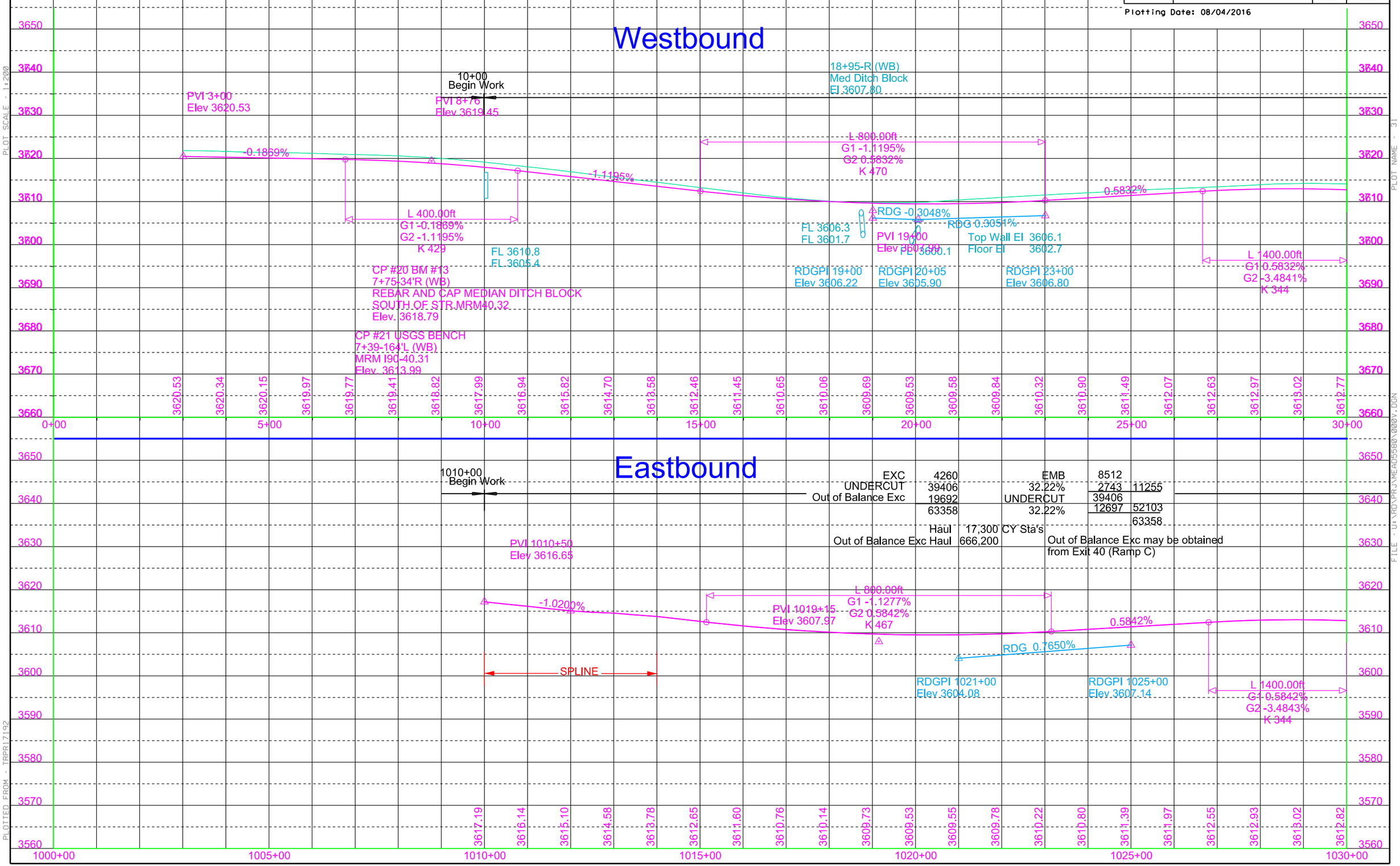

STATE OF SOUTH DAKOTA	PROJECT	SHEET	TOTAL SHEETS
	IM 0901(38)40	B35	B114

Plotting Date: 08/04/2016

Exit 40 Ramp C

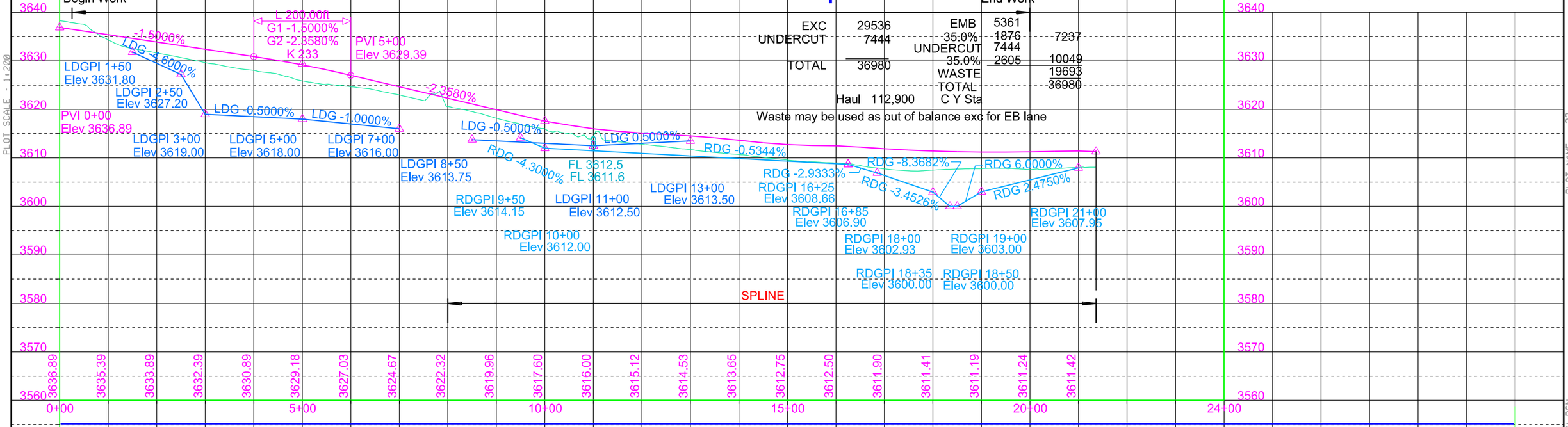

EXC	29536	EMB	5361	
UNDERCUT	7444	35.0%	1876	7237
		UNDERCUT	7444	
TOTAL	36980	35.0%	2605	10049
		WASTE		19693
		TOTAL		36980
Haul	112,900	C Y Sta		

Waste may be used as out of balance exc for EB lane

Exit 40 Ramp B

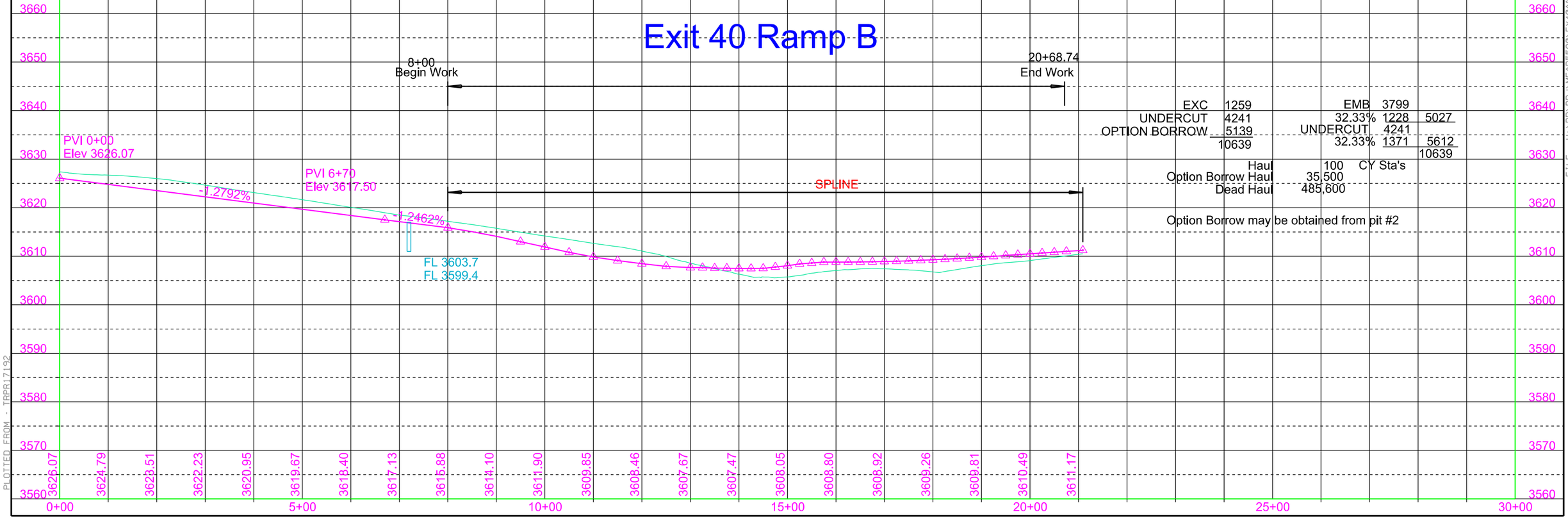

EXC	1259	EMB	3799	
UNDERCUT	4241	32.33%	1228	5027
OPTION BORROW	5139	UNDERCUT	4241	
	10639	32.33%	1371	5612
				10639
Haul	100	CY Sta's		
Option Borrow Haul	35,500			
Dead Haul	485,600			

Option Borrow may be obtained from pit #2

PLOT SCALE - 1:200
PLOT NAME - 32
FILE - U:\RD\PRJ\MEA0558\0\EX40A&BV.DGN
PLOTTED FROM - TPPR17192

STATE OF SOUTH DAKOTA	PROJECT	SHEET	TOTAL SHEETS
	IM 0901(38)40	B36	B114

Plotting Date: 08/04/2016

1033+35 to 1052+10 (EB)
Take Out Concrete 4.7'
Median Barrier

1036+98 (EB) (306 ac)
Retain 8' x 9' RCBC

Remove Drop Inlets
with Frame & Grates
at the following locations:
1043+12 - 2' L to 6' R (EB)
1048+68 - 0' R to 4' R (EB)
56+61 - 56' R (WB)

40+90 (WB)
Take Out 18"- 56' RCP
& 2 Safety Ends
(Incidental Work, Grading)

41+00 (WB) (2.5 ac)
Install 24" - 102' RCP
& 1 Safety End

41+00 - 56' R
Install Type L Median Drain
and Frame & Grate Assembly

1043+12 (EB)
Take Out 18" - 42' RCP
(Incidental Work, Grading)

1048+68-57' R (EB)
Retain Median Drain

1047+72 (EB)
Retain RCBC

47+55.18 (WBL) (130 ac)
Install 7' x 7' Box
Culvert Extension
(See Section E)

1048+69 (EB)
Take Out 18"- 41' RCP
and Plug Pipe
(Incidental Work, Grading)

48+69 (WB)
Take Out 18"- 125' RCP
& 2- Flared Ends
(Incidental Work, Grading)

49+50 - 56' R (WB)
Install Type M Median Drain
and Frame & Grate Assembly

49+50(WB) (3.7 Acres)
Install 24" - 132' RCP
& 1 Safety End

56+60 (WB)
Take Out 24"-85' RCP
and 1 End Section
(Incidental Work, Grading)

56+61 (WB) (19 ac)
Install 36" - 120' RCP
& 1-30" to 36" Increaser
& 1 Sloped End

1056+77 (EB)
Take Out 30" to 36" Increaser,
and 30"-103' RCP
and 1-End Section
(Incidental Work, Grading)

1056+77 (EB) (19 ac)
Install 36" - 112' RCP
& 1 Sloped End w/bars

1057+88-50' R (EB)
Take Out 24"-54' RCP
& 2 End Sections
(Incidental Work, Grading)

59+00-88' L to 60' R (WB) (12 ac)
Install 30" - 132' RCP
& 1-30" to 24" RC Tee
& 1 Sloped End
(Between Median Drain & Outlet)

59+00 to 59+13 - 56' R (WB) (3 ac)
Install 24" - 10' RCP
(Between Median Drain & RC Tee)

1059+16.41 -52' R to 41' R (EB) (9 ac)
Install 24" - 86' RCP
& 1-24" to 30" Increaser
(Between Median Drain & RCP Increaser)

10+39 (RA Ramp D) (6 ac)
Install 24" - 52' RCP
& 1 Sloped Ends
(Between Inlet & Median Drain)

59+13 - 56' R (WB)
Install Type M Median Drain
and Frame & Grate Assembly

1059+16.41 - 41.65 R (EB)
Install Type L Median Drain
and Frame & Grate Assembly

56+91-94' L
Do Not Disturb
Power Pole

56+61-79'L to 200' L (WB)
Cut Outlet Ditch

30+10-451' L
Environmental Site
ESS1

Parcel A1
Omitted

Clair D Hagan & Darlene Hagan
Parcel CA2

45+55.66-75' L (WB)
End New Control
of Access

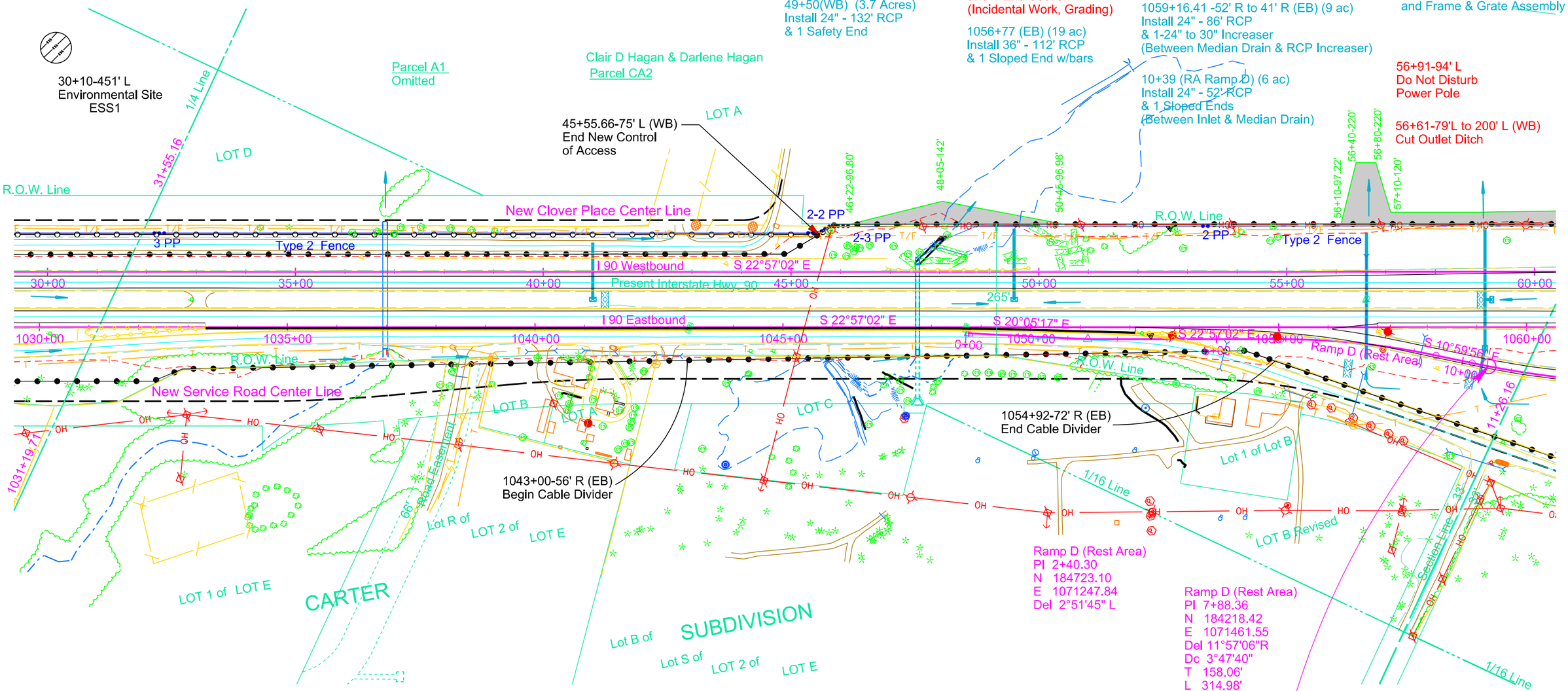

Ramp D (Rest Area)
PI 2+40.30
N 184723.10
E 1071247.84
Del 2°51'45" L

Ramp D (Rest Area)
PI 7+88.36
N 184218.42
E 1071461.55
Del 11°57'06"R
Dc 3°47'40"
T 158.06'
L 314.98'
R 1510.00'

Ramp D (Rest Area)
PI 12+19.31
N 183794.26
E 1071543.99
Del 11°56'04" L
Dc 2°59'59"
T 199.64'
L 397.84'
R 1910.00'

Sec. 20 - T4N - R6E

End Grading (Rest Area Ramp D)

Station 10+50.00

Parcel CA2
46+22.00 to 50+45.00 L
Temporary easement for
Cut & fill containing
0.2 ac, more or less

Parcel CA2
56+10 to 60+94 L
Temporary easement for
Cut, fill, & Outlet Ditch containing
0.4 ac, more or less

PLOT SCALE - 1:200
PLOT NAME - 33
PLOTTED FROM - TRPR17192
FILE - U:\RD\PROJ\MEAD5580\030.DGN

STATE OF SOUTH DAKOTA	PROJECT	SHEET	TOTAL SHEETS
	IM 0901(38)40	B37	B114

Plotting Date: 08/04/2016

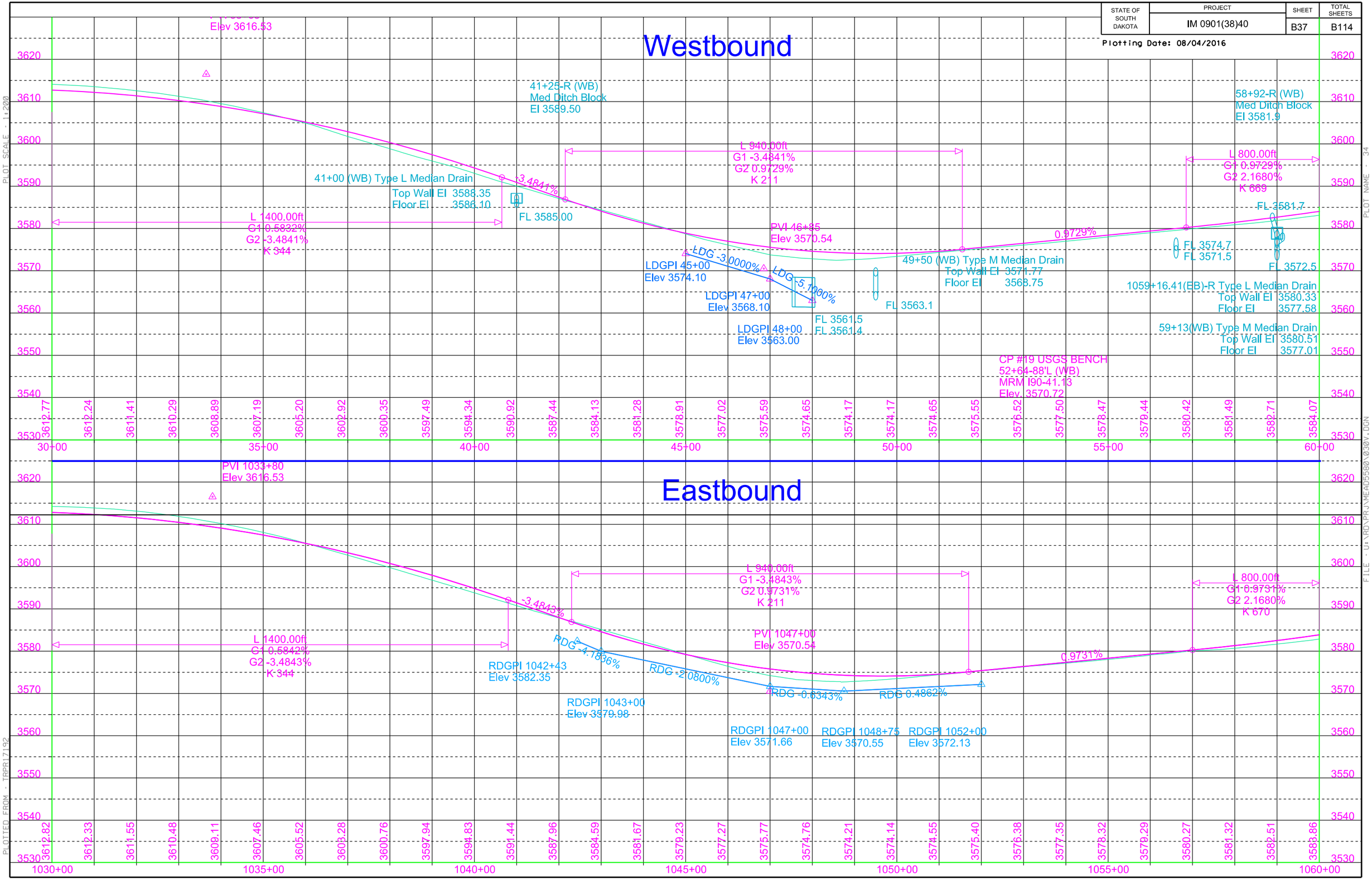

PLOT SCALE - 1:200

PLOTTED FROM - TRPR17192

PLOT NAME - 34

FILE - U:\RD\PRJ\MEAD5580\030V.DGN

STATE OF SOUTH DAKOTA	PROJECT	SHEET	TOTAL SHEETS
	IM 0901(38)40	B38	B114

Plotting Date: 08/04/2016

1068+41-74' R to 1070+24-12' R (EB)
Take Out 6"- 180' PVC Sewer Line
(Incidental Work, Grading)

70+07-61' L to 71+34-150' L (WB)
Take Out 6"- 155' PVC Sewer Line
(Incidental Work, Grading)

14+73 R (Ramp D)
Clean out Pipe End
(Incidental Work, Grading)

7+60 (Ramp A)
Take Out 18"-72' RCP
& 2 End Sections
(Incidental Work, Grading)

8+50 (Rest Area Ramp A) (2.3 ac)
Install 24" - 94' RCP
& 2 Sloped Ends

1070+24-12' R (EB) to 70+07-61' L (WB)
Take Out 6"- 185' PVC Sewer Line
(Incidental Work, Grading)

1068+41-74' R to 1070+24-34' R (EB)
Install 6"-188' PVC Sewer Pipe

1070+24-34' R (EB) to 70+07-61' L (WB)
Install 6"-207' PVC Sewer Pipe

70+07-61' L (WB) to 9+24-33' L (RA Ramp A)
Install 6"-155' PVC Sewer Pipe

0+40 (Ramp B)
Take Out 18"-56' RCP
& 2 End Sections
(Incidental Work, Grading)

0+00 (Rest Area Ramp B)
Install 18" - 50' RCP
& 1 Safety Ends
(Between Median Drain & Outlet)

0+00 - 30.7' R (Rest Area Ramp B)
Install Type L Median Drain
and Frame & Grate Assembly

2+50 (Rest Area Ramp C)
Install 24" - 60' RCP
& 2 Safety Ends

83+69 (WB)
Take Out 24"-71' RCP
& End Section
(Incidental Work, Grading)

83+69-R (WB)
Remove Drop Inlet
with Frame & Grate

1070+24-12' R to 34' R
Remove & Reset Manhole

Reconstruct Manhole at
the following locations:
1070+24-34' R (EB)
70+07-61' L (WB)
9+24-33' L (RA Ramp A)

Adjust Water Valves at
the following locations:
9+19-38' L (RA Ramp A)
9+27-37' L (RA Ramp A)

62+96-480' L (WB)
End New Control
of Access

End Grading (Rest Area Ramp A)
Station 10+25.00

Ramp A
PI 7+58.70
N 183103.07
E 1072213.11
Del 13°11'28"R
Dc 2°59'59"
T 220.85'
L 439.74'
R 1910.00'

(WB)
PI 73+20.67
N 182729.93
E 1072239.55
Del 1°16'11"R
Dc 0°21'54"
T 173.96'
L 347.90'
R 15700.00'

Begin Grading (Rest Area Ramp B)
Station 0+00.00

Ramp B
PI 1+29.85
N 182025.51
E 1072602.03
Del 2°36'08"R
Dc 1°49'50"
T 71.09'
L 142.15'
R 3130.00'

Ramp B
PI 3+73.35
N 181785.12
E 1072640.99
Del 12°28'26" L
Dc 3°47'40"
T 165.02'
L 328.74'
R 1510.00'

Ramp A
PI 2+90.85
N 183488.25
E 1071944.50
Del 11°56'25" L
Dc 2°29'28"
T 240.53'
L 479.32'
R 2300.00'

60+91 L (WB)
End Type 2

61+18-96' L(WB)
Begin New Control
of Access

R.O.W. Line
1/4 Line
RCP & E Railroad
Railroad R.O.W. Line
50'
60+73.08
60+81.89-97.42'
60+94-123.53'
8+60.04
73+14.92
89+71.81
S 21°41'59" E
S 11°48'33" E
S 9°12'25" E
S 34°53'27" E
S 22°57'02" E
Ramp A (Rest Area)
Ramp B (Rest Area)
S 21°40'51" E
I 90 Westbound
I 90 Eastbound
Present Interstate Hwy. 90
1060+37.55
1074+93.66
1075+76.79
S 21°40'52" E
S 21°40'32" E
S 22°56'00" E
Ramp D (Rest Area)
14+73
S 22°54'35" E
S 33°40'34" E
Ramp C (Rest Area)
New Service Road Center Line
2 PP
3 PP
1079+00 R (EB)
End Type 2
1079+00 R (EB)
Begin Cable Divider
7+35.06
1/4 Line
LOT B
LOT A
1/16 Line
5+74.40
1089+36.90
66' Existing County Road
Lot 1
Lot 2
1068+72 R (EB)
Begin Type 2

Ramp D
PI 12+19.31
N 183794.26
E 1071543.99
Del 11°56'04" L
Dc 2°59'59"
T 199.64'
L 397.84'
R 1910.00'

Ramp C
PI 1+58.35
N 182893.89
E 1071927.96
Del 10°45'59" L
Dc 7°28'48"
T 72.18'
L 143.94'
R 766.00'

(EB)
PI 1073+35.84
N 182687.40
E 1072135.93
Del 1°16'10"R
Dc 0°21'54"
T 173.92'
L 347.83'
R 15700.00'

Ramp C
PI 6+05.28
N 182521.61
E 1072176.01
Del 11°59'42"R
Dc 2°29'28"
T 241.64'
L 481.51'
R 2300.00'

CARTER
SUBDIVISION

Sec. 29 - T4N - R6E

Begin Grading (Rest Area Ramp C)
Station 0+00.00

PLOT SCALE - 1:200
PLOT NAME - 35
PLOTTED FROM - TRPR17192
FILE - U:\RD\PRJ\MEAD5580\060.DGN

STATE OF SOUTH DAKOTA	PROJECT	SHEET	TOTAL SHEETS
	IM 0901(38)40	B39	B114

Plotting Date: 08/10/2016

Westbound

EXC	8225		EMB	65269	
UNDERCUT	67557		25.74%	16800	82069
MUCK	14758		UNDERCUT	67557	
OPTION BORROW	91233		25.74%	17389	84946
TOTAL	181773		WASTE		14758
			TOTAL		181773

Haul 200 CY Sta's
Option Borrow Haul 4,422,200
Dead Haul 1,866,800

Option Borrow may be obtained from pit #1 (70,000) and pit #2 (21,232)
Waste is muck excavation to be disposed of at a site approved by the Engineer

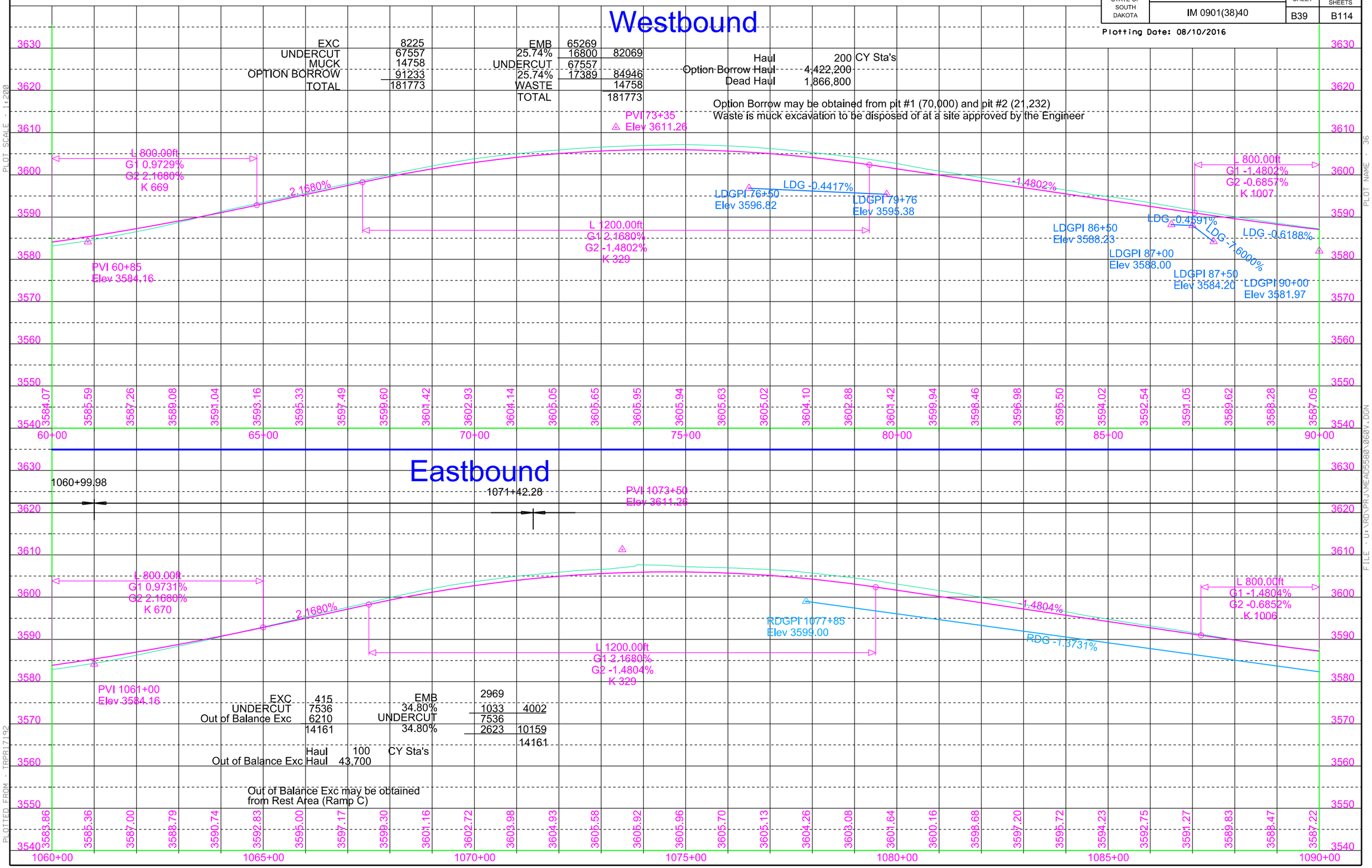

EXC	415		EMB		2969	
UNDERCUT	7536		34.80%		1033	4002
Out of Balance Exc	6210		UNDERCUT		7536	
	14161		34.80%		2623	10159
						14161

Haul 100 CY Sta's
Out of Balance Exc Haul 43,700

Out of Balance Exc may be obtained
from Rest Area (Ramp C)

PLOT SCALE - 1:200
PLOTTED FROM - TRPR17192
PLOT NAME - 36
FILE - U:\RD\PRJ\MEAD5580\060V.DGN

STATE OF SOUTH DAKOTA	PROJECT	SHEET	TOTAL SHEETS
	IM 0901(38)40	B40	B114

Plotting Date: 08/04/2016

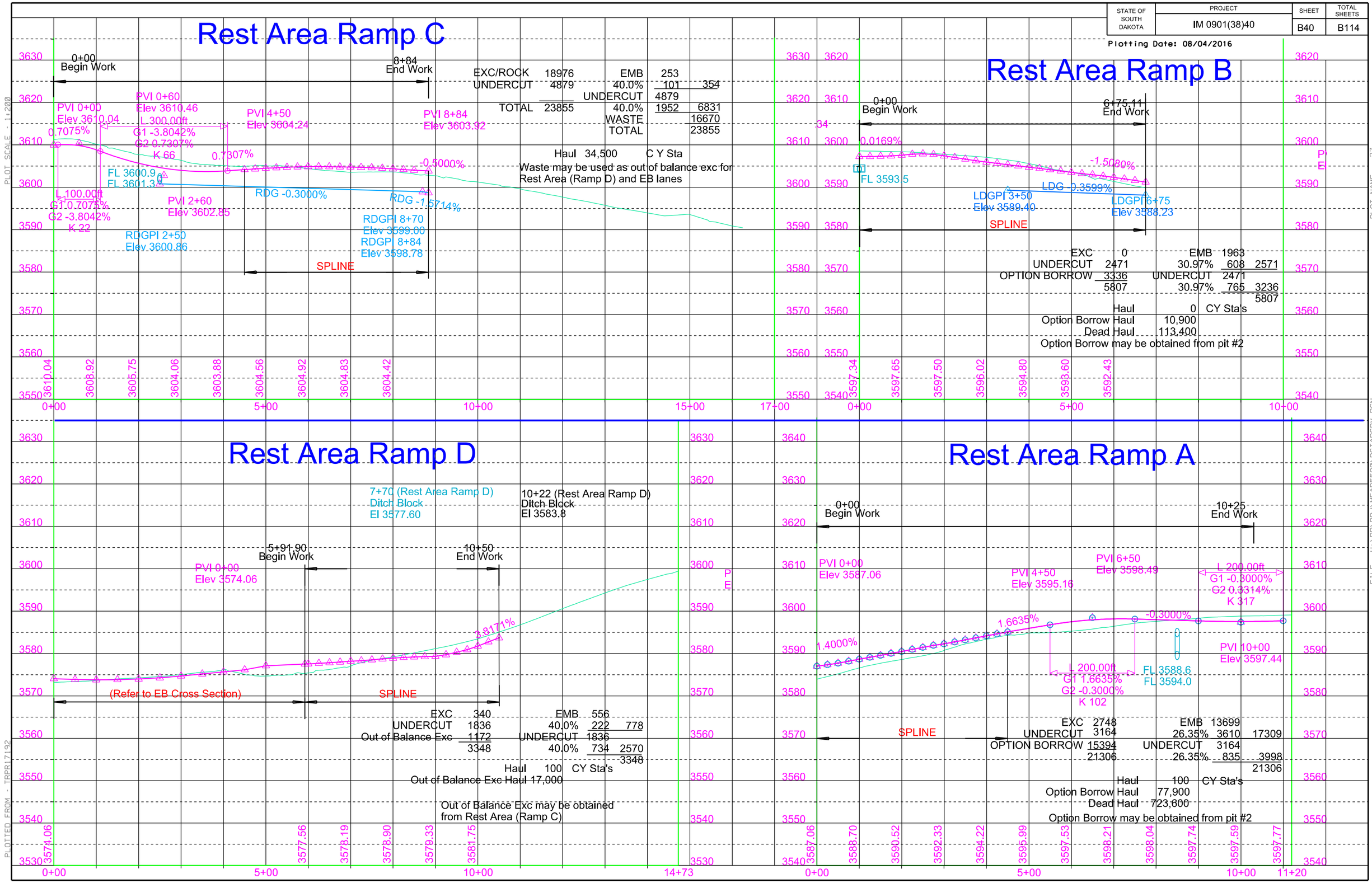

PLOT SCALE - 1:200
PLOTTED FROM - TRPR17192
PLOT NAME - 37
FILE - U:\RDV\PRJ\MEAD5580\RST\ABCDV.DGN

STATE OF SOUTH DAKOTA	PROJECT	SHEET	TOTAL SHEETS
	IM 0901(38)40	B41	B114

Plotting Date: 09/02/2016 Revised 9-2-2016 (BT)

1093+00 (EB) (3.74 Acres)
Install 24" - 100' RCP
& 1 Safety End
(Between Outlet & Median Drain)

1093+00 - 56' L (EB)
Install Type L Median Drain
and Frame & Grate Assembly

112+00 - 56' R (WB)
Install Type M Median Drain
and Frame & Grate Assembly

112+00 to 112+12 - 56' R(WB) (3.8 Acres)
Install 24"-10' RCP
(Between Median Drain & Existing Box Culvert)

1112+30 (EB)
Retain RCBC

112+14.54 (WB) (568 Ac)
Install 9' x 7' Box
Culvert Extension
(See Section E)

112+00 to 112+50-80 'L (WB)
Install Class B Riprap
(124.6 Tons) (2' Thick)
& Class B Drainage Fabric
(160 Sq Yd)

116+67-57' R (WB)
Remove Drop Inlet with
Frame and Grate

1116+84 (EB)
Take Out 18"-70' RCP
& End Section
(Incidental Work , Grading)

116+67 (WB)
Take Out 18"-72' RCP
& End Section
(Incidental Work , Grading)

0+50 (XR1118)
12" - 36' CMP
& 2 Flared Ends

Sec. 29 - T4N - R6E

(WB)
PI 104+93.68
N 179781.38
E 1073411.78
Del 1°16'37" L
Dc 0°21'54"
T 174.95'
L 349.88'
R 15700.00'

XR1118 (Culdesac)
PI 0+24.22
N 178536.69
E 1073623.61
Del 51°41'02" L
Dc114°35'30"
T 24.22'
L 45.10'
R 50'

XR1118 (Culdesac)
PI 3+16.60
N 178512.70
E 1073623.28
Del 51°41'02" L
Dc114°35'30"
T 24.22'
L 45.10'
R 50'

RCP & E Railroad, Inc.
Parcel A2

1/4 Line
Railroad R.O.W. Line
R.O.W. Line
97+75-108.16'
98+90-136'
104+20-117'
89+71.81
S 21°40'51" E
S 21°40'52" E
S 22°57'28" E
90+00
95+00
100+00
105+00
110+00
115+00
120+00
1090+00
1095+00
1100+00
1105+00
1110+00
1115+00
1120+00
Present Interstate Hwy. 90
283'
118+67.87
33'
118+69.64-82.32'
118+85-115.48'
119+42.36-82.29'
119+58-116.04'
3 PP
New Service Road
1103+47 R (EB)
Begin Type 2
1103+58-100.02'
1103+45.64-91.24'
Western Truck and Equipment LLC
Parcel A3
1111+00-118'
1115+06 R (EB)
End Type 2
Begin Type 6 S
1115+00-88.50'
LOT 1
LOT 2
LOT 3
LOT 2A
1113+50 (EB)
Elim Ent
1117+55 R (EB)
End Type 6S
Begin Type 2
1117+08-88.59
1117+10-185.68'
1117+54.97-88.62
1117+46.54-263.81
1117+52-266'
1118+27.70-88.65'
1118+31.93- 88.64
1118+33-125' R
Do Not Disturb
Billboard
(EB)
PI 1105+09.49
N 179738.26
E 1073308.41
Del 1°16'36" L
Dc 0°21'54"
T 174.92'
L 349.82'
R 15700.00'
1103+46 R (EB)
End Cable Divider
OH
DICKSON
HOMESTEAD
ESTATES
Lot 2A
Lot 2C
1112+50 to 1115+06 R (EB)
Do Not Disturb Tubular Fence
Melissa Beth Rowe
& Dave Rowe
Parcel 1
1117+15-125' R
Retain Entrance
Section Line
LOT 11
1/16 Line
Parcel 1 (Sta./Offsets
1117+16.56-135.84'
1117+30.17-142.15'
1117+31.69-103.18'
1117+45.30-109.48'
0+00 to 1+30 R (XR118)
Do Not Disturb RV Hookups
Trail's End Corporation
Parcel 2
Omitted
Parcel A5

Sec. 32 - T4N - R6E

Parcel A2
97+75.00 to 118+85.00 L
Temporary easement for
Cut & fill containing
1.6 ac, more or less

Parcel A3
1103+45.64 to 1115+00 R
Temporary easement for
Cut & fill containing
0.5 ac, more or less

Parcel 1
1117+08 to 1117+54.97 R
Temporary easement for
Cut & fill containing
0.1 ac, more or less

Parcel A5
1117+46.54 to 1118+31.93 R
Temporary easement for
Cut & fill containing
0.1 ac, more or less

PLOT SCALE - 1:200
PLOTTED FROM - TRPR17192
PLOT NAME - 38
FILE - U:\RD\PRJ\MEAD5580\090.DGN

STATE OF SOUTH DAKOTA	PROJECT	SHEET	TOTAL SHEETS
	IM 0901(38)40	B42	B114

Plotting Date: 08/04/2016

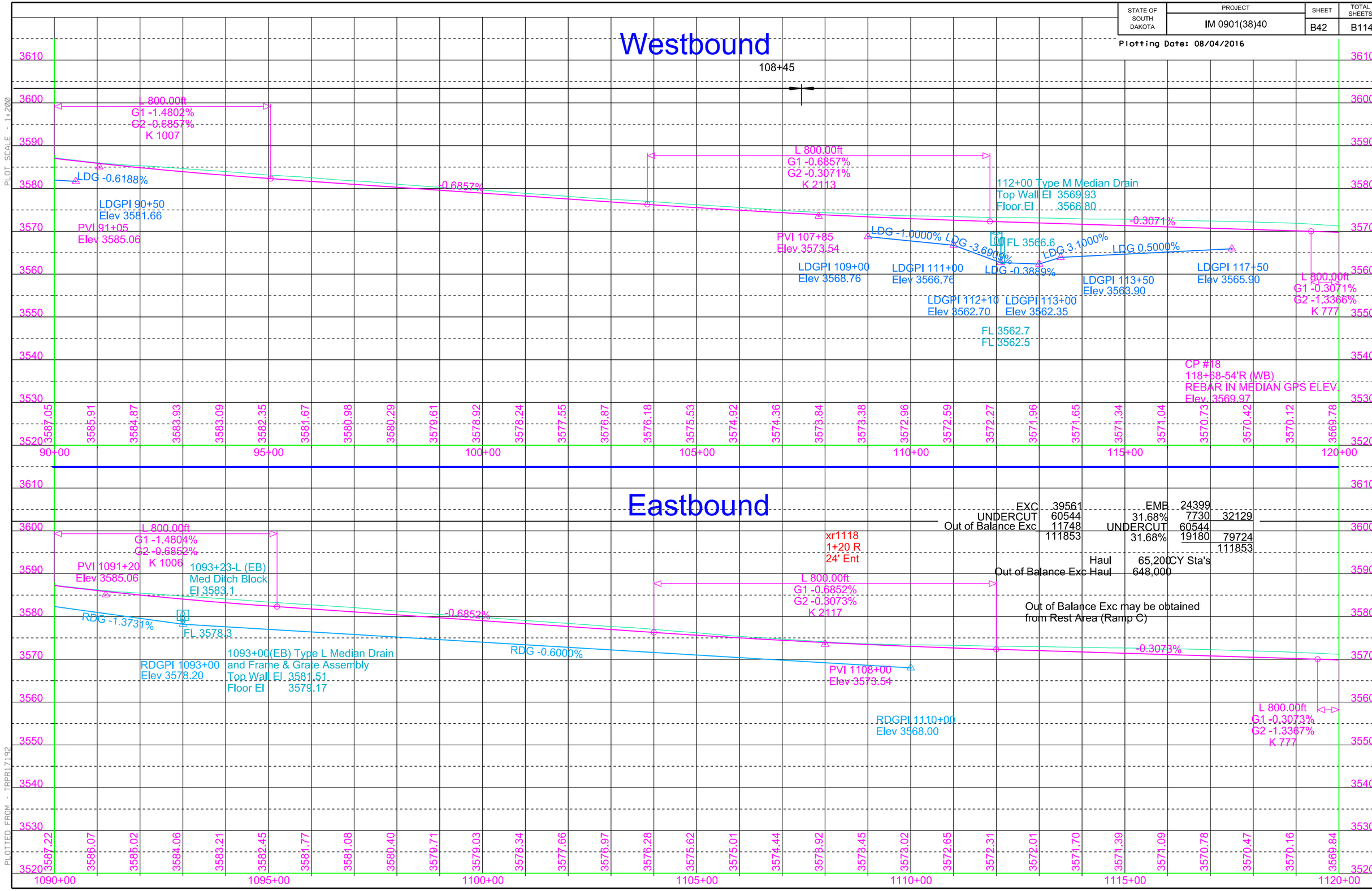

PLOT SCALE - 1:200
PLOT NAME - 39
PLOTTED FROM - TRPR17192
FILE - U:\RD\PRJ\MEAD5580\0901V.DGN

STATE OF SOUTH DAKOTA	PROJECT	SHEET	TOTAL SHEETS
	IM 0901(38)40	B43	B114

Plotting Date: 09/02/2016 Revised 9-2-2016 (BT)

127+00 (WB) (3 ac)
Install 24" -102' RCP
& 1 Safety End
(Between Outlet & Median Drain)

138+56-53'R to 140+38-53'R (WB)
Take Out 18"-176' RCP
& End Section
(Incidental Work, Grading)

140+38-53'R to 20' L (WB)
Take Out 18"- 64' RCP
& End Section
(Incidental Work, Grading)

142+25.25 - 21.62' L to 54.4' L
Install 18"- 26' RCP
& 1 Safety End (WB)
(Between Drop Inlet and Outlet)

1142+42 - 21.62' R to 52' R
Install 18"- 24' RCP (EB)
& 1 Safety End
(Between Drop Inlet and Outlet)

127+00 -56' R (WB)
Install Type L Median Drain
and Frame & Grate Assembly

140+53.80 to 142+13.30 (47.5 sq mi)
Install 159' -6" Continuous
Concrete Bridge (WB)
(See Section E)

1140+70.23 to 1142+29.73 (47.5 sq mi)
Install 159' -6" Continuous
Concrete Bridge (EB)
(See Section E)

140+38-53'R
Remove Drop Inlet
with Frame and Grate

141+33 (WB) & 1141+50 (EB)
Take Out Continuous Concrete Bridge
(Incidental Work, Structure)
(See Section E)

133+11-94' L (WB)
DND Power Pole & Anchors
& Communication Cabinet

Install 1.5' X 3' Type D Drop Inlet
with 6" Concrete collar
and Type D Frame & Grate
at the following locations:
142+25.25-21.62' L (WB)
1142+42-21.62' R (EB)

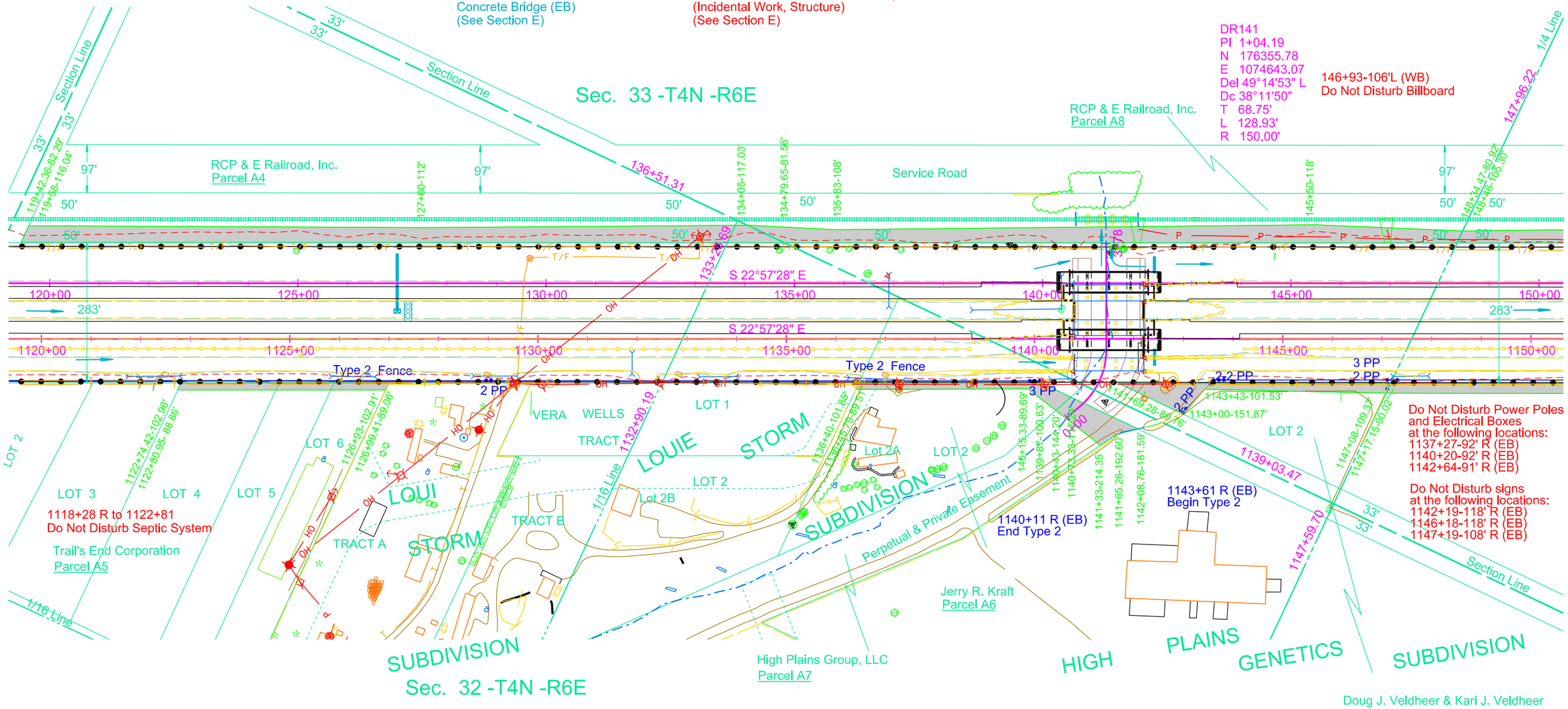

Parcel A4
119+42.36 to 134+79.65 L
Temporary easement for
Cut & fill containing
1.1 ac, more or less

Parcel A5
1122+74.42 to 1126+99.41 R
Temporary easement for
Cut & fill containing
0.1 ac, more or less

Parcel A6
1136+40.00 to 1140+73.33 R
Temporary easement for
Cut & Fill containing
0.1 ac, more or less

Parcel A7
1140+43.00 to 1142+08.76 R
Temporary easement for
Cut & Fill containing
0.2 ac, more or less

Parcel A8
134+05 to 148+46 L
Temporary easement for
Cut & fill containing
1.0 ac, more or less

Parcel A9
1141+69.28 to 1147+17.15 R
Temporary easement for
Cut & fill containing
0.2 ac, more or less

PLOT SCALE - 1:200
PLOT NAME - 40
FILE - U:\RDV\PRJ\MEAD5580\T120.DGN
PLOTTED FROM - TRPR17192

STATE OF SOUTH DAKOTA	PROJECT	SHEET	TOTAL SHEETS
	IM 0901(38)40	B44	B114

Plotting Date: 08/04/2016

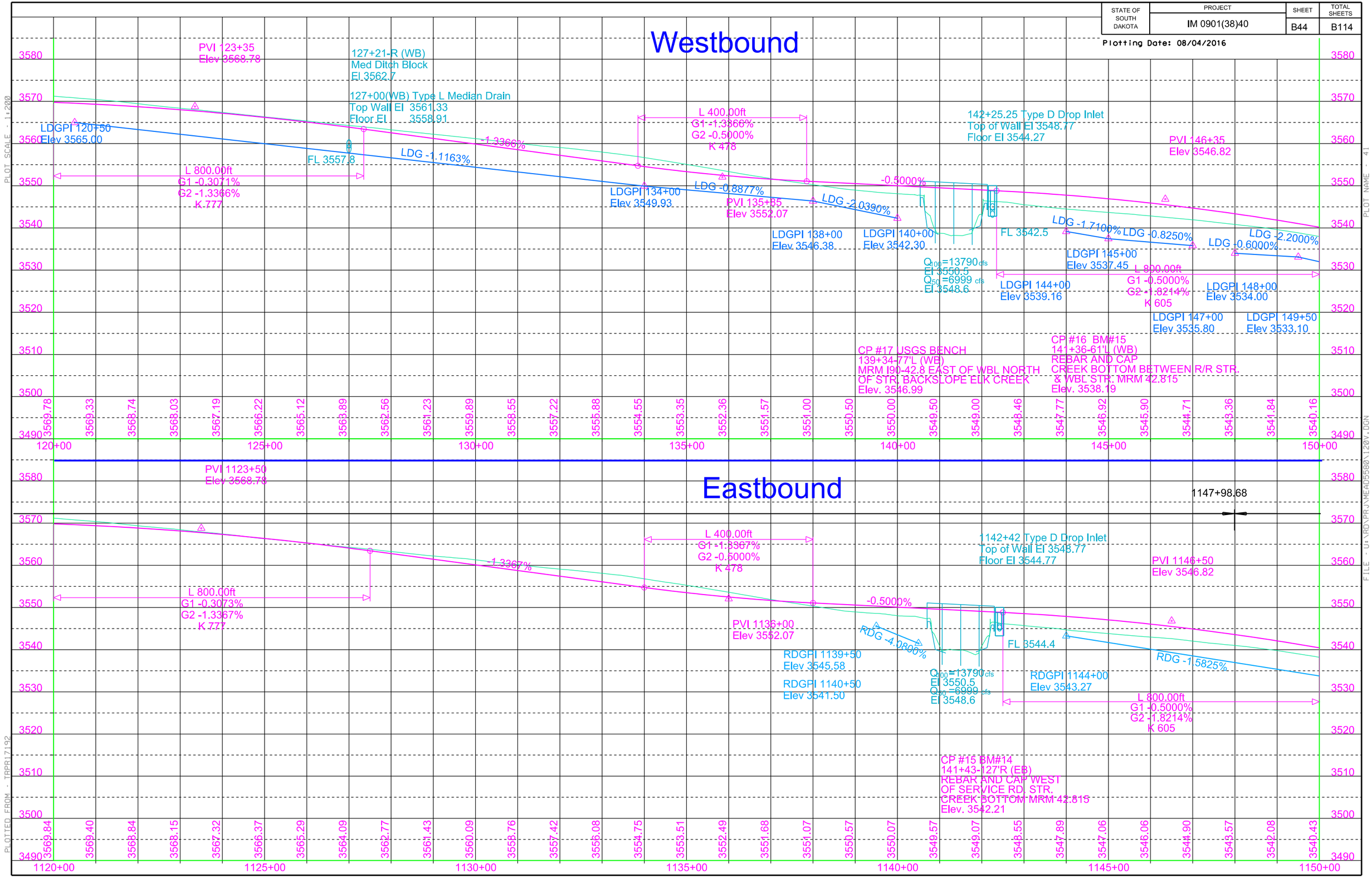

STATE OF SOUTH DAKOTA	PROJECT	SHEET	TOTAL SHEETS
	IM 0901(38)40	B45	B114

Plotting Date: 08/09/2016

160+65 - 55' R (WB)
Remove Drop Inlet
with Frame and Grate

160+65 R (WB)
Take Out 24"- 72' RCP
& End Section
(Incidental Work, Grading)

174+11 to 174+28 - 56' R (WB) (2.85 ac)
Install 24" - 16' RCP
(Between Median Drain & Existing Box Culvert)

174+11 - 56' R (WB)
Install Type M Median Drain
and Frame & Grate Assembly

1174+52 (EB) & 174+35 (WB)
Retain 14' x 7' RCBC

1176+44-225' R to 1176+86-108' R (EB)
Install 18" - 116' CMP (42 & 60 & 12)
And 2 - 10.0° Elbows
& 1 CMP Flared End
& 1 CMP Safety End

1160+82 (EB)
Take Out 24"- 68' RCP
& End Section
(Incidental Work, Grading)

160+00 WB (3.64 ac)
Install 24" - 108' RCP
& 1 Safety End
(Between Outlet & Median Drain)

1174+51.9 (EB)-174+35.43 (WB) (610 ac)
Install 2-7' x 7' Box
Culvert Extensions
(See Section E)

1176+86-108' R (EB)
Install Bank and Channel
Protection Gabions
(4.5 CY)

1174+00 to 1174+67 72' R (EB)
Install Class B Riprap
112 Tons (2' Thick)
& Class B Drainage Fabric
(146 Sq Yd)

0+88 (XR1177)
Install 18"-38' CMP
& 2 Safety Ends

Do Not Disturb Billboards
at the following locations:
151+96-106' L (WB)
156+95-106' L (WB)
161+96-107' L (WB)
166+91-107' L (WB)
178+29- 85' L (WB)

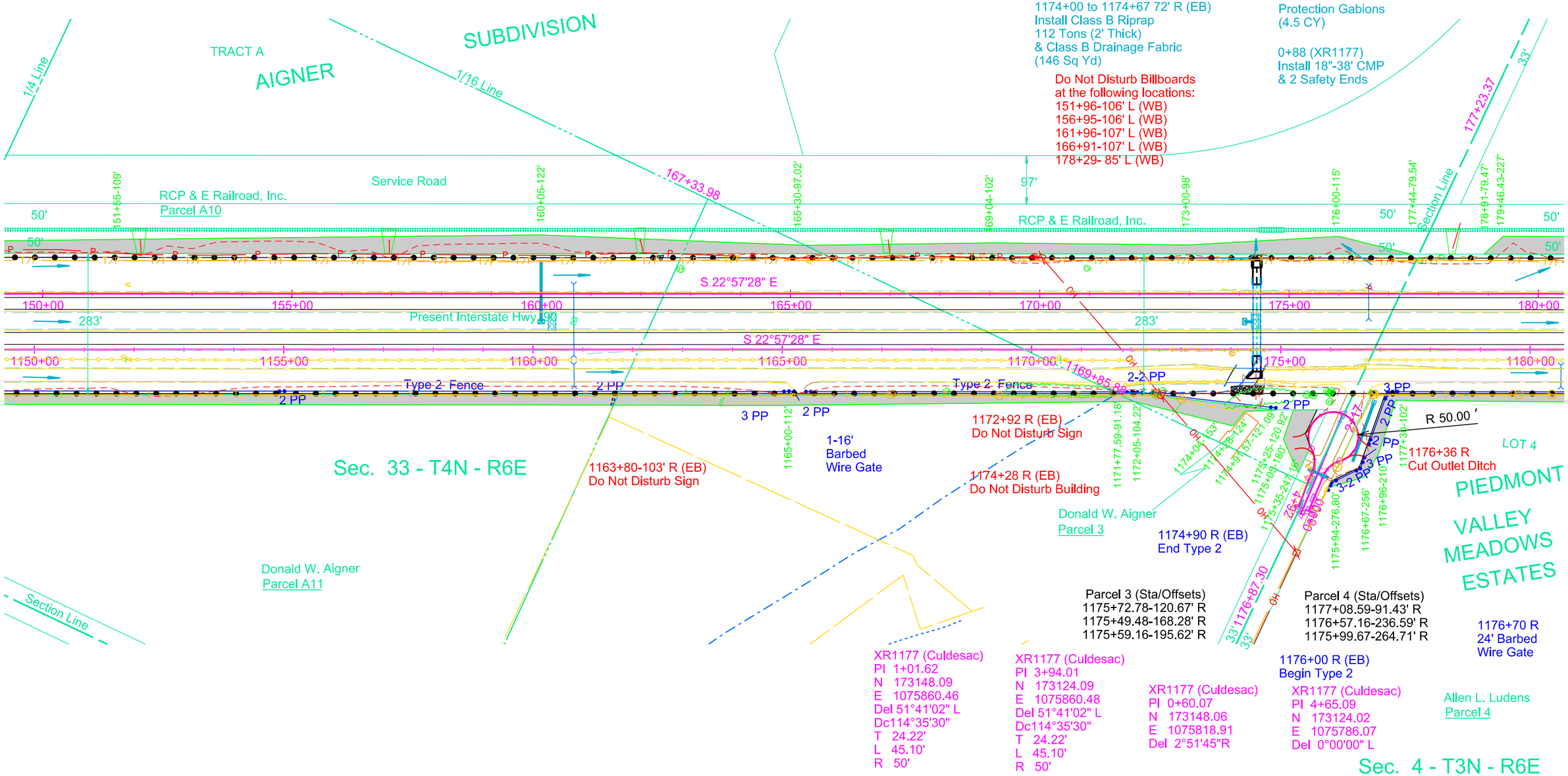

Parcel A10
148+34.47 to 177+44 L
Temporary easement for
Cut & fill containing
1.8 ac, more or less

Parcel A11
1147+08 to 1172+05 R
Temporary easement for
Cut & fill containing
1.1 ac, more or less

Parcel 3
1171+77.59 to 1174+91.57 R
Temporary easement for
Cut & fill containing
0.2 ac, more or less

Parcel 3
1175+05 to 1175+72.78 R
Temporary easement for
Cut & fill containing
0.1 ac, more or less

Parcel 4
1175+94.00 to 1182+35.40 R
Temporary easement for
Cut & fill containing
0.3 ac, more or less

PLOT SCALE - 1:200
PLOTTED FROM - TRPR13418
PLOT NAME - 42
FILE - U:\RD\PRJ\MEA05580\150.DGN

STATE OF SOUTH DAKOTA	PROJECT	SHEET	TOTAL SHEETS
	IM 0901(38)40	B46	B114

Plotting Date: 08/10/2016

Westbound

EXC	49032	EMB	93411
UNDERCUT	53303	28.71%	26818
MUCK	1977	UNDERCUT	53303
OPTION BORROW	86283	28.71%	15303
Out of Balance Exc	212	WASTE	1977
	190813		190813
Haul		100	CY Sta's
Option Borrow Haul		6,039,300	
Dead Haul		763,400	
Out of Balance Haul		200	

120229

68606

Option Borrow may be obtained from Borrow Pit # 2

Out of Balance Exc may be obtained from DR141

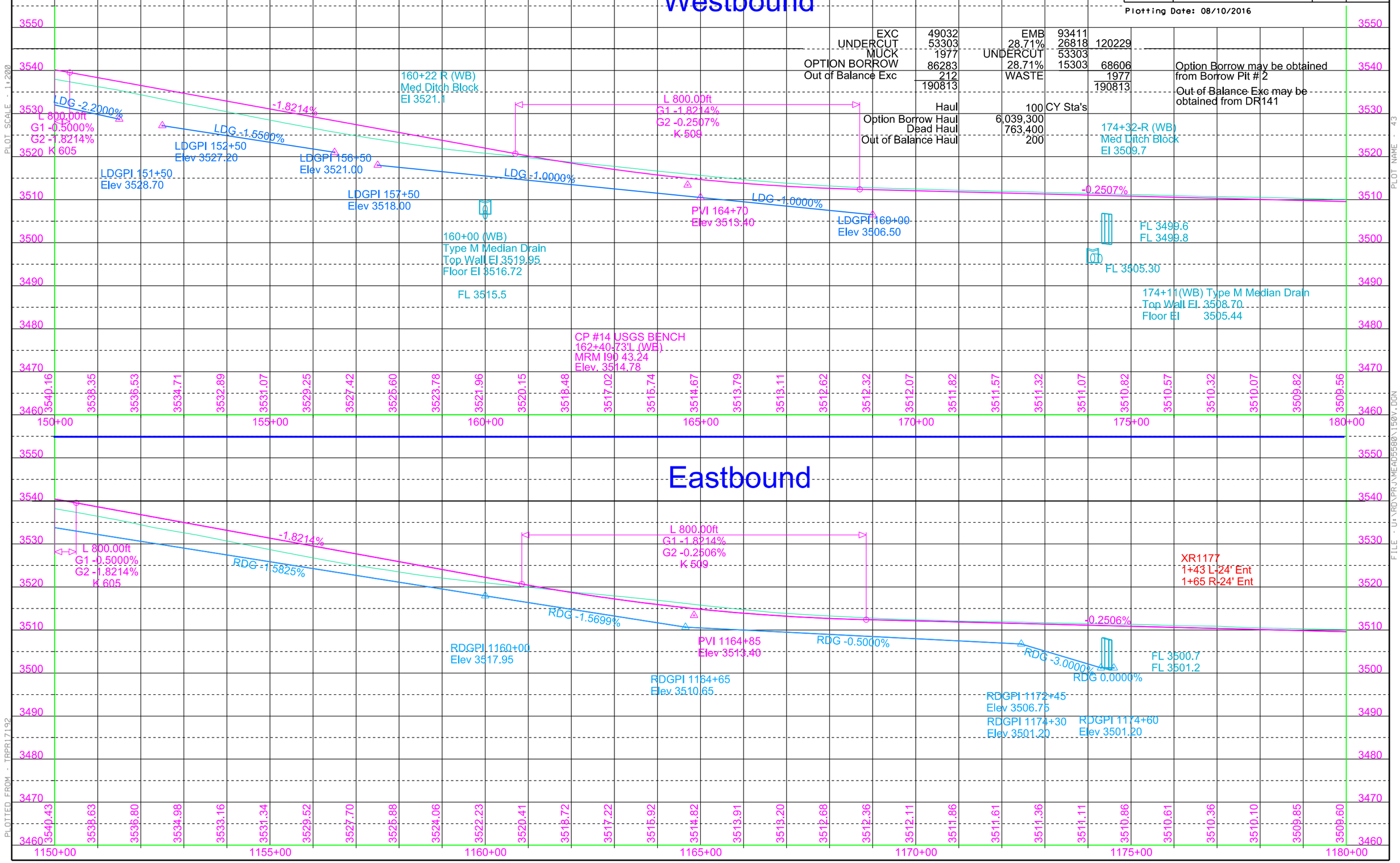

Eastbound

PLOT SCALE - 1:200

PLOTTED FROM - TRPR17192

PLOT NAME - 43

FILE - U:\RD\PRJ\MEA05580\150V.DGN

STATE OF SOUTH DAKOTA	PROJECT	SHEET	TOTAL SHEETS
	IM 0901(38)40	B47	B114

Plotting Date: 08/09/2016

183+17 (WB)
Retain RCBC

182+17.45 (WB) (418 ac)
Install 10' x 7' Box
Culvert Extension
(See Section E)

184+00 (WB) (3.62 ac)
Install 24" - 114' RCP
& 1 Safety End
(Between Outlet & Median Drain)

184+00 - 56' R (WB)
Install Type M Median Drain
and Frame & Grate Assembly

189+80 (EB)
Retain 36"-150' RCP

189+80 (EB)
Remove for Reset
2-36" RCP
Flared End Sections

189+64 WB (75 ac)
Install 36" - 38' RCP
& Reset 1 Flared End

1189+81 EB (75 ac)
Install 36" - 34' RCP
& Reset 1 Flared End

207+00 (WB) & 1207+00 (EB)
Take Out Continuous Concrete Bridge
(Incidental Work, Structure)
(See Section E)

192+00 (WB) (2.83 ac)
Install 24" - 116' RCP
& 1 Safety End
(Between Outlet & Median Drain)

192+00 - 56' R (WB)
Install Type M Median Drain
and Frame & Grate Assembly

207+91-16' L to 52' R
Take Out 18"- 66' RCP
& End Section
(Incidental Work, Grading)

206+13 - 21.62' L to 68' L (WB)
Install 18" - 42' RCP
& 1 RCP Safety End
(Between Drop Inlet & Outlet)

1206+29.42 - 21.62' R to 41' R (EB)
Install 18" - 12' RCP
&1 RCP Safety End
(Between Drop Inlet & Outlet)

207+91- 52' R 209+75 - 57' R (WB)
Take Out 18"- 178' RCP
& End Section
(Incidental Work, Grading)

207+92-52' R (WB)
Remove Drop Inlet
with Frame and Grate

1206+41.33 to 1207+91.83 (EB) &
206+24.93 to 207+75.43 (WB) (16.2 sq mi)
Install 150'-6" Continuous
Concrete Bridges
(See Section E)

Install 1.5'x3' Type D Drop Inlet
with 6" Concrete Collar
and Type D frame & Grate
at the following locations:
206+13-21.62' L (WB)
1206+29.42-21.62' L (EB)

Sec. 4 - T3N - R6E

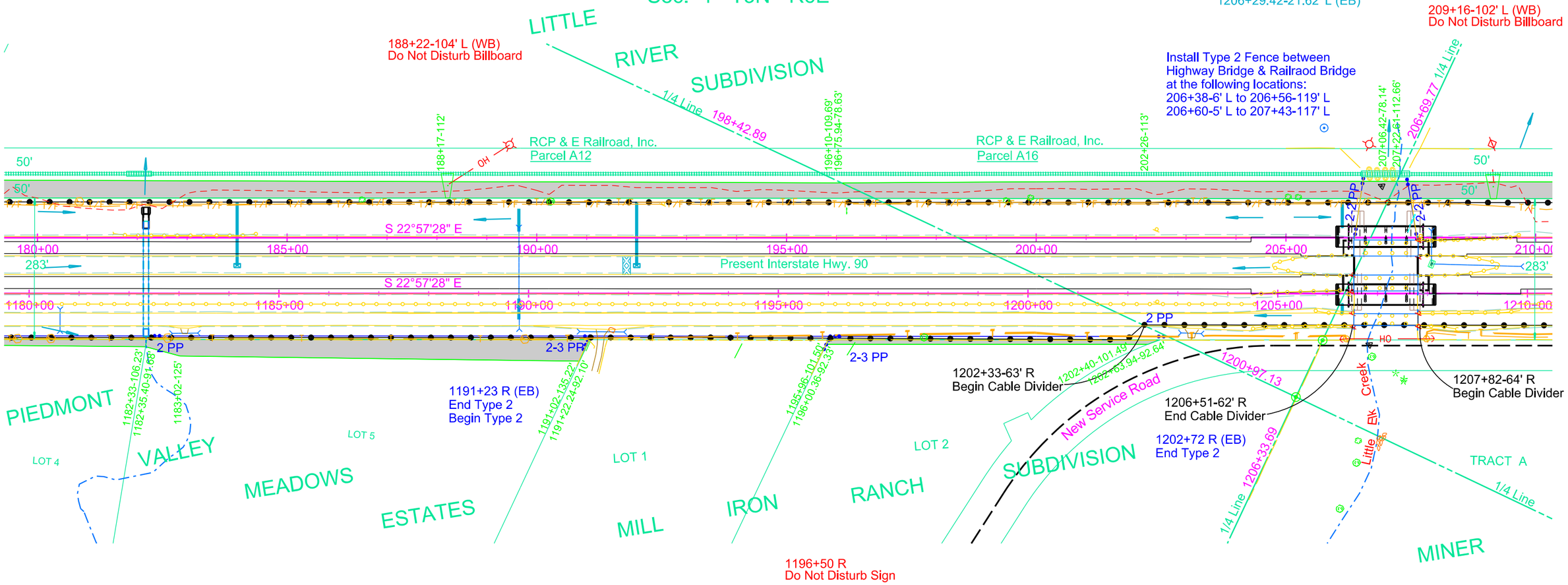

Parcel A12
178+91 to 196+75.94 L
Temporary easement for
Cut & fill containing
1.3 ac, more or less

Parcel A13
1182+33 to 1191+22.24 R
Temporary easement for
Cut & Fill containing
0.8 ac, more or less

Parcel A15
1195+96 to 1202+63.94 R
Temporary easement for
Cut & Fill containing
0.1 ac, more or less

Parcel A16
196+10 to 207+22.61 L
Temporary easement for
Cut & fill containing
0.8 ac, more or less

PLOT SCALE - 1:200
PLOT NAME - 44
PLOTTED FROM - TRPR17192
FILE - U:\RD\PROJ\MEAD5580\180.DGN

STATE OF SOUTH DAKOTA	PROJECT	SHEET	TOTAL SHEETS
	IM 0901(38)40	B48	B114

Plotting Date: 08/10/2016

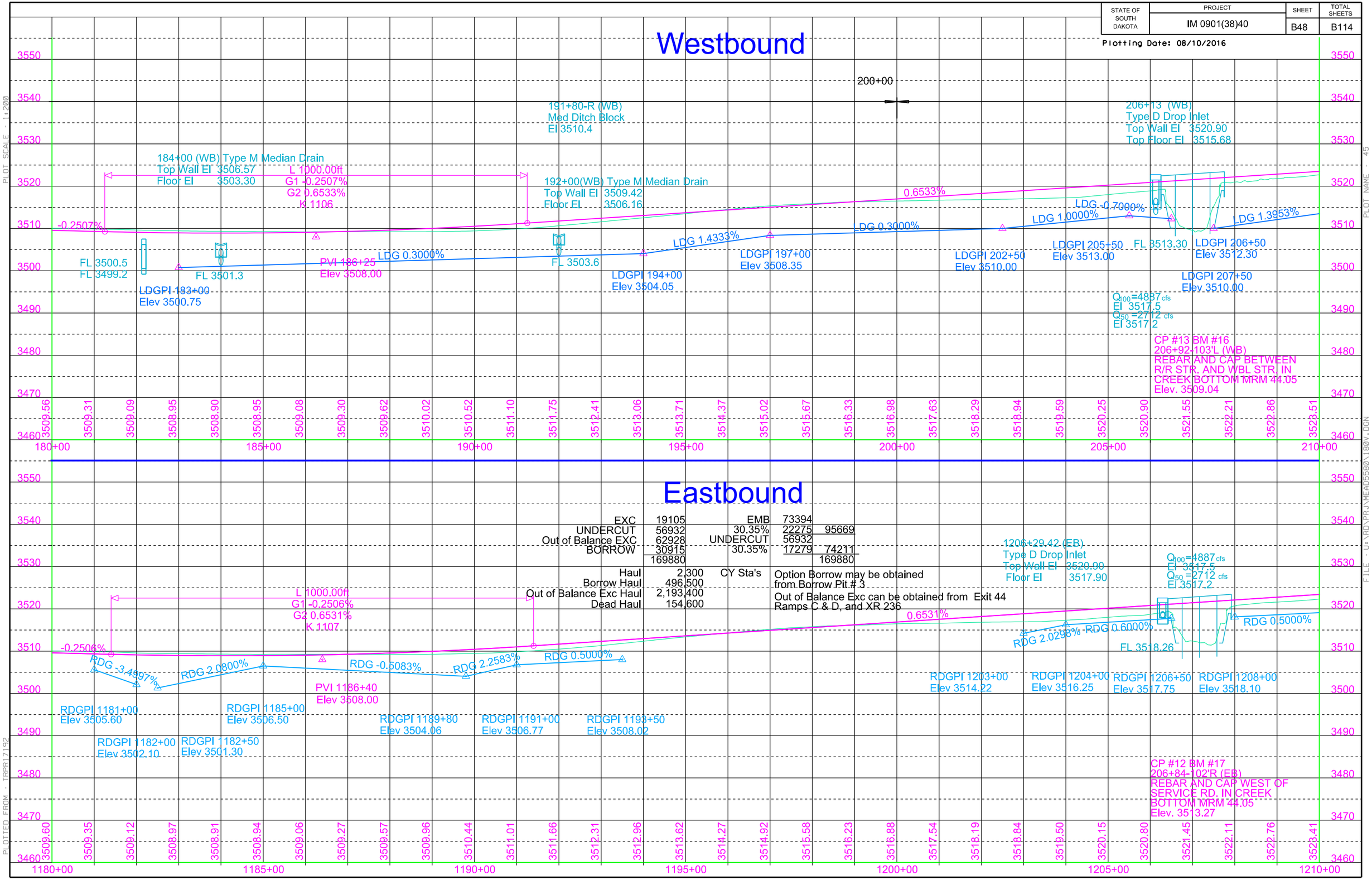

STATE OF SOUTH DAKOTA	PROJECT	SHEET	TOTAL SHEETS
	IM 0901(38)40	B49	B114

Plotting Date: 08/10/2016

2+68 - (Ramp D)
Take Out 18"- 42' RCP
& 2 End Sections
(Incidental Work, Grading)

219+62 - (WB)
Take Out 24"- 80' RCP
& 1 End Section
(Incidental Work, Grading)

1219+79 (EB)
Take Out 24"- 66' RCP
& 1 End Section and
24"x 36" Increaser
(Incidental Work,Grading)

1+00 (Exit 44 Ramp C) (8 Acres)
Install 24" - 58' RCP
& 2 Sloped Ends

17+00 (Exit 44 Ramp D) (42 Acres)
Install 30" - 58' RCP
& 2 Sloped Ends

236+42 (WB) & 1236+26 (EB)
Take Out 3 Span Steel Grider Bridge
(Incidental Work, Grading)
(See Section E)

238+01-55' R (WB)
=1238+33.23-59' L (EB)
Remove 18" RCP Safety End
for Reset

1234+85 (EB)
Retain 24"-222' RCP

1238+35 (EB)
Retain 24"-243' RCP

1234+85 (EB)
Remove End Sections
and Plug Pipe
(Incidental Work, Grading)

1238+35 (EB)
Remove End Sections
and Plug Pipe
(Incidental Work, Grading)

219+62 - (WB)
Remove Drop Inlet
with Frame and Grate

219+62-72' L to 60' R (WB) (33 Acres)
Install 36" - 116' RCP
& 1-36"-24" RC Tee
& 1-24"x36" RCP Increaser
& 1 Flared End

235+55.65 to 237+53.63 (WB) &
1235+14.49 to 1237+12.47 (EB)
Install 197' - 117/8" Prestressed
Girder Bridge
(See Section E)

1237+26-21.62' R to 100' R
Install 18" - 14' RCP (EB)
Install 18" - 58' CMP (8' & 50')
and 2 - 15.0° Elbows
& 1 - 18" RCP to CMP Outlet Transition
& 1 CMP Flared End

Install 1.5'X3'Type D Drop Inlet
with 6" Concrete collar
and Type D Frame & Grate
at the following locations
237+95-21.62' L (WB)
1237+26-21.62' R (EB)

217+40 - 56' R (WB)
Install 18" - 42' RCP
& 2 RCP Safety End

219+62 to 219+75 - 56' R (WB)
Install 24" - 10' RCP
(Between Median Drain & RC Tee)

237+95 - 21.62' L to 53.5' R (WB)
Install 18" - 68' RCP
& 1 RCP Safety End
(Between Drop Inlet & Outlet)

219+75 - 56' R (WB)
Install Type M Median Drain
and Frame & Grate Assembly

1237+26-100' R (EB)
Install Bank and Channel
Protection Gabions
(4.5 CY)

Exit 44 Ramp B
PI 1+92.68
N 167533.01
E 1078894.57
Del 5°55'44"R
Dc 1°49'50"
T 162.09'
L 323.88'
R 3130.00'

Exit 44 Ramp A
PI 3+78.07
N 168774.01
E 1078100.61
Del 10°34'03" L
Dc 2°29'28"
T 212.71'
L 424.21'
R 2300.00'

(WB)
PI 229+74.76
N 168288.88
E 1078280.05
Del 8°04'14" L
Dc 1°33'10"
T 260.31'
L 519.76'
R 3690.00'

Exit 44 Ramp A
PI 13+91.87
N 167927.85
E 1078661.21
Del 2°56'29"R
Dc 1°49'50"
T 80.36'
L 160.69'
R 3130.00'

1219+79 - 52' L to 62' R (EB)
Install 36" - 106' RCP
& 1 Flared End

Sec. 4 - T3N - R6E

214+37 - 71' L (WB)
Do Not Disturb
Power Pole & Anchors

LOT
VM-1

RCP & E Railroad, Inc.
Parcel 5

LOT
VM-2

5+00 to16+58 L
(Exit 44 Ramp A)
Do Not Disturb Railroad Tracks

RCP & E Railroad, Inc.
Parcel 6

LOT A

Exit 44 Ramp B

Exit 44 Ramp A

S 33°31'31" E

Present Interstate Hwy. 90

S 20°05'43" E

Westbound

Eastbound

236+98.40-168.83'
236+98.71-189.83'
237+38.99-189.23'

238+23.38-197.36'
238+52.64-179.67'
238+45.39-167.69'

Type 2 Fence

1218+37 R (EB)
End Cable Divider

LOT 2

TRACT A

MINER

SUBDIVISION

1218+37 R (EB)
Begin Type 2

1/4 Line

Little Elk Canyon Road 60'

Donovan Williamson & Donahue Williamson
Parcel A18

TRACT B

New Service Road

Exit 44 Ramp D
PI 7+74.84
N 168690.96
E 1077933.04
Del 6°23'49"R
Dc 2°28'15"
T 129.59'
L 258.91'
R 2319.00'

(EB)
PI 1229+99.08
N 168237.92
E 1078180.00
Del 8°04'14" L
Dc 1°33'10"
T 260.31'
L 519.76'
R 3690.00'

Exit 44 Ramp D
PI 15+85.31
N 167903.28
E 1078125.03
Del 17°23'50" L
Dc 5°18'19"
T 165.24'
L 327.93'
R 1080.00'

1233+05 R (EB)
End Type 2

Kenneth B. Dehn & Brigitte Dehn
Parcel A19

MINER SUBDIVISION

Exit 44 Ramp C
PI 3+08.78
N 167447.00
E 1078400.23
Del 12°21'14" L
Dc 2°33'28"
T 242.43'
L 482.98'
R 2240.00'

1232+94 R (EB)
Begin Type 2

HAUER

SUBDIVISION

Tract A

TRACT D REVISED

Lot C

1/16 Line

Parcel 5
207+06.42 to 237+54 L
Temporary easement for
Cut & fill containing
2.5 ac, more or less

Parcel A18
1218+54.84 to 1220+65 R
Temporary easement for
Cut & fill containing
0.1 ac, more or less

Parcel A19
1220+63.47 to 1233+01.14 R
Temporary easement for
Cut & fill containing
0.6 ac, more or less

Parcel 6
238+23.38 to 247+70 L
Temporary easement for
Cut & fill containing
0.6 ac, more or less

PLOT SCALE - 1:200

PLOTTED FROM - TRPR13418

PLOT NAME - 46

FILE - U:\RD\PRJ\MEAD5580\210.DGN

STATE OF SOUTH DAKOTA	PROJECT	SHEET	TOTAL SHEETS
	IM 0901(38)40	B50	B114

Plotting Date: 08/10/2016

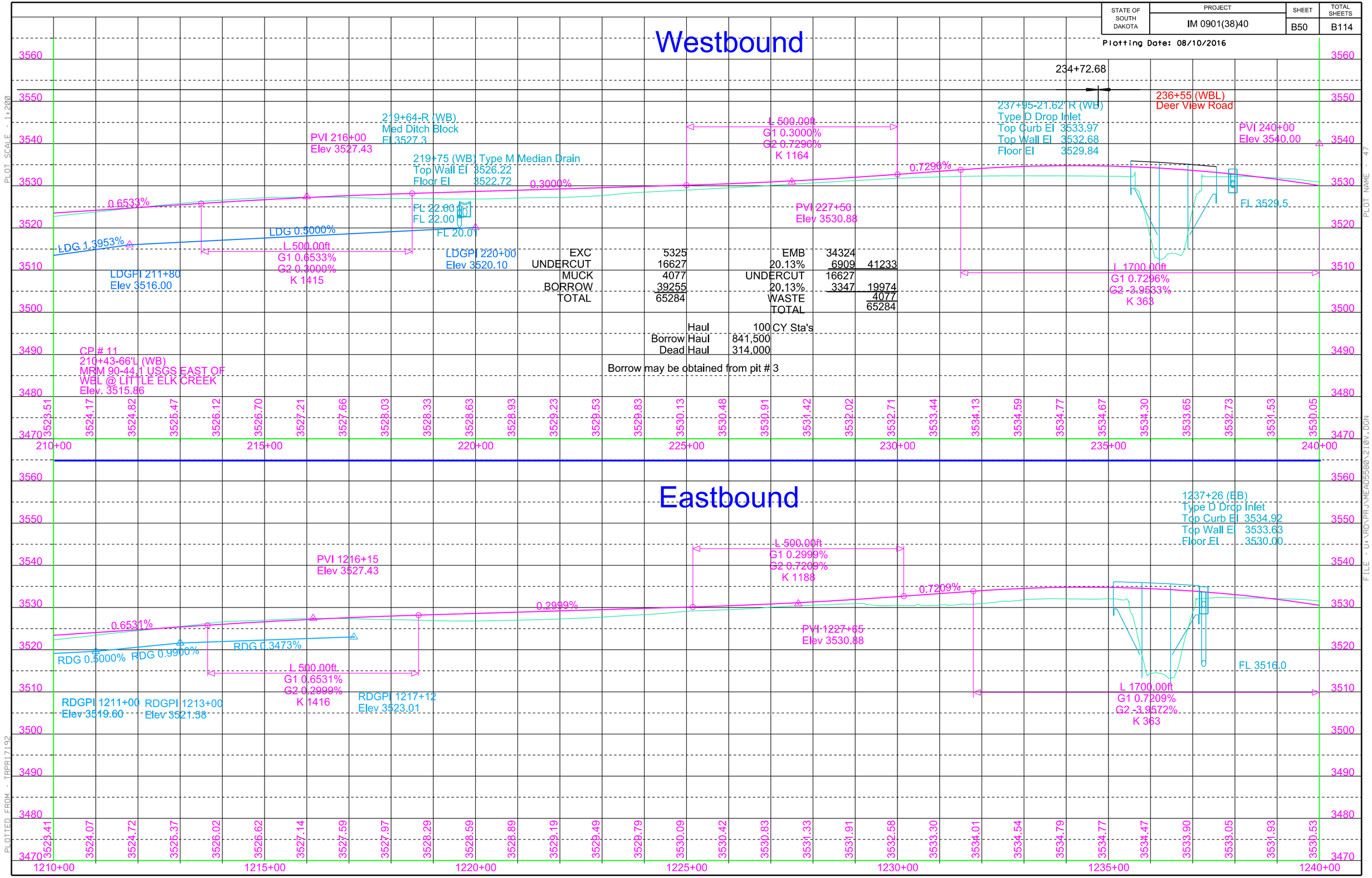

STATE OF SOUTH DAKOTA	PROJECT	SHEET	TOTAL SHEETS
	IM 0901(38)40	B51	B114

Plotting Date: 08/04/2016

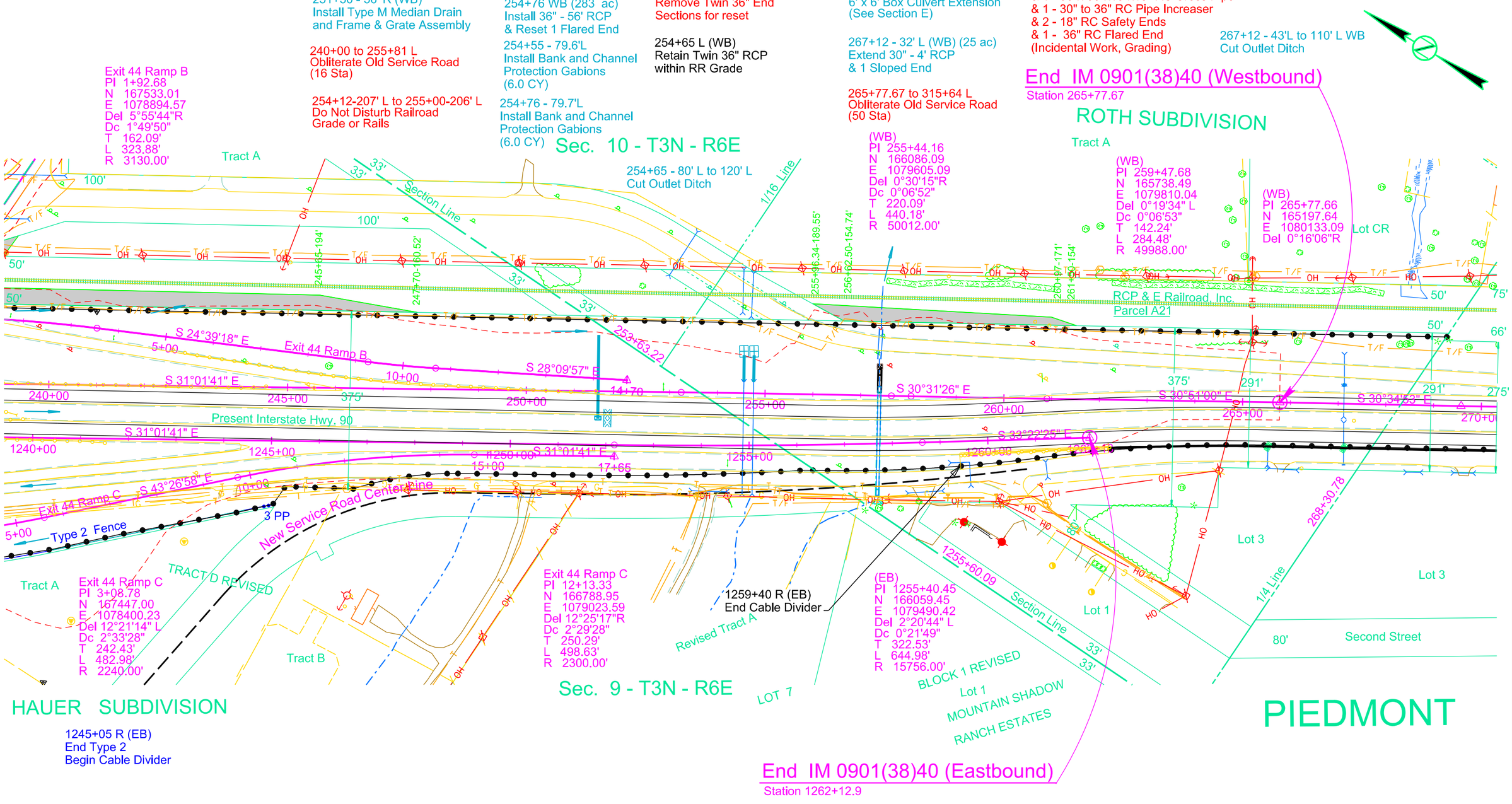

PLOT SCALE - 1:200

PLOT NAME - 48

PLOTTED FROM - TRPR17192

FILE - U:\RDO\PRJ\MEAD5580\240.DGN

STATE OF SOUTH DAKOTA	PROJECT	SHEET	TOTAL SHEETS
	IM 0901(38)40	B52	B114

Plotting Date: 08/10/2016

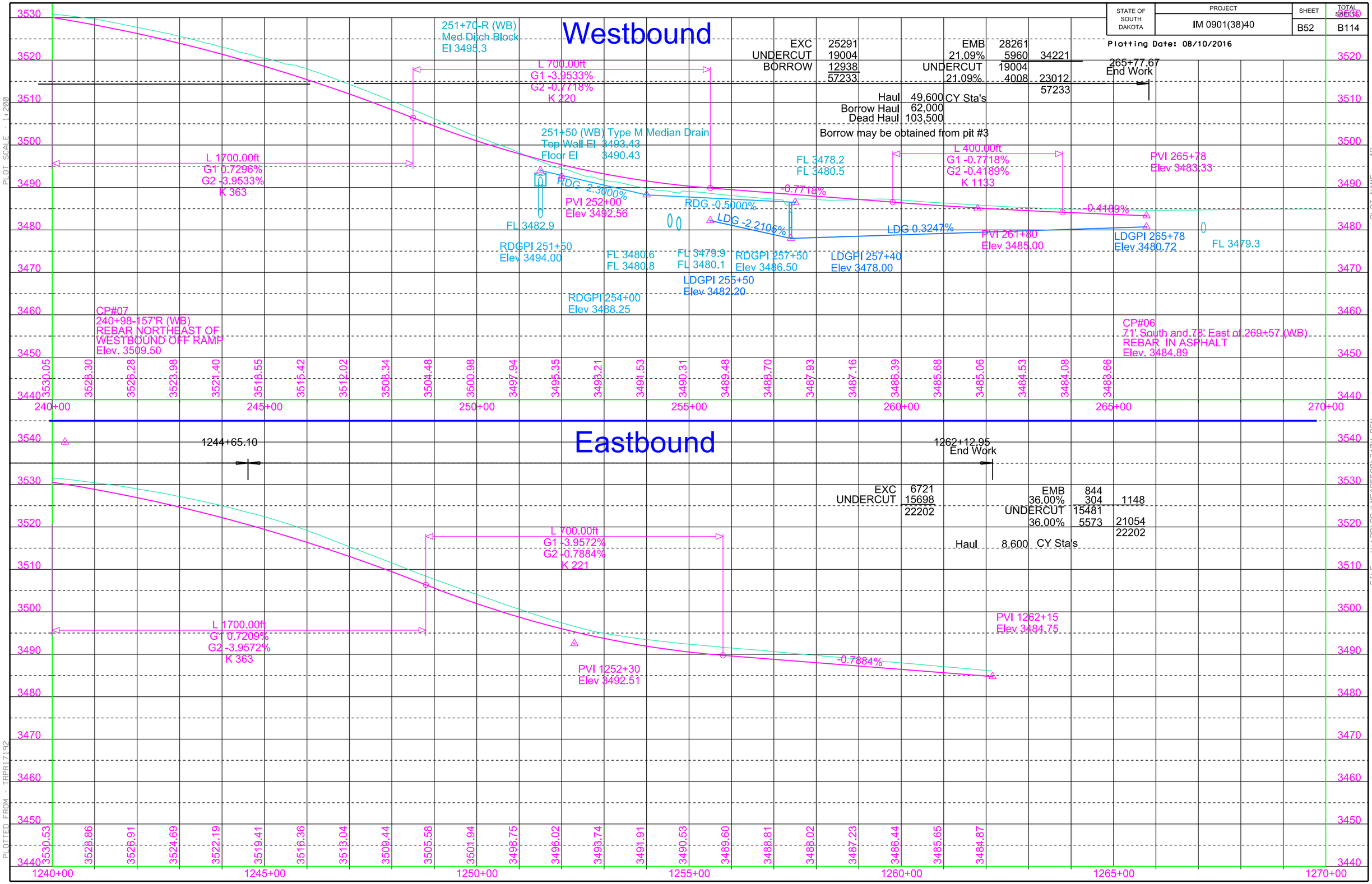

STATE OF SOUTH DAKOTA	PROJECT	SHEET	TOTAL SHEETS
	IM 0901(38)40	B53	B114

Plotting Date: 08/10/2016

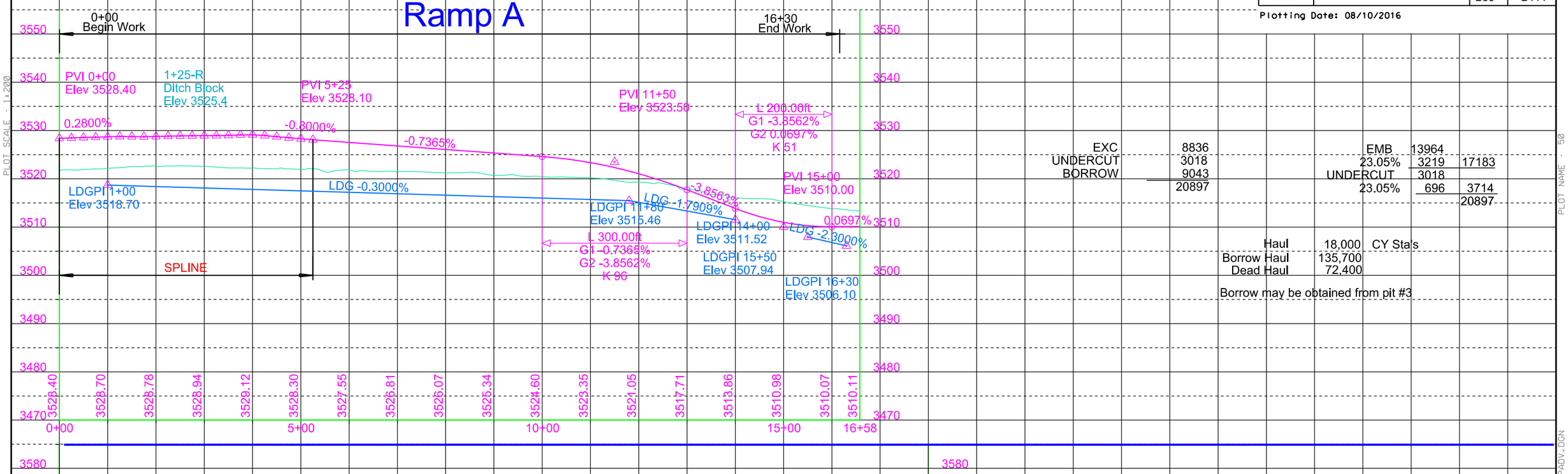

EXC	8836		EMB	13964	
UNDERCUT	3018		23.05%	3219	17183
BORROW	9043		UNDERCUT	3018	
	20897		23.05%	696	3714
					20897

Haul	18,000	CY Sta's
Borrow Haul	135,700	
Dead Haul	72,400	

Borrow may be obtained from pit #3

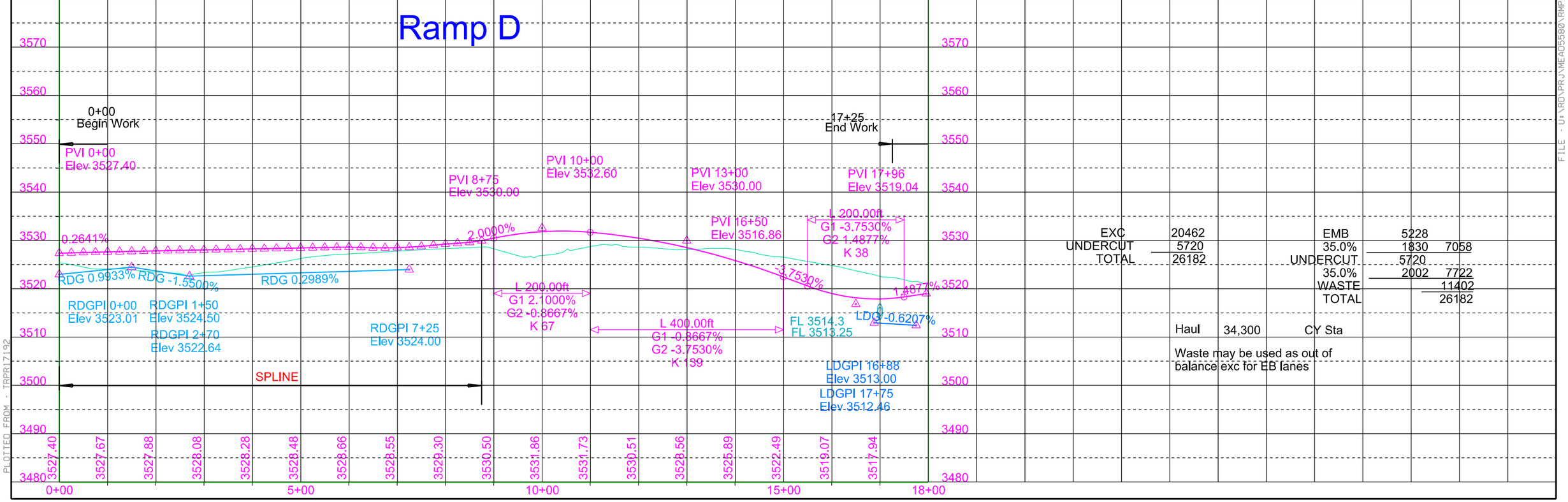

EXC	20462		EMB	5228	
UNDERCUT	5720		35.0%	1830	7058
TOTAL	26182		UNDERCUT	5720	
			35.0%	2002	7722
			WASTE		11402
			TOTAL		26182

Haul	34,300	CY Sta

Waste may be used as out of balance exc for EB lanes

PLOT SCALE - 1:200

PLOT NAME - 50

FILE - U:\RD\PRJ\MEAD5580\RMPADV.DGN

PLOTTED FROM - TPPR17192

STATE OF SOUTH DAKOTA	PROJECT	SHEET	TOTAL SHEETS
	IM 0901(38)40	B54	B114

Plotting Date: 08/10/2016

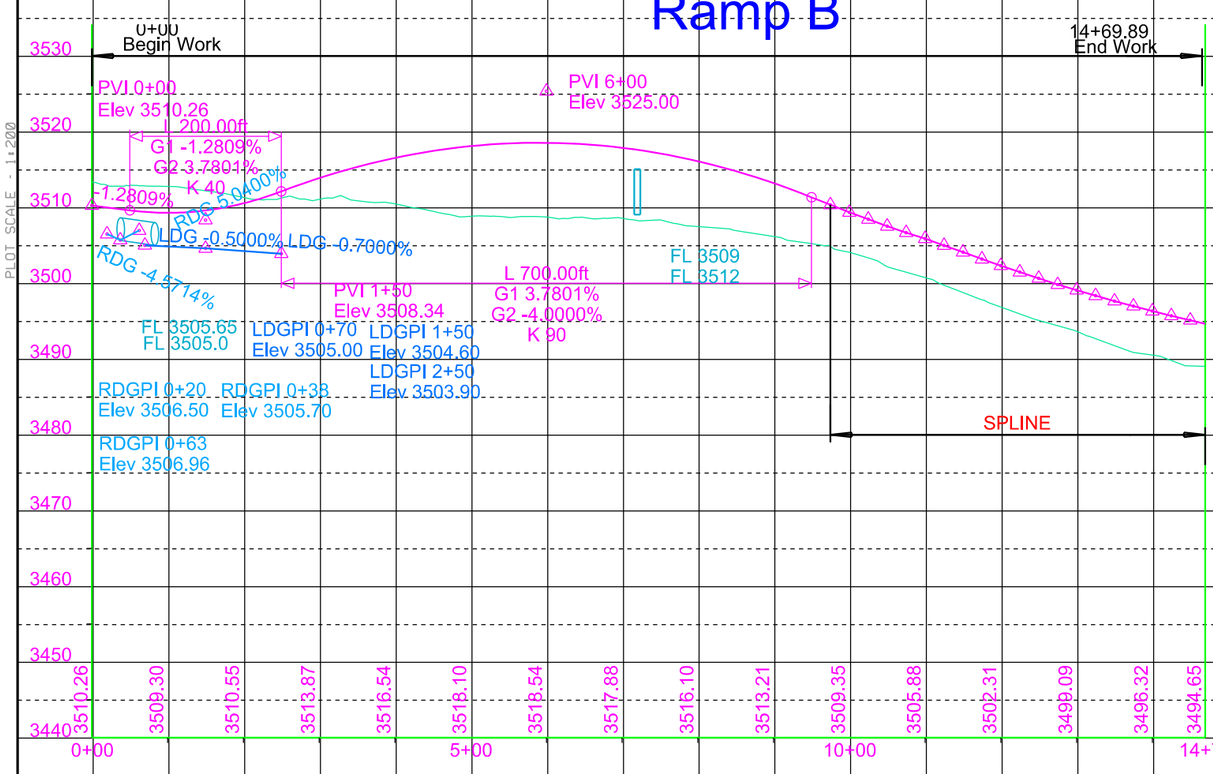

EXC	4810		EMB	33840	
UNDERCUT	2116		16.54%	5597	39437
BORROW	34977		UNDERCUT	2116	
	41903		16.54%	350	2466
					41903

Haul	700	CY Sta's
Borrow Haul	326,600	
Dead Haul	410,600	

Borrow may be obtained from pit #3

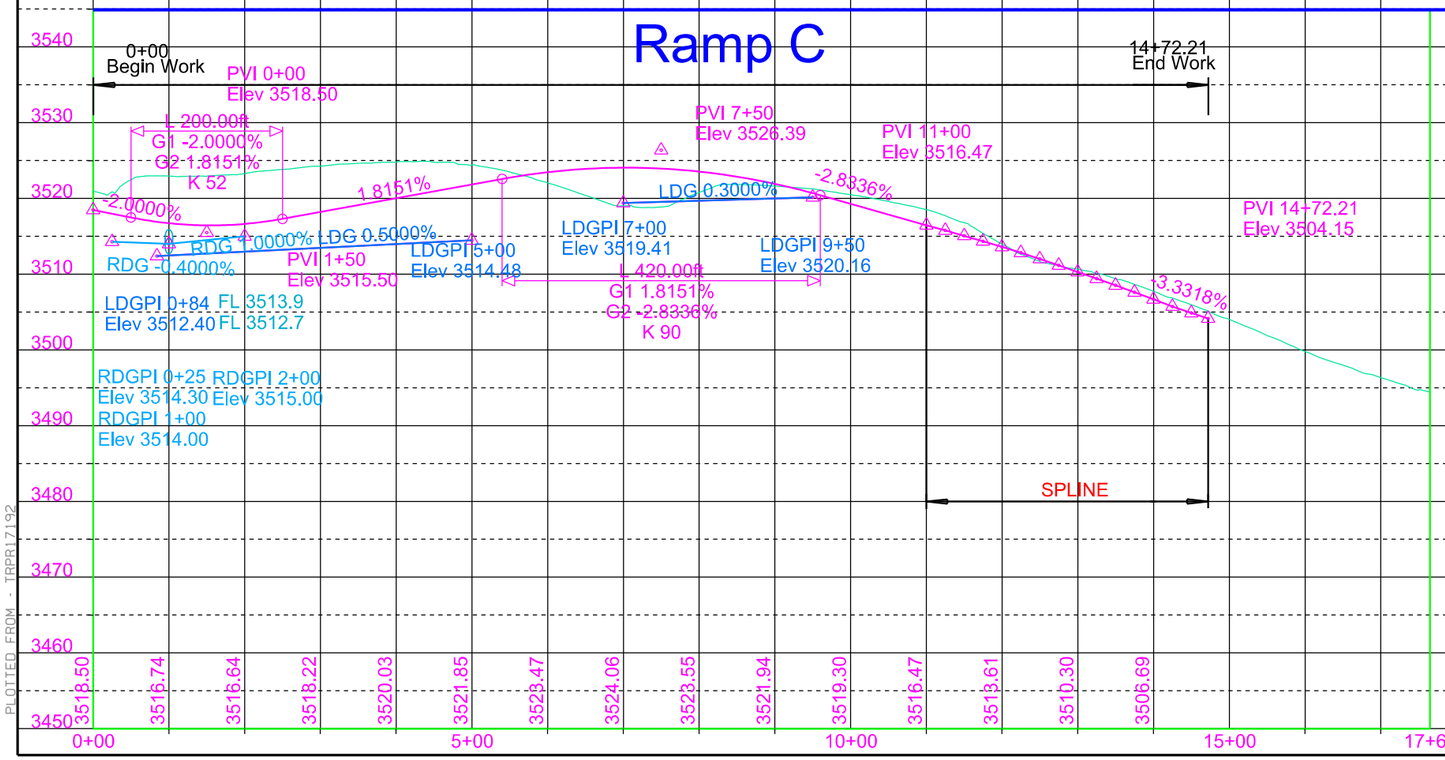

EXC	45326		EMB	3477	
UNDERCUT	6723		35.0%	1217	4694
TOTAL	52049		UNDERCUT	6723	
			35.0%	2353	9076
			WASTE		38279
			TOTAL		52049

Haul	149,100	C Y Sta

Waste may be used as out of balance exc for EB lanes

PLOT SCALE - 1:200

PLOTTED FROM - TRPR17192

PLOT NAME - 51

FILE - U:\RD\PRJ\MEAD5580\RMPBCV.DGN

STATE OF SOUTH DAKOTA	PROJECT	SHEET	TOTAL SHEETS
	IM 0901(38)40	B55	B114

Plotting Date: 08/04/2016 Revised 3-4-2016(BT)

193+70-46' L (XR236)
Take Out 24"-40' RCP
With End Sections
(Incidental Work, Grading)

194+86-127' R (XR236)
Take Out 18"-43' RCP
With End Sections
(Incidental Work, Grading)

197+74 (XR236)
Take Out 18"-70' RCP
With End Sections
(Incidental Work, Grading)

198+88 (XR236)
Take Out 18"-54' RCP
With End Sections
(Incidental Work, Grading)

0+64 (Exit 44 Ramp B) (54 ac)
Skew 30° LHF
Install 36" - 74' RCP Arch
& 2 Flared Ends

197+85 (XR236) (44 ac)
Skew 35° RHF
Install 36" - 90' RCP Arch
& 2 Flared Ends

198+85 XR236
Skew 32 °30' RHF
Install 24" - 90' RCP
& 2 Sloped Ends

198+69 (XR236)
Take Out 18"-54' RCP
With Headwalls
(Incidental Work, Grading)

198+72-64' R
Take Out 30"-41' RCP
With Headwalls
(Incidental Work, Grading)

198+13-40.5'R (XR236)
Install Bank and Channel
Protection Baskets
(6.0 CY)

200+09 - R (xr236)
Install 12' Entrance for
R.R. Bungalow

200+89 (XR236)
Retain 24"-142'RCP
and 2 Safety Ends

201+99 (XR236)
Retain 24"-140'RCP
and 2 Safety Ends

Begin XR236 IM 0901(38)40
Sta. 187+82.00

MINER SUBDIVISION

South Dakota Department of Transportation
Parcel A17

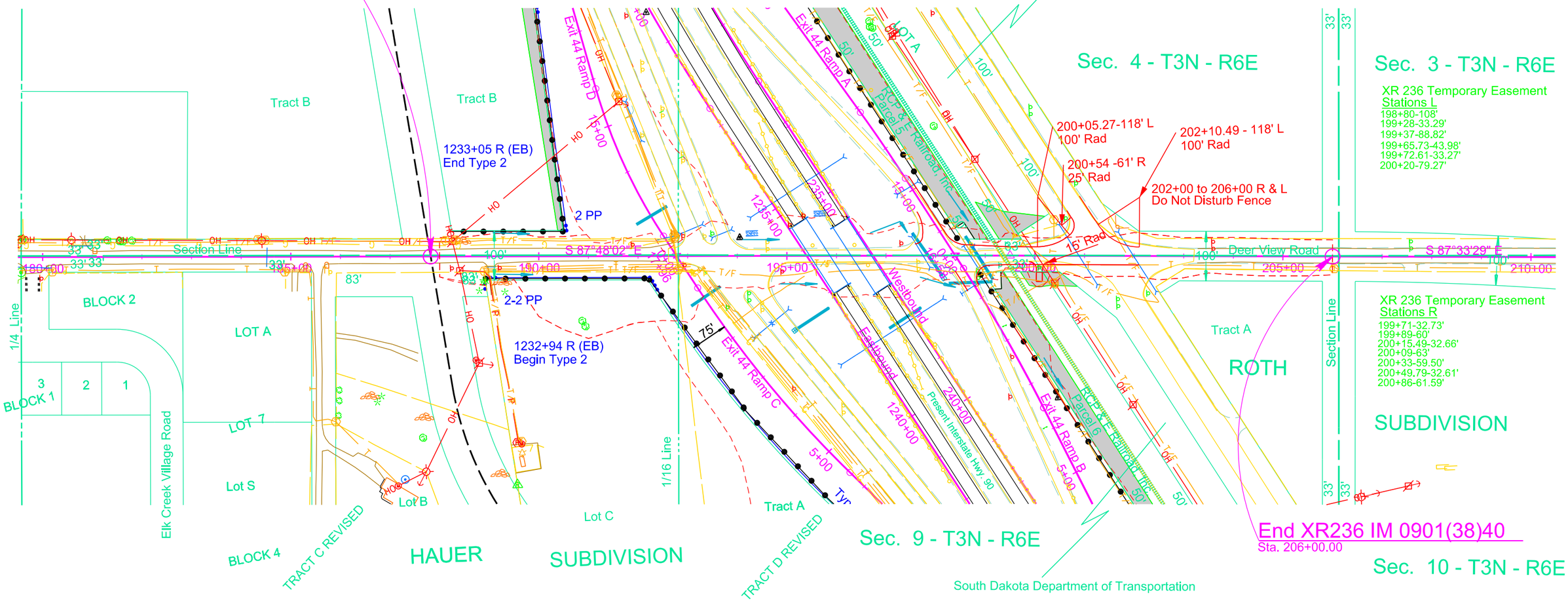

Parcel 5
198+80 to 199+72.61 L(XR236)
Temporary easement for
Cut & Fill containing
0.1 ac, more or less

Parcel A17
199+37 to 200+20 L(XR236)
Temporary easement for
Cut & Fill containing
0.1 ac, more or less

Parcel 6
199+71 to 200+33 R(XR236)
Temporary easement for
Cut & Fill containing
0.1 ac, more or less

Parcel A20
200+15.56 to 200+86 R(XR236)
Temporary easement for
Cut & Fill containing
0.1 ac more or less

PLOT SCALE - 1:200
PLOTTED FROM - TRPR17192
PLOT NAME - 52
FILE - U:\RD\PRJ\MEA05580\180XR236.DGN

STATE OF SOUTH DAKOTA	PROJECT	SHEET	TOTAL SHEETS
	IM 0901(38)40	B56	B114

Plotting Date: 08/04/2016 Revised 3-4-2016(BT)

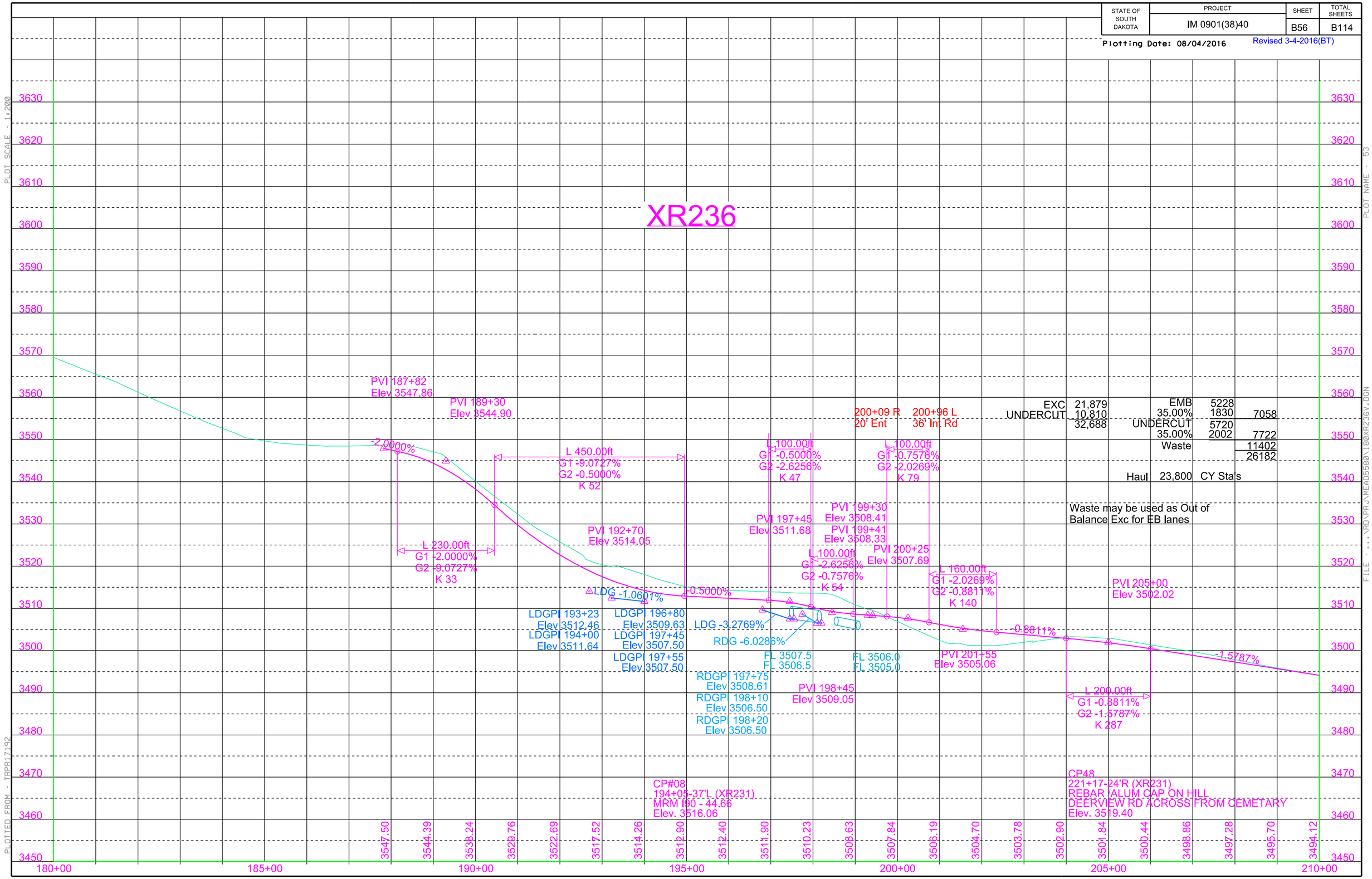

STATE OF SOUTH DAKOTA	PROJECT	SHEET	TOTAL SHEETS
	IM 0901(38)40	B57	B114

Plotting Date: 08/04/2016

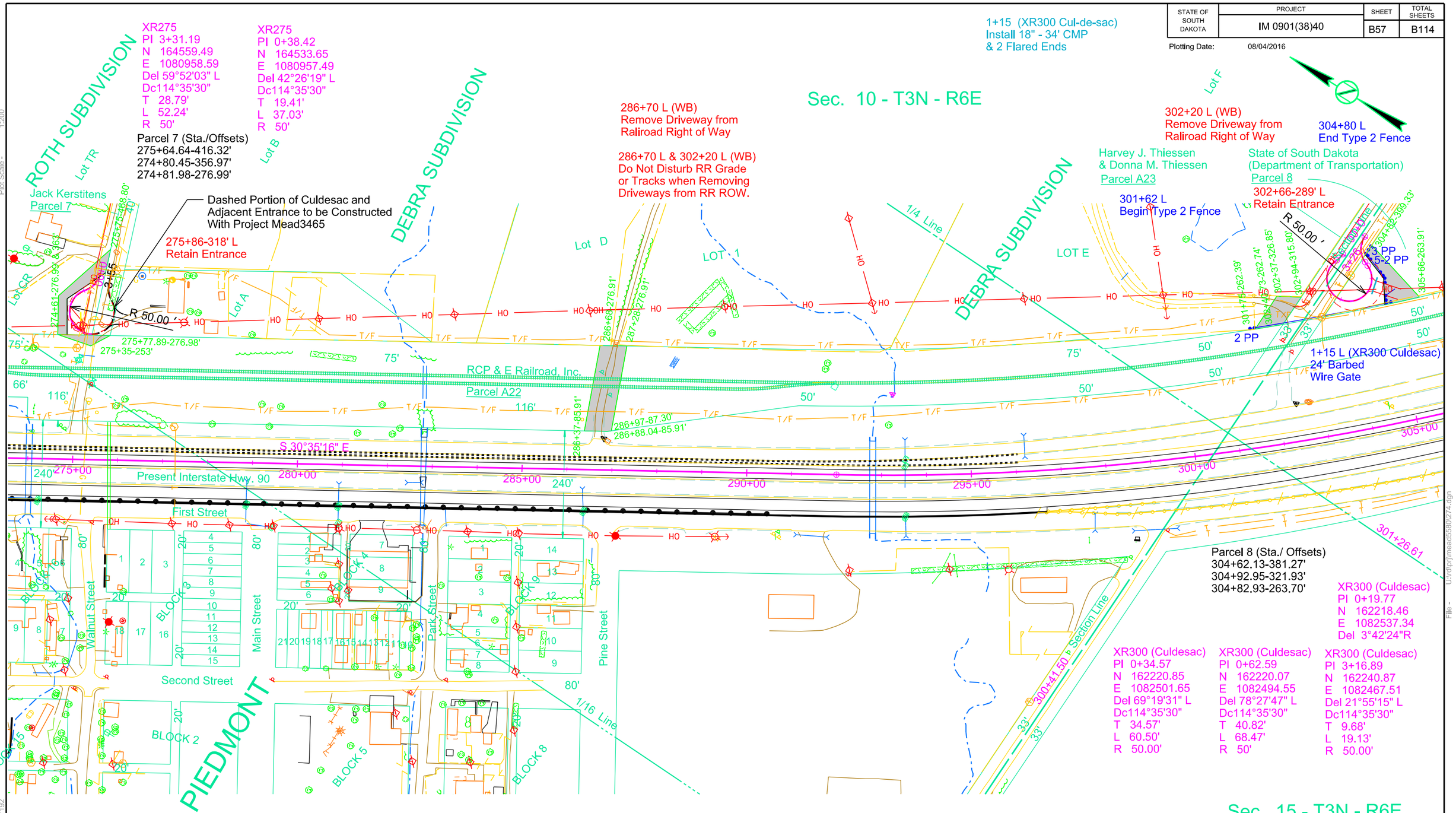

Parcel A22
274+61 to 275+77.89 L
Temporary easement for
Cut & fill containing
0.1 ac, more or less

Parcel A22
286+37 to 287+28 L
Temporary easement for
Driveway Removal containing
0.3 ac, more or less

Parcel 7
274+61 to 275+75 L
Temporary easement for
Cut & fill containing
0.1 ac, more or less

Parcel A23
301+75 to 302+94 L
Temporary easement for
Cut, fill, & entrance containing
0.1 ac, more or less

Parcel 8
304+62.13 to 305+66 L
Temporary easement for
Cut & fill containing
0.1 ac, more or less

INTERSECTION LAYOUT

XR236 with Ramps C & D

STATE OF SOUTH DAKOTA	PROJECT	SHEET	TOTAL SHEETS
	IM 0901(38)40	B58	B114

Plotting Date: 08/04/2016

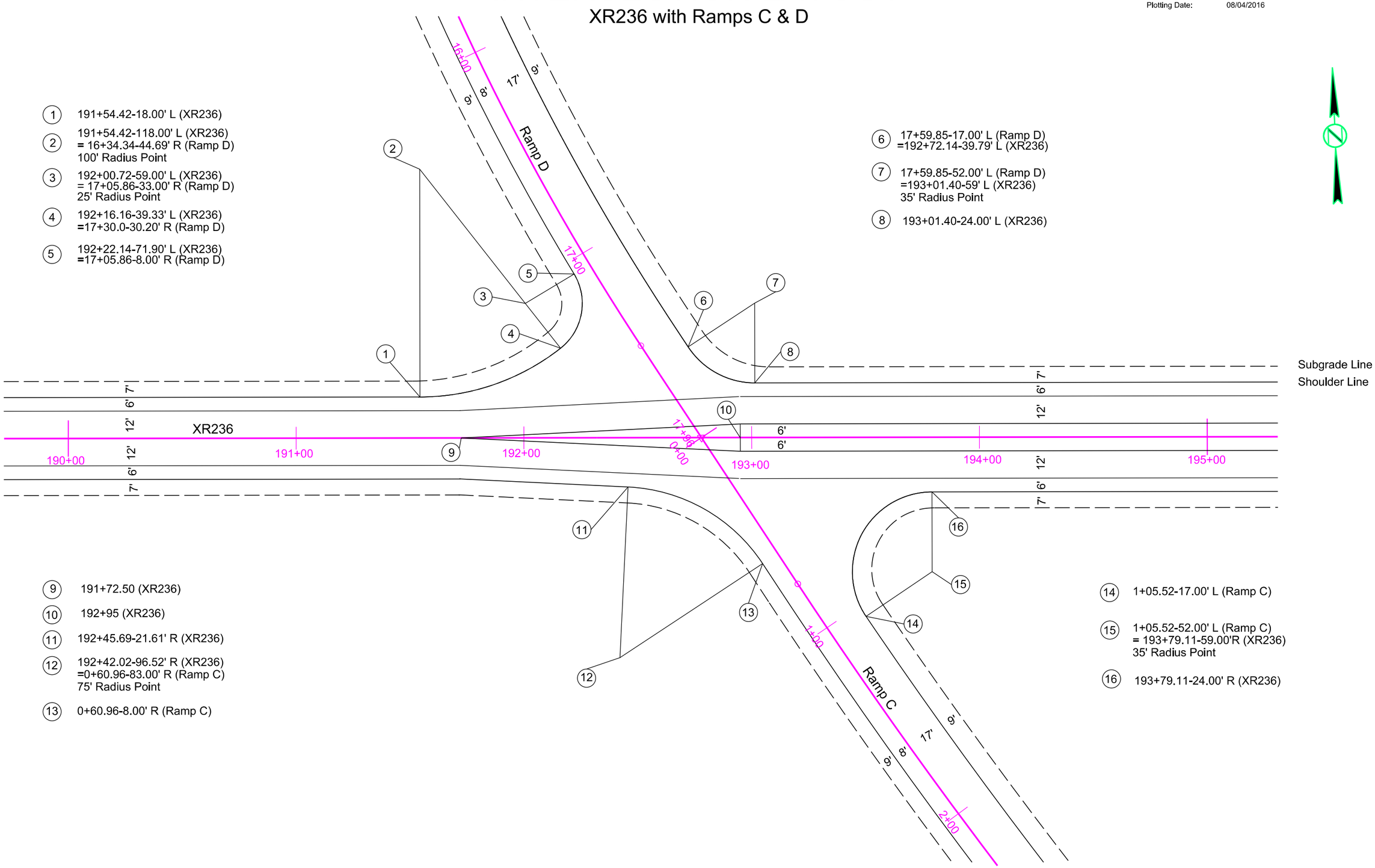

Plot Scale - 1:40

Plotted From - trgt17192

File - ...\prj\meade5580\193xr236int.dgn

STATE OF SOUTH DAKOTA	PROJECT	SHEET	TOTAL SHEETS
	IM 0901(38)40	B59	B114

Plotting Date: 08/04/2016

INTERSECTION LAYOUT

XR236 with Ramps A & B

1. 197+58.55-24.00' L (XR236)
2. 197+58.55-39.00' L (XR236) =15+81.13-47.00' R (Ramp A) 15' Radius Point
3. 197+73.38-36.75' L (XR236) =15+91.06-35.75' R (Ramp A)
4. 196+99.23-48.00' L (XR236) =15+41.45-92.00' R (Ramp A) 75' Radius Point
5. 15+41.45-17.00' R (Ramp A)
6. 16+09.49-8.00' L (Ramp A) = 198+20.15-44.94' L (XR236)
7. 16+09.49-58.00' L (Ramp A) =198+62.18-72.02' L (XR236) 50' Radius Point
8. 198+59.74-22.08' L (XR236)
9. 198+20.00 (XR236)
10. 199+42.50 (XR236)

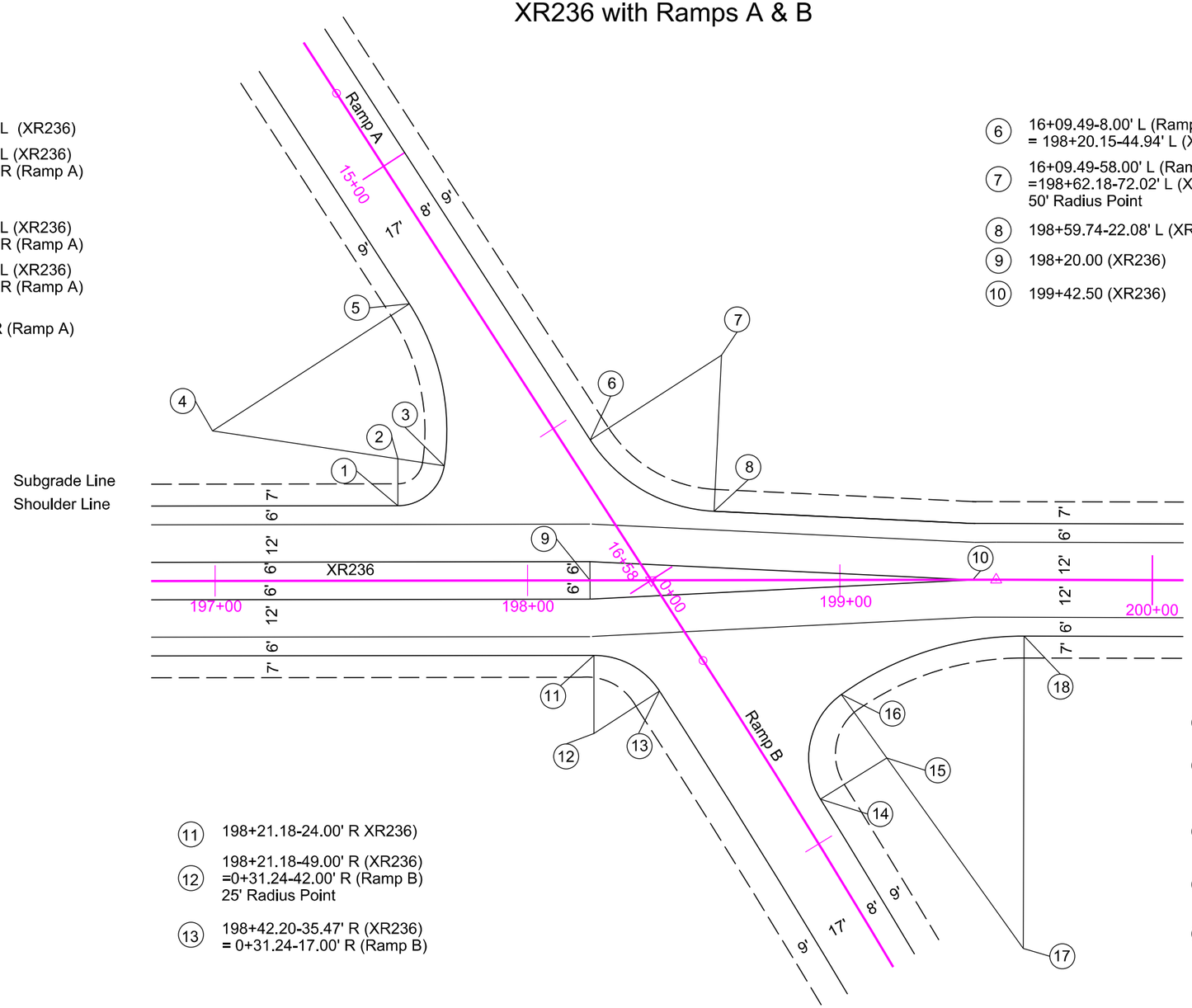

11. 198+21.18-24.00' R XR236)
12. 198+21.18-49.00' R (XR236) =0+31.24-42.00' R (Ramp B) 25' Radius Point
13. 198+42.20-35.47' R (XR236) = 0+31.24-17.00' R (Ramp B)
14. 0+88.11-8.00' L (Ramp B)
15. 0+88.11- 33.00' L (Ramp B) =199+14.90-57.00' R (XR236) 25' Radius Point
16. 199+00.37-36.65' R (XR236) =0+63.41-31.44' L (Ramp B)
17. 1+62.03-38.85' L (Ramp B) =199+58.99-118' R (XR236) 100' Radius Point
18. 199+58.99-18' R (XR236)

Plot Scale - 1:40
Plotted From - tpp17192
File - ...\prj\mead55800\198xr236int.dgn

GUARDRAIL LAYOUT

STATE OF SOUTH DAKOTA	PROJECT	SHEET	TOTAL SHEETS
	IM 0901(38)40	B60	B114

Plotting Date: 08/04/2016

EXIT 40 Crossroad

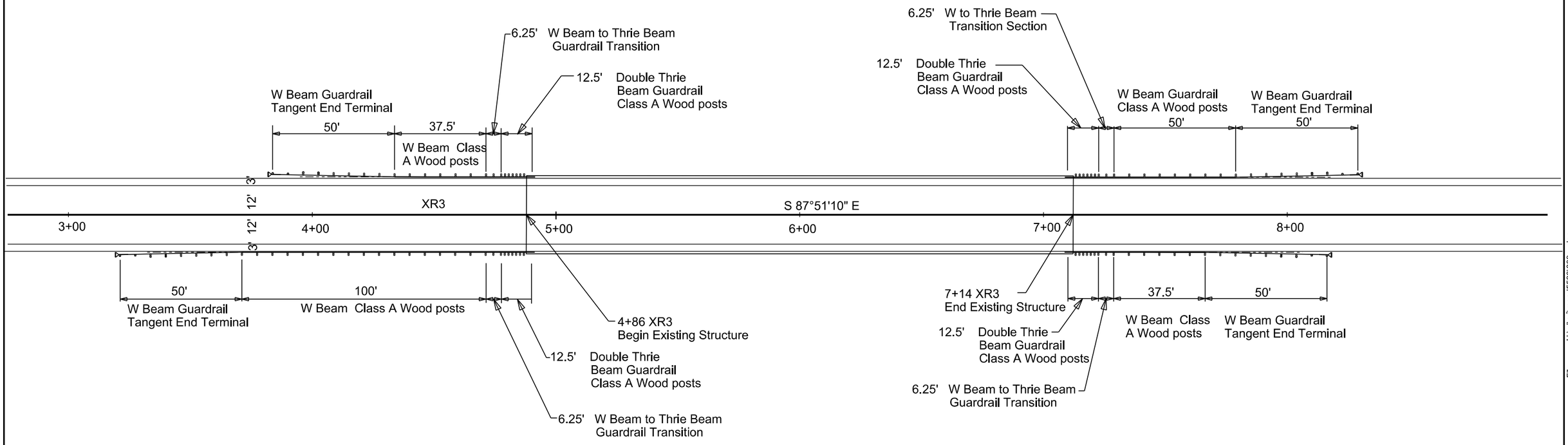

Plot Scale - 1:40

Plotted From - trpr17192

File - U:\rdlprj\mead55580\003gr.dgn

STATE OF SOUTH DAKOTA	PROJECT	SHEET	TOTAL SHEETS
	IM 0901(38)40	B61	B114

Plotting Date: 08/04/2016

GUARDRAIL LAYOUT

West Bound I90

(West Half)

* Temporary Guardrail for head to head traffic

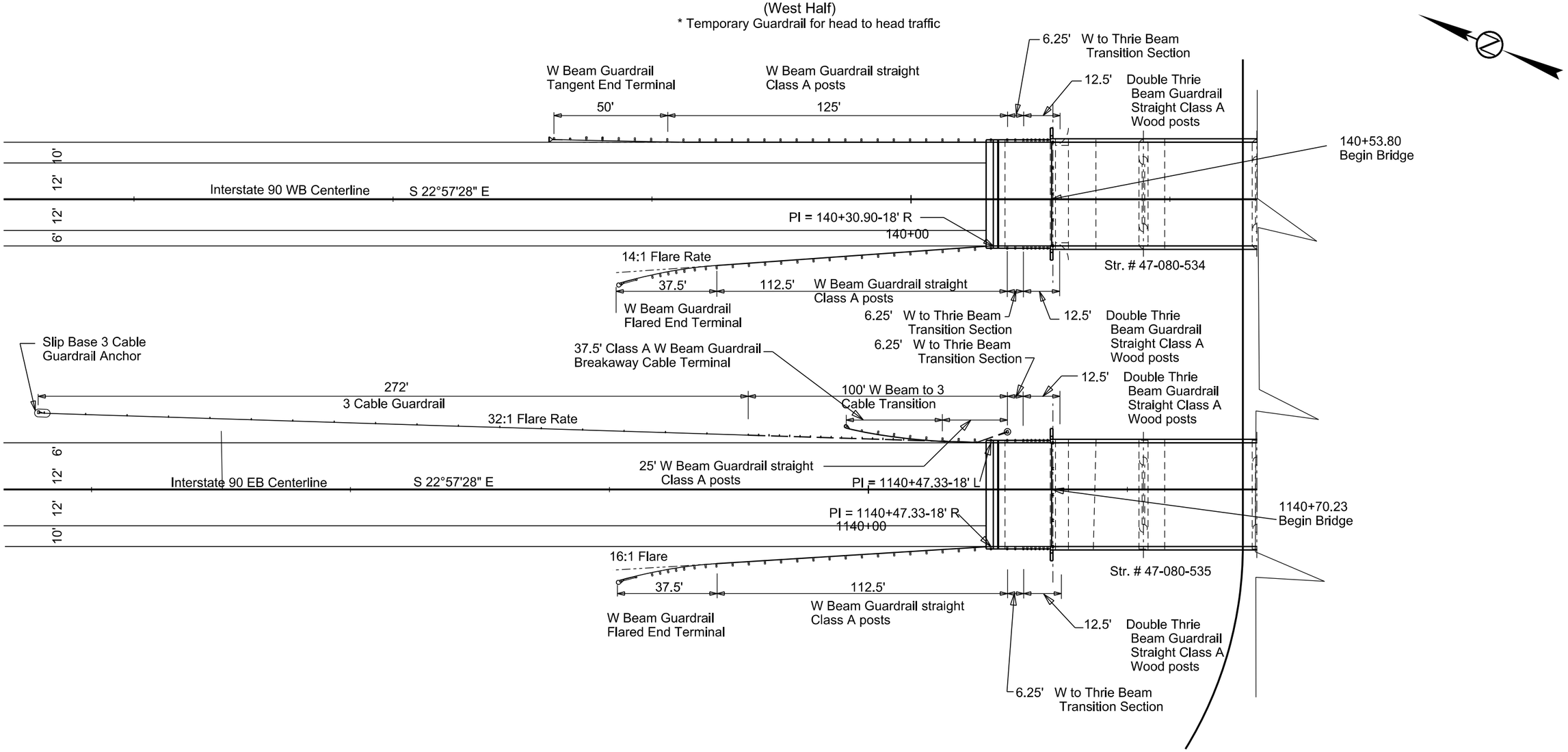

East Bound I90

(West Half)

Plot Scale - 1:40

Plotted From - tnpr17192

File - ...\rdlpn\mead5580\140WBWHgr.dgn

STATE OF SOUTH DAKOTA	PROJECT	SHEET	TOTAL SHEETS
	IM 0901(38)40	B62	B114

Plotting Date: 08/04/2016

GUARDRAIL LAYOUT

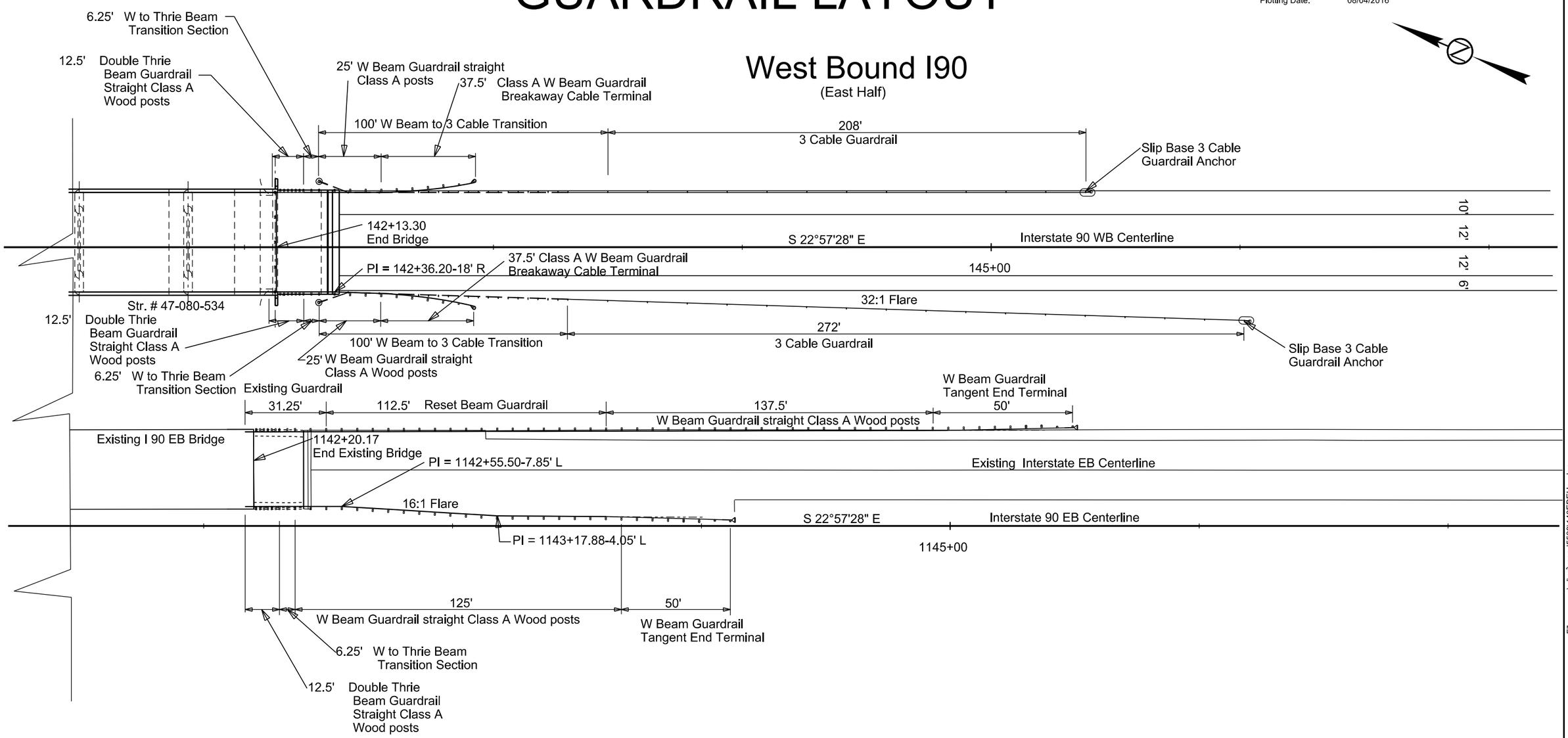

Plot Scale - 1:40

Plotted From - tnpr17192

File - ...\rdlpp\mead5580\140EBEHgr.dgn

GUARDRAIL LAYOUT

STATE OF SOUTH DAKOTA	PROJECT	SHEET	TOTAL SHEETS
	IM 0901(38)40	B63	B114

Plotting Date: 08/04/2016

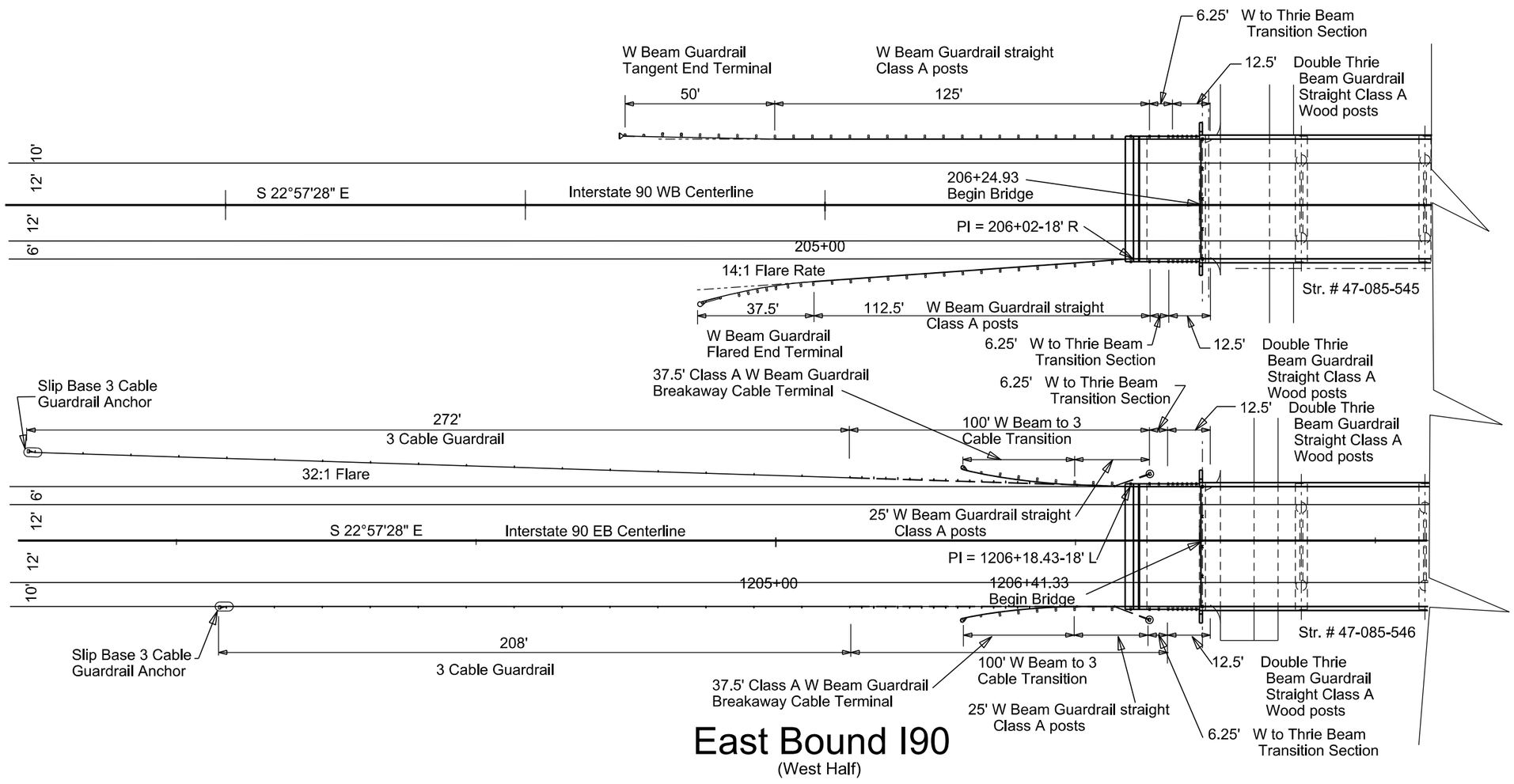

Plot Scale - 1:40

Plotted From - trpr17192

File - ...\rdprj\mead5580\205WBWHgr.dgn

GUARDRAIL LAYOUT

STATE OF SOUTH DAKOTA	PROJECT	SHEET	TOTAL SHEETS
	IM 0901(38)40	B64	B114

Plotting Date: 08/04/2016

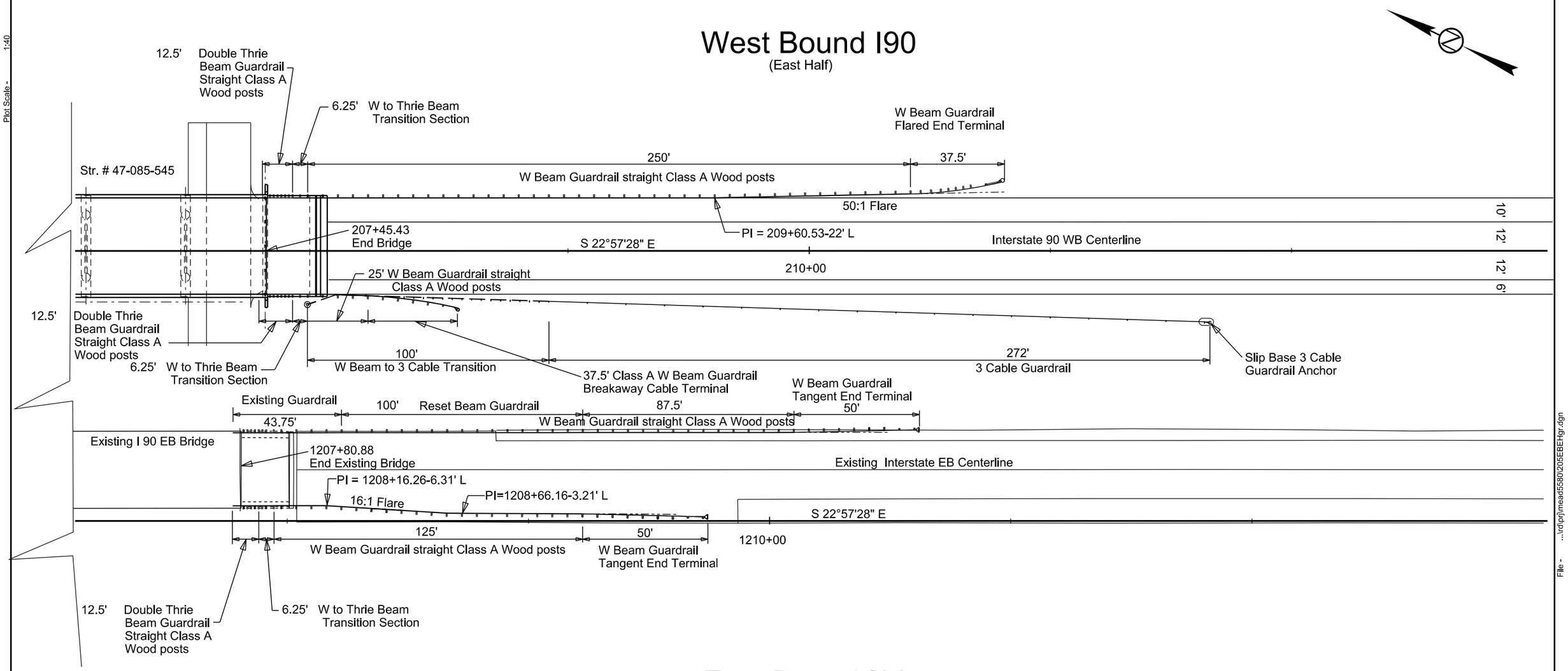

East Bound I90

(East Half)

Temporary Guardrail for head to head traffic
PCC shoulder shall be removed
before installation of temporary guardrail

Plot Scale - 1:40

Plotted From - trpr17192

File - ...\rdprj\mead55800\205EBEHgr.dgn

GUARDRAIL LAYOUT

STATE OF SOUTH DAKOTA	PROJECT	SHEET	TOTAL SHEETS
	IM 0901(38)40	B65	B114

Plotting Date: 08/11/2016

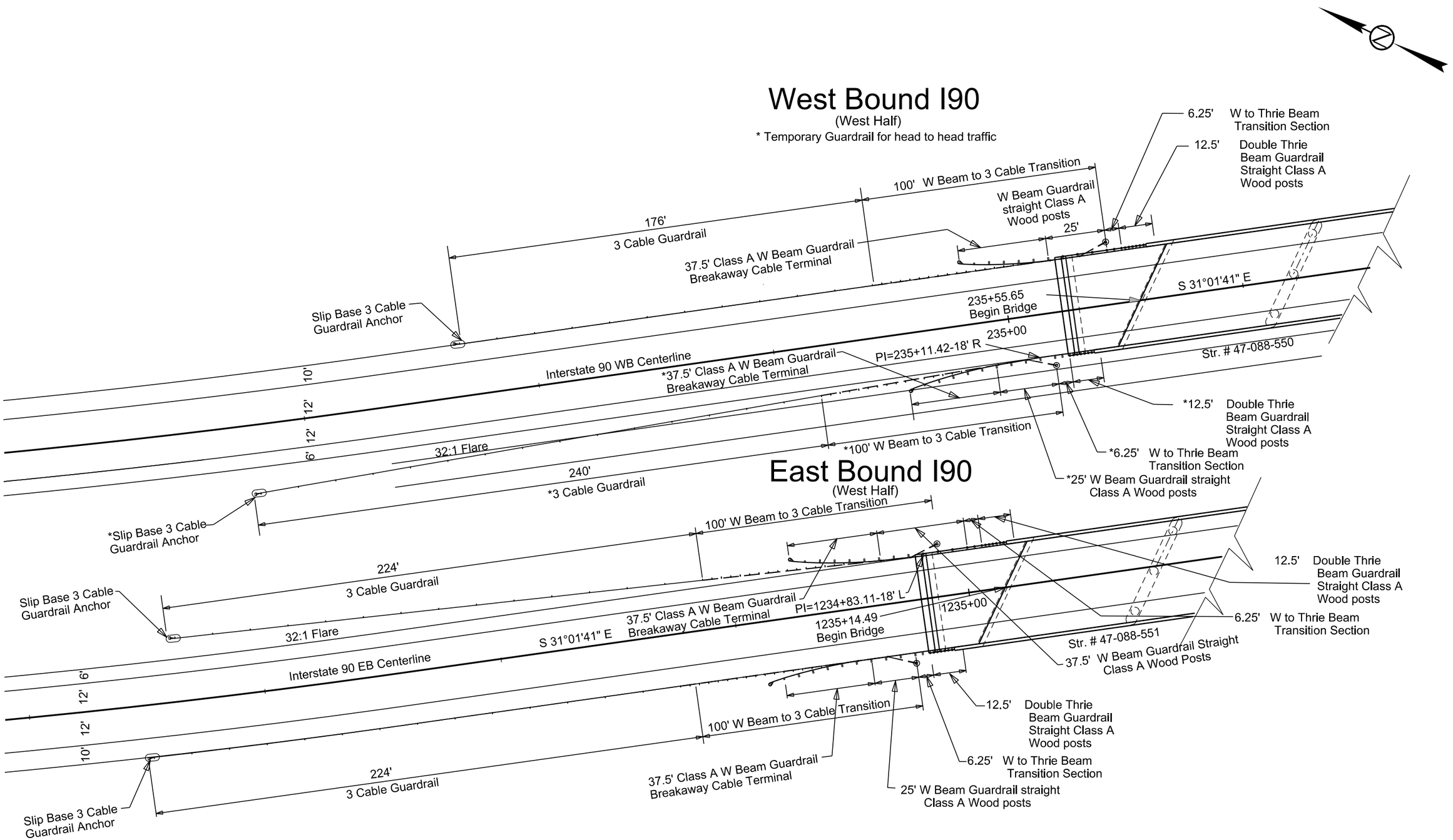

Plot Scale - 1:40

Plotted From - trpr17192

File - ...\rdprj\mead5580\235WBWHgr.dgn

GUARDRAIL LAYOUT

STATE OF SOUTH DAKOTA	PROJECT	SHEET	TOTAL SHEETS
	IM 0901(38)40	B66	B114

Plotting Date: 08/11/2016

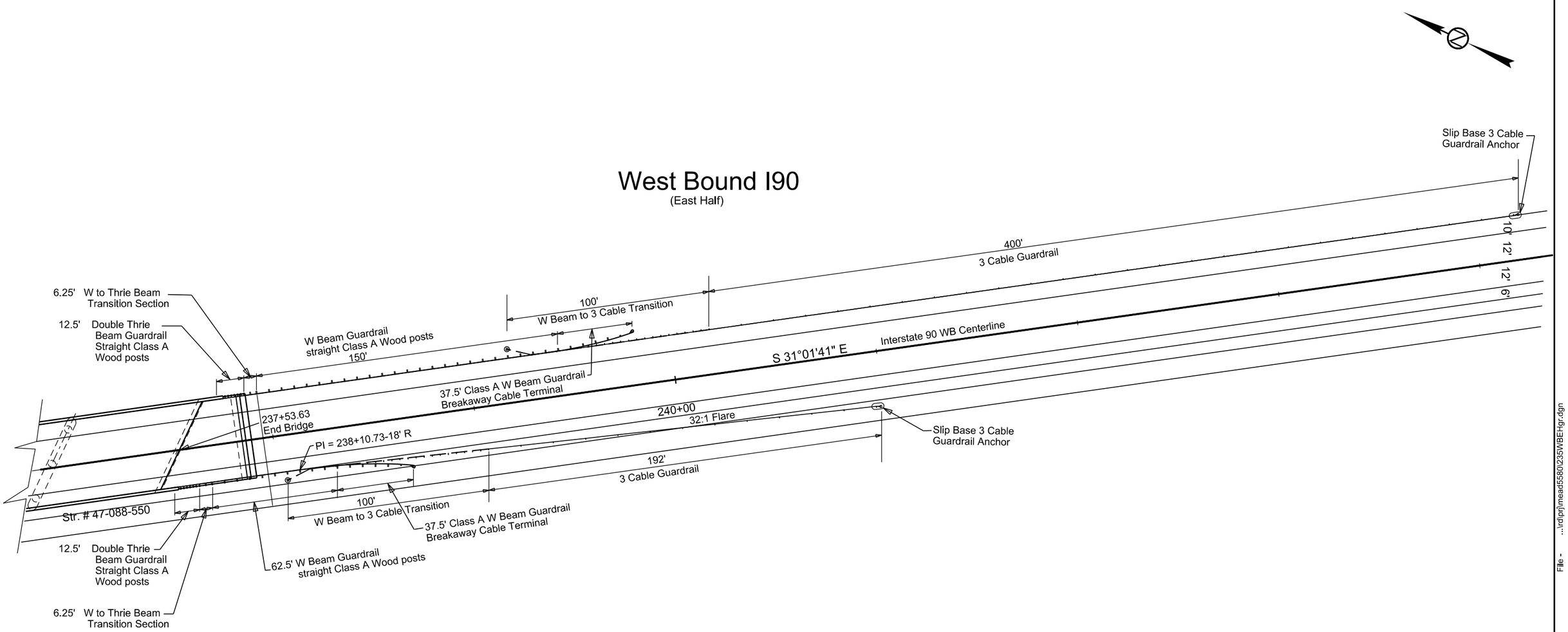

East Bound I90

(East Half) - Median side
Remove 3 Cable Anchor Assembly
Slip Base 3 Cable Guardrail Anchor

(East Half) - Outside Shoulder
Remove 3 Cable Anchor Assembly
Slip Base 3 Cable Guardrail Anchor

Plot Scale - 1:48
Plotted From - trpr17192
File - ...\rd\prj\mead55800\235\WBEHgr.dgn

GUARDRAIL LAYOUT

STATE OF SOUTH DAKOTA	PROJECT	SHEET	TOTAL SHEETS
	IM 0901(38)40	B67	B114

Plotting Date: 08/04/2016

xr236

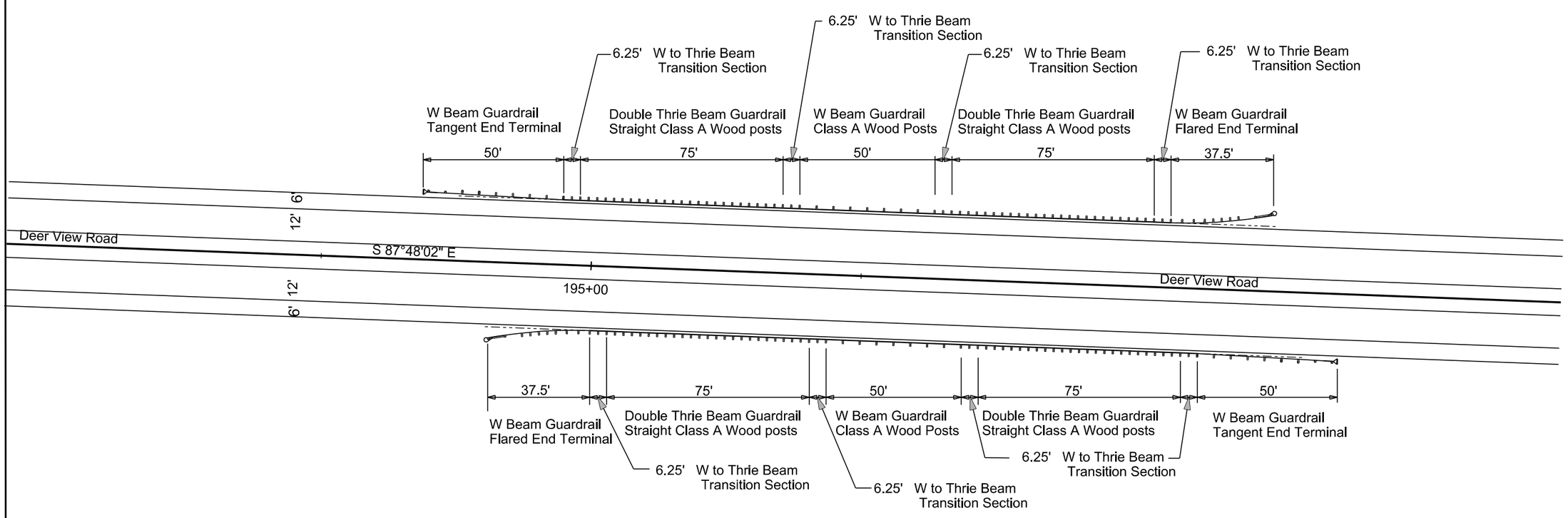

Plot Scale - 1:40

Plotted From - trpr17192

File - ...\rdprj\mead55801180xr236gr.dgn

RAMP GORE LAYOUT
EXIT 40 RAMP B

STATE OF SOUTH DAKOTA	PROJECT	SHEET	TOTAL SHEETS
	IM 0901(38)40	B68	B114

Plotting Date: 08/04/2016

SCALE
1" = 40'

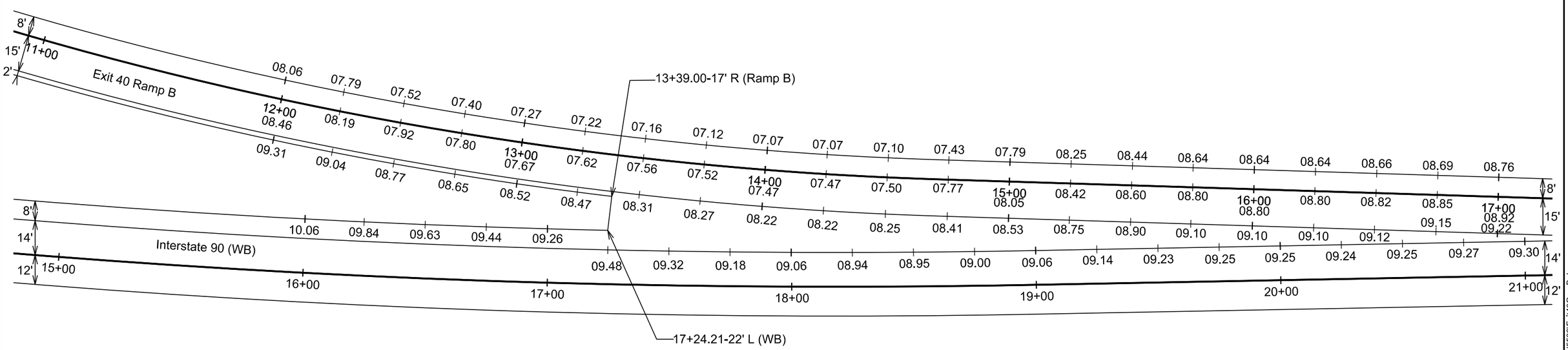

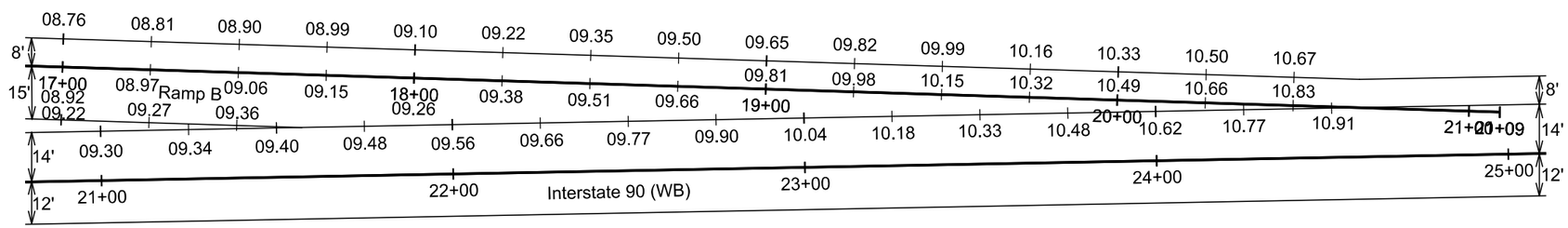

Plot Scale - 1:40

Plotted From - trpr17192

File - ...\pr\jmead5580\Exit40GoreB.dgn

RAMP GORE LAYOUT
EXIT 40 RAMP C

STATE OF SOUTH DAKOTA	PROJECT	SHEET	TOTAL SHEETS
	IM 0901(38)40	B69	B114

Plotting Date: 08/04/2016

SCALE
1" = 40'

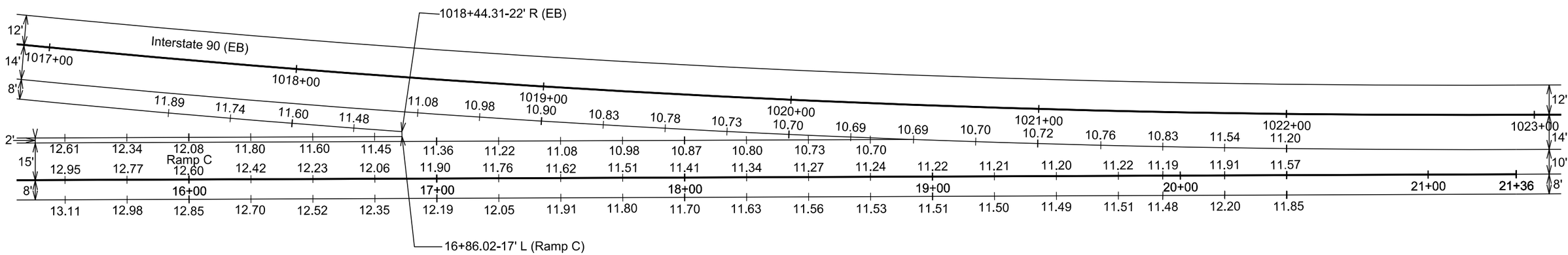

Plot Scale - 1:40

Plotted From - trpr17192

File - ...\prj\meade5580\Exit40GoreC.dgn

RAMP GORE LAYOUT
REST AREA RAMP A

STATE OF SOUTH DAKOTA	PROJECT	SHEET	TOTAL SHEETS
	IM 0901(38)40	B70	B114

Plotting Date: 08/04/2016

SCALE
1" = 40'

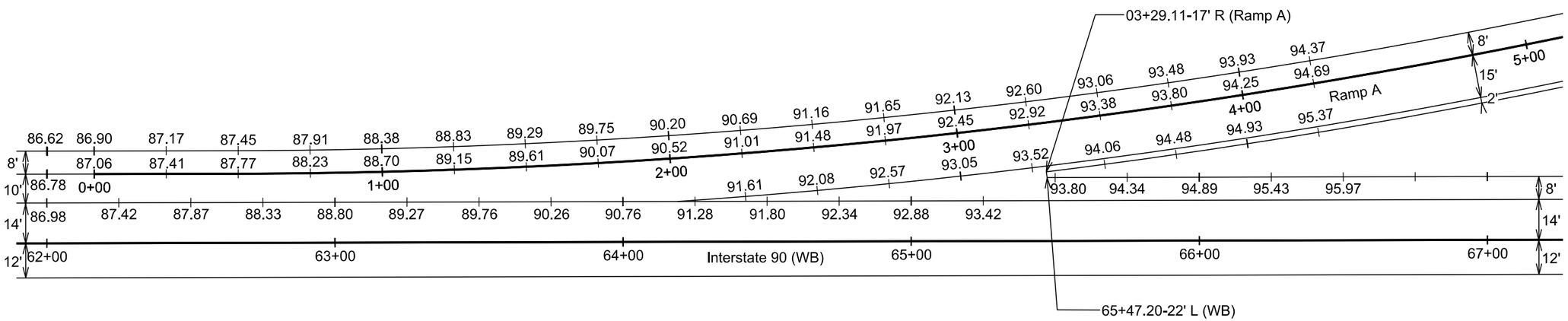

Plot Scale - 1:40

Plotted From - trpr17192

File - ...\prj\mead5580\RestAreaGoreA.dgn

RAMP GORE LAYOUT
REST AREA RAMP B

STATE OF SOUTH DAKOTA	PROJECT	SHEET	TOTAL SHEETS
	IM 0901(38)40	B71	B114

Plotting Date: 08/04/2016

SCALE
1" = 40'

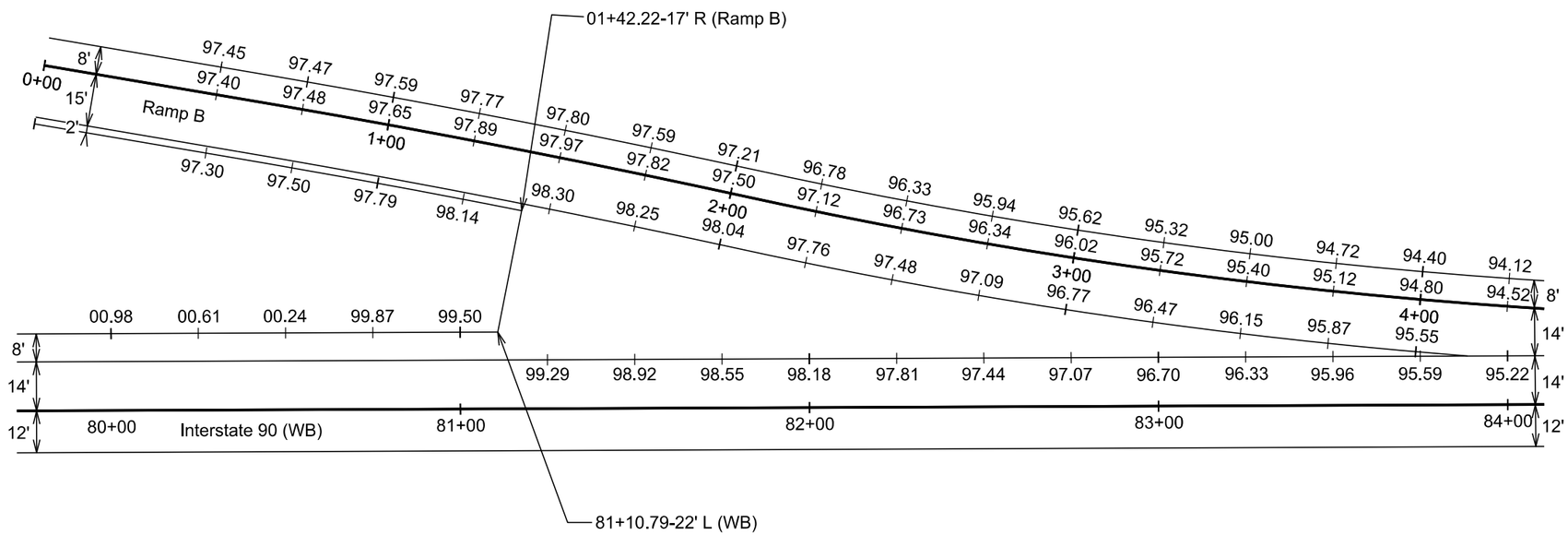

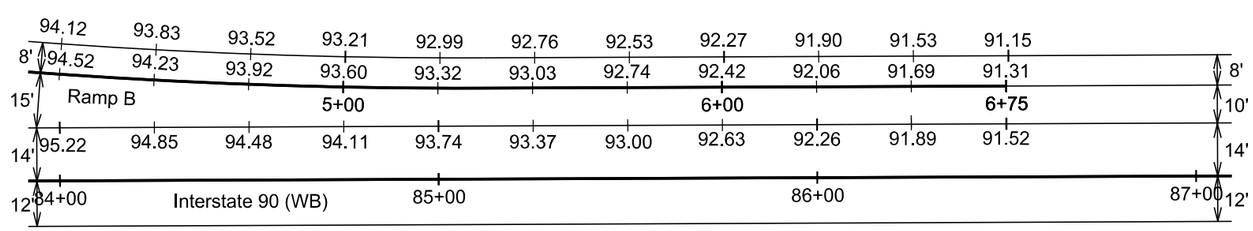

Plot Scale - 1:40
Plotted From - trpr17192
File - ...\prj\mead5580\RestAreaGoreB.dgn

RAMP GORE LAYOUT
REST AREA RAMP C

STATE OF SOUTH DAKOTA	PROJECT	SHEET	TOTAL SHEETS
	IM 0901(38)40	B72	B114

Plotting Date: 08/04/2016

SCALE
1" = 40'

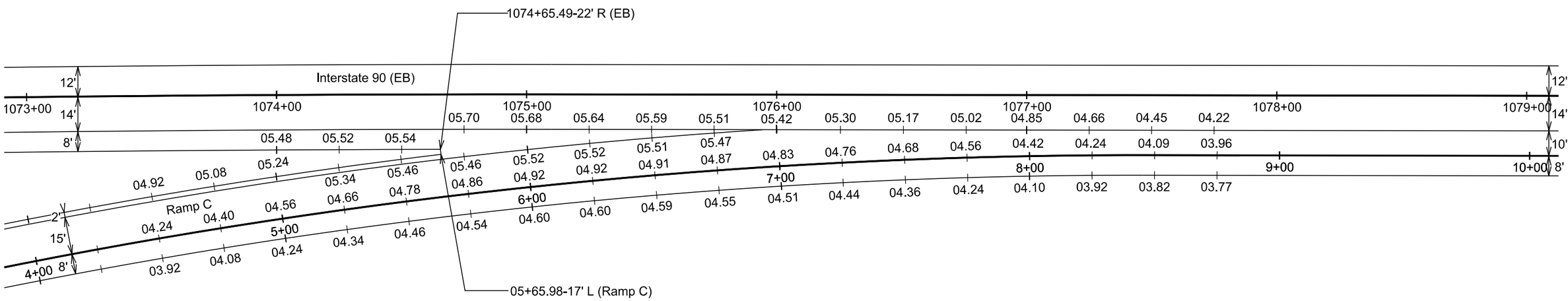

Plot Scale - 1:40

Plotted From - tpr17192

File - ...\prj\mead5580\RestAreaGoreC.dgn

RAMP GORE LAYOUT
REST AREA RAMP D

STATE OF SOUTH DAKOTA	PROJECT	SHEET	TOTAL SHEETS
	IM 0901(38)40	B73	B114

Plotting Date: 08/04/2016

SCALE
1" = 40'

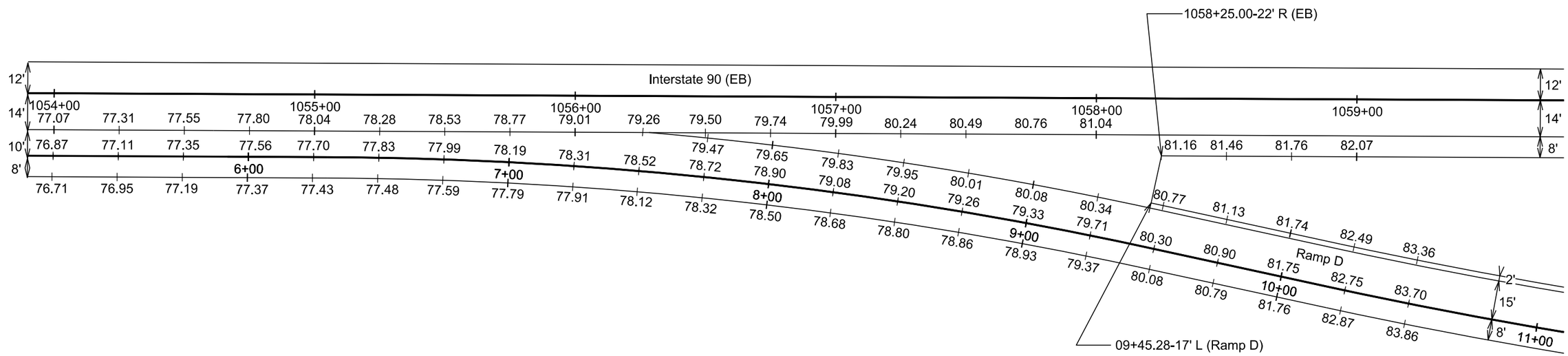

Plot Scale - 1:40

Plotted From - tnpr17192

File - ...\prj\mead5580\RestAreaGoreD.dgn

RAMP GORE LAYOUT
EXIT 44 RAMP A

STATE OF SOUTH DAKOTA	PROJECT	SHEET	TOTAL SHEETS
	IM 0901(38)40	B74	B114

Plotting Date: 08/04/2016

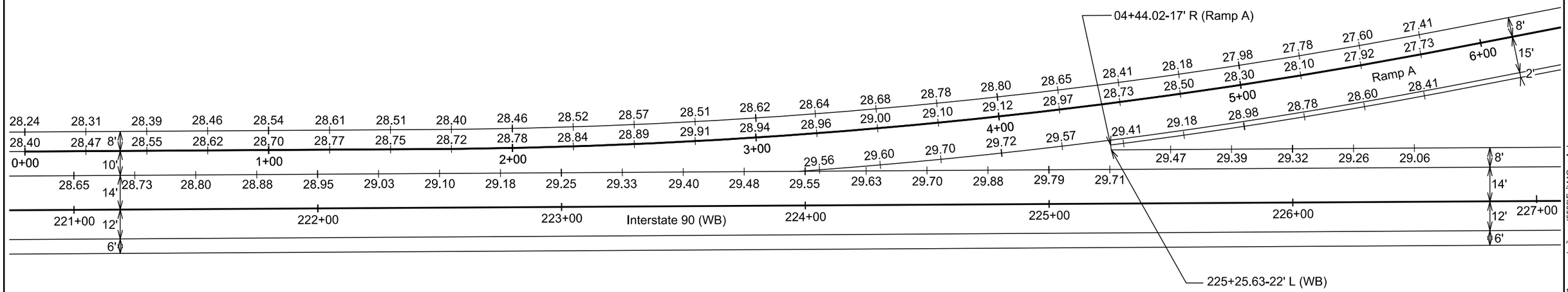

Plot Scale - 1:40

Plotted From - trpr17192

File - ...\prj\mead5580\Exit44GoreA.dgn

RAMP GORE LAYOUT
EXIT 44 RAMP B

STATE OF SOUTH DAKOTA	PROJECT	SHEET	TOTAL SHEETS
	IM 0901(38)40	B75	B114

Plotting Date: 08/04/2016

SCALE
1" = 40'

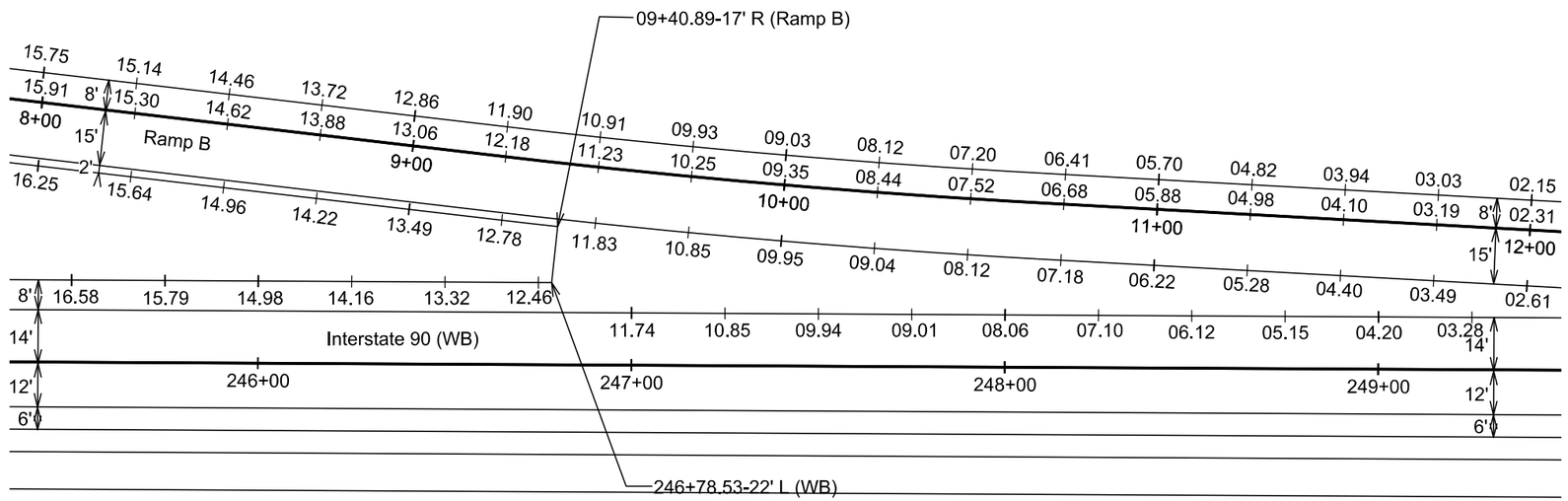

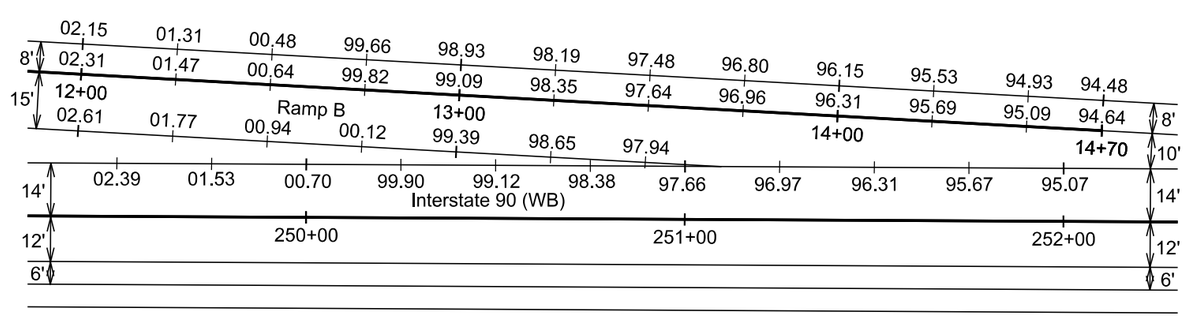

Plot Scale - 1:40

Plotted From - tnpr17192

File - ...\pn\mead5580\Exit44GoreB.dgn

RAMP GORE LAYOUT
EXIT 44 RAMP C

STATE OF SOUTH DAKOTA	PROJECT	SHEET	TOTAL SHEETS
	IM 0901(38)40	B76	B114

Plotting Date: 08/04/2016

SCALE
1" = 40'

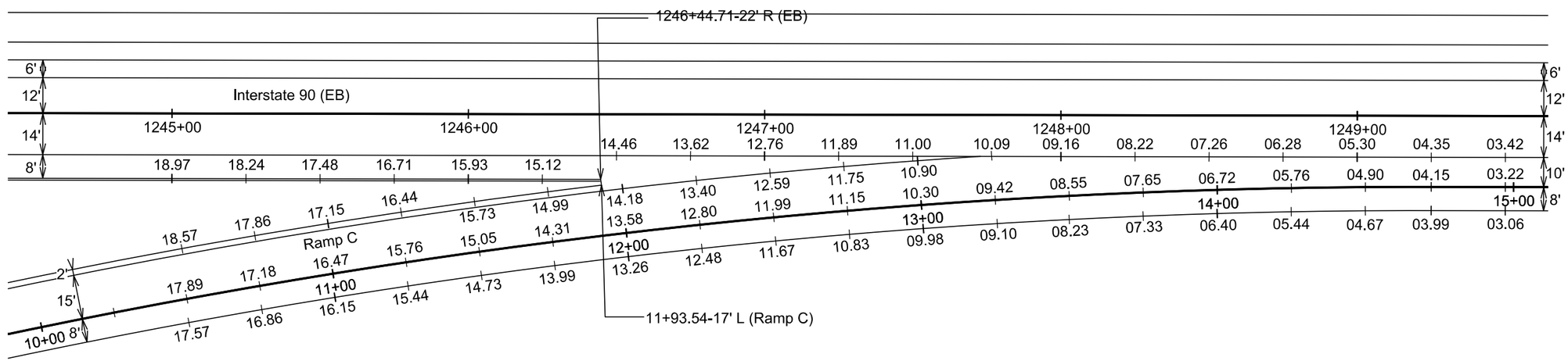

Plot Scale - 1:40

Plotted From - tnpr17192

File - ...\pp\mead5580\Exit44GoreC.dgn

RAMP GORE LAYOUT

Exit 44 Ramp D

STATE OF SOUTH DAKOTA	PROJECT	SHEET	TOTAL SHEETS
	IM 0901(38)40	B77	B114

Plotting Date: 08/04/2016

SCALE
1" = 40'

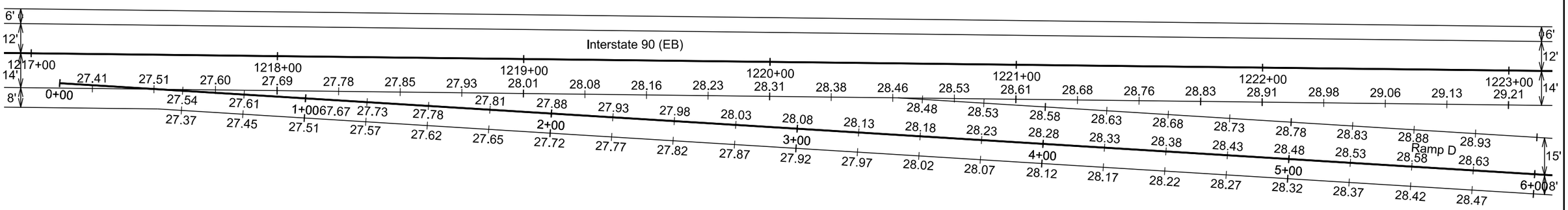

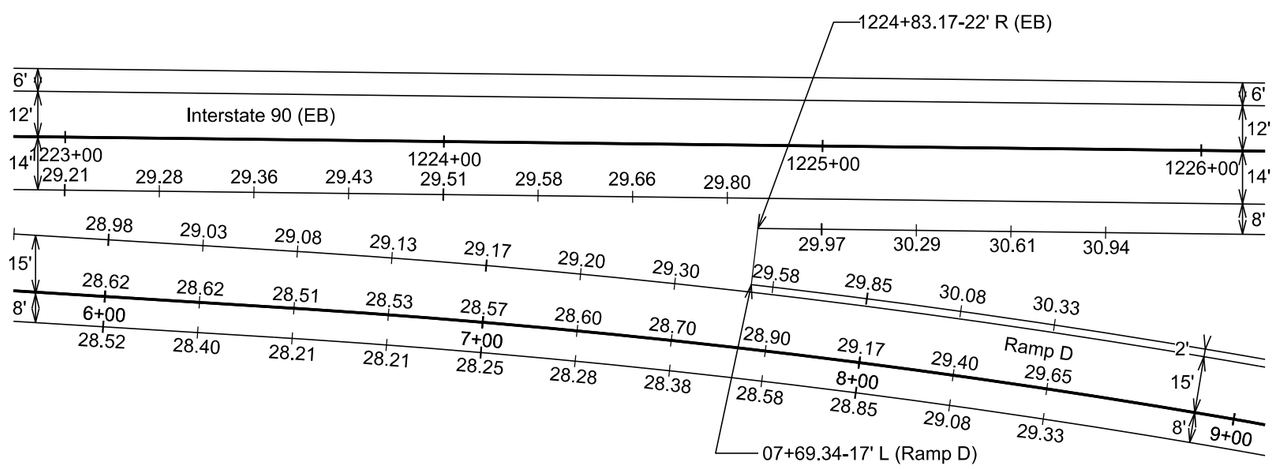

Plot Scale - 1:40

Plotted From - trpr17192

File - ...\prj\mead5580\Exit44GoreD.dgn

ONE CABLE GUARDRAIL

STATE OF SOUTH DAKOTA	PROJECT	SHEET	TOTAL SHEETS
	IM 0901(38)40	B78	B114

Plotting Date: 08/04/2016

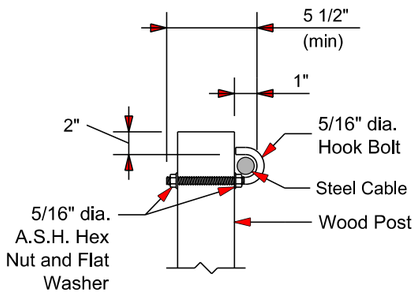

Cable Mounting Detail
for In-Line Post

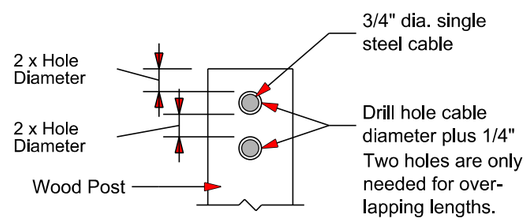

Cable Mounting Detail
for Terminal Post

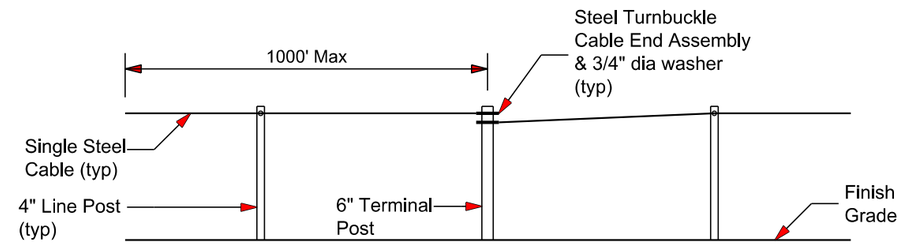

Cable Overlap Detail

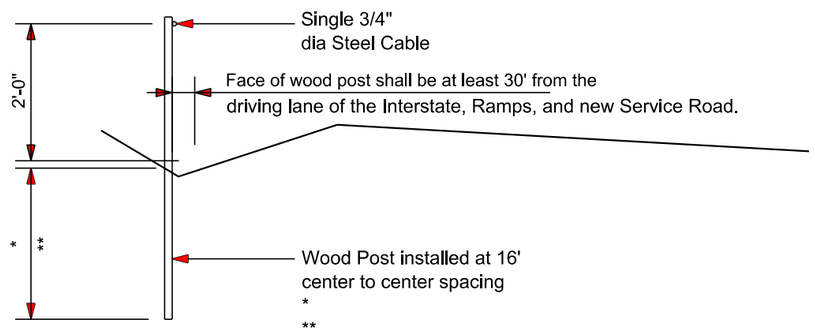

Cable Divider Installation Detail

* Line Post - 4" round with 2'-6" below grade.
** Terminal Post - 6" round with 3'-0" below grade.

The Cable Divider shall terminate at each end with a Steel Turnbuckle Cable End Assembly as detailed on Std Plate 629.01, Sheet 4 of 6, Detail A.

No length of Cable Divider shall be longer than 1000 feet. For Cable Divider runs between 1000 feet and 2000 feet, the run shall be split into two lengths at the mid point of the total run length. Split runs shall overlap as detailed hereon.

Cable Divider steel cable splices shall be as detailed on Std Plate 629.01, Sheet 4 of 6, Detail G.

All labor, materials and equipment needed for the completion of this work shall be incidental to the contract unit price per foot of 1 Cable Guardrail.

Plot Scale - 1:200
Plotted From - tnpr17192
File - ...\One Cable Guardrail.dgn

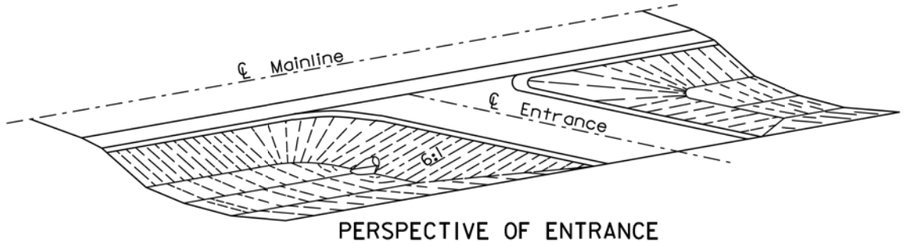

PERSPECTIVE OF ENTRANCE

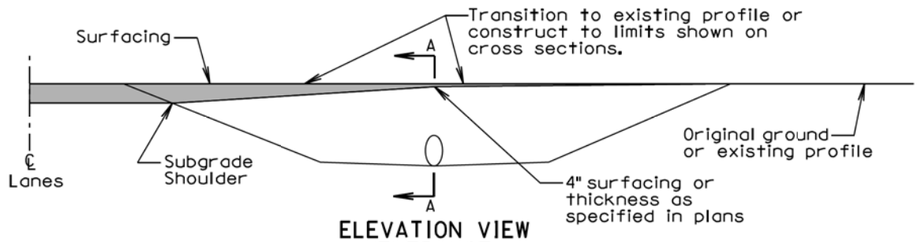

ELEVATION VIEW (ENTRANCE)

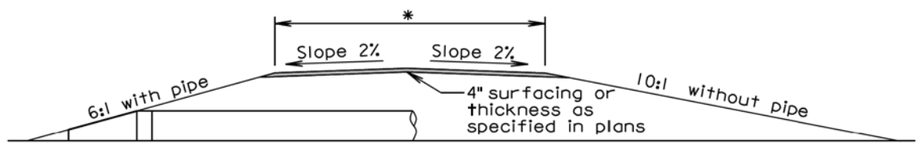

SECTION A-A (ENTRANCE)

*The finished surfacing width is stated elsewhere in the plans. The subgrade width is 4' wider than the finished surfacing width unless stated otherwise in the plans.

GENERAL NOTES:

The ditch section shown above in the perspective and elevation view is only for illustrative purposes.

A 6:1 inslope shall be constructed for an entrance when a pipe is required. A 10:1 inslope shall be constructed when a pipe is not required.

Pipe lengths shall be adjusted if necessary during construction to obtain the 6:1 slopes. For grading projects, the pipe lengths are estimated typically using a 4" thickness of surfacing directly over the subgrade above the pipe.

The transition area between the mainline inslope and the approach inslope for entrances shall be rounded to eliminate an abrupt transition.

The turning radii shall be 35' for intersecting roads and entrances unless stated otherwise in the plans.

September 6, 2013

Published Date: 3rd Qtr. 2016	SDDOT	INTERSECTING ROADS AND ENTRANCES	PLATE NUMBER 120.01
			Sheet 1 of 2

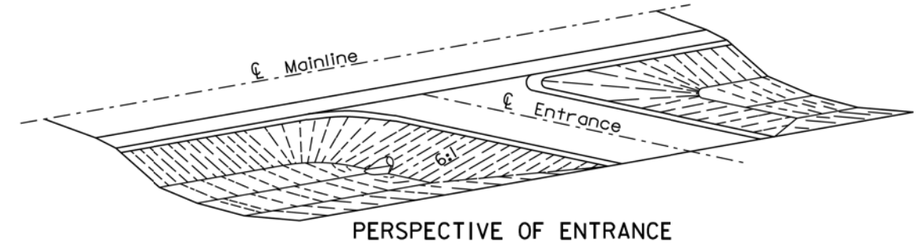

PERSPECTIVE OF ENTRANCE

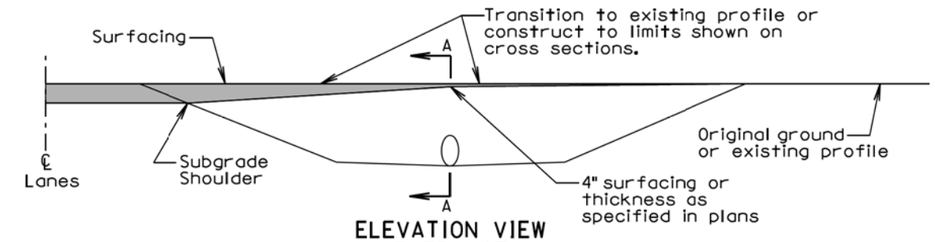

ELEVATION VIEW (ENTRANCE)

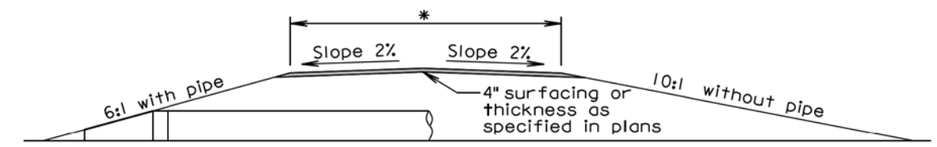

SECTION A-A (ENTRANCE)

*The finished surfacing width is stated elsewhere in the plans. The subgrade width is 4' wider than the finished surfacing width unless stated otherwise in the plans.

GENERAL NOTES:

The ditch section shown above in the perspective and elevation view is only for illustrative purposes.

A 6:1 inslope shall be constructed for an entrance when a pipe is required. A 10:1 inslope shall be constructed when a pipe is not required.

Pipe lengths shall be adjusted if necessary during construction to obtain the 6:1 slopes. For grading projects, the pipe lengths are estimated typically using a 4" thickness of surfacing directly over the subgrade above the pipe.

The transition area between the mainline inslope and the approach inslope for entrances shall be rounded to eliminate an abrupt transition.

The turning radii shall be 35' for intersecting roads and entrances unless stated otherwise in the plans.

September 6, 2013

Published Date: 3rd Qtr. 2016	SDDOT	INTERSECTING ROADS AND ENTRANCES	PLATE NUMBER 120.01
			Sheet 1 of 2

Plot Scale - 1:200
- Plotted From - trpr17192
File - ...\mead55801s12001_1s12001_2.dgn

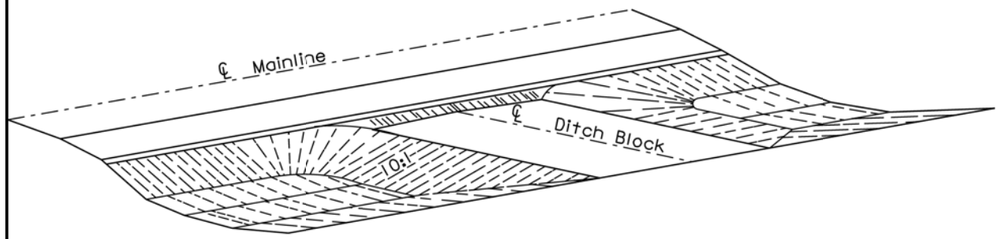

PERSPECTIVE OF DITCH BLOCK

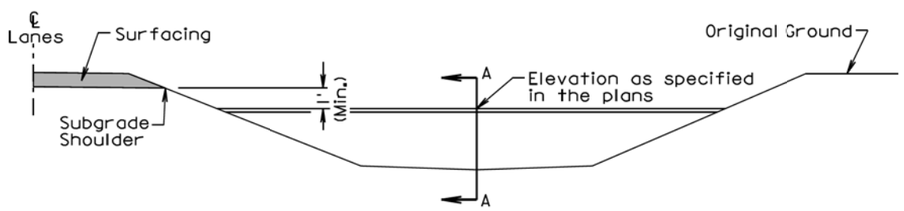

ELEVATION VIEW

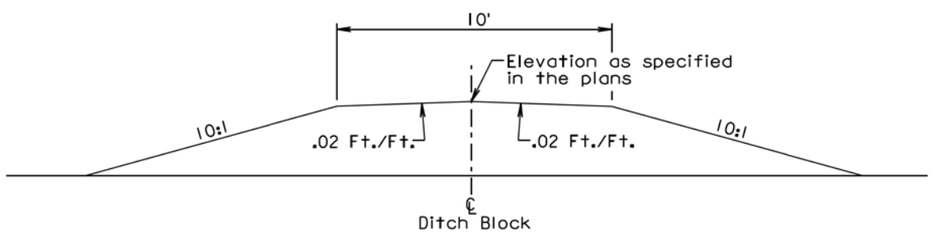

SECTION A-A

GENERAL NOTES:

The ditch section shown above in the perspective and elevation view is only for illustrative purposes.

The inslopes of the ditch block shall be 10:1 or as specified in the plans.

The transition area between the mainline inslope and the ditch block inslope shall be rounded to eliminate an abrupt transition.

February 14, 2011

Published Date: 3rd Qtr. 2016	SDDOT	DITCH BLOCK	PLATE NUMBER 120.02
			Sheet 1 of 1

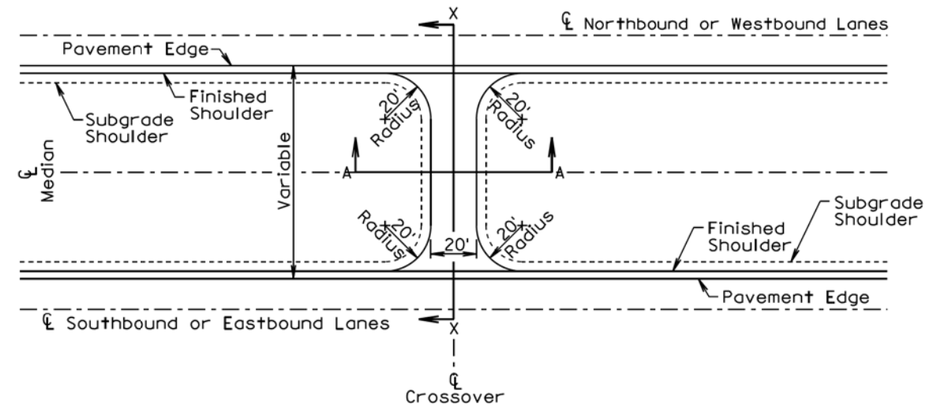

PLAN VIEW

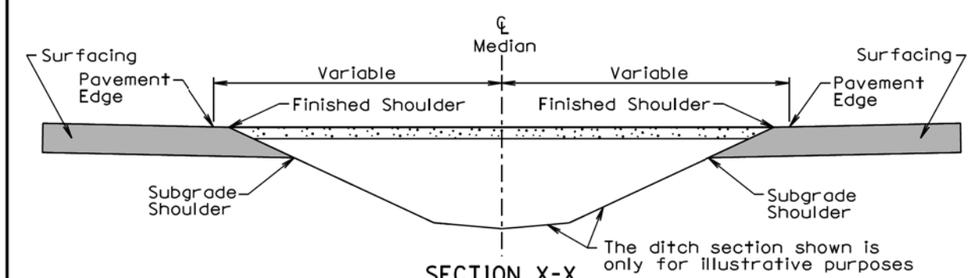

SECTION X-X

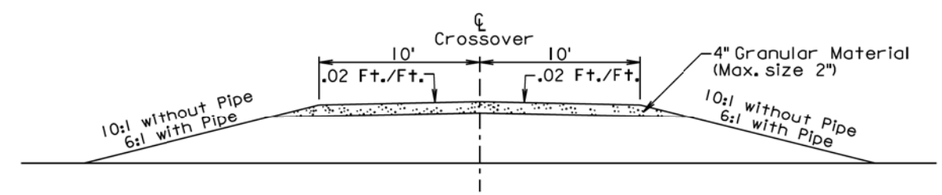

SECTION A-A

GENERAL NOTES:

The inslopes of the maintenance crossovers shall be 6:1 when there is a pipe, 10:1 without pipe, or as specified in the plans.

The quantities of materials necessary for construction of the maintenance crossovers are as provided in the plans and shall be paid for at their respective contract unit prices for the various materials used.

February 14, 2011

Published Date: 3rd Qtr. 2016	SDDOT	STANDARD MAINTENANCE CROSSOVER FOR INTERSTATE HIGHWAYS	PLATE NUMBER 120.04
			Sheet 1 of 1

Plot Scale - 1:200
- Plotted From - tnpr17192
File - ...\prj\mead5580\s12002s12004.dgn

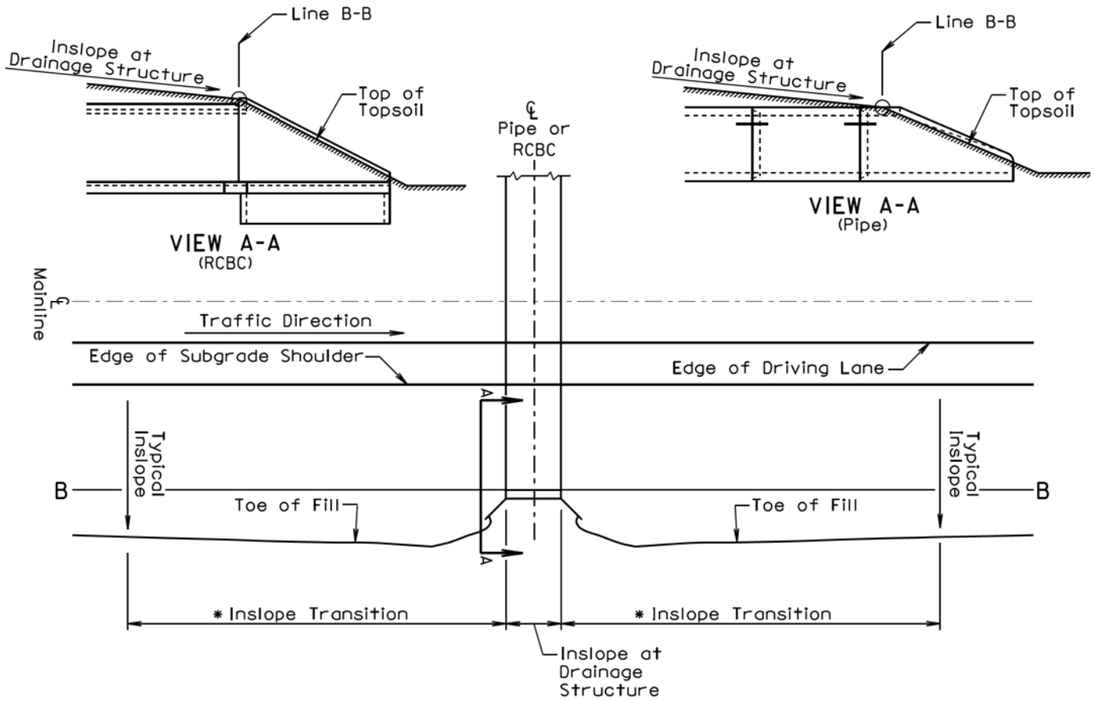

TYPE 1 INSLOPE TRANSITION

GENERAL NOTES:

This Type 1 Inslope Transition is used when the specified inslope at the drainage structure is flatter than the typical inslope and the inslope at the drainage structure is between a 4:1 slope and 6:1 slope.

Line B-B represents the clear zone line, the location where soil intercepts the parapet on an RCBC, the location where the soil intercepts the top of the pipe adjacent to the opening of the pipe end section, or may represent a change in slope.

* Transition from the typical inslope to the inslope at the drainage structure. Within the clear zone (area from edge of subgrade shoulder to line B-B) use 100' length for each 1:1 slope change. Example: transition from a 4:1 to a 6:1 would require a 200' length transition. The typical inslope outside of the clear zone shall be transitioned gradually to the slope necessary adjacent to the RCBC wing wall or pipe culvert end section within the transition length necessary for the transition within the clear zone.

Published Date: 3rd Qtr. 2016

SDDOT

INSLOPE TRANSITIONS AT PIPE CULVERTS OR REINFORCED CONCRETE BOX CULVERTS

PLATE NUMBER 120.05

Sheet 1 of 2

February 14, 2011

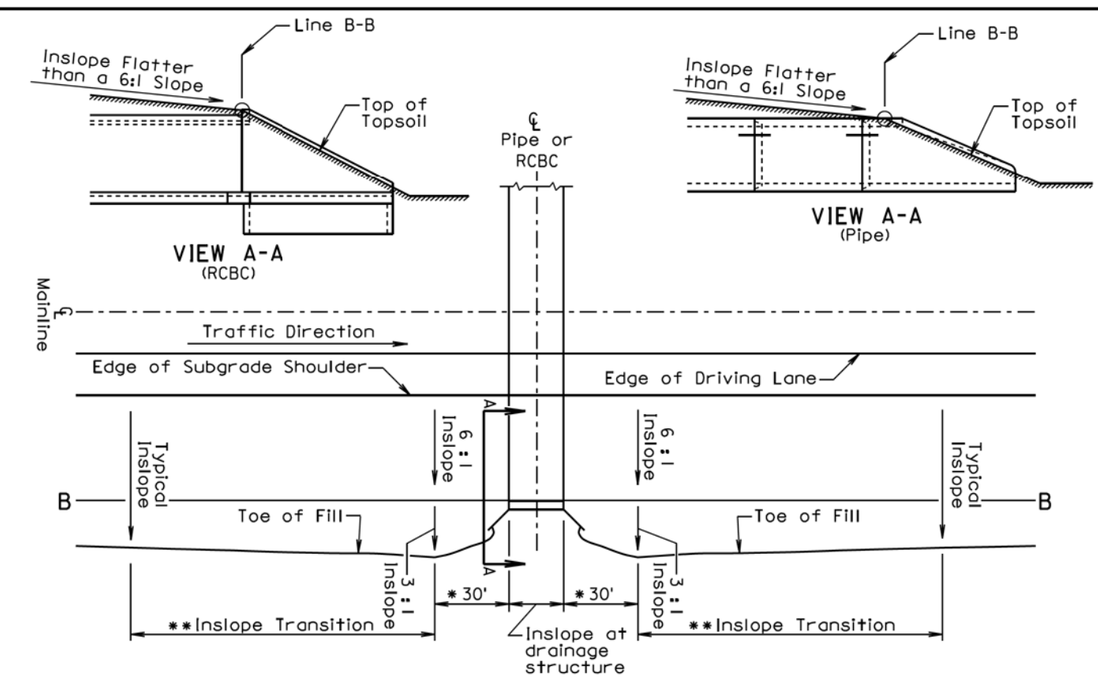

TYPE 2 INSLOPE TRANSITION

GENERAL NOTES:

This Type 2 Inslope Transition is used when the specified inslope at the pipe or RCBC is flatter than a 6:1 slope.

Line B-B represents the clear zone line, the location where soil intercepts the parapet on an RCBC, the location where the soil intercepts the top of the pipe adjacent to the opening of the pipe end section, or may represent a change in slope.

* Transition from inslope at drainage structure to a 6 : 1 inslope and 3:1 inslope.

** Transition from typical inslope to the inslopes adjacent to the drainage structure. Within the clear zone (area from edge of subgrade shoulder to line B-B) use 100' length for each 1:1 slope change. Example: transition from a 4:1 to a 6:1 would require a 200' length transition. The typical inslope outside of the clear zone shall be transitioned to a 3:1 inslope within the transition length necessary for the transition within the clear zone.

Published Date: 3rd Qtr. 2016

SDDOT

INSLOPE TRANSITIONS AT PIPE CULVERTS OR REINFORCED CONCRETE BOX CULVERTS

PLATE NUMBER 120.05

Sheet 2 of 2

February 14, 2011

STATE OF SOUTH DAKOTA

PROJECT IM 0901(38)40

SHEET B81

TOTAL SHEETS B114

Plotting Date: 08/04/2016

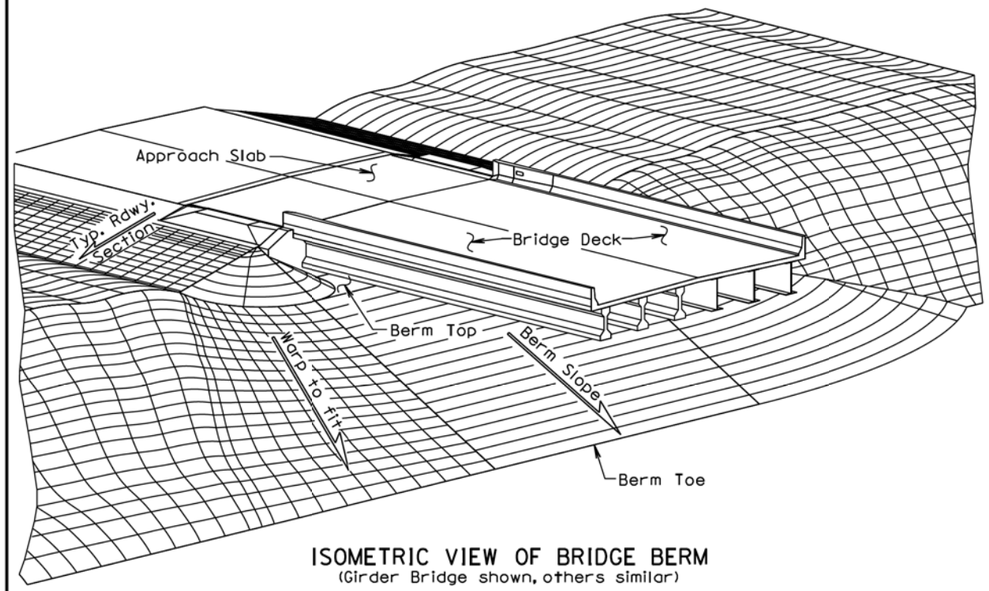

ISOMETRIC VIEW OF BRIDGE BERM
(Girder Bridge shown, others similar)

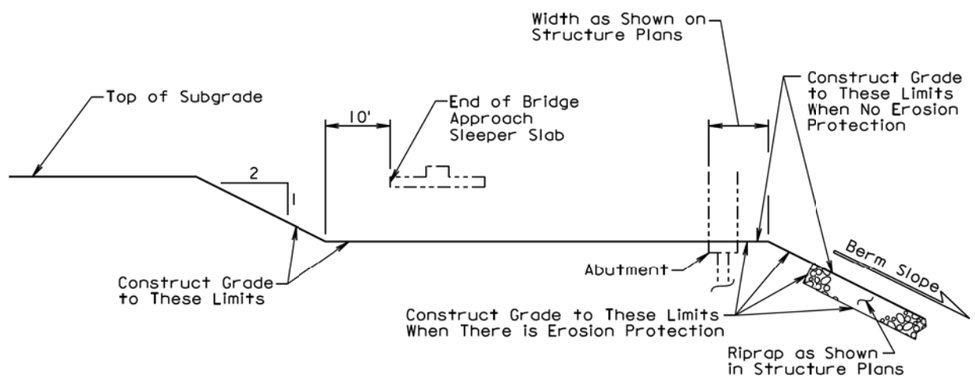

TYPICAL GRADING PROFILE AT BRIDGE BERM
(Normal to ℄ Abutment at ℄ Roadway)

GENERAL NOTE:

The bridge berm elevation and slope shall be as shown in the structure plans.

September 6, 2006

Published Date: 3rd Qtr. 2016	SDDOT	***BRIDGE BERM (NONPROJECTING EMBANKMENT)***	***PLATE NUMBER 120.10*** *Sheet 1 of 1*

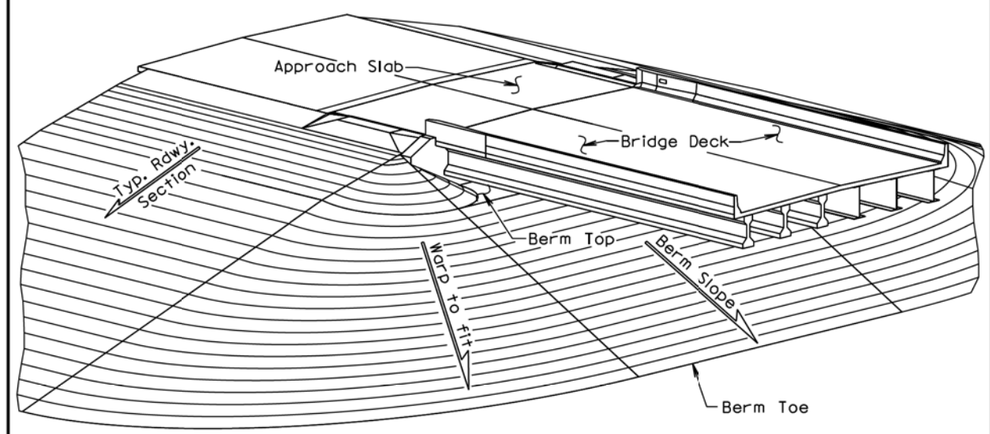

ISOMETRIC VIEW OF BRIDGE BERM
(Girder Bridge shown, others similar)

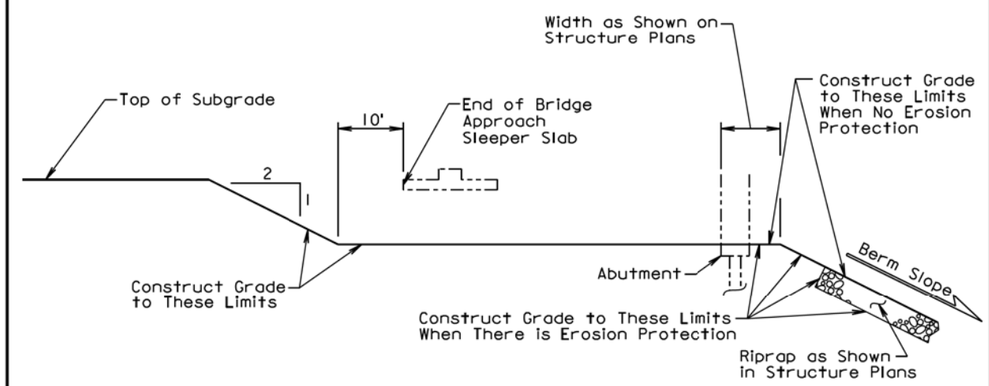

TYPICAL GRADING PROFILE AT BRIDGE BERM
(Normal to ℄ Abutment at ℄ Roadway)

GENERAL NOTE:

The bridge berm elevation and slope shall be as shown in the structure plans.

September 6, 2006

Published Date: 3rd Qtr. 2016	SDDOT	***BRIDGE BERM (PROJECTING EMBANKMENT)***	***PLATE NUMBER 120.11*** *Sheet 1 of 1*

Plot Scale - 1:200
- Plotted From - trpr17192
File - ...\prj\mead5580\s12010s12011.dgn

TOLERANCES IN DIMENSIONS

Diameter: ±1.5% for 24" Dia. or less and ±1% or 3/8" whichever is more for 27" Dia. or greater.
Diameters at joints: ± 3/16" for 30" Dia. or less and ± 1/4" for 36" or greater.
Length of joint (j): ± 1/4".
Wall thickness (T): not less than design T by more than 5% or 3/16", whichever is greater.
Laying length: shall not underrun by more than 1/2".

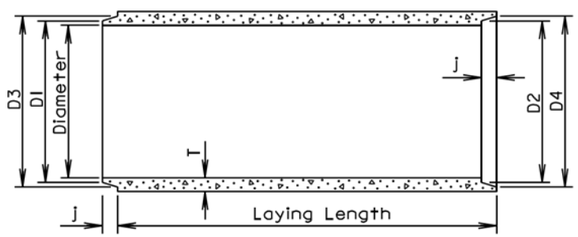

LONGITUDINAL SECTION

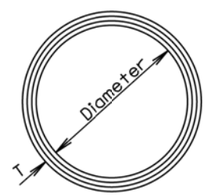

END VIEW

GENERAL NOTES:

Construction of R. C. P. shall conform to the requirements of Section 990 of the Specifications.

Not more than 2 four-foot sections shall be permitted near the ends of any culvert. Four-foot lengths shall be used only to secure the required length of culvert.

Diam. (in.)	Approx. Wt. /Ft. (lb.)	T (in.)	J (in.)	D1 (in.)	D2 (in.)	D3 (in.)	D4 (in.)
12	92	2	1 3/4	13 1/4	13 5/8	13 7/8	14 1/4
15	127	2 1/4	2	16 1/2	16 7/8	17 1/4	17 5/8
18	168	2 1/2	2 1/4	19 5/8	20	20 3/8	20 3/4
21	214	2 3/4	2 1/2	22 7/8	23 1/4	23 3/4	24 1/8
24	265	3	2 3/4	26	26 3/8	27	27 3/8
27	322	3 1/4	3	29 1/4	29 5/8	30 1/4	30 5/8
30	384	3 1/2	3 1/4	32 3/8	32 3/4	33 1/2	33 7/8
36	524	4	3 3/4	38 3/4	39 1/4	40	40 1/2
42	685	4 1/2	4	45 1/8	45 5/8	46 1/2	47
48	867	5	4 1/2	51 1/2	52	53	53 1/2
54	1070	5 1/2	4 1/2	57 7/8	58 3/8	59 3/8	59 7/8
60	1296	6	5	64 1/4	64 3/4	66	66 1/2
66	1542	6 1/2	5 1/2	70 5/8	71 1/8	72 1/2	73
72	1810	7	6	77	77 1/2	79	79 1/2
78	2098	7 1/2	6 1/2	83 3/8	83 7/8	85 5/8	86 1/8
84	2410	8	7	89 3/4	90 1/4	92 1/8	92 5/8
90	2740	8 1/2	7	95 3/4	96 1/4	98 1/8	98 5/8
96	2950	9	7	102 1/8	102 5/8	104 1/2	105
102	3075	9 1/2	7 1/2	109	109 1/2	111 1/2	112
108	3870	10	7 1/2	115 1/2	116	118	118 1/2

June 26, 2015

Published Date: 3rd Qtr. 2016

SDDOT

REINFORCED CONCRETE PIPE

PLATE NUMBER 450.01

Sheet 1 of 1

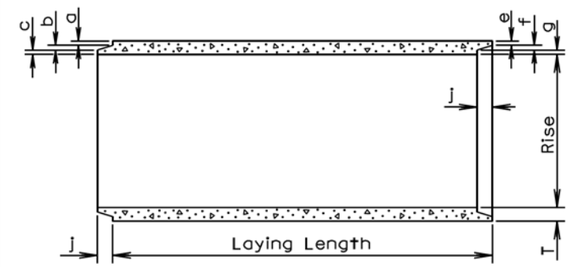

LONGITUDINAL SECTION

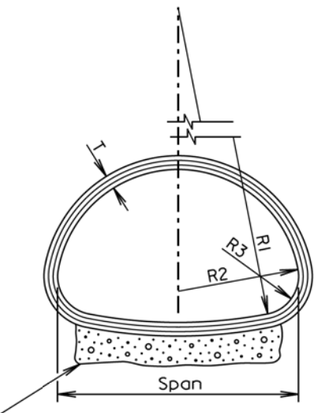

END VIEW

TOLERANCES IN DIMENSIONS

Radial dimensions at joints: ± 1/8" for 65" span or less and ± 1/4" for longer spans.
Rise and Span: ±2% of tabular values.
Length of Joint (J): ± 1/4".
Wall thickness (T): not less than design T by more than 5% or 3/16", whichever is greater.
Laying length: shall not underrun by more than 1/2".

Gravel Bedding Material shall be supplied for 102" to 169" spans. It shall be placed to a thickness of 6" (Min.) x 85% of the Span x Length of culvert and shall conform to the gradation requirements for gravel surfacing except material may be screened or may be plan provided material.

* Size (in.)	Approx. Wt./Ft. (lb.)	Rise (in.)	Span (in.)	T (in.)	a (in.)	b (in.)	c (in.)	j (in.)	e (in.)	f (in.)	g (in.)	R1 (in.)	R2 (in.)	R3 (in.)
18	170	13 1/2	22	2 1/2	1 3/8	3/8	3/4	2	1 1/8	3/8	1	27 1/2	13 3/4	5 1/4
24	320	18	28 1/2	3 1/2	1 5/8	1/2	1 3/8	3	1 3/8	1/2	1 5/8	40 11/16	14 3/4	4 5/8
30	450	22 1/2	36 1/4	4	1 13/16	5/8	1 9/16	3 1/2	1 9/16	5/8	1 13/16	51	18 3/4	6 1/8
36	600	26 5/8	43 3/4	4 1/2	2	3/4	1 3/4	4	1 3/4	3/4	2	62	22 1/2	6 1/2
42	740	31 5/16	51 1/8	4 1/2	2	3/4	1 3/4	4	1 3/4	3/4	2	73	26 1/4	7 3/4
48	890	36	58 1/2	5	2 1/4	3/4	2	5	2	3/4	2 1/4	84	30	8 7/8
54	1100	40	65	5 1/2	2 1/2	3/4	2 1/4	5	2 1/4	3/4	2 1/2	92 1/2	33 3/8	10
60	1400	45	73 1/2	6	3 5/16	3/4	1 15/16	5	2 3/4	3/4	2 1/2	105	37 1/2	11
72	1900	54	88	7	3 13/16	1	2 3/16	6	3 1/4	1	2 3/4	126	45	13 5/16
84	2500	62	102	8	4 1/8	1	2 7/8	6	3 1/2	1	3 1/2	162 1/2	52	14 1/2
96	3300	78	122 3/8	9	4 1/2	1	3 1/2	7	4	1	4	218	62	20
108	4200	88	138 1/2	10	5	1	4	7	4 1/2	1	4 1/2	269	70	22
120	5100	96 7/8	154	11	5 1/2	1	4 1/2	7	5	1	5	301 3/8	78	24
132	5100	106 1/2	168 3/4	10		1	4	7	4 1/2	1	4 1/2	329	85 5/8	26 7/8

* Equivalent Diameter of Circular R. C. P.

GENERAL NOTES:

Construction of R.C.P. Arch shall conform to the requirements of Section 990 of the Specifications. Not more than 2 four-foot sections shall be permitted near the ends of any culvert. Four-foot lengths shall be used only to secure the required length of culvert.

June 26, 2015

Published Date: 3rd Qtr. 2016

SDDOT

REINFORCED CONCRETE PIPE ARCH

PLATE NUMBER 450.02

Sheet 1 of 1

Plot Scale - 1:200
- Plotted From - tnpr17192
File - ...\prj\mead5580\s45001\s45002.dgn

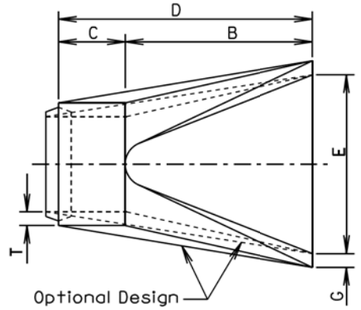

TOP VIEW

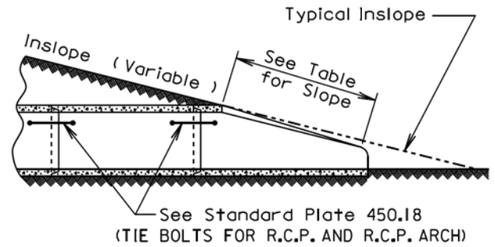

SLOPE DETAIL

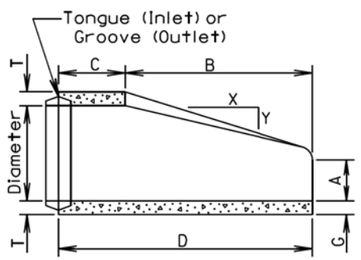

LONGITUDINAL SECTION

GENERAL NOTES:

Lengths of concrete pipe shown on plan sheets are between flared ends only.

Construction of R.C.P. Flared End shall conform to the requirements of Section 990 of the Specifications.

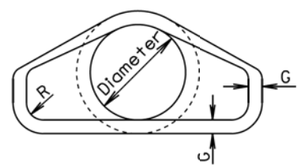

END VIEW

Dia. (in.)	Approx. Wt. of Section (lbs.)	Approx. Slope (X to Y)	T (in.)	A (in.)	B (in.)	C (in.)	D (in.)	E (in.)	G (in.)	R (in.)
12	530	2.4:1	2	4	24	48 7/8	72 7/8	24	2	1 1/2
15	740	2.4:1	2 1/4	6	27	46	73	30	2 1/4	1 1/2
18	990	2.3:1	2 1/2	9	27	46	73	36	2 1/2	1 1/2
21	1280	2.4:1	2 3/4	9	36	37 1/2	73 1/2	42	2 3/4	1 1/2
24	1520	2.5:1	3	9 1/2	43 1/2	30	73 1/2	48	3	1 1/2
27	1930	2.5:1	3 1/4	10 1/2	49 1/2	24	73 1/2	54	3 1/4	1 1/2
30	2190	2.5:1	3 1/2	12	54	19 3/4	73 3/4	60	3 1/2	1 1/2
36	4100	2.5:1	4	15	63	34 3/4	97 3/4	72	4	1 1/2
42	5380	2.5:1	4 1/2	21	63	35	98	78	4 1/2	1 1/2
48	6550	2.5:1	5	24	72	26	98	84	5	1 1/2
54	8240	2:1	5 1/2	27	65	33 1/4	98 1/4	90	5 1/2	1 1/2
60	8730	1.9:1	6	35	60	39	99	96	5	1 1/2
66	10710	1.7:1	6 1/2	30	72	27	99	102	5 1/2	1 1/2
72	12520	1.8:1	7	36	78	21	99	108	6	1 1/2
78	14770	1.8:1	7 1/2	36	90	21	111	114	6 1/2	1 1/2
84	18160	1.6:1	8	36	90 1/2	21	111 1/2	120	6 1/2	1 1/2
90	20900	1.5:1	8 1/2	41	87 1/2	24	111 1/2	132	6 1/2	6

June 26, 2015

Published Date: 3rd Qtr. 2016

SDDOT

R. C. P. FLARED ENDS

PLATE NUMBER 450.10

Sheet 1 of 1

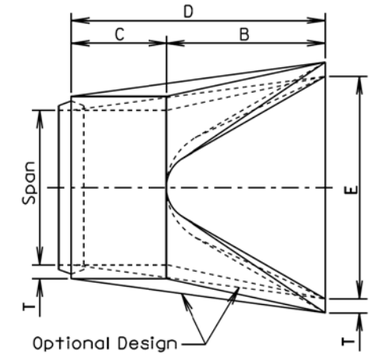

TOP VIEW

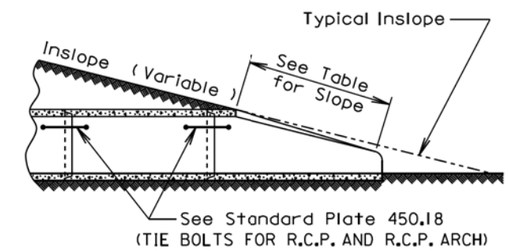

SLOPE DETAIL

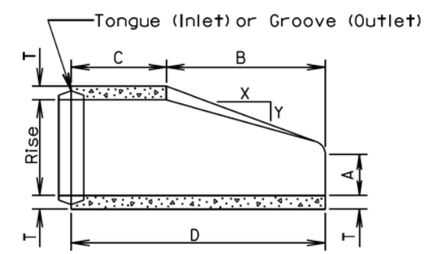

LONGITUDINAL SECTION

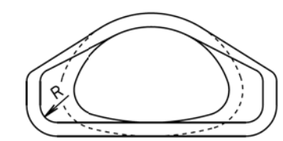

END VIEW

GENERAL NOTES:

Lengths of concrete pipe shown on plan sheets are between flared ends only.

Construction of R. C. P. Arch Flared End shall conform to the requirements of Section 990 of the Specifications.

* Size (in.)	Approximate Weight of Section (lbs.)	Rise (in.)	Span (in.)	Slope (X:Y)	T (in.)	A (in.)	B (in.)	C (in.)	D (in.)	E (in.)	R (in.)
18	1100	13 1/2	22	3:1	2 1/2	7	27	45	72	36	2
24	1750	18	28 1/2	3:1	3 1/2	8 1/2	39	33	72	48	3
30	3300	22 1/2	36 1/4	3:1	4	9 1/2	50	46	96	60	3
36	4350	26 5/8	43 3/4	3:1	4 1/2	11 1/8	60	36	96	72	6
42	5250	31 5/16	51 1/8	3:1	4 1/2	15 13/16	60	36	96	78	6
48	6400	36	58 1/2	3:1	5	21	60	36	96	84	6
54	7850	40	65	3:1	5 1/2	25 1/2	60	36	96	90	6
60	9500	45	73 1/2	3:1	6	31	60	36	96	96	6
72	13550	54	88	2:1	7	31	60	39	99	120	6
84	17950	62	102	2:1	8	28 1/2	83	19	102	144	6

*Equivalent Diameter of Circular R. C. P.

June 26, 2015

Published Date: 3rd Qtr. 2016

SDDOT

R. C. P. ARCH FLARED ENDS

PLATE NUMBER 450.11

Sheet 1 of 1

Plot Scale - 1:200

- Plotted From - trpr17192

File - ...\prj\mead5580\s45010s45011.dgn

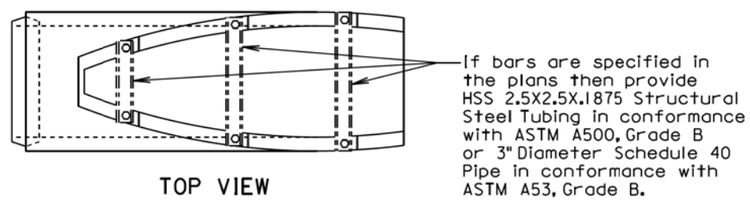

TOP VIEW

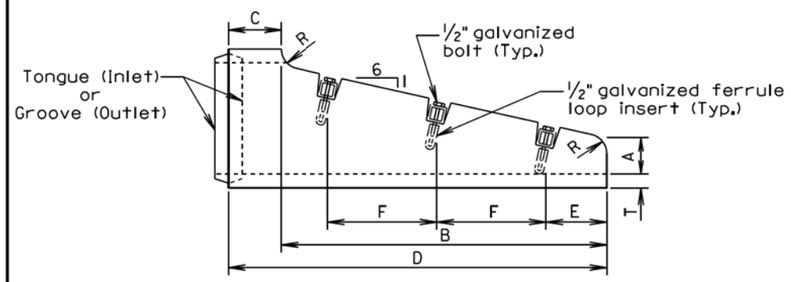

SIDE VIEW

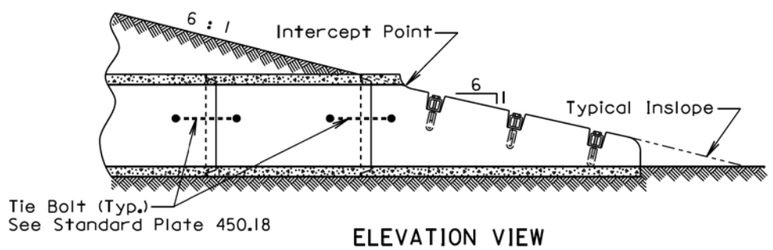

ELEVATION VIEW

Dia. (in.)	T (in.)	R (in.)	A (in.)	B (in.)	C (in.)	D (in.)	E (in.)	F (in.)	No. Sections	No. Bars
FOR CIRCULAR PIPE										
15	2 1/4	3	6	48	9	57	6	18	1	3
18	2 1/2	3	6	69	9	78	9	24	1	3
*24	3	3	6	111	9	120	6	24	1 or 2	5
FOR ARCH PIPE										
**18	2 1/2	1	6	39	33	72	6	24	1	2

*The use of 2 sections must be an approved design.
**Equivalent Diameter of Circular R.C.P.

GENERAL NOTES:

The length of concrete pipe shown on the plans is between safety ends.

Safety ends without bars are acceptable with or without the bar notches.

Bars shall be galvanized after fabrication in accordance with ASTM A123.

August 31, 2013

Published Date: 3rd Qtr. 2016	SDDOT	R. C. P. SAFETY ENDS WITH OR WITHOUT BARS	PLATE NUMBER 450.12 Sheet 1 of 1

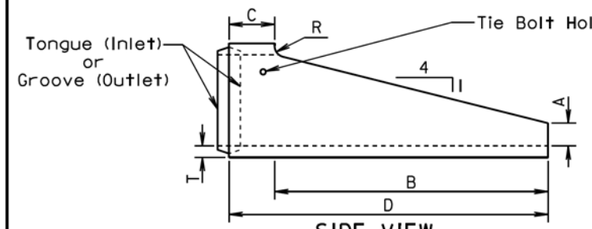

SIDE VIEW

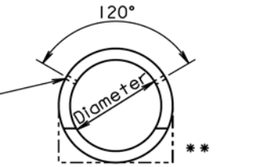

END VIEW "CIRCULAR"

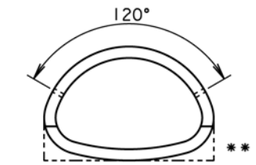

END VIEW "ARCH"

Dia. (in.)	T (in.)	A (in.)	B (in.)	C (in.)	D (in.)	R (in.)
FOR CIRCULAR PIPE						
24	3	6	72	12	84	3
30	3 1/2	7 1/2	90	12	102	3 1/2
FOR ARCH PIPE						
* 24	3	6	48	12	60	3
* 30	3 1/2	7 1/2	60	12	72	3 1/2
* 36	4 1/2	8 5/8	66	30	96	0
* 42	4 1/2	10	77 1/4	18 3/4	96	0

ALTERNATE

Dia. (in.)	T (in.)	A (in.)	B (in.)	C (in.)	D (in.)	R (in.)
FOR CIRCULAR PIPE						
24	3	9	72	12	84	0
30	3 1/2	11	90	12	102	0
FOR ARCH PIPE						
* 24	3	9	48	12	60	0
* 30	3 1/2	11	60	12	72	0

* Equivalent Diameter of Circular R.C.P.
** Acceptable Flat Bottom Alternate.

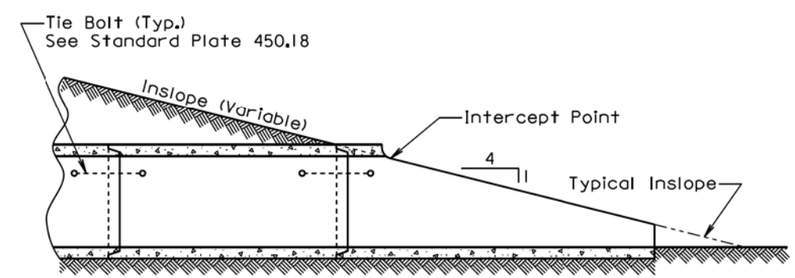

SECTION
(Along Centerline of Pipe)

GENERAL NOTE:

The length of concrete pipe shown in the construction plans is between sloped ends.

September 22, 2006

Published Date: 3rd Qtr. 2016	SDDOT	R. C. P. SLOPED ENDS	PLATE NUMBER 450.13 Sheet 1 of 1

Plot Scale - 1:200
- Plotted From - tnpr17192
File - ...\pp\mead5580\s450\2s45013.dgn

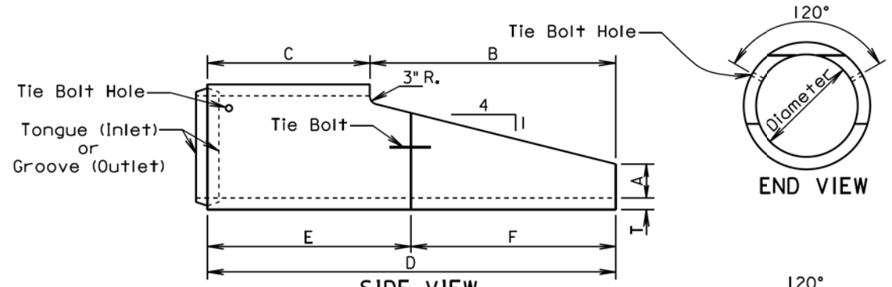

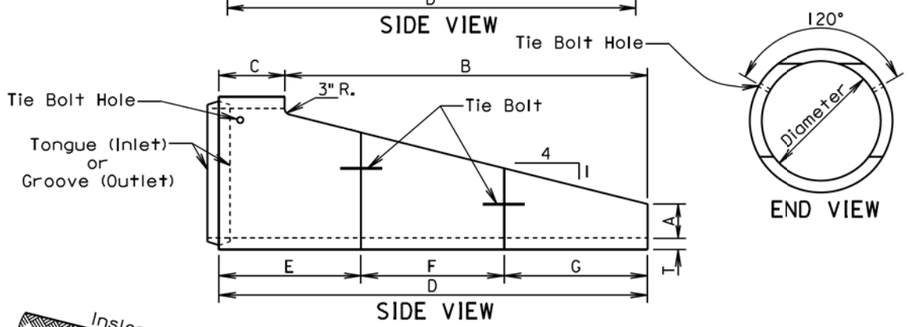

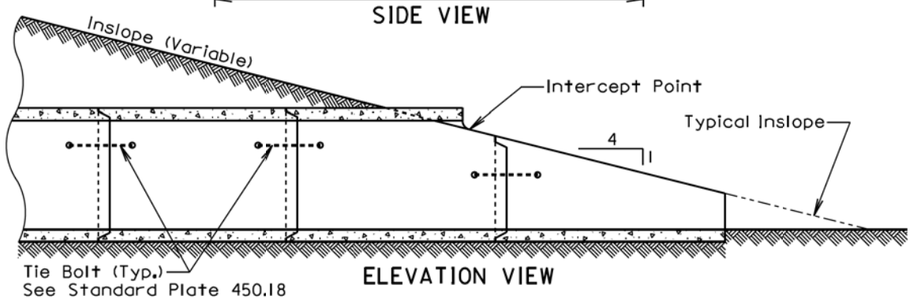

Dia. (in.)	T (in.)	A (in.)	B (in.)	C (in.)	D (in.)	E (in.)	F (in.)	G (in.)
36	4	12	86.5	57.5	144	72	72	
42	4.5	12	110.5	33.5	144	72	72	
48	5	12	134.5	33.5	168	96	72	
54	5.5	12	158.5	33.5	192	96	96	
60	6	12	182.5	33.5	216	72	72	72

GENERAL NOTE:

The length of concrete pipe shown in the construction plans is between sloped ends.

If bars are specified in the plans, then the bar assemblies shall be constructed in accordance with Standard Plate 450.15.

August 31, 2013

Published Date: 3rd Qtr. 2016	SDDOT	R. C. P. SLOPED ENDS WITH OR WITHOUT BARS	PLATE NUMBER 450.14 Sheet 1 of 1

Wall "t" (in.)	Rod Dia. (in.)	Pipe Sleeve Dia. (nominal)
≤ 3¼	⅝	¾
3½-6½	¾	1
≥ 7	1	1¼

GENERAL NOTES:

Tie bolts shall conform to ASTM F1554 Grade 36 or ASTM A36. Nuts shall be heavy hex conforming to ASTM A563. Washers shall conform to ASTM F436.

Pipe Sleeve shall conform to ASTM A500 or A53, Grade B.

Galvanize adjustible eye bolt tie assembly in accordance with ASTM A153.

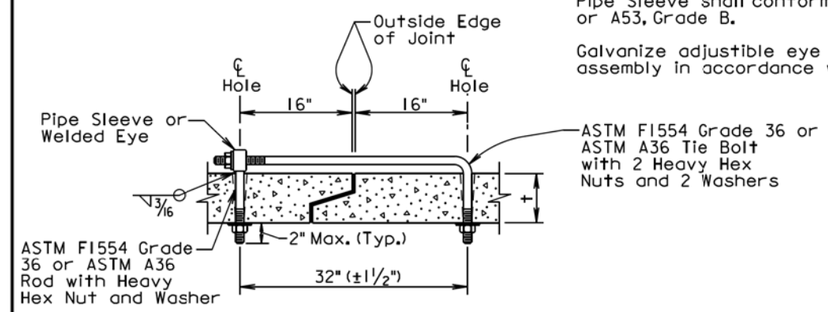

ADJUSTABLE EYE BOLT TIE

Pipe Dia. (in.)	"L" (in.)	Bolt Dia. (in.)
≤ 48	4	¾
> 48	6	1

GENERAL NOTES:

Angles shall conform to ASTM A36.

Bolts shall conform to ASTM A307. Nuts shall be heavy hex conforming to ASTM A563. Washers shall conform to ASTM F436.

Galvanize angles, bolts, nuts, and washers in accordance with ASTM A153.

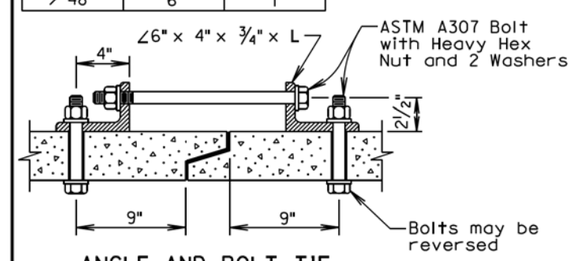

ANGLE AND BOLT TIE

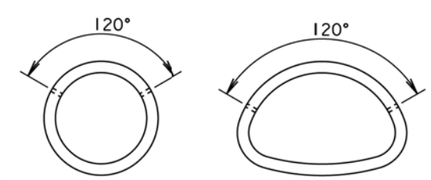

END VIEW "CIRCULAR"

END VIEW "ARCH"

GENERAL NOTES:

In lieu of the tie bolts detailed above other types of tie bolt connections may be installed as approved by the Office of Bridge Design.

All pipe sections of R.C.P. and R.C.P. Arch shall be tied with tie bolts except for pipe located between drop inlets, manholes, and junction boxes. All pipe sections of pipes that only enter or exit drop inlets, manhole, and junction boxes shall be tied with tie bolts.

There will be no separate measurement or payment for the tie bolts. The cost for furnishing and installing the tie bolts shall be incidental to the contract unit price per foot for the corresponding bid item for R.C.P. or R.C.P. Arch.

February 28, 2013

Published Date: 3rd Qtr. 2016	SDDOT	TIE BOLTS FOR R.C.P. AND R.C.P. ARCH	PLATE NUMBER 450.18 Sheet 1 of 1

Plot Scale - 1:200
- Plotted From - trpr17192
File - ...\prj\mead5580\s45014s45018.dgn

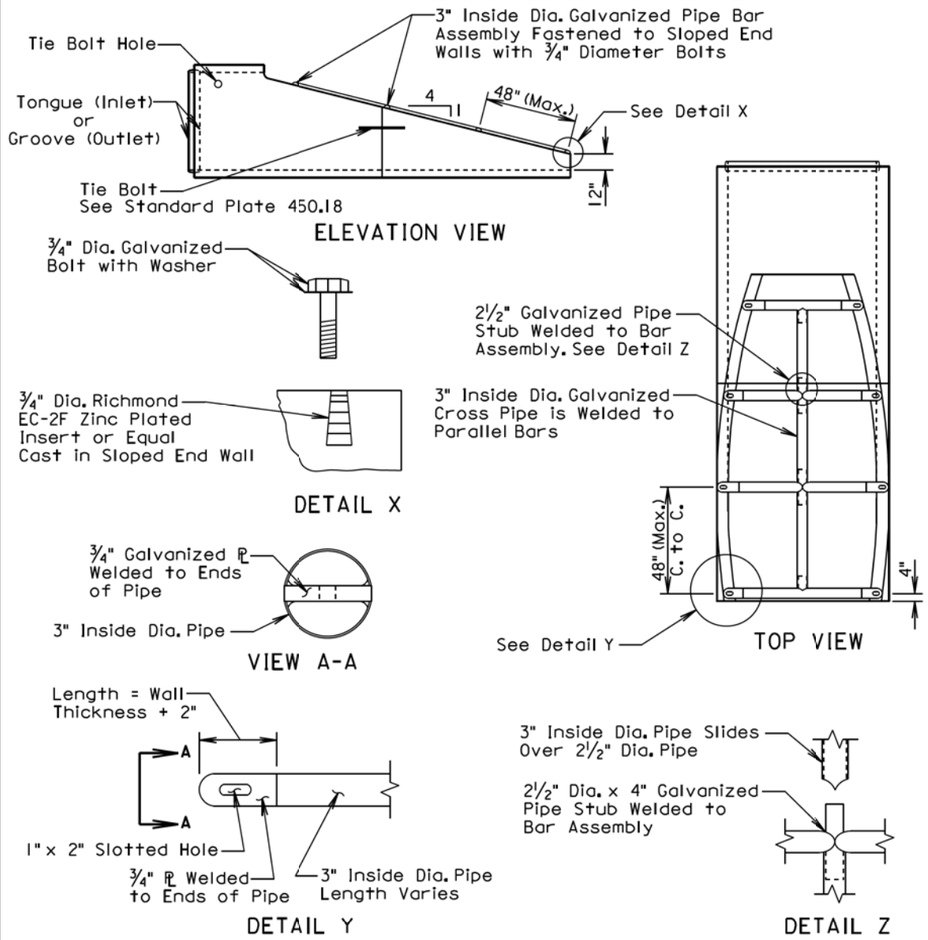

GENERAL NOTES:

The bar assembly shall be fabricated from steel in accordance with ASTM A53, Grade B or ASTM A500, Grade B.

The schedule 40 pipe sizes on the bar assembly drawings indicate sizes in regards to specification ASTM A53, Grade B. The allowable ASTM A500, Grade B sizes are HSS 3.5X.216 (for 3" schedule 40 pipe) and HSS 3X.25 (for 2.5" schedule 40 pipe).

Welding shall be accomplished by a certified welder. Installation shall be performed in accordance with the Specifications.

The bar assembly shall be galvanized after fabrication in accordance with ASTM A123.

Cost for all work and materials required for fabrication and installation of the bar assembly shall be incidental to the bid items for the various sizes of sloped ends.

June 26, 2015

Published Date: 3rd Qtr. 2016	SDDOT	R. C. P. SLOPED END BAR ASSEMBLIES	PLATE NUMBER 450.15
			Sheet 1 of 2

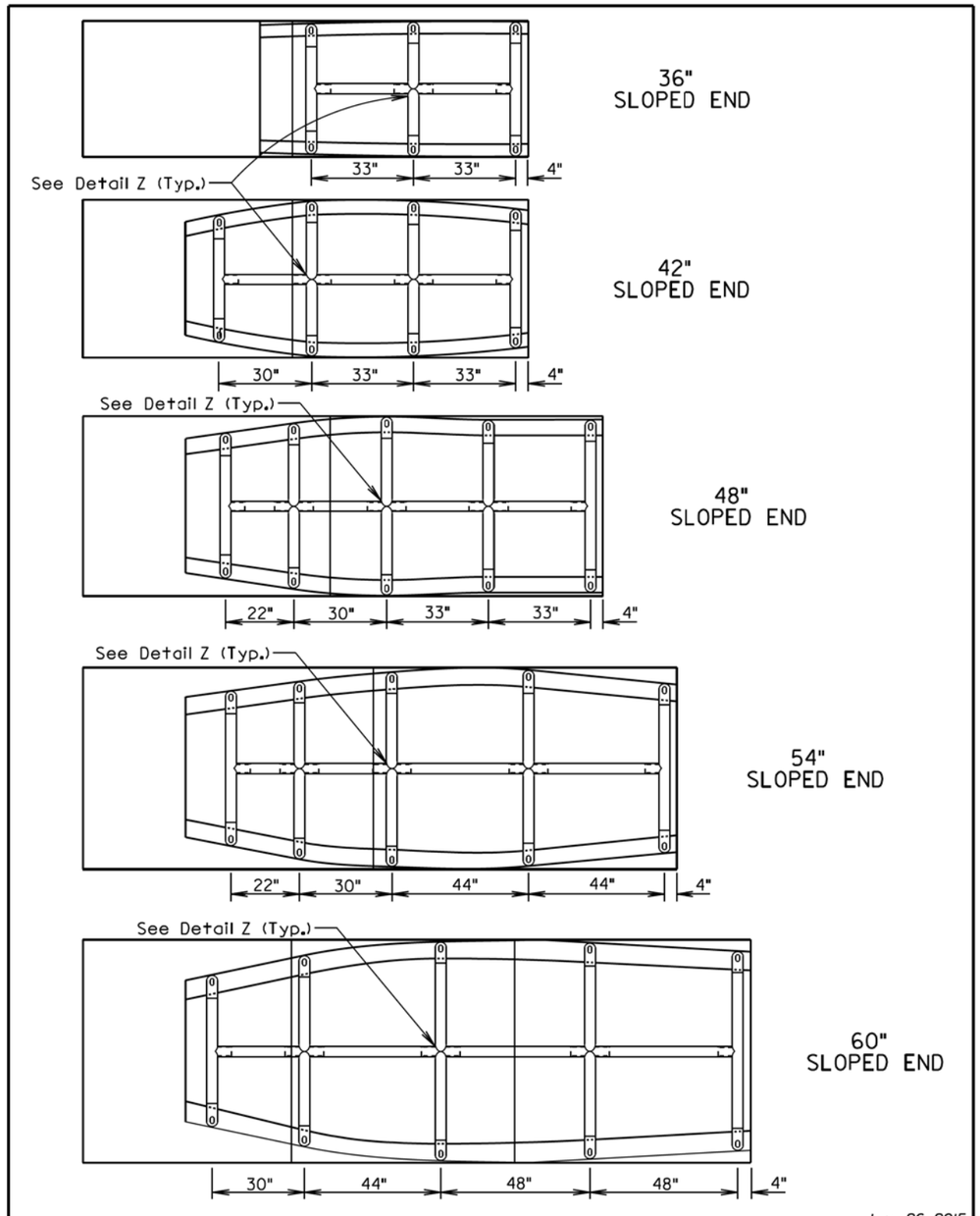

June 26, 2015

Published Date: 3rd Qtr. 2016	SDDOT	R. C. P. SLOPED END BAR ASSEMBLIES	PLATE NUMBER 450.15
			Sheet 2 of 2

Plot Scale - 1:200
- Plotted From - trpr17192
File - ...\mead5580\s450l5_1s450l5_2.dgn

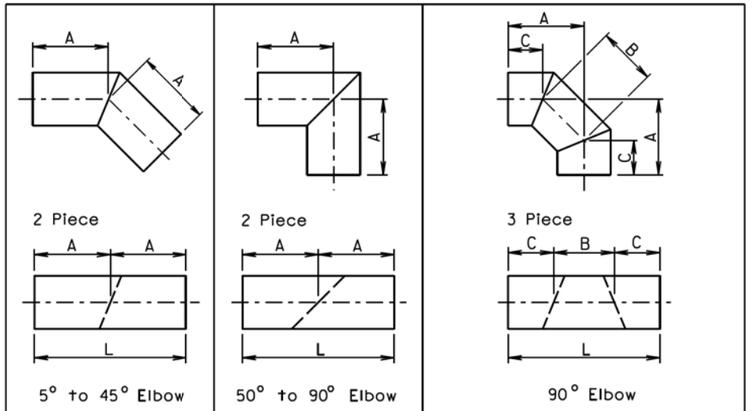

Diameter	A	L	Diameter	A	L	Diameter	A	B	C	L
Inches	Feet	Feet	Inches	Feet	Feet	Inches	Inches			Feet
12	1	2	12	2	4	12	25½	11	18½	4
15	1	2	15	2	4	15	26½	12	18	4
18	1	2	18	2	4	18	27	14	17	4
21	2	4	21	2	4	21	27	15	16½	4
24	2	4	24	2	4	24	27½	16	16	4
27	2	4	27	2	4	27	27½	17	15½	4
30	2	4	30	3	6	30	40	19	26½	6
33	2	4	33	3	6	33	40	20	26	6
36	2	4	36	3	6	36	40½	21	25½	6
42	2	4	42	3	6	42	41	23	24½	6
48	2	4	48	4	8	48	53½	26	35	8
54	3	6	54	4	8	54	54	28	34	8
60	3	6	60	4	8	60	54½	31	32½	8
66	3	6	66	4	8	66	54	33	31½	8
72	3	6	72	5	10	72	67½	36	42	10
78	3	6	78	5	10	78	68	39	40½	10
84	3	6	84	5	10	84	68½	41	39½	10
90	3	6	90	6	12	90	70	46	37	10
96	3	6	96	6	12	96	82	46	49	12

FABRICATED ELBOW LENGTHS FOR ALL CORRUGATIONS

GENERAL NOTES:

All dimensions shown are nominal.

L = Linear Feet of C.M.P. required to fabricate fitting.

June 26, 2001

Published Date: 3rd Qtr. 2016

SDDOT

C.M.P. FABRICATED LENGTHS FOR ELBOWS

PLATE NUMBER 450.32

Sheet 1 of 1

Alternate Type Connector Sections may be used with approval of the Engineer.

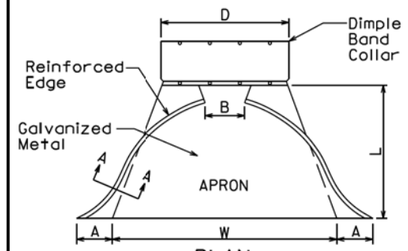

PLAN

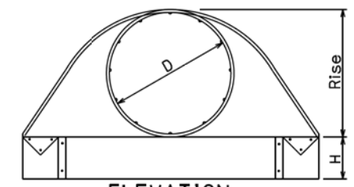

ELEVATION

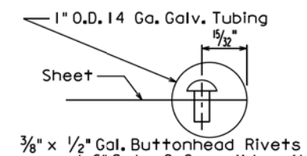

⅜" x ½" Gal. Buttonhead Rivets spaced 6" C. to C. Overall length of rivets=0.78"

TUBING ATTACHMENT DETAILS
SECTION A-A

Dia. D (in.)	Ga.	DIMENSIONS (in.)					Approx. Slope	Body
		A	B	H	L	W		
12	16	6	6	6	21	24	2½:1	1 Pc.
15	16	7	8	6	26	30	2½:1	1 Pc.
18	16	8	10	6	31	36	2½:1	1 Pc.
21	16	9	12	6	36	42	2½:1	1 Pc.
24	16	10	13	6	41	48	2½:1	1 Pc.
30	14	12	16	8	46	60	2½:1	1 Pc.
36	14	14	19	9	51	72	2½:1	2 Pc.
42	12	16	22	11	60	84	2½:1	2 Pc.
48	12	18	27	12	69	90	2¼:1	2 Pc.
54	12	18	30	12	78	102	2:1	3 Pc.
60	12	18	33	12	84	114	1¾:1	3 Pc.
66	12	18	36	12	87	120	1½:1	3 Pc.
72	12	18	39	12	87	126	1⅓:1	3 Pc.
78	12	18	42	12	87	132	1¼:1	3 Pc.
84	12	18	45	12	87	138	1⅙:1	3 Pc.

STANDARD CONNECTIONS

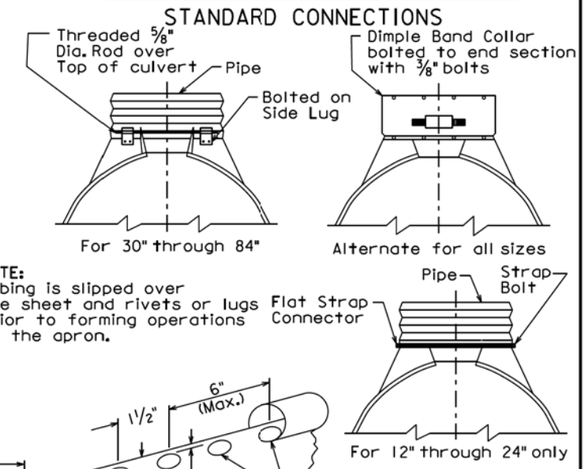

NOTE:
Tubing is slipped over the sheet and rivets or lugs prior to forming operations of the apron.

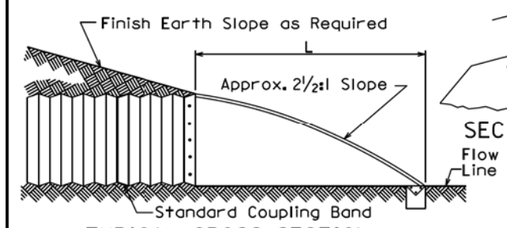

TYPICAL CROSS-SECTION

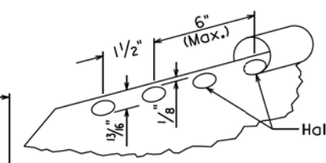

SECTION A-A (alternate)

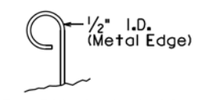

SECTION A-A (alternate)

GENERAL NOTES:

All 3 pc. bodies shall have 12 Ga. sides and 10 Ga. center panels. Width of center panels shall be greater than 20% of the pipe periphery. Multiple panel bodies to have lap seams tightly joined by ⅜" Dia. galvanized rivets or bolts.

For 60" through 84" sizes, reinforced edges shall be supplemented with galvanized stiffener angles. The angles will be 2" x 2" x ¼" for 60" through 72" diameters and 2½" x 2½" x¼" for 78" and 84" diameters. The angles shall be attached by ⅜" diameter galvanized nuts and bolts.

Rivets and Bolts shall be ⅜" Dia. Min. for 10 Ga. and 12 Ga. sheet, and 5/16" Dia. Min. for 14 Ga. and 16 Ga. sheets. Tighten nuts with torque wrench to 25 lbs. torque.

March 31, 2000

Published Date: 3rd Qtr. 2016

SDDOT

C.M.P. FLARED ENDS

PLATE NUMBER 450.35

Sheet 1 of 1

Plot Scale - 1:200

Plotted From - tpr17192

File - ...\prj\mead55801\s450325s450 35.dgn

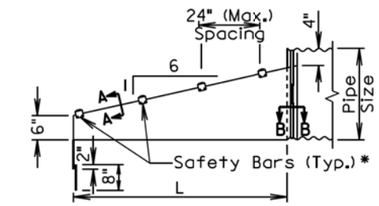

ELEVATION VIEW

*Number of bars required will vary depending on the length of the end section.

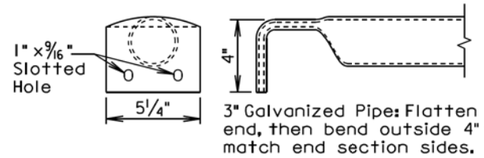

DETAIL OF SAFETY BARS

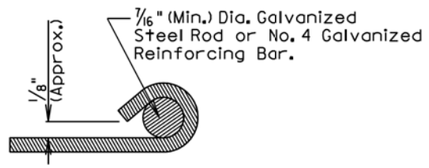

SECTION A-A

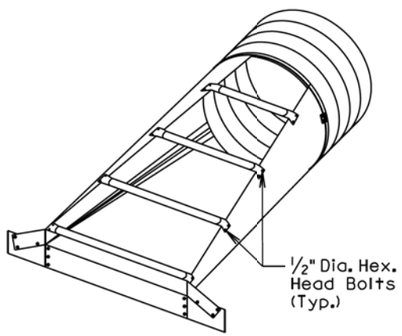

ISOMETRIC VIEW

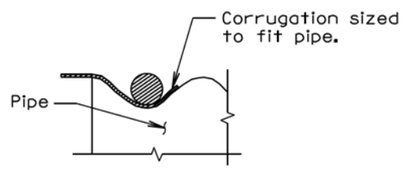

SECTION B-B

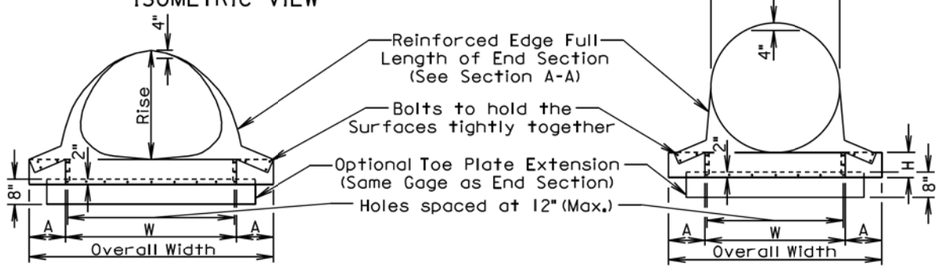

FRONT VIEW

FRONT VIEW

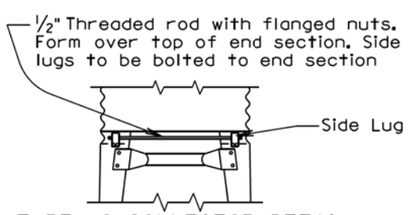

TYPE #2 CONNECTOR DETAIL
(For 30" and Larger)
(For 21" X 15" and Larger)

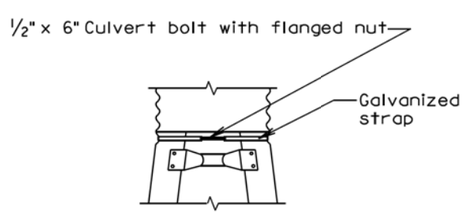

TYPE #1 CONNECTOR DETAIL
(For 15" Through 24")

June 26, 2015

Published Date: 3rd Qtr. 2016	SDDOT	C. M. P. SAFETY ENDS	PLATE NUMBER 450.38
			Sheet 1 of 2

ARCH C.M.P. SAFETY ENDS

Equv. Dia. (Inch)	(Inches)		Min. Thick.		Dimensions (Inches)				L Dimensions	
	Span	Rise	Inch	Gage	A	H	W	Overall Width	Slope	Length (Inch)
18	21	15	.064	16	8	6	27	43	6:1	30
21	24	18	.064	16	8	6	30	46	6:1	48
24	28	20	.064	16	8	6	34	50	6:1	60
30	35	24	.079	14	12	9	41	65	6:1	84
36	42	29	.109	12	12	9	48	72	6:1	114
42	49	33	.109	12	16	12	55	87	6:1	138
48	57	38	.109	12	16	12	63	95	6:1	168
54	64	43	.109	12	16	12	70	102	6:1	198
60	71	47	.109	12	16	12	77	109	6:1	222
72	83	57	.109	12	16	12	89	121	6:1	282

CIRCULAR C.M.P. SAFETY ENDS

Pipe Dia. (Inch)	Min. Thick.		Dimensions (Inches)				L Dimensions	
	Inch	Gage	A	H	W	Overall Width	Slope	Length (Inch)
15	.064	16	8	6	21	37	6:1	30
18	.064	16	8	6	24	40	6:1	48
21	.064	16	8	6	27	43	6:1	66
24	.064	16	8	6	30	46	6:1	84
30	.109	12	12	9	36	60	6:1	120
36	.109	12	12	9	42	66	6:1	156
42	.109	12	16	12	48	80	6:1	192
48	.109	12	16	12	54	86	6:1	228
54	.109	12	16	12	60	92	6:1	264
60	.109	12	16	12	66	98	6:1	300

GENERAL NOTES:

Safety ends shall be fabricated from galvanized steel conforming to the requirements of the Specifications.

Safety bars shall be fabricated from steel schedule 40 pipe in conformance with ASTM A53, grade B or HSS 3.5X.216 in conformance with ASTM A500, grade B.

Slotted holes for safety bar attachment shall be provided for all end sections.

Attachment to circular pipes 15" through 24" diameter shall be made with Type #1 straps. All other sizes shall be attached with Type #2 rods and lugs.

When stated in the plans, optional toe plate extension shall be punched and bolted to end section apron lip with 3/8" diameter galvanized bolts. Steel for toe plate extension shall be same gauge as end section. Dimensions shall be overall width less 6" by 8" high.

Installation shall be performed in accordance with the Specifications.

Cost of all work and materials required for fabrication and installation of safety ends shall be incidental to the bid items for the various sizes of safety ends.

June 26, 2015

Published Date: 3rd Qtr. 2016	SDDOT	C. M. P. SAFETY ENDS	PLATE NUMBER 450.38
			Sheet 2 of 2

Plot Scale - 1:200
- Plotted From - trpr17192
File - ...\mead5580\s45038_1s45038_2.dgn

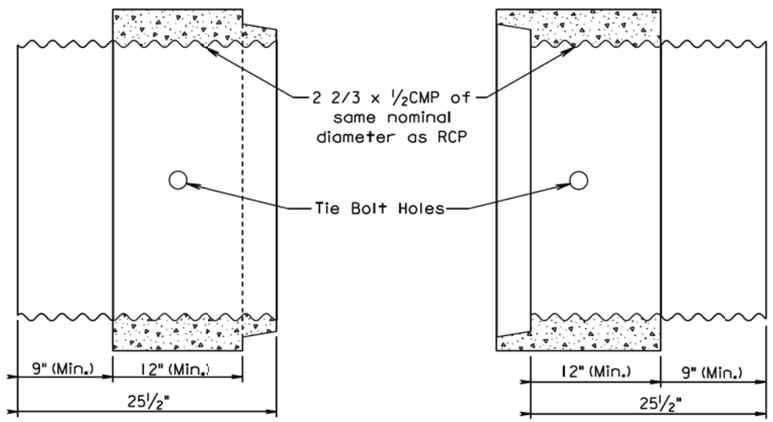

INLET
(CMP to RCP Transition)

OUTLET
(RCP to CMP Transition)

GENERAL NOTE:

Arch pipe transitions shall be fabricated similar to the round transition shown above.

March 31, 2000

Published Date: 3rd Qtr. 2016

SDDOT

C.M.P. TO R.C.P. TRANSITION AND R.C.P. TO C.M.P. TRANSITION

PLATE NUMBER 450.50

Sheet 1 of 1

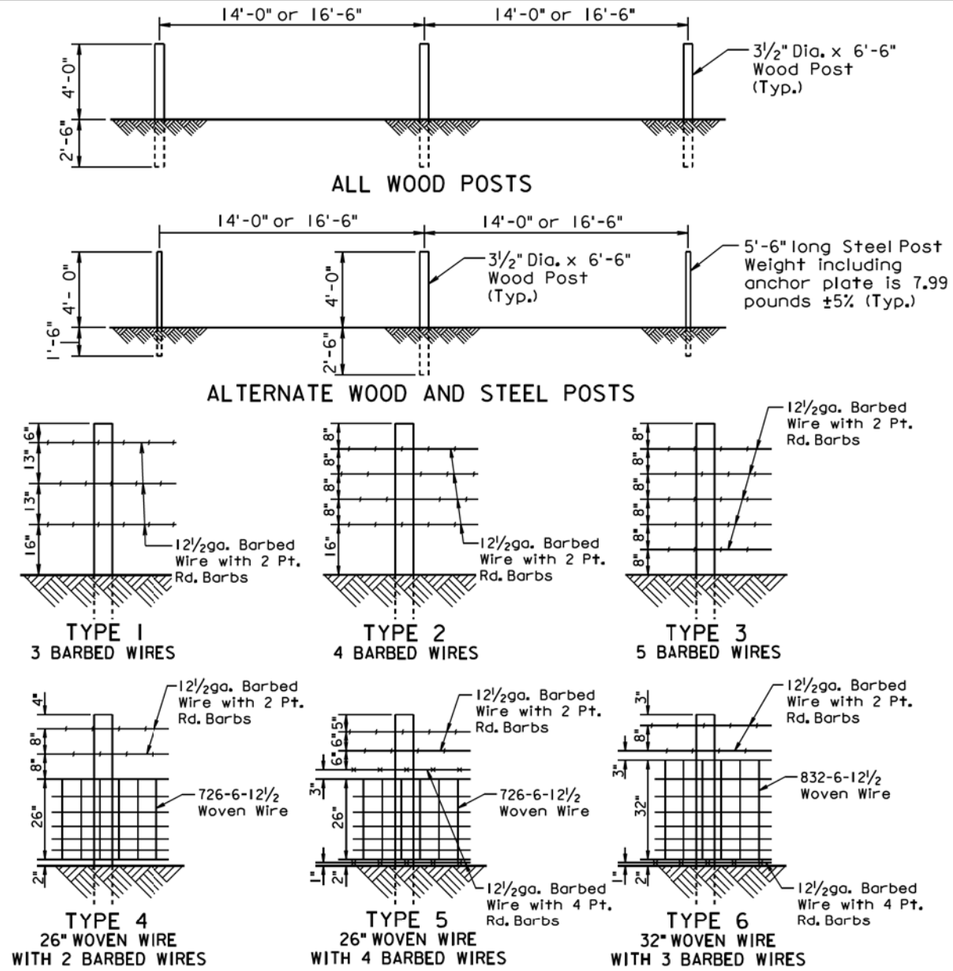

TYPE OF FENCE		LINE POST SPACING	BARBED WIRE		WOVEN WIRE
TYPE	DESCRIPTION		WIRE GAGE	NUMBER AND SHAPE OF BARBS	STYLE OR DESIGN NO.
1	3 Barbed Wires	16'-6"	12½	2 Point Round	—
2	4 Barbed Wires	16'-6"	12½	2 Point Round	—
3	5 Barbed Wires	16'-6"	12½	2 Point Round	—
4	26" Woven Wire with 2 Barbed Wires	14'-0"	12½	2 Point Round	726-6-12½
5	26" Woven Wire with 4 Barbed Wires	14'-0"	12½	2 wires with 2 Pt. Rd. 2 wires with 4 Pt. Rd.	726-6-12½
6	32" Woven Wire with 3 Barbed Wires	14'-0"	12½	2 wires with 2 Pt. Rd. 1 wire with 4 Pt. Rd.	832-6-12½

GENERAL NOTES:

Fence types designated on the plans that are followed by the letter S shall have smooth (barbless) wires.

When type 5S or 6S is designated the bottom wire may be barbed, smooth, or left off.

All degrees of curvature stated for fence are at centerline of roadway.

September 14, 2009

Published Date: 3rd Qtr. 2016

SDDOT

RIGHT-OF-WAY FENCE

PLATE NUMBER 620.01

Sheet 1 of 1

Plot Scale - 1:200
- Plotted From - tnpr17192
File - ...\prj\mead5580\s450505620001.dgn

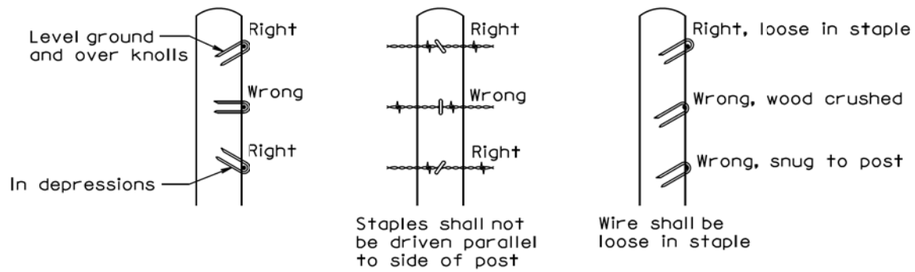

STAPLE INSTALLATION

GENERAL NOTES:

The Right-of-Way fence shall consist of barbed wire or a combination of woven wire and barbed wire. The barbed wire and/or woven wire shall be fastened to all wood posts or fastened to alternating wood and steel posts. Only wood posts shall be used for brace panels. Gates shall be of the type designated in the plans or as otherwise directed by the Engineer. Fence shall be constructed conforming to the details on the standard plates and in the plans unless otherwise directed by the Engineer.

Right-of-Way fence on Interstate Projects shall be constructed one foot within the Interstate Right-of-Way lines except at bridge openings, cattle passes, and as otherwise directed by the Engineer.

Right-of-Way fence other than on Interstate Projects shall be constructed within one foot of the Right-of-Way on the Landowner's side except at bridge openings, cattle passes, and as otherwise directed by the Engineer.

Barbs shall be fabricated from zinc coated 14 ga. wire. Two point barbs shall be wrapped twice around one main strand at 4" spacings and the four point barbs shall be interlocked and wrapped around both main strands at 5" spacings.

The gages of wire and wood post lengths and sizes are the minimum acceptable unless otherwise specified in the plans. The tolerances for steel posts shall be as stated in AASHTO M281. Woven wire shall conform to design and specifications of ASTM A116 and barbed wire shall conform to ASTM A121.

December 23, 2004

Published Date: 3rd Qtr. 2016 | SDDOT | STAPLE INSTALLATION AND GENERAL RIGHT-OF-WAY FENCE NOTES | PLATE NUMBER 620.02 | Sheet 1 of 1

SPECIFICATIONS

1. Design Specifactions: AASHTO Specifications for Highway Bridges, 1996 Edition (Service Load).
2. Construction Specifications: South Dakota Standard Specifications for Roads and Bridges, Current Edition and required Provisions, Supplemental Specifications, and Special Provisions as Included in the Proposal.

GENERAL NOTES

1. Design Loading: HS20-44 AASHTO.
2. Cattle Guards shall be constructed in accordance with Section 610.
3. All structural steel shall conform to ASTM A709, Grade 36. Structural tubing shall conform to ASTM A500, Grade B. All bolts and nuts shall be galvanized and shall conform to ASTM A307. All lock washers shall be galvanized and shall conform to AISI B18.21.1.
4. Welding and weld inspection shall be in accordance with AWS D1.1-(Current Year).
5. Cattle Guard Grate, Wings, and Connecting Plates shall be painted with a paint system which conforms to Section 412.2 and shall be applied in accordance with the manufacturer's recommendations. The top coat shall be green in color, conforming to Federal Standard 24108.
6. Grate Sections may be combined to obtain larger grate widths. Refer to Detail of Multiple Installation Joint on this sheet when larger grate widths are required.
7. Cattle Guard Grate & Wing Details shall be used in conjunction with Cast-in-Place or Precast Cattle Guard Foundation Details on Std. Plate 610.01 or 610.02 when Cattle Guard Foundations are required.
8. Alternate designs will be considered; submit detailed drawings and specifications of the proposed similar cattle guard grate or wing through proper channels to the Office of Bridge Design for approval.

INFORMATIONAL QUANTITIES

ITEM	UNIT	QUANTITY			
		10' GRATE	12' GRATE	14' GRATE	2-WINGS
Structural Steel	Lb.	1496	1783	2070	114

BILL OF MATERIALS FOR CATTLE GUARD GRATES

WIDTH OF CATTLE GUARD	CATTLE GUARD GRATE			CONNECTING PLATES		GRATE CONN. BOLTS
	10'-0"	12'-0"	14'-0"	6"	12"	
10'	1			4	8	---
12'		1		4	10	---
14'			1	4	12	---
20'	2			4	18	6
24'		2		4	22	6
30'	3			4	28	12

June 26, 2015

Published Date: 3rd Qtr. 2016 | SDDOT | CATTLE GUARD GRATE AND WING | PLATE NUMBER 610.03 | Sheet 1 of 3

Plot Scale - 1:200
Plotted From - tnpr17192
File - ...\mead55801\s62002\s62003_1.dgn

SPACING OF 2 POST PANELS WITHIN CURVES	
DEGREE OF CURVE	SPACING OF 2 POST PANEL
less than 3°15'	** 1320'
3°15' and greater	**At P.C., P.T., and at every 1320' between P.C. and P.T.

GENERAL NOTE:

All degrees of curvature stated for fence are at centerline of roadway.

* If fence length is less than 600' to next corner use a 2 post panel.
If fence length is greater than 600' to next corner use a 3 post panel.

** Fence lengths greater than 1320' and less than 2640' place 2 Post Panel approximately at midpoint.

① See Detail B on Sheet 1 of 3.

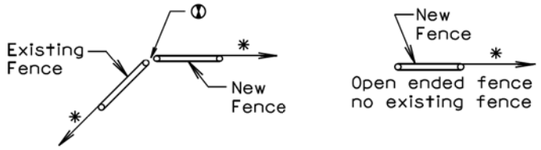

BEGIN OR END FENCE
(where new fence ties into existing fence)

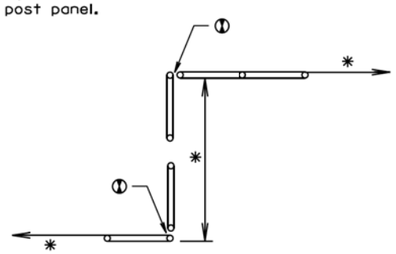

SHORT JOGS IN FENCE

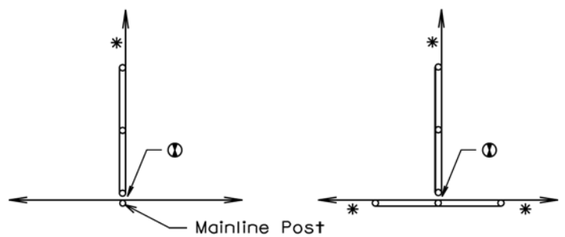

CROSS FENCE

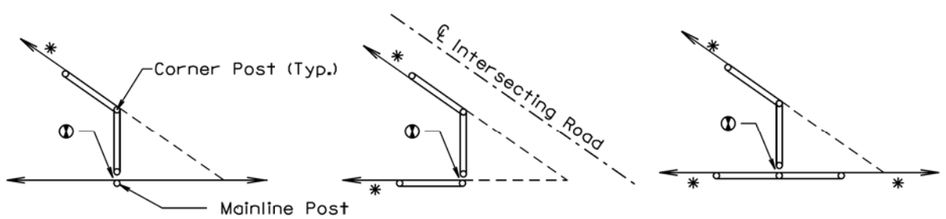

SHARP ANGLES IN CROSS FENCE

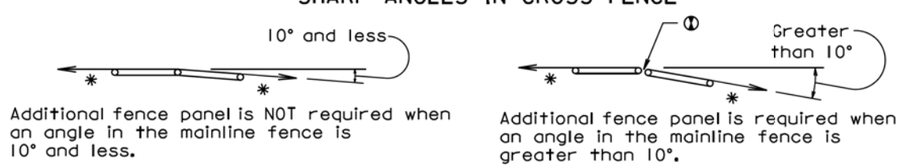

ANGLES IN MAINLINE FENCE

December 23, 2004

Published Date: 3rd Qtr. 2016	SDDOT	BRACE PANELS AND APPLICATIONS OF BRACE PANELS	PLATE NUMBER 620.03 Sheet 2 of 3

ENTRANCE
(NOT ON CORNER)

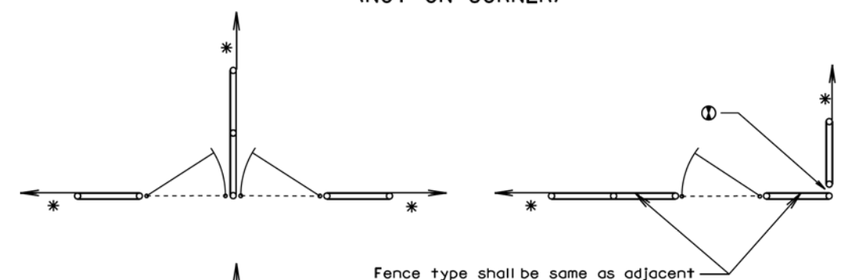

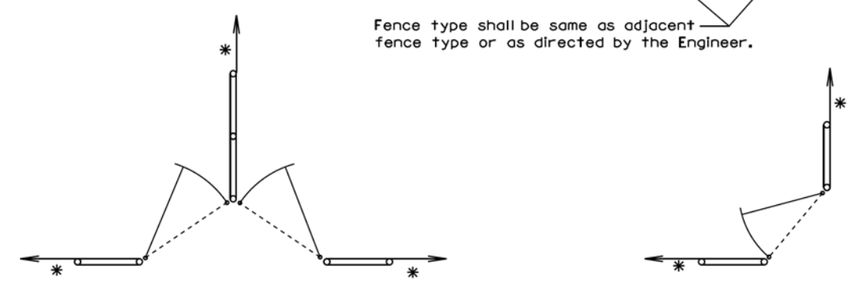

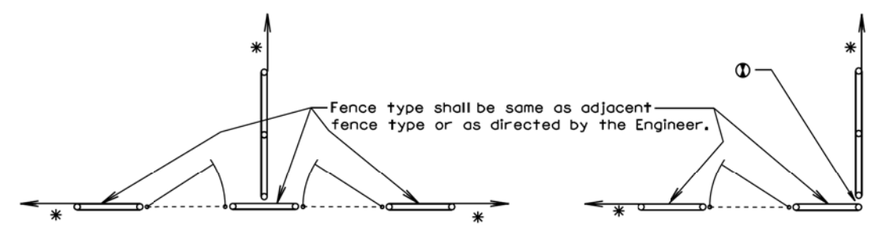

DOUBLE ENTRANCES

ENTRANCES AT CORNERS

GATES

* If fence length is less than 600' to next corner use a 2 post panel.
If fence length is greater than 600' to next corner use a 3 post panel.

① See Detail B on Sheet 1 of 3.

December 23, 2004

Published Date: 3rd Qtr. 2016	SDDOT	BRACE PANELS AND APPLICATIONS OF BRACE PANELS	PLATE NUMBER 620.03 Sheet 3 of 3

Plot Scale - 1:200
- Plotted From - tnpr17192
File - ...\mead5580\s62003_2s62003_3.dgn

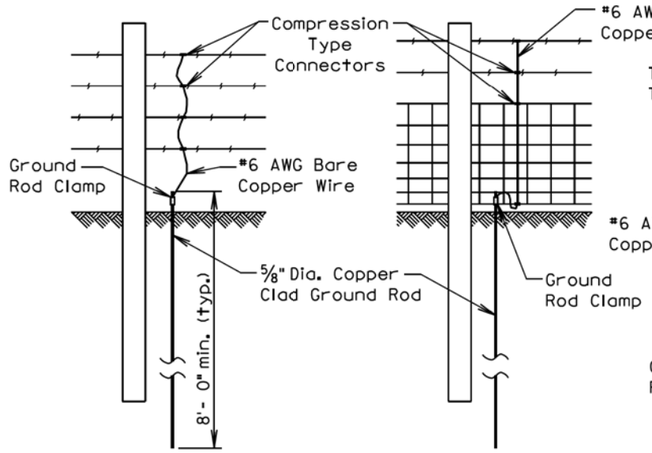

BARBED WIRE FENCE

WOVEN WIRE FENCE

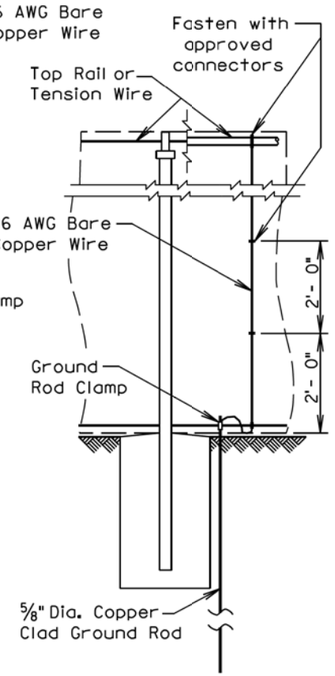

CHAIN LINK FENCE

GENERAL NOTES:

Details shown on this standard plate shall apply to all types of Right-of-Way fence constructed with all wood posts or chain link fence.

Continuous fence in urban areas shall be grounded at maximum intervals of 500 feet. Continuous fence in rural areas shall be grounded at maximum intervals of 1000 feet. There shall be a ground at a maximum of 100 feet from a gate in each adjacent section of fence.

Fence placed under a power line shall be grounded with three grounds. One ground shall be placed directly below the crossing and the other two shall be placed 25 feet to 50 feet away, one on each side.

One ground shall be placed directly below each telephone or cable crossing.

Ground rods shall be located on the post side of the fence and shall be as close as possible to the post and fence.

The cost of furnishing and placing all materials for grounding shall be incidental to the contract unit price per Ft for the respective Right-of-Way fence or chain link fence bid item.

The approximate quantites of materials per each installation of a ground are:

- 1 ground rod clamp.
- 1 5/8" dia. X 8' long copper clad ground rod
- 1 #6 AWG bare copper wire; 7' long for Right-of-Way fence or 10' long for chain link fence.

Compression type or other type of connectors:

26" woven wire shall have a total of two connectors, one secured to the top and one secured to the bottom.

32" woven wire shall have a total of three connectors, one secured to the top, one secured to the middle, and one secured to the bottom.

One connector shall be used for each strand of barbed wire.

A minimum of 3 connectors shall be installed on chain link fence, the connectors shall be placed vertically at every two foot increment and connectors shall be placed on the top and bottom tension wires or top rail.

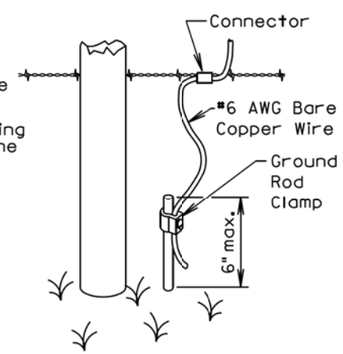

GROUND ROD DETAIL

March 31, 2000

Published Date: 3rd Qtr. 2016	SDDOT	***FENCE GROUNDING***	***PLATE NUMBER*** *620.11* *Sheet 1 of 1*

Plot Scale - 1:200
- Plotted From - trpr17192
File - U:\rdprj\mead55580\ss62011.dgn

GENERAL NOTES:

Either flanged channel steel posts or S3x5.7 steel I beam posts shall be used, but post type shall be consistent thoughout the project. The S3x5.7 Steel I Beam post shall be used for the end posts.

All costs associated with furnishing and constructing the 3 cable guardrail anchor assembly including the concrete anchor, cable anchor bracket, compensating device, steel turnbuckle cable assembly, and necessary hardware shall be incidental to the contract unit price per each for "3 Cable Guardrail Anchor Assembly".

All costs associated with furnishing and constructing the 3 cable guardrail including posts, cable, cable splices, and hardware shall be incidental to the contract unit price per foot for "3 Cable Guardrail".

The following table and criteria shall apply to the arrangement of the Spring Cable End Assemblies (Compensation Devices) and Turnbuckle Cable End Assemblies:

LENGTH OF CABLE RUN	CRITERIA FOR ARRANGEMENT OF THE SPRING CABLE END ASSEMBLIES (COMPENSATION DEVICES) AND TURNBUCKLE CABLE END ASSEMBLIES
Less than 500'	Use turnbuckle on the approaching traffic end and compensating device on the other end of each individual cable, except in the W Beam to 3 Cable Transition where all compensating devices shall be provided at the bridge ends.
Greater than 500' to 1000'	Use compensating device on each end of each individual cable.
Greater than 1000'	Start new run by interlacing at last parallel post as shown on sheet 2 of 6.

All Compensating Devices shall be attached to the cable anchor bracket when one end of the run is attached to a bridge.

Compensating Devices must have a spring rate of 450 ± 50 pounds per inch and shall have a total available travel of 6 inches minimum.

The cable shall be retensioned after the initial 2 week pretension period in accordance with the following table:

CABLE TENSIONING SPECIFICATIONS														
Temperature Range (Degree F)	-20 to -11	-10 to -1	0 to 9	10 to 19	20 to 29	30 to 39	40 to 49	50 to 59	60 to 69	70 to 79	80 to 89	90 to 99	100 to 109	110 to 120
Spring Compression (Inch)	4¼	4	3¾	3½	3¼	3	2¾	2½	2¼	2	1¾	1½	1¼	1

POST SPACING FOR HORIZONTAL CURVES	
Roadway ℄ Curvature	Maximum Post Spacing (Ft)
1° and Less	16'
Greater than 1° to 8°	12'
Greater than 8° to 13°	8'
Greater than 13°	NOT ALLOWED

December 16, 2015

Published Date: 3rd Qtr. 2016

SDDOT

3 CABLE GUARDRAIL (LOW TENSION)

PLATE NUMBER 629.01

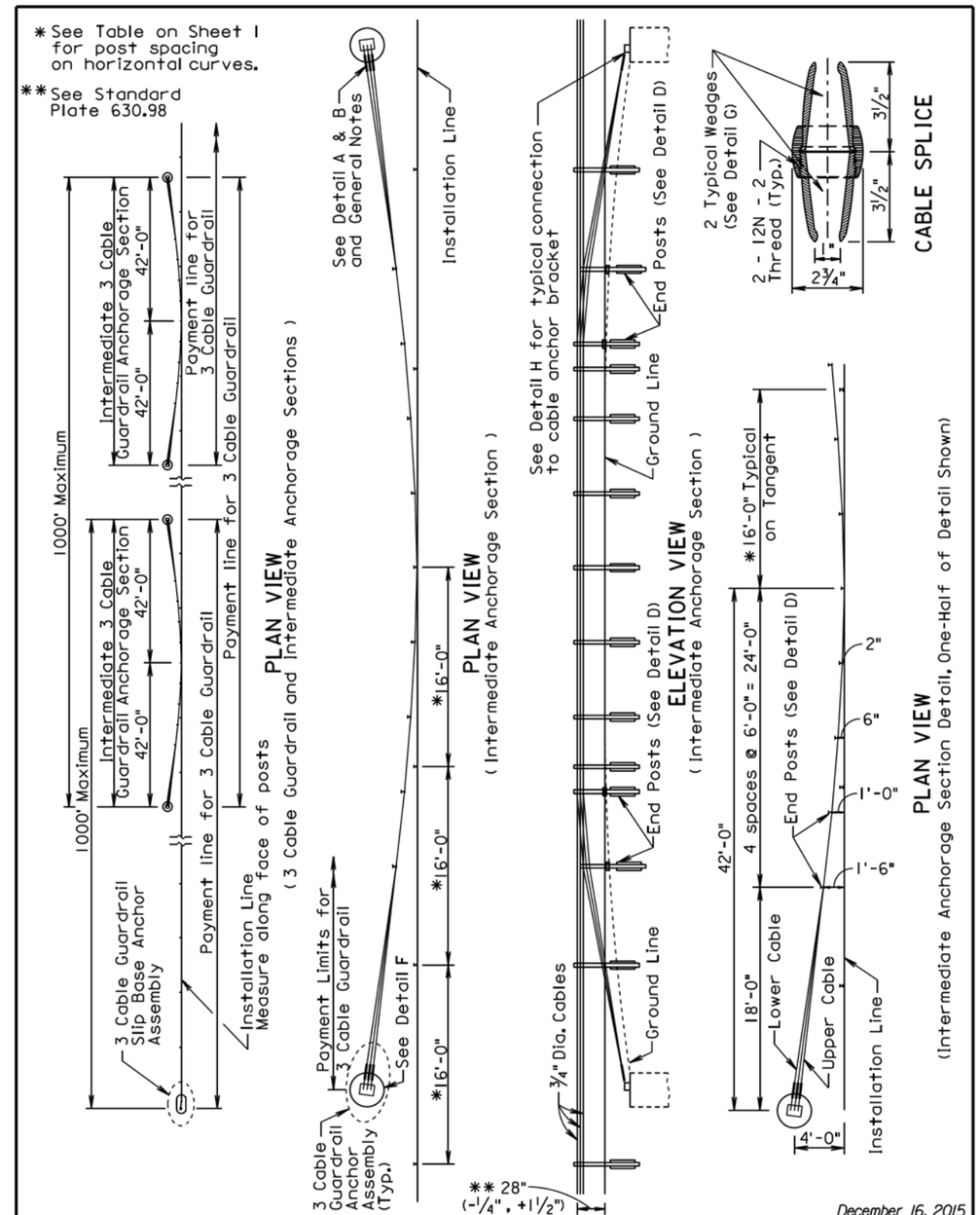

December 16, 2015

Published Date: 3rd Qtr. 2016

SDDOT

3 CABLE GUARDRAIL (LOW TENSION)

PLATE NUMBER 629.01

Plot Scale - 1:200
Plotted From - trpr17192
File - ...\meade5580\s62901_1s62901_2.dgn

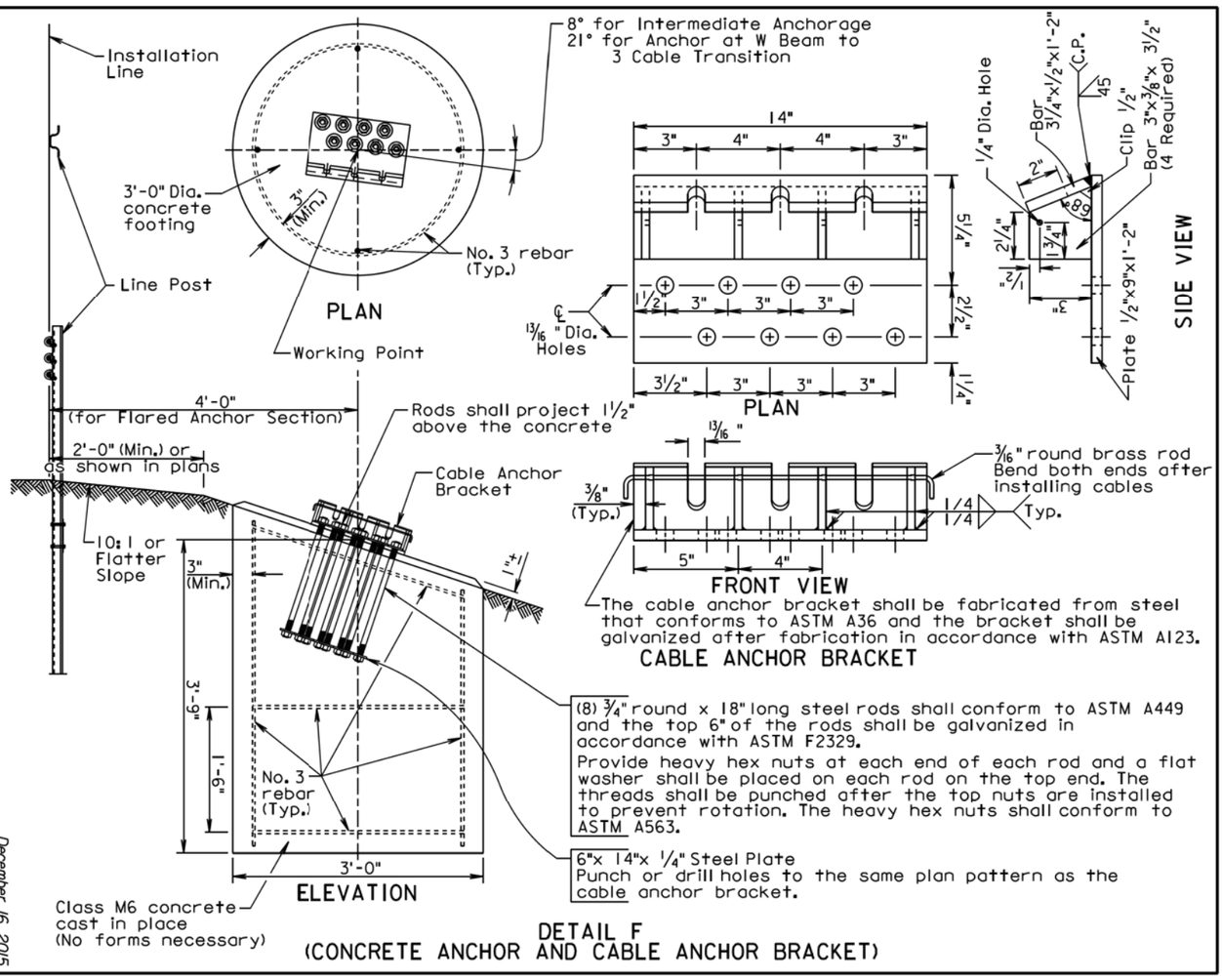

DETAIL F
(CONCRETE ANCHOR AND CABLE ANCHOR BRACKET)

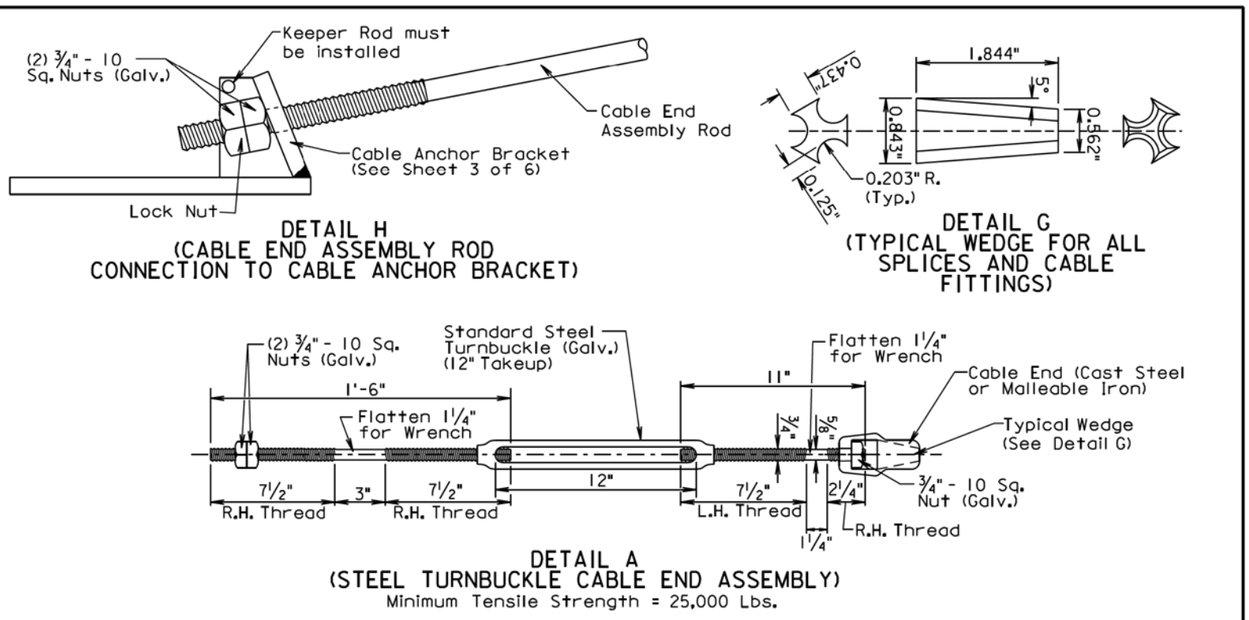

Published Date: 3rd Qtr. 2016

SDDOT

3 CABLE GUARDRAIL (LOW TENSION)

PLATE NUMBER 629.01

Sheet 3 of 6

December 16, 2015

Published Date: 3rd Qtr. 2016

SDDOT

3 CABLE GUARDRAIL (LOW TENSION)

PLATE NUMBER 629.01

Sheet 4 of 6

December 16, 2015

STATE OF SOUTH DAKOTA

PROJECT IM 0901(38)40

SHEET B95

TOTAL SHEETS B114

Plotting Date: 08/04/2016

Published Date: 3rd Qtr. 2016

SDDOT

3 CABLE GUARDRAIL (LOW TENSION)

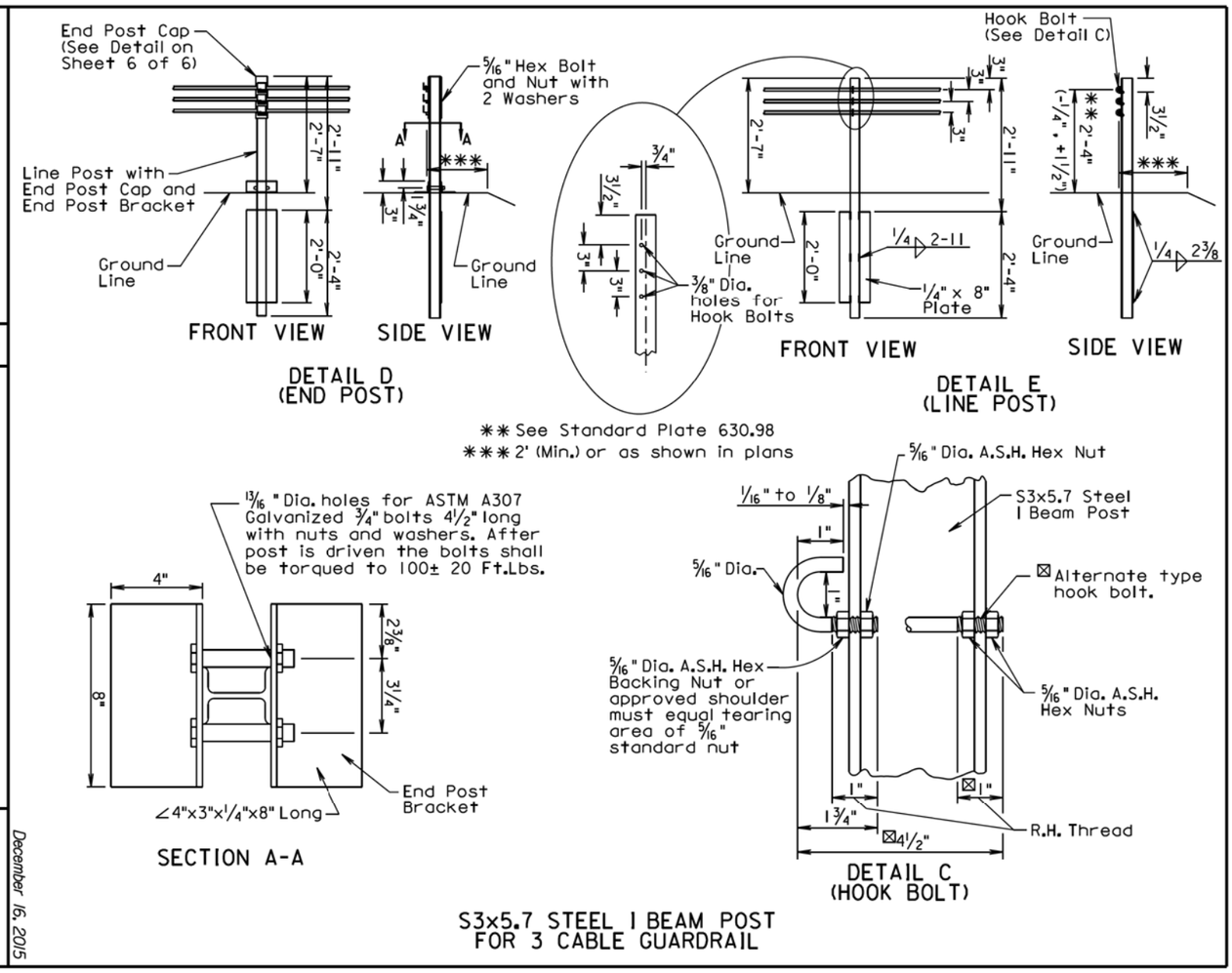

PLATE NUMBER 629.01

Sheet 5 of 6

December 16, 2015

Published Date: 3rd Qtr. 2016

SDDOT

3 CABLE GUARDRAIL (LOW TENSION)

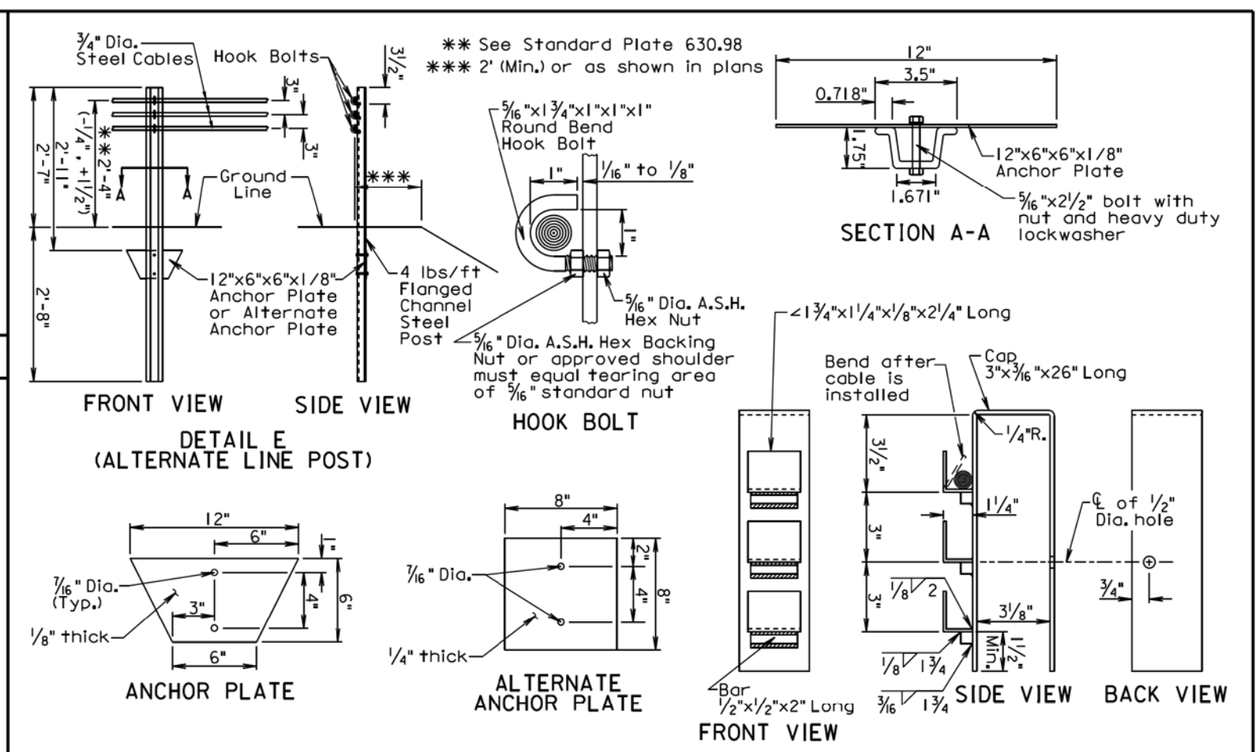

GENERAL NOTES:

Flanged channel steel posts shall be produced from high strength steel in accordance with ASTM A499, Grade 60.

Anchor plates shall be in conformance with ASTM A709, Grade 36.

Bolt shall be in conformance with ASTM A307. Nut shall be in conformance with ASTM A563 Grade DH.

Bolt shall be galvanized in accordance with ASTM F2329.

Finish for the post and anchor plate shall be a baked on high quality dark green enamel.

Alternate anchor plate may be unfinished.

PLATE NUMBER 629.01

Sheet 6 of 6

December 16, 2015

STATE OF SOUTH DAKOTA

PROJECT IM 0901(38)40

Plotting Date: 08/04/2016

SHEET B96

TOTAL SHEETS B114

Published Date: 3rd Qtr. 2016

SDDOT

W BEAM TO 3 CABLE TRANSITION

PLATE NUMBER 629.05

Sheet 1 of 1

December 16, 2014

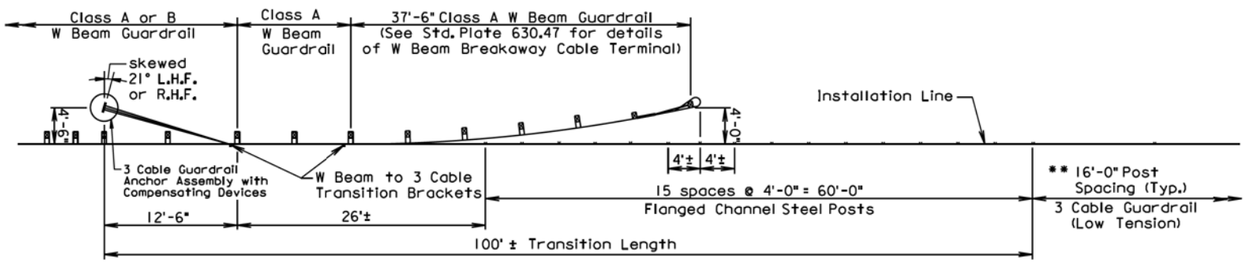

PLAN

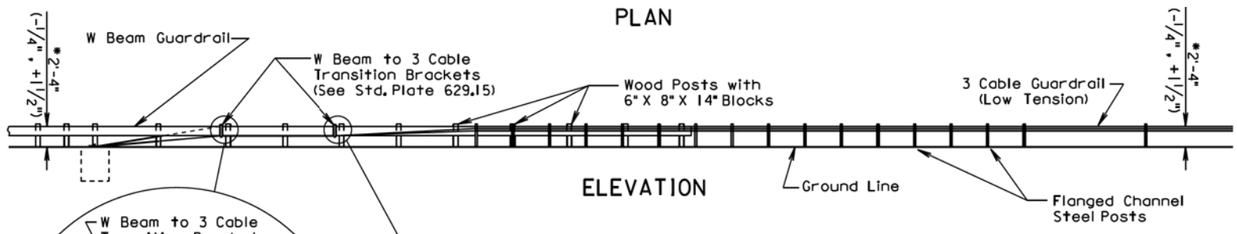

ELEVATION

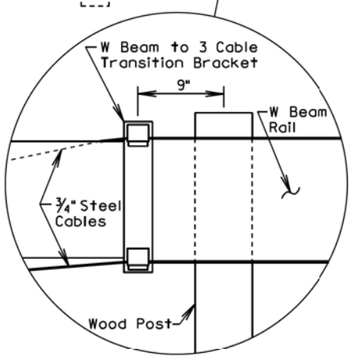

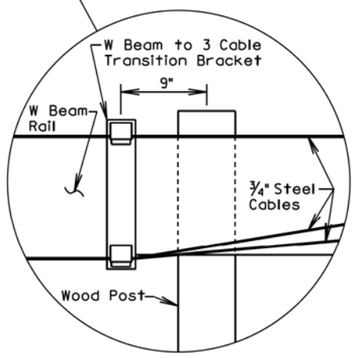

* See Standard Plate 630.98

** or post spacing as specified in the plans

GENERAL NOTES:

Flanged channel steel posts are shown on this standard plate, however, S3 X 5.7 steel I beam posts may be substituted for the flanged channel steel posts.

All costs associated with furnishing and installing the W Beam to 3 Cable Transition Bracket shall be incidental to the contract unit price per Ft. for "3 Cable Guardrail", "Reset 3 Cable Guardrail", or "Reset 3 Cable Guardrail, Cable Only".

See Standard Plates 630.31, 630.32, and 630.33 for details and payment information for W Beam Guardrail.

See Standard Plate 629.01 for details and payment information for 3 Cable Guardrail.

Published Date: 3rd Qtr. 2016

SDDOT

3 CABLE GUARDRAIL SLIP BASE ANCHOR ASSEMBLY

PLATE NUMBER 629.10

Sheet 1 of 3

June 26, 2016

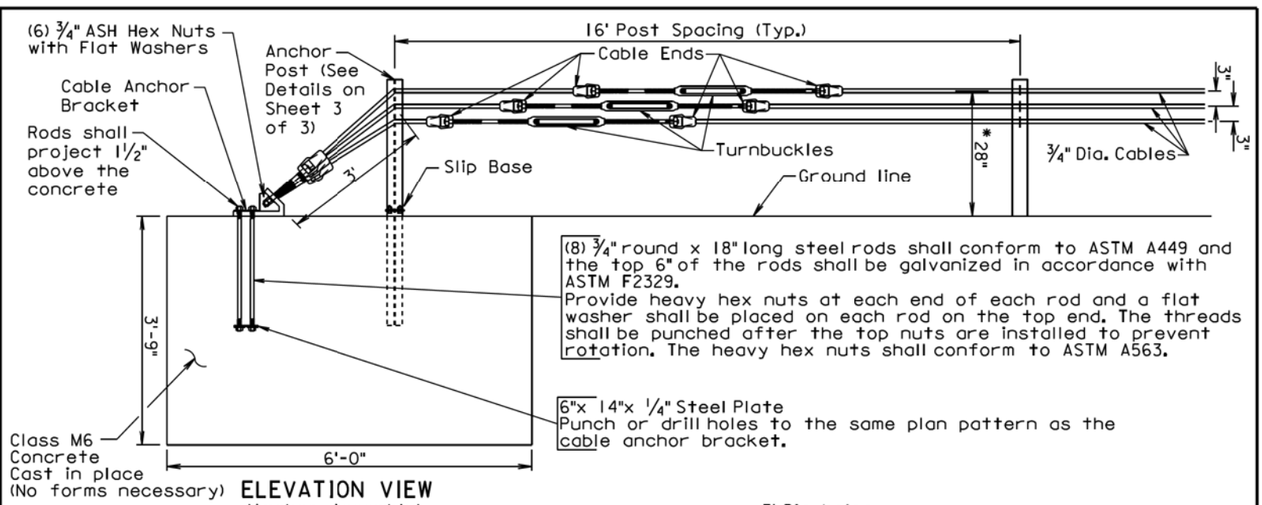

ELEVATION VIEW
(Anchor Assembly)

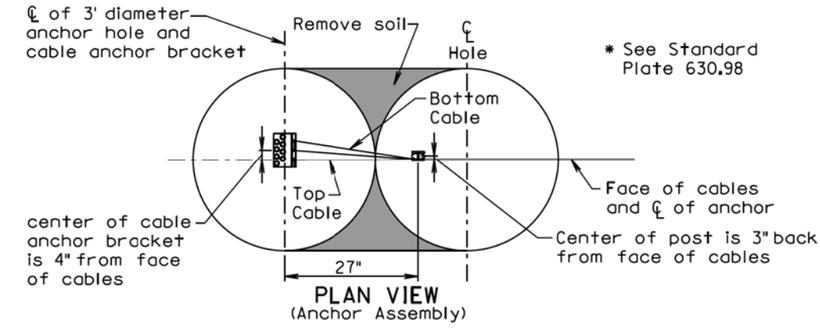

PLAN VIEW
(Anchor Assembly)

* See Standard Plate 630.98

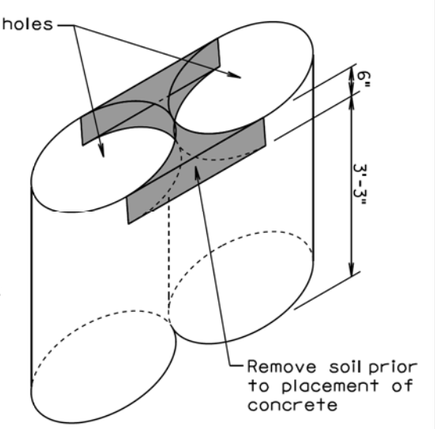

ISOMETRIC VIEW

ANCHOR CONSTRUCTION NOTES:

1. Auger two 3' diameter by 3'-9" deep holes tangent to each other.
2. Clean out the top 6 inches of soil between the holes.
3. Place concrete in holes with anchor bolts and slip base stub post in place.
4. For informational purposes the neat line concrete volume of the anchor is 1.9 cubic yards.

STATE OF SOUTH DAKOTA

PROJECT IM 0901(38)40

SHEET B97

TOTAL SHEETS B114

Plotting Date: 08/04/2016

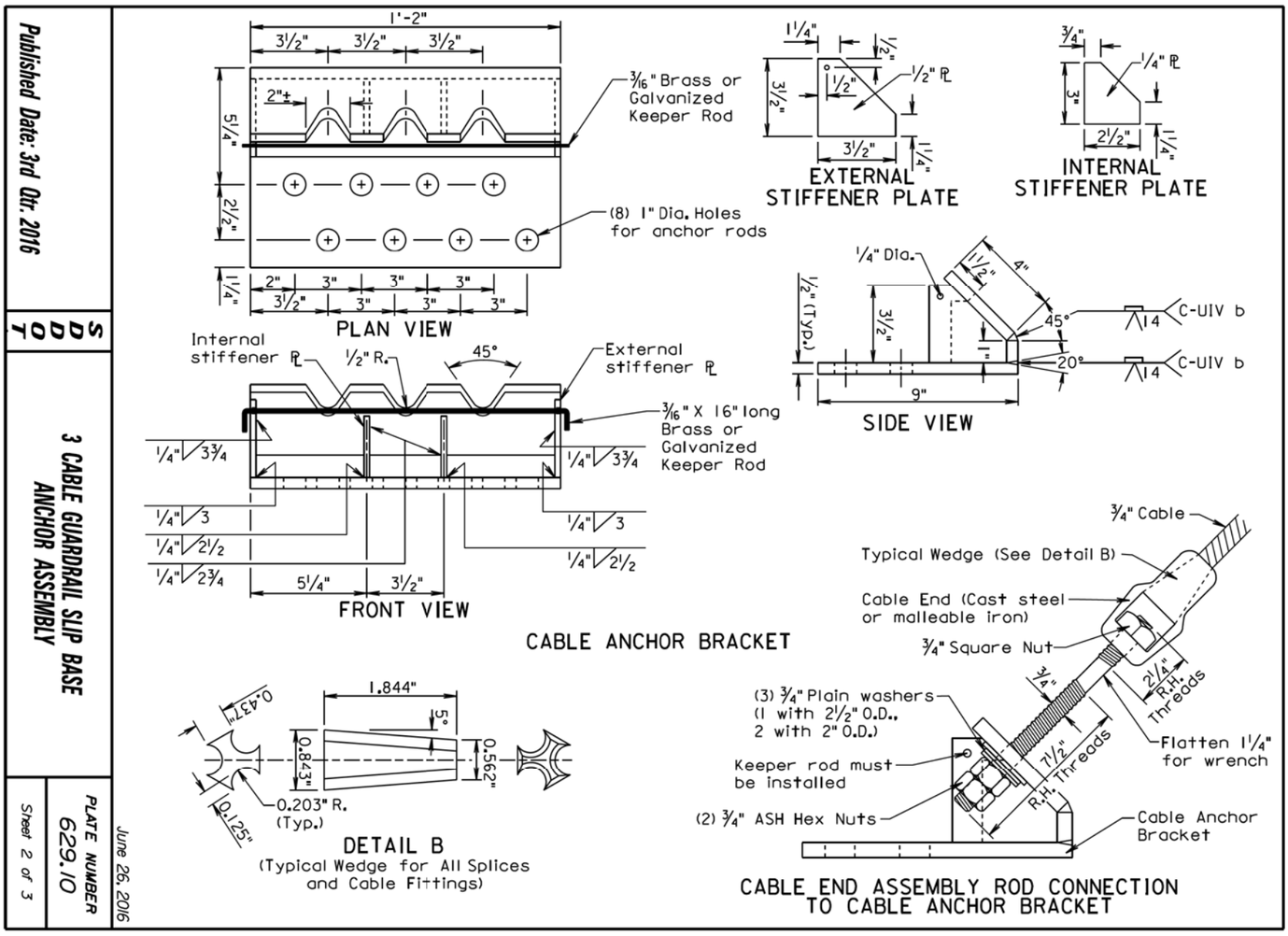

Published Date: 3rd Qtr. 2016

S D D O T

3 CABLE GUARDRAIL SLIP BASE ANCHOR ASSEMBLY

PLATE NUMBER 629.10

Sheet 2 of 3

June 26, 2016

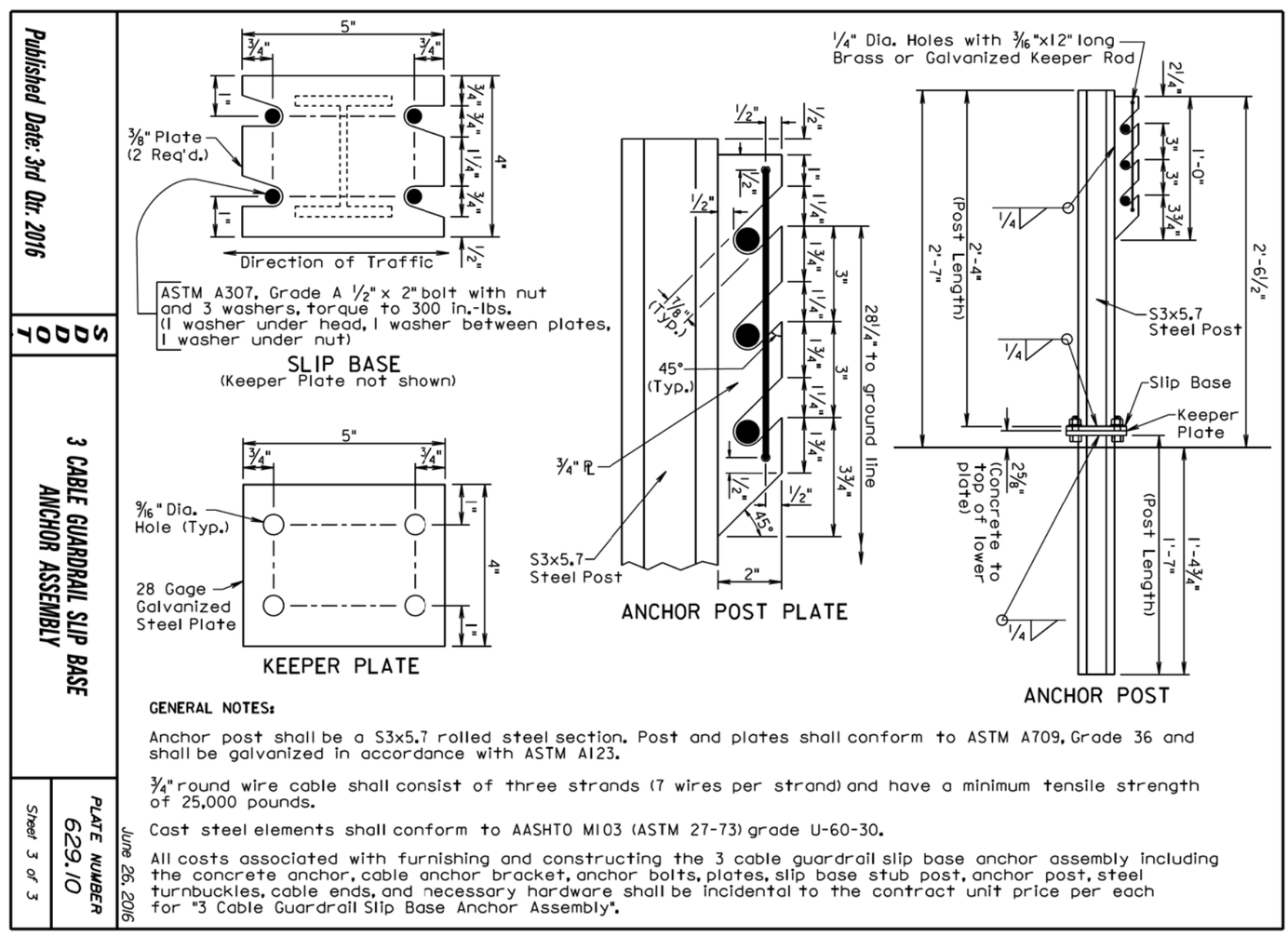

GENERAL NOTES:

Anchor post shall be a S3x5.7 rolled steel section. Post and plates shall conform to ASTM A709, Grade 36 and shall be galvanized in accordance with ASTM A123.

¾" round wire cable shall consist of three strands (7 wires per strand) and have a minimum tensile strength of 25,000 pounds.

Cast steel elements shall conform to AASHTO M103 (ASTM 27-73) grade U-60-30.

All costs associated with furnishing and constructing the 3 cable guardrail slip base anchor assembly including the concrete anchor, cable anchor bracket, anchor bolts, plates, slip base stub post, anchor post, steel turnbuckles, cable ends, and necessary hardware shall be incidental to the contract unit price per each for "3 Cable Guardrail Slip Base Anchor Assembly".

Published Date: 3rd Qtr. 2016

S D D O T

3 CABLE GUARDRAIL SLIP BASE ANCHOR ASSEMBLY

PLATE NUMBER 629.10

Sheet 3 of 3

June 26, 2016

STATE OF SOUTH DAKOTA	PROJECT	SHEET	TOTAL SHEETS
Plotting Date: 08/04/2016	IM 0901(38)40	B98	B114

STATE OF SOUTH DAKOTA	PROJECT	SHEET	TOTAL SHEETS
	IM 0901(38)40	B99	B114

Plotting Date: 08/17/2016

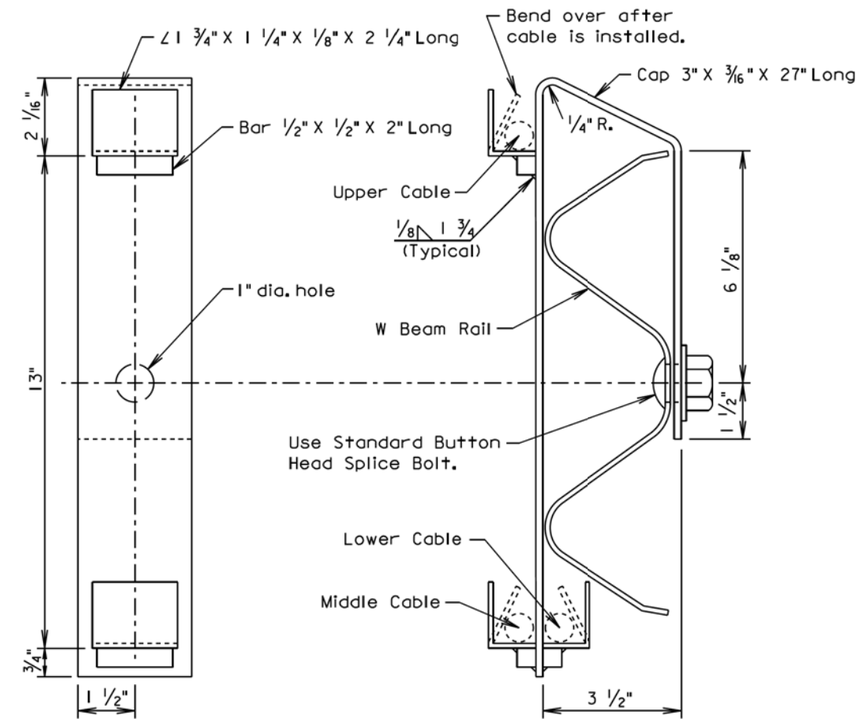

ELEVATION
(TRANSITION BRACKET)

END VIEW
(W BEAM RAIL AND TRANSITION BRACKET)

GENERAL NOTES:

Steel used in the fabrication of the bracket shall conform to ASTM A36 and the bracket shall be galvanized after fabrication in accordance with ASTM A123.

March 31, 2000

Published Date: 3rd Qtr. 2016	SDDOT	*W BEAM TO 3 CABLE TRANSITION BRACKET*	*PLATE NUMBER* 629.15
			Sheet 1 of 1

Plot Scale - 1:200

- Plotted From - tpr17192

File - U:\rdi\pr\mead5580\ls62915.dgn

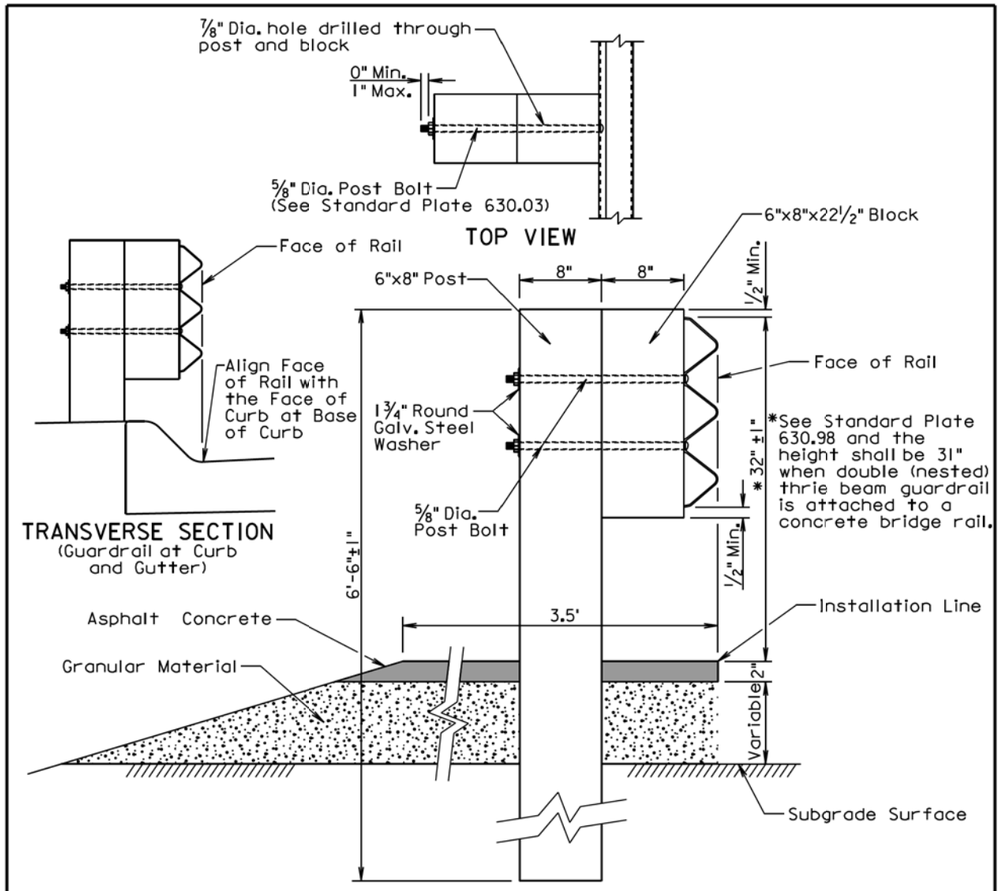

GENERAL NOTES:

Asphalt concrete shall be the same type used elsewhere on the project or shall be as specified in the plans. If asphalt concrete is not specified in the plans, the asphalt concrete shall conform to the Specifications for "Asphalt Concrete Composite." For informational purposes, the Rate of Materials for the 3.5' wide section of asphalt concrete as shown above shall be 4.80 Tons per Station.

Granular material shall be the same type used elsewhere on the project or shall be as specified in the plans. If granular material type is not specified in the plans, the material shall conform to the Specifications for "Base Course". The granular material shall be placed the same thickness as the mainline surfacing or as specified in the plans.

The cross slope for the surfacing and subgrade surface shall be as specified in the plans (See Typical Sections and/or Cross Sections).

The top of post and top of block shall have a true square cut. The top of block shall be ±1 inch from the top of the post.

June 26, 2015

Published Date: 3rd Qtr. 2016	SDDOT	THRIE BEAM GUARDRAIL POST INSTALLATION	PLATE NUMBER 630.01
			Sheet 1 of 1

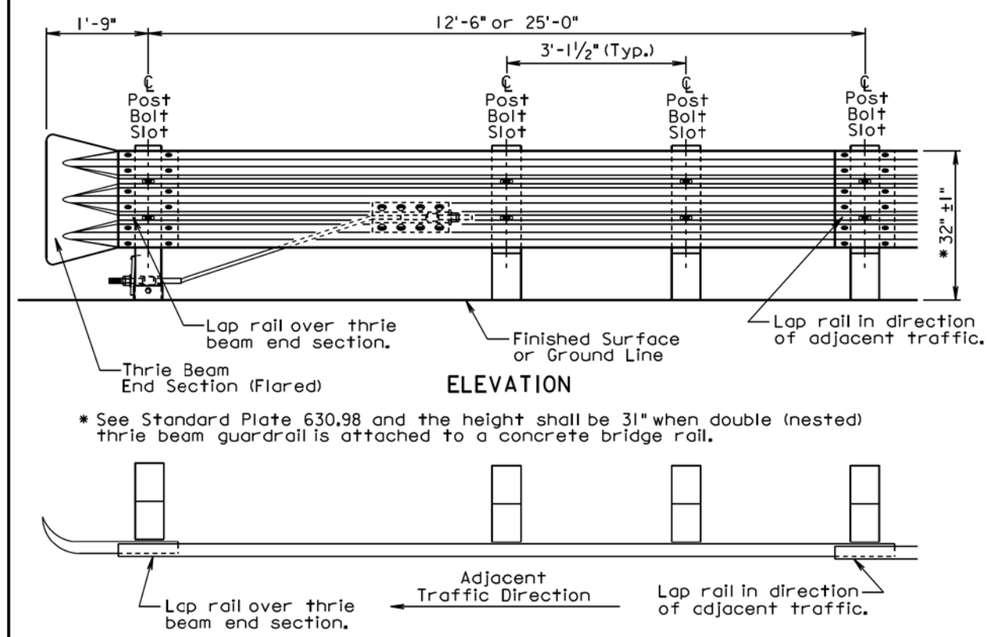

THRIE BEAM GUARDRAIL DEFLECTION CRITERIA	
POST SPACING	MAXIMUM DEFLECTION
6'-3"	2'-6"
3'-1 1/2"	1'-9"

For Informational Purposes Only

GENERAL NOTES:

All thrie beam rail shall be Type 1.

There will be no separate payment for furnishing and installing Thrie Beam End Sections (Flared) and Thrie Beam Terminal Connectors. All costs for the Thrie Beam End Sections (Flared) and Thrie Beam Terminal Connectors shall be incidental to the contract unit price per foot for the respective "Thrie Beam Guardrail" bid item.

Thrie beam rail section lengths may be 12'-6" and/or 25'-0". The combination of section lengths used shall be compatible with the total length of rail per site as shown in the plans.

Thrie Beam End Sections (Flared) shall only be used in a one-way traffic situation. See Standard Plate 630.80 for Thrie Beam End Section (Flared) in the Beam Guardrail Trailing End Terminal.

All costs for constructing thrie beam guardrail including labor, equipment, and materials including all posts, blocks, steel beam rail, and hardware shall be incidental to the contract unit price per foot for the respective "Thrie Beam Guardrail" bid item.

June 26, 2015

Published Date: 3rd Qtr. 2016	SDDOT	THRIE BEAM GUARDRAIL INSTALLATION	PLATE NUMBER 630.02
			Sheet 1 of 1

Plot Scale - 1:200
- Plotted From - tnpr17192
File - ...\prj\mead55801s63001s63002.dgn

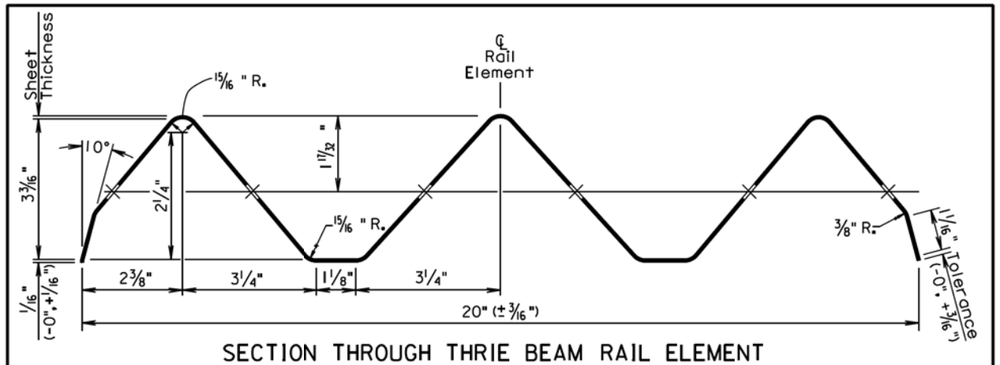

SECTION THROUGH THRIE BEAM RAIL ELEMENT

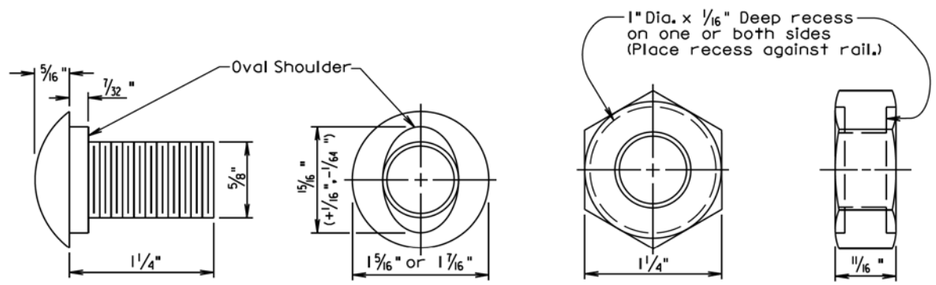

The Post Bolt is similar except the post bolt is 18" long.

SPLICE BOLT
(5/8" BUTTON HEAD BOLT AND RECESS NUT)

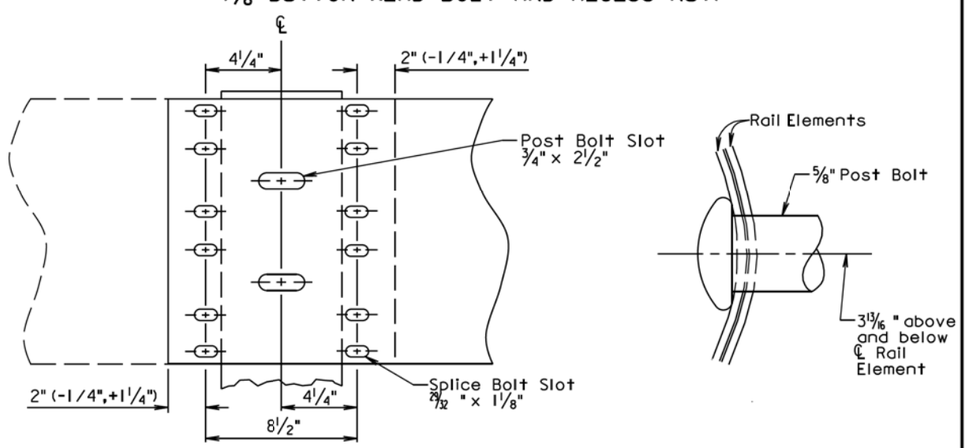

Lap in direction of traffic.

RAIL SPLICE

March 31, 2000

Published Date: 3rd Qtr. 2016	SDDOT	THRIE BEAM RAIL, RAIL SPLICE, AND HARDWARE	PLATE NUMBER 630.03
			Sheet 1 of 1

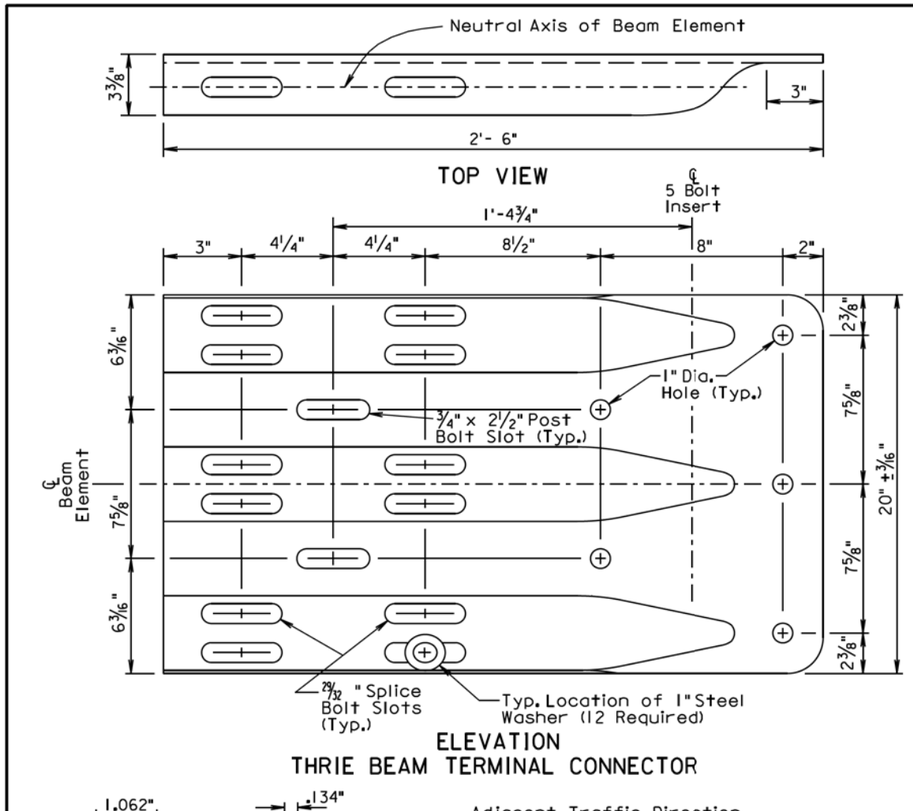

ELEVATION
THRIE BEAM TERMINAL CONNECTOR

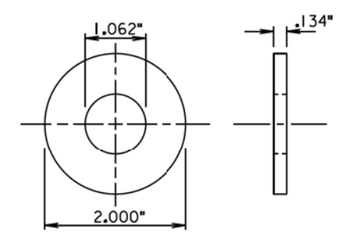

1" STEEL WASHER

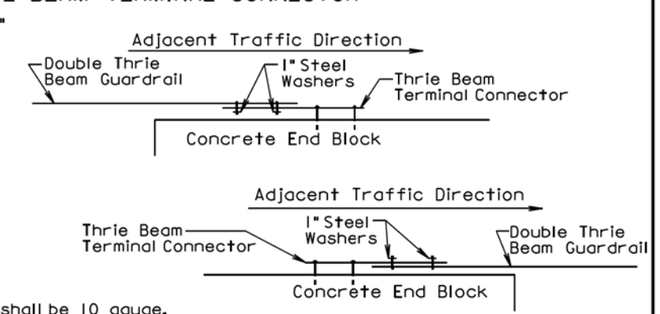

GENERAL NOTES:

Thrie Beam Terminal Connectors shall be 10 gauge.

When the thrie beam terminal connector is used to connect the rail to the bridge, 1" steel washers shall be used at the lap splice and the washers shall be in direct contact with the 3" slots of the thrie beam terminal connector. See the drawings above for the typical locations of the 1" steel washers.

There will be no separate payment for furnishing and installing the Thrie Beam Terminal Connector. All costs for the Thrie Beam Terminal Connector shall be incidental to the contract unit price per foot for the respective "Thrie Beam Guardrail" bid item.

September 14, 2001

Published Date: 3rd Qtr. 2016	SDDOT	THRIE BEAM TERMINAL CONNECTOR AND 1" STEEL WASHER	PLATE NUMBER 630.05
			Sheet 1 of 1

Plot Scale - 1:200
- Plotted From - trpr17192
File - ...\prj\mead5580\s63003s63005.dgn

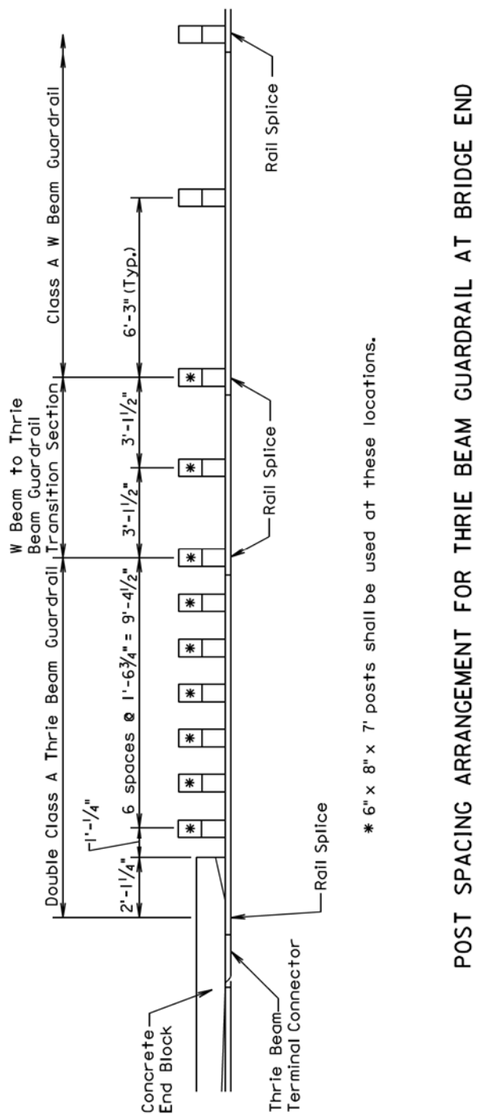

* 6" x 8" x 7' posts shall be used at these locations.

POST SPACING ARRANGEMENT FOR THRIE BEAM GUARDRAIL AT BRIDGE END

December 23, 2002

Published Date: 3rd Qtr. 2016	SDDOT	POST SPACING ARRANGEMENT FOR THRIE BEAM GUARDRAIL AT BRIDGE END	PLATE NUMBER 630.15 Sheet 1 of 1

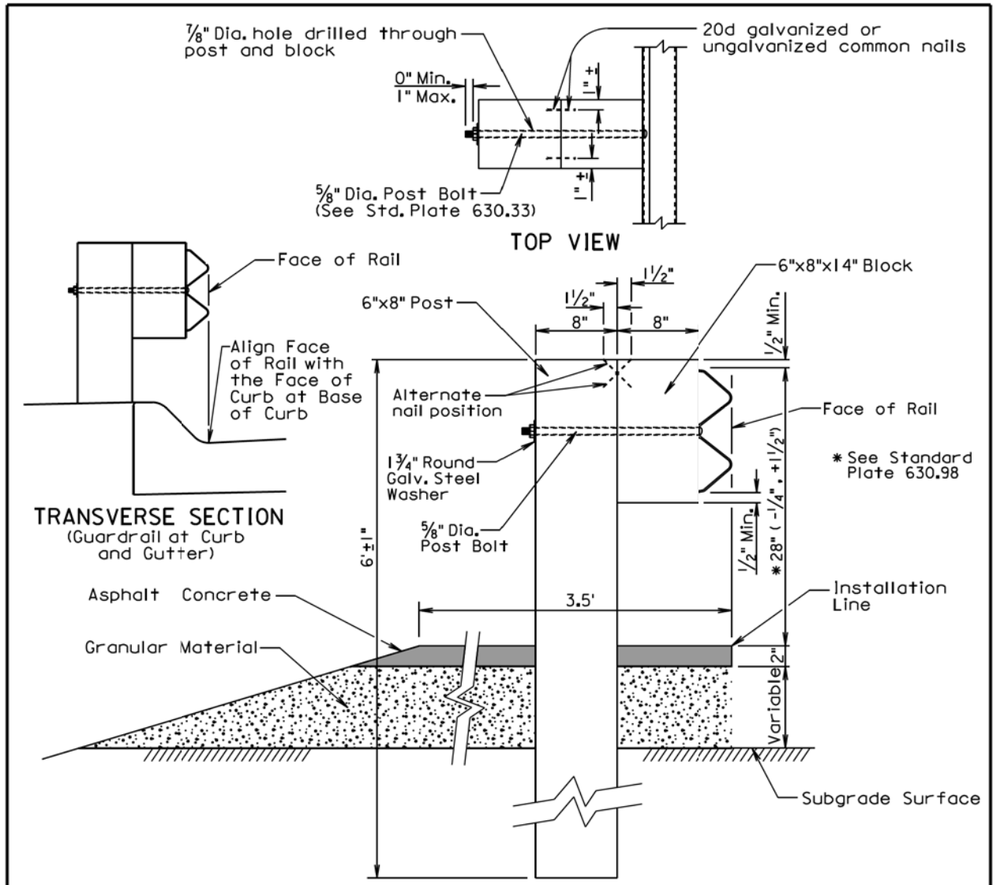

GENERAL NOTES:

Asphalt concrete shall be the same type used elsewhere on the project or shall be as specified in the plans. If asphalt concrete is not specified in the plans, the asphalt concrete shall conform to the Specifications for "Asphalt Concrete Composite." For informational purposes, the Rate of Materials for the 3.5' wide section of asphalt concrete as shown above shall be 4.80 Tons per Station.

Granular material shall be the same type used elsewhere on the project or shall be as specified in the plans. If granular material type is not specified in the plans, the material shall conform to the Specifications for "Base Course". The granular material shall be placed the same thickness as the mainline surfacing or as specified in the plans.

The cross slope for the surfacing and subgrade surface shall be as specified in the plans (See Typical Sections and/or Cross Sections).

The top of post and top of block shall have a true square cut. The top of block shall be ±1 inch from the top of the post.

June 26, 2015

Published Date: 3rd Qtr. 2016	SDDOT	W BEAM GUARDRAIL POST INSTALLATION	PLATE NUMBER 630.31 Sheet 1 of 1

Plot Scale - 1:200
- Plotted From - tnpr17192
File - ...\pp\mead5580\s63015s63031.dgn

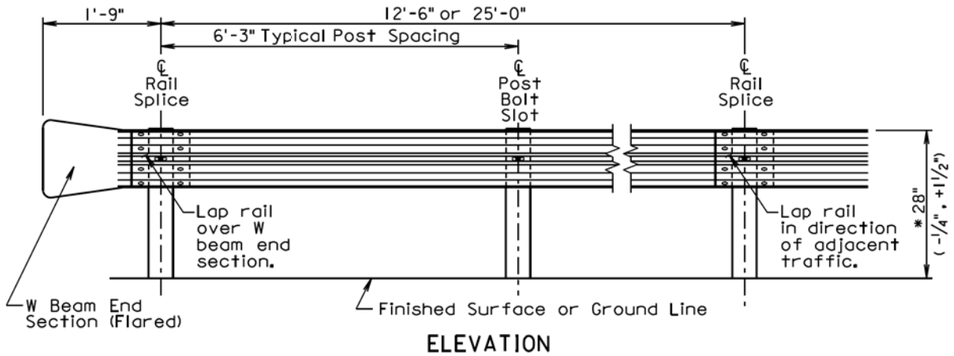

ELEVATION

*See Standard Plate 630.98

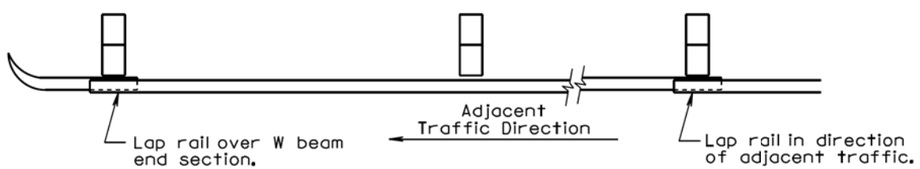

PLAN

W BEAM GUARDRAIL DEFLECTION CRITERIA	
POST SPACING	MAXIMUM DEFLECTION
6'-3"	5'-0"
3'-1 1/2"	3'-9"

For Informational Purposes Only

GENERAL NOTES:

All W beam rail shall be Type I.

There will be no separate payment for furnishing and installing W Beam End Sections (Flared) and W Beam Terminal Connectors. All costs for the W Beam End Sections (Flared) and W Beam Terminal Connectors shall be incidental to the contract unit price per foot for the respective "W Beam Guardrail" bid item.

W beam rail section lengths may be 12'-6" and/or 25'-0". The combination of section lengths used shall be compatible with the total length of rail per site as shown in the plans.

W Beam End Sections (Flared) shall only be used in a one way traffic situation. See Standard Plate 630.80 for W Beam End Section (Flared) in the Beam Guardrail Trailing End Terminal.

All costs for constructing W beam guardrail including labor, equipment, and materials including all posts, blocks, steel beam rail, and hardware shall be incidental to the contract unit price per foot for the respective "W Beam Guardrail" bid item.

June 26, 2015

Published Date: 3rd Qtr. 2016	SDDOT	W BEAM GUARDRAIL INSTALLATION	PLATE NUMBER 630.32
			Sheet 1 of 1

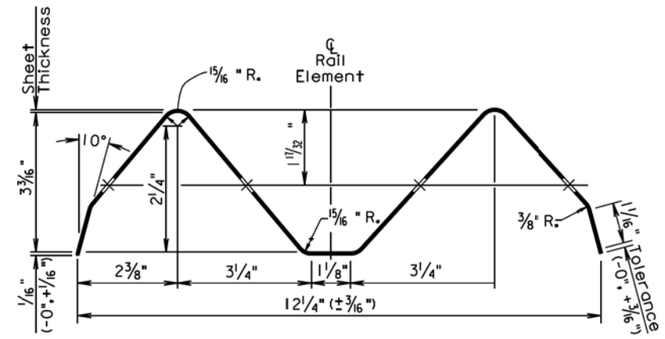

SECTION THROUGH W BEAM RAIL ELEMENT

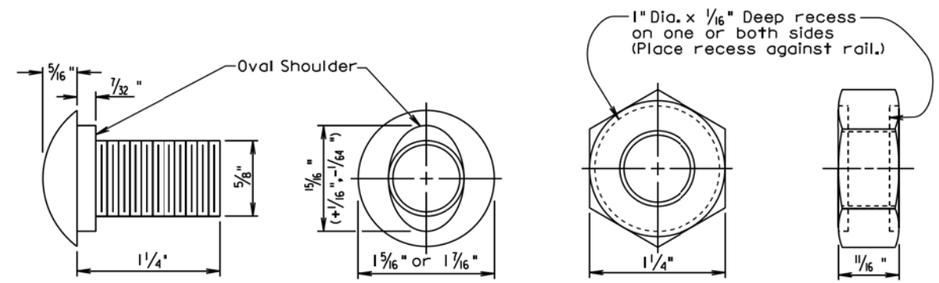

The Post Bolt is similar except the post bolt is 18" long.

SPLICE BOLT
(5/8" BUTTON HEAD BOLT AND RECESS NUT)

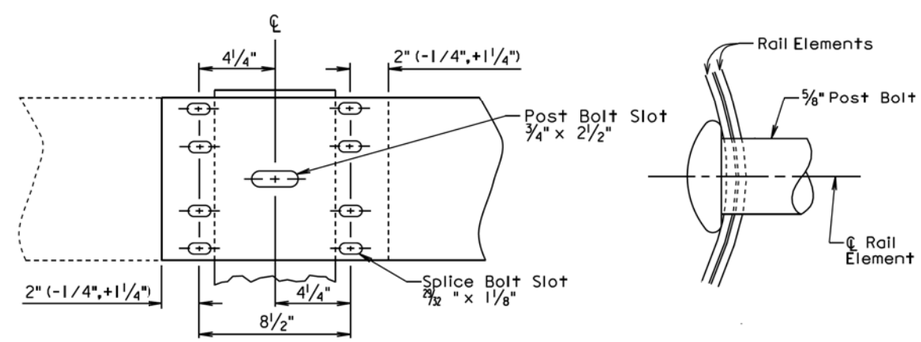

Lap in direction of traffic.

RAIL SPLICE

December 23, 2004

Published Date: 3rd Qtr. 2016	SDDOT	W BEAM RAIL, RAIL SPLICE, AND HARDWARE	PLATE NUMBER 630.33
			Sheet 1 of 1

Plot Scale - 1:200
- Plotted From - trp17192
File - ...\prj\mead55801s63032s63033.dgn

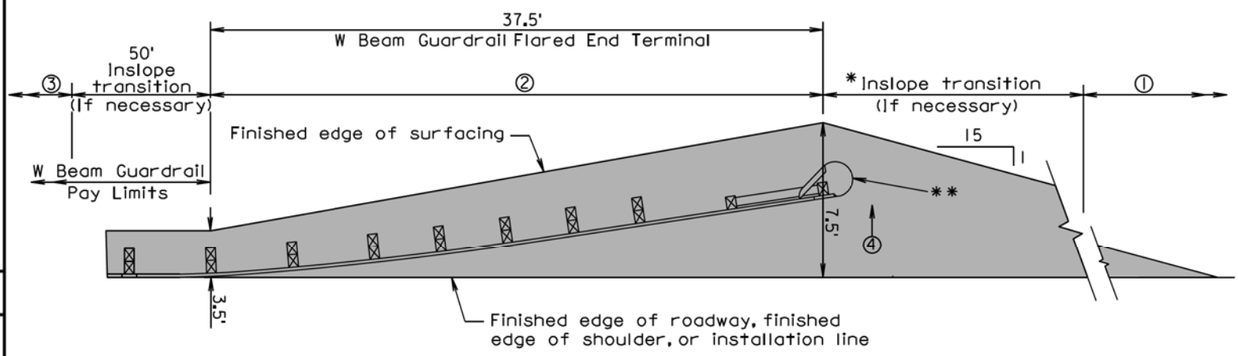

2" Asphalt concrete surfacing with variable thickness granular material

PLAN

① Same inslope as mainline inslope
② 4:1 inslope
③ 2:1 inslope or flatter, or inslope as specified in plans
④ Same slope as roadway cross slope

* The length of inslope transition varies with the amount of change between inslopes. The length of the transition shall change 100' for every whole number change in the inslope. For Example: If the inslope changes from a 5:1 to a 4:1 the length of the inslope transition would be 100'. If the inslope changes from a 6:1 to a 4:1 the length of the inslope transition would be 200'.

GENERAL NOTES:

The W beam guardrail flared end terminal shall be installed according to the manufacturer's installation instructions.

** An adhesive object marker shall be placed on the end section buffer or extruder after placement of the end section buffer or extruder. The adhesive object marker dimensions may be 16" x 16" or other variation due to the shape of the end section buffer or extruder. A minimum of 256 square inches of object marker reflective sheeting area is required. The reflective sheeting shall be fluorescent yellow super or very high intensity. All costs for furnishing and installing the adhesive object marker shall be incidental to various contract items.

Asphalt concrete shall be the same type used elsewhere on the project or shall be as specified in the plans. If asphalt concrete is not specified in the plans, the asphalt concrete shall conform to the Specifications for "Asphalt Concrete Composite."

Granular material shall be the same type used elsewhere on the project or shall be as specified in the plans. If granular material type is not specified in the plans, the material shall conform to the Specifications for "Base Course". The granular material shall be placed the same thickness as the mainline surfacing or as specified in the plans.

Published Date: 3rd Qtr. 2016

SDDOT

EMBANKMENT AND SURFACING FOR W BEAM GUARDRAIL FLARED END TERMINAL

PLATE NUMBER 630.45

Sheet 1 of 1

December 16, 2014

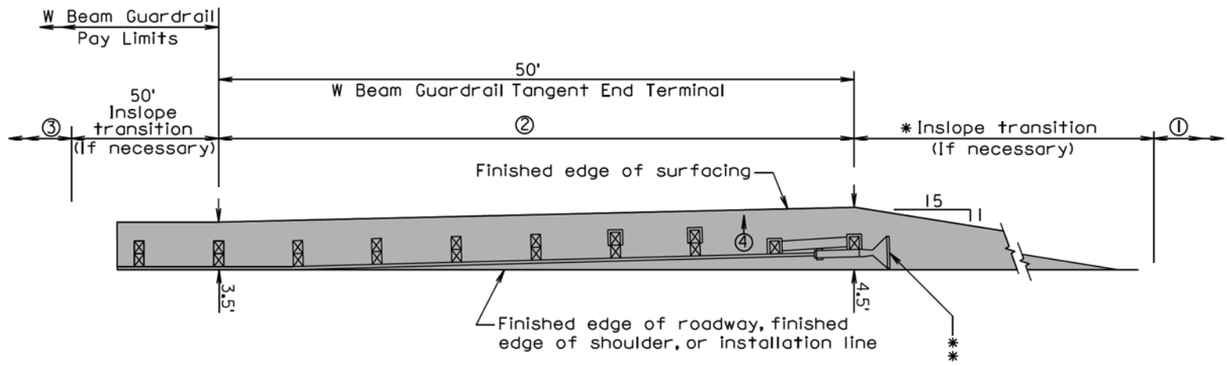

PLAN

2" Asphalt concrete surfacing with variable thickness granular material

① Same inslope as mainline inslope
② 4:1 inslope
③ 2:1 inslope or flatter, or inslope as specified in plans
④ Same slope as roadway cross slope

* The length of inslope transition varies with the amount of change between inslopes. The length of the transition shall change 100' for every whole number change in the inslope. For Example: If the inslope changes from a 5:1 to a 4:1 the length of the inslope transition would be 100'. If the inslope changes from a 6:1 to a 4:1 the length of the inslope transition would be 200'.

GENERAL NOTES:

The W beam guardrail tangent end terminal shall be installed according to the manufacturer's installation instructions.

** An adhesive object marker shall be placed on the end section buffer or extruder after placement of the end section buffer or extruder. The adhesive object marker dimensions may be 16" x 16" or other variation due to the shape of the end section buffer or extruder. A minimum of 256 square inches of object marker reflective sheeting area is required. The reflective sheeting shall be fluorescent yellow super or very high intensity. All costs for furnishing and installing the adhesive object marker shall be incidental to various contract items.

Asphalt concrete shall be the same type used elsewhere on the project or shall be as specified in the plans. If asphalt concrete is not specified in the plans, the asphalt concrete shall conform to the Specifications for "Asphalt Concrete Composite."

Granular material shall be the same type used elsewhere on the project or shall be as specified in the plans. If granular material type is not specified in the plans, the material shall conform to the Specifications for "Base Course". The granular material shall be placed the same thickness as the mainline surfacing or as specified in the plans.

Published Date: 3rd Qtr. 2016

SDDOT

EMBANKMENT AND SURFACING FOR W BEAM GUARDRAIL TANGENT END TERMINAL

PLATE NUMBER 630.46

Sheet 1 of 1

December 16, 2014

STATE OF SOUTH DAKOTA

PROJECT IM 0901(38)40

SHEET B104

TOTAL SHEETS B114

Plotting Date: 08/04/2016

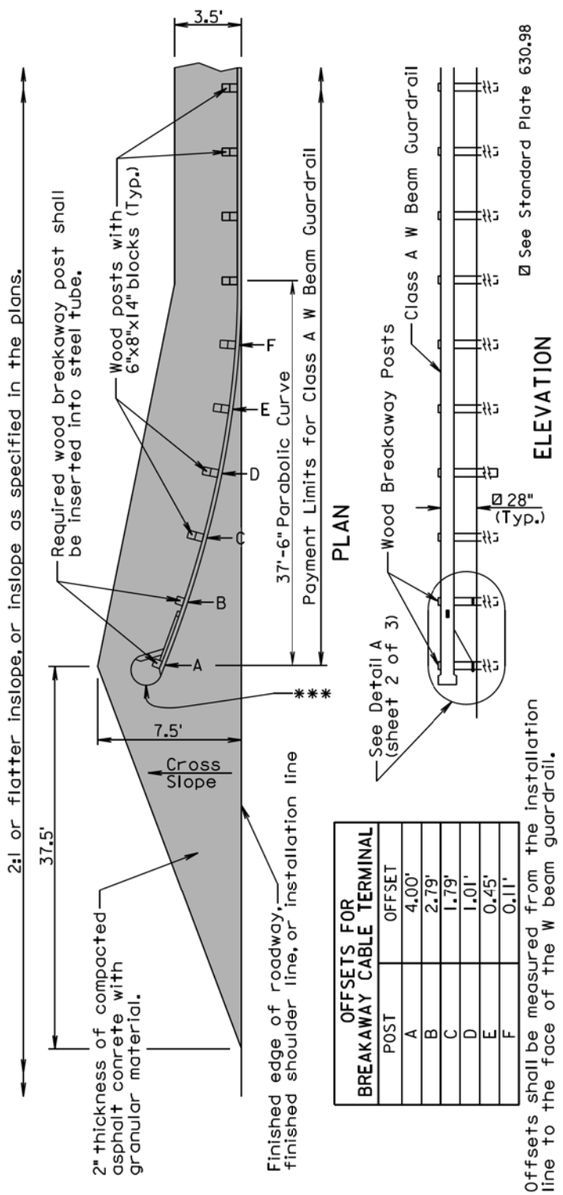

OFFSETS FOR BREAKAWAY CABLE TERMINAL

POST	OFFSET
A	4.00'
B	2.79'
C	1.79'
D	1.01'
E	0.45'
F	0.11'

GENERAL NOTES:

The finished embankment surfacing cross slope shall match the roadway cross slope; however, if a steeper cross slope is necessary the steepest allowable cross slope is 10:1.

Asphalt concrete shall be the same type used elsewhere on the project or shall be as specified in the plans. If asphalt concrete is not specified in the plans, the asphalt concrete shall conform to the Specifications for "Asphalt Concrete Composite".

Granular material shall be the same type used elsewhere on the project or shall be as specified in the plans. If granular material type is not specified in the plans, the material shall conform to the Specifications for "Base Course". The granular material shall be placed the same thickness as the mainline surfacing or as specified in the plans.

***An adhesive object marker shall be placed on the end section buffer after placement of the end section buffer. The adhesive object marker dimensions may be 16" x 16" or other variation due to the shape of the end section buffer. A minimum of 256 square inches of object marker reflective sheeting area is required. The reflective sheeting shall be fluorescent yellow super or very high intensity. All costs for furnishing and installing the adhesive object marker shall be incidental to various contract items.

Costs for constructing the W Beam Guardrail Breakaway Cable Terminal including labor, equipment, and materials including the anchor bracket, cable assembly, steel tubes, soil plates, bearing plate, pipe sleeve, W beam end section(buffer), modified W beam terminal connector, and all necessary hardware shall be incidental to the contract unit price per each for "W Beam Guardrail Breakaway Cable Terminal".

December 16, 2014

Published Date: 3rd Qtr. 2016

SDDOT

W BEAM GUARDRAIL BREAKAWAY CABLE TERMINAL

PLATE NUMBER 630.47

Sheet 1 of 3

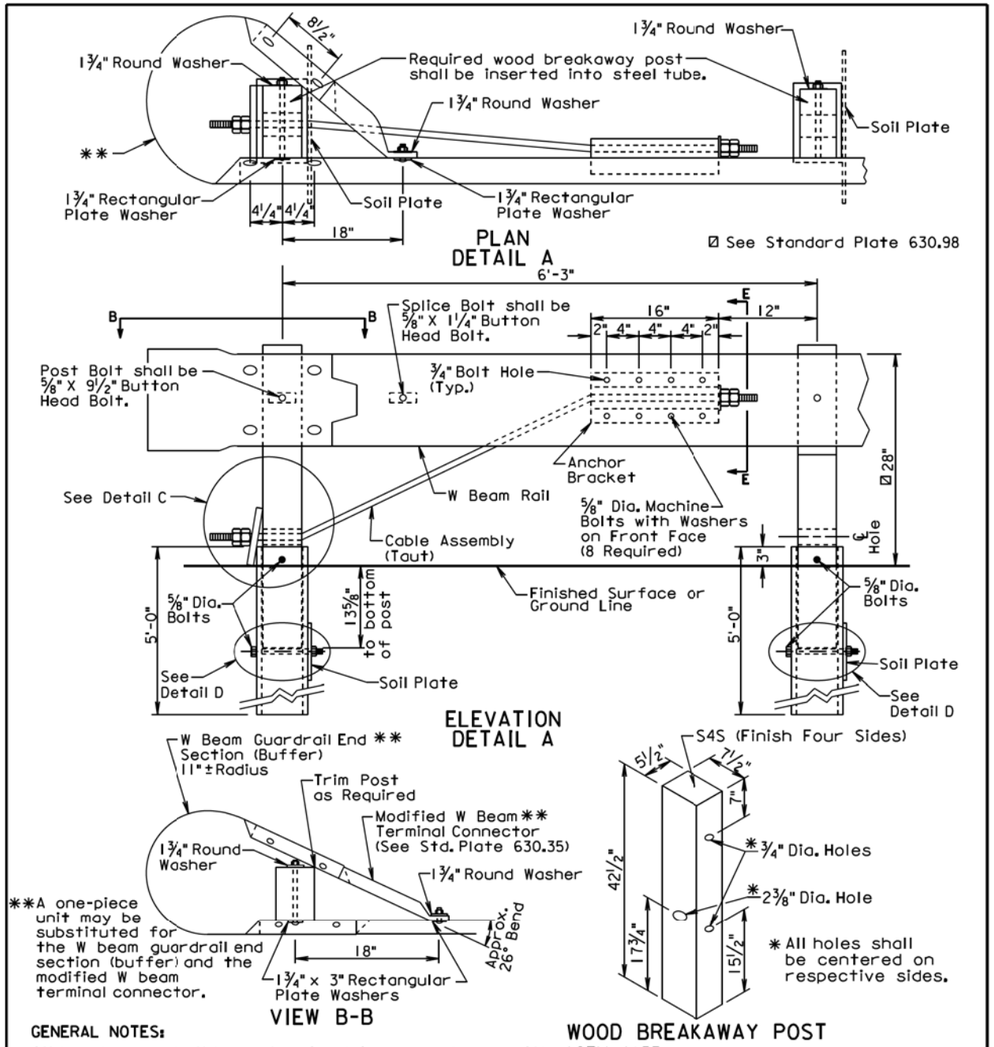

GENERAL NOTES:

All hardware shall be galvanized in accordance with ASTM A153.

The steel tubes shall meet the requirements of ASTM Specification A500, Grade B, and shall be galvanized after fabrication in accordance with the requirements of AASHTO Specification M111.

The anchor bracket, soil plate, and bearing plate shall be fabricated from steel that meets ASTM A36 Specifications. They shall be galvanized after fabrication in accordance with ASTM A123.

The W Beam End Section (Buffer) shall be 12 gage galvanized steel.

The cable shall be ¾", Type II, with Class A coating in conformance with AASHTO M30.

December 16, 2014

Published Date: 3rd Qtr. 2016

SDDOT

W BEAM GUARDRAIL BREAKAWAY CABLE TERMINAL

PLATE NUMBER 630.47

Sheet 2 of 3

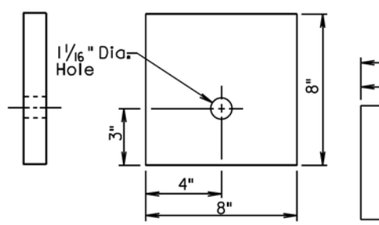

BEARING PLATE

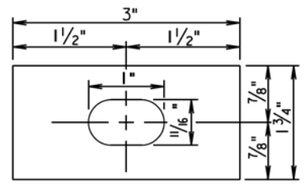

RECTANGULAR PLATE WASHER

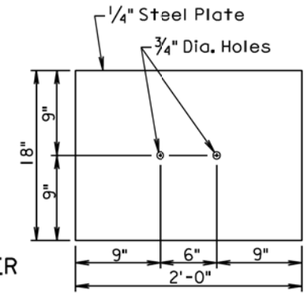

SOIL PLATE

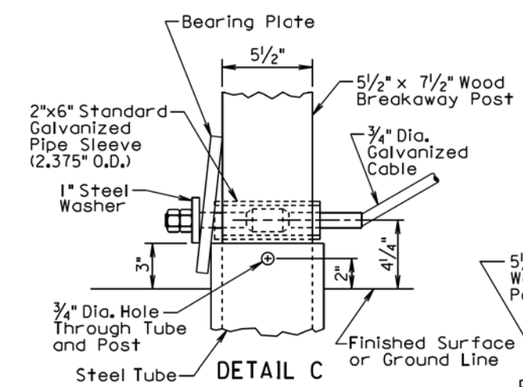

DETAIL C

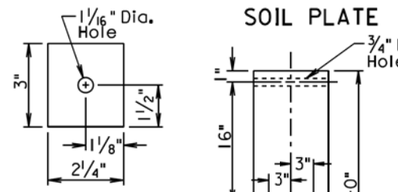

END PLATE

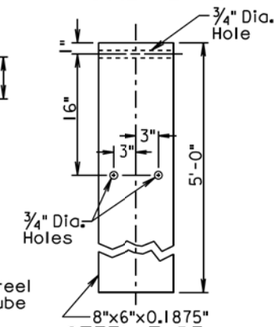

STEEL TUBE

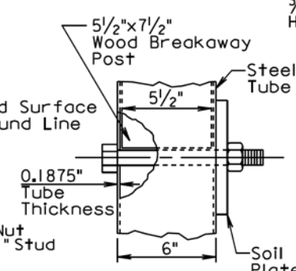

DETAIL D

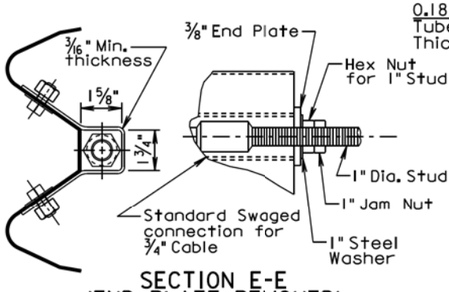

SECTION E-E
(END PLATE REMOVED)

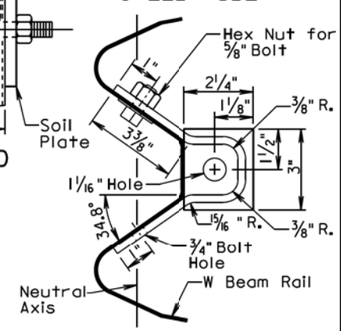

ANCHOR BRACKET

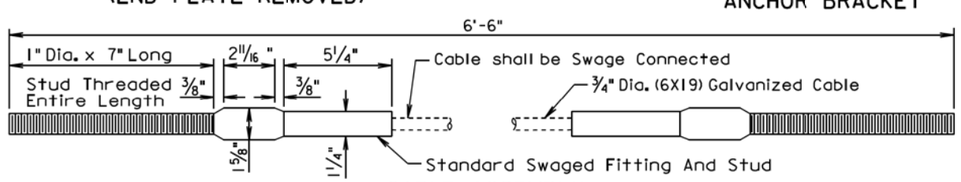

CABLE ASSEMBLY

December 16, 2014

Published Date: 3rd Qtr. 2016	SDDOT	W BEAM GUARDRAIL BREAKAWAY CABLE TERMINAL	PLATE NUMBER 630.47
			Sheet 3 of 3

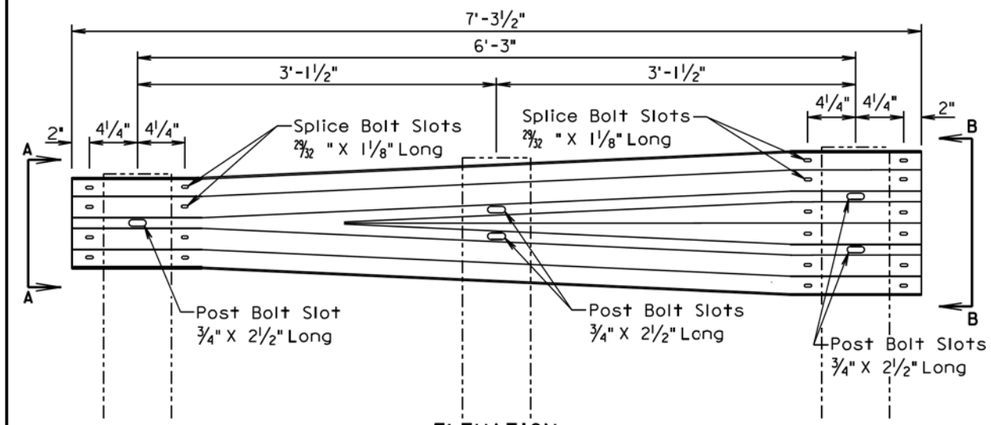

ELEVATION

VIEW A-A

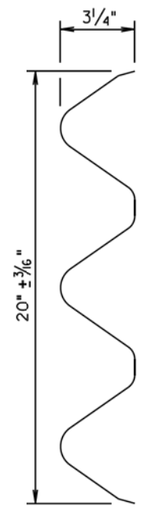

VIEW B-B

GENERAL NOTE:

All costs for constructing the W Beam to Thrie Beam Guardrail Transition including labor, equipment, and materials including two posts, two blocks, W beam to thrie beam transition section, and hardware shall be incidental to the contract unit price per each for "W Beam to Thrie Beam Guardrail Transition".

March 31, 2000

Published Date: 3rd Qtr. 2016	SDDOT	W BEAM TO THRIE BEAM GUARDRAIL TRANSITION SECTION	PLATE NUMBER 630.82
			Sheet 1 of 1

Plot Scale - 1:200
- Plotted From - trpr17192
File - ...\mead55801s63047_3s63082.dgn

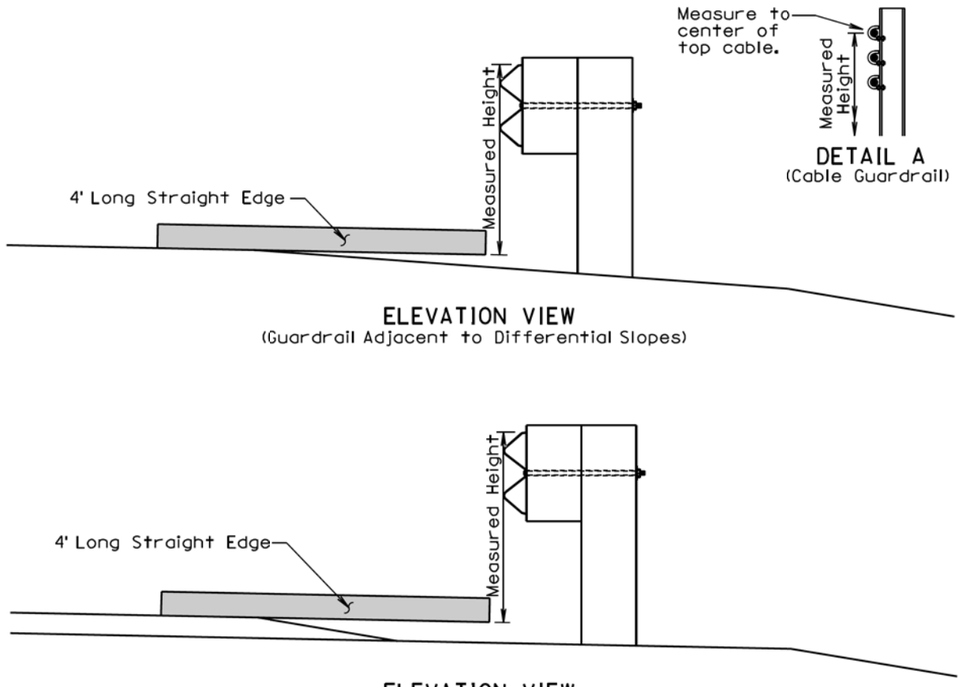

GENERAL NOTES:

The W Beam guardrail shown is for illustrative purpose. The guardrail height for all types of guardrail systems shall be measured in accordance with this standard plate.

When measuring height of cable guardrail or cable barrier the height shall be measured to the center of the top cable. See Detail A.

June 26, 2010

Published Date: 3rd Qtr. 2016	SDDOT	MEASURING GUARDRAIL HEIGHT	PLATE NUMBER 630.98
			Sheet 1 of 1

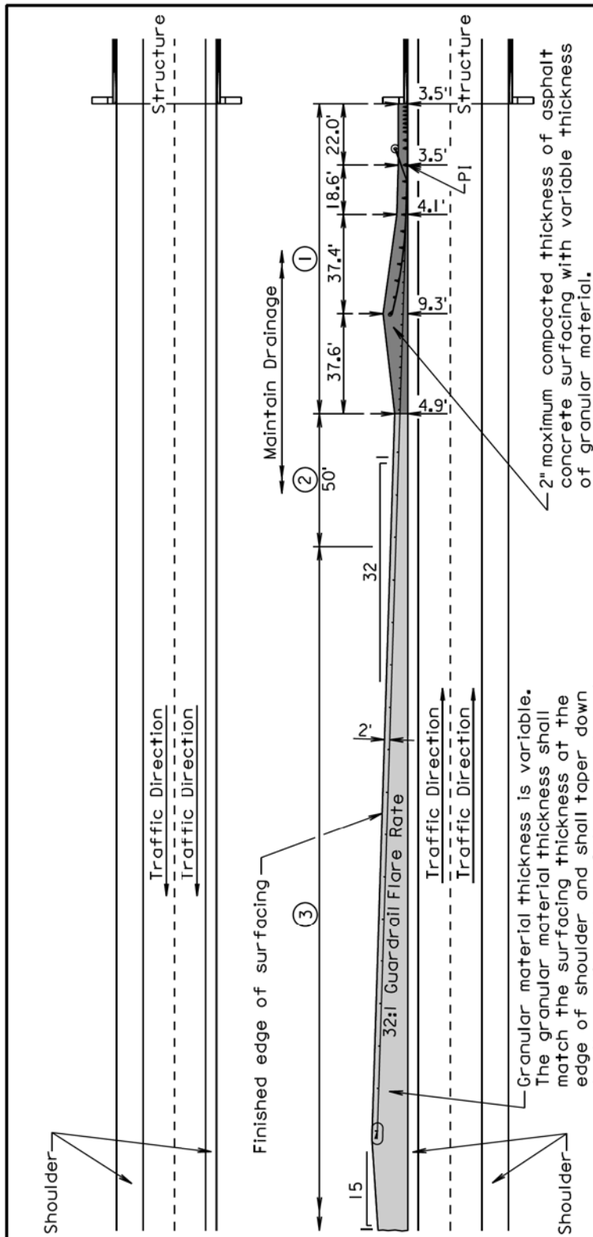

PLAN VIEW

1. Finished embankment surfacing cross slope shall be the same as the roadway cross slope.
2. Finished embankment surfacing cross slope transition.
3. Finished embankment surfacing cross slope shall be 10:1, however, a cross slope flatter than 10:1 may be used to obtain the 6" minimum thickness of granular material.

GENERAL NOTES:

Asphalt concrete shall be the same type used elsewhere on the project or shall be as specified in the plans. If asphalt concrete is not specified in the plans, the asphalt concrete shall conform to the Specifications for "Asphalt Concrete Composite."

Granular material shall be the same type used elsewhere on the project or shall be as specified in the plans. If granular material type is not specified in the plans, the material shall conform to the Specifications for "Base Course".

February 10, 2014

Published Date: 3rd Qtr. 2016	SDDOT	EMBANKMENT AND SURFACING FOR TYPICAL MEDIAN PROTECTION	PLATE NUMBER 630.99
			Sheet 1 of 1

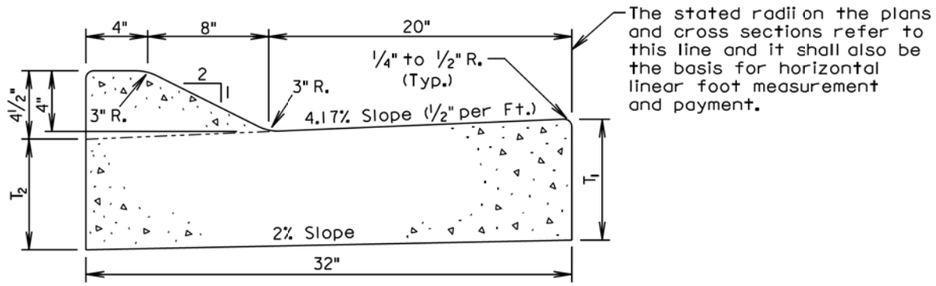

Type	T_1 (Inches)	T_2 (Inches)	Cu. Yd. Per Lin. Ft.	Lin. Ft. Per Cu. Yd.
D46	6	5 5/16	0.056	18.0
D47	7	6 5/16	0.064	15.7
D48	8	7 5/16	0.072	13.9
D48.5	8.5	7 13/16	0.076	13.1
D49	9	8 5/16	0.080	12.5
D49.5	9.5	8 13/16	0.084	11.9
D410	10	9 5/16	0.088	11.3
D410.5	10.5	9 13/16	0.093	10.8
D411	11	10 5/16	0.097	10.3
D411.5	11.5	10 13/16	0.101	9.9
D412	12	11 5/16	0.105	9.5

GENERAL NOTES:

When concrete curb and gutter longitudinally adjoins new concrete pavement, the method of attachment shall be by one of the methods shown on Standard Plate 380.11.

See Standard Plate 650.90 for expansion and contraction joints in the curb and gutter.

September 6, 2006

Published Date: 3rd Qtr. 2016	SDDOT	TYPE D CONCRETE CURB AND GUTTER	PLATE NUMBER 650.15
			Sheet 1 of 1

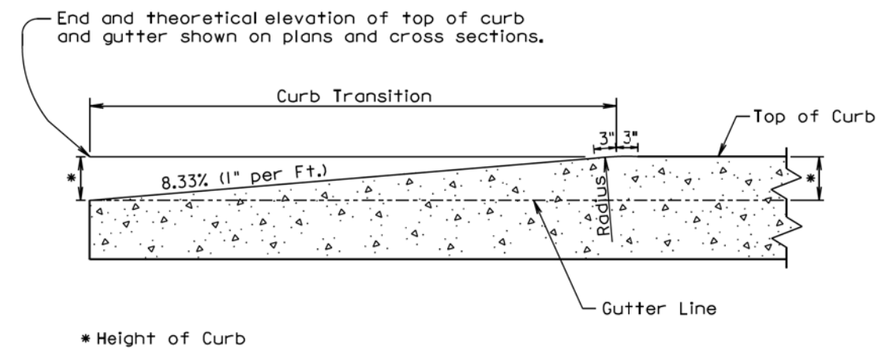

LONGITUDINAL SECTION OF CONCRETE CURB TAPER

September 14, 2005

Published Date: 3rd Qtr. 2016	SDDOT	CONCRETE CURB TAPER	PLATE NUMBER 650.35
			Sheet 1 of 1

Plot Scale - 1:200
Plotted From - trpr17192
File - ...\prj\mead5580\s65015s65035.dgn

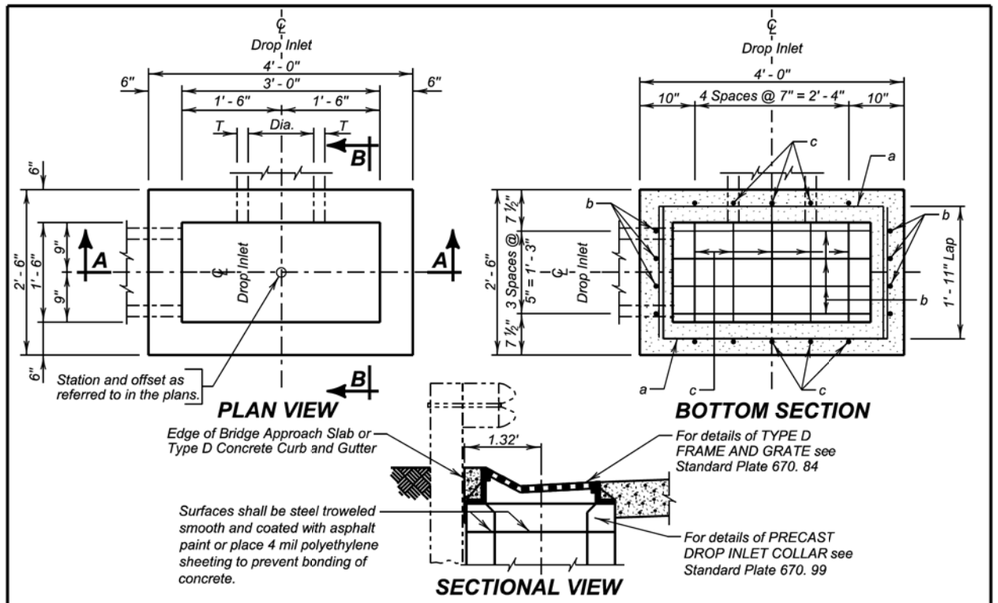

DROP INLETS FOR 12" TO 24" DIAMETER PIPE

ESTIMATED QUANTITIES

ITEM	UNIT	CONSTANT QUANTITY	VARIABLE QUANTITY
✳ Class M6 Concrete	Cu. Yd.	0.22	0.20H
Reinforcing Steel	Lb.	39.95	25.40H
Frame and Grate Assembly	Each	1	———

SPECIFICATIONS

Design Specifications: AASHTO LRFD Bridge Design Specifications, 2012 Edition.

Construction Specifications: South Dakota Standard Specifications for Roads and Bridges, Current Edition and required Provisions, Supplemental Specifications, and Special Provisions as included in the Proposal.

GENERAL NOTES:

Design Live Load: HL-93. No construction loading in excess of legal load was considered.

Reinforcing steel shall conform to ASTM A615 grade 60. The d bars shall be lapped 12 inches with the b and c bars. Cut and bend reinforcing steel as required to place pipe(s) through the drop inlet wall.

Drop inlet may be precast. If precast drop inlet details differ from this standard plate, submit a checked design done by a SD registered P.E. and shop plans to the Office of Bridge Design for approval.

✳ Reduce total quantities of concrete by the amount of concrete displaced by the pipe(s). The total quantity of concrete shall be computed to the nearest hundredth of a cubic yard. The total quantity of reinforcing steel shall be computed to the nearest pound.

Drop inlet shown may be modified by the addition or omission of connecting pipes as noted elsewhere in the plans. All pipes entering drop inlet must fit between the inside face of walls and shall not enter through the corners.

Maximum R.C.P. diameter shall not exceed 12 inches (No R. C. arch) on the 1-foot 6-inch wide side and shall not exceed 24 inches (24 inches for R. C. arch) on the 3-foot wide side of the drop inlet.

The dimension of H is in feet. Maximum H is 10 feet.

PIPE DISPLACEMENT REDUCTIONS

	Diameter (Inches)	Wall T (Inches)	Class M6 Concrete (Cu. Yd.)
R.C.P.	12	2	0.03
	15	2 ¼	0.04
	18	2 ½	0.05
	24	3	0.09
R.C. ARCH	18	2 ½	0.05
	24	3 ½	0.09

December 16, 2015

Published Date: 3rd Qtr. 2016

SDDOT

1.5' X 3' TYPE D
REINFORCED CONCRETE DROP INLET

PLATE NUMBER 670.20

Sheet 1 of 2

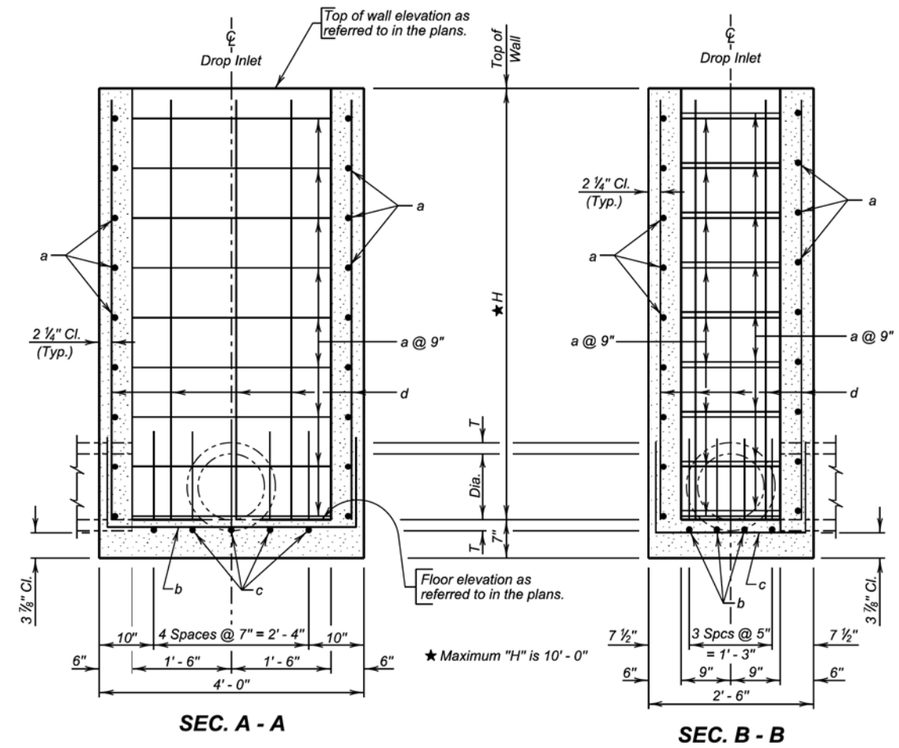

REINFORCING SCHEDULE

Mk.	No.	Size	Length	Type	Bending Details
a	2.67H	4	7' - 6"	17	
b	4	5	6' - 3"	17	
c	5	4	4' - 9"	17	
d	18	4	H - 2"	Str.	

NOTE:
All dimensions are out to out of bars.

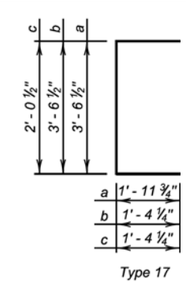

December 16, 2015

Published Date: 3rd Qtr. 2016

SDDOT

1.5' X 3' TYPE D
REINFORCED CONCRETE DROP INLET

PLATE NUMBER 670.20

Sheet 2 of 2

Plot Scale - 1:200
- Plotted From - tropi7192
File - ...\mead5580\s67020_1s67020_2.dgn

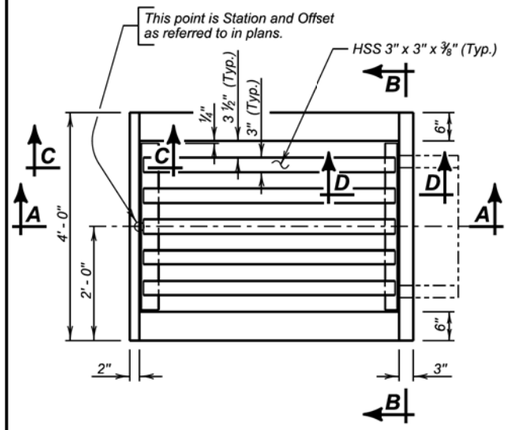

PLAN VIEW - TYPE L FRAME AND GRATE ASSEMBLY

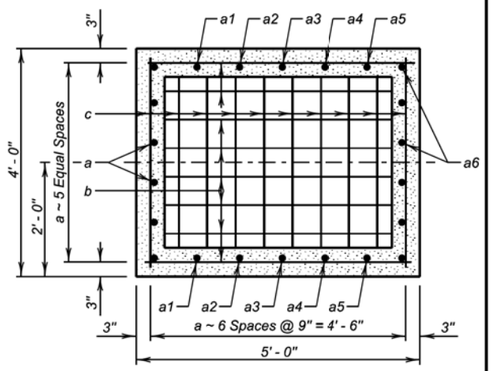

BOTTOM SECTION

ESTIMATED QUANTITIES

ITEM	UNIT	CONSTANT QUANTITY	VARIABLE QUANTITY
✳ Class M6 Concrete	Cu.Yd.	0.48	0.30 H
Reinforcing Steel	Lb.	116.84	14.70 H
Type L Frame and Grate Assembly	Each	1	———

PIPE DISPLACEMENT REDUCTIONS

	DIAMETER (Inches)	Wall T (Inches)	CLASS M6 CONCRETE (Cu. Yd.)
R.C.P.	15	2 ¼	0.04
	18	2 ½	0.05
	24	3	0.09
R.C. ARCH	18	2 ½	0.05
	24	3	0.09

SPECIFICATIONS:

1. Design Specifications: AASHTO LRFD Bridge Design Specifications, 2012 Edition.
2. Construction Specifications: South Dakota Standard Specifications for Roads and Bridges, Current Edition and required Provisions, Supplemental Specifications, and Special Provisions as included in the Proposal.

GENERAL NOTES:

1. The dimension H is in feet.
2. Design Live Load: HL-93.
3. ✳ Reduce total quantities of concrete by the amount of concrete displaced by the pipe. The total quantity of concrete shall be computed to the nearest hundredth of a cubic yard. The total quantity of reinforcing steel shall be computed to the nearest pound.
4. Cut and bend reinforcing steel during construction as necessary to accomodate pipe outlet. All reinforcing steel shall conform to ASTM A615 Grade 60.
5. All Concrete shall be Class M6.
6. All angles shall conform to ASTM A36. Tubes shall conform to ASTM A500 Grade B.
7. All exposed edges shall be chamfered ¾ inch.
8. Use 1 ½ inch clear cover on all reinforcing steel except as shown.
9. After welding is complete, galvanize the frame and grate assembly in accordance with AASHTO M111 (ASTM A123). For information only, the estimated weight of the frame and grate assembly is 338 pounds.
10. Type L Median Drain shall be paid for at the contract unit price per each or by the individual bid items as shown in the plans, which shall be full compensation for furnishing all materials and labor including necessary excavation and backfill required to construct one complete drain.
11. The location and size of pipe outlet from the drain shall be as noted on cross section sheets.

June 26, 2015

Published Date: 3rd Qtr. 2016	SDDOT	TYPE L MEDIAN DRAIN For 6:1 INSLOPE	PLATE NUMBER 670.60 Sheet 1 of 2

REINFORCING SCHEDULE
(For 1 Drain)

Mk.	No.	Size	Length	Type
a	6	4	H + 3"	Str.
a1	2	4	H + 4"	Str.
a2	2	4	H + 6"	Str.
a3	2	4	H + 7"	Str.
a4	2	4	H + 9"	Str.
a5	2	4	H + 10"	Str.
a6	6	4	H + 1.0'	Str.
b	18	4	4' - 9"	Str.
c	19	4	3' - 9"	Str.
d	2	4	2' - 4"	Str.

NOTE:
All dimensions are out to out of bars.

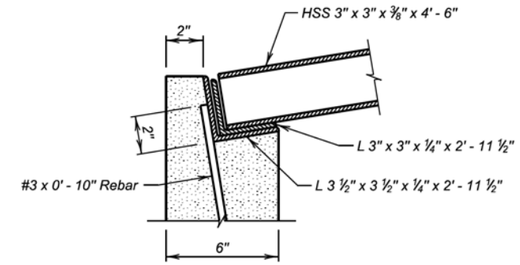

SEC. C - C

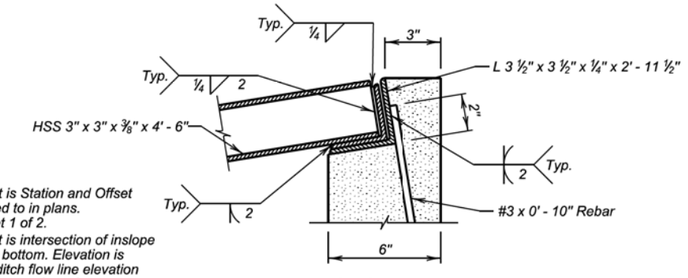

SEC. D - D

This point is Station and Offset as referred to in plans.
See sheet 1 of 2.
This point is intersection of inslope and ditch bottom. Elevation is equal to ditch flow line elevation at location noted on plans.

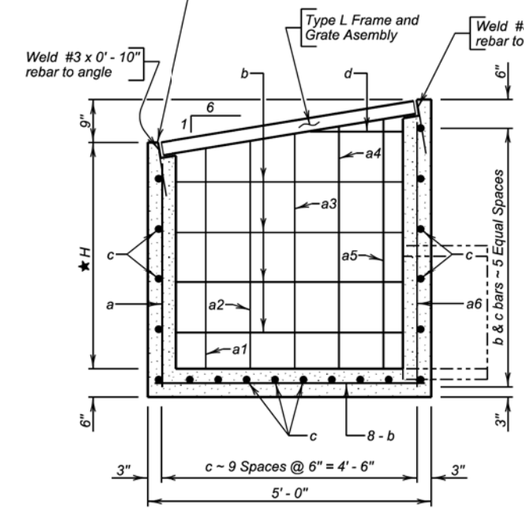

★ Maximum H is 4' - 0"

SEC. A - A

(L3" x 3" x ¼" x 2' - 11 ½" not shown for illustration purpose)

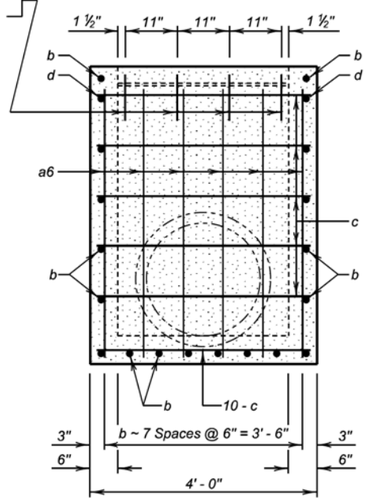

SEC. B - B

June 26, 2015

Published Date: 3rd Qtr. 2016	SDDOT	TYPE L MEDIAN DRAIN For 6:1 INSLOPE	PLATE NUMBER 670.60 Sheet 2 of 2

Plot Scale - 1:200
- Plotted From- trpr17192
File - ...\mead5580\s67060_1s67060_2.dgn

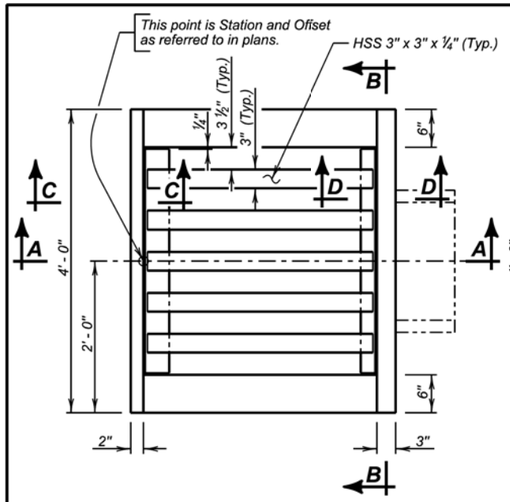

PLAN VIEW - TYPE L FRAME AND GRATE ASSEMBLY

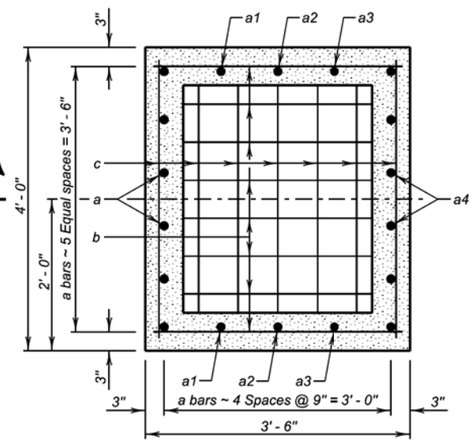

BOTTOM SECTION

ESTIMATED QUANTITIES

ITEM	UNIT	CONSTANT QUANTITY	VARIABLE QUANTITY
✶ Class M6 Concrete	Cu.Yd.	0.35	0.24 H
Reinforcing Steel	Lb.	87.51	12.02 H
Type L Frame and Grate Assembly	Each	1	——

PIPE DISPLACEMENT REDUCTIONS

	DIAMETER (Inches)	Wall T (Inches)	CLASS M6 CONCRETE (Cu. Yd.)
R.C.P.	15	2 ¼	0.04
	18	2 ½	0.05
	24	3	0.09
R.C. ARCH	18	2 ½	0.05
	24	3	0.09

SPECIFICATIONS:

1. Design Specifications: AASHTO LRFD Bridge Design Specifications, 2012 Edition.
2. Construction Specifications: South Dakota Standard Specifications for Roads and Bridges, Current Edition and required Provisions, Supplemental Specifications, and Special Provisions as included in the Proposal.

GENERAL NOTES:

1. The dimension H is in feet.
2. Design Live Load: HL-93.
3. ✶ Reduce total quantities of concrete by the amount of concrete displaced by the pipe. The total quantity of concrete shall be computed to the nearest hundredth of a cubic yard. The total quantity of reinforcing steel shall be computed to the nearest pound.
4. Cut and bend reinforcing steel during construction as necessary to accomodate pipe outlet. All reinforcing steel shall conform to ASTM A615 Grade 60.
5. All Concrete shall be Class M6.
6. All angles shall conform to ASTM A36. Tubes shall conform to ASTM A500 Grade B.
7. All exposed edges shall be chamfered ¾ inch.
8. Use 1 ½ inch clear cover on all reinforcing steel except as shown.
9. After welding is complete, galvanize the frame and grate assembly in accordance with AASHTO M111 (ASTM A123). For information only, the estimated weight of the frame and grate assembly is 198 pounds.
10. Type L Median Drain shall be paid for at the contract unit price per each or by the individual bid items as shown in the plans, which shall be full compensation for furnishing all materials and labor including necessary excavation and backfill required to construct one complete drain.
11. The location and size of pipe outlet from the drain shall be as noted on cross section sheets.

June 26, 2015

Published Date: 3rd Qtr. 2016	SDDOT	TYPE L MEDIAN DRAIN For 4:1 INSLOPE	PLATE NUMBER 670.61
			Sheet 1 of 2

REINFORCING SCHEDULE
(For 1 Drain)

Mk.	No.	Size	Length	Type
a	6	4	H + 3"	Str.
a1	2	4	H + 5"	Str.
a2	2	4	H + 7"	Str.
a3	2	4	H + 9"	Str.
a4	6	4	H + 11"	Str.
b	18	4	3' - 3"	Str.
c	16	4	3' - 9"	Str.
d	2	4	1' - 0"	Str.

NOTE:
All dimensions are out to out of bars.

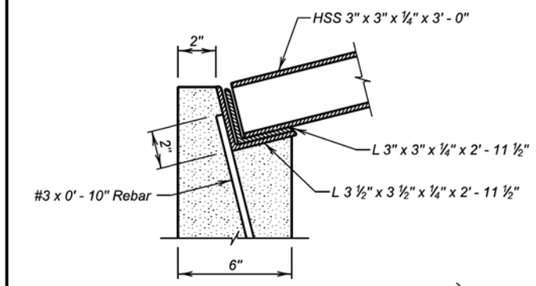

SEC. C - C

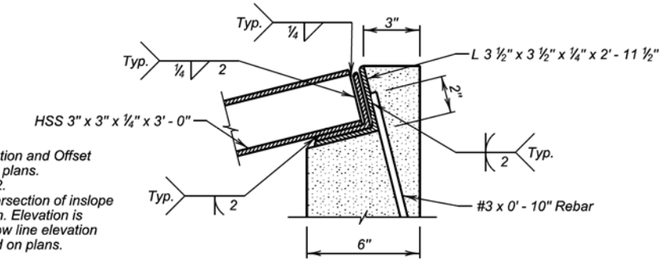

SEC. D - D

This point is Station and Offset as referred to in plans. See sheet 1 of 2. This point is intersection of inslope and ditch bottom. Elevation is equal to ditch flow line elevation at location noted on plans.

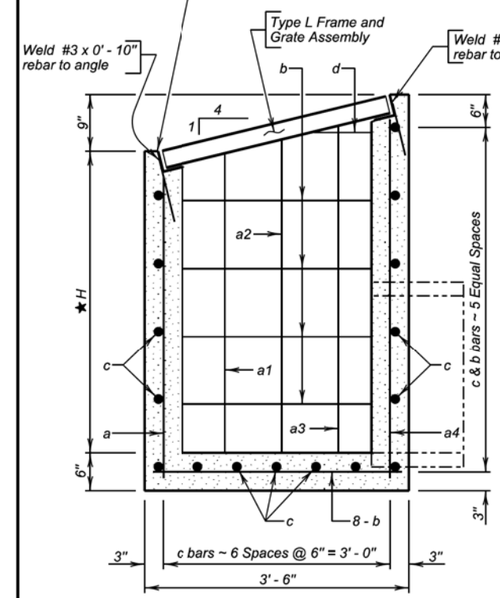

★ Maximum H is 4' - 0"

SEC. A - A

(L 3" x 3" x ¼" x 2' - 11 ½" not shown for illustration purpose)

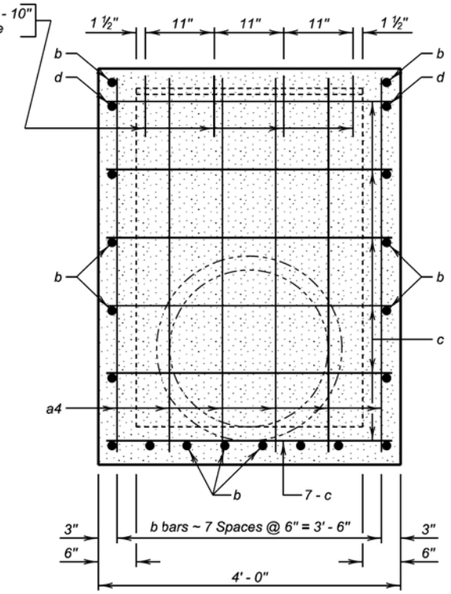

SEC. B - B

June 26, 2015

Published Date: 3rd Qtr. 2016	SDDOT	TYPE L MEDIAN DRAIN For 4 : 1 INSLOPE	PLATE NUMBER 670.61
			Sheet 2 of 2

Plot Scale - 1:200
- Plotted From - trpr17192
File - ...\mead5580\s67061_1s67061_2.dgn

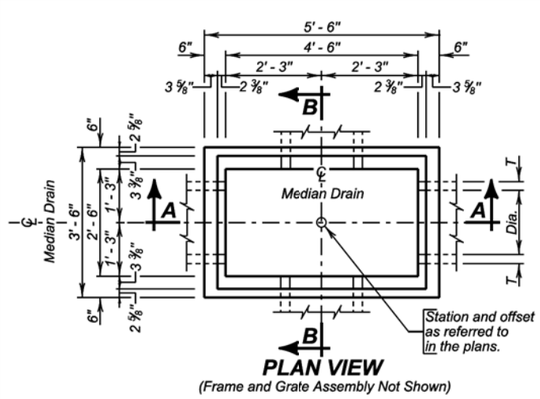

PLAN VIEW
(Frame and Grate Assembly Not Shown)

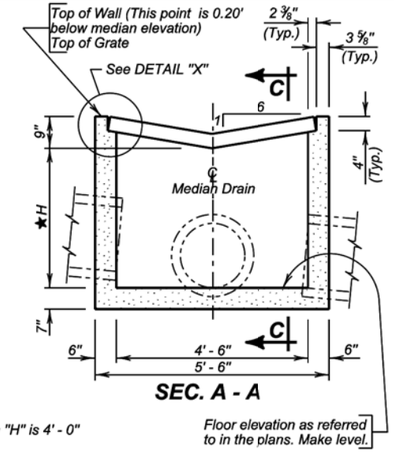

SEC. A - A

★ Maximum "H" is 4' - 0"

ESTIMATED QUANTITIES			
ITEM	UNIT	CONSTANT QUANTITY	VARIABLE QUANTITY
✳ Class M6 Concrete	Cu. Yd.	0.59	0.30H
Reinforcing Steel	Lb.	72.01	33.87H
Type M Frame and Grate Assembly	Each	1	——

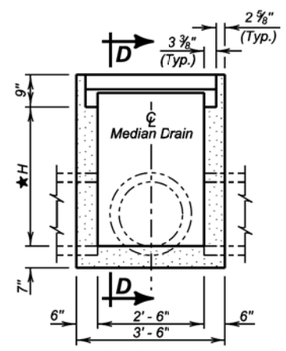

SEC. B - B

SPECIFICATIONS

Design Specifications: AASHTO LRFD Bridge Design Specifications, 2012 Edition.

Construction Specifications: South Dakota Standard Specifications for Roads and Bridges, Current Edition and required Provisions, Supplemental Specifications, and Special Provisions as included in the Proposal.

GENERAL NOTES:

Design Live Load: HL-93. No construction loading in excess of legal load was considered.

Reinforcing steel shall conform to ASTM A615 grade 60. The d bars shall be lapped 12 inches with the b and c bars. Cut and bend reinforcing steel as required to place pipe(s) through the drop inlet wall.

Median drain may be precast. If precast median drain details differ from this standard plate, submit a checked design done by a SD registered P.E. and shop plans to the Office of Bridge Design for approval.

✳ Reduce total quantities of concrete by the amount of concrete displaced by the pipe(s). The total quantity of concrete shall be computed to the nearest hundredth of a cubic yard. The total quantity of reinforcing steel shall be computed to the nearest pound.

Median drain shown may be modified by the addition or omission of connecting pipes as noted elsewhere in the plans. All pipes entering median drain must fit between the inside face of walls and shall not enter through the corners.

Structural steel for angles and plates shall conform to ASTM A36.
Structural steel for rectangular HSS shall conform to ASTM A500 grade B.
For informational purpose, the approximate weight of the frame is 104 pounds and the approximate weight of the grate is 254 pounds.

Maximum R.C.P. diameter shall not exceed 30 inches (18 inches R. C. arch) on the 3-foot 6-inch wide side and shall not exceed 42 inches (36 inches for R. C. arch) on the 5-foot 6-inch wide side of the median drain.

The dimension of H is in feet. Maximum H is 4 feet.

PIPE DISPLACEMENT REDUCTIONS			
	Diameter (Inches)	Wall T (Inches)	Class M6 Concrete (Cu. Yd.)
R.C.P.	12	2	0.03
	15	2 ¼	0.04
	18	2 ½	0.05
	24	3	0.09
	30	3 ½	0.14
	36	4	0.20
	42	4 ½	0.26
R.C. ARCH	18	2 ½	0.05
	24	3 ½	0.09
	30	4	0.14
	36	4 ½	0.19

March 21, 2016

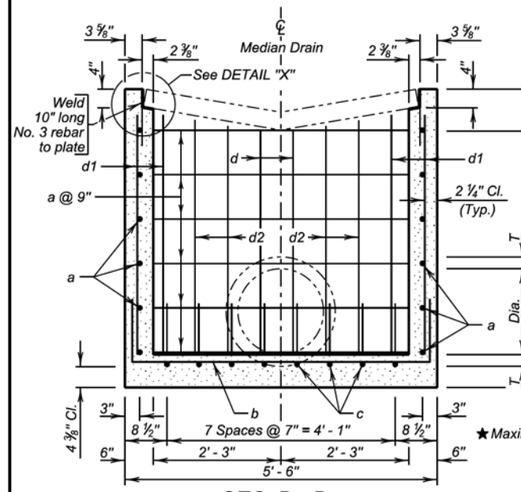

SEC. D - D

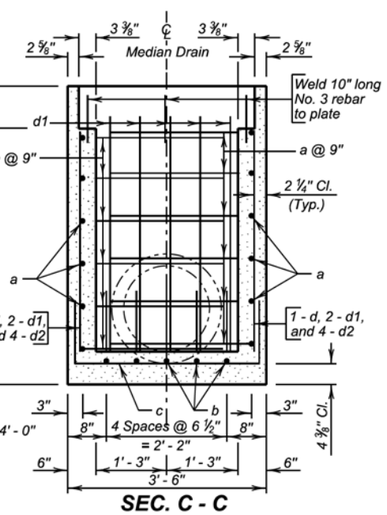

SEC. C - C

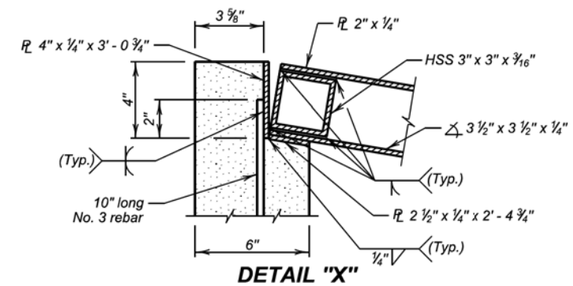

DETAIL "X"

REINFORCING SCHEDULE					
Mk.	No.	Size	Length	Type	Bending Details
a	2.67H	4	10' - 0"	17	
b	5	5	7' - 6"	17	
c	8	4	5' - 9"	17	
d	2	4	H - 1 1/2"	Str.	
d1	14	4	H + 3"	Str.	
d2	8	4	H	Str.	

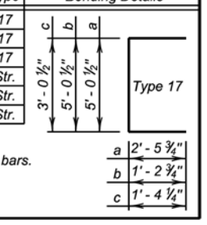

NOTE:
All dimensions are out to out of bars.

March 21, 2016

Plot Scale - 1:200
- Plotted From - tnpr17192
File - ...\mead5580\s67065_1s67065_2.dgn

STATE OF SOUTH DAKOTA	PROJECT	SHEET	TOTAL SHEETS
	IM 0901(38)40	B113	B114

Plotting Date: 08/30/2016 Revised 8-30-2016(BT)

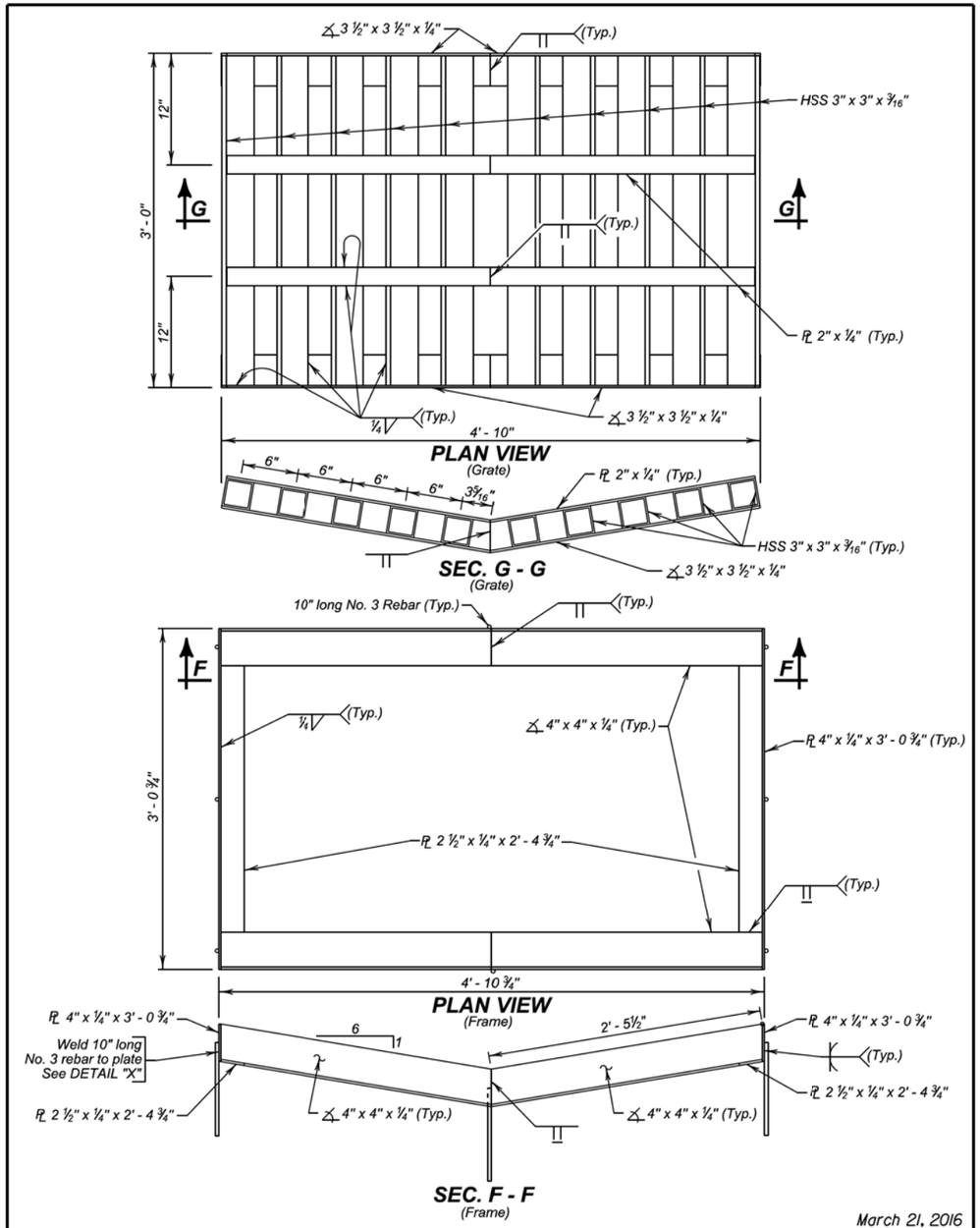

March 21, 2016

Published Date: 3rd Qtr. 2016	SDDOT	TYPE M MEDIAN DRAIN	PLATE NUMBER 670.65
			Sheet 3 of 3

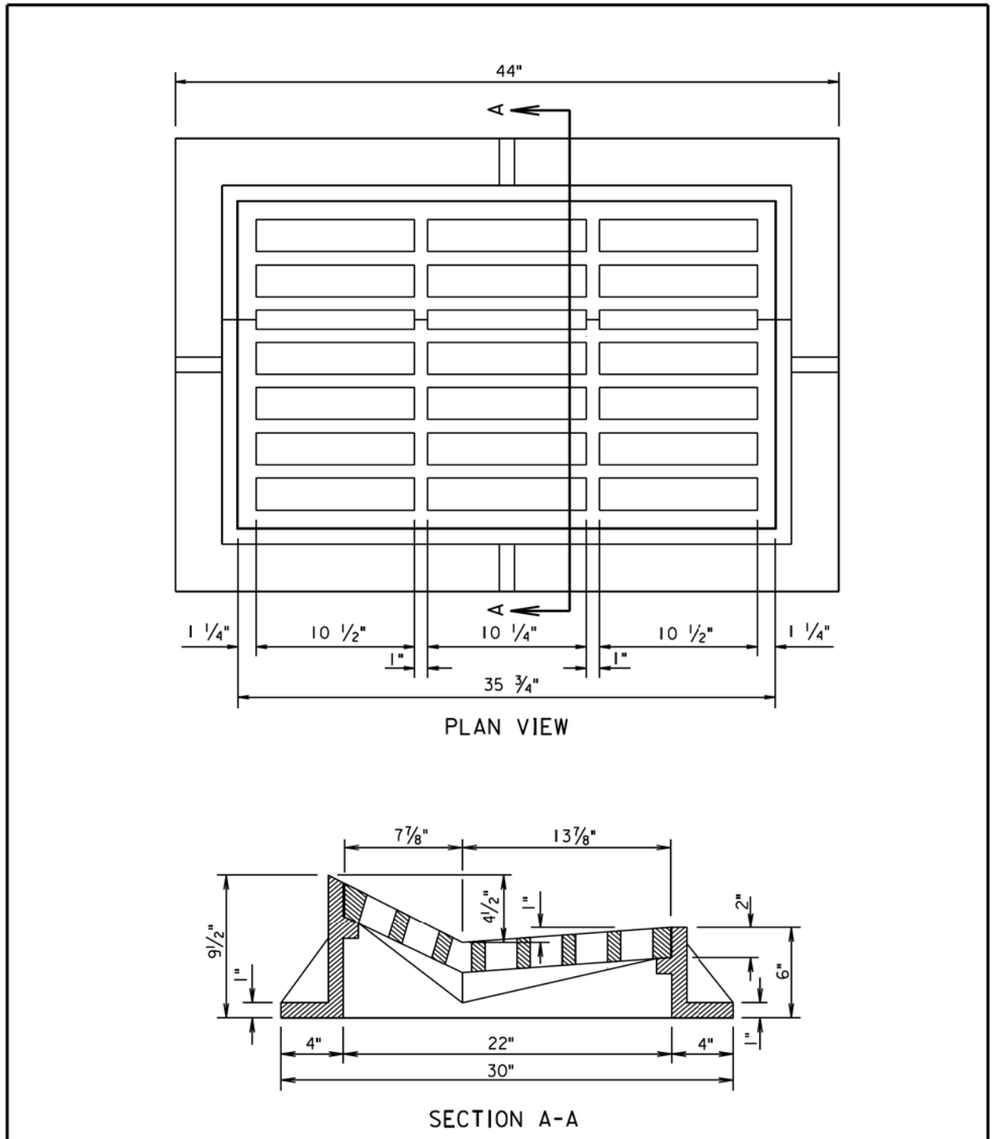

GENERAL NOTE:

The total weight of the frame and grate shall be 620 pounds minimum.

March 31, 2000

Published Date: 3rd Qtr. 2016	SDDOT	TYPE D FRAME AND GRATE	PLATE NUMBER 670.84
			Sheet 1 of 1

Plot Scale - 1:200

- Plotted From - trpr17192

File - ...\mead5580\s67065_3s67084.dgn

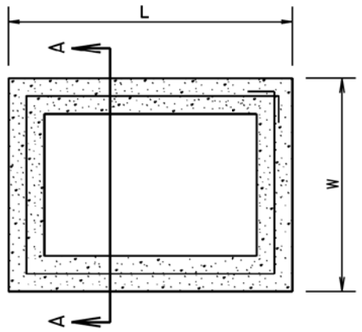

PLAN VIEW

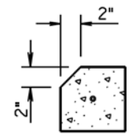

For Type D Drop Inlets only:
Use Precast Drop Inlet Collar with 2" chamfer on L sides only.

DETAIL B

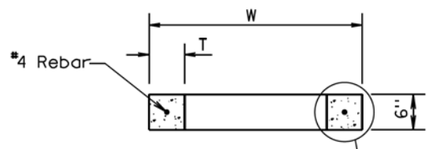

SECTION A-A

See Detail B (For Type D Drop Inlets Only)

INFORMATIONAL QUANTITIES					
FRAME AND GRATE TYPE	L Ft-In	W Ft-In	T In	CLASS M6 CONCRETE CuYd	REINFORCING STEEL Lb
TYPE B	4'-0"	3'-0"	6	0.11	9
TYPE C	5'-0"	4'-0"	6	0.15	11
TYPE D	4'-0"	2'-6"	6	0.10	8

GENERAL NOTES:

All reinforcing steel shall conform to ASTM A615, Grade 60.

The ½" diameter bar shall lap 6"± and shall be centered in the concrete.

The cost of furnishing and installing Precast Drop Inlet Collars, including labor, materials, and incidentals shall be incidental to the contract unit price per Each for "Precast Drop Inlet Collar".

March 31, 2000

Published Date: 3rd Qtr. 2016	SDDOT	PRECAST DROP INLET COLLAR	PLATE NUMBER 670.99
			Sheet 1 of 1

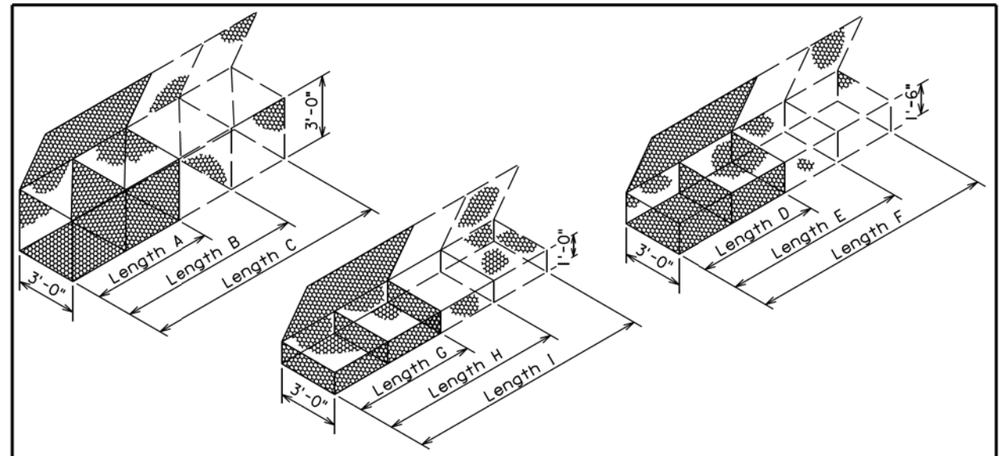

GABION DETAILS

STANDARD SIZES

SIZE	LENGTH	WIDTH	HEIGHT	NUMBER OF CELLS	CAPACITY, Cu. Yd.
A	6'-0"	3'-0"	3'-0"	2	2.0
B	9'-0"	3'-0"	3'-0"	3	3.0
C	12'-0"	3'-0"	3'-0"	4	4.0
D	6'-0"	3'-0"	1'-6"	2	1.0
E	9'-0"	3'-0"	1'-6"	3	1.5
F	12'-0"	3'-0"	1'-6"	4	2.0
G	6'-0"	3'-0"	1'-0"	2	0.7
H	9'-0"	3'-0"	1'-0"	3	1.0
I	12'-0"	3'-0"	1'-0"	4	1.3

Above Dimensions subject to mill tolerances.

GENERAL NOTES:

Lacing and internal connecting wire shall be 0.0866 inch diameter steel wire ASTM A641 Class 3 soft temper measured after galvanizing and for PVC coated gabions shall be 0.0866 inch diameter steel wire measured after galvanizing but before PVC coating.

The lacing procedure is as follows:

1. Cut a length of lacing wire approximately 1 ½ times the distance to be laced but not exceeding 5 feet.
2. Secure the wire terminal at the corner by looping and twisting.
3. Proceed lacing with alternating single and double loops at a spacing not to exceed 6 inches.
4. Securely fasten the other lacing wire terminal.

Wire lacing or interlocking type fasteners shall be used for gabion assembly and final construction of gabion structures. Interlocking fasteners for galvanized gabions shall be high tensile 0.120 inch diameter galvanized steel wire measured after galvanizing. The galvanizing shall conform to ASTM A641-92 Class 3 coating. Fasteners shall also be in accordance with ASTM A764, Class II, Type III.

Interlocking fasteners for PVC coated gabions shall be high tensile 0.120 inch diameter stainless steel wire conforming to ASTM A313, Type 302, Class I. The spacing of the interlocking fasteners during all phases of assembly and construction shall not exceed 6 inches.
All fasteners shall be placed where the mesh weaves around the selvage wire at the vertical and horizontal joints.

June 26, 2001

Published Date: 3rd Qtr. 2016	SDDOT	BANK AND CHANNEL PROTECTION GABIONS	PLATE NUMBER 720.01
			Sheet 1 of 1

Plot Scale - 1:200
- Plotted From - trpr17192
File - ...\prj\mead5580\s67099s72001.dgn