1 Revised Sep. 20, 2016 JSD/PW

Section E: Structure Plans

INDEX OF SHEETS -

Sheet E1	Layout Map and Index
Sheet E2 to E4	Estimate of Structure Quantities
Sheet E5 to E11	3 - 8' X 6' Box Culvert Extension
Sheet E12 to E17	3 - 8' X 6' Box Culvert Extension
Sheet E18 to E24	7' X 7' Box Culvert Extension
Sheet E25 to E31	9' X 7' Box Culvert Extension
Sheet E32 to E53	159' - 6" Continuous Concrete Bridge
Sheet E54 to E75	159' - 6" Continuous Concrete Bridge
Sheet E76 to E83	2 - 7' X 7' Box Culvert Extension
Sheet E84 to E89	10' X 7' Box Culvert Extension
Sheet E90 to E109	150' - 6" Continuous Concrete Bridge
Sheet E110 to E129	150' - 6" Continuous Concrete Bridge
Sheet E130 to E159	197' - 11 7/8" Prestressed Girder Bridge
Sheet E160 to E189	197' - 11 7/8" Prestressed Girder Bridge
Sheet E190 to E195	6' X 6' Box Culvert Extension
Sheet E196 to E199	Concrete Barrier & Glare Screen

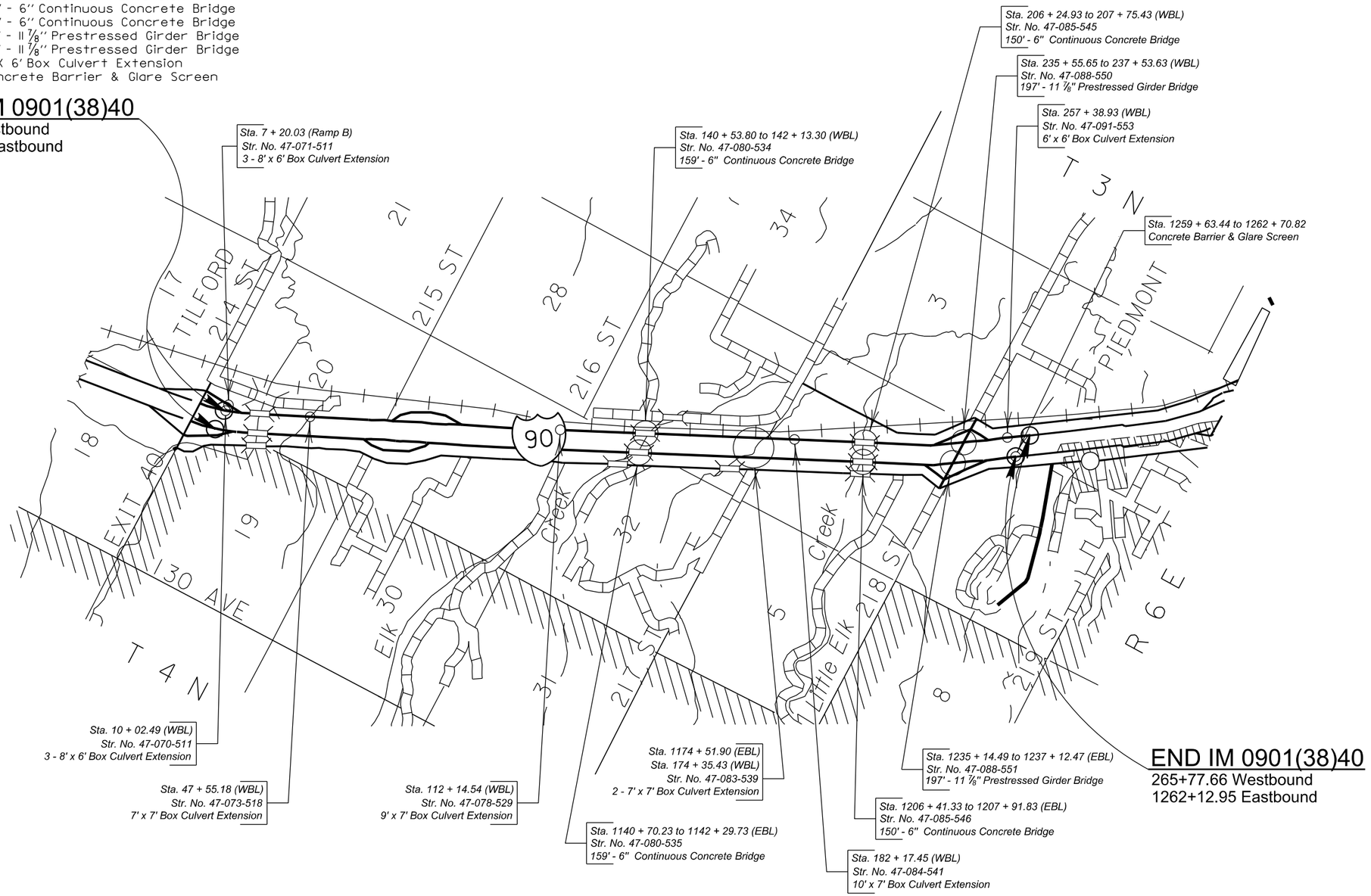

SECTION E – ESTIMATE OF STRUCTURE QUANTITES

Str. No. 47-070-511
3 – 8' X 6' Box Culvert Extension
Sta. 10 + 02.49 (WBL)

BID ITEM NUMBER	ITEM	QUANTITY	UNIT
420E0200	Structure Excavation, Box Culvert	19	CuYd
421E0200	Box Culvert Undercut	32	CuYd
460E0120	Class A45 Concrete, Box Culvert	31.4	CuYd
460E0300	Breakout Structural Concrete	15.6	CuYd
460E0380	Install Dowel in Concrete	50	Each
480E0100	Reinforcing Steel	4,656	Lb
700E0210	Class B Riprap	64.3	Ton
831E0110	Type B Drainage Fabric	93	SqYd

Str. No. 47-071-511
3 – 8' X 6' Box Culvert Extension
Sta. 07 + 20.03 (Ramp B)

BID ITEM NUMBER	ITEM	QUANTITY	UNIT
420E0200	Structure Excavation, Box Culvert	19	CuYd
421E0200	Box Culvert Undercut	31	CuYd
460E0120	Class A45 Concrete, Box Culvert	37.4	CuYd
460E0300	Breakout Structural Concrete	12.8	CuYd
460E0380	Install Dowel in Concrete	50	Each
480E0100	Reinforcing Steel	6,483	Lb

Str. No. 47-080-534
159' – 6'' Continuous Concrete Bridge
Sta. 140 + 53.80 to Sta. 142 + 13.30 (WBL)

BID ITEM NUMBER	ITEM	QUANTITY	UNIT
009E3310	Bridge Elevation Survey	Lump Sum	LS
009E5000	Concrete Penetrating Sealer	709.0	SqYd
250E0030	Incidental Work, Structure	Lump Sum	LS
410E2600	Membrane Sealant Expansion Joint	83.8	Ft
420E0100	Structure Excavation, Bridge	753	CuYd
430E0200	Bridge End Embankment	784	CuYd
430E0300	Granular Bridge End Backfill	72.3	CuYd
430E0510	Approach Slab Underdrain Excavation	3.2	CuYd
430E0700	Precast Concrete Headwall for Drain	2	Each
460E0030	Class A45 Concrete, Bridge Deck	376.9	CuYd
460E0050	Class A45 Concrete, Bridge	271.1	CuYd
460E0150	Concrete Approach Slab for Bridge	190.6	SqYd
460E0160	Concrete Approach Sleeper Slab for Bridge	67.5	SqYd
464E0100	Controlled Density Fill	7.9	CuYd
480E0100	Reinforcing Steel	47,812	Lb
480E0200	Epoxy Coated Reinforcing Steel	106,091	Lb
480E0507	No. 7 Rebar Splice	108	Each
510E1500	Micropile Verification Load Test	1	Each
510E1510	Micropile Proof Load Test	5	Each
510E1520	Micropile	72	Each
680E0040	4" Underdrain Pipe	255	Ft
680E2500	Porous Backfill	38.6	Ton
700E0310	Class C Riprap	1,266.0	Ton
831E0110	Type B Drainage Fabric	1,069	SqYd

Str. No. 47-080-535
159' – 6'' Continuous Concrete Bridge
Sta. 1140 + 70.23 to Sta. 1142 + 29.73 (EBL)

BID ITEM NUMBER	ITEM	QUANTITY	UNIT
009E3310	Bridge Elevation Survey	Lump Sum	LS
009E5000	Concrete Penetrating Sealer	709.0	SqYd
250E0030	Incidental Work, Structure	Lump Sum	LS
410E2600	Membrane Sealant Expansion Joint	83.8	Ft
420E0100	Structure Excavation, Bridge	753	CuYd
430E0200	Bridge End Embankment	784	CuYd
430E0300	Granular Bridge End Backfill	72.3	CuYd
430E0510	Approach Slab Underdrain Excavation	3.2	CuYd
430E0700	Precast Concrete Headwall for Drain	2	Each
460E0030	Class A45 Concrete, Bridge Deck	376.9	CuYd
460E0050	Class A45 Concrete, Bridge	271.1	CuYd
460E0150	Concrete Approach Slab for Bridge	190.6	SqYd
460E0160	Concrete Approach Sleeper Slab for Bridge	67.5	SqYd
464E0100	Controlled Density Fill	7.9	CuYd
480E0100	Reinforcing Steel	47,812	Lb
480E0200	Epoxy Coated Reinforcing Steel	106,091	Lb
480E0507	No. 7 Rebar Splice	108	Each
510E1500	Micropile Verification Load Test	1	Each
510E1510	Micropile Proof Load Test	5	Each
510E1520	Micropile	72	Each
680E0040	4" Underdrain Pipe	255	Ft
680E2500	Porous Backfill	38.6	Ton
700E0310	Class C Riprap	2,196.0	Ton
831E0110	Type B Drainage Fabric	1,828	SqYd

Str. No. 47-085-545
150' – 6'' Continuous Concrete Bridge
Sta. 206 + 24.93 to Sta. 207 + 75.43 (WBL)

BID ITEM NUMBER	ITEM	QUANTITY	UNIT
009E3310	Bridge Elevation Survey	Lump Sum	LS
009E5000	Concrete Penetrating Sealer	669.0	SqYd
250E0030	Incidental Work, Structure	Lump Sum	LS
410E2600	Membrane Sealant Expansion Joint	83.8	Ft
420E0100	Structure Excavation, Bridge	323	CuYd
430E0200	Bridge End Embankment	665	CuYd
430E0300	Granular Bridge End Backfill	71.1	CuYd
430E0510	Approach Slab Underdrain Excavation	2.7	CuYd
430E0700	Precast Concrete Headwall for Drain	2	Each
460E0030	Class A45 Concrete, Bridge Deck	343.7	CuYd
460E0050	Class A45 Concrete, Bridge	273.5	CuYd
460E0150	Concrete Approach Slab for Bridge	190.6	SqYd
460E0160	Concrete Approach Sleeper Slab for Bridge	67.5	SqYd
464E0100	Controlled Density Fill	7.3	CuYd
480E0100	Reinforcing Steel	36,477	Lb
480E0200	Epoxy Coated Reinforcing Steel	84,168	Lb
480E0507	No. 7 Rebar Splice	106	Each
510E1500	Micropile Verification Load Test	1	Each
510E1510	Micropile Proof Load Test	5	Each
510E1520	Micropile	73	Each
680E0040	4" Underdrain Pipe	255	Ft
680E2500	Porous Backfill	31.7	Ton
700E0310	Class C Riprap	843.5	Ton
831E0110	Type B Drainage Fabric	947	SqYd

Str. No. 47-085-546
150' – 6'' Continuous Concrete Bridge
Sta. 1206 + 41.33 to Sta. 1207 + 91.83 (EBL)

BID ITEM NUMBER	ITEM	QUANTITY	UNIT
009E3310	Bridge Elevation Survey	Lump Sum	LS
009E5000	Concrete Penetrating Sealer	669.0	SqYd
250E0030	Incidental Work, Structure	Lump Sum	LS
410E2600	Membrane Sealant Expansion Joint	83.8	Ft
420E0100	Structure Excavation, Bridge	424	CuYd
430E0200	Bridge End Embankment	665	CuYd
430E0300	Granular Bridge End Backfill	71.1	CuYd
430E0510	Approach Slab Underdrain Excavation	2.7	CuYd
430E0700	Precast Concrete Headwall for Drain	2	Each
460E0030	Class A45 Concrete, Bridge Deck	343.7	CuYd
460E0050	Class A45 Concrete, Bridge	273.5	CuYd
460E0150	Concrete Approach Slab for Bridge	190.6	SqYd
460E0160	Concrete Approach Sleeper Slab for Bridge	67.5	SqYd
464E0100	Controlled Density Fill	7.3	CuYd
480E0100	Reinforcing Steel	36,492	Lb
480E0200	Epoxy Coated Reinforcing Steel	84,225	Lb
480E0507	No. 7 Rebar Splice	106	Each
510E1500	Micropile Verification Load Test	1	Each
510E1510	Micropile Proof Load Test	5	Each
510E1520	Micropile	76	Each
680E0040	4" Underdrain Pipe	255	Ft
680E2500	Porous Backfill	31.7	Ton
700E0310	Class C Riprap	405.3	Ton
831E0110	Type B Drainage Fabric	460	SqYd

Non - Structure Length Box Culvert Extensions
Str. No. 47-073-518 - Sta. 47 + 55.18 (WBL)
Str. No. 47-078-529 – Sta. 112 + 14.54 (WBL)
Str. No. 47-083-539 – Sta. 174 + 35.43 (WBL)
Sta. 1174 + 51.90 (EBL)
Str. No. 47-091-553 – Sta. 257 + 38.93 (WBL)
Concrete Barrier with Glare Screen

BID ITEM NUMBER	ITEM	QUANTITY	UNIT
420E0200	Structure Excavation, Box Culvert	114	CuYd
421E0200	Box Culvert Undercut	435	CuYd
460E0100	Class A45 Concrete, Miscellaneous	148.8	CuYd
460E0120	Class A45 Concrete, Box Culvert	272.2	CuYd
460E0300	Breakout Structural Concrete	57.2	CuYd
460E0380	Install Dowel in Concrete	156	Each
480E0100	Reinforcing Steel	44,620	Lb
480E0200	Epoxy Coated Reinforcing Steel	18,826	Lb
700E0210	Class B Riprap	174.2	Ton
831E0110	Type B Drainage Fabric	284	SqYd

Str. No. 47-088-550
197' – 11 7/8'' Prestressed Grider Bridge
Sta. 235 + 55.65 to Sta. 237 + 53.63 (WBL)

BID ITEM NUMBER	ITEM	QUANTITY	UNIT
009E3310	Bridge Elevation Survey	Lump Sum	LS
009E5000	Concrete Penetrating Sealer	875.0	SqYd
250E0030	Incidental Work, Structure	Lump Sum	LS
410E0030	Structural Steel, Miscellaneous	Lump Sum	LS
410E2600	Membrane Sealant Expansion Joint	83.8	Ft
420E0100	Structure Excavation, Bridge	28	CuYd
430E0200	Bridge End Embankment	1,984	CuYd
430E0300	Granular Bridge End Backfill	104.8	CuYd
430E0510	Approach Slab Underdrain Excavation	6.0	CuYd
430E0700	Precast Concrete Headwall for Drain	4	Each
460E0030	Class A45 Concrete, Bridge Deck	292.7	CuYd
460E0050	Class A45 Concrete, Bridge	158.0	CuYd
460E0150	Concrete Approach Slab for Bridge	273.0	SqYd
460E0160	Concrete Approach Sleeper Slab for Bridge	67.5	SqYd
465E0100	Class A45 Concrete, Drilled Shaft	125.5	CuYd
465E0200	Drilled Shaft Excavation	123.1	CuYd
465E1044	44" Permanent Casing	108.0	Ft
480E0100	Reinforcing Steel	85,724	Lb
480E0200	Epoxy Coated Reinforcing Steel	44,665	Lb
480E0507	No. 7 Rebar Splice	106	Each
480E0514	No. 14 Rebar Splice	108	Each
510E0300	Preboring Pile	140	Ft
510E3401	HP 12x53 Steel Test Pile, Furnish and Drive	175	Ft
510E3405	HP 12x53 Steel Bearing Pile, Furnish and Drive	600	Ft
560E8045	45" Minnesota Shape Prestressed Concrete Beam	969	Ft
680E0040	4" Underdrain Pipe	301	Ft
680E2500	Porous Backfill	25.4	Ton
734E2020	Bridge Berm Slope Protection, Crushed Aggregate	727.9	SqYd
831E0100	Type A Drainage Fabric	728	SqYd

Str. No. 47-088-551
197' – 11 7/8'' Prestressed Grider Bridge
Sta. 1235 + 14.49 to Sta. 1237 + 12.47 (EBL)

BID ITEM NUMBER	ITEM	QUANTITY	UNIT
009E3310	Bridge Elevation Survey	Lump Sum	LS
009E5000	Concrete Penetrating Sealer	875.0	SqYd
250E0030	Incidental Work, Structure	Lump Sum	LS
410E0030	Structural Steel, Miscellaneous	Lump Sum	LS
410E2600	Membrane Sealant Expansion Joint	83.8	Ft
420E0100	Structure Excavation, Bridge	28	CuYd
430E0200	Bridge End Embankment	1,984	CuYd
430E0300	Granular Bridge End Backfill	104.8	CuYd
430E0510	Approach Slab Underdrain Excavation	6.0	CuYd
430E0700	Precast Concrete Headwall for Drain	4	Each
460E0030	Class A45 Concrete, Bridge Deck	292.6	CuYd
460E0050	Class A45 Concrete, Bridge	159.0	CuYd
460E0150	Concrete Approach Slab for Bridge	273.0	SqYd
460E0160	Concrete Approach Sleeper Slab for Bridge	67.5	SqYd
465E0100	Class A45 Concrete, Drilled Shaft	96.9	CuYd
465E0200	Drilled Shaft Excavation	94.5	CuYd
465E1044	44" Permanent Casing	75.0	Ft
480E0100	Reinforcing Steel	78,179	Lb
480E0200	Epoxy Coated Reinforcing Steel	55,326	Lb
480E0507	No. 7 Rebar Splice	106	Each
480E0514	No. 14 Rebar Splice	108	Each
510E0300	Preboring Pile	140	Ft
510E3401	HP 12x53 Steel Test Pile, Furnish and Drive	95	Ft
510E3405	HP 12x53 Steel Bearing Pile, Furnish and Drive	630	Ft
560E8045	45" Minnesota Shape Prestressed Concrete Beam	969	Ft
680E0040	4" Underdrain Pipe	301	Ft
680E2500	Porous Backfill	25.4	Ton
734E2020	Bridge Berm Slope Protection, Crushed Aggregate	722.2	SqYd
831E0100	Type A Drainage Fabric	722	SqYd

The elevations shown in these plans are based on the National Geodetic Survey (NGS) North American Vertical Datum of 1988 (NAVD88).

STATE OF	PROJECT	SHEET NO.	TOTAL SHEETS
S.D.	IM 0901(38)40	E5	E199

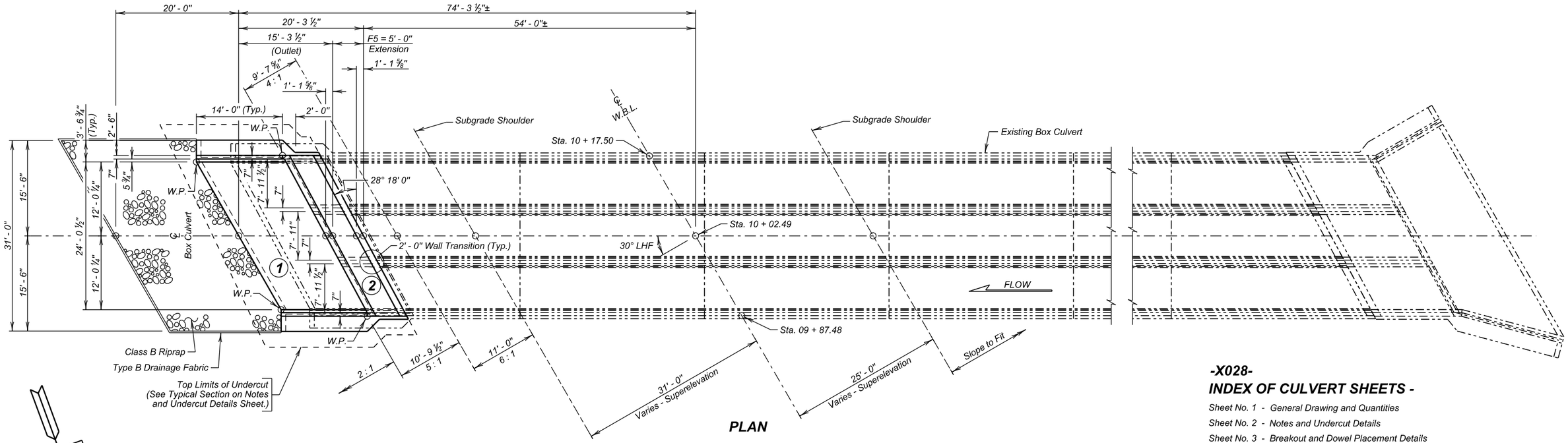

PLAN

-X028-
INDEX OF CULVERT SHEETS -

Sheet No. 1 - General Drawing and Quantities
Sheet No. 2 - Notes and Undercut Details
Sheet No. 3 - Breakout and Dowel Placement Details
Sheet No. 4 - Outlet Details (A)
Sheet No. 5 - Outlet Details (B)
Sheet No. 6 - F5 Barrel End Section Details (5' - 0")
Sheet No. 7 - Details of Standard Plate No.'s 460.03 and 620.16

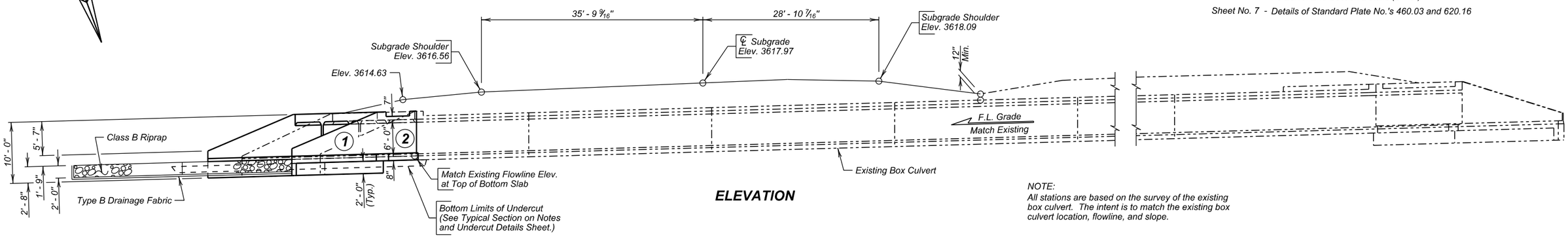

ELEVATION

NOTE:
All stations are based on the survey of the existing box culvert. The intent is to match the existing box culvert location, flowline, and slope.

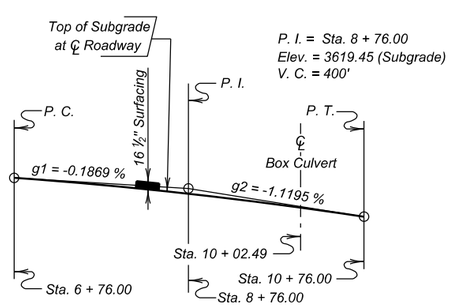

VERTICAL CURVE DATA
(Westbound Lanes)

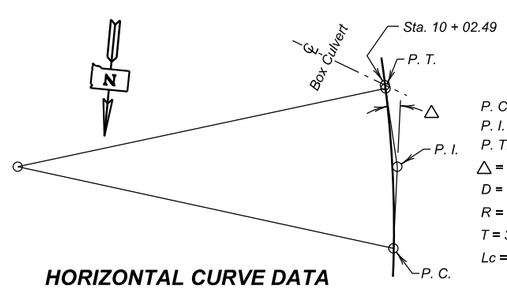

P. C. Sta. 3 + 12.91
P. I. Sta. 6 + 56.88
P. T. Sta. 10 + 00.00
△ = 6° 57' 10" Lt.
D = 1° 00' 43"
R = 5662.00'
T = 343.97'
Lc = 687.09'

HORIZONTAL CURVE DATA
(Westbound Lanes)

ESTIMATED QUANTITIES

ITEM	UNIT	QUANTITY
Class A45 Concrete, Box Culvert	Cu. Yd.	31.4
Reinforcing Steel	Lb.	4656
Structure Excavation, Box Culvert	Cu. Yd.	19.0
Box Culvert Undercut	Cu. Yd.	32
* Class B Riprap	Tons	64.3
Type B Drainiage Fabric	Sq. Yd.	93
Breakout Structural Concrete	Cu. Yd.	15.6
Install Dowel in Concrete	Each	50

* For estimating purposes only, a factor of 1.4 tons/cu. yd. was used to convert Cu. Yds. to Tons.

GENERAL DRAWING AND QUANTITIES
FOR
3 - 8' X 6' BOX CULVERT EXTENSION

OVER TILFORD GULCH — 30° LHF SKEW
STA. 10 + 02.49 (WBL) — SEC. 19/20-T4N-R6E
STR. NO. 47-070-511 — IM 0901(38)40
PCN 5580 — HS 20-44 & ALT.

MEADE COUNTY
S. D. DEPT. OF TRANSPORTATION
FEBRUARY 2015

PLANS BY :
OFFICE OF BRIDGE DESIGN, SOUTH DAKOTA DEPARTMENT OF TRANSPORTATION

DESIGNED BY	CK. DES. BY	DRAFTED BY	
MM/PW	JMH	MG	Steve A Johnson
MEAD5580	5580GA01		BRIDGE ENGINEER

STATE OF	PROJECT	SHEET NO.	TOTAL SHEETS
S.D.	IM 0901(38)40	E6	E199

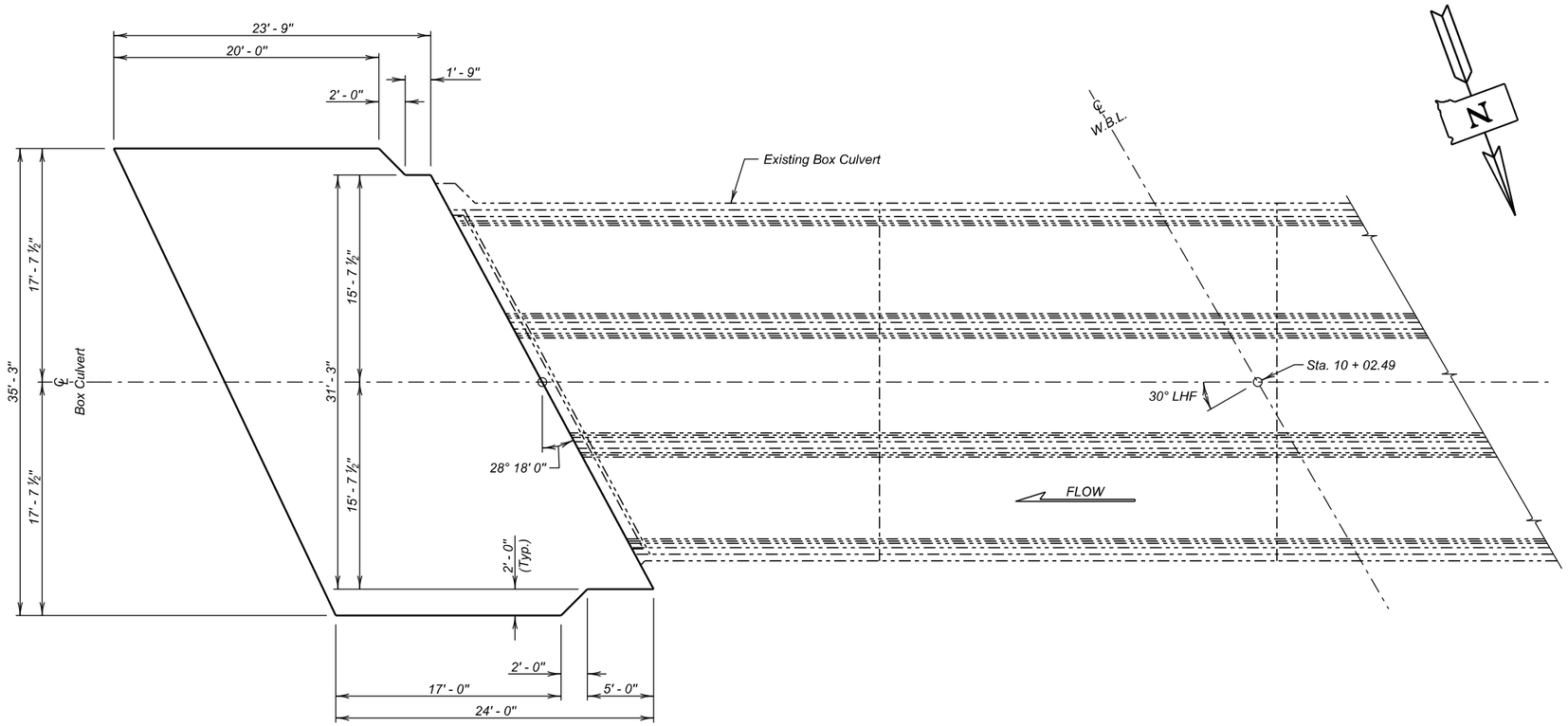

UNDERCUT LAYOUT
(Bottom Dimensions)

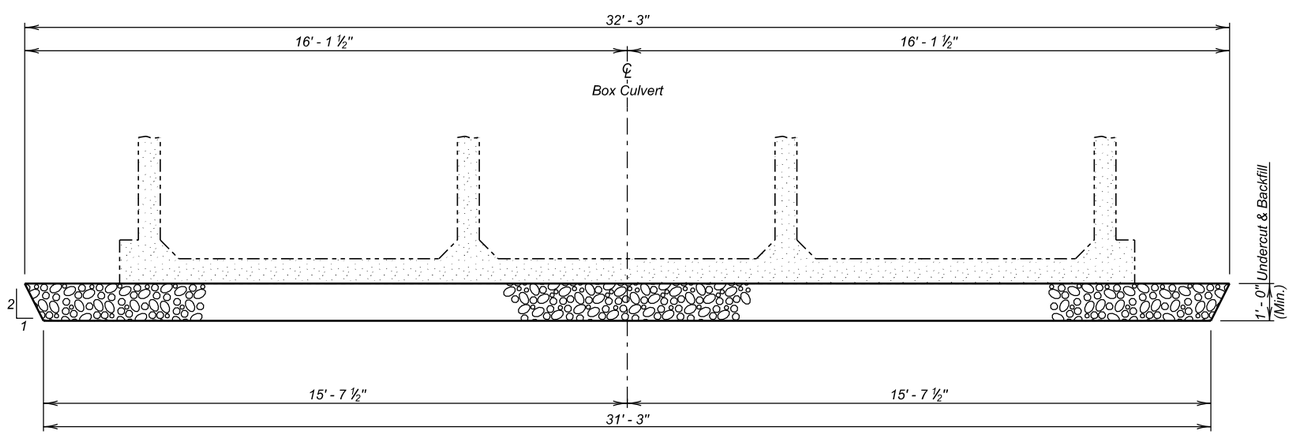

TYPICAL SECTION
(For Limits of Undercut)

SPECIFICATIONS

1. Design Specifications: AASHTO Standard Specifications for Highway Bridges, 2002 Edition (Service Load).
2. Construction Specifications: South Dakota Standard Specifications for Roads and Bridges, 2015 Edition and required Provisions, Supplemental Specifications and Special Provisions as included in the Proposal.

GENERAL NOTES

1. Design Live Load: HS 20-44, Alternate Loading, and construction load consisting of one 7' - 6" gage axle with gross weight = 95,850 lbs. The construction load shall not be applied until a minimum of 4 ft. of fill has been placed over the Box Culvert. Other construction loads in excess of legal load must be submitted thru proper channels to the Office of Bridge Design for analysis.
2. The design of the barrel section on a minimum fill height of 1 ft. and includes all subsequent fill heights up to and including the maximum fill height of 5 ft. (F5).
3. Unit Stresses: Concrete f'c = 1800 p.s.i.
   Reinforcing Steel fs = 24000 p.s.i.
4. All concrete shall be Class A45 conforming to Section 460.
5. All reinforcing steel shall conform to ASTM A615 Grade 60.
6. All exposed edges shall be chamfered ¾ inch.
7. Use 1 inch clear cover on all reinforcing steel EXCEPT as shown.
8. The Contractor shall imprint on the structure the date of the existing box culvert construction as well as the date of new construction as specified and detailed on Standard Plate No. 460.03.
9. Care shall be taken to establish Working Points (W.P.) as shown on the wings.
10. Circled numbers in PLAN and ELEVATION views on the General Drawing are section I.D. Numbers (see SDDOT Materials Manual).
11. Cost of Preformed Expansion Joint Filler used in apron construction shall be incidental to the other contract items.
12. Compaction of earth embankment and box culvert backfill material shall be governed by the Specified Density method.
13. The subsurface soils throughout the project consist of clay-silt to gravelly clay-silt to gravel and cobbles.
14. It is anticipated that dewatering will be required to construct the box culvert extension. The Contractor will be responsible to verify groundwater location prior to construction and provide necessary means of dewatering the construction site and prevention of the inflow of additional water. The use of well points may be required in dewatering the site for construction.

DIMENSIONS OF EXISTING BOX CULVERT

All details and dimensions of the Existing Box Culvert, contained in these plans, are provided as information only. It is the Contractor's responsibility to inspect and verify actual field conditions and any necessary dimensions affecting the satisfactory completion of the work required for this project. Original construction plans can be obtained from the Office of Bridge Design.

ESTIMATED QUANTITIES

ITEM	UNIT	QUANTITY
⌀ Box Culvert Undercut	Cu. Yd.	32

⌀ For payment, quantity is based on plan shown undercut dimensions and will not be measured unless the Engineer orders a change.

NOTES AND UNDERCUT DETAILS

FOR

3 - 8' X 6' BOX CULVERT EXTENSION

OVER TILFORD GULCH
STA. 10 + 02.49 (WBL)
STR. NO. 47-070-511

30° LHF SKEW
SEC. 19/20-T4N-R6E
IM 0901(38)40
HS 20-44
& ALT.

MEADE COUNTY

S. D. DEPT. OF TRANSPORTATION

FEBRUARY 2015

DESIGNED BY	CK. DES. BY	DRAFTED BY	
MM/PW	JMH	MG	Steve A. Johnson BRIDGE ENGINEER
MEAD5580	5580GA02		

STATE OF	PROJECT	SHEET NO.	TOTAL SHEETS
S.D.	IM 0901(38)40	E7	E199

BREAKOUT STRUCTURAL CONCRETE

1. This work shall consist of breaking out and disposing of structural concrete. All broken out concrete and other discarded material shall be disposed of in accordance with the ENVIRONMENTAL COMMITMENT notes found in Section A.
2. Define the breakout limits with ¾ inch saw cuts.
3. Any additional breakout required due to spalling or cracking of the existing structure will be determined by the Engineer. Where additional breakout in the barrel section of the existing structure is required, care shall be taken not to damage any of the existing reinforcing steel. All steel will be left in place and thoroughly cleaned by sandblasting.
4. Additional breakout in existing walls or top slab will require shoring up of the parapet and top slab, as directed by the Engineer.
5. Plans quantity payment will be full compensation for this item regardless of the quantity actually broken out, unless measurement is ordered by the Engineer. If the Engineer orders breakout beyond the limits shown, this additional breakout will be paid for at the contract unit price per cubic yard for Breakout Structural Concrete. If additional breakout is caused by the Contractor's operations, no additional payment will be made.
6. Breakout Structural Concrete will be paid for at the contract unit price per cubic yard. This payment shall be full compensation for furnishing all materials, labor, tools and equipment necessary or incidental to breaking out the structural concrete. Payment includes, but is not limited to, excavation required to perform the required breakout, sawcutting, breaking out concrete, cleaning, and sandblasting reinforcing steel and concrete surfaces, and removing and disposing of all waste materials to satisfactorily complete the work.

INSTALLING DOWELS IN CONCRETE

1. Dowels shall be installed as per Section 380.3 C.1.
2. No loads shall be applied to the epoxy grouted dowel bars until the epoxy resin has had sufficient time to cure as specified by the epoxy resin manufacturer.
3. Embed z2 dowels 8" into existing concrete.
4. Dowel bars shall be #6 deformed bars conforming to ASTM A615 Grade 60.
5. The cost of drilling holes, epoxy resin, dowels, installation, and other incidental items shall be included in the contract unit price per each for Install Dowel in Concrete.

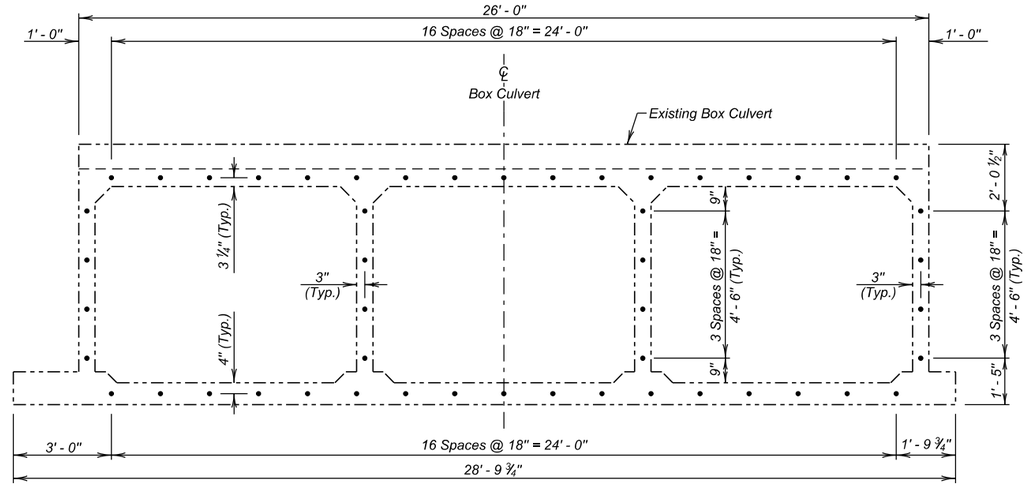

VIEW A - A
(Dowel Locations)

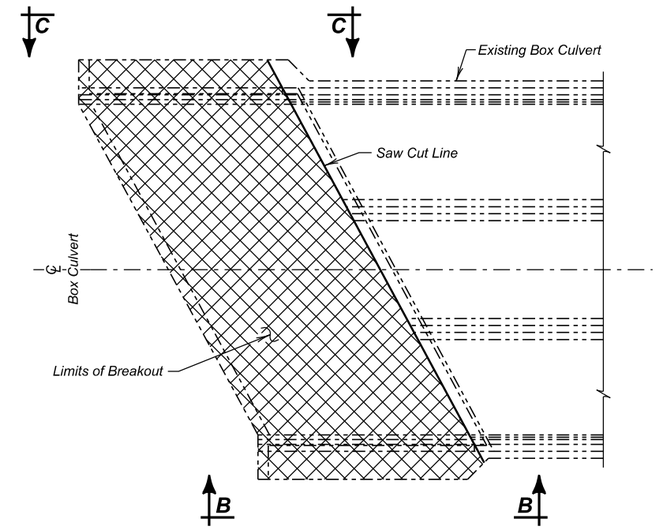

PLAN - BREAKOUT DETAILS

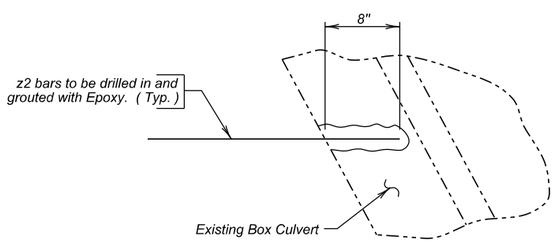

DETAIL "Y"

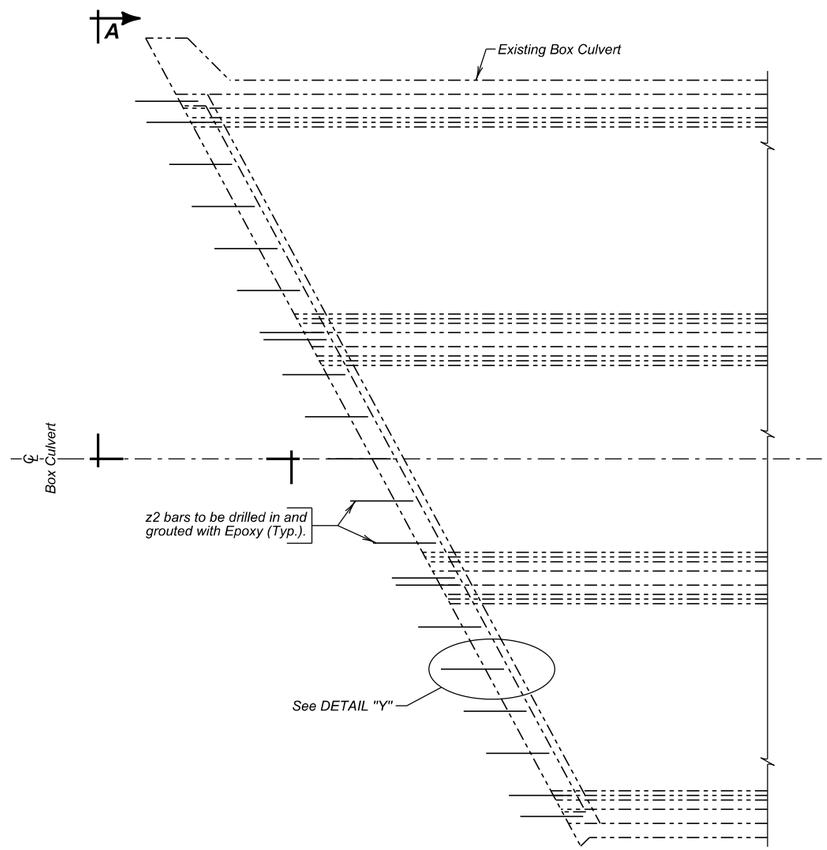

PLAN - DOWEL DETAILS

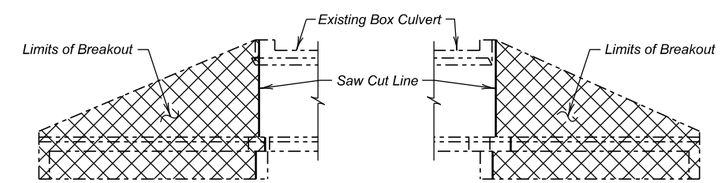

VIEW B - B **VIEW C - C**

ELEVATION - BREAKOUT DETAILS

ESTIMATED QUANTITIES

ITEM	UNIT	QUANTITY
Breakout Structural Concrete	Cu. Yd.	15.6
Install Dowel In Concrete	Each	50

BREAKOUT AND DOWEL PLACEMENT DETAILS
FOR
3 - 8' X 6' BOX CULVERT EXTENSION

OVER TILFORD GULCH — 30° LHF SKEW
STA. 10 + 02.49 (WBL) — SEC. 19/20-T4N-R6E
STR. NO. 47-070-511 — IM 0901(38)40
HS 20-44 & ALT.

MEADE COUNTY
S. D. DEPT. OF TRANSPORTATION
FEBRUARY 2015

DESIGNED BY	CK. DES. BY	DRAFTED BY	
MM/PW	JMH	MG	Steve A Johnson BRIDGE ENGINEER
MEAD5580	5580GA03		

STATE OF	PROJECT	SHEET NO.	TOTAL SHEETS
S.D.	IM 0901(38)40	E8	E199

NOTE:
Apron shall NOT be built monolithic with the Box Culvert.

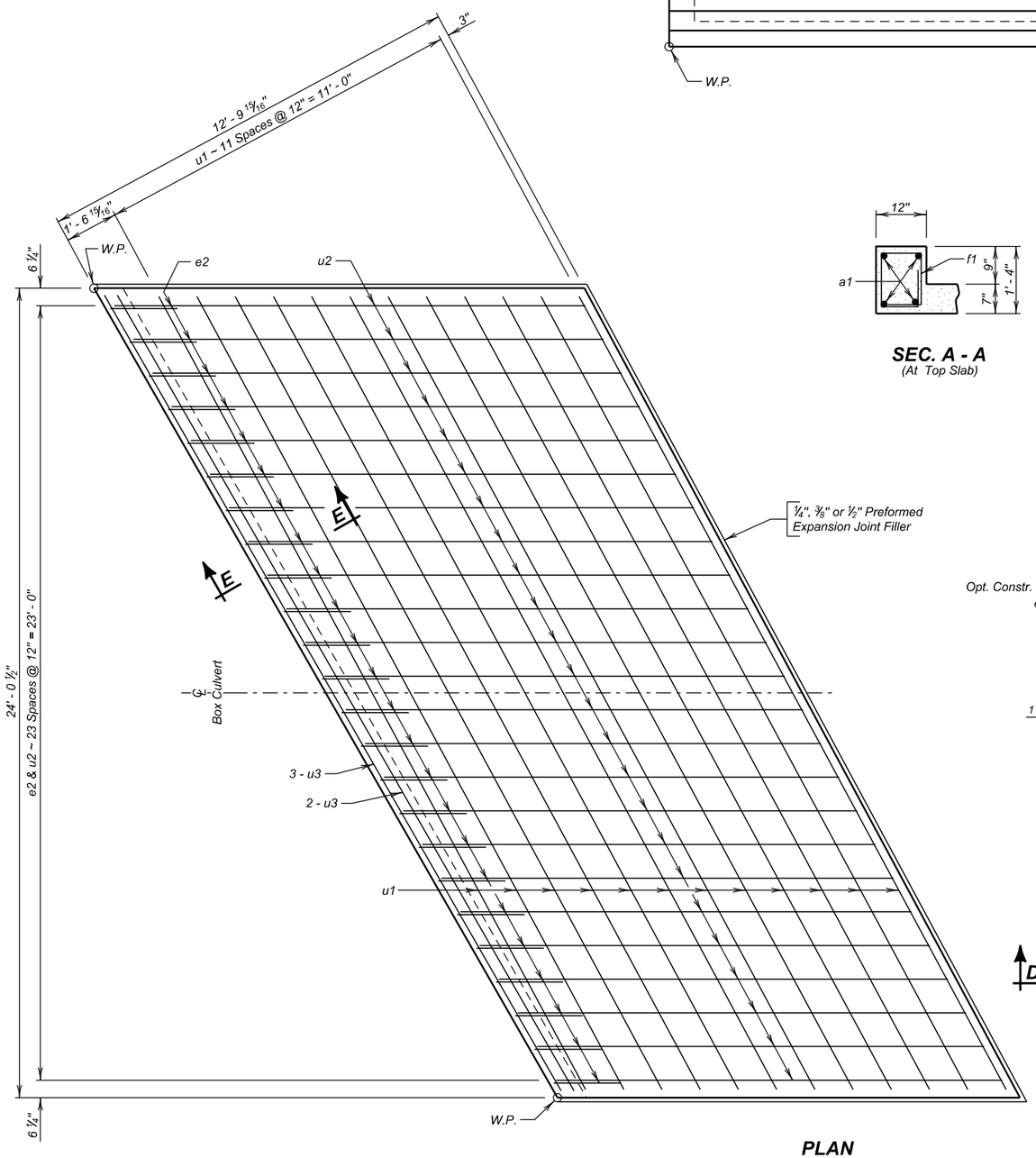

PLAN
(Outlet Apron)

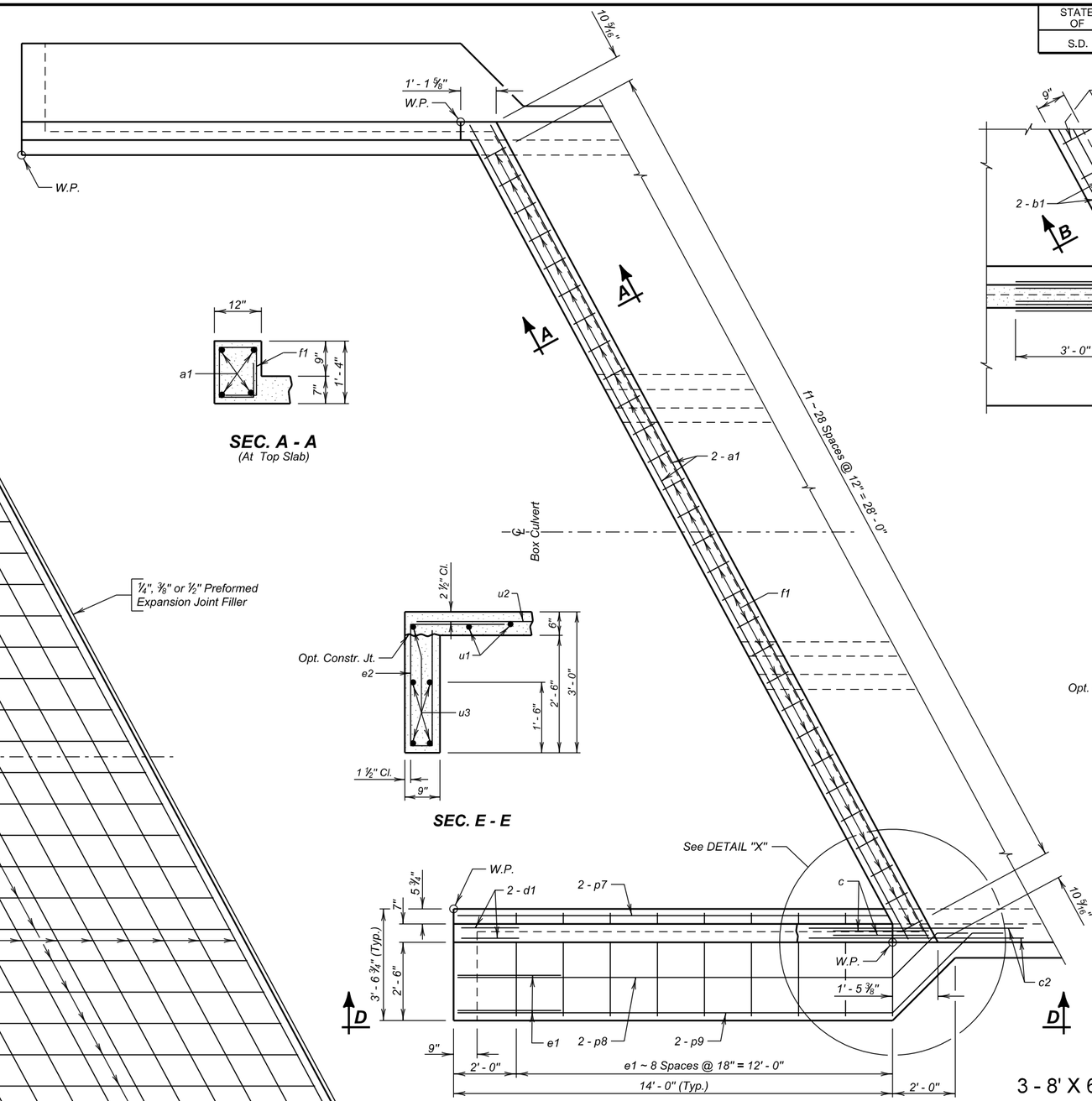

PLAN

SEC. A - A
(At Top Slab)

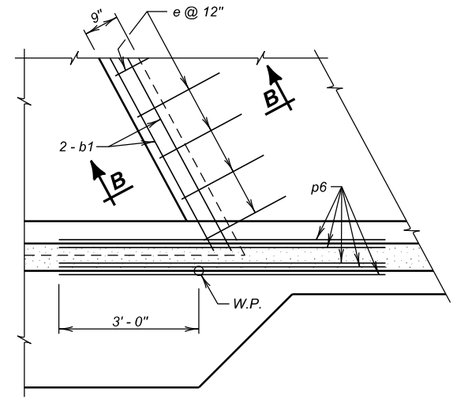

DETAIL "X"
(At Bottom Slab)

SEC. E - E

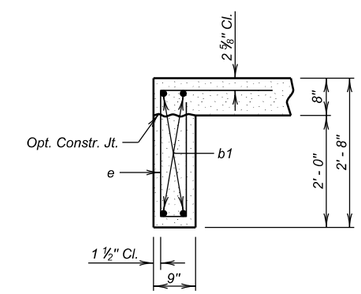

SEC. B - B

OUTLET DETAILS (A)
FOR
3 - 8' X 6' BOX CULVERT EXTENSION

OVER TILFORD GULCH
STA. 10 + 02.49 (WBL)
STR. NO. 47-070-511

30° LHF SKEW
SEC. 19/20-T4N-R6E
IM 0901(38)40
HS 20-44
& ALT.

MEADE COUNTY
S. D. DEPT. OF TRANSPORTATION
FEBRUARY 2015

DESIGNED BY	CK. DES. BY	DRAFTED BY	
MM/PW	JMH	MG	Steve A Johnson BRIDGE ENGINEER
MEAD5580	5580GA04		

STATE OF	PROJECT	SHEET NO.	TOTAL SHEETS
S.D.	IM 0901(38)40	E9	E199

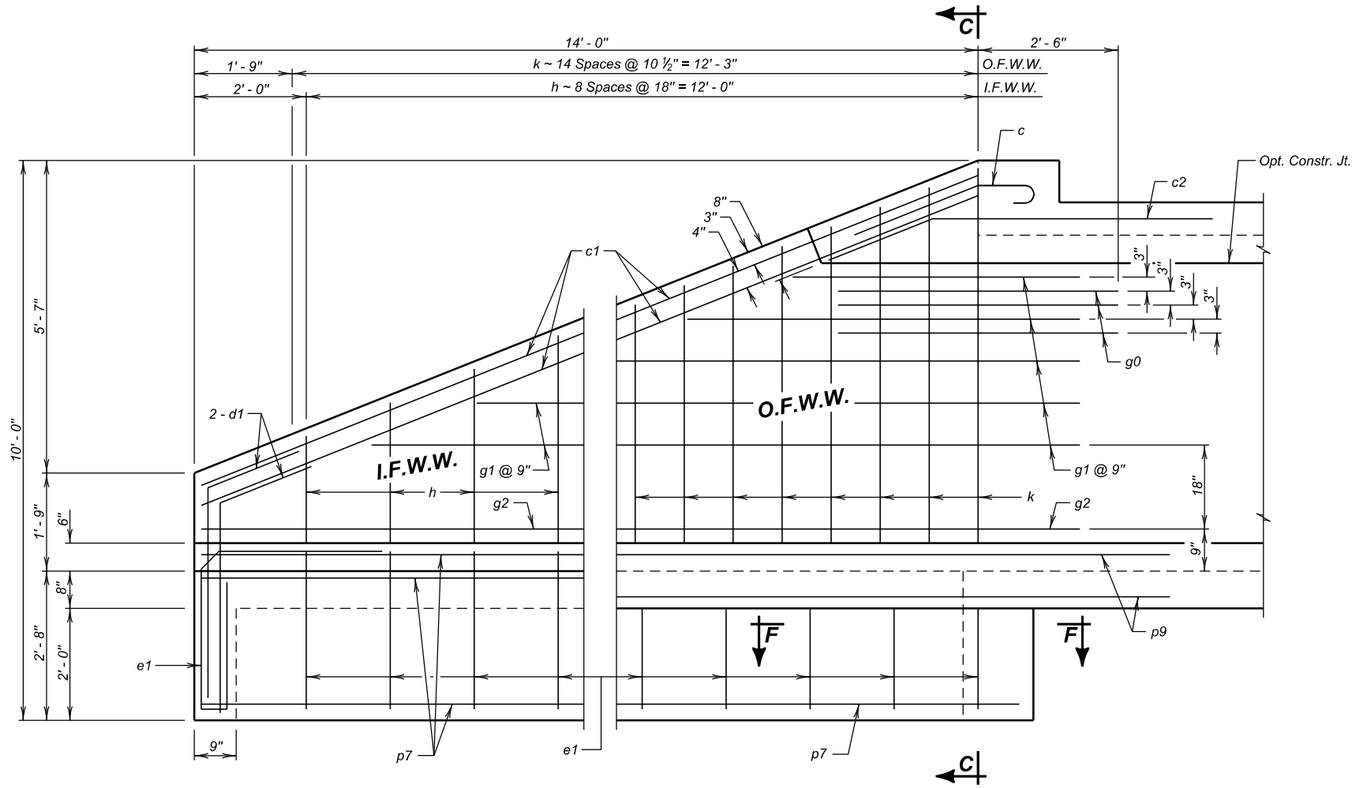

VIEW D - D

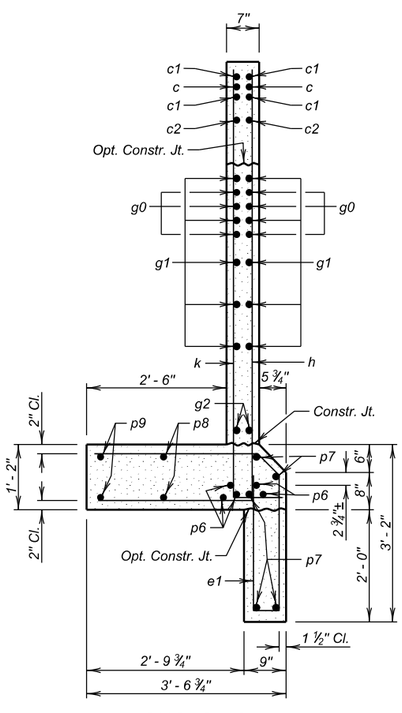

SEC. C - C

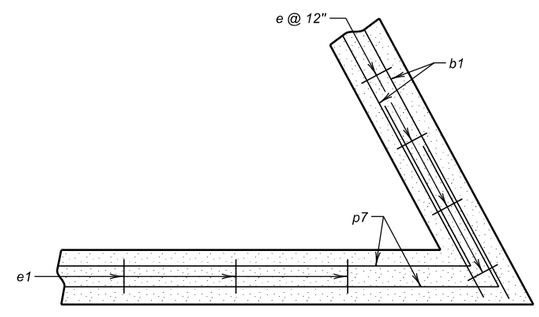

SEC. F - F

REINFORCING SCHEDULE

	Mk.	No.	Size	Length	Type
	a1	4	6	29' - 6"	Str.
	b1	4	6	28' - 9"	Str.
*	c	4	5	4' - 6"	1A
	c1	8	5	15' - 0"	Str.
	c2	4	5	7' - 0"	19B
	d1	8	5	5' - 6"	19B
	e	29	4	6' - 9"	S12
	e1	22	4	8' - 9"	S12A
	f1	29	4	5' - 0"	S6A
	g0	12	5	5' - 0"	Str.
⌀	g1	10	4	18' - 6"	Str.
	g2	4	4	15' - 9"	Str.
⌀	h	9	4	16' - 0"	17A
⌀	k	15	4	12' - 3"	17A
	p6	10	6	7' - 0"	Str.
*	p7	10	4	16' - 6"	Str.
*	p8	4	4	17' - 6"	Str.
*	p9	4	4	19' - 0"	Str.
	OUTLET APRON				
	e2	24	4	7' - 6"	S12
	u1	12	4	26' - 9"	Str.
⌀	u2	12	4	27' - 3"	Str.
	u3	5	4	27' - 3"	Str.

Bending Details

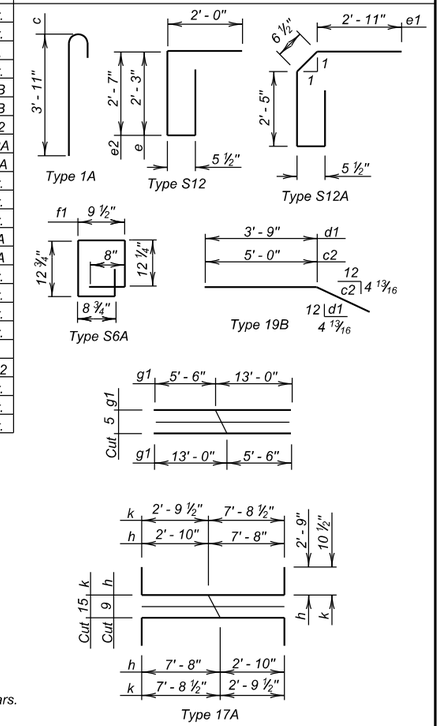

NOTES:
All dimensions are out to out of bars.
⌀ See cutting diagram.
* Bend in field as necessary to fit.

ESTIMATED QUANTITIES

ITEM	Class A45 Concrete, Box Culvert	Reinforcing Steel	Structure Excavation, Box Culvert
UNIT	Cu. Yd.	Lb.	Cu. Yd.
Outlet	13.3	1685	6.9
Outlet Apron	8.2	644	8.2

LEGEND FOR PLACING RE-STEEL

O. F. W. W. - Outside Face of Wing Wall
I. F. W. W. - Inside Face of Wing Wall

OUTLET DETAILS (B)

FOR

3 - 8' X 6' BOX CULVERT EXTENSION

OVER TILFORD GULCH — 30° LHF SKEW
STA. 10 + 02.49 (WBL) — SEC. 19/20-T4N-R6E
STR. NO. 47-070-511 — IM 0901(38)40
HS 20-44 & ALT.

MEADE COUNTY
S. D. DEPT. OF TRANSPORTATION
FEBRUARY 2015

DESIGNED BY	CK. DES. BY	DRAFTED BY	
MM/PW	JMH	MG	Steve A. Johnson BRIDGE ENGINEER
MEAD5580	5580GA05		

STATE OF	PROJECT	SHEET NO.	TOTAL SHEETS
S.D.	IM 0901(38)40	E10	E199

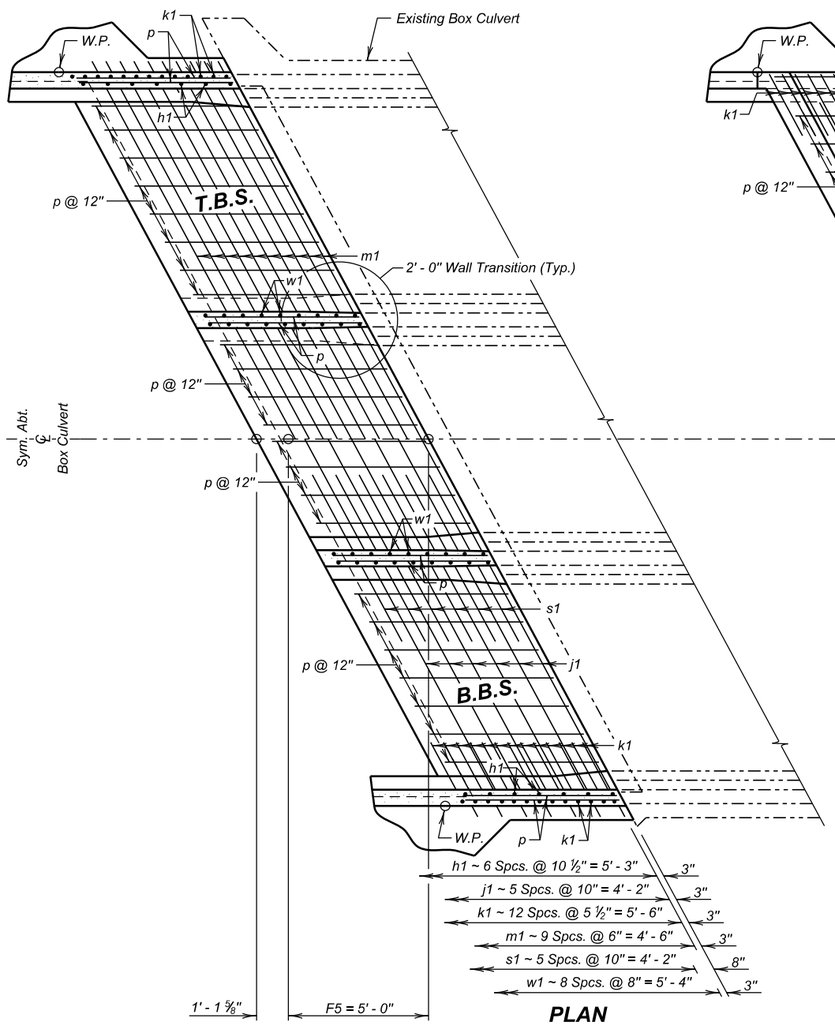

PLAN
(Bottom Slab)

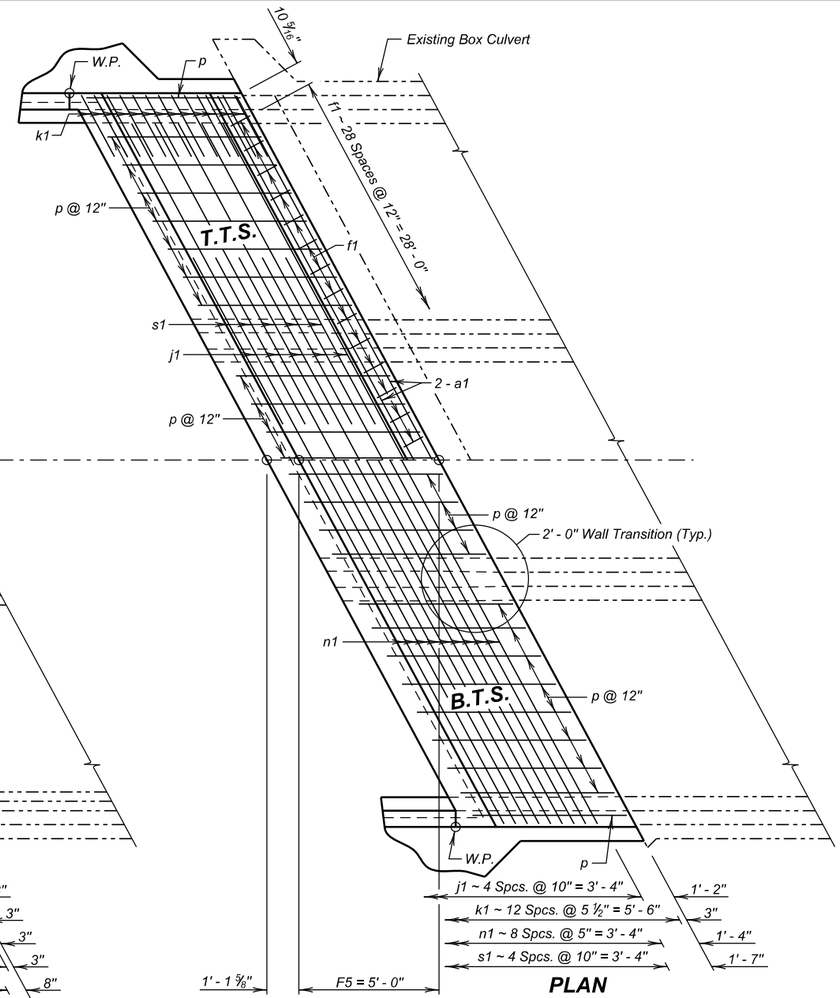

PLAN
(Top Slab)

REINFORCING SCHEDULE
(For One F5 Barrel End Section @ 5' - 0")

Mk.	No.	Size	Length	Type
a1	4	6	29' - 6"	Str.
f1	29	4	5' - 0"	S6A
h1	14	4	7' - 9"	17A
j1	11	5	28' - 6"	Str.
k1	26	4	12' - 0"	17
m1	10	5	30' - 6"	Str.
n1	9	5	29' - 6"	Str.
p	136	4	5' - 6"	Str.
s1	22	5	6' - 9"	Str.
w1	18	4	16' - 3"	S11A
✳ z2	42	6	2' - 3"	Str.

Bending Details

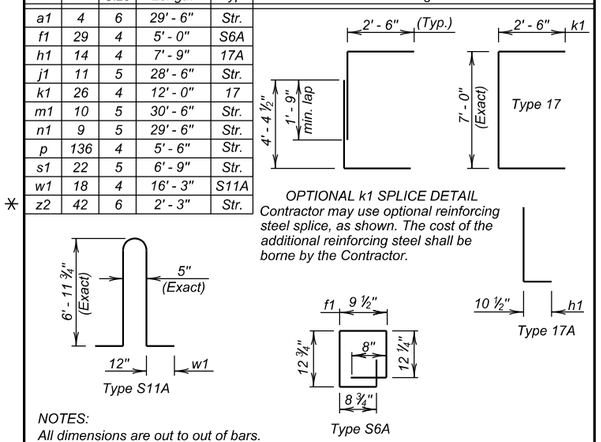

OPTIONAL k1 SPLICE DETAIL
Contractor may use optional reinforcing steel splice, as shown. The cost of the additional reinforcing steel shall be borne by the Contractor.

NOTES:
All dimensions are out to out of bars.

Request for additional reinforcing steel splices at points other than those shown, must be submitted to the Engineer for prior approval. If additional splices are approved, no payment will be allowed for the added quantity of reinforcing steel.

✳ Quantity of z2 bars is not included in reinforcing steel quantity. See BREAKOUT AND DOWEL PLACEMENT DETAILS sheet.

ESTIMATED QUANTITIES

ITEM	Class A45 Concrete, Box Culvert	Reinforcing Steel	Structure Excavation, Box Culvert
UNIT	Cu.Yd.	Lb.	Cu.Yd.
1 - F5 Barrel End Section @ 5' - 0"	9.9	2327	3.4

LEGEND FOR PLACING RE-STEEL

- T.T.S. - Top of Top Slab
- B.T.S. - Bottom of Top Slab
- T.B.S. - Top of Bottom Slab
- B.B.S. - Bottom of Bottom Slab
- O.F.O.W. - Outside Face of Outside Wall
- I.F.O.W. - Inside Face of Outside Wall
- M.W. - Middle Wall

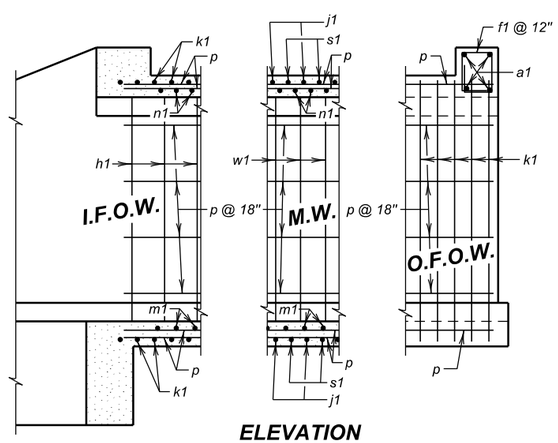

ELEVATION

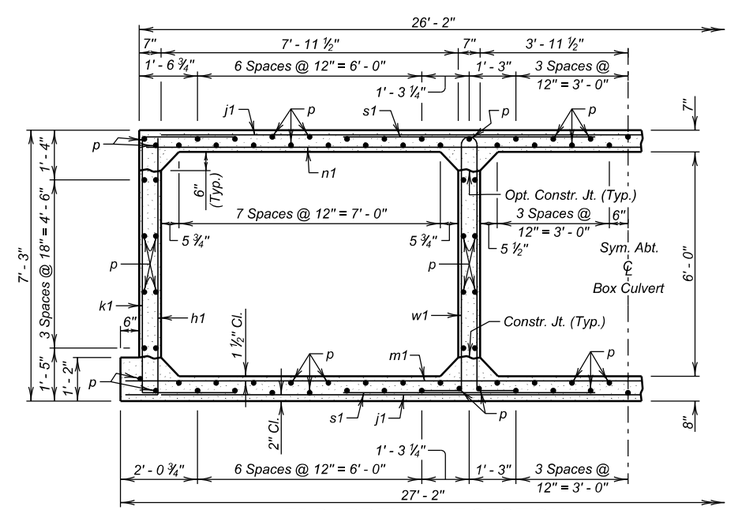

F5 BARREL HALF SECTION
(5' - 0" Maximum Fill)

F5 BARREL END SECTION DETAILS (5' - 0")

FOR

3 - 8' X 6' BOX CULVERT EXTENSION

OVER TILFORD GULCH
STA. 10 + 02.49 (WBL)
STR. NO. 47-070-511

30° LHF SKEW
SEC. 19/20-T4N-R6E
IM 0901(38)40
HS 20-44
& ALT.

MEADE COUNTY
S. D. DEPT. OF TRANSPORTATION
FEBRUARY 2015

DESIGNED BY	CK. DES. BY	DRAFTED BY	
MM/PW	JMH	MG	Steve A. Johnson BRIDGE ENGINEER
MEAD5580	5580GA06		

YEAR PLATE DETAILS FOR ORIGINAL CONSTRUCTION

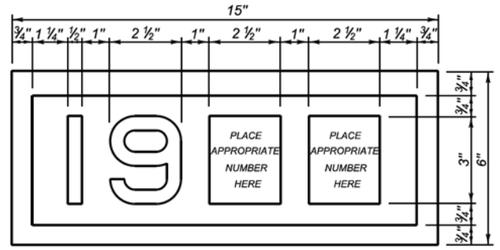

YEAR PLATE DETAILS FOR NEW CONSTRUCTION

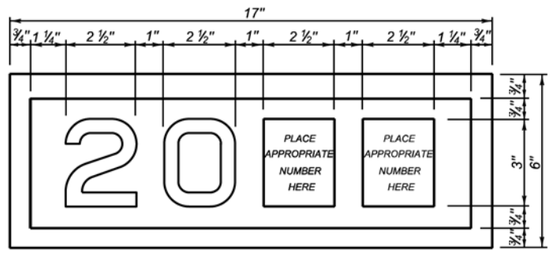

GENERAL NOTES:

1. Year plates of the general dimensions shown shall be constructed on all box culverts and bridges. The year plates shall be constructed in reverse and attached to the forms in such a manner that the finished imprint in the concrete does not exceed one-half (½) inch in depth.
2. Year plates shall be located on structure(s) as follows:
   a. On cast-in-place box culverts the year plates shall be four and one - half (4 ½) inches below the top of the upstream parapet wall and centered laterally on the upstream face. On precast box culverts the year plate shall be centered laterally on the upstream face of the top slab. Where an extended interior wall interferes with this location, the year plate shall be centered in an adjacent barrel.
   b. On bridges with six (6) inch curbs or "Jersey" shaped barriers with no endblocks, the year plate shall be centered vertically on the curb face approximately six (6) inches from the end of the bridge, or as designated by the Engineer. On bridges with "Jersey" shaped barrier endblocks, the year plate shall be centered on the upper sloped portion of the barrier approximately 5'- 6" from the end of the bridge, or as designated by the Engineer. There shall be one year plate at each end of the bridge on opposite sides.
   c. When the plans specify that both the original date of construction and the date of reconstruction are to be shown, one date shall be placed as listed above and the other located adjacent to it. Both year plates shall be shown at each end of the bridge on opposite sides.
3. There will be no separate measurement or payment made for year plates on box culverts and bridges. All costs for this work shall be incidental to other contract items.

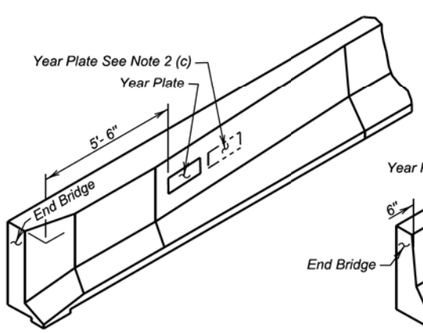

JERSEY BARRIER
(With Endblock)

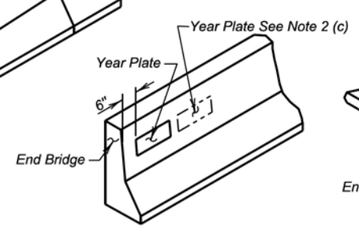

JERSEY BARRIER

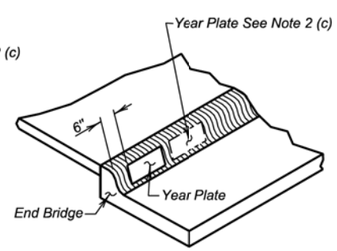

TYPE B CURB

June 26, 2012

Published Date: 3rd Qtr. 2016	SDDOT	DUAL DATE YEAR PLATE DETAILS	PLATE NUMBER 460.03
			Sheet 1 of 1

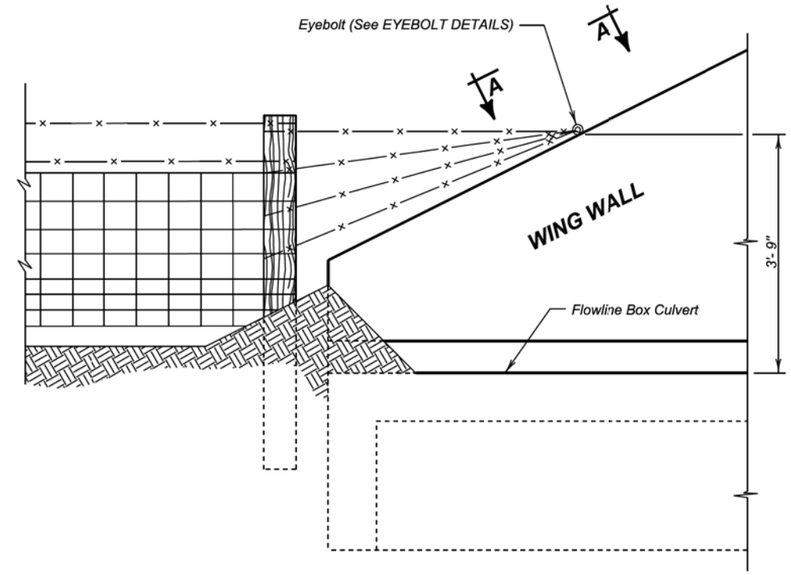

DETAIL FOR FENCE ANCHORS

GENERAL NOTES:

1. The fence and post details shown are for illustrative purpose only. The fence shall be as specified elsewhere in the plans.
2. Eyebolts shall be placed on all of the box culvert wing walls.
3. Eyebolts shall be ⅝ inch diameter and shall conform to ASTM A307.
4. Eyebolts, nuts, and concrete inserts shall be galvanized in accordance with AASHTO M232 (ASTM A153). Concrete inserts of corrosion resistant material need not be galvanized.
5. Cast-in-place eyebolts shall have a nut attached, be 4 ½ inches (Min.) in length and shall be embedded such that the eye of the bolt is flush with the concrete surface. (See Eyebolt Details) As an alternate, cast-in-place concrete inserts, capable of developing the full strength of the ⅝ inch diameter threaded eyebolt, may be used and shall be set in the concrete in accordance with the manufacturer's recommendations. The eyebolt shall be of sufficient length to develop its full strength. The eye of the eyebolt shall be flush with the concrete surface.
6. The cost for furnishing and installing eyebolts and/or concrete inserts shall be incidental to various contract items.

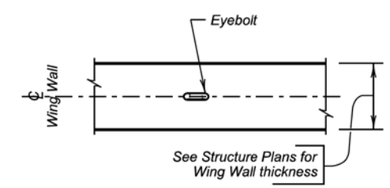

VIEW A - A

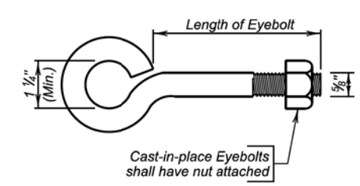

EYEBOLT DETAILS

December 23, 2012

Published Date: 3rd Qtr. 2016	SDDOT	FENCE ANCHORS FOR BOX CULVERT WING WALLS	PLATE NUMBER 620.16
			Sheet 1 of 1

The elevations shown in these plans are based on the National Geodetic Survey (NGS) North American Vertical Datum of 1988 (NAVD88).

STATE OF	PROJECT	SHEET NO.	TOTAL SHEETS
S.D.	IM 0901(38)40	E12	E199

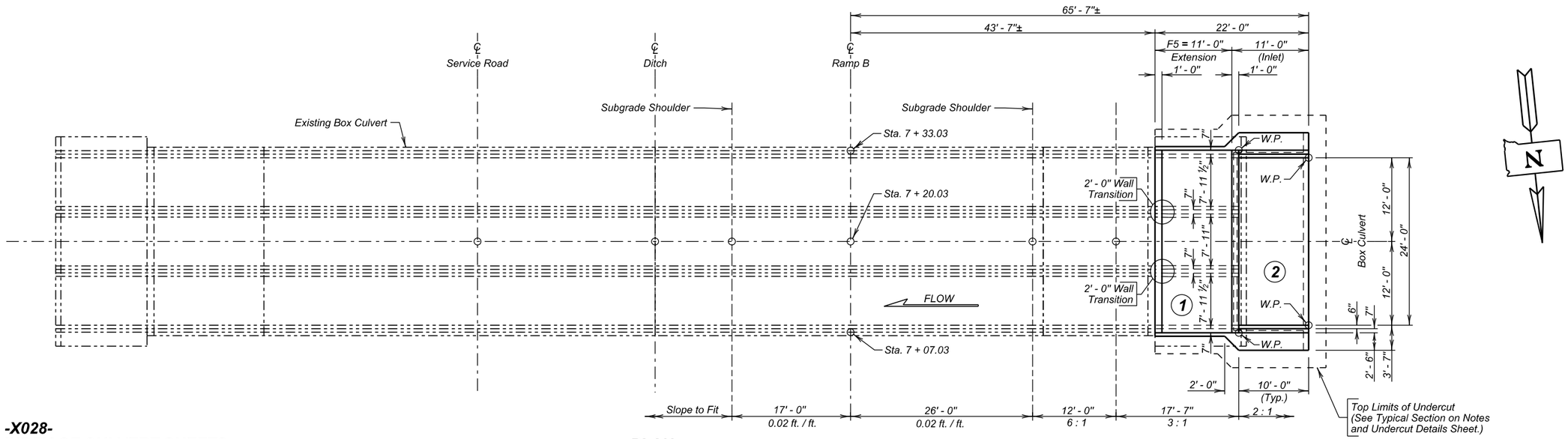

PLAN

-X028-
INDEX OF CULVERT SHEETS-

Sheet No. 1 - General Drawing and Quantities
Sheet No. 2 - Notes and Undercut Details
Sheet No. 3 - Breakout and Dowel Placement Details
Sheet No. 4 - Inlet Details
Sheet No. 5 - F5 Barrel End Section Details (11' - 0")
Sheet No. 6 - Standard Plate No.'s 460.03 and 620.16

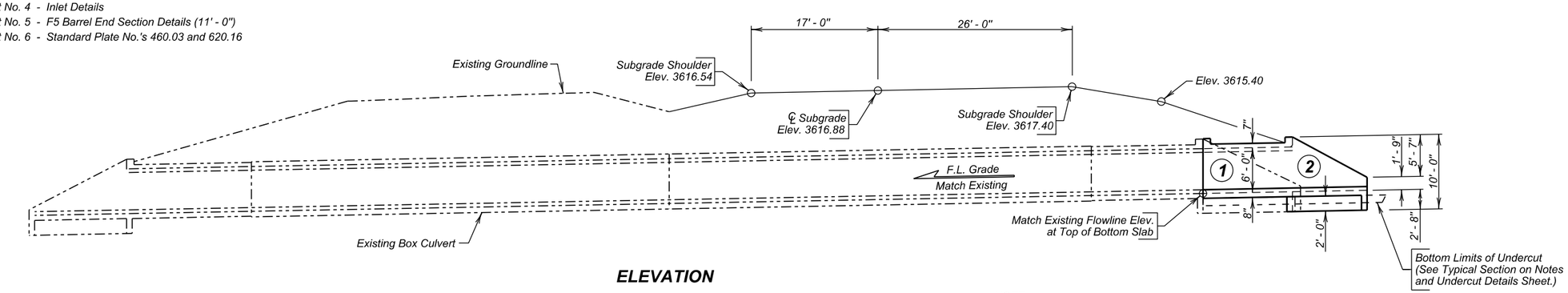

ELEVATION

NOTE:
All stations are based on the survey of the existing box culvert. The intent is to match the existing box culvert location, flowline and slope.

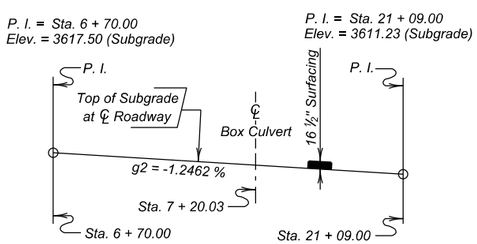

RAMP B GRADELINE DATA

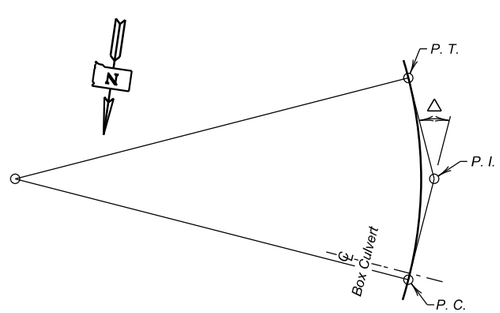

P. C. Sta. 7 + 13.05
P. I. Sta. 11 + 00.46
P. T. Sta. 14 + 71.51
△ = 28° 46' 45" Lt.
D = 3° 47' 40"
R = 1510.00'
T = 387.41'
Lc = 758.46'

HORIZONTAL CURVE DATA

ESTIMATED QUANTITIES

ITEM	UNIT	QUANTITY
Class A45 Concrete, Box Culvert	Cu. Yd.	37.4
Reinforcing Steel	Lb.	6483
Structure Excavation, Box Culvert	Cu. Yd.	19
Box Culvert Undercut	Cu. Yd.	31
Breakout Structural Concrete	Cu. Yd.	12.8
Install Dowel in Concrete	Each	50

GENERAL DRAWING AND QUANTITIES

FOR

3 - 8' X 6' BOX CULVERT EXTENSION

OVER TILFORD GULCH — 0° SKEW
STA. 7 + 20.03 (RAMP B) — SEC. 20-T4N-R6E
STR. NO. 47-071-511 — IM 0901(38)40
PCN 5580 — HS 20-44 & ALT.

MEADE COUNTY

S. D. DEPT. OF TRANSPORTATION

FEBRUARY 2014

-X028-

1 OF 6

PLANS BY :
OFFICE OF BRIDGE DESIGN, SOUTH DAKOTA DEPARTMENT OF TRANSPORTATION

DESIGNED BY	CK. DES. BY	DRAFTED BY	
MM/PW	JMH	GW/MG	Steve A. Johnson
MEAD5580	5580WB01		BRIDGE ENGINEER

STATE OF	PROJECT	SHEET NO.	TOTAL SHEETS
S.D.	IM 0901(38)40	E13	E199

SPECIFICATIONS

1. Design Specifications: AASHTO Standard Specifications for Highway Bridges, 2002 Edition (Service Load).
2. Construction Specifications: South Dakota Standard Specifications for Roads and Bridges, 2015 Edition and required Provisions, Supplemental Specifications and Special Provisions as included in the Proposal.

GENERAL NOTES

1. Design Live Load: HS 20-44, Alternate Loading, and construction load consisting of one 7' - 6" gage axle with gross weight = 95,850 lbs. The construction load shall not be applied until a minimum of 4 ft. of fill has been placed over the Box Culvert. Other construction loads in excess of legal load must be submitted thru proper channels to the Office of Bridge Design for analysis.
2. The design of the barrel section on a minimum fill height of 1 ft. and includes all subsequent fill heights up to and including the maximum fill height of 5 ft. (F5).
3. Unit Stresses: Concrete fc = 1800 p.s.i.
   Reinforcing Steel fs = 24000 p.s.i.
4. All concrete shall be Class A45 conforming to Section 460.
5. All reinforcing steel shall conform to ASTM A615 Grade 60.
6. All exposed edges shall be chamfered ¾ inch.
7. Use 1 inch clear cover on all reinforcing steel EXCEPT as shown.
8. The Contractor shall imprint on the structure the date of the existing box culvert construction as well as the date of new construction as specified and detailed on Standard Plate No. 460.03.
9. Care shall be taken to establish Working Points (W.P.) as shown on the wings.
10. Circled numbers in PLAN and ELEVATION views on the General Drawing are section I.D. Numbers (see SDDOT Materials Manual).
11. Cost of Preformed Expansion Joint Filler used in apron construction shall be incidental to the other contract items.
12. Compaction of earth embankment and box culvert backfill material shall be governed by the Specified Density method.
13. The subsurface soils throughout the project consist of clay-silt to gravelly clay-silt to gravel and cobbles.
14. It is anticipated that dewatering will be required to construct the box culvert extensions. The Contractor will be responsible to verify groundwater location prior to construction and provide necessary means of dewatering the construction site and prevention of the inflow of additional water. The use of well points may be required in dewatering the site for construction.

DIMENSIONS OF EXISTING BOX CULVERT

All details and dimensions of the Existing Box Culvert, contained in these plans, are provided as information only. It is the Contractor's responsibility to inspect and verify actual field conditions and any necessary dimensions affecting the satisfactory completion of the work required for this project. Original construction plans can be obtained from the Office of Bridge Design.

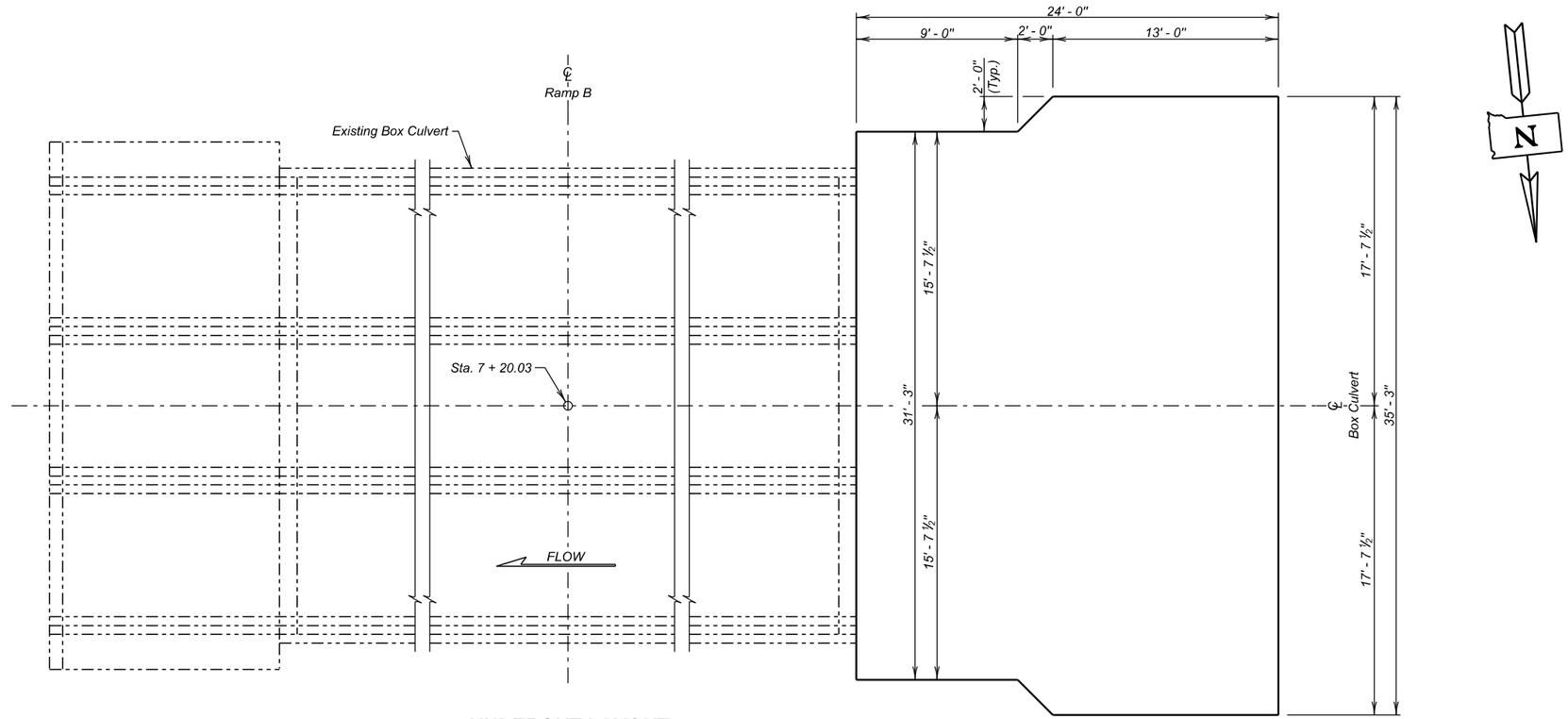

UNDERCUT LAYOUT
(Bottom Dimensions)

ESTIMATED QUANTITIES

ITEM	UNIT	QUANTITY
⌀ Box Culvert Undercut	Cu. Yd.	31

⌀ For payment, quantity is based on plan shown undercut dimensions and will not be measured unless the Engineer orders a change.

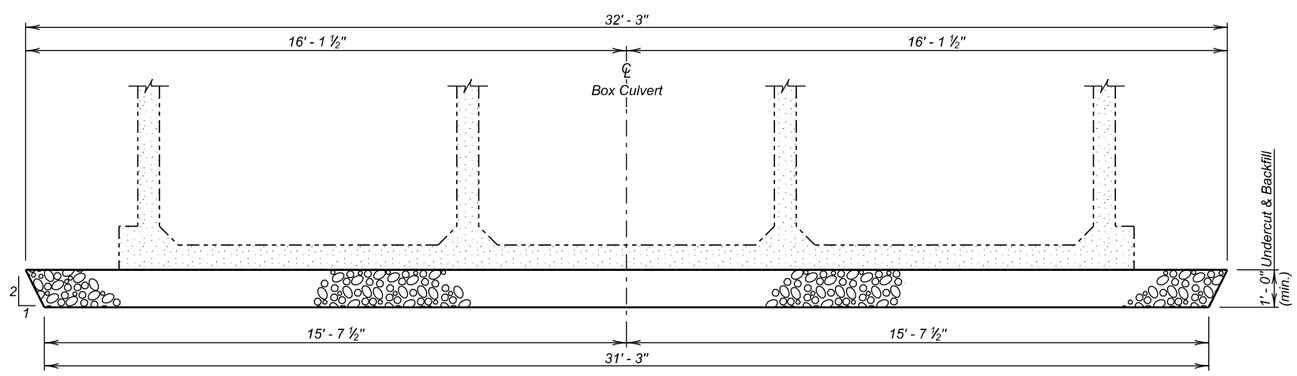

TYPICAL SECTION
(For Limits of Undercut)

NOTES AND UNDERCUT DETAILS

FOR

3 - 8' X 6' BOX CULVERT EXTENSION

OVER TILFORD GULCH — 0° SKEW
STA. 7 + 20.03 (RAMP B) — SEC. 20-T4N-R6E
STR. NO. 47-071-511 — IM 0901(38)40
HS 20-44 & ALT.

MEADE COUNTY

S. D. DEPT. OF TRANSPORTATION

FEBRUARY 2014

DESIGNED BY	CK. DES. BY	DRAFTED BY	
MM/PW	JMH	GW/MG	Steve A Johnson BRIDGE ENGINEER
MEAD5580	5580WB02		

STATE OF	PROJECT	SHEET NO.	TOTAL SHEETS
S.D.	IM 0901(38)40	E14	E199

BREAKOUT STRUCTURAL CONCRETE

1. This work shall consist of breaking out and disposing of structural concrete. All broken out concrete and other discarded material shall be disposed of in accordance with the ENVIRONMENTAL COMMITMENT notes found in Section A.
2. Define the breakout limits with ¾ inch saw cuts.
3. Any additional breakout required due to spalling or cracking of the existing structure will be determined by the Engineer. Where additional breakout in the barrel section of the existing structure is required, care shall be taken not to damage any of the existing reinforcing steel. All steel will be left in place and thoroughly cleaned by sandblasting.
4. Additional breakout in existing walls or top slab will require shoring up of the parapet and top slab, as directed by the Engineer.
5. Plans quantity payment will be full compensation for this item regardless of the quantity actually broken out, unless measurement is ordered by the Engineer. If the Engineer orders breakout beyond the limits shown, this additional breakout will be paid for at the contract unit price per cubic yard for Breakout Structural Concrete. If additional breakout is caused by the Contractor's operations, no additional payment will be made.
6. Breakout Structural Concrete will be paid for at the contract unit price per cubic yard. This payment shall be full compensation for furnishing all materials, labor, tools and equipment necessary or incidental to breaking out the structural concrete. Payment includes, but is not limited to, excavation required to perform the required breakout, sawcutting, breaking out concrete, cleaning, and sandblasting reinforcing steel and concrete surfaces, and removing and disposing of all waste materials to satisfactorily complete the work.

INSTALLING DOWELS IN CONCRETE

1. Dowels shall be installed as per Section 380.3 C.1.
2. No loads shall be applied to the epoxy grouted dowel bars until the epoxy resin has had sufficient time to cure as specified by the epoxy resin manufacturer.
3. Embed z2 dowels 8" into existing concrete.
4. Dowel bars shall be #6 deformed bars conforming to ASTM A615 Grade 60.
5. The cost of drilling holes, epoxy resin, dowels, installation, and other incidental items shall be included in the contract unit price per each for Install Dowel in Concrete.

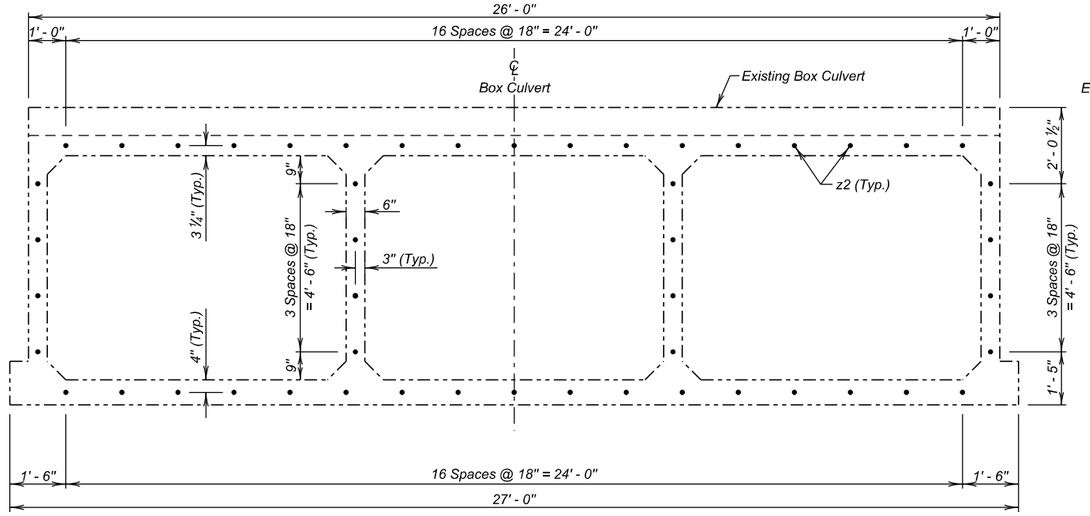

VIEW A - A
(Dowel Locations)

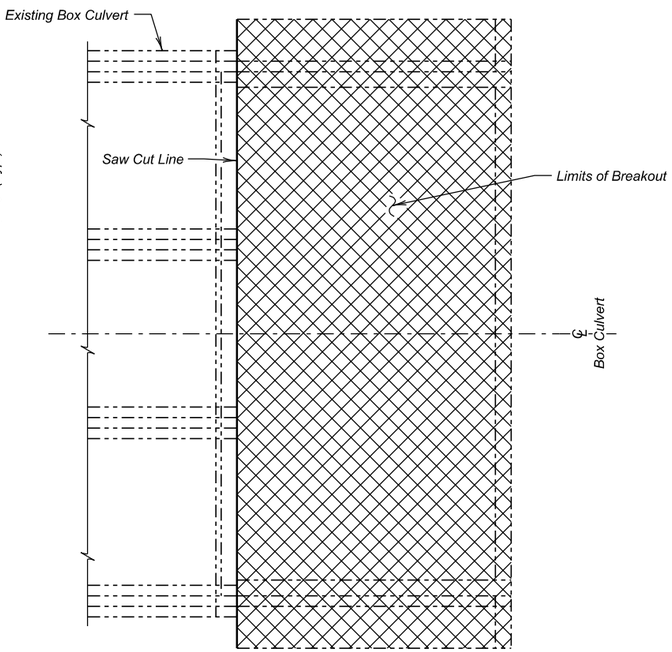

PLAN - BREAKOUT DETAILS

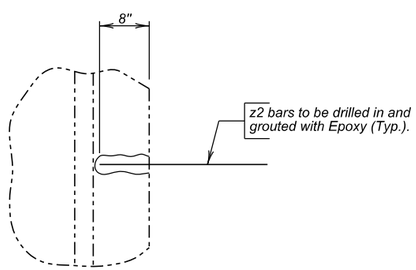

DETAIL "Y"

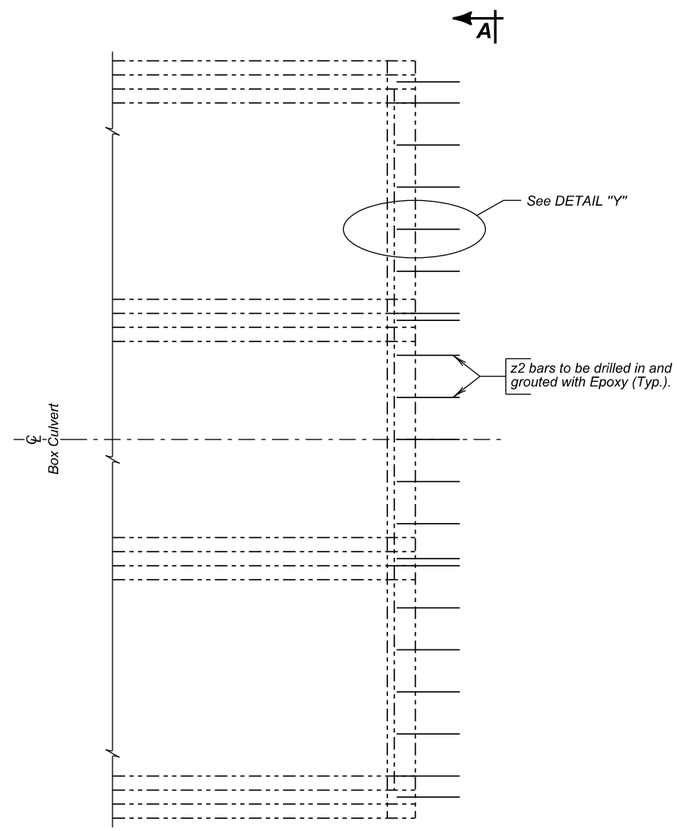

PLAN - DOWEL DETAILS

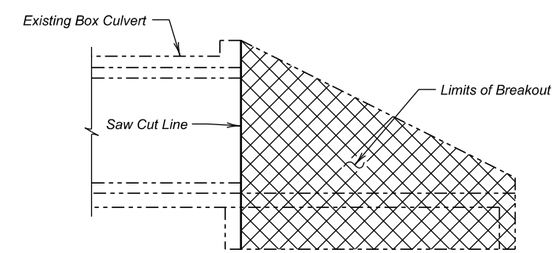

ELEVATION - BREAKOUT DETAILS

ESTIMATED QUANTITIES

ITEM	UNIT	QUANTITY
Breakout Structural Concrete	Cu. Yd.	12.8
Install Dowel In Concrete	Each	50

BREAKOUT AND DOWEL PLACEMENT DETAILS
FOR
3 - 8' X 6' BOX CULVERT EXTENSION

OVER TILFORD GULCH — 0° SKEW
STA. 7 + 20.03 (RAMP B) — SEC. 20-T4N-R6E
STR. NO. 47-071-511 — IM 0901(38)40
HS 20-44 & ALT.

MEADE COUNTY
S. D. DEPT. OF TRANSPORTATION
FEBRUARY 2014

DESIGNED BY	CK. DES. BY	DRAFTED BY	
MM/PW	JMH	GW/MG	Steve A Johnson BRIDGE ENGINEER
MEAD5580	5580WB03		

STATE OF	PROJECT	SHEET NO.	TOTAL SHEETS
S.D.	IM 0901(38)40	E15	E199

NOTE:
Apron shall NOT be built monolithic with the Box Culvert.

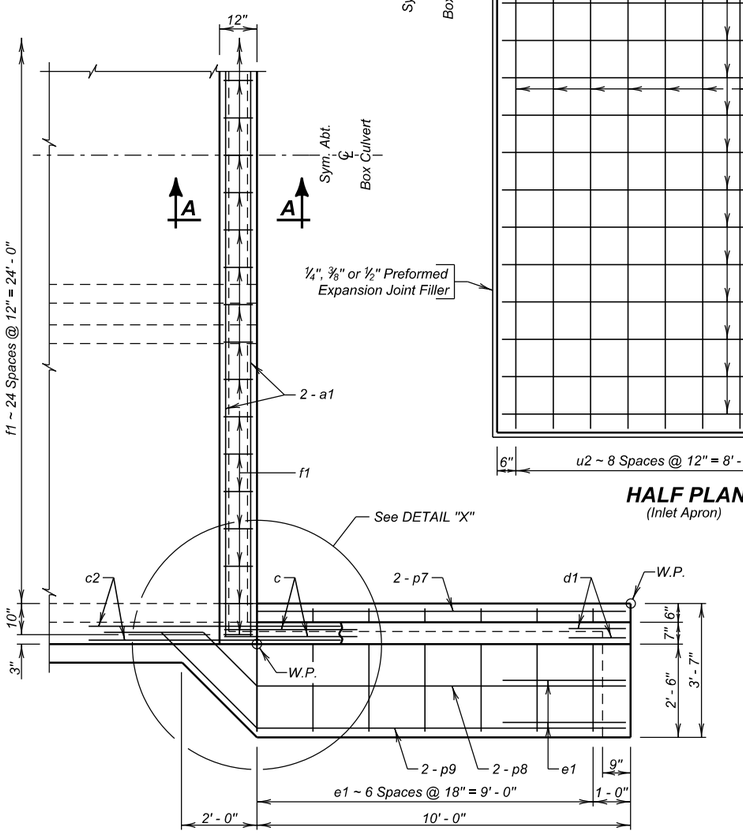

HALF PLAN

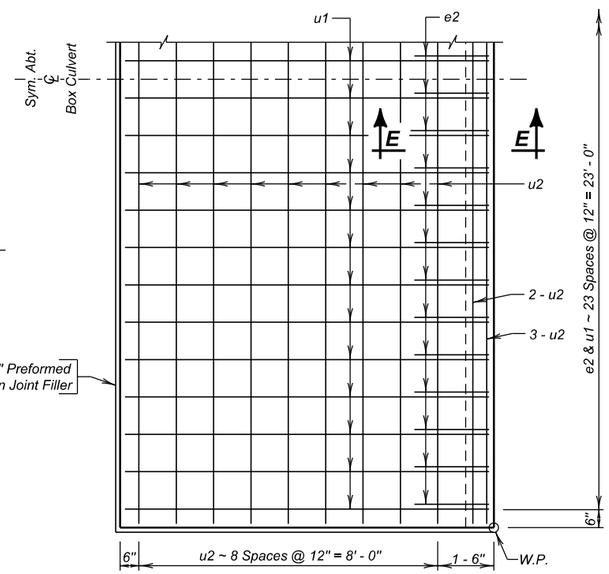

HALF PLAN
(Inlet Apron)

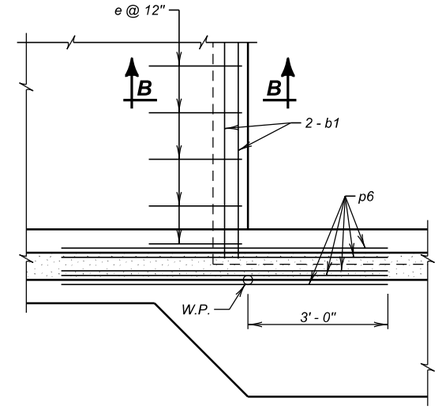

DETAIL "X"
(At Bottom Slab)

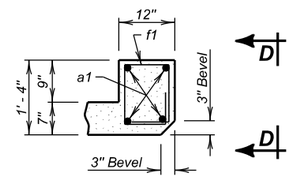

SEC. A - A
(At Top Slab)

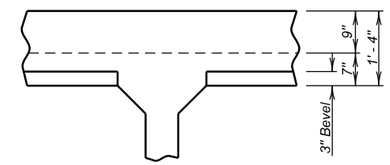

VIEW D - D
(At Middle Wall)

REINFORCING SCHEDULE

	Mk.	No.	Size	Length	Type
	a1	4	6	25' - 9"	Str.
	b1	4	6	25' - 3"	Str.
✳	c	4	5	4' - 6"	1A
	c1	8	5	11' - 3"	Str.
	c2	4	5	7' - 0"	19B
	d1	8	5	5' - 6"	19B
	e	26	4	7' - 0"	S12
	e1	18	4	8' - 9"	S12A
	f1	27	4	5' - 0"	S6A
	g0	12	5	5' - 0"	Str.
⌀	g1	10	4	14' - 3"	Str.
	g2	4	4	11' - 9"	Str.
⌀	h	7	4	16' - 0"	17A
⌀	k	11	4	12' - 3"	17A
	p6	10	6	7' - 0"	Str.
✳	p7	10	4	12' - 6"	Str.
✳	p8	4	4	13' - 3"	Str.
✳	p9	4	4	15' - 0"	Str.
	INLET APRON				
	e2	24	4	7' - 6"	S12
	u1	24	4	9' - 6"	Str.
	u2	14	4	23' - 6"	Str.

Bending Details

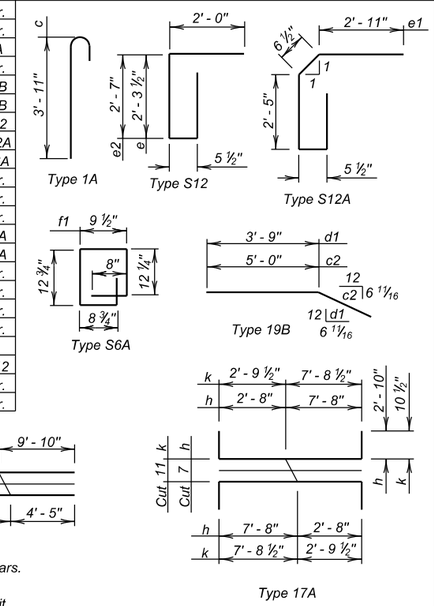

NOTES:
All dimensions are out to out of bars.
⌀ See cutting diagram.
✳ Bend in field as necessary to fit.

ESTIMATED QUANTITIES

ITEM	Class A45 Concrete, Box Culvert	Reinforcing Steel	Structure Excavation, Box Culvert
UNIT	Cu. Yd.	Lb.	Cu. Yd.
Inlet	10.3	1429	5.4
Inlet Apron	6.2	492	6.2

LEGEND FOR PLACING RE-STEEL

O. F. W. W. - Outside Face of Wing Wall
I. F. W. W. - Inside Face of Wing Wall

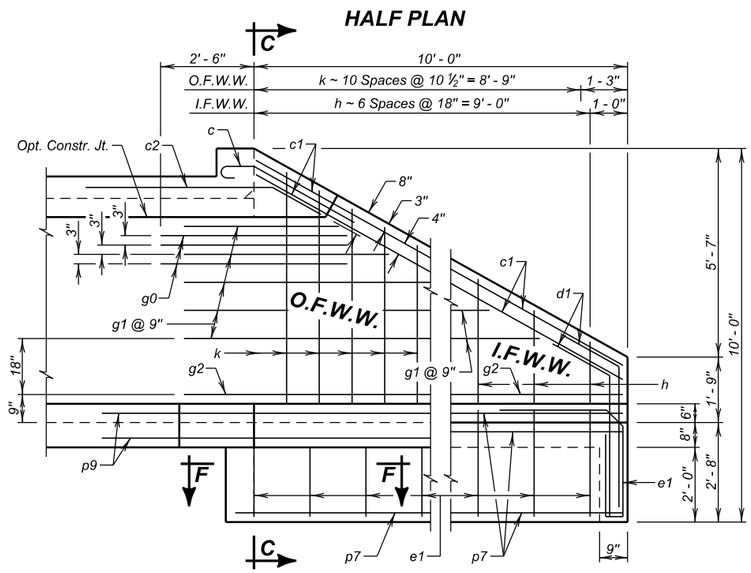

ELEVATION

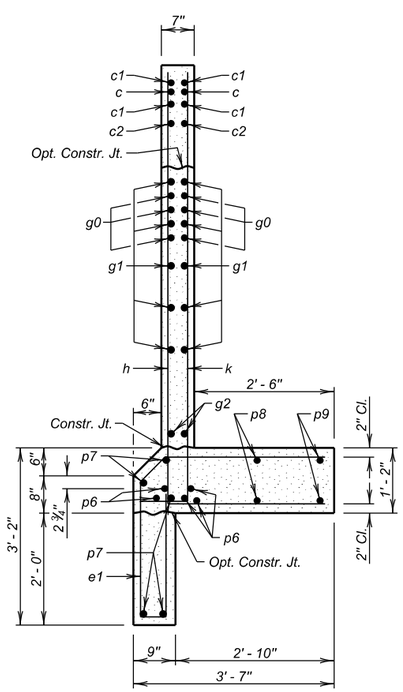

SEC. C - C

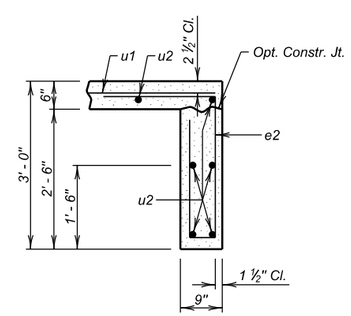

SEC. E - E

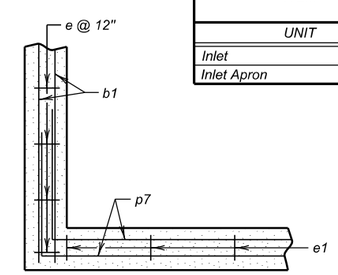

SEC. F - F

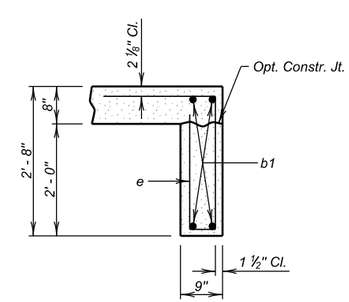

SEC. B - B

INLET DETAILS
FOR
3 - 8' X 6' BOX CULVERT EXTENSION

OVER TILFORD GULCH — 0° SKEW
STA. 7 + 20.03 (RAMP B) — SEC. 20-T4N-R6E
STR. NO. 47-071-511 — IM 0901(38)40
HS 20-44 & ALT.

MEADE COUNTY
S. D. DEPT. OF TRANSPORTATION
FEBRUARY 2014

DESIGNED BY	CK. DES. BY	DRAFTED BY	
MM/PW	JMH	GW/MG	BRIDGE ENGINEER
MEAD5580	5580WB04		

STATE OF	PROJECT	SHEET NO.	TOTAL SHEETS
S.D.	IM 0901(38)40	E16	E199

REINFORCING SCHEDULE
(For One F5 Barrel End Section @ 11' - 0")

Mk.	No.	Size	Length	Type
a1	4	6	25' - 9"	Str.
f1	27	4	5' - 0"	S6A
h1	28	4	7' - 9"	17A
j1	27	5	25' - 0"	Str.
k1	52	4	12' - 6"	17
m1	22	5	26' - 9"	Str.
n1	25	5	25' - 9"	Str.
p	136	4	11' - 6"	Str.
s1	50	5	6' - 0"	Str.
w1	36	4	16' - 3"	S11A
z2	42	6	2' - 3"	Str.

Bending Details

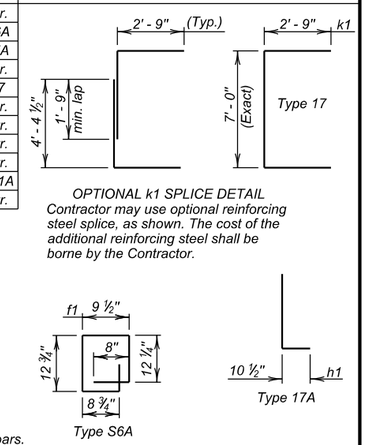

OPTIONAL k1 SPLICE DETAIL
Contractor may use optional reinforcing steel splice, as shown. The cost of the additional reinforcing steel shall be borne by the Contractor.

NOTES:
All dimensions are out to out of bars.

Request for additional reinforcing steel splices at points other than those shown, must be submitted to the Engineer for prior approval. If additional splices are approved, no payment will be allowed for the added quantity of reinforcing steel.

✳ Quantity of z2 dowel bars is not included in reinforcing steel quantity. See BREAKOUT AND DOWEL PLACEMENT DETAILS sheet.

ESTIMATED QUANTITIES

ITEM	Class A45 Concrete, Box Culvert	Reinforcing Steel	Structure Excavation, Box Culvert
UNIT	Cu.Yd.	Lb.	Cu.Yd.
1 - F5 Barrel End Section @ 11' - 0"	20.9	4562	7.4

LEGEND FOR PLACING RE- STEEL

- T.T.S. - Top of Top Slab
- B.T.S. - Bottom of Top Slab
- T.B.S. - Top of Bottom Slab
- B.B.S. - Bottom of Bottom Slab
- O.F.O.W. - Outside Face of Outside Wall
- I.F.O.W. - Inside Face of Outside Wall
- M.W. - Middle Wall

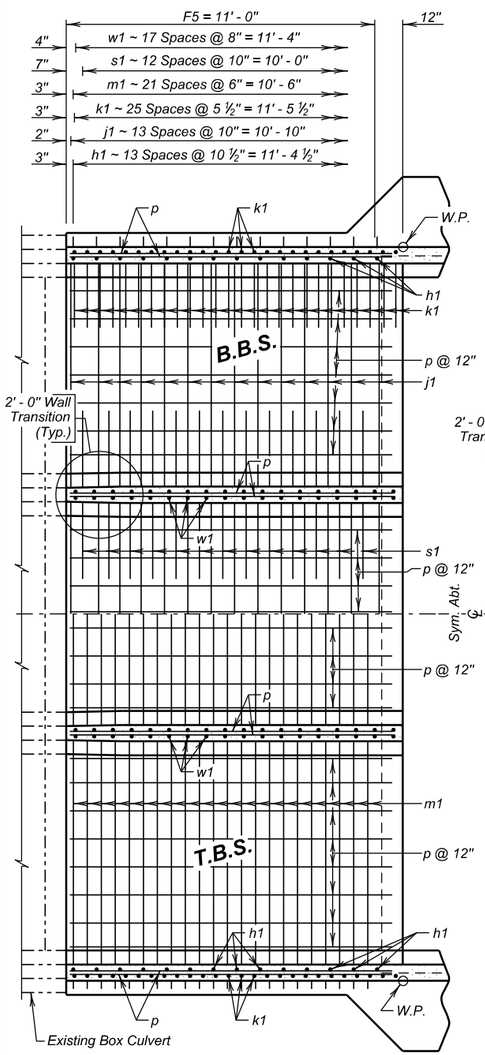

PLAN
(Bottom Slab)

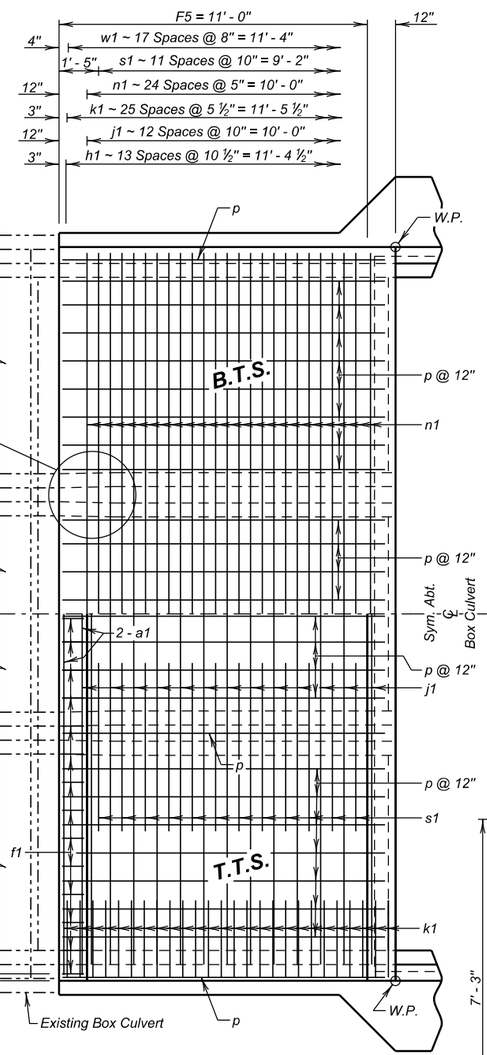

PLAN
(Top Slab)

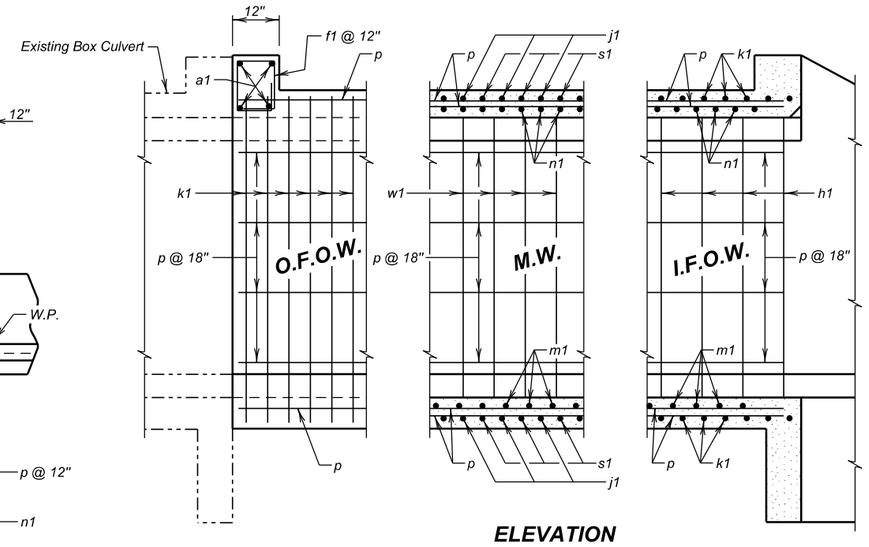

ELEVATION

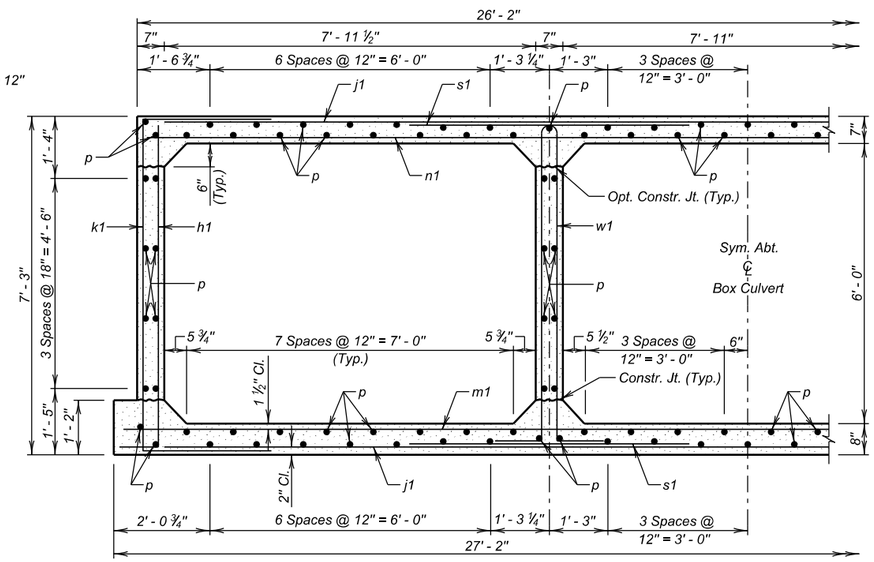

F5 BARREL HALF SECTION
(5' - 0" Maximum Fill)

F5 BARREL END SECTION DETAILS (11' - 0")
FOR
3 - 8' X 6' BOX CULVERT EXTENSION

OVER TILFORD GULCH — 0° SKEW
STA. 7 + 20.03 (RAMP B) — SEC. 20-T4N-R6E
STR. NO. 47-071-511 — IM 0901(38)40
HS 20-44 & ALT.

MEADE COUNTY
S. D. DEPT. OF TRANSPORTATION
FEBRUARY 2014

DESIGNED BY	CK. DES. BY	DRAFTED BY	
MM/PW	JMH	GW/MG	Steve A Johnson BRIDGE ENGINEER
MEAD5580	5580WB05		

YEAR PLATE DETAILS FOR ORIGINAL CONSTRUCTION

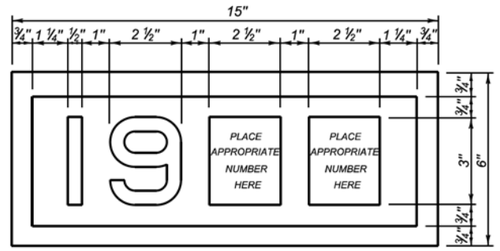

YEAR PLATE DETAILS FOR NEW CONSTRUCTION

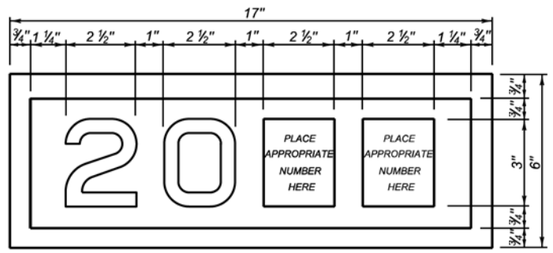

GENERAL NOTES:

1. Year plates of the general dimensions shown shall be constructed on all box culverts and bridges. The year plates shall be constructed in reverse and attached to the forms in such a manner that the finished imprint in the concrete does not exceed one-half (½) inch in depth.
2. Year plates shall be located on structure(s) as follows:
   a. On cast-in-place box culverts the year plates shall be four and one - half (4 ½) inches below the top of the upstream parapet wall and centered laterally on the upstream face. On precast box culverts the year plate shall be centered laterally on the upstream face of the top slab. Where an extended interior wall interferes with this location, the year plate shall be centered in an adjacent barrel.
   b. On bridges with six (6) inch curbs or "Jersey" shaped barriers with no endblocks, the year plate shall be centered vertically on the curb face approximately six (6) inches from the end of the bridge, or as designated by the Engineer. On bridges with "Jersey" shaped barrier endblocks, the year plate shall be centered on the upper sloped portion of the barrier approximately 5'- 6" from the end of the bridge, or as designated by the Engineer. There shall be one year plate at each end of the bridge on opposite sides.
   c. When the plans specify that both the original date of construction and the date of reconstruction are to be shown, one date shall be placed as listed above and the other located adjacent to it. Both year plates shall be shown at each end of the bridge on opposite sides.
3. There will be no separate measurement or payment made for year plates on box culverts and bridges. All costs for this work shall be incidental to other contract items.

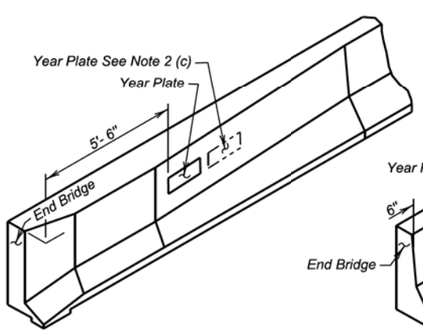

JERSEY BARRIER
(With Endblock)

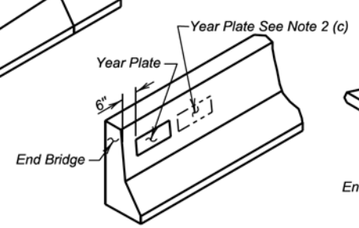

JERSEY BARRIER

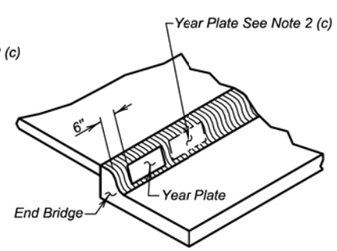

TYPE B CURB

June 26, 2012

Published Date: 3rd Qtr. 2016	SDDOT	DUAL DATE YEAR PLATE DETAILS	PLATE NUMBER 460.03
			Sheet 1 of 1

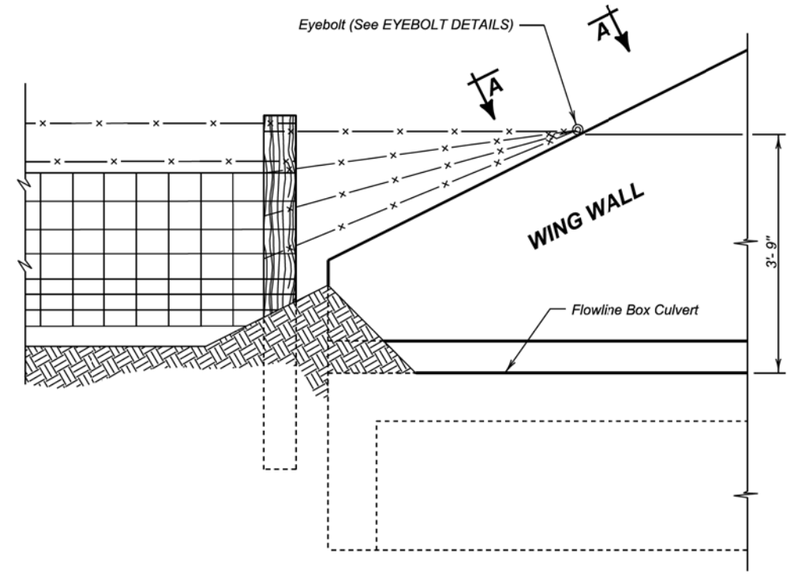

DETAIL FOR FENCE ANCHORS

GENERAL NOTES:

1. The fence and post details shown are for illustrative purpose only. The fence shall be as specified elsewhere in the plans.
2. Eyebolts shall be placed on all of the box culvert wing walls.
3. Eyebolts shall be ⅝ inch diameter and shall conform to ASTM A307.
4. Eyebolts, nuts, and concrete inserts shall be galvanized in accordance with AASHTO M232 (ASTM A153). Concrete inserts of corrosion resistant material need not be galvanized.
5. Cast-in-place eyebolts shall have a nut attached, be 4 ½ inches (Min.) in length and shall be embedded such that the eye of the bolt is flush with the concrete surface. (See Eyebolt Details) As an alternate, cast-in-place concrete inserts, capable of developing the full strength of the ⅝ inch diameter threaded eyebolt, may be used and shall be set in the concrete in accordance with the manufacturer's recommendations. The eyebolt shall be of sufficient length to develop its full strength. The eye of the eyebolt shall be flush with the concrete surface.
6. The cost for furnishing and installing eyebolts and/or concrete inserts shall be incidental to various contract items.

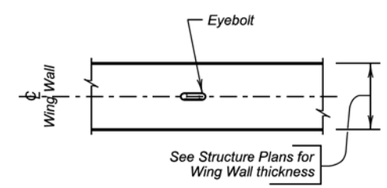

VIEW A - A

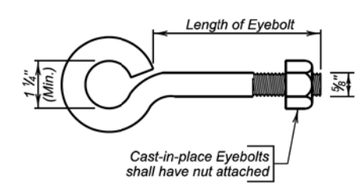

EYEBOLT DETAILS

December 23, 2012

Published Date: 3rd Qtr. 2016	SDDOT	FENCE ANCHORS FOR BOX CULVERT WING WALLS	PLATE NUMBER 620.16
			Sheet 1 of 1

The elevations shown in these plans are based on the National Geodetic Survey (NGS) North American Vertical Datum of 1988 (NAVD88).

STATE OF	PROJECT	SHEET NO.	TOTAL SHEETS
S.D.	IM 0901(38)40	E18	E199

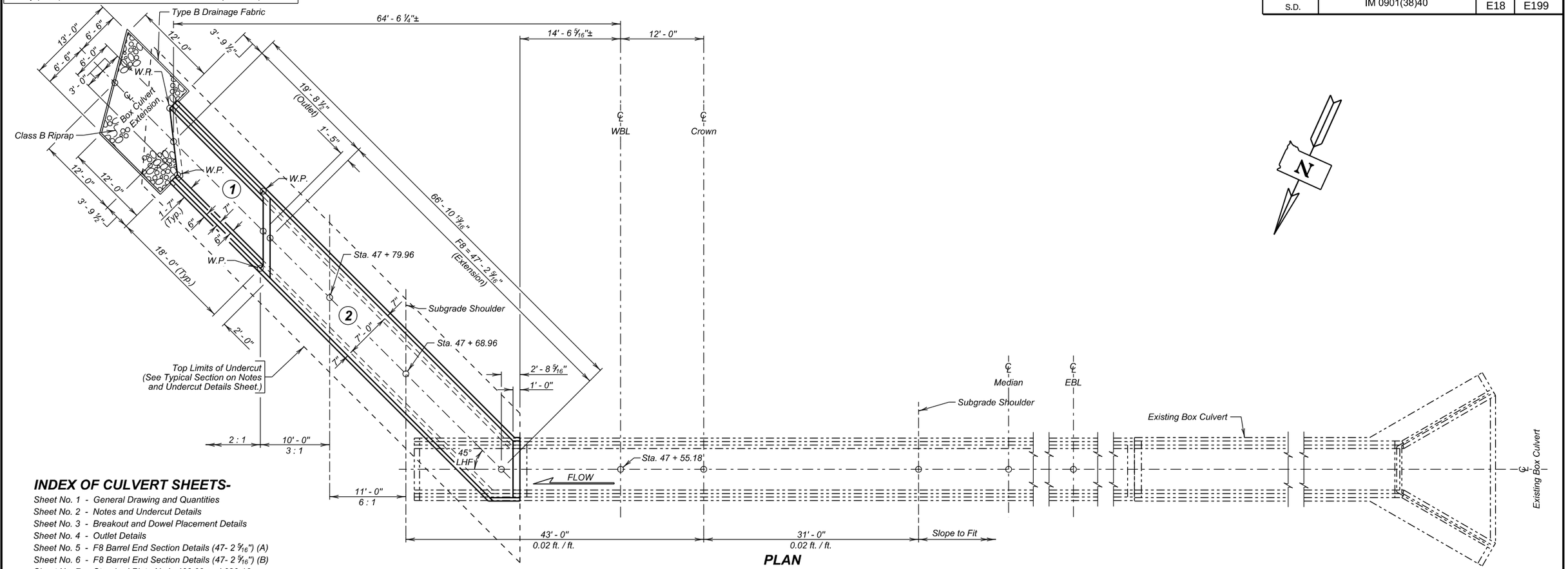

PLAN

INDEX OF CULVERT SHEETS-

Sheet No. 1 - General Drawing and Quantities
Sheet No. 2 - Notes and Undercut Details
Sheet No. 3 - Breakout and Dowel Placement Details
Sheet No. 4 - Outlet Details
Sheet No. 5 - F8 Barrel End Section Details (47- 2 9/16") (A)
Sheet No. 6 - F8 Barrel End Section Details (47- 2 9/16") (B)
Sheet No. 7 - Standard Plate No.'s 460.03 and 620.16

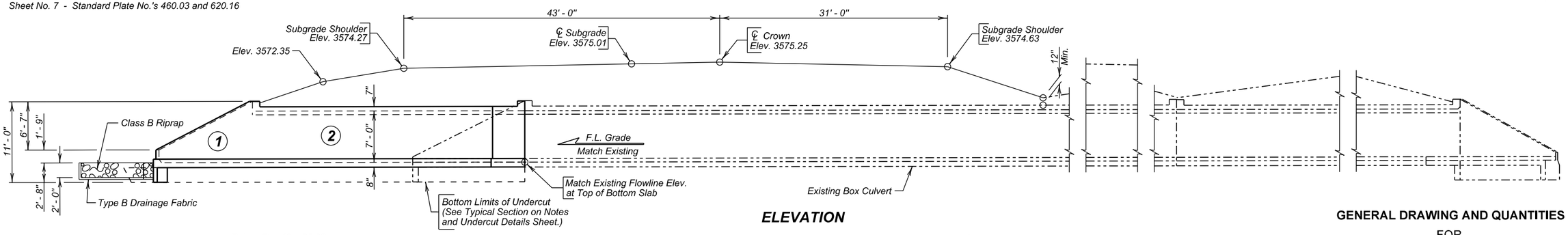

ELEVATION

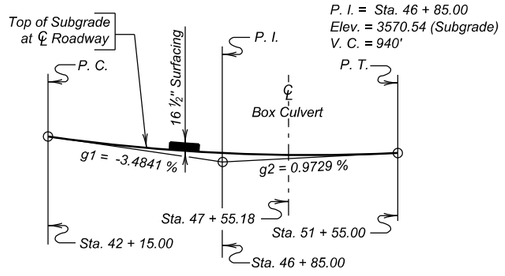

P. I. = Sta. 46 + 85.00
Elev. = 3570.54 (Subgrade)
V. C. = 940'

VERTICAL CURVE DATA

ESTIMATED QUANTITIES

	ITEM	UNIT	QUANTITY
	Class A45 Concrete, Box Culvert	Cu. Yd.	53.9
	Reinforcing Steel	Lb.	8739
	Structure Excavation, Box Culvert	Cu. Yd.	20.8
	Box Culvert Undercut	Cu. Yd.	81
	Breakout Structural Concrete	Cu. Yd.	7.4
	Install Dowel in Concrete	Each	18
#	Class B Riprap	Ton	16.2
	Type B Drainage Fabric	Sq. Yd.	30.0

For estimating purposes only, a factor of 1.4 tons/cu. yd. was used to convert Cu. Yd. to Tons.

NOTE:
All stations are based on the survey of the existing box culvert. The intent is to match the existing box culvert location, flowline and slope.

GENERAL DRAWING AND QUANTITIES

FOR

7' X 7' BOX CULVERT EXTENSION

I90 OVER CREEK — 0° SKEW W/ 45° LHF DOGLEG
STA. 47 + 55.18 (WBL) — SEC. 20-T4N-R6E
STR. NO. 47-073-518 — IM 0901(38)40
PCN 5580 — HS 20-44 (& ALT.)

MEADE COUNTY

S. D. DEPT. OF TRANSPORTATION

AUGUST 2015

1 OF 7

PLANS BY :
OFFICE OF BRIDGE DESIGN, SOUTH DAKOTA DEPARTMENT OF TRANSPORTATION

DESIGNED BY	CK. DES. BY	DRAFTED BY	
BB	JMH	GW/MG	Steve A Johnson BRIDGE ENGINEER
MEAD5580	5580WC01		

STATE OF	PROJECT	SHEET NO.	TOTAL SHEETS
S.D.	IM 0901(38)40	E19	E199

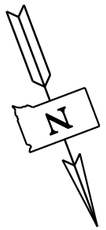

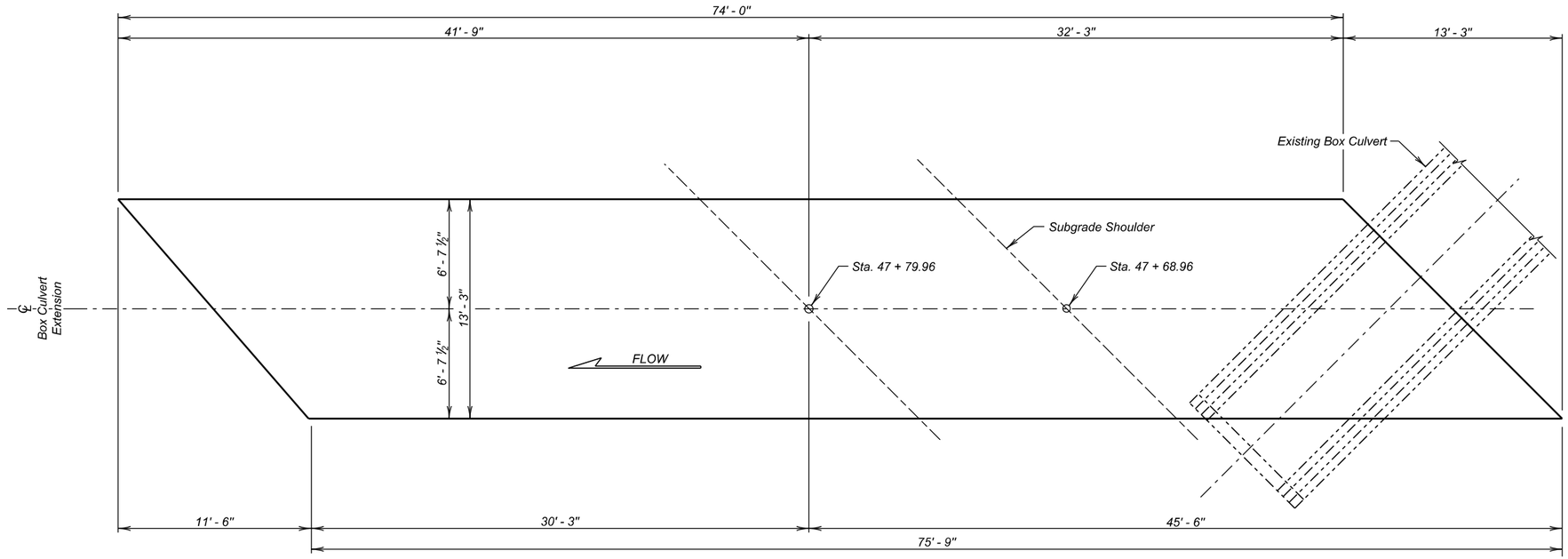

UNDERCUT LAYOUT
(Bottom Dimensions)

SPECIFICATIONS

1. Design Specifications: AASHTO Standard Specifications for Highway Bridges, 2002 Edition (Service Load).
2. Construction Specifications: South Dakota Standard Specifications for Roads and Bridges, 2015 Edition and required Provisions, Supplemental Specifications and/or Special Provisions as included in the Proposal.

GENERAL NOTES

1. Design Live Load: HS 20-44, Alternate Loading, and construction load consisting of one 7' - 6" gage axle with gross weight = 95,850 lbs. The construction load shall not be applied until a minimum of 4 ft. of fill has been placed over the Box Culvert. Other construction loads in excess of legal load must be submitted thru proper channels to the Office of Bridge Design for analysis.
2. The design of the barrel section on a minimum fill height of 1 foot and includes all subsequent fill heights up to and including the maximum fill height of 8 ft. (F8).
3. Unit Stresses: Concrete fc = 1800 p.s.i.
   Reinforcing Steel fs = 24000 p.s.i.
4. All concrete shall be Class A45 conforming to Section 460.
5. All reinforcing steel shall conform to ASTM A615 Grade 60.
6. All exposed edges shall be chamfered ¾ inch.
7. Use 1 inch clear cover on all reinforcing steel EXCEPT as shown.
8. The Contractor shall imprint on the structure the date of the existing box culvert construction as well as the date of new construction as specified and detailed on Standard Plate No. 460.03.
9. Care shall be taken to establish Working Points (W.P.) as shown on the wings.
10. Circled numbers in PLAN and ELEVATION views on the General Drawing are section I.D. Numbers (see SDDOT Materials Manual).
11. Compaction of earth embankment and box culvert backfill material shall be governed by the Specified Density method.
12. The subsurface soils throughout the project consist of clay-silt to gravelly clay-silt to gravel and cobbles.
13. It is anticipated that dewatering will be required to construct the box culvert extension. The Contractor will be responsible to verify groundwater location prior to construction and provide necessary means of dewatering the construction site and prevention of the inflow of additional water. The use of well points may be required in the dewatering the site for construction.
14. A temporary barrier consisting of sheet pile, inflatable bladder, or other means of seperation will be required to keep the existing pond out of the excavation for the extension.

DIMENSIONS OF EXISTING BOX CULVERT

All details and dimensions of the Existing Box Culvert, contained in these plans, are provided as information only. It is the Contractor's responsibility to inspect and verify actual field conditions and any necessary dimensions affecting the satisfactory completion of the work required for this project. Original construction plans can be obtained from the Office of Bridge Design.

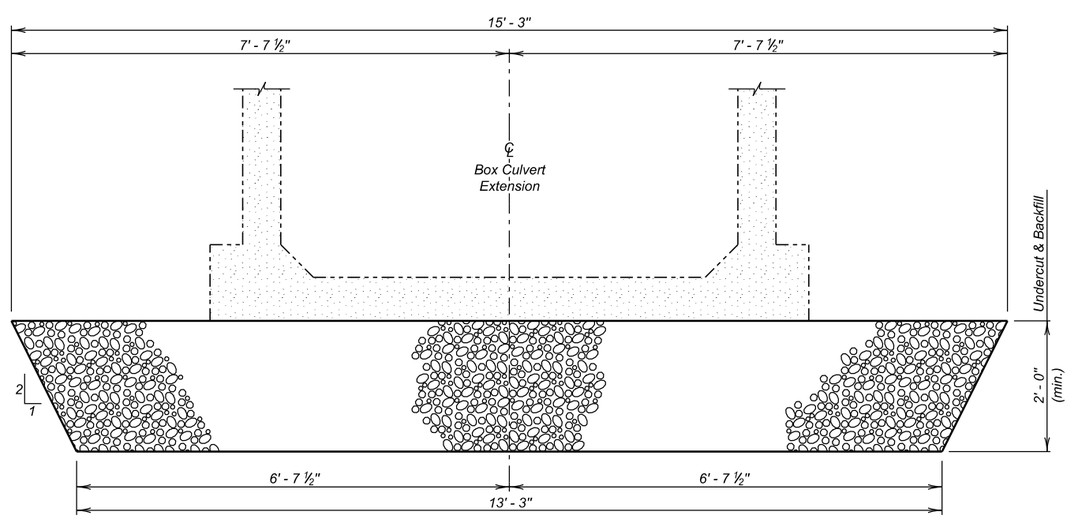

TYPICAL SECTION
(For Limits of Undercut)

ESTIMATED QUANTITIES

	ITEM	UNIT	QUANTITY
⌀	Box Culvert Undercut	Cu. Yd.	81

⌀ For payment, quantity is based on plan shown undercut dimensions and will not be measured unless the Engineer orders a change.

NOTES AND UNDERCUT DETAILS

FOR

7' X 7' BOX CULVERT EXTENSION

I90 OVER CREEK — 0° SKEW W/ 45° LHF DOGLEG
STA. 47 + 55.18 (WBL) — SEC. 20-T4N-R6E
STR. NO. 47-073-518 — IM 0901(38)40
HS 20-44
(& ALT.)

MEADE COUNTY

S. D. DEPT. OF TRANSPORTATION

AUGUST 2015

DESIGNED BY	CK. DES. BY	DRAFTED BY	
BB	JMH	GW/MG	Steve A. Johnson
MEAD5580	5580WC02		BRIDGE ENGINEER

STATE OF	PROJECT	SHEET NO.	TOTAL SHEETS
S.D.	IM 0901(38)40	E20	E199

BREAKOUT STRUCTURAL CONCRETE

1. This work shall consist of breaking out and disposing of structural concrete. All broken out concrete and other discarded material shall be disposed of in accordance with the ENVIRONMENTAL COMMITMENT notes found in Section A.
2. Define the breakout limits with ¾ inch saw cuts.
3. Any additional breakout required due to spalling or cracking of the existing structure will be determined by the Engineer. Where additional breakout in the barrel section of the existing structure is required, care shall be taken not to damage any of the existing reinforcing steel. All steel will be left in place and thoroughly cleaned by sandblasting.
4. Additional breakout in existing walls or top slab will require shoring up of the parapet and top slab, as directed by the Engineer.
5. Plans quantity payment will be full compensation for this item regardless of the quantity actually broken out, unless measurement is ordered by the Engineer. If the Engineer orders breakout beyond the limits shown, this additional breakout will be paid for at the contract unit price per cubic yard for Breakout Structural Concrete. If additional breakout is caused by the Contractor's operations, no additional payment will be made.
6. Breakout Structural Concrete will be paid for at the contract unit price per cubic yard. This payment shall be full compensation for furnishing all materials, labor, tools and equipment necessary or incidental to breaking out the structural concrete. Payment includes, but is not limited to, excavation required to perform the required breakout, sawcutting, breaking out concrete, cleaning, and sandblasting reinforcing steel and concrete surfaces, and removing and disposing of all waste materials to satisfactorily complete the work.

INSTALLING DOWELS IN CONCRETE

1. Dowels shall be installed as per Section 380.3 C.1.
2. No loads shall be applied to the epoxy grouted dowel bars until the epoxy resin has had sufficient time to cure as specified by the epoxy resin manufacturer.
3. Embed z2 dowels 8" into existing concrete.
4. Dowel bars shall be #6 deformed bars conforming to ASTM A615 Grade 60.
5. The cost of drilling holes, epoxy resin, dowels, installation, and other incidental items shall be included in the contract unit price per each for Install Dowel in Concrete.

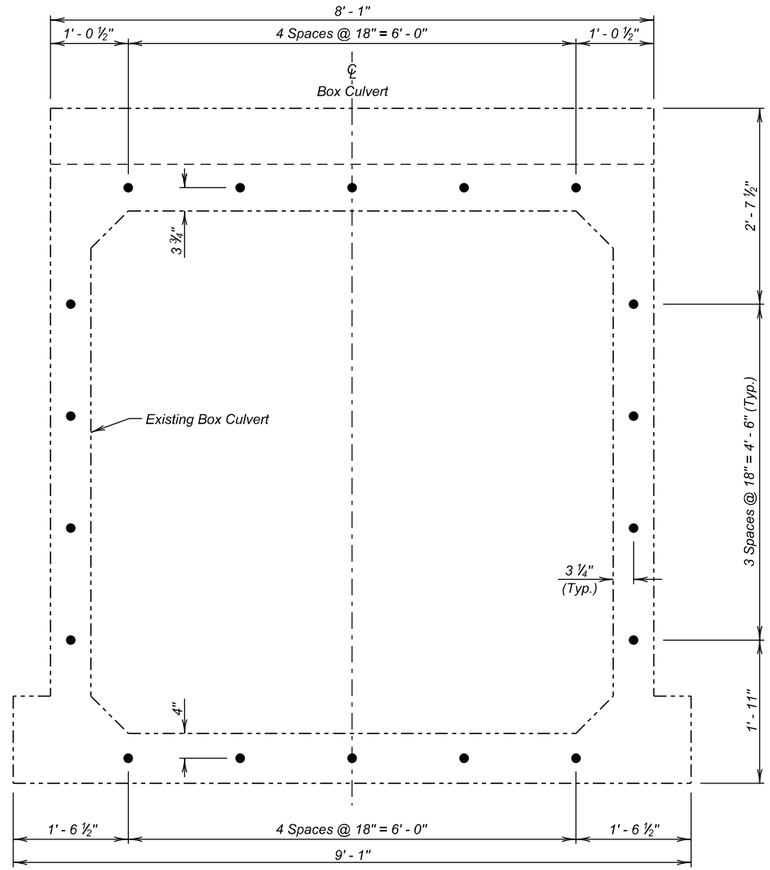

VIEW A - A
(Dowel Locations)

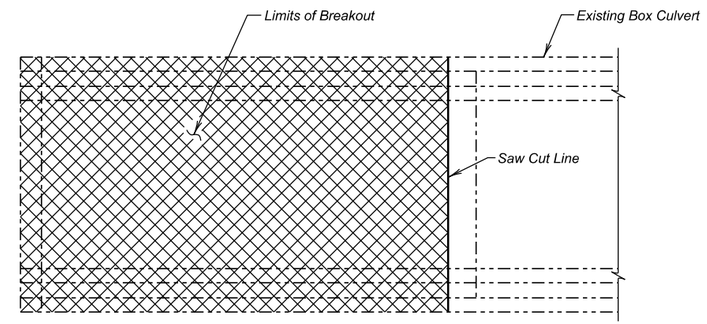

PLAN - BREAKOUT DETAILS

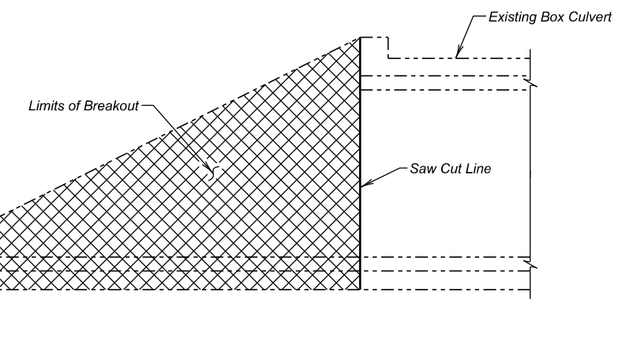

ELEVATION - BREAKOUT DETAILS

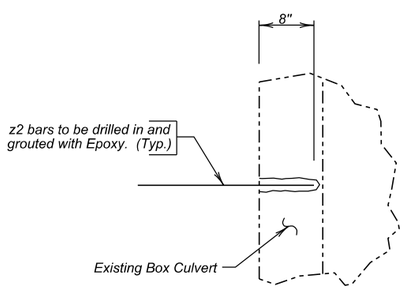

DETAIL "X"

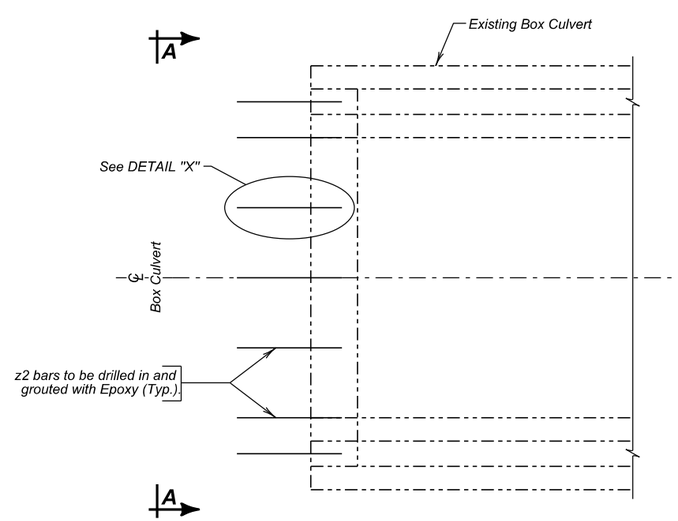

PLAN - DOWEL DETAILS

ESTIMATED QUANTITIES

ITEM	UNIT	QUANTITY
Breakout Structural Concrete	Cu. Yd.	7.4
Install Dowel In Concrete	Each	18

BREAKOUT DETAILS
FOR
7' X 7' BOX CULVERT EXTENSION

I90 OVER CREEK
STA. 47 + 55.18 (WBL)
STR. NO. 47-073-518

0° SKEW W/ 45° LHF DOGLEG
SEC. 20-T4N-R6E
IM 0901(38)40
HS 20-44
(& ALT.)

MEADE COUNTY
S. D. DEPT. OF TRANSPORTATION
AUGUST 2015

DESIGNED BY	CK. DES. BY	DRAFTED BY	
JMH	BB	GW/MG	Steve A Johnson
MEAD5580	5580WC03		BRIDGE ENGINEER

STATE OF	PROJECT	SHEET NO.	TOTAL SHEETS
S.D.	IM 0901(38)40	E21	E199

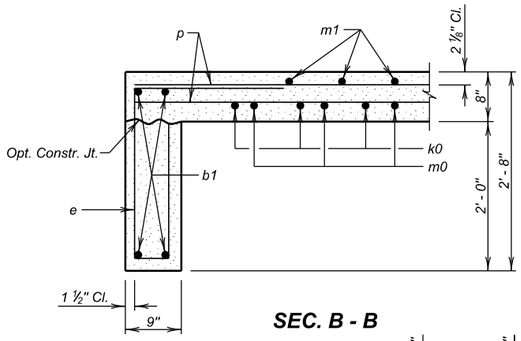

SEC. B - B

SEC. A - A
(At Top Slab)

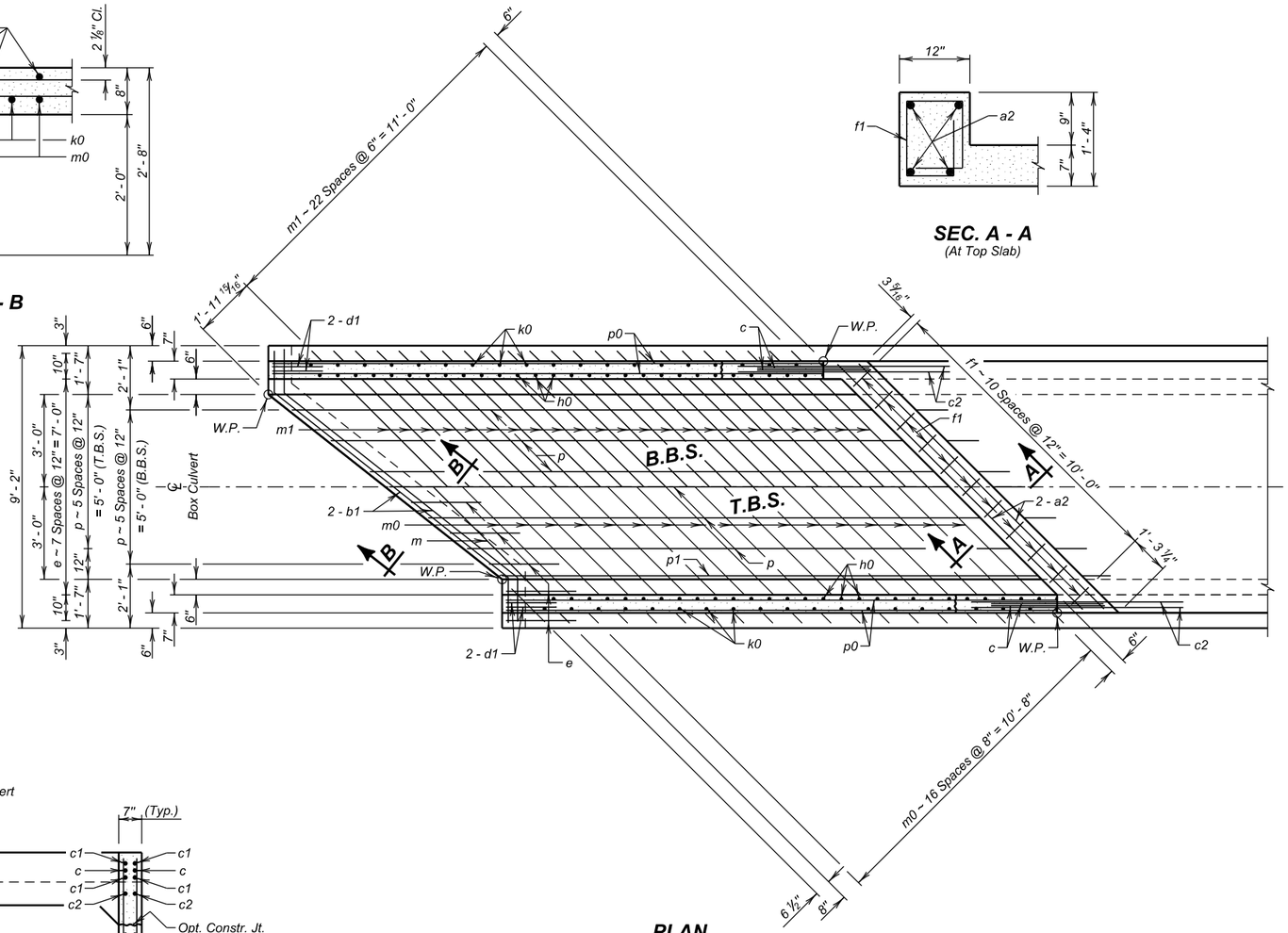

PLAN

REINFORCING SCHEDULE

	Mk.	No.	Size	Length	Type
	a2	4	6	11' - 3"	Str.
✳	b1	4	6	12' - 6"	Str.
✳	c	4	5	4' - 6"	1A
	c1	8	5	19' - 0"	Str.
	c2	4	5	7' - 0"	19B
	d1	8	5	5' - 6"	19B
	e	10	4	7' - 0"	S12
	f1	11	4	5' - 0"	S6A
	g0	12	5	5' - 0"	Str.
ϕ	g1	10	4	22' - 9"	Str.
	g2	4	4	19' - 9"	Str.
ϕ	h0	29	4	13' - 0"	17A
ϕ	k0	20	4	15' - 6"	17A
	m	1	5	6' - 3"	Str.
	m0	17	4	12' - 6"	Str.
	m1	23	5	12' - 6"	Str.
ϕ	p	6	4	41' - 3"	Str.
	p0	4	4	20' - 9"	Str.
	p1	1	4	19' - 9"	Str.

Bending Details

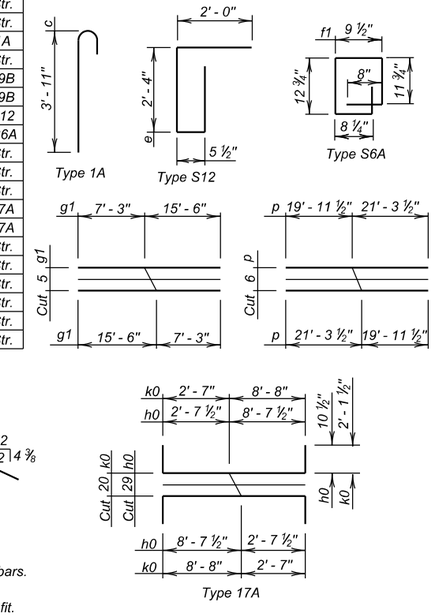

NOTES:
All dimensions are out to out of bars.
ϕ See cutting diagram.
✳ Bend in field as necessary to fit.

ESTIMATED QUANTITIES

ITEM	Class A45 Concrete, Box Culvert	Reinforcing Steel	Structure Excavation, Box Culvert
UNIT	Cu. Yd.	Lb.	Cu. Yd.
Outlet	16.7	1887	9.5

LEGEND FOR PLACING RE-STEEL

O. F. W. W. - Outside Face of Wing Wall
I. F. W. W. - Inside Face of Wing Wall
T.B.S. - Top of Bottom Slab
B.B.S. - Bottom of Bottom Slab

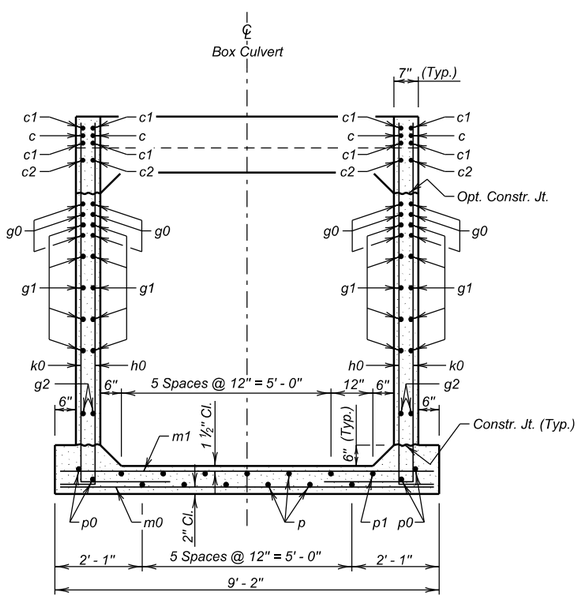

SEC. C - C

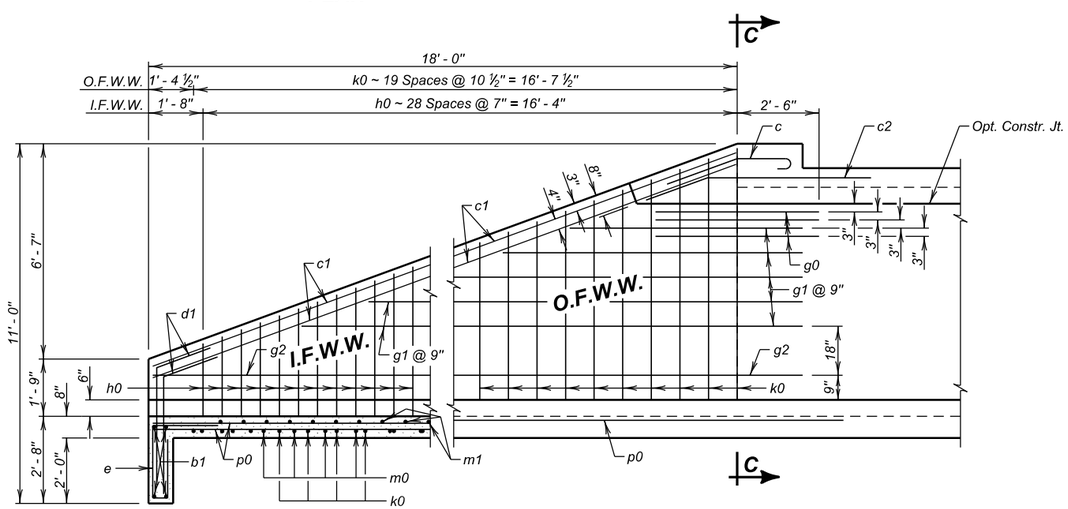

ELEVATION

OUTLET DETAILS
FOR
7' X 7' BOX CULVERT EXTENSION

I90 OVER CREEK
STA. 47 + 55.18 (WBL)
STR. NO. 47-073-518

0° SKEW W/ 45° LHF DOGLEG
SEC. 20-T4N-R6E
IM 0901(38)40
HS 20-44
(& ALT.)

MEADE COUNTY
S. D. DEPT. OF TRANSPORTATION
AUGUST 2015

DESIGNED BY	CK. DES. BY	DRAFTED BY	
JMH	BB	GW/MG	Steve A Johnson BRIDGE ENGINEER
MEAD5580	5580WC04		

STATE OF	PROJECT	SHEET NO.	TOTAL SHEETS
S.D.	IM 0901(38)40	E22	E199

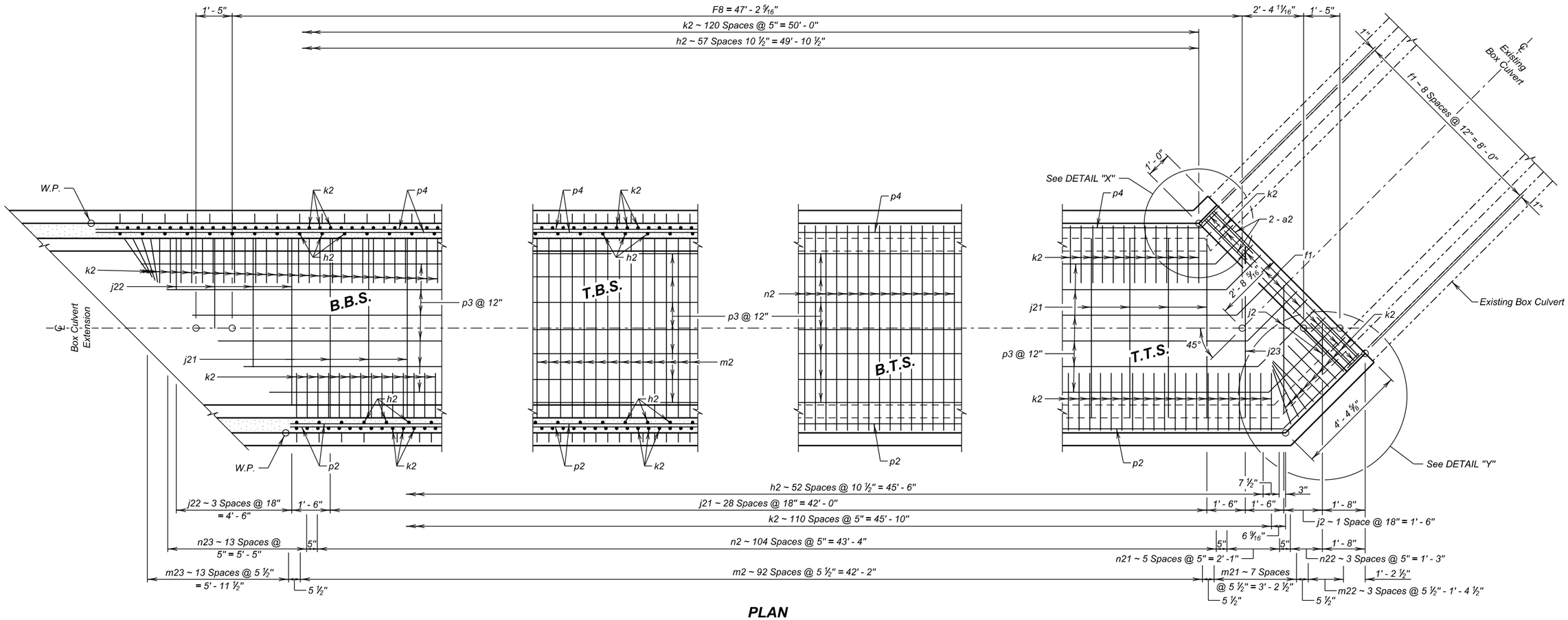

PLAN

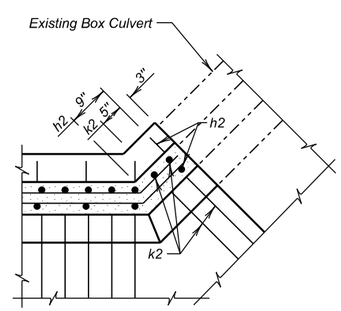

DETAIL "X"
(h2 and k2 bars shown)

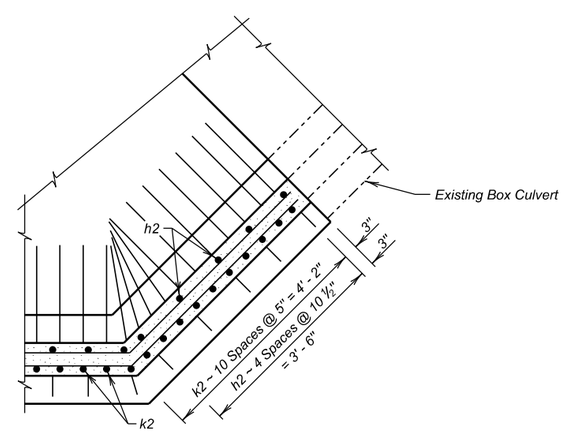

DETAIL "Y"
(h2 and k2 bars shown)

LEGEND FOR PLACING RE- STEEL
T.T.S. - Top of Top Slab
B.T.S. - Bottom of Top Slab
T.B.S. - Top of Bottom Slab
B.B.S. - Bottom of Bottom Slab

F8 BARREL END SECTION DETAILS (47' - 2 5/16") (A)

FOR

7' X 7' BOX CULVERT EXTENSION

I90 OVER CREEK
STA. 47 + 55.18 (WBL)
STR. NO. 47-073-518

0° SKEW W/ 45° LHF DOGLEG
SEC. 20-T4N-R6E
IM 0901(38)40
HS 20-44
(& ALT.)

MEADE COUNTY
S. D. DEPT. OF TRANSPORTATION
AUGUST 2015

5 OF 7

DESIGNED BY	CK. DES. BY	DRAFTED BY	
JMH	BB	GW/MG	Steve A. Johnson BRIDGE ENGINEER
MEAD5580	5580WC05		

STATE OF	PROJECT	SHEET NO.	TOTAL SHEETS
S.D.	IM 0901(38)40	E23	E199

REINFORCING SCHEDULE
(For One F5 Barrel End Section @ 47' - 2 5/16")

	Mk.	No.	Size	Length	Type
	a2	4	6	8' - 0"	Str.
	f1	9	4	5' - 0"	S6A
	h2	118	4	8' - 9"	17A
⌀	j2	2	4	6' - 9"	Str.
	j21	58	4	7' - 0"	Str.
⌀	j22	4	4	8' - 6"	Str.
	j23	1	4	6' - 6"	Str.
	k2	245	4	12' - 6"	17
	m2	93	5	9' - 0"	Str.
⌀	m21	4	5	15' - 0"	Str.
⌀	m22	2	5	7' - 3"	Str.
⌀	m23	7	5	9' - 9"	Str.
	n2	105	5	8' - 0"	Str.
⌀	n21	3	5	13' - 3"	Str.
⌀	n22	2	5	7' - 6"	Str.
⌀	n23	7	5	8' - 9"	Str.
	p2	12	4	51' - 6"	Str.
⌀	p3	13	4	101' - 3"	Str.
	p4	12	4	50' - 3"	Str.
✳	z2	5	6	2' - 3"	Str.

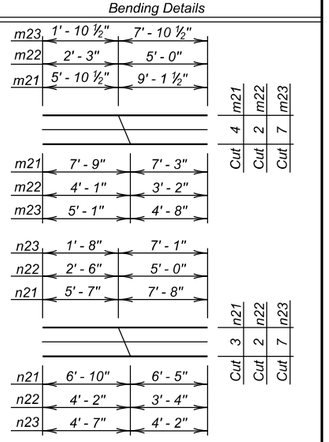

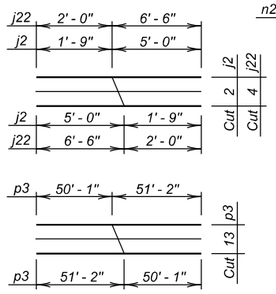

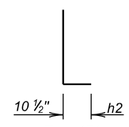

Type 17A

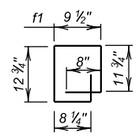

Type S6A

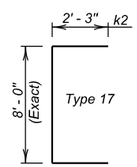

Type 17

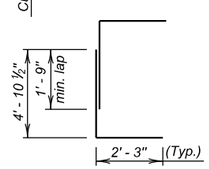

OPTIONAL k2 SPLICE DETAIL
Contractor may use optional reinforcing steel splice, as shown. The cost of the additional reinforcing steel shall be borne by the Contractor.

NOTES:

⌀ See cutting diagram.

All dimensions are out to out of bars.

Request for additional reinforcing steel splices at points other than those shown, must be submitted to the Engineer for prior approval. If additional splices are approved, no payment will be allowed for the added quantity of reinforcing steel.

✳ Quantity of z2 dowel bars is not included in reinforcing steel quantity. See BREAKOUT AND DOWEL PLACEMENT DETAILS sheet.

ESTIMATED QUANTITIES

ITEM	Class A45 Concrete, Box Culvert	Reinforcing Steel	Structure Excavation, Box Culvert
UNIT	Cu.Yd.	Lb.	Cu.Yd.
1 - F8 Barrel End Section @ 42' - 2 5/16"	37.2	6852	11.3

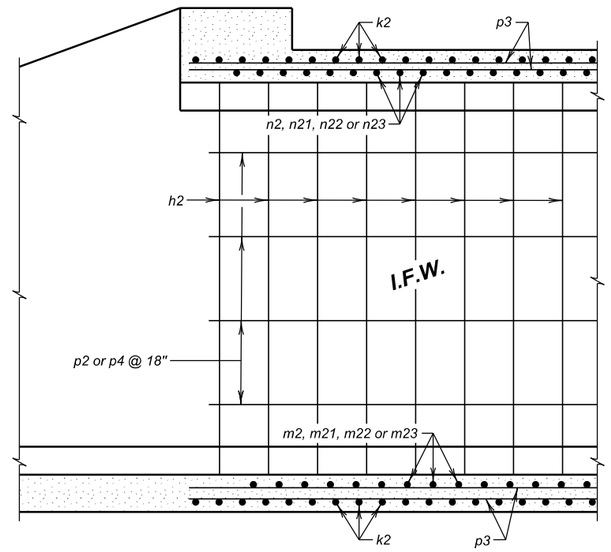

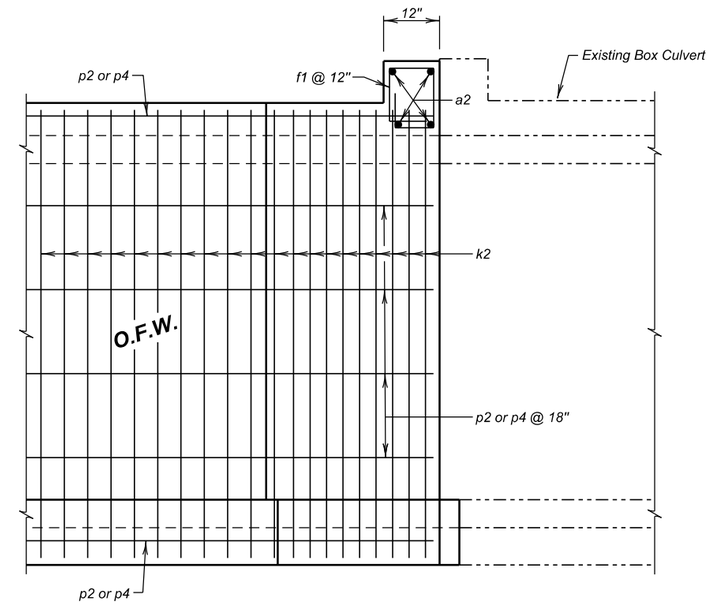

ELEVATION

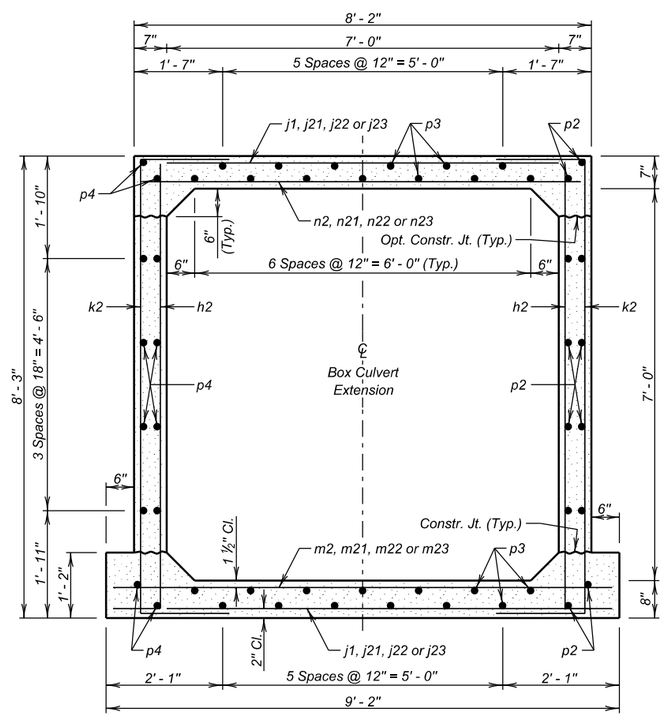

F8 BARREL SECTION
(8' - 0" Maximum Fill)

LEGEND FOR PLACING RE- STEEL

O.F.W. - Outside Face of Wall
I.F.W. - Inside Face of Wall

F8 BARREL END SECTION DETAILS (47' - 2 5/16") (B)

FOR

7' X 7' BOX CULVERT EXTENSION

I90 OVER CREEK
STA. 47 + 55.18 (WBL)
STR. NO. 47-073-518

0° SKEW W/ 45° LHF DOGLEG
SEC. 20-T4N-R6E
IM 0901(38)40
HS 20-44
(& ALT.)

MEADE COUNTY
S. D. DEPT. OF TRANSPORTATION
AUGUST 2015

6 OF 7

DESIGNED BY	CK. DES. BY	DRAFTED BY	
JMH	BB	GW/MG	Steve A. Johnson BRIDGE ENGINEER
MEAD5580	5580WC06		

YEAR PLATE DETAILS FOR ORIGINAL CONSTRUCTION

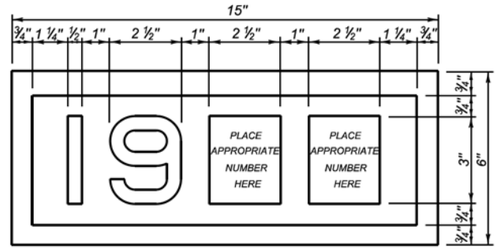

YEAR PLATE DETAILS FOR NEW CONSTRUCTION

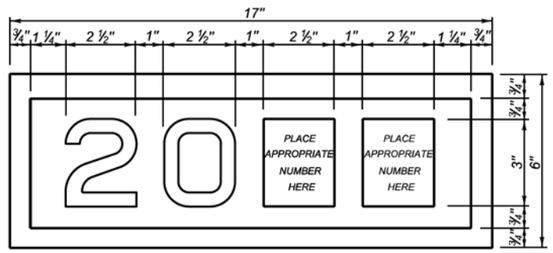

GENERAL NOTES:

1. Year plates of the general dimensions shown shall be constructed on all box culverts and bridges. The year plates shall be constructed in reverse and attached to the forms in such a manner that the finished imprint in the concrete does not exceed one-half (½) inch in depth.
2. Year plates shall be located on structure(s) as follows:
   a. On cast-in-place box culverts the year plates shall be four and one - half (4 ½) inches below the top of the upstream parapet wall and centered laterally on the upstream face. On precast box culverts the year plate shall be centered laterally on the upstream face of the top slab. Where an extended interior wall interferes with this location, the year plate shall be centered in an adjacent barrel.
   b. On bridges with six (6) inch curbs or "Jersey" shaped barriers with no endblocks, the year plate shall be centered vertically on the curb face approximately six (6) inches from the end of the bridge, or as designated by the Engineer. On bridges with "Jersey" shaped barrier endblocks, the year plate shall be centered on the upper sloped portion of the barrier approximately 5'- 6" from the end of the bridge, or as designated by the Engineer. There shall be one year plate at each end of the bridge on opposite sides.
   c. When the plans specify that both the original date of construction and the date of reconstruction are to be shown, one date shall be placed as listed above and the other located adjacent to it. Both year plates shall be shown at each end of the bridge on opposite sides.
3. There will be no separate measurement or payment made for year plates on box culverts and bridges. All costs for this work shall be incidental to other contract items.

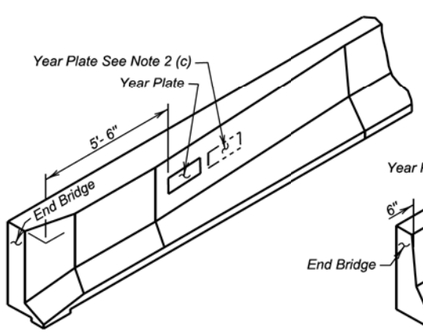

JERSEY BARRIER
(With Endblock)

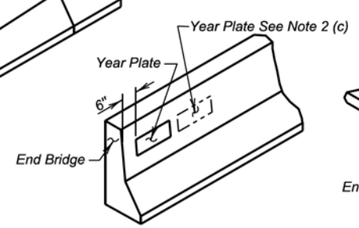

JERSEY BARRIER

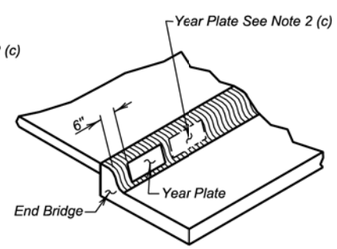

TYPE B CURB

June 26, 2012

Published Date: 3rd Qtr. 2016	SDDOT	DUAL DATE YEAR PLATE DETAILS	PLATE NUMBER 460.03
			Sheet 1 of 1

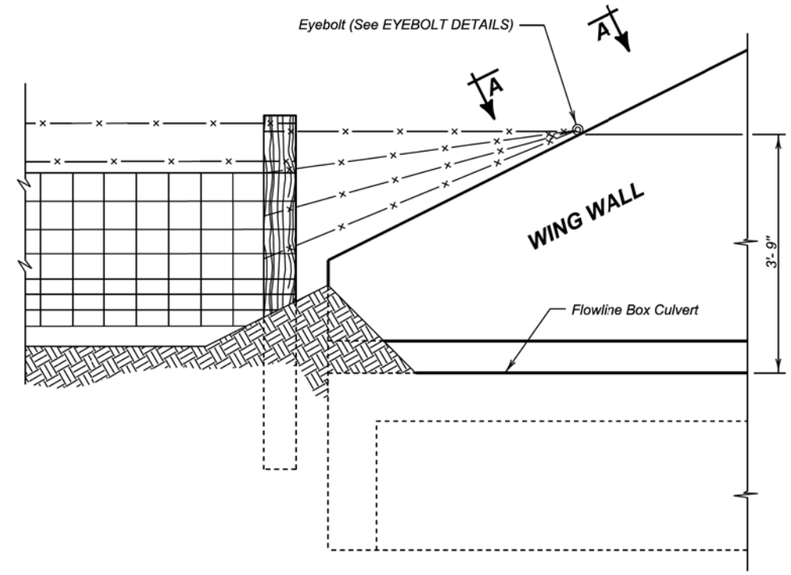

DETAIL FOR FENCE ANCHORS

GENERAL NOTES:

1. The fence and post details shown are for illustrative purpose only. The fence shall be as specified elsewhere in the plans.
2. Eyebolts shall be placed on all of the box culvert wing walls.
3. Eyebolts shall be ⅝ inch diameter and shall conform to ASTM A307.
4. Eyebolts, nuts, and concrete inserts shall be galvanized in accordance with AASHTO M232 (ASTM A153). Concrete inserts of corrosion resistant material need not be galvanized.
5. Cast-in-place eyebolts shall have a nut attached, be 4 ½ inches (Min.) in length and shall be embedded such that the eye of the bolt is flush with the concrete surface. (See Eyebolt Details) As an alternate, cast-in-place concrete inserts, capable of developing the full strength of the ⅝ inch diameter threaded eyebolt, may be used and shall be set in the concrete in accordance with the manufacturer's recommendations. The eyebolt shall be of sufficient length to develop its full strength. The eye of the eyebolt shall be flush with the concrete surface.
6. The cost for furnishing and installing eyebolts and/or concrete inserts shall be incidental to various contract items.

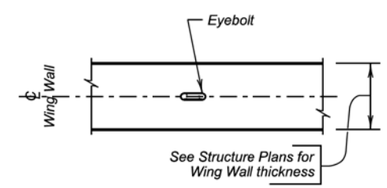

VIEW A - A

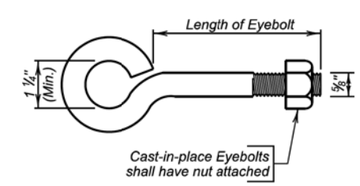

EYEBOLT DETAILS

December 23, 2012

Published Date: 3rd Qtr. 2016	SDDOT	FENCE ANCHORS FOR BOX CULVERT WING WALLS	PLATE NUMBER 620.16
			Sheet 1 of 1

The elevations shown in these plans are based on the National Geodetic Survey (NGS) North American Vertical Datum of 1988 (NAVD88).

STATE OF	PROJECT	SHEET NO.	TOTAL SHEETS
S.D.	IM 0901(38)40	E25	E199

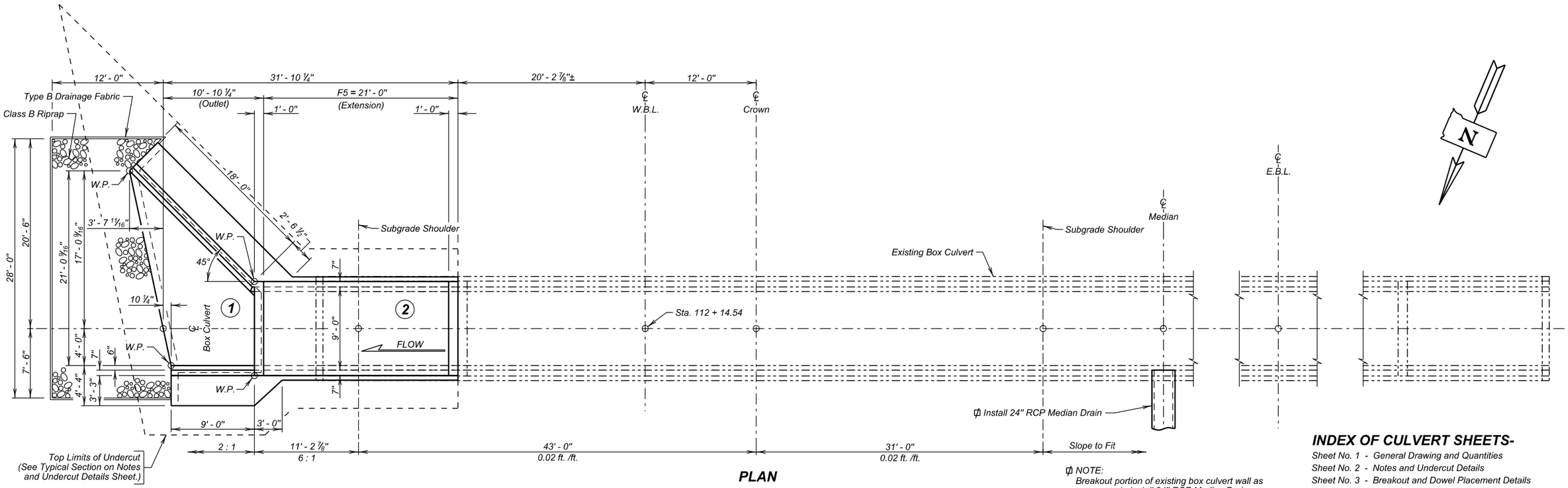

PLAN

NOTE:
Breakout portion of existing box culvert wall as necessary to install 24" RCP Median Drain

INDEX OF CULVERT SHEETS-

Sheet No. 1 - General Drawing and Quantities
Sheet No. 2 - Notes and Undercut Details
Sheet No. 3 - Breakout and Dowel Placement Details
Sheet No. 4 - Outlet Details (A)
Sheet No. 5 - Outlet Details (B)
Sheet No. 6 - F5 Barrel End Section Details (21' - 0")
Sheet No. 7 - Standard Plate No.'s 460.03 and 620.16

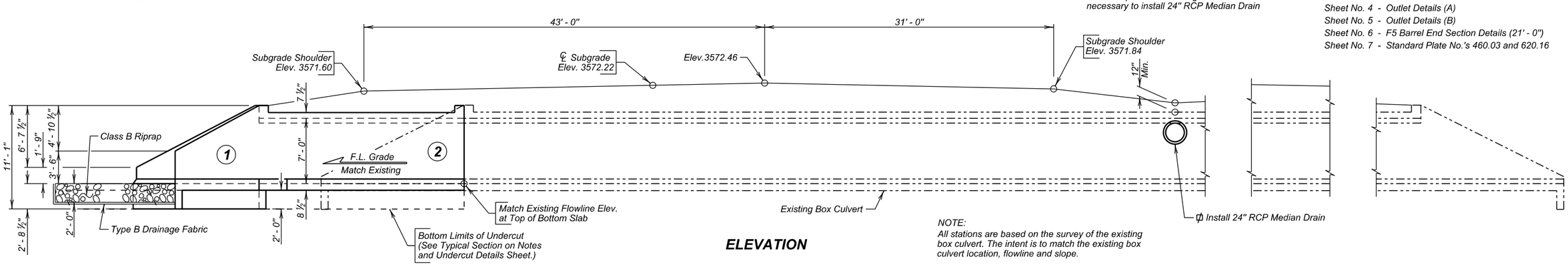

ELEVATION

NOTE:
All stations are based on the survey of the existing box culvert. The intent is to match the existing box culvert location, flowline and slope.

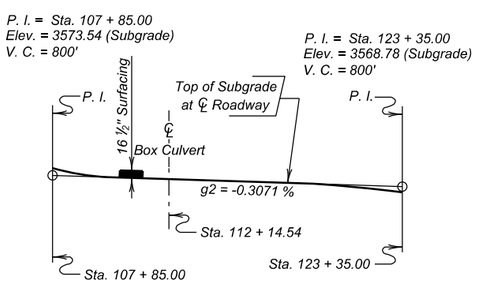

GRADELINE DATA

(Westbound Lanes)

ESTIMATED QUANTITIES

	ITEM	UNIT	QUANTITY
	Class A45 Concrete, Box Culvert	Cu. Yd.	34.1
	Reinforcing Steel	Lb.	5455
	Structure Excavation, Box Culvert	Cu. Yd.	16.2
	Box Culvert Undercut	Cu. Yd.	63
	Breakout Structural Concrete	Cu. Yd.	9.1
	Install Dowel in Concrete	Each	20
#	Class B Riprap	Ton	31.4
	Type B Drainage Fabric	Sq. Yd.	52

For estimating purposes only, a factor of 1.4 tons/cu. yd. was used to convert Cu. Yd. to Tons.

GENERAL DRAWING AND QUANTITIES

FOR

9' X 7' BOX CULVERT EXTENSION

OVER CREEK — 0° SKEW
STA. 112 + 14.54 (WBL) — SEC. 29-T4N-R6E
STR. NO. 47-078-529 — IM 0901(38)40
PCN 5580 — HS 20-44 & ALT.

MEADE COUNTY

S. D. DEPT. OF TRANSPORTATION

FEBRUARY 2014

DESIGNED BY	CK. DES. BY	DRAFTED BY	
MM/PW	JMH	GW/MG	Steve A Johnson BRIDGE ENGINEER
MEAD5580	5580WD01		

STATE OF	PROJECT	SHEET NO.	TOTAL SHEETS
S.D.	IM 0901(38)40	E26	E199

SPECIFICATIONS

1. Design Specifications: AASHTO Standard Specifications for Highway Bridges, 2002 Edition (Service Load).
2. Construction Specifications: South Dakota Standard Specifications for Roads and Bridges, 2015 Edition and required Provisions, Supplemental Specifications and/or Special Provisions as included in the Proposal.

GENERAL NOTES

1. Design Live Load: HS 20-44, Alternte Loading, and construction load consisting of one 7' - 6" gage axle with gross weight = 95,850 lbs. The construction load shall not be applied until a minimum of 4 ft. of fill has been placed over the Box Culvert. Other construction loads in excess of legal load must be submitted thru proper channels to the Office of Bridge Design for analysis.
2. The design of the barrel section on a minimum fill height of 1 ft. and includes all subsequent fill heights up to and including the maximum fill height of 5 ft. (F5).
3. Unit Stresses: Concrete fc = 1800 p.s.i.
   Reinforcing Steel fs = 24000 p.s.i.
4. All concrete shall be Class A45 conforming to Section 460.
5. All reinforcing steel shall conform to ASTM A615 Grade 60.
6. All exposed edges shall be chamfered ¾ inch.
7. Use 1 inch clear cover on all reinforcing steel EXCEPT as shown.
8. The Contractor shall imprint on the structure the date of the existing box culvert construction as well as the date of new construction as specified and detailed on Standard Plate No. 460.03.
9. Care shall be taken to establish Working Points (W.P.) as shown on the wings.
10. Circled numbers in PLAN and ELEVATION views on the General Drawing are section I.D. Numbers (see SDDOT Materials Manual).
11. Cost of Preformed Expansion Joint Filler used in apron construction shall be incidental to the other contract items.
12. Compaction of earth embankment and box culvert backfill material shall be governed by the Specified Density method.
13. The subsurface soils throughout the project consist of clay-silt to gravelly clay-silt to gravel and cobbles.
14. It is anticipated that dewatering will be required to construct the box culvert extension. The Contractor will be responsible to verify groundwater location prior to construction and provide necessary means of dewatering the construction site and prevention of the inflow of additional water. The use of well points may be required in dewatering the site for construction.

DIMENSIONS OF EXISTING BOX CULVERT

All details and dimensions of the Existing Box Culvert, contained in these plans, are provided as information only. It is the Contractor's responsibility to inspect and verify actual field conditions and any necessary dimensions affecting the satisfactory completion of the work required for this project. Original construction plans can be obtained from the Office of Bridge Design.

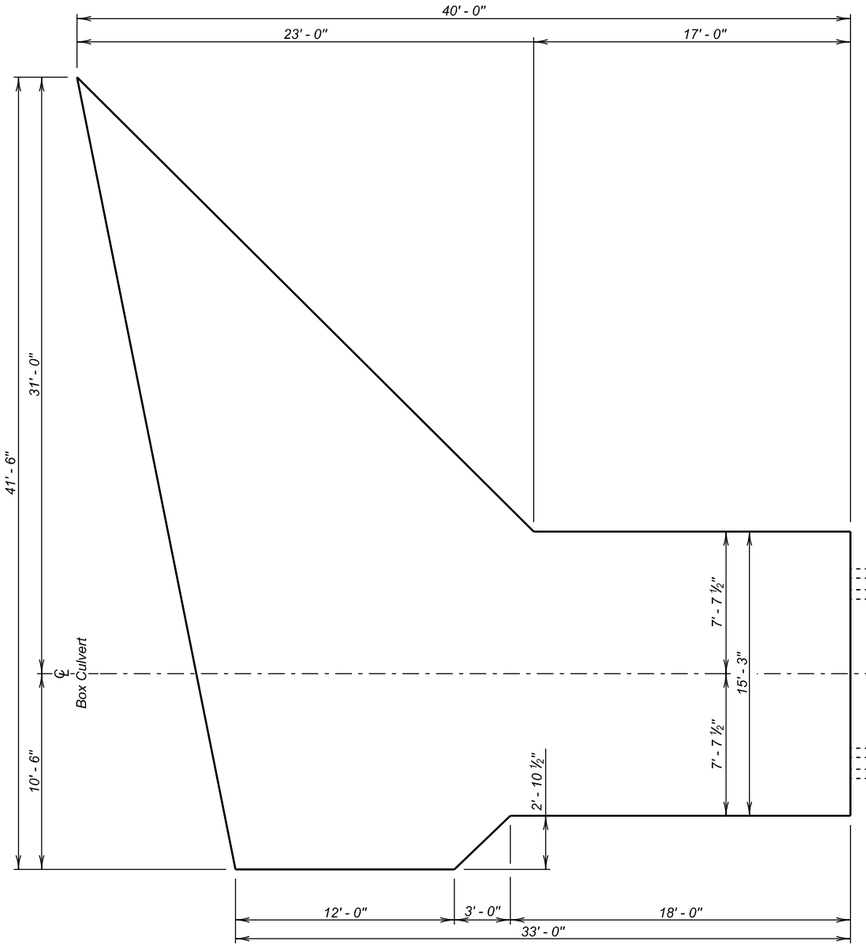

UNDERCUT LAYOUT
(Bottom Dimensions)

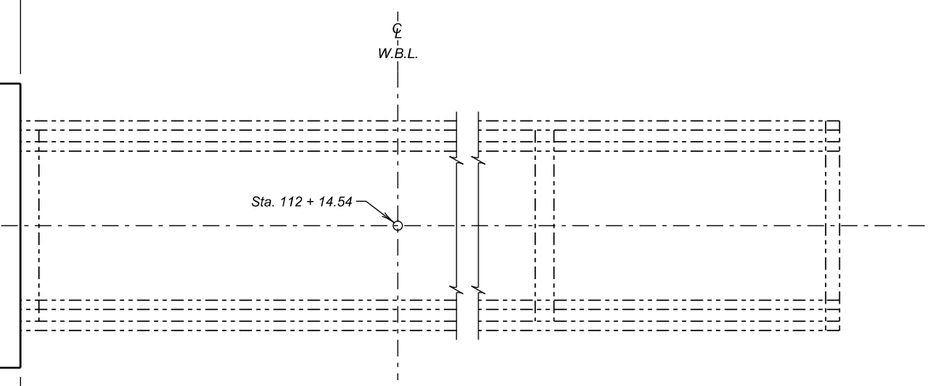

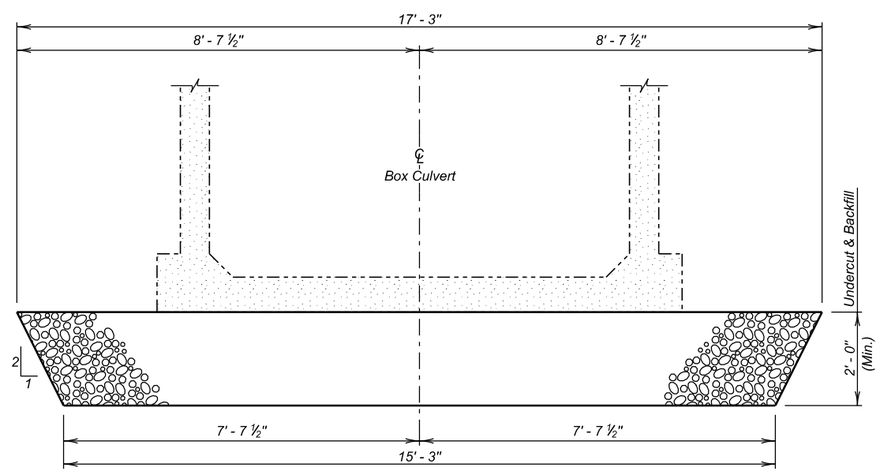

TYPICAL SECTION
(For Limits of Undercut)

ESTIMATED QUANTITIES

ITEM	UNIT	QUANTITY
⌀ Box Culvert Undercut	Cu. Yd.	63

⌀ For payment, quantity is based on plan shown undercut dimensions and will not be measured unless the Engineer orders a change.

NOTES AND UNDERCUT DETAILS

FOR

9' X 7' BOX CULVERT EXTENSION

OVER CREEK — 0° SKEW
STA. 112 + 14.54 (WBL) — SEC. 29-T4N-R6E
STR. NO. 47-078-529 — IM 0901(38)40
HS 20-44 & ALT.

MEADE COUNTY

S. D. DEPT. OF TRANSPORTATION

FEBRUARY 2014

2 OF 7

DESIGNED BY	CK. DES. BY	DRAFTED BY	
MM/PW	JMH	GW/MG	Steve A Johnson BRIDGE ENGINEER
MEAD5580	5580WD02		

STATE OF	PROJECT	SHEET NO.	TOTAL SHEETS
S.D.	IM 0901(38)40	E27	E199

BREAKOUT STRUCTURAL CONCRETE

1. This work shall consist of breaking out and disposing of structural concrete. All broken out concrete and other discarded material shall be disposed of in accordance with the ENVIRONMENTAL COMMITMENT notes found in Section A.
2. Define the breakout limits with ¾ inch saw cuts.
3. Any additional breakout required due to spalling or cracking of the existing structure will be determined by the Engineer. Where additional breakout in the barrel section of the existing structure is required, care shall be taken not to damage any of the existing reinforcing steel. All steel will be left in place and thoroughly cleaned by sandblasting.
4. Additional breakout in existing walls or top slab will require shoring up of the parapet and top slab, as directed by the Engineer.
5. Plans quantity payment will be full compensation for this item regardless of the quantity actually broken out, unless measurement is ordered by the Engineer. If the Engineer orders breakout beyond the limits shown, this additional breakout will be paid for at the contract unit price per cubic yard for Breakout Structural Concrete. If additional breakout is caused by the Contractor's operations, no additional payment will be made.
6. Breakout Structural Concrete will be paid for at the contract unit price per cubic yard. This payment shall be full compensation for furnishing all materials, labor, tools and equipment necessary or incidental to breaking out the structural concrete. Payment includes, but is not limited to, excavation required to perform the required breakout, sawcutting, breaking out concrete, cleaning, and sandblasting reinforcing steel and concrete surfaces, and removing and disposing of all waste materials to satisfactorily complete the work.

INSTALLING DOWELS IN CONCRETE

1. Dowels shall be installed as per Section 380.3 C.1.
2. No loads shall be applied to the epoxy grouted dowel bars until the epoxy resin has had sufficient time to cure as specified by the epoxy resin manufacturer.
3. Embed z2 dowels 8" into existing concrete.
4. Dowel bars shall be #6 deformed bars conforming to ASTM A615 Grade 60.
5. The cost of drilling holes, epoxy resin, dowels, installation, and other incidental items shall be included in the contract unit price per each for Install Dowel in Concrete.

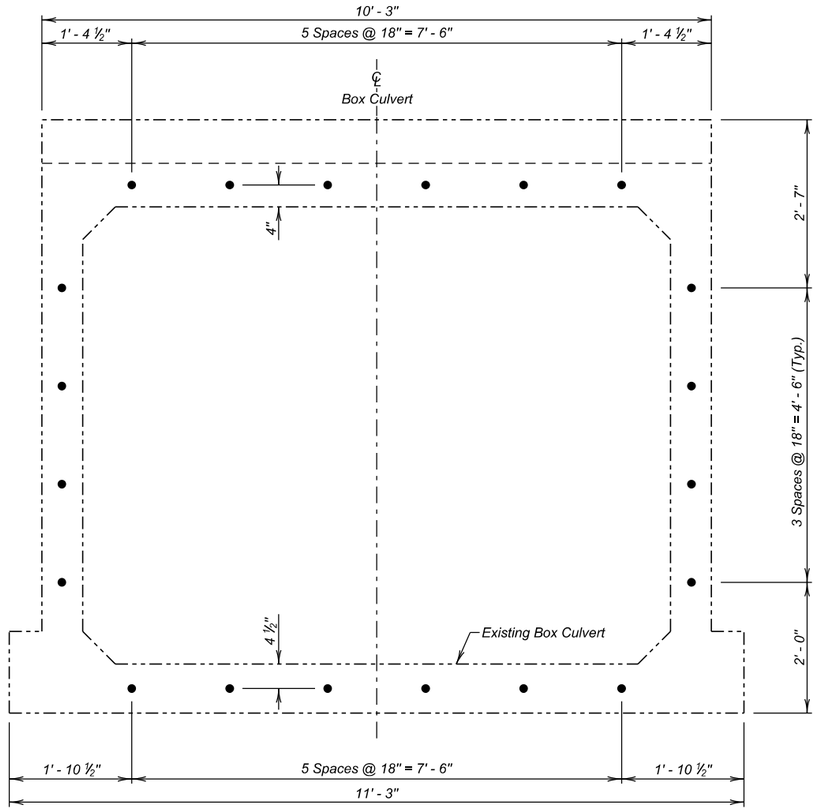

VIEW A - A
(Dowel Locations)

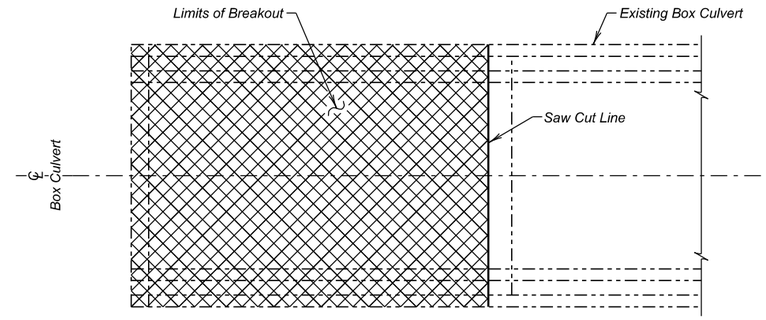

PLAN - BREAKOUT DETAILS

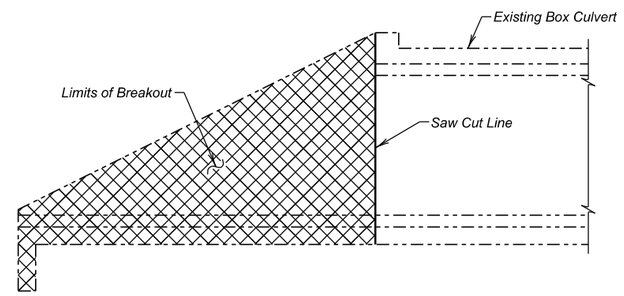

ELEVATION - BREAKOUT DETAILS

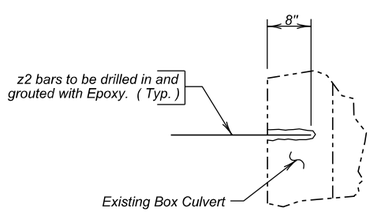

DETAIL "X"

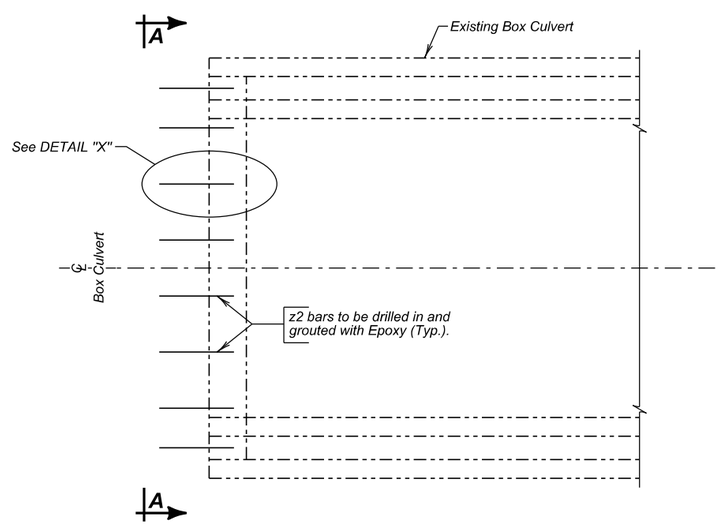

PLAN - DOWEL DETAILS
(Outlet)

ESTIMATED QUANTITIES
(Outlet)

ITEM	UNIT	QUANTITY
Breakout Structural Concrete	Cu. Yd.	9.1
Install Dowel In Concrete	Each	20

BREAKOUT AND DOWEL PLACEMENT DETAILS
FOR
9' X 7' BOX CULVERT EXTENSION

OVER CREEK — 0° SKEW
STA. 112 + 14.54 (WBL) — SEC. 29-T4N-R6E
STR. NO. 47-078-529 — IM 0901(38)40
HS 20-44 & ALT.

MEADE COUNTY
S. D. DEPT. OF TRANSPORTATION
FEBRUARY 2014

3 OF 7

DESIGNED BY	CK. DES. BY	DRAFTED BY	
MM/PW	JMH	GW/MG	Steve A. Johnson BRIDGE ENGINEER
MEAD5580	5580WD03		

STATE OF	PROJECT	SHEET NO.	TOTAL SHEETS
S.D.	IM 0901(38)40	E28	E199

NOTE:
Apron shall NOT be built monolithic with the Box Culvert.

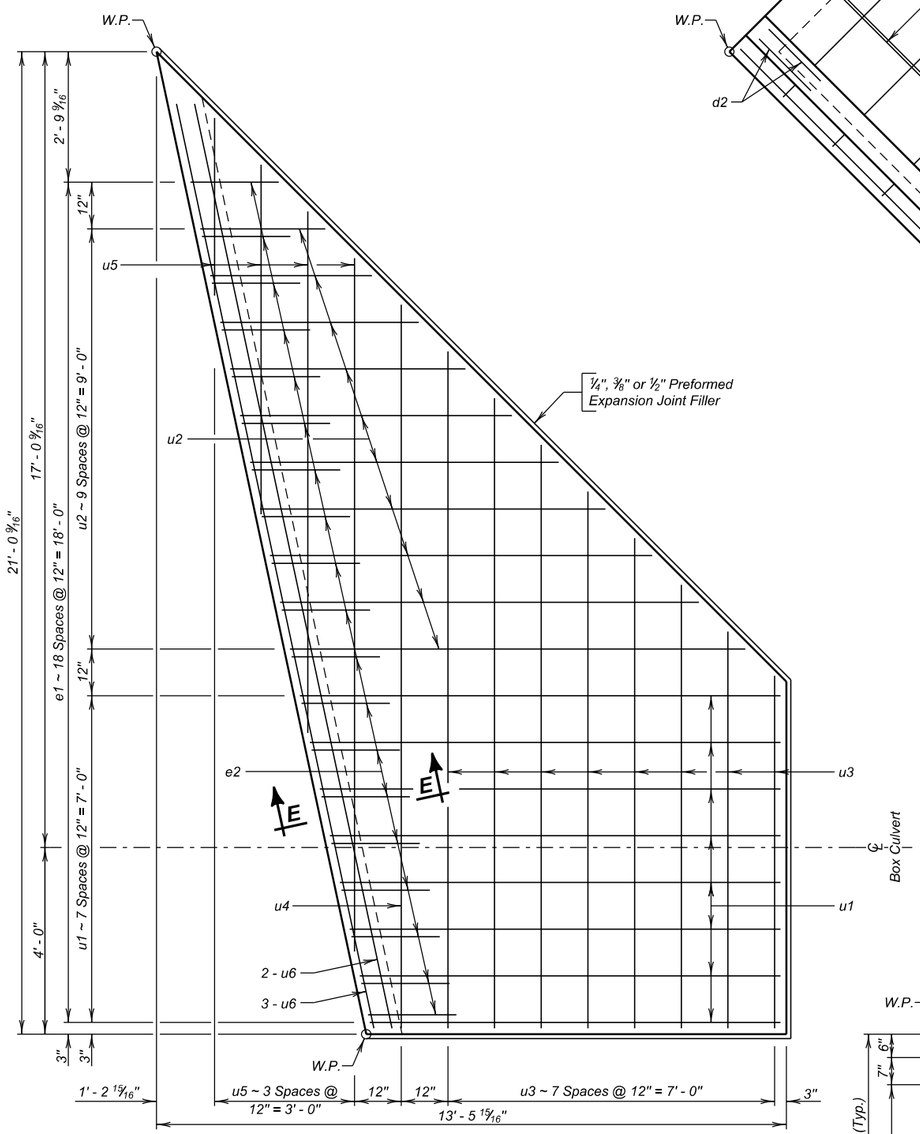

PLAN

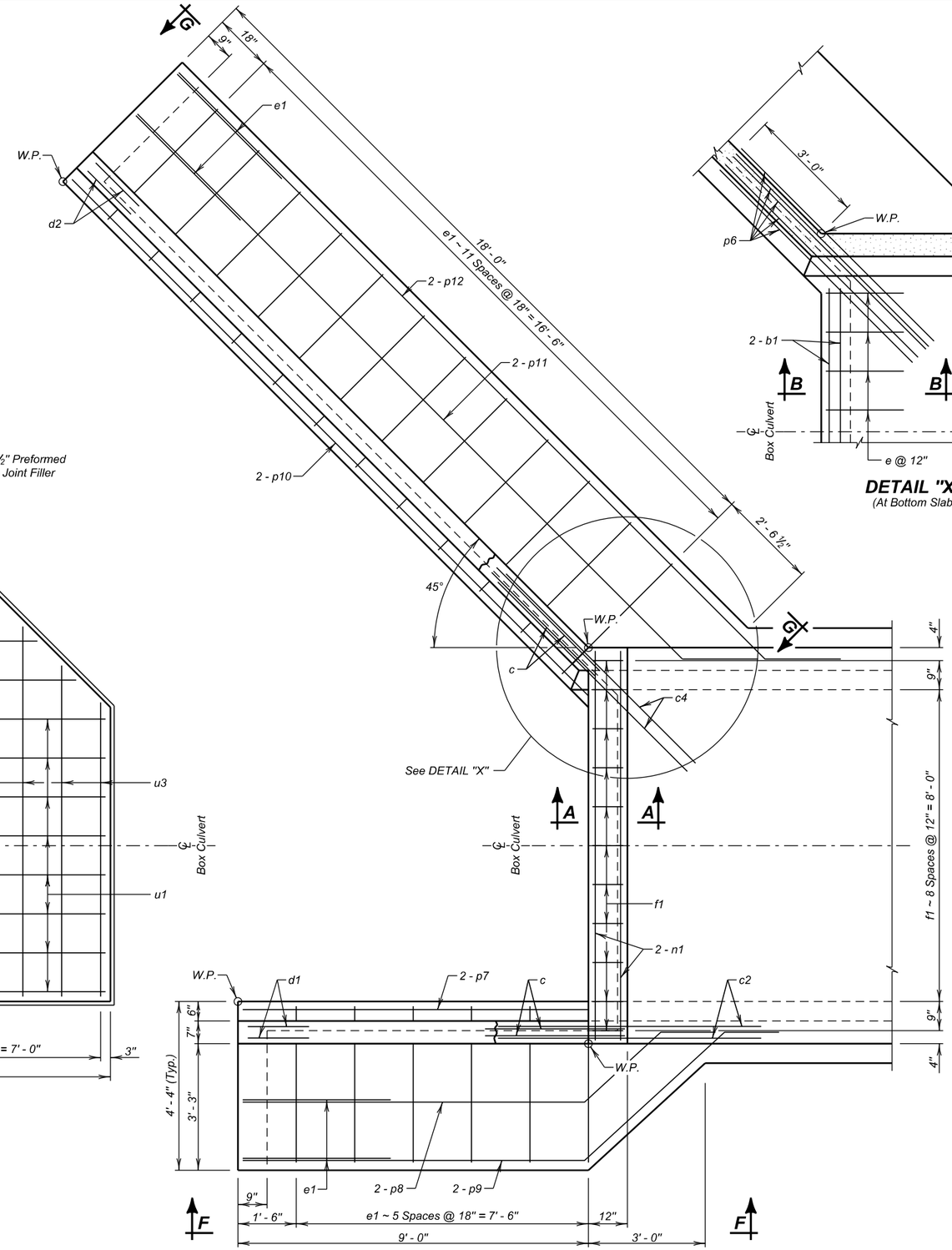

PLAN

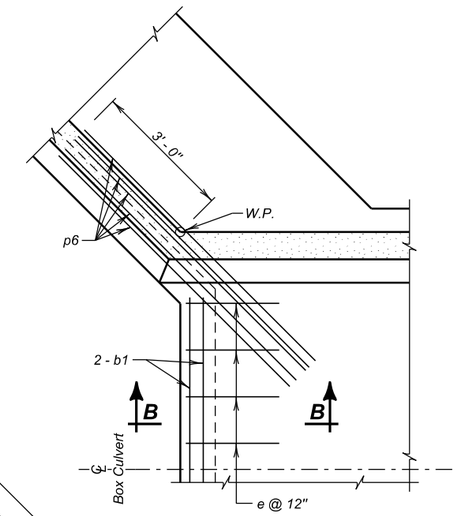

DETAIL "X"
(At Bottom Slab)

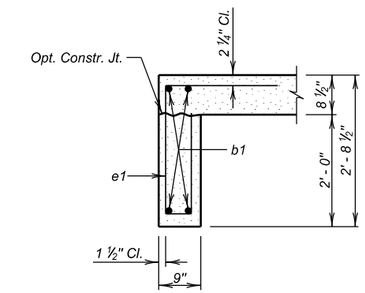

SEC. B - B

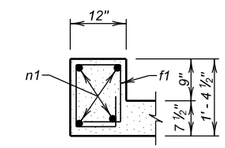

SEC. A - A
(At top Slab)

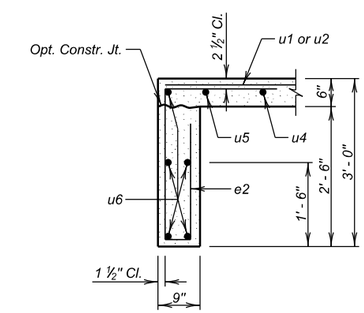

SEC. E - E

OUTLET DETAILS (A)

FOR

9' X 7' BOX CULVERT EXTENSION

OVER CREEK — 0° SKEW
STA. 112 + 14.54 (WBL) — SEC. 29-T4N-R6E
STR. NO. 47-078-529 — IM 0901(38)40
HS 20-44 & ALT.

MEADE COUNTY
S. D. DEPT. OF TRANSPORTATION
FEBRUARY 2014

DESIGNED BY	CK. DES. BY	DRAFTED BY	
MM/PW	JMH	GW/MG	Steve A. Johnson BRIDGE ENGINEER
MEAD5580	5580WD04		

STATE OF	PROJECT	SHEET NO.	TOTAL SHEETS
S.D.	IM 0901(38)40	E29	E199

ESTIMATED QUANTITIES

ITEM	Class A45 Concrete, Box Culvert	Reinforcing Steel	Structure Excavation, Box Culvert
UNIT	Cu. Yd.	Lb.	Cu. Yd.
Outlet	11.4	1344	5.8
Outlet Apron	4.2	335	4.2

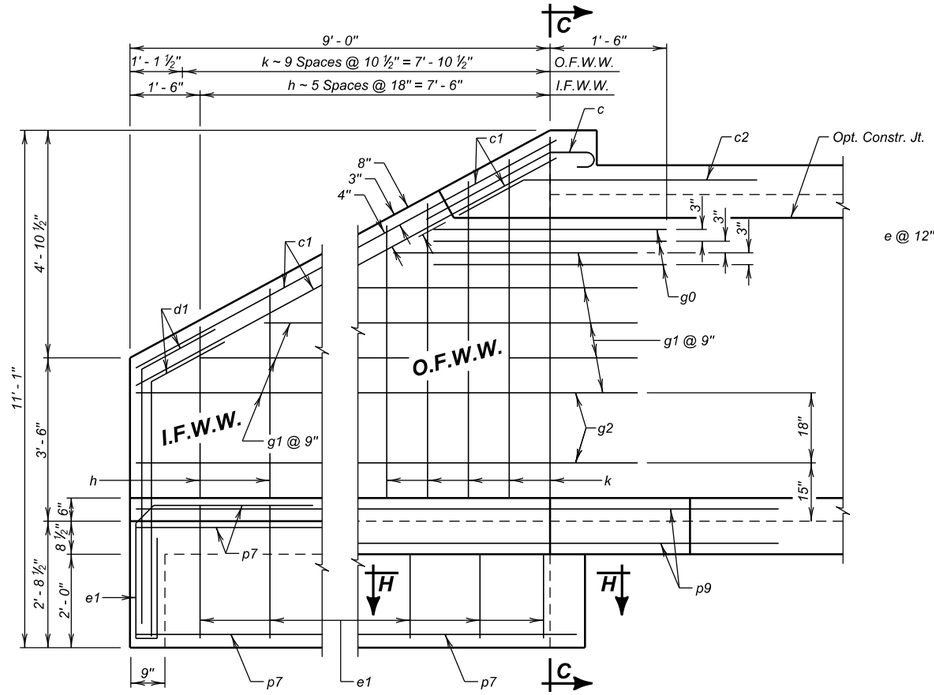

VIEW F - F

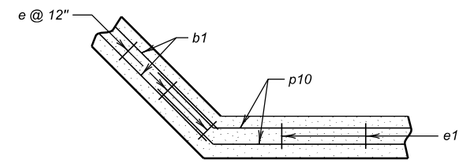

SEC. J - J

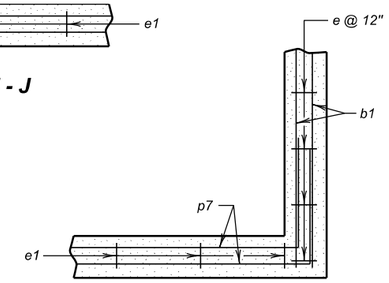

SEC. H - H

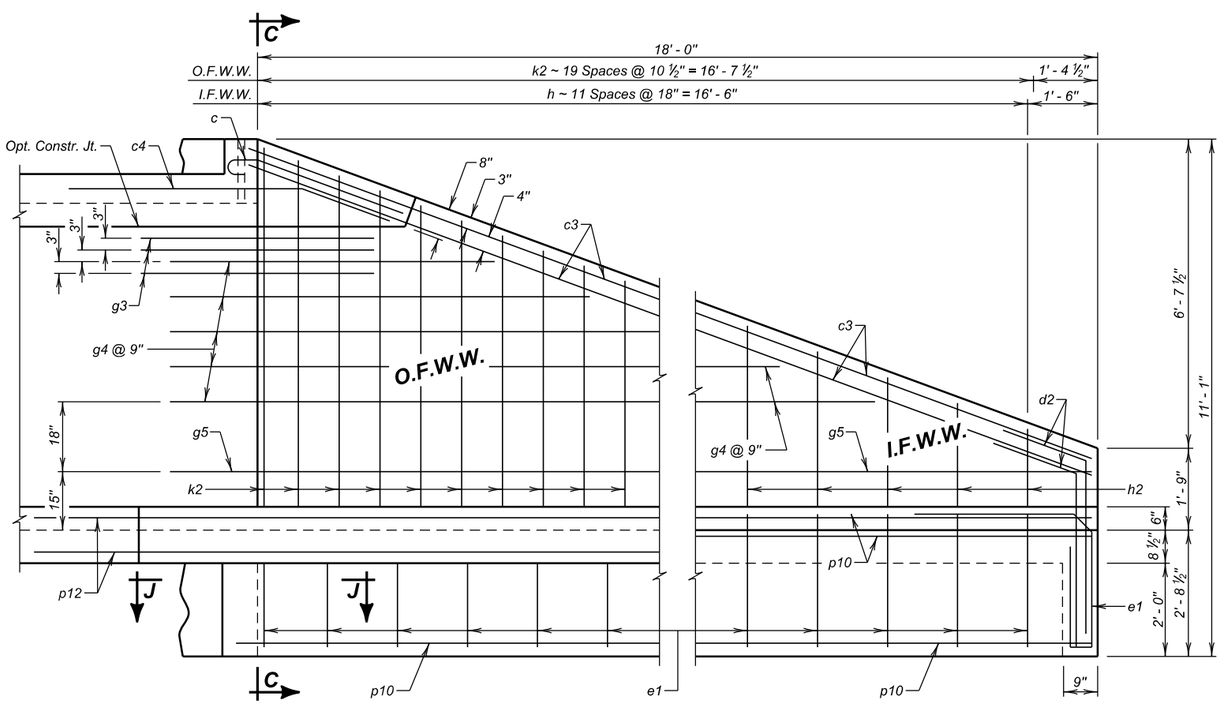

VIEW G - G

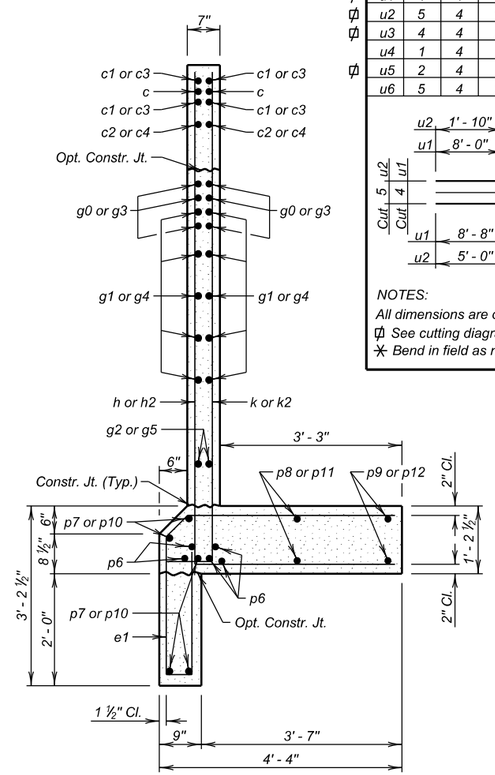

SEC. C - C

REINFORCING SCHEDULE

	Mk.	No.	Size	Length	Type
	b1	4	6	8' - 3"	Str.
✳	c	4	5	4' - 6"	1A
	c1	4	5	10' - 0"	Str.
	c2	2	5	7' - 0"	19B
	c3	4	5	19' - 0"	Str.
	c4	2	5	7' - 0"	19B
	d1	4	5	7' - 3"	19B
	d2	4	5	5' - 6"	19B
	e	9	4	7' - 0"	S12
	e1	22	4	9' - 6"	S12A
	f1	11	4	5' - 0"	S6A
	g0	6	5	5' - 0"	Str.
✱	g1	4	4	15' - 3"	Str.
	g2	4	4	10' - 9"	Str.
	g3	6	5	5' - 0"	19B
✱	g4	5	4	22' - 9"	19B
	g5	2	4	19' - 9"	19B
✱	h	3	4	20' - 0"	17A
✱	h2	6	4	18' - 0"	17A
✱	k	5	4	15' - 0"	17A
✱	k2	10	4	13' - 3"	17A
	n1	4	6	10' - 0"	Str.
	p6	10	6	7' - 0"	Str.
✳	p7	5	4	11' - 6"	Str.
✳	p8	2	4	13' - 0"	Str.
✳	p9	2	4	15' - 3"	Str.
✳	p10	5	4	20' - 6"	Str.
✳	p11	2	4	21' - 3"	Str.
✳	p12	2	4	22' - 9"	Str.
	OUTLET APRON				
	e2	19	4	7' - 6"	S12
✱	u1	4	4	17' - 6"	Str.
✱	u2	5	4	10' - 9"	Str.
✱	u3	4	4	21' - 6"	Str.
	u4	1	4	15' - 3"	Str.
✱	u5	2	4	16' - 0"	Str.
	u6	5	4	20' - 3"	Str.

Bending Details

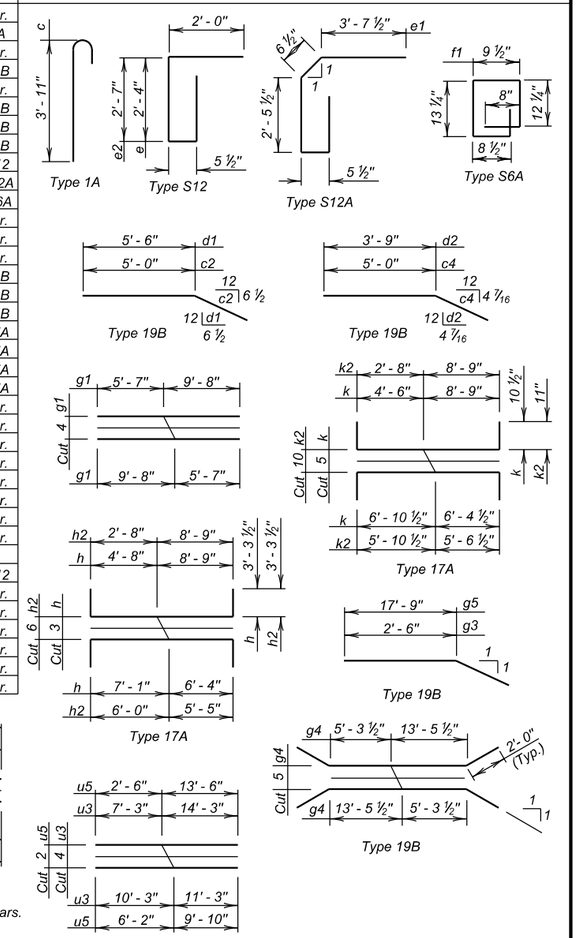

NOTES:
All dimensions are out to out of bars.
✱ See cutting diagram.
✳ Bend in field as necessary to fit.

LEGEND FOR PLACING RE-STEEL

O. F. W. W. - Outside Face of Wing Wall
I. F. W. W. - Inside Face of Wing Wall

OUTLET DETAILS (B)

FOR

9' X 7' BOX CULVERT EXTENSION

OVER CREEK — 0° SKEW
STA. 112 + 14.54 (WBL) — SEC. 29-T4N-R6E
STR. NO. 47-078-529 — IM 0901(38)40
HS 20-44 & ALT.

MEADE COUNTY
S. D. DEPT. OF TRANSPORTATION
FEBRUARY 2014

DESIGNED BY	CK. DES. BY	DRAFTED BY	
MM/PW	JMH	GW/MG	Steve A Johnson BRIDGE ENGINEER
MEAD5580	5580WD05		

STATE OF	PROJECT	SHEET NO.	TOTAL SHEETS
S.D.	IM 0901(38)40	E30	E199

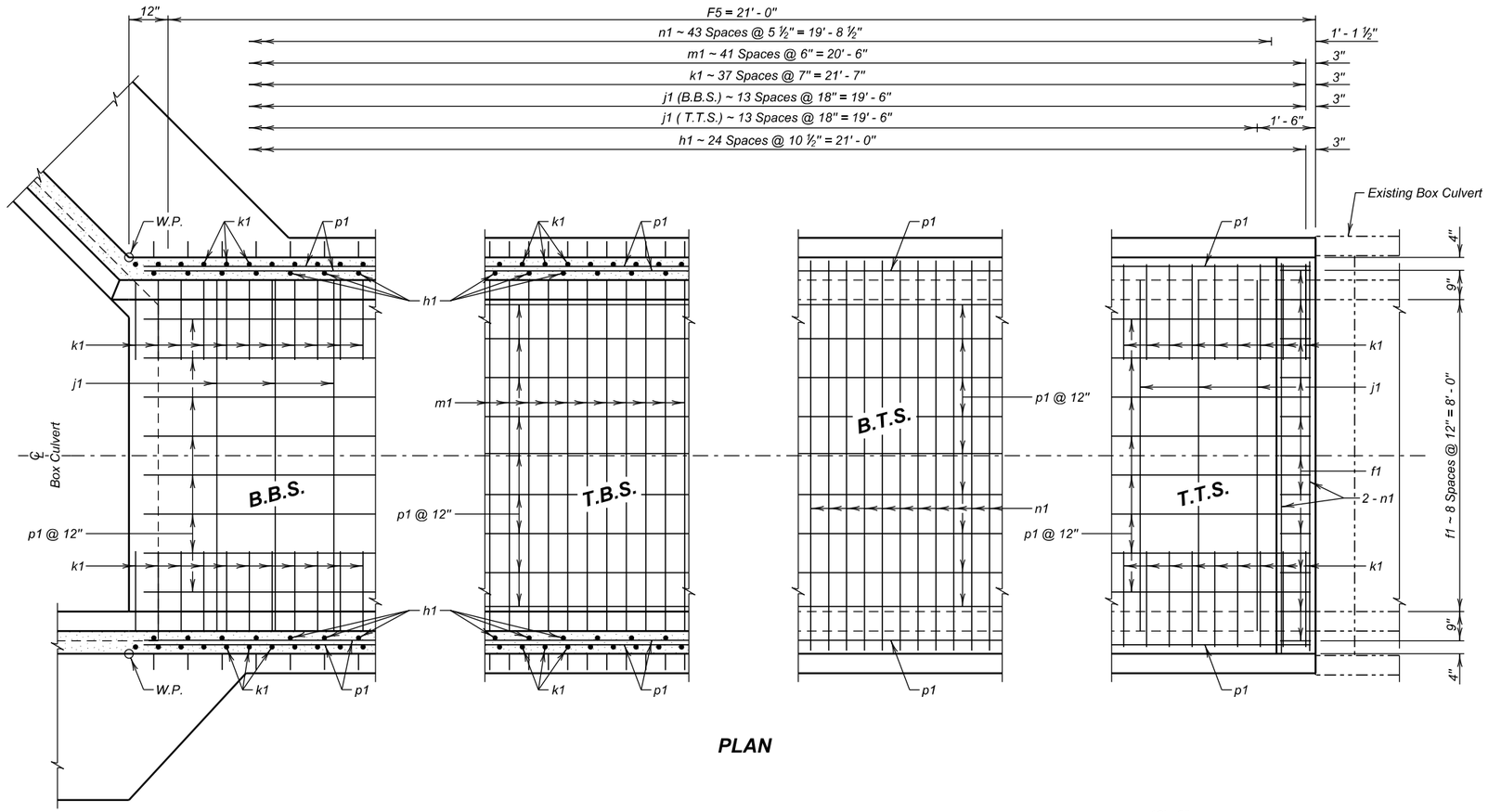

PLAN

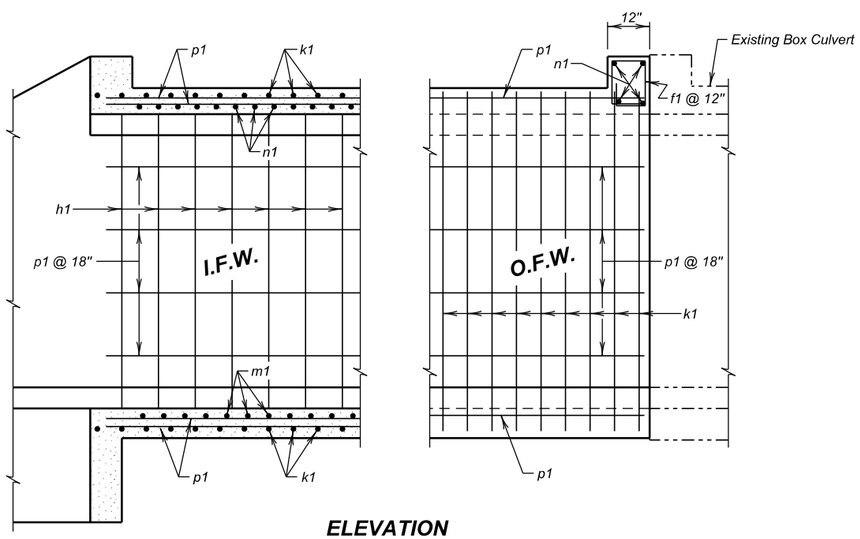

ELEVATION

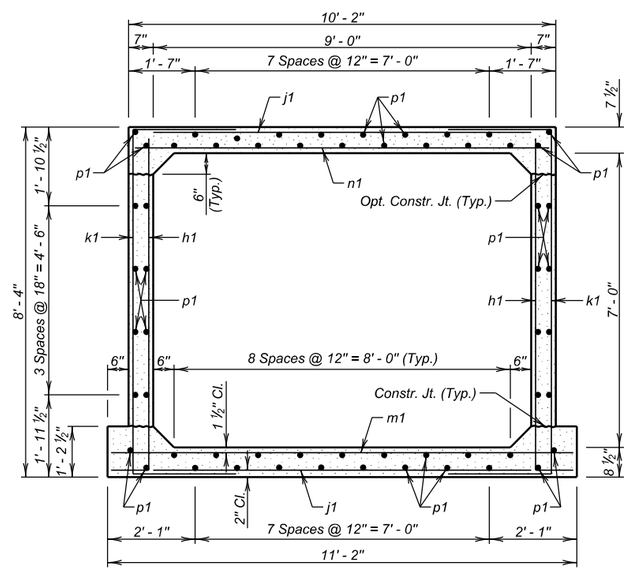

F5 BARREL SECTION
(5' - 0" Maximum Fill)

REINFORCING SCHEDULE
(For One F5 Barrel End Section @ 21' - 0")

Mk.	No.	Size	Length	Type
f1	11	4	5' - 0"	S6A
h1	50	4	8' - 9"	17A
j1	28	4	9' - 0"	Str.
k1	76	5	13' - 0"	17
m1	42	6	11' - 0"	Str.
n1	48	6	10' - 0"	Str.
p1	58	4	21' - 6"	Str.
z2	6	6	2' - 3"	Str.

Bending Details

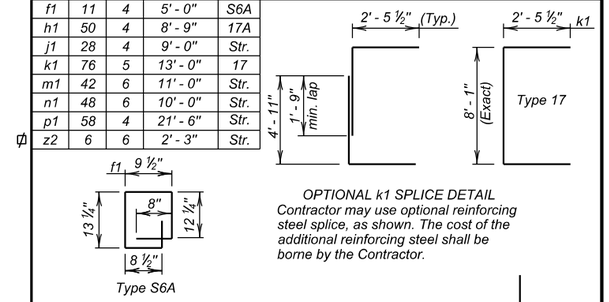

OPTIONAL k1 SPLICE DETAIL
Contractor may use optional reinforcing steel splice, as shown. The cost of the additional reinforcing steel shall be borne by the Contractor.

NOTES:

All dimensions are out to out of bars.

Request for additional reinforcing steel splices at points other than those shown, must be submitted to the Engineer for prior approval. If additional splices are approved, no payment will be allowed for the added quantity of reinforcing steel.

℄ Quantity of z2 dowel bars is not included in reinforcing steel quantity. (See BREAKOUT AND DOWEL PLACEMENT DETAILS Sheet.)

ESTIMATED QUANTITIES

ITEM	Class A45 Concrete, Box Culvert	Reinforcing Steel	Structure Excavation, Box Culvert
UNIT	Cu.Yd.	Lb.	Cu.Yd.
1 - F5 Barrel End Section @ 21' - 0"	18.5	3776	6.2

LEGEND FOR PLACING RE- STEEL

T.T.S. - Top of Top Slab
B.T.S. - Bottom of Top Slab
T.B.S. - Top of Bottom Slab
B.B.S. - Bottom of Bottom Slab
O.F.W. - Outside Face of Wall
I.F.W. - Inside Face of Wall

F5 BARREL END SECTION DETAILS (21' - 0")

FOR

9' X 7' BOX CULVERT EXTENSION

OVER CREEK — 0° SKEW
STA. 112 + 14.54 (WBL) — SEC. 29-T4N-R6E
STR. NO. 47-078-529 — IM 0901(38)40
HS 20-44 & ALT.

MEADE COUNTY

S. D. DEPT. OF TRANSPORTATION

FEBRUARY 2014

DESIGNED BY	CK. DES. BY	DRAFTED BY	
MM/PW	JMH	GW/MG	Steve A Johnson BRIDGE ENGINEER
MEAD5580	5580WD06		

YEAR PLATE DETAILS FOR ORIGINAL CONSTRUCTION

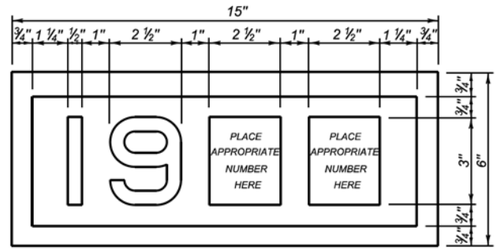

YEAR PLATE DETAILS FOR NEW CONSTRUCTION

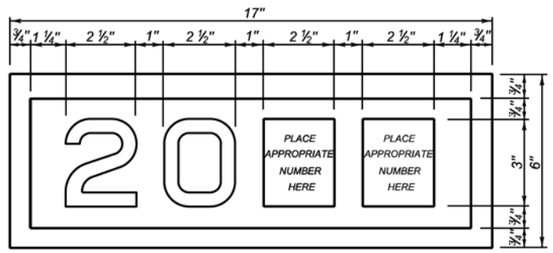

GENERAL NOTES:

1. Year plates of the general dimensions shown shall be constructed on all box culverts and bridges. The year plates shall be constructed in reverse and attached to the forms in such a manner that the finished imprint in the concrete does not exceed one-half (½) inch in depth.
2. Year plates shall be located on structure(s) as follows:
   a. On cast-in-place box culverts the year plates shall be four and one - half (4 ½) inches below the top of the upstream parapet wall and centered laterally on the upstream face. On precast box culverts the year plate shall be centered laterally on the upstream face of the top slab. Where an extended interior wall interferes with this location, the year plate shall be centered in an adjacent barrel.
   b. On bridges with six (6) inch curbs or "Jersey" shaped barriers with no endblocks, the year plate shall be centered vertically on the curb face approximately six (6) inches from the end of the bridge, or as designated by the Engineer. On bridges with "Jersey" shaped barrier endblocks, the year plate shall be centered on the upper sloped portion of the barrier approximately 5'- 6" from the end of the bridge, or as designated by the Engineer. There shall be one year plate at each end of the bridge on opposite sides.
   c. When the plans specify that both the original date of construction and the date of reconstruction are to be shown, one date shall be placed as listed above and the other located adjacent to it. Both year plates shall be shown at each end of the bridge on opposite sides.
3. There will be no separate measurement or payment made for year plates on box culverts and bridges. All costs for this work shall be incidental to other contract items.

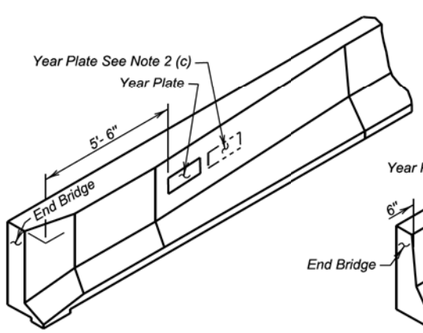

JERSEY BARRIER
(With Endblock)

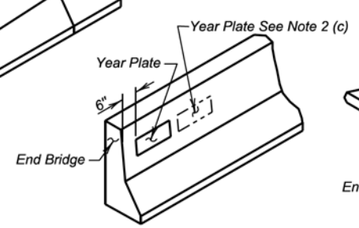

JERSEY BARRIER

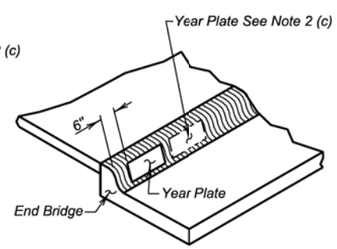

TYPE B CURB

June 26, 2012

Published Date: 3rd Qtr. 2016	SDDOT	DUAL DATE YEAR PLATE DETAILS	PLATE NUMBER 460.03
			Sheet 1 of 1

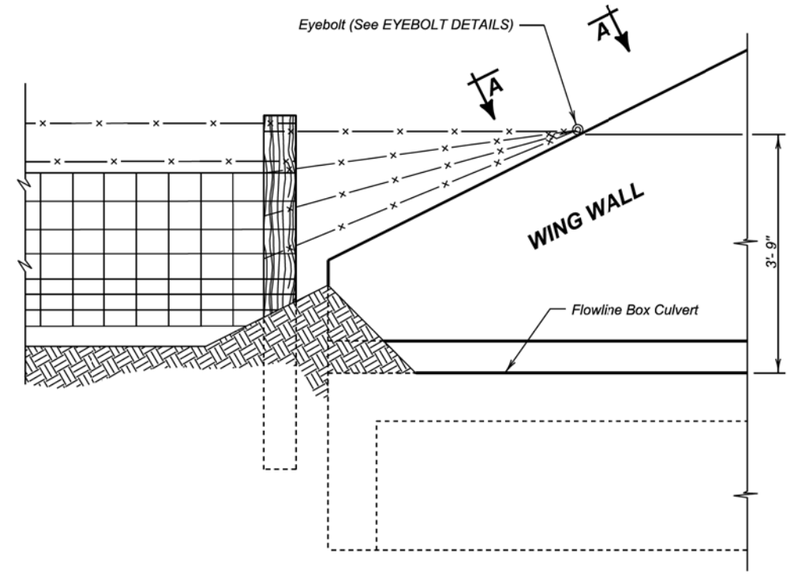

DETAIL FOR FENCE ANCHORS

GENERAL NOTES:

1. The fence and post details shown are for illustrative purpose only. The fence shall be as specified elsewhere in the plans.
2. Eyebolts shall be placed on all of the box culvert wing walls.
3. Eyebolts shall be ⅝ inch diameter and shall conform to ASTM A307.
4. Eyebolts, nuts, and concrete inserts shall be galvanized in accordance with AASHTO M232 (ASTM A153). Concrete inserts of corrosion resistant material need not be galvanized.
5. Cast-in-place eyebolts shall have a nut attached, be 4 ½ inches (Min.) in length and shall be embedded such that the eye of the bolt is flush with the concrete surface. (See Eyebolt Details) As an alternate, cast-in-place concrete inserts, capable of developing the full strength of the ⅝ inch diameter threaded eyebolt, may be used and shall be set in the concrete in accordance with the manufacturer's recommendations. The eyebolt shall be of sufficient length to develop its full strength. The eye of the eyebolt shall be flush with the concrete surface.
6. The cost for furnishing and installing eyebolts and/or concrete inserts shall be incidental to various contract items.

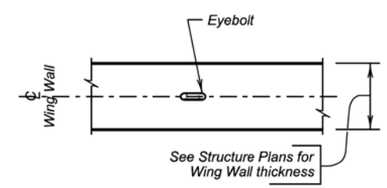

VIEW A - A

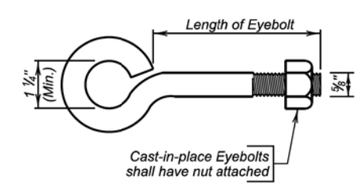

EYEBOLT DETAILS

December 23, 2012

Published Date: 3rd Qtr. 2016	SDDOT	FENCE ANCHORS FOR BOX CULVERT WING WALLS	PLATE NUMBER 620.16
			Sheet 1 of 1

The elevations shown in these plans are based on the National Geodetic Survey (NGS) North American Vertical Datum of 1988 (NAVD88).

STATE OF	PROJECT	SHEET NO.	TOTAL SHEETS
S.D.	IM 0901(38)40	E32	E199

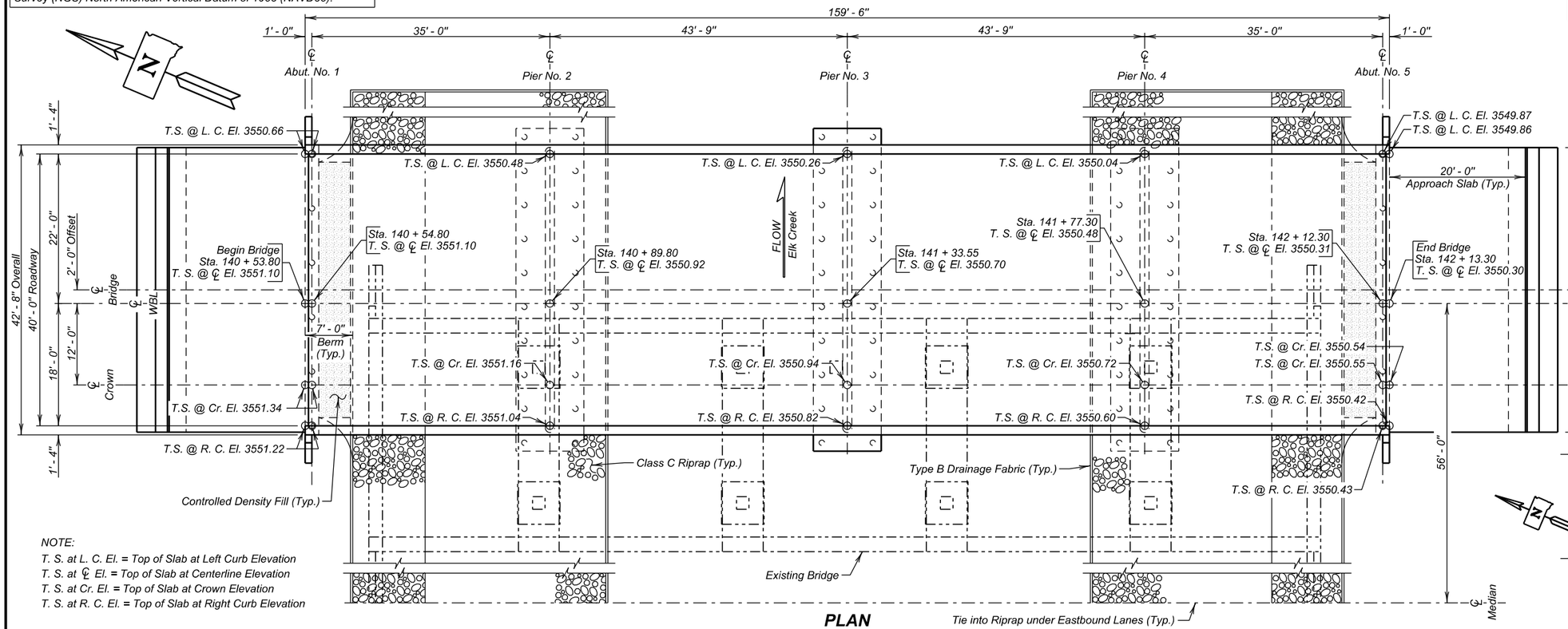

NOTE:
T. S. at L. C. El. = Top of Slab at Left Curb Elevation
T. S. at ℄ El. = Top of Slab at Centerline Elevation
T. S. at Cr. El. = Top of Slab at Crown Elevation
T. S. at R. C. El. = Top of Slab at Right Curb Elevation

PLAN

-X020-
INDEX OF BRIDGE SHEETS -

Sheet No. 1 - General Drawing
Sheet No. 2 - Estimate of Structure Quantities and Notes
Sheet No. 3 - Notes (Continued)
Sheet No. 4 - Subsurface Investigation and Micropile Layout
Sheet No. 5 - Micropile Layout Details
Sheet No. 6 - Micropile Details
Sheet No. 7 - Abutment No. 1 Details
Sheet No. 8 - Abutment No. 5 Details
Sheet No. 9 - Pier Details (A)
Sheet No. 10 - Pier Details (B)
Sheet No. 11 - Superstructure Details
Sheet No. 12 - End Block and Barrier Curb Details
Sheet No. 13 - Details of Bridge End Backfill (A)
Sheet No. 14 - Details of Bridge End Backfill (B)
Sheet No. 15 - Details of Approach Slab Adjacent to Bridge
Sheet No. 16 - Approach Slab Joint Details
Sheet No. 17 - Riprap Details
Sheet No. 18 - As-Built Elevation Survey (A)
Sheet No. 19 - As-Built Elevation Survey (B)
Sheet No. 20 - Standard Plate No's. 430.50 and 460.02
Sheet No. 21 - Standard Plate No's. 460.05 and 620.18
Sheet No. 22 - Standard Plate No. 630.92

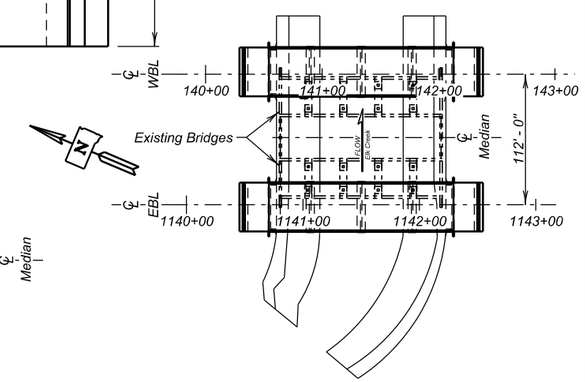

LAYOUT

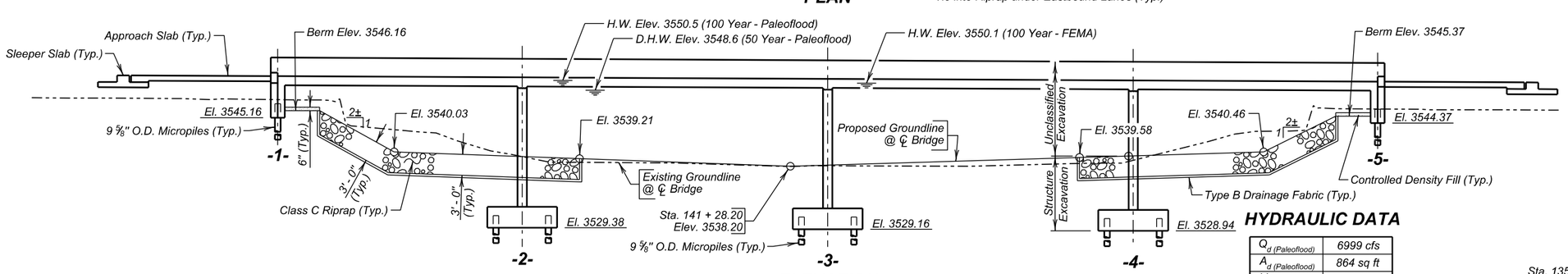

ELEVATION

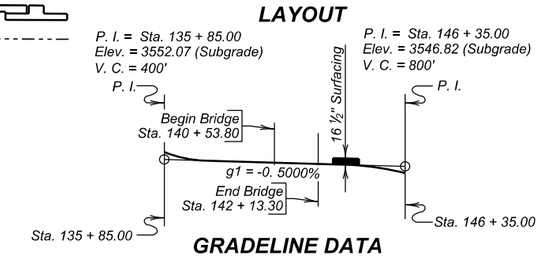

GRADELINE DATA

HYDRAULIC DATA

$Q_{d\ (Paleoflood)}$	6999 cfs
$A_{d\ (Paleoflood)}$	864 sq ft
$V_{d\ (Paleoflood)}$	8.1 fps
$Q_{F\ (Paleoflood)}$	7392 cfs
$Q_{100\ (Paleoflood)}$	13790 cfs
$Q_{100\ (FEMA)}$	8610 cfs
$Q_{OT\ (Berm)}$	4600 cfs
$Q_{OT\ (I\text{-}90)}$	8610 cfs
$V_{max\ (Paleoflood)}$	8.1 fps

Q_d = Design discharge for the proposed bridge based on 50 year (Paleoflood) frequency. El. 3548.6.

$Q_{OT\ (Berm)}$ = Overtopping discharge and frequency 32 year (Paleoflood) recurrence interval. El. 3548.5. Location: Sta. 142 + 50 Rt. ±.

$Q_{OT\ (I\text{-}90)}$ = Overtopping discharge and frequency 61 year (Paleoflood) recurrence interval. El. 3550.1. Location: Sta. 142 + 50 ±.

Q_F = Designated peak discharge for the basin approaching proposed project based on 50 year (Paleoflood) frequency.

Q_{100} = Computed discharge for the basin approaching proposed project based on 100 year frequency. El. 3550.5 (Paleoflood), El. 3550.1 (FEMA).

V_{max} = Maximum computed outlet velocity for the proposed bridge, based on 100 year frequency.

✳ TABLE OF ELEVATIONS

Slab Point	Left Curb	℄ WBL	℄ Crown Point	Right Curb
0	3550.656	3551.096	3551.336	3551.216
1	3550.655	3551.095	3551.335	3551.215
2	3550.621	3551.061	3551.301	3551.181
3	3550.549	3550.989	3551.229	3551.109
4	3550.481	3550.921	3551.161	3551.041
5	3550.464	3550.904	3551.144	3551.024
6	3550.439	3550.879	3551.119	3550.999
7	3550.354	3550.794	3551.034	3550.914
8	3550.262	3550.702	3550.942	3550.822
9	3550.245	3550.685	3550.925	3550.805
10	3550.220	3550.660	3550.900	3550.780
11	3550.136	3550.576	3550.816	3550.696
12	3550.044	3550.484	3550.724	3550.604
13	3550.024	3550.464	3550.704	3550.584
14	3550.008	3550.448	3550.688	3550.568
15	3549.955	3550.395	3550.635	3550.515
16	3549.869	3550.309	3550.549	3550.429

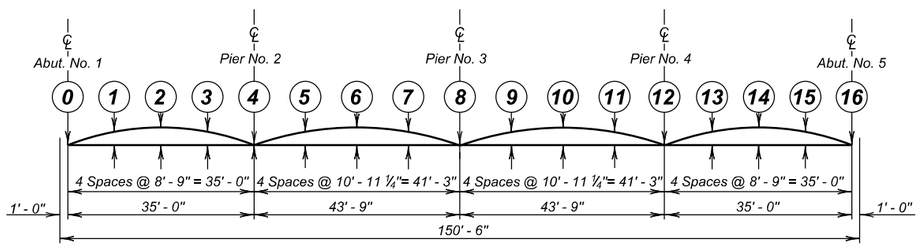

CURB AND CENTERLINE ELEVATION

(See TABLE OF ELEVATIONS for elevations)

✳ Camber for Dead Load Deflection plus Plastic Flow, shown on SUPERSTRUCTURE DETAILS, has been included in the the elevations shown.

PLANS BY :
OFFICE OF BRIDGE DESIGN, SOUTH DAKOTA DEPARTMENT OF TRANSPORTATION

GENERAL DRAWING
FOR
WESTBOUND LANES

159' - 6" CONTINUOUS CONCRETE BRIDGE

40' - 0" ROADWAY — 0° SKEW
OVER ELK CREEK — SEC. 33-T4N-R6E
STA. 140 + 53.80 TO 142 + 13.30 — IM 0901(38)40
STR. NO. 47-080-534 — HL-93
PCN 5580

MEADE COUNTY
S. D. DEPT. OF TRANSPORTATION
FEBRUARY 2014

DESIGNED BY	CK. DES. BY	DRAFTED BY	
BB	PW	MG	BRIDGE ENGINEER
MEAD5580	5580GE01		

ESTIMATE OF STRUCTURE QUANTITIES

DESCRIPTION	QUANTITY	UNIT	REMARKS
Bridge Elevation Survey	Lump Sum	LS	
Concrete Penetrating Sealer	709	SqYd	See Special Provision
Bridge End Embankment	784.3	CuYd	
Incidental Work, Structure	Lump Sum	LS	
Membrane Sealant Expansion Joint	83.8	Ft	
Structure Excavation, Bridge	752.8	CuYd	
Granular Bridge End Backfill	72.3	CuYd	
Approach Slab Underdrain Excavation	3.2	CuYd	
Class A45 Concrete, Bridge Deck	376.9	CuYd	
Class A45 Concrete, Bridge	271.1	CuYd	
Concrete Approach Slab For Bridge	190.6	SqYd	
Concrete Approach Sleeper Slab for Bridge	67.5	SqYd	
Controlled Density Fill	7.9	Cu Yd	
Reinforcing Steel	47812	Lb	
Epoxy Coated Reinforcing Steel	106091	Lb	
No. 7 Rebar Splice	108	Each	
Micropile Verification Load Test	1	Each	See Special Provision
Micropile Proof Load Test	5	Each	See Special Provision
Micropile	72	Each	See Special Provision
4" Underdrain Pipe	255	Ft	
Precast Concrete Headwall for Drain	2	Each	
Porous Backfill	38.6	Ton	
Class C Riprap	1266.0	Ton	
Type B Drainage Fabric	1069	SqYd	

SPECIFICATIONS FOR BRIDGE

1. Design Specifications: AASHTO LRFD Bridge Design Specifications, 2014 Edition with 2015 Interims.

2. Construction Specifications: South Dakota Standard Specifications for Roads and Bridges, 2015 Edition and required provisions, supplemental specifications, and special provisions as included in the proposal.

BRIDGE DESIGN LOADING

1. AASHTO HL-93.

2. Dead Load includes 22 psf for future wearing surface on the roadway.

DESIGN MATERIAL STRENGTHS

Concrete	f'c = 4500 psi
Micropile Grout	f'c = 5000 psi
Reinforcing Steel	fy = 60,000 psi
Reinforcing Steel (micropile)	fy = 75,000 psi
Casing (API N-80)	fy = 80,000 psi
Structural Steel (ASTM A709 Gr 36)	fy = 36,000 psi

GENERAL CONSTRUCTION

1. All mild reinforcing steel shall conform to ASTM A615, Grade 60, except the reinforcing steel in micropile shall be ASTM A615, Grade 75.

2. All exposed concrete corners and edges shall be chamfered 3/4" unless noted otherwise.

3. Use 2" clear cover on all reinforcing steel except as shown.

4. Contractor shall imprint on the structure the date of new construction as specified and detailed on Standard Plate No. 460.02.

5. Barrier Curbs and End blocks shall be built normal to the grade.

6. Request for construction joints or resteel splices at points other than those shown, must be submitted to the Engineer for prior approval. If additional splices are approved, no payment will be allowed for the added quantity of resteel.

7. The elevation of the bridge deck is 16 1/2" above subgrade elevation.

INCIDENTAL WORK, STRUCTURE

1. In place centerline Sta. 140+63.3 to centerline Sta. 142+03.3 is a 140.0' 5 span Continuous Concrete Bridge with a 30'-0" clear roadway. The superstructure consists of a 11 inch reinforced concrete slab. The bridge rail consists of a 12 inch high curb with a 1'-11" vertical face concrete barrier running the length of the bridge. The deck has been overlaid with a 3 inch low slump concrete. The substructure consists of 2 column reinforced concrete bents and reinforced concrete abutments. The abutments are supported on timber piling. Concrete walls with steel railing to centerline of median at both begin and end bridge.

2. Break down and remove the existing bridge, concrete walls, and approach/sleeper slabs if applicable, to 1 foot below finished groundline, or as required to construct the new structure in accordance with Section 110 of the Specifications. All portions of the existing bridge not salvaged for future highway related use shall be removed and disposed of by the Contractor on a site obtained by the Contractor and approved by the Engineer in accordance with the ENVIRONMENTAL COMMITMENTS found in Section A.

3. The existing approach guard rail, including posts, shall be salvaged for future highway related use. See Section B for stockpiling location.

4. During demolition of the structure, efforts shall be taken to prevent material from falling into Elk Creek. Under no circumstances is asphalt allowed to fall into Elk Creek.

5. The foregoing is a general description of the in-place bridge and should not be construed to be complete in all details. Before preparing the bid it shall be the responsibility of the Contractor to make a visual inspection of the structure to verify the extent of the work and materials involved. If desired by the Contractor, a copy of the original construction plans may be obtained through the Office of Bridge Design.

NOTICE - LEAD BASED PAINT

Be advised that the paint on the steel surfaces of the existing structure contains lead. The Contractor should plan his/her operations accordingly, and inform his/her employees of the hazards of lead exposure.

DESIGN MIX OF CONCRETE

1. All structural concrete shall be Class A45 unless otherwise indicated.

2. Type II cement is required.

ESTIMATE OF STRUCTURE QUANTITIES AND NOTES

FOR

WESTBOUND LANES

159' - 6" CONTINUOUS CONCRETE BRIDGE

STR. NO. 47-080-534

FEBRUARY 2014

DESIGNED BY	CK. DES. BY	DRAFTED BY	
BB	PW	PW	Steve A Johnson
MEAD5580	5580WE02		BRIDGE ENGINEER

ABUTMENTS AND PIERS

1. See Special Provision for micropile. Casing for micropile shall be API-N80 or equivalent (outside diameter = 9 $^5/_8$" and wall thickness = 0.472").

2. A representative of the Geotechnical Engineering Activity shall be present to observe the placement of the micropiles. The contractor shall notify the Geotechnical Engineering Activity two weeks prior to the start of the micropile installation operations.

3. Galvanize the pier wall armoring plates and anything welded to them after all welding is completed. They shall be galvanized in accordance with AASHTO M111 (ASTM A123). If welded splices are used subsequent to galvanizing, the weld details and the procedures for preparing the surface for welding and repairing the galvanizing after welding shall be included with the shop plans. Repair of galvanizing shall be by the zinc-based solder method in conformance with ASTM A780.

4. Central bar in micropile shall be a #18 threaded bar conforming to the physical and chemical requirements of ASTM A615 Grade 75. Plan lengths shown are greater than 60 feet. Threaded couplers are required and must develop 100% of the bars ultimate strength.

5. Steel for the pier wall armoring plates shall be ½" thick and conform to ASTM A709, Grade 36. Shear connectors shall conform to Clause 7.3, Type A or B of the AASHTO/AWS D1.5 Bridge Welding Code.

6. Welding for the pier wall armoring plates shall be in accordance with AWS D1.1 Structural Welding Code - Steel.

7. The cost of the pier wall armoring plates complete in-place including fabrication, welding, and galvanizing shall be incidental to the contract unit price per cubic yard for Class A45 Concrete, Bridge.

8. Each finished abutment shall include a Bridge Survey Marker. See Standard Plate No. 460.05.

SUPERSTRUCTURE

1. Preplanned construction joints may be used in accordance with Section 460.3 of the Specifications. Contact the Office of Bridge Design for joint configuration and allowable location. Emergency slab construction joints shall be as shown with the superstructure details. If an emergency slab joint is used, contact the Office of Bridge Design before proceeding with deck pour.

2. The deck-finishing machine shall be adjusted and operated in such a manner that the roller screed or screeds are parallel with the centerline of the bridge and the finish machine is parallel to the skew of the bridge. Concrete placement in front of the finish machine shall be kept parallel to the machine.

3. Barrier curbs shall be poured after all the slab has been poured. Superstructure falsework shall not be removed until bridge deck concrete, including barrier curbs, has attained a strength of 2400 psi.

4. The bridge deck must be placed and finished continuously at a minimum rate of 22 ft. of deck per hour measured along centerline roadway. If concrete cannot be placed and finished at this rate, the Engineer shall order a header installed and operations stopped. Notify the Bridge Construction Engineer if deck pour operations are stopped. Operations may resume only when the Engineer is satisfied that a minimum rate of 22 ft. of deck per hour can be achieved and the concrete in the previous pour has attained a minimum compressive strength of 2000 psi.

5. Snap ties, if used in barrier curb formwork, shall be epoxy coated. The epoxy coating shall be inert in concrete and compatible with the coating applied to the new epoxy coated reinforcing steel.

6. See Special Provision for Concrete Penetrating Sealer.

FALSEWORK

1. The Contractor shall be required to include with the Falsework Plans, details for the construction of an adequate "Walk-Way" including railing.

2. The maximum falsework deflection allowed is ¼ inch.

CLASS B COMMERCIAL TEXTURE FINISH

1. A Class B commercial texture finish shall be applied to the following areas:

   a) **Barrier Rail:** all exposed surfaces (inside face – pearl white, top and back – buff tan).
   b) **Slab:** edge of slab – buff tan.

2. The Class B commercial texture finish shall be applied in accordance with Section 460.3 L.1.c of the Specifications.

3. Where the Class B commercial texture finish is to be applied, concrete curing shall be accomplished with cotton or burlap mats and polyethylene sheeting. Curing shall continue for not less than seven days after placing concrete before the commercial texture finish is applied. The commercial texture finish shall be applied in accordance with the manufacturer's recommendations. The commercial texture finish itself does not require a specific cure except for drying.

APPROACH SLABS

1. Sleeper slab riser shall be cast with the approach slab or cast after the approach slab is placed. Care shall be taken to ensure the correct grade is maintained across the joint.

2. The portion of the sleeper slab below the construction joint may be precast. If the bottom portion of the sleeper slab is precast, the Contractor shall submit proposal lifting and setting plans to the Bridge Construction Engineer for approval. In addition, if reinforcing or other details differ from those shown in the plans, the Contractor shall submit proposed alternate details for approval.

3. The use of an approved finishing machine will be required during placement of Class A45 Concrete for the approach slabs. Concrete placement in front of the machine shall be kept parallel to the screed.

4. The concrete in the approach slab shall be tined normal to centerline roadway.

5. Concrete Approach Sleeper Slab for Bridge will be paid for at the contract unit price per square yard. This payment shall be full compensation for all excavation, furnishing, hauling, and placing all materials including concrete and reinforcing steel; for disposal of all excavated material and surplus materials; and for labor, tools, equipment and any incidentals necessary to complete this item of work.

6. Concrete Approach Slab for Bridge will be paid for at the contract unit price per square yard. This payment shall be full compensation for all excavation, furnishing, hauling and placing all materials including concrete, asphalt paint or 4 mil polyethylene sheeting, elastic joint sealer and reinforcing steel; for disposal of all excavated material and surplus materials and for labor, tools, equipment and any incidentals necessary to complete this item of work.

AS - BUILT ELEVATION SURVEY

The Contractor shall be responsible for recording the As-built deck elevations and bridge survey marker elevations at the locations shown in the Table of As-Built Elevations shown in the plans. All costs associated with obtaining the elevations including all equipment, labor and any incidentals required shall be incidental to the contract lump sum price for Bridge Elevation Survey.

NOTES (CONTINUED)
FOR
WESTBOUND LANES
159' - 6" CONTINUOUS CONCRETE BRIDGE

STR. NO. 47-080-534
FEBRUARY 2014

DESIGNED BY	CK. DES. BY	DRAFTED BY	
BB	PW	PW	Steve A. Johnson
MEAD5580	5580WE03		BRIDGE ENGINEER

STATE OF	PROJECT	SHEET NO.	TOTAL SHEETS
S.D.	IM 0901(38)40	E35	E199

Hole Number	X1	
Station	142+13	
Depth	35.5	ft
Soil Color	Red	
Classification	Silt Clay	
Strength (Q_u)	4.897	psf
Dry Density	111.9	pcf
Wet Density	132.6	pcf
Moisture	18.5	%
Pass No. 10	99.9	%
Pass No. 40	99.9	%
Pass No. 200	99.2	%
Sand Content	0.7	%
Silt Content	56.6	%
Clay Content	42.6	%

Hole Number	X1	
Station	142+13	
Depth	55.0	ft
Soil Color	Red	
Classification	Silt Clay	
Strength (Q_u)	4.275	psf
Dry Density	131.2	pcf
Wet Density	146.8	pcf
Moisture	11.9	%
Pass No. 10	100.0	%
Pass No. 40	100.0	%
Pass No. 200	97.5	%
Sand Content	2.5	%
Silt Content	52.9	%
Clay Content	44.6	%

Hole Number	X3	
Station	140+59	
Depth	40.5	ft
Soil Color	Red	
Classification	Silt Clay	
Strength (Q_u)	8.543	psf
Dry Density	125.0	pcf
Wet Density	140.7	pcf
Moisture	12.6	%
Pass No. 10	100.0	%
Pass No. 40	100.0	%
Pass No. 200	97.7	%
Sand Content	2.2	%
Silt Content	55.2	%
Clay Content	42.6	%

Hole Number	X3	
Station	140+59	
Depth	59.9	ft
Soil Color	Red	
Classification	Silt Clay	
Strength (Q_u)	11.400	psf
Dry Density	125.6	pcf
Wet Density	141.5	pcf
Moisture	12.7	%
Pass No. 10	100.0	%
Pass No. 40	100.0	%
Pass No. 200	98.4	%
Sand Content	1.6	%
Silt Content	63.8	%
Clay Content	34.6	%

The gravel and cobbles (up to boulder size) consist of material originating from sandstone, limestone, dolomite, or granite outcrops from nearby upstream canyon walls. Material most likely transported by mud flows with very little weathering. The borings shown only represent material found at the exact location of the small diameter drill hole. Boulders of 3 feet or more may be encountered at the site.

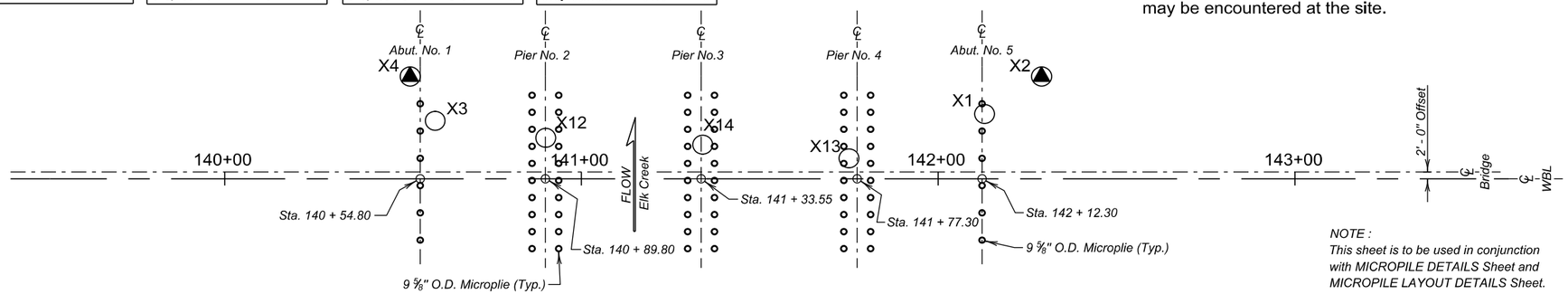

NOTE :
This sheet is to be used in conjunction with MICROPILE DETAILS Sheet and MICROPILE LAYOUT DETAILS Sheet.

Sample Zone 48 Blows Per Foot

Penetration Test results are listed as uncorrected "N" values. Blows over inches are listed if refusal is achieved, which is 50 blows within one 6 inch set.

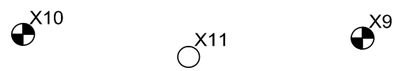

MICROPILE LAYOUT

Existing Timber Piling

Existing Spread Footing

X9, X11, and X12 moved in profile view for clarity

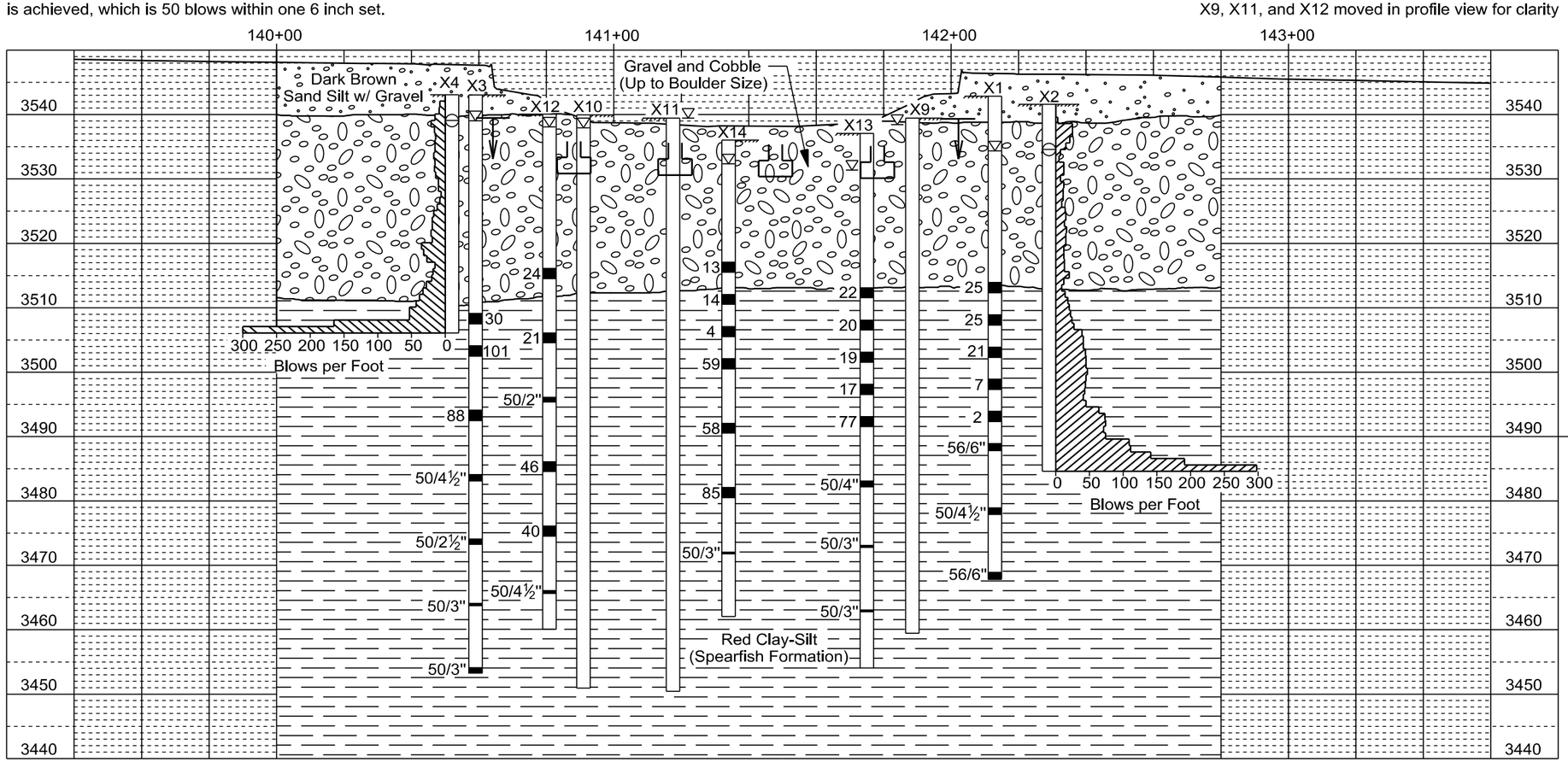

The Spearfish Formation is a relatively weak red sandy shale. Textural classification typically is a clay-silt. Gypsum is present throughout the formation that varies from thin stringers to massive deposits over 30 feet thick. Bedded layers of red stained sandstone can also be encountered. Unweathered Spearfish Formation is considered to be "Soft Rock", although massive unweathered gypsum may behave similar to weak limestone.

The Geotechnical Engineering Activity has on file all of the boring logs for this project. These logs and additional results of laboratory test, if any, are available for review at the Central Office in Pierre.

LEGEND

- Penetration Test
- Drive Test
- Water
- Caved
- Auger Test
- Sample Zone

Drive test are conducted by dropping a 490 pound hammer 30 inches to drive a 2⅞ inch drill stem with attached retractable plug sampler for taking samples and to measure the resistance to penetration of the soil.

Penetration test holes are drilled with a 6⅝ inch diameter hollow stem auger. Penetration tests are conducted by dropping a 140 pound hammer 30 inches to obtain 2 inch nominal diameter samples and to measure the resistance to penetration of the soil.

GROUND WATER ELEVATIONS

as of JUNE 2014

X1		3534.4
X2	(CAVED)	3534.6
X3		3539.0
X4	(CAVED)	3539.1
X9		3538.5
X10		3538.0
X11		3539.4
X12		3538.1
X13		3531.4
X14		3532.4

MEASURED SKIN FRICTION

	ELEV.	PSF
X2	3515.6	107
X2	3484.6	1441
X4	3509.1	505
X4	3506.1	6222

SUBSURFACE INVESTIGATION AND MICROPILE LAYOUT

FOR

WESTBOUND LANES

159' - 6" CONTINUOUS CONCRETE BRIDGE

40' - 0" ROADWAY — 0° SKEW
OVER ELK CREEK — SEC. 33-T4N-R6E
STA. 140 + 53.80 TO 142 + 13.30 — IM 0901(38)40
STR. NO. 47-080-534 — HL-93

MEADE COUNTY

S. D. DEPT. OF TRANSPORTATION

FEBRUARY 2014

DESIGNED BY	CK. DES. BY	DRAFTED BY	
BB	PW	MG/JL	Steve A Johnson BRIDGE ENGINEER
MEAD5580	5580GE04		

STATE OF	PROJECT	SHEET NO.	TOTAL SHEETS
S.D.	IM 0901(38)40	E36	E199

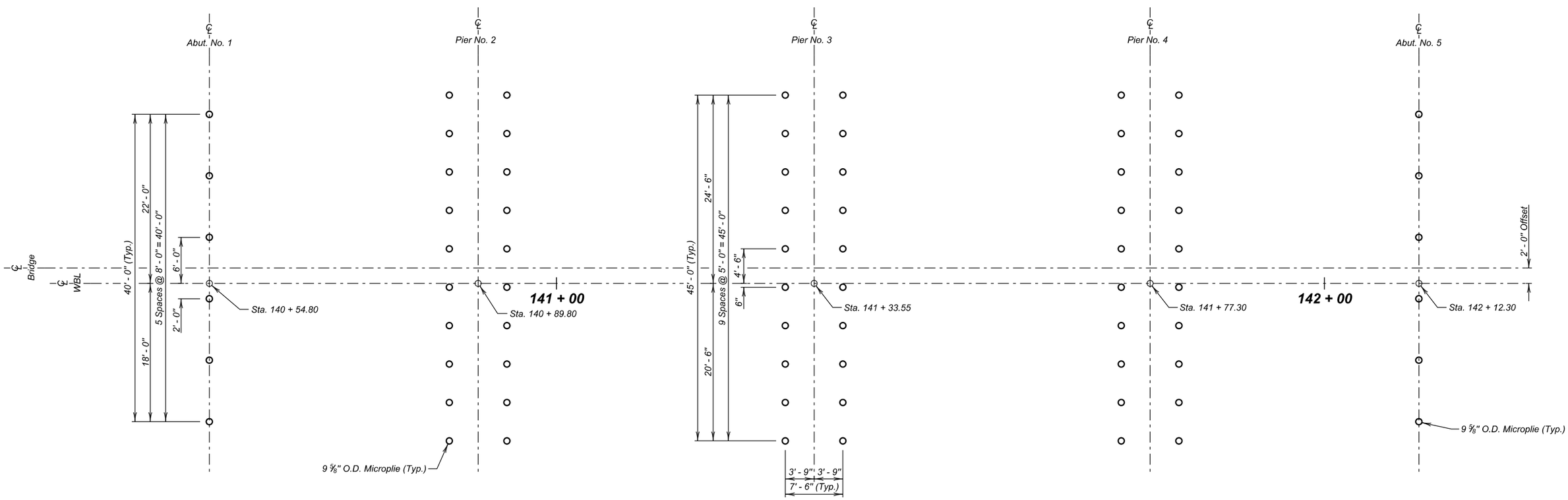

MICROPILE LAYOUT

NOTE:
This sheet is to be used in conjunction with SUBSURFACE INVESTIGATION AND MICROPILE LAYOUT and MICROPILE DETAILS sheets.

MICROPILE LAYOUT DETAILS

FOR

WESTBOUND LANES

159' - 6" CONTINUOUS CONCRETE BRIDGE

40' - 0" ROADWAY	0° SKEW
OVER ELK CREEK	SEC. 33-T4N-R6E
STA. 140 + 53.80 TO 142 + 13.30	IM 0901(38)40
STR. NO. 47-080-534	HL-93

MEADE COUNTY

S. D. DEPT. OF TRANSPORTATION

FEBRUARY 2014

DESIGNED BY	CK. DES. BY	DRAFTED BY	
BB	PW	MG	Steve A Johnson BRIDGE ENGINEER
MEAD5580	5580GE05		

STATE OF	PROJECT	SHEET NO.	TOTAL SHEETS
S.D.	IM 0901(38)40	E37	E199

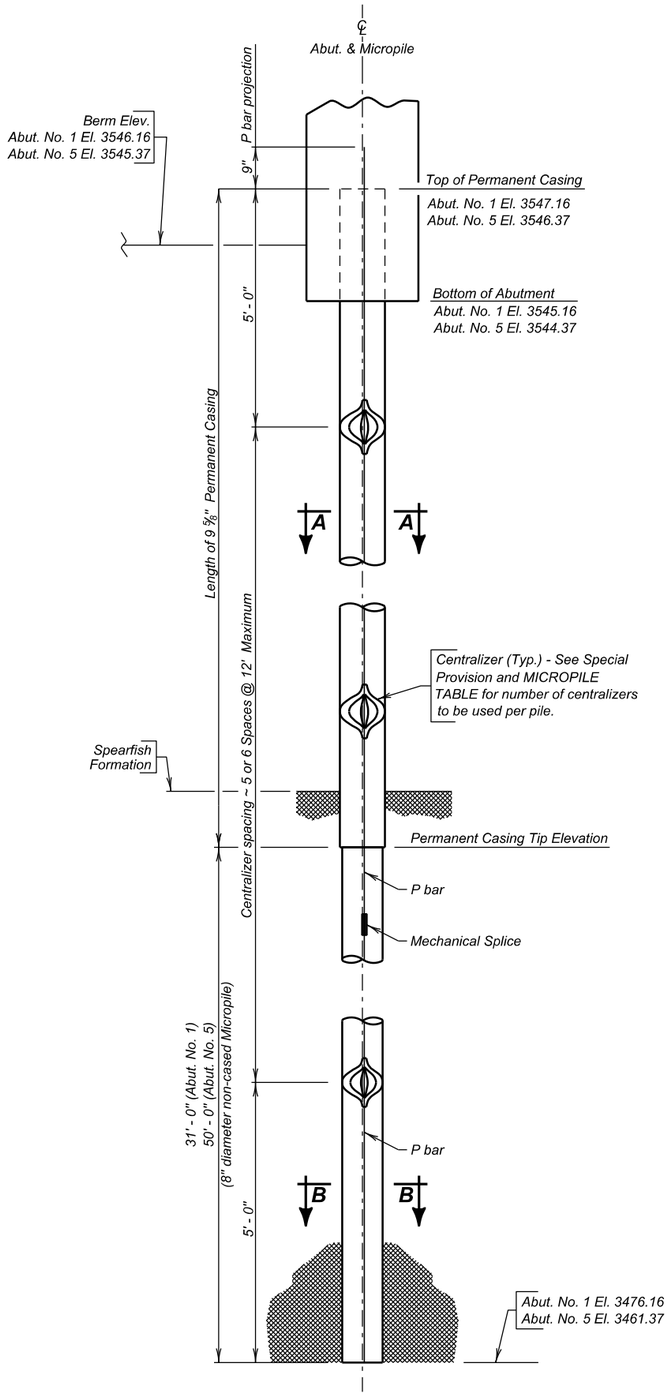

ABUTMENT ELEVATION

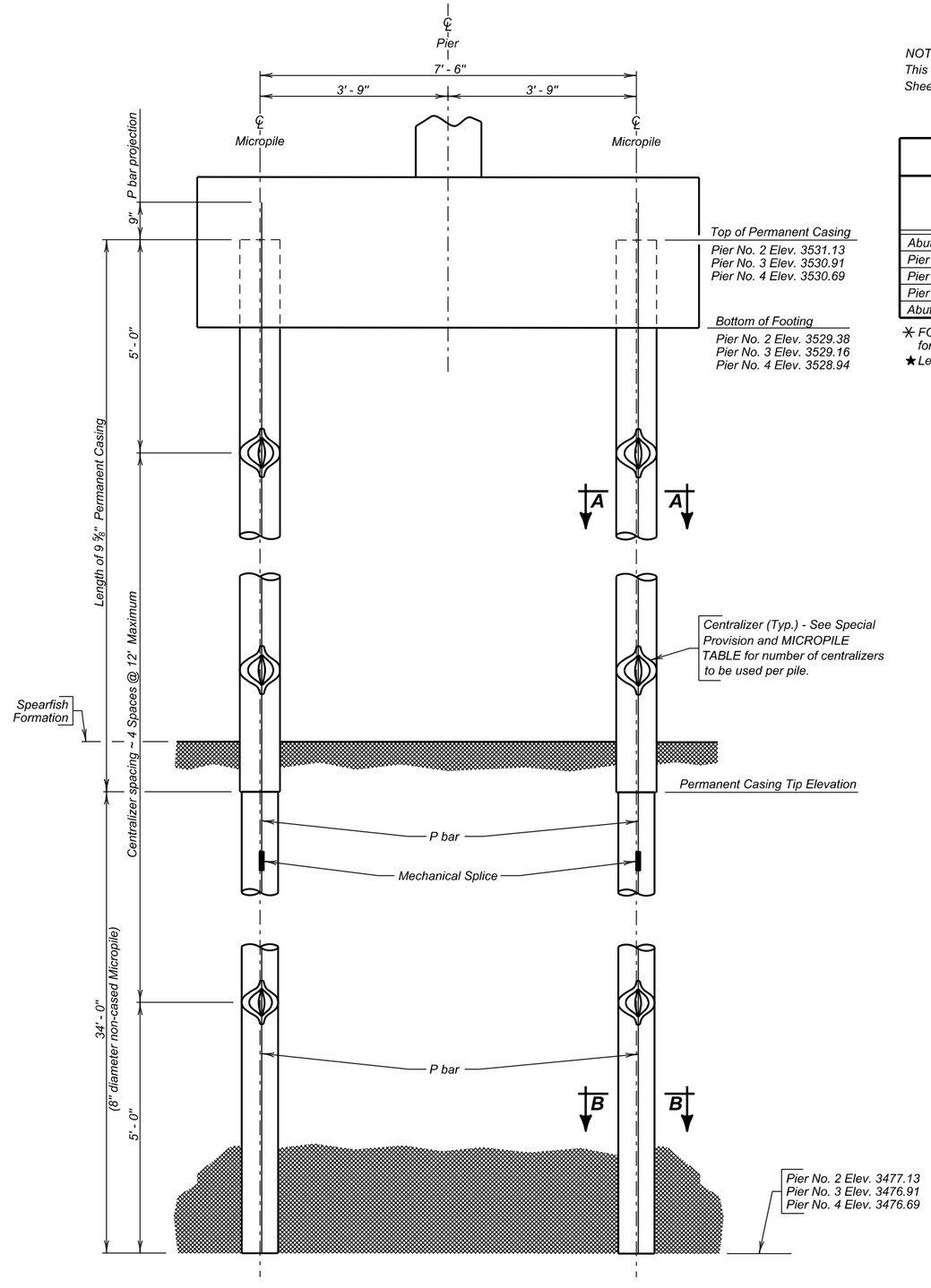

PIER ELEVATION

NOTE :
This sheet is to be used in conjunction with SUBSURFACE INVESTIGATION AND MICROPILE LAYOUT Sheet, ABUTMENT DETAILS NO. 1 & No. 5 DETAILS Sheets, and PIER DETAILS (A) & (B) Sheets.

✳ MICROPILE TABLE

	Permanent Casing Tip Elev.	Permanent Casing Length	# of Centralizers per pile	P BARS				Grout
				Mk.	No.	Size	★Length	Cu. Yd.
Abut. No. 1	3507.16	40.00	6	P1	6	18	71' - 9"	6.1
Pier No. 2	3511.13	20.00	5	P2	20	18	54' - 9"	14.9
Pier No. 3	3510.91	20.00	5	P3	20	18	54' - 9"	14.9
Pier No. 4	3510.69	20.00	5	P4	20	18	54' - 9"	14.9
Abut. No. 5	3511.37	35.00	7	P5	6	18	85' - 9"	7.1

✳ *FOR INFORMATIONAL PURPOSES ONLY. All items listed are included in the contract unit price for micropile.*
★ *Length is total length required. Use mechanical coupler as needed.*

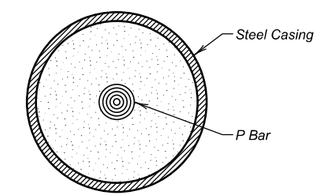

SEC. A - A

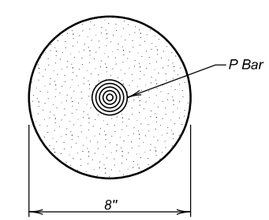

SEC. B - B

MICROPILE DETAILS
FOR
WESTBOUND LANES

159' - 6" CONTINUOUS CONCRETE BRIDGE

40' - 0" ROADWAY — 0° SKEW
OVER ELK CREEK — SEC. 33-T4N-R6E
STA. 140 + 53.80 TO 142 + 13.30 — IM 0901(38)40
STR. NO. 47-080-534 — HL-93

MEADE COUNTY
S. D. DEPT. OF TRANSPORTATION
FEBRUARY 2014

DESIGNED BY	CK. DES. BY	DRAFTED BY	
BB	PW	MG	Steve A. Johnson BRIDGE ENGINEER
MEAD5580	5580GE06		

STATE OF	PROJECT	SHEET NO.	TOTAL SHEETS
S.D.	IM 0901(38)40	E38	E199

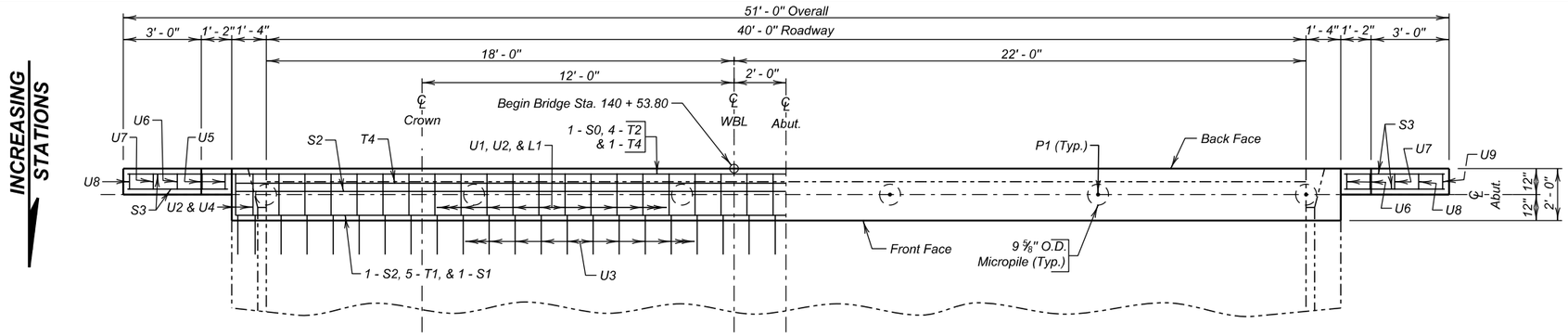

PLAN

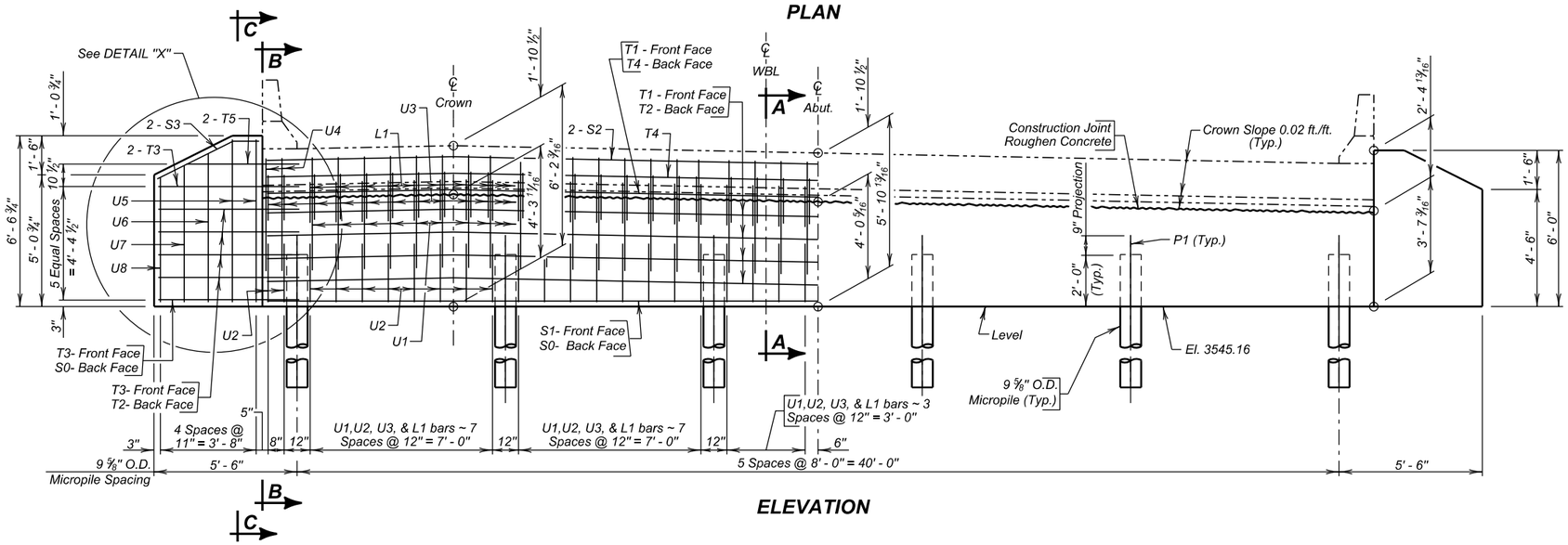

ELEVATION

REINFORCING SCHEDULE

	Mk.	No.	Size	Length	Type
△	L1	40	4	3' - 6"	17A
	S0	1	9	50' - 8"	Str.
	S1	1	9	42' - 4"	Str.
# △	S2	2	9	42' - 4"	Str.
	S3	4	9	4' - 3"	19B
#	T1	5	5	45' - 5"	2
	T2	4	5	50' - 8"	Str.
	T3	14	5	5' - 5"	Str.
# △	T4	2	5	42' - 4"	Str.
△	T5	4	5	4' - 4"	Str.
△	U1	40	6	9' - 8"	18
	U2	44	4	6' - 2"	17
△	U3	44	4	2' - 10"	S12A
△	U4	4	6	10' - 2"	17
	U5	2	4	14' - 6"	T1
	U6	3	4	13' - 5"	T1
	U7	2	4	12' - 6"	T1
	U8	2	4	11' - 7"	T1
	U9	1	4	10' - 8"	T1

Bending Details

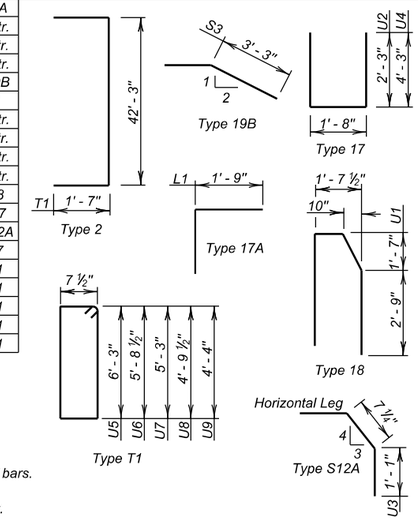

NOTES:
All dimensions are out to out of bars.
△ Bars are to be epoxy coated.
Bend in field as necessary to fit.

ESTIMATED QUANTITIES

ITEM	UNIT	QUANTITY
Class A45 Concrete, Bridge	Cu. Yd.	14.5
Reinforcing Steel	Lb.	1169
Epoxy Coated Reinforcing Steel	Lb.	1213
Structure Excavation, Bridge	Cu. Yd.	9.7
Micropile	Each	6
Micropile Proof Load Test	Each	1

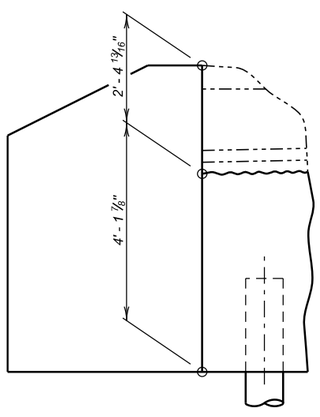

DETAIL "X"

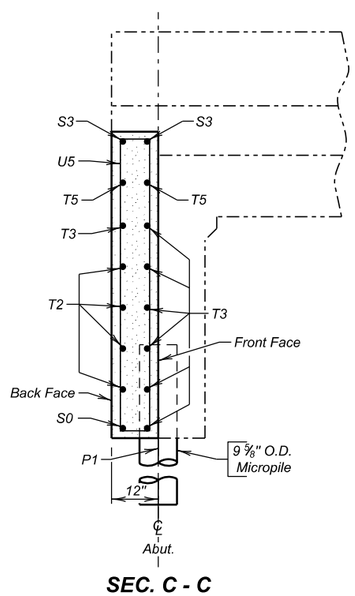

SEC. C - C

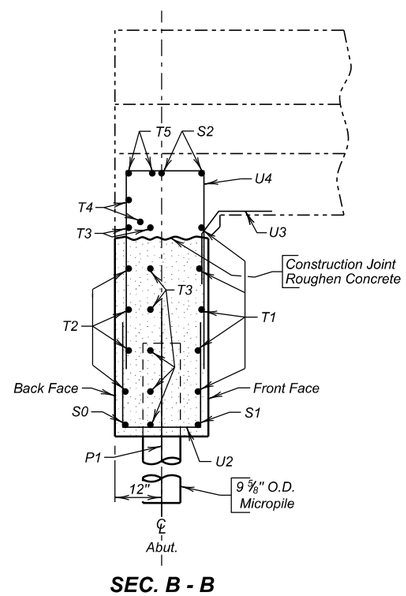

SEC. B - B

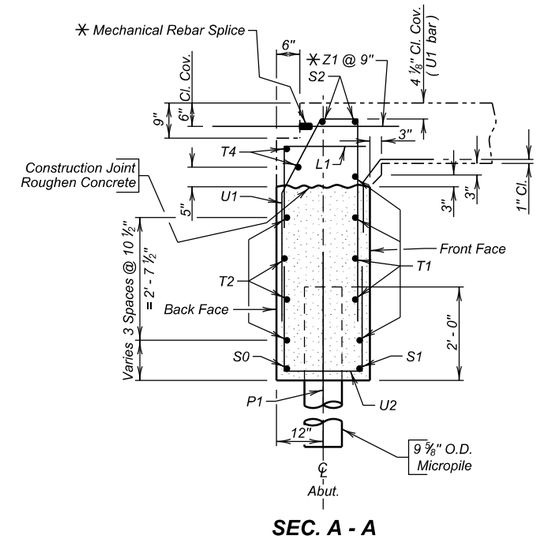

SEC. A - A

NOTE:
Quantity for Z1 bars and Mechanical Splices are listed on the SUPERSTRUCTURE DETAILS Sheet.

ABUTMENT NO. 1 DETAILS
FOR
WESTBOUND LANES

159' - 6" CONTINUOUS CONCRETE BRIDGE

40' - 0" ROADWAY — 0° SKEW
OVER ELK CREEK — SEC. 33-T4N-R6E
STA. 140 + 53.80 TO 142 + 13.30 — IM 0901(38)40
STR. NO. 47-080-534 — HL-93

MEADE COUNTY
S. D. DEPT. OF TRANSPORTATION
FEBRUARY 2014

DESIGNED BY	CK. DES. BY	DRAFTED BY	
BB	PW	MG	Steve A Johnson BRIDGE ENGINEER
MEAD5580	5580GE07		

STATE OF	PROJECT	SHEET NO.	TOTAL SHEETS
S.D.	IM 0901(38)40	E39	E199

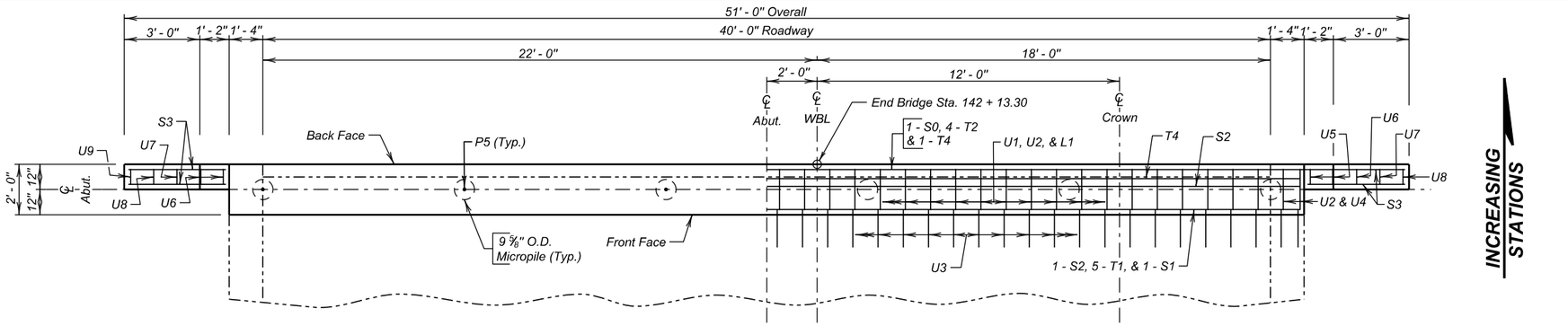

PLAN

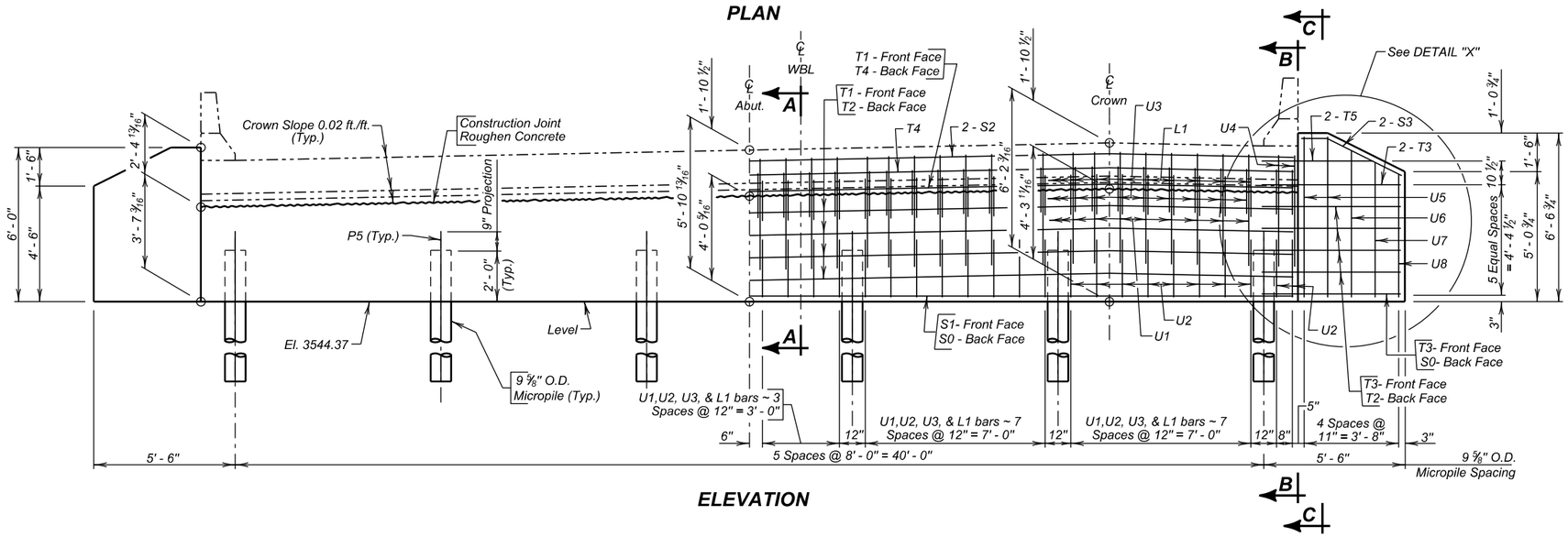

ELEVATION

REINFORCING SCHEDULE

	Mk.	No.	Size	Length	Type
△	L1	40	4	3' - 6"	17A
	S0	1	9	50' - 8"	Str.
	S1	1	9	42' - 4"	Str.
# △	S2	2	9	42' - 4"	Str.
	S3	4	9	4' - 3"	19B
#	T1	5	5	45' - 5"	2
	T2	4	5	50' - 8"	Str.
	T3	14	5	5' - 5"	Str.
# △	T4	2	5	42' - 4"	Str.
△	T5	4	5	4' - 4"	Str.
△	U1	40	6	9' - 8"	18
	U2	44	4	6' - 2"	17
△	U3	44	4	2' - 10"	S12A
△	U4	4	6	10' - 2"	17
	U5	2	4	14' - 6"	T1
	U6	3	4	13' - 5"	T1
	U7	2	4	12' - 6"	T1
	U8	2	4	11' - 7"	T1
	U9	1	4	10' - 8"	T1

Bending Details

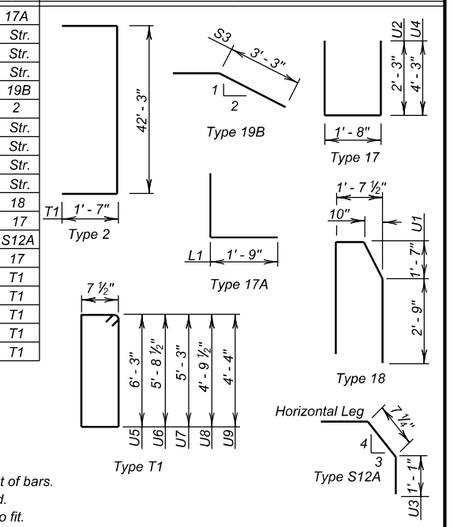

NOTES:
All dimensions are out to out of bars.
△ Bars are to be epoxy coated.
Bend in field as necessary to fit.

ESTIMATED QUANTITIES

ITEM	UNIT	QUANTITY
Class A45 Concrete, Bridge	Cu. Yd.	14.5
Reinforcing Steel	Lb.	1169
Epoxy Coated Reinforcing Steel	Lb.	1213
Structure Excavation, Bridge	Cu. Yd.	9.7
Micropile	Each	6
Micropile Proof Load Test	Each	1
Micropile Verification Load Test	Each	1

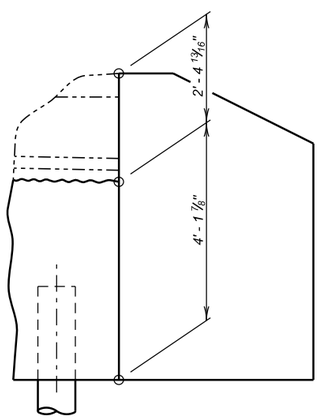

DETAIL "X"

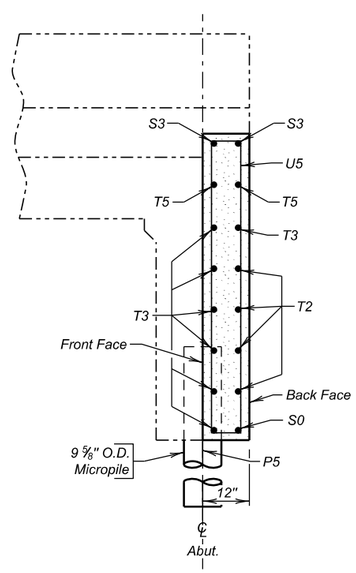

SEC. C - C

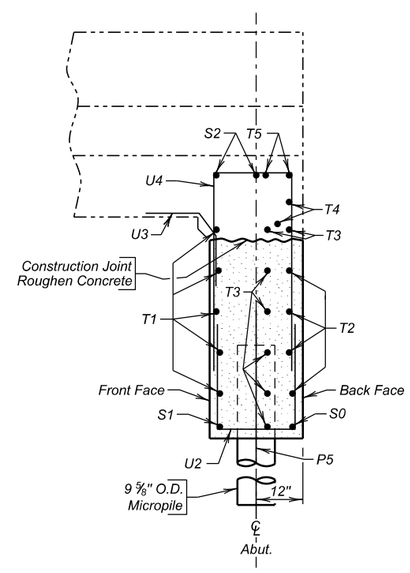

SEC. B - B

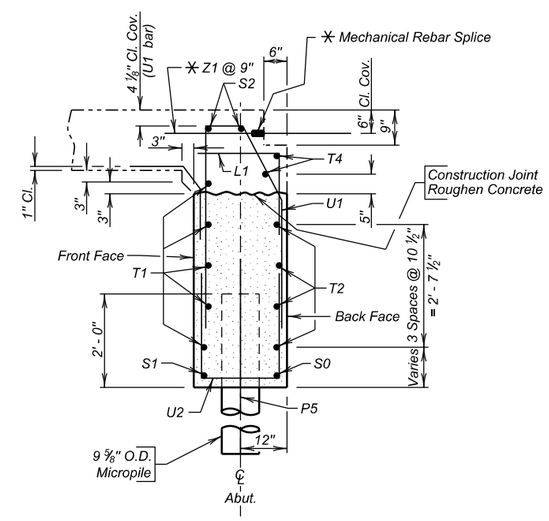

SEC. A - A

NOTE:
Quantity for Z1 bars and Mechanical Splices are listed on the SUPERSTRUCTURE DETAILS Sheet.

ABUTMENT NO. 5 DETAILS
FOR
WESTBOUND LANES

159' - 6" CONTINUOUS CONCRETE BRIDGE

40' - 0" ROADWAY — 0° SKEW
OVER ELK CREEK — SEC. 33-T4N-R6E
STA. 140 + 53.80 TO 142 + 13.30 — IM 0901(38)40
STR. NO. 47-080-534 — HL-93

MEADE COUNTY
S. D. DEPT. OF TRANSPORTATION
FEBRUARY 2014

DESIGNED BY	CK. DES. BY	DRAFTED BY	
BB	PW	MG	Steve A Johnson BRIDGE ENGINEER
MEAD5580	5580GE08		

STATE OF	PROJECT	SHEET NO.	TOTAL SHEETS
S.D.	IM 0901(38)40	E40	E199

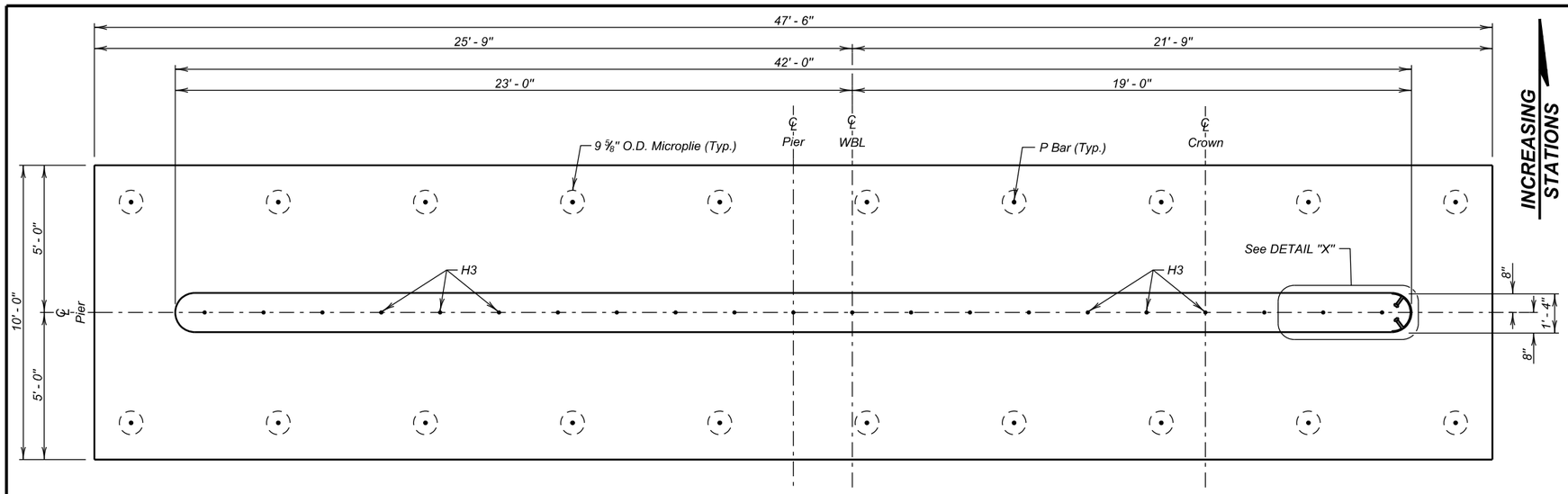

PLAN

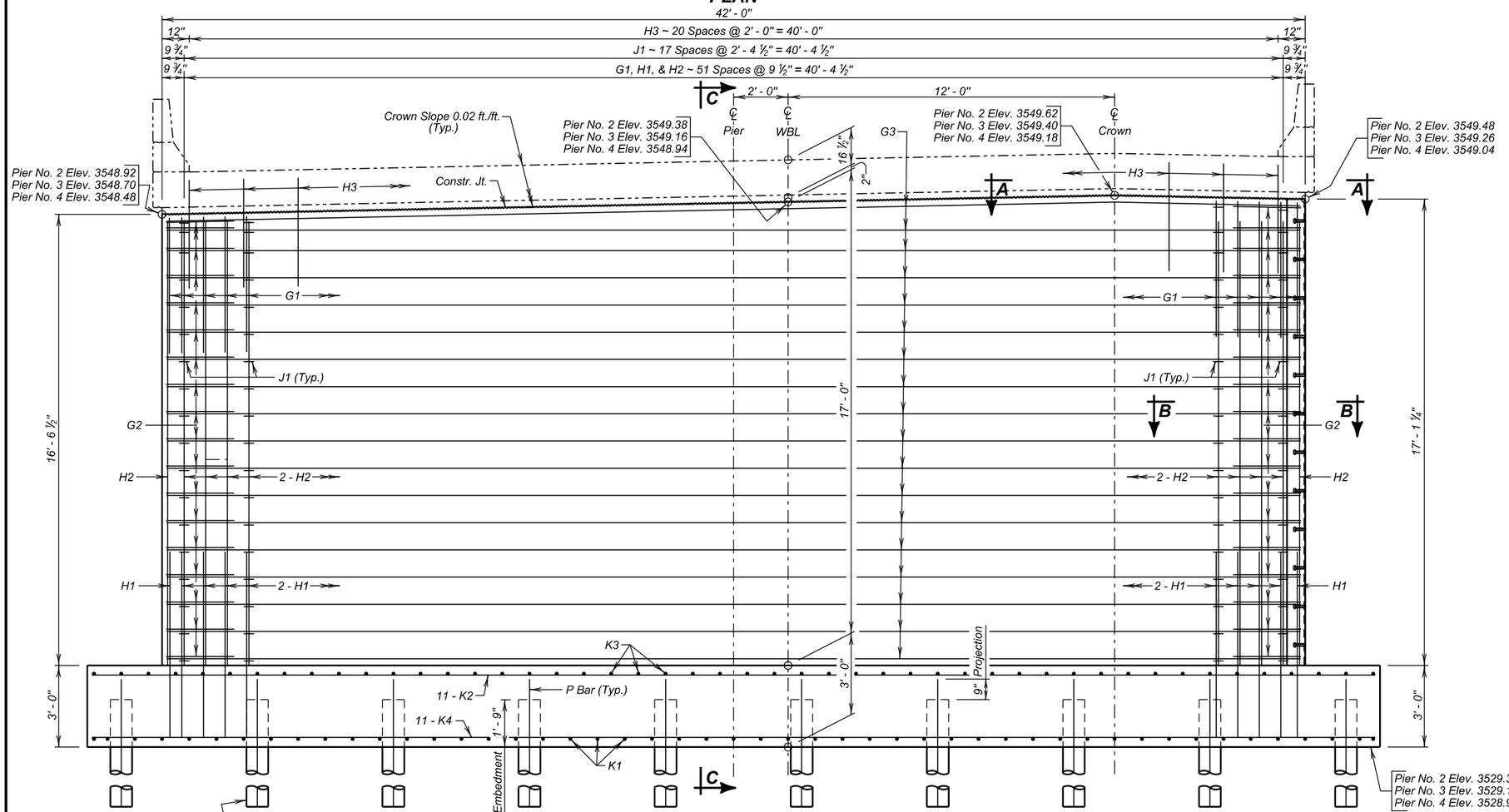

ELEVATION

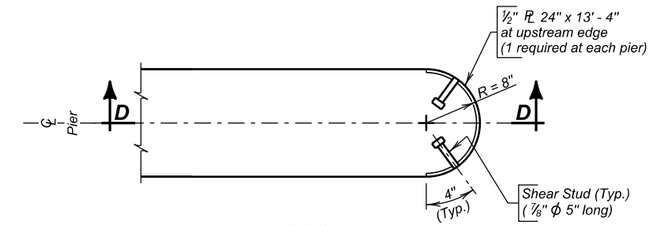

DETAIL "X"

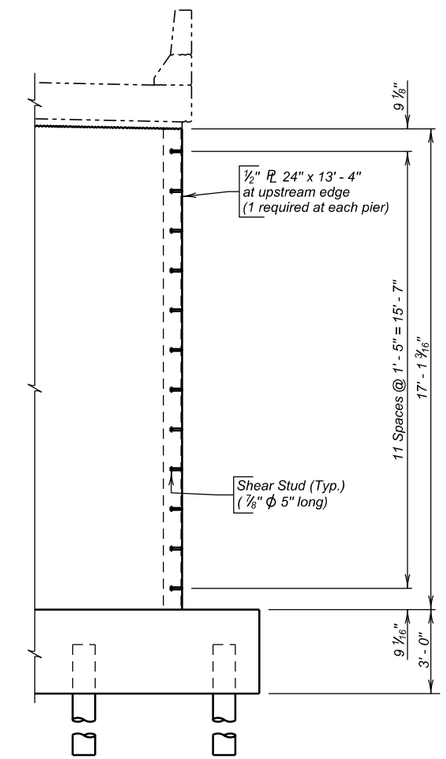

SEC. D - D

PIER DETAILS (A)

FOR

WESTBOUND LANES

159' - 6" CONTINUOUS CONCRETE BRIDGE

40' - 0" ROADWAY — 0° SKEW
OVER ELK CREEK — SEC. 33-T4N-R6E
STA. 140 + 53.80 TO 142 + 13.30 — IM 0901(38)40
STR. NO. 47-080-534 — HL-93

MEADE COUNTY

S. D. DEPT. OF TRANSPORTATION

FEBRUARY 2014

DESIGNED BY	CK. DES. BY	DRAFTED BY	
BB	PW	MG	Steve A. Johnson
MEAD5580	5580GE09		BRIDGE ENGINEER

STATE OF	PROJECT	SHEET NO.	TOTAL SHEETS
S.D.	IM 0901(38)40	E41	E199

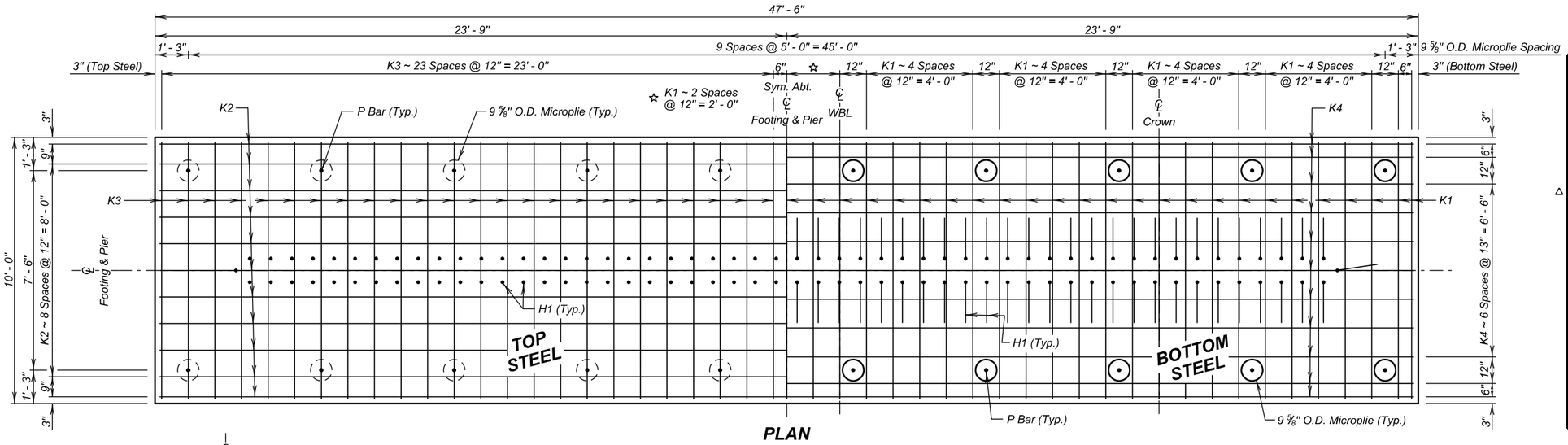

PLAN
(Footing Steel)

REINFORCING SCHEDULE
(For One Pier - 3 Required)

	Mk.	No.	Size	Length	Type
	G1	52	9	10' - 11"	17
	G2	36	4	5' - 7"	S11
	G3	36	4	41' - 8"	Str.
	H1	106	9	8' - 5"	17A
	H2	106	9	17' - 3"	Str.
△	H3	21	7	4' - 0"	Str.
	J1	324	4	1' - 9"	T9
	K1	49	8	9' - 8"	Str.
	K2	11	4	47' - 2"	Str.
	K3	48	4	9' - 8"	Str.
	K4	11	5	47' - 2"	Str.

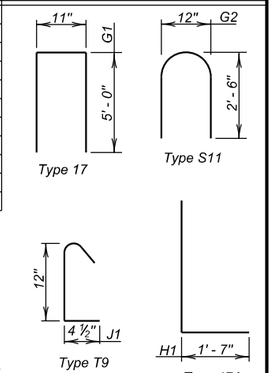

NOTE:
All dimensions are out to out of bars.
△ Bars to be epoxy coated.

ESTIMATED QUANTITIES

ITEM	UNIT	QUANTITY		
		Pier No. 2	Pier No. 3	Pier No. 4
Class A45 Concrete, Bridge	Cu. Yd.	87.9	87.9	87.9
Reinforcing Steel	Lb.	15158	15158	15158
Epoxy Coated Reinforcing Steel	Lb.	172	172	172
Structure Excavation, Bridge	Cu. Yd.	248.3	223.7	261.4
Micropile	Each	20	20	20
Micropile Proof Load Test	Each	1	1	1

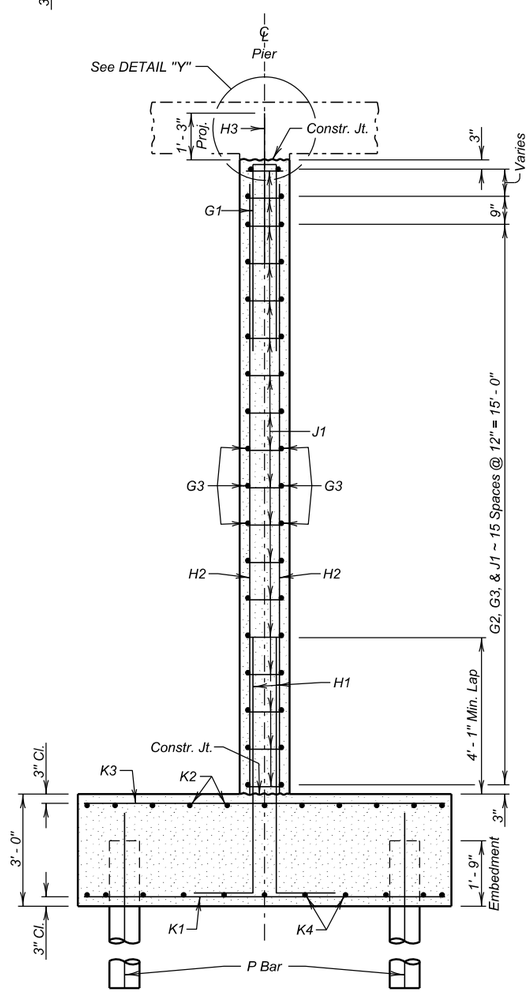

SEC. C - C

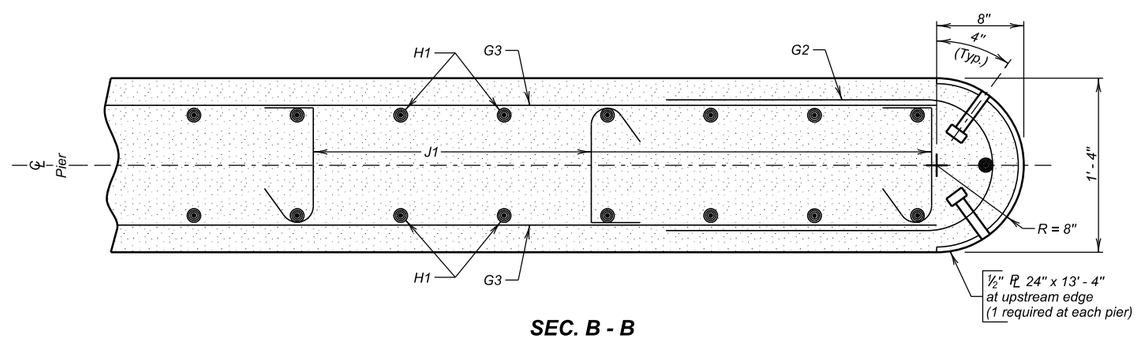

SEC. B - B

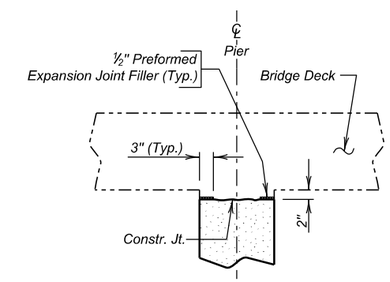

DETAIL "Y"
(Resteel not shown)

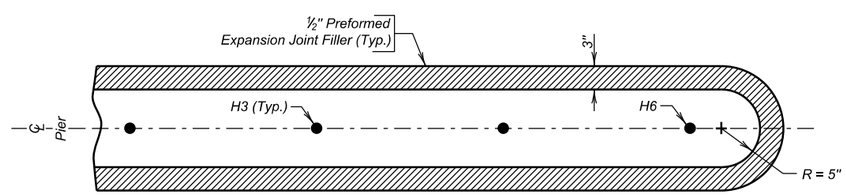

VIEW A - A
(Resteel and Bridge Deck not shown)

PIER DETAILS (B)
FOR
WESTBOUND LANES

159' - 6" CONTINUOUS CONCRETE BRIDGE

40' - 0" ROADWAY — 0° SKEW
OVER ELK CREEK — SEC. 33-T4N-R6E
STA. 140 + 53.80 TO 142 + 13.30 — IM 0901(38)40
STR. NO. 47-080-534 — HL-93

MEADE COUNTY
S. D. DEPT. OF TRANSPORTATION
FEBRUARY 2014

DESIGNED BY	CK. DES. BY	DRAFTED BY	
BB	PW	MG	Steve A Johnson
MEAD5580	5580GE10		BRIDGE ENGINEER

STATE OF	PROJECT	SHEET NO.	TOTAL SHEETS
S.D.	IM 0901(38)40	E42	E199

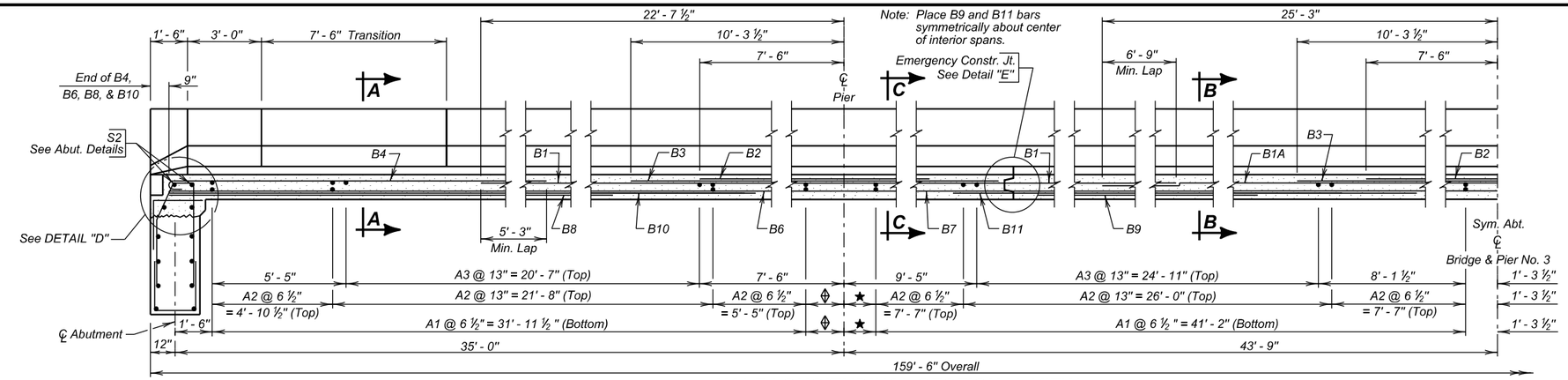

HALF LONGITUDINAL SECTIONAL VIEW

⟐ 1' - 6 ½"
★ 1' - 3 ½"

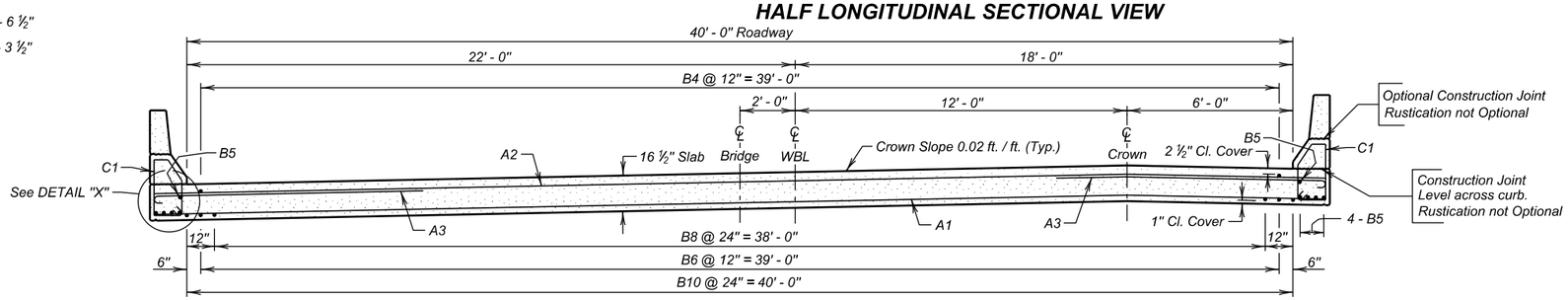

SEC. A - A

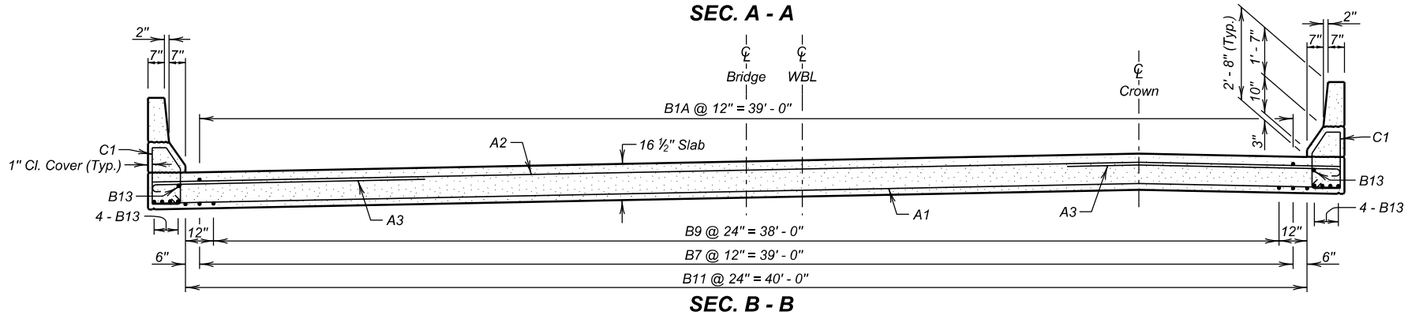

SEC. B - B

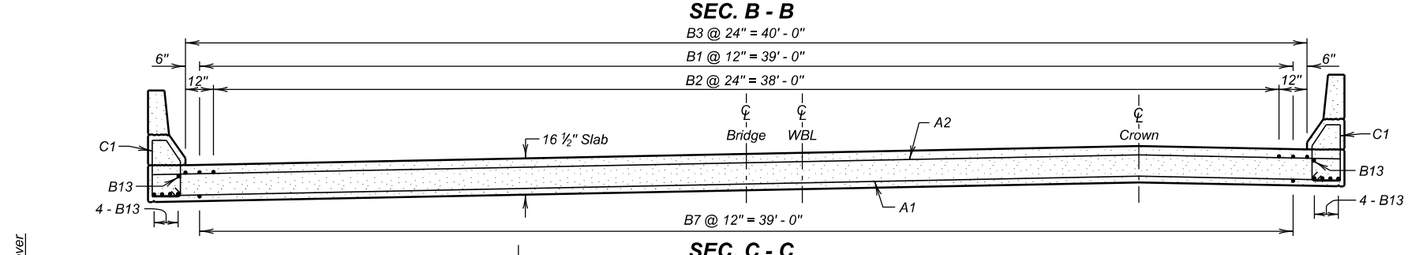

SEC. C - C

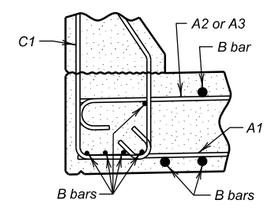

DETAIL "X"

Note: All barrier curb details shown on END BLOCK AND BARRIER CURB sheet.

REINFORCING SCHEDULE

Mk.	No.	Size	Length	Type
A1	272	5	42' - 4"	Str.
A2	186	4	42' - 4"	Str.
A3	176	4	10' - 3"	1A
B1	80	10	47' - 11"	Str.
B1A	40	10	50' - 6"	Str.
B2	60	10	15' - 0"	Str.
B3	63	10	20' - 7"	Str.
B4	80	9	19' - 2"	1A
B5	20	6	35' - 9"	Str.
B6	80	9	35' - 3"	Str.
B7	80	9	43' - 9"	Str.
B8	40	8	24' - 3"	Str.
B9	40	8	20' - 0"	Str.
B10	42	9	29' - 7"	Str.
B11	42	9	26' - 10"	Str.
B12	36	6	47' - 6"	Str.
B13	20	6	43' - 9"	Str.
B15	12	5	15' - 0"	Str.
B16	6	4	52' - 10'	Str.
B17	8	4	8' - 6"	19B
B18	12	8	4' - 3"	19B
B19	12	5	2' - 4"	Str.
B20	12	6	4' - 0"	17A
B21	12	4	53' - 8"	Str.
C1	302	5	6' - 8"	T1A
C2	272	5	5' - 1"	S11
C3	4	5	5' - 0"	S11
C4	4	5	5' - 0"	S11
C5	4	5	5' - 0"	S11
C6	4	5	6' - 8"	T1
C7	4	5	6' - 9"	T1
C8	4	5	6' - 11"	T1
C9	4	5	7' - 0"	T1
C10	16	6	6' - 10"	T1A
C11	16	5	7' - 1"	T1
C12	4	6	6' - 4"	17
C13	4	5	5' - 4"	17
△ Z1	108	7	2' - 0"	Str.

Bending Details

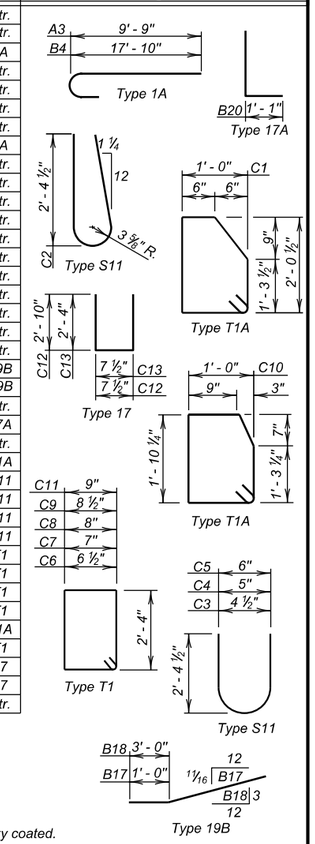

NOTES-
All reinforcing steel shall be epoxy coated.
All dimensions are out to out of bars.
Bend in field as necessary to fit.

ESTIMATED QUANTITIES

ITEM	UNIT	QUANTITY
Class A45 Concrete, Bridge Deck	Cu. Yd.	376.9
Epoxy Coated Reinforcing Steel	Lb.	103170
No. 7 Rebar Splice	Each	108
Concrete Penetrating Sealer	Sq. Yd.	709

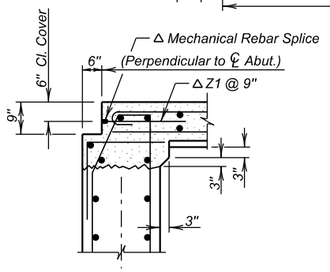

DETAIL "D"

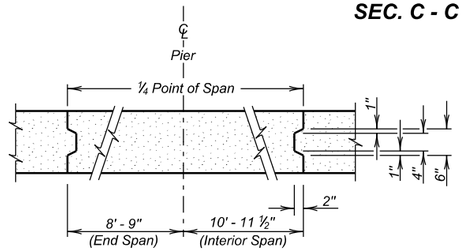

DETAIL "E"

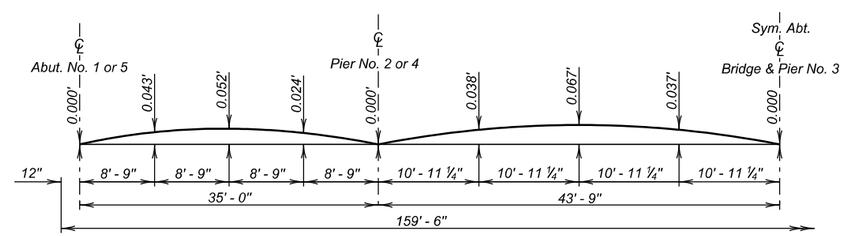

CAMBER DIAGRAM

Camber is calculated for dead load deflection plus plastic flow and shall be added to the proposed grade elevations at the respective stations to establish the elevations of the top of the finished roadway slab.

△ See DETAILS OF APPROACH SLAB ADJACENT TO BRIDGE sheet for location of Z1 bars and Mechanical Rebar Splices.

SUPERSTRUCTURE DETAILS
FOR
WESTBOUND LANES

159' - 6" CONTINUOUS CONCRETE BRIDGE

40' - 0" ROADWAY — 0° SKEW
OVER ELK CREEK — SEC. 33-T4N-R6E
STA. 140 + 53.80 TO 142 + 13.30 — IM 0901(38)40
STR. NO. 47-080-534 — HL-93

MEADE COUNTY
S. D. DEPT. OF TRANSPORTATION
FEBRUARY 2014

DESIGNED BY	CK. DES. BY	DRAFTED BY	
BB	PW	MG	Steve A Johnson BRIDGE ENGINEER
MEAD5580	5580GE11		

STATE OF	PROJECT	SHEET NO.	TOTAL SHEETS
S.D.	IM 0901(38)40	E43	E199

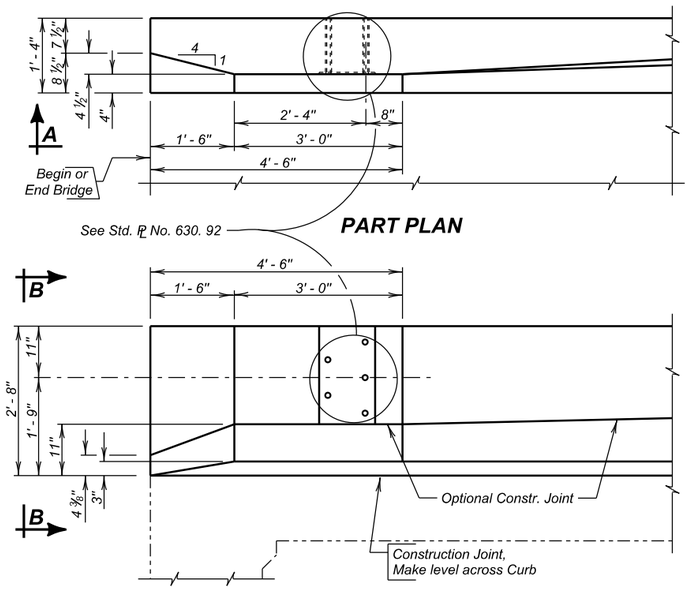

PART PLAN

VIEW A- A

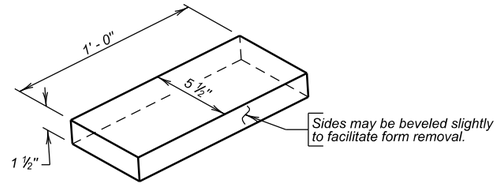

RECESS DETAIL

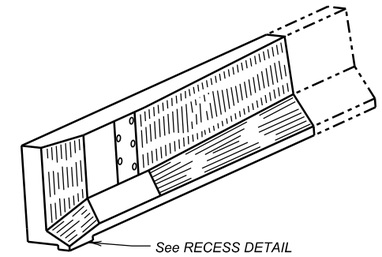

ISOMETRIC VIEW

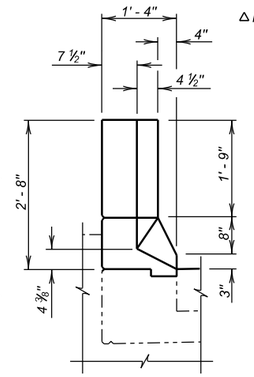

VIEW B - B

△ Place as shown in Superstructure Details.

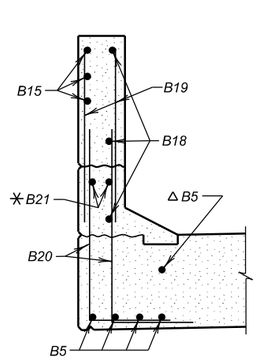

SEC. C - C

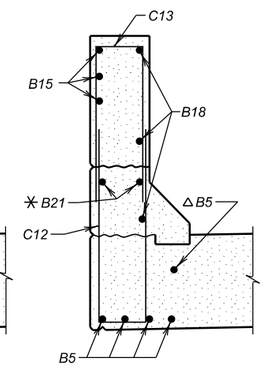

SEC. D - D

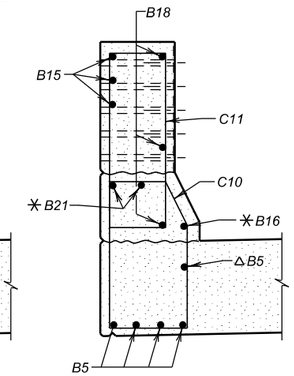

SEC. E - E

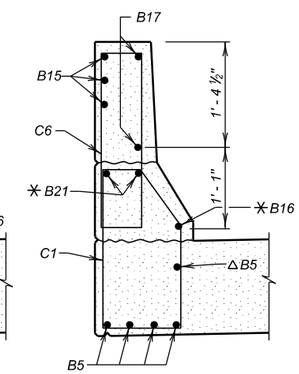

SEC. F - F

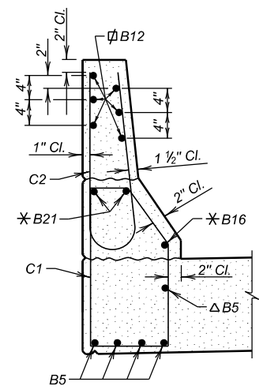

SEC. G - G

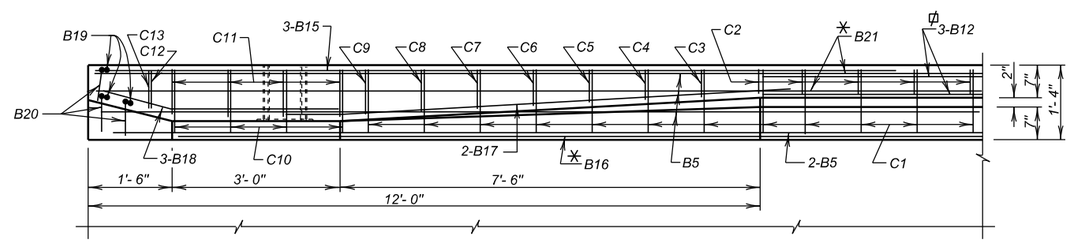

✳ Min. Lap = 1' - 0"
ϕ Min. Lap = 2' - 3"

PLAN

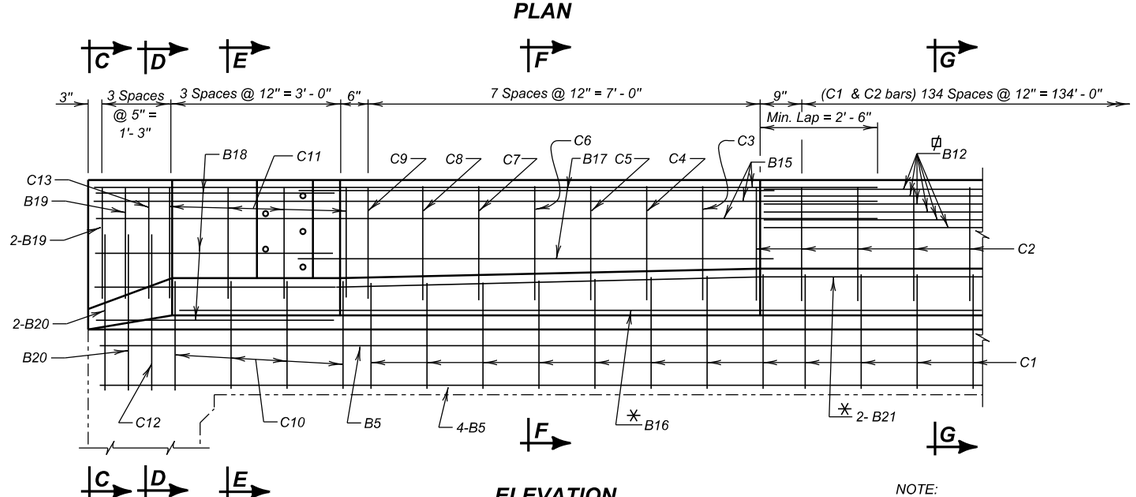

ELEVATION

NOTE:
For listing of re-bars see Superstructure Details.

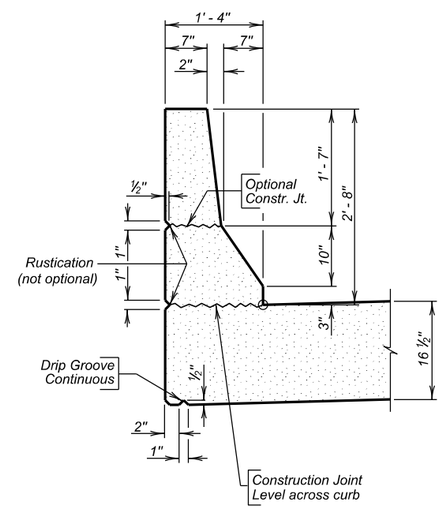

BARRIER DETAILS

END BLOCK AND BARRIER CURB DETAILS

FOR

WESTBOUND LANES

159' - 6" CONTINUOUS CONCRETE BRIDGE

40' - 0" ROADWAY — 0° SKEW
OVER ELK CREEK — SEC. 33-T4N-R6E
STA. 140 + 53.80 TO 142 + 13.30 — IM 0901(38)40
STR. NO. 47-080-534 — HL-93

MEADE COUNTY

S. D. DEPT. OF TRANSPORTATION

FEBRUARY 2014

DESIGNED BY	CK. DES. BY	DRAFTED BY	
BB	PW	MG	Steve A Johnson BRIDGE ENGINEER
MEAD5580	5580GE12		

STATE OF	PROJECT	SHEET NO.	TOTAL SHEETS
S.D.	IM 0901(38)40	E44	E199

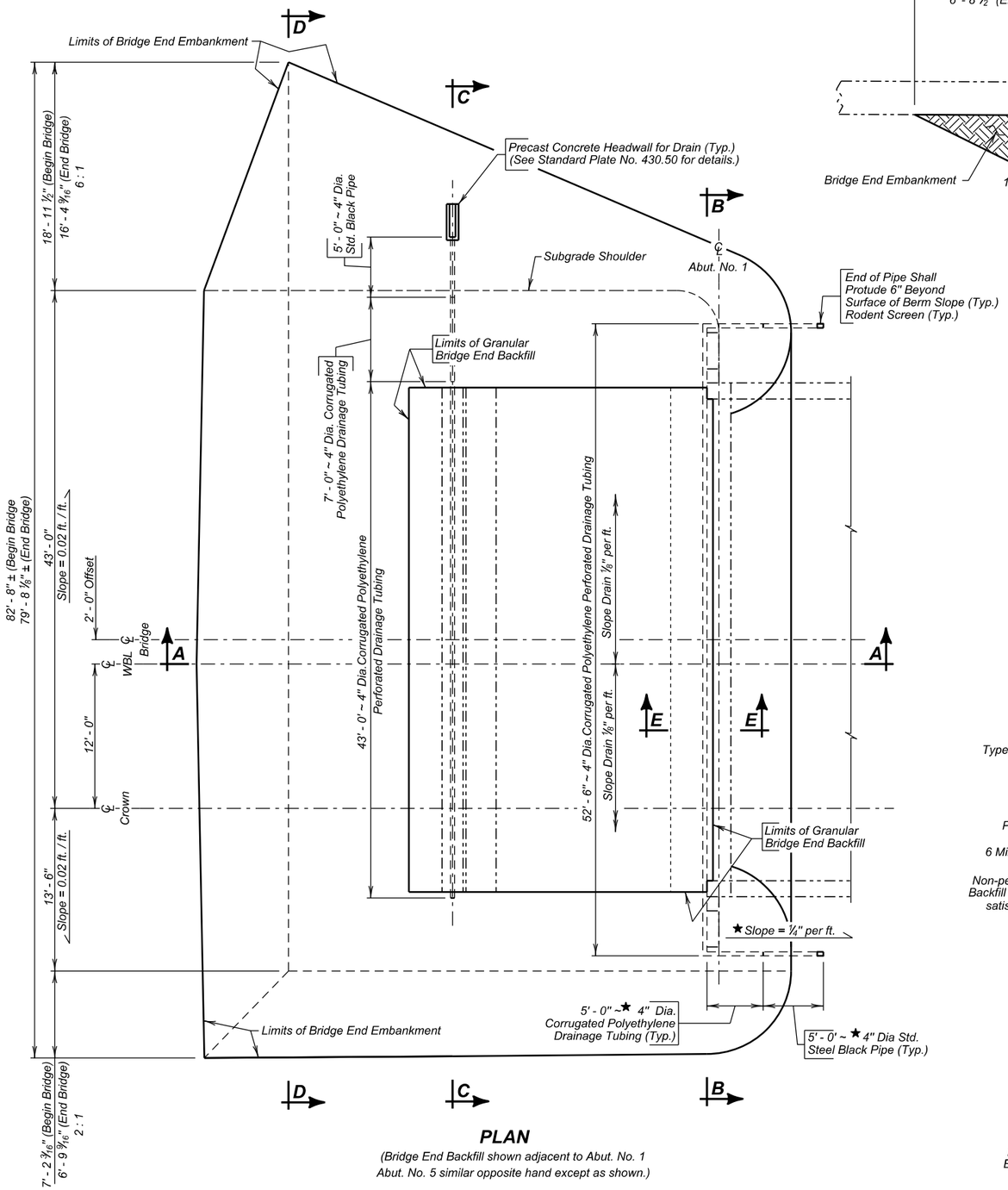

PLAN

(Bridge End Backfill shown adjacent to Abut. No. 1
Abut. No. 5 similar opposite hand except as shown.)

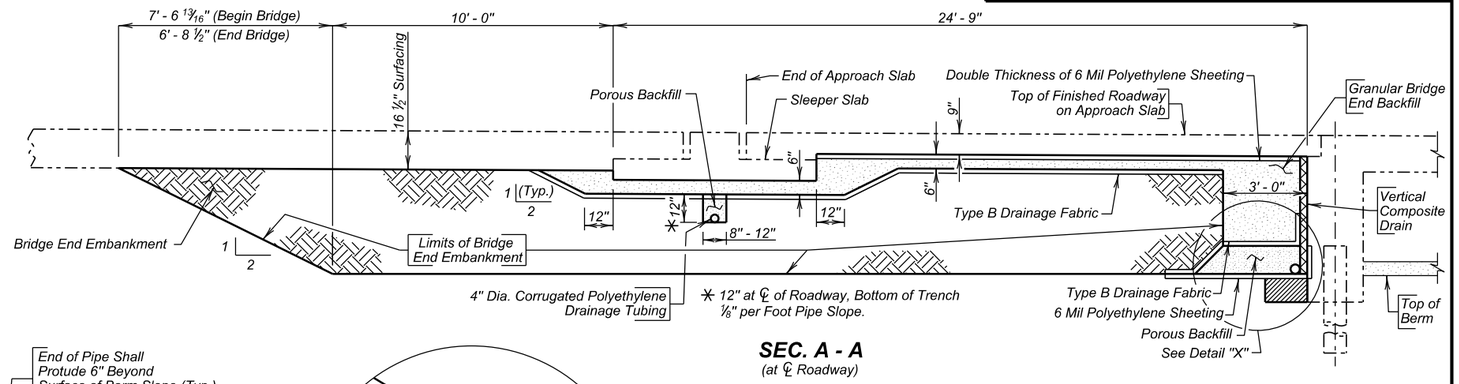

SEC. A - A

(at ℄ Roadway)

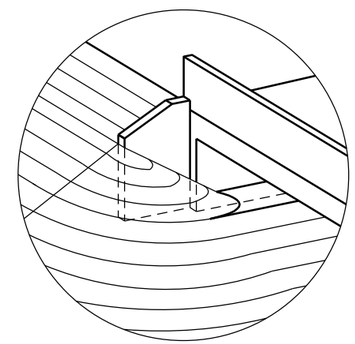

SPILL CONE DETAIL AT EMBANKMENT

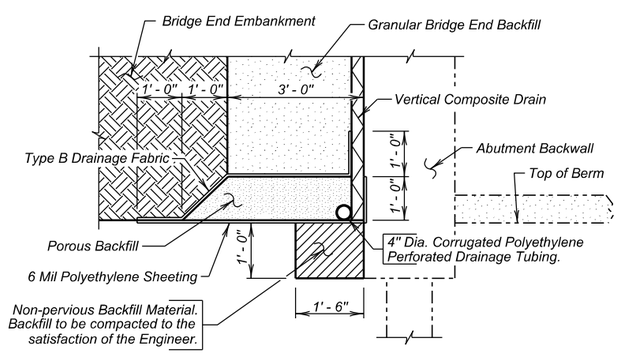

DETAIL "X"

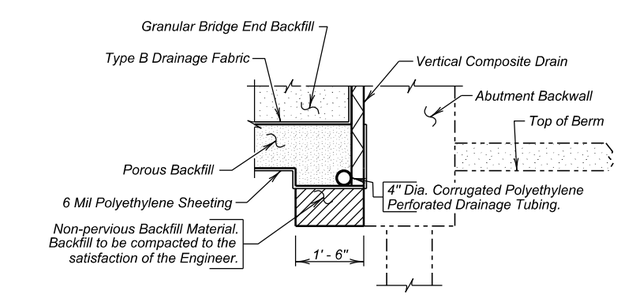

SEC. E - E

ESTIMATED QUANTITIES

(For Two Abutments)

ITEM	UNIT	QUANTITY
Granular Bridge End Backfill	Cu. Yd.	72.3
∡ Bridge End Embankment	Cu. Yd.	784.3
⌀ Porous Backfill	Ton	38.6
4" Underdrain Pipe	Ft.	255
⊕ Approach Slab Underdrain Excavation	Cu. Yd.	3.2
Precast Concrete Headwall for Drain	Each	2

1. 191 ft. 4" dia. Corrugated Polyethylene Perforated Drainage Tubing.
2. 34 ft. 4" dia. Corrugated Polyethylene Drainage Tubing.
3. 30 ft. 4" dia. Std. Black Steel Pipe with Rodent Screens.
4. 364 sq. ft. Vertical Composite Drain

Items 1 thru 4 are approximate quantities contained in the 4" Underdrain Pipe and are for information only.

5. 3570 sq. ft. 6 mil Polyethylene Sheeting, not including laps.
6. 303 sq. yd. Type B Drainage Fabric.

Items 5 and 6 are approximate quantities contained in the Granular Bridge End Backfill and are for information only.

⌀ For estimating purposes only, a factor of 1.89 tons/cu. yd. was used to convert cu. yds. to tons.

∡ Shrinkage Factor of 1.25 Used.

⊕ Quantity based on a 12" wide trench.

DETAILS OF BRIDGE END BACKFILL (A)

FOR

WESTBOUND LANES

159' - 6" CONTINUOUS CONCRETE BRIDGE

40' - 0" ROADWAY — 0° SKEW
OVER ELK CREEK — SEC. 33-T4N-R6E
STA. 140 + 53.80 TO 142 + 13.30 — IM 0901(38)40
STR. NO. 47-080-534 — HL-93

MEADE COUNTY

S. D. DEPT. OF TRANSPORTATION

FEBRUARY 2014

DESIGNED BY	CK. DES. BY	DRAFTED BY	
BB	PW	BT	Steve A Johnson BRIDGE ENGINEER
MEAD5580	5580GE13		

STATE OF	PROJECT	SHEET NO.	TOTAL SHEETS
S.D.	IM 0901(38)40	E45	E199

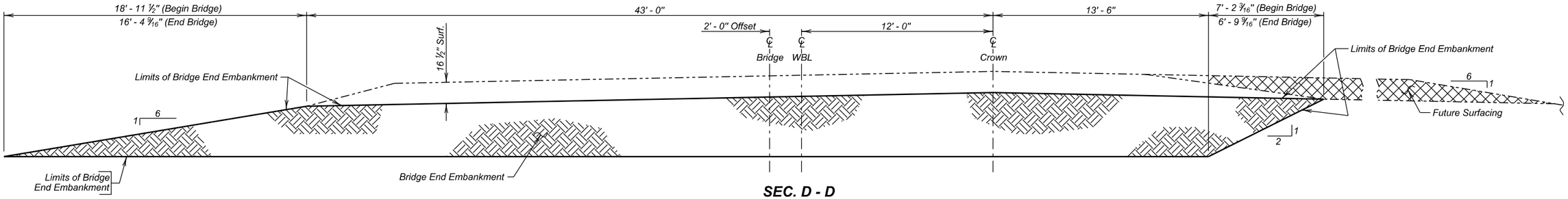

SEC. D - D

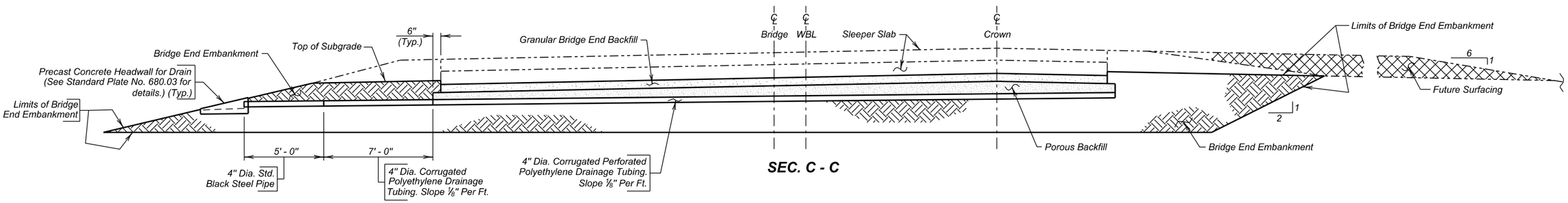

SEC. C - C

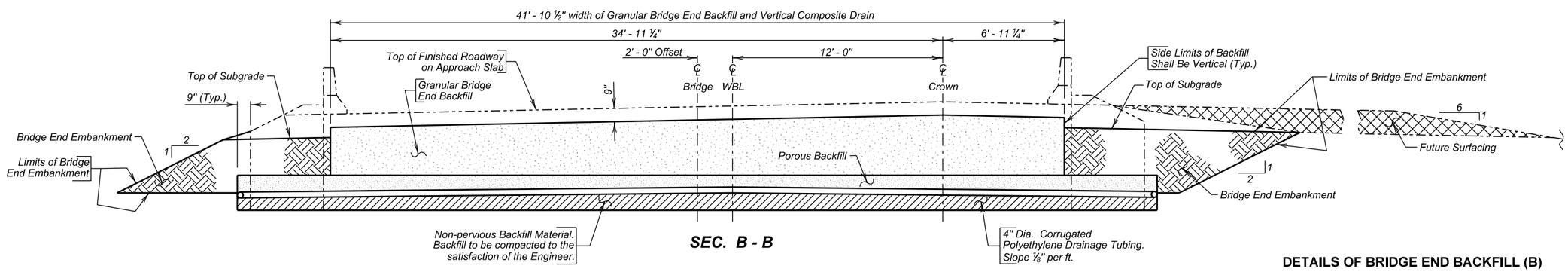

SEC. B - B

DETAILS OF BRIDGE END BACKFILL (B)

FOR

WESTBOUND LANES

159' - 6" CONTINUOUS CONCRETE BRIDGE

40' - 0" ROADWAY	0° SKEW
OVER ELK CREEK	SEC. 33-T4N-R6E
STA. 140 + 53.80 TO 142 + 13.30	IM 0901(38)40
STR. NO. 47-080-534	HL-93

MEADE COUNTY

S. D. DEPT. OF TRANSPORTATION

FEBRUARY 2014

DESIGNED BY	CK. DES. BY	DRAFTED BY	
BB	PW	BT	Steve A Johnson
MEAD5580	5580GE14		BRIDGE ENGINEER

STATE OF	PROJECT	SHEET NO.	TOTAL SHEETS
S.D.	IM 0901(38)40	E46	E199

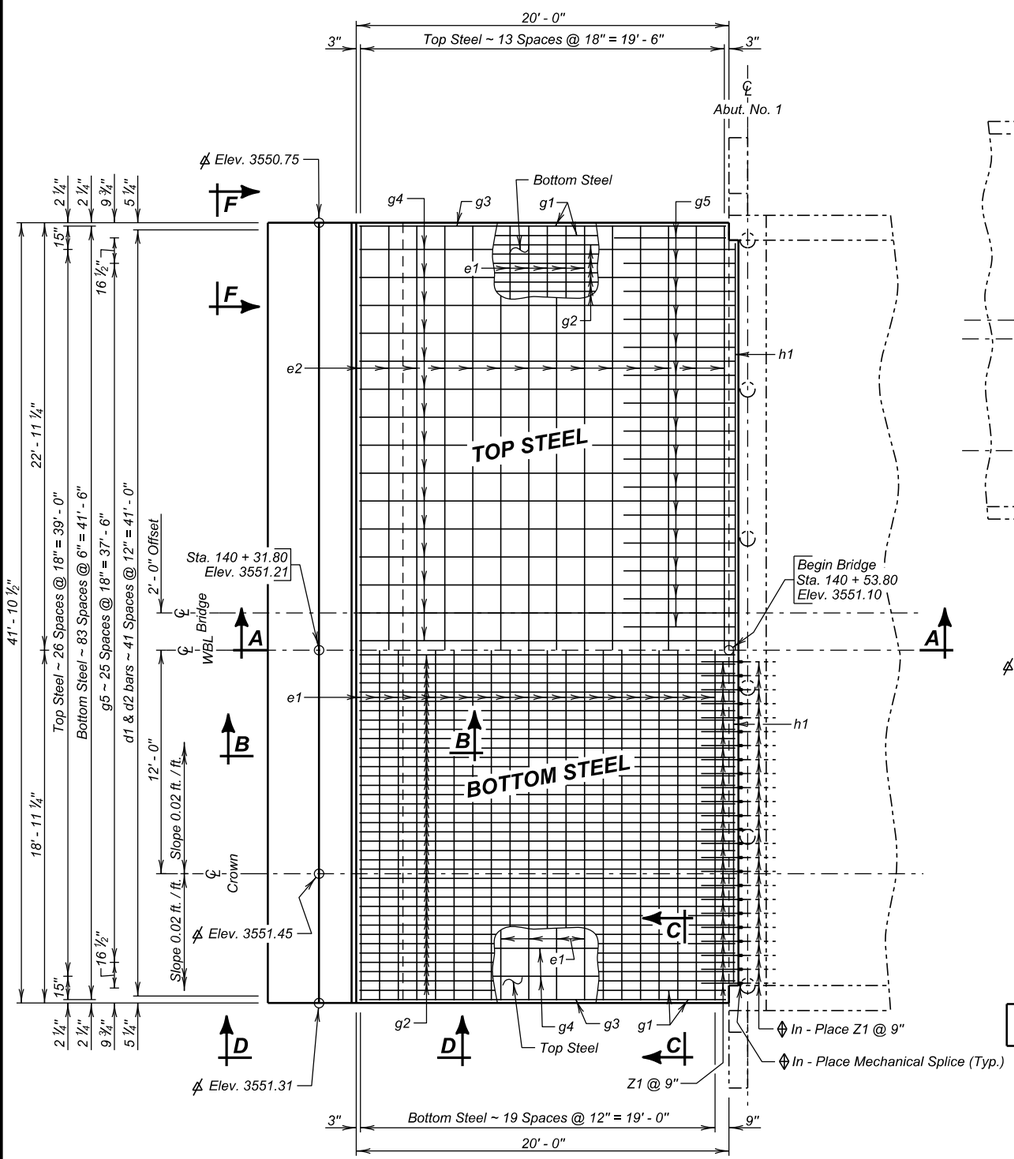

PLAN

(Shown adj. to Abut. No. 1, Abut. No. 5 similar by rotation)

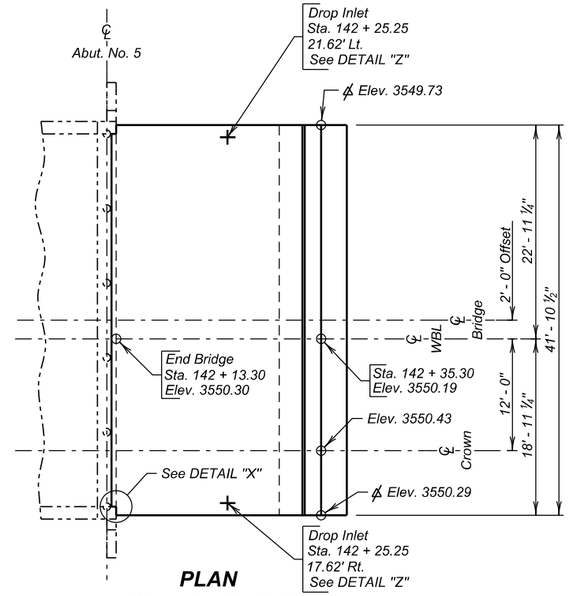

PLAN

(Shown adj. to Abut. No. 5)

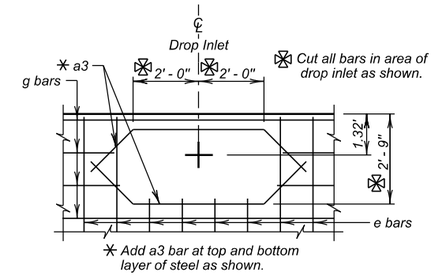

DETAIL "Z"

(Typical plan for steel when drop inlet is used.)

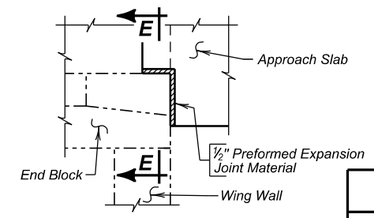

DETAIL "X"

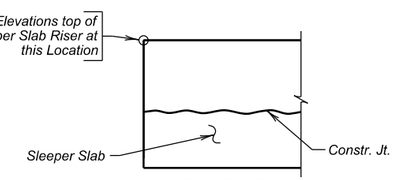

VIEW F - F

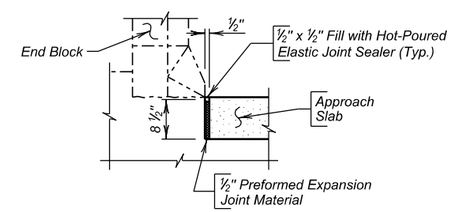

SEC. E - E

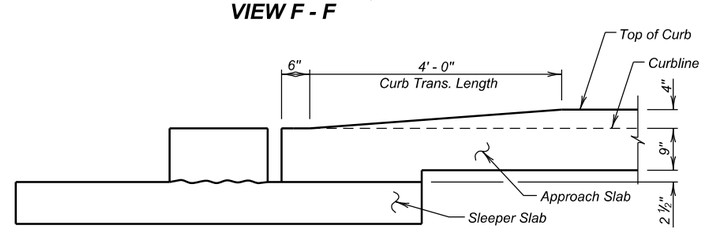

VIEW D - D

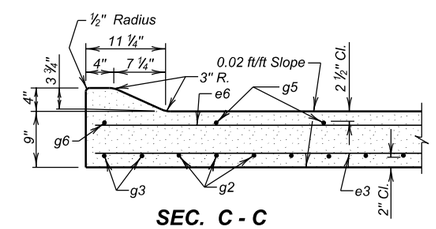

SEC. C - C

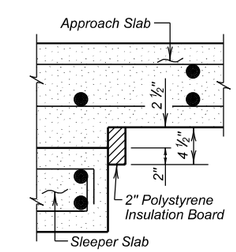

DETAIL "Q"

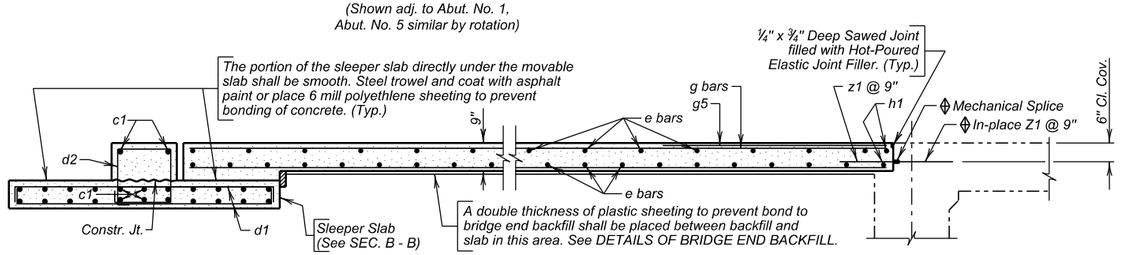

SEC. A - A

In-place Z1 bars and Mechanical Splices are listed and included in superstructure quantities. See SUPERSTRUCTURE DETAILS.

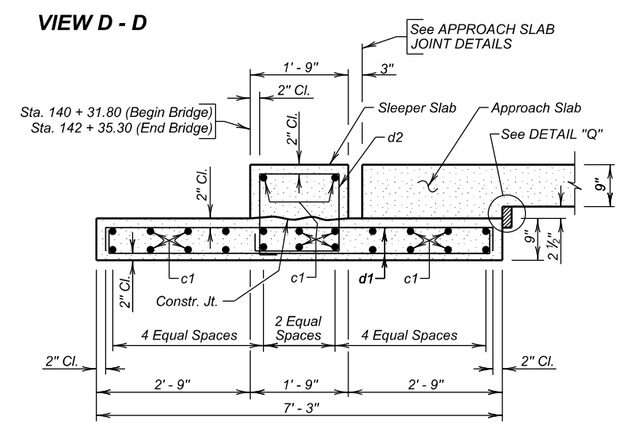

SEC. B - B

(Sleeper Slab)

REINFORCING SCHEDULE

(For Two Approach Slabs & Two Sleeper Slabs)

Mk.	No.	Size	Length	Type
Approach Slabs				
a3	8	4	7' - 4"	19A
e1	40	6	41' - 7"	Str.
e2	28	4	41' - 7"	Str.
g1	8	8	19' - 8"	Str.
g2	160	8	20' - 2"	Str.
g3	4	4	19' - 8"	Str.
g4	54	4	20' - 2"	Str.
g5	50	4	6' - 0"	Str.
h1	4	6	39' - 8"	Str.
Z1	108	7	2' - 0"	Str.
Sleeper Slabs				
c1	48	5	41' - 7"	Str.
d1	168	4	7' - 9"	2
d2	84	4	6' - 4"	T2

Bending Details

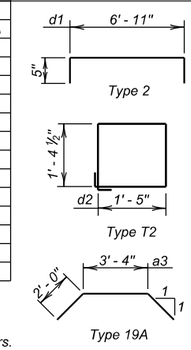

NOTES:
All bars to be epoxy coated.
All dimensions are out to out of bars.

ESTIMATED QUANTITIES

(For Two Approach Slabs and Two Sleeper Slabs)

ITEM	UNIT	QUANTITY
Concrete Approach Slab for Bridge	Sq. Yd.	190.6
Concrete Approach Sleeper Slab for Bridge	Sq. Yd.	67.5

1. 49.8 Cu. Yds. Concrete in Approach Slabs.
2. 14012 Lbs. Epoxy Coated Re-Steel in Approach Slabs.
3. 22.1 Cu. Yds. Concrete in Sleeper Slabs.
4. 3307 Lbs. Epoxy Coated Re-Steel in Sleeper Slabs.
5. 31.4 Sq. Ft. of 2" Polystyrene Insulation Board.

Items 1 thru 5 are approximate quantities contained in the above bid items and are for information only.

DETAILS OF APPROACH SLAB ADJACENT TO BRIDGE

FOR

WESTBOUND LANES

159' - 6" CONTINUOUS CONCRETE BRIDGE

40' - 0" ROADWAY — 0° SKEW
OVER ELK CREEK — SEC. 33-T4N-R6E
STA. 140 + 53.80 TO 142 + 13.30 — IM 0901(38)40
STR. NO. 47-080-534 — HL-93

MEADE COUNTY
S. D. DEPT. OF TRANSPORTATION
FEBRUARY 2014

DESIGNED BY	CK. DES. BY	DRAFTED BY	
BB	PW	MG	Steve A Johnson BRIDGE ENGINEER
MEAD5580	5580GE15		

STATE OF	PROJECT	SHEET NO.	TOTAL SHEETS
S.D.	IM 0901(38)40	E47	E199

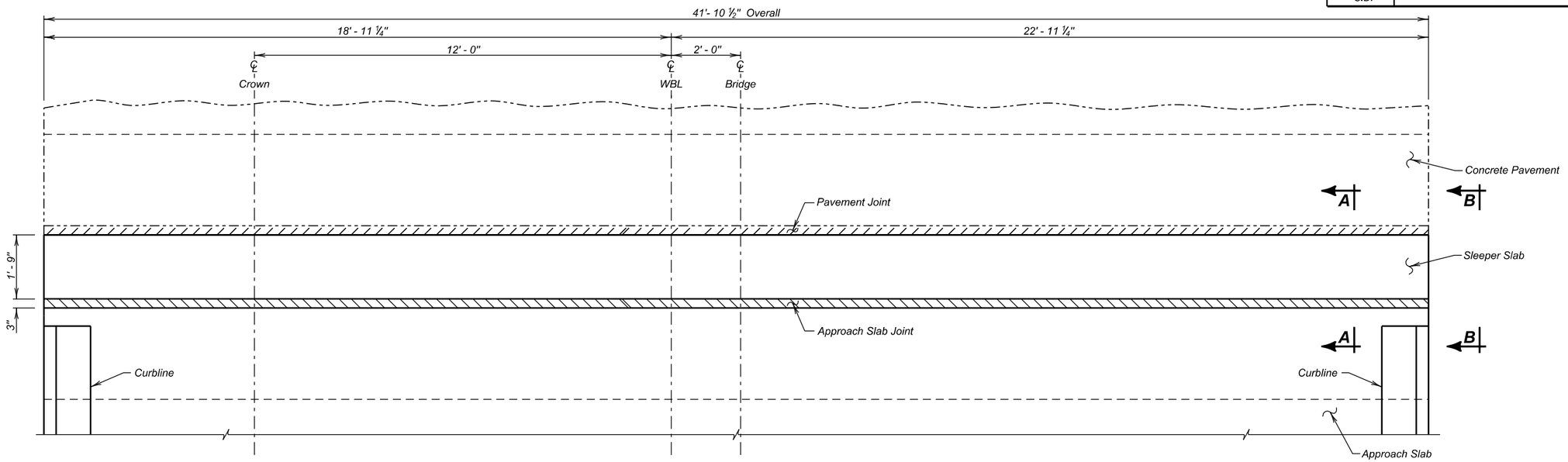

PLAN

GENERAL NOTES

1. The Membrane Sealant shall be on the approved product list for Membrane Sealant Expansion Joints.
2. The manufacturer shall supply the membrane sealant in packaging that precompresses the membrane sealant. The precompressed dimension shall be as recommended by the sealant manufacturer, however, in no case shall the precompressed dimension exceed 75% of the joint opening width. The foam sealant shall be slowly self expanding to permit workers ample time to install the membrane sealant before the membrane sealant exceeds the joint opening width.
3. The membrane sealant shall provide a water tight seal throughout a joint movement range of + 25% (minimum) from the specified joint opening dimension.
4. The membrane sealant shall be supplied in pieces a minimum of 5 feet in length. The foam sealant shall be ultra-violet and ozone resistant.
5. The bonding adhesive used to attach the membrane sealant to the adjacent concrete shall be approved by the membrane sealant manufacturer.
6. Adhesive used to join adjacent pieces of the membrane sealant shall be as recommended by the manufacturer.
7. If styrofoam filler material is used in the construction, it shall be closed cell and water-tight as approved by the Engineer.
8. The minimum ambient air temperature at the time of joint installation and adhesive curing shall be 40° F.
9. A technical representative of the membrane sealant manufacturer shall be present at the jobsite during installation. The technical representative shall be knowledgeable in the correct procedures for the preparation and installation of the joint material to ensure the Contractor installs the joint to the manufacturers' recommendations.
10. Surfaces that will be in contact with the membrane sealant shall be thoroughly cleaned by abrasive blasting to remove all laitance and contaminants (such as oil, curing compounds, etc.) from the surface. At a minimum, two passes of abrasive blasting with the nozzle held at an angle to within 1 to 2 inches of the surface will be required. Cleaning of the surfaces with solvents, wire brushing, or grinding shall not be permitted.
11. After abrasive blasting, but immediately prior to membrane joint installation, the entire joint contact surface shall be air blasted. The air compressor used for joint cleaning shall be equipped with trap devices capable of providing moisture-free and oil-free air at a recommended pressure of 90 psi. To obtain complete bonding with the adhesive, the adjacent surfaces must be dry and clean. The contact surfaces for the joint shall be visually inspected by the Engineer immediately prior to joint installation to verify the surface is dry and clean.
12. Individual spliced sections shall be installed as per the manufacturers' recommendations. The membrane joint sealant manufacturer shall submit a detailed installation procedure to the Engineer at least 5 days prior to joint installation for his review.
13. Traffic shall not be allowed on the joint until the bonding adhesive has had time to cure, as recommended by the manufacturer.
14. Use plywood or other material to protect concrete adjacent to the joint from spalling before any equipment is moved across the joint. Any spall areas will be repaired at the Contractor's expense by breaking out and replacing adjacent concrete, as approved by the Engineer.
15. The Membrane Sealant Expansion Joint will be measured in feet to the nearest one-tenth foot, complete in place. Measurement will be made of the overall horizontal length. The Membrane Sealant Expansion Joint will be paid for at the contract unit price per foot complete in place. Payment for this item shall be full compensation for furnishing all the required materials in place, including labor, equipment and incidentals necessary to complete the work in accordance with the plans and the foregoing specifications.

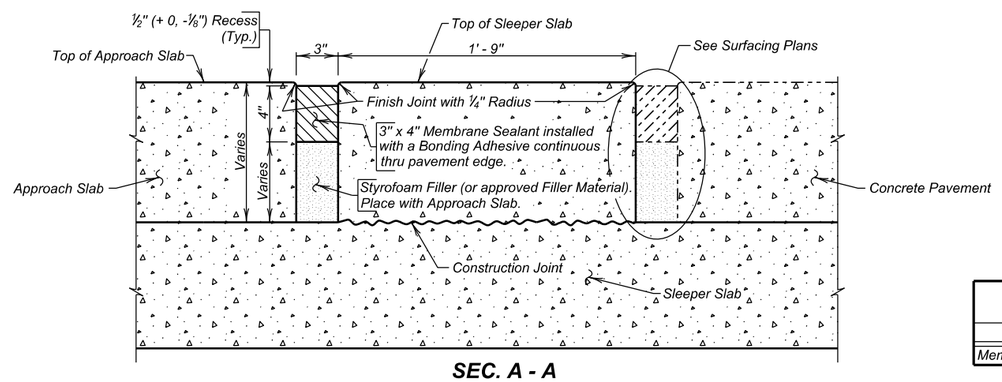

SEC. A - A

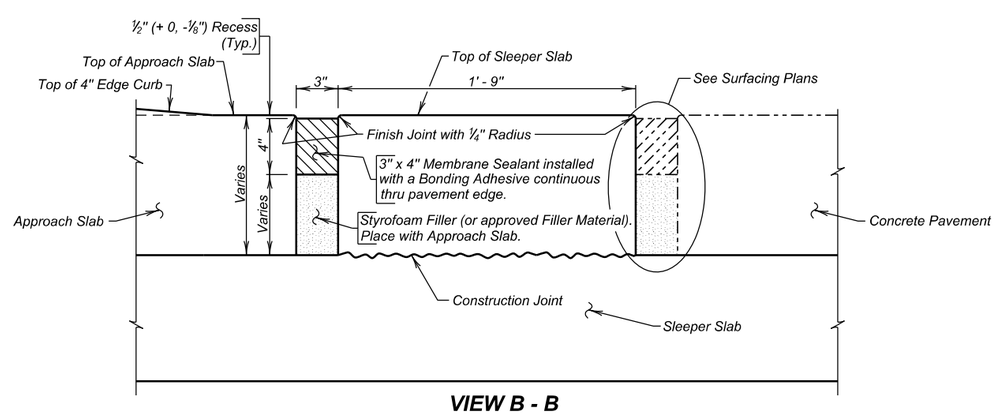

VIEW B - B

ESTIMATED QUANTITIES
(For Two Approach Slabs)

ITEM	UNIT	QUANTITY
Membrane Sealant Expansion Joint	Ft.	83.8

APPROACH SLAB JOINT DETAILS

FOR

WESTBOUND LANES

159' - 6" CONTINUOUS CONCRETE BRIDGE

40' - 0" ROADWAY — 0° SKEW
OVER ELK CREEK — SEC. 33-T4N-R6E
STA. 140 + 53.80 TO 142 + 13.30 — IM 0901(38)40
STR. NO. 47-080-534 — HL-93

MEADE COUNTY

S. D. DEPT. OF TRANSPORTATION

FEBRUARY 2014

DESIGNED BY	CK. DES. BY	DRAFTED BY	
BB	PW	MG	Steve A. Johnson
MEAD5580	5580GE16		BRIDGE ENGINEER

STATE OF	PROJECT	SHEET NO.	TOTAL SHEETS
S.D.	IM 0901(38)40	E48	E199

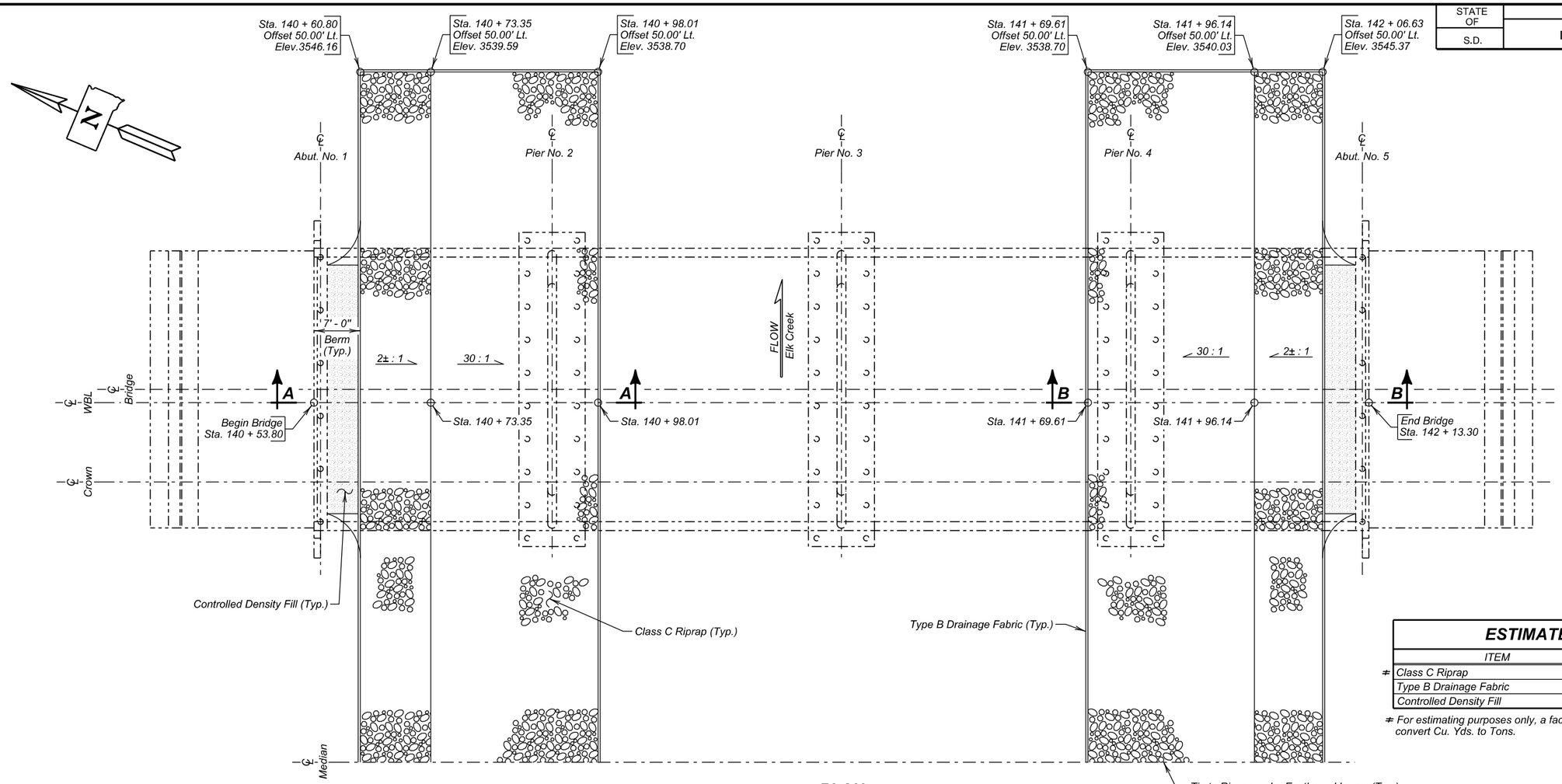

PLAN
(Riprap Layout)

ESTIMATED QUANTITIES

ITEM	UNIT	QUANTITY
# Class C Riprap	Ton	1266.0
Type B Drainage Fabric	Sq. Yd.	1069
Controlled Density Fill	Cu. Yd.	7.9

For estimating purposes only, a factor of 1.4 tons/cu.yd. was used to convert Cu. Yds. to Tons.

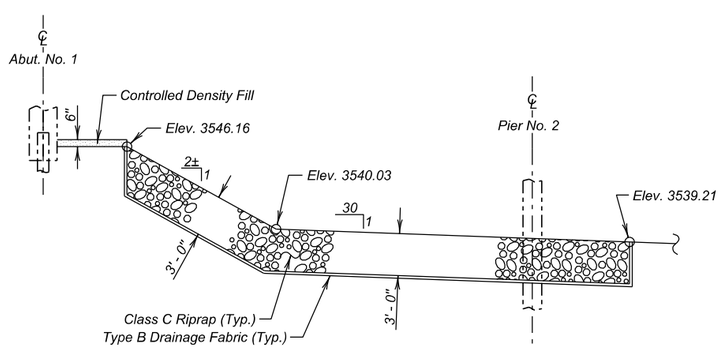

SEC. A - A

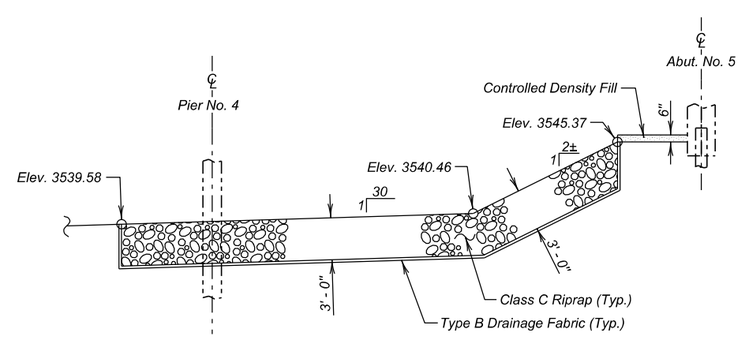

SEC. B - B

RIPRAP DETAILS
FOR
WESTBOUND LANES

159' - 6" CONTINUOUS CONCRETE BRIDGE

40' - 0" ROADWAY — 0° SKEW
OVER ELK CREEK — SEC. 33-T4N-R6E
STA. 140 + 53.80 TO 142 + 13.30 — IM 0901(38)40
STR. NO. 47-080-534 — HL-93

MEADE COUNTY
S. D. DEPT. OF TRANSPORTATION
FEBRUARY 2014

DESIGNED BY	CK. DES. BY	DRAFTED BY	
BB	PW	MG	Steve A. Johnson BRIDGE ENGINEER
MEAD5580	5580GE17		

The elevations shown in these plans are based on the National Geodetic Survey (NGS) North American Vertical Datum of 1988 (NAVD88).

STATE OF	PROJECT	SHEET NO.	TOTAL SHEETS
S.D.	IM 0901(38)40	E49	E199

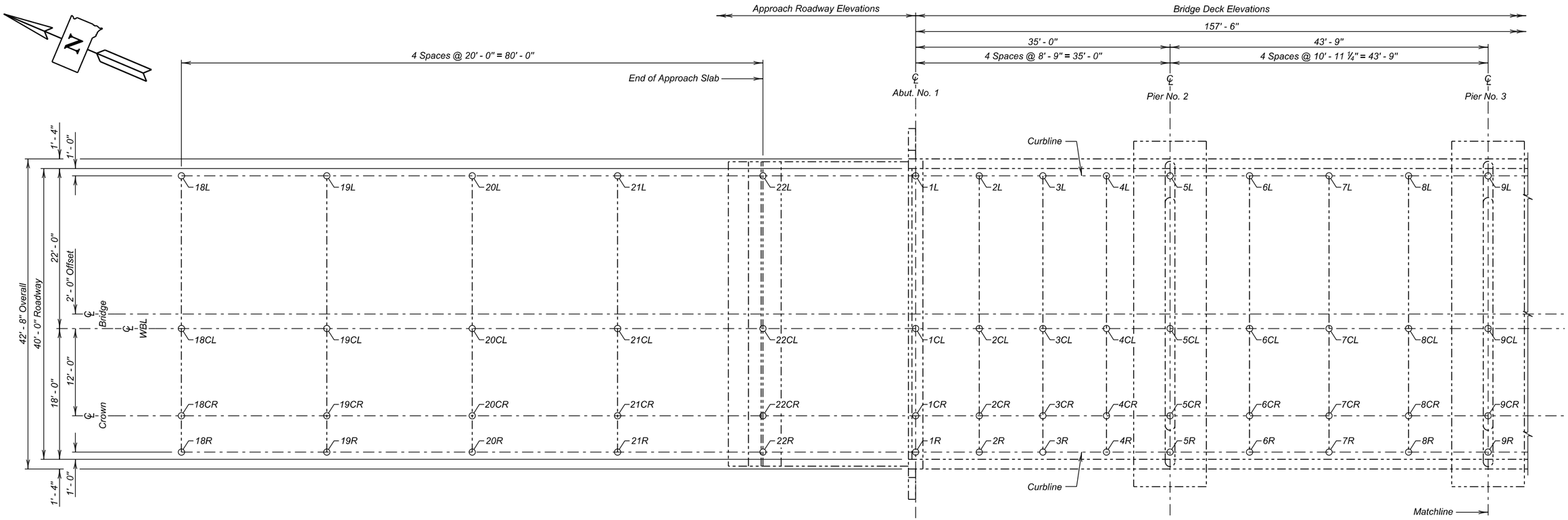

PLAN

Table of As-Built Elevations - Bridge Deck							
Location	**Elevation**	**Location**	**Elevation**	**Location**	**Elevation**	**Location**	**Elevation**
1L		1CL		1CR		1R	
2L		2CL		2CR		2R	
3L		3CL		3CR		3R	
4L		4CL		4CR		4R	
5L		5CL		5CR		5R	
6L		6CL		6CR		6R	
7L		7CL		7CR		7R	
8L		8CL		8CR		8R	
9L		9CL		9CR		9R	

Table of As-Built Elevations - Approach Roadway							
Location	**Elevation**	**Location**	**Elevation**	**Location**	**Elevation**	**Location**	**Elevation**
18L		18CL		18CR		18R	
19L		19CL		19CR		19R	
20L		20CL		20CR		20R	
21L		21CL		21CR		21R	
22L		22CL		22CR		22R	

ELEVATION - BRIDGE SURVEY MARKER		
LOCATION	**STATION - OFFSET**	**ELEVATION**
Begin Bridge		

NOTE -
The Contractor shall be responsible for producing the As - Built Elevation Survey soon after construction is complete and before the bridge is opened to traffic. The As - Built Elevations of the Bridge shall be taken and recorded at the locations shown by the table on this sheet. The completed table shall be given to the Engineer who will forward a copy to the Office of Bridge Design and the Region Office.

ESTIMATED QUANTITIES		
ITEM	UNIT	QUANTITY
Bridge Elevation Survey	L. S.	Lump Sum

AS-BUILT ELEVATION SURVEY (A)
FOR
WESTBOUND LANES

159' - 6" CONTINUOUS CONCRETE BRIDGE

40' - 0" ROADWAY — 0° SKEW
OVER ELK CREEK — SEC. 33-T4N-R6E
STA. 140 + 53.80 TO 142 + 13.30 — IM 0901(38)40
STR. NO. 47-080-534 — HL-93

MEADE COUNTY
S. D. DEPT. OF TRANSPORTATION
FEBRUARY 2014

DESIGNED BY	CK. DES. BY	DRAFTED BY	
BB	PW	MG	Steve A. Johnson
MEAD5580	5580GE18		BRIDGE ENGINEER

The elevations shown in these plans are based on the National Geodetic Survey (NGS) North American Vertical Datum of 1988 (NAVD88).

STATE OF	PROJECT	SHEET NO.	TOTAL SHEETS
S.D.	IM 0901(38)40	E50	E199

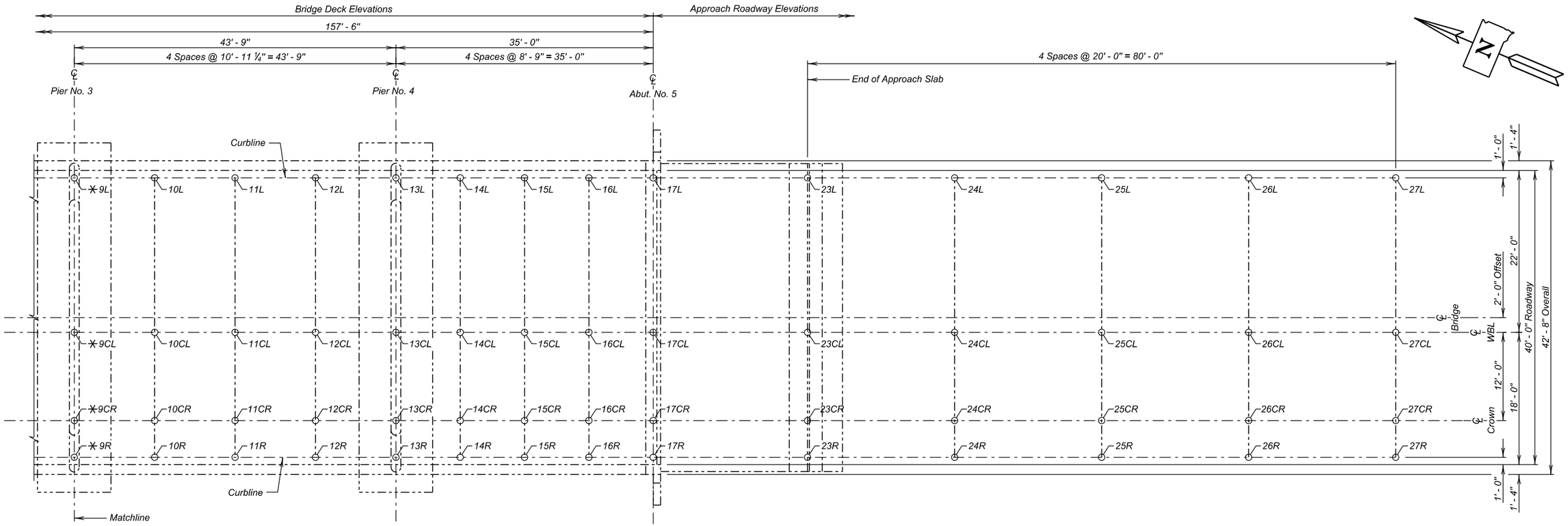

PLAN

✳ Included in AS-BUILT ELEVATION SURVERY (A).

Table of As-Built Elevations - Bridge Deck

Location	Elevation	Location	Elevation	Location	Elevation	Location	Elevation
10L		10CL		10CR		10R	
11L		11CL		11CR		11R	
12L		12CL		12CR		12R	
13L		13CL		13CR		13R	
14L		14CL		14CR		14R	
15L		15CL		15CR		15R	
16L		16CL		16CR		16R	
17L		17CL		17CR		17R	

Table of As-Built Elevations - Approach Roadway

Location	Elevation	Location	Elevation	Location	Elevation	Location	Elevation
23L		23CL		23CR		23R	
24L		24CL		24CR		24R	
25L		25CL		25CR		25R	
26L		26CL		26CR		26R	
27L		27CL		27CR		27R	

ELEVATION - BRIDGE SURVEY MARKER

LOCATION	STATION - OFFSET	ELEVATION
End Bridge		

NOTE -
The Contractor shall be responsible for producing the As - Built Elevation Survey soon after construction is complete and before the bridge is opened to traffic. The As - Built Elevations of the Bridge shall be taken and recorded at the locations shown by the table on this sheet. The completed table shall be given to the Engineer who will forward a copy to the Office of Bridge Design and the Region Office.

AS-BUILT ELEVATION SURVEY (B)
FOR
WESTBOUND LANES

159' - 6" CONTINUOUS CONCRETE BRIDGE

40' - 0" ROADWAY — 0° SKEW
OVER ELK CREEK — SEC. 33-T4N-R6E
STA. 140 + 53.80 TO 142 + 13.30 — IM 0901(38)40
STR. NO. 47-080-534 — HL-93

MEADE COUNTY
S. D. DEPT. OF TRANSPORTATION
FEBRUARY 2014

DESIGNED BY	CK. DES. BY	DRAFTED BY	
BB	PW	MG	Steve A. Johnson
MEAD5580	5580GE19		BRIDGE ENGINEER

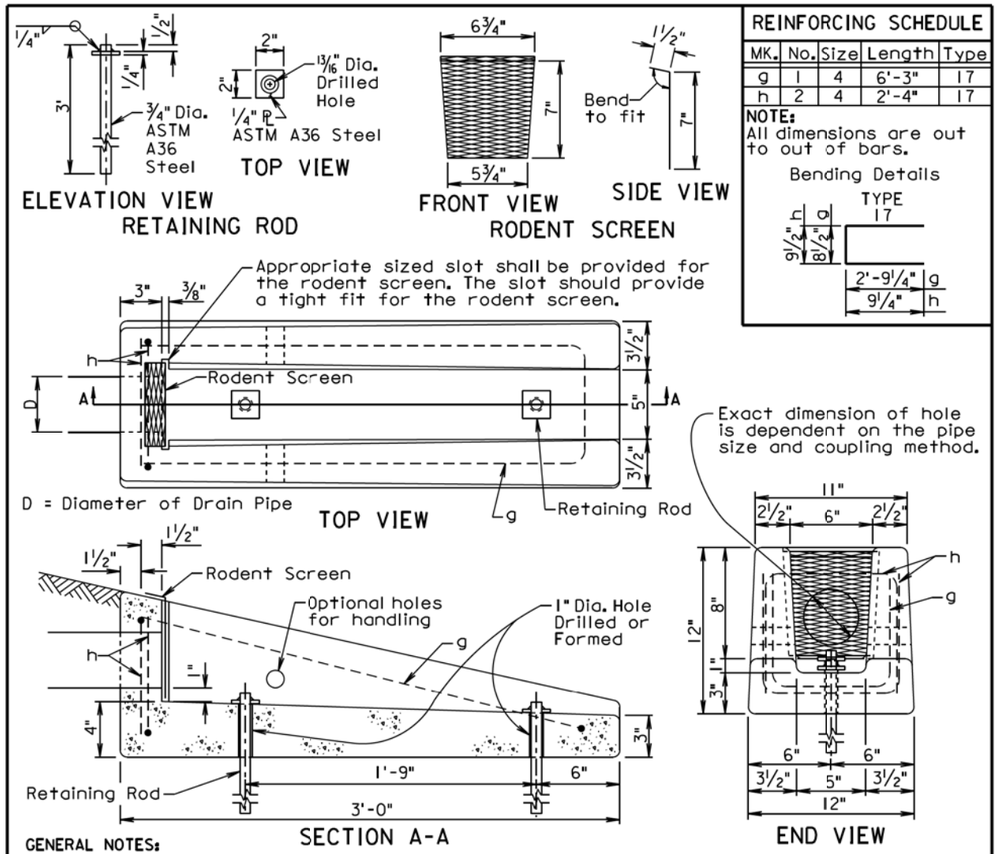

REINFORCING SCHEDULE

MK.	No.	Size	Length	Type
g	1	4	6'-3"	17
h	2	4	2'-4"	17

NOTE:
All dimensions are out to out of bars.

Bending Details

GENERAL NOTES:

The concrete shall be Class M6. The concrete shall conform to the requirements of Section 462 of the Specifications. It is estimated that each unit weighs approximately 210 pounds.

All reinforcing steel shall conform to ASTM A615 Grade 60 and shall be epoxy coated. The reinforcing steel shall be securely retained to prevent displacement during placement of concrete. It is estimated that 7.3 pounds of reinforcing steel is required for each unit.

The pipe shall be placed in the concrete headwall with the pipe end flush with the concrete surface adjacent to the rodent screen.

The rodent screen shall be galvanized 13 Ga. steel with a diamond shaped flattened mesh pattern. The size shall be 1/2". The size refers to the measurement across the smallest diamond shaped opening measured from the centers of the wires.

The retaining rod shall be galvanized in accordance with ASTM A123 after all shop welding has been completed.

The drawing indicates using 1/2" fillets; however, 3/4" chamfers may be substituted for the 1/2" fillets.

All costs for furnishing and installing the concrete headwall including equipment, labor, and materials including concrete, reinforcing steel, retaining rods, and rodent screen shall be incidental to the contract unit price per each for "Precast Concrete Headwall for Drain".

June 26, 2015

Published Date: 3rd Qtr. 2016	SDDOT	PRECAST CONCRETE HEADWALL FOR DRAIN	PLATE NUMBER 430.50 Sheet 1 of 1

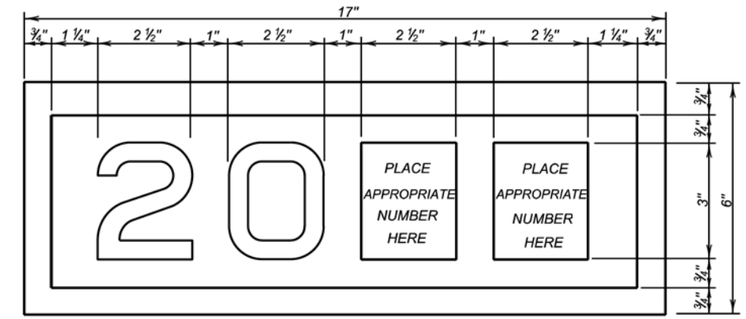

YEAR PLATE DETAILS

GENERAL NOTES:

1. Year plates of the general dimensions shown shall be constructed on all box culverts and bridges. The year plates shall be constructed in reverse and attached to the forms in such a manner that the finished imprint in the concrete does not exceed one-half (1/2) inch in depth.

2. Year plates shall be located on structure (s) as follows:

   a. On cast-in-place box culverts the year plates shall be four and one - half (4 1/2) inches below the top of the upstream parapet wall and centered laterally on the upstream face. On precast box culverts the year plate shall be centered laterally on the upstream face of the top slab. Where an extended interior wall interferes with this location, the year plate shall be centered in an adjacent barrel.

   b. On bridges with six (6) inch curbs or "Jersey" shaped barriers with no endblocks, the year plate shall be centered vertically on the curb face approximately six (6) inches from the end of the bridge, or as designated by the Engineer. On bridges with "Jersey" shaped barrier endblocks, the year plate shall be centered on the upper sloped portion of the barrier approximately 5'- 6" from the end of the bridge, or as designated by the Engineer. There shall be one year plate at each end of the bridge on opposite sides.

   c. When the plans specify that both the original date of construction and the date of reconstruction are to be shown, one date shall be placed as listed above and the other located adjacent to it. Both year plates shall be shown at each end of the bridge on opposite sides.

3. There will be no separate measurement or payment made for year plates on box culverts and bridges. All costs for this work shall be incidental to other contract items.

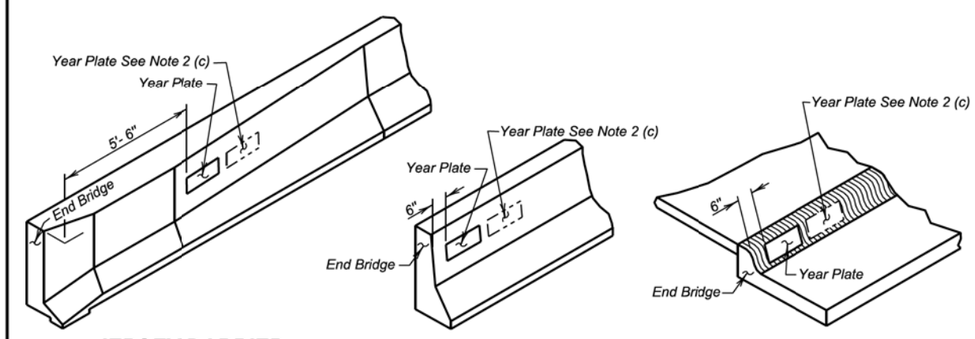

JERSEY BARRIER (With Endblock) **JERSEY BARRIER** **TYPE B CURB**

June 26, 2012

Published Date: 3rd Qtr. 2016	SDDOT	YEAR PLATE DETAILS	PLATE NUMBER 460.02 Sheet 1 Of 1

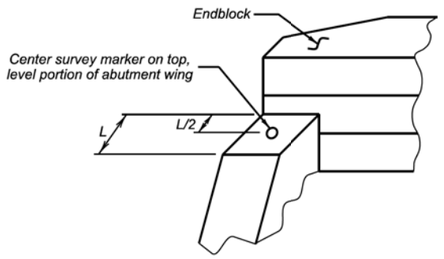

ABUTMENT WITH "STRAIGHT" WINGS

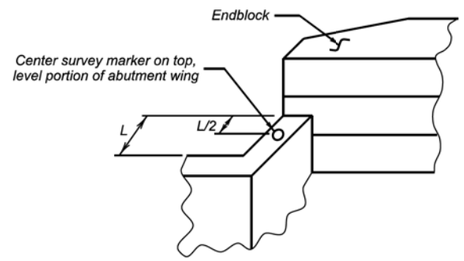

ABUTMENT WITH "SWEPT BACK" WINGS

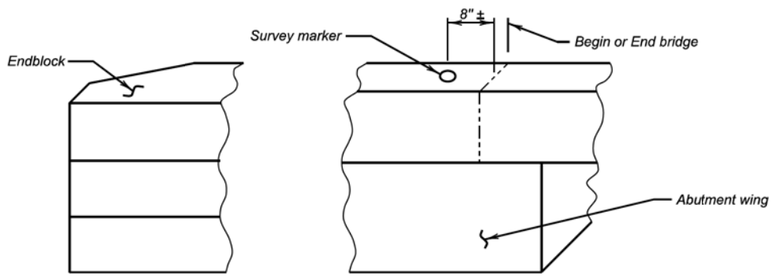

ABUTMENT WITH "SWEPT BACK" WINGS

(Endblock on top of wings)

GENERAL NOTES:

1. Survey markers shall be located at each abutment on the same side of the bridge as the year plate. Place survey markers on abutment wings as shown. Two survey markers will be required at each bridge.
2. Survey markers shall be of a type intended for installation in concrete, be made of solid brass or bronze, have a domed top and be either a 3" top diameter (with a ¾" X 2" long ribbed shank), or a US Army Corps of Engineers Type C Disc with a 3 ½" top diameter.
3. There will be no separate measurement or payment made for survey markers. All costs for this work shall be incidental to the other contract items.

June 26, 2012

Published Date: 3rd Qtr. 2016	SDDOT	BRIDGE SURVEY MARKER	PLATE NUMBER 460.05
			Sheet 1 of 1

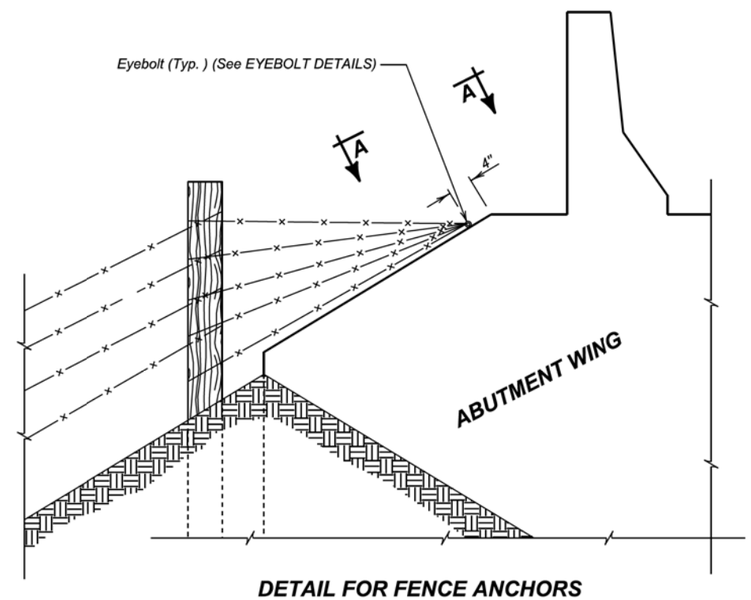

DETAIL FOR FENCE ANCHORS

GENERAL NOTES:

1. The fence and post details shown are for illustrative purpose only. The fence shall be as specified elsewhere in the plans.
2. Eyebolts shall be placed on all of the bridge abutment wings.
3. Eyebolts shall be ⅝ inch diameter and shall conform to ASTM A307.
4. Eyebolts, nuts, and concrete inserts shall be galvanized in accordance with AASHTO M232 (ASTM A153). Concrete inserts of corrosion resistant material need not be galvanized.
5. Cast-in-place eyebolts shall have a nut attached, be 4 ½ inches (Min.) in length and shall be embedded such that the eye of the bolt is flush with the concrete surface. (See Eyebolt Details) As an alternate, cast-in-place concrete inserts, capable of developing the full strength of the ⅝ inch diameter threaded eyebolt, may be used and shall be set in the concrete in accordance with the manufacturer's recommendations. The eyebolt shall be of sufficient length to develop its full strength. The eye of the eyebolt shall be flush with the concrete surface.
6. The cost for furnishing and installing eyebolts and/or concrete inserts shall be incidental to various contract items.

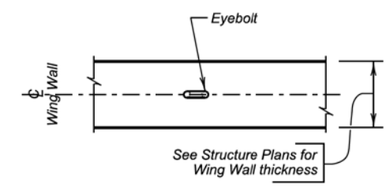

VIEW A - A

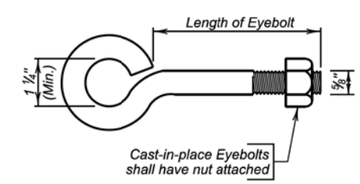

EYEBOLT DETAILS

December 23, 2012

Published Date: 3rd Qtr. 2016	SDDOT	FENCE ANCHORS FOR BRIDGE ABUTMENT WINGS (WINGS 6' AND SHORTER)	PLATE NUMBER 620.18
			Sheet 1 of 1

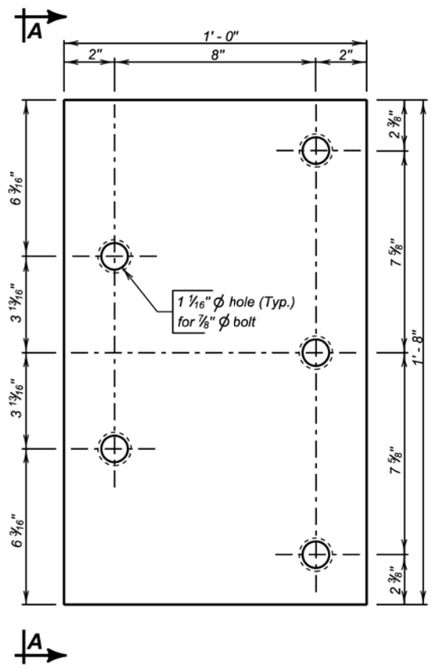

ELEVATION

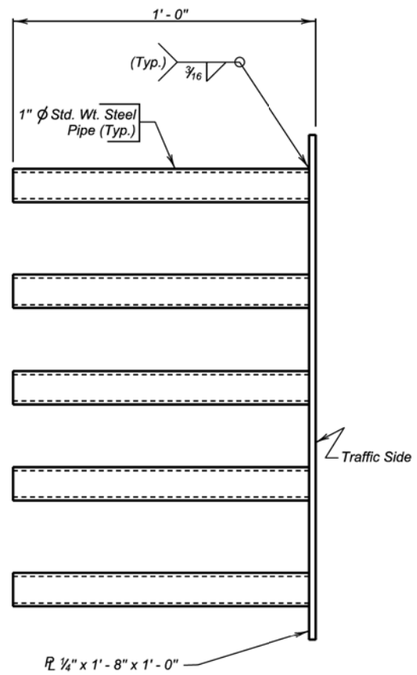

VIEW A - A

GENERAL NOTES:

1. Steel plate for the insert assembly shall conform to ASTM A709 Grade 36. The steel pipes shall conform to ASTM A53 or ASTM A500 Grade B.
2. Welding and weld inspection shall be in conformance with AWS D1.1 - (Current Year) Structural Welding Code - Steel.
3. After fabrication, galvanize in accordance with AASHTO M111 (ASTM A123).
4. Bolts, nuts, and washers shall be provided with each assembly. Bolts shall be galvanized and conform to the requirements of ASTM A307, A325, or A449. Plain washers shall be galvanized and conform to ASTM F844.
5. Bolt heads shall be placed on the traffic side of the endblock. Bolt projection at the back side of the insert shall not exceed 1 inch beyond the nut.
6. The cost of the 5 bolt insert plate assembly complete in place including welding and galvanizing shall be incidental to the contract unit price per Cubic Yard for " Class A45 Concrete, Miscellaneous ", " Class A45 Concrete, Bridge Deck ", or " Class A45 Concrete, Bridge Repair ", as applicable.

December 23, 2013

Published Date: 3rd Qtr. 2016	SDDOT	5 BOLT INSERT PLATE ASSEMBLY	PLATE NUMBER 630.92
			Sheet 1 of 1

The elevations shown in these plans are based on the National Geodetic Survey (NGS) North American Vertical Datum of 1988 (NAVD88).

STATE OF	PROJECT	SHEET NO.	TOTAL SHEETS
S.D.	IM 0901(38)40	E54	E199

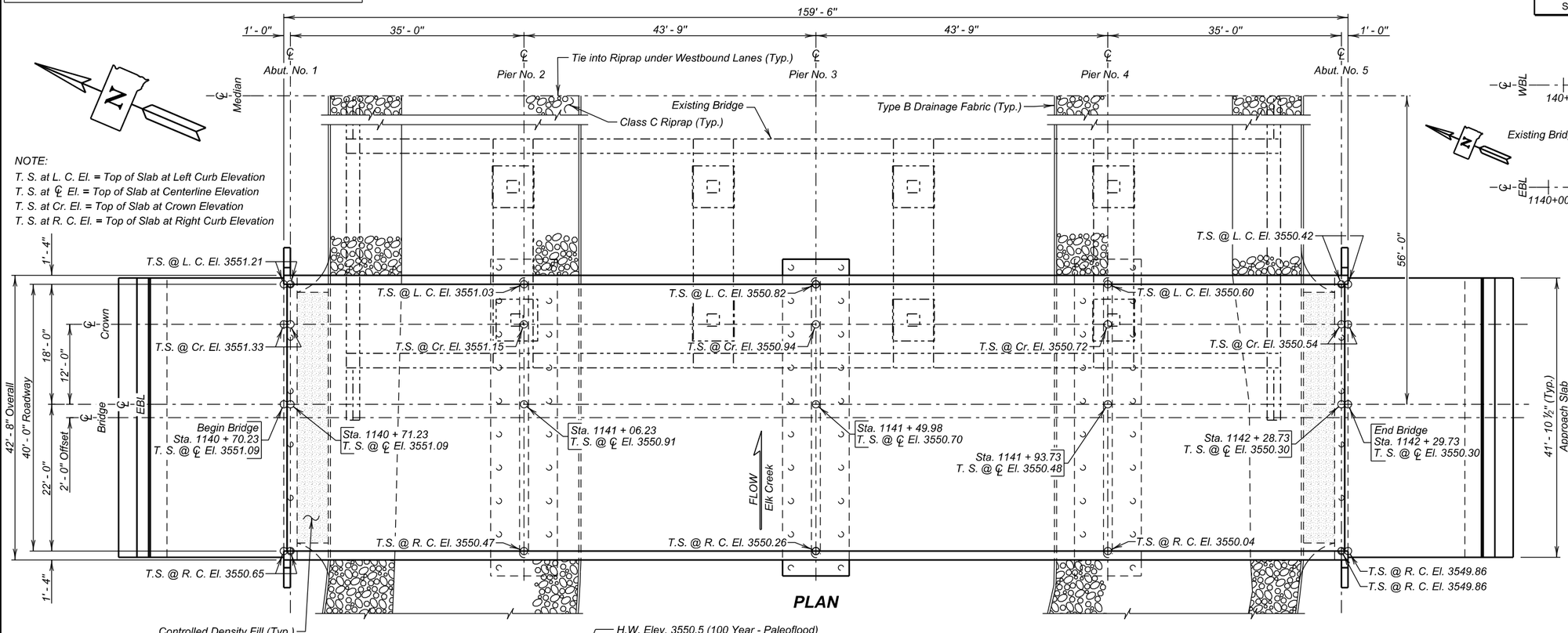

PLAN

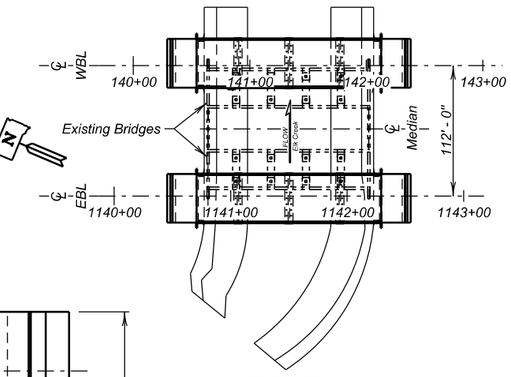

LAYOUT

-X020-
INDEX OF BRIDGE SHEETS -

Sheet No. 1 - General Drawing
Sheet No. 2 - Estimate of Structure Quantities and Notes
Sheet No. 3 - Notes (Continued)
Sheet No. 4 - Subsurface Investigation and Micropile Layout
Sheet No. 5 - Micropile Layout Details
Sheet No. 6 - Micropile Details
Sheet No. 7 - Abutment No. 1 Details
Sheet No. 8 - Abutment No. 5 Details
Sheet No. 9 - Pier Details (A)
Sheet No. 10 - Pier Details (B)
Sheet No. 11 - Superstructure Details
Sheet No. 12 - End Block and Barrier Curb Details
Sheet No. 13 - Details of Bridge End Backfill (A)
Sheet No. 14 - Details of Bridge End Backfill (B)
Sheet No. 15 - Details of Approach Slab Adjacent to Bridge
Sheet No. 16 - Approach Slab Joint Details
Sheet No. 17 - Riprap Details
Sheet No. 18 - As-Built Elevation Survey (A)
Sheet No. 19 - As-Built Elevation Survey (B)
Sheet No. 20 - Standard Plate No's. 430.50 and 460.02
Sheet No. 21 - Standard Plate No's. 460.05 and 620.18
Sheet No. 22 - Standard Plate No. 630.92

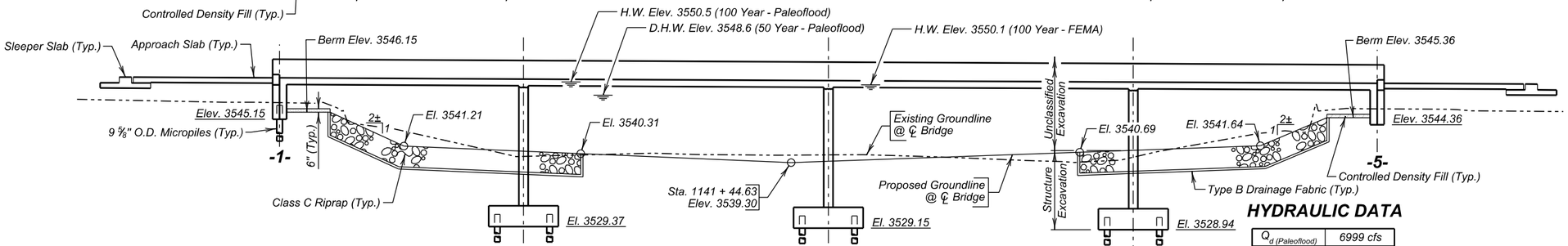

ELEVATION

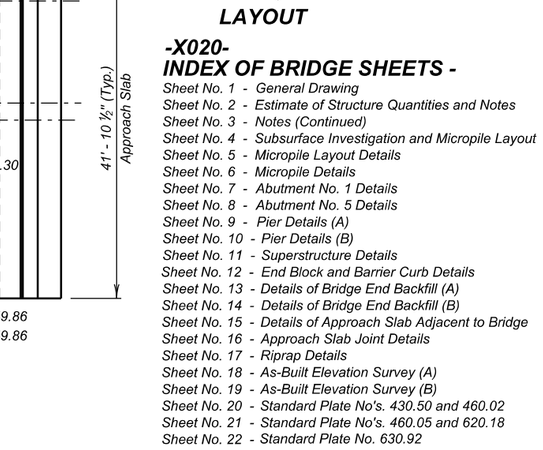

GRADELINE DATA

HYDRAULIC DATA

$Q_{d\ (Paleoflood)}$	6999 cfs
$A_{d\ (Paleoflood)}$	864 sq ft
$V_{d\ (Paleoflood)}$	8.1 fps
$Q_{F\ (Paleoflood)}$	7392 cfs
$Q_{100\ (Paleoflood)}$	13790 cfs
$Q_{100\ (FEMA)}$	8610 cfs
$Q_{OT\ (Berm)}$	4600 cfs
$Q_{OT\ (I\text{-}90)}$	8610 cfs
$V_{max\ (Paleoflood)}$	8.1 fps

Q_d = Design discharge for the proposed bridge based on 50 year (Paleoflood) frequency. El. 3548.6.

$Q_{OT\ (Berm)}$ = Overtopping discharge and frequency 32 year (Paleoflood) recurrence interval. El. 3548.5. Location: Sta. 1142 + 50 Rt. ±.

$Q_{OT\ (I\text{-}90)}$ = Overtopping discharge and frequency 61 year (Paleoflood) recurrence interval. El. 3550.1. Location: Sta. 1142 + 50 ±.

Q_F = Designated peak discharge for the basin approaching proposed project based on 50 year (Paleoflood) frequency.

Q_{100} = Computed discharge for the basin approaching proposed project based on 100 year frequency. El. 3550.5 (Paleoflood), El. 3550.1 (FEMA).

V_{max} = Maximum computed outlet velocity for the proposed bridge, based on 100 year frequency.

PLANS BY :
OFFICE OF BRIDGE DESIGN, SOUTH DAKOTA DEPARTMENT OF TRANSPORTATION

✳ TABLE OF ELEVATIONS

Slab Point	Left Curb	℄ Crown Point	℄ EBL	Right Curb
0	3551.209	3551.329	3551.089	3550.649
1	3551.208	3551.328	3551.088	3550.648
2	3551.173	3551.293	3551.053	3550.613
3	3551.102	3551.222	3550.982	3550.542
4	3551.034	3551.154	3550.914	3550.474
5	3551.017	3551.137	3550.897	3550.457
6	3550.991	3551.111	3550.871	3550.431
7	3550.907	3551.027	3550.787	3550.347
8	3550.815	3550.935	3550.695	3550.255
9	3550.797	3550.917	3550.677	3550.237
10	3550.773	3550.893	3550.653	3550.213
11	3550.689	3550.809	3550.569	3550.129
12	3550.596	3550.716	3550.476	3550.036
13	3550.577	3550.697	3550.457	3550.017
14	3550.561	3550.681	3550.441	3550.001
15	3550.508	3550.628	3550.388	3549.948
16	3550.421	3550.541	3550.301	3549.861

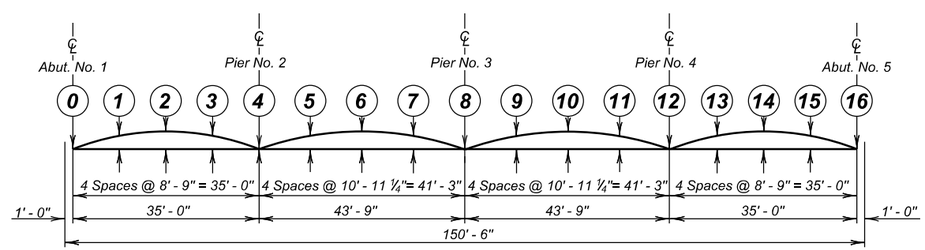

CURB AND CENTERLINE ELEVATION

(See TABLE OF ELEVATIONS for elevations)

✳ Camber for Dead Load Deflection plus Plastic Flow, shown on SUPERSTRUCTURE DETAILS, has been included in the the elevations shown.

GENERAL DRAWING
FOR
EASTBOUND LANES

159' - 6" CONTINUOUS CONCRETE BRIDGE

40' - 0" ROADWAY — 0° SKEW
OVER ELK CREEK — SEC. 33-T4N-R6E
STA. 1140 + 70.23 TO 1142 + 29.73 — IM 0901(38)40
STR. NO. 47-080-535 — HL-93
PCN 5580

MEADE COUNTY
S. D. DEPT. OF TRANSPORTATION
AUGUST 2014

DESIGNED BY	CK. DES. BY	DRAFTED BY	
BB	PW	MG	Steve A. Johnson
MEAD5580	5580GF01		BRIDGE ENGINEER

ESTIMATE OF STRUCTURE QUANTITIES

DESCRIPTION	QUANTITY	UNIT	REMARKS
Bridge Elevation Survey	Lump Sum	LS	
Concrete Penetrating Sealer	709	SqYd	See Special Provision
Bridge End Embankment	784.3	CuYd	
Incidental Work, Structure	Lump Sum	LS	
Membrane Sealant Expansion Joint	83.8	Ft	
Structure Excavation, Bridge	752.8	CuYd	
Granular Bridge End Backfill	72.3	CuYd	
Approach Slab Underdrain Excavation	3.2	CuYd	
Class A45 Concrete, Bridge Deck	376.9	CuYd	
Class A45 Concrete, Bridge	271.1	CuYd	
Concrete Approach Slab For Bridge	190.6	SqYd	
Concrete Approach Sleeper Slab for Bridge	67.5	SqYd	
Controlled Density Fill	7.9	Cu Yd	
Reinforcing Steel	47812	Lb	
Epoxy Coated Reinforcing Steel	106091	Lb	
No. 7 Rebar Splice	108	Each	
Micropile Verification Load Test	1	Each	See Special Provision
Micropile Proof Load Test	5	Each	See Special Provision
Micropile	72	Each	See Special Provision
4" Underdrain Pipe	255	Ft	
Precast Concrete Headwall for Drain	2	Each	
Porous Backfill	38.6	Ton	
Class C Riprap	2196.0	Ton	
Type B Drainage Fabric	1828	SqYd	

SPECIFICATIONS FOR BRIDGE

1. Design Specifications: AASHTO LRFD Bridge Design Specifications, 2014 Edition with 2015 Interims.

2. Construction Specifications: South Dakota Standard Specifications for Roads and Bridges, 2015 Edition and required provisions, supplemental specifications, and special provisions as included in the proposal.

BRIDGE DESIGN LOADING

1. AASHTO HL-93.

2. Dead Load includes 22 psf for future wearing surface on the roadway.

DESIGN MATERIAL STRENGTHS

Concrete	f'c = 4500 psi
Micropile Grout	f'c = 5000 psi
Reinforcing Steel	fy = 60,000 psi
Reinforcing Steel (micropile)	fy = 75,000 psi
Casing (API N-80)	fy = 80,000 psi
Structural Steel (ASTM A709 Gr 36)	fy = 36,000 psi

GENERAL CONSTRUCTION

1. All mild reinforcing steel shall conform to ASTM A615, Grade 60, except the reinforcing steel in micropile shall be ASTM A615, Grade 75.

2. All exposed concrete corners and edges shall be chamfered 3/4" unless noted otherwise.

3. Use 2" clear cover on all reinforcing steel except as shown.

4. Contractor shall imprint on the structure the date of new construction as specified and detailed on Standard Plate No. 460.02.

5. Barrier Curbs and End blocks shall be built normal to the grade.

6. Request for construction joints or resteel splices at points other than those shown, must be submitted to the Engineer for prior approval. If additional splices are approved, no payment will be allowed for the added quantity of resteel.

7. The elevation of the bridge deck is 16 1/2" above subgrade elevation.

INCIDENTAL WORK, STRUCTURE

1. In place centerline Sta. 1140+80.1 to centerline Sta. 1142+20.1 is a 140.0' 5 span Continuous Concrete Bridge with a 30'-0" clear roadway. The superstructure consists of a 11 inch reinforced concrete slab. The bridge rail consists of a 12 inch high curb with a a 1'-11" vertical face concrete barrier running the length of the bridge. The deck has been overlaid with a 3 inch low slump concrete. The substructure consists of 2 column reinforced concrete bents and reinforced concrete abutments. The abutments are supported on timber piling. Concrete walls with steel railing to centerline of median at both begin and end bridge.

2. Break down and remove the existing bridge, concrete walls, and approach/sleeper slabs if applicable, to 1 foot below finished groundline, or as required to construct the new structure in accordance with Section 110 of the Specifications. All portion of the existing bridge not salvaged for future highway related use shall be removed and disposed of by the Contractor on a site obtained by the Contractor and approved by the Engineer in accordance with the ENVIRONMENTAL COMMITMENTS found in Section A.

3. The existing approach guard rail, including posts, shall be salvaged for future highway related use. See Section B for stockpiling location.

4. During demolition of the structure, efforts shall be taken to prevent material from falling into Elk Creek. Under no circumstances is asphalt allowed to fall into Elk Creek.

5. The foregoing is a general description of the in-place bridge and should not be construed to be complete in all details. Before preparing the bid it shall be the responsibility of the Contractor to make a visual inspection of the structure to verify the extent of the work and materials involved. If desired by the Contractor, a copy of the original construction plans may be obtained through the Office of Bridge Design.

NOTICE - LEAD BASED PAINT

Be advised that the paint on the steel surfaces of the existing structure contains lead. The Contractor should plan his/her operations accordingly, and inform his/her employees of the hazards of lead exposure.

DESIGN MIX OF CONCRETE

1. All structural concrete shall be Class A45 unless otherwise indicated.

2. Type II cement is required.

ESTIMATE OF STRUCTURE QUANTITIES AND NOTES

FOR

EASTBOUND LANES

159' - 6" CONTINUOUS CONCRETE BRIDGE

STR. NO. 47-080-535

AUGUST 2014

DESIGNED BY	CK. DES. BY	DRAFTED BY	
BB	PW	PW	Steve A Johnson
MEAD5580	5580GF02		BRIDGE ENGINEER

ABUTMENTS AND PIERS

1. See Special Provision for micropile. Casing for micropile shall be API-N80 or equivalent (outside diameter = 9 $^5/_8$" and wall thickness = 0.472").

2. A representative of the Geotechnical Engineering Activity shall be present to observe the placement of the micropiles. The contractor shall notify the Geotechnical Engineering Activity two weeks prior to the start of the micropile installation operations.

3. Galvanize the pier wall armoring plates and anything welded to them after all welding is completed. They shall be galvanized in accordance with AASHTO M111 (ASTM A123). If welded splices are used subsequent to galvanizing, the weld details and the procedures for preparing the surface for welding and repairing the galvanizing after welding shall be included with the shop plans. Repair of galvanizing shall be by the zinc-based solder method in conformance with ASTM A780.

4. Central bar in micropile shall be a #18 threaded bar conforming to the physical and chemical requirements of ASTM A615 Grade 75. Plan lengths shown are greater than 60 feet. Threaded couplers are required and must develop 100% of the bars ultimate strength.

5. Steel for the pier wall armoring plates shall be ½ " thick and conform to ASTM A709, Grade 36. Shear connectors shall conform to Clause 7.3, Type A or B of the AASHTO/AWS D1.5 Bridge Welding Code.

6. Welding for the pier wall armoring plates shall be in accordance with AWS D1.1 Structural Welding Code - Steel.

7. The cost of the pier wall armoring plates complete in-place including fabrication, welding, and galvanizing shall be incidental to the contract unit price per cubic yard for Class A45 Concrete, Bridge.

8. Each finished abutment shall include a Bridge Survey Marker. See Standard Plate No. 460.05.

SUPERSTRUCTURE

1. Preplanned construction joints may be used in accordance with Section 460.3 of the Specifications. Contact the Office of Bridge Design for joint configuration and allowable location. Emergency slab construction joints shall be as shown with the superstructure details. If an emergency slab joint is used, contact the Office of Bridge Design before proceeding with deck pour.

2. The deck-finishing machine shall be adjusted and operated in such a manner that the roller screed or screeds are parallel with the centerline of the bridge and the finish machine is parallel to the skew of the bridge. Concrete placement in front of the finish machine shall be kept parallel to the machine.

3. Barrier curbs shall be poured after all the slab has been poured. Superstructure falsework shall not be removed until bridge deck concrete, including barrier curbs, has attained a strength of 2400 psi.

4. The bridge deck must be placed and finished continuously at a minimum rate of 22 ft. of deck per hour measured along centerline roadway. If concrete cannot be placed and finished at this rate, the Engineer shall order a header installed and operations stopped. Notify the Bridge Construction Engineer if deck pour operations are stopped. Operations may resume only when the Engineer is satisfied that a minimum rate of 22 ft. of deck per hour can be achieved and the concrete in the previous pour has attained a minimum compressive strength of 2000 psi.

5. Snap ties, if used in barrier curb formwork, shall be epoxy coated. The epoxy coating shall be inert in concrete and compatible with the coating applied to the new epoxy coated reinforcing steel.

6. See Special Provision for Concrete Penetrating Sealer.

FALSEWORK

1. The Contractor shall be required to include with the Falsework Plans, details for the construction of an adequate "Walk-Way" including railing.

2. The maximum falsework deflection allowed is ¼ inch.

CLASS B COMMERCIAL TEXTURE FINISH

1. A Class B commercial texture finish shall be applied to the following areas:

   a) **Barrier Rail:** all exposed surfaces (inside face – pearl white, top and back – buff tan).
   b) **Slab:** edge of slab – buff tan.

2. The Class B commercial texture finish shall be applied in accordance with Section 460.3 L.1.c of the Specifications.

3. Where the Class B commercial texture finish is to be applied, concrete curing shall be accomplished with cotton or burlap mats and polyethylene sheeting. Curing shall continue for not less than seven days after placing concrete before the commercial texture finish is applied. The commercial texture finish shall be applied in accordance with the manufacturer's recommendations. The commercial texture finish itself does not require a specific cure except for drying.

APPROACH SLABS

1. Sleeper slab riser shall be cast with the approach slab or cast after the approach slab is placed. Care shall be taken to ensure the correct grade is maintained across the joint.

2. The portion of the sleeper slab below the construction joint may be precast. If the bottom portion of the sleeper slab is precast, the Contractor shall submit proposed lifting and setting plans to the Bridge Construction Engineer for approval. In addition, if reinforcing or other details differ from those shown in the plans, the Contractor shall submit proposed alternate details for approval

3. The use of an approved finishing machine will be required during placement of Class A45 Concrete for the approach slabs. Concrete placement in front of the machine shall be kept parallel to the screed.

4. The concrete in the approach slab shall be tined normal to centerline roadway.

5. Concrete Approach Sleeper Slab for Bridge will be paid for at the contract unit price per square yard. This payment shall be full compensation for all excavation, furnishing, hauling, and placing all materials including concrete and reinforcing steel; for disposal of all excavated material and surplus materials; and for labor, tools, equipment and any incidentals necessary to complete this item of work.

6. Concrete Approach Slab for Bridge will be paid for at the contract unit price per square yard. This payment shall be full compensation for all excavation, furnishing, hauling and placing all materials including concrete, asphalt paint or 4 mil polyethylene sheeting, elastic joint sealer and reinforcing steel; for disposal of all excavated material and surplus materials and for labor, tools, equipment and any incidentals necessary to complete this item of work.

AS - BUILT ELEVATION SURVEY

The Contractor shall be responsible for recording the As-built deck elevations and bridge survey marker elevations at the locations shown in the Table of As-Built Elevations shown in the plans. All costs associated with obtaining the elevations including all equipment, labor and any incidentals required shall be incidental to the contract lump sum price for Bridge Elevation Survey.

NOTES (CONTINUED)
FOR
EASTBOUND LANES

159' - 6" CONTINUOUS CONCRETE BRIDGE

STR. NO. 47-080-535

AUGUST 2014

DESIGNED BY	CK. DES. BY	DRAFTED BY	
BB	PW	PW	Steve A. Johnson
MEAD5580	5580GF03		BRIDGE ENGINEER

STATE OF	PROJECT	SHEET NO.	TOTAL SHEETS
S.D.	IM 0901(38)40	E57	E199

Hole Number	X5	
Station	140+70	
Depth	39.5	ft
Soil Color	Red	
Classification	Clay Silt	
Strength (Q_u)	17,000	psf
Dry Density	132.6	pcf
Wet Density	145.7	pcf
Moisture	9.9	%
Pass No. 10	100.0	%
Pass No. 40	100.0	%
Pass No. 200	95.7	%
Sand Content	4.3	%
Silt Content	71.5	%
Clay Content	24.2	%

Hole Number	X5	
Station	140+70	
Depth	69.8	ft
Soil Color	Red	
Classification	Silt Clay	
Strength (Q_u)	14,250	psf
Dry Density	134.2	pcf
Wet Density	146.7	pcf
Moisture	9.3	%
Pass No. 10	99.8	%
Pass No. 40	99.8	%
Pass No. 200	97.6	%
Sand Content	2.2	%
Silt Content	61.5	%
Clay Content	36.1	%

Hole Number	X7	
Station	142+28	
Depth	39.9	ft
Soil Color	Red	
Classification	Silt Sand	
Strength (Q_u)	593.2	psf
Dry Density	102.5	pcf
Wet Density	128.0	pcf
Moisture	24.9	%
Pass No. 10	99.5	%
Pass No. 40	99.5	%
Pass No. 200	41.3	%
Sand Content	58.2	%
Silt Content	31.1	%
Clay Content	10.1	%

Hole Number	X7	
Station	142+28	
Depth	74.7	ft
Soil Color	Red	
Classification	Silt Clay	
Strength (Q_u)	6,215	psf
Dry Density	127.7	pcf
Wet Density	142.9	pcf
Moisture	11.9	%
Pass No. 10	97.0	%
Pass No. 40	97.0	%
Pass No. 200	93.8	%
Sand Content	3.2	%
Silt Content	58.7	%
Clay Content	35.1	%

The gravel and cobbles (up to boulder size) consist of material originating from sandstone, limestone, dolomite, or granite outcrops from nearby upstream canyon walls. Material most likely transported by mud flows with very little weathering. The borings shown only represent material found at the exact location of the small diameter drill hole. Boulders of 3 feet or more may be encountered at the site.

NOTE :
This sheet is to be used in conjunction with MICROPILE DETAILS Sheet and MICROPILE LAYOUT DETAILS Sheet.

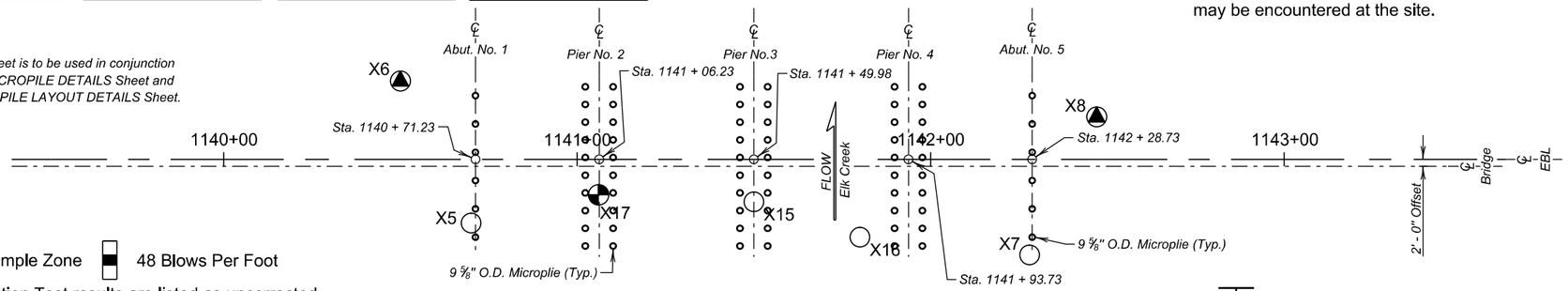

Sample Zone 48 Blows Per Foot

Penetration Test results are listed as uncorrected "N" values. Blows over inches are listed if refusal is achieved, which is 50 blows within one 6 inch set.

Existing Timber Piling Existing Spread Footing

MICROPILE LAYOUT

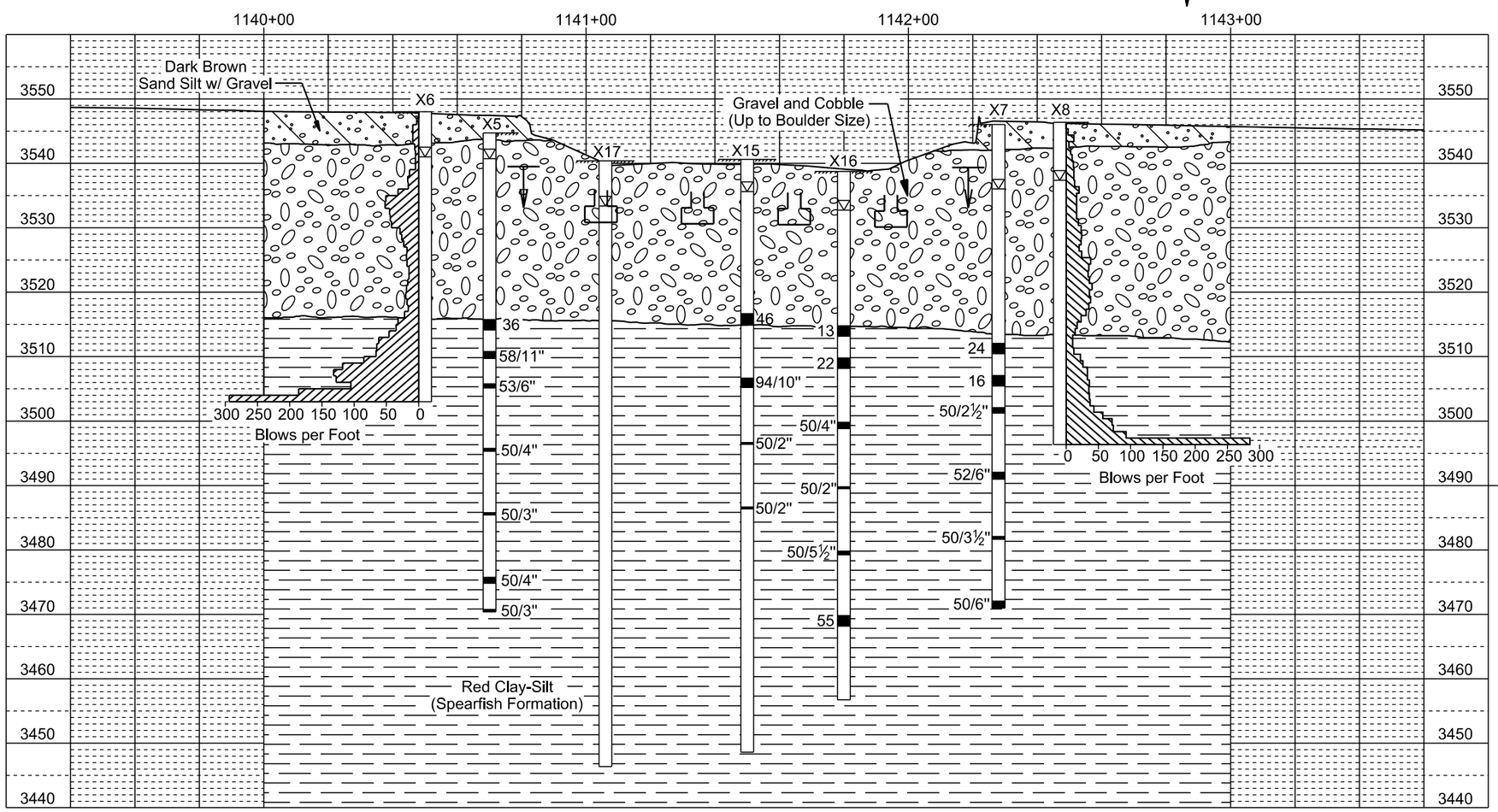

The Spearfish Formation is a relatively weak red sandy shale. Textural classification typically is a clay-silt. Gypsum is present throughout the formation that varies from thin stringers to massive deposits over 30 feet thick. Bedded layers of red stained sandstone can also be encountered. Unweathered Spearfish Formation is considered to be "Soft Rock", although massive unweathered gypsum may behave similar to weak limestone.

The Geotechnical Engineering Activity has on file all of the boring logs for this project. These logs and additional results of laboratory test, if any, are available for review at the Central Office in Pierre.

LEGEND

- Penetration Test
- Drive Test
- Water
- Caved
- Auger Test
- Sample Zone

Drive test are conducted by dropping a 490 pound hammer 30 inches to drive a 2⅞ inch drill stem with attached retractable plug sampler for taking samples and to measure the resistance to penetration of the soil.

Penetration test holes are drilled with a 6⅝" inch diameter hollow stem auger. Penetration tests are conducted by dropping a 140 pound hammer 30 inches to obtain 2 inch nominal diameter samples and to measure the resistance to penetration of the soil.

GROUND WATER ELEVATIONS

as of JUNE 2014

X5	3540.7
X6	3541.0
X7	3536.0
X8	3537.4
X15	3535.6
X16	3532.8
X17	3533.4

MEASURED SKIN FRICTION

	ELEV.	PSF
X6	3517.0	355
X6	3503.0	2667
X8	3513.4	250
X8	3496.4	588

SUBSURFACE INVESTIGATION AND MICROPILE LAYOUT

FOR

EASTBOUND LANES

159' - 6" CONTINUOUS CONCRETE BRIDGE

40' - 0" ROADWAY — 0° SKEW
OVER ELK CREEK — SEC. 33-T4N-R6E
STA. 1140 + 70.23 TO 1142 + 29.73 — IM 0901(38)40
STR. NO. 47-080-535 — HL-93

MEADE COUNTY

S. D. DEPT. OF TRANSPORTATION

AUGUST 2014

DESIGNED BY	CK. DES. BY	DRAFTED BY	
BB	PW	MG/JL	Steve A Johnson BRIDGE ENGINEER
MEAD5580	5580GE04		

STATE OF	PROJECT	SHEET NO.	TOTAL SHEETS
S.D.	IM 0901(38)40	E58	E199

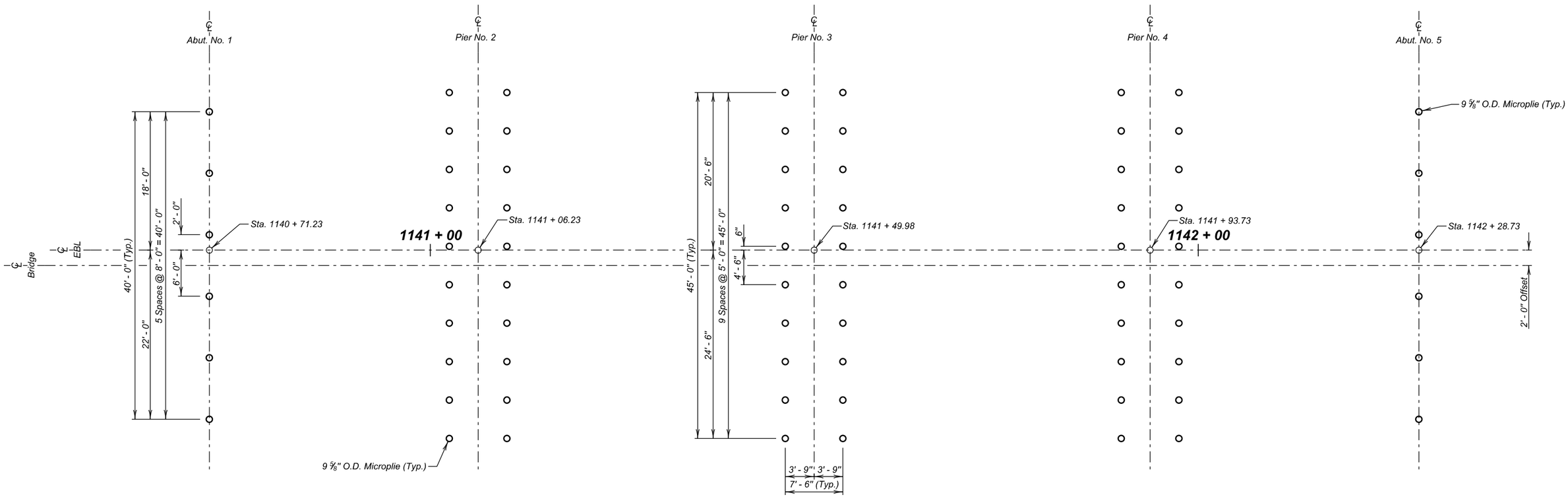

MICROPILE LAYOUT

NOTE:
This sheet is to be used in conjunction with SUBSURFACE INVESTIGATION AND MICROPILE LAYOUT and MICROPILE DETAILS sheets.

MICROPILE LAYOUT DETAILS
FOR
EASTBOUND LANES

159' - 6" CONTINUOUS CONCRETE BRIDGE

40' - 0" ROADWAY	0° SKEW
OVER ELK CREEK	SEC. 33-T4N-R6E
STA. 1140 + 70.23 TO 1142 + 29.73	IM 0901(38)40
STR. NO. 47-080-535	HL-93

MEADE COUNTY
S. D. DEPT. OF TRANSPORTATION
AUGUST 2014

DESIGNED BY	CK. DES. BY	DRAFTED BY	
BB	PW	MG	Steve A Johnson BRIDGE ENGINEER
MEAD5580	5580GF05		

STATE OF	PROJECT	SHEET NO.	TOTAL SHEETS
S.D.	IM 0901(38)40	E59	E199

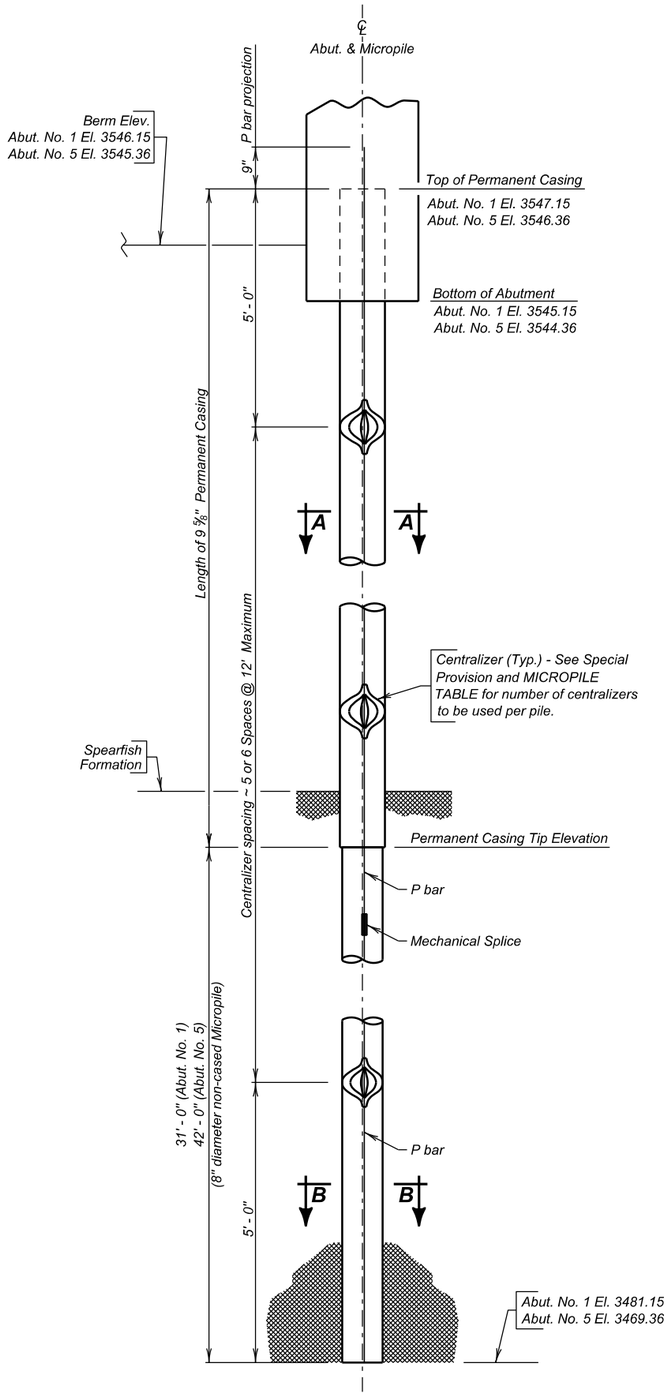

ABUTMENT ELEVATION

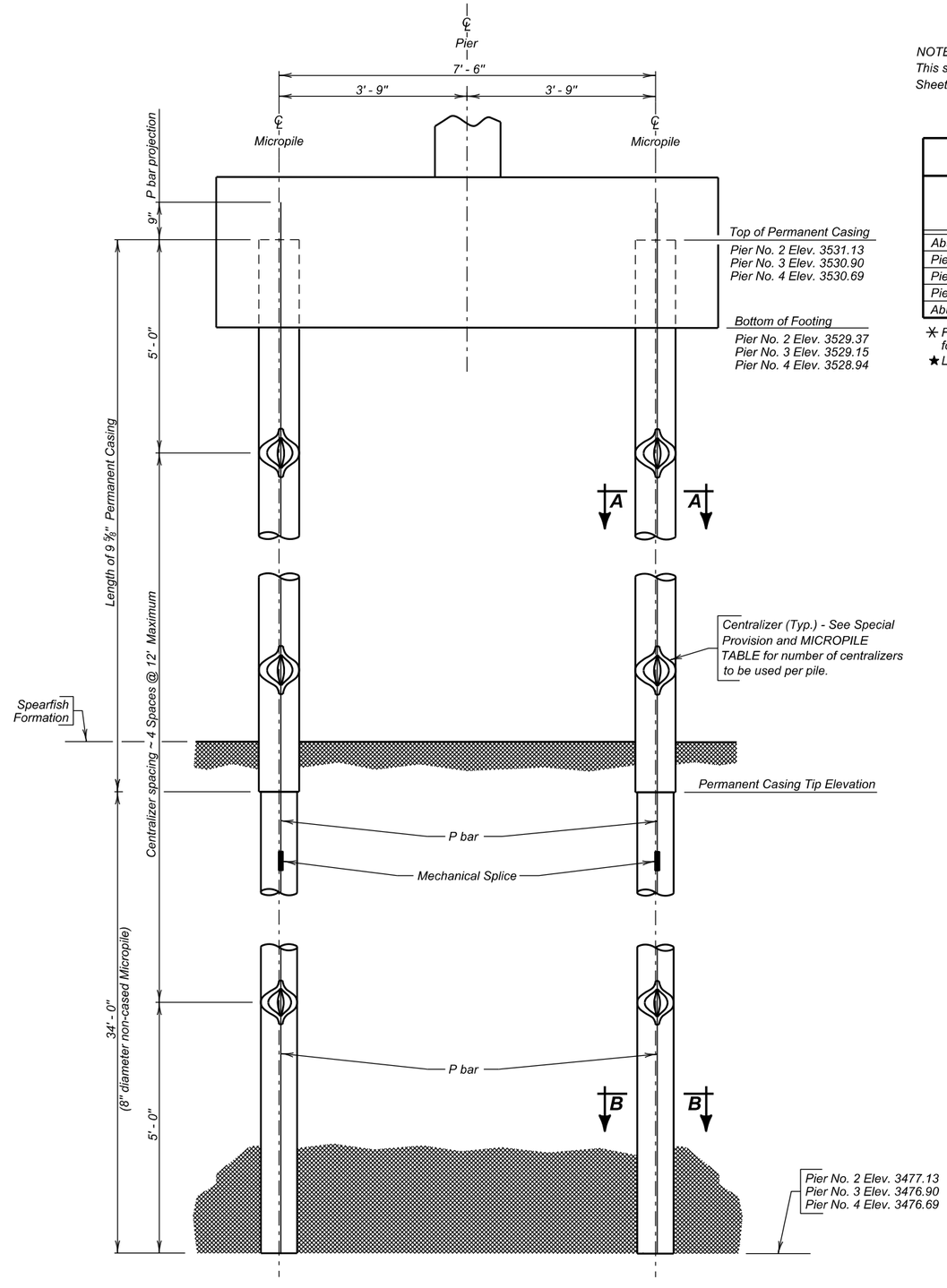

PIER ELEVATION

NOTE :
This sheet is to be used in conjunction with SUBSURFACE INVESTIGATION AND MICROPILE LAYOUT Sheet, ABUTMENT DETAILS NO. 1 & No. 5 DETAILS Sheets, and PIER DETAILS (A) & (B) Sheets.

✳ MICROPILE TABLE

	Permanent Casing Tip Elev.	Permanent Casing Length	# of Centralizers per pile	P BARS				Grout
				Mk.	No.	Size	★Length	Cu. Yd.
Abut. No. 1	3512.15	35.00	6	P1	6	18	66' - 9"	5.5
Pier No. 2	3511.13	20.00	5	P2	20	18	54' - 9"	14.9
Pier No. 3	3510.90	20.00	5	P3	20	18	54' - 9"	14.9
Pier No. 4	3510.69	20.00	5	P4	20	18	54' - 9"	14.9
Abut. No. 5	3511.36	35.00	7	P5	6	18	77' - 9"	6.5

✳ *FOR INFORMATIONAL PURPOSES ONLY. All items listed are included in the contract unit price for micropile.*
★ *Length is total length required. Use mechanical coupler as needed.*

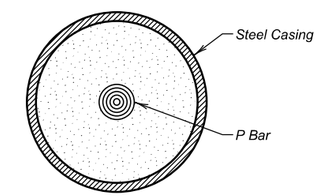

SEC. A - A

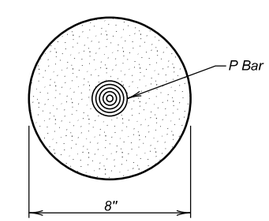

SEC. B - B

MICROPILE DETAILS
FOR
EASTBOUND LANES

159' - 6" CONTINUOUS CONCRETE BRIDGE

40' - 0" ROADWAY — 0° SKEW
OVER ELK CREEK — SEC. 33-T4N-R6E
STA. 1140 + 70.23 TO 1142 + 29.73 — IM 0901(38)40
STR. NO. 47-080-535 — HL-93

MEADE COUNTY
S. D. DEPT. OF TRANSPORTATION
AUGUST 2014

DESIGNED BY	CK. DES. BY	DRAFTED BY	
BB	PW	MG	Steve A. Johnson BRIDGE ENGINEER
MEAD5580	5580GF06		

STATE OF	PROJECT	SHEET NO.	TOTAL SHEETS
S.D.	IM 0901(38)40	E60	E199

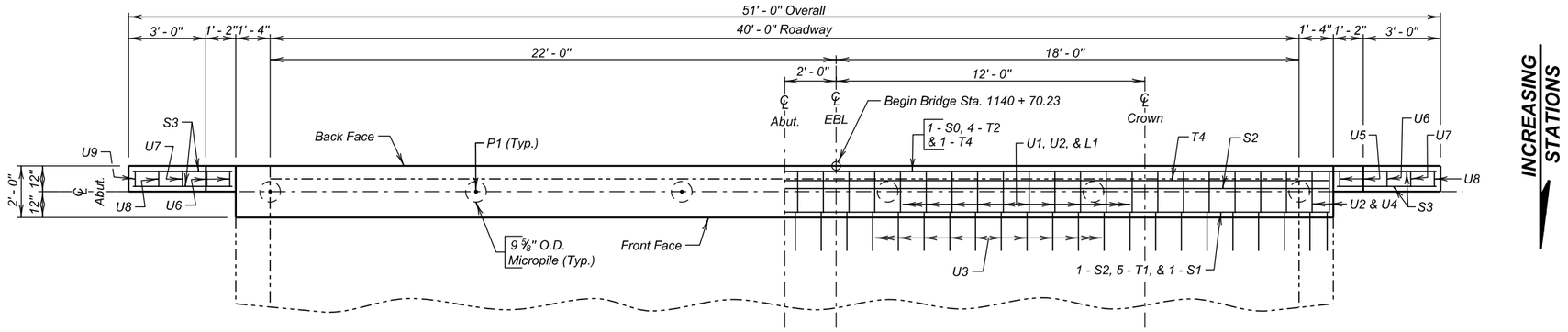

PLAN

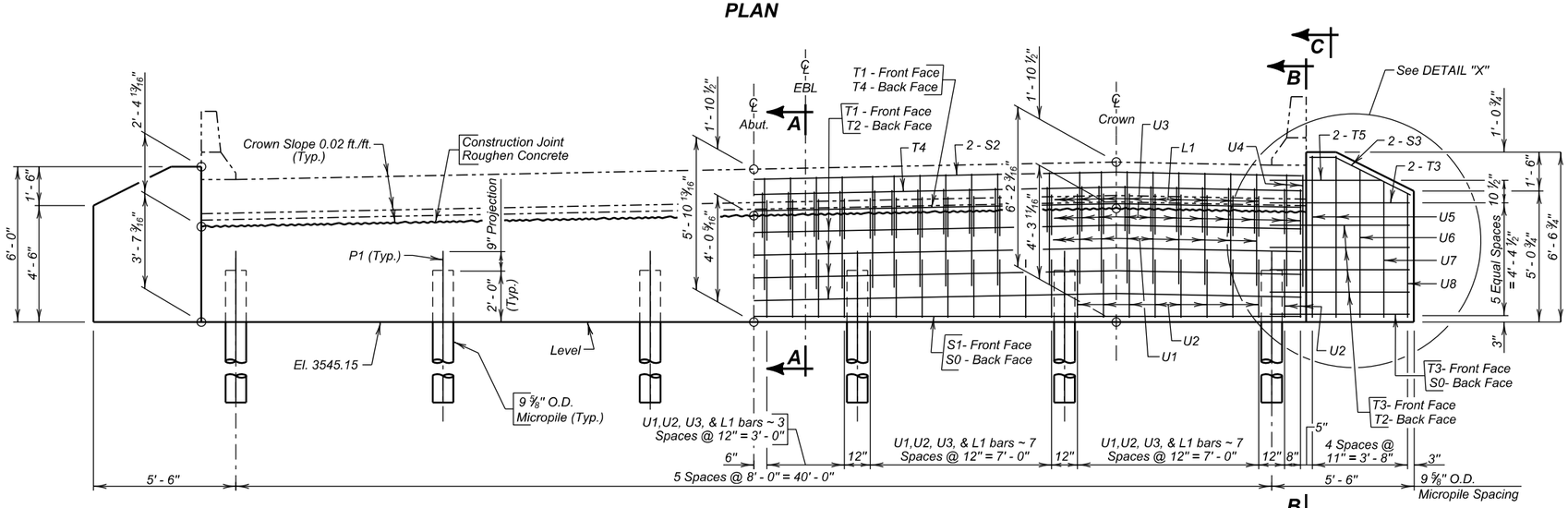

ELEVATION

REINFORCING SCHEDULE

	Mk.	No.	Size	Length	Type
△	L1	40	4	3' - 6"	17A
	S0	1	9	50' - 8"	Str.
	S1	1	9	42' - 4"	Str.
# △	S2	2	9	42' - 4"	Str.
	S3	4	9	4' - 3"	19B
#	T1	5	5	45' - 5"	2
	T2	4	5	50' - 8"	Str.
	T3	14	5	5' - 5"	Str.
# △	T4	2	5	42' - 4"	Str.
△	T5	4	5	4' - 4"	Str.
△	U1	40	6	9' - 8"	18
	U2	44	4	6' - 2"	17
△	U3	44	4	2' - 10"	S12A
△	U4	4	6	10' - 2"	17
	U5	2	4	14' - 6"	T1
	U6	3	4	13' - 5"	T1
	U7	2	4	12' - 6"	T1
	U8	2	4	11' - 7"	T1
	U9	1	4	10' - 8"	T1

Bending Details

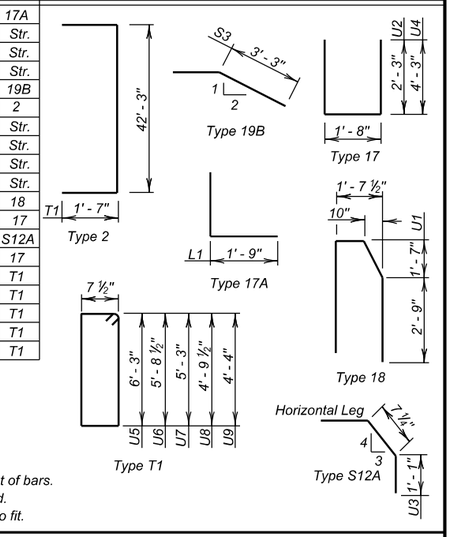

NOTES:
All dimensions are out to out of bars.
△ Bars are to be epoxy coated.
Bend in field as necessary to fit.

ESTIMATED QUANTITIES

ITEM	UNIT	QUANTITY
Class A45 Concrete, Bridge	Cu. Yd.	14.5
Reinforcing Steel	Lb.	1169
Epoxy Coated Reinforcing Steel	Lb.	1213
Structure Excavation, Bridge	Cu. Yd.	9.7
Micropile	Each	6
Micropile Proof Load Test	Each	1

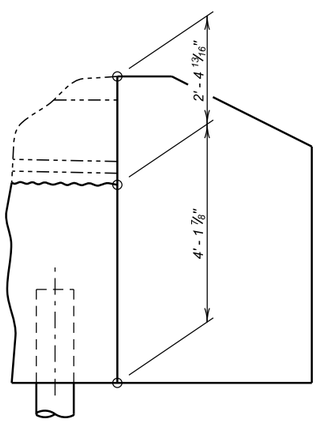

DETAIL "X"

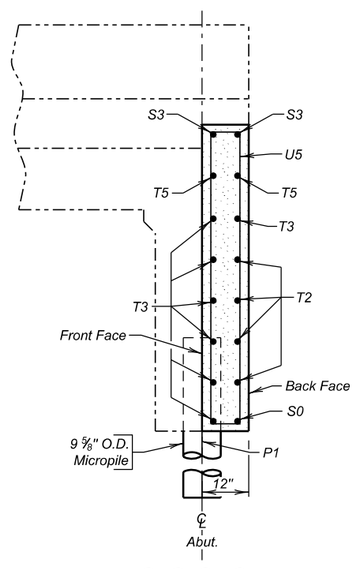

SEC. C - C

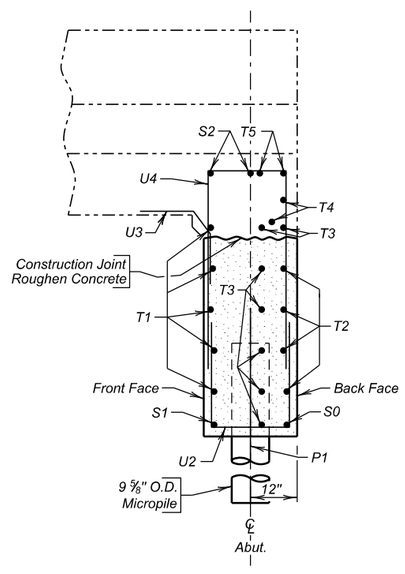

SEC. B - B

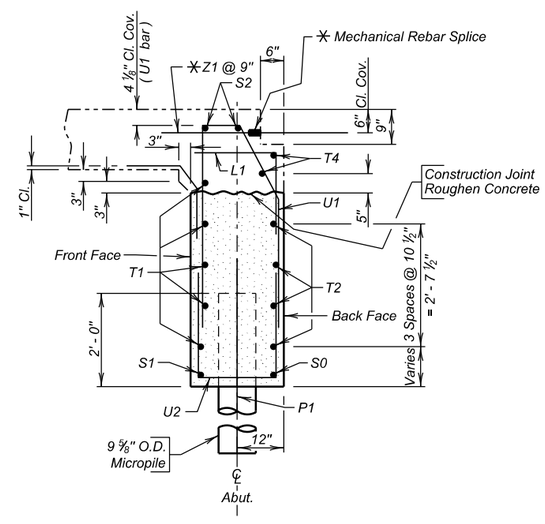

SEC. A - A

NOTE:
Quantity for Z1 bars and Mechanical Splices are listed on the SUPERSTRUCTURE DETAILS Sheet.

ABUTMENT NO. 1 DETAILS
FOR
EASTBOUND LANES

159' - 6" CONTINUOUS CONCRETE BRIDGE

40' - 0" ROADWAY — 0° SKEW
OVER ELK CREEK — SEC. 33-T4N-R6E
STA. 1140 + 70.23 TO 1142 + 29.73 — IM 0901(38)40
STR. NO. 47-080-535 — HL-93

MEADE COUNTY
S. D. DEPT. OF TRANSPORTATION
AUGUST 2014

DESIGNED BY	CK. DES. BY	DRAFTED BY	
BB	PW	MG	Steve A Johnson BRIDGE ENGINEER
MEAD5580	5580GF07		

STATE OF	PROJECT	SHEET NO.	TOTAL SHEETS
S.D.	IM 0901(38)40	E61	E199

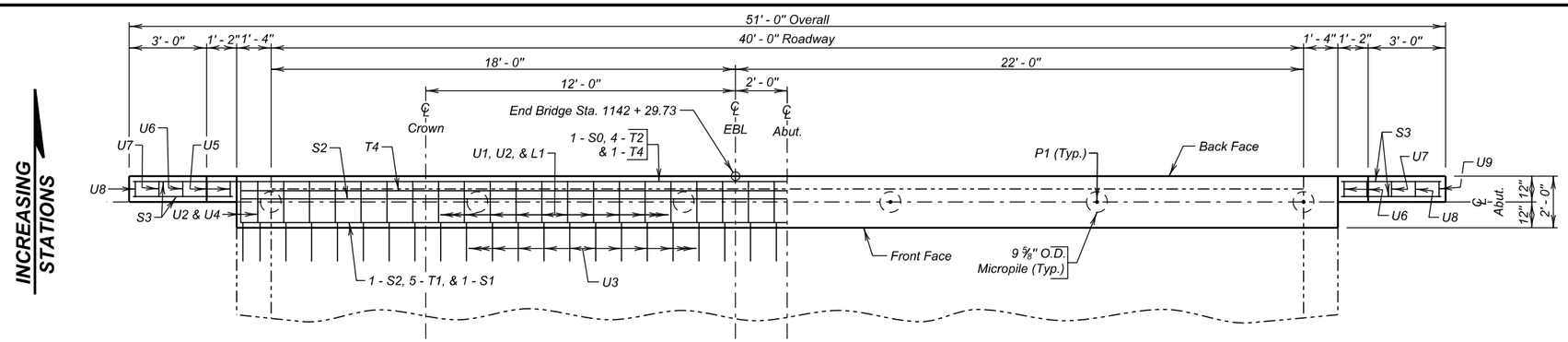

PLAN

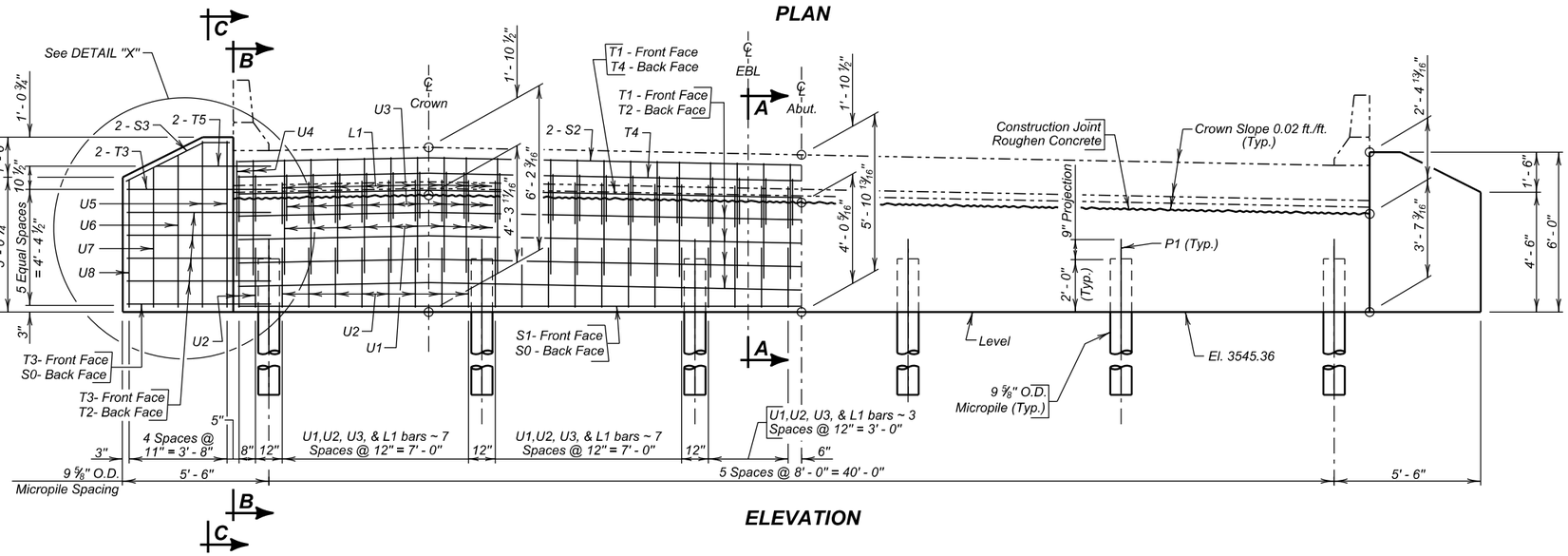

ELEVATION

REINFORCING SCHEDULE

	Mk.	No.	Size	Length	Type
△	L1	40	4	3' - 6"	17A
	S0	1	9	50' - 8"	Str.
	S1	1	9	42' - 4"	Str.
# △	S2	2	9	42' - 4"	Str.
	S3	4	9	4' - 3"	19B
#	T1	5	5	45' - 5"	2
	T2	4	5	50' - 8"	Str.
	T3	14	5	5' - 5"	Str.
# △	T4	2	5	42' - 4"	Str.
△	T5	4	5	4' - 4"	Str.
△	U1	40	6	9' - 8"	18
	U2	44	4	6' - 2"	17
△	U3	44	4	2' - 10"	S12A
△	U4	4	6	10' - 2"	17
	U5	2	4	14' - 6"	T1
	U6	3	4	13' - 5"	T1
	U7	2	4	12' - 6"	T1
	U8	2	4	11' - 7"	T1
	U9	1	4	10' - 8"	T1

Bending Details

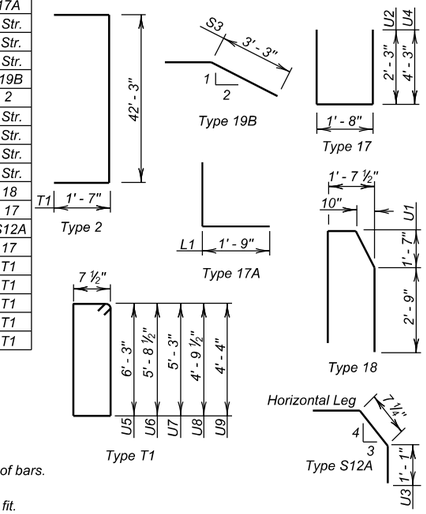

NOTES:
All dimensions are out to out of bars.
△ Bars are to be epoxy coated.
Bend in field as necessary to fit.

ESTIMATED QUANTITIES

ITEM	UNIT	QUANTITY
Class A45 Concrete, Bridge	Cu. Yd.	14.5
Reinforcing Steel	Lb.	1169
Epoxy Coated Reinforcing Steel	Lb.	1213
Structure Excavation, Bridge	Cu. Yd.	9.7
Micropile	Each	6
Micropile Proof Load Test	Each	1
Micropile Verification Load Test	Each	1

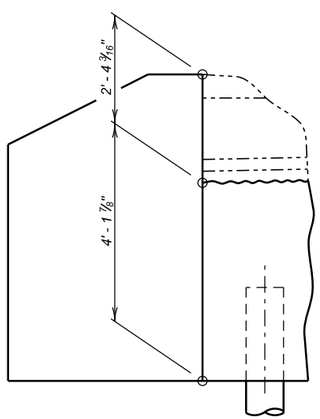

DETAIL "X"

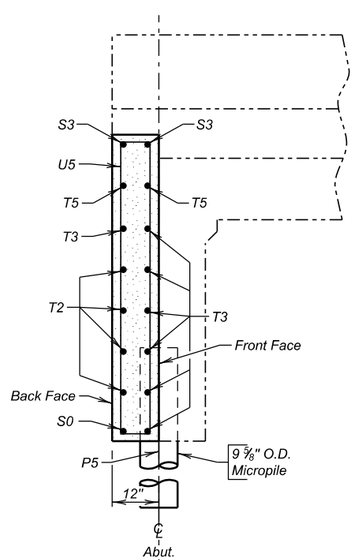

SEC. C - C

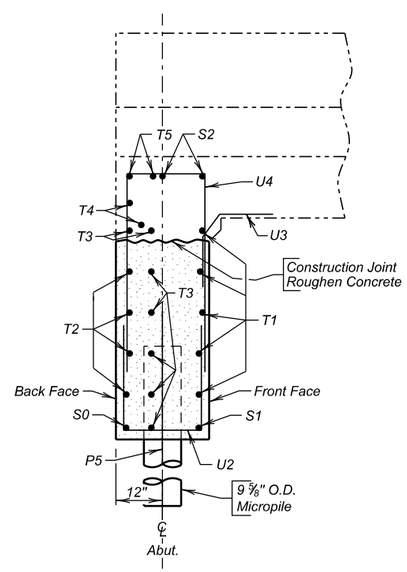

SEC. B - B

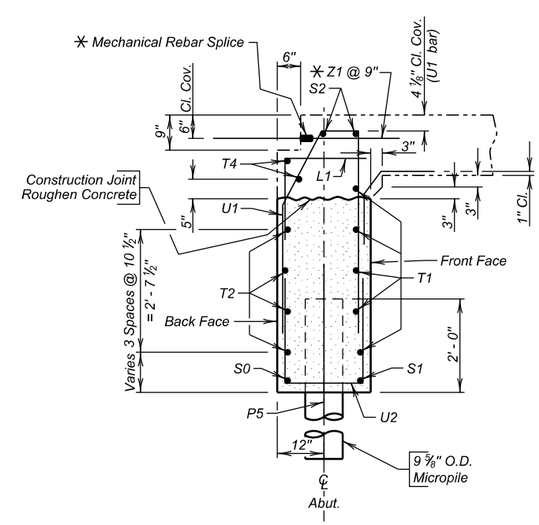

SEC. A - A

✳ NOTE:
Quantity for Z1 bars and Mechanical Splices are listed on the SUPERSTRUCTURE DETAILS Sheet.

ABUTMENT NO. 5 DETAILS
FOR
EASTBOUND LANES

159' - 6" CONTINUOUS CONCRETE BRIDGE

40' - 0" ROADWAY — 0° SKEW
OVER ELK CREEK — SEC. 33-T4N-R6E
STA. 1140 + 70.23 TO 1142 + 29.73 — IM 0901(38)40
STR. NO. 47-080-535 — HL-93

MEADE COUNTY
S. D. DEPT. OF TRANSPORTATION
AUGUST 2014

DESIGNED BY	CK. DES. BY	DRAFTED BY	
BB	PW	MG	Steve A Johnson BRIDGE ENGINEER
MEAD5580	5580GF08		

STATE OF	PROJECT	SHEET NO.	TOTAL SHEETS
S.D.	IM 0901(38)40	E62	E199

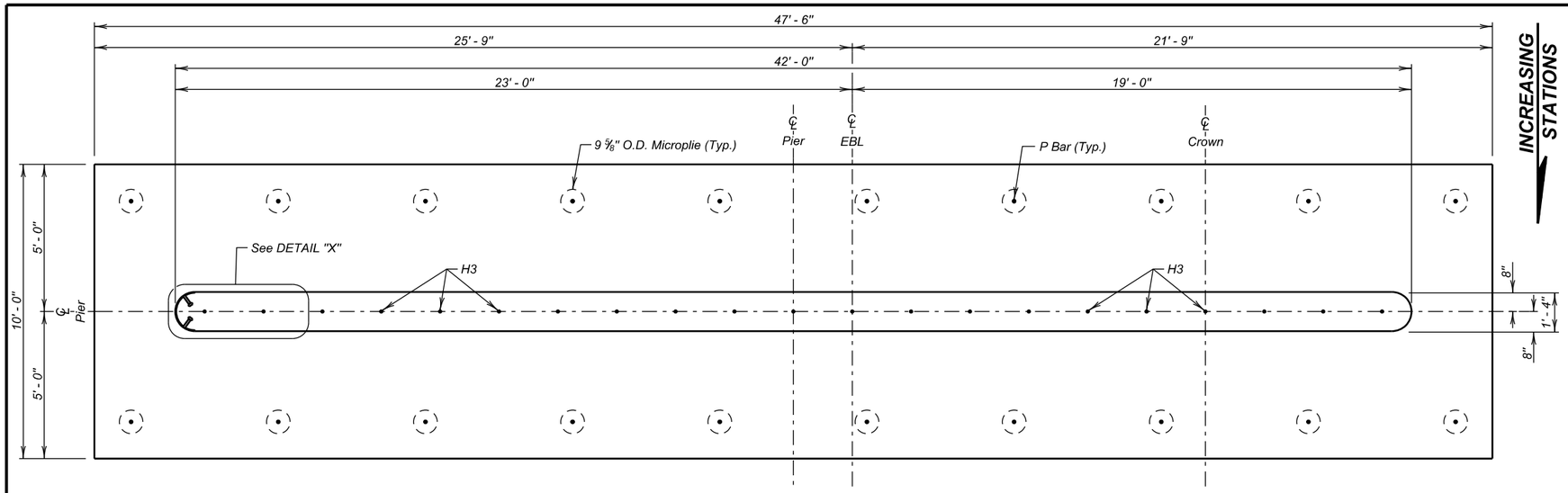

PLAN

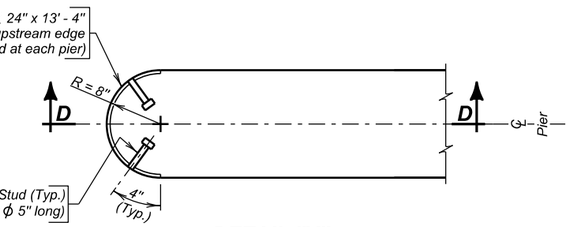

DETAIL "X"

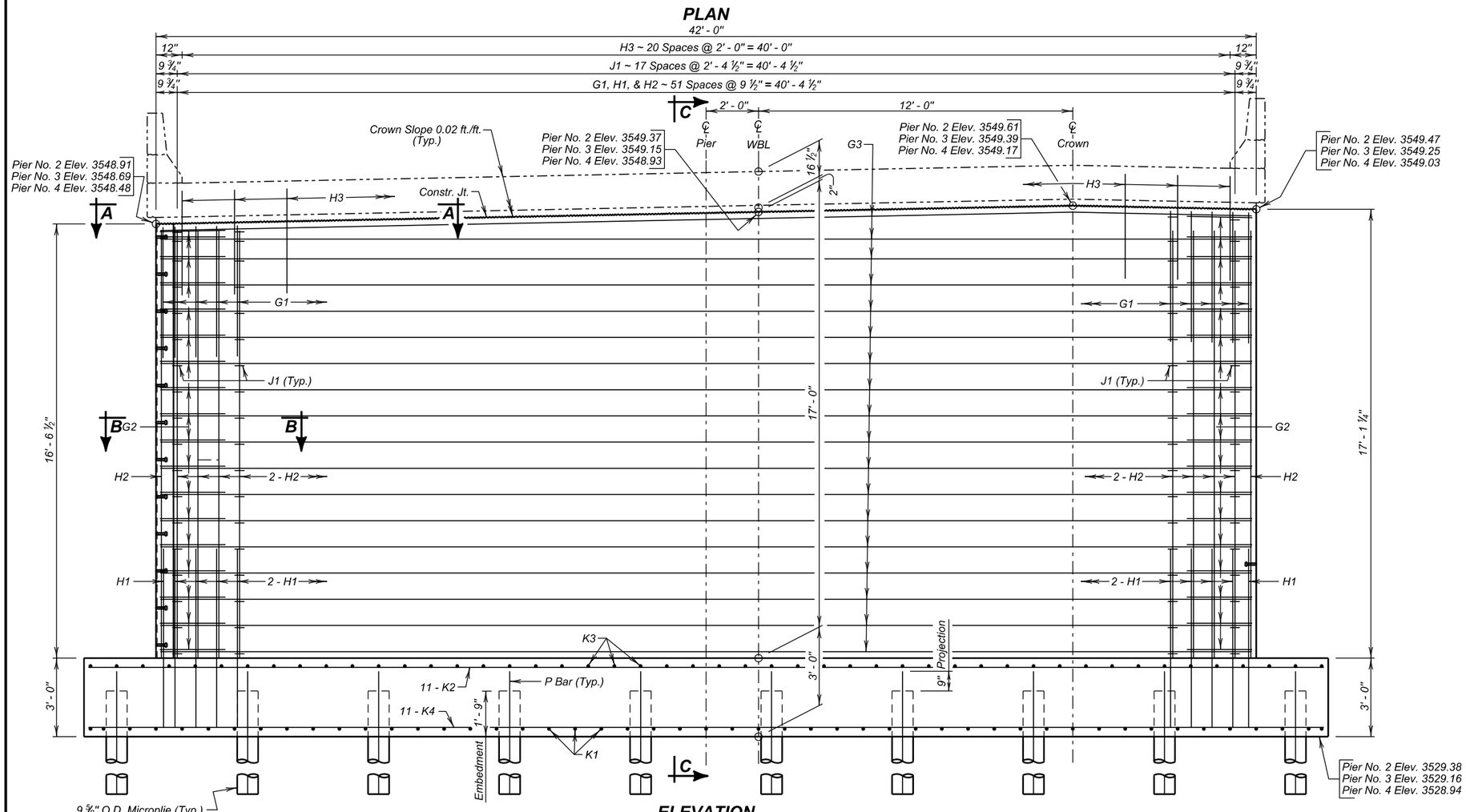

ELEVATION

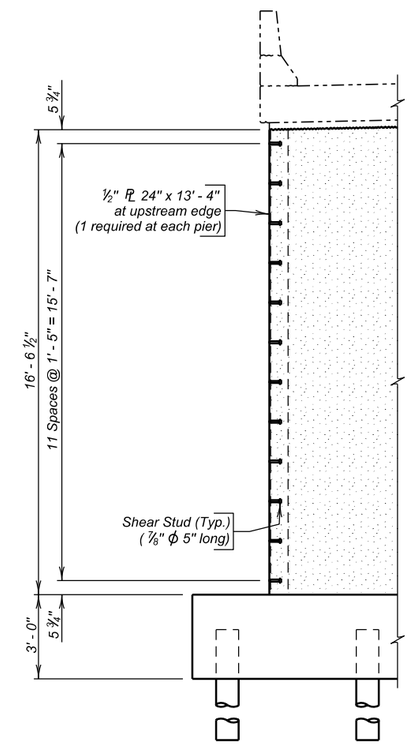

SEC. D - D

PIER DETAILS (A)

FOR

EASTBOUND LANES

159' - 6" CONTINUOUS CONCRETE BRIDGE

40' - 0" ROADWAY — 0° SKEW
OVER ELK CREEK — SEC. 33-T4N-R6E
STA. 1140 + 70.23 TO 1142 + 29.73 — IM 0901(38)40
STR. NO. 47-080-535 — HL-93

MEADE COUNTY

S. D. DEPT. OF TRANSPORTATION

AUGUST 2014

DESIGNED BY	CK. DES. BY	DRAFTED BY	
BB	PW	MG	Steve A Johnson BRIDGE ENGINEER
MEAD5580	5580GF09		

STATE OF	PROJECT	SHEET NO.	TOTAL SHEETS
S.D.	IM 0901(38)40	E63	E199

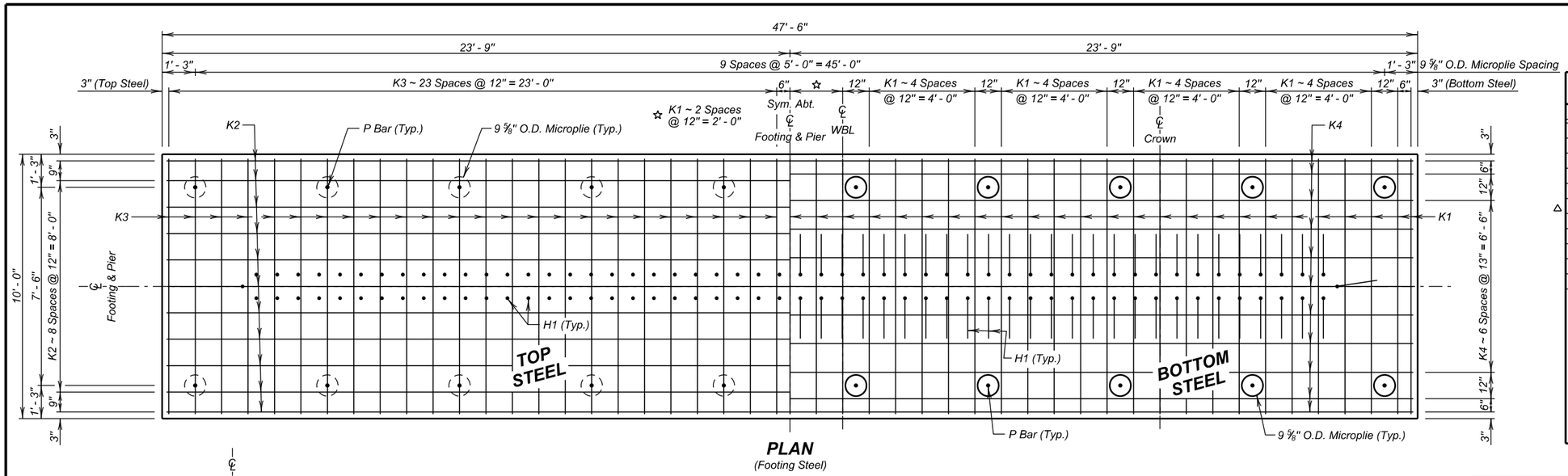

PLAN
(Footing Steel)

REINFORCING SCHEDULE
(For One Pier - 3 Required)

	Mk.	No.	Size	Length	Type
	G1	52	9	10' - 11"	17
	G2	36	4	5' - 7"	S11
	G3	36	4	41' - 8"	Str.
	H1	106	9	8' - 5"	17A
	H2	106	9	17' - 3"	Str.
△	H3	21	7	4' - 0"	Str.
	J1	324	4	1' - 9"	T9
	K1	49	8	9' - 8"	Str.
	K2	11	4	47' - 2"	Str.
	K3	48	4	9' - 8"	Str.
	K4	11	5	47' - 2"	Str.

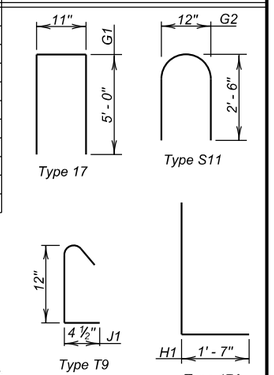

NOTE:
All dimensions are out to out of bars.
△ Bars to be epoxy coated.

ESTIMATED QUANTITIES

ITEM	UNIT	QUANTITY Pier No. 2	Pier No. 3	Pier No. 4
Class A45 Concrete, Bridge	Cu. Yd.	87.9	87.9	87.9
Reinforcing Steel	Lb.	15158	15158	15158
Epoxy Coated Reinforcing Steel	Lb.	172	172	172
Structure Excavation, Bridge	Cu. Yd.	248.3	223.7	261.4
Micropile	Each	20	20	20
Micropile Proof Load Test	Each	1	1	1

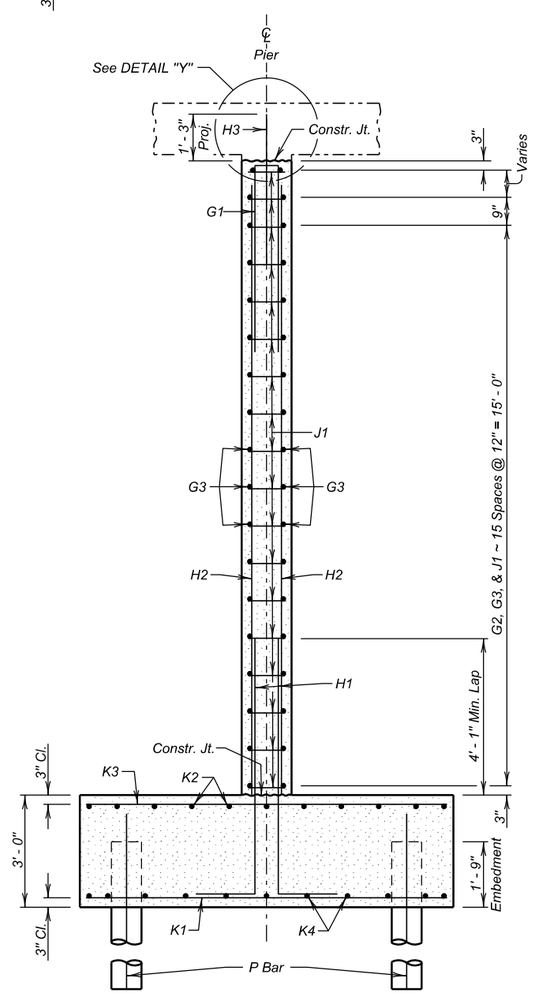

SEC. C - C

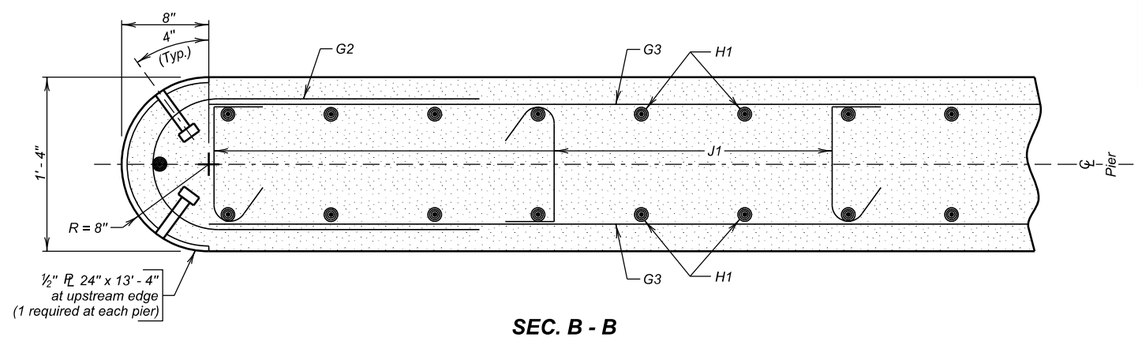

SEC. B - B

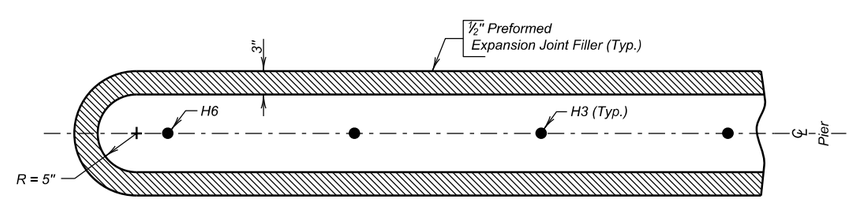

VIEW A - A
(Resteel and Bridge Deck not shown)

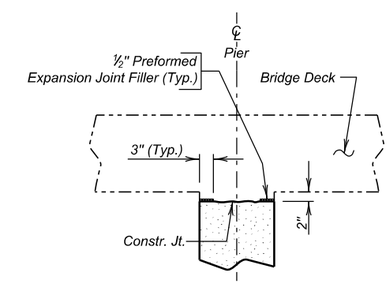

DETAIL "Y"
(Resteel not shown)

PIER DETAILS (B)
FOR
EASTBOUND LANES

159' - 6" CONTINUOUS CONCRETE BRIDGE

40' - 0" ROADWAY — 0° SKEW
OVER ELK CREEK — SEC. 33-T4N-R6E
STA. 1140 + 70.23 TO 1142 + 29.73 — IM 0901(38)40
STR. NO. 47-080-535 — HL-93

MEADE COUNTY
S. D. DEPT. OF TRANSPORTATION
AUGUST 2014

DESIGNED BY	CK. DES. BY	DRAFTED BY	
BB	PW	MG	Steve A. Johnson
MEAD5580	5580GF10		BRIDGE ENGINEER

STATE OF	PROJECT	SHEET NO.	TOTAL SHEETS
S.D.	IM 0901(38)40	E64	E199

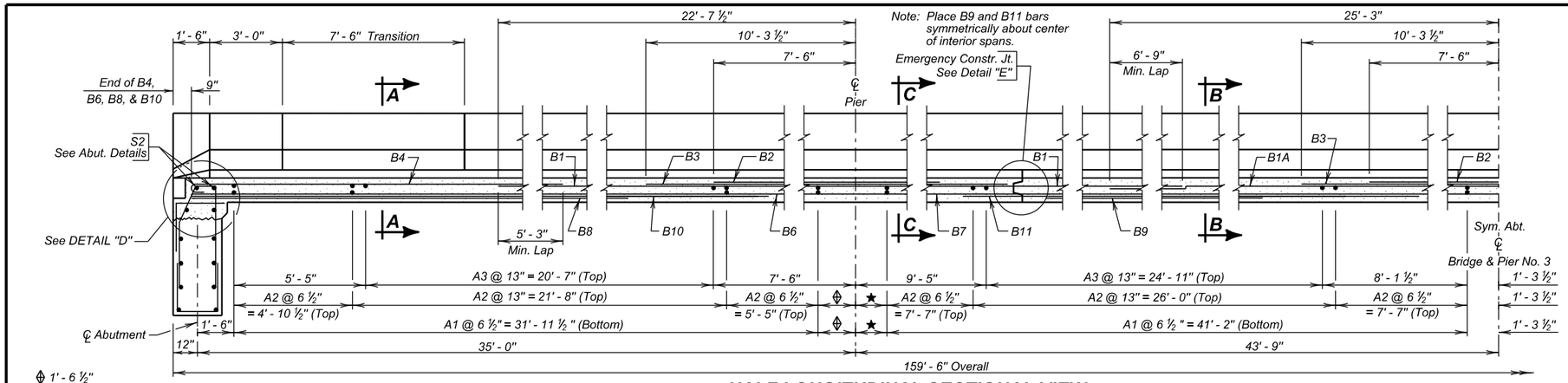

HALF LONGITUDINAL SECTIONAL VIEW

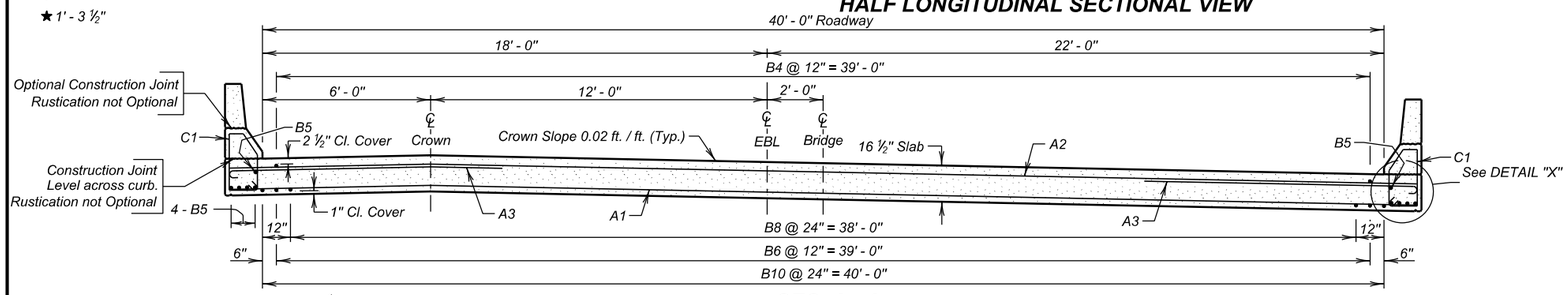

SEC. A - A

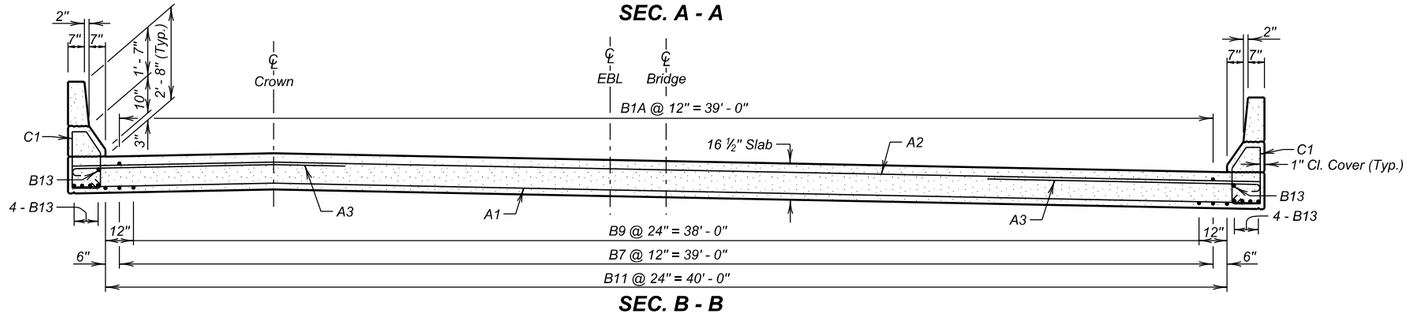

SEC. B - B

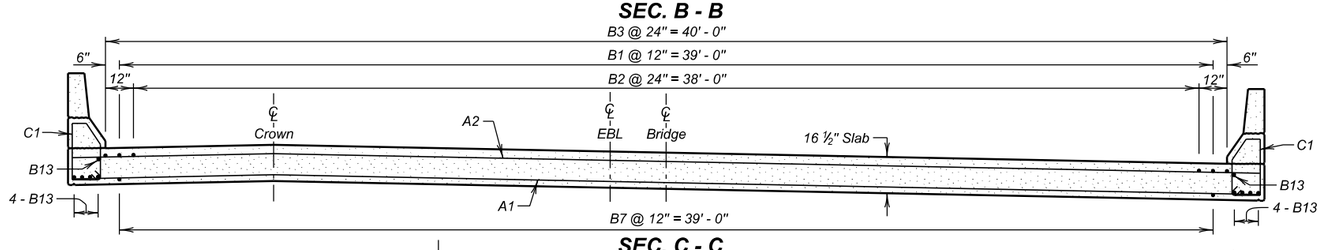

SEC. C - C

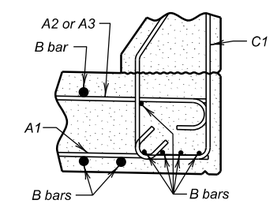

DETAIL "X"

Note: All barrier curb details shown on END BLOCK AND BARRIER CURB sheet.

REINFORCING SCHEDULE

Mk.	No.	Size	Length	Type	Bending Details
A1	272	5	42' - 4"	Str.	
A2	186	4	42' - 4"	Str.	
A3	176	4	10' - 3"	1A	
B1	80	10	47' - 11"	Str.	
B1A	40	10	50' - 6"	Str.	
B2	60	10	15' - 0"	Str.	
B3	63	10	20' - 7"	Str.	
B4	80	9	19' - 2"	1A	
B5	20	6	35' - 9"	Str.	
B6	80	9	35' - 3"	Str.	
B7	80	9	43' - 9"	Str.	
B8	40	8	24' - 3"	Str.	
B9	40	8	20' - 0"	Str.	
B10	42	9	29' - 7"	Str.	
B11	42	9	26' - 10"	Str.	
B12	36	6	47' - 6"	Str.	
B13	20	6	43' - 9"	Str.	
B15	12	5	15' - 0"	Str.	
B16	6	4	52' - 10'	Str.	
B17	8	4	8' - 6"	19B	
B18	12	8	4' - 3"	19B	
B19	12	5	2' - 4"	Str.	
B20	12	6	4' - 0"	17A	
B21	12	4	53' - 8"	Str.	
C1	302	5	6' - 8"	T1A	
C2	272	5	5' - 1"	S11	
C3	4	5	5' - 0"	S11	
C4	4	5	5' - 0"	S11	
C5	4	5	5' - 0"	S11	
C6	4	5	6' - 8"	T1	
C7	4	5	6' - 9"	T1	
C8	4	5	6' - 11"	T1	
C9	4	5	7' - 0"	T1	
C10	16	6	6' - 10"	T1A	
C11	16	5	7' - 1"	T1	
C12	4	6	6' - 4"	17	
C13	4	5	5' - 4"	17	
△ Z1	108	7	2' - 0"	Str.	

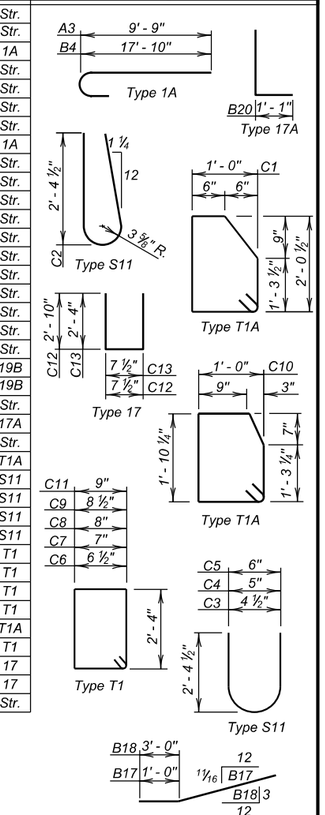

NOTES-
All reinforcing steel shall be epoxy coated.
All dimensions are out to out of bars.
Bend in field as necessary to fit.

ESTIMATED QUANTITIES

ITEM	UNIT	QUANTITY
Class A45 Concrete, Bridge Deck	Cu. Yd.	376.9
Epoxy Coated Reinforcing Steel	Lb.	103170
No. 7 Rebar Splice	Each	108
Concrete Penetrating Sealer	Sq. Yd.	709

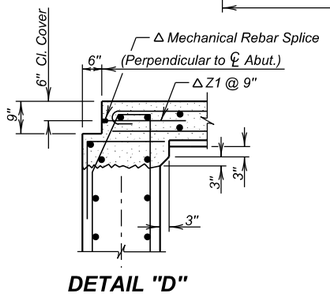

DETAIL "D"

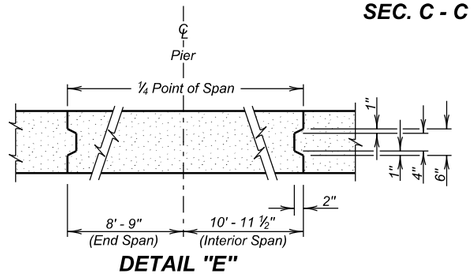

DETAIL "E"

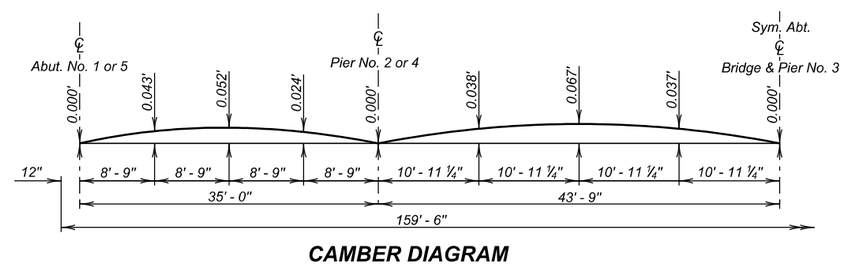

CAMBER DIAGRAM

Camber is calculated for dead load deflection plus plastic flow and shall be added to the proposed grade elevations at the respective stations to establish the elevations of the top of the finished roadway slab.

△ See DETAILS OF APPROACH SLAB ADJACENT TO BRIDGE sheet for location of Z1 bars and Mechanical Rebar Splices.

SUPERSTRUCTURE DETAILS

FOR

EASTBOUND LANES

159' - 6" CONTINUOUS CONCRETE BRIDGE

40' - 0" ROADWAY — 0° SKEW
OVER ELK CREEK — SEC. 33-T4N-R6E
STA. 1140 + 70.23 TO 1142 + 29.73 — IM 0901(38)40
STR. NO. 47-080-535 — HL-93

MEADE COUNTY

S. D. DEPT. OF TRANSPORTATION

AUGUST 2014

DESIGNED BY	CK. DES. BY	DRAFTED BY	
BB	PW	MG	Steve A Johnson BRIDGE ENGINEER
MEAD5580	5580GF11		

STATE OF	PROJECT	SHEET NO.	TOTAL SHEETS
S.D.	IM 0901(38)40	E65	E199

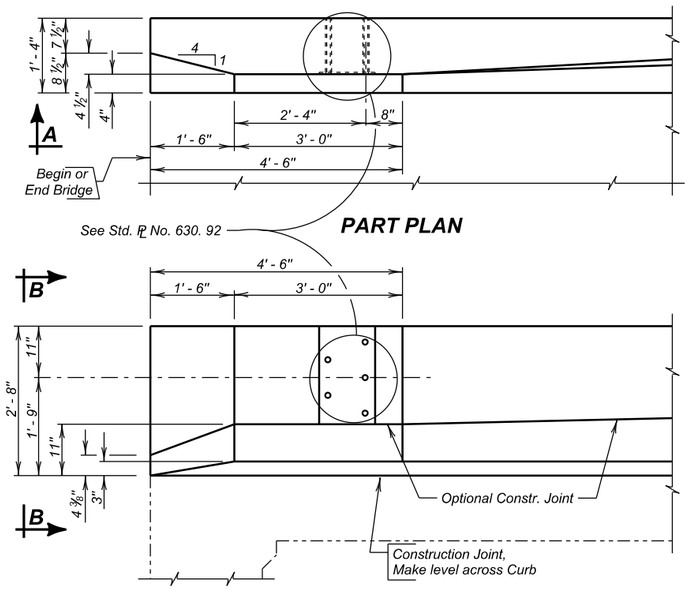

PART PLAN

VIEW A- A

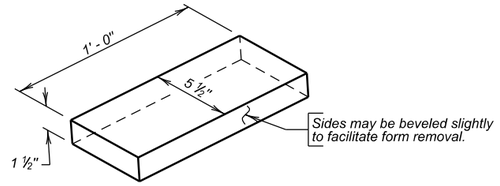

RECESS DETAIL

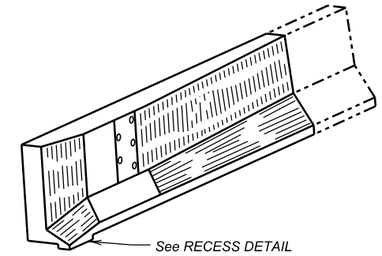

ISOMETRIC VIEW

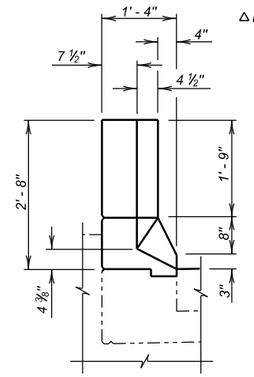

VIEW B - B

△ Place as shown in Superstructure Details.

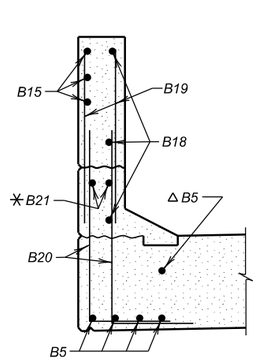

SEC. C - C

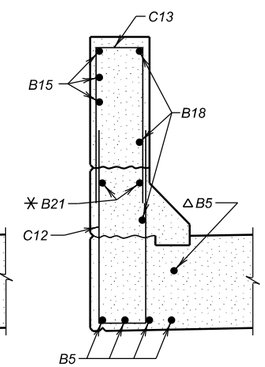

SEC. D - D

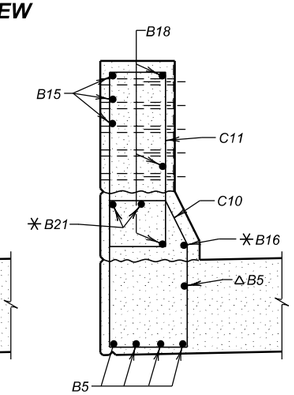

SEC. E - E

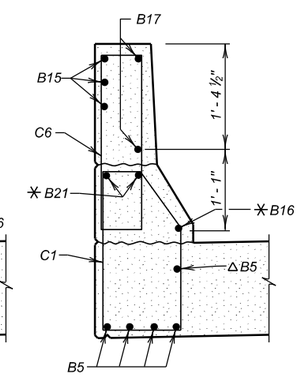

SEC. F - F

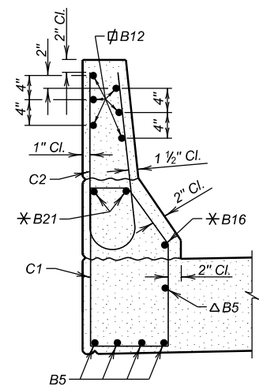

SEC. G - G

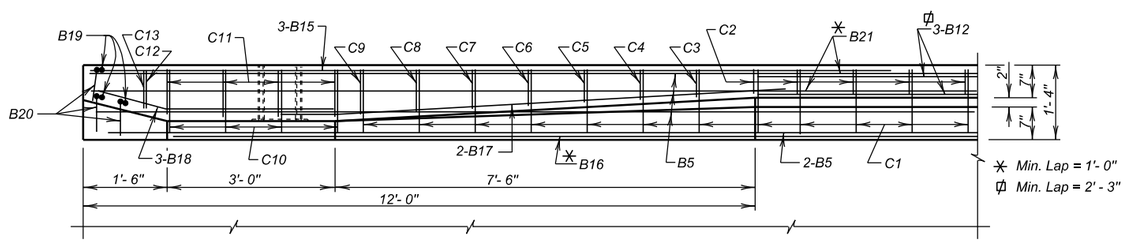

PLAN

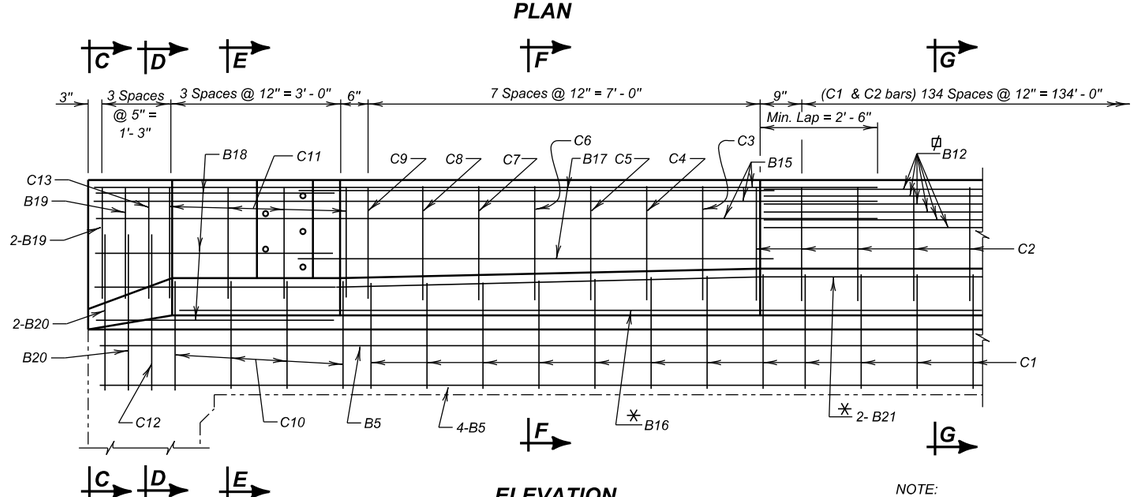

ELEVATION

NOTE:
For listing of re-bars see Superstructure Details.

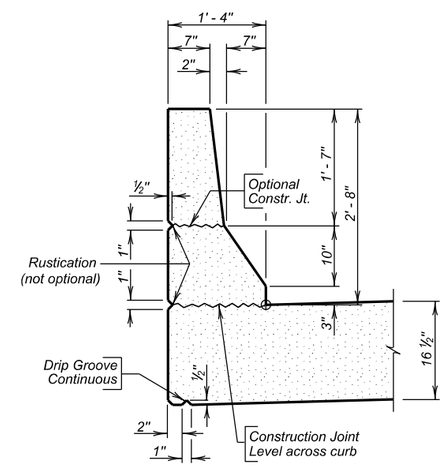

BARRIER DETAILS

END BLOCK AND BARRIER CURB DETAILS

FOR

EASTBOUND LANES

159' - 6" CONTINUOUS CONCRETE BRIDGE

40' - 0" ROADWAY — 0° SKEW
OVER ELK CREEK — SEC. 33-T4N-R6E
STA. 1140 + 70.23 TO 1142 + 29.73 — IM 0901(38)40
STR. NO. 47-080-535 — HL-93

MEADE COUNTY

S. D. DEPT. OF TRANSPORTATION

AUGUST 2014

DESIGNED BY	CK. DES. BY	DRAFTED BY	
BB	PW	MG	Steve A Johnson BRIDGE ENGINEER
MEAD5580	5580GF12		

STATE OF	PROJECT	SHEET NO.	TOTAL SHEETS
S.D.	IM 0901(38)40	E66	E199

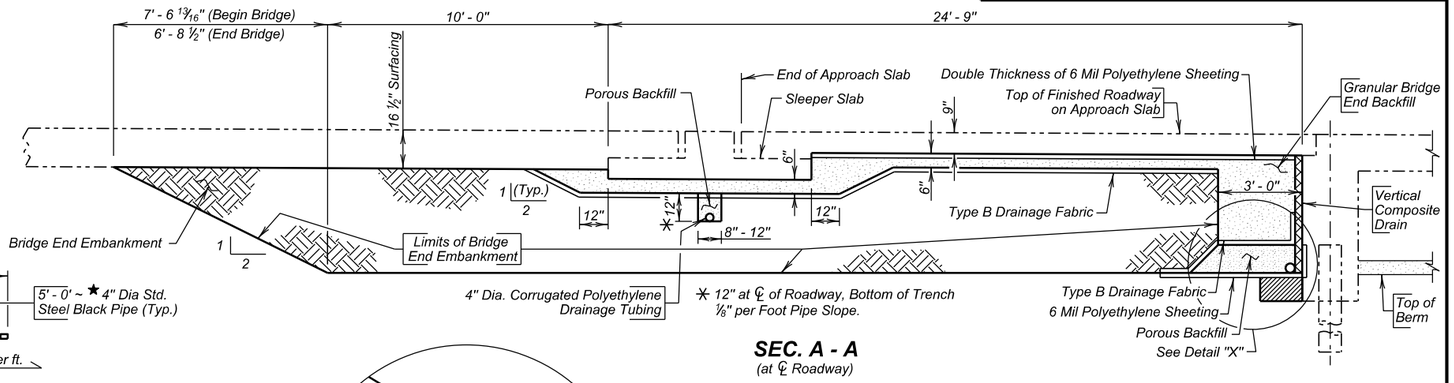

SEC. A - A
(at ℄ Roadway)

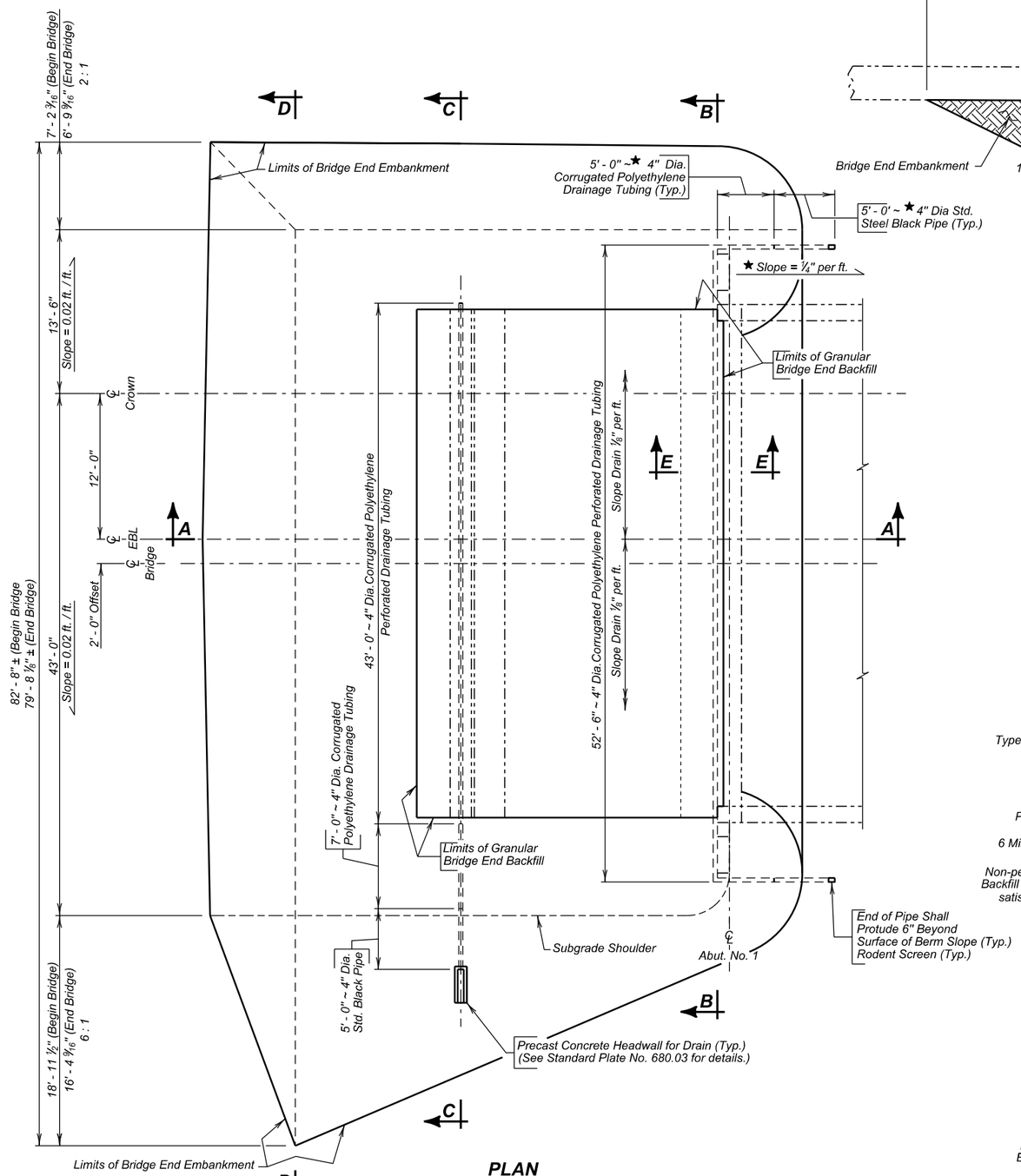

PLAN
(Bridge End Backfill shown adjacent to Abut. No. 1
Abut. No. 5 similar opposite hand except as shown.)

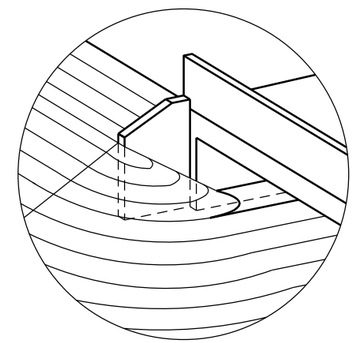

SPILL CONE DETAIL AT EMBANKMENT

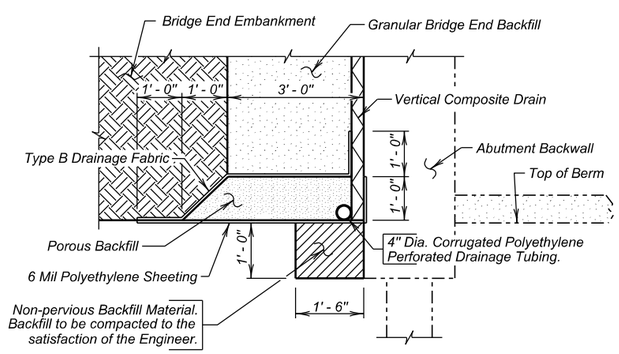

DETAIL "X"

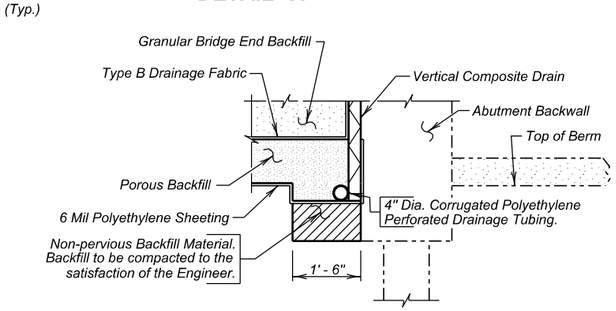

SEC. E - E

ESTIMATED QUANTITIES
(For Two Abutments)

ITEM	UNIT	QUANTITY
Granular Bridge End Backfill	Cu. Yd.	72.3
✗ Bridge End Embankment	Cu. Yd.	784.3
⊕ ⊄ Porous Backfill	Ton	38.6
4" Underdrain Pipe	Ft.	255
⊕ Approach Slab Underdrain Excavation	Cu. Yd.	3.2
Precast Concrete Headwall for Drain	Each	2

1. 191 ft. 4" dia. Corrugated Polyethylene Perforated Drainage Tubing.
2. 34 ft. 4" dia. Corrugated Polyethylene Drainage Tubing.
3. 30 ft. 4" dia. Std. Black Steel Pipe with Rodent Screens.
4. 364 sq. ft. Vertical Composite Drain

Items 1 thru 4 are approximate quantities contained in the 4" Underdrain Pipe and are for information only.

5. 3570 sq. ft. 6 mil Polyethylene Sheeting, not including laps.
6. 303 sq. yd. Type B Drainage Fabric.

Items 5 and 6 are approximate quantities contained in the Granular Bridge End Backfill and are for information only.

⊄ For estimating purposes only, a factor of 1.89 tons/cu. yd. was used to convert cu. yds. to tons.

✗ Shrinkage Factor of 1.25 Used.

⊕ Quantity based on a 12" wide trench.

DETAILS OF BRIDGE END BACKFILL (A)
FOR
EASTBOUND LANES

159' - 6" CONTINUOUS CONCRETE BRIDGE

40' - 0" ROADWAY — 0° SKEW
OVER ELK CREEK — SEC. 33-T4N-R6E
STA. 1140 + 70.23 TO 1142 + 29.73 — IM 0901(38)40
STR. NO. 47-080-535 — HL-93

MEADE COUNTY
S. D. DEPT. OF TRANSPORTATION
AUGUST 2014

DESIGNED BY	CK. DES. BY	DRAFTED BY	
BB	PW	BT	Steve A. Johnson BRIDGE ENGINEER
MEAD5580	5580GF13		

STATE OF	PROJECT	SHEET NO.	TOTAL SHEETS
S.D.	IM 0901(38)40	E67	E199

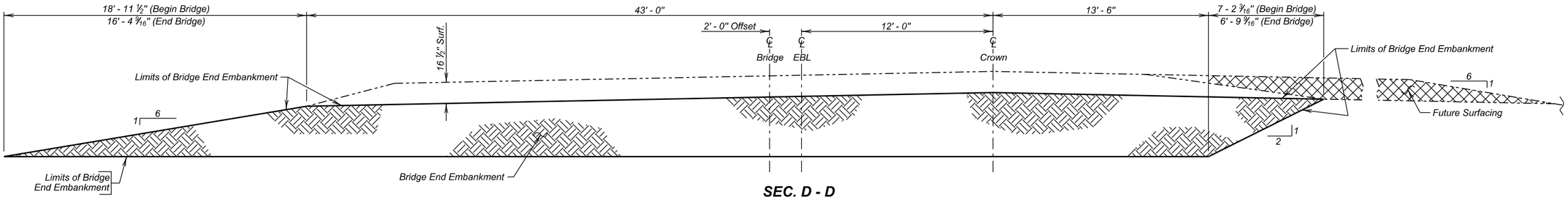

SEC. D - D

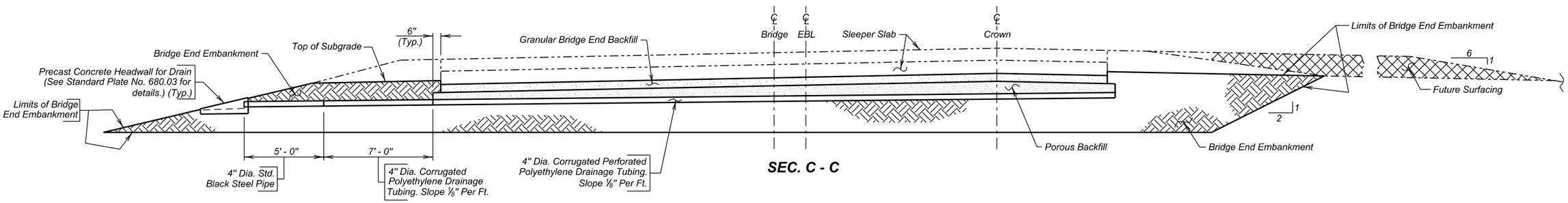

SEC. C - C

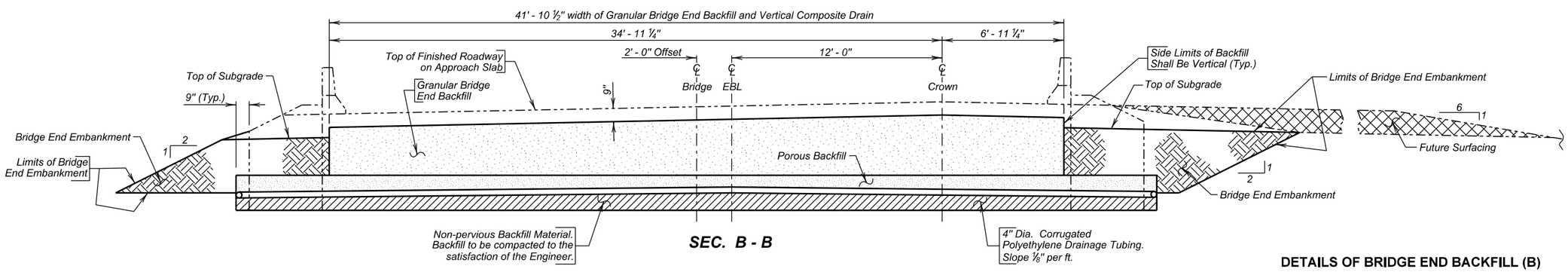

SEC. B - B

DETAILS OF BRIDGE END BACKFILL (B)

FOR

EASTBOUND LANES

159' - 6" CONTINUOUS CONCRETE BRIDGE

40' - 0" ROADWAY	0° SKEW
OVER ELK CREEK	SEC. 33-T4N-R6E
STA. 1140 + 70.23 TO 1142 + 29.73	IM 0901(38)40
STR. NO. 47-080-535	HL-93

MEADE COUNTY

S. D. DEPT. OF TRANSPORTATION

AUGUST 2014

DESIGNED BY	CK. DES. BY	DRAFTED BY	
BB	PW	BT	Steve A Johnson BRIDGE ENGINEER
MEAD5580	5580GF14		

STATE OF	PROJECT	SHEET NO.	TOTAL SHEETS
S.D.	IM 0901(38)40	E68	E199

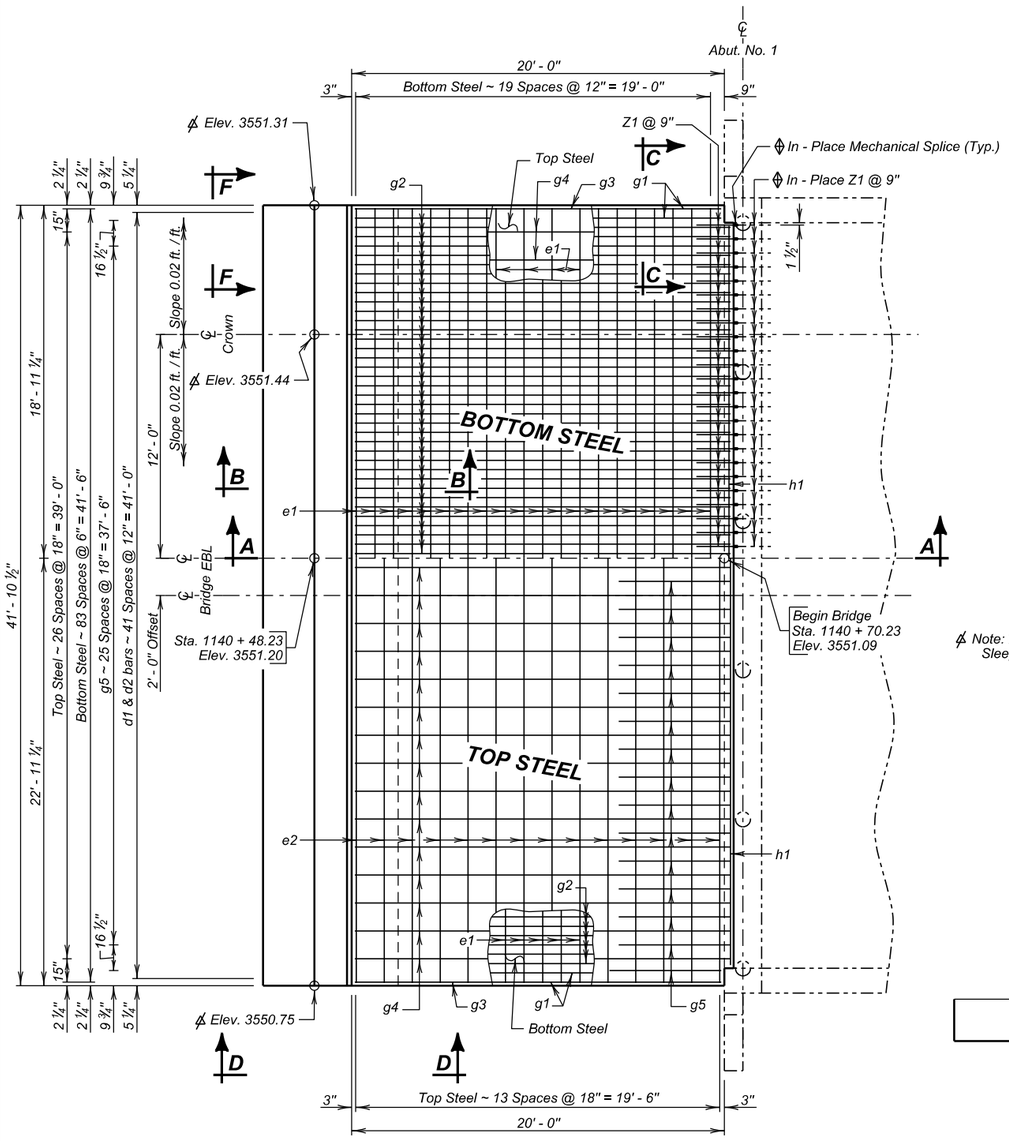

PLAN

(Shown adj. to Abut. No. 1, Abut. No. 5 similar Opposite Hand)

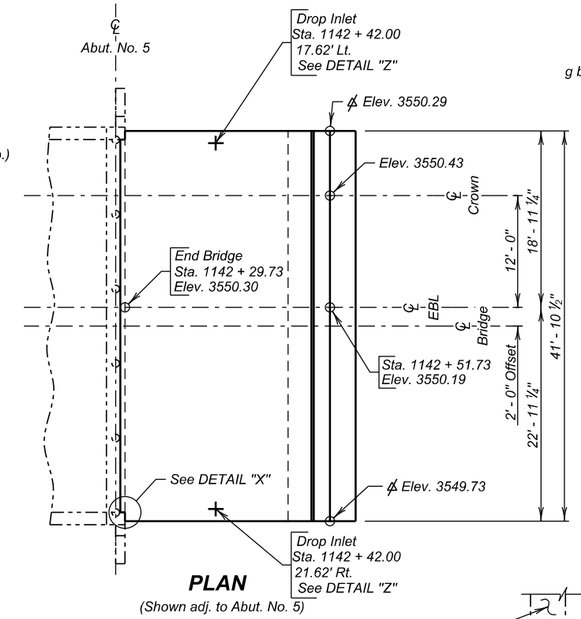

PLAN

(Shown adj. to Abut. No. 5)

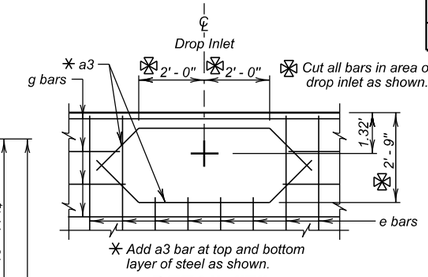

DETAIL "Z"

(Typical plan for steel when drop inlet is used.)

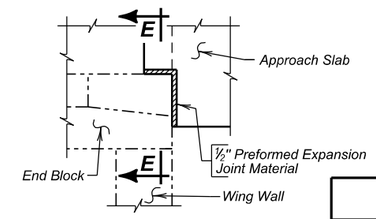

DETAIL "X"

REINFORCING SCHEDULE

(For Two Approach Slabs & Two Sleeper Slabs)

Mk.	No.	Size	Length	Type
Approach Slabs				
a3	8	4	7' - 4"	19A
e1	40	6	41' - 7"	Str.
e2	28	4	41' - 7"	Str.
g1	8	8	19' - 8"	Str.
g2	160	8	20' - 2"	Str.
g3	4	4	19' - 8"	Str.
g4	54	4	20' - 2"	Str.
g5	50	4	6' - 0"	Str.
h1	4	6	39' - 8"	Str.
Z1	108	7	2' - 0"	Str.
Sleeper Slabs				
c1	48	5	41' - 7"	Str.
d1	168	4	7' - 9"	2
d2	84	4	6' - 4"	T2

Bending Details

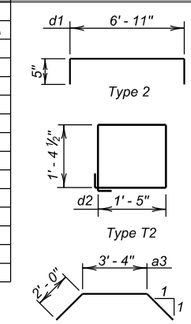

NOTES:
All bars to be epoxy coated.
All dimensions are out to out of bars.

ESTIMATED QUANTITIES

(For Two Approach Slabs and Two Sleeper Slabs)

ITEM	UNIT	QUANTITY
Concrete Approach Slab for Bridge	Sq. Yd.	190.6
Concrete Approach Sleeper Slab for Bridge	Sq. Yd.	67.5

1. 49.8 Cu. Yds. Concrete in Approach Slabs.
2. 14012 Lbs. Epoxy Coated Re-Steel in Approach Slabs.
3. 22.1 Cu. Yds. Concrete in Sleeper Slabs.
4. 3307 Lbs. Epoxy Coated Re-Steel in Sleeper Slabs.
5. 31.4 Sq. Ft. of 2" Polystyrene Insulation Board.

Items 1 thru 5 are approximate quantities contained in the above bid items and are for information only.

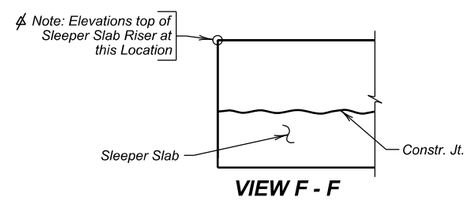

VIEW F - F

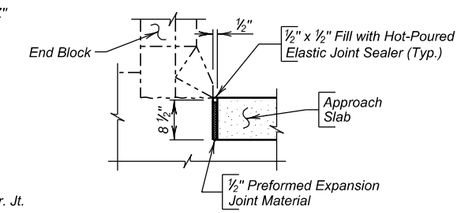

SEC. E - E

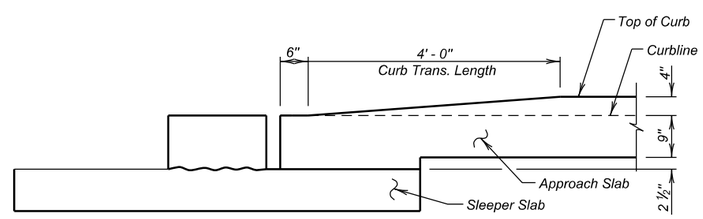

VIEW D - D

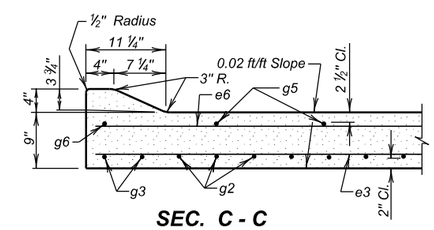

SEC. C - C

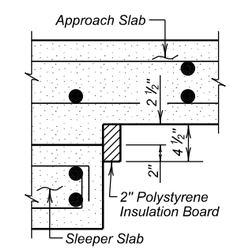

DETAIL "Q"

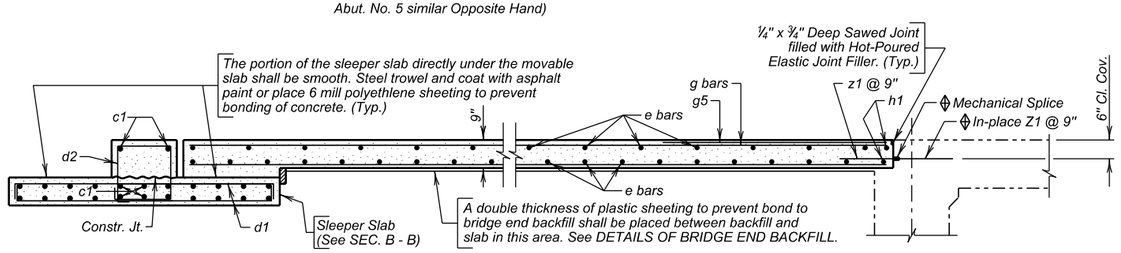

SEC. A - A

In-place Z1 bars and Mechanical Splices are listed and included in superstructure quantities. See SUPERSTRUCTURE DETAILS.

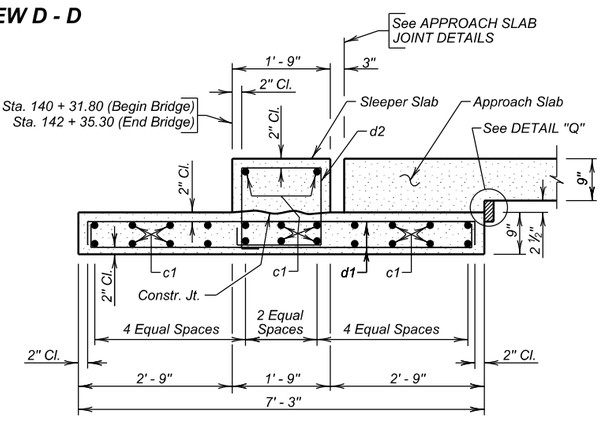

SEC. B - B

(Sleeper Slab)

DETAILS OF APPROACH SLAB ADJACENT TO BRIDGE

FOR

EASTBOUND LANES

159' - 6" CONTINUOUS CONCRETE BRIDGE

40' - 0" ROADWAY — 0° SKEW
OVER ELK CREEK — SEC. 33-T4N-R6E
STA. 1140 + 70.23 TO 1142 + 29.73 — IM 0901(38)40
STR. NO. 47-080-535 — HL-93

MEADE COUNTY
S. D. DEPT. OF TRANSPORTATION
AUGUST 2014

DESIGNED BY	CK. DES. BY	DRAFTED BY	
BB	PW	MG	Steve A Johnson BRIDGE ENGINEER
MEAD5580	5580GF15		

STATE OF	PROJECT	SHEET NO.	TOTAL SHEETS
S.D.	IM 0901(38)40	E69	E199

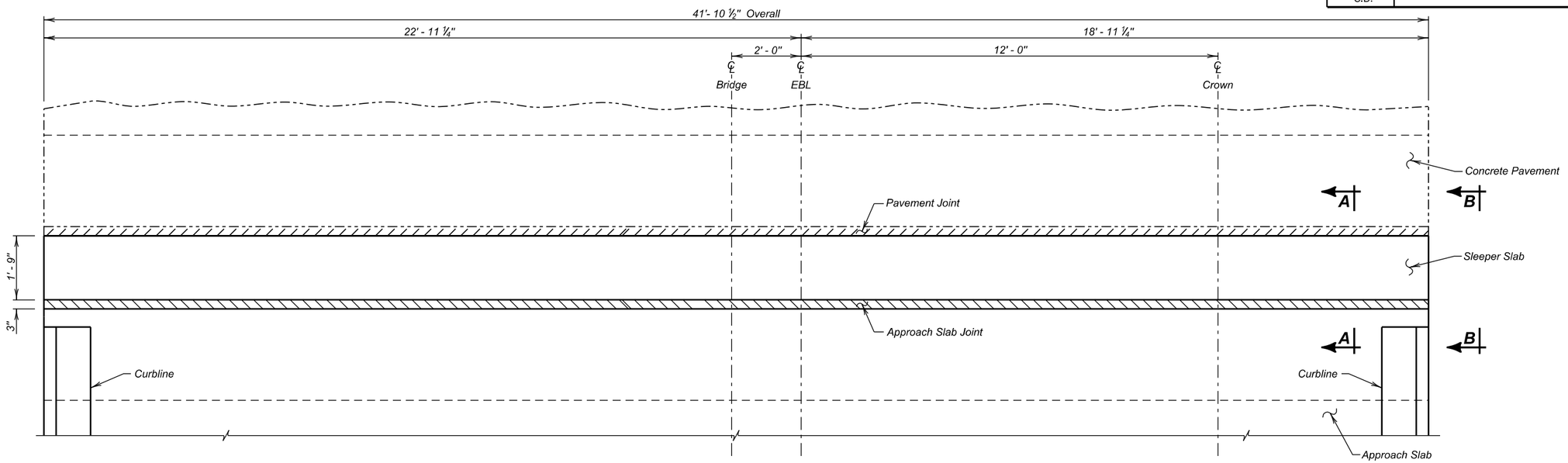

PLAN

GENERAL NOTES

1. The Membrane Sealant shall be on the approved product list for Membrane Sealant Expansion Joints.
2. The manufacturer shall supply the membrane sealant in packaging that precompresses the membrane sealant. The precompressed dimension shall be as recommended by the sealant manufacturer, however, in no case shall the precompressed dimension exceed 75% of the joint opening width. The foam sealant shall be slowly self expanding to permit workers ample time to install the membrane sealant before the membrane sealant exceeds the joint opening width.
3. The membrane sealant shall provide a water tight seal throughout a joint movement range of + 25% (minimum) from the specified joint opening dimension.
4. The membrane sealant shall be supplied in pieces a minimum of 5 feet in length. The foam sealant shall be ultra-violet and ozone resistant.
5. The bonding adhesive used to attach the membrane sealant to the adjacent concrete shall be approved by the membrane sealant manufacturer.
6. Adhesive used to join adjacent pieces of the membrane sealant shall be as recommended by the manufacturer.
7. If styrofoam filler material is used in the construction, it shall be closed cell and water-tight as approved by the Engineer.
8. The minimum ambient air temperature at the time of joint installation and adhesive curing shall be 40° F.
9. A technical representative of the membrane sealant manufacturer shall be present at the jobsite during installation. The technical representative shall be knowledgeable in the correct procedures for the preparation and installation of the joint material to ensure the Contractor installs the joint to the manufacturers' recommendations.
10. Surfaces that will be in contact with the membrane sealant shall be thoroughly cleaned by abrasive blasting to remove all laitance and contaminants (such as oil, curing compounds, etc.) from the surface. At a minimum, two passes of abrasive blasting with the nozzle held at an angle to within 1 to 2 inches of the surface will be required. Cleaning of the surfaces with solvents, wire brushing, or grinding shall not be permitted.
11. After abrasive blasting, but immediately prior to membrane joint installation, the entire joint contact surface shall be air blasted. The air compressor used for joint cleaning shall be equipped with trap devices capable of providing moisture-free and oil-free air at a recommended pressure of 90 psi. To obtain complete bonding with the adhesive, the adjacent surfaces must be dry and clean. The contact surfaces for the joint shall be visually inspected by the Engineer immediately prior to joint installation to verify the surface is dry and clean.
12. Individual spliced sections shall be installed as per the manufacturers' recommendations. The membrane joint sealant manufacturer shall submit a detailed installation procedure to the Engineer at least 5 days prior to joint installation for his review.
13. Traffic shall not be allowed on the joint until the bonding adhesive has had time to cure, as recommended by the manufacturer.
14. Use plywood or other material to protect concrete adjacent to the joint from spalling before any equipment is moved across the joint. Any spall areas will be repaired at the Contractor's expense by breaking out and replacing adjacent concrete, as approved by the Engineer.
15. The Membrane Sealant Expansion Joint will be measured in feet to the nearest one-tenth foot, complete in place. Measurement will be made of the overall horizontal length. The Membrane Sealant Expansion Joint will be paid for at the contract unit price per foot complete in place. Payment for this item shall be full compensation for furnishing all the required materials in place, including labor, equipment and incidentals necessary to complete the work in accordance with the plans and the foregoing specifications.

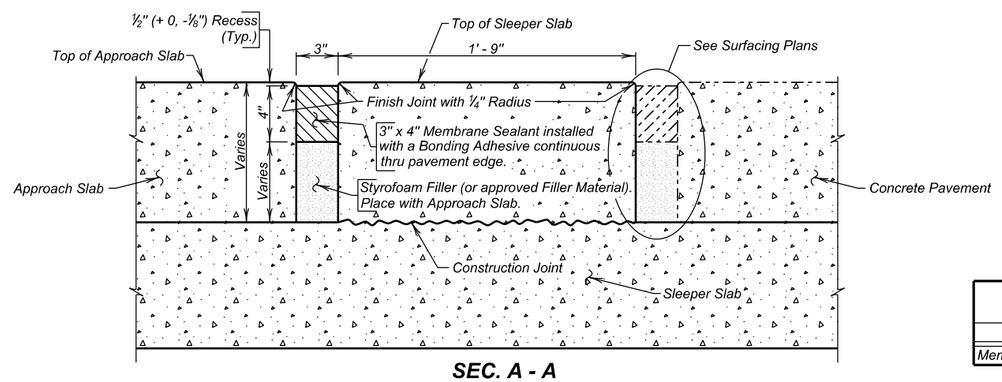

SEC. A - A

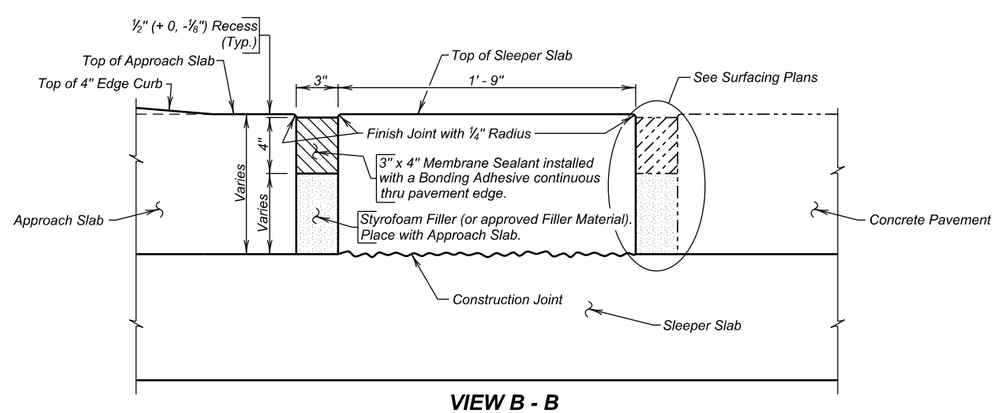

VIEW B - B

ESTIMATED QUANTITIES
(For Two Approach Slabs)

ITEM	UNIT	QUANTITY
Membrane Sealant Expansion Joint	Ft.	83.8

APPROACH SLAB JOINT DETAILS

FOR

EASTBOUND LANES

159' - 6" CONTINUOUS CONCRETE BRIDGE

40' - 0" ROADWAY — 0° SKEW
OVER ELK CREEK — SEC. 33-T4N-R6E
STA. 1140 + 70.23 TO 1142 + 29.73 — IM 0901(38)40
STR. NO. 47-080-535 — HL-93

MEADE COUNTY

S. D. DEPT. OF TRANSPORTATION

AUGUST 2014

DESIGNED BY	CK. DES. BY	DRAFTED BY	
BB	PW	MG	Steve A. Johnson
MEAD5580	5580GF16		BRIDGE ENGINEER

STATE OF	PROJECT	SHEET NO.	TOTAL SHEETS
S.D.	IM 0901(38)40	E70	E199

ESTIMATED QUANTITIES

ITEM	UNIT	QUANTITY
≠ Class C Riprap	Ton	2196.0
Type B Drainage Fabric	Sq. Yd.	1828
Controlled Density Fill	Cu. Yd.	7.9

≠ For estimating purposes only, a factor of 1.4 tons/cu.yd. was used to convert Cu. Yds. to Tons.

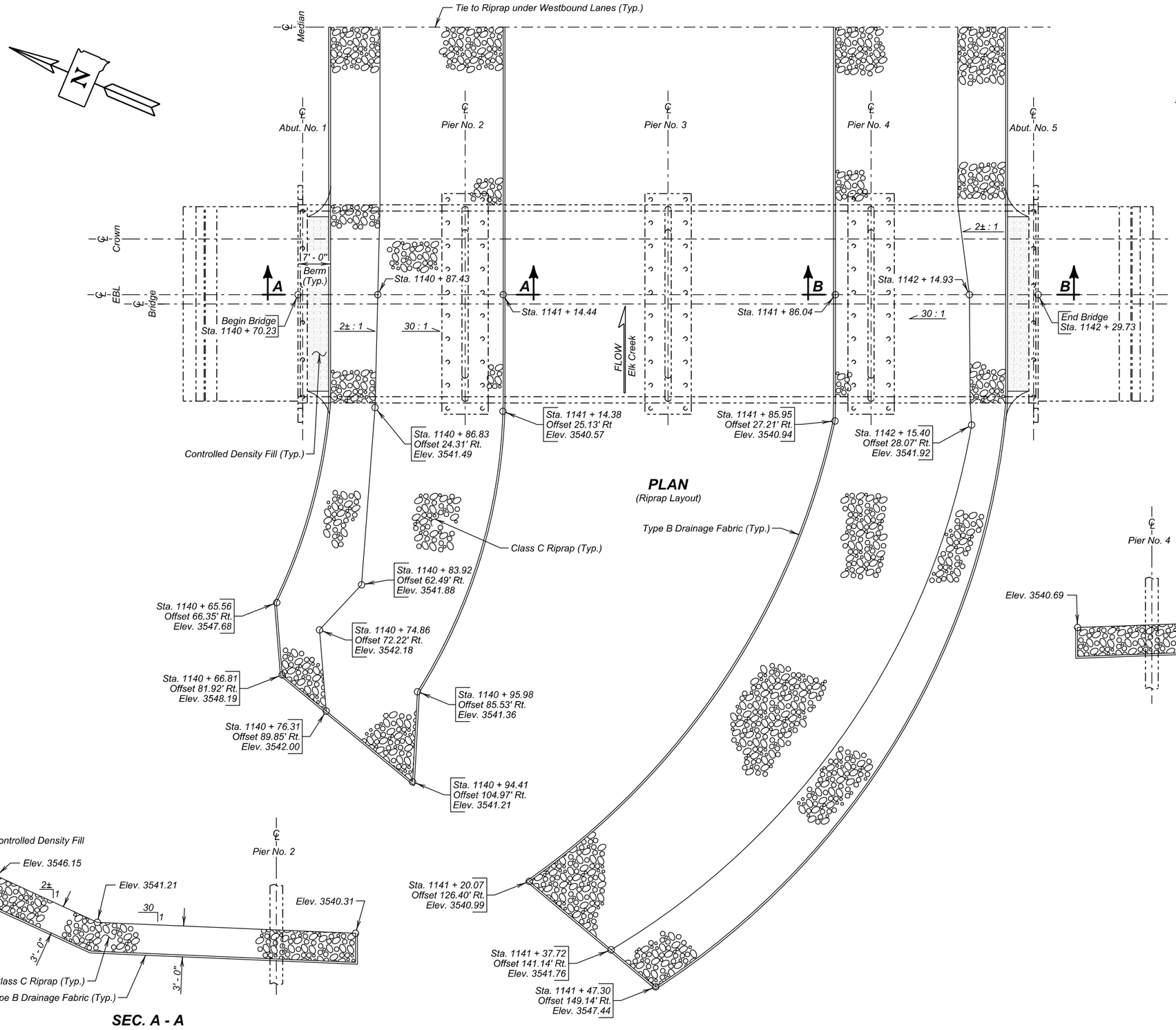

PLAN
(Riprap Layout)

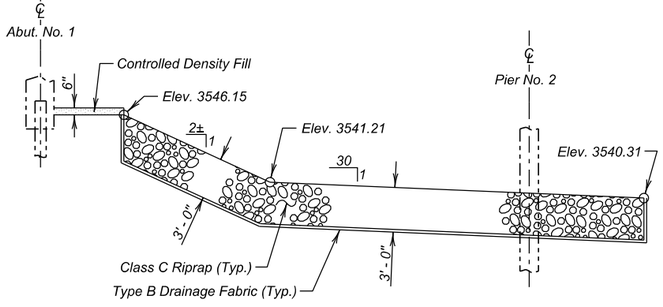

SEC. A - A

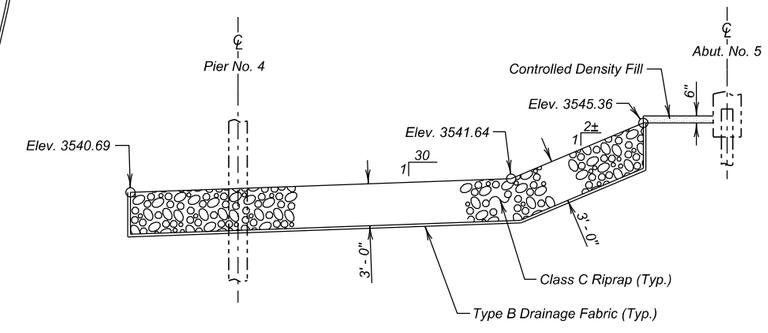

SEC. B - B

RIPRAP DETAILS
FOR
EASTBOUND LANES

159' - 6" CONTINUOUS CONCRETE BRIDGE

40' - 0" ROADWAY — 0° SKEW
OVER ELK CREEK — SEC. 33-T4N-R6E
STA. 1140 + 70.23 TO 1142 + 29.73 — IM 0901(38)40
STR. NO. 47-080-535 — HL-93

MEADE COUNTY
S. D. DEPT. OF TRANSPORTATION
AUGUST 2014

DESIGNED BY	CK. DES. BY	DRAFTED BY	
BB	PW	MG	Steve A Johnson BRIDGE ENGINEER
MEAD5580	5580GF17		

The elevations shown in these plans are based on the National Geodetic Survey (NGS) North American Vertical Datum of 1988 (NAVD88).

STATE OF	PROJECT	SHEET NO.	TOTAL SHEETS
S.D.	IM 0901(38)40	E71	E199

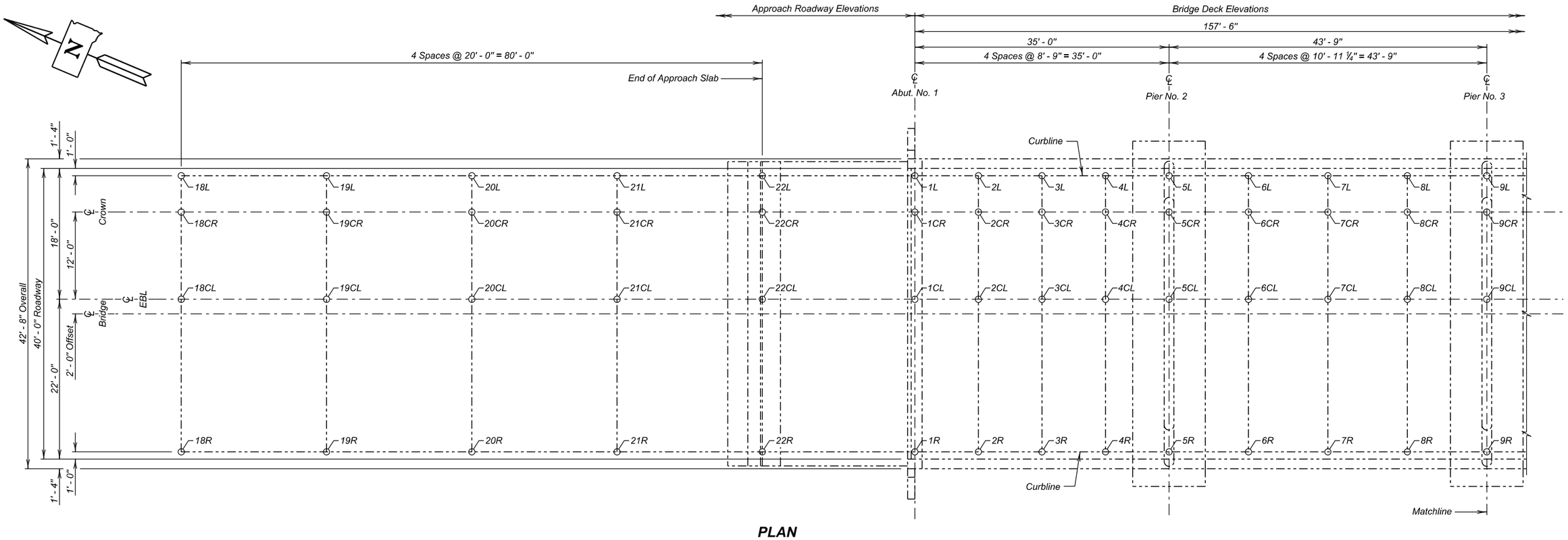

PLAN

Table of As-Built Elevations - Bridge Deck							
Location	Elevation	Location	Elevation	Location	Elevation	Location	Elevation
1L		1CR		1CL		1R	
2L		2CR		2CL		2R	
3L		3CR		3CL		3R	
4L		4CR		4CL		4R	
5L		5CR		5CL		5R	
6L		6CR		6CL		6R	
7L		7CR		7CL		7R	
8L		8CR		8CL		8R	
9L		9CR		9CL		9R	

Table of As-Built Elevations - Approach Roadway							
Location	Elevation	Location	Elevation	Location	Elevation	Location	Elevation
18L		18CR		18CL		18R	
19L		19CR		19CL		19R	
20L		20CR		20CL		20R	
21L		21CR		21CL		21R	
22L		22CR		22CL		22R	

ELEVATION - BRIDGE SURVEY MARKER		
LOCATION	STATION - OFFSET	ELEVATION
Begin Bridge		

NOTE -
The Contractor shall be responsible for producing the As - Built Elevation Survey soon after construction is complete and before the bridge is opened to traffic.
The As - Built Elevations of the Bridge shall be taken and recorded at the locations shown by the table on this sheet. The completed table shall be given to the Engineer who will forward a copy to the Office of Bridge Design and the Region Office.

ESTIMATED QUANTITIES		
ITEM	UNIT	QUANTITY
Bridge Elevation Survey	L. S.	Lump Sum

AS-BUILT ELEVATION SURVEY (A)
FOR
EASTBOUND LANES

159' - 6" CONTINUOUS CONCRETE BRIDGE

40' - 0" ROADWAY — 0° SKEW
OVER ELK CREEK — SEC. 33-T4N-R6E
STA. 1140 + 70.23 TO 1142 + 29.73 — IM 0901(38)40
STR. NO. 47-080-535 — HL-93

MEADE COUNTY
S. D. DEPT. OF TRANSPORTATION
AUGUST 2014

DESIGNED BY	CK. DES. BY	DRAFTED BY	
BB	PW	MG	Steve A Johnson
MEAD5580	5580GF18		BRIDGE ENGINEER

The elevations shown in these plans are based on the National Geodetic Survey (NGS) North American Vertical Datum of 1988 (NAVD88).

STATE OF	PROJECT	SHEET NO.	TOTAL SHEETS
S.D.	IM 0901(38)40	E72	E199

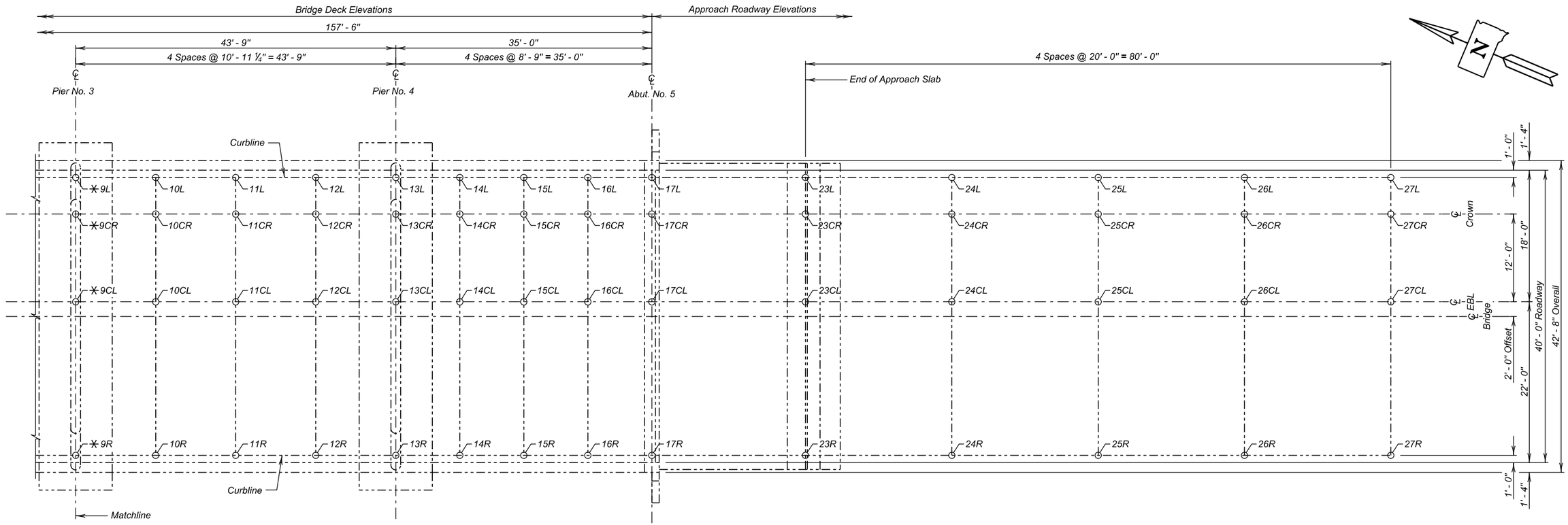

PLAN

✳ Included in AS-BUILT ELEVATION SURVERY (A).

Table of As-Built Elevations - Bridge Deck

Location	Elevation	Location	Elevation	Location	Elevation	Location	Elevation
10L		10CR		10CL		10R	
11L		11CR		11CL		11R	
12L		12CR		12CL		12R	
13L		13CR		13CL		13R	
14L		14CR		14CL		14R	
15L		15CR		15CL		15R	
16L		16CR		16CL		16R	
17L		17CR		17CL		17R	

Table of As-Built Elevations - Approach Roadway

Location	Elevation	Location	Elevation	Location	Elevation	Location	Elevation
23L		23CR		23CL		23R	
24L		24CR		24CL		24R	
25L		25CR		25CL		25R	
26L		26CR		26CL		26R	
27L		27CR		27CL		27R	

ELEVATION - BRIDGE SURVEY MARKER

LOCATION	STATION - OFFSET	ELEVATION
End Bridge		

NOTE -
The Contractor shall be responsible for producing the As - Built Elevation Survey soon after construction is complete and before the bridge is opened to traffic. The As - Built Elevations of the Bridge shall be taken and recorded at the locations shown by the table on this sheet. The completed table shall be given to the Engineer who will forward a copy to the Office of Bridge Design and the Region Office.

AS-BUILT ELEVATION SURVEY (B)
FOR
EASTBOUND LANES

159' - 6" CONTINUOUS CONCRETE BRIDGE

40' - 0" ROADWAY — 0° SKEW
OVER ELK CREEK — SEC. 33-T4N-R6E
STA. 1140 + 70.23 TO 1142 + 29.73 — IM 0901(38)40
STR. NO. 47-080-535 — HL-93

MEADE COUNTY
S. D. DEPT. OF TRANSPORTATION
AUGUST 2014

DESIGNED BY	CK. DES. BY	DRAFTED BY	
BB	PW	MG	Steve A Johnson BRIDGE ENGINEER
MEAD5580	5580GF19		

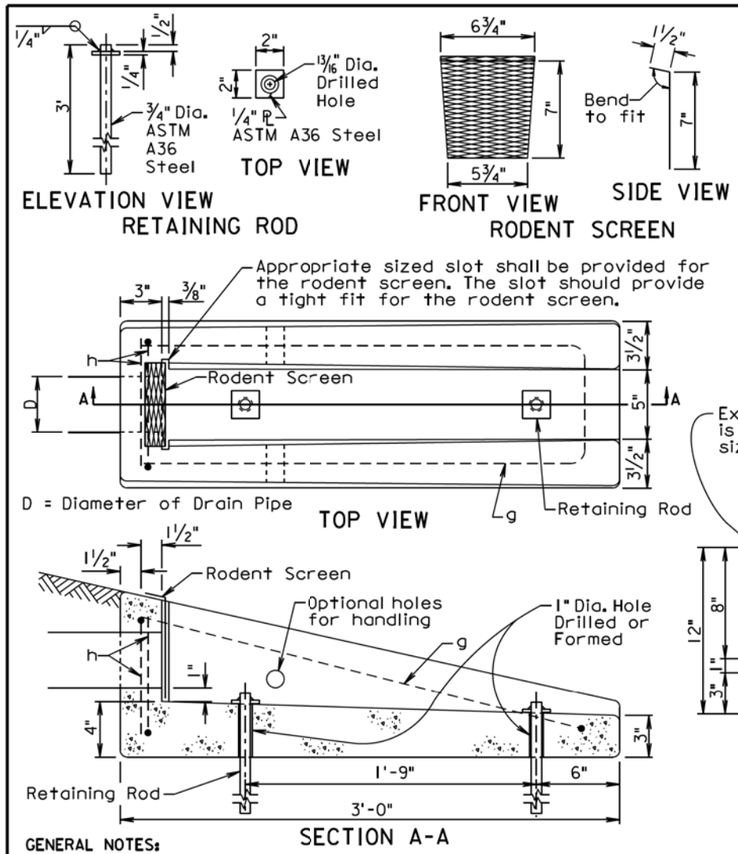

REINFORCING SCHEDULE

MK.	No.	Size	Length	Type
g	1	4	6'-3"	17
h	2	4	2'-4"	17

NOTE: All dimensions are out to out of bars.

Bending Details

TYPE 17

GENERAL NOTES:

The concrete shall be Class M6. The concrete shall conform to the requirements of Section 462 of the Specifications. It is estimated that each unit weighs approximately 210 pounds.

All reinforcing steel shall conform to ASTM A615 Grade 60 and shall be epoxy coated. The reinforcing steel shall be securely retained to prevent displacement during placement of concrete. It is estimated that 7.3 pounds of reinforcing steel is required for each unit.

The pipe shall be placed in the concrete headwall with the pipe end flush with the concrete surface adjacent to the rodent screen.

The rodent screen shall be galvanized 13 Ga. steel with a diamond shaped flattened mesh pattern. The size shall be 1/2". The size refers to the measurement across the smallest diamond shaped opening measured from the centers of the wires.

The retaining rod shall be galvanized in accordance with ASTM A123 after all shop welding has been completed.

The drawing indicates using 1/2" fillets; however, 3/4" chamfers may be substituted for the 1/2" fillets.

All costs for furnishing and installing the concrete headwall including equipment, labor, and materials including concrete, reinforcing steel, retaining rods, and rodent screen shall be incidental to the contract unit price per each for "Precast Concrete Headwall for Drain".

June 26, 2015

Published Date: 3rd Qtr. 2016	SDDOT	PRECAST CONCRETE HEADWALL FOR DRAIN	PLATE NUMBER 430.50 Sheet 1 of 1

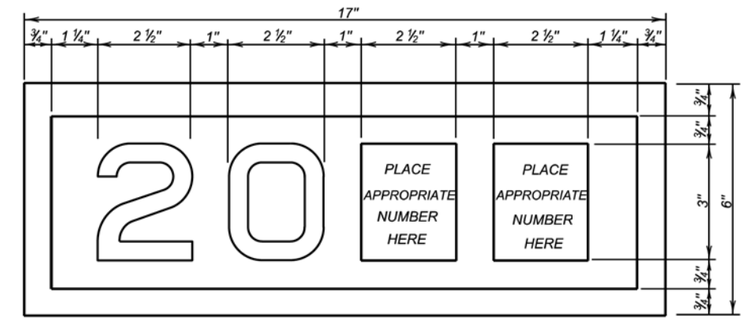

YEAR PLATE DETAILS

GENERAL NOTES:

1. Year plates of the general dimensions shown shall be constructed on all box culverts and bridges. The year plates shall be constructed in reverse and attached to the forms in such a manner that the finished imprint in the concrete does not exceed one-half (1/2) inch in depth.

2. Year plates shall be located on structure (s) as follows:

   a. On cast-in-place box culverts the year plates shall be four and one - half (4 1/2) inches below the top of the upstream parapet wall and centered laterally on the upstream face. On precast box culverts the year plate shall be centered laterally on the upstream face of the top slab. Where an extended interior wall interferes with this location, the year plate shall be centered in an adjacent barrel.

   b. On bridges with six (6) inch curbs or "Jersey" shaped barriers with no endblocks, the year plate shall be centered vertically on the curb face approximately six (6) inches from the end of the bridge, or as designated by the Engineer. On bridges with "Jersey" shaped barrier endblocks, the year plate shall be centered on the upper sloped portion of the barrier approximately 5'- 6" from the end of the bridge, or as designated by the Engineer. There shall be one year plate at each end of the bridge on opposite sides.

   c. When the plans specify that both the original date of construction and the date of reconstruction are to be shown, one date shall be placed as listed above and the other located adjacent to it. Both year plates shall be shown at each end of the bridge on opposite sides.

3. There will be no separate measurement or payment made for year plates on box culverts and bridges. All costs for this work shall be incidental to other contract items.

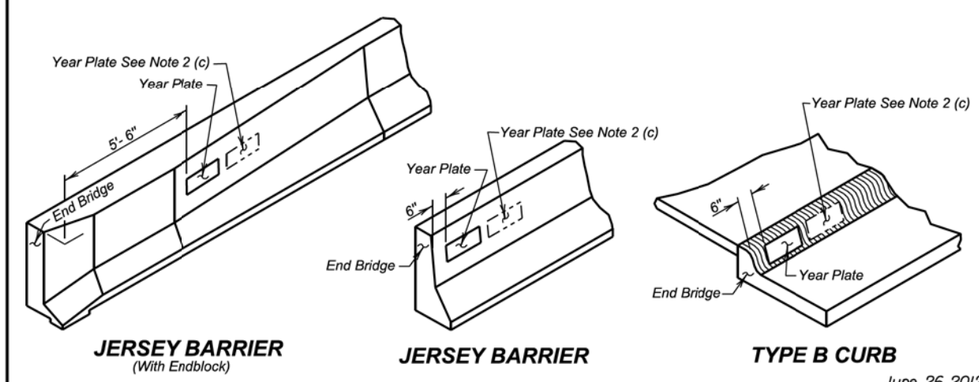

June 26, 2012

Published Date: 3rd Qtr. 2016	SDDOT	YEAR PLATE DETAILS	PLATE NUMBER 460.02 Sheet 1 Of 1

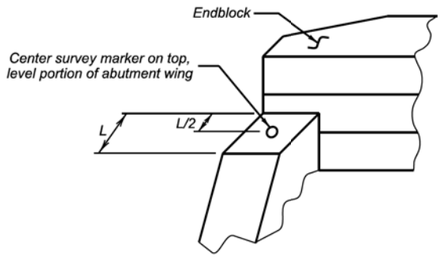

ABUTMENT WITH "STRAIGHT" WINGS

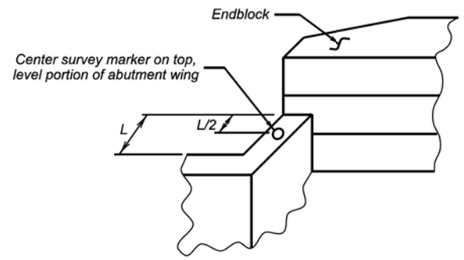

ABUTMENT WITH "SWEPT BACK" WINGS

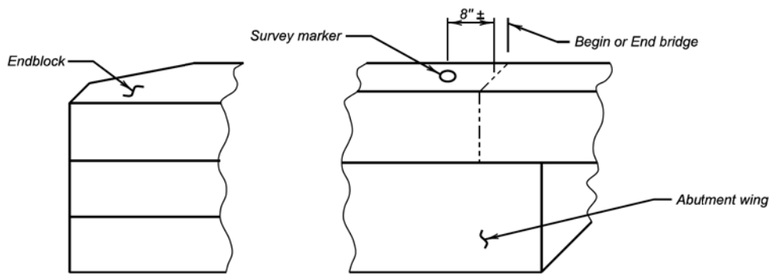

ABUTMENT WITH "SWEPT BACK" WINGS

(Endblock on top of wings)

GENERAL NOTES:

1. Survey markers shall be located at each abutment on the same side of the bridge as the year plate. Place survey markers on abutment wings as shown. Two survey markers will be required at each bridge.
2. Survey markers shall be of a type intended for installation in concrete, be made of solid brass or bronze, have a domed top and be either a 3" top diameter (with a ¾" X 2" long ribbed shank), or a US Army Corps of Engineers Type C Disc with a 3 ½" top diameter.
3. There will be no separate measurement or payment made for survey markers. All costs for this work shall be incidental to the other contract items.

June 26, 2012

Published Date: 3rd Qtr. 2016	SDDOT	BRIDGE SURVEY MARKER	PLATE NUMBER 460.05
			Sheet 1 of 1

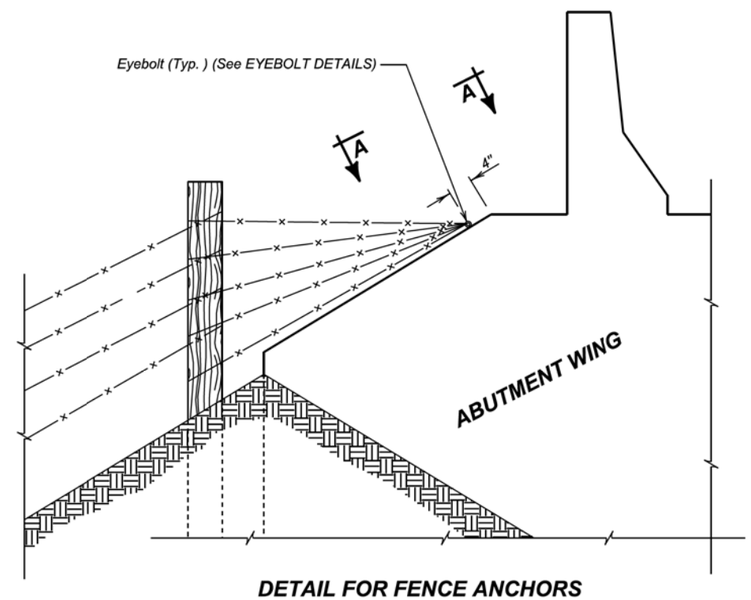

DETAIL FOR FENCE ANCHORS

GENERAL NOTES:

1. The fence and post details shown are for illustrative purpose only. The fence shall be as specified elsewhere in the plans.
2. Eyebolts shall be placed on all of the bridge abutment wings.
3. Eyebolts shall be ⅝ inch diameter and shall conform to ASTM A307.
4. Eyebolts, nuts, and concrete inserts shall be galvanized in accordance with AASHTO M232 (ASTM A153). Concrete inserts of corrosion resistant material need not be galvanized.
5. Cast-in-place eyebolts shall have a nut attached, be 4 ½ inches (Min.) in length and shall be embedded such that the eye of the bolt is flush with the concrete surface. (See Eyebolt Details) As an alternate, cast-in-place concrete inserts, capable of developing the full strength of the ⅝ inch diameter threaded eyebolt, may be used and shall be set in the concrete in accordance with the manufacturer's recommendations. The eyebolt shall be of sufficient length to develop its full strength. The eye of the eyebolt shall be flush with the concrete surface.
6. The cost for furnishing and installing eyebolts and/or concrete inserts shall be incidental to various contract items.

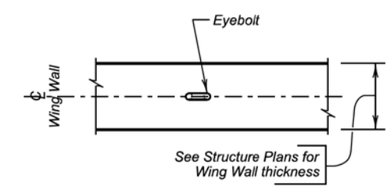

VIEW A - A

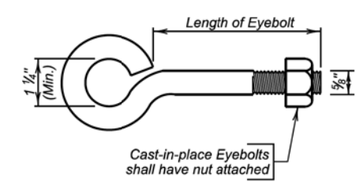

EYEBOLT DETAILS

December 23, 2012

Published Date: 3rd Qtr. 2016	SDDOT	FENCE ANCHORS FOR BRIDGE ABUTMENT WINGS (WINGS 6' AND SHORTER)	PLATE NUMBER 620.18
			Sheet 1 of 1

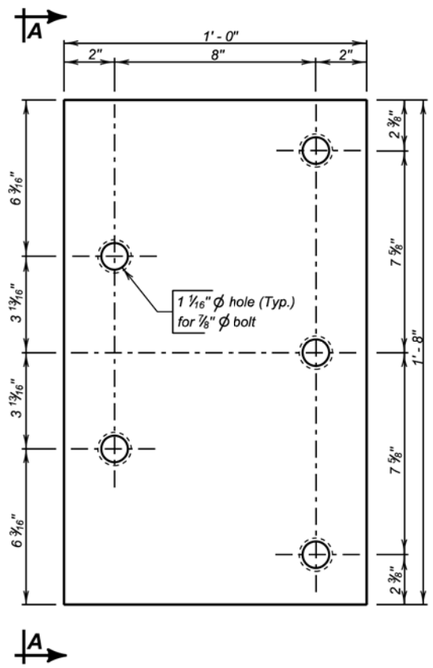

ELEVATION

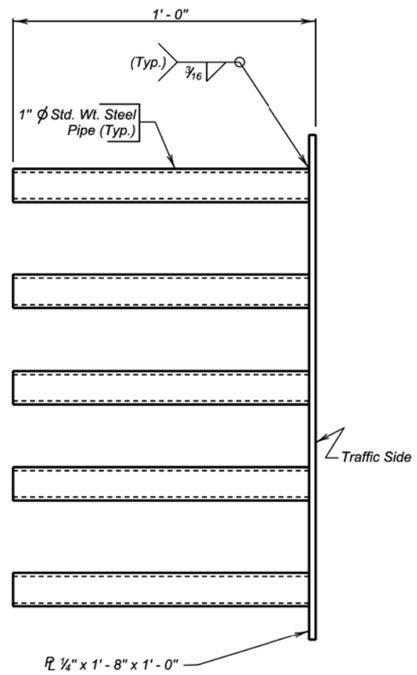

VIEW A - A

GENERAL NOTES:

1. Steel plate for the insert assembly shall conform to ASTM A709 Grade 36. The steel pipes shall conform to ASTM A53 or ASTM A500 Grade B.
2. Welding and weld inspection shall be in conformance with AWS D1.1 - (Current Year) Structural Welding Code - Steel.
3. After fabrication, galvanize in accordance with AASHTO M111 (ASTM A123).
4. Bolts, nuts, and washers shall be provided with each assembly. Bolts shall be galvanized and conform to the requirements of ASTM A307, A325, or A449. Plain washers shall be galvanized and conform to ASTM F844.
5. Bolt heads shall be placed on the traffic side of the endblock. Bolt projection at the back side of the insert shall not exceed 1 inch beyond the nut.
6. The cost of the 5 bolt insert plate assembly complete in place including welding and galvanizing shall be incidental to the contract unit price per Cubic Yard for " Class A45 Concrete, Miscellaneous ", " Class A45 Concrete, Bridge Deck ", or " Class A45 Concrete, Bridge Repair ", as applicable.

December 23, 2013

Published Date: 3rd Qtr. 2016	SDDOT	5 BOLT INSERT PLATE ASSEMBLY	PLATE NUMBER 630.92
			Sheet 1 of 1

The elevations shown in these plans are based on the National Geodetic Survey (NGS) North American Vertical Datum of 1988 (NAVD88).

STATE OF	PROJECT	SHEET NO.	TOTAL SHEETS
S.D.	IM 0901(38)40	E76	E199

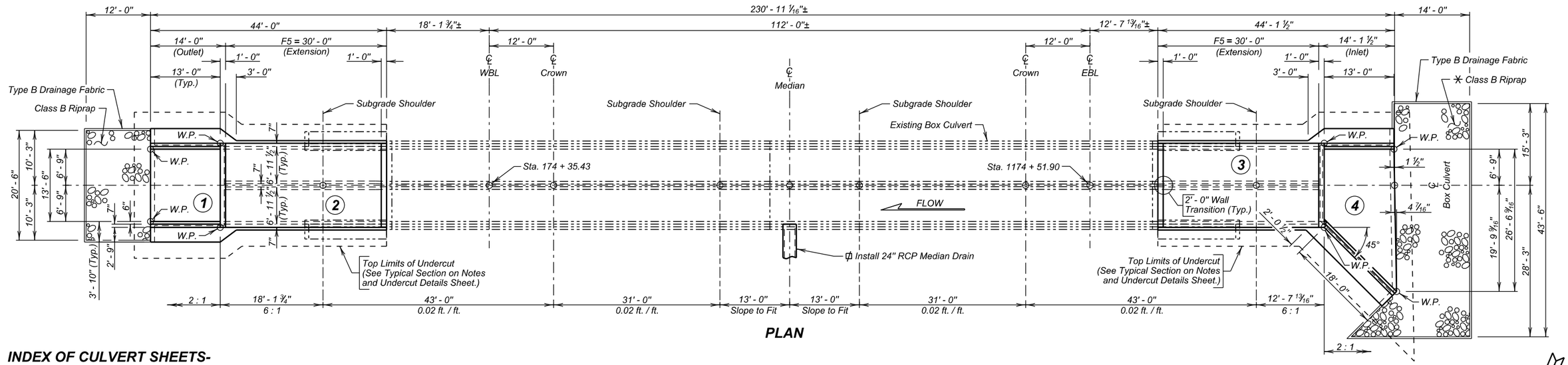

PLAN

INDEX OF CULVERT SHEETS-

Sheet No. 1 - General Drawing and Quantities
Sheet No. 2 - Notes and Undercut Details
Sheet No. 3 - Breakout and Dowel Placement Details
Sheet No. 4 - Inlet Details (A)
Sheet No. 5 - Inlet Details (B)
Sheet No. 6 - Outlet Details
Sheet No. 7 - F5 Barrel End Section Details (30' - 0")
Sheet No. 8 - Standard Plate No.'s 460.03 and 620.16

℄ NOTE:
Breakout portion of existing box culvert wall as necessary to install 24" RCP Median Drain

NOTE:
All stations are based on the survey of the existing box culvert. The intent is to match the existing box culvert location, flowline and slope.

✳ NOTE:
Warp riprap in field to conform to natural channel shape and elevation, as approved by the Engineer.

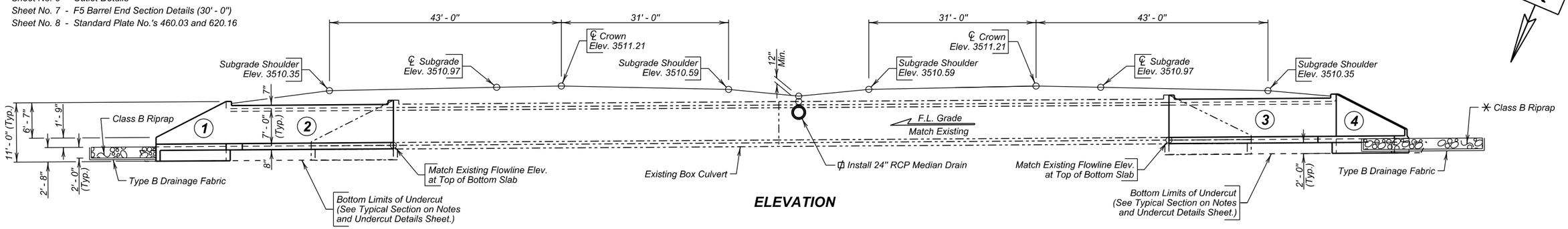

ELEVATION

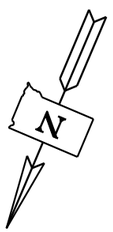

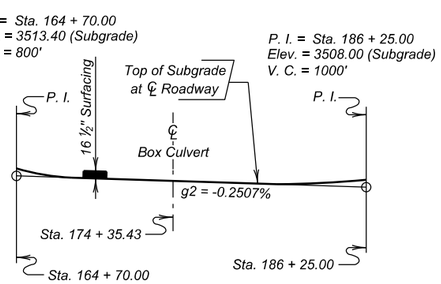

GRADELINE DATA
(Westbound Lanes)

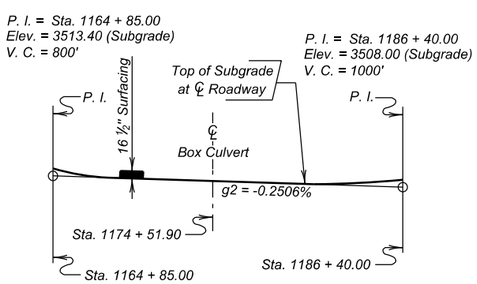

GRADELINE DATA
(Eastbound Lanes)

ESTIMATED QUANTITIES

	ITEM	UNIT	QUANTITY
	Class A45 Concrete, Box Culvert	Cu. Yd.	111.7
	Reinforcing Steel	Lb.	18034
	Structure Excavation, Box Culvert	Cu. Yd.	47.7
	Box Culvert Undercut	Cu. Yd.	175
	Breakout Structural Concrete	Cu. Yd.	12.3
	Install Dowel in Concrete	Each	64
≠	Class B Riprap	Ton	91.8
	Type B Drainage Fabric	Sq. Yd.	141

≠ For estimating purposes only, a factor of 1.4 tons/cu. yd. was used to convert Cu. Yd. to Tons.

GENERAL DRAWING AND QUANTITIES
FOR
2 - 7' X 7' BOX CULVERT EXTENSION

OVER CREEK — 0° SKEW
STA. 1174 + 51.90 (EBL) — SEC. 33-T4N-R6E
STA. 174 + 35.43 (WBL) — IM 0901(38)40
STR. NO. 47-083-539 — HS 20-44 & ALT.
PCN 5580

MEADE COUNTY
S. D. DEPT. OF TRANSPORTATION
FEBRUARY 2014

PLANS BY :
OFFICE OF BRIDGE DESIGN, SOUTH DAKOTA DEPARTMENT OF TRANSPORTATION

DESIGNED BY	CK. DES. BY	DRAFTED BY	
MM/PW	JMH	MG	Steve A Johnson BRIDGE ENGINEER
MEAD5580	5580GG01		

STATE OF	PROJECT	SHEET NO.	TOTAL SHEETS
S.D.	IM 0901(38)40	E77	E199

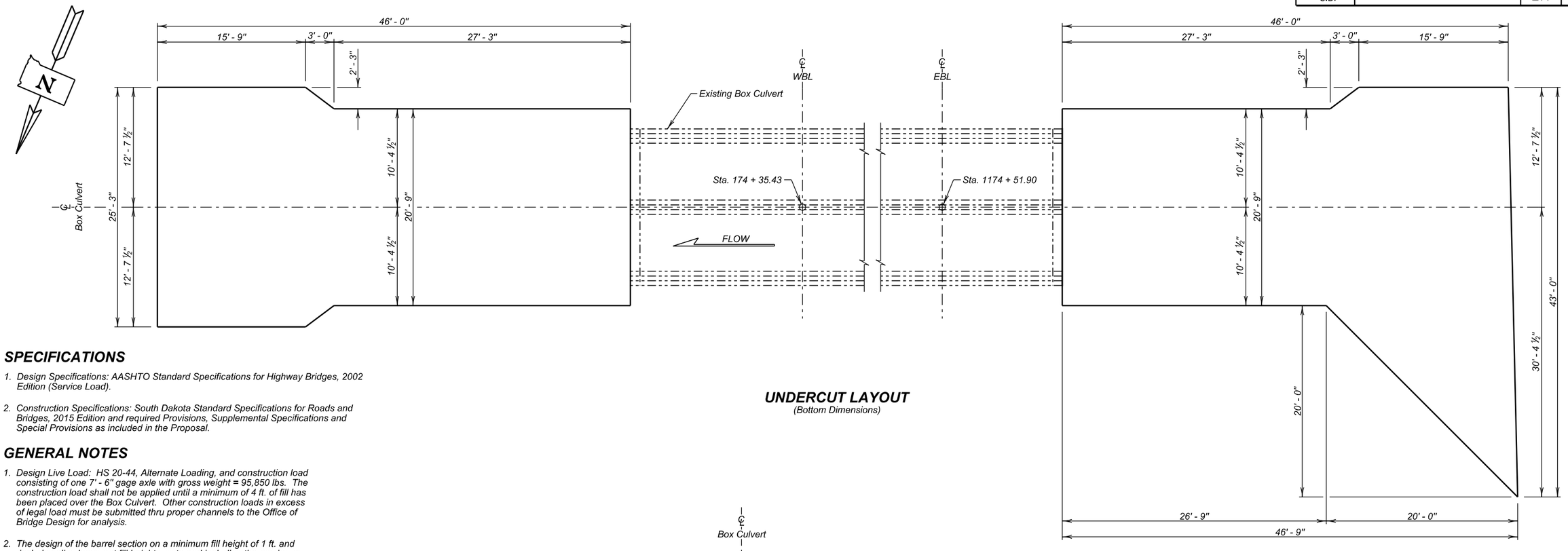

UNDERCUT LAYOUT

(Bottom Dimensions)

SPECIFICATIONS

1. Design Specifications: AASHTO Standard Specifications for Highway Bridges, 2002 Edition (Service Load).
2. Construction Specifications: South Dakota Standard Specifications for Roads and Bridges, 2015 Edition and required Provisions, Supplemental Specifications and Special Provisions as included in the Proposal.

GENERAL NOTES

1. Design Live Load: HS 20-44, Alternate Loading, and construction load consisting of one 7' - 6" gage axle with gross weight = 95,850 lbs. The construction load shall not be applied until a minimum of 4 ft. of fill has been placed over the Box Culvert. Other construction loads in excess of legal load must be submitted thru proper channels to the Office of Bridge Design for analysis.
2. The design of the barrel section on a minimum fill height of 1 ft. and includes all subsequent fill heights up to and including the maximum fill height of 5 ft. (F5).
3. Unit Stresses: Concrete fc = 1800 p.s.i.
   Reinforcing Steel fs = 24000 p.s.i.
4. All concrete shall be Class A45 conforming to Section 460.
5. All reinforcing steel shall conform to ASTM A615 Grade 60.
6. All exposed edges shall be chamfered ¾ inch.
7. Use 1 inch clear cover on all reinforcing steel EXCEPT as shown.
8. The Contractor shall imprint on the structure the date of the existing box culvert construction as well as the date of new construction as specified and detailed on Standard Plate No. 460.03.
9. Care shall be taken to establish Working Points (W.P.) as shown on the wings.
10. Circled numbers in PLAN and ELEVATION views on the General Drawing are section I.D. Numbers (see SDDOT Materials Manual).
11. Cost of Preformed Expansion Joint Filler used in apron construction shall be incidental to the other contract items.
12. Compaction of earth embankment and box culvert backfill material shall be governed by the Specified Density method.
13. The subsurface soils throughout the project consist of clay-silt to gravelly clay-silt to gravel and cobbles.
14. It is anticipated that dewatering will be required to construct the box culvert extension. The Contractor will be responsible to verify groundwater location prior to construction and provide necessary means of dewatering the construction site and prevention of the inflow of additional water. The use of well points may be required in the dewatering the site for construction.

DIMENSIONS OF EXISTING BOX CULVERT

All details and dimensions of the Existing Box Culvert, contained in these plans, are provided as information only. It is the Contractor's responsibility to inspect and verify actual field conditions and any necessary dimensions affecting the satisfactory completion of the work required for this project. Original construction plans can be obtained from the Office of Bridge Design.

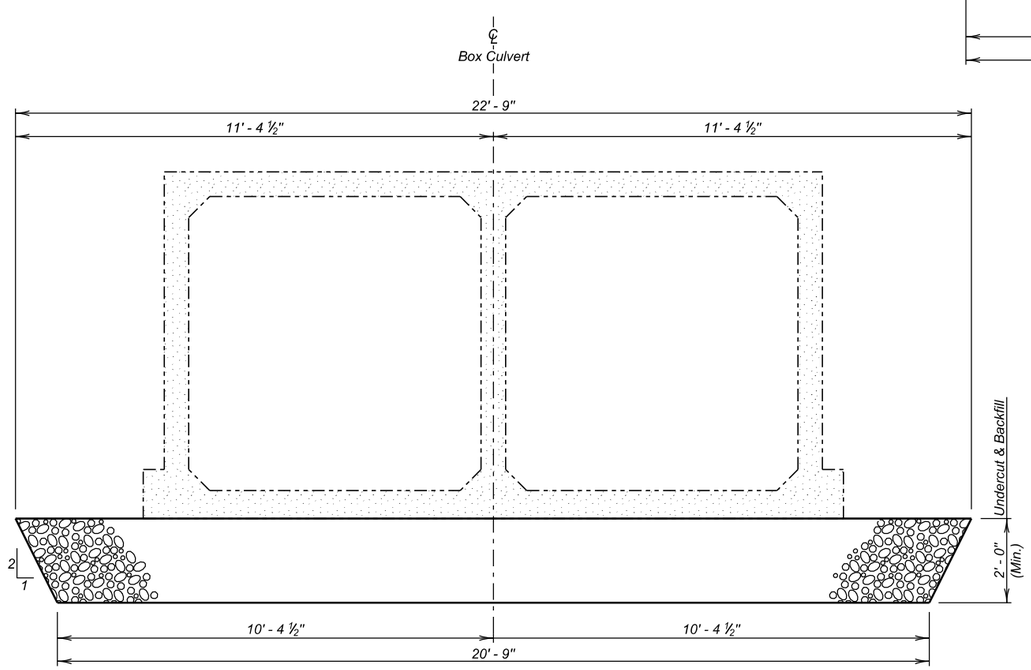

TYPICAL SECTION

(For Limits of Undercut)

ESTIMATED QUANTITIES

	ITEM	UNIT	QUANTITY
¢	Box Culvert Undercut	Cu. Yd.	175

¢ For payment, quantity is based on plan shown undercut dimensions and will not be measured unless the Engineer orders a change.

NOTES AND UNDERCUT DETAILS

FOR

2 - 7' X 7' BOX CULVERT EXTENSION

OVER CREEK — 0° SKEW
STA. 1174 + 51.90 (EBL) — SEC. 33-T4N-R6E
STA. 174 + 35.43 (WBL) — IM 0901(38)40
STR. NO. 47-083-539 — HS 20-44 & ALT.

MEADE COUNTY

S. D. DEPT. OF TRANSPORTATION

FEBRUARY 2014

DESIGNED BY	CK. DES. BY	DRAFTED BY	
MM/PW	JMH	MG	Steve A Johnson BRIDGE ENGINEER
MEAD5580	5580GG02		

STATE OF	PROJECT	SHEET NO.	TOTAL SHEETS
S.D.	IM 0901(38)40	E78	E199

BREAKOUT STRUCTURAL CONCRETE

1. This work shall consist of breaking out and disposing of structural concrete. All broken out concrete and other discarded material shall be disposed of in accordance with the ENVIRONMENTAL COMMITMENT notes found in Section A.
2. Define the breakout limits with ¾ inch saw cuts.
3. Any additional breakout required due to spalling or cracking of the existing structure will be determined by the Engineer. Where additional breakout in the barrel section of the existing structure is required, care shall be taken not to damage any of the existing reinforcing steel. All steel will be left in place and thoroughly cleaned by sandblasting.
4. Additional breakout in existing walls or top slab will require shoring up of the parapet and top slab, as directed by the Engineer.
5. Plans quantity payment will be full compensation for this item regardless of the quantity actually broken out, unless measurement is ordered by the Engineer. If the Engineer orders breakout beyond the limits shown, this additional breakout will be paid for at the contract unit price per cubic yard for Breakout Structural Concrete. If additional breakout is caused by the Contractor's operations, no additional payment will be made.
6. Breakout Structural Concrete will be paid for at the contract unit price per cubic yard. This payment shall be full compensation for furnishing all materials, labor, tools and equipment necessary or incidental to breaking out the structural concrete. Payment includes, but is not limited to, excavation required to perform the required breakout, sawcutting, breaking out concrete, cleaning, and sandblasting reinforcing steel and concrete surfaces, and removing and disposing of all waste materials to satisfactorily complete the work.

INSTALLING DOWELS IN CONCRETE

1. Dowels shall be installed as per Section 380.3 C.1.
2. No loads shall be applied to the epoxy grouted dowel bars until the epoxy resin has had sufficient time to cure as specified by the epoxy resin manufacturer.
3. Embed z2 dowels 8" into existing concrete.
4. Dowel bars shall be #6 deformed bars conforming to ASTM A615 Grade 60.
5. The cost of drilling holes, epoxy resin, dowels, installation, and other incidental items shall be included in the contract unit price per each for Install Dowel in Concrete.

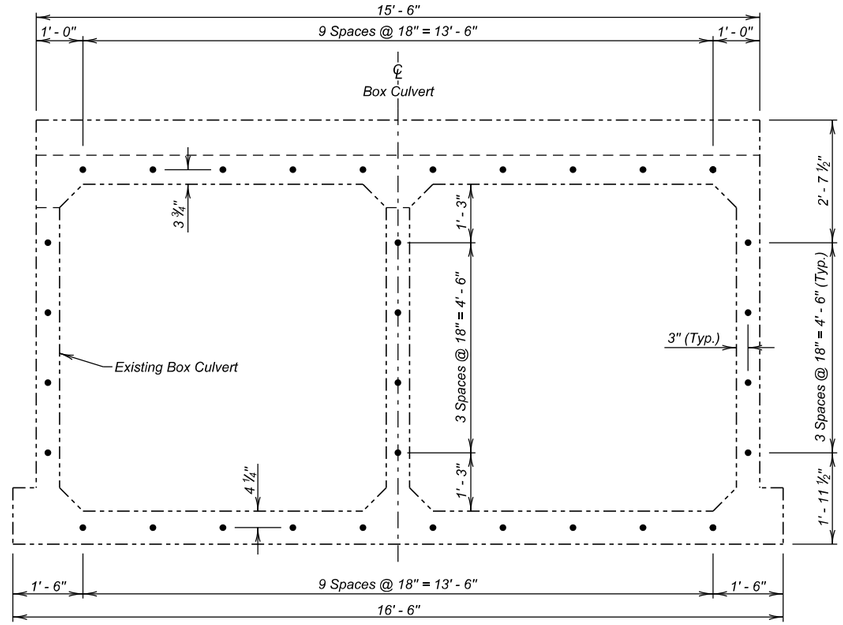

VIEW A - A
(Dowel Locations)

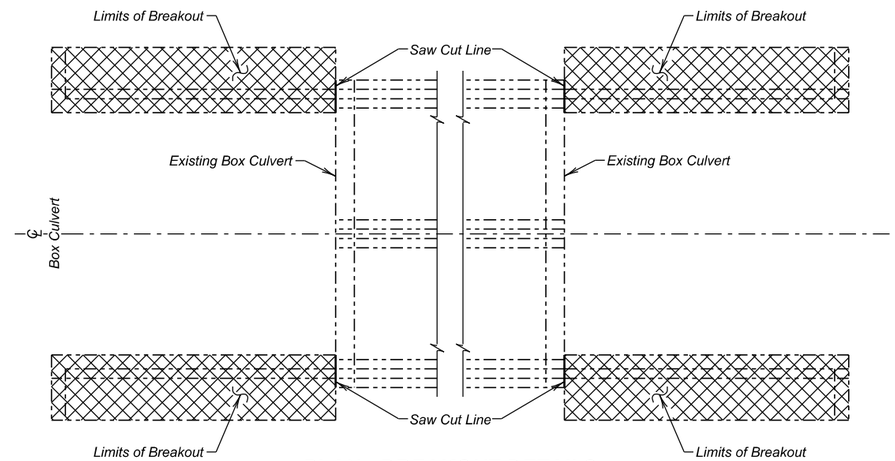

PLAN - BREAKOUT DETAILS

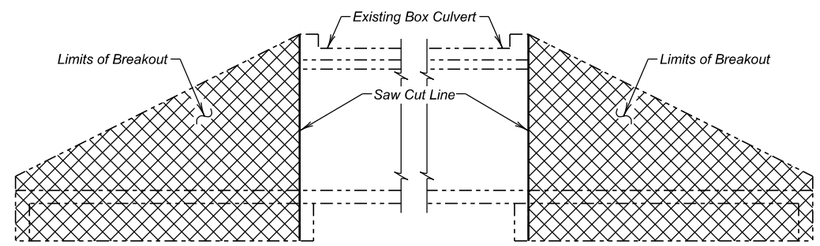

ELEVATION - BREAKOUT DETAILS

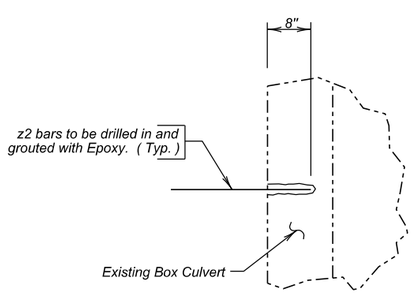

DETAIL "X"

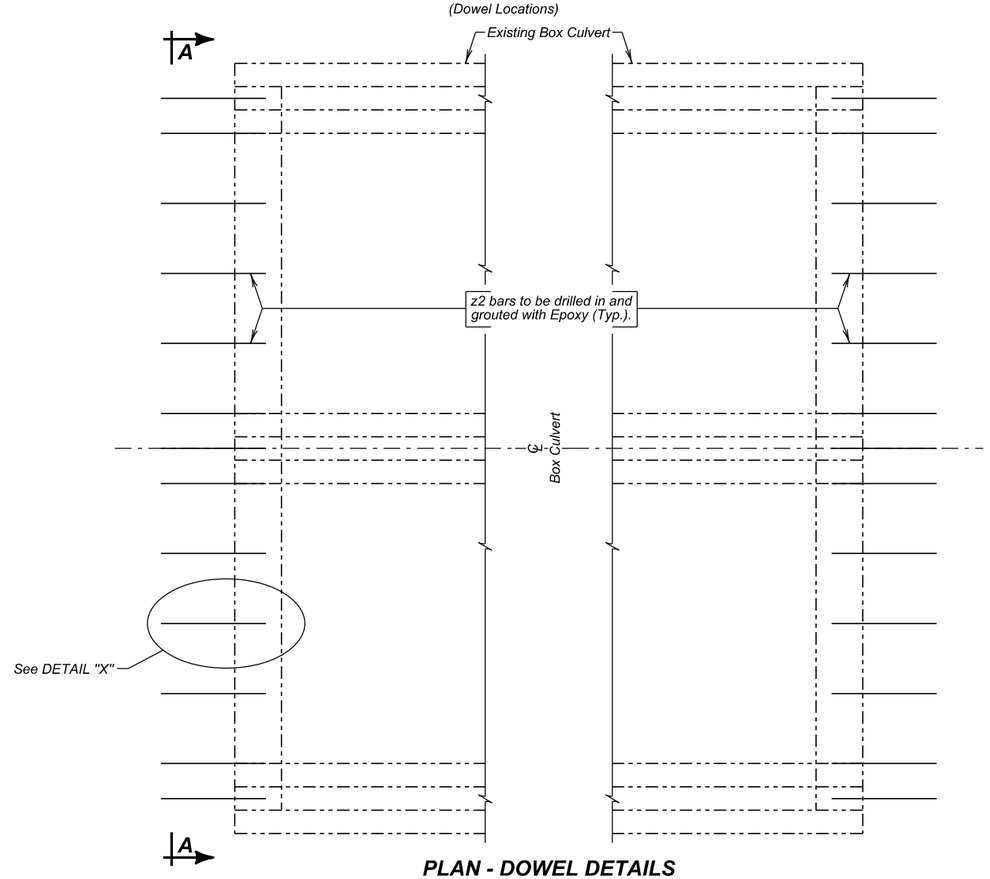

PLAN - DOWEL DETAILS
(Inlet and Outlet)

ESTIMATED QUANTITIES

ITEM	UNIT	QUANTITY
Breakout Structural Concrete	Cu. Yd.	12.3
Install Dowel In Concrete	Each	64

BREAKOUT AND DOWEL PLACEMENT DETAILS
FOR
2 - 7' X 7' BOX CULVERT EXTENSION

OVER CREEK — 0° SKEW
STA. 1174 + 51.90 (EBL) — SEC. 33-T4N-R6E
STA. 174 + 35.43 (WBL) — IM 0901(38)40
STR. NO. 47-083-539 — HS 20-44 & ALT.

MEADE COUNTY
S. D. DEPT. OF TRANSPORTATION
FEBRUARY 2014

DESIGNED BY	CK. DES. BY	DRAFTED BY	
MM/PW	JMH	MG	Steve A Johnson BRIDGE ENGINEER
MEAD5580	5580GG03		

STATE OF	PROJECT	SHEET NO.	TOTAL SHEETS
S.D.	IM 0901(38)40	E79	E199

NOTE:
Apron shall NOT be built monolithic with the Box Culvert.

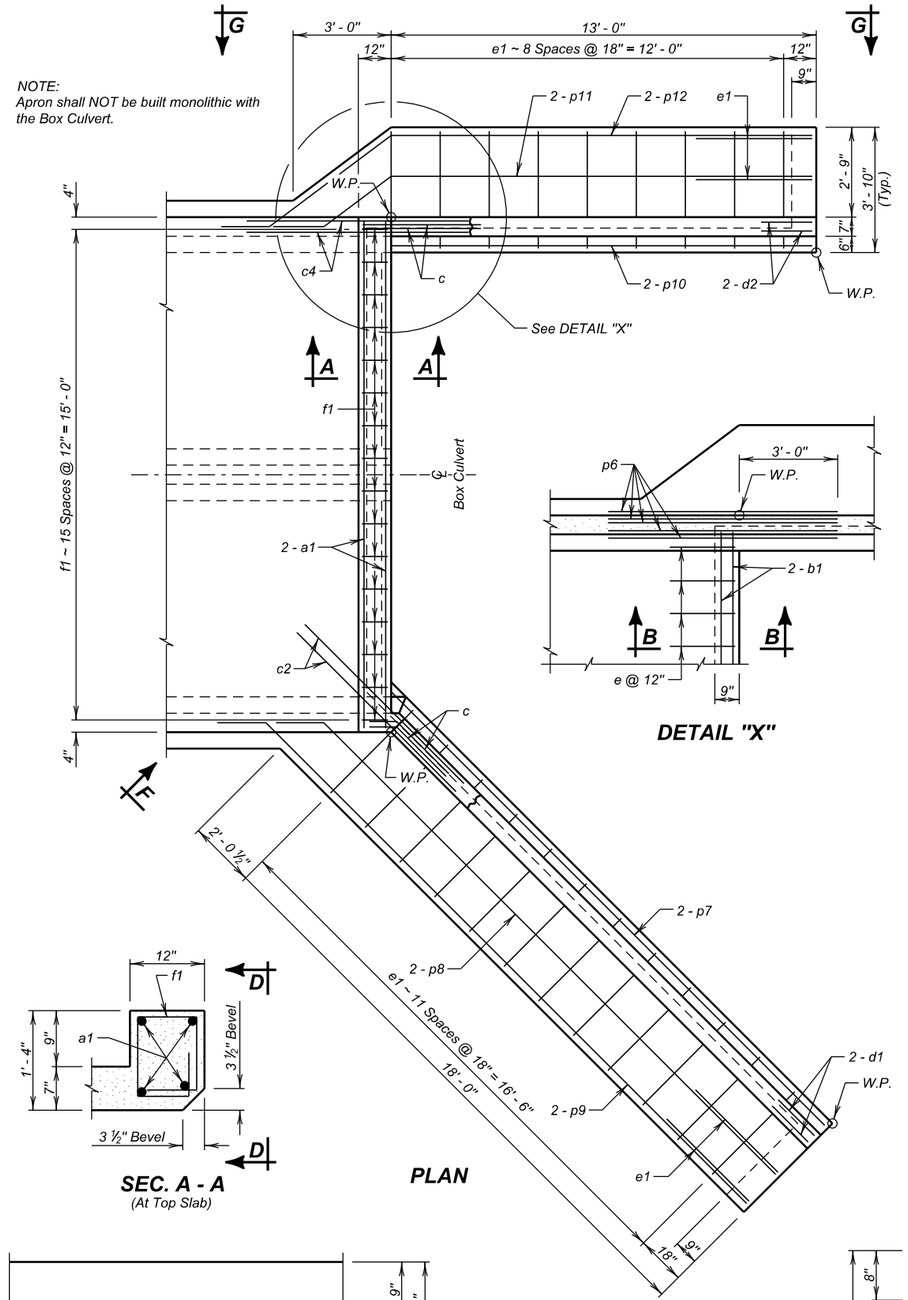

PLAN

DETAIL "X"

SEC. A - A
(At Top Slab)

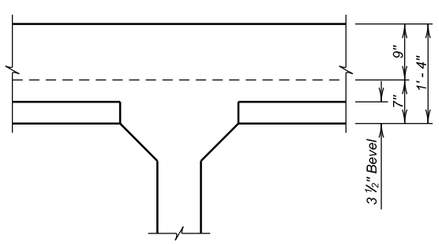

VIEW D - D
(At Middle Wall)

ESTIMATED QUANTITIES

ITEM	Class A45 Concrete, Box Culvert	Reinforcing Steel	Structure Excavation, Box Culvert
UNIT	Cu. Yd.	Lb.	Cu. Yd.
Inlet	12.9	1516	6.4
Inlet Apron	6.7	523	6.7

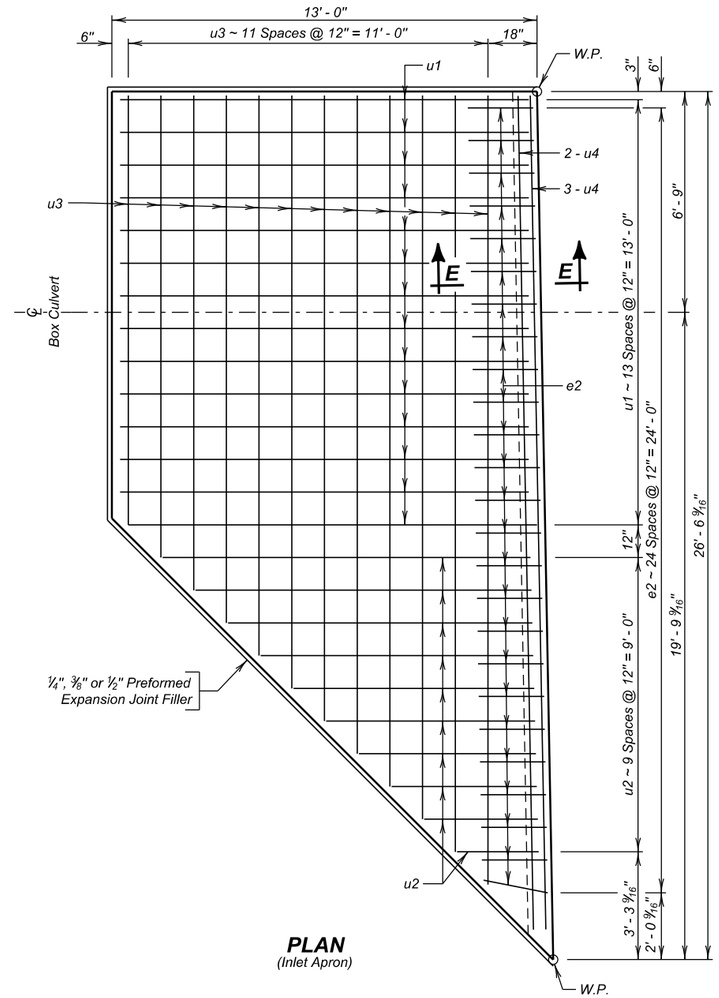

PLAN
(Inlet Apron)

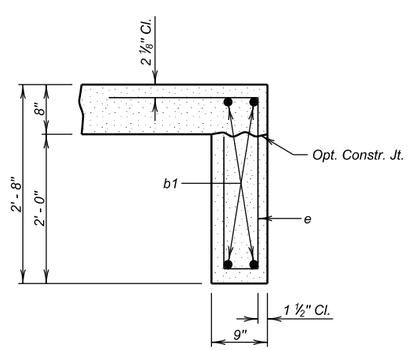

SEC. B - B

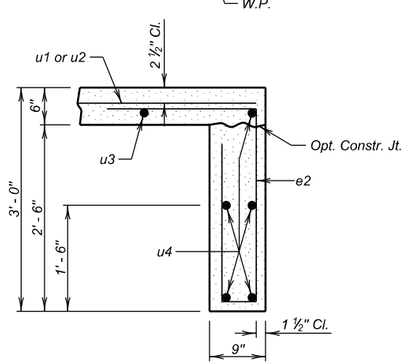

SEC. E - E

REINFORCING SCHEDULE

Mk.	No.	Size	Length	Type
a1	4	6	15' - 6"	Str.
b1	4	6	14' - 0"	Str.
✳ c	4	5	4' - 6"	1A
c1	4	5	19' - 0"	Str.
c2	2	5	7' - 0"	19B
c3	4	5	14' - 6"	Str.
c4	2	5	7' - 0"	19B
d1	4	5	5' - 6"	19B
d2	4	5	5' - 6"	19B
e	14	4	7' - 0"	S12
e1	25	4	8' - 9"	S12A
f1	16	4	5' - 0"	S6A
g0	6	5	5' - 0"	19B
⌀ g1	5	4	22' - 9"	19B
g2	2	4	19' - 9"	19B
g3	6	5	5' - 0"	Str.
⌀ g4	5	4	17' - 3"	Str.
g5	2	4	14' - 9"	Str.
⌀ h	6	4	17' - 6"	17A
⌀ h0	4	4	18' - 0"	17A
⌀ k	10	4	13' - 0"	17A
⌀ k0	7	4	13' - 3"	17A
p6	10	4	7' - 0"	Str.
✳ p7	5	4	20' - 6"	Str.
✳ p8	2	4	21' - 0"	Str.
✳ p9	2	4	22' - 3"	Str.
✳ p10	5	4	15' - 6"	Str.
✳ p11	2	4	17' - 0"	Str.
✳ p12	2	4	19' - 0"	Str.
INLET APRON				
e2	25	4	7' - 6"	S12
u1	14	4	12' - 6"	Str.
⌀ u2	5	4	13' - 9"	Str.
⌀ u3	6	4	37' - 3"	Str.
u4	5	4	25' - 6"	Str.

Bending Details

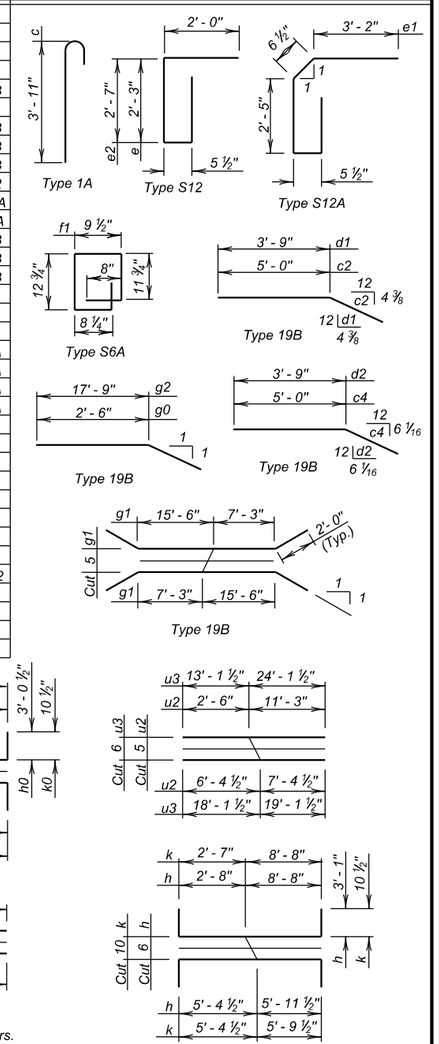

NOTES:
All dimensions are out to out of bars.
⌀ See cutting diagram.
✳ Bend in field as necessary to fit.

INLET DETAILS (A)

FOR

2 - 7' X 7' BOX CULVERT EXTENSION

OVER CREEK
STA. 1174 + 51.90 (EBL)
STA. 174 + 35.43 (WBL)
STR. NO. 47-083-539

0° SKEW
SEC. 33-T4N-R6E
IM 0901(38)40
HS 20-44
& ALT.

MEADE COUNTY
S. D. DEPT. OF TRANSPORTATION
FEBRUARY 2014

4 OF 8

DESIGNED BY	CK. DES. BY	DRAFTED BY	
MM/PW	JMH	MG	Steve A Johnson BRIDGE ENGINEER
MEAD5580	5580GG04		

STATE OF	PROJECT	SHEET NO.	TOTAL SHEETS
S.D.	IM 0901(38)40	E80	E199

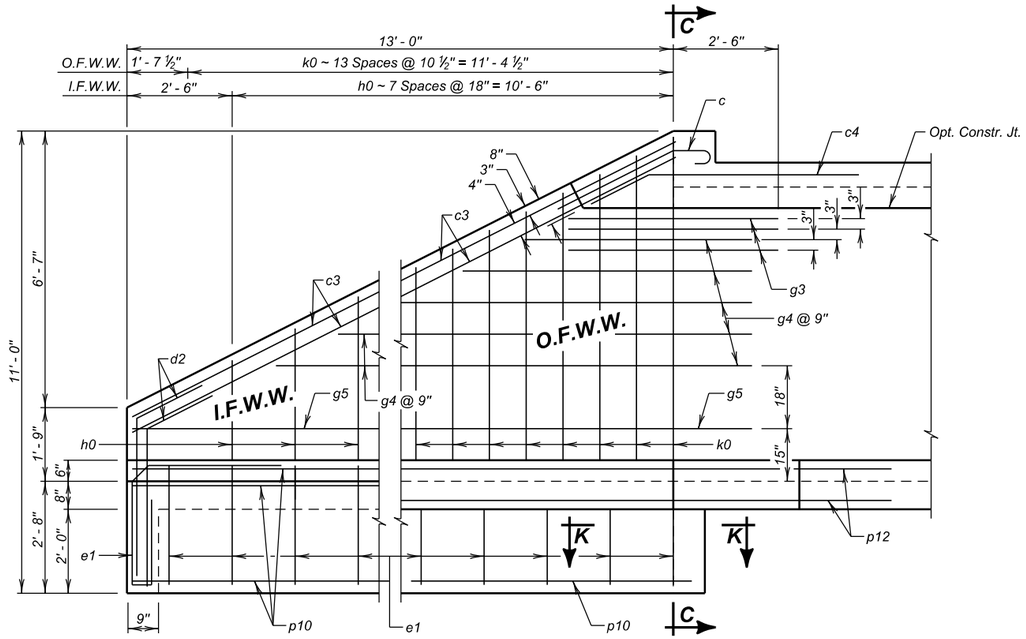

VIEW G - G

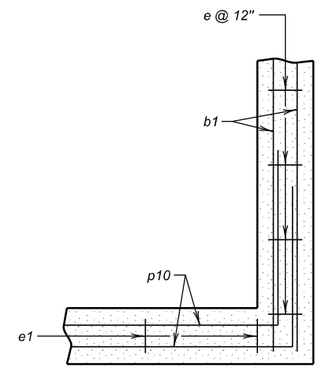

SEC. K - K

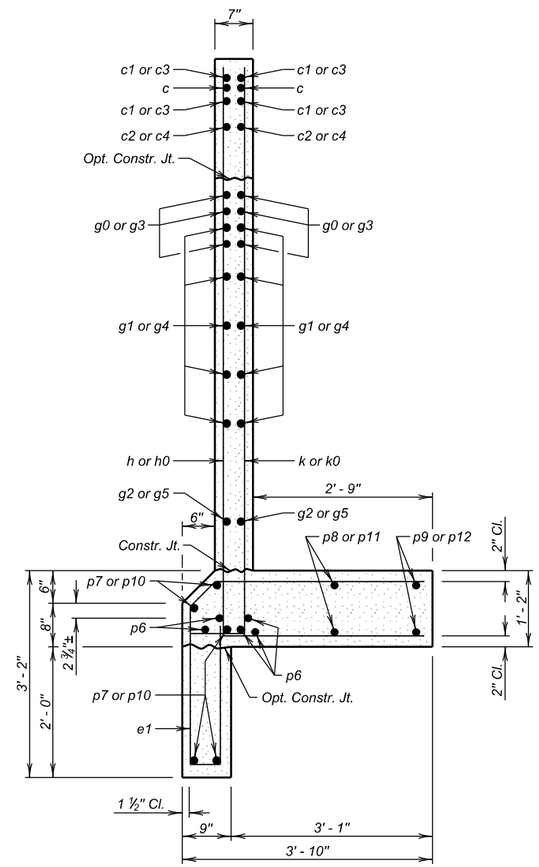

SEC. C - C

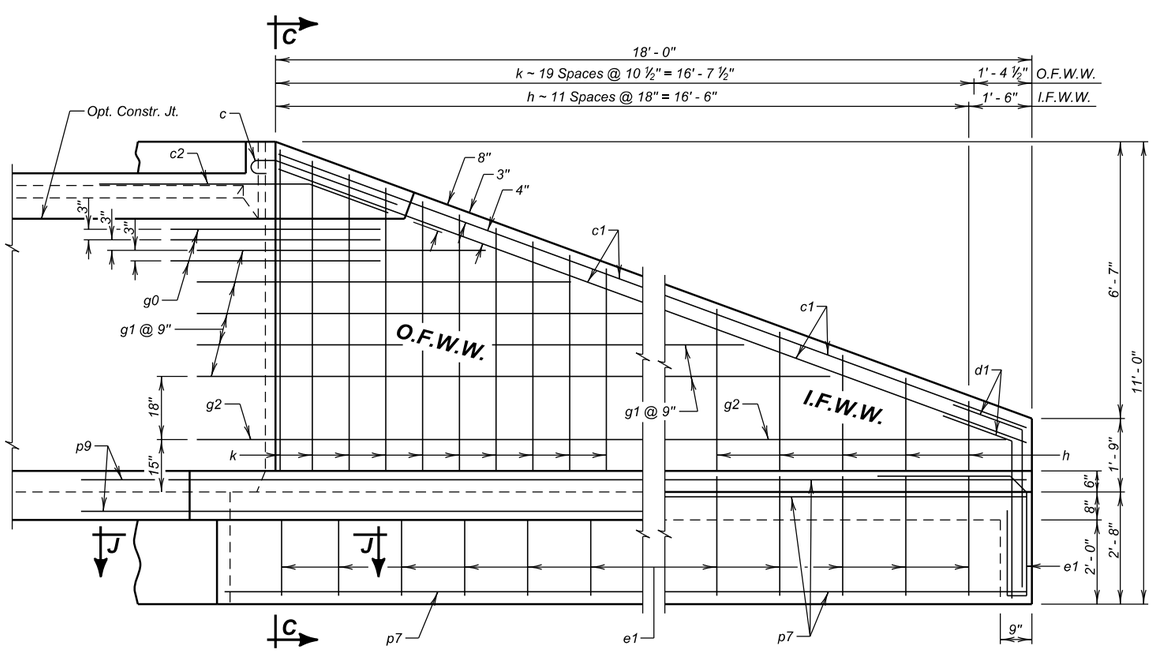

VIEW F - F

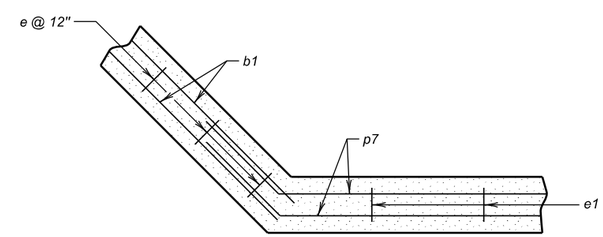

SEC. J - J

LEGEND FOR PLACING RE-STEEL

O. F. W. W. - Outside Face of Wing Wall
I. F. W. W. - Inside Face of Wing Wall

INLET DETAILS (B)

FOR

2 - 7' X 7' BOX CULVERT EXTENSION

OVER CREEK — 0° SKEW
STA. 174 + 51.90 (EBL) — SEC. 33-T4N-R6E
STA. 174 + 35.43 (WBL) — IM 0901(38)40
STR. NO. 47-083-539 — HS 20-44 & ALT.

MEADE COUNTY

S. D. DEPT. OF TRANSPORTATION

FEBRUARY 2014

5 OF 8

DESIGNED BY	CK. DES. BY	DRAFTED BY	
MM/PW	JMH	MG	Steve A. Johnson BRIDGE ENGINEER
MEAD5580	5580GG05		

STATE OF	PROJECT	SHEET NO.	TOTAL SHEETS
S.D.	IM 0901(38)40	E81	E199

NOTE:
Apron shall NOT be built monolithic with the Box Culvert.

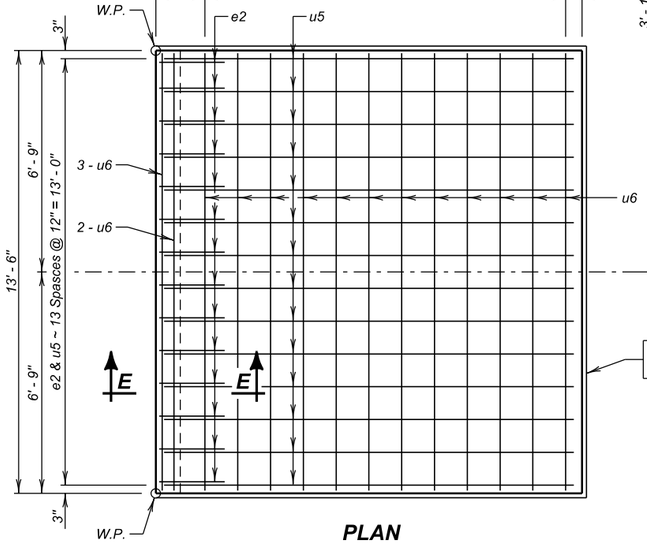

PLAN
(Outlet Apron)

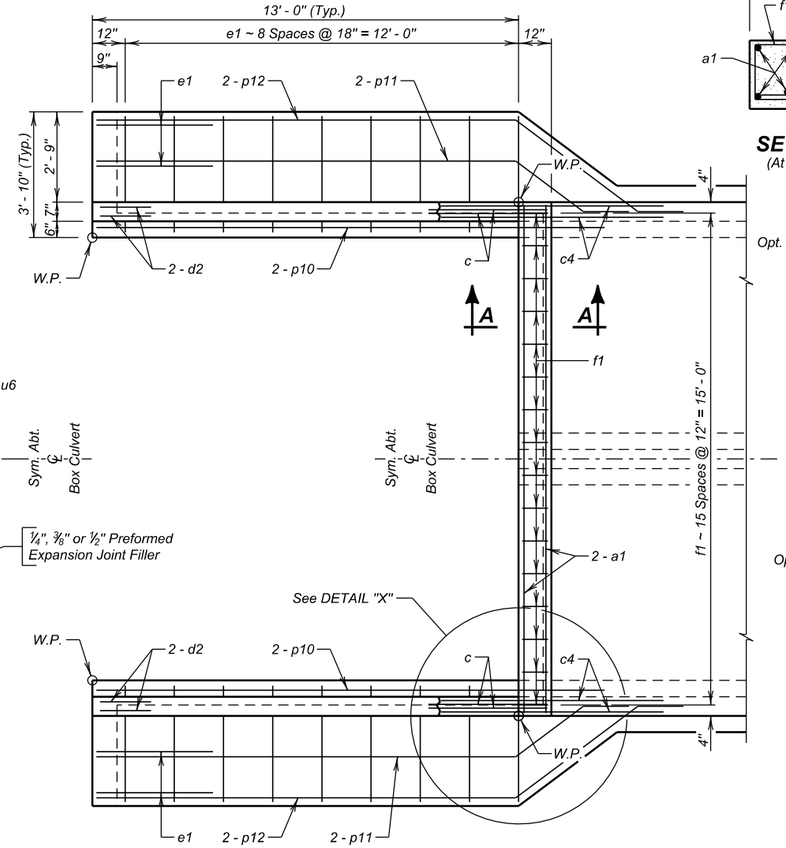

PLAN

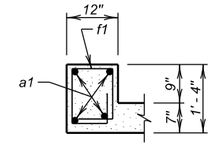

SEC. A - A
(At Top Slab)

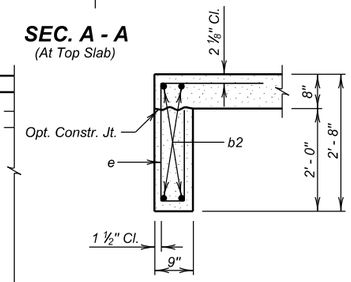

SEC. B - B

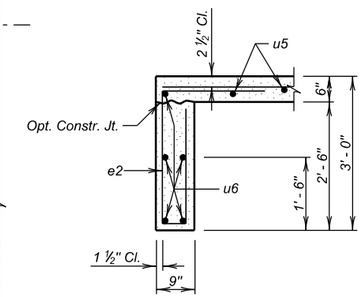

SEC. E - E

REINFORCING SCHEDULE

	Mk.	No.	Size	Length	Type
	a1	4	6	15' - 6"	Str.
	b2	4	6	14' - 9"	Str.
✳	c	4	5	4' - 6"	1A
	c3	8	5	14' - 6"	Str.
	c4	4	5	7' - 0"	19B
	d2	8	5	5' - 6"	19B
	e	15	4	7' - 0"	S12
	e1	22	4	8' - 9"	S12A
	f1	16	4	5' - 0"	S6A
	g3	12	5	5' - 0"	Str.
⌀	g4	10	4	17' - 3"	Str.
	g5	4	4	14' - 9"	Str.
⌀	h0	8	4	18' - 0"	17A
⌀	k0	14	4	13' - 3"	17A
	p6	10	6	7' - 0"	Str.
✳	p10	10	4	15' - 6"	Str.
✳	p11	4	4	17' - 0"	Str.
✳	p12	4	4	19' - 0"	Str.
	OUTLET APRON				
	e2	14	4	7' - 6"	S12
	u5	14	4	12' - 6"	Str.
	u6	17	4	13' - 0"	Str.

Bending Details

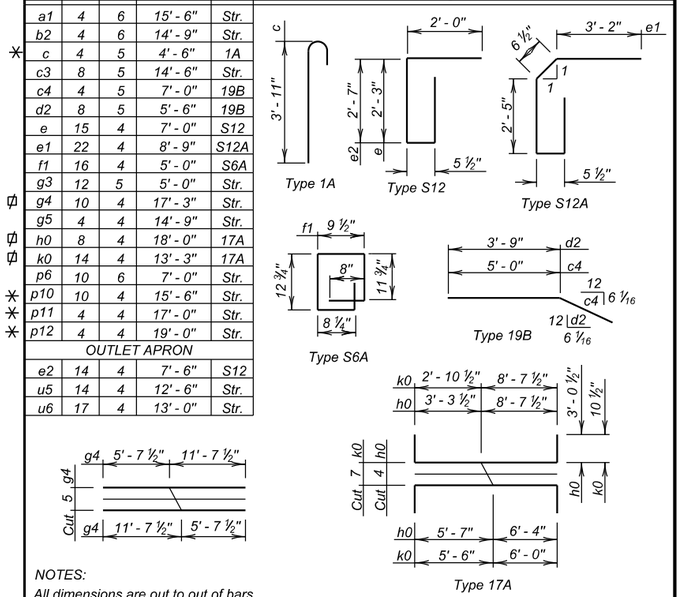

NOTES:
All dimensions are out to out of bars.
⌀ See cutting diagram.
✳ Bend in field as necessary to fit.

ESTIMATED QUANTITIES

ITEM	Class A45 Concrete, Box Culvert	Reinforcing Steel	Structure Excavation, Box Culvert
UNIT	Cu. Yd.	Lb.	Cu. Yd.
Outlet	11.3	1392	5.6
Outlet Apron	4.2	335	4.2

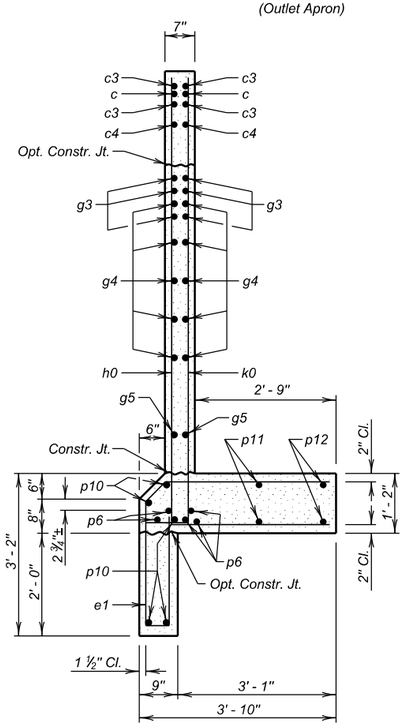

SEC. C - C

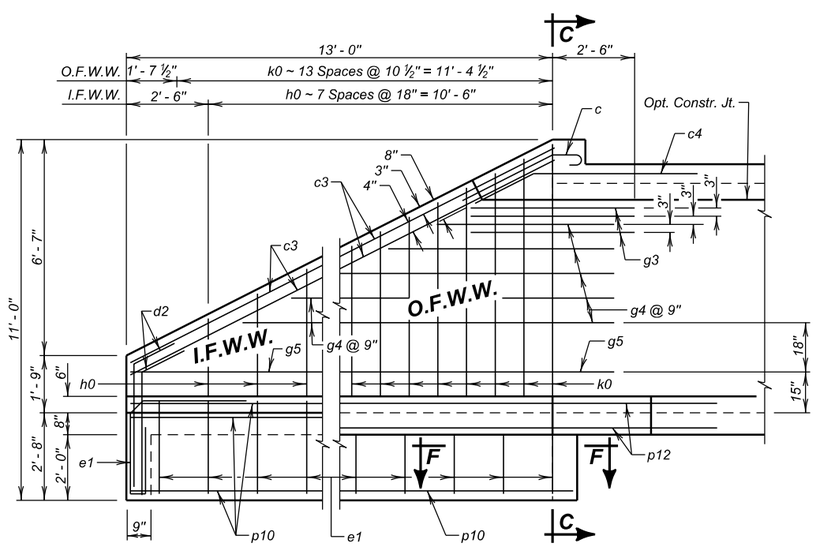

ELEVATION

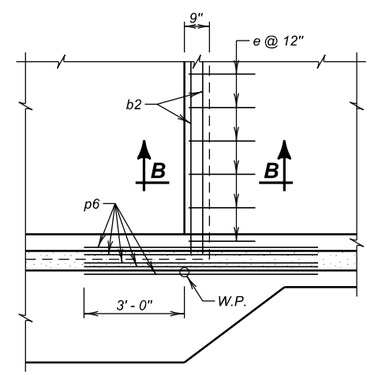

DETAIL "X"
(At Bottom Slab)

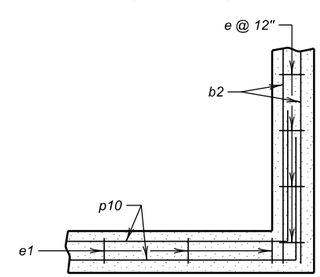

SEC. F - F

LEGEND FOR PLACING RE-STEEL

O. F. W. W. - Outside Face of Wing Wall
I. F. W. W. - Inside Face of Wing Wall

OUTLET DETAILS
FOR
2 - 7' X 7' BOX CULVERT EXTENSION

OVER CREEK — 0° SKEW
STA. 1174 + 51.90 (EBL) — SEC. 33-T4N-R6E
STA. 174 + 35.43 (WBL) — IM 0901(38)40
STR. NO. 47-083-539 — HS 20-44 & ALT.

MEADE COUNTY
S. D. DEPT. OF TRANSPORTATION
FEBRUARY 2014

DESIGNED BY	CK. DES. BY	DRAFTED BY	
MM/PW	JMH	MG	Steve A Johnson BRIDGE ENGINEER
MEAD5580	5580GG06		

STATE OF	PROJECT	SHEET NO.	TOTAL SHEETS
S.D.	IM 0901(38)40	E82	E199

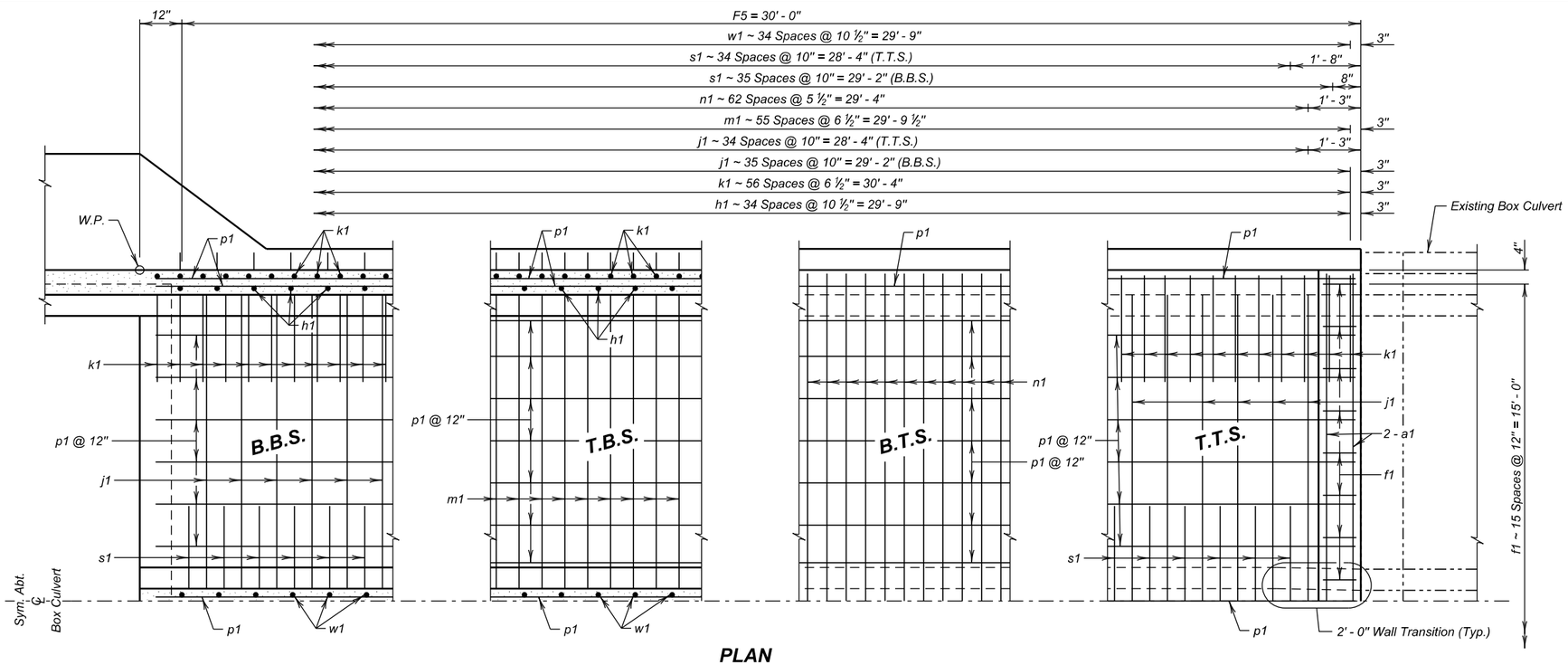

PLAN

(Outlet shown, Inlet similar by rotation)

REINFORCING SCHEDULE

For One F5 Barrel End Section @ 30' - 0" (2 Required)

Mk.	No.	Size	Length	Type
a1	4	6	15' - 6"	Str.
f1	16	4	5' - 0"	S6A
h1	70	4	8' - 9"	17A
j1	71	5	14' - 6"	Str.
k1	114	4	13' - 0"	17
m1	56	5	16' - 6"	Str.
n1	63	5	15' - 6"	Str.
p1	87	4	30' - 6"	Str.
s1	71	5	4' - 6"	Str.
w1	35	4	18' - 3"	S11A
z2	24	6	2' - 3"	Str.

Bending Details

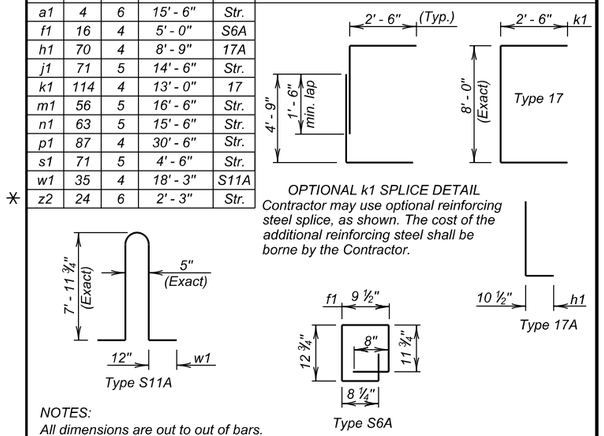

NOTES:

All dimensions are out to out of bars.

Request for additional reinforcing steel splices at points other than those shown, must be submitted to the Engineer for prior approval. If additional splices are approved, no payment will be allowed for the added quantity of reinforcing steel.

✳ Quantity of z2 bars is not included in reinforcing steel quantity. See BREAKOUT AND DOWEL PLACEMENT DETAILS sheet.

ESTIMATED QUANTITIES

ITEM	Class A45 Concrete, Box Culvert	Reinforcing Steel	Structure Excavation, Box Culvert
UNIT	Cu.Yd.	Lb.	Cu.Yd.
1 - F5 Barrel End Section @ 30' - 0"	38.3	7134	12.4

LEGEND FOR PLACING RE- STEEL

T.T.S. - Top of Top Slab
B.T.S. - Bottom of Top Slab
T.B.S. - Top of Bottom Slab
B.B.S. - Bottom of Bottom Slab
O.F.O.W. - Outside Face of Outside Wall
I.F.O.W. - Inside Face of Outside Wall
M.W. - Middle Wall

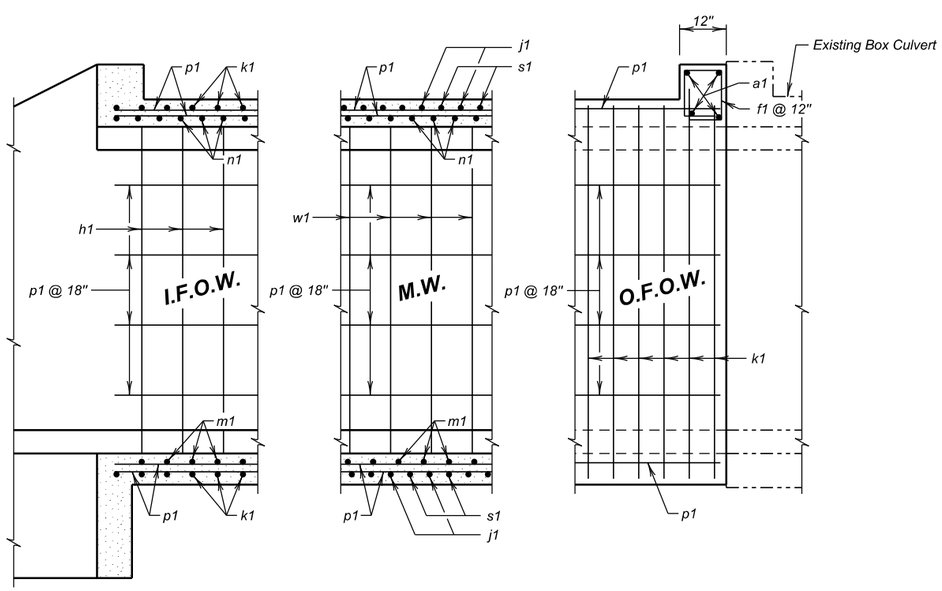

ELEVATION

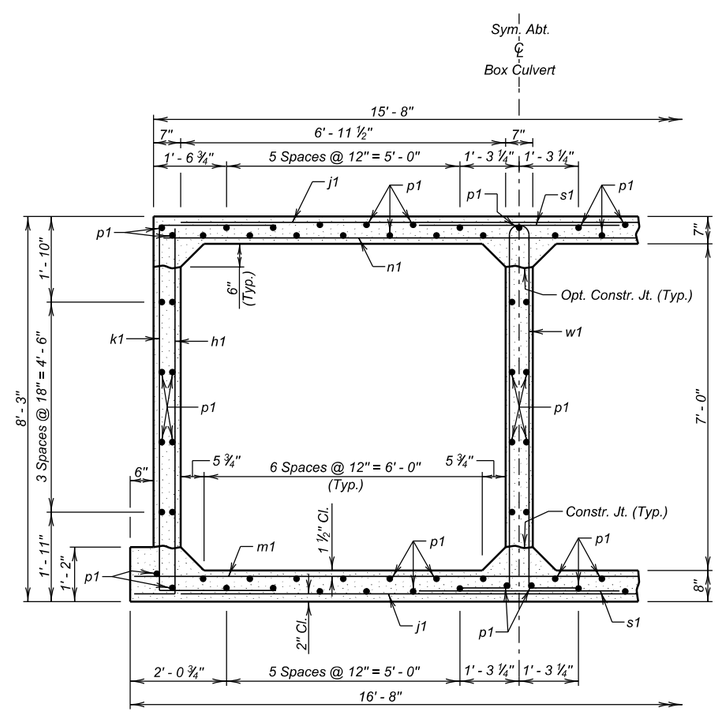

F5 BARREL HALF SECTION

(5' - 0" Maximum Fill)

F5 BARREL END SECTION DETAILS (30' - 0")

FOR

2 - 7' X 7' BOX CULVERT EXTENSION

OVER CREEK — 0° SKEW

STA. 1174 + 51.90 (EBL) — SEC. 33-T4N-R6E

STA. 174 + 35.43 (WBL) — IM 0901(38)40

STR. NO. 47-083-539 — HS 20-44 & ALT.

MEADE COUNTY

S. D. DEPT. OF TRANSPORTATION

FEBRUARY 2014

DESIGNED BY	CK. DES. BY	DRAFTED BY	
MM/PW	JMH	MG	Steve A Johnson BRIDGE ENGINEER
MEAD5580	5580GG07		

YEAR PLATE DETAILS FOR ORIGINAL CONSTRUCTION

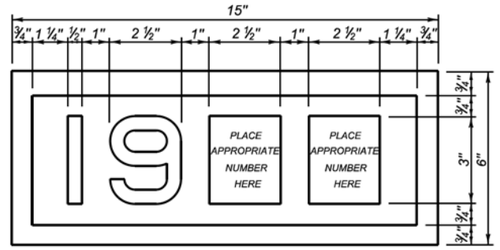

YEAR PLATE DETAILS FOR NEW CONSTRUCTION

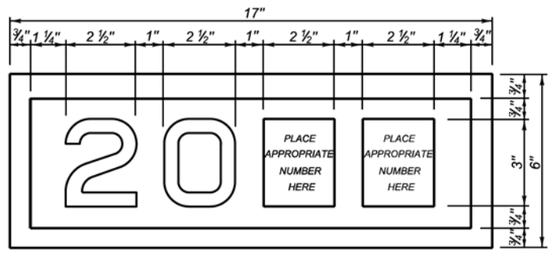

GENERAL NOTES:

1. Year plates of the general dimensions shown shall be constructed on all box culverts and bridges. The year plates shall be constructed in reverse and attached to the forms in such a manner that the finished imprint in the concrete does not exceed one-half (½) inch in depth.
2. Year plates shall be located on structure(s) as follows:
   a. On cast-in-place box culverts the year plates shall be four and one - half (4 ½) inches below the top of the upstream parapet wall and centered laterally on the upstream face. On precast box culverts the year plate shall be centered laterally on the upstream face of the top slab. Where an extended interior wall interferes with this location, the year plate shall be centered in an adjacent barrel.
   b. On bridges with six (6) inch curbs or "Jersey" shaped barriers with no endblocks, the year plate shall be centered vertically on the curb face approximately six (6) inches from the end of the bridge, or as designated by the Engineer. On bridges with "Jersey" shaped barrier endblocks, the year plate shall be centered on the upper sloped portion of the barrier approximately 5'- 6" from the end of the bridge, or as designated by the Engineer. There shall be one year plate at each end of the bridge on opposite sides.
   c. When the plans specify that both the original date of construction and the date of reconstruction are to be shown, one date shall be placed as listed above and the other located adjacent to it. Both year plates shall be shown at each end of the bridge on opposite sides.
3. There will be no separate measurement or payment made for year plates on box culverts and bridges. All costs for this work shall be incidental to other contract items.

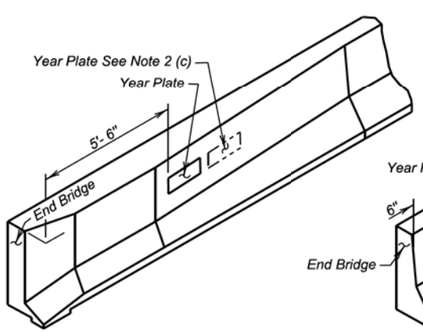

JERSEY BARRIER
(With Endblock)

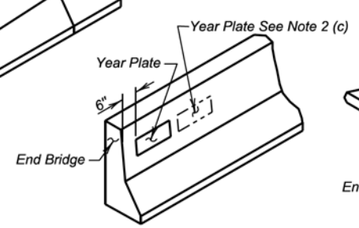

JERSEY BARRIER

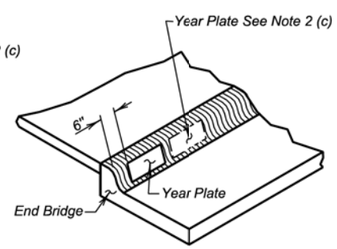

TYPE B CURB

June 26, 2012

Published Date: 3rd Qtr. 2016	SDDOT	DUAL DATE YEAR PLATE DETAILS	PLATE NUMBER 460.03
			Sheet 1 of 1

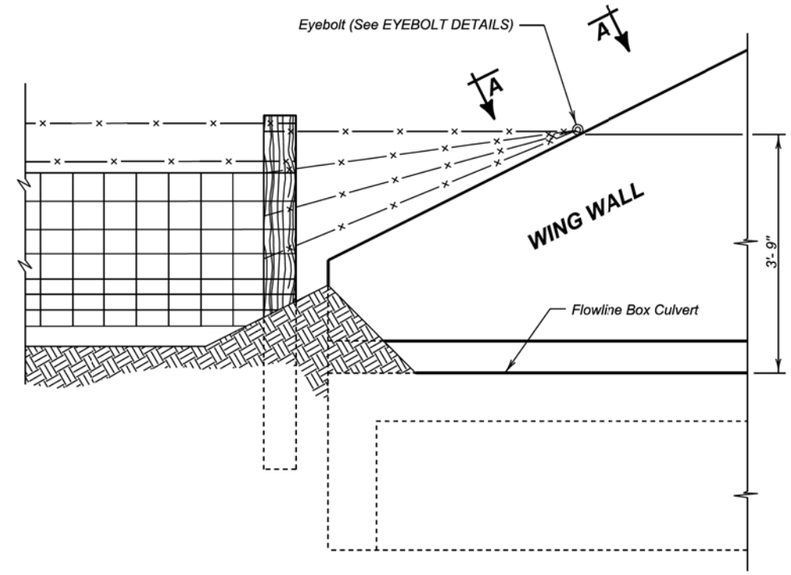

DETAIL FOR FENCE ANCHORS

GENERAL NOTES:

1. The fence and post details shown are for illustrative purpose only. The fence shall be as specified elsewhere in the plans.
2. Eyebolts shall be placed on all of the box culvert wing walls.
3. Eyebolts shall be ⅝ inch diameter and shall conform to ASTM A307.
4. Eyebolts, nuts, and concrete inserts shall be galvanized in accordance with AASHTO M232 (ASTM A153). Concrete inserts of corrosion resistant material need not be galvanized.
5. Cast-in-place eyebolts shall have a nut attached, be 4 ½ inches (Min.) in length and shall be embedded such that the eye of the bolt is flush with the concrete surface. (See Eyebolt Details) As an alternate, cast-in-place concrete inserts, capable of developing the full strength of the ⅝ inch diameter threaded eyebolt, may be used and shall be set in the concrete in accordance with the manufacturer's recommendations. The eyebolt shall be of sufficient length to develop its full strength. The eye of the eyebolt shall be flush with the concrete surface.
6. The cost for furnishing and installing eyebolts and/or concrete inserts shall be incidental to various contract items.

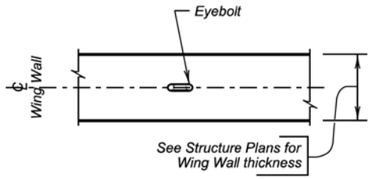

VIEW A - A

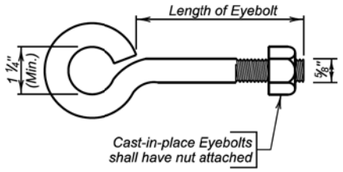

EYEBOLT DETAILS

December 23, 2012

Published Date: 3rd Qtr. 2016	SDDOT	FENCE ANCHORS FOR BOX CULVERT WING WALLS	PLATE NUMBER 620.16
			Sheet 1 of 1

The elevations shown in these plans are based on the National Geodetic Survey (NGS) North American Vertical Datum of 1988 (NAVD88).

STATE OF	PROJECT	SHEET NO.	TOTAL SHEETS
S.D.	IM 0901(38)40	E84	E199

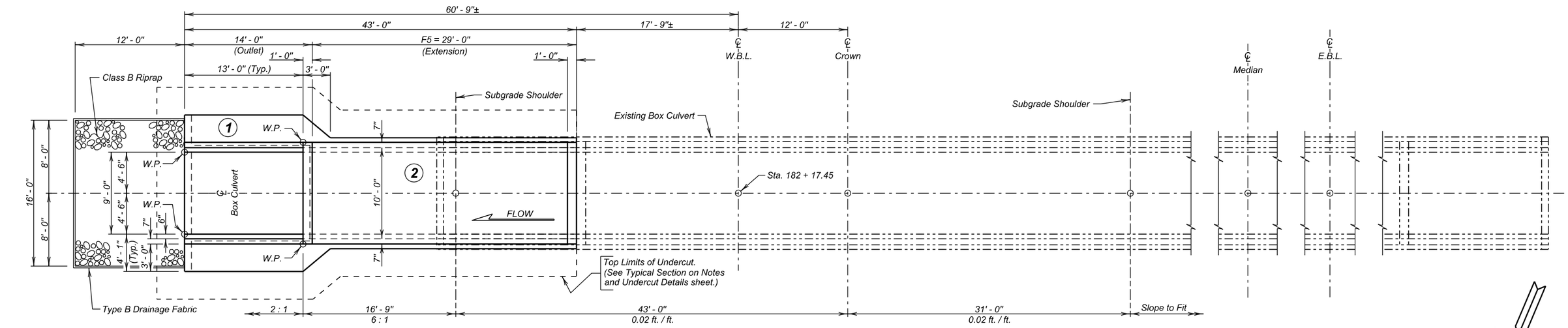

PLAN

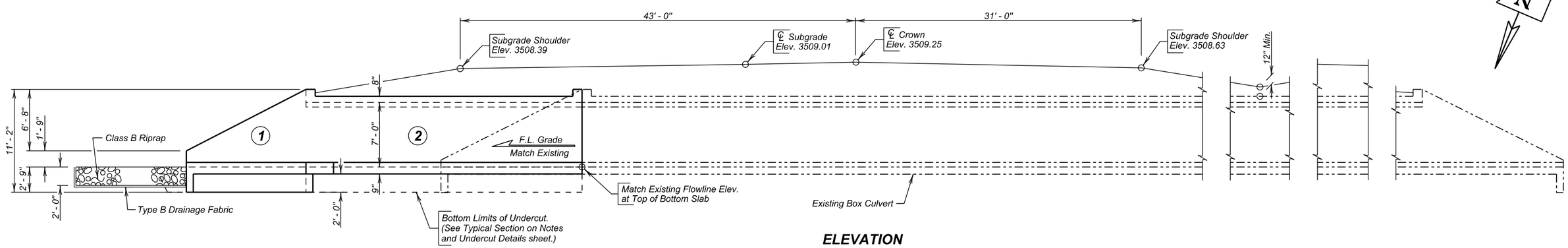

ELEVATION

N

NOTE:
All stations are based on the survey of the existing box culvert. The intent is to match the existing box culvert location, flowline and slope.

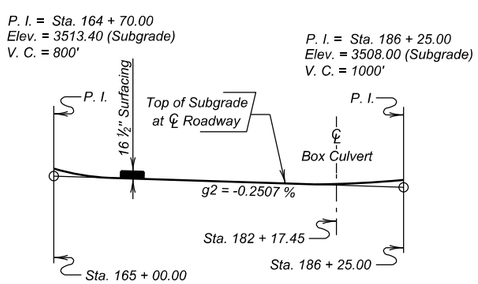

GRADELINE DATA

ESTIMATED QUANTITIES

	ITEM	UNIT	QUANTITY
	Class A45 Concrete, Box Culvert	Cu. Yd.	42.2
	Reinforcing Steel	Lb.	7384
	Structure Excavation, Box Culvert	Cu. Yd.	19.0
	Box Culvert Undercut	Cu. Yd.	65
	Breakout Structural Concrete	Cu. Yd.	10.1
	Install Dowel in Concrete	Each	24
✳	Class B Riprap	Ton	19.9
	Type B Drainage Fabric	Sq. Yd.	34

✳ For estimating purposes only, a factor of 1.4 tons/cu. yd. was used to convert Cu. Yds. to Tons.

INDEX OF CULVERT SHEETS-

Sheet No. 1 - General Drawing and Quantities
Sheet No. 2 - Notes and Undercut Details
Sheet No. 3 - Breakout and Dowel Placement Details
Sheet No. 4 - Outlet Details
Sheet No. 5 - F5 Barrel End Section Details (29' - 0")
Sheet No. 6 - Details of Standard Plate No's. 460.03 & 620.16

GENERAL DRAWING AND QUANTITIES

FOR

10' X 7' BOX CULVERT EXTENSION

OVER CREEK — 0° SKEW
STA. 182 + 17.45 (WBL) — SEC. 4-T3N-R6E
STR. NO. 47-084-541 — IM 0901(38)40
PCN 5580 — HS 20-44 & ALT.

MEADE COUNTY

S. D. DEPT. OF TRANSPORTATION

FEBRUARY 2014

1 OF 6

PLANS BY :
OFFICE OF BRIDGE DESIGN, SOUTH DAKOTA DEPARTMENT OF TRANSPORTATION

DESIGNED BY	CK. DES. BY	DRAFTED BY	
BAF/JMH	MM/PW	MG	Steve A Johnson BRIDGE ENGINEER
MEAD5580	5580GH01		

STATE OF	PROJECT	SHEET NO.	TOTAL SHEETS
S.D.	IM 0901(38)40	E85	E199

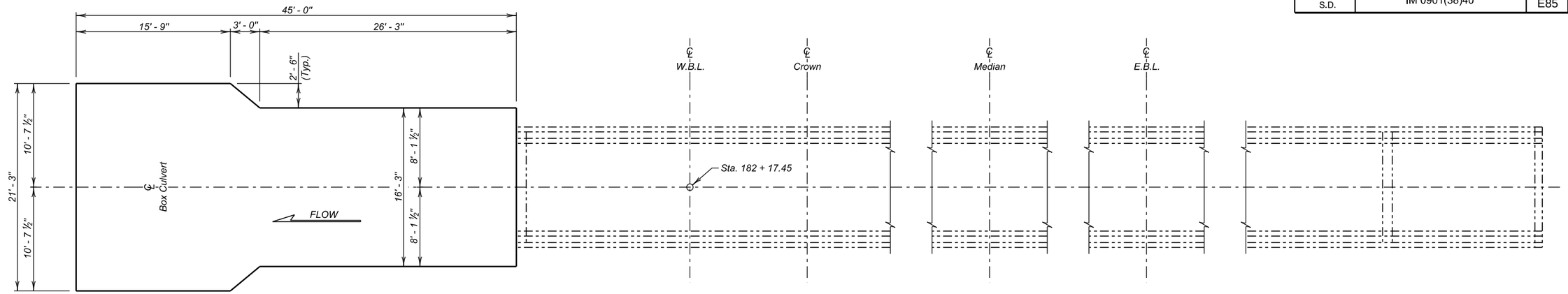

UNDERCUT LAYOUT

(Bottom Dimensions)

SPECIFICATIONS

1. Design Specifications: AASHTO Standard Specifications for Highway Bridges, 2002 Edition (Service Load).
2. Construction Specifications: South Dakota Standard Specifications for Roads and Bridges, 2015 Edition and required Provisions, Supplemental Specifications and Special Provisions as included in the Proposal.

GENERAL NOTES

1. Design Live Load: HS 20-44, Alternte Loading, and construction load consisting of one 7' - 6" gage axle with gross weight = 95,850 lbs. The construction load shall not be applied until a minimum of 4 ft. of fill has been placed over the Box Culvert. Other construction loads in excess of legal load must be submitted thru proper channels to the Office of Bridge Design for analysis.
2. The design of the barrel section on a minimum fill height of 1 foot and includes all subsequent fill heights up to and including the maximum fill height of 5 ft. (F5).
3. Unit Stresses: Concrete fc = 1800 p.s.i.
   Reinforcing Steel fs = 24000 p.s.i.
4. All concrete shall be Class A45 conforming to Section 460.
5. All reinforcing steel shall conform to ASTM A615 Grade 60.
6. All exposed edges shall be chamfered ¾ inch.
7. Use 1 inch clear cover on all reinforcing steel EXCEPT as shown.
8. The Contractor shall imprint on the structure the date of the existing box culvert construction as well as the date of new construction as specified and detailed on Standard Plate No. 460.03.
9. Care shall be taken to establish Working Points (W.P.) as shown on the wings.
10. Circled numbers in PLAN and ELEVATION views on the General Drawing are section I.D. Numbers (see SDDOT Materials Manual).
11. Cost of Preformed Expansion Joint Filler used in apron construction shall be incidental to the other contract items.
12. Compaction of earth embankment and box culvert backfill material shall be governed by the Specified Density method.
13. The subsurface soils throughout the project consist of clay-silt to gravelly clay-silt to gravel and cobbles.
14. It is anticipated that dewatering will be required to construct the box culvert extension. The Contractor will be responsible to verify groundwater location prior to construction and provide necessary means of dewatering the construction site and prevention of the inflow of additional water. The use of well points may be required in dewatering the site for construction.

DIMENSIONS OF EXISTING BOX CULVERT

All details and dimensions of the Existing Box Culvert, contained in these plans, are provided as information only. It is the Contractor's responsibility to inspect and verify actual field conditions and any necessary dimensions affecting the satisfactory completion of the work required for this project. Original construction plans can be obtained from the Office of Bridge Design.

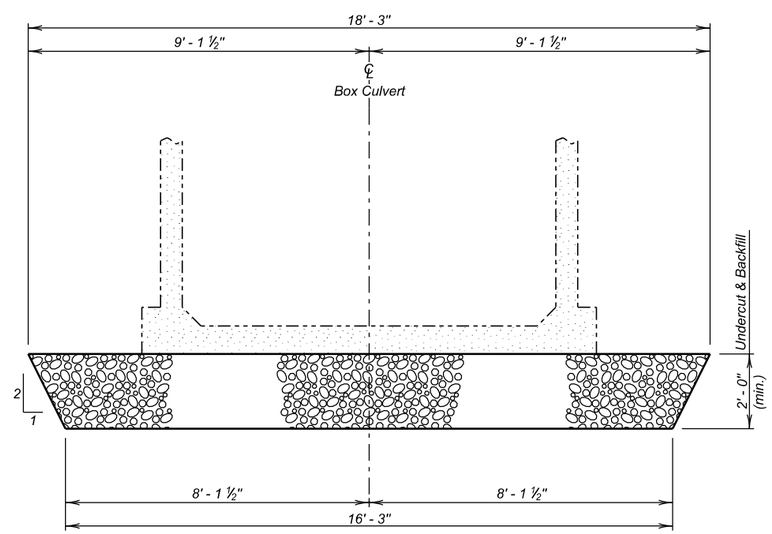

TYPICAL SECTION

(For Limits of Undercut)

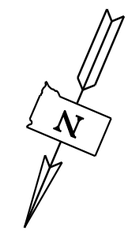

ESTIMATED QUANTITIES

ITEM	UNIT	QUANTITY
⌀ Box Culvert Undercut	Cu. Yd.	65

⌀ For payment, quantity is based on plan shown undercut dimensions and will not be measured unless the Engineer orders a change.

NOTES AND UNDERCUT DETAILS

FOR

10' X 7' BOX CULVERT EXTENSION

OVER CREEK — 0° SKEW
STA. 182 + 17.45 (WBL) — SEC. 4-T3N-R6E
STR. NO. 47-084-541 — IM 0901(38)40
HS 20-44 & ALT.

MEADE COUNTY

S. D. DEPT. OF TRANSPORTATION

FEBRUARY 2014

DESIGNED BY	CK. DES. BY	DRAFTED BY	
BAF/JMH	MM/PW	MG	Steve A Johnson BRIDGE ENGINEER
MEAD5580	5580GH02		

BREAKOUT STRUCTURAL CONCRETE

1. This work shall consist of breaking out and disposing of structural concrete. All broken out concrete and other discarded material shall be disposed of in accordance with the ENVIRONMENTAL COMMITMENT notes found in Section A.
2. Define the breakout limits with ¾ inch saw cuts.
3. Any additional breakout required due to spalling or cracking of the existing structure will be determined by the Engineer. Where additional breakout in the barrel section of the existing structure is required, care shall be taken not to damage any of the existing reinforcing steel. All steel will be left in place and thoroughly cleaned by sandblasting.
4. Additional breakout in existing walls or top slab will require shoring up of the parapet and top slab, as directed by the Engineer.
5. Plans quantity payment will be full compensation for this item regardless of the quantity actually broken out, unless measurement is ordered by the Engineer. If the Engineer orders breakout beyond the limits shown, this additional breakout will be paid for at the contract unit price per cubic yard for Breakout Structural Concrete. If additional breakout is caused by the Contractor's operations, no additional payment will be made.
6. Breakout Structural Concrete will be paid for at the contract unit price per cubic yard. This payment shall be full compensation for furnishing all materials, labor, tools and equipment necessary or incidental to breaking out the structural concrete. Payment includes, but is not limited to, excavation required to perform the required breakout, sawcutting, breaking out concrete, cleaning, and sandblasting reinforcing steel and concrete surfaces, and removing and disposing of all waste materials to satisfactorily complete the work.

INSTALLING DOWELS IN CONCRETE

1. Dowels shall be installed as per Section 380.3 C.1.
2. No loads shall be applied to the epoxy grouted dowel bars until the epoxy resin has had sufficient time to cure as specified by the epoxy resin manufacturer.
3. Embed z2 dowels 8" into existing concrete.
4. Dowel bars shall be #6 deformed bars conforming to ASTM A615 Grade 60.
5. The cost of drilling holes, epoxy resin, dowels, installation, and other incidental items shall be included in the contract unit price per each for Install Dowel in Concrete.

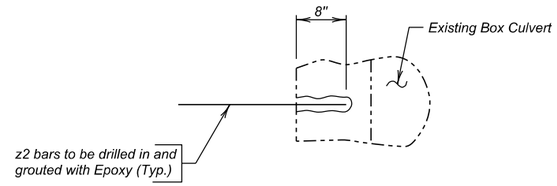

DETAIL "X"

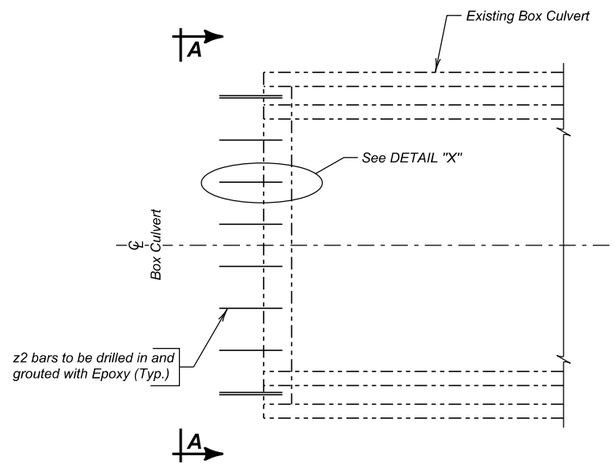

PLAN - DOWEL DETAILS

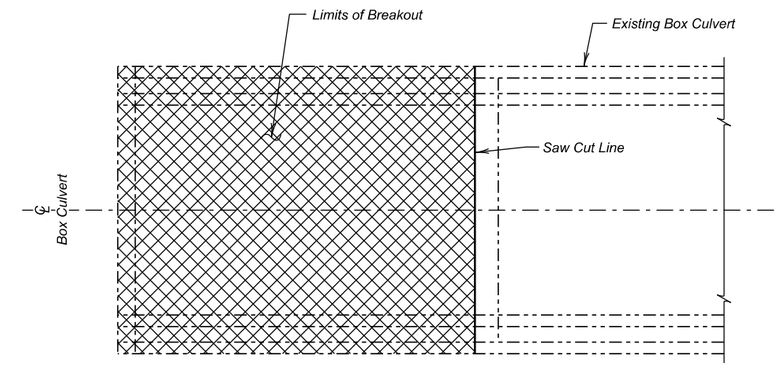

PLAN - BREAKOUT DETAILS

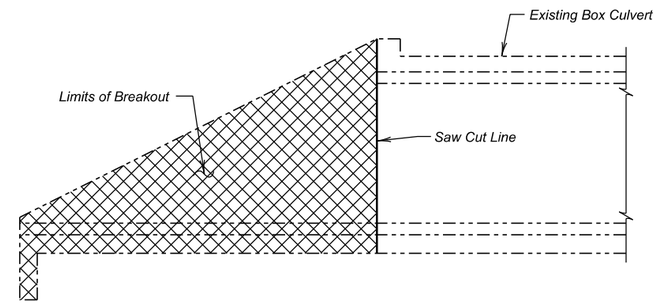

ELEVATION - BREAKOUT DETAILS

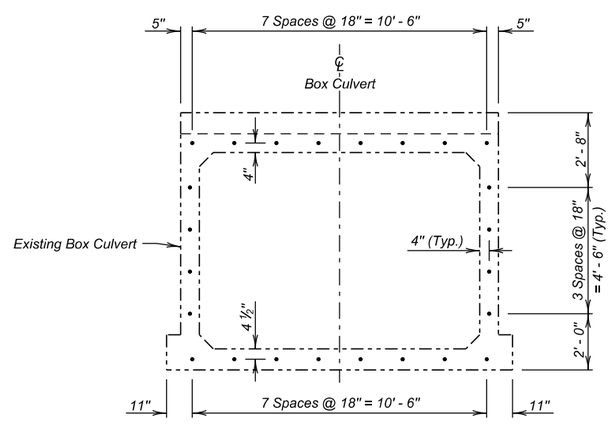

VIEW A - A
(Dowel Locations)

ESTIMATED QUANTITIES

ITEM	UNIT	QUANTITY
Breakout Structural Concrete	Cu. Yd.	10.1
Install Dowel in Concrete	Each	24

BREAKOUT AND DOWEL PLACEMENT DETAILS
FOR
10' X 7' BOX CULVERT EXTENSION

OVER CREEK — 0° SKEW
STA. 182 + 17.45 (WBL) — SEC. 4-T3N-R6E
STR. NO. 47-084-541 — IM 0901(38)40
HS 20-44 & ALT.

MEADE COUNTY
S. D. DEPT. OF TRANSPORTATION
FEBRUARY 2014

DESIGNED BY	CK. DES. BY	DRAFTED BY	
BAF/JMH	MM/PW	MG	Steve A Johnson BRIDGE ENGINEER
MEAD5580	5580GH03		

STATE OF	PROJECT	SHEET NO.	TOTAL SHEETS
S.D.	IM 0901(38)40	E87	E199

NOTE:
Apron shall NOT be built monolithic with the Box Culvert.

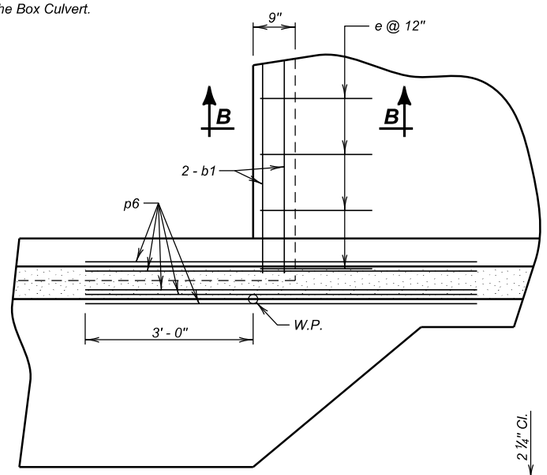

DETAIL "X"
(At Bottom Slab)

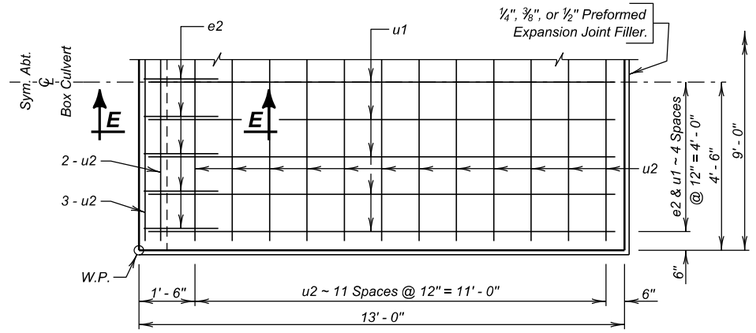

HALF PLAN
(Outlet Apron)

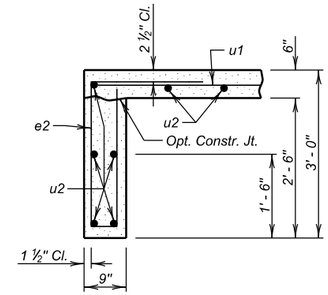

SEC. E - E

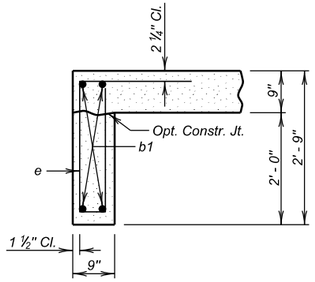

SEC. B - B

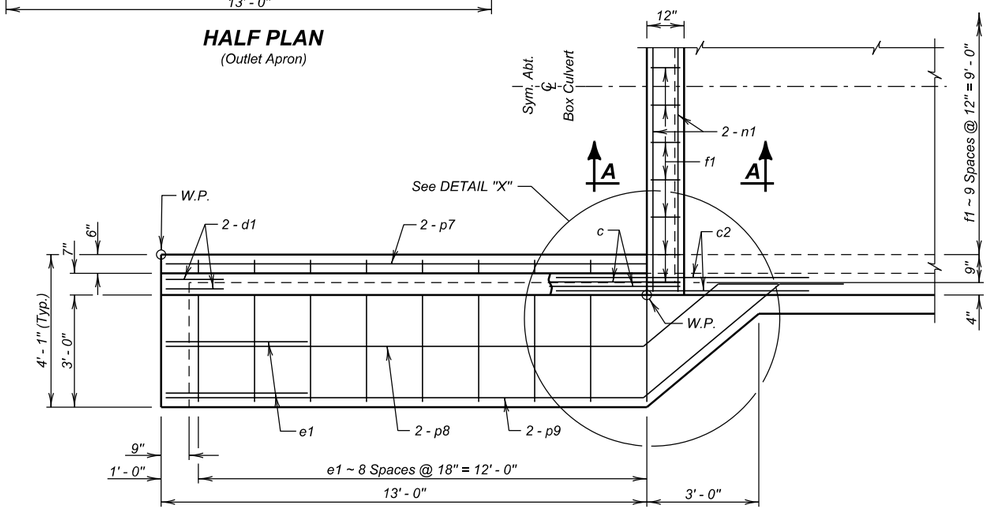

HALF PLAN

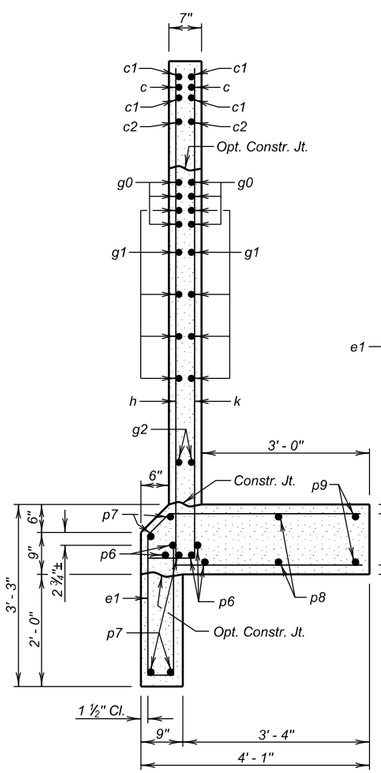

SEC. C - C

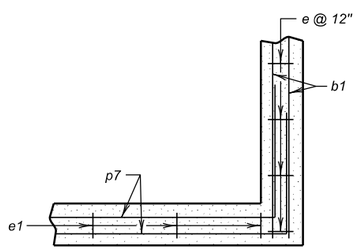

SEC. F - F

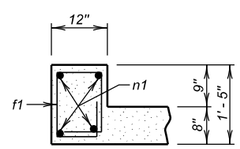

SEC. A - A
(At Top Slab)

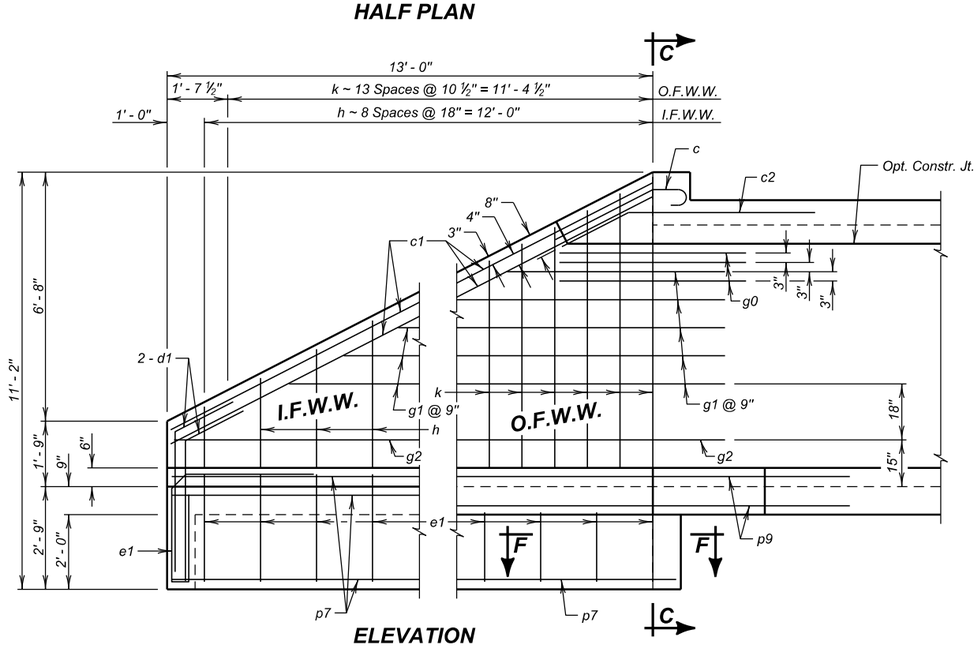

ELEVATION

REINFORCING SCHEDULE

	Mk.	No.	Size	Length	Type
	b1	4	6	10' - 3"	Str.
*	c	4	5	4' - 6"	1A
	c1	8	5	14' - 6"	Str.
	c2	4	5	7' - 0"	19B
	d1	8	5	5' - 6"	19B
	e	11	4	7' - 0"	S12
	e1	22	4	9' - 3"	S12A
	f1	12	4	5' - 0"	S6A
	g0	12	5	5' - 0"	19B
⌀	g1	10	4	17' - 6"	Str.
	g2	4	4	14' - 9"	Str.
⌀	h	9	4	18' - 0"	17A
⌀	k	14	4	13' - 6"	17A
	n1	4	6	11' - 0"	Str.
	p6	10	6	7' - 0"	Str.
*	p7	10	4	15' - 6"	Str.
*	p8	4	4	17' - 0"	Str.
*	p9	4	4	19' - 3"	Str.
	OUTLET APRON				
	e2	9	4	7' - 6"	S12
	u1	9	4	12' - 6"	Str.
	u2	17	4	8' - 6"	Str.

Bending Details

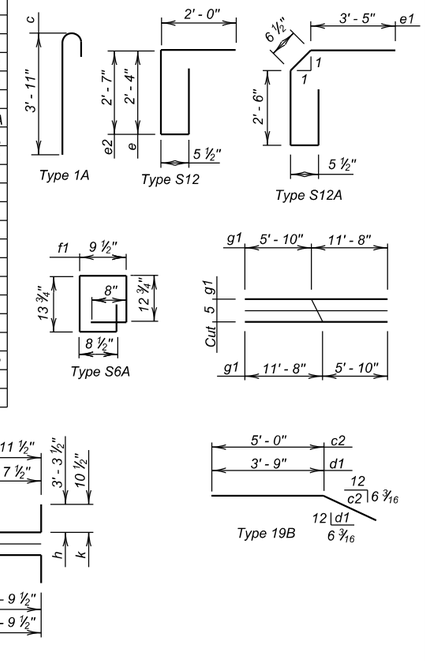

NOTES:
All dimensions are out to out of bars.
⌀ See cutting diagram.
* Bend in field as necessary to fit.

ESTIMATED QUANTITIES

ITEM	Class A45 Concrete, Box Culvert	Reinforcing Steel	Structure Excavation, Box Culvert
UNIT	Cu. Yd.	Lb.	Cu. Yd.
Outlet	11.4	1329	5.9
Outlet Apron	2.8	216	2.8

LEGEND FOR PLACING RE-STEEL

O. F. W. W. - Outside Face of Wing Wall
I. F. W. W. - Inside Face of Wing Wall

OUTLET DETAILS
FOR
10' X 7' BOX CULVERT EXTENSION

OVER CREEK
STA. 182 + 17.45 (WBL)
STR. NO. 47-084-541

0° SKEW
SEC. 4-T3N-R6E
IM 0901(38)40
HS 20-44
& ALT.

MEADE COUNTY
S. D. DEPT. OF TRANSPORTATION
FEBRUARY 2014

DESIGNED BY	CK. DES. BY	DRAFTED BY	
BAF/JMH MEAD5580	MM/PW 5580GH04	MG	Steve A Johnson BRIDGE ENGINEER

STATE OF	PROJECT	SHEET NO.	TOTAL SHEETS
S.D.	IM 0901(38)40	E88	E199

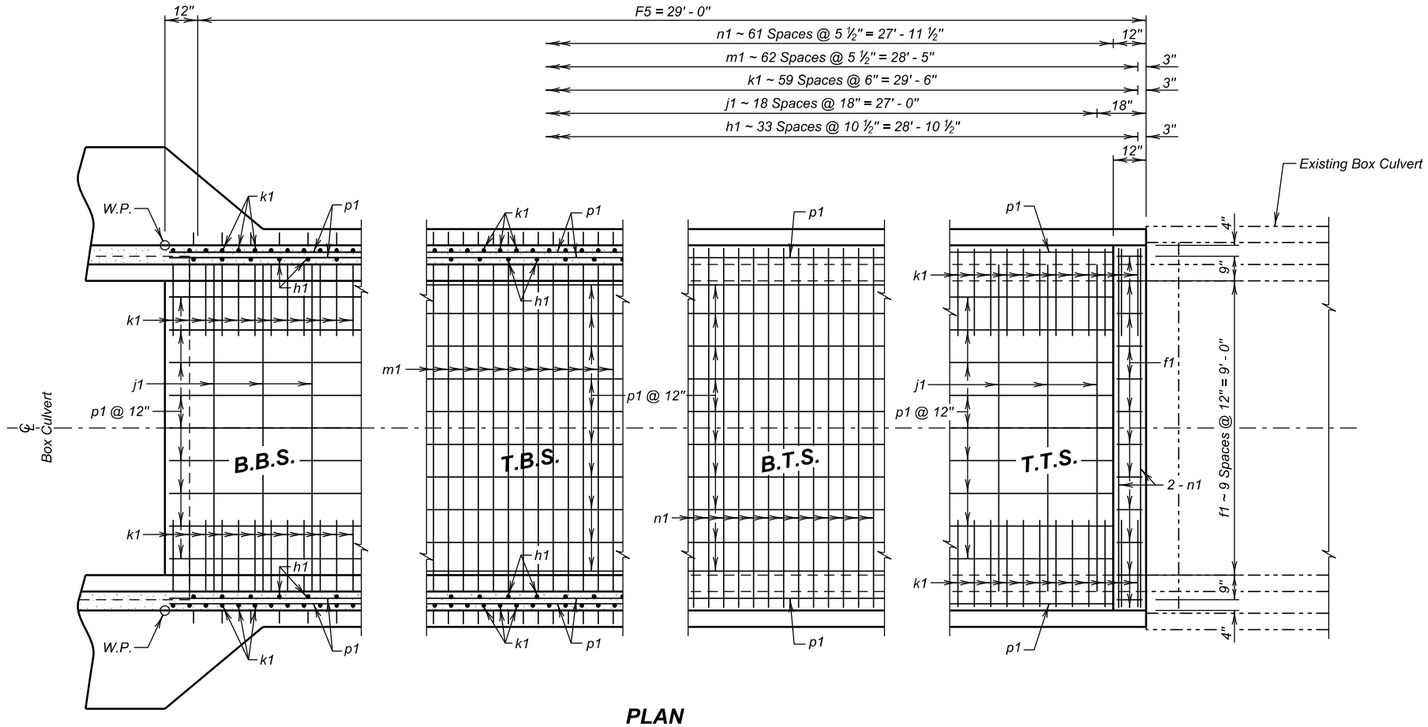

PLAN

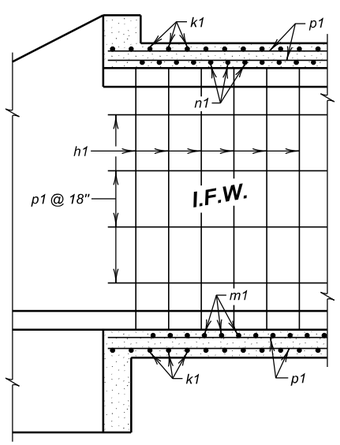

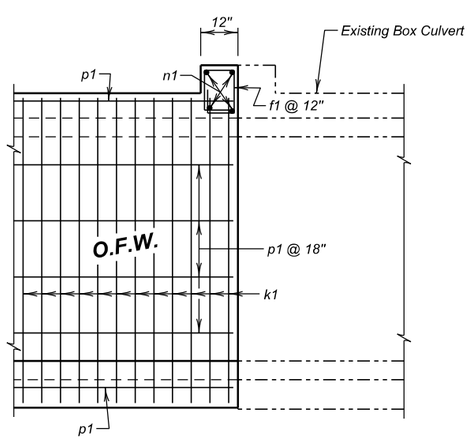

ELEVATION

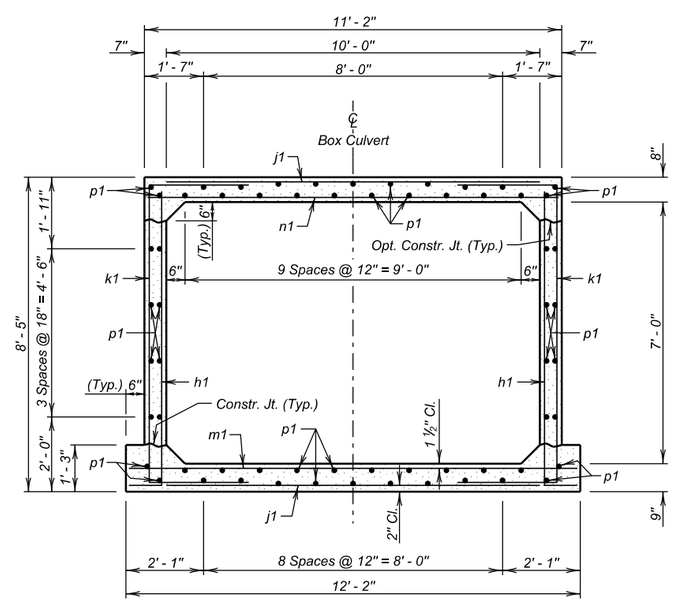

F5 BARREL SECTION

(5' - 0" Maximum Fill)

REINFORCING SCHEDULE

Mk.	No.	Size	Length	Type
f1	12	4	5' - 0"	S6A
h1	68	4	8' - 9"	17A
j1	38	4	10' - 0"	Str.
k1	120	5	13' - 6"	17
m1	63	6	12' - 0"	Str.
n1	66	6	11' - 0"	Str.
p1	62	4	29' - 9"	Str.
✳ z2	8	6	2' - 3"	Str.

Bending Details

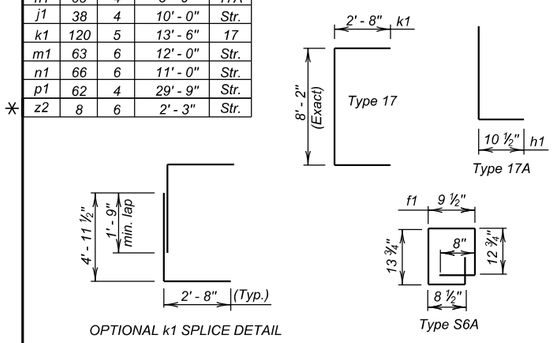

Contractor may use optional reinforcing steel splice, as shown. The cost of the additional reinforcing steel shall be borne by the Contractor.

NOTES:

All dimensions are out to out of bars.

Request for additional reinforcing steel splices at points other than those shown, must be submitted to the Engineer for prior approval. If additional splices are approved, no payment will be allowed for the added quantity of reinforcing steel.

✳ Quantity of z2 bars is not included in reinforcing steel quantity. See BREAKOUT AND DOWEL PLACEMENT DETAILS Sheet.

ESTIMATED QUANTITIES

ITEM	Class A45 Concrete, Box Culvert	Reinforcing Steel	Structure Excavation, Box Culvert
UNIT	Cu.Yd.	Lb.	Cu.Yd.
1 - F5 Barrel End Section @ 29' - 0"	28.0	5839	9.8

LEGEND FOR PLACING RE- STEEL

T. T. S.	- Top of Top Slab
B. T. S.	- Bottom of Top Slab
T. B. S.	- Top of Bottom Slab
B. B. S.	- Bottom of Bottom Slab
O. F. W.	- Outside Face of Wall
I. F. W.	- Inside Face of Wall

F5 BARREL END SECTION DETAILS (29' - 0")

FOR

10' X 7' BOX CULVERT EXTENSION

OVER CREEK — 0° SKEW

STA. 182 + 17.45 (WBL) — SEC. 4-T3N-R6E

STR. NO. 47-084-541 — IM 0901(38)40

HS 20-44 & ALT.

MEADE COUNTY

S. D. DEPT. OF TRANSPORTATION

FEBRUARY 2014

DESIGNED BY	CK. DES. BY	DRAFTED BY	
BAF/JMH	MM/PW	MG	Steve A Johnson
MEAD5580	5580GH05		BRIDGE ENGINEER

YEAR PLATE DETAILS FOR ORIGINAL CONSTRUCTION

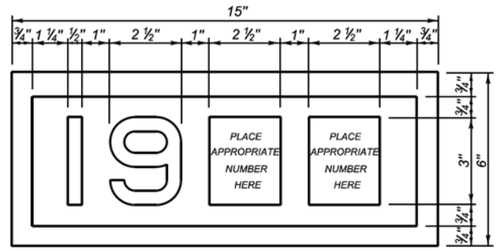

YEAR PLATE DETAILS FOR NEW CONSTRUCTION

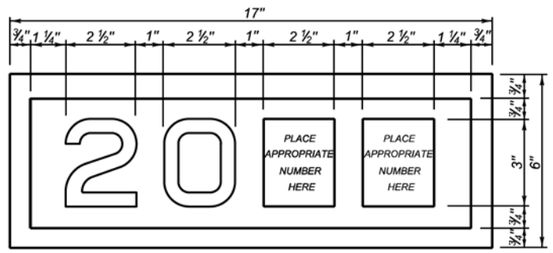

GENERAL NOTES:

1. Year plates of the general dimensions shown shall be constructed on all box culverts and bridges. The year plates shall be constructed in reverse and attached to the forms in such a manner that the finished imprint in the concrete does not exceed one-half (½) inch in depth.
2. Year plates shall be located on structure(s) as follows:
   a. On cast-in-place box culverts the year plates shall be four and one - half (4 ½) inches below the top of the upstream parapet wall and centered laterally on the upstream face. On precast box culverts the year plate shall be centered laterally on the upstream face of the top slab. Where an extended interior wall interferes with this location, the year plate shall be centered in an adjacent barrel.
   b. On bridges with six (6) inch curbs or "Jersey" shaped barriers with no endblocks, the year plate shall be centered vertically on the curb face approximately six (6) inches from the end of the bridge, or as designated by the Engineer. On bridges with "Jersey" shaped barrier endblocks, the year plate shall be centered on the upper sloped portion of the barrier approximately 5'- 6" from the end of the bridge, or as designated by the Engineer. There shall be one year plate at each end of the bridge on opposite sides.
   c. When the plans specify that both the original date of construction and the date of reconstruction are to be shown, one date shall be placed as listed above and the other located adjacent to it. Both year plates shall be shown at each end of the bridge on opposite sides.
3. There will be no separate measurement or payment made for year plates on box culverts and bridges. All costs for this work shall be incidental to other contract items.

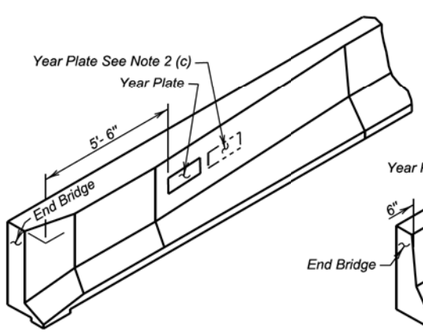

JERSEY BARRIER
(With Endblock)

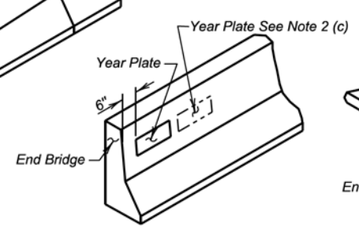

JERSEY BARRIER

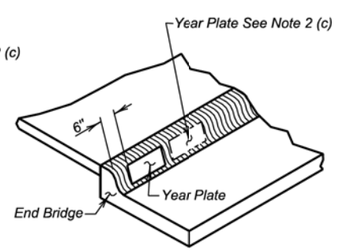

TYPE B CURB

June 26, 2012

Published Date: 3rd Qtr. 2016	SDDOT	DUAL DATE YEAR PLATE DETAILS	PLATE NUMBER 460.03
			Sheet 1 of 1

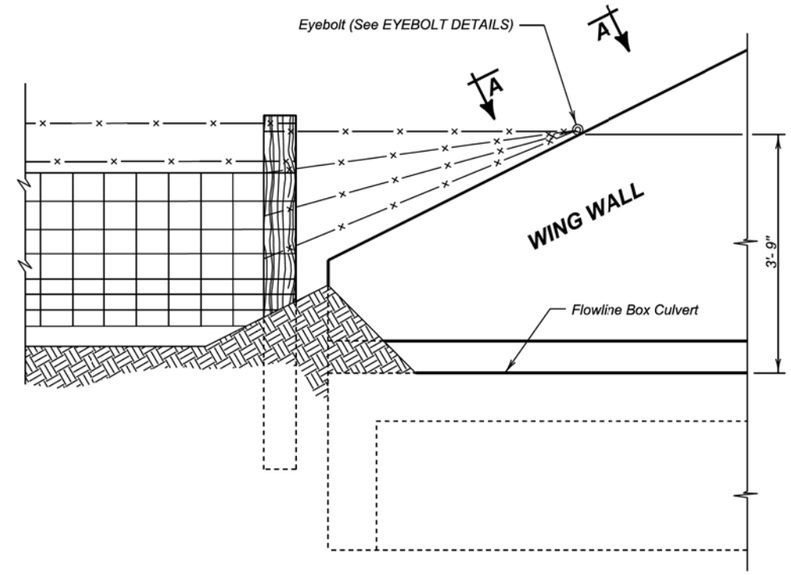

DETAIL FOR FENCE ANCHORS

GENERAL NOTES:

1. The fence and post details shown are for illustrative purpose only. The fence shall be as specified elsewhere in the plans.
2. Eyebolts shall be placed on all of the box culvert wing walls.
3. Eyebolts shall be ⅝ inch diameter and shall conform to ASTM A307.
4. Eyebolts, nuts, and concrete inserts shall be galvanized in accordance with AASHTO M232 (ASTM A153). Concrete inserts of corrosion resistant material need not be galvanized.
5. Cast-in-place eyebolts shall have a nut attached, be 4 ½ inches (Min.) in length and shall be embedded such that the eye of the bolt is flush with the concrete surface. (See Eyebolt Details) As an alternate, cast-in-place concrete inserts, capable of developing the full strength of the ⅝ inch diameter threaded eyebolt, may be used and shall be set in the concrete in accordance with the manufacturer's recommendations. The eyebolt shall be of sufficient length to develop its full strength. The eye of the eyebolt shall be flush with the concrete surface.
6. The cost for furnishing and installing eyebolts and/or concrete inserts shall be incidental to various contract items.

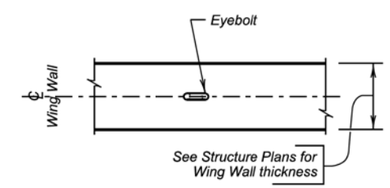

VIEW A - A

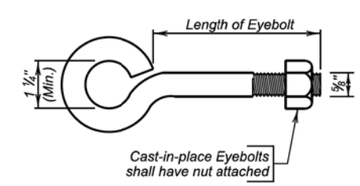

EYEBOLT DETAILS

December 23, 2012

Published Date: 3rd Qtr. 2016	SDDOT	FENCE ANCHORS FOR BOX CULVERT WING WALLS	PLATE NUMBER 620.16
			Sheet 1 of 1

The elevations shown in these plans are based on the National Geodetic Survey (NGS) North American Vertical Datum of 1988 (NAVD88).

STATE OF	PROJECT	SHEET NO.	TOTAL SHEETS
S.D.	IM 0901(38)40	E90	E199

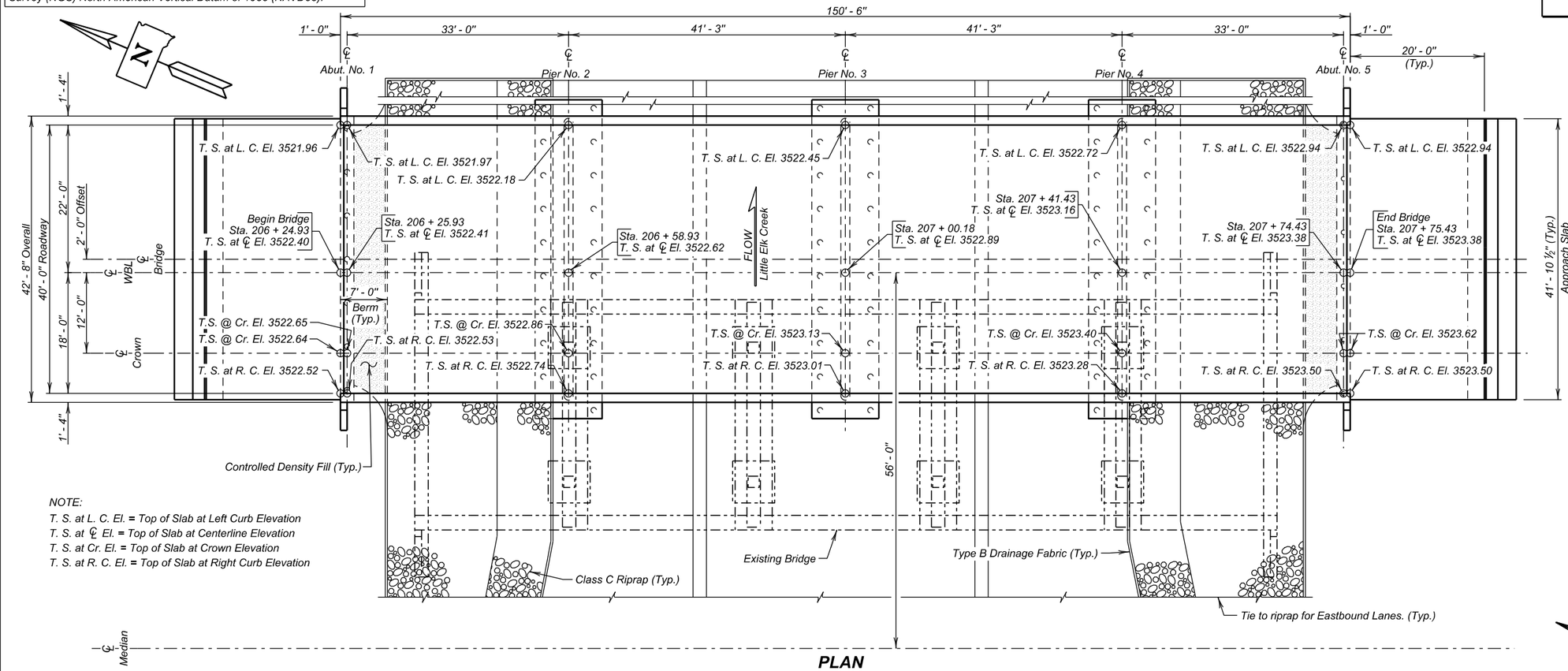

NOTE:
T. S. at L. C. El. = Top of Slab at Left Curb Elevation
T. S. at ℄ El. = Top of Slab at Centerline Elevation
T. S. at Cr. El. = Top of Slab at Crown Elevation
T. S. at R. C. El. = Top of Slab at Right Curb Elevation

PLAN

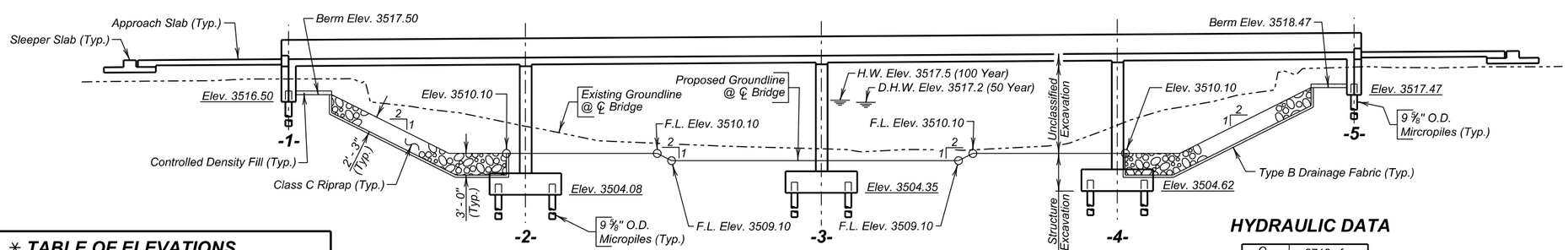

ELEVATION

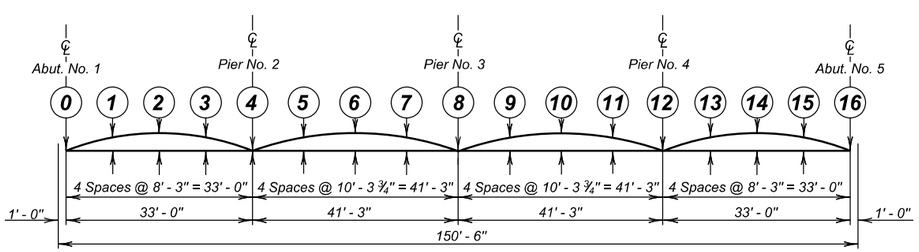

CURB AND CENTERLINE ELEVATION

(See TABLE OF ELEVATIONS for elevations)

✳ Camber for Dead Load Deflection plus Plastic Flow, shown on SUPERSTRUCTURE DETAILS, has been included in the the elevations shown.

✳ TABLE OF ELEVATIONS

Slab Point	Left Curb	℄ WBL	℄ Crown Point	Right Curb
0	3521.965	3522.405	3522.645	3522.525
1	3522.057	3522.497	3522.737	3522.617
2	3522.118	3522.558	3522.798	3522.678
3	3522.147	3522.587	3522.827	3522.707
4	3522.181	3522.621	3522.861	3522.741
5	3522.281	3522.721	3522.961	3522.841
6	3522.369	3522.809	3523.049	3522.929
7	3522.415	3522.855	3523.095	3522.975
8	3522.450	3522.890	3523.130	3523.010
9	3522.549	3522.989	3523.229	3523.109
10	3522.639	3523.079	3523.319	3523.199
11	3522.685	3523.125	3523.365	3523.245
12	3522.720	3523.160	3523.400	3523.280
13	3522.794	3523.234	3523.474	3523.354
14	3522.872	3523.312	3523.552	3523.432
15	3522.919	3523.359	3523.599	3523.479
16	3522.936	3523.376	3523.616	3523.496

-X020-
INDEX OF BRIDGE SHEETS -

Sheet No. 1 - General Drawing
Sheet No. 2 - Estimate of Structure Quantities and Notes
Sheet No. 3 - Notes (Continued)
Sheet No. 4 - Subsurface Investigation and Micropile Layout
Sheet No. 5 - Micropile Layout Details
Sheet No. 6 - Micropile Details
Sheet No. 7 - Abutment No. 1 Details
Sheet No. 8 - Abutment No. 5 Details
Sheet No. 9 - Pier Details
Sheet No. 10 - Superstructure Details
Sheet No. 11 - End Block and Barrier Curb Details
Sheet No. 12 - Details of Bridge End Backfill (A)
Sheet No. 13 - Details of Bridge End Backfill (B)
Sheet No. 14 - Details of Approach Slab Adjacent to Bridge
Sheet No. 15 - Approach Slab Joint Details
Sheet No. 16 - Riprap Details
Sheet No. 17 - As - Built Elevation Survey
Sheet No. 18 - Standard Plate No's. 430.50 and 460.02
Sheet No. 19 - Standard Plate No's. 460.05 and 620.18
Sheet No. 20 - Standard Plate No. 630.92

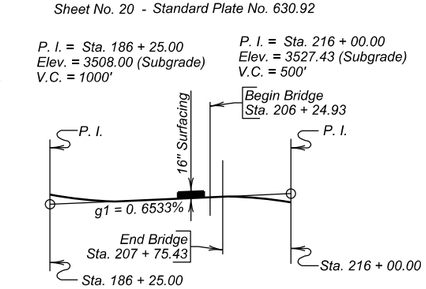

GRADELINE DATA

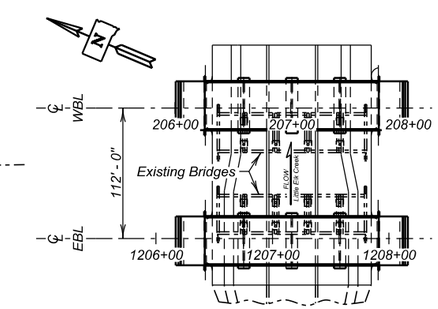

LAYOUT

HYDRAULIC DATA

Q_d	2712 cfs
A_d	512 sq ft
V_d	5.3 fps
Q_F	2712 cfs
Q_{100}	4887 cfs
Q_{OT}	$>Q_{100\ Yr.}$
V_{max}	7.9 fps

Q_d = Design discharge for the proposed bridge based on 50 year frequency. El. 3517.2

Q_{OT} = Overtopping discharge and frequency > Q_{100} year recurrence interval. El. 3517.7. Location ~ EBL Sta. 1206 + 00 Rt.

Q_F = Designated peak discharge for the basin approaching proposed project based on 50 year frequency.

Q_{100} = Computed discharge for the basin approaching proposed project based on 100 year frequency. El. 3517.5

V_{max} = Maximum computed outlet velocity for the proposed bridge, based on 100 year frequency.

PLANS BY :
OFFICE OF BRIDGE DESIGN, SOUTH DAKOTA DEPARTMENT OF TRANSPORTATION

GENERAL DRAWING
FOR
WESTBOUND LANES

150' - 6" CONTINUOUS CONCRETE BRIDGE

40' - 0" ROADWAY — 0° SKEW
OVER LITTLE ELK CREEK — SEC. 4-T3N-R6E
STA. 206 + 24.93 TO 207 + 75.43 — IM 0901(38)40
STR. NO. 47-085-545 — HL-93
PCN 5580

MEADE COUNTY
S. D. DEPT. OF TRANSPORTATION
FEBRUARY 2015

-X020-

DESIGNED BY	CK. DES. BY	DRAFTED BY	
TB/PW	SK	GW/MG	Steve A. Johnson BRIDGE ENGINEER
MEAD5580	5580WI01		

ESTIMATE OF STRUCTURE QUANTITIES

DESCRIPTION	QUANTITY	UNIT	REMARKS
Bridge Elevation Survey	Lump Sum	LS	
Concrete Penetrating Sealer	669	SqYd	See Special Provision
Bridge End Embankment	665	CuYd	
Incidental Work, Structure	Lump Sum	LS	
Membrane Sealant Expansion Joint	83.8	Ft	
Structure Excavation, Bridge	323.3	CuYd	
Granular Bridge End Backfill	71.1	CuYd	
Approach Slab Underdrain Excavation	2.7	CuYd	
Class A45 Concrete, Bridge Deck	343.7	CuYd	
Class A45 Concrete, Bridge	273.5	CuYd	
Concrete Approach Slab For Bridge	190.6	SqYd	
Concrete Approach Sleeper Slab for Bridge	67.5	SqYd	
Controlled Density Fill	7.3	Cu Yd	
Reinforcing Steel	36,477	Lb	
Epoxy Coated Reinforcing Steel	84,168	Lb	
No. 7 Rebar Splice	106	Each	
Micropile Verification Load Test	1	Each	See Special Provision
Micropile Proof Load Test	5	Each	See Special Provision
Micropile	73	Each	See Special Provision
4" Underdrain Pipe	255	Ft	
Precast Concrete Headwall for Drain	2	Each	
Porous Backfill	31.7	Ton	
Class C Riprap	843.5	Ton	
Type B Drainage Fabric	947	SqYd	

SPECIFICATIONS FOR BRIDGE

1. Design Specifications: AASHTO LRFD Bridge Design Specifications, 2014 Edition with 2015 Interims.

2. Construction Specifications: South Dakota Standard Specifications for Roads and Bridges, 2015 Edition and required provisions, supplemental specifications, and special provisions as included in the proposal.

BRIDGE DESIGN LOADING

1. AASHTO HL-93.

2. Dead Load includes 22 psf for future wearing surface on the roadway.

DESIGN MATERIAL STRENGTHS

Concrete	f'c = 4500 psi
Micropile Grout	f'c = 5000 psi
Reinforcing Steel	fy = 60,000 psi
Reinforcing Steel (micropile)	fy = 75,000 psi
Casing (API N-80)	fy = 80,000 psi
Structural Steel (ASTM A709 Gr 36)	fy = 36,000 psi

GENERAL CONSTRUCTION

1. All mild reinforcing steel shall conform to ASTM A615, Grade 60, except the reinforcing steel in micropile shall be ASTM A615, Grade 75.

2. All exposed concrete corners and edges shall be chamfered 3/4" unless noted otherwise.

3. Use 2" clear cover on all reinforcing steel except as shown.

4. Contractor shall imprint on the structure the date of new construction as specified and detailed on Standard Plate No. 460.02.

5. Barrier Curbs and End blocks shall be built normal to the grade.

6. Request for construction joints or resteel splices at points other than those shown, must be submitted to the Engineer for prior approval. If additional splices are approved, no payment will be allowed for the added quantity of resteel.

7. The elevation of the bridge deck is 16 1/2" above subgrade elevation.

INCIDENTAL WORK, STRUCTURE

1. In place centerline Sta. 207+35.98 to centerline Sta. 208+64.61 is a 128.5' 5 span Continuous Concrete Bridge with a 30'-0" clear roadway. The superstructure consists of a 10 1/2 inch reinforced concrete slab. The bridge rail consists of a 12 inch high curb with a 1'-11" vertical face concrete barrier running the length of the bridge. The deck has been overlaid with a 2.99 inch low slump concrete. The substructure consists of 2 column reinforced concrete bents and reinforced concrete abutments. The abutments are supported on timber piling. Concrete walls with steel railing to centerline of median at both begin and end bridge.

2. Break down and remove the existing bridge, concrete walls, and approach/sleeper slabs if applicable, to 1 foot below finished groundline, or as required to construct the new structure in accordance with Section 110 of the Specifications. All portion of the existing bridge not salvaged for future highway related use shall be removed and disposed of by the Contractor on a site obtained by the Contractor and approved by the Engineer in accordance with the ENVIRONMENTAL COMMITMENTS found in Section A.

3. The existing approach guard rail, including posts, shall be salvaged for future highway related use. See Section B for stockpiling location.

4. During demolition of the structure, efforts shall be taken to prevent material from falling into Little Elk Creek. Under no circumstances is asphalt allowed to fall into Little Elk Creek.

5. The foregoing is a general description of the in-place bridge and should not be construed to be complete in all details. Before preparing the bid it shall be the responsibility of the Contractor to make a visual inspection of the structure to verify the extent of the work and materials involved. If desired by the Contractor, a copy of the original construction plans may be obtained through the Office of Bridge Design.

NOTICE - LEAD BASED PAINT

Be advised that the paint on the steel surfaces of the existing structure contains lead. The Contractor should plan his/her operations accordingly, and inform his/her employees of the hazards of lead exposure.

DESIGN MIX OF CONCRETE

1. All structural concrete shall be Class A45 unless otherwise indicated.

2. Type II cement is required.

ESTIMATE OF STRUCTURE QUANTITIES AND NOTES

FOR

WESTBOUND LANES

150' - 6" CONTINUOUS CONCRETE BRIDGE

STR. NO. 47-085-545

FEBRUARY 2015

DESIGNED BY	CK. DES. BY	DRAFTED BY	
TB/PW	SK	PW	Steve A Johnson
MEAD5580	5580WI02		BRIDGE ENGINEER

ABUTMENTS AND PIERS

1. See Special Provision for micropile. Casing for micropile shall be API-N80 or equivalent (outside diameter = 9 $^5/_8$" and wall thickness = 0.472").

2. A representative of the Geotechnical Engineering Activity shall be present to observe the placement of the micropiles. The contractor shall notify the Geotechnical Engineering Activity two weeks prior to the start of the micropile installation operations.

3. Galvanize the pier wall armoring plates and anything welded to them after all welding is completed. They shall be galvanized in accordance with AASHTO M111 (ASTM A123). If welded splices are used subsequent to galvanizing, the weld details and the procedures for preparing the surface for welding and repairing the galvanizing after welding shall be included with the shop plans. Repair of galvanizing shall be by the zinc-based solder method in conformance with ASTM A780.

4. Central bar in micropile shall be a #18 threaded bar conforming to the physical and chemical requirements of ASTM A615 Grade 75. Plan lengths shown are greater than 60 feet. Threaded couplers are required and must develop 100% of the bars ultimate strength.

5. Steel for the pier wall armoring plates shall be ½ " thickness and conform to ASTM A709, Grade 36. Shear connectors shall conform to Clause 7.3, Type A or B of the AASHTO/AWS D1.5 Bridge Welding Code.

6. Welding for the pier wall armoring plates shall be in accordance with AWS D1.1 Structural Welding Code - Steel.

7. The cost of the pier wall armoring plates complete in-place including fabrication, welding, and galvanizing shall be incidental to the contract unit price per cubic yard for Class A45 Concrete, Bridge.

8. Each finished abutment shall include a Bridge Survey Marker. See Standard Plate No. 460.05.

SUPERSTRUCTURE

1. Preplanned construction joints may be used in accordance with Section 460.3 of the Specifications. Contact the Office of Bridge Design for joint configuration and allowable location. Emergency slab construction joints shall be as shown with the superstructure details. If an emergency slab joint is used, contact the Office of Bridge Design before proceeding with deck pour.

2. The deck-finishing machine shall be adjusted and operated in such a manner that the roller screed or screeds are parallel with the centerline of the bridge and the finish machine is parallel to the skew of the bridge. Concrete placement in front of the finish machine shall be kept parallel to the machine.

3. Barrier curbs shall be poured after all the slab has been poured. Superstructure falsework shall not be removed until bridge deck concrete, including barrier curbs, has attained a strength of 2400 psi.

4. The bridge deck must be placed and finished continuously at a minimum rate of 21 ft. of deck per hour measured along centerline roadway. If concrete cannot be placed and finished at this rate, the Engineer shall order a header installed and operations stopped. Notify the Bridge Construction Engineer if deck pour operations are stopped. Operations may resume only when the Engineer is satisfied that a minimum rate of 21 ft. of deck per hour can be achieved and the concrete in the previous pour has attained a minimum compressive strength of 2000 psi.

5. Snap ties, if used in barrier curb formwork, shall be epoxy coated. The epoxy coating shall be inert in concrete and compatible with the coating applied to the new epoxy coated reinforcing steel.

6. See Special Provision for Concrete Penetrating Sealer.

FALSEWORK

The Contractor shall be required to include with the Falsework Plans, details for the construction of an adequate "Walk-Way" including railing.

CLASS B COMMERCIAL TEXTURE FINISH

1. A Class B commercial texture finish shall be applied to the following areas:

   a) **Barrier Rail:** all exposed surfaces (inside face – pearl white, top and back – buff tan).
   b) **Slab:** edge of slab – buff tan.

2. The Class B commercial texture finish shall be applied in accordance with Section 460.3 L.1.c of the Specifications.

3. Where the Class B commercial texture finish is to be applied, concrete curing shall be accomplished with cotton or burlap mats and polyethylene sheeting. Curing shall continue for not less than seven days after placing concrete before the commercial texture finish is applied. The commercial texture finish shall be applied in accordance with the manufacturer's recommendations. The commercial texture finish itself does not require a specific cure except for drying.

APPROACH SLABS

1. Sleeper slab riser shall be cast with the approach slab or cast after the approach slab is placed. Care shall be taken to ensure the correct grade is maintained across the joint.

2. The portion of the sleeper slab below the construction joint may be precast. If the bottom portion of the sleeper slab is precast, the Contractor shall submit proposed lifting and setting plans to the Bridge Construction Engineer for approval. In addition, if reinforcing or other details differ from those shown in the plans, the Contractor shall submit proposed alternate details for approval.

3. The use of an approved finishing machine will be required during placement of Class A45 Concrete for the approach slabs. Concrete placement in front of the machine shall be kept parallel to the screed.

4. The concrete in the approach slab shall be tined normal to centerline roadway.

5. Concrete Approach Sleeper Slab for Bridge will be paid for at the contract unit price per square yard. This payment shall be full compensation for all excavation, furnishing, hauling, and placing all materials including concrete and reinforcing steel; for disposal of all excavated material and surplus materials; and for labor, tools, equipment and any incidentals necessary to complete this item of work.

6. Concrete Approach Slab for Bridge will be paid for at the contract unit price per square yard. This payment shall be full compensation for all excavation, furnishing, hauling and placing all materials including concrete, asphalt paint or 4 mil polyethylene sheeting, elastic joint sealer and reinforcing steel; for disposal of all excavated material and surplus materials and for labor, tools, equipment and any incidentals necessary to complete this item of work.

AS - BUILT ELEVATION SURVEY

The Contractor shall be responsible for recording the As-built deck elevations and bridge survey marker elevations at the locations shown in the Table of As-Built Elevations shown in the plans. All costs associated with obtaining the elevations including all equipment, labor and any incidentals required shall be incidental to the contract lump sum price for Bridge Elevation Survey.

NOTES (CONTINUED)
FOR
WESTBOUND LANES
150' - 6" CONTINUOUS CONCRETE BRIDGE

STR. NO. 47-085-545
FEBRUARY 2015

DESIGNED BY	CK. DES. BY	DRAFTED BY	
TB/PW	SK	PW	Steve A. Johnson
MEAD5580	5580WI03		BRIDGE ENGINEER

STATE OF	PROJECT	SHEET NO.	TOTAL SHEETS
S.D.	IM 0901(38)40	E93	E199

Hole Number	W1	
Station	207+75	
Depth	25.0	ft
Soil Color	Red	
Classification	Silt	
Strength (Q_u)	9.541	psf
Dry Density	125.5	pcf
Wet Density	141.1	pcf
Moisture	12.5	%
Pass No. 10	100.0	%
Pass No. 40	100.0	%
Pass No. 200	86.2	%
Sand Content	13.8	%
Silt Content	67.6	%
Clay Content	18.6	%

Hole Number	W1	
Station	207+75	
Depth	60.2	ft
Soil Color	Red	
Classification	Clay Silt	
Strength (Q_u)	6.371	psf
Dry Density	126.9	pcf
Wet Density	142.1	pcf
Moisture	12.0	%
Pass No. 10	100.0	%
Pass No. 40	100.0	%
Pass No. 200	94.3	%
Sand Content	5.7	%
Silt Content	67.5	%
Clay Content	26.8	%

Hole Number	W3	
Station	206+25	
Depth	64.8	ft
Soil Color	Red	
Classification	Silt Clay	
Strength (Q_u)	841.8	psf
Dry Density	110.6	pcf
Wet Density	132.9	pcf
Moisture	20.2	%
Pass No. 10	99.0	%
Pass No. 40	99.0	%
Pass No. 200	81.2	%
Sand Content	17.8	%
Silt Content	50.8	%
Clay Content	30.5	%

Hole Number	W5	
Station	206+58	
Depth	25.5	ft
Soil Color	Red	
Classification	Silt	
Strength (Q_u)	6.636	psf
Dry Density	131.6	pcf
Wet Density	142.8	pcf
Moisture	8.5	%
Pass No. 10	93.8	%
Pass No. 40	9.38	%
Pass No. 200	83.0	%
Sand Content	10.7	%
Silt Content	63.5	%
Clay Content	19.5	%

Hole Number	W19	
Station	206+90	
Depth	20.5	ft
Soil Color	Red	
Classification	Clay Silt	
Strength (Q_u)	4.183	psf
Dry Density	118.4	pcf
Wet Density	136.9	pcf
Moisture	15.6	%
Pass No. 10	99.6	%
Pass No. 40	99.6	%
Pass No. 200	84.7	%
Sand Content	14.9	%
Silt Content	62.6	%
Clay Content	22.1	%

Hole Number	W19	
Station	206+90	
Depth	64.7	ft
Soil Color	Red	
Classification	Silt Clay	
Strength (Q_u)	5.669	psf
Dry Density	122.6	pcf
Wet Density	140.7	pcf
Moisture	14.8	%
Pass No. 10	94.9	%
Pass No. 40	94.9	%
Pass No. 200	85.2	%
Sand Content	9.7	%
Silt Content	50.8	%
Clay Content	34.4	%

The gravel and cobbles (up to boulder size) consist of material originating from sandstone, limestone, dolomite, or granite outcrops from nearby upstream canyon walls. Material most likely transported by mud flows with very little weathering. The borings shown only represent material found at the exact location of the small diameter drill hole. Boulders of 3 feet or more may be encountered at the site.

The Geotechnical Engineering Activity has on file all of the boring logs for this project. These logs and additional results of laboratory test, if any, are available for review at the Central Office in Pierre.

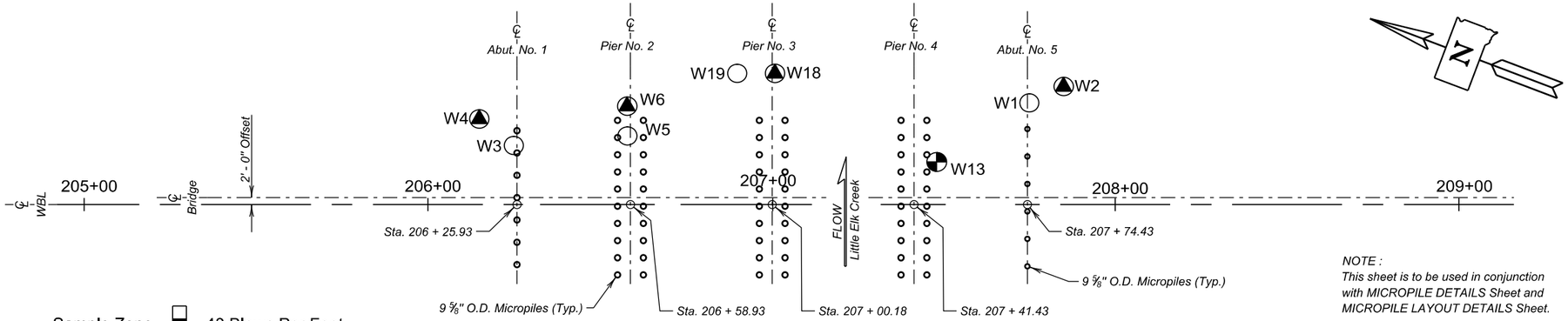

NOTE :
This sheet is to be used in conjunction with MICROPILE DETAILS Sheet and MICROPILE LAYOUT DETAILS Sheet.

Sample Zone ■ 48 Blows Per Foot

Penetration Test results are listed as uncorrected "N" values. Blows over inches are listed if refusal is achieved, which is 50 blows within one 6 inch set.

MICROPILE LAYOUT

LEGEND

- Auger Test
- Drive Test
- Water
- Caved
- Penetration Test
- Sample Zone

Drive test are conducted by dropping a 490 pound hammer 30 inches to drive a 2⅞ inch drill stem with attached retractable plug sampler for taking samples and to measure the resistance to penetration of the soil. Auger holes are drilled with a 4½ inch diameter continuous flight auger.

Penetration test holes are drilled with a 6⅝" inch diameter hollow stem auger. Penetration tests are conducted by dropping a 140 pound hammer 30 inches to obtain 2 inch nominal diameter samples and to measure the resistance to penetration of the soil.

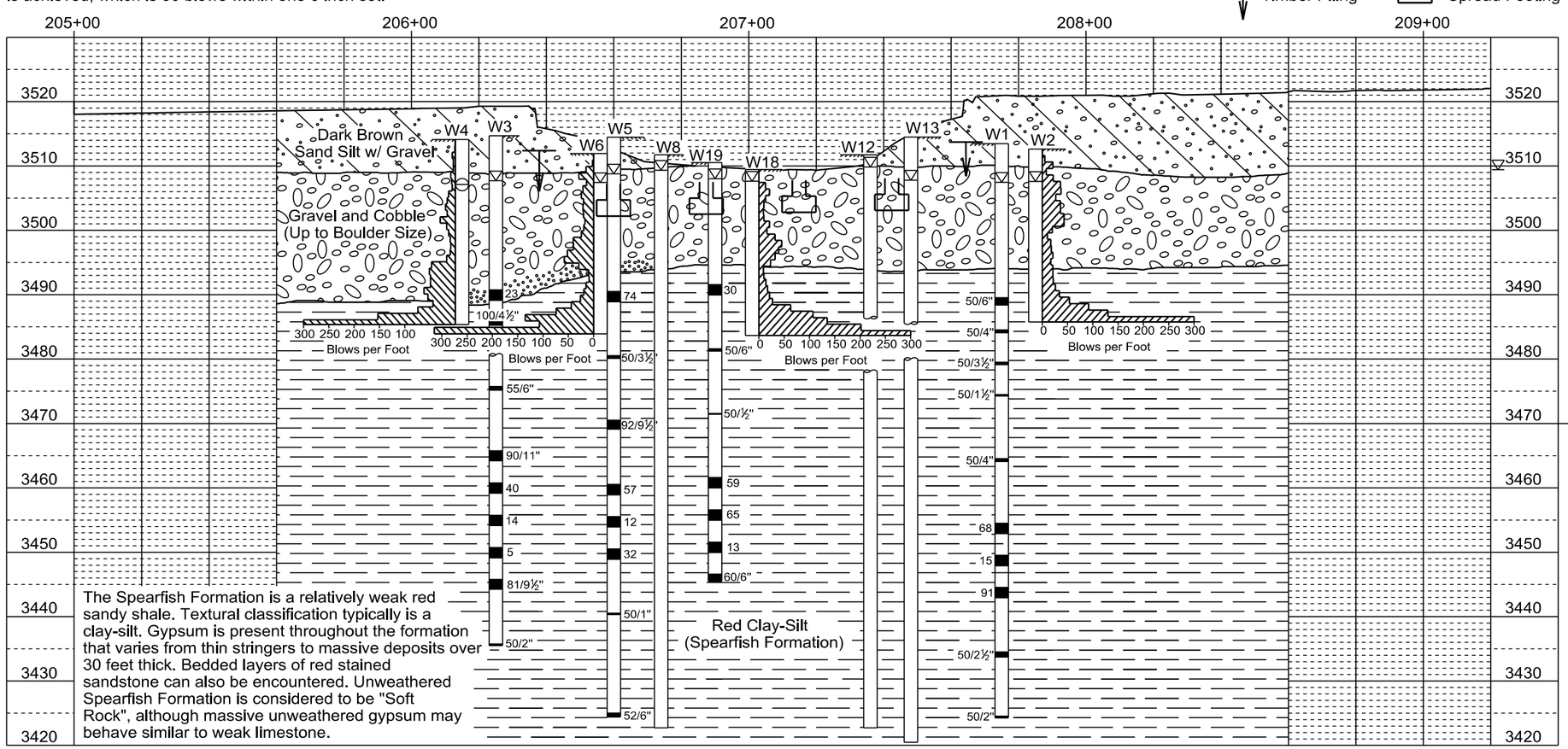

The Spearfish Formation is a relatively weak red sandy shale. Textural classification typically is a clay-silt. Gypsum is present throughout the formation that varies from thin stringers to massive deposits over 30 feet thick. Bedded layers of red stained sandstone can also be encountered. Unweathered Spearfish Formation is considered to be "Soft Rock", although massive unweathered gypsum may behave similar to weak limestone.

GROUND WATER ELEVATIONS

as of APRIL 2014

W1		3507.5
W2		3507.6
W3		3507.7
W4	(CAVED)	3507.1
W5		3508.2
W6		3507.4
W8		3509.3
W12		3509.9
W13		3507.8
W18		3507.6
W19		3508.0

MEASURED SKIN FRICTION

	ELEV.	PSF
W2	3491.6	800
W2	3485.8	4570
W4	3493.1	333
W4	3485.4	4043
W6	3490.9	467
W6	3483.9	5333
W18	3493.4	571
W18	3483.7	2393

SUBSURFACE INVESTIGATION AND MICROPILE LAYOUT

FOR

WESTBOUND LANES

150' - 6" CONTINUOUS CONCRETE BRIDGE

40' - 0" ROADWAY — 0° SKEW
OVER LITTLE ELK CREEK — SEC. 4-T3N-R6E
STA. 206 + 24.93 TO 207 + 75.43 — IM 0901(38)40
STR. NO. 47-085-545 — HL-93

MEADE COUNTY

S. D. DEPT. OF TRANSPORTATION

FEBRUARY 2015

DESIGNED BY	CK. DES. BY	DRAFTED BY	
TB/PW	SK	MG	Steve A. Johnson BRIDGE ENGINEER
MEAD5580	5580WI04		

STATE OF	PROJECT	SHEET NO.	TOTAL SHEETS
S.D.	IM 0901(38)40	E94	E199

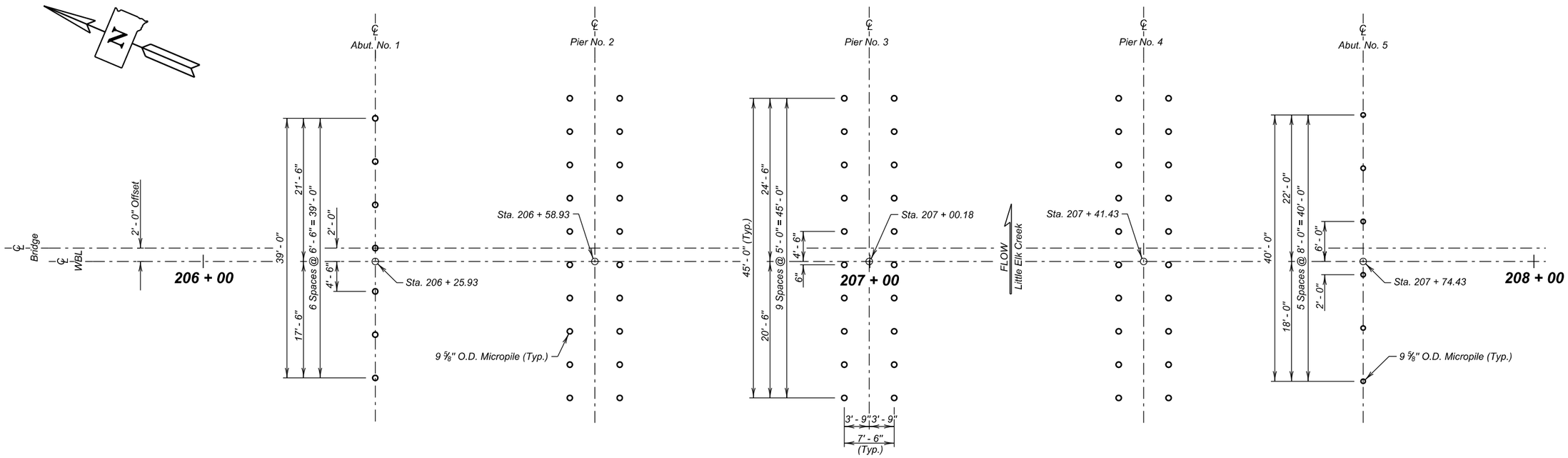

MICROPILE LAYOUT

NOTE:
This sheet is to be used in conjunction with MICROPILE DETAILS Sheet and SUBSURFACE INVESTIGATION AND MICROPILE LAYOUT Sheet.

MICROPILE LAYOUT DETAILS

FOR

WESTBOUND LANES

150' - 6" CONTINUOUS CONCRETE BRIDGE

40' - 0" ROADWAY	0° SKEW
OVER LITTLE ELK CREEK	SEC. 4-T3N-R6E
STA. 206 + 24.93 TO 207 + 75.43	IM 0901(38)40
STR. NO. 47-085-545	HL-93

MEADE COUNTY

S. D. DEPT. OF TRANSPORTATION

FEBRUARY 2015

5 OF 20

DESIGNED BY	CK. DES. BY	DRAFTED BY	
TB/PW	SK	GW/MG	Steve A Johnson
MEAD5580	5580WI05		BRIDGE ENGINEER

STATE OF	PROJECT	SHEET NO.	TOTAL SHEETS
S.D.	IM 0901(38)40	E95	E199

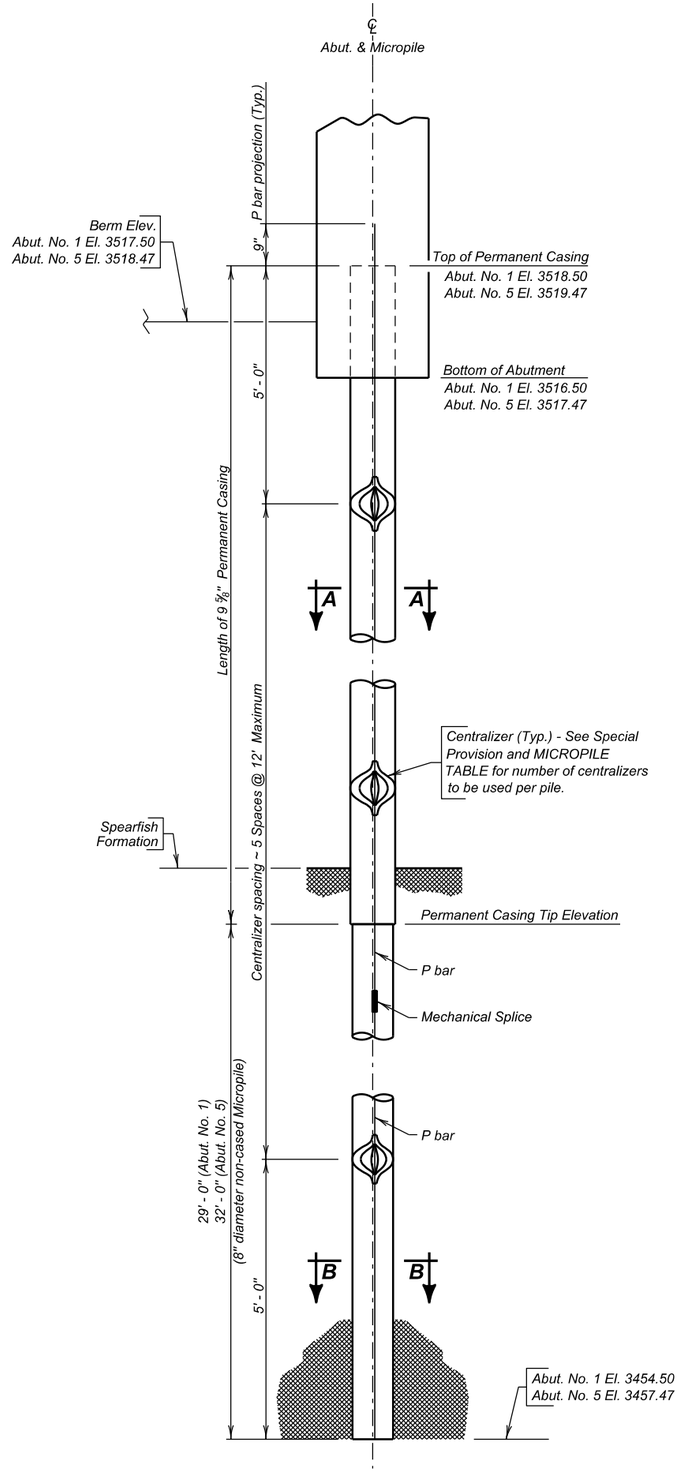

ABUTMENT ELEVATION

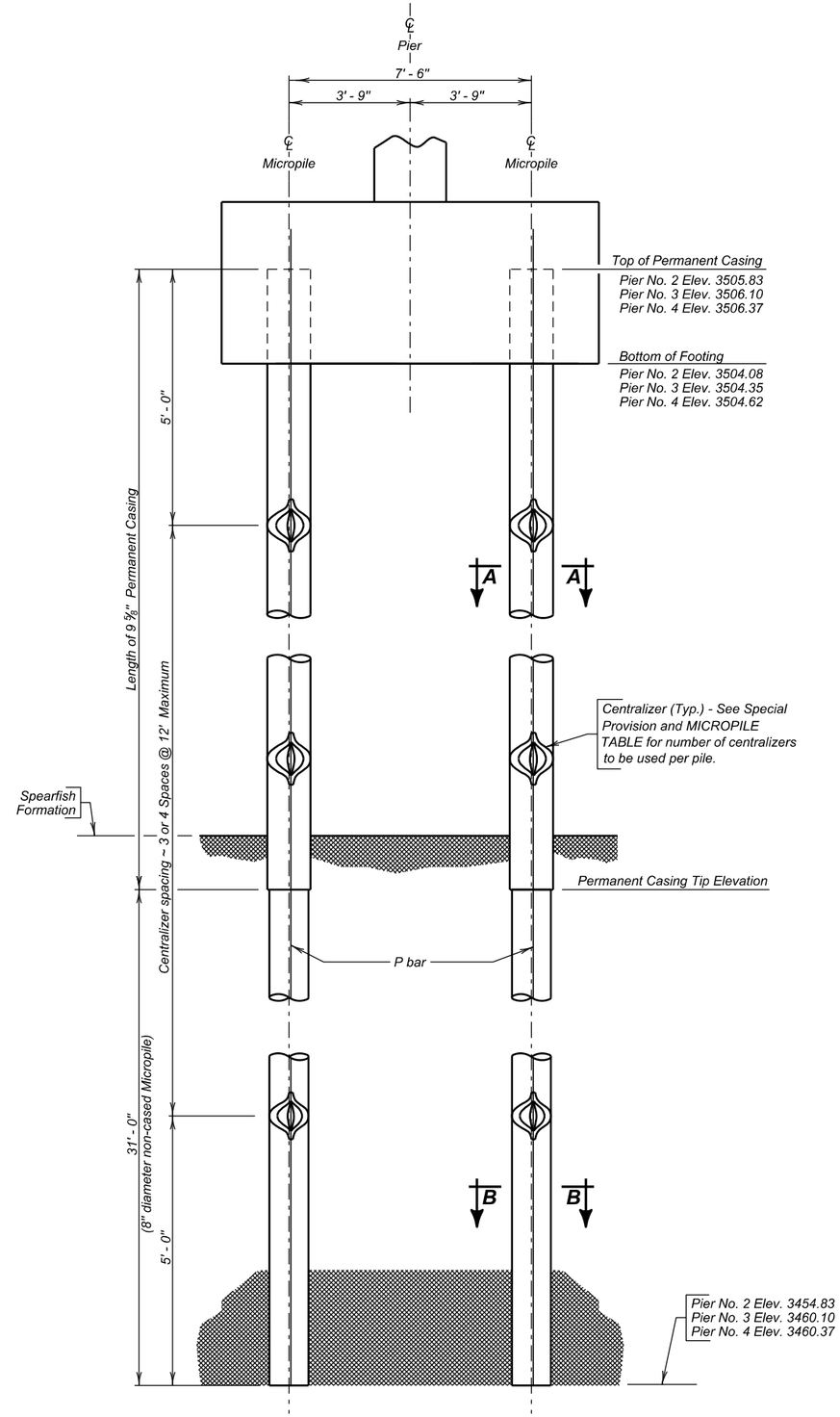

PIER ELEVATION

✳ MICROPILE TABLE

	Permanent Casing Tip Elev.	Permanent Casing Length	# of Centralizers per pile	P BARS				Grout
				Mk.	No.	Size	★Length	Cu. Yd.
Abut. No. 1	3483.50	35.00'	6	P1	7	18	64' - 9"	6.4
Pier No. 2	3485.83	20.00'	5	P2	20	18	51' - 9"	14.1
Pier No. 3	3491.10	15.00'	4	P3	20	18	46' - 9"	12.6
Pier No. 4	3491.37	15.00'	4	P4	20	18	46' - 9"	12.6
Abut. No. 5	3489.47	30.00'	6	P5	6	18	62' - 9"	5.1

✳ FOR INFORMATIONAL PURPOSES ONLY. All items listed are included in the contract unit price for micropile.

★ Length is total length required. Use mechanical coupler as needed.

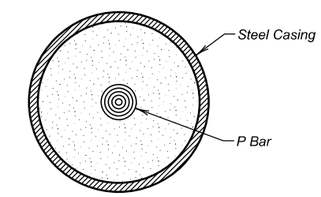

SEC. A - A

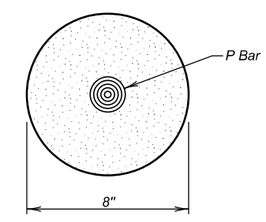

SEC. B - B

NOTE :
This sheet is to be used in conjunction with SUBSURFACE INVESTIGATION AND MICROPILE LAYOUT Sheet, ABUTMENT DETAILS NO. 1 & No. 5 DETAILS Sheets, and PIER DETAILS Sheet.

MICROPILE DETAILS

FOR

WESTBOUND LANES

150' - 6" CONTINUOUS CONCRETE BRIDGE

40' - 0" ROADWAY — 0° SKEW
OVER LITTLE ELK CREEK — SEC. 4-T3N-R6E
STA. 206 + 24.93 TO 207 + 75.43 — IM 0901(38)40
STR. NO. 47-085-545 — HL-93

MEADE COUNTY

S. D. DEPT. OF TRANSPORTATION

FEBRUARY 2015

DESIGNED BY	CK. DES. BY	DRAFTED BY	
PW/TB	SK	GW/MG	Steve A. Johnson BRIDGE ENGINEER
MEAD5580	5580WI06		

STATE OF	PROJECT	SHEET NO.	TOTAL SHEETS
S.D.	IM 0901(38)40	E96	E199

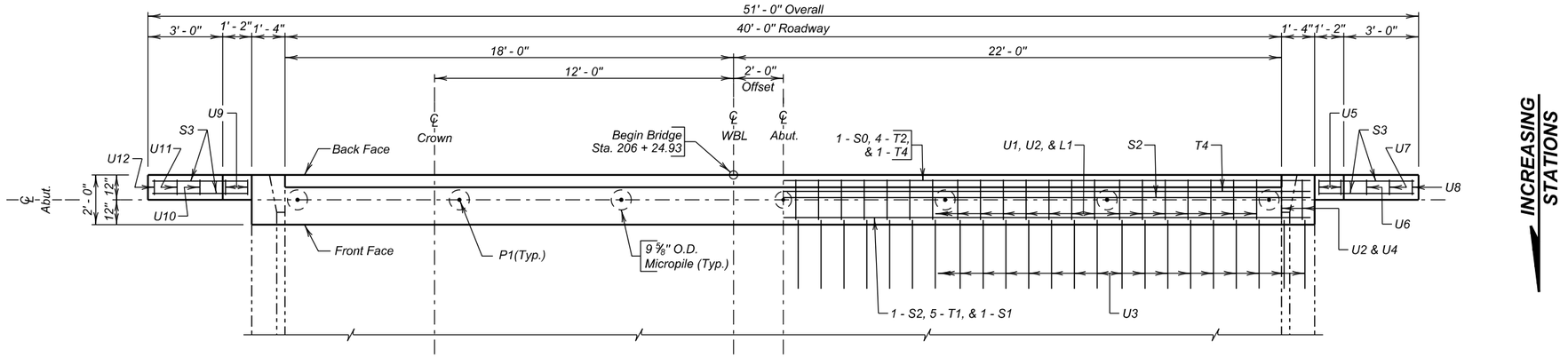

PLAN

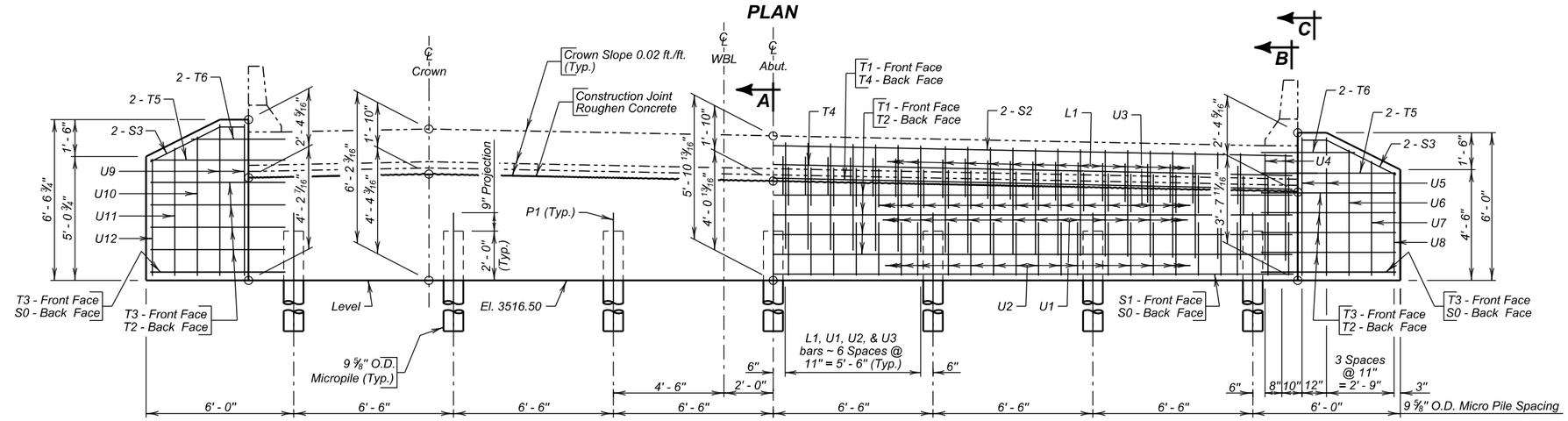

ELEVATION

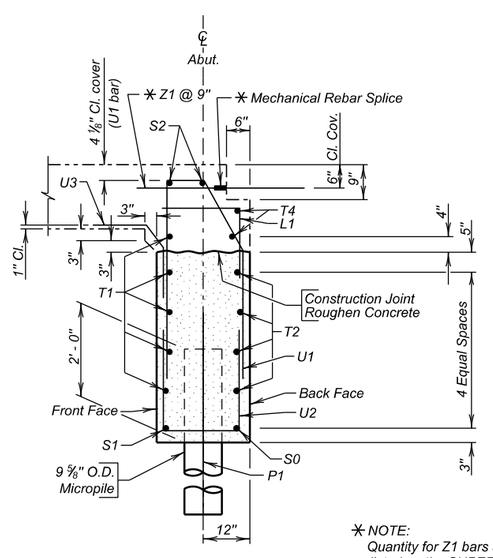

SEC. A - A

✳ NOTE:
Quantity for Z1 bars and Mechanical Splices are listed on the SUPERSTRUCTURE DETAILS Sheet.

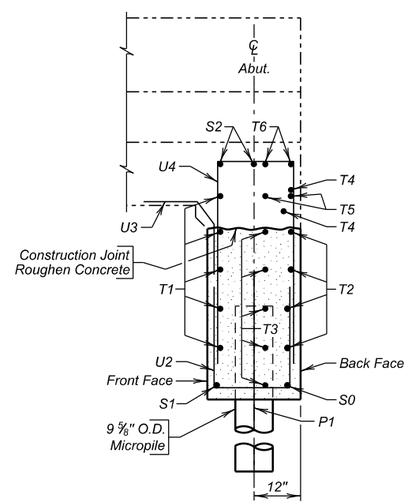

SEC. B - B

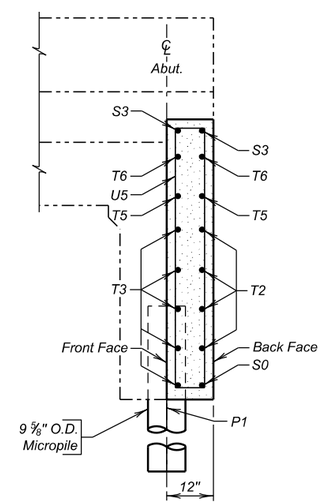

SEC. C - C

REINFORCING SCHEDULE

	Mk.	No.	Size	Length	Type
△	L1	42	4	3' - 6"	17A
	S0	1	9	50' - 8"	Str.
	S1	1	9	42' - 4"	Str.
# △	S2	2	9	42' - 4"	Str.
	S3	4	9	4' - 2"	19B
#	T1	5	9	45' - 5"	2
#	T2	4	5	50' - 8"	Str.
	T3	10	5	4' - 9"	Str.
# △	T4	2	5	42' - 4"	Str.
	T5	4	5	5' - 3"	Str.
	T6	4	5	4' - 1"	Str.
△	U1	42	6	9' - 8"	14B
	U2	46	4	7' - 4"	17
△	U3	46	4	2' - 10"	14A
△	U4	4	6	10' - 4"	T1
	U5	4	4	13' - 3"	T1
	U6	2	4	12' - 3"	T1
	U7	2	4	11' - 4"	T1
	U8	2	4	10' - 6"	T1
	U9	4	4	14' - 4"	T1
	U10	2	4	13' - 6"	T1
	U11	2	4	12' - 6"	T1
	U12	2	4	11' - 6"	T1

Bending Details

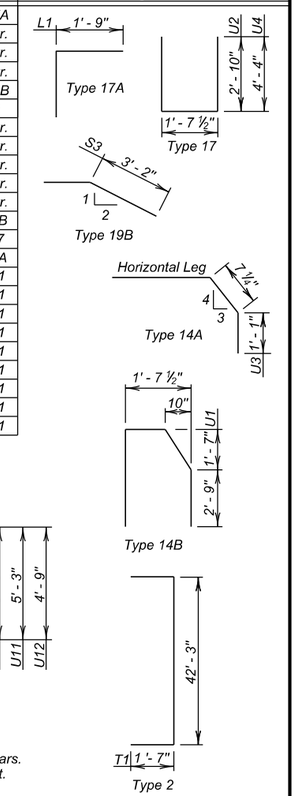

NOTES:
All dimensions are out to out of bars.
Bend in field as necessary to fit.
△ Bars are to be epoxy coated.

ESTIMATED QUANTITIES

ITEM	UNIT	QUANTITY
Class A45 Concrete, Bridge	Cu. Yd.	14.5
Reinforcing Steel	Lb.	1304
Epoxy Coated Reinforcing Steel	Lb.	1233
Structure Excavation, Bridge	Cu. Yd.	9.7
Micropile	Each	7
Micropile Proof Load Test	Each	1
Micropile Verification Load Test	Each	1

ABUTMENT NO. 1 DETAILS
FOR
WESTBOUND LANES

150' - 6" CONTINUOUS CONCRETE BRIDGE

40' - 0" ROADWAY — 0° SKEW
OVER LITTLE ELK CREEK — SEC. 4-T3N-R6E
STA. 206 + 24.93 TO 207 + 75.43 — IM 0901(38)40
STR. NO. 47-085-545 — HL-93

MEADE COUNTY
S. D. DEPT. OF TRANSPORTATION
FEBRUARY 2015

DESIGNED BY	CK. DES. BY	DRAFTED BY	
TB/PW	SK	GW/MG	Steve A Johnson BRIDGE ENGINEER
MEAD5580	5580WI07		

STATE OF	PROJECT	SHEET NO.	TOTAL SHEETS
S.D.	IM 0901(38)40	E97	E199

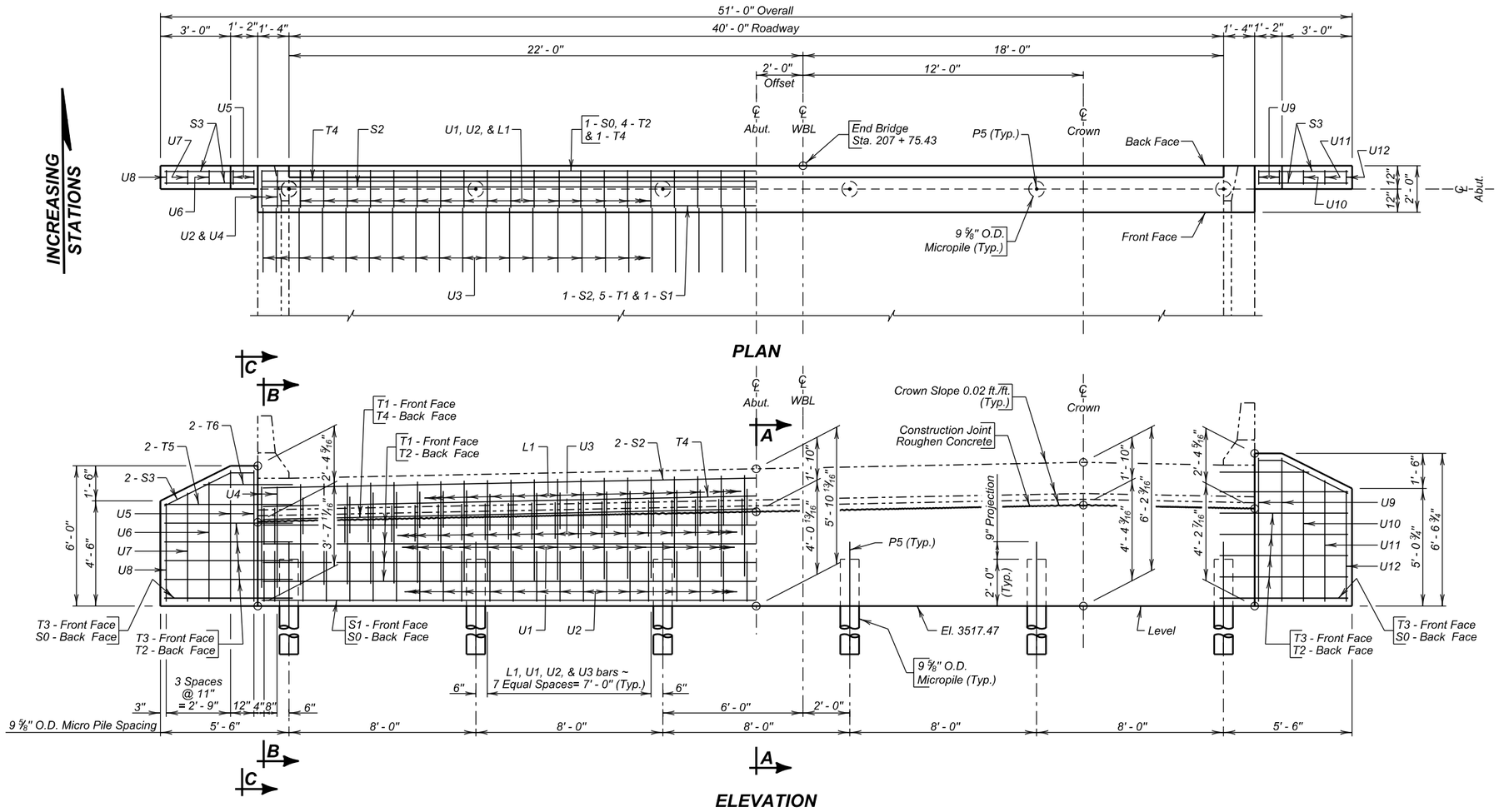

REINFORCING SCHEDULE

	Mk.	No.	Size	Length	Type
△	L1	40	4	3' - 6"	17A
	S0	1	9	50' - 8"	Str.
	S1	1	9	42' - 4"	Str.
# △	S2	2	9	42' - 4"	Str.
	S3	4	9	4' - 2"	19B
#	T1	5	5	45' - 5"	2
#	T2	4	5	50' - 8"	Str.
	T3	10	5	4' - 9"	Str.
# △	T4	2	5	42' - 4"	Str.
	T5	4	5	5' - 3"	Str.
	T6	4	5	4' - 1"	Str.
△	U1	40	6	9' - 8"	14B
	U2	44	4	7' - 4"	17
△	U3	44	4	2' - 10"	14A
△	U4	4	6	10' - 4"	T1
	U5	4	4	13' - 3"	T1
	U6	2	4	12' - 3"	T1
	U7	2	4	11' - 4"	T1
	U8	2	4	10' - 6"	T1
	U9	4	4	14' - 4"	T1
	U10	2	4	13' - 6"	T1
	U11	2	4	12' - 6"	T1
	U12	2	4	11' - 6"	T1

Bending Details

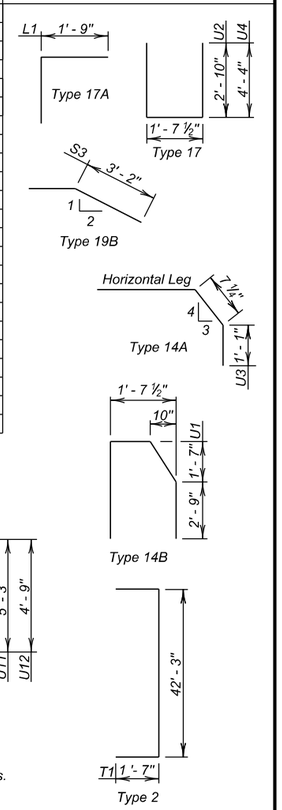

NOTES:
All dimensions are out to out of bars.
Bend in field as necessary to fit.
△ Bars are to be epoxy coated.

ESTIMATED QUANTITIES

ITEM	UNIT	QUANTITY
Class A45 Concrete, Bridge	Cu. Yd.	14.5
Reinforcing Steel	Lb.	1294
Epoxy Coated Reinforcing Steel	Lb.	1196
Structure Excavation, Bridge	Cu. Yd.	9.7
Micropile	Each	6
Micropile Proof Load Test	Each	1

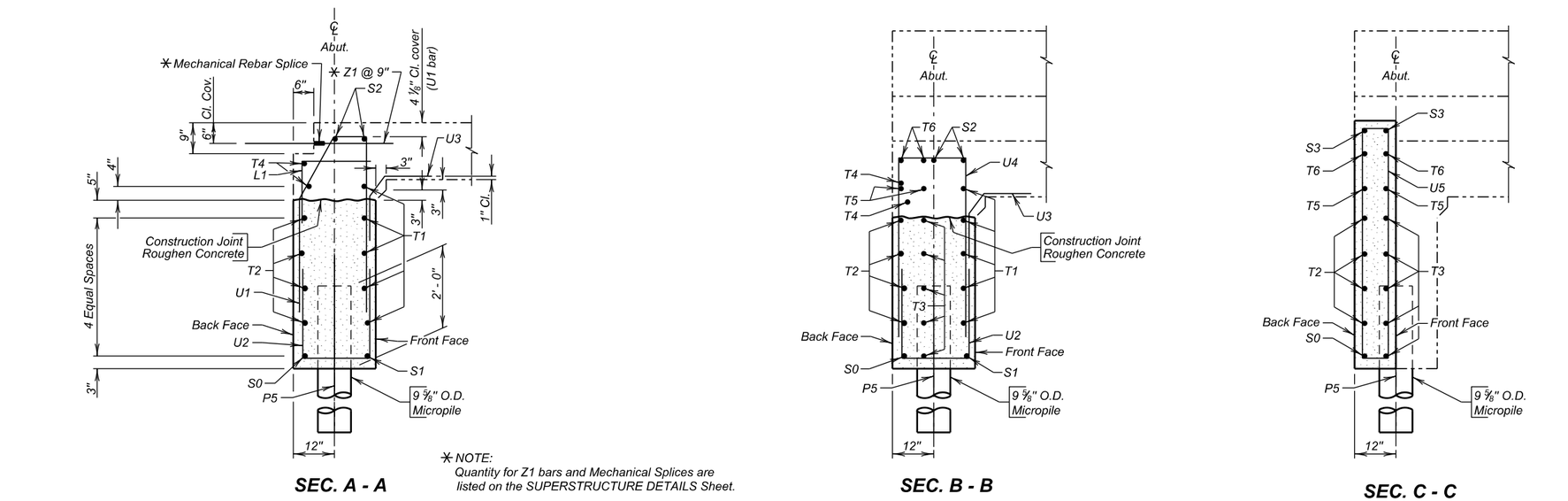

NOTE:
Quantity for Z1 bars and Mechanical Splices are listed on the SUPERSTRUCTURE DETAILS Sheet.

ABUTMENT NO. 5 DETAILS

FOR

WESTBOUND LANES

150' - 6" CONTINUOUS CONCRETE BRIDGE

40' - 0" ROADWAY — 0° SKEW
OVER LITTLE ELK CREEK — SEC. 4-T3N-R6E
STA. 206 + 24.93 TO 207 + 75.43 — IM 0901(38)40
STR. NO. 47-085-545 — HL-93

MEADE COUNTY
S. D. DEPT. OF TRANSPORTATION
FEBRUARY 2015

DESIGNED BY	CK. DES. BY	DRAFTED BY	
TB/PW	SK	GW/MG	BRIDGE ENGINEER
MEAD5580	5580WI08		

STATE OF	PROJECT	SHEET NO.	TOTAL SHEETS
S.D.	IM 0901(38)40	E98	E199

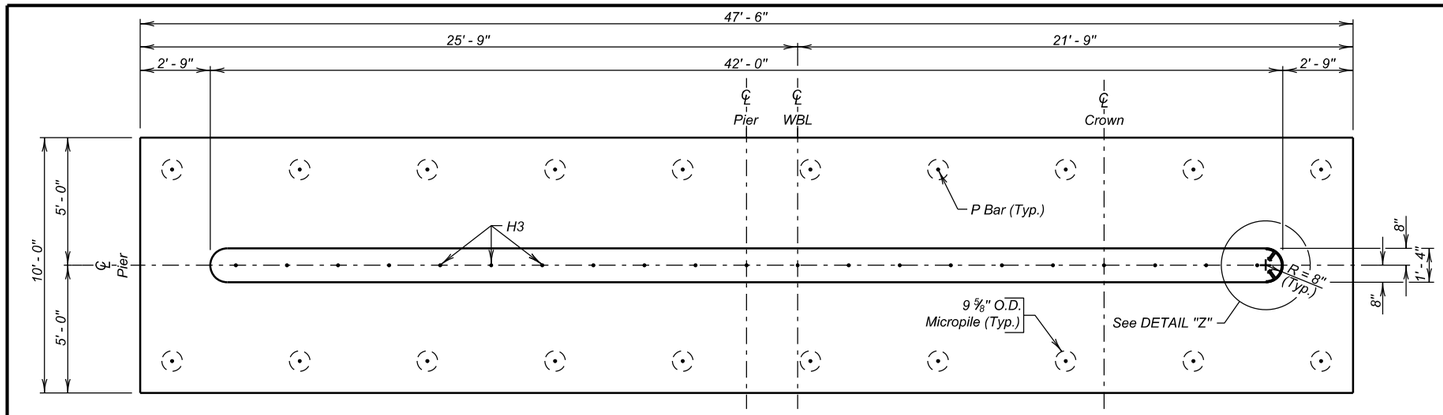

PLAN

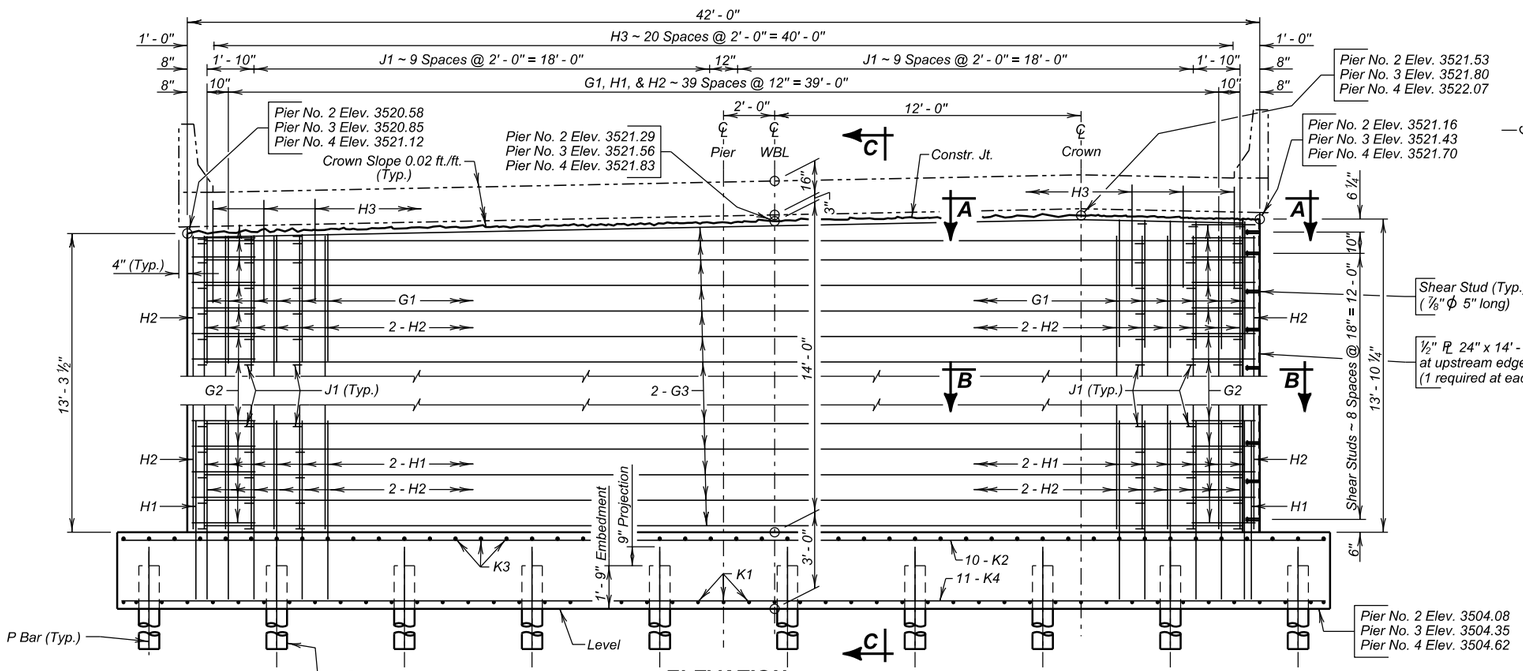

ELEVATION

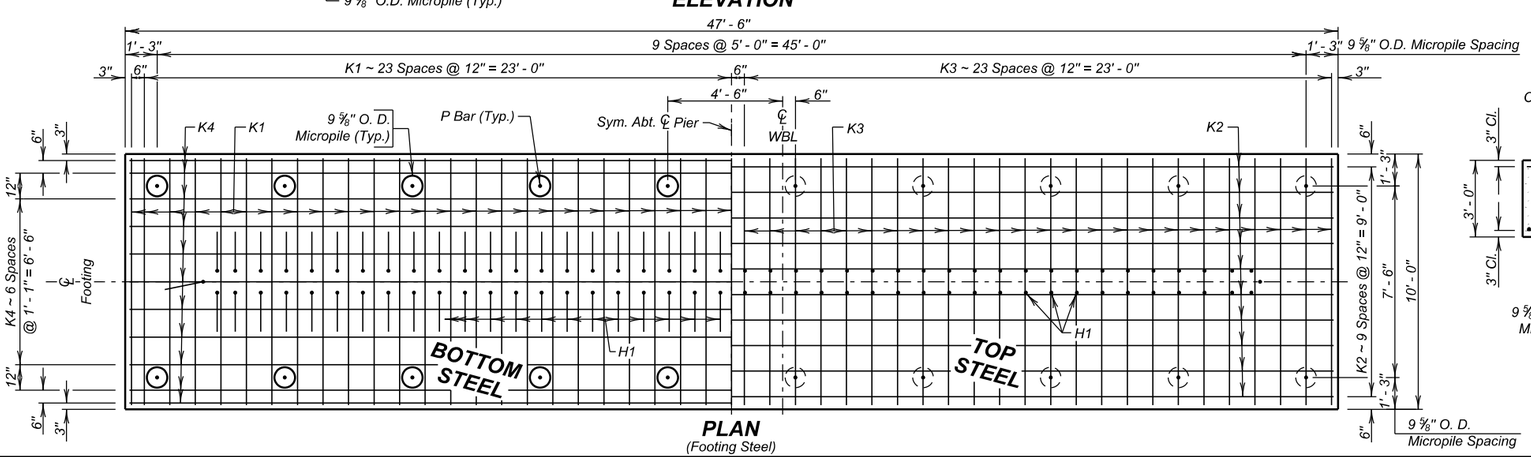

PLAN
(Footing Steel)

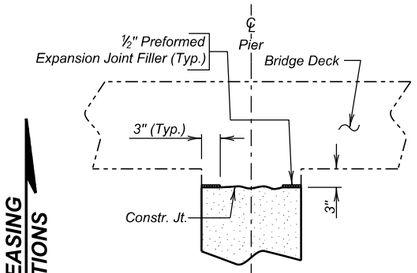

DETAIL "X"
(Resteel not shown)

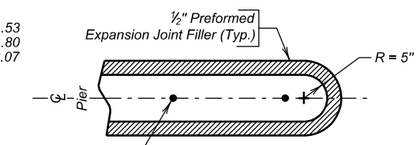

VIEW A - A
(Resteel and Bridge Deck not shown)

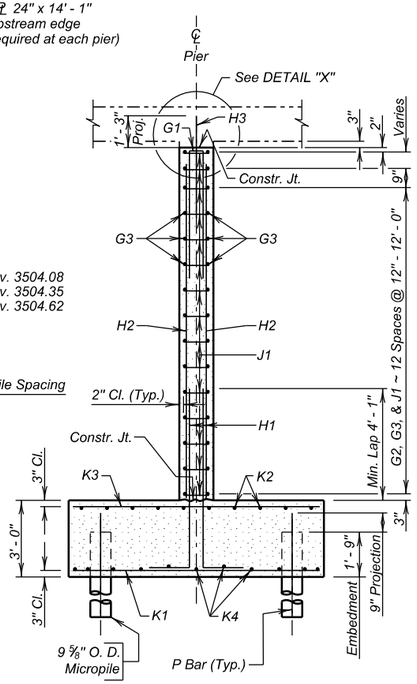

SEC. C - C

REINFORCING SCHEDULE
(For One Pier - 3 Required)

Mk.	No.	Size	Length	Type
G1	42	9	10' - 11"	17
G2	26	4	5' - 7"	S11
G3	26	4	40' - 8"	Str.
H1	86	9	7' - 11"	17A
H2	86	9	13' - 1"	Str.
H3	21	7	4' - 0"	Str.
J1	308	4	1' - 9"	T9
K1	49	8	9' - 8"	Str.
K2	10	4	47' - 2"	Str.
K3	48	4	9' - 8"	Str.
K4	11	5	47' - 2"	Str.

Bending Details

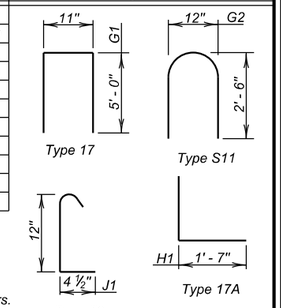

NOTE:
All dimensions are out to out of bars.
Δ Bars to be epoxy coated.

ESTIMATED QUANTITIES

ITEM	UNIT	QUANTITY Pier No. 2	Pier No. 3	Pier No. 4
Class A45 Concrete, Bridge	Cu. Yd.	81.5	81.5	81.5
Reinforcing Steel	Lb.	11293	11293	11293
Epoxy Coated Reinforcing Steel	Lb.	172	172	172
Structure Excavation, Bridge	Cu. Yd.	112.6	88.8	102.5
Micropile	Each	20	20	20
Micropile Proof Load Test	Each	1	1	1

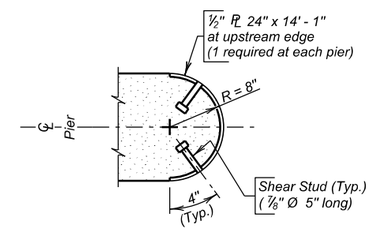

DETAIL "Z"

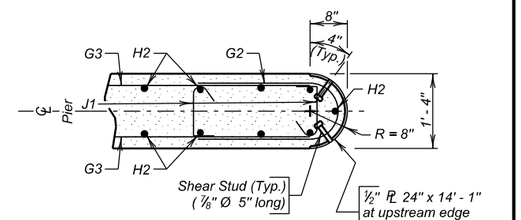

SEC. B - B

PIER DETAILS
FOR
WESTBOUND LANES

150' - 6" CONTINUOUS CONCRETE BRIDGE

40' - 0" ROADWAY — 0° SKEW
OVER LITTLE ELK CREEK — SEC. 4-T3N-R6E
STA. 206 + 24.93 TO 207 + 75.43 — IM 0901(38)40
STR. NO. 47-085-545 — HL-93

MEADE COUNTY
S. D. DEPT. OF TRANSPORTATION
FEBRUARY 2015

DESIGNED BY	CK. DES. BY	DRAFTED BY	
TB/PW	SK	GW/MG	Steve A Johnson BRIDGE ENGINEER
MEAD5580	5580WI09		

STATE OF	PROJECT	SHEET NO.	TOTAL SHEETS
S.D.	IM 0901(38)40	E99	E199

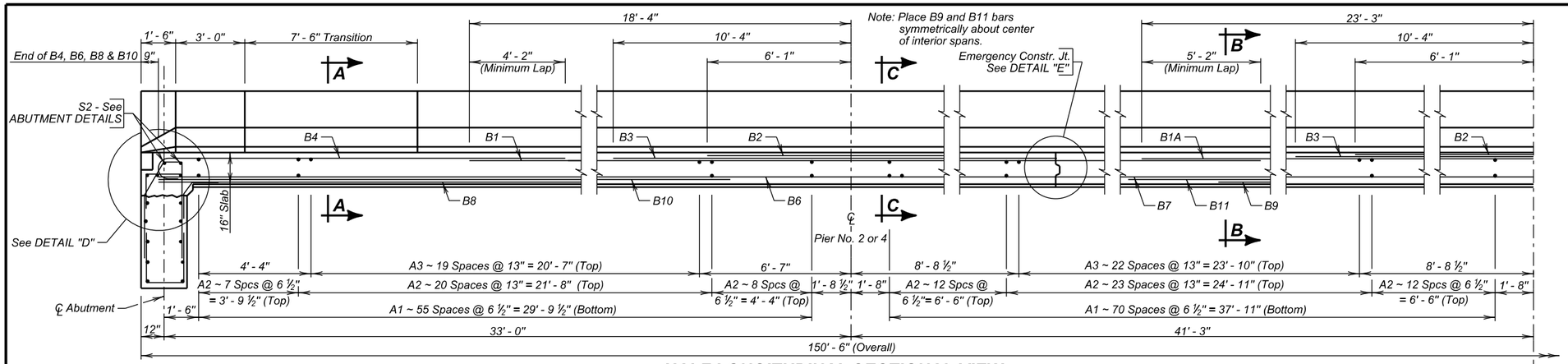

HALF LONGITUDINAL SECTIONAL VIEW

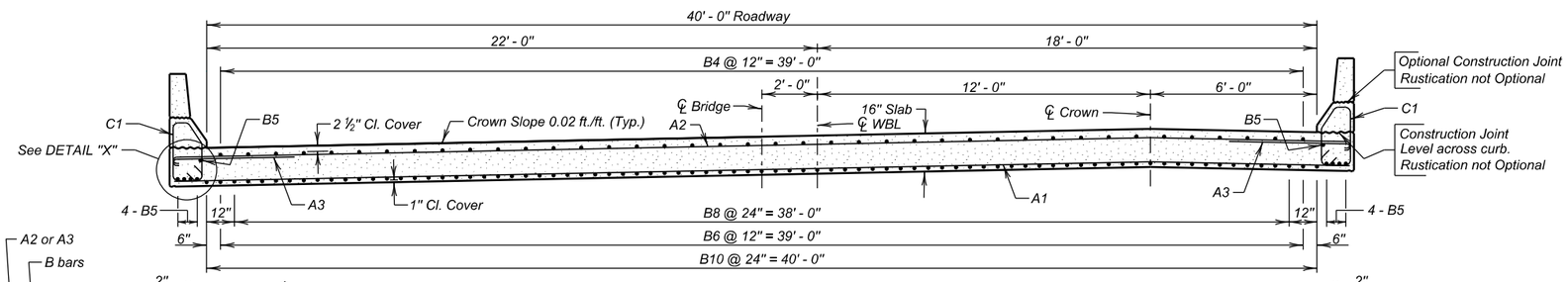

SEC. A - A

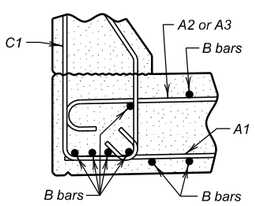

DETAIL "X"

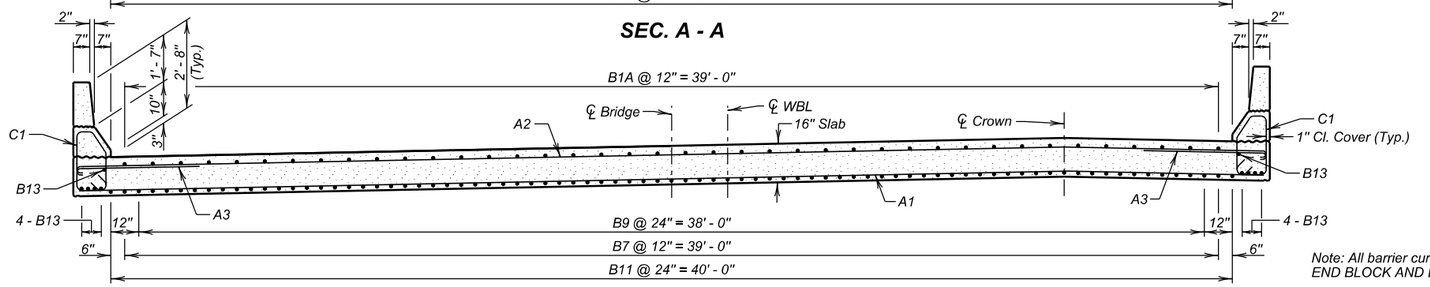

Note: All barrier curb details shown on END BLOCK AND BARRIER CURB sheet.

SEC. B - B

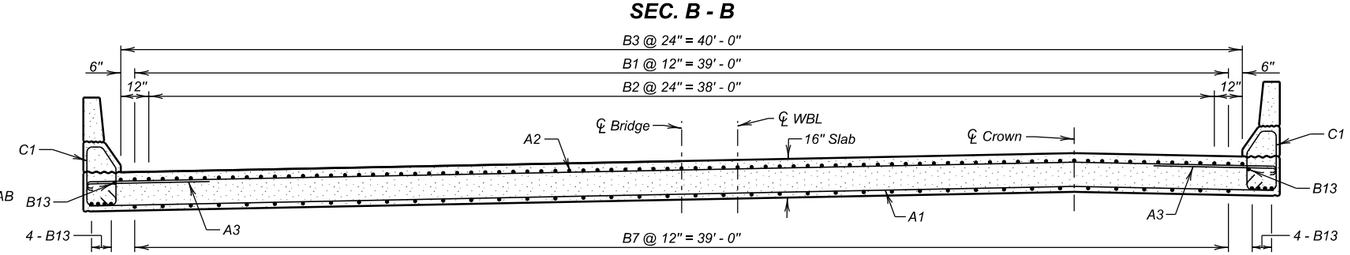

△ See DETAILS OF APPROACH SLAB ADJACENT TO BRIDGE sheet for location of Z1 bars and Mechanical Rebar Splices.

SEC. C - C

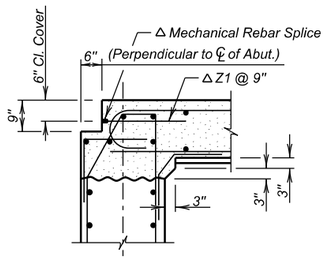

DETAIL "D"

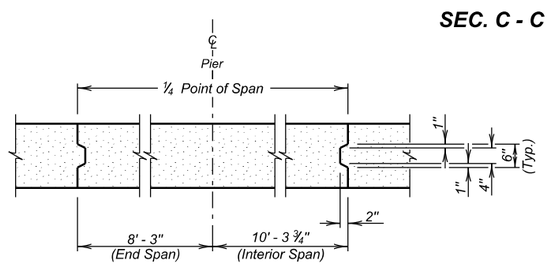

DETAIL "E"

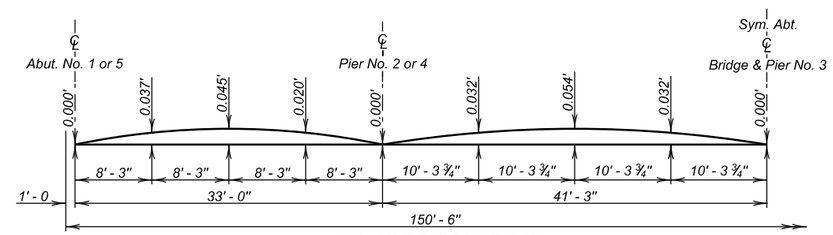

CAMBER DIAGRAM

Camber is calculated for dead load deflection plus plastic flow and has been added to the proposed grade elevations at the respective stations to establish the elevations of the top of the finished roadway slab.

REINFORCING SCHEDULE

Mk.	No.	Size	Length	Type
A1	254	5	42'- 4"	Str.
A2	168	4	43' - 9"	1
A3	172	4	8'- 5"	1A
B1	80	9	41' - 6"	Str.
B1A	40	9	46' - 6"	Str.
B2	60	10	12' - 2"	Str.
B3	63	9	20' - 8"	Str.
B4	80	8	20' - 1"	1A
B5	16	5	33' - 9"	Str.
B6	80	8	33' - 3"	Str.
B7	80	8	41 '- 3"	Str.
B8	40	8	21' - 10"	Str.
B9	40	8	18' - 10"	Str.
B10	42	9	26' - 3"	Str.
B11	42	8	26' - 8"	Str.
B12	36	4	43' - 8"	Str.
B13	16	5	41' - 3"	Str.
B15	12	5	15' - 0"	Str.
B16	6	4	49' - 10"	Str.
B17	8	4	8' - 6"	19B
B18	12	8	4' - 3"	19B
B19	12	5	2' - 4"	Str.
B20	12	6	4' - 0"	17A
# B21	12	4	50' - 9"	Str.
C1	284	5	6' - 8"	T1A
C2	256	5	5' - 1"	S11
C3	4	5	5' - 0"	S11
C4	4	5	5' - 0"	S11
C5	4	5	5' - 0"	S11
C6	4	5	6' - 8"	T1
C7	4	5	6' - 9"	T1
C8	4	5	6' - 11"	T1
C9	4	5	7' - 0"	T1
C10	16	6	6' - 11"	T1A
C11	16	5	7' - 1"	T1
C12	4	6	6' - 5"	17
C13	4	5	5' - 4"	17
△ Z1	106	7	2' - 0"	Str.

Bending Details

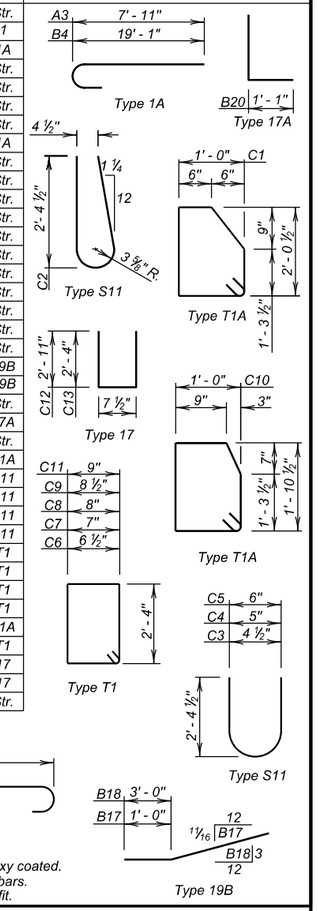

NOTES -
All reinforcing steel shall be epoxy coated.
All dimensions are out to out of bars.
Bend in field as necessary to fit.

ESTIMATED QUANTITIES

ITEM	UNIT	QUANTITY
Class A45 Concrete, Bridge Deck	Cu. Yd.	343.7
Epoxy Coated Reinforcing Steel	Lb.	81223
No. 7 Rebar Splice	Ea.	106
Concrete Penetrating Sealer	Sq. Yd.	669

SUPERSTRUCTURE DETAILS

FOR

WESTBOUND LANES

150' - 6" CONTINUOUS CONCRETE BRIDGE

40' - 0" ROADWAY — 0° SKEW
OVER LITTLE ELK CREEK — SEC. 4-T3N-R6E
STA. 206 + 24.93 TO 207 + 75.43 — IM 0901(38)40
STR. NO. 47-085-545 — HL-93

MEADE COUNTY

S. D. DEPT. OF TRANSPORTATION

FEBRUARY 2015

DESIGNED BY	CK. DES. BY	DRAFTED BY	
TB/PW	SK	GW/MG	Steve A Johnson BRIDGE ENGINEER
MEAD5580	5580WI10		

STATE OF	PROJECT	SHEET NO.	TOTAL SHEETS
S.D.	IM 0901(38)40	E100	E199

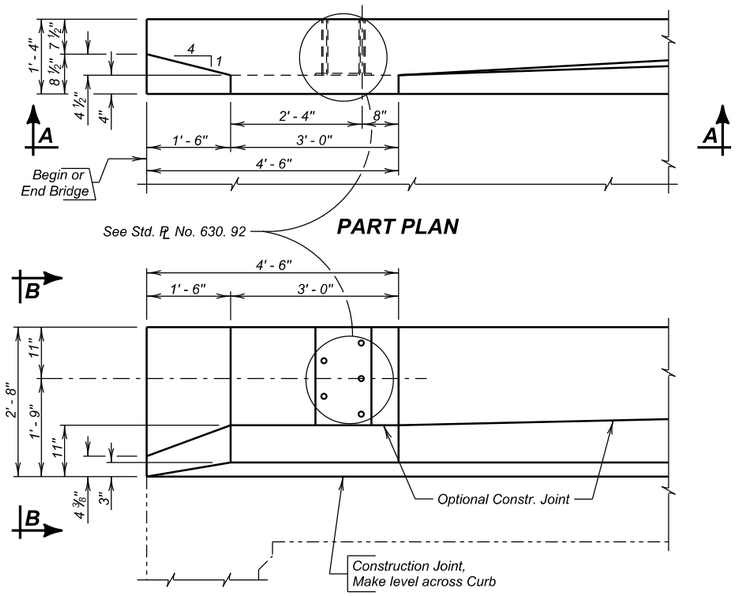

PART PLAN

VIEW A - A

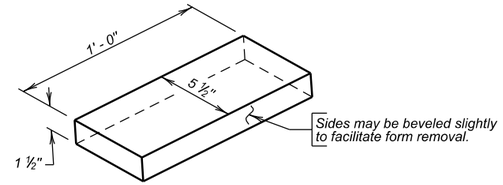

RECESS DETAIL

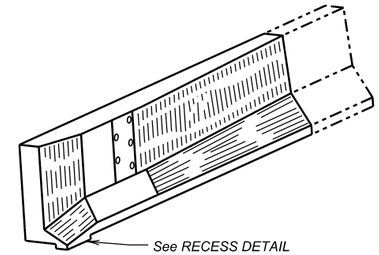

ISOMETRIC VIEW

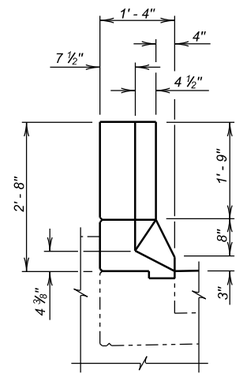

VIEW B - B

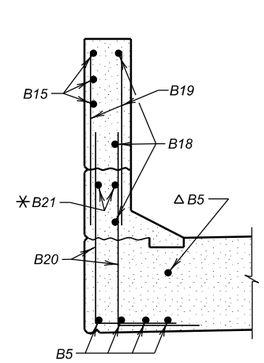

SEC. C - C

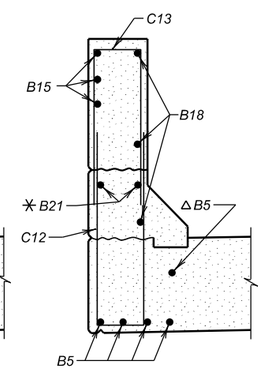

SEC. D - D

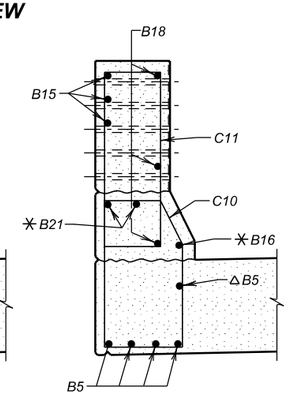

SEC. E - E

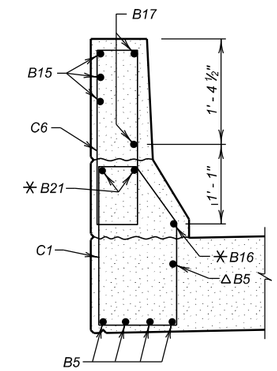

SEC. F - F

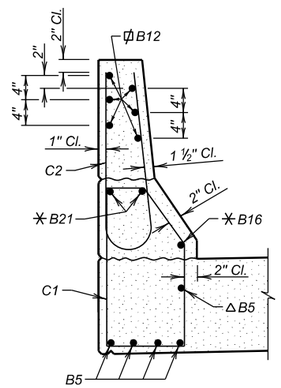

SEC. G - G

△Place as shown in SUPERSTRUCTURE DETAILS.

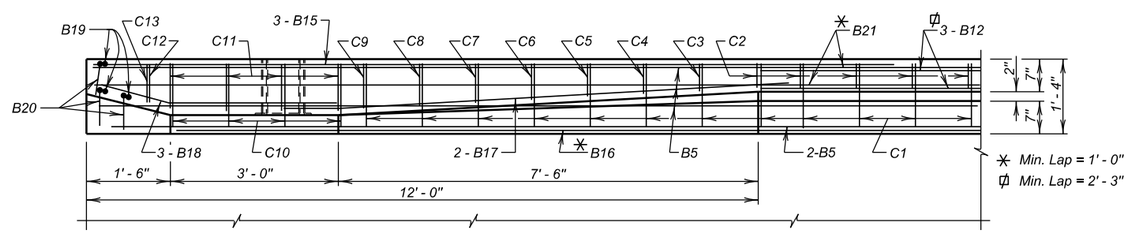

PLAN

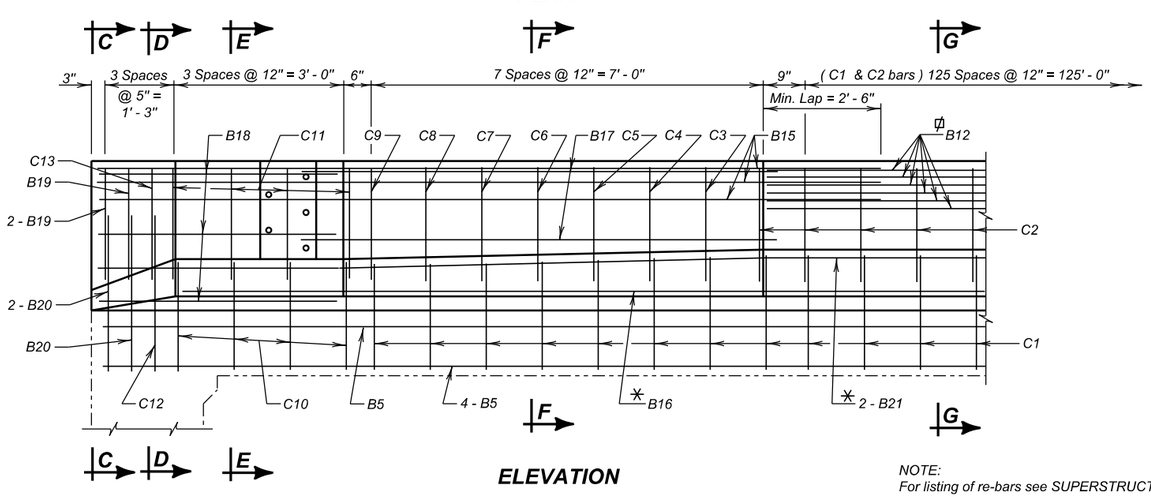

ELEVATION

NOTE:
For listing of re-bars see SUPERSTRUCTURE DETAILS.

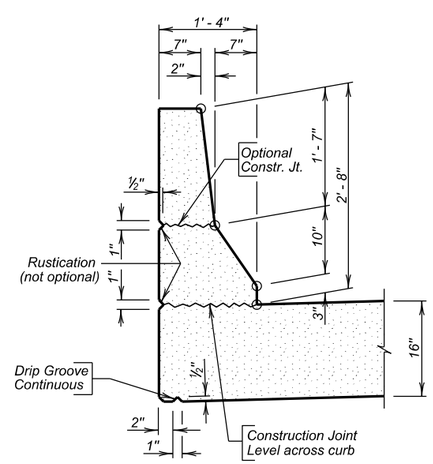

BARRIER DETAILS

END BLOCK AND BARRIER CURB DETAILS

FOR

WESTBOUND LANES

150' - 6" CONTINUOUS CONCRETE BRIDGE

40' - 0" ROADWAY — 0° SKEW
OVER LITTLE ELK CREEK — SEC. 4-T3N-R6E
STA. 206 + 24.93 TO 207 + 75.43 — IM 0901(38)40
STR. NO. 47-085-545 — HL-93

MEADE COUNTY
S. D. DEPT. OF TRANSPORTATION
FEBRUARY 2015

DESIGNED BY	CK. DES. BY	DRAFTED BY	
TB/PW	SK	GW/MG	Steve A Johnson BRIDGE ENGINEER
MEAD5580	5580WI11		

STATE OF	PROJECT	SHEET NO.	TOTAL SHEETS
S.D.	IM 0901(38)40	E101	E199

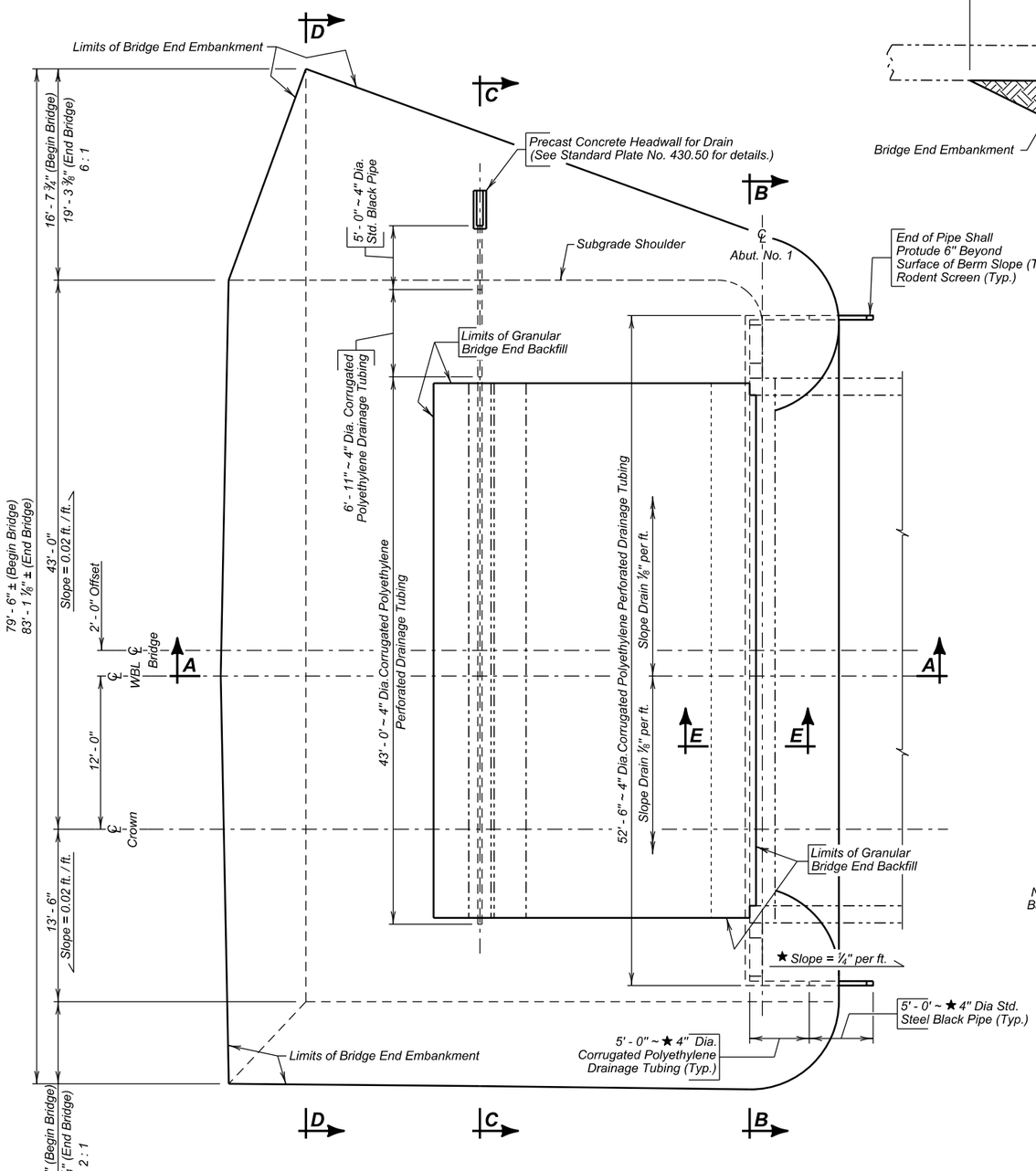

PLAN

(Bridge End Backfill shown adjacent to Abut. No. 1
Abut. No. 5 similar opposite hand except as shown.)

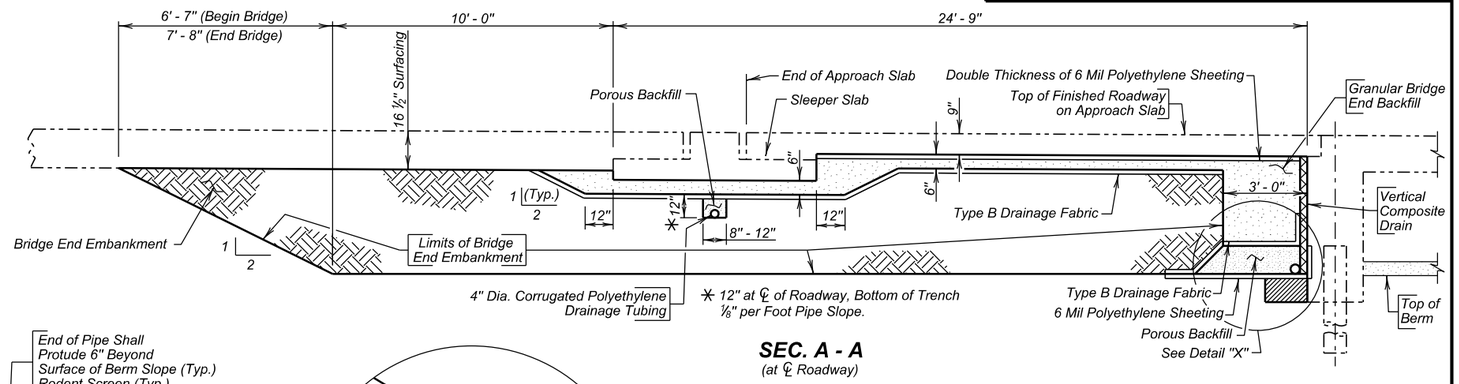

SEC. A - A

(at ℄ Roadway)

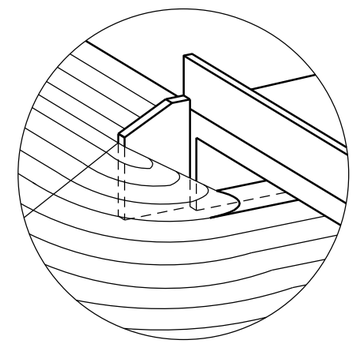

SPILL CONE DETAIL AT EMBANKMENT

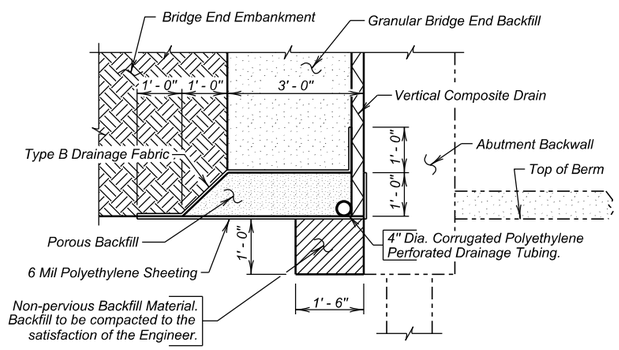

DETAIL "X"

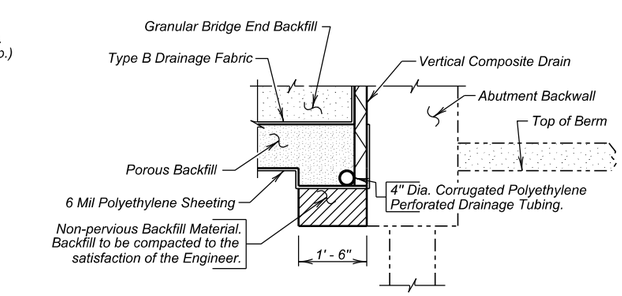

SEC. E - E

ESTIMATED QUANTITIES

(For Two Abutments)

ITEM	UNIT	QUANTITY
Granular Bridge End Backfill	Cu. Yd.	71.1
∡ Bridge End Embankment	Cu. Yd.	665.0
⌀ Porous Backfill	Ton	31.7
4" Underdrain Pipe	Ft.	255
⊕ Approach Slab Underdrain Excavation	Cu. Yd.	2.7
Precast Concrete Headwall for Drain	Each	2

1. 191 ft. 4" dia. Corrugated Polyethylene Perforated Drainage Tubing.
2. 34 ft. 4" dia. Corrugated Polyethylene Drainage Tubing.
3. 30 ft. 4" dia. Std. Black Steel Pipe with Rodent Screens.
4. 354 sq. ft. Vertical Composite Drain

Items 1 thru 4 are approximate quantities contained in the 4" Underdrain Pipe and are for information only.

5. 403 sq. yd. 6 mil Polyethylene Sheeting, not including laps.
6. 308 sq. yd. Type B Drainage Fabric.

Items 5 and 6 are approximate quantities contained in the Granular Bridge End Backfill and are for information only.

⌀ For estimating purposes only, a factor of 1.89 tons/cu. yd. was used to convert cu. yds. to tons.

∡ Shrinkage Factor of 1.25 Used.

⊕ Quantity based on a 12" wide trench.

DETAILS OF BRIDGE END BACKFILL (A)

FOR

WESTBOUND LANES

150' - 6" CONTINUOUS CONCRETE BRIDGE

40' - 0" ROADWAY — 0° SKEW
OVER LITTLE ELK CREEK — SEC. 4-T3N-R6E
STA. 206 + 24.93 TO 207 + 75.43 — IM 0901(38)40
STR. NO. 47-085-545 — HL-93

MEADE COUNTY
S. D. DEPT. OF TRANSPORTATION
FEBRUARY 2015

DESIGNED BY	CK. DES. BY	DRAFTED BY	
TB/PW	SK	BT	Steve A. Johnson BRIDGE ENGINEER
MEAD5580	5580WI12		

STATE OF	PROJECT	SHEET NO.	TOTAL SHEETS
S.D.	IM 0901(38)40	E102	E199

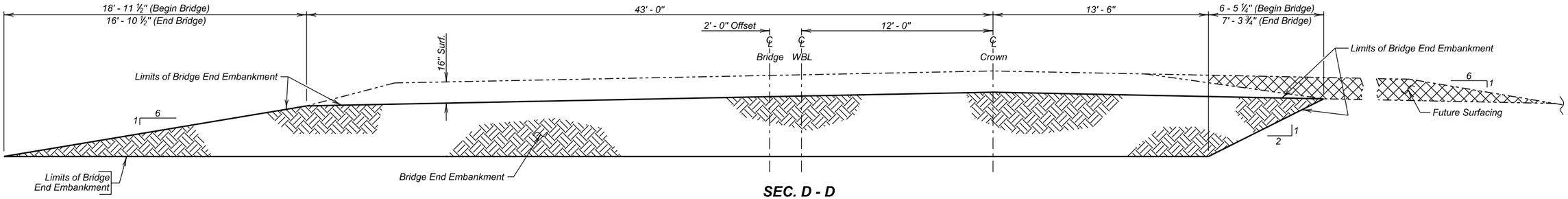

SEC. D - D

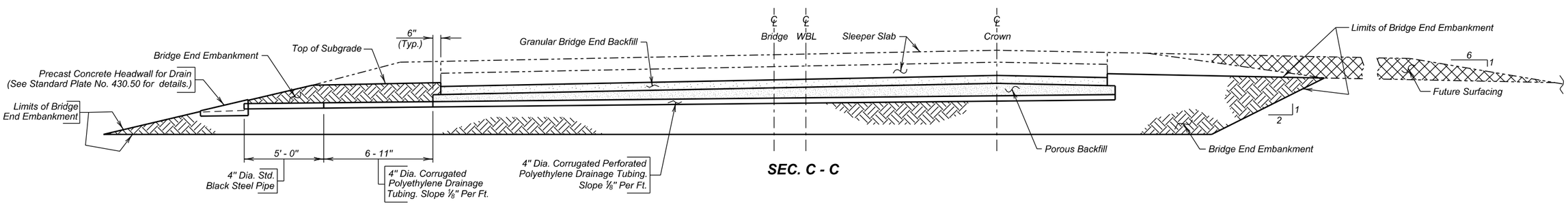

SEC. C - C

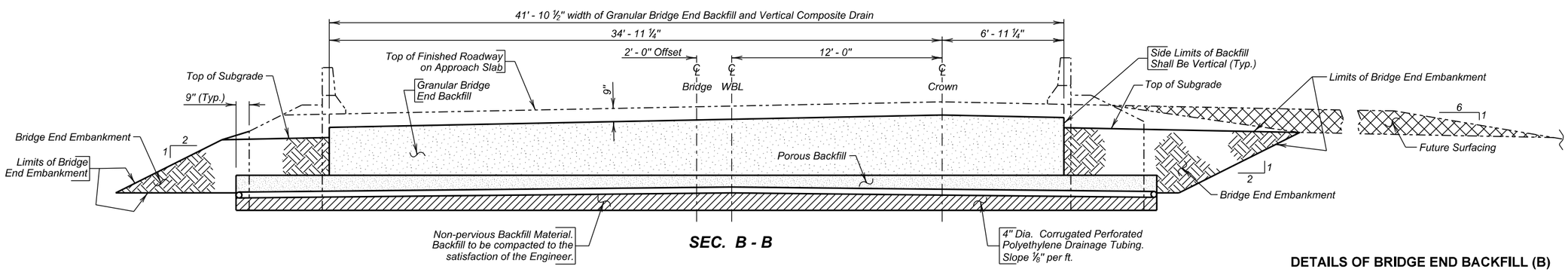

SEC. B - B

DETAILS OF BRIDGE END BACKFILL (B)

FOR

WESTBOUND LANES

150' - 6" CONTINUOUS CONCRETE BRIDGE

40' - 0" ROADWAY	0° SKEW
OVER LITTLE ELK CREEK	SEC. 4-T3N-R6E
STA. 206 + 24.93 TO 207 + 75.43	IM 0901(38)40
STR. NO. 47-085-545	HL-93

MEADE COUNTY

S. D. DEPT. OF TRANSPORTATION

FEBRUARY 2015

DESIGNED BY	CK. DES. BY	DRAFTED BY	
TB	SK	BT	Steve A Johnson BRIDGE ENGINEER
MEAD5580	5580WI13		

STATE OF	PROJECT	SHEET NO.	TOTAL SHEETS
S.D.	IM 0901(38)40	E103	E199

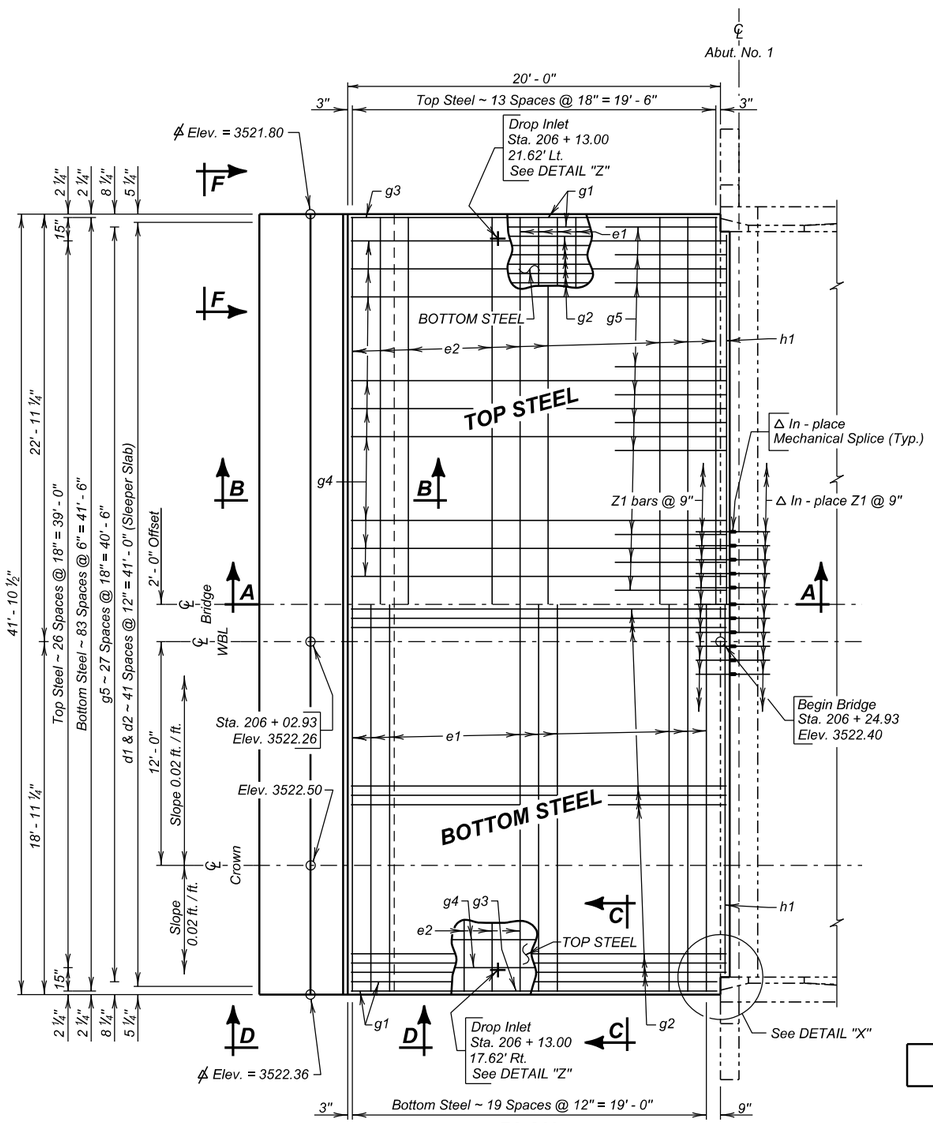

PLAN

(Shown adj. to Abut. No. 1, Abut No. 5 similar by rotation)

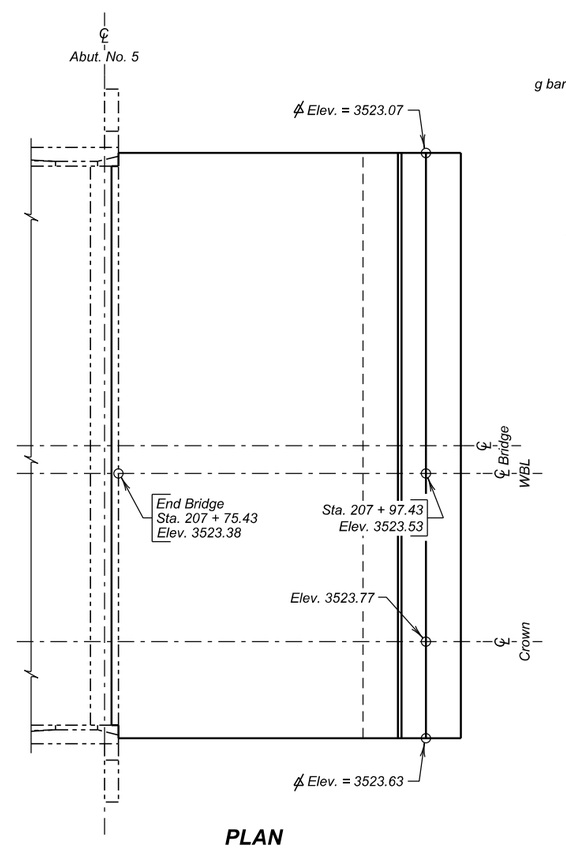

PLAN

(Shown adj. to Abut. No. 5)

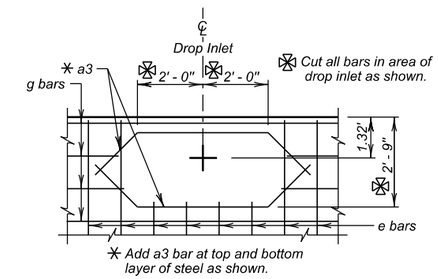

DETAIL "Z"

(Typical plan for steel when drop inlet is used.)

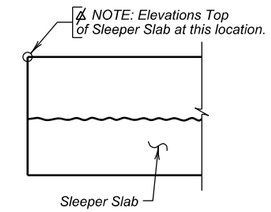

VIEW F - F

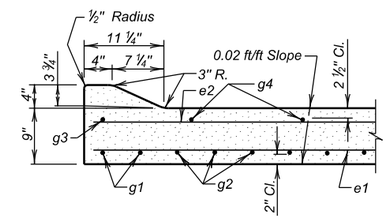

SEC. C - C

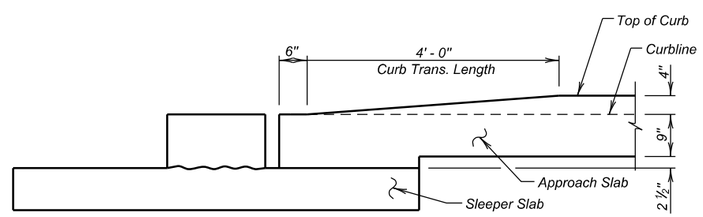

VIEW D - D

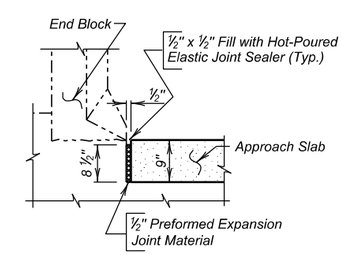

SEC. E - E

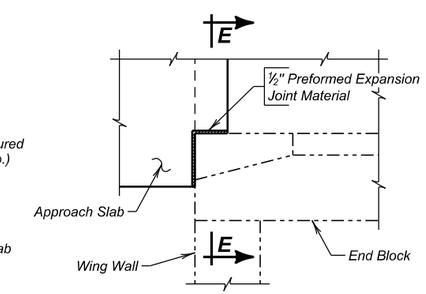

DETAIL "X"

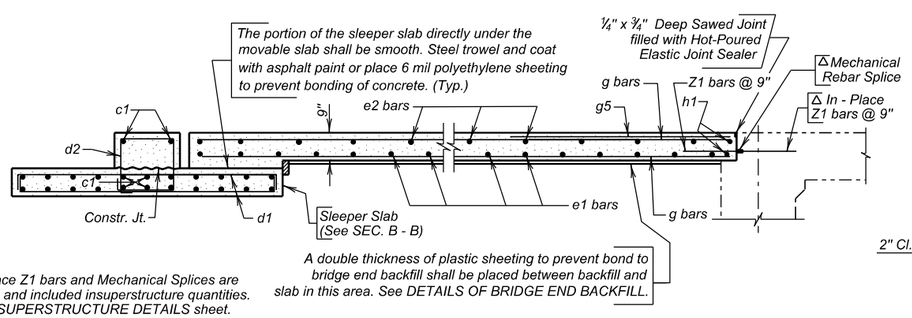

△ In-place Z1 bars and Mechanical Splices are listed and included insuperstructure quantities. See SUPERSTRUCTURE DETAILS sheet.

SEC. A - A

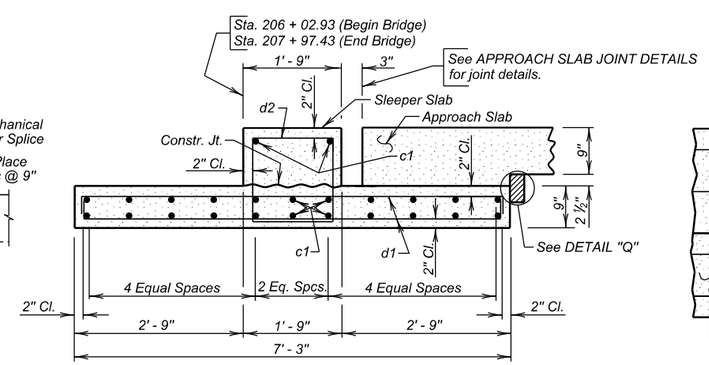

SEC. B - B

(Sleeper Slab)

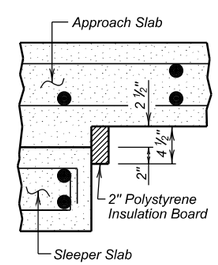

DETAIL "Q"

REINFORCING SCHEDULE

(For Two Approach Slabs & Two Sleeper Slabs)

Mk.	No.	Size	Length	Type
Sleeper Slabs				
c1	48	5	41' - 7"	Str.
d1	168	4	7' - 9"	2
d2	84	4	6' - 4"	T2
Approach Slabs				
a3	8	4	7' - 4"	19A
e1	40	6	41' - 7"	Str.
e2	28	4	41' - 7"	Str.
g1	8	8	19' - 8"	Str.
g2	160	8	20' - 2"	Str.
g3	4	4	19' - 8"	Str.
g4	54	4	20' - 2"	Str.
g5	56	4	6' - 0"	Str.
h1	4	6	39' - 8"	Str.
Z1	106	7	2' - 0"	Str.

Bending Details

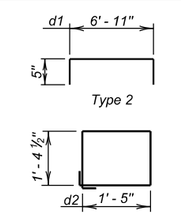

NOTES:
All bars to be epoxy coated.
All dimensions are out to out of bars.

ESTIMATED QUANTITIES

(For Two Approach Slabs and Two Sleeper Slabs)

ITEM	UNIT	QUANTITY
Concrete Approach Slab for Bridge	Sq. Yd.	190.6
Concrete Approach Sleeper Slab for Bridge	Sq. Yd.	67.5

1. 48.4 Cu. Yds. Concrete in Approach Slabs.
2. 14027 Lbs. Epoxy Coated Re-Steel in Approach Slabs.
3. 22.0 Cu. Yds. Concrete in Sleeper Slabs.
4. 3307 Lbs. Epoxy Coated Re-Steel in Sleeper Slabs.
5. 31.4 Sq. Ft. of 2" Polystyrene Insulation Board.

Items 1 thru 5 are approximate quantities contained in the above bid items and are for information only.

DETAILS OF APPROACH SLAB ADJACENT TO BRIDGE

FOR

WESTBOUND LANES

150' - 6" CONTINUOUS CONCRETE BRIDGE

40' - 0" ROADWAY — 0° SKEW
OVER LITTLE ELK CREEK — SEC. 4-T3N-R6E
STA. 206 + 24.93 TO 207 + 75.43 — IM 0901(38)40
STR. NO. 47-085-545 — HL-93

MEADE COUNTY
S. D. DEPT. OF TRANSPORTATION
FEBRUARY 2015

DESIGNED BY	CK. DES. BY	DRAFTED BY	
TB/PW	SK	GW/MG	Steve A Johnson BRIDGE ENGINEER
MEAD5580	5580WI14		

STATE OF	PROJECT	SHEET NO.	TOTAL SHEETS
S.D.	IM 0901(38)40	E104	E199

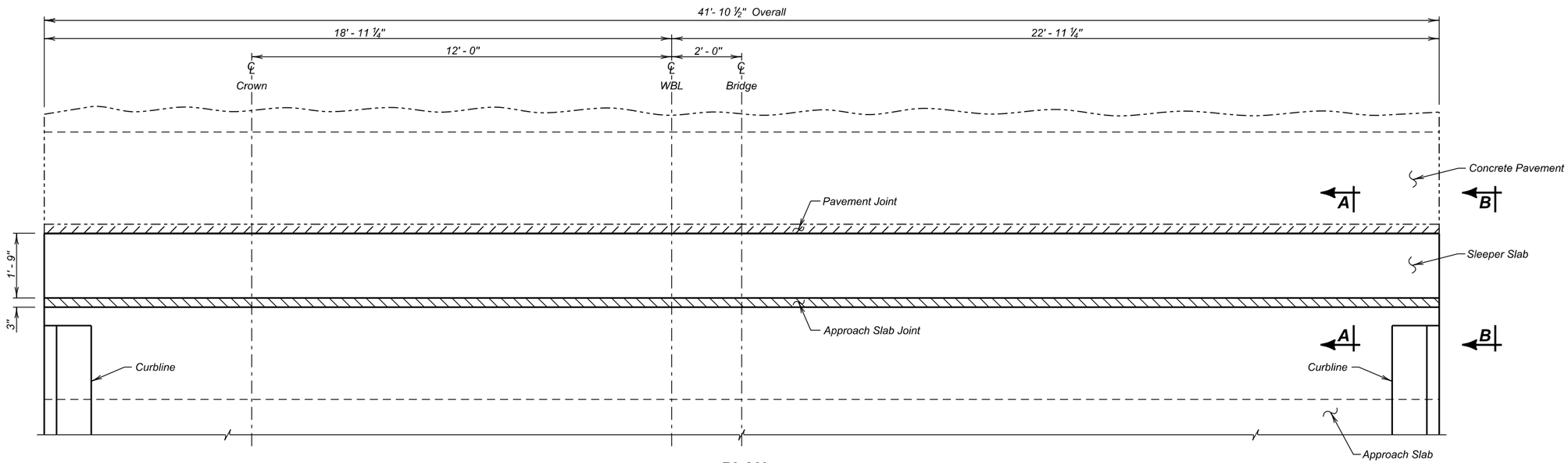

PLAN

GENERAL NOTES

1. The Membrane Sealant shall be on the approved product list for Membrane Sealant Expansion Joints.
2. The manufacturer shall supply the membrane sealant in packaging that precompresses the membrane sealant. The precompressed dimension shall be as recommended by the sealant manufacturer, however, in no case shall the precompressed dimension exceed 75% of the joint opening width. The foam sealant shall be slowly self expanding to permit workers ample time to install the membrane sealant before the membrane sealant exceeds the joint opening width.
3. The membrane sealant shall provide a water tight seal throughout a joint movement range of + 25% (minimum) from the specified joint opening dimension.
4. The membrane sealant shall be supplied in pieces a minimum of 5 feet in length. The foam sealant shall be ultra-violet and ozone resistant.
5. The bonding adhesive used to attach the membrane sealant to the adjacent concrete shall be approved by the membrane sealant manufacturer.
6. Adhesive used to join adjacent pieces of the membrane sealant shall be as recommended by the manufacturer.
7. If styrofoam filler material is used in the construction, it shall be closed cell and water-tight as approved by the Engineer.
8. The minimum ambient air temperature at the time of joint installation and adhesive curing shall be 40° F.
9. A technical representative of the membrane sealant manufacturer shall be present at the jobsite during installation. The technical representative shall be knowledgeable in the correct procedures for the preparation and installation of the joint material to ensure the Contractor installs the joint to the manufacturers' recommendations.
10. Surfaces that will be in contact with the membrane sealant shall be thoroughly cleaned by abrasive blasting to remove all laitance and contaminants (such as oil, curing compounds, etc.) from the surface. At a minimum, two passes of abrasive blasting with the nozzle held at an angle to within 1 to 2 inches of the surface will be required. Cleaning of the surfaces with solvents, wire brushing, or grinding shall not be permitted.
11. After abrasive blasting, but immediately prior to membrane joint installation, the entire joint contact surface shall be air blasted. The air compressor used for joint cleaning shall be equipped with trap devices capable of providing moisture-free and oil-free air at a recommended pressure of 90 psi. To obtain complete bonding with the adhesive, the adjacent surfaces must be dry and clean. The contact surfaces for the joint shall be visually inspected by the Engineer immediately prior to joint installation to verify the surface is dry and clean.
12. Individual spliced sections shall be installed as per the manufacturers' recommendations. The membrane joint sealant manufacturer shall submit a detailed installation procedure to the Engineer at least 5 days prior to joint installation for his review.
13. Traffic shall not be allowed on the joint until the bonding adhesive has had time to cure, as recommended by the manufacturer.
14. Use plywood or other material to protect concrete adjacent to the joint from spalling before any equipment is moved across the joint. Any spall areas will be repaired at the Contractor's expense by breaking out and replacing adjacent concrete, as approved by the Engineer.
15. The Membrane Sealant Expansion Joint will be measured in feet to the nearest one-tenth foot, complete in place. Measurement will be made of the overall horizontal length. The Membrane Sealant Expansion Joint will be paid for at the contract unit price per foot complete in place. Payment for this item shall be full compensation for furnishing all the required materials in place, including labor, equipment and incidentals necessary to complete the work in accordance with the plans and the foregoing specifications.

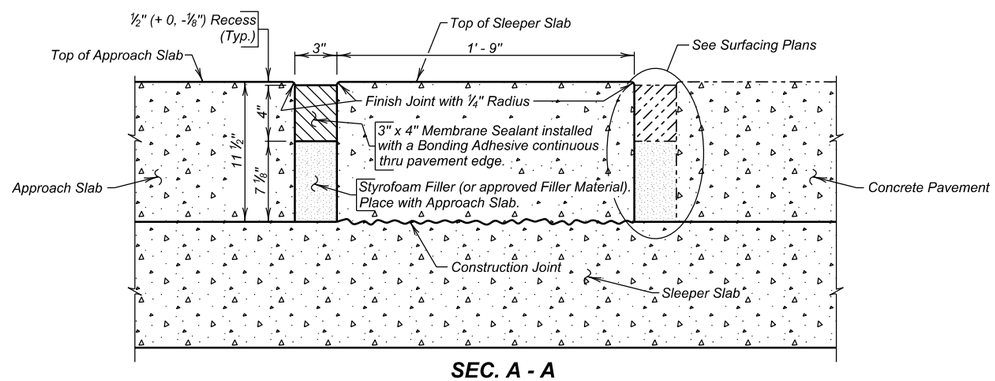

SEC. A - A

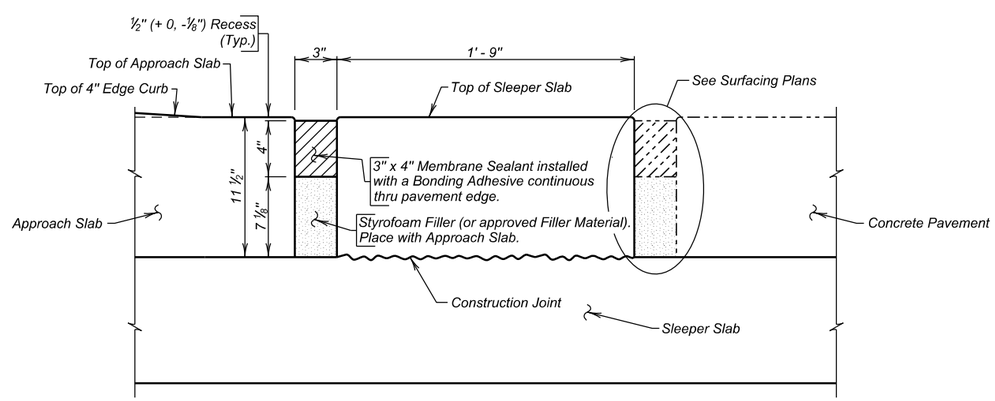

VIEW B - B

ESTIMATED QUANTITIES
(For Two Approach Slabs)

ITEM	UNIT	QUANTITY
Membrane Sealant Expansion Joint	Ft.	83.8

APPROACH SLAB JOINT DETAILS

FOR

WESTBOUND LANES

150' - 6" CONTINUOUS CONCRETE BRIDGE

40' - 0" ROADWAY — 0° SKEW
OVER LITTLE ELK CREEK — SEC. 4-T3N-R6E
STA. 206 + 24.93 TO 207 + 75.43 — IM 0901(38)40
STR. NO. 47-085-545 — HL-93

MEADE COUNTY

S. D. DEPT. OF TRANSPORTATION

FEBRUARY 2015

DESIGNED BY	CK. DES. BY	DRAFTED BY	
TB/PW	SK	GW/MG	Steve A. Johnson
MEAD5580	5580WI15		BRIDGE ENGINEER

STATE OF	PROJECT	SHEET NO.	TOTAL SHEETS
S.D.	IM 0901(38)40	E105	E199

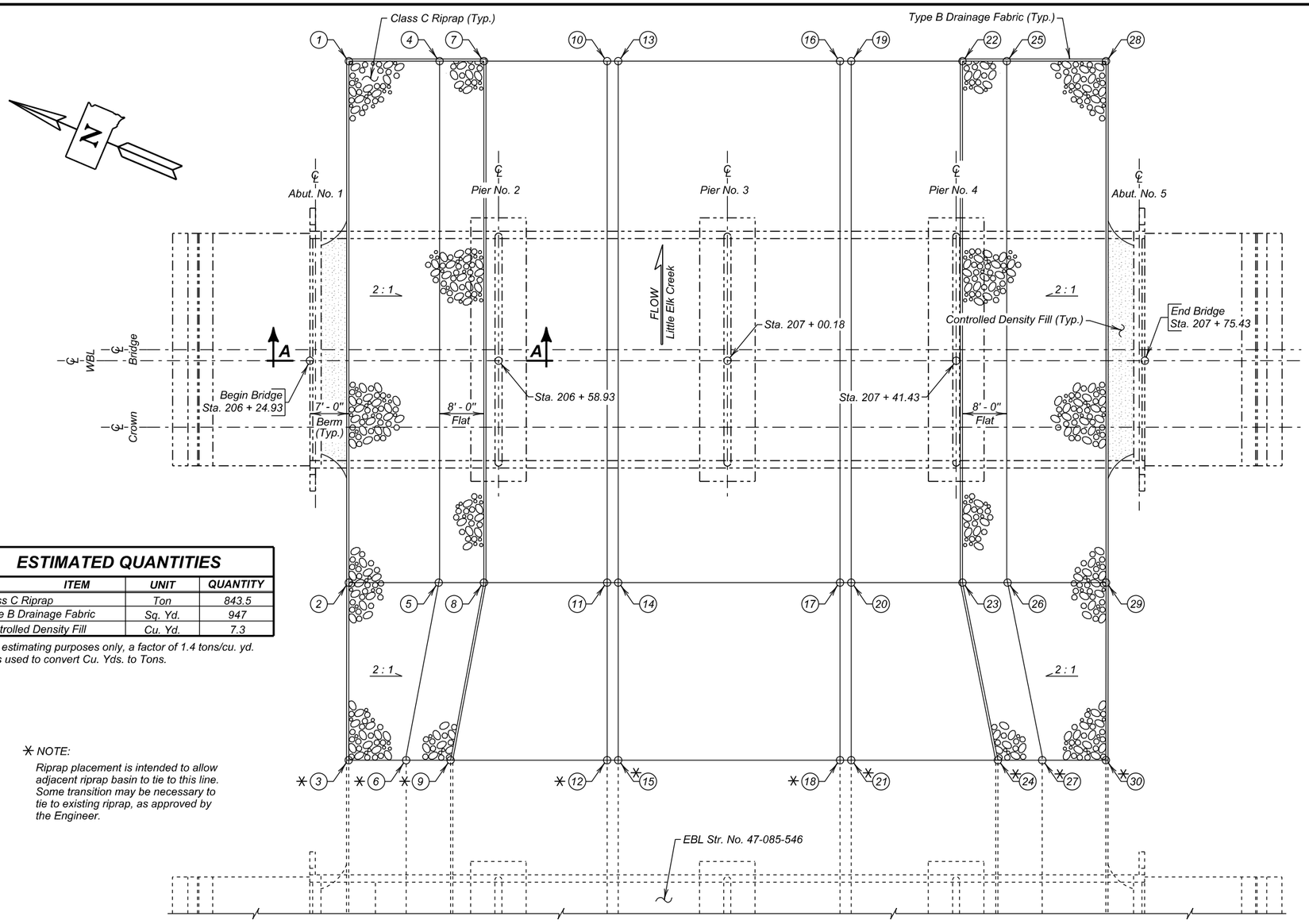

PLAN

TABLE OF POINTS

POINT	STATION	OFFSET	ELEVATION
1	206 + 31.93	53.15' Lt.	Elev. 3517.50
2	206 + 31.93	40.00' Rt.	Elev. 3517.50
3	206 + 31.93	72.00' Rt.	Elev. 3517.50
4	206 + 47.30	53.15' Lt.	Elev. 3510.10
5	206 + 47.30	40.00' Rt.	Elev. 3510.10
6	206 + 42.28	72.00' Rt.	Elev. 3510.10
7	206 + 55.30	53.15' Lt.	Elev. 3510.10
8	206 + 55.30	40.00' Rt.	Elev. 3510.10
9	206 + 50.28	72.00' Rt.	Elev. 3510.10
10	206 + 77.31	53.15' Lt.	Elev. 3510.10
11	206 + 77.31	40.00' Rt.	Elev. 3510.10
12	206 + 77.31	72.00' Rt.	Elev. 3510.10
13	206 + 79.31	53.15' Lt.	Elev. 3509.10
14	206 + 79.31	40.00' Rt.	Elev. 3509.10
15	206 + 79.31	72.00' Rt.	Elev. 3509.10
16	207 + 19.31	53.15' Lt.	Elev. 3509.10
17	207 + 19.31	40.00' Rt.	Elev. 3509.10
18	207 + 19.31	72.00' Rt.	Elev. 3509.10
19	207 + 21.31	53.15' Lt.	Elev. 3510.10
20	207 + 21.31	40.00' Rt.	Elev. 3510.10
21	207 + 21.31	72.00' Rt.	Elev. 3510.10
22	207 + 43.30	53.15' Lt.	Elev. 3510.10
23	207 + 43.30	40.00' Rt.	Elev. 3510.10
24	207 + 48.94	72.00' Rt.	Elev. 3510.10
25	207 + 51.30	53.15' Lt.	Elev. 3510.10
26	207 + 51.30	40.00' Rt.	Elev. 3510.10
27	207 + 56.94	72.00' Rt.	Elev. 3510.10
28	207 + 68.43	53.15' Lt.	Elev. 3517.47
29	207 + 68.43	40.00' Rt.	Elev. 3517.47
30	207 + 68.43	72.00' Rt.	Elev. 3517.47

ESTIMATED QUANTITIES

ITEM	UNIT	QUANTITY
⊛ Class C Riprap	Ton	843.5
Type B Drainage Fabric	Sq. Yd.	947
Controlled Density Fill	Cu. Yd.	7.3

⊛ For estimating purposes only, a factor of 1.4 tons/cu. yd. was used to convert Cu. Yds. to Tons.

✳ NOTE:

Riprap placement is intended to allow adjacent riprap basin to tie to this line. Some transition may be necessary to tie to existing riprap, as approved by the Engineer.

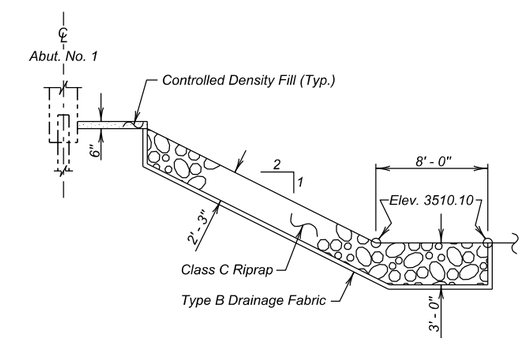

SEC. A - A

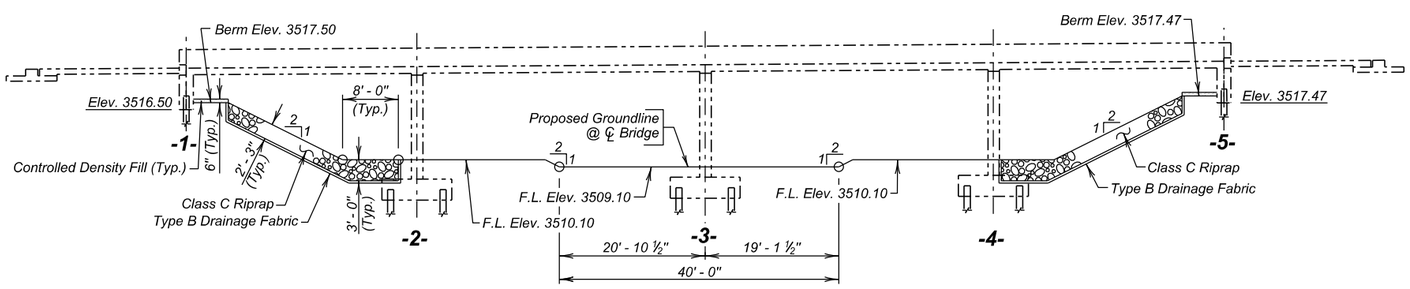

ELEVATION

RIPRAP DETAILS

FOR

WESTBOUND LANES

150' - 6" CONTINUOUS CONCRETE BRIDGE

40' - 0" ROADWAY — 0° SKEW
OVER LITTLE ELK CREEK — SEC. 4-T3N-R6E
STA. 206 + 24.93 TO 207 + 75.43 — IM 0901(38)40
STR. NO. 47-085-545 — HL-93

MEADE COUNTY

S. D. DEPT. OF TRANSPORTATION

FEBRUARY 2015

DESIGNED BY	CK. DES. BY	DRAFTED BY	
TB/PW	SK	GW/MG	Steve A Johnson BRIDGE ENGINEER
MEAD5580	5580WI16		

The elevations shown in these plans are based on the National Geodetic Survey (NGS) North American Vertical Datum of 1988 (NAVD88).

STATE OF	PROJECT	SHEET NO.	TOTAL SHEETS
S.D.	IM 0901(38)40	E106	E199

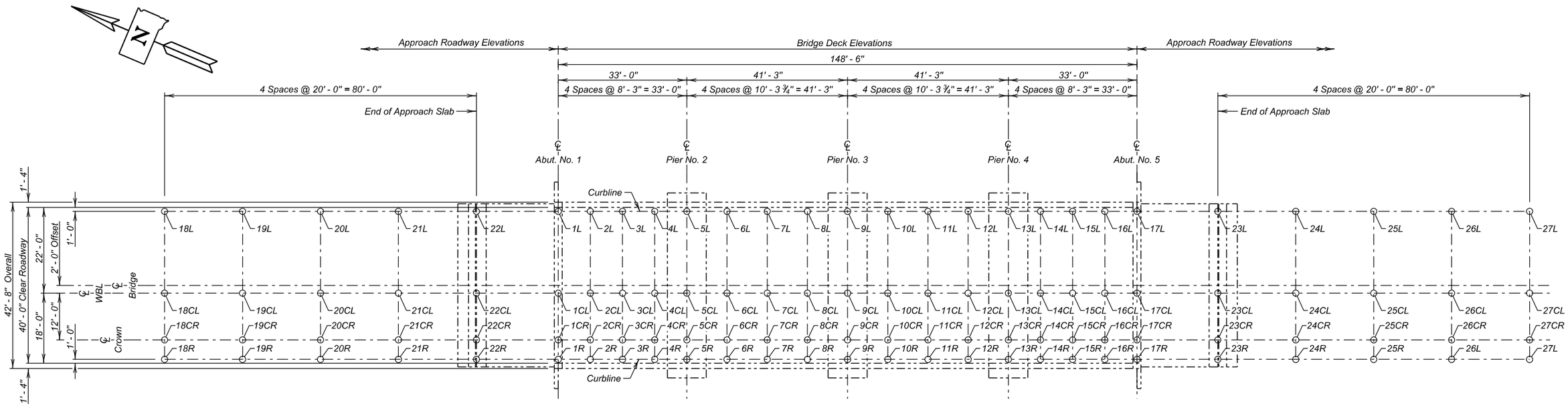

PLAN

Table of As-Built Elevations - Bridge Deck

Location	Elevation	Location	Elevation	Location	Elevation	Location	Elevation
1L		1CL		1CR		1R	
2L		2CL		2CR		2R	
3L		3CL		3CR		3R	
4L		4CL		4CR		4R	
5L		5CL		5CR		5R	
6L		6CL		6CR		6R	
7L		7CL		7CR		7R	
8L		8CL		8CR		8R	
9L		9CL		9CR		9R	
10L		10CL		10CR		10R	
11L		11CL		11CR		11R	
12L		12CL		12CR		12R	
13L		13CL		13CR		13R	
14L		14CL		14CR		14R	
15L		15CL		15CR		15R	
16L		16CL		16CR		16R	
17L		17CL		17CR		17R	

Table of As-Built Elevations - Approach Roadway

Location	Elevation	Location	Elevation	Location	Elevation	Location	Elevation
18L		18CL		18CR		18R	
19L		19CL		19CR		19R	
20L		20CL		20CR		20R	
21L		21CL		21CR		21R	
22L		22CL		22CR		22R	
23L		23CL		23CR		23R	
24L		24CL		24CR		24R	
25L		25CL		25CR		25R	
26L		26CL		26CR		26R	
27L		27CL		27CR		27R	

NOTE -
The Contractor shall be responsible for producing the As - Built Elevation Survey soon after construction is complete and before the bridge is opened to traffic. The As - Built Elevations of the Bridge shall be taken and recorded at the locations shown by the table on this sheet. The completed table shall be given to the Engineer who will forward a copy to the Office of Bridge Design and the Region Office.

Elevations - Bridge Survey Markers

Location	Station - Offset	Elevation
Begin Bridge		
End Bridge		

ESTIMATED QUANTITIES

ITEM	UNIT	QUANTITY
Bridge Elevation Survey	L. S.	Lump Sum

AS-BUILT ELEVATION SURVEY
FOR
WESTBOUND LANES

150' - 6" CONTINUOUS CONCRETE BRIDGE

40' - 0" ROADWAY — 0° SKEW
OVER LITTLE ELK CREEK — SEC. 4-T3N-R6E
STA. 206 + 24.93 TO 207 + 75.43 — IM 0901(38)40
STR. NO. 47-085-545 — HL-93

MEADE COUNTY
S. D. DEPT. OF TRANSPORTATION
FEBRUARY 2015

DESIGNED BY	CK. DES. BY	DRAFTED BY	
TB/PW	SK	GW/MG	Steve A Johnson BRIDGE ENGINEER
MEAD5580	5580WI20		

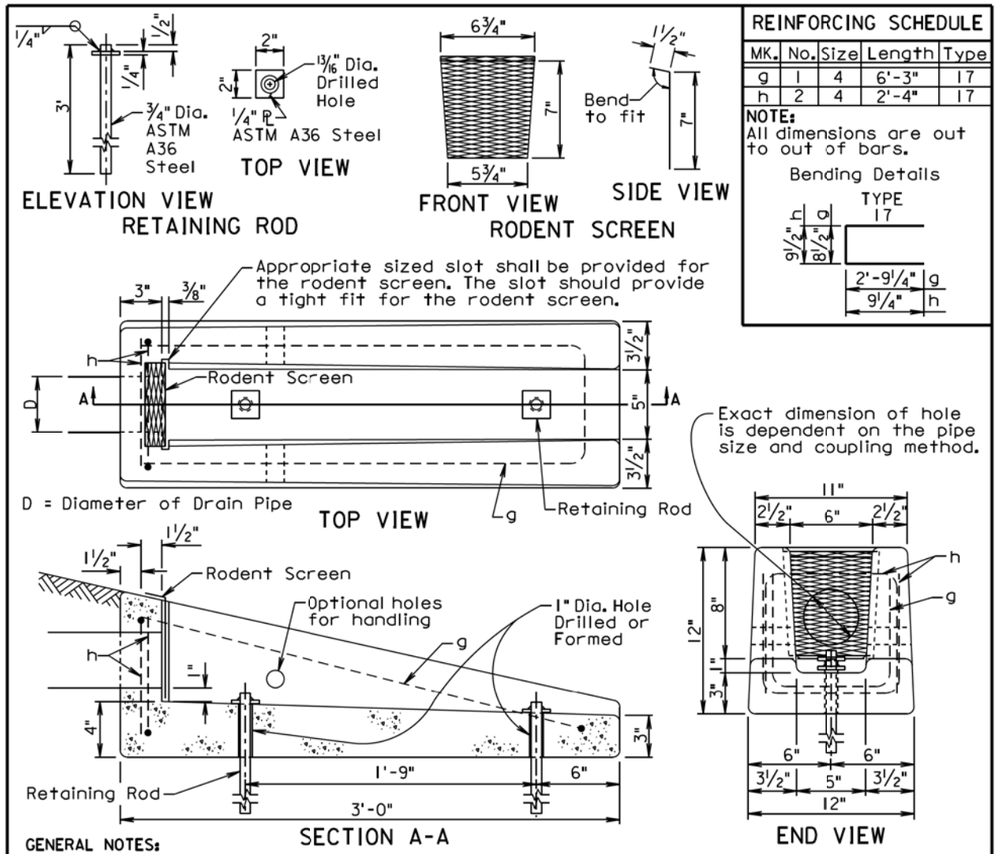

REINFORCING SCHEDULE

MK.	No.	Size	Length	Type
g	1	4	6'-3"	17
h	2	4	2'-4"	17

NOTE: All dimensions are out to out of bars.

Bending Details

TYPE 17

GENERAL NOTES:

The concrete shall be Class M6. The concrete shall conform to the requirements of Section 462 of the Specifications. It is estimated that each unit weighs approximately 210 pounds.

All reinforcing steel shall conform to ASTM A615 Grade 60 and shall be epoxy coated. The reinforcing steel shall be securely retained to prevent displacement during placement of concrete. It is estimated that 7.3 pounds of reinforcing steel is required for each unit.

The pipe shall be placed in the concrete headwall with the pipe end flush with the concrete surface adjacent to the rodent screen.

The rodent screen shall be galvanized 13 Ga. steel with a diamond shaped flattened mesh pattern. The size shall be 1/2". The size refers to the measurement across the smallest diamond shaped opening measured from the centers of the wires.

The retaining rod shall be galvanized in accordance with ASTM A123 after all shop welding has been completed.

The drawing indicates using 1/2" fillets; however, 3/4" chamfers may be substituted for the 1/2" fillets.

All costs for furnishing and installing the concrete headwall including equipment, labor, and materials including concrete, reinforcing steel, retaining rods, and rodent screen shall be incidental to the contract unit price per each for "Precast Concrete Headwall for Drain".

June 26, 2015

Published Date: 3rd Qtr. 2016	SDDOT	PRECAST CONCRETE HEADWALL FOR DRAIN	PLATE NUMBER 430.50 Sheet 1 of 1

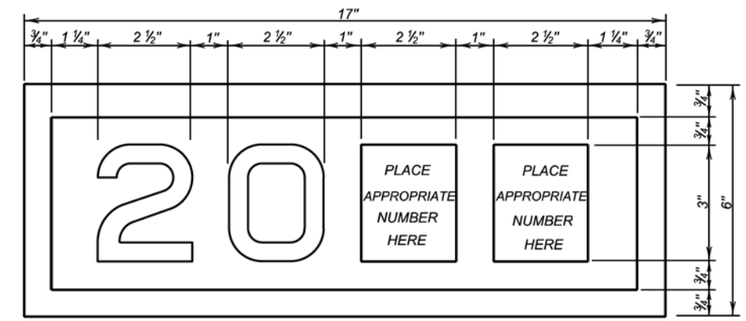

YEAR PLATE DETAILS

GENERAL NOTES:

1. Year plates of the general dimensions shown shall be constructed on all box culverts and bridges. The year plates shall be constructed in reverse and attached to the forms in such a manner that the finished imprint in the concrete does not exceed one-half (1/2) inch in depth.

2. Year plates shall be located on structure (s) as follows:

   a. On cast-in-place box culverts the year plates shall be four and one - half (4 1/2) inches below the top of the upstream parapet wall and centered laterally on the upstream face. On precast box culverts the year plate shall be centered laterally on the upstream face of the top slab. Where an extended interior wall interferes with this location, the year plate shall be centered in an adjacent barrel.

   b. On bridges with six (6) inch curbs or "Jersey" shaped barriers with no endblocks, the year plate shall be centered vertically on the curb face approximately six (6) inches from the end of the bridge, or as designated by the Engineer. On bridges with "Jersey" shaped barrier endblocks, the year plate shall be centered on the upper sloped portion of the barrier approximately 5'- 6" from the end of the bridge, or as designated by the Engineer. There shall be one year plate at each end of the bridge on opposite sides.

   c. When the plans specify that both the original date of construction and the date of reconstruction are to be shown, one date shall be placed as listed above and the other located adjacent to it. Both year plates shall be shown at each end of the bridge on opposite sides.

3. There will be no separate measurement or payment made for year plates on box culverts and bridges. All costs for this work shall be incidental to other contract items.

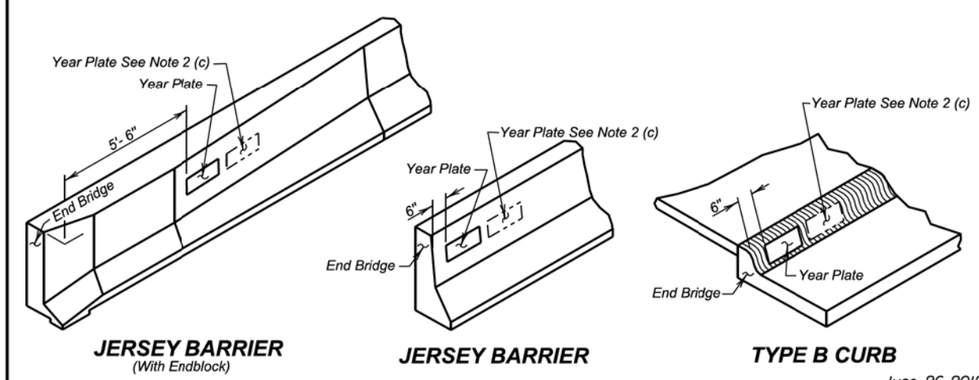

June 26, 2012

Published Date: 3rd Qtr. 2016	SDDOT	YEAR PLATE DETAILS	PLATE NUMBER 460.02 Sheet 1 Of 1

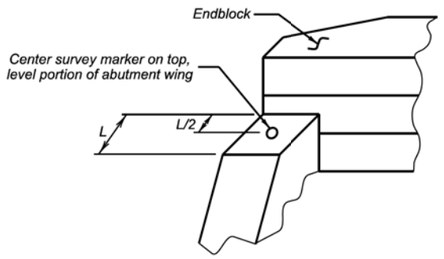

ABUTMENT WITH "STRAIGHT" WINGS

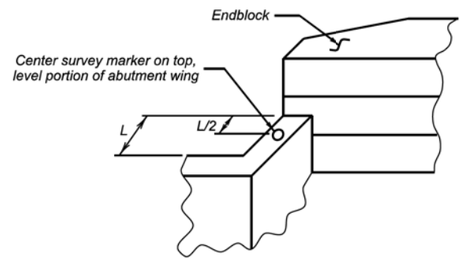

ABUTMENT WITH "SWEPT BACK" WINGS

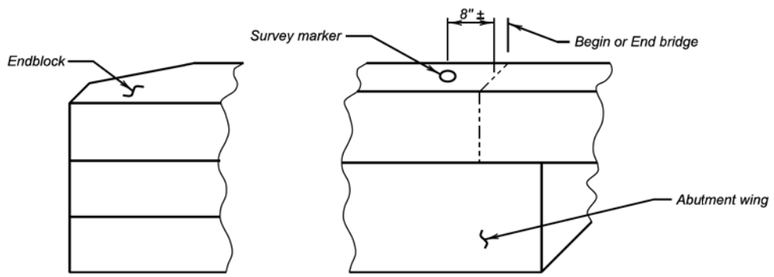

ABUTMENT WITH "SWEPT BACK" WINGS

(Endblock on top of wings)

GENERAL NOTES:

1. Survey markers shall be located at each abutment on the same side of the bridge as the year plate. Place survey markers on abutment wings as shown. Two survey markers will be required at each bridge.
2. Survey markers shall be of a type intended for installation in concrete, be made of solid brass or bronze, have a domed top and be either a 3" top diameter (with a ¾" X 2" long ribbed shank), or a US Army Corps of Engineers Type C Disc with a 3 ½" top diameter.
3. There will be no separate measurement or payment made for survey markers. All costs for this work shall be incidental to the other contract items.

June 26, 2012

Published Date: 3rd Qtr. 2016	SDDOT	BRIDGE SURVEY MARKER	PLATE NUMBER 460.05
			Sheet 1 of 1

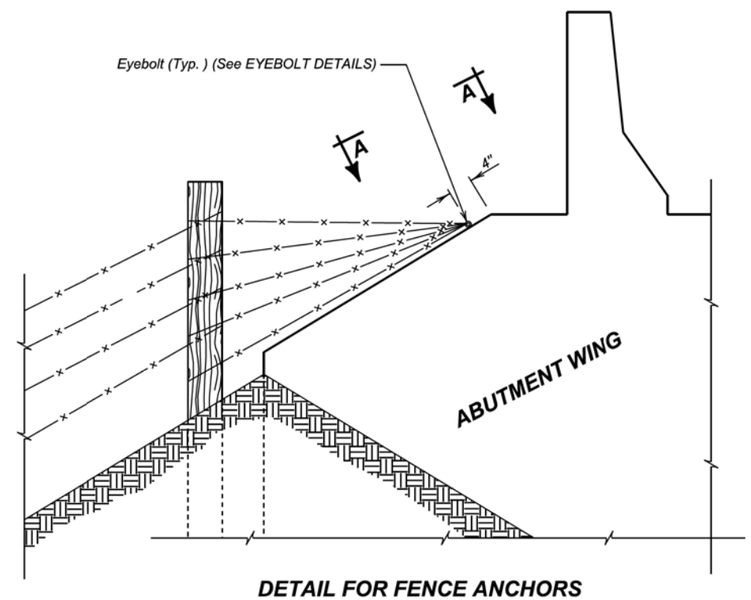

DETAIL FOR FENCE ANCHORS

GENERAL NOTES:

1. The fence and post details shown are for illustrative purpose only. The fence shall be as specified elsewhere in the plans.
2. Eyebolts shall be placed on all of the bridge abutment wings.
3. Eyebolts shall be ⅝ inch diameter and shall conform to ASTM A307.
4. Eyebolts, nuts, and concrete inserts shall be galvanized in accordance with AASHTO M232 (ASTM A153). Concrete inserts of corrosion resistant material need not be galvanized.
5. Cast-in-place eyebolts shall have a nut attached, be 4 ½ inches (Min.) in length and shall be embedded such that the eye of the bolt is flush with the concrete surface. (See Eyebolt Details) As an alternate, cast-in-place concrete inserts, capable of developing the full strength of the ⅝ inch diameter threaded eyebolt, may be used and shall be set in the concrete in accordance with the manufacturer's recommendations. The eyebolt shall be of sufficient length to develop its full strength. The eye of the eyebolt shall be flush with the concrete surface.
6. The cost for furnishing and installing eyebolts and/or concrete inserts shall be incidental to various contract items.

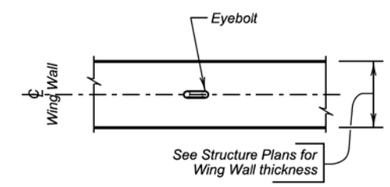

VIEW A - A

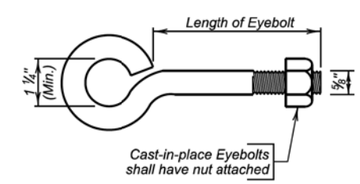

EYEBOLT DETAILS

December 23, 2012

Published Date: 3rd Qtr. 2016	SDDOT	FENCE ANCHORS FOR BRIDGE ABUTMENT WINGS (WINGS 6' AND SHORTER)	PLATE NUMBER 620.18
			Sheet 1 of 1

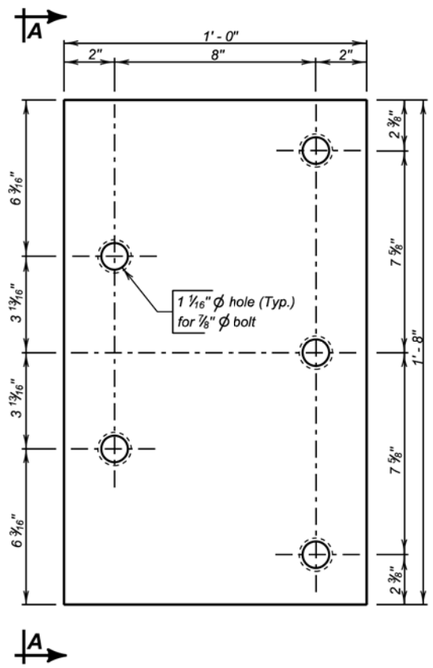

ELEVATION

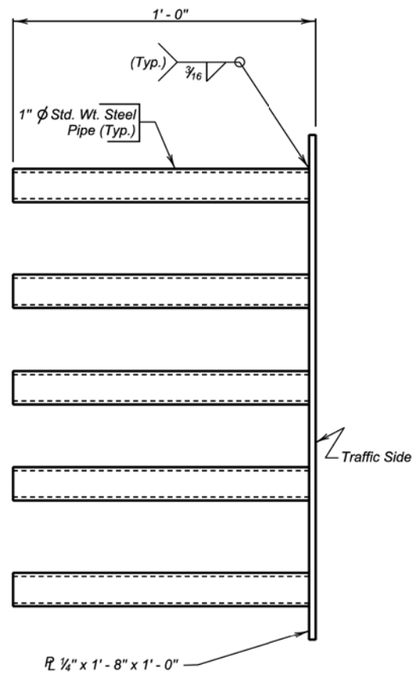

VIEW A - A

GENERAL NOTES:

1. Steel plate for the insert assembly shall conform to ASTM A709 Grade 36. The steel pipes shall conform to ASTM A53 or ASTM A500 Grade B.
2. Welding and weld inspection shall be in conformance with AWS D1.1 - (Current Year) Structural Welding Code - Steel.
3. After fabrication, galvanize in accordance with AASHTO M111 (ASTM A123).
4. Bolts, nuts, and washers shall be provided with each assembly. Bolts shall be galvanized and conform to the requirements of ASTM A307, A325, or A449. Plain washers shall be galvanized and conform to ASTM F844.
5. Bolt heads shall be placed on the traffic side of the endblock. Bolt projection at the back side of the insert shall not exceed 1 inch beyond the nut.
6. The cost of the 5 bolt insert plate assembly complete in place including welding and galvanizing shall be incidental to the contract unit price per Cubic Yard for " Class A45 Concrete, Miscellaneous ", " Class A45 Concrete, Bridge Deck ", or " Class A45 Concrete, Bridge Repair ", as applicable.

December 23, 2013

Published Date: 3rd Qtr. 2016	SDDOT	5 BOLT INSERT PLATE ASSEMBLY	PLATE NUMBER 630.92 Sheet 1 of 1

The elevations shown in these plans are based on the National Geodetic Survey (NGS) North American Vertical Datum of 1988 (NAVD88).

STATE OF	PROJECT	SHEET NO.	TOTAL SHEETS
S.D.	IM 0901(38)40	E110	E199

NOTE:
T. S. at L. C. El. = Top of Slab at Left Curb Elevation
T. S. at Cr. El. = Top of Slab at Crown Elevation
T. S. at ℄ El. = Top of Slab at Centerline Elevation
T. S. at R. C. El. = Top of Slab at Right Curb Elevation

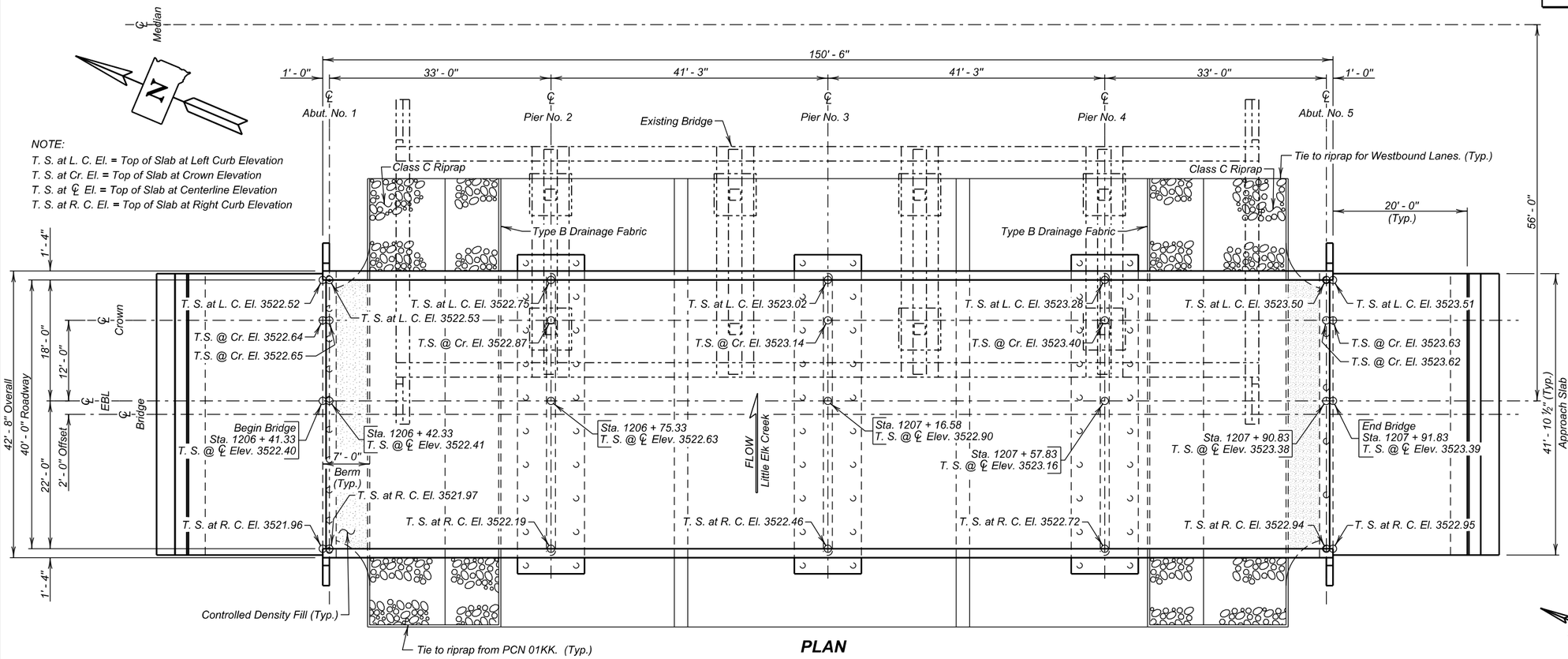

PLAN

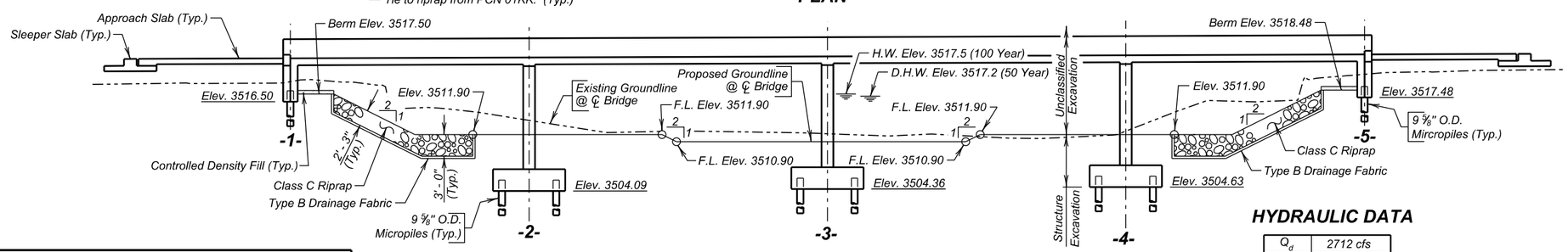

ELEVATION

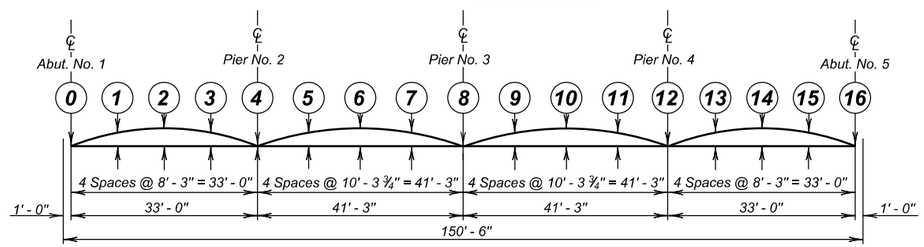

CURB AND CENTERLINE ELEVATION

(See TABLE OF ELEVATIONS for elevations)

✳ Camber for Dead Load Deflection plus Plastic Flow, shown on SUPERSTRUCTURE DETAILS, has been included in the the elevations shown.

✳ TABLE OF ELEVATIONS

Slab Point	Left Curb	℄ Crown Point	℄ EBL	Right Curb
0	3522.531	3522.651	3522.411	3521.971
1	3522.622	3522.742	3522.502	3522.062
2	3522.683	3522.803	3522.563	3522.123
3	3522.712	3522.832	3522.592	3522.152
4	3522.746	3522.866	3522.626	3522.186
5	3522.846	3522.966	3522.726	3522.286
6	3522.934	3523.054	3522.814	3522.374
7	3522.980	3523.100	3522.860	3522.420
8	3523.015	3523.135	3522.895	3522.455
9	3523.114	3523.234	3522.994	3522.554
10	3523.204	3523.324	3523.084	3522.644
11	3523.250	3523.370	3523.130	3522.690
12	3523.285	3523.405	3523.165	3522.725
13	3523.359	3523.479	3523.239	3522.799
14	3523.437	3523.557	3523.317	3522.877
15	3523.484	3523.604	3523.364	3522.924
16	3523.500	3523.620	3523.380	3522.940

-X020-
INDEX OF BRIDGE SHEETS -

Sheet No. 1 - General Drawing
Sheet No. 2 - Estimate of Structure Quantities and Notes
Sheet No. 3 - Notes (Continued)
Sheet No. 4 - Subsurface Investigation and Micropile Layout
Sheet No. 5 - Micropile Layout Details
Sheet No. 6 - Micropile Details
Sheet No. 7 - Abutment No. 1 Details
Sheet No. 8 - Abutment No. 5 Details
Sheet No. 9 - Pier Details
Sheet No. 10 - Superstructure Details
Sheet No. 11 - End Block and Barrier Curb Details
Sheet No. 12 - Details of Bridge End Backfill (A)
Sheet No. 13 - Details of Bridge End Backfill (B)
Sheet No. 14 - Details of Approach Slab Adjacent to Bridge
Sheet No. 15 - Approach Slab Joint Details
Sheet No. 16 - Riprap Details
Sheet No. 17 - As - Built Elevation Survey
Sheet No. 18 - Standard Plate No's. 430.50 and 460.02
Sheet No. 19 - Standard Plate No's. 460.05 and 620.18
Sheet No. 20 - Standard Plate No. 630.92

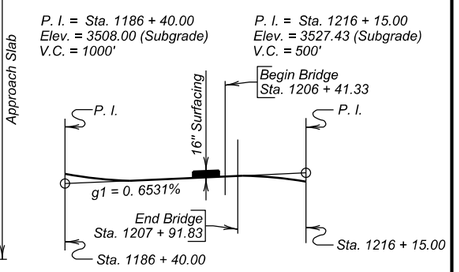

GRADELINE DATA

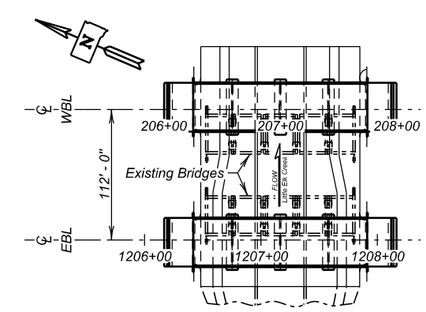

LAYOUT

HYDRAULIC DATA

Q_d	2712 cfs
A_d	512 sq ft
V_d	5.3 fps
Q_F	2712 cfs
Q_{100}	4887 cfs
Q_{OT}	$>Q_{100\ Yr.}$
V_{max}	7.9 fps

Q_d = Design discharge for the proposed bridge based on 50 year frequency. El. 3517.2

Q_{OT} = Overtopping discharge and frequency > Q_{100} year recurrence interval. El. 3517.7. Location ~ EBL Sta. 1206 + 00 Rt.

Q_F = Designated peak discharge for the basin approaching proposed project based on 50 year frequency.

Q_{100} = Computed discharge for the basin approaching proposed project based on 100 year frequency. El. 3517.5

V_{max} = Maximum computed outlet velocity for the proposed bridge, based on 100 year frequency.

PLANS BY :
OFFICE OF BRIDGE DESIGN, SOUTH DAKOTA DEPARTMENT OF TRANSPORTATION

GENERAL DRAWING
FOR
EASTBOUND LANES

150' - 6" CONTINUOUS CONCRETE BRIDGE

40' - 0" ROADWAY — 0° SKEW
OVER LITTLE ELK CREEK — SEC. 4-T3N-R6E
STA. 1206 + 41.33 TO 1207 + 91.83 — IM 0901(38)40
STR. NO. 47-085-546 — HL-93
PCN 5580

MEADE COUNTY
S. D. DEPT. OF TRANSPORTATION
DECEMBER 2014

-X020-

DESIGNED BY	CK. DES. BY	DRAFTED BY	
TB/PW	SK	GW/MG	Steve A Johnson BRIDGE ENGINEER
MEAD5580	5580WJ01		

ESTIMATE OF STRUCTURE QUANTITIES

DESCRIPTION	QUANTITY	UNIT	REMARKS
Bridge Elevation Survey	Lump Sum	LS	
Concrete Penetrating Sealer	669	SqYd	See Special Provision
Bridge End Embankment	665	CuYd	
Incidental Work, Structure	Lump Sum	LS	
Membrane Sealant Expansion Joint	83.8	Ft	
Structure Excavation, Bridge	423.8	CuYd	
Granular Bridge End Backfill	71.1	CuYd	
Approach Slab Underdrain Excavation	2.7	CuYd	
Class A45 Concrete, Bridge Deck	343.7	CuYd	
Class A45 Concrete, Bridge	273.5	CuYd	
Concrete Approach Slab For Bridge	190.6	SqYd	
Concrete Approach Sleeper Slab for Bridge	67.5	SqYd	
Controlled Density Fill	7.3	Cu Yd	
Reinforcing Steel	36492	Lb	
Epoxy Coated Reinforcing Steel	84225	Lb	
No. 7 Rebar Splice	106	Each	
Micropile Verification Load Test	1	Each	See Special Provision
Micropile Proof Load Test	5	Each	See Special Provision
Micropile	76	Each	See Special Provision
4" Underdrain Pipe	255	Ft	
Precast Concrete Headwall for Drain	2	Each	
Porous Backfill	31.7	Ton	
Class C Riprap	405.3	Ton	
Type B Drainage Fabric	460	SqYd	

SPECIFICATIONS FOR BRIDGE

1. Design Specifications: AASHTO LRFD Bridge Design Specifications, 2014 Edition with 2015 Interims.

2. Construction Specifications: South Dakota Standard Specifications for Roads and Bridges, 2015 Edition and required provisions, supplemental specifications, and special provisions as included in the proposal.

BRIDGE DESIGN LOADING

1. AASHTO HL-93.

2. Dead Load includes 22 psf for future wearing surface on the roadway.

DESIGN MATERIAL STRENGTHS

Concrete	f'c = 4500 psi
Micropile Grout	f'c = 5000 psi
Reinforcing Steel	fy = 60,000 psi
Reinforcing Steel (micropile)	fy = 75,000 psi
Casing (API N-80)	fy = 80,000 psi
Structural Steel (ASTM A709 Gr 36)	fy = 36,000 psi

GENERAL CONSTRUCTION

1. All mild reinforcing steel shall conform to ASTM A615, Grade 60, except the reinforcing steel in micropile shall be ASTM A615, Grade 75.

2. All exposed concrete corners and edges shall be chamfered 3/4" unless noted otherwise.

3. Use 2" clear cover on all reinforcing steel except as shown.

4. Contractor shall imprint on the structure the date of new construction as specified and detailed on Standard Plate No. 460.02.

5. Barrier Curbs and End blocks shall be built normal to the grade.

6. Request for construction joints or resteel splices at points other than those shown, must be submitted to the Engineer for prior approval. If additional splices are approved, no payment will be allowed for the added quantity of resteel.

7. The elevation of the bridge deck is 16 1/2" above subgrade elevation.

INCIDENTAL WORK, STRUCTURE

1. In place centerline Sta. 1206+52.3 to centerline Sta. 1207+80.8 is a 128.5' 5 span Continuous Concrete Bridge with a 30'-0" clear roadway. The superstructure consists of a 10 1/2 inch reinforced concrete slab. The bridge rail consists of a 12 inch high curb with a 1'-11" vertical face concrete barrier running the length of the bridge. The deck has been overlaid with a 2.48 inch low slump concrete. The substructure consists of 2 column reinforced concrete bents and reinforced concrete abutments. The abutments are supported on timber piling. Concrete walls with steel railing to centerline of median at both begin and end bridge.

2. Break down and remove the existing bridge, concrete walls, and approach/sleeper slabs if applicable, to 1 foot below finished groundline, or as required to construct the new structure in accordance with Section 110 of the Specifications. All portion of the existing bridge not salvaged for future highway related use shall be removed and disposed of by the Contractor on a site obtained by the Contractor and approved by the Engineer in accordance with the ENVIRONMENTAL COMMITMENTS found in Section A.

3. The existing approach guard rail, including posts, shall be salvaged for future highway related use. See Section B for stockpiling location.

4. During demolition of the structure, efforts shall be taken to prevent material from falling into Little Elk Creek. Under no circumstances is asphalt allowed to fall into Little Elk Creek.

5. The foregoing is a general description of the in-place bridge and should not be construed to be complete in all details. Before preparing the bid it shall be the responsibility of the Contractor to make a visual inspection of the structure to verify the extent of the work and materials involved. If desired by the Contractor, a copy of the original construction plans may be obtained through the Office of Bridge Design.

NOTICE - LEAD BASED PAINT

Be advised that the paint on the steel surfaces of the existing structure contains lead. The Contractor should plan his/her operations accordingly, and inform his/her employees of the hazards of lead exposure.

DESIGN MIX OF CONCRETE

1. All structural concrete shall be Class A45 unless otherwise indicated.

2. Type II cement is required.

ESTIMATE OF STRUCTURE QUANTITIES AND NOTES

FOR

EASTBOUND LANES

150' - 6" CONTINUOUS CONCRETE BRIDGE

STR. NO. 47-085-546

DECEMBER 2014

DESIGNED BY	CK. DES. BY	DRAFTED BY	
TB/PW	SK	PW	Steve A Johnson BRIDGE ENGINEER
MEAD5580	5580WJ02		

ABUTMENTS AND PIERS

1. See Special Provision for micropile. Casing for micropile shall be API-N80 or equivalent (outside diameter = 9 $^5/_8$" and wall thickness = 0.472").

2. A representative of the Geotechnical Engineering Activity shall be present to observe the placement of the micropiles. The contractor shall notify the Geotechnical Engineering Activity two weeks prior to the start of the micropile installation operations.

3. Galvanize the pier wall armoring plates and anything welded to them after all welding is completed. They shall be galvanized in accordance with AASHTO M111 (ASTM A123). If welded splices are used subsequent to galvanizing, the weld details and the procedures for preparing the surface for welding and repairing the galvanizing after welding shall be included with the shop plans. Repair of galvanizing shall be by the zinc-based solder method in conformance with ASTM A780.

4. Central bar in micropile shall be a #18 threaded bar conforming to the physical and chemical requirements of ASTM A615 Grade 75. Plan lengths shown are greater than 60 feet. Threaded couplers are required and must develop 100% of the bars ultimate strength.

5. Steel for the pier wall armoring plates shall be ½ " thickness and conform to ASTM A709, Grade 36. Shear connectors shall conform to Clause 7.3, Type A or B of the AASHTO/AWS D1.5 Bridge Welding Code.

6. Welding for the pier wall armoring plates shall be in accordance with AWS D1.1 Structural Welding Code - Steel.

7. The cost of the pier wall armoring plates complete in-place including fabrication, welding, and galvanizing shall be incidental to the contract unit price per cubic yard for Class A45 Concrete, Bridge.

8. Each finished abutment shall include a Bridge Survey Marker. See Standard Plate No. 460.05.

SUPERSTRUCTURE

1. Preplanned construction joints may be used in accordance with Section 460.3 of the Specifications. Contact the Office of Bridge Design for joint configuration and allowable location. Emergency slab construction joints shall be as shown with the superstructure details. If an emergency slab joint is used, contact the Office of Bridge Design before proceeding with deck pour.

2. The deck-finishing machine shall be adjusted and operated in such a manner that the roller screed or screeds are parallel with the centerline of the bridge and the finish machine is parallel to the skew of the bridge. Concrete placement in front of the finish machine shall be kept parallel to the machine.

3. Barrier curbs shall be poured after all the slab has been poured. Superstructure falsework shall not be removed until bridge deck concrete, including barrier curbs, has attained a strength of 2400 psi.

4. The bridge deck must be placed and finished continuously at a minimum rate of 21 ft. of deck per hour measured along centerline roadway. If concrete cannot be placed and finished at this rate, the Engineer shall order a header installed and operations stopped. Notify the Bridge Construction Engineer if deck pour operations are stopped. Operations may resume only when the Engineer is satisfied that a minimum rate of 21 ft. of deck per hour can be achieved and the concrete in the previous pour has attained a minimum compressive strength of 2000 psi.

5. Snap ties, if used in barrier curb formwork, shall be epoxy coated. The epoxy coating shall be inert in concrete and compatible with the coating applied to the new epoxy coated reinforcing steel.

6. See Special Provision for Concrete Penetrating Sealer.

FALSEWORK

The Contractor shall be required to include with the Falsework Plans, details for the construction of an adequate "Walk-Way" including railing.

CLASS B COMMERCIAL TEXTURE FINISH

1. A Class B commercial texture finish shall be applied to the following areas:

   a) **Barrier Rail:** all exposed surfaces (inside face – pearl white, top and back – buff tan).
   b) **Slab:** edge of slab – buff tan.

2. The Class B commercial texture finish shall be applied in accordance with Section 460.3 L.1.c of the Specifications.

3. Where the Class B commercial texture finish is to be applied, concrete curing shall be accomplished with cotton or burlap mats and polyethylene sheeting. Curing shall continue for not less than seven days after placing concrete before the commercial texture finish is applied. The commercial texture finish shall be applied in accordance with the manufacturer's recommendations. The commercial texture finish itself does not require a specific cure except for drying.

APPROACH SLABS

1. Sleeper slab riser shall be cast with the approach slab or cast after the approach slab is placed. Care shall be taken to ensure the correct grade is maintained across the joint.

2. The portion of the sleeper slab below the construction joint may be precast. If the bottom portion of the sleeper slab is precast, the Contractor shall submit proposed lifting and setting plans to the Bridge Construction Engineer for approval. In addition, if reinforcing or other details differ from those shown in the plans, the Contractor shall submit proposed alternate details for approval.

3. The use of an approved finishing machine will be required during placement of Class A45 Concrete for the approach slabs. Concrete placement in front of the machine shall be kept parallel to the screed.

4. The concrete in the approach slab shall be tined normal to centerline roadway.

5. Concrete Approach Sleeper Slab for Bridge will be paid for at the contract unit price per square yard. This payment shall be full compensation for all excavation, furnishing, hauling, and placing all materials including concrete and reinforcing steel; for disposal of all excavated material and surplus materials; and for labor, tools, equipment and any incidentals necessary to complete this item of work.

6. Concrete Approach Slab for Bridge will be paid for at the contract unit price per square yard. This payment shall be full compensation for all excavation, furnishing, hauling and placing all materials including concrete, asphalt paint or 4 mil polyethylene sheeting, elastic joint sealer and reinforcing steel; for disposal of all excavated material and surplus materials and for labor, tools, equipment and any incidentals necessary to complete this item of work.

AS - BUILT ELEVATION SURVEY

The Contractor shall be responsible for recording the As-built deck elevations and bridge survey marker elevations at the locations shown in the Table of As-Built Elevations shown in the plans. All costs associated with obtaining the elevations including all equipment, labor and any incidentals required shall be incidental to the contract lump sum price for Bridge Elevation Survey.

NOTES (CONTINUED)
FOR
EASTBOUND LANES
150' - 6" CONTINUOUS CONCRETE BRIDGE

STR. NO. 47-085-546
DECEMBER 2014

DESIGNED BY	CK. DES. BY	DRAFTED BY	
TB/PW	SK	PW	Steve A Johnson
MEAD5580	5580WJ03		BRIDGE ENGINEER

STATE OF	PROJECT	SHEET NO.	TOTAL SHEETS
S.D.	IM 0901(38)40	E113	E199

Hole Number	W15	
Station	206+38	
Depth	60.2	ft
Soil Color	Red	
Classification	Silt Clay	
Strength (Q_u)	3.838	psf
Dry Density	119.6	pcf
Wet Density	137.1	pcf
Moisture	14.6	%
Pass No. 10	100.0	%
Pass No. 40	100.0	%
Pass No. 200	97.9	%
Sand Content	2.1	%
Silt Content	61.7	%
Clay Content	36.2	%

Hole Number	W15	
Station	206+38	
Depth	74.8	ft
Soil Color	Red	
Classification	Clay Silt	
Strength (Q_u)	6.709	psf
Dry Density	128.2	pcf
Wet Density	142.9	pcf
Moisture	11.5	%
Pass No. 10	100.0	%
Pass No. 40	100.0	%
Pass No. 200	98.2	%
Sand Content	1.8	%
Silt Content	74.0	%
Clay Content	24.2	%

Hole Number	W17	
Station	207+93	
Depth	50.5	ft
Soil Color	Red	
Classification	Silt Clay	
Strength (Q_u)	4.547	psf
Dry Density	114.2	pcf
Wet Density	135.2	pcf
Moisture	18.3	%
Pass No. 10	100.0	%
Pass No. 40	100.0	%
Pass No. 200	89.3	%
Sand Content	10.7	%
Silt Content	57.1	%
Clay Content	32.2	%

Hole Number	W17	
Station	207+93	
Depth	75.5	ft
Soil Color	Red	
Classification	Silt Clay	
Strength (Q_u)	8.443	psf
Dry Density	116.3	pcf
Wet Density	134.9	pcf
Moisture	16.0	%
Pass No. 10	100.0	%
Pass No. 40	100.0	%
Pass No. 200	99.4	%
Sand Content	0.6	%
Silt Content	57.2	%
Clay Content	42.2	%

The gravel and cobbles (up to boulder size) consist of material originating from sandstone, limestone, dolomite, or granite outcrops from nearby upstream canyon walls. Material most likely transported by mud flows with very little weathering. The borings shown only represent material found at the exact location of the small diameter drill hole. Boulders of 3 feet or more may be encountered at the site.

The Spearfish Formation is a relatively weak red sandy shale. Textural classification typically is a clay-silt. Gypsum is present throughout the formation that varies from thin stringers to massive deposits over 30 feet thick. Bedded layers of red stained sandstone can also be encountered. Unweathered Spearfish Formation is considered to be "Soft Rock", although massive unweathered gypsum may behave similar to weak limestone.

The Geotechnical Engineering Activity has on file all of the boring logs for this project. These logs and additional results of laboratory test, if any, are available for review at the Central Office in Pierre.

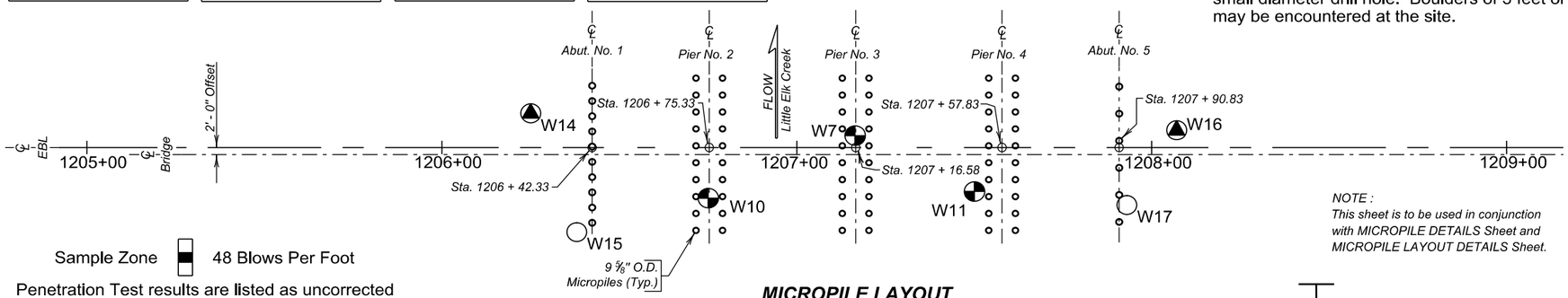

NOTE :
This sheet is to be used in conjunction with MICROPILE DETAILS Sheet and MICROPILE LAYOUT DETAILS Sheet.

Sample Zone ■ 48 Blows Per Foot

Penetration Test results are listed as uncorrected "N" values. Blows over inches are listed if refusal is achieved, which is 50 blows within one 6 inch set.

MICROPILE LAYOUT

Existing Timber Piling

Existing Spread Footing

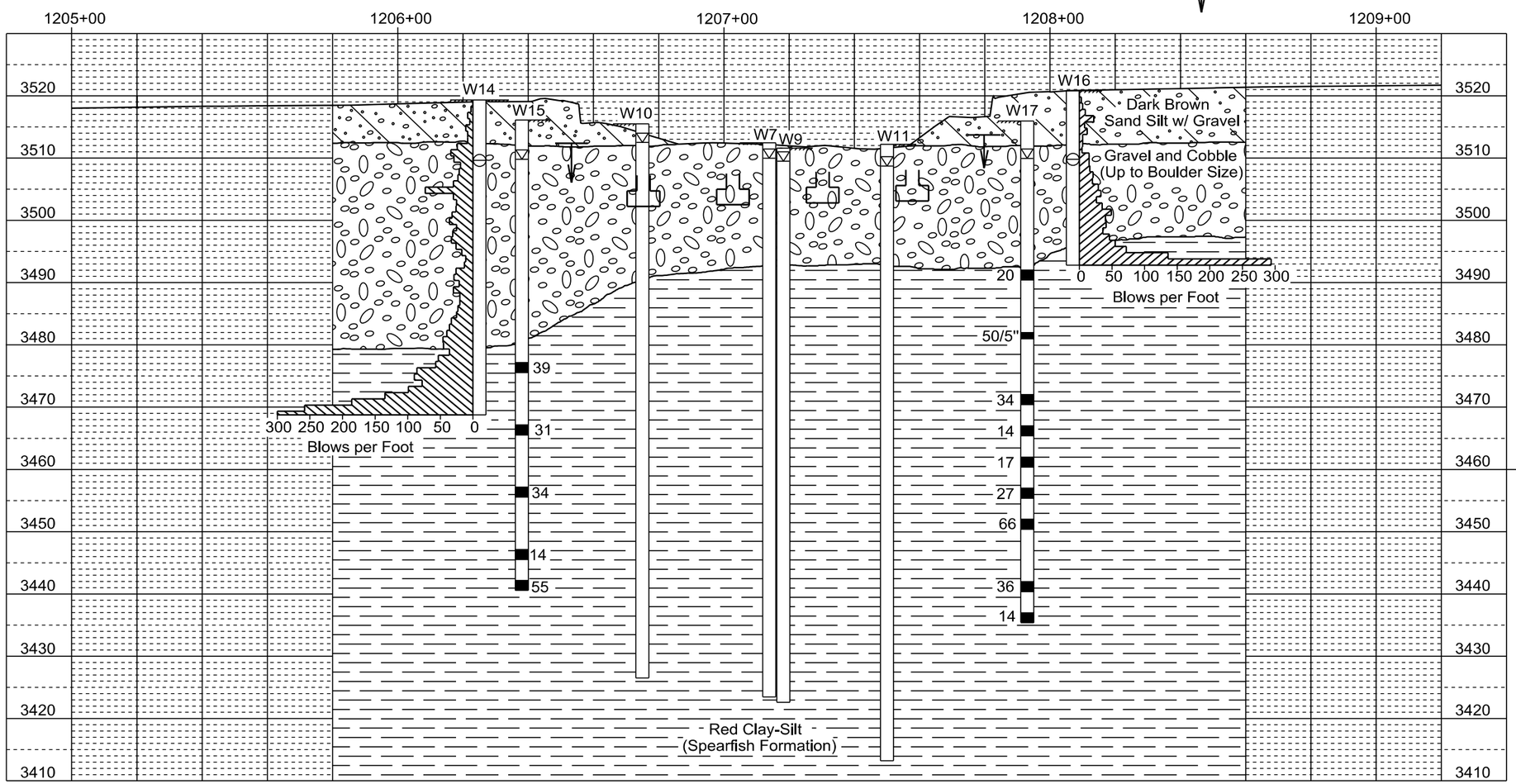

LEGEND

Auger Test — Water — Penetration Test

Drive Test — Caved — Sample Zone

Drive test are conducted by dropping a 490 pound hammer 30 inches to drive a 2⅞ inch drill stem with attached retractable plug sampler for taking samples and to measure the resistance to penetration of the soil. Auger holes are drilled with a 4½ inch diameter continuous flight auger.

Penetration test holes are drilled with a 6⅝" inch diameter hollow stem auger. Penetration tests are conducted by dropping a 140 pound hammer 30 inches to obtain 2 inch nominal diameter samples and to measure the resistance to penetration of the soil.

GROUND WATER ELEVATIONS

as of MAY 2014

W7		3510.0
W9		3509.5
W10		3512.5
W11		3508.7
W14	(CAVED)	3509.6
W15		3509.8
W16	(CAVED)	3509.8
W17		3509.9

MEASURED SKIN FRICTION

	ELEV.	PSF
W14	3479.3	547
W14	3468.7	6236
W16	3492.8	1679

SUBSURFACE INVESTIGATION AND MICROPILE LAYOUT

FOR

EASTBOUND LANES

150' - 6" CONTINUOUS CONCRETE BRIDGE

40' - 0" ROADWAY — 0° SKEW

OVER LITTLE ELK CREEK — SEC. 4-T3N-R6E

STA. 1206 + 41.33 TO 1207 + 91.83 — IM 0901(38)40

STR. NO. 47-085-546 — HL-93

MEADE COUNTY

S. D. DEPT. OF TRANSPORTATION

DECEMBER 2014

DESIGNED BY	CK. DES. BY	DRAFTED BY	
TB/PW	SK	MG	Steve A Johnson BRIDGE ENGINEER
MEAD5580	5580WJ04		

STATE OF	PROJECT	SHEET NO.	TOTAL SHEETS
S.D.	IM 0901(38)40	E114	E199

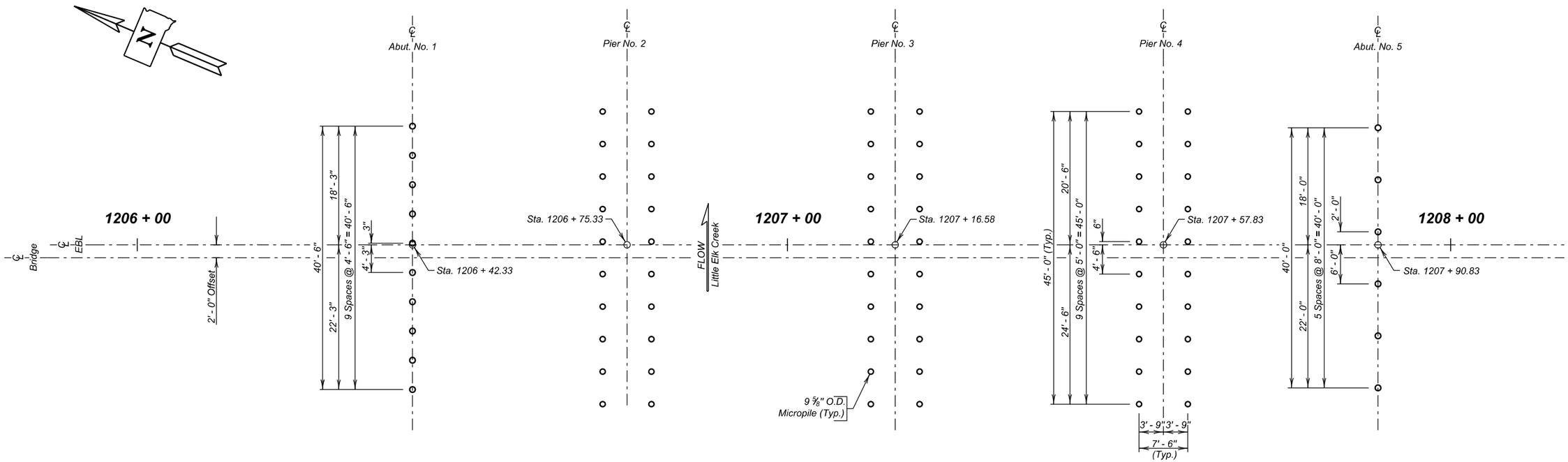

MICROPILE LAYOUT

NOTE:
This sheet is to be used in conjunction with MICROPILE DETAILS Sheet and SUBSURFACE INVESTIGATION AND MICROPILE LAYOUT Sheet.

MICROPILE LAYOUT DETAILS

FOR

EASTBOUND LANES

150' - 6" CONTINUOUS CONCRETE BRIDGE

40' - 0" ROADWAY	0° SKEW
OVER LITTLE ELK CREEK	SEC. 4-T3N-R6E
STA. 1206 + 41.33 TO 1207 + 91.83	IM 0901(38)40
STR. NO. 47-085-546	HL-93

MEADE COUNTY

S. D. DEPT. OF TRANSPORTATION

DECEMBER 2014

DESIGNED BY	CK. DES. BY	DRAFTED BY	
TB/PW	SK	GW/MG	Steve A. Johnson
MEAD5580	5580WJ05		BRIDGE ENGINEER

STATE OF	PROJECT	SHEET NO.	TOTAL SHEETS
S.D.	IM 0901(38)40	E115	E199

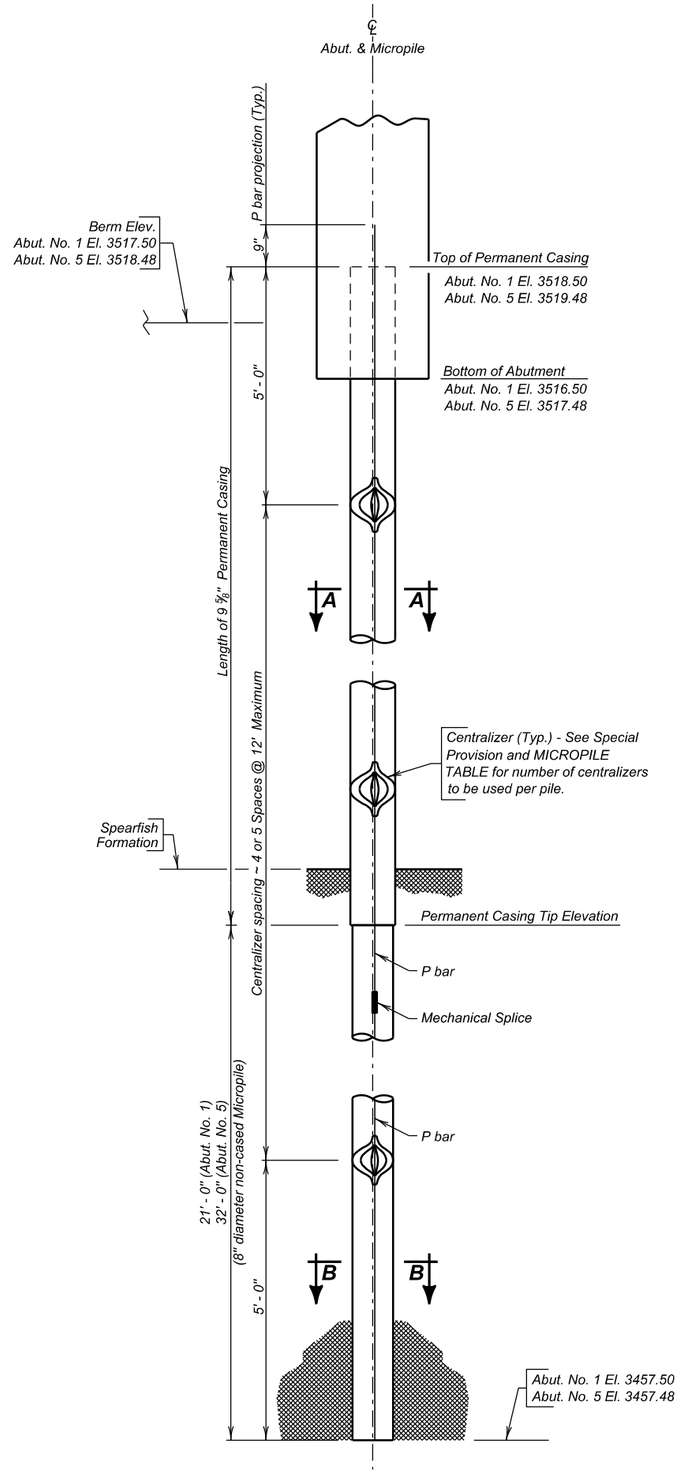

ABUTMENT ELEVATION

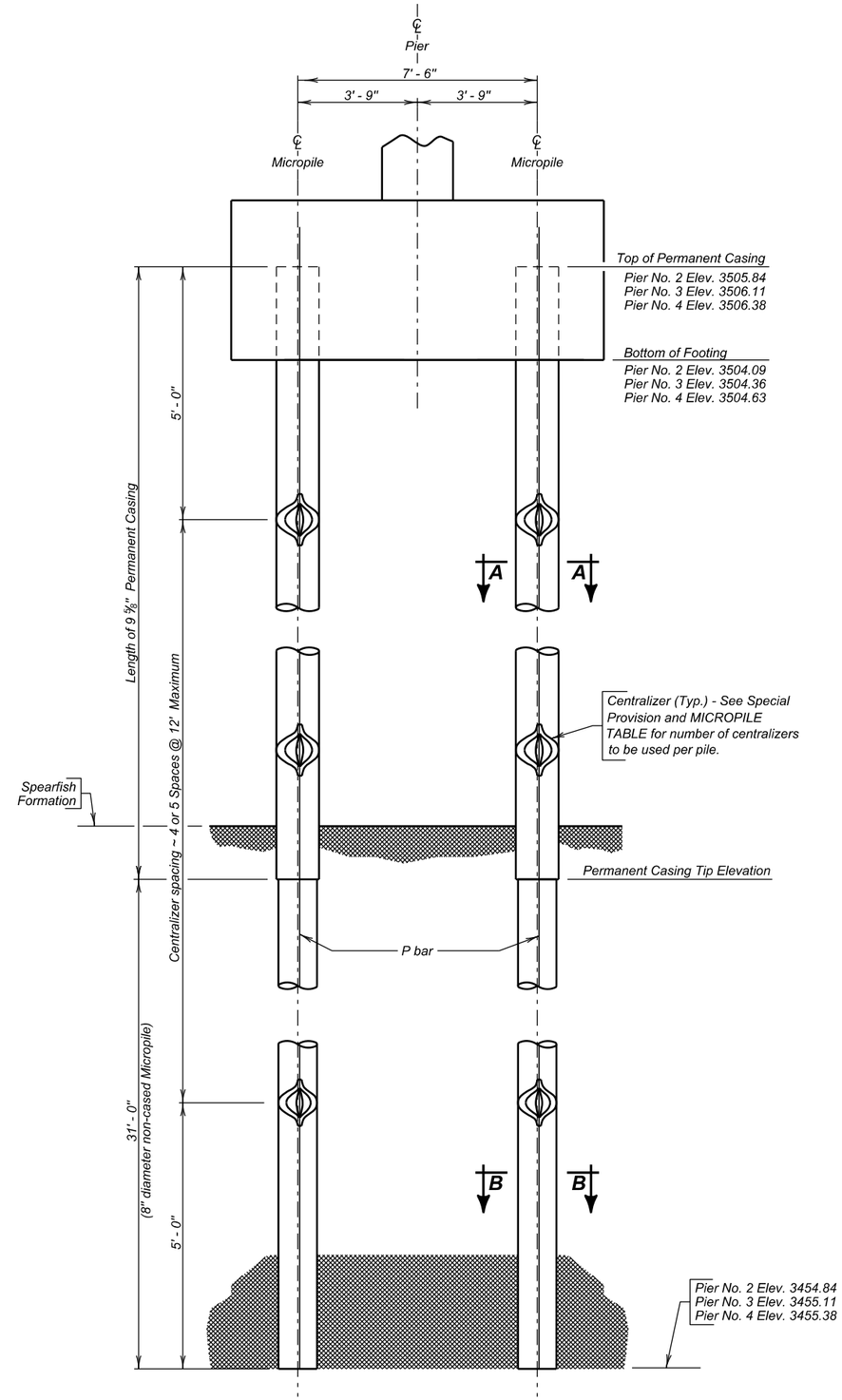

PIER ELEVATION

✳ MICROPILE TABLE

	Permanent Casing Tip Elev.	Permanent Casing Length	# of Centralizers per pile	P BARS				Grout
				Mk.	No.	Size	★Length	Cu. Yd.
Abut. No. 1	3478.50	40.00'	6	P1	10	18	61' - 9"	8.8
Pier No. 2	3485.84	20.00'	5	P2	20	18	51' - 9"	14.1
Pier No. 3	3586.11	20.00'	5	P3	20	18	51' - 9"	14.1
Pier No. 4	3486.38	20.00'	5	P4	20	18	51' - 9"	14.1
Abut. No. 5	3489.48	30.00'	6	P5	6	18	62' - 9"	5.2

✳ FOR INFORMATIONAL PURPOSES ONLY. All items listed are included in the contract unit price for micropile.

★ Length is total length required. Use mechanical coupler as needed.

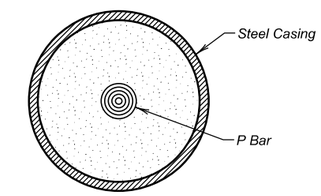

SEC. A - A

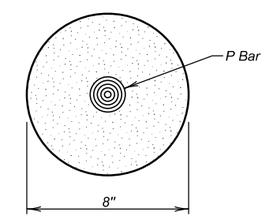

SEC. B - B

NOTE :
This sheet is to be used in conjunction with SUBSURFACE INVESTIGATION AND MICROPILE LAYOUT Sheet, ABUTMENT No. 1 and No. 5 DETAILS Sheet, and PIER DETAILS Sheet.

MICROPILE DETAILS

FOR

EASTBOUND LANES

150' - 6" CONTINUOUS CONCRETE BRIDGE

40' - 0" ROADWAY — 0° SKEW
OVER LITTLE ELK CREEK — SEC. 4-T3N-R6E
STA. 1206 + 41.33 TO 1207 + 91.83 — IM 0901(38)40
STR. NO. 47-085-546 — HL-93

MEADE COUNTY

S. D. DEPT. OF TRANSPORTATION

DECEMBER 2014

DESIGNED BY	CK. DES. BY	DRAFTED BY	
TB/PW	SK	GW/MG	BRIDGE ENGINEER
MEAD5580	5580WJ06		

STATE OF	PROJECT	SHEET NO.	TOTAL SHEETS
S.D.	IM 0901(38)40	E116	E199

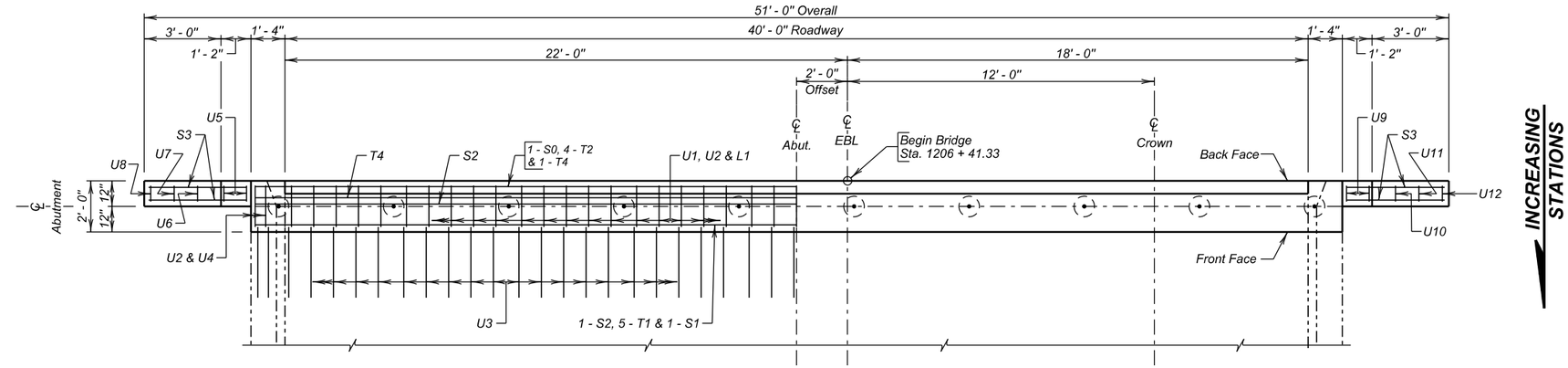

PLAN

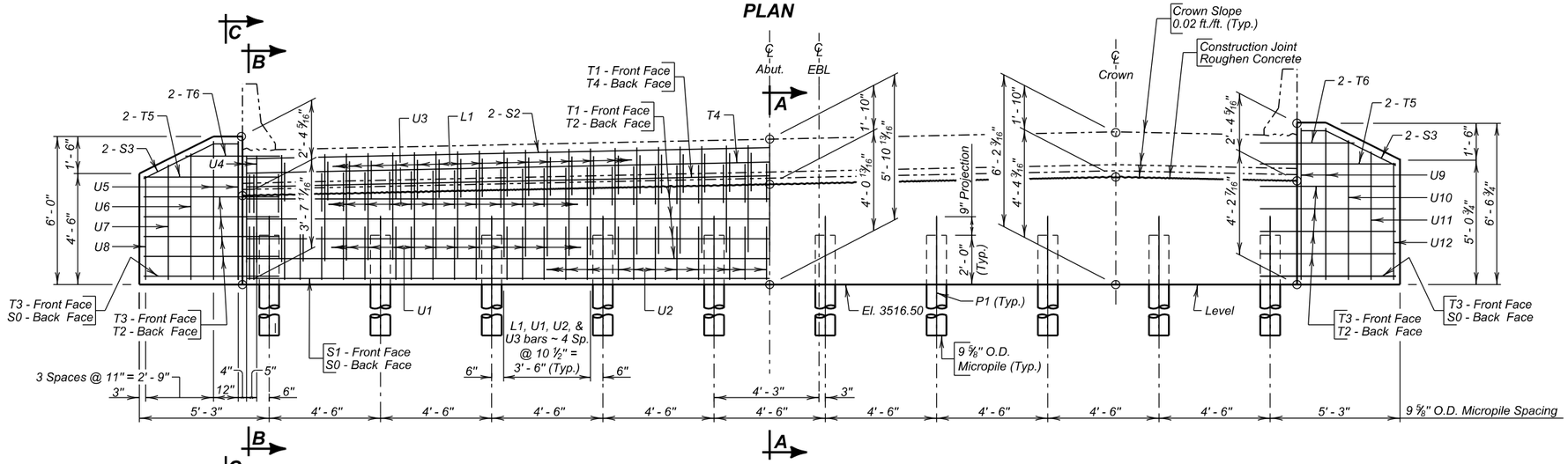

ELEVATION

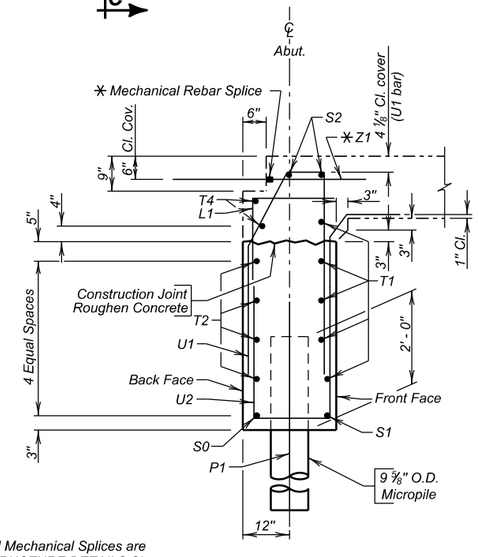

SEC. A - A

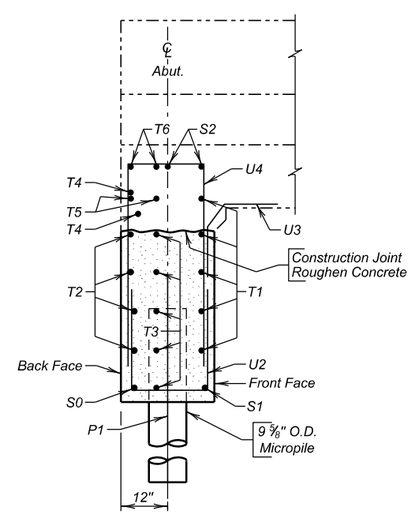

SEC. B - B

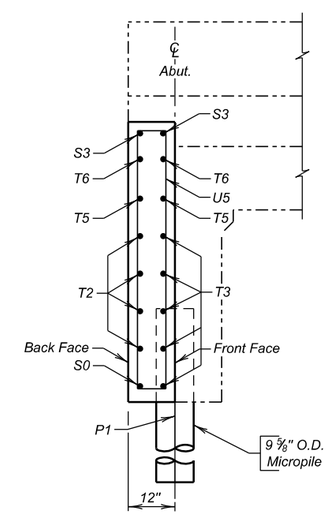

SEC. C - C

✳ NOTE:
Quantity for Z1 bars and Mechanical Splices are listed on the SUPERSTRUCTURE DETAILS Sheet.

REINFORCING SCHEDULE

	Mk.	No.	Size	Length	Type
△	L1	45	4	3' - 6"	17A
	S0	1	9	50' - 8"	Str.
	S1	1	9	42' - 4"	Str.
# △	S2	2	9	42' - 4"	Str.
	S3	4	9	4' - 2"	19B
#	T1	5	5	45' - 5"	2
#	T2	4	5	50' - 8"	Str.
	T3	10	5	4' - 9"	Str.
# △	T4	2	5	42' - 4"	Str.
	T5	4	5	5' - 3"	Str.
	T6	4	5	4' - 1"	Str.
△	U1	45	6	9' - 8"	14B
	U2	49	4	7' - 4"	17
△	U3	49	4	2' - 10"	14A
△	U4	4	6	10' - 4"	T1
	U5	4	4	13' - 3"	T1
	U6	2	4	12' - 3"	T1
	U7	2	4	11' - 4"	T1
	U8	2	4	10' - 6"	T1
	U9	4	4	14' - 4"	T1
	U10	2	4	13' - 6"	T1
	U11	2	4	12' - 6"	T1
	U12	2	4	11' - 6"	T1

Bending Details

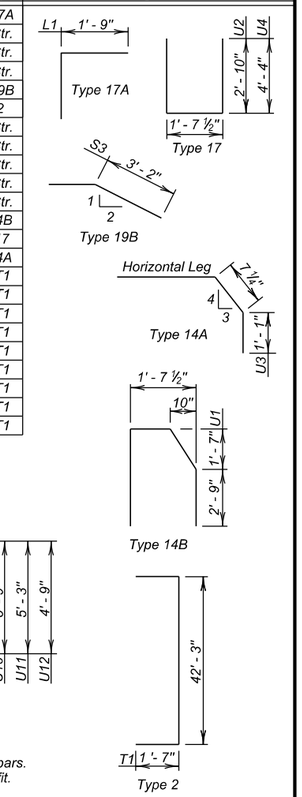

NOTES:
All dimensions are out to out of bars.
Bend in field as necessary to fit.
△ Bars are to be epoxy coated.

ESTIMATED QUANTITIES

ITEM	UNIT	QUANTITY
Class A45 Concrete, Bridge	Cu. Yd.	14.5
Reinforcing Steel	Lb.	1319
Epoxy Coated Reinforcing Steel	Lb.	1290
Structure Excavation, Bridge	Cu. Yd.	9.7
Micropile	Each	10
Micropile Proof Load Test	Each	1
Micropile Verification Load Test	Each	1

ABUTMENT NO. 1 DETAILS
FOR
EASTBOUND LANES

150' - 6" CONTINUOUS CONCRETE BRIDGE

40' - 0" ROADWAY — 0° SKEW
OVER LITTLE ELK CREEK — SEC. 4-T3N-R6E
STA. 1206 + 41.33 TO 1207 + 91.83 — IM 0901(38)40
STR. NO. 47-085-546 — HL-93

MEADE COUNTY
S. D. DEPT. OF TRANSPORTATION
DECEMBER 2014

DESIGNED BY	CK. DES. BY	DRAFTED BY	
TB/PW	SK	GW/MG	BRIDGE ENGINEER
MEAD5580	5580WJ07		

STATE OF	PROJECT	SHEET NO.	TOTAL SHEETS
S.D.	IM 0901(38)40	E117	E199

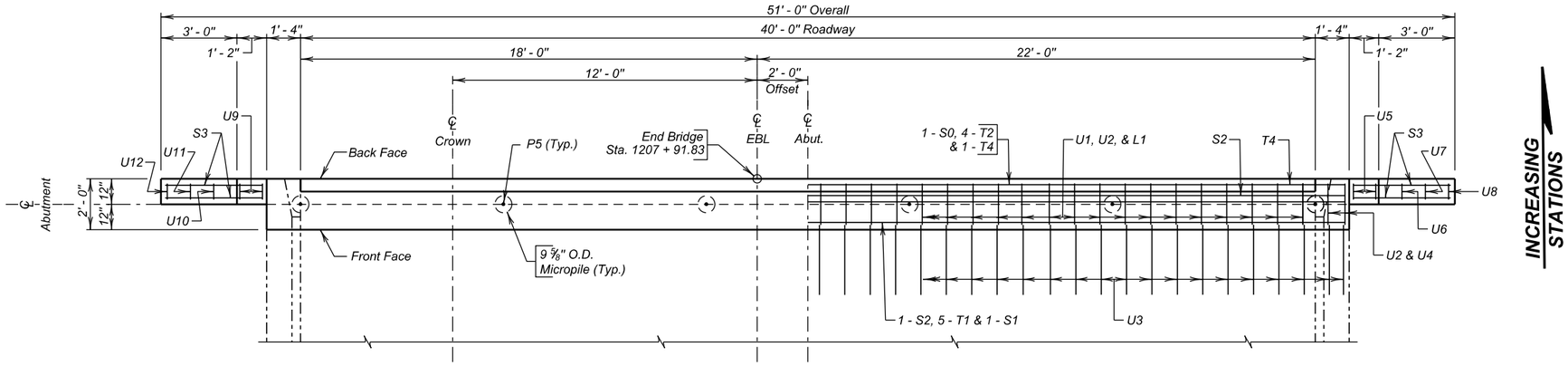

PLAN

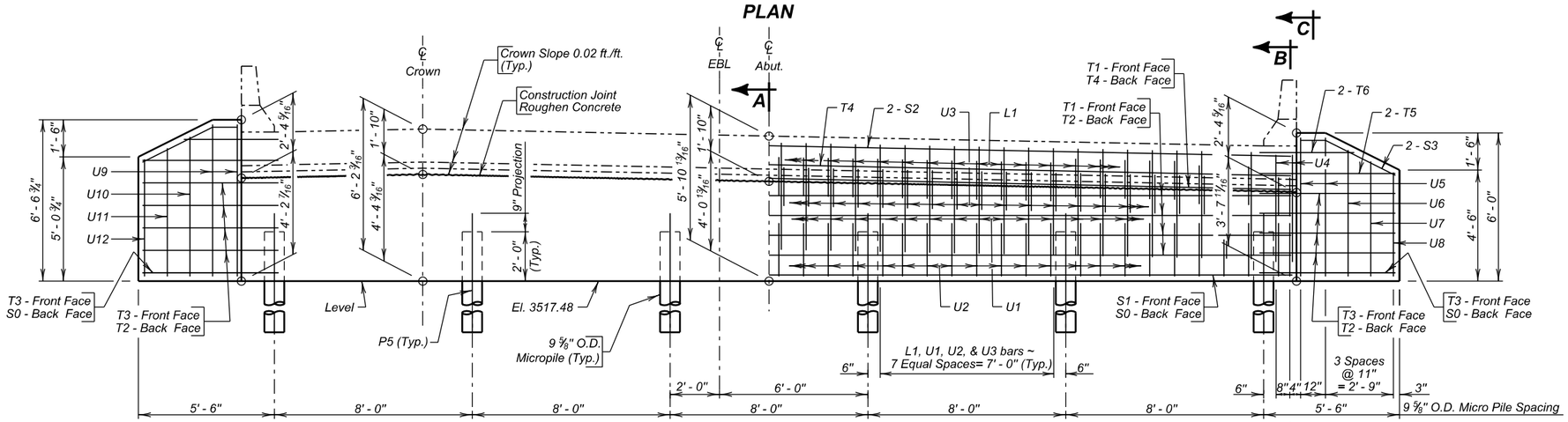

ELEVATION

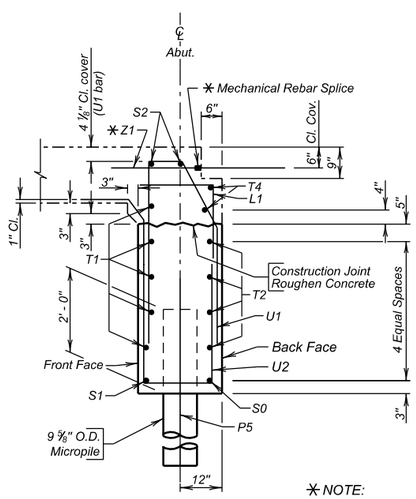

SEC. A - A

NOTE:
Quantity for Z1 bars and Mechanical Splices are listed on the SUPERSTRUCTURE DETAILS Sheet.

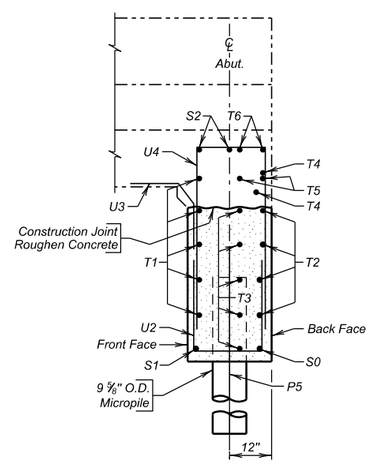

SEC. B - B

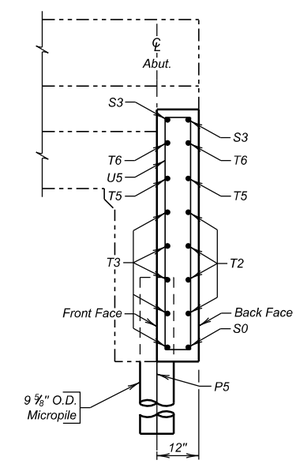

SEC. C - C

REINFORCING SCHEDULE

	Mk.	No.	Size	Length	Type
△	L1	40	4	3' - 6"	17A
	S0	1	9	50' - 8"	Str.
	S1	1	9	42' - 4"	Str.
# △	S2	2	9	42' - 4"	Str.
	S3	4	9	4' - 2"	19B
#	T1	5	5	45' - 5"	2
#	T2	4	5	50' - 8"	Str.
	T3	10	5	4' - 9"	Str.
# △	T4	2	5	42' - 4"	Str.
	T5	4	5	5' - 3"	Str.
	T6	4	5	4' - 1"	Str.
△	U1	40	6	9' - 8"	14B
	U2	44	4	7' - 4"	17
△	U3	44	4	2' - 10"	14A
△	U4	4	6	10' - 4"	T1
	U5	4	4	13' - 3"	T1
	U6	2	4	12' - 3"	T1
	U7	2	4	11' - 4"	T1
	U8	2	4	10' - 6"	T1
	U9	4	4	14' - 4"	T1
	U10	2	4	13' - 6"	T1
	U11	2	4	12' - 6"	T1
	U12	2	4	11' - 6"	T1

Bending Details

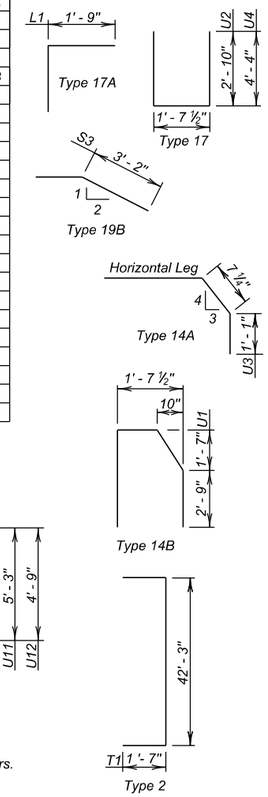

NOTES:
All dimensions are out to out of bars.
Bend in field as necessary to fit.
△ Bars are to be epoxy coated.

ESTIMATED QUANTITIES

ITEM	UNIT	QUANTITY
Class A45 Concrete, Bridge	Cu. Yd.	14.5
Reinforcing Steel	Lb.	1294
Epoxy Coated Reinforcing Steel	Lb.	1196
Structure Excavation, Bridge	Cu. Yd.	9.7
Micropile	Each	6
Micropile Proof Load Test	Each	1

ABUTMENT NO. 5 DETAILS
FOR
EASTBOUND LANES

150' - 6" CONTINUOUS CONCRETE BRIDGE

40' - 0" ROADWAY — 0° SKEW
OVER LITTLE ELK CREEK — SEC. 4-T3N-R6E
STA. 1206 + 41.33 TO 1207 + 91.83 — IM 0901(38)40
STR. NO. 47-085-546 — HL-93

MEADE COUNTY
S. D. DEPT. OF TRANSPORTATION
DECEMBER 2014

DESIGNED BY	CK. DES. BY	DRAFTED BY	
TB/PW	SK	GW/MG	Steve A Johnson BRIDGE ENGINEER
MEAD5580	5580WJ08		

STATE OF	PROJECT	SHEET NO.	TOTAL SHEETS
S.D.	IM 0901(38)40	E118	E199

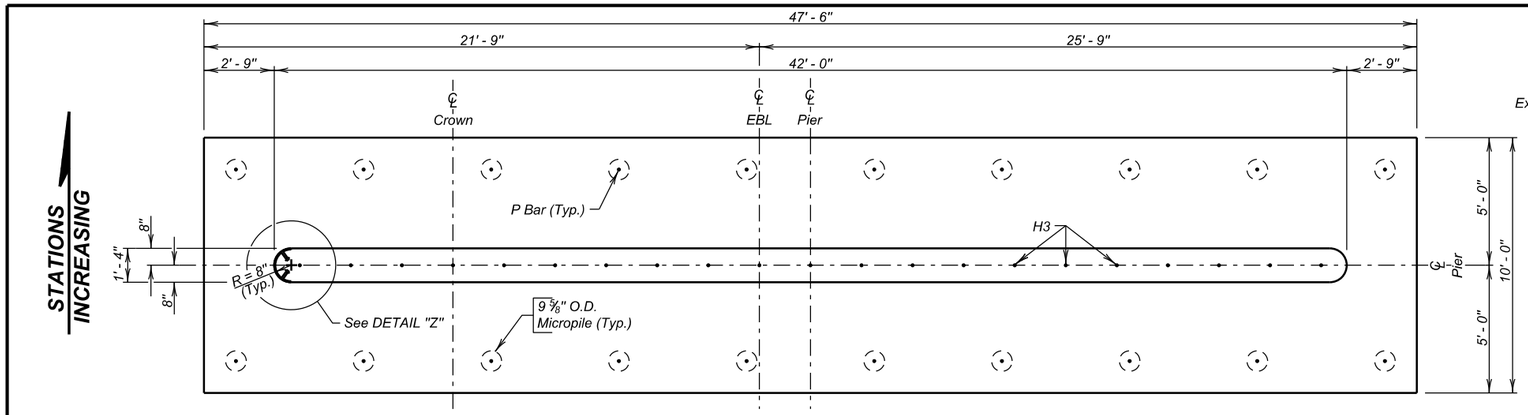

PLAN

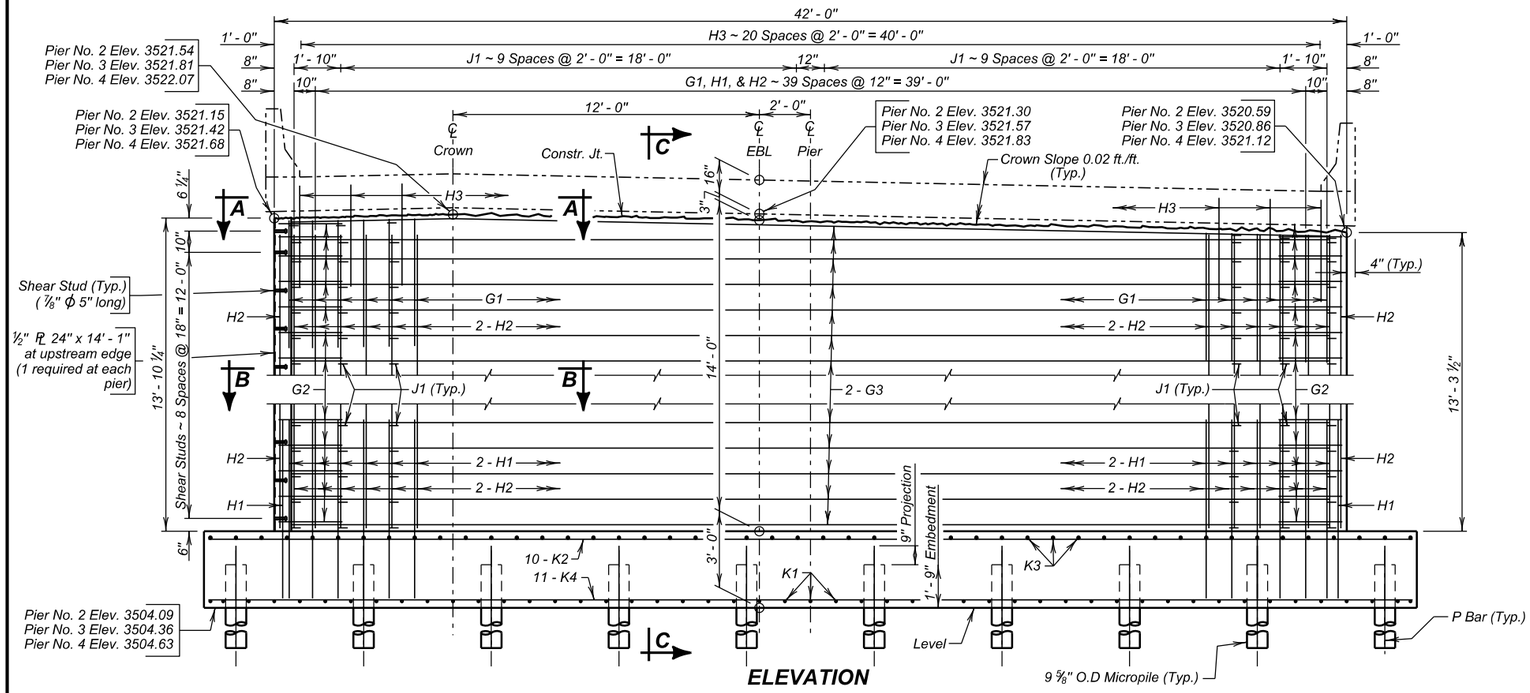

ELEVATION

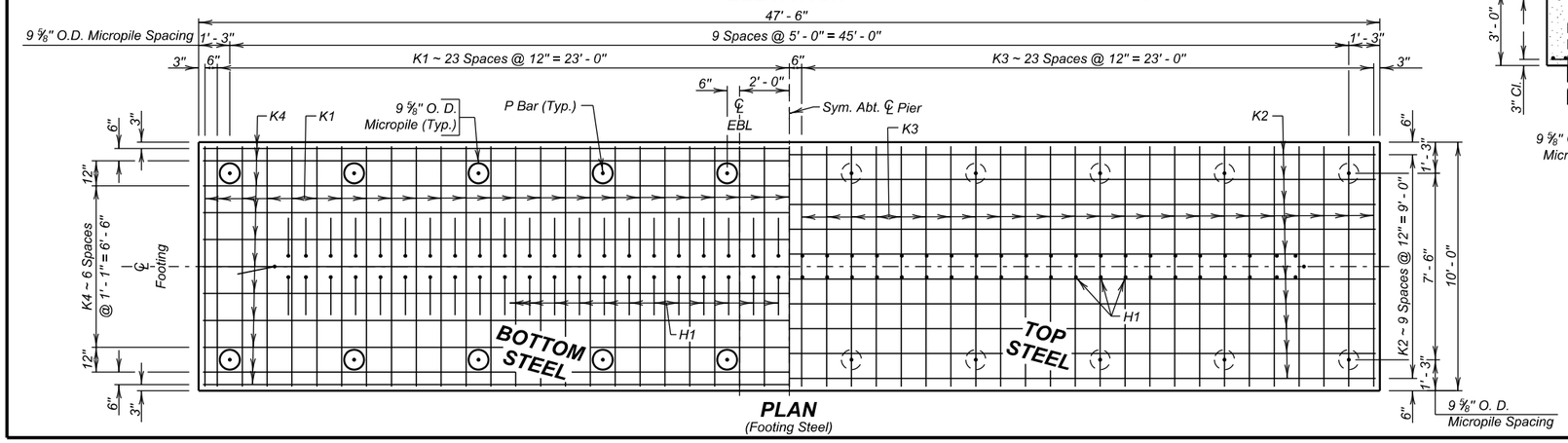

PLAN
(Footing Steel)

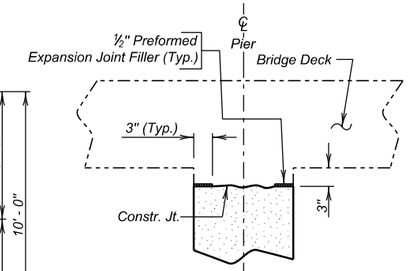

DETAIL "X"
(Resteel not shown)

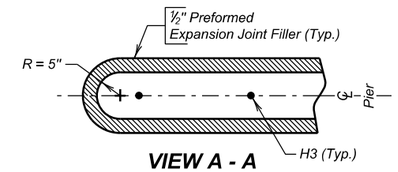

VIEW A - A
(Resteel and Bridge Deck not shown)

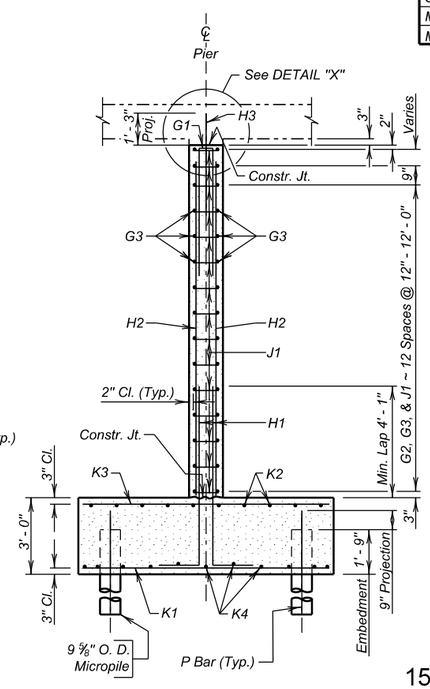

SEC. C - C

REINFORCING SCHEDULE
(For One Pier - 3 Required)

Mk.	No.	Size	Length	Type	Bending Details
G1	42	9	10' - 11"	17	
G2	26	4	5' - 7"	S11	
G3	26	4	40' - 8"	Str.	
H1	86	9	7' - 11"	17A	
H2	86	9	13' - 1"	Str.	
H3	21	7	4' - 0"	Str.	
J1	308	4	1' - 9"	T9	
K1	49	8	9' - 8"	Str.	
K2	10	4	47' - 2"	Str.	
K3	48	4	9' - 8"	Str.	
K4	11	5	47' - 2"	Str.	

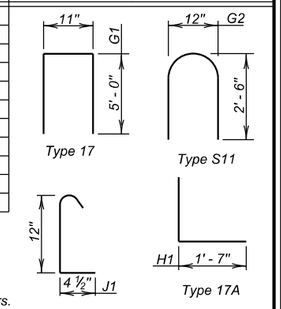

NOTE:
All dimensions are out to out of bars.
Δ Bars to be epoxy coated.

ESTIMATED QUANTITIES

ITEM	UNIT	QUANTITY Pier No. 2	Pier No. 3	Pier No. 4
Class A45 Concrete, Bridge	Cu. Yd.	81.5	81.5	81.5
Reinforcing Steel	Lb.	11293	11293	11293
Epoxy Coated Reinforcing Steel	Lb.	172	172	172
Structure Excavation, Bridge	Cu. Yd.	146.1	122.3	136.0
Micropile	Each	20	20	20
Micropile Proof Load Test	Each	1	1	1

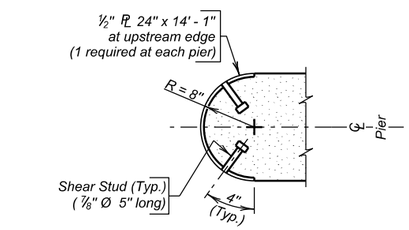

DETAIL "Z"

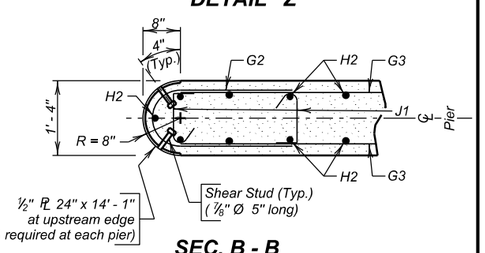

SEC. B - B

PIER DETAILS
FOR
EASTBOUND LANES

150' - 6" CONTINUOUS CONCRETE BRIDGE

40' - 0" ROADWAY — 0° SKEW
OVER LITTLE ELK CREEK — SEC. 4-T3N-R6E
STA. 1206 + 41.33 TO 1207 + 91.83 — IM 0901(38)40
STR. NO. 47-085-546 — HL-93

MEADE COUNTY
S. D. DEPT. OF TRANSPORTATION
DECEMBER 2014

DESIGNED BY	CK. DES. BY	DRAFTED BY	
TB/PW MEAD5580	SK 5580WJ09	GW/MG	Steve A Johnson BRIDGE ENGINEER

STATE OF	PROJECT	SHEET NO.	TOTAL SHEETS
S.D.	IM 0901(38)40	E119	E199

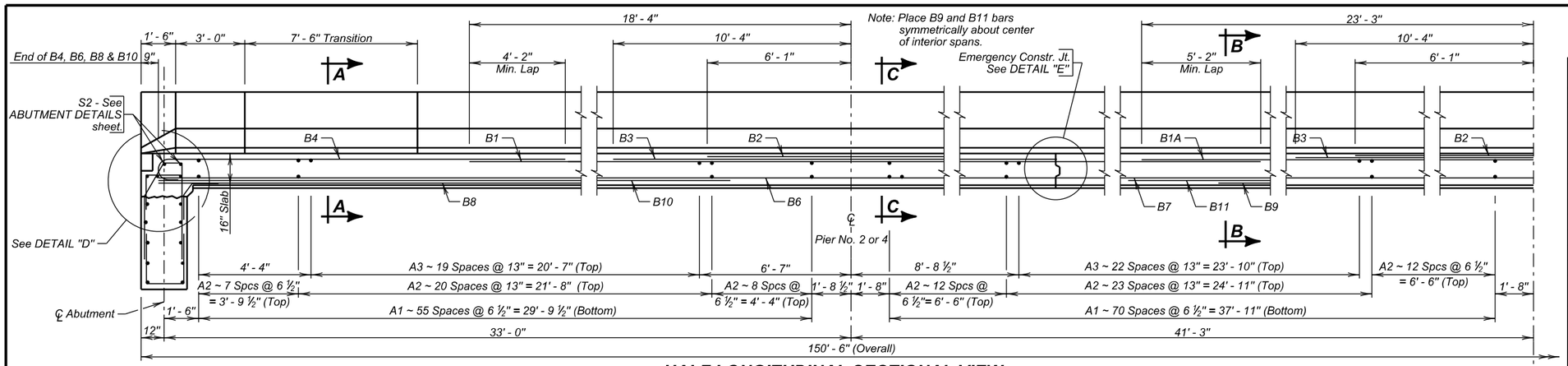

HALF LONGITUDINAL SECTIONAL VIEW

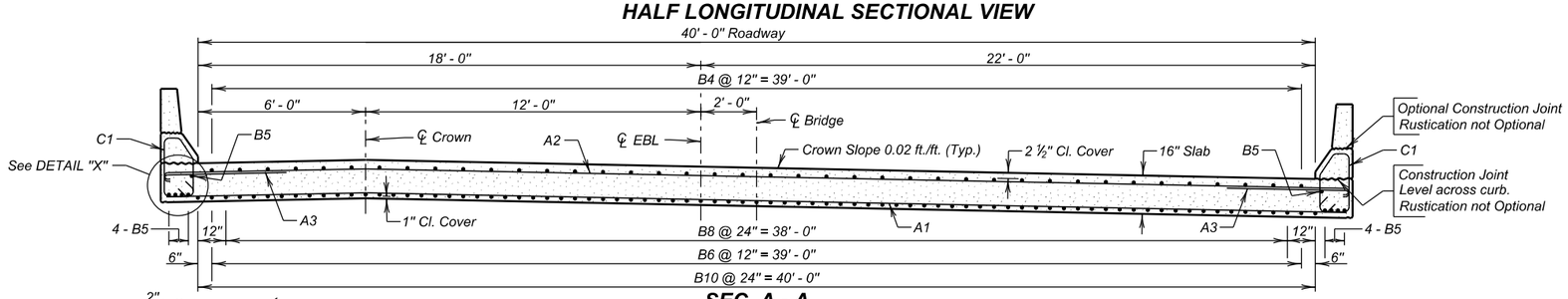

SEC. A - A

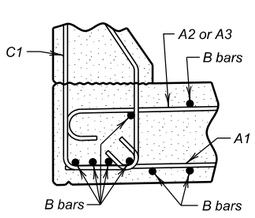

DETAIL "X"

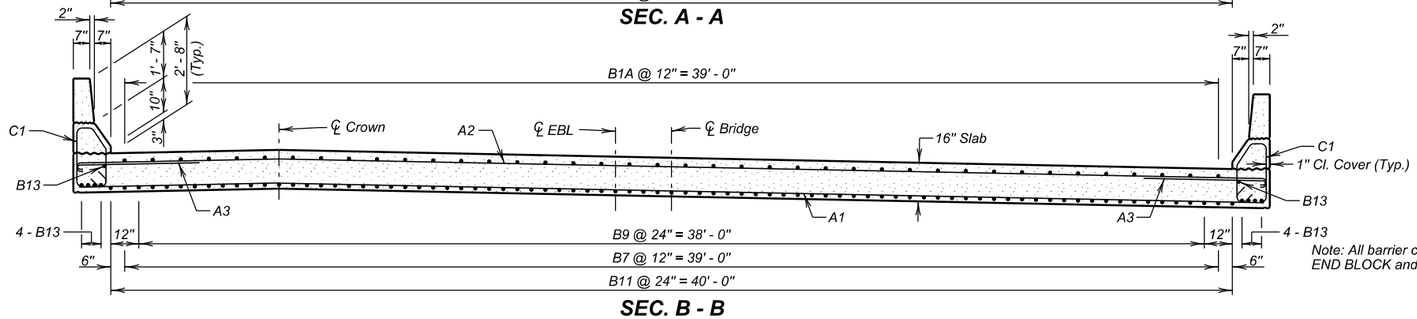

Note: All barrier curb details shown on END BLOCK and BARRIER CURB sheet.

SEC. B - B

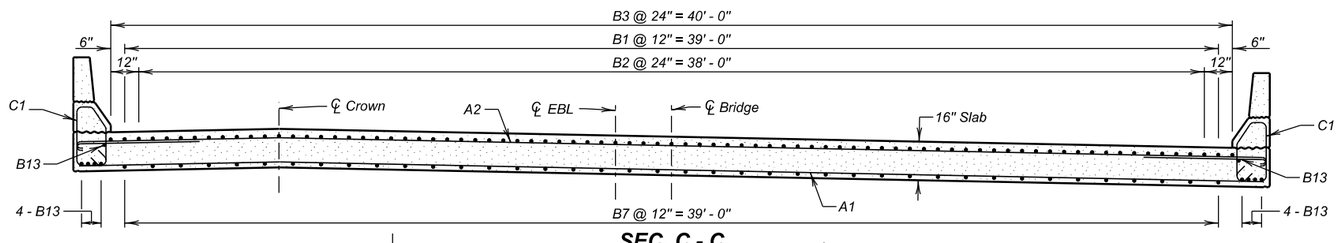

SEC. C - C

△ See DETAILS OF APPROACH SLAB ADJACENT TO BRIDGE sheet for location of Z1 bars and Mechanical Rebar Splices.

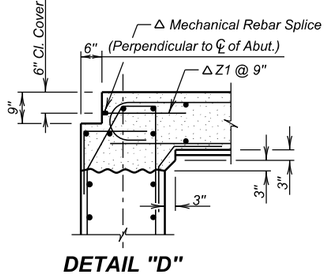

DETAIL "D"

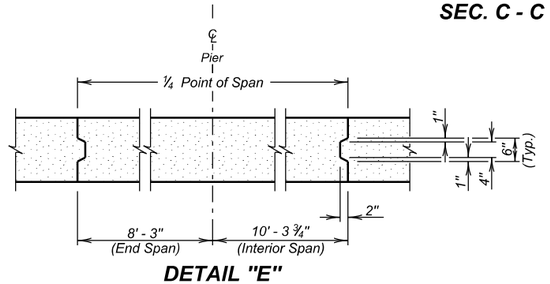

DETAIL "E"

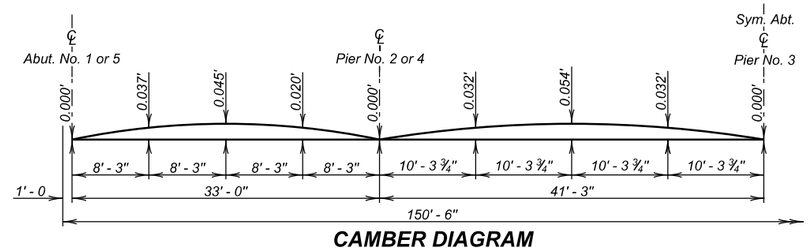

CAMBER DIAGRAM

Camber is calculated for dead load deflection plus plastic flow and has been added to the proposed grade elevations at the respective stations to establish the elevations of the top of the finished roadway slab.

REINFORCING SCHEDULE

Mk.	No.	Size	Length	Type
A1	254	5	42'- 4"	Str.
A2	168	4	43' - 9"	1
A3	172	4	8'- 5"	1A
B1	80	9	41' - 6"	Str.
B1A	40	9	46' - 6"	Str.
B2	60	10	12' - 2"	Str.
B3	63	9	20' - 8"	Str.
B4	80	8	20' - 1"	1A
B5	16	5	33' - 9"	Str.
B6	80	8	33' - 3"	Str.
B7	80	8	41 '- 3"	Str.
B8	40	8	21' - 10"	Str.
B9	40	8	18' - 10"	Str.
B10	42	9	26' - 3"	Str.
B11	42	8	26' - 8"	Str.
B12	36	4	43' - 8"	Str.
B13	16	5	41' - 3"	Str.
B15	12	5	15' - 0"	Str.
B16	6	4	49' - 10"	Str.
B17	8	4	8' - 6"	19B
B18	12	8	4' - 3"	19B
B19	12	5	2' - 4"	Str.
B20	12	6	4' - 0"	17A
B21	12	4	50' - 9"	Str.
C1	284	5	6' - 8"	T1A
C2	256	5	5' - 1"	S11
C3	4	5	5' - 0"	S11
C4	4	5	5' - 0"	S11
C5	4	5	5' - 0"	S11
C6	4	5	6' - 8"	T1
C7	4	5	6' - 9"	T1
C8	4	5	6' - 11"	T1
C9	4	5	7' - 0"	T1
C10	16	6	6' - 11"	T1A
C11	16	5	7' - 1"	T1
C12	4	6	6' - 5"	17
C13	4	5	5' - 4"	17
△ Z1	106	7	2' - 0"	Str.

Bending Details

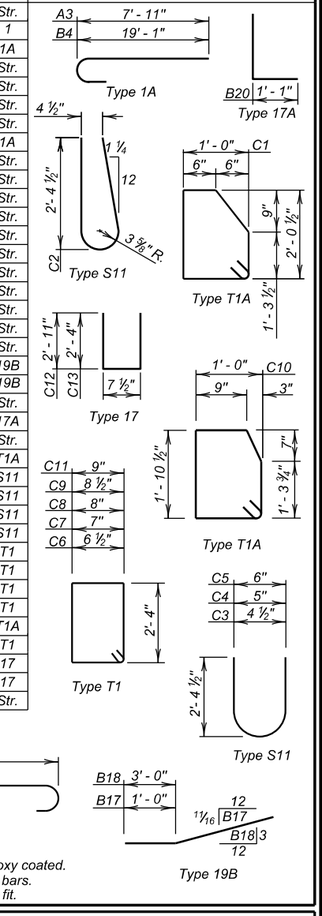

NOTES -
All reinforcing steel shall be epoxy coated.
All dimensions are out to out of bars.
≠ Bend in field as necessary to fit.

ESTIMATED QUANTITIES

ITEM	UNIT	QUANTITY
Class A45 Concrete, Bridge Deck	Cu. Yd.	343.7
Epoxy Coated Reinforcing Steel	Lb.	81223
No. 7 Rebar Splice	Ea.	106
Concrete Penetrating Sealer	Sq. Yd.	669

SUPERSTRUCTURE DETAILS

FOR

EASTBOUND LANES

150' - 6" CONTINUOUS CONCRETE BRIDGE

40' - 0" ROADWAY — 0° SKEW
OVER LITTLE ELK CREEK — SEC. 4-T3N-R6E
STA. 1206 + 41.33 TO 1207 + 91.83 — IM 0901(38)40
STR. NO. 47-085-546 — HL-93

MEADE COUNTY

S. D. DEPT. OF TRANSPORTATION

DECEMBER 2014

DESIGNED BY	CK. DES. BY	DRAFTED BY	
TB/PW	SK	GW/MG	Steve A Johnson BRIDGE ENGINEER
MEAD5580	5580WJ09		

STATE OF	PROJECT	SHEET NO.	TOTAL SHEETS
S.D.	IM 0901(38)40	E120	E199

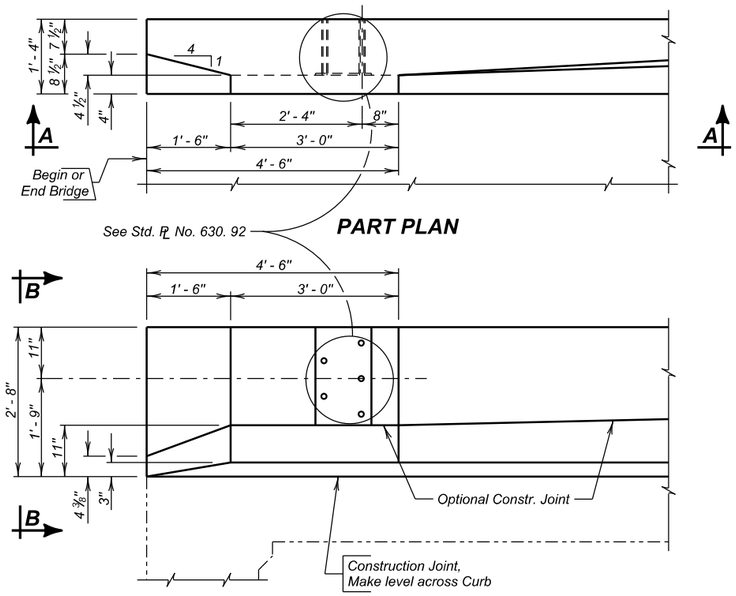

PART PLAN

VIEW A - A

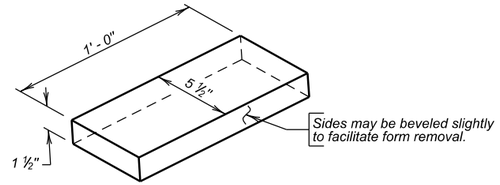

RECESS DETAIL

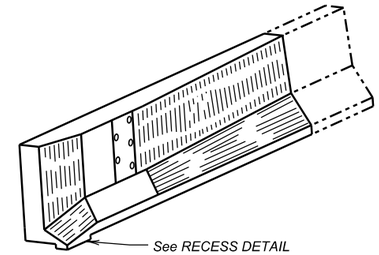

ISOMETRIC VIEW

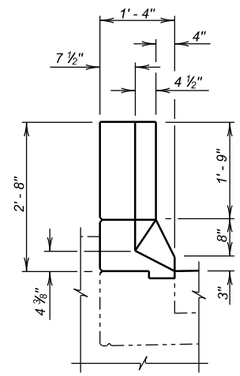

VIEW B - B

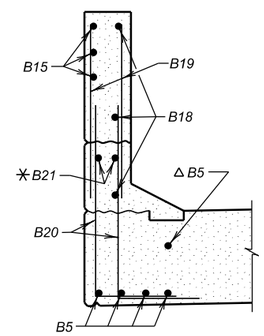

SEC. C - C

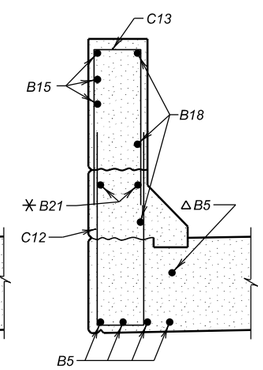

SEC. D - D

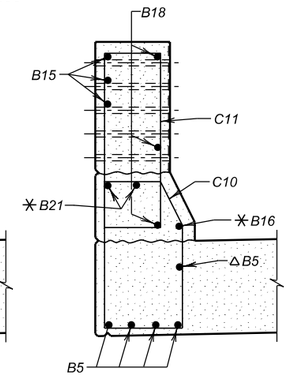

SEC. E - E

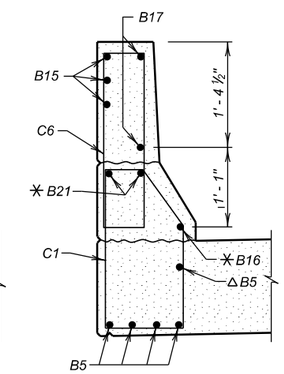

SEC. F - F

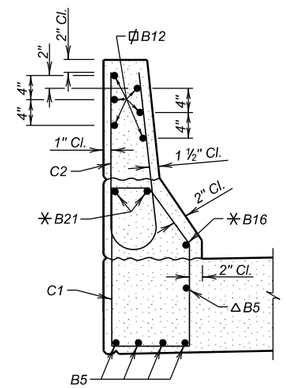

SEC. G - G

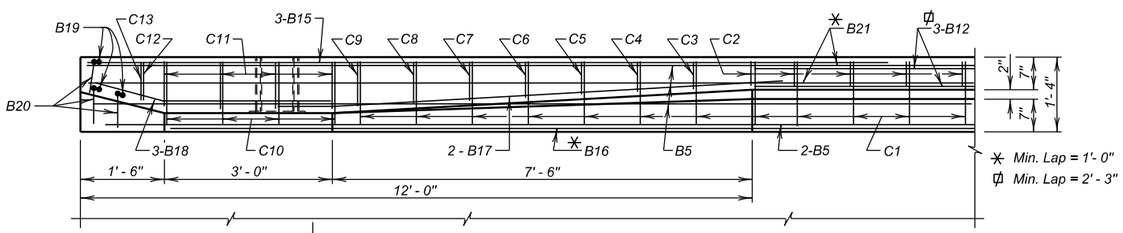

PLAN

△ Place as shown in SUPERSTRUCTURE DETAILS.

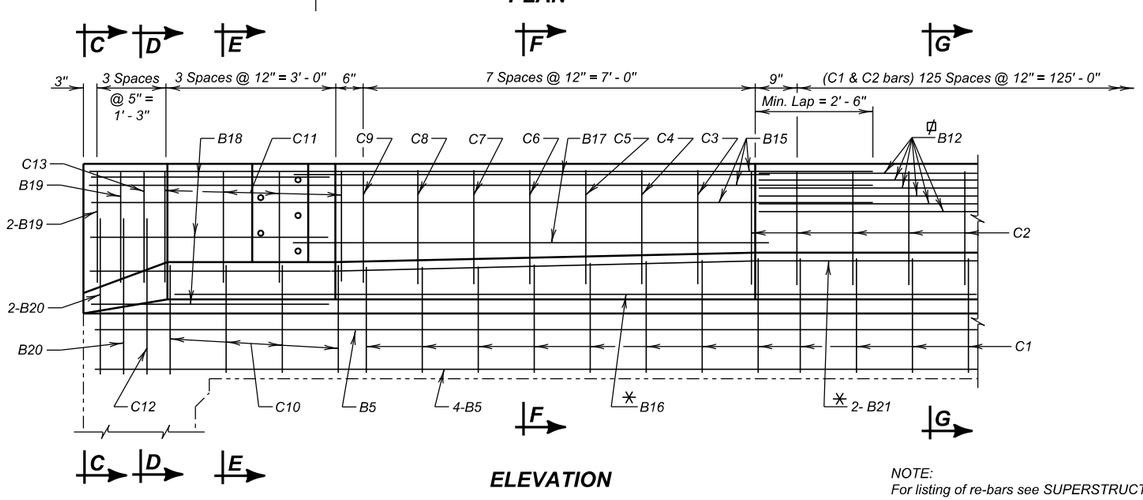

ELEVATION

NOTE:
For listing of re-bars see SUPERSTRUCTURE DETAILS.

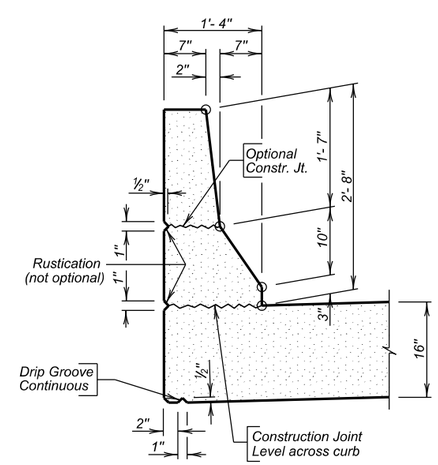

BARRIER DETAILS

END BLOCK AND BARRIER CURB DETAILS

FOR

EASTBOUND LANES

150' - 6" CONTINUOUS CONCRETE BRIDGE

40' - 0" ROADWAY — 0° SKEW
OVER LITTLE ELK CREEK — SEC. 4-T3N-R6E
STA. 1206 + 41.33 TO 1207 + 91.83 — IM 0901(38)40
STR. NO. 47-085-546 — HL-93

MEADE COUNTY
S. D. DEPT. OF TRANSPORTATION
DECEMBER 2014

DESIGNED BY	CK. DES. BY	DRAFTED BY	
TB/PW	SK	GW/MG	Steve A Johnson BRIDGE ENGINEER
MEAD5580	5580WJ11		

STATE OF	PROJECT	SHEET NO.	TOTAL SHEETS
S.D.	IM 0901(38)40	E121	E199

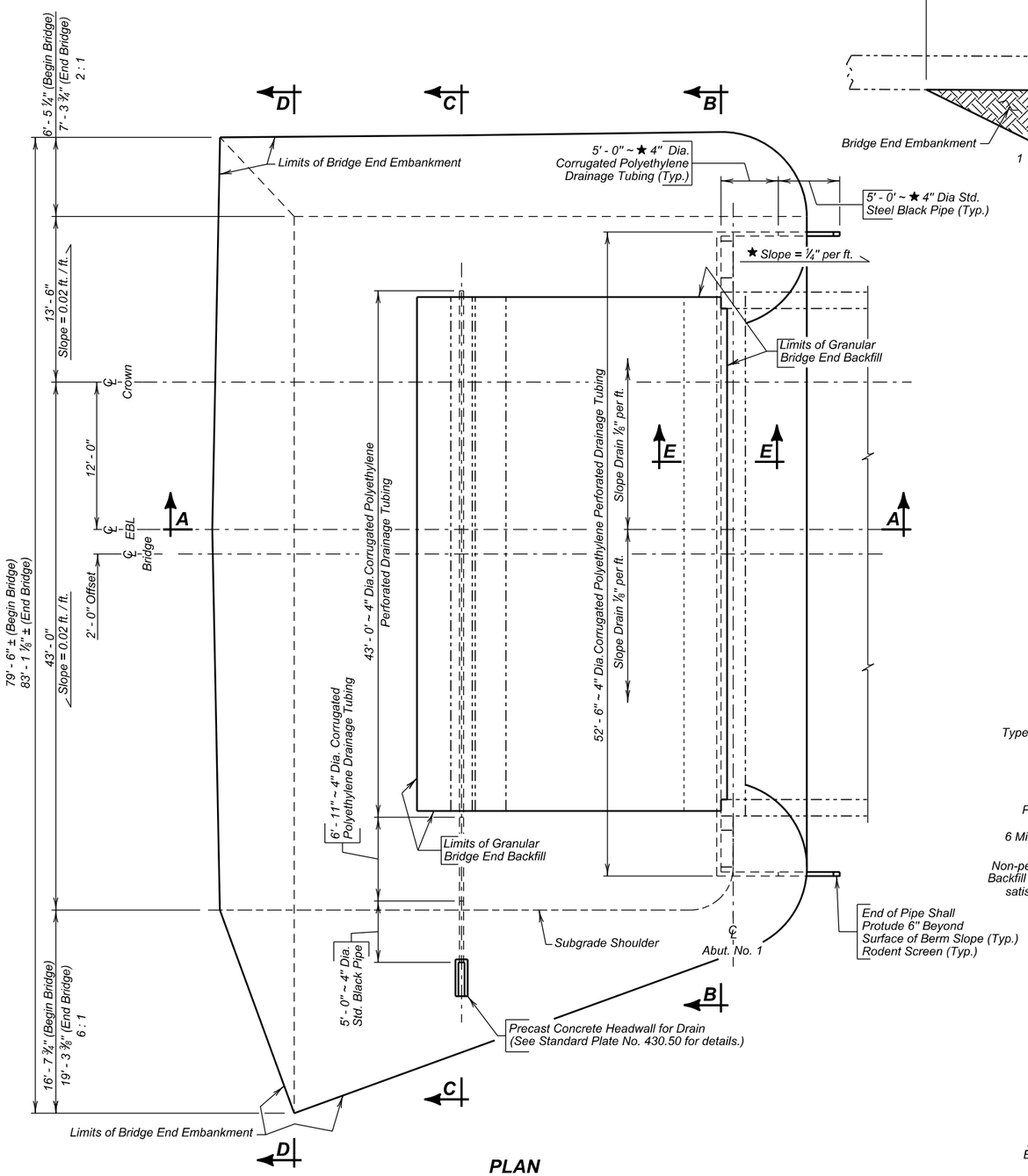

PLAN

(Bridge End Backfill shown adjacent to Abut. No. 1
Abut. No. 5 similar opposite hand except as shown.)

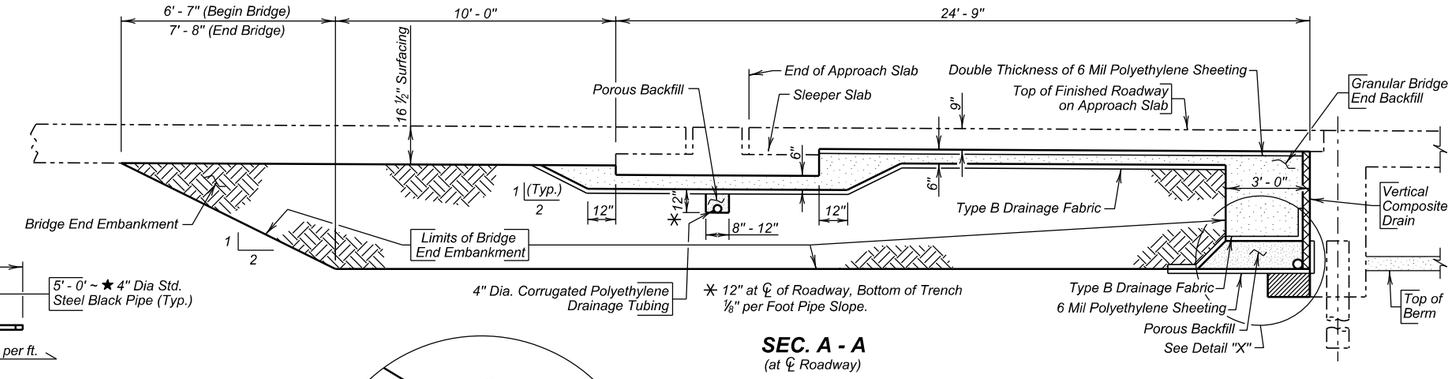

SEC. A - A

(at ℄ Roadway)

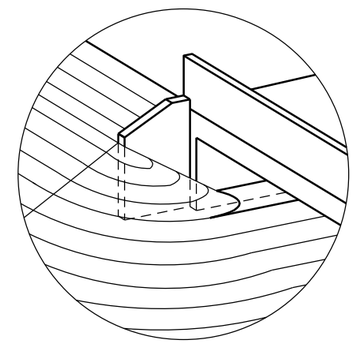

SPILL CONE DETAIL AT EMBANKMENT

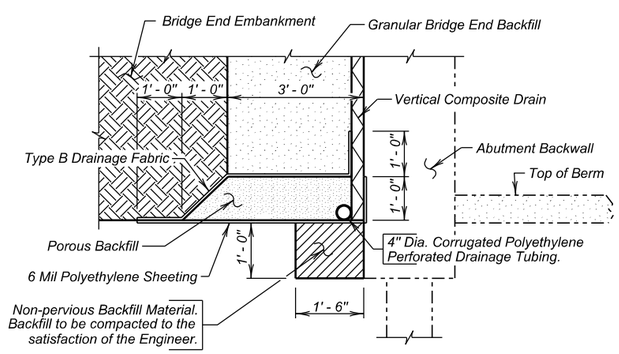

DETAIL "X"

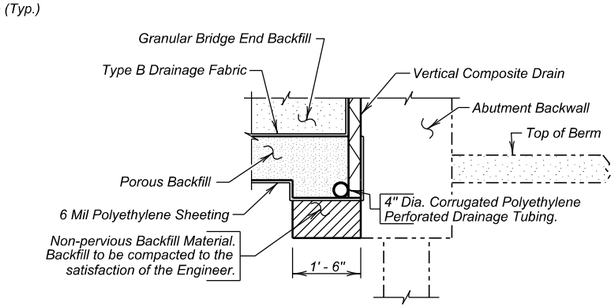

SEC. E - E

ESTIMATED QUANTITIES

(For Two Abutments)

ITEM	UNIT	QUANTITY
Granular Bridge End Backfill	Cu. Yd.	71.1
✳ Bridge End Embankment	Cu. Yd.	665.0
✠ Porous Backfill	Ton	31.7
4" Underdrain Pipe	Ft.	255
✠ Approach Slab Underdrain Excavation	Cu. Yd.	2.7
Precast Concrete Headwall for Drain	Each	2

1. 191 ft. 4" dia. Corrugated Polyethylene Perforated Drainage Tubing.
2. 34 ft. 4" dia. Corrugated Polyethylene Drainage Tubing.
3. 30 ft. 4" dia. Std. Black Steel Pipe with Rodent Screens.
4. 354 sq. ft. Vertical Composite Drain

Items 1 thru 4 are approximate quantities contained in the 4" Underdrain Pipe and are for information only.

5. 403 sq. yd. 6 mil Polyethylene Sheeting, not including laps.
6. 308 sq. yd. Type B Drainage Fabric.

Items 5 and 6 are approximate quantities contained in the Granular Bridge End Backfill and are for information only.

✠ For estimating purposes only, a factor of 1.89 tons/cu. yd. was used to convert cu. yds. to tons.

✳ Shrinkage Factor of 1.25 Used.

✠ Quantity based on a 12" wide trench.

DETAILS OF BRIDGE END BACKFILL (A)

FOR

EASTBOUND LANES

150' - 6" CONTINUOUS CONCRETE BRIDGE

40' - 0" ROADWAY — 0° SKEW
OVER LITTLE ELK CREEK — SEC. 4-T3N-R6E
STA. 1206 + 41.33 TO 1207 + 91.83 — IM 0901(38)40
STR. NO. 47-085-546 — HL-93

MEADE COUNTY
S. D. DEPT. OF TRANSPORTATION
DECEMBER 2014

DESIGNED BY	CK. DES. BY	DRAFTED BY	
TB/PW	SK	BT	Steve A. Johnson BRIDGE ENGINEER
MEAD5580	5580WJ12		

STATE OF	PROJECT	SHEET NO.	TOTAL SHEETS
S.D.	IM 0901(38)40	E122	E199

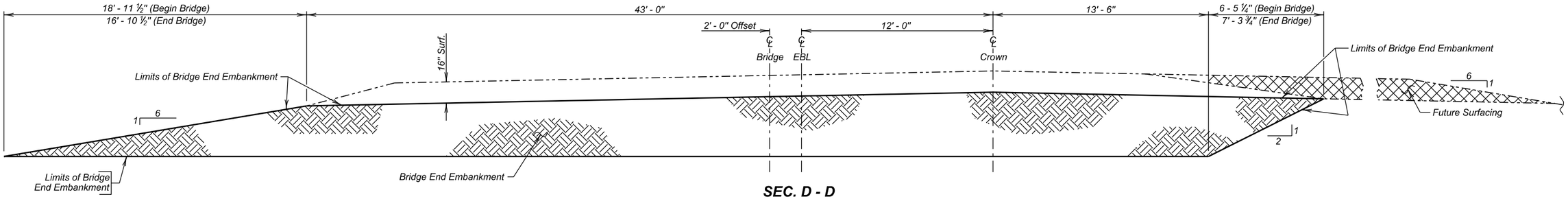

SEC. D - D

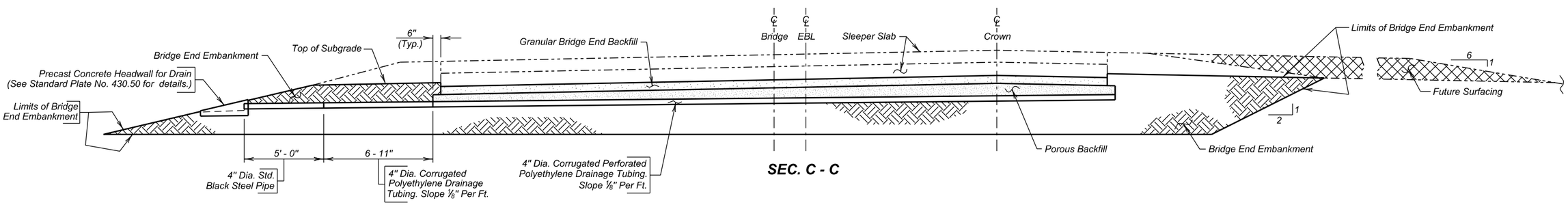

SEC. C - C

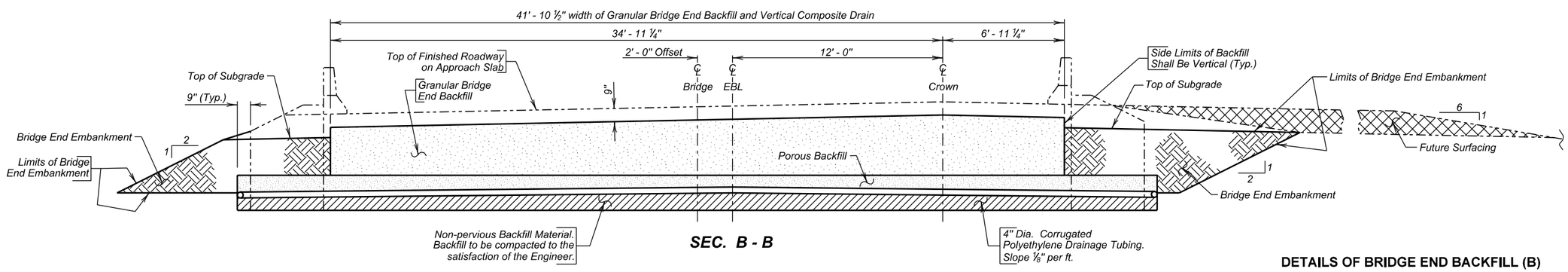

SEC. B - B

DETAILS OF BRIDGE END BACKFILL (B)

FOR

EASTBOUND LANES

150' - 6" CONTINUOUS CONCRETE BRIDGE

40' - 0" ROADWAY	0° SKEW
OVER LITTLE ELK CREEK	SEC. 4-T3N-R6E
STA. 1206 + 41.33 TO 1207 + 91.83	IM 0901(38)40
STR. NO. 47-085-546	HL-93

MEADE COUNTY

S. D. DEPT. OF TRANSPORTATION

DECEMBER 2014

13 OF 20

DESIGNED BY	CK. DES. BY	DRAFTED BY	
TB/PW	SK	BT	Steve A Johnson BRIDGE ENGINEER
MEAD5580	5580WJ13		

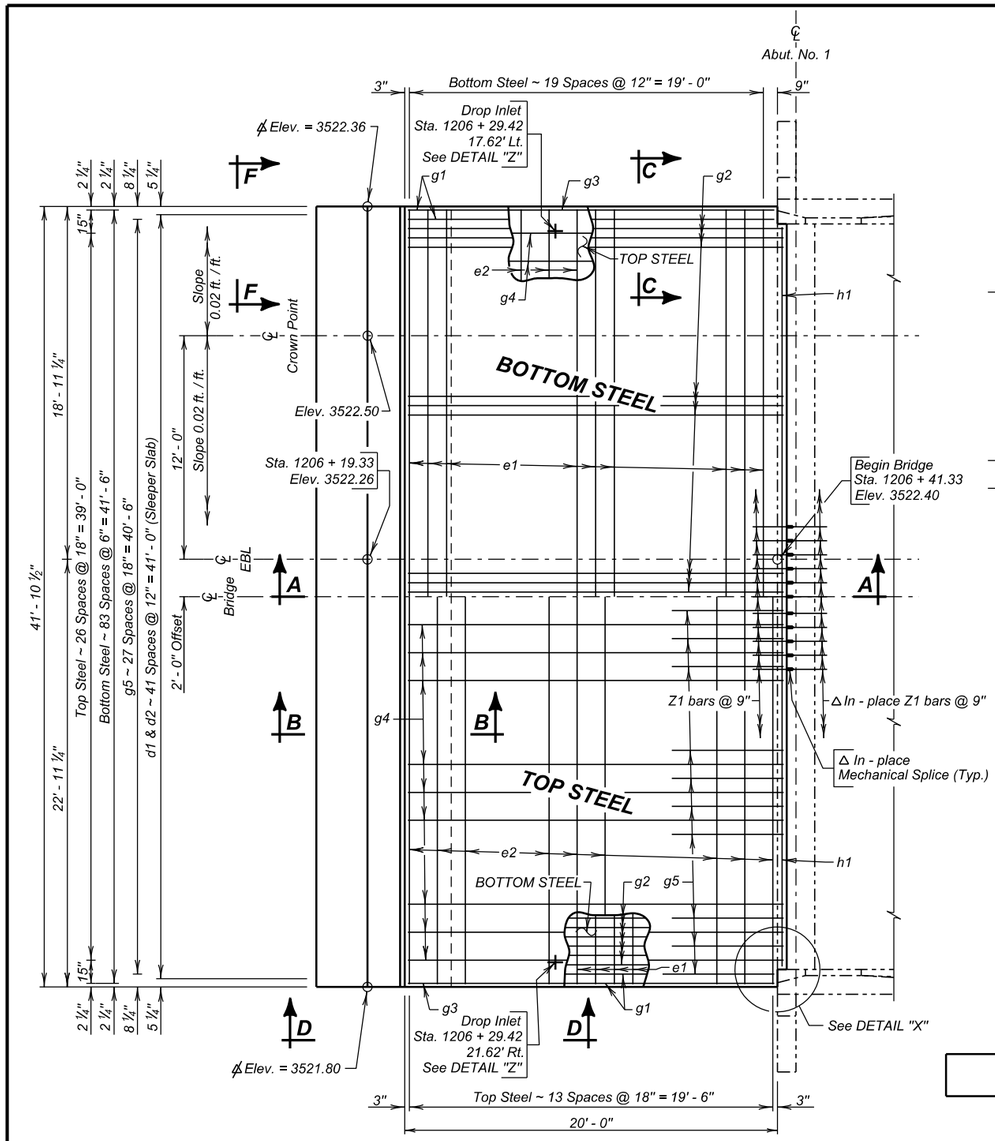

PLAN
(Shown adj. to Abut. No. 1, Abut No. 5 similar by rotation)

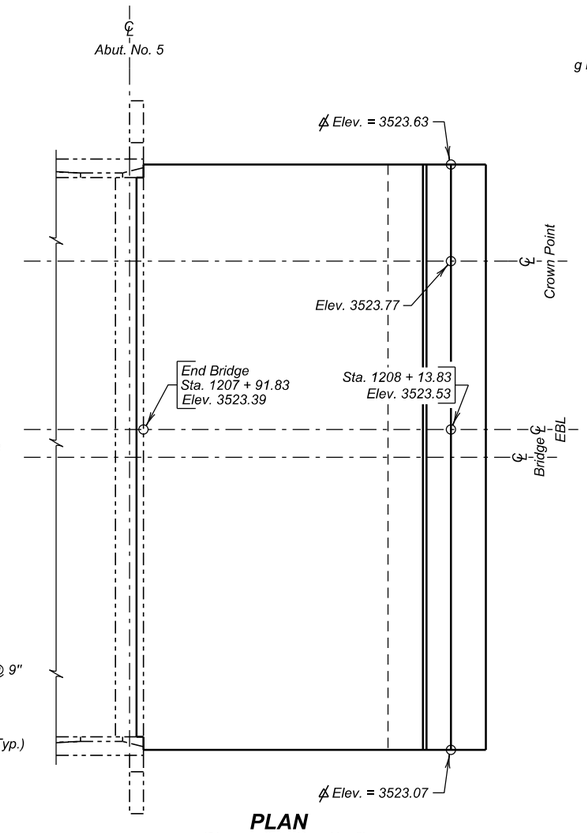

PLAN
(Shown adj. to Abut. No. 5)

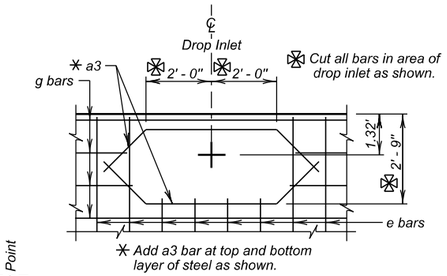

DETAIL "Z"
(Typical plan for steel when drop inlet is used.)

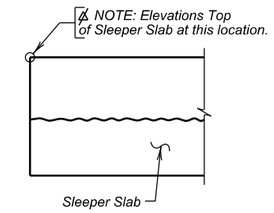

VIEW F - F

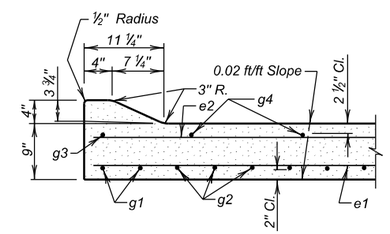

SEC. C - C

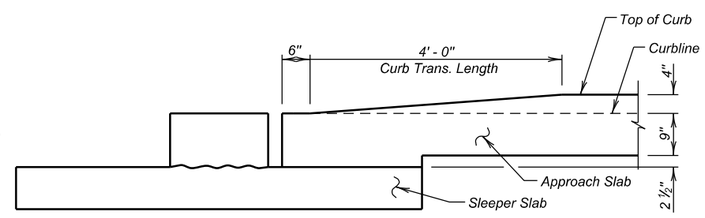

VIEW D - D

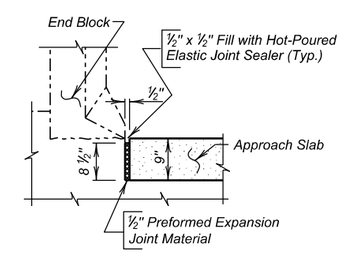

SEC. E - E

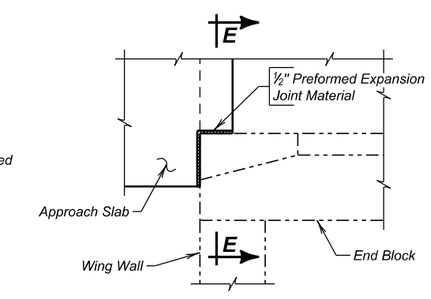

DETAIL "X"

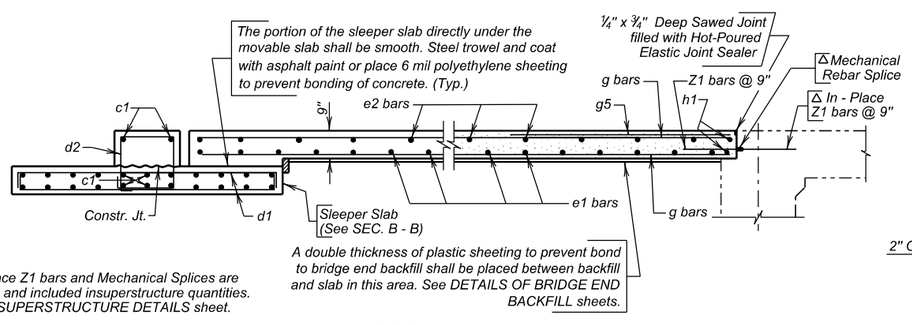

In-place Z1 bars and Mechanical Splices are listed and included insuperstructure quantities. See SUPERSTRUCTURE DETAILS sheet.

SEC. A - A

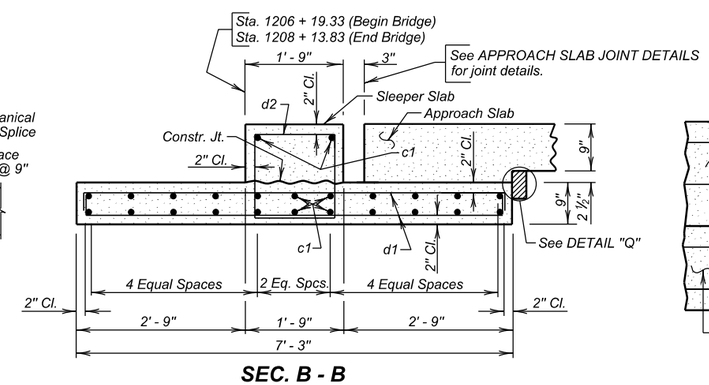

SEC. B - B
(Sleeper Slab)

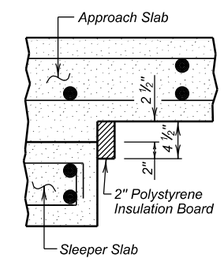

DETAIL "Q"

STATE OF	PROJECT	SHEET NO.	TOTAL SHEETS
S.D.	IM 0901(38)40	E123	E199

REINFORCING SCHEDULE
(For Two Approach Slabs & Two Sleeper Slabs)

Mk.	No.	Size	Length	Type
Sleeper Slabs				
c1	48	5	41' - 7"	Str.
d1	168	4	7' - 9"	2
d2	84	4	6' - 4"	T2
Approach Slabs				
a3	8	4	7' - 4"	19A
e1	40	6	41' - 7"	Str.
e2	28	4	41' - 7"	Str.
g1	8	8	19' - 8"	Str.
g2	160	8	20' - 2"	Str.
g3	4	4	19' - 8"	Str.
g4	54	4	20' - 2"	Str.
g5	56	4	6' - 0"	Str.
h1	4	6	39' - 8"	Str.
Z1	106	7	2' - 0"	Str.

Bending Details

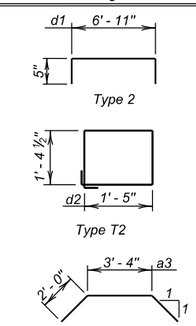

NOTES:
All bars to be epoxy coated.
All dimensions are out to out of bars.

ESTIMATED QUANTITIES
(For Two Approach Slabs and Two Sleeper Slabs)

ITEM	UNIT	QUANTITY
Concrete Approach Slab for Bridge	Sq. Yd.	190.6
Concrete Approach Sleeper Slab for Bridge	Sq. Yd.	67.5

1. 48.4 Cu. Yds. Concrete in Approach Slabs.
2. 14027 Lbs. Epoxy Coated Re-Steel in Approach Slabs.
3. 22.0 Cu. Yds. Concrete in Sleeper Slabs.
4. 3307 Lbs. Epoxy Coated Re-Steel in Sleeper Slabs.
5. 31.4 Sq. Ft. of 2" Polystyrene Insulation Board.

Items 1 thru 5 are approximate quantities contained in the above bid items and are for information only.

DETAILS OF APPROACH SLAB ADJACENT TO BRIDGE
FOR
EASTBOUND LANES

150' - 6" CONTINUOUS CONCRETE BRIDGE

40' - 0" ROADWAY — 0° SKEW
OVER LITTLE ELK CREEK — SEC. 4-T3N-R6E
STA. 1206 + 41.33 TO 1207 + 91.83 — IM 0901(38)40
STR. NO. 47-085-546 — HL-93

MEADE COUNTY
S. D. DEPT. OF TRANSPORTATION
DECEMBER 2014

DESIGNED BY	CK. DES. BY	DRAFTED BY	
TB/PW	SK	GW/MG	Steve A Johnson BRIDGE ENGINEER
MEAD5580	5580WJ14		

STATE OF	PROJECT	SHEET NO.	TOTAL SHEETS
S.D.	IM 0901(38)40	E124	E199

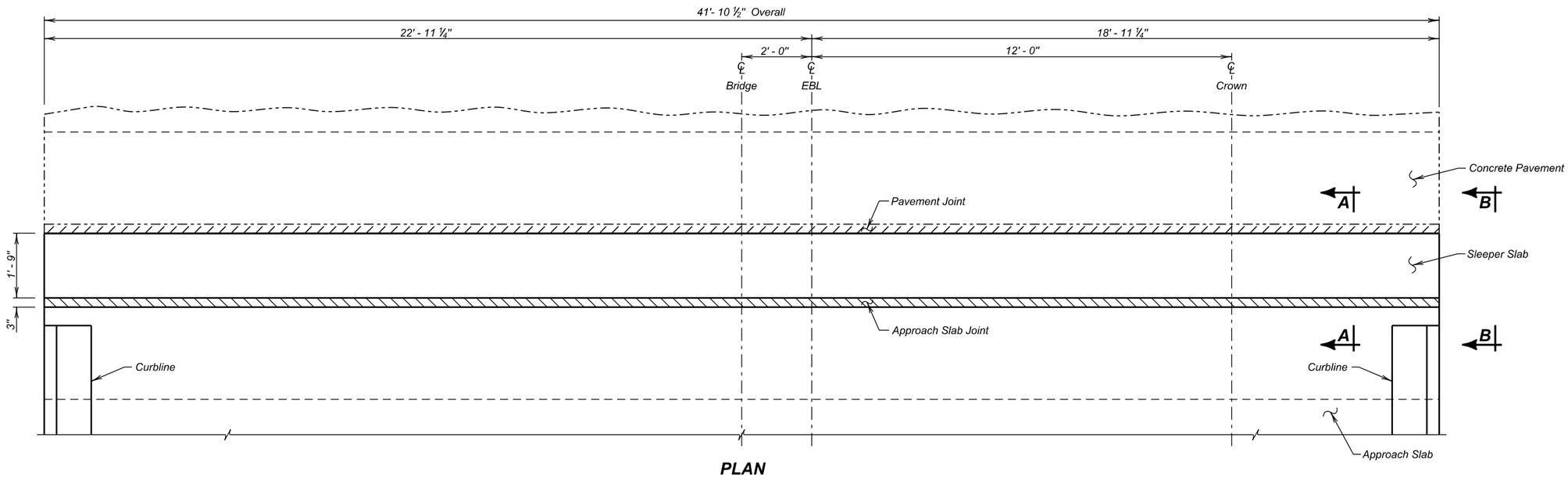

PLAN

GENERAL NOTES

1. The Membrane Sealant shall be on the approved product list for Membrane Sealant Expansion Joints.
2. The manufacturer shall supply the membrane sealant in packaging that precompresses the membrane sealant. The precompressed dimension shall be as recommended by the sealant manufacturer, however, in no case shall the precompressed dimension exceed 75% of the joint opening width. The foam sealant shall be slowly self expanding to permit workers ample time to install the membrane sealant before the membrane sealant exceeds the joint opening width.
3. The membrane sealant shall provide a water tight seal throughout a joint movement range of + 25% (minimum) from the specified joint opening dimension.
4. The membrane sealant shall be supplied in pieces a minimum of 5 feet in length. The foam sealant shall be ultra-violet and ozone resistant.
5. The bonding adhesive used to attach the membrane sealant to the adjacent concrete shall be approved by the membrane sealant manufacturer.
6. Adhesive used to join adjacent pieces of the membrane sealant shall be as recommended by the manufacturer.
7. If styrofoam filler material is used in the construction, it shall be closed cell and water-tight as approved by the Engineer.
8. The minimum ambient air temperature at the time of joint installation and adhesive curing shall be 40° F.
9. A technical representative of the membrane sealant manufacturer shall be present at the jobsite during installation. The technical representative shall be knowledgeable in the correct procedures for the preparation and installation of the joint material to ensure the Contractor installs the joint to the manufacturers' recommendations.
10. Surfaces that will be in contact with the membrane sealant shall be thoroughly cleaned by abrasive blasting to remove all laitance and contaminants (such as oil, curing compounds, etc.) from the surface. At a minimum, two passes of abrasive blasting with the nozzle held at an angle to within 1 to 2 inches of the surface will be required. Cleaning of the surfaces with solvents, wire brushing, or grinding shall not be permitted.
11. After abrasive blasting, but immediately prior to membrane joint installation, the entire joint contact surface shall be air blasted. The air compressor used for joint cleaning shall be equipped with trap devices capable of providing moisture-free and oil-free air at a recommended pressure of 90 psi. To obtain complete bonding with the adhesive, the adjacent surfaces must be dry and clean. The contact surfaces for the joint shall be visually inspected by the Engineer immediately prior to joint installation to verify the surface is dry and clean.
12. Individual spliced sections shall be installed as per the manufacturers' recommendations. The membrane joint sealant manufacturer shall submit a detailed installation procedure to the Engineer at least 5 days prior to joint installation for his review.
13. Traffic shall not be allowed on the joint until the bonding adhesive has had time to cure, as recommended by the manufacturer.
14. Use plywood or other material to protect concrete adjacent to the joint from spalling before any equipment is moved across the joint. Any spall areas will be repaired at the Contractor's expense by breaking out and replacing adjacent concrete, as approved by the Engineer.
15. The Membrane Sealant Expansion Joint will be measured in feet to the nearest one-tenth foot, complete in place. Measurement will be made of the overall horizontal length. The Membrane Sealant Expansion Joint will be paid for at the contract unit price per foot complete in place. Payment for this item shall be full compensation for furnishing all the required materials in place, including labor, equipment and incidentals necessary to complete the work in accordance with the plans and the foregoing specifications.

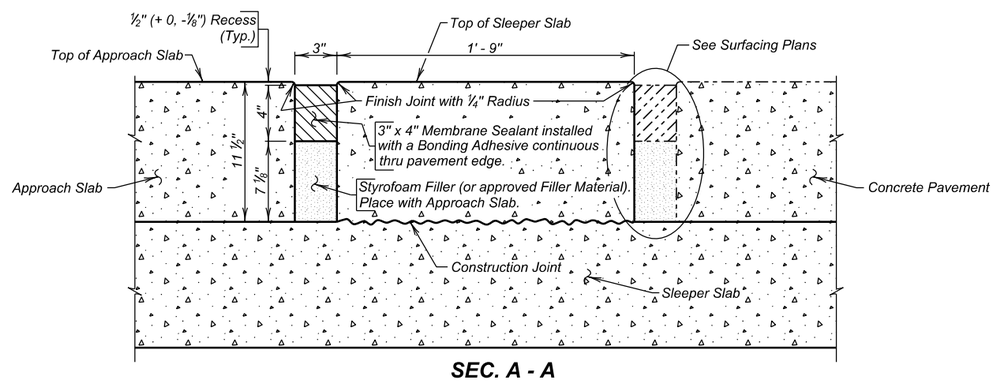

SEC. A - A

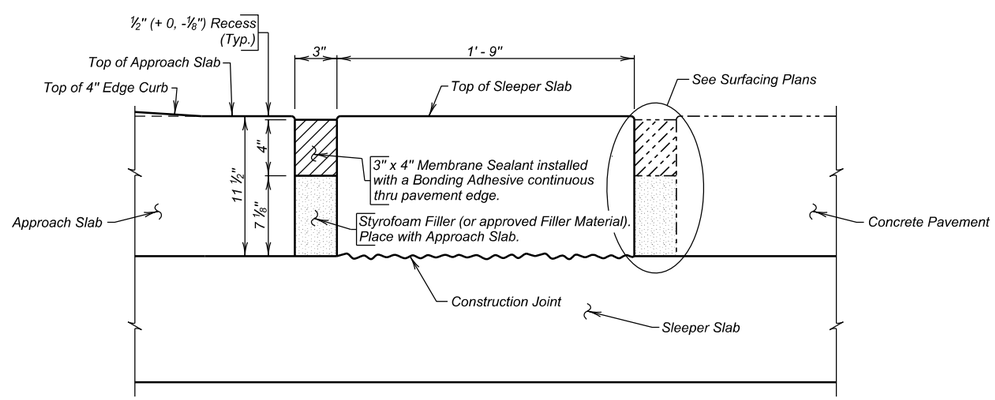

VIEW B - B

ESTIMATED QUANTITIES
(For Two Approach Slabs)

ITEM	UNIT	QUANTITY
Membrane Sealant Expansion Joint	Ft.	83.8

APPROACH SLAB JOINT DETAILS

FOR

EASTBOUND LANES

150' - 6" CONTINUOUS CONCRETE BRIDGE

40' - 0" ROADWAY — 0° SKEW
OVER LITTLE ELK CREEK — SEC. 4-T3N-R6E
STA. 1206 + 41.33 TO 1207 + 91.83 — IM 0901(38)40
STR. NO. 47-085-546 — HL-93

MEADE COUNTY

S. D. DEPT. OF TRANSPORTATION

DECEMBER 2014

DESIGNED BY	CK. DES. BY	DRAFTED BY	
TB/PW	SK	GW/MG	BRIDGE ENGINEER
MEAD5580	5580WJ15		

STATE OF	PROJECT	SHEET NO.	TOTAL SHEETS
S.D.	IM 0901(38)40	E125	E199

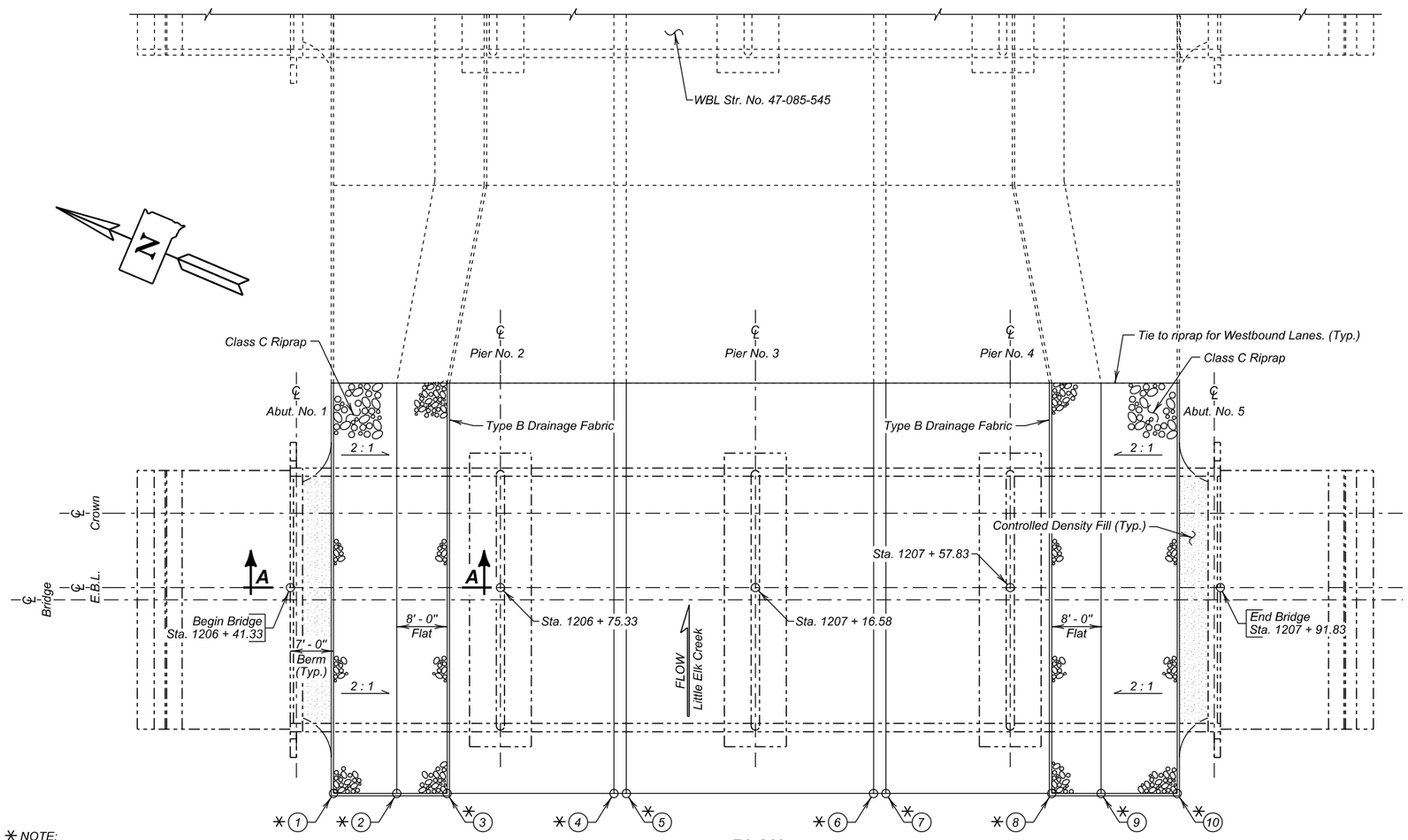

PLAN

✳ NOTE:

Riprap placement is intended to allow adjacent riprap basin to tie to this line. Some transition may be necessary to tie to existing riprap, as approved by the Engineer.

TABLE OF POINTS

POINT	STATION	OFFSET	ELEVATION
1	1206 + 48.33	33.33' Rt.	Elev. 3517.50
2	1206 + 59.53	33.33' Rt.	Elev. 3511.90
3	1206 + 67.53	33.33' Rt.	Elev. 3511.90
4	1206 + 93.59	33.33' Rt.	Elev. 3511.90
5	1206 + 95.59	33.33' Rt.	Elev. 3510.90
6	1207 + 35.59	33.33' Rt.	Elev. 3510.90
7	1207 + 37.59	33.33' Rt.	Elev. 3511.90
8	1207 + 63.30	33.33' Rt.	Elev. 3511.90
9	1207 + 71.30	33.33' Rt.	Elev. 3511.90
10	1207 + 84.83	33.33' Rt.	Elev. 3518.48

ESTIMATED QUANTITIES

	ITEM	UNIT	QUANTITY
≠	Class C Riprap	Ton	405.3
	Type B Drainage Fabric	Sq. Yd.	460
	Controlled Density Fill	Cu. Yd.	7.3

≠ For estimating purposes only, a factor of 1.4 tons/cu. yd. was used to convert Cu. Yd. to Tons.

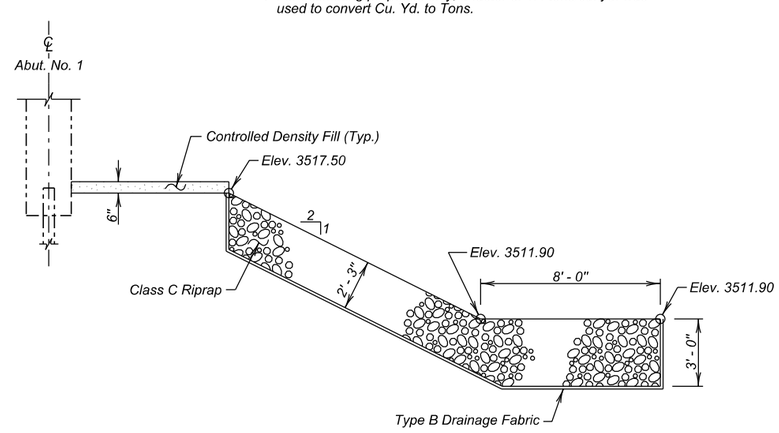

SEC. A - A

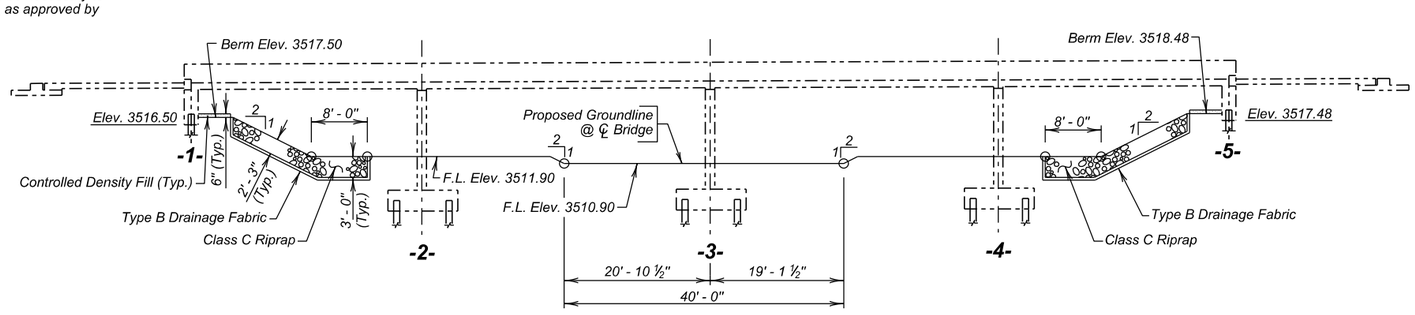

ELEVATION

RIPRAP DETAILS

FOR

EASTBOUND LANES

150' - 6" CONTINUOUS CONCRETE BRIDGE

40' - 0" ROADWAY — 0° SKEW
OVER LITTLE ELK CREEK — SEC. 4-T3N-R6E
STA. 1206 + 41.33 TO 1207 + 91.83 — IM 0901(38)40
STR. NO. 47-085-546 — HL-93

MEADE COUNTY

S. D. DEPT. OF TRANSPORTATION

DECEMBER 2014

DESIGNED BY	CK. DES. BY	DRAFTED BY	
TB/PW	SK	GW/MG	Steve A Johnson
MEAD5580	5580WJ16		BRIDGE ENGINEER

The elevations shown in these plans are based on the National Geodetic Survey (NGS) North American Vertical Datum of 1988 (NAVD88).

STATE OF	PROJECT	SHEET NO.	TOTAL SHEETS
S.D.	IM 0901(38)40	E126	E199

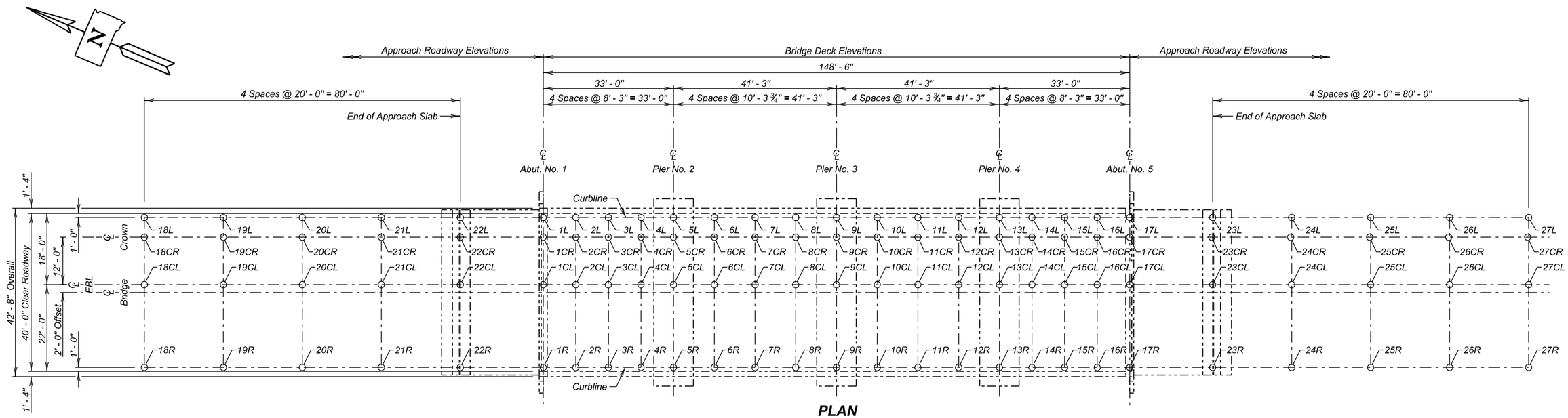

PLAN

Table of As-Built Elevations - Bridge Deck

Location	Elevation	Location	Elevation	Location	Elevation	Location	Elevation
1L		1CL		1CR		1R	
2L		2CL		2CR		2R	
3L		3CL		3CR		3R	
4L		4CL		4CR		4R	
5L		5CL		5CR		5R	
6L		6CL		6CR		6R	
7L		7CL		7CR		7R	
8L		8CL		8CR		8R	
9L		9CL		9CR		9R	
10L		10CL		10CR		10R	
11L		11CL		11CR		11R	
12L		12CL		12CR		12R	
13L		13CL		13CR		13R	
14L		14CL		14CR		14R	
15L		15CL		15CR		15R	
16L		16CL		16CR		16R	
17L		17CL		17CR		17R	

Table of As-Built Elevations - Approach Roadway

Location	Elevation	Location	Elevation	Location	Elevation	Location	Elevation
18L		18CL		18CR		18R	
19L		19CL		19CR		19R	
20L		20CL		20CR		20R	
21L		21CL		21CR		21R	
22L		22CL		22CR		22R	
23L		23CL		23CR		23R	
24L		24CL		24CR		24R	
25L		25CL		25CR		25R	
26L		26CL		26CR		26R	
27L		27CL		27CR		27R	

Elevations - Bridge Survey Markers

Location	Station - Offset	Elevation
Begin Bridge		
End Bridge		

ESTIMATED QUANTITIES

ITEM	UNIT	QUANTITY
Bridge Elevation Survey	L. S.	Lump Sum

NOTE -
The Contractor shall be responsible for producing the As - Built Elevation Survey soon after construction is complete and before the bridge is opened to traffic. The As - Built Elevations of the Bridge shall be taken and recorded at the locations shown by the table on this sheet. The completed table shall be given to the Engineer who will forward a copy to the Office of Bridge Design and the Region Office.

AS-BUILT ELEVATION SURVEY
FOR
EASTBOUND LANES

150' - 6" CONTINUOUS CONCRETE BRIDGE

40' - 0" ROADWAY — 0° SKEW
OVER LITTLE ELK CREEK — SEC. 4-T3N-R6E
STA. 1206 + 41.33 TO 1207 + 91.83 — IM 0901(38)40
STR. NO. 47-085-546 — HL-93

MEADE COUNTY
S. D. DEPT. OF TRANSPORTATION
DECEMBER 2014

DESIGNED BY	CK. DES. BY	DRAFTED BY	
TB/PW	SK	GW/MG	Steve A Johnson
MEAD5580	5580WJ17		BRIDGE ENGINEER

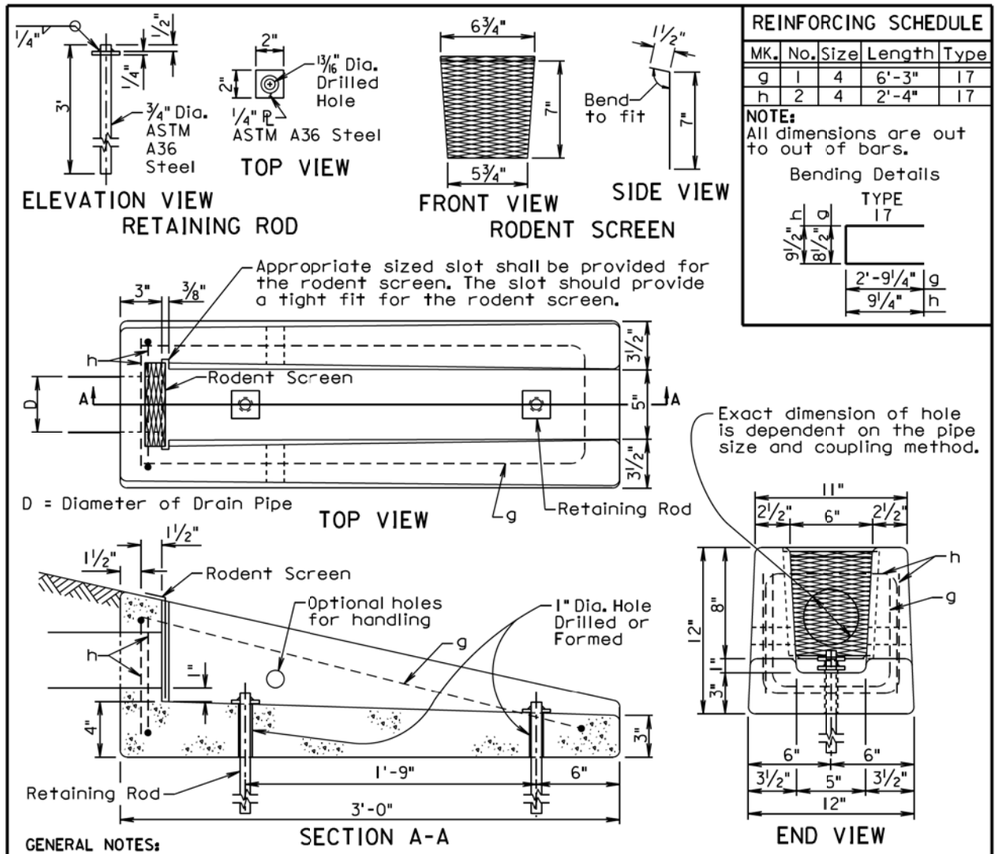

REINFORCING SCHEDULE

MK.	No.	Size	Length	Type
g	1	4	6'-3"	17
h	2	4	2'-4"	17

NOTE:
All dimensions are out to out of bars.

Bending Details

TYPE 17

GENERAL NOTES:

The concrete shall be Class M6. The concrete shall conform to the requirements of Section 462 of the Specifications. It is estimated that each unit weighs approximately 210 pounds.

All reinforcing steel shall conform to ASTM A615 Grade 60 and shall be epoxy coated. The reinforcing steel shall be securely retained to prevent displacement during placement of concrete. It is estimated that 7.3 pounds of reinforcing steel is required for each unit.

The pipe shall be placed in the concrete headwall with the pipe end flush with the concrete surface adjacent to the rodent screen.

The rodent screen shall be galvanized 13 Ga. steel with a diamond shaped flattened mesh pattern. The size shall be 1/2". The size refers to the measurement across the smallest diamond shaped opening measured from the centers of the wires.

The retaining rod shall be galvanized in accordance with ASTM A123 after all shop welding has been completed.

The drawing indicates using 1/2" fillets; however, 3/4" chamfers may be substituted for the 1/2" fillets.

All costs for furnishing and installing the concrete headwall including equipment, labor, and materials including concrete, reinforcing steel, retaining rods, and rodent screen shall be incidental to the contract unit price per each for "Precast Concrete Headwall for Drain".

June 26, 2015

Published Date: 3rd Qtr. 2016	SDDOT	PRECAST CONCRETE HEADWALL FOR DRAIN	PLATE NUMBER 430.50 Sheet 1 of 1

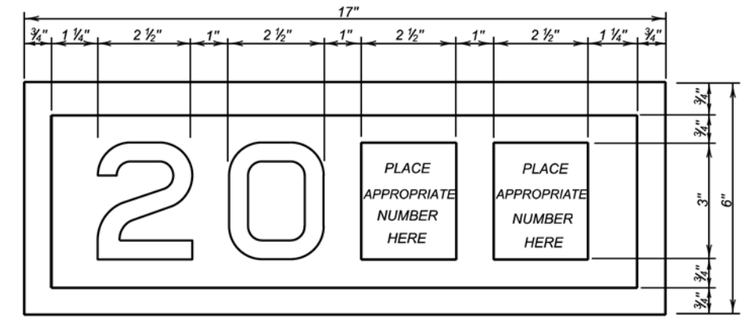

YEAR PLATE DETAILS

GENERAL NOTES:

1. Year plates of the general dimensions shown shall be constructed on all box culverts and bridges. The year plates shall be constructed in reverse and attached to the forms in such a manner that the finished imprint in the concrete does not exceed one-half (1/2) inch in depth.

2. Year plates shall be located on structure (s) as follows:

   a. On cast-in-place box culverts the year plates shall be four and one - half (4 1/2) inches below the top of the upstream parapet wall and centered laterally on the upstream face. On precast box culverts the year plate shall be centered laterally on the upstream face of the top slab. Where an extended interior wall interferes with this location, the year plate shall be centered in an adjacent barrel.

   b. On bridges with six (6) inch curbs or "Jersey" shaped barriers with no endblocks, the year plate shall be centered vertically on the curb face approximately six (6) inches from the end of the bridge, or as designated by the Engineer. On bridges with "Jersey" shaped barrier endblocks, the year plate shall be centered on the upper sloped portion of the barrier approximately 5'- 6" from the end of the bridge, or as designated by the Engineer. There shall be one year plate at each end of the bridge on opposite sides.

   c. When the plans specify that both the original date of construction and the date of reconstruction are to be shown, one date shall be placed as listed above and the other located adjacent to it. Both year plates shall be shown at each end of the bridge on opposite sides.

3. There will be no separate measurement or payment made for year plates on box culverts and bridges. All costs for this work shall be incidental to other contract items.

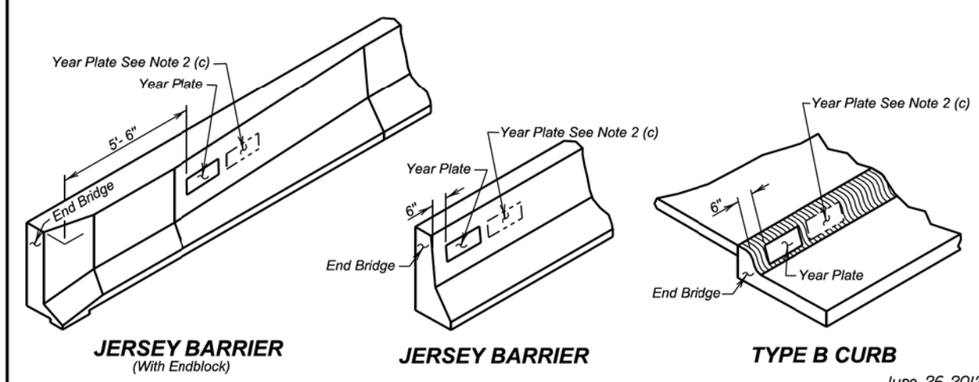

June 26, 2012

Published Date: 3rd Qtr. 2016	SDDOT	YEAR PLATE DETAILS	PLATE NUMBER 460.02 Sheet 1 Of 1

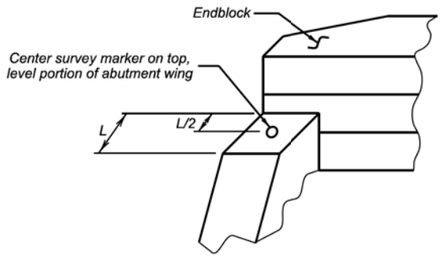

ABUTMENT WITH "STRAIGHT" WINGS

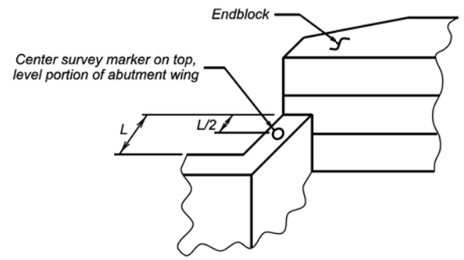

ABUTMENT WITH "SWEPT BACK" WINGS

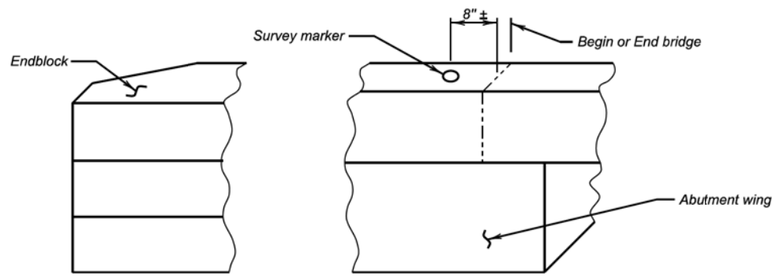

ABUTMENT WITH "SWEPT BACK" WINGS

(Endblock on top of wings)

GENERAL NOTES:

1. Survey markers shall be located at each abutment on the same side of the bridge as the year plate. Place survey markers on abutment wings as shown. Two survey markers will be required at each bridge.
2. Survey markers shall be of a type intended for installation in concrete, be made of solid brass or bronze, have a domed top and be either a 3" top diameter (with a ¾" X 2" long ribbed shank), or a US Army Corps of Engineers Type C Disc with a 3 ½" top diameter.
3. There will be no separate measurement or payment made for survey markers. All costs for this work shall be incidental to the other contract items.

June 26, 2012

Published Date: 3rd Qtr. 2016	SDDOT	BRIDGE SURVEY MARKER	PLATE NUMBER 460.05
			Sheet 1 of 1

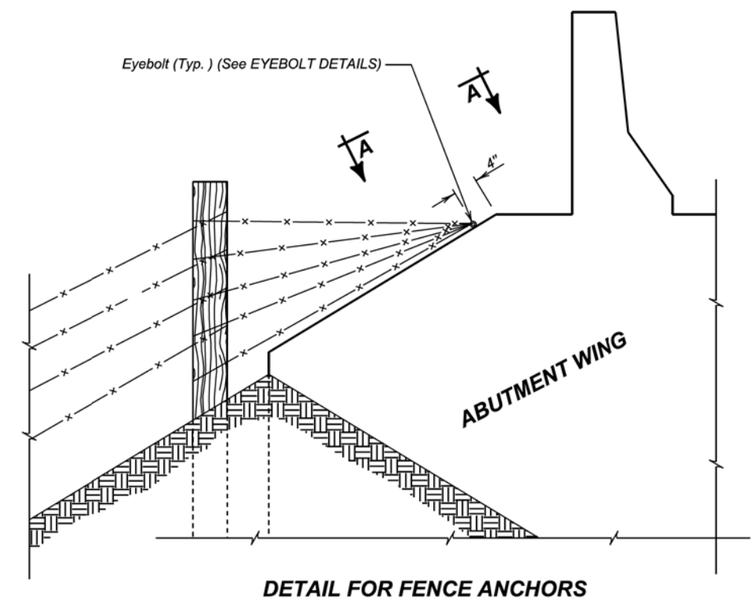

DETAIL FOR FENCE ANCHORS

GENERAL NOTES:

1. The fence and post details shown are for illustrative purpose only. The fence shall be as specified elsewhere in the plans.
2. Eyebolts shall be placed on all of the bridge abutment wings.
3. Eyebolts shall be ⅝ inch diameter and shall conform to ASTM A307.
4. Eyebolts, nuts, and concrete inserts shall be galvanized in accordance with AASHTO M232 (ASTM A153). Concrete inserts of corrosion resistant material need not be galvanized.
5. Cast-in-place eyebolts shall have a nut attached, be 4 ½ inches (Min.) in length and shall be embedded such that the eye of the bolt is flush with the concrete surface. (See Eyebolt Details) As an alternate, cast-in-place concrete inserts, capable of developing the full strength of the ⅝ inch diameter threaded eyebolt, may be used and shall be set in the concrete in accordance with the manufacturer's recommendations. The eyebolt shall be of sufficient length to develop its full strength. The eye of the eyebolt shall be flush with the concrete surface.
6. The cost for furnishing and installing eyebolts and/or concrete inserts shall be incidental to various contract items.

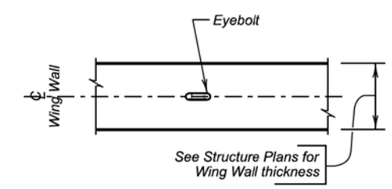

VIEW A - A

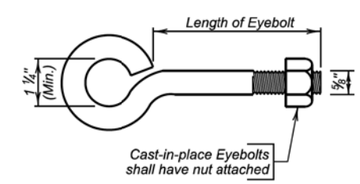

EYEBOLT DETAILS

December 23, 2012

Published Date: 3rd Qtr. 2016	SDDOT	FENCE ANCHORS FOR BRIDGE ABUTMENT WINGS (WINGS 6' AND SHORTER)	PLATE NUMBER 620.18
			Sheet 1 of 1

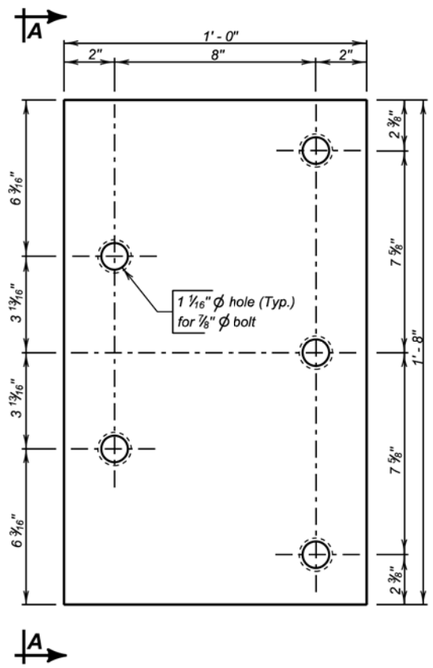

ELEVATION

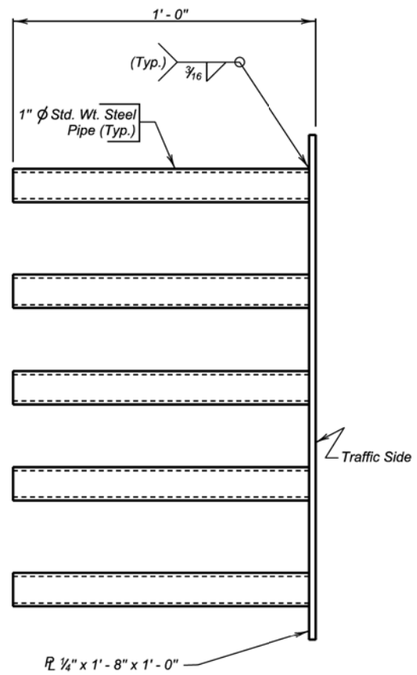

VIEW A - A

GENERAL NOTES:

1. Steel plate for the insert assembly shall conform to ASTM A709 Grade 36. The steel pipes shall conform to ASTM A53 or ASTM A500 Grade B.
2. Welding and weld inspection shall be in conformance with AWS D1.1 - (Current Year) Structural Welding Code - Steel.
3. After fabrication, galvanize in accordance with AASHTO M111 (ASTM A123).
4. Bolts, nuts, and washers shall be provided with each assembly. Bolts shall be galvanized and conform to the requirements of ASTM A307, A325, or A449. Plain washers shall be galvanized and conform to ASTM F844.
5. Bolt heads shall be placed on the traffic side of the endblock. Bolt projection at the back side of the insert shall not exceed 1 inch beyond the nut.
6. The cost of the 5 bolt insert plate assembly complete in place including welding and galvanizing shall be incidental to the contract unit price per Cubic Yard for " Class A45 Concrete, Miscellaneous ", " Class A45 Concrete, Bridge Deck ", or " Class A45 Concrete, Bridge Repair ", as applicable.

December 23, 2013

Published Date: 3rd Qtr. 2016	SDDOT	5 BOLT INSERT PLATE ASSEMBLY	PLATE NUMBER 630.92
			Sheet 1 of 1

STATE OF	PROJECT	SHEET NO.	TOTAL SHEETS
S.D.	IM 0901(38)40	E130	E199

The elevations shown in these plans are based on the National Geodetic Survey (NGS) North American Vertical Datum of 1988 (NAVD88).

TEST PILE AREA
Sta. 235 + 52.00 - 75' Lt. as determined by the Engineer - See Special Provision

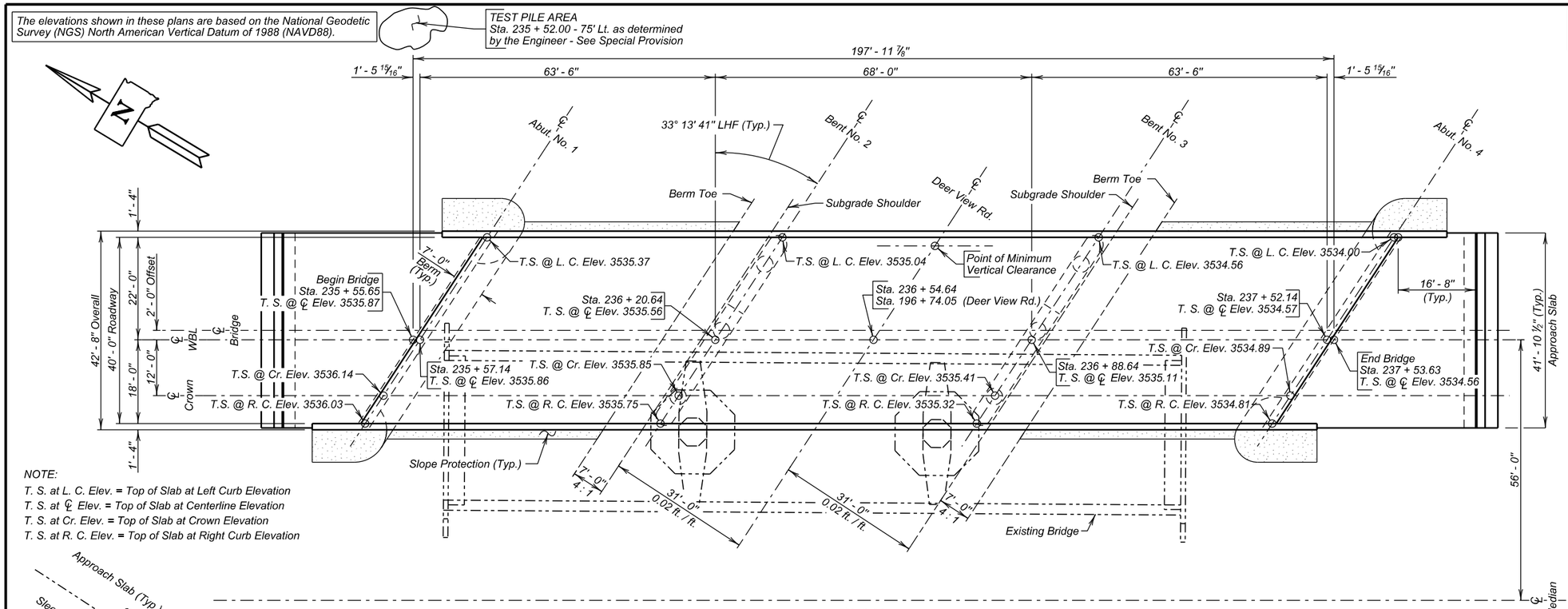

NOTE:
T. S. at L. C. Elev. = Top of Slab at Left Curb Elevation
T. S. at ℄ Elev. = Top of Slab at Centerline Elevation
T. S. at Cr. Elev. = Top of Slab at Crown Elevation
T. S. at R. C. Elev. = Top of Slab at Right Curb Elevation

PLAN

-X271-
INDEX OF BRIDGE SHEETS

Sheet No. 1 - General Drawing
Sheet No. 2 - Estimate of Structure Quantities and Notes
Sheet No. 3 - Notes (Continued)
Sheet No. 4 - Notes (Continued)
Sheet No. 5 - Notes (Continued)
Sheet No. 6 - Subsurface Investigation, Piling & Drilled Shaft Layout
Sheet No. 7 - Abutment No. 1 Details (A)
Sheet No. 8 - Abutment No. 1 Details (B)
Sheet No. 9 - Abutment No. 4 Details (A)
Sheet No. 10 - Abutment No. 4 Details (B)
Sheet No. 11 - Bent Details
Sheet No. 12 - Superstructure Details (A)
Sheet No. 13 - Superstructure Details (B)
Sheet No. 14 - End Block, Barrier Curb & Deck Drain Details
Sheet No. 15 - 63' - 3" Girder Details
Sheet No. 16 - 67' - 3" Girder Details
Sheet No. 17 - Erection Data
Sheet No. 18 - Slab Form Elevations
Sheet No. 19 - Diaphragm Details
Sheet No. 20 - Details of Bridge End Backfill (A)
Sheet No. 21 - Details of Bridge End Backfill (B)
Sheet No. 22 - Details of Approach Slab Adjacent to Bridge (A)
Sheet No. 23 - Details of Approach Slab Adjacent to Bridge (B)
Sheet No. 24 - Approach Slab Joint Details
Sheet No. 25 - Slope Protection Details
Sheet No. 26 - As-Built Elevation Survey (A)
Sheet No. 27 - As-Built Elevation Survey (B)
Sheet No. 28 - Details of Standard Plate No.'s 430.50 and 460.02
Sheet No. 29 - Details of Standard Plate No.'s 460.05 and 510.40
Sheet No. 30 - Details of Standard Plate No. 630.92

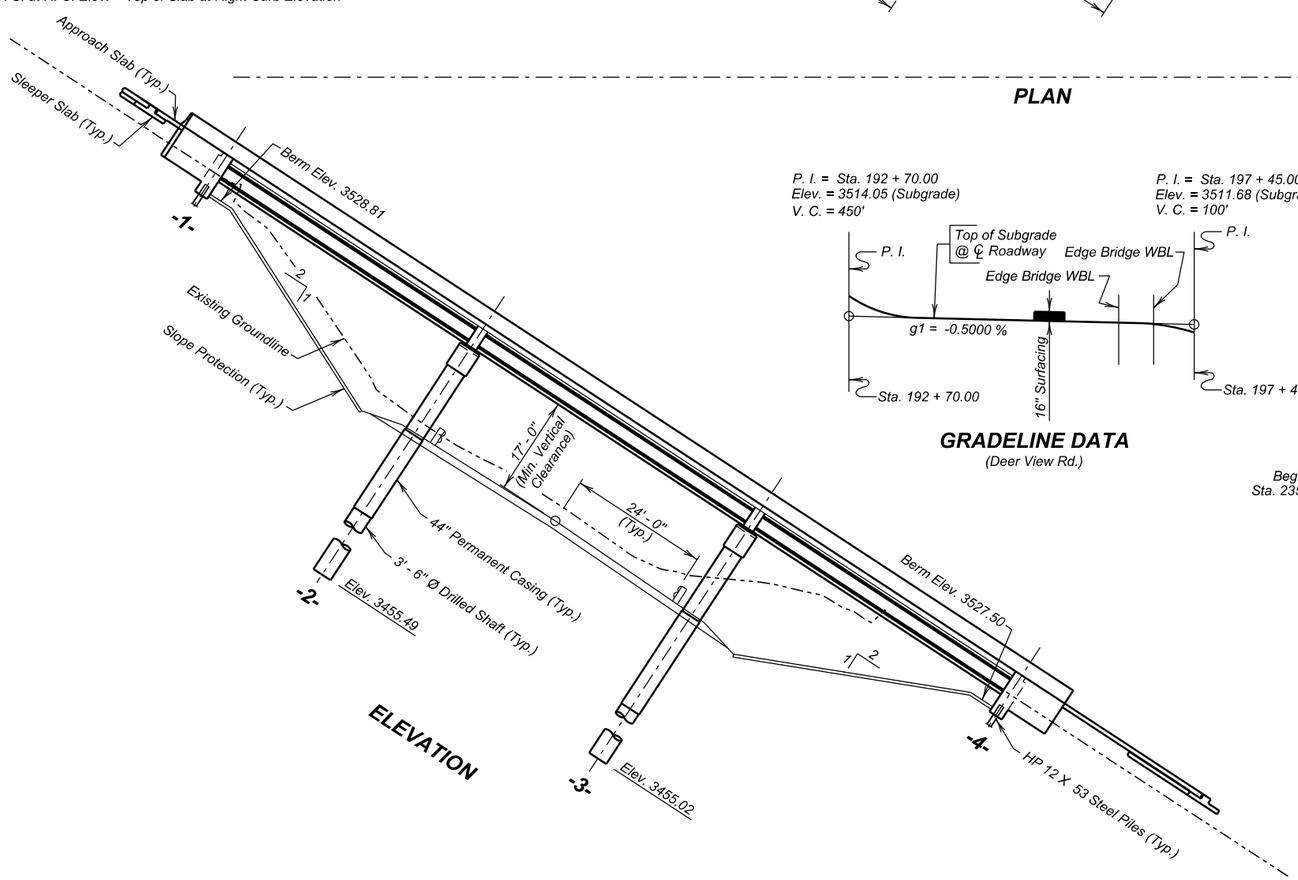

ELEVATION

GRADELINE DATA
(Deer View Rd.)

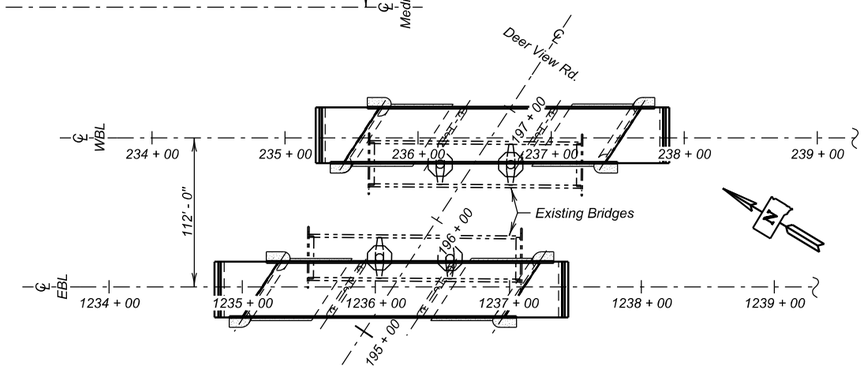

LAYOUT

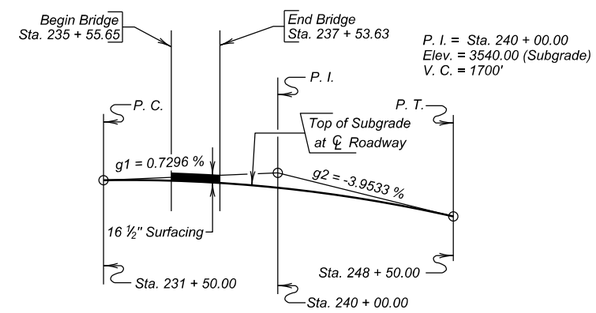

VERTICAL CURVE DATA
(I-90 WBL)

GENERAL DRAWING
FOR
WESTBOUND LANES
197' - 11 7/8" PRESTR. GIRDER BRIDGE

40' - 0" ROADWAY
OVER DEER VIEW ROAD
STA. 235 + 55.65 TO 237 + 53.63
STR. NO. 47-088-550
PCN 5580

33° 13' 41" LHF SKEW
SEC. 4/9-T3N-R6E
IM 0901(38)40
HL-93

MEADE COUNTY
S. D. DEPT. OF TRANSPORTATION
JANUARY 2014

-X271-

DESIGNED BY	CK. DES. BY	DRAFTED BY	
BAF/PW	DC/TD	MG	Steve A. Johnson
MEAD5580	5580GK01		BRIDGE ENGINEER

PLANS BY :
OFFICE OF BRIDGE DESIGN, SOUTH DAKOTA DEPARTMENT OF TRANSPORTATION

ESTIMATE OF STRUCTURE QUANTITIES

DESCRIPTION	QUANTITY	UNIT	REMARKS
Bridge Elevation Survey	Lump Sum	LS	
Concrete Penetrating Sealer	875	SqYd	See Special Provision
Incidental Work, Structure	Lump Sum	LS	
Structural Steel, Miscellaneous	Lump Sum	LS	
Membrane Sealant Expansion Joint	83.8	Ft	
Structure Excavation, Bridge	27.8	CuYd	
Bridge End Embankment	1984	CuYd	
Granular Bridge End Backfill	104.8	CuYd	
Approach Slab Underdrain Excavation	6	CuYd	
Precast Concrete Headwall for Drain	4	Each	
Class A45 Concrete, Bridge Deck	292.7	CuYd	
Class A45 Concrete, Bridge	158.0	CuYd	
Concrete Approach Slab for Bridge	273.0	CuYd	
Concrete Approach Sleeper Slab for Bridge	67.5	CuYd	
Class A45 Concrete, Drilled Shaft	125.5	CuYd	
Drilled Shaft Excavation	123.1	CuYd	
44" Permanent Casing	108	Ft	
Reinforcing Steel	85,724	Lb	
Epoxy Coated Reinforcing Steel	44,665	Lb	
No. 7 Rebar Splice	106	Each	
No. 14 Rebar Splice	108	Each	
Preboring Pile	140	Ft	
HP 12x53 Steel Test Pile, Furnish and Drive	175	Ft	
HP 12x53 Steel Bearing Pile, Furnish and Drive	600	Ft	
Dynamic Pile Test (during driving)	2	Each	See Special Provision
Dynamic Pile Test (during restrike)	2	Each	See Special Provision
Static Pile Load Test	2	Each	See Special Provision
45" Minnesota Shape Prestressed Concrete Beam	969	Ft	
4" Underdrain Pipe	301	Ft	
Porous Backfill	25.4	Ton	
Bridge Berm Slope Protection, Crushed Aggregate	727.9	SqYd	
Type A Drainage Fabric	728	SqYd	

SPECIFICATIONS FOR BRIDGE

1. Design Specifications: AASHTO LRFD Bridge Design Specifications, 2014 Edition with 2015 interims.

2. Construction Specifications: South Dakota Standard Specifications for Roads and Bridges, 2015 Edition and required provisions, supplemental specifications, and special provisions as included in the proposal.

BRIDGE DESIGN LOADING

1. AASHTO HL-93.

2. Dead Load includes 22 psf for future wearing surface on the roadway.

DESIGN MATERIAL STRENGTHS*

Concrete	f'c = 4,500 psi
Reinforcing Steel	fy = 60,000 psi
Piling (ASTM A572 Grade 50)	fy = 50,000 psi

*For prestressed beams, see notes regarding Prestressed Girders.

GENERAL CONSTRUCTION

1. All mild reinforcing steel shall conform to ASTM A615, Grade 60.

2. All exposed concrete corners and edges shall be chamfered 3/4" unless noted otherwise.

3. Use 2" clear cover on all reinforcing steel except as shown.

4. Contractor shall imprint on the structure the date of new construction as specified and detailed on Standard Plate No. 460.02.

5. Barrier Curbs and End blocks shall be built normal to the grade.

6. Request for construction joints or resteel splices at points other than those shown, must be submitted to the Engineer for prior approval. If additional splices are approved, no payment will be allowed for the added quantity of resteel.

7. The elevation of the bridge deck is16.5" above subgrade elevation.

INCIDENTAL WORK, STRUCTURE

1. In place on W.B.L. centerline Sta. 235+63.31-17.73' Rt. to centerline Sta. 237+22.81-19.30' Rt. is a 159.5' 3 span steel girder bridge with a 30'-0" clear roadway. The superstructure consists of 4 steel girders with a reinforced concrete slab and steel railing. The deck has been overlaid with 2 inch non-metallic fiber reinforced concrete overlay. The substructure consists of a single column reinforced concrete bents and reinforced concrete sill-type abutments, all of which are supported on timber piling.

2. Break down and remove the existing bridge, and approach/sleeper slabs if applicable, to 1 foot below finished groundline, or as required to construct the new structure in accordance with Section 110 of the Specifications. All portions of the existing bridge not salvaged for future highway related use shall be removed and disposed of by the Contractor on a site obtained by the Contractor and approved by the Engineer in accordance with the ENVIRONMENTAL COMMITMENT found in Section A.

3. The existing approach guardrail, including posts shall be salvaged for future highway related use. See Section B for stockpiling location.

4. The foregoing is a general description of the in-place bridge and should not be construed to be complete in all details. Before preparing the bid it shall be the responsibility of the Contractor to make a visual inspection of the structure to verify the extent of the work and materials involved. If desired by the Contractor, a copy of the original construction plans may be obtained through the Office of Bridge Design.

NOTICE - LEAD BASED PAINT

Be advised that the paint on the steel surfaces of the existing structure contains lead. The Contractor should plan his/her operations accordingly, and inform his/her employees of the hazards of lead exposure.

DESIGN MIX OF CONCRETE

1. All structural concrete shall be Class A45 unless otherwise indicated.

2. Type II cement is required, except Type III may be used for the prestressed beams.

3. Coarse aggregate to be used in concrete shall consist of either crushed quartzite or other crushed ledge rock. If crushed ledge rock other than quartzite is to be used, it shall be from a source approved by the Engineer.

4. Grout design mix shall be as specified in Section 460.2 K of the Specifications. A compressive strength of 2000 psi shall be attained by the grout prior to erection of any beams. Chamfer edges of grout pads ¾". The quantity of grout is included in and shall be paid for at the contract unit price per cubic yard for Class A45 Concrete, Bridge.

ESTIMATE OF STRUCTURE QUANTITIES AND NOTES
FOR
WESTBOUND LANES
197' - 11⅞" PRESTR. GIRDER BRIDGE
STR. NO. 47-088-550
JANUARY 2014

DESIGNED BY	CK. DES. BY	DRAFTED BY	
PW	TD	TD	Steve A Johnson
MEAD5580	5580GK02		BRIDGE ENGINEER

ABUTMENTS

1. Preboring piling at each abutment is required to whichever is greater, ten feet or to natural ground.

2. The HP 12x53 Piling were designed using a factored bearing resistance of 98 tons per pile. Piling shall develop a field verified nominal bearing resistance of 245 tons per pile.

3. One test pile shall be driven at each abutment and will become part of the pile group.

4. The contractor shall have sufficient pile splice material on hand before pile driving is started. See Standard Plate No. 510.40.

5. Piles shall not be driven out of position by more than two inches in the direction normal to the abutment centerline. A pile-driving template shall be used to insure this accuracy.

6. Abutment backwalls above the construction joint may be cast separately from the deck slab. The concrete used for the backwalls and wings shall be Class A45 Concrete, Bridge. All abutment and bridge deck concrete shall have attained design strength prior to backfilling. Abutment wing walls shall not be cast until after the deck has been poured.

7. Each finished abutment shall include a Bridge Survey Marker. See Standard Plate No. 460.05.

ABUTMENT BACKWALL COATING

The material for waterproofing the abutment backwall shall be one of the products from the approved products list. The acceptable abutment backwall coating suppliers are listed on the approved products list at the following Internet address:

http://apps.sd.gov/applications/HC60ApprovedProducts/ProductList.aspx

The cost of furnishing and applying the coating shall be incidental to the contract unit price per cubic yard for Class A45 Concrete, Bridge.

PILE DRIVING

1. A drivability analysis was performed using the wave equation analysis program (GRLWEAP). The following pile hammers were evaluated and found to produce acceptable driving stresses:

   Delmag D-19-32 Delmag D-19-42 MVE M-19

2. Pile hammers not listed will require evaluation and approval prior to use from the Geotechnical Engineering Activity.

BENTS

1. The design of the drilled shafts is based upon encountering competent bedrock at elevation 3490. If competent bedrock is not encountered at or above this elevation, contact the Office of Bridge Design, through proper channels, before proceeding with the drilled shaft construction. Geotechnical Engineering Activity personnel shall be present during the drilling operations to confirm these elevations and to observe placement of the drilled shafts. The Geotechnical Engineering Activity shall be notified a minimum of two weeks prior to the start of excavation for the drilled shafts.

2. The drilled shafts shall be constructed using the permanent casing method in conformance with Section 465 of the Specifications. Permanent casings for the drilled shafts shall be installed and seated immediately prior to drilled shaft excavation. A construction joint shall be placed at the top of the permanent casing and the permanent casing shall extend a minimum of 1'-0" above the groundline, waterline, or construction platform elevation, whichever is higher.

3. The construction joint locations and quantities provided on the plans are based upon the estimated existing groundline and/or waterline elevations. It is the responsibility of the Contractor to verify the existing elevations and have a drilled shaft installation plan submitted and approved prior to ordering the casing. If the Contractor intends to use construction platforms, etc. that would require any of the construction joints to be at a location other than the location shown in the plans, the Contractor shall include these proposed changes in the drilled shaft installation plan for approval by the Office of Bridge Design.

4. The quantities for Drilled Shaft Excavation; 44" Permanent Casing; Class A45 Concrete, Drilled Shaft; and Class A45 Concrete, Bridge are based upon the construction joint locations as shown in the plans. Payment for these items shall be at the contract unit price for the plans shown quantities regardless of any approved changes in the location of the construction joints as requested by the Contractor due to the construction of work platforms, etc. Measurement and payment will be made at the contract unit prices for any changes due to variations in the competent foundation soil or in the locations of the existing groundline and/or waterline elevations as ordered by the Engineer.

5. The H1 and H2 bars are detailed alternating with staggered mechanical splices and are provided in the reinforcing schedule. Once the construction joint elevations have been verified and/or established, mechanical splice details showing location shall be submitted with the drilled shaft installation plan for approval. Any costs involved in cutting reinforcing steel and any other items incidental to providing the mechanical splice shall be included in the contract unit price per pound for Reinforcing Steel.

ACCESS TUBES

1. Access tubes shall be furnished and installed in each of the drilled shafts in accordance with Section 465 of the Specifications.

2. These access tubes are to be used for crosshole sonic log testing of the drilled shaft in the event that the Department deems that the quality of the drilled shaft is suspect. In order for the Department to determine if crosshole sonic log testing is necessary, no subsequent work above the construction joint will be allowed for 7 days or until authorized by the Engineer, whichever comes first. Upon authorization by the Engineer and prior to any subsequent concrete placement above the construction joint, the Contractor shall remove the water from the access tubes, cut the access tubes off flush with the top of the drilled shaft and completely fill the access tubes with grout.

NOTES (CONTINUED)
FOR
WESTBOUND LANES
197' - 11⅞" PRESTR. GIRDER BRIDGE
STR. NO. 47-088-550
JANUARY 2014

DESIGNED BY	CK. DES. BY	DRAFTED BY	
PW	TD	TD	Steve A Johnson BRIDGE ENGINEER
MEAD5580	5580GK03		

PRESTRESSED GIRDERS

1. Minimum concrete compressive strength f'c = 7,000 psi at 28 days and f'ci = 4,500 psi for all Girders.
2. All mild reinforcing steel shall be deformed bars conforming to ASTM A615, Grade 60.
3. Individual tendons in all pretensioned sections shall consist of seven wire uncoated Type 270K Strands having a nominal diameter of 0.6" and a minimum ultimate strength of 58600 lbs. per cable. An initial tensile force of 43940 lbs. shall be applied to all 0.6" cables in all girders. All prestressing steel shall conform to AASHTO M203. (low lax strands).
4. All prestressed girders within a span shall be cast within an 8 day period. If not, the newest girder shall be at least 6 weeks old before the deck slab is poured. The girders shall be poured in all steel forms.
5. Prestressed concrete girders shall always be lifted by the devices provided in the top flanges near the ends of the girders. Types of lifting devices other than those shown on the plans may be used provided they are approved by the Office of Bridge Design. The design of the lifting devices shall be the responsibility of the Fabricator.
6. Each beam shall be marked showing structure number, casting date, and beam number. Marking shall be on the face of the beam near the end and so located that they will be exposed after the diaphragms have been cast. Facia beams shall be marked on an inside face. All markings shall be stenciled and clearly legible. For beam designations and locations, see superstructure layout plan and Erection Data sheet.
7. The physical properties of the elastomeric bearing pads shall conform to the requirements of Section 18.2 of the AASHTO LFRD Bridge Construction Specification and the AASHTO Materials Specification M251. The elastomeric bearing pads shall conform to Grade 50 (durometer). The cost of the pads shall be incidental to the contract unit price per cubic yard for Class A45 Concrete, Bridge. Certification that pads are 50 durometer and meet the requirements of AASHTO LFRD Bridge Construction Specification Section 18.2 and AASHTO Materials Specification M251 shall be furnished to the Engineer with the shop drawings. No laminated bearing pads will be allowed.
8. All exposed corners shall be chamfered 3/4" or rounded to 3/4" radius.
9. Dead Load of girder taken as effective at transfer. Cut strands, except those extended and bent, flush with end of girder and coat end of strands with mortar.
10. The Contractor shall be responsible for ensuring that transportation stresses, handling and erection do not cause damage to the girders.
11. Furnish and Install Inserts for T8 Rebars as shown in the plans. All costs involved shall be incidental to the contract unit price per foot of girder.

SUPERSTRUCTURE

1. Girder lifting hooks shall be cut off before placement of concrete deck slab.
2. The diaphragms at the bents shall be poured integrally with the deck slab. Placement of diaphragms at the bents shall not slow down the rate of deck concrete placement and finishing. The Contractor shall place the concrete for the specified diaphragms ahead of the deck concrete in such a manner that advancement of the deck concrete reaches the diaphragm just as placement of concrete in the diaphragm is complete.
3. The deck-finishing machine shall be adjusted and operated in such a manner that the roller screed or screeds are parallel with the centerline of the bridge and the finish machine is parallel to the skew of the bridge. Concrete placement in front of the finish machine shall be kept parallel to the machine.
4. The bridge deck must be placed and finished continuously at a minimum rate of 45 ft. of deck per hour measured along Centerline Roadway. This rate is exclusive of concrete placed in the diaphragms. (See note 2 above.) If concrete cannot be placed and finished at this rate, the Engineer shall order a header installed and operations stopped. Notify the Bridge Construction Engineer if deck pour operations are stopped. Operations may resume only when the Engineer is satisfied that a rate of 45 ft. of deck per hour can be achieved and the concrete in the previous pour has attained a minimum compressive strength of 2000 psi.
5. Snap ties, if used in the barrier curb formwork, shall be epoxy coated. The epoxy coating shall be inert in concrete and compatible with the coating applied to the new epoxy coated reinforcing steel.
6. See Special Provision for Concrete Penetrating Sealer.

BOLT TESTING

The certified mill test reports for all bolts used on the project shall include the test results for all of the testing specified in Section 972.2 D of the Specifications. Some of these tests are supplemental tests that must be requested at the time the bolts are ordered. It is the responsibility of the Contractor to notify the bolt supplier of these requirements.

SHOP PLANS

Shop plans shall be required as specified by the Specifications.

FALSEWORK

The Contractor shall be required to include with the Falsework Plans, details for the construction of an adequate "Walk-Way" including railing.

FALL PROTECTION

1. The Contractor shall install a Fall Protection System conforming to OSHA Regulations. When working on the girders prior to decking installation, a Horizontal Lifeline – or other OSHA approved system shall be installed. The Contractor shall have one Personal Fall Arrest System (PFAS) available for use by a Department Inspector. The PFAS shall be compatible with the installed Fall Protection System.
2. Modifications to any bridge components used to accommodate the Fall Protection System shall be shown on the Falsework Plans and/or the appropriate Shop Plans. Field welding to bridge components will not be allowed. Field placed concrete inserts or drilled-in anchor bolts will be allowed if approved by the Engineer. All costs associated with providing the Fall Protection System shall be incidental to the other contract items.

NOTES (CONTINUED)
FOR
WESTBOUND LANES
197' - 11 7/8" PRESTR. GIRDER BRIDGE
STR. NO. 47-088-550
JANUARY 2014

DESIGNED BY	CK. DES. BY	DRAFTED BY	
PW	TD	TD	Steve A Johnson BRIDGE ENGINEER
MEAD5580	5580GK04		

CLASS B COMMERCIAL TEXTURE FINISH

1. A Class B commercial texture finish shall be applied to the following areas:

    a. **Abutments:** all exposed surfaces to an elevation 1-foot below finished ground line.
    b. **Barrier Rail:** all exposed surfaces (front, top and back).
    c. **Slab:** edge of slab.
    d. **Girder:** Outside face and bottom of facia girders.
    e. **Bents:** All exposed surfaces.

2. The Class B commercial texture finish shall be applied in accordance with Section 460.3 L.1.c of the Specifications.

3. Where the Class B commercial texture finish is to be applied, concrete curing shall be accomplished with cotton or burlap mats and polyethylene sheeting. Curing shall continue for not less than seven days after placing concrete before the commercial texture finish is applied. The commercial texture finish shall be applied in accordance with the manufacturer's recommendations. The commercial texture finish itself does not require a specific cure except for drying.

4. The cost of the Class B Commercial Texture Finish applied to the fascia girders shall be incidental to the contract unit price per cubic yard for Class A45 Concrete, Bridge Deck.

APPROACH SLABS

1. Sleeper slab riser shall be cast with the approach slab or cast after the approach slab is placed. Care shall be taken to ensure the correct grade is maintained across the joint.

2. The portion of the sleeper slab below the construction joint may be precast. If the bottom portion of the sleeper slab is precast, the Contractor shall submit proposed lifting and setting plans to the Bridge Construction Engineer for approval. In addition, if reinforcing or other details differ from those shown in the plans, the Contractor shall submit proposed alternate details for approval.

3. The use of an approved finishing machine will be required during placement of Class A45 Concrete for the approach slabs. Concrete placement in front of the machine shall be kept parallel to the screed.

4. The concrete in the approach slab shall be tined normal to centerline roadway.

5. Concrete Approach Sleeper Slab for Bridge, whether cast-in-place or precast, will be paid for at the contract unit price per square yard. This payment shall be full compensation for all excavation, furnishing, hauling, and placing all materials including concrete and reinforcing steel; for disposal of all excavated material and surplus materials; and for labor, tools, equipment and any incidentals necessary to complete this item of work.

6. Concrete Approach Slab for Bridge will be paid for at the contract unit price per square yard. This payment shall be full compensation for all excavation, furnishing, hauling and placing all materials including concrete, asphalt paint or 4 mil polyethylene sheeting, elastic joint sealer and reinforcing steel; for disposal of all excavated material and surplus materials and for labor, tools, equipment and any incidentals necessary to complete this item of work.

AS - BUILT ELEVATION SURVEY

The Contractor shall be responsible for recording the As-built deck elevations and bridge survey marker elevations at the locations shown in the Table of As-Built Elevations shown in the plans. All costs associated with obtaining the elevations including all equipment, labor and any incidentals required shall be incidental to the contract lump sum price for Bridge Elevation Survey.

CRUSHED AGGREGATE SLOPE PROTECTION

1. This work shall consist of paving the bridge berm slopes with crushed aggregate slope protection for control and prevention of berm erosion.

2. The aggregate used in the crushed aggregate slope protection shall be composed of durable fragments of quarried ledge rock or an approved alternative. The material shall be well graded with 90 – 100% passing a 6" sieve and 0 – 10% passing a 2" sieve or as approved by the Engineer.

3. The type A drainage fabric shall be non-woven.

4. The surface upon which the slope protection is to be placed shall be smooth, uniform, and free from foreign material. The top surface of the slope protection shall conform to the dimensions, elevations, and slopes shown in the plans.

5. The crushed aggregate shall be shaped and compacted to provide a stable, smooth and uniform surface.

6. Payment for crushed aggregate slope protection shall be at the contract unit price per square yard for Bridge Berm Slope Protection, Crushed Aggregate and shall include furnishing all materials, labor, and equipment necessary or incidental to the satisfactory completion of this work. Payment will be for plans quantity.

NOTES (CONTINUED)
FOR
WESTBOUND LANES

197' - 11 7/8" PRESTR. GIRDER BRIDGE

STR. NO. 47-088-550

JANUARY 2014

DESIGNED BY	CK. DES. BY	DRAFTED BY	
PW	TD	TD	Steve A Johnson BRIDGE ENGINEER
MEAD5580	5580GK05		

Hole Number	V5
Station	235+13
Depth	15.5 ft
Soil Color	Red
Classification	Silt-Clay
Strength (Q_u)	4.487 psf
Dry Density	117.7 pcf
Wet Density	133.3 pcf
Moisture	13.2 %
Pass No. 10	99.9 %
Pass No. 40	98.0 %
Pass No. 200	92.9 %
Sand Content	7.0 %
Silt Content	62.3 %
Clay Content	30.6 %

Hole Number	V9
Station	236+80
Depth	14.45 ft
Soil Color	Red
Classification	Clay-Silt
Strength (Q_u)	394.4 psf
Dry Density	108.8 pcf
Wet Density	119.6 pcf
Moisture	9.9 %
Pass No. 10	99.1 %
Pass No. 40	95.6 %
Pass No. 200	91.5 %
Sand Content	7.7 %
Silt Content	71.0 %
Clay Content	20.4 %

Hole Number	V9
Station	236+80
Depth	29.68 ft
Soil Color	Red
Classification	Silt
Strength (Q_u)	4.893 psf
Dry Density	123.6 pcf
Wet Density	134.8 pcf
Moisture	9.0 %
Pass No. 10	100.0 %
Pass No. 40	91.2 %
Pass No. 200	83.0 %
Sand Content	17.0 %
Silt Content	76.4 %
Clay Content	6.6 %

Hole Number	V10
Station	236+40
Depth	29.92 ft
Soil Color	Red
Classification	Silt
Strength (Q_u)	1.121 psf
Dry Density	114.8 pcf
Wet Density	126.2 pcf
Moisture	9.9 %
Pass No. 10	100.0 %
Pass No. 40	88.9 %
Pass No. 200	78.0 %
Sand Content	22.0 %
Silt Content	59.4 %
Clay Content	18.6 %

Hole Number	V13
Station	237+54
Depth	20.16 ft
Soil Color	Red
Classification	Clay-Silt
Strength (Q_u)	2.110 psf
Dry Density	112.4 pcf
Wet Density	127.5 pcf
Moisture	13.5 %
Pass No. 10	98.3 %
Pass No. 40	91.6 %
Pass No. 200	83.3 %
Sand Content	15.0 %
Silt Content	63.0 %
Clay Content	20.2 %

Hole Number	V13
Station	237+54
Depth	49.66 ft
Soil Color	Red
Classification	Silt-Clay
Strength (Q_u)	7.426 psf
Dry Density	127.9 pcf
Wet Density	141.8 pcf
Moisture	10.8 %
Pass No. 10	100.0 %
Pass No. 40	99.3 %
Pass No. 200	95.7 %
Sand Content	4.3 %
Silt Content	63.1 %
Clay Content	32.6 %

STATE OF	PROJECT	SHEET NO.	TOTAL SHEETS
S.D.	IM 0901(38)40	E135	E199

The Spearfish Formation is a relatively weak red sandy shale. Textural classification typically is a clay-silt. Gypsum is present throughout the formation that varies from thin stringers to massive deposits over 30 feet thick. Bedded layers of red stained sandstone can also be encountered. Unweathered Spearfish Formation is considered to be "Soft Rock", although massive unweathered gypsum may behave similar to weak limestone.

The Geotechnical Engineering Activity has on file all of the boring logs for this project. These logs and additional results of laboratory test, if any, are available for review at the Central Office in Pierre.

* Values represent uncorrected "N" values from Penetration Test.

Sample Zone — 48 Blows Per Foot

If refusal of the penatration test was achieved based on 50 blows within one of the 6 inch sets. The number of blows over inches is listed.

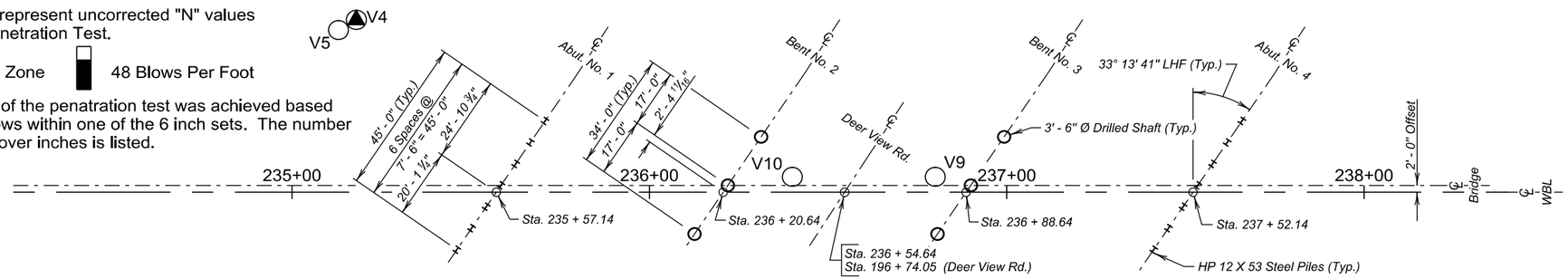

PILING & DRILLED SHAFT LAYOUT

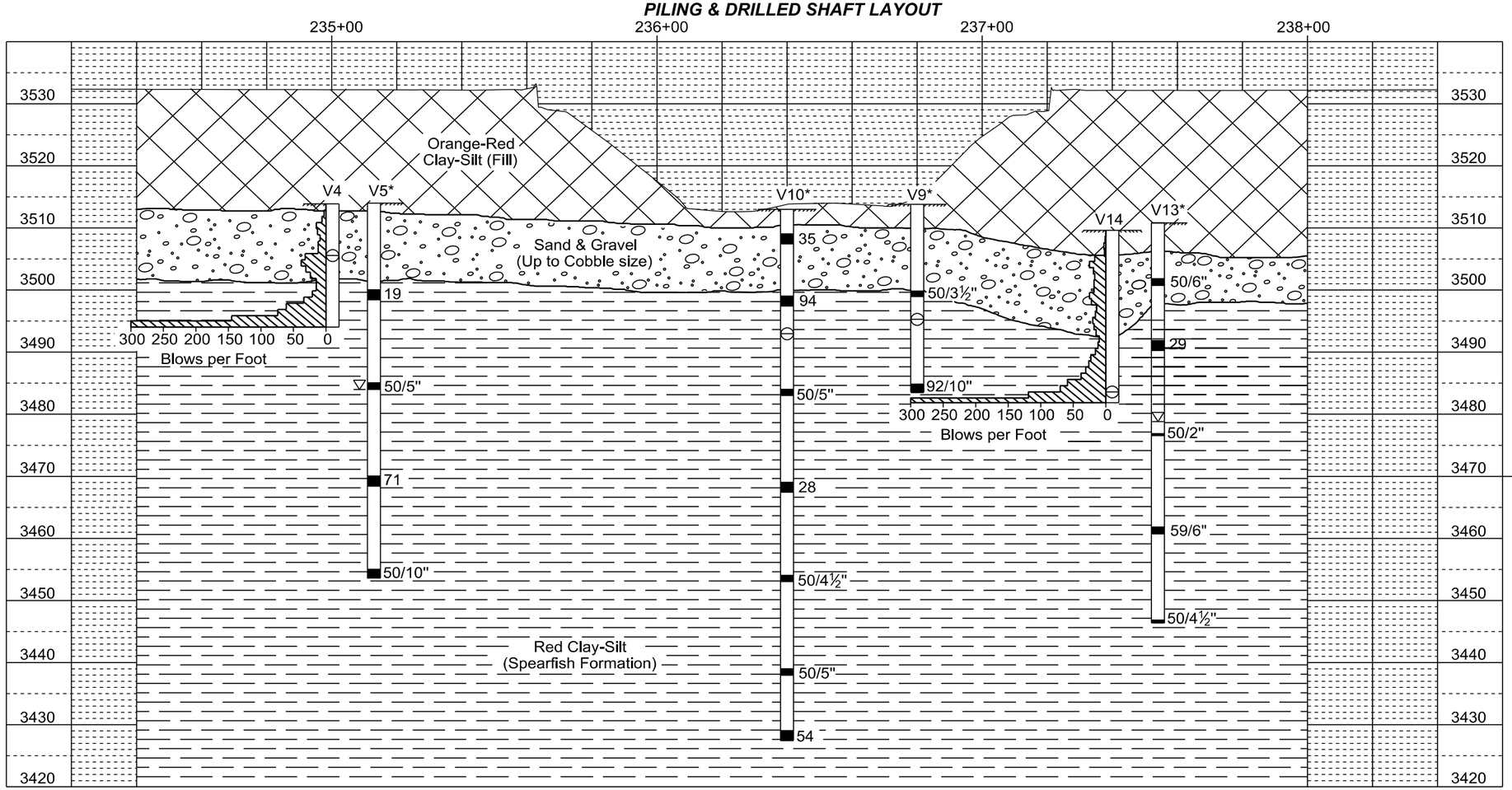

LEGEND

- Penetration Test
- Drive Test
- Water
- Caved
- Sample Zone

Drive test are conducted by dropping a 490 pound hammer 30 inches to drive a 2⅞ inch drill stem with attached retractable plug sampler for taking samples and to measure the resistance to penetration of the soil.

Penetration test holes are drilled with a 6⅝ inch diameter hollow stem auger. Penetration tests are conducted by dropping a 140 pound hammer 30 inches to obtain 2 inch nominal diameter samples and to measure the resistance to penetration of the soil.

GROUND WATER ELEVATIONS

as of MARCH 2013

V4	(DRY) 3305.6
V5	3484.0
V9	(DRY) 3495.3
V10	(DRY) 3493.0
V13	3478.8
V14	(DRY) 3483.6

MEASURED SKIN FRICTION

	ELEV.	PSF
V4	3494.0	389
V14	3496.6	1222
V14	3481.9	1944

SUBSURFACE INVESTIGATION, PILING, & DRILLED SHAFT LAYOUT

FOR

WESTBOUND LANES

197' - 11⅞" PRESTR. GIRDER BRIDGE

40' - 0" ROADWAY — 33° 13' 41" LHF SKEW
OVER DEER VIEW ROAD — SEC. 4/9-T3N-R6E
STA. 235 + 55.65 TO 237 + 53.63 — IM 0901(38)40
STR. NO. 47-088-550 — HL-93

MEADE COUNTY

S. D. DEPT. OF TRANSPORTATION

JANUARY 2014

DESIGNED BY	CK. DES. BY	DRAFTED BY	
PW	TD	MG	Steve A Johnson BRIDGE ENGINEER
MEAD5580	5580GK06		

STATE OF	PROJECT	SHEET NO.	TOTAL SHEETS
S.D.	IM 0901(38)40	E136	E199

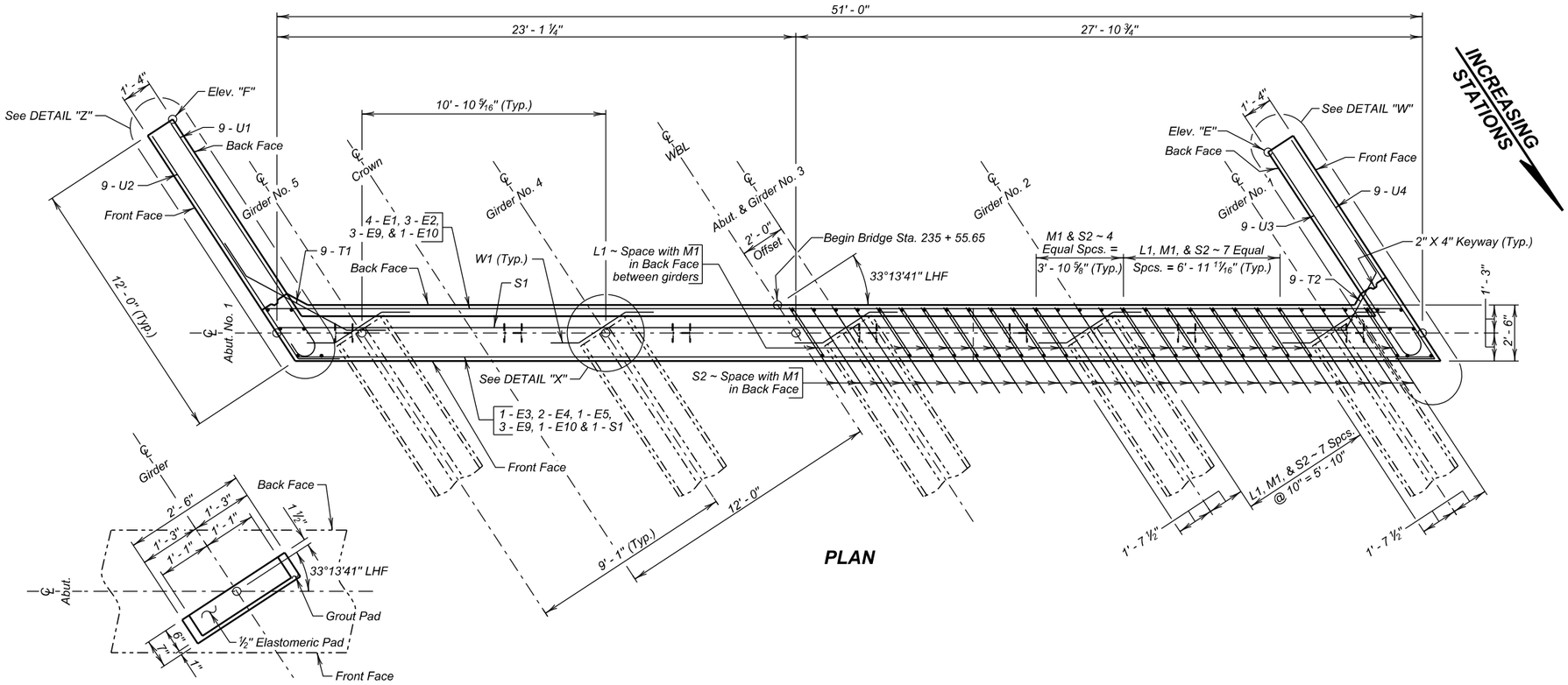

PLAN

DETAIL "X"

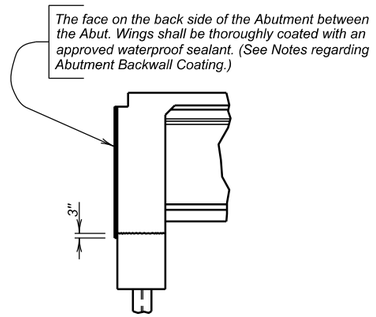

ABUT. BACKWALL COATING DETAILS

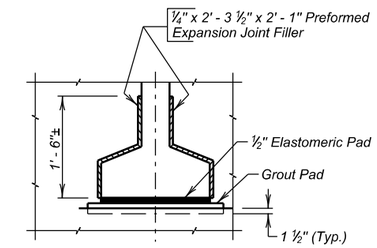

DETAIL "Y"
(Typical at Girder Ends; Abutments only)

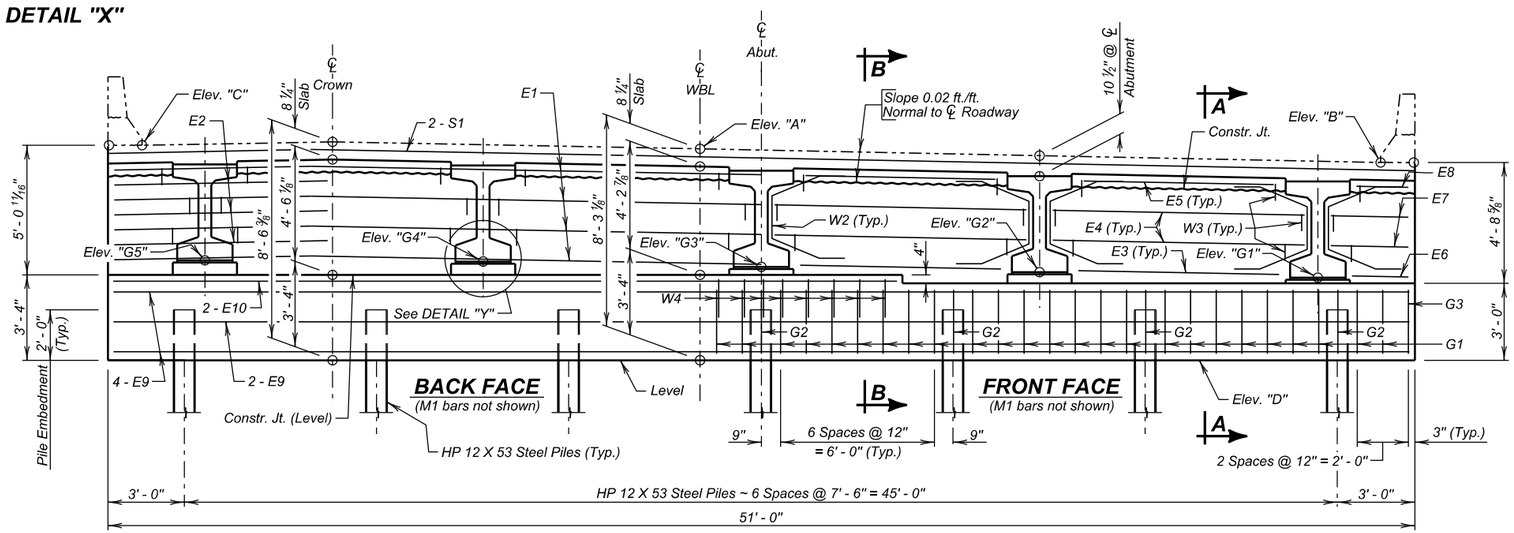

ELEVATION
(Along ℄ Abutment)

TABLE OF ELEVATIONS

Abut. No.	Elev. "A"	Elev. "B"	Elev. "C"	Elev. "D"	Elev. "E"	Elev. "F"
1	3535.86	3535.36	3536.03	3527.60	3534.22	3534.87

TABLE OF ELEVATIONS

Abut. No.	Elev. "G1"	Elev. "G2"	Elev. "G3"	Elev. "G4"	Elev. "G5"
1	3530.72	3530.92	3531.13	3531.33	3531.37

NOTE : Elev. "A", "B" and "C" are top of slab at ℄ of Abutment. Elev. "E" and "F" are at top of wingwall 14 ¼" below top of slab elevation. Elev. "G1", "G2", "G3", "G4", and "G5" are top of grout pad elevations at ℄ Abutment.
Top of Grout Pads shall be Level and Smooth.

ABUTMENT NO. 1 DETAILS (A)

FOR

WESTBOUND LANES

197' - 11⅞" PRESTR. GIRDER BRIDGE

40' - 0" ROADWAY — 33° 13' 41" LHF SKEW
OVER DEER VIEW ROAD — SEC. 4/9-T3N-R6E
STA. 235 + 55.65 TO 237 + 53.63 — IM 0901(38)40
STR. NO. 47-088-550 — HL-93

MEADE COUNTY
S. D. DEPT. OF TRANSPORTATION
JANUARY 2014

DESIGNED BY	CK. DES. BY	DRAFTED BY	
BAF/PW	TD	MG	Steve A Johnson BRIDGE ENGINEER
MEAD5580	5580GK07		

STATE OF	PROJECT	SHEET NO.	TOTAL SHEETS
S.D.	IM 0901(38)40	E137	E199

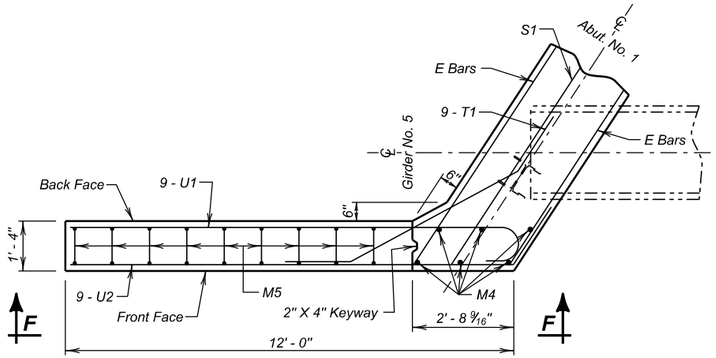

DETAIL "Z"

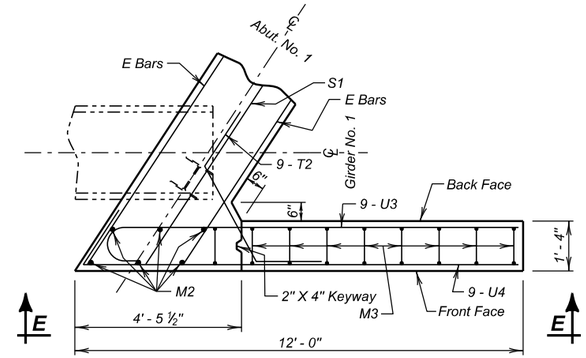

DETAIL "W"

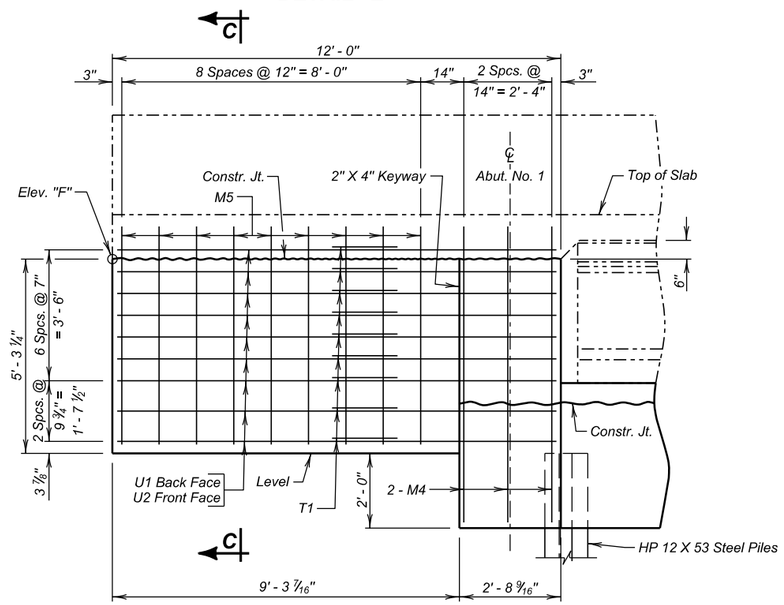

VIEW F - F

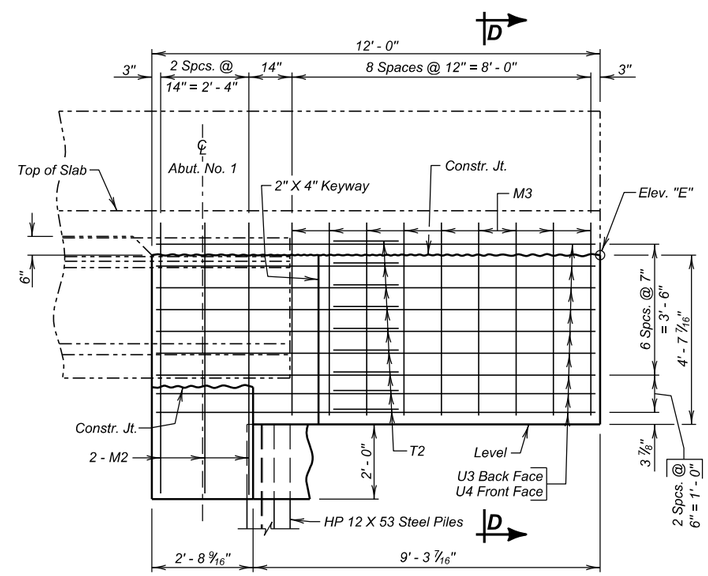

VIEW E - E

REINFORCING SCHEDULE

	Mk.	No.	Size	Length	Type
	E1	4	8	50' - 7"	Str.
	E2	6	8	9' - 6"	Str.
	E3	4	4	7' - 10"	Str.
	E4	8	4	9' - 10"	Str.
	E5	4	4	7' - 5"	Str.
	E6	2	4	2' - 3"	Str.
	E7	4	4	3' - 3"	Str.
	E8	2	4	2' - 1"	Str.
	E9	10	7	50' - 7"	Str.
	E10	2	4	30' - 7"	Str.
	G1	46	5	10' - 3"	T1
	G2	7	5	8' - 8"	S6
	G3	2	5	11' - 1"	T1
△	L1	34	4	4' - 7"	17A
	M1	83	5	6' - 7"	Str.
	M2	6	5	7' - 4"	Str.
	M3	9	5	11' - 6"	17
	M4	6	5	8' - 1"	Str.
	M5	9	5	13' - 0"	17
△	S1	2	9	50' - 7"	Str.
△	S2	49	5	8' - 3"	14A
	T1	9	6	9' - 1"	19
	T2	9	6	6' - 5"	19
	U1	9	9	13' - 5"	1A
	U2	9	5	13' - 6"	19A
	U3	9	9	12' - 5"	1A
	U4	9	5	13' - 3"	19A
	W1	5	5	5' - 8"	19
	W2	10	4	7' - 8"	14
	W3	30	4	3' - 11"	17
	W4	33	4	5' - 2"	17

Bending Details

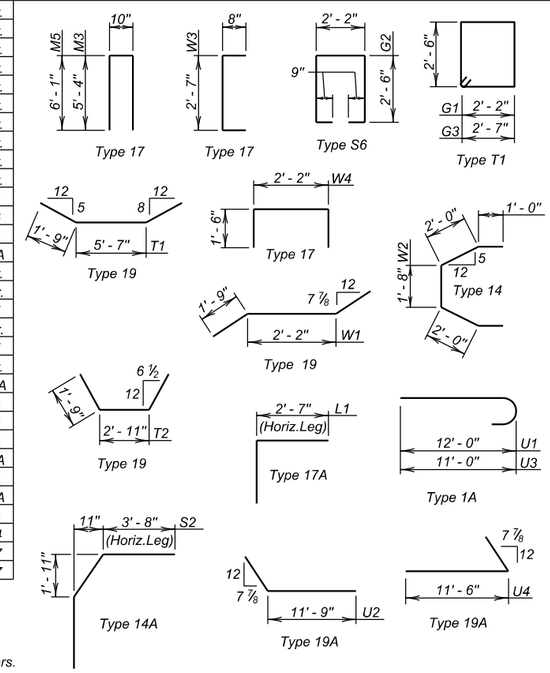

NOTES:
All dimensions are out to out of bars.
△ Bars to be Epoxy Coated.

ESTIMATED QUANTITIES

	ITEM	UNIT	QUANTITY
ϕ	Class A45 Concrete, Bridge	Cu. Yd.	36.3
	Reinforcing Steel	Lb.	4874
	Epoxy Coated Reinforcing Steel	Lb.	870
	Structure Excavation, Bridge	Cu. Yd.	13.9
	HP 12 x 53 Steel Test Pile, Furnish and Drive	Ft.	1 @ 50', 1 @ 40', 1 @ 30' = 120'
	HP 12 x 53 Steel Bearing Pile, Furnish and Drive	Ft.	6 @ 45' = 270'
	Preboring Pile	Ft.	7 @ 10' = 70'

ϕ Includes 0.1 cu. yds. for grout pads.

Note: Concrete shall be placed in the space under the beams (within the backwall width) during the pour. Care shall be taken to get the concrete vibrated into this area. If upon form removal the space is not completely filled and consolidated, the contractor shall grout the remaining voids.

✳ Z1 bars and mechanical splices are listed and included in superstructure. See SUPERSTRUCTURE DETAILS (A) & (B).

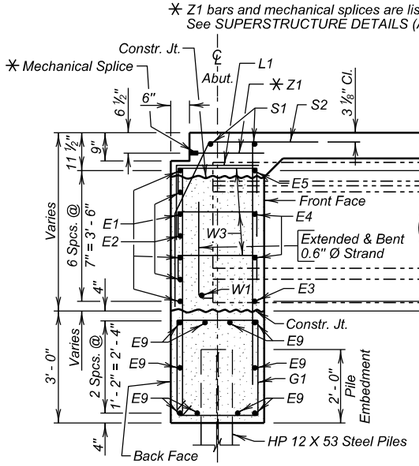

SEC. A - A

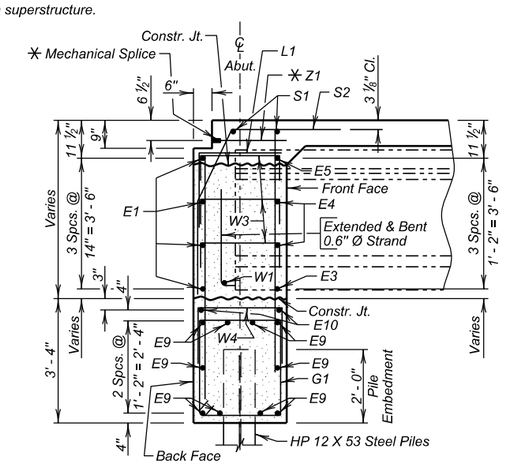

SEC. B - B

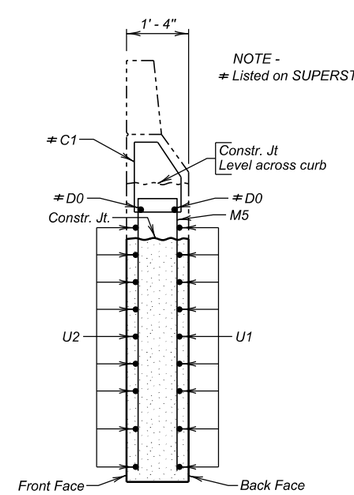

SEC. C - C

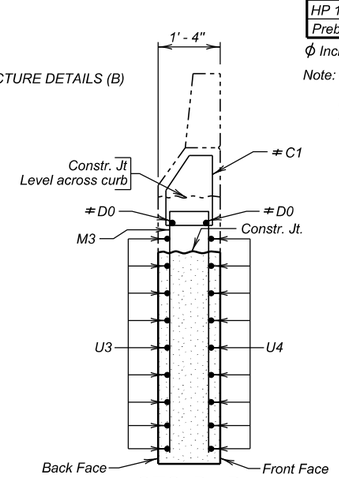

SEC. D - D

ABUTMENT NO. 1 DETAILS (B)

FOR

WESTBOUND LANES

197' - 11 7/8" PRESTR. GIRDER BRIDGE

40' - 0" ROADWAY — 33° 13' 41" LHF SKEW
OVER DEER VIEW ROAD — SEC. 4/9-T3N-R6E
STA. 235 + 55.65 TO 237 + 53.63 — IM 0901(38)40
STR. NO. 47-088-550 — HL-93

MEADE COUNTY
S. D. DEPT. OF TRANSPORTATION
JANUARY 2014

DESIGNED BY	CK. DES. BY	DRAFTED BY	
BAF/PW	TD	MG	Steve A Johnson BRIDGE ENGINEER
MEAD5580	5580GK08		

STATE OF	PROJECT	SHEET NO.	TOTAL SHEETS
S.D.	IM 0901(38)40	E138	E199

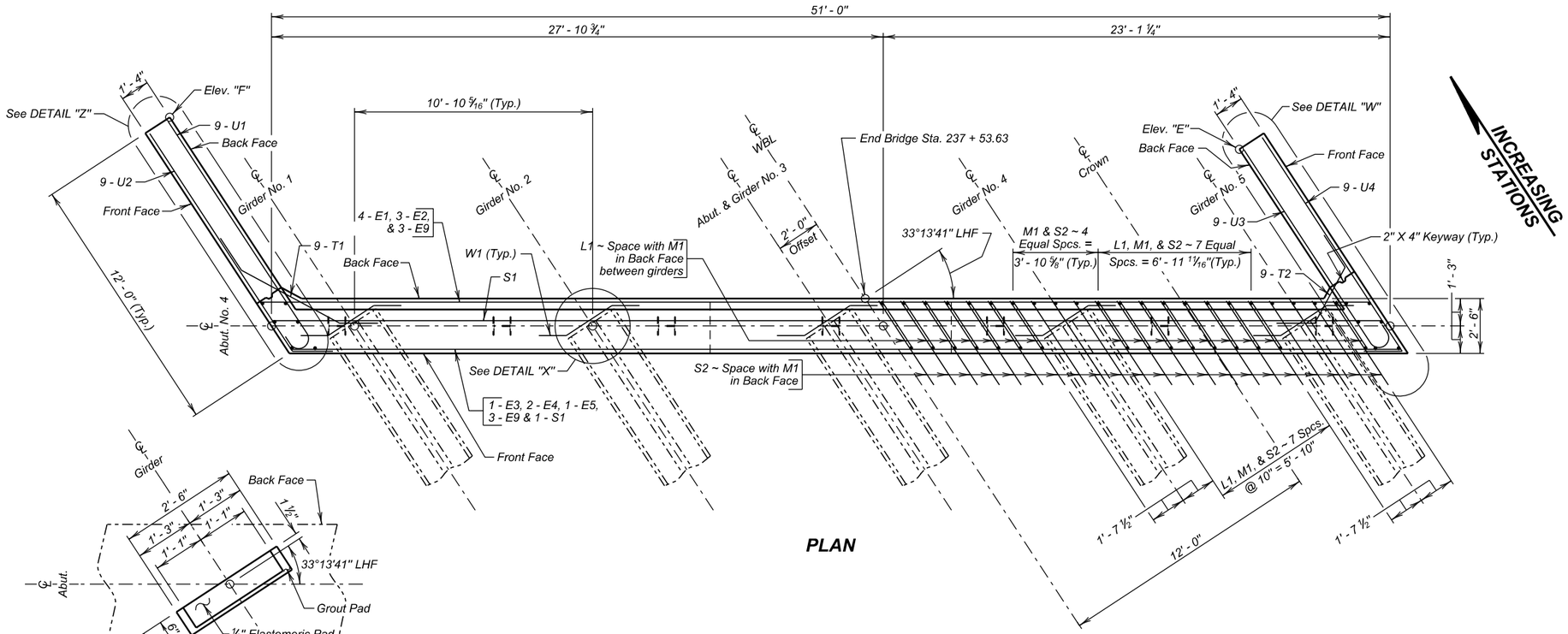

PLAN

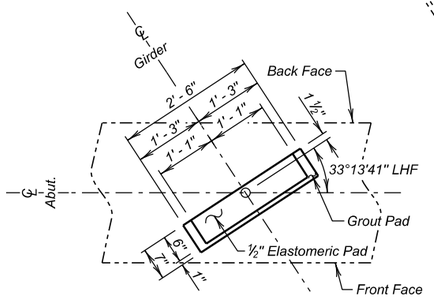

DETAIL "X"

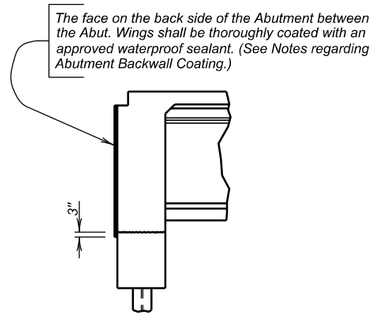

ABUT. BACKWALL COATING DETAILS

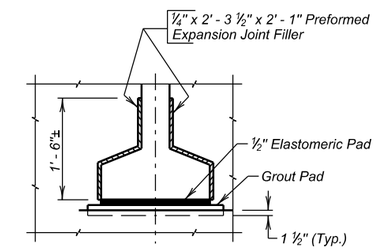

DETAIL "Y"
(Typical at Girder Ends; Abutments only)

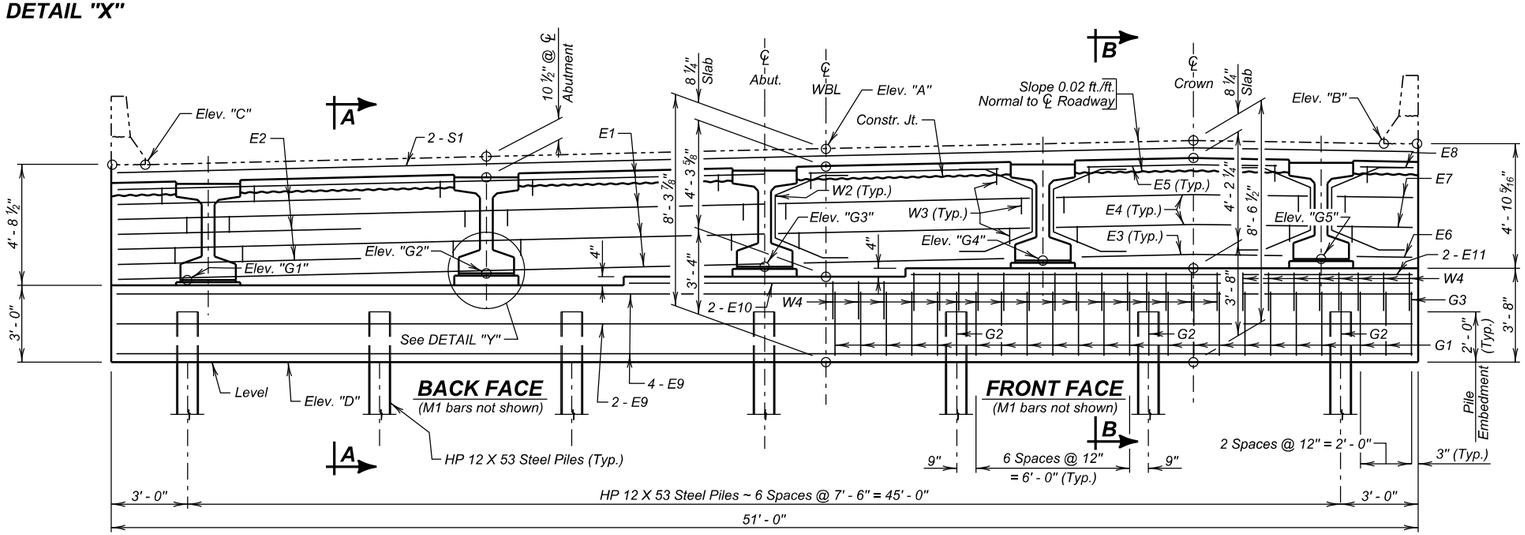

ELEVATION
(Along ℄ Abutment)

TABLE OF ELEVATIONS

Abut. No.	Elev. "A"	Elev. "B"	Elev. "C"	Elev. "D"	Elev. "E"	Elev. "F"
4	3534.57	3534.80	3534.00	3526.25	3533.52	3532.71

TABLE OF ELEVATIONS

Abut. No.	Elev. "G1"	Elev. "G2"	Elev. "G3"	Elev. "G4"	Elev. "G5"
4	3529.36	3529.60	3529.83	3530.07	3530.14

NOTE : Elev. "A", "B" and "C" are top of slab at ℄ of Abutment. Elev. "E" and "F" are at top of wingwall 14 1/4" below top of slab elevation. Elev. "G1", "G2", "G3", "G4", and "G5" are top of grout pad elevations at ℄ Abutment.
Top of Grout Pads shall be Level and Smooth.

ABUTMENT NO. 4 DETAILS (A)

FOR

WESTBOUND LANES

197' - 11 7/8" PRESTR. GIRDER BRIDGE

40' - 0" ROADWAY — 33° 13' 41" LHF SKEW
OVER DEER VIEW ROAD — SEC. 4/9-T3N-R6E
STA. 235 + 55.65 TO 237 + 53.63 — IM 0901(38)40
STR. NO. 47-088-550 — HL-93

MEADE COUNTY
S. D. DEPT. OF TRANSPORTATION
JANUARY 2014

DESIGNED BY	CK. DES. BY	DRAFTED BY	
BAF/PW	TD	MG	Steve A. Johnson
MEAD5580	5580GK09		BRIDGE ENGINEER

Revised August 16, 2016 PW

STATE OF	PROJECT	SHEET NO.	TOTAL SHEETS
S.D.	IM 0901(38)40	E139	E199

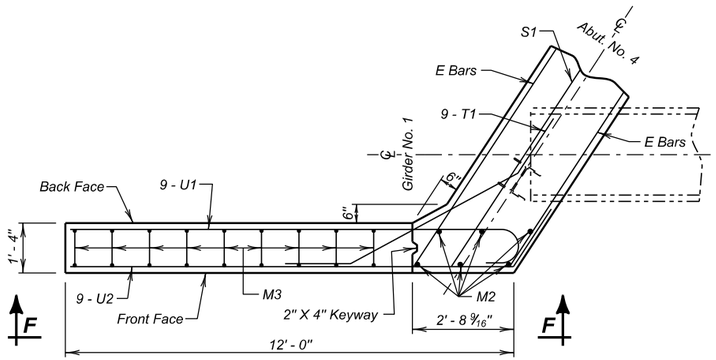

DETAIL "Z"

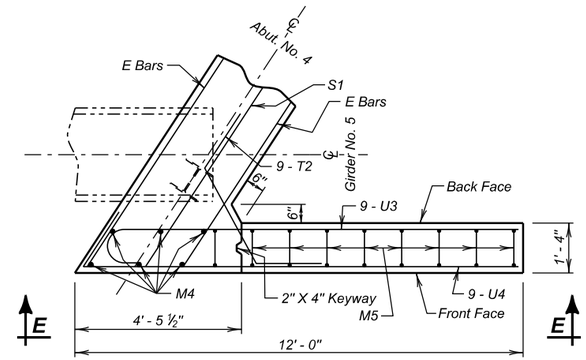

DETAIL "W"

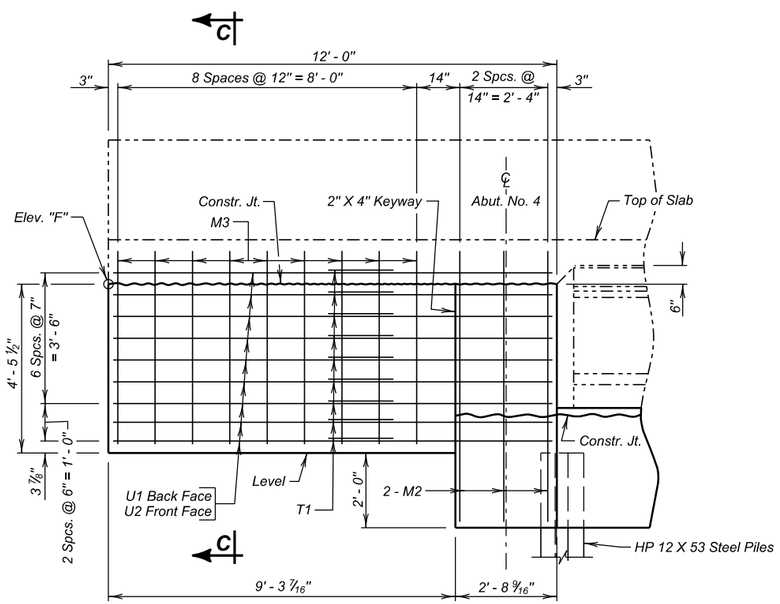

VIEW F - F

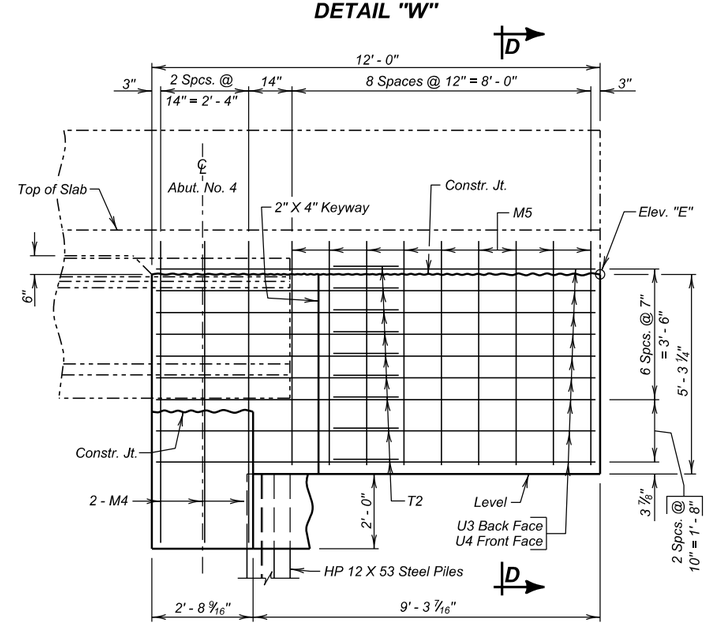

VIEW E - E

REINFORCING SCHEDULE

	Mk.	No.	Size	Length	Type
	E1	4	8	50' - 7"	Str.
	E2	6	8	9' - 6"	Str.
	E3	4	4	7' - 10"	Str.
	E4	8	4	9' - 10"	Str.
	E5	4	4	7' - 5"	Str.
	E6	2	4	2' - 3"	Str.
	E7	4	4	3' - 3"	Str.
	E8	2	4	2' - 1"	Str.
	E9	10	7	50' - 7"	Str.
	E10	2	4	30' - 7"	Str.
	E11	2	4	19' - 7"	Str.
	G1	46	5	10' - 3"	T1
	G2	7	5	8' - 8"	S6
	G3	2	5	11' - 1"	T1
Δ	L1	34	4	4' - 7"	17A
	M1	83	5	6' - 7"	Str.
	M2	6	5	7' - 4"	Str.
	M3	9	5	11' - 6"	17
	M4	6	5	8' - 1"	Str.
	M5	9	5	13' - 0"	17
Δ	S1	2	9	50' - 7"	Str.
Δ	S2	49	5	8' - 3"	14A
	T1	9	6	9' - 1"	19
	T2	9	6	6' - 5"	19
	U1	9	9	13' - 5"	1A
	U2	9	5	13' - 6"	19A
	U3	9	9	12' - 5"	1A
	U4	9	5	13' - 3"	19A
	W1	5	5	5' - 8"	19
	W2	10	4	7' - 8"	14
	W3	30	4	3' - 11"	17
	W4	33	4	5' - 2"	17

Bending Details

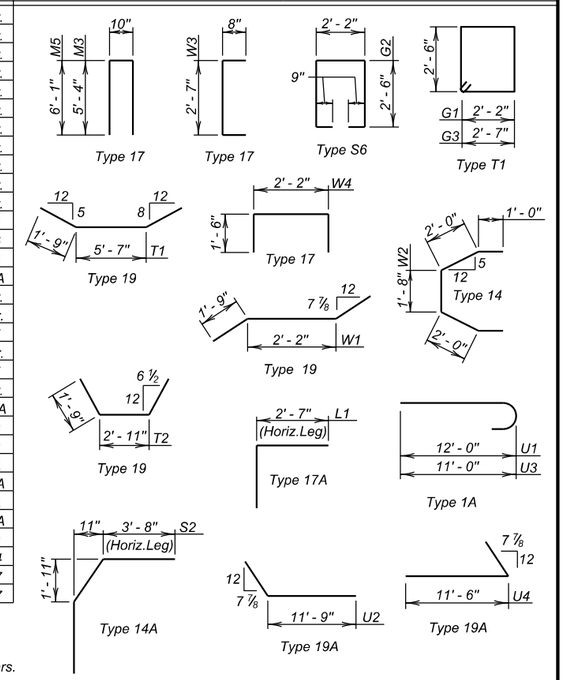

NOTES:
All dimensions are out to out of bars.
Δ Bars to be Epoxy Coated.

ESTIMATED QUANTITIES

	ITEM	UNIT	QUANTITY
ϕ	Class A45 Concrete, Bridge	Cu. Yd.	36.6
	Reinforcing Steel	Lb.	4900
	Epoxy Coated Reinforcing Steel	Lb.	870
	Structure Excavation, Bridge	Cu. Yd.	13.9
	HP 12 x 53 Steel Test Pile, Furnish and Drive	Ft.	1 @ 60'
	HP 12 x 53 Steel Bearing Pile, Furnish and Drive	Ft.	6 @ 55' = 330'
	Preboring Pile	Ft.	7 @ 10' = 70'

ϕ Includes 0.1 cu. yds. for grout pads.

Note: Concrete shall be placed in the space under the beams (within the backwall width) during the pour. Care shall be taken to get the concrete vibrated into this area. If upon form removal the space is not completely filled and consolidated, the contractor shall grout the remaining voids.

✳ Z1 bars and mechanical splices are listed and included in superstructure. See SUPERSTRUCTURE DETAILS (A) & (B).

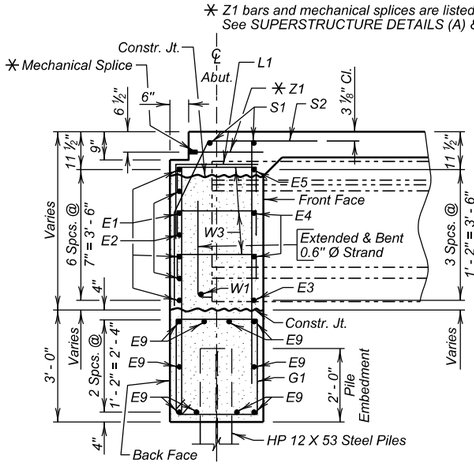

SEC. A - A

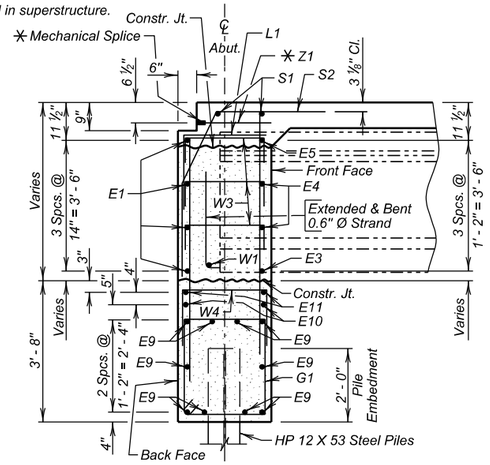

SEC. B - B

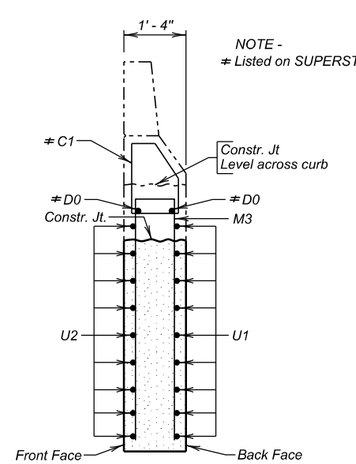

SEC. C - C

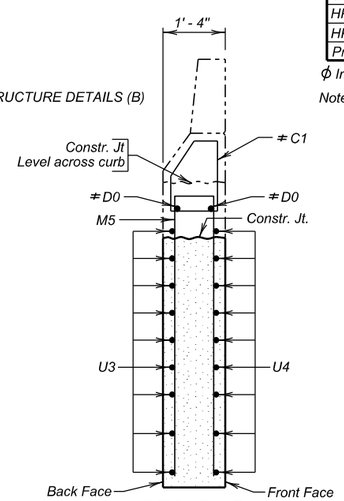

SEC. D - D

ABUTMENT NO. 4 DETAILS (B)

FOR

WESTBOUND LANES

197' - 11⅞" PRESTR. GIRDER BRIDGE

40' - 0" ROADWAY — 33° 13' 41" LHF SKEW
OVER DEER VIEW ROAD — SEC. 4/9-T3N-R6E
STA. 235 + 55.65 TO 237 + 53.63 — IM 0901(38)40
STR. NO. 47-088-550 — HL-93

MEADE COUNTY
S. D. DEPT. OF TRANSPORTATION
JANUARY 2014

DESIGNED BY	CK. DES. BY	DRAFTED BY	
BAF/PW	TD	MG	Steve A Johnson BRIDGE ENGINEER
MEAD5580	5580GK10		

STATE OF	PROJECT	SHEET NO.	TOTAL SHEETS
S.D.	IM 0901(38)40	E140	E199

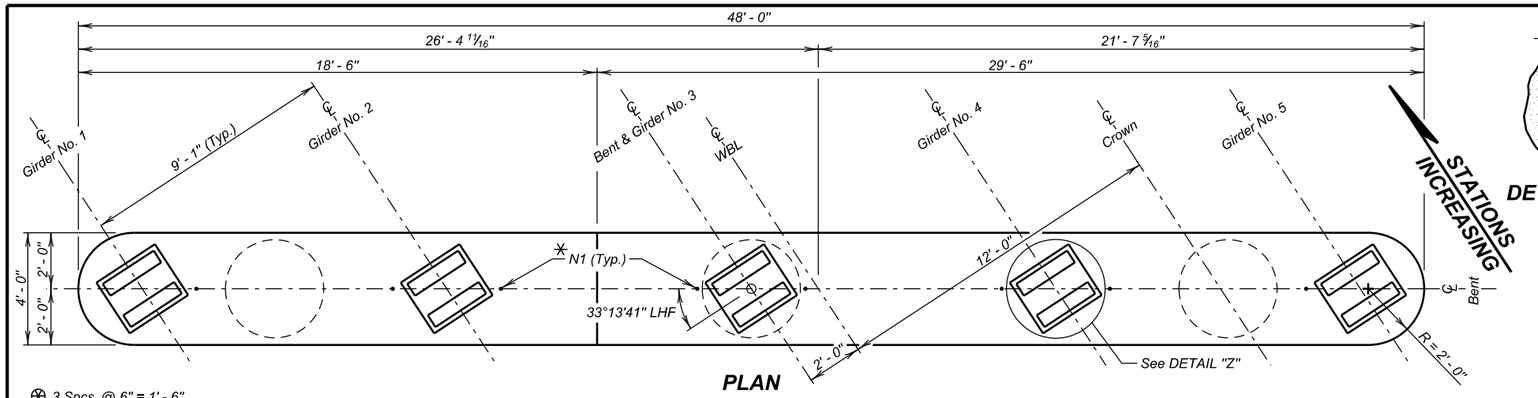

PLAN

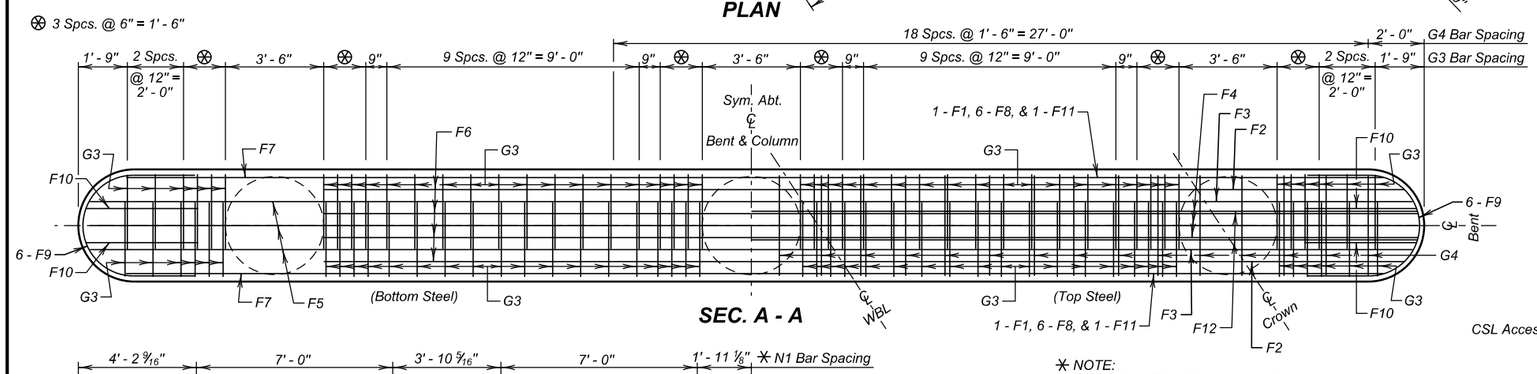

SEC. A - A

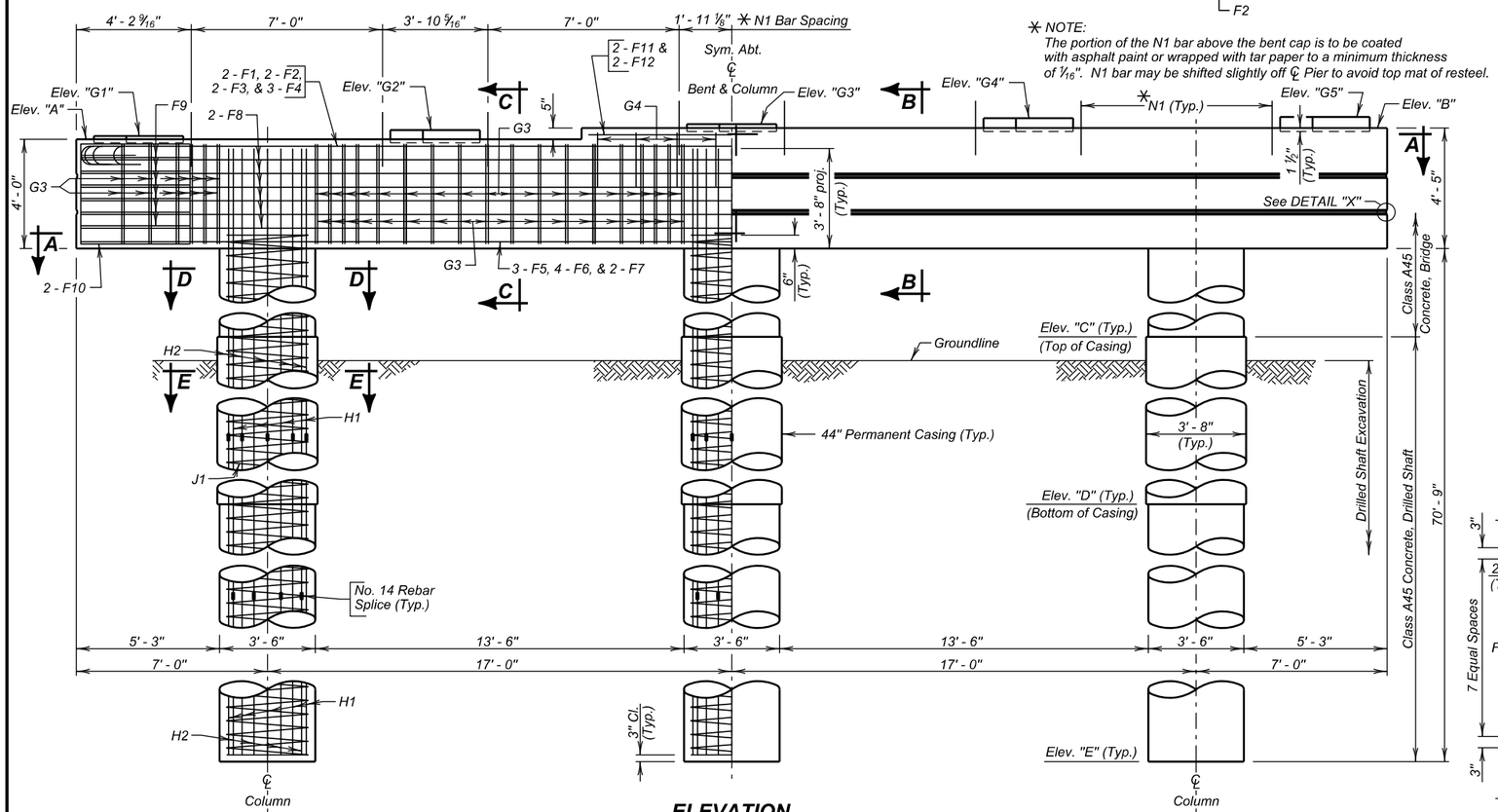

ELEVATION

✳ NOTE:
The portion of the N1 bar above the bent cap is to be coated with asphalt paint or wrapped with tar paper to a minimum thickness of 1/16". N1 bar may be shifted slightly off ℄ Pier to avoid top mat of resteel.

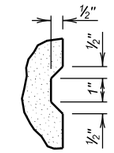

DETAIL "X"

TABLE OF ELEVATIONS

Bent No.	★Elev. "G1"	★Elev. "G2"	★Elev. "G3"	★Elev. "G4"	★Elev. "G5"	Elev. "A"	Elev. "B"	Elev. "C"	Elev. "D"	Elev. "E"
2	3530.39	3530.61	3530.82	3531.04	3531.08	3530.24	3530.66	3514.00	3497.00	3455.49
3	3529.91	3530.14	3530.37	3530.60	3530.66	3529.77	3530.19	3514.00	3495.00	3455.02

NOTE: Top of Grout Pad shall be level and smooth .
★Elevations are Top of Grout Pad at centerline of bent.

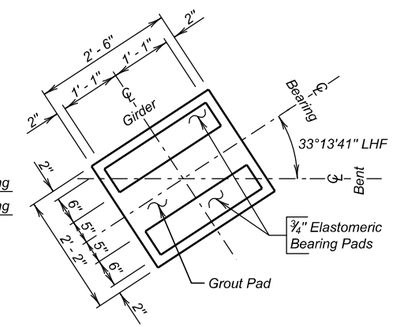

DETAIL "Z"

REINFORCING SCHEDULE

(For One Bent - 2 Required)

Mk.	No.	Size	Length	Type
F1	2	8	46' - 11"	1
F2	2	8	48' - 5"	1
F3	2	8	49' - 0"	1
F4	3	8	49' - 4"	1
F5	3	8	47' - 2"	Str.
F6	4	8	30' - 6"	Str.
F7	2	8	45' - 1"	Str.
F8	12	4	45' - 1"	Str.
F9	12	4	10' - 1"	S11
F10	4	4	11' - 8"	17
F11	2	4	27' - 7"	Str.
F12	2	4	29' - 0"	Str.
G3	96	4	12' - 9"	T1
G4	19	4	7' - 7"	17
H1	54	14	50' - 2"	Str.
H2	54	14	24' - 0"	Str.
J1	3	4	1359' - 0"	Spiral
N1	8	8	2' - 0"	Str.

Bending Details

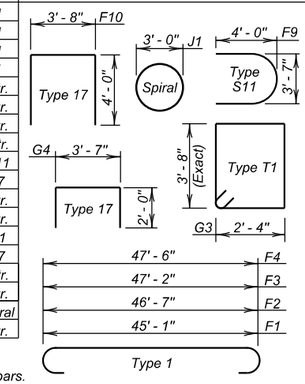

NOTES-
All dimensions are out to out of bars.
Spirals - Use 6" pitch and 1 1/2 extra turns at each end. Use 1 1/2 turns for lap at splice as required, or weld as approved by the Office of Bridge Design.
Use 4 vertical spacer bars per column. Spirals may be smooth bars.
Bar length shown does not not include splices.

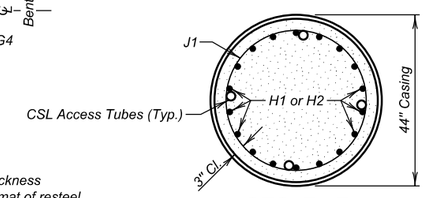

SEC. E - E

ESTIMATED QUANTITIES

ITEM	UNIT	QUANTITY Bent No. 2	QUANTITY Bent No. 3
⌀ Class A45 Concrete, Bridge	Cu. Yd.	42.8	42.3
Reinforcing Steel	Lb.	36977	36977
Drilled Shaft Excavation	Cu. Yd.	61.3	61.8
Class A45 Concrete, Drilled Shaft	Cu. Yd.	62.5	63.0
44" Permanent Casing	Ft.	51	57
No. 14 Rebar Splice	Each	54	54

⌀ Includes 0.3 Cu. Yds. for Grout Pads at Bents 2 & 3.

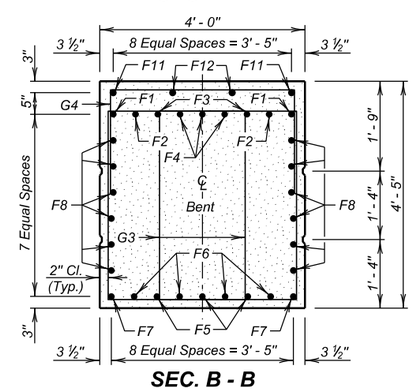

SEC. B - B

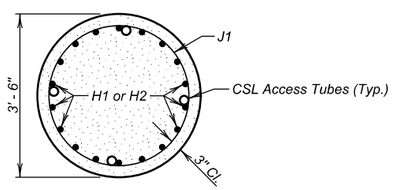

SEC. D - D

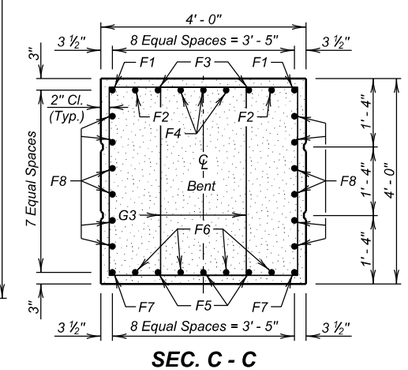

SEC. C - C

BENT DETAILS
FOR
WESTBOUND LANES

197' - 11 7/8" PRESTR. GIRDER BRIDGE

40' - 0" ROADWAY
OVER DEER VIEW ROAD
STA. 235 + 55.65 TO 237 + 53.63
STR. NO. 47-088-550

33° 13' 41" LHF SKEW
SEC. 4/9-T3N-R6E
IM 0901(38)40
HL-93

MEADE COUNTY
S. D. DEPT. OF TRANSPORTATION
JANUARY 2014

DESIGNED BY	CK. DES. BY	DRAFTED BY	
JMH/PW	TD	MG	Steve A Johnson BRIDGE ENGINEER
MEAD5580	5580GK11		

STATE OF	PROJECT	SHEET NO.	TOTAL SHEETS
S.D.	IM 0901(38)40	E141	E199

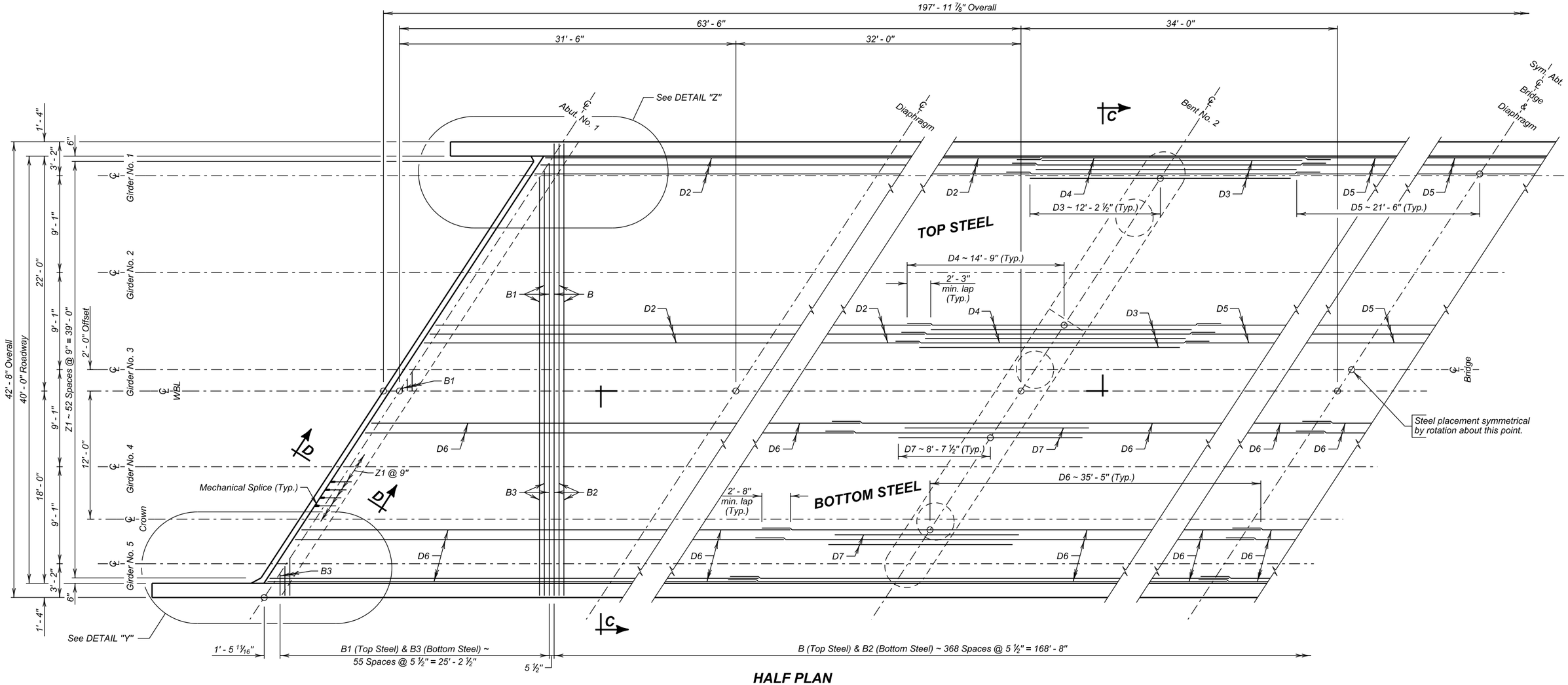

HALF PLAN

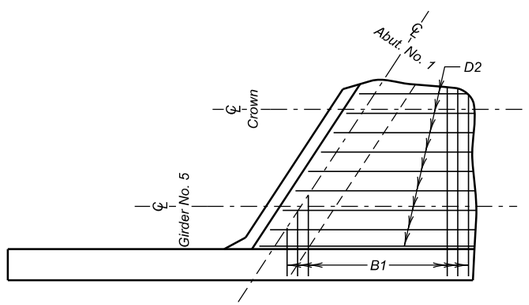

DETAIL "Y"
(Top Steel)

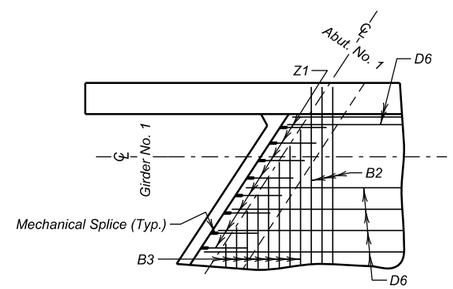

DETAIL "Z"
(Bottom Steel)

SUPERSTRUCTURE DETAILS (A)
FOR
WESTBOUND LANES

197' - 11 7/8" PRESTR. GIRDER BRIDGE

40' - 0" ROADWAY — 33° 13' 41" LHF SKEW
OVER DEER VIEW ROAD — SEC. 4/9-T3N-R6E
STA. 235 + 55.65 TO 237 + 53.63 — IM 0901(38)40
STR. NO. 47-088-550 — HL-93

MEADE COUNTY
S. D. DEPT. OF TRANSPORTATION
JANUARY 2014

DESIGNED BY	CK. DES. BY	DRAFTED BY	
BAF/PW	DC/TD	MG	Steve A Johnson
MEAD5580	5580GK12		BRIDGE ENGINEER

STATE OF	PROJECT	SHEET NO.	TOTAL SHEETS
S.D.	IM 0901(38)40	E142	E199

REINFORCING SCHEDULE

	Mk.	No.	Size	Length	Type
∅	B	369	4	43' - 4"	1
≠ ∅	B1	56	4	43' - 7"	1A
	B2	369	4	42' - 4"	Str.
≠	B3	56	4	42' - 7"	Str.
	B15	12	5	14' - 6"	Str.
	B16	8	4	54' - 0"	Str.
	B17	8	4	8' - 6"	19B
	B18	12	8	4' - 3"	19B
	B19	12	5	2' - 4"	Str.
	B20	12	6	3' - 6"	17A
	C1	414	5	5' - 7"	T1A
	C2	386	5	5' - 1"	S11
	C3	4	5	5' - 0"	S11
	C4	4	5	5' - 0"	S11
	C5	4	5	5' - 0"	S11
	C6	4	5	6' - 8"	T1
	C7	4	5	6' - 9"	T1
	C8	4	5	6' - 11"	T1
	C9	4	5	7' - 0"	T1
	C10	16	6	5' - 11"	T1A
	C11	16	5	7' - 1"	T1
	C12	4	6	5' - 6"	17
	C13	4	5	5' - 4"	17
	D	16	4	55' - 4"	Str.
	D0	16	5	55' - 8"	Str.
	D1	48	4	49' - 6"	Str.
	D2	98	4	51' - 8"	Str.
	D3	96	5	24' - 5"	Str.
	D4	98	5	29' - 6"	Str.
	D5	49	4	43' - 0"	Str.
	D6	144	5	51' - 1"	Str.
	D7	56	5	17' - 3"	Str.
✳	T1	16	6	7' - 10"	Str.
✳	T2	48	5	9' - 10"	Str.
✳	T3	16	5	7' - 5"	Str.
✳	T4	12	5	5' - 0"	19C
✳	T5	8	6	47' - 2"	Str.
✳	T6	20	5	6' - 8"	19C
✳	T7	20	5	5' - 1"	19C
✳	T8	32	6	2' - 6"	Str.
✳	T9	4	5	3' - 7"	Str.
	U5	32	4	12' - 11"	S4
	U6	40	6	13' - 5"	S4
✳	U7	64	4	4' - 3"	17
	Z1	106	7	2' - 0"	Str.

Bending Details

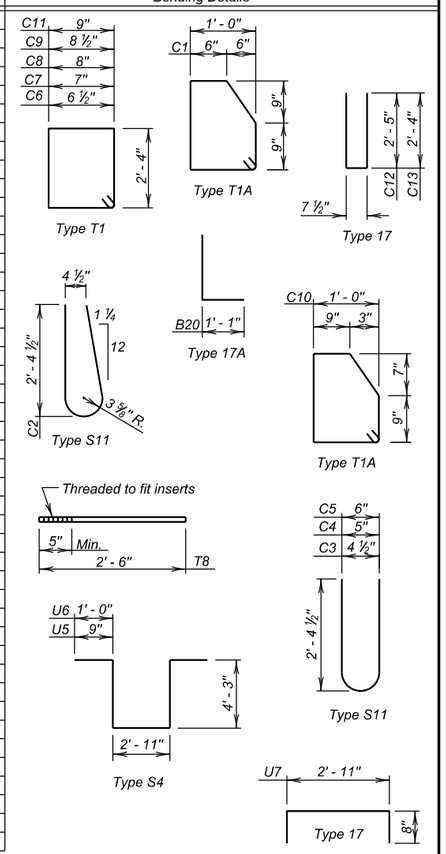

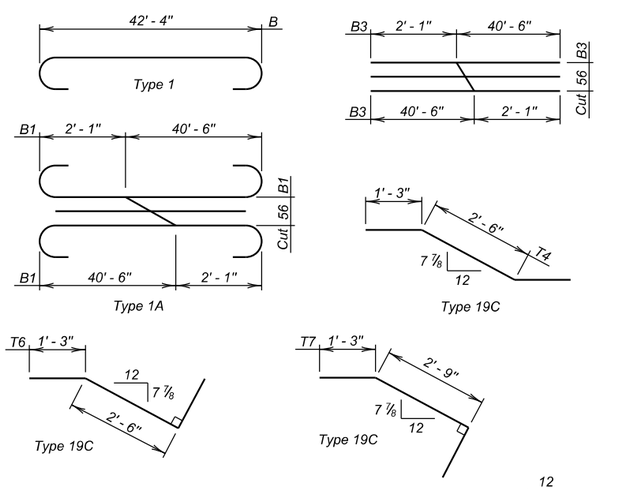

NOTES -

≠ See cutting diagram.

All reinforcing steel shall be epoxy coated except as noted.
See Approach Slab sheet for location of Z1 bars.
All dimensions are out to out of bars.

✳ Bars not to be epoxy coated.

∅ Tip bars as required to maintain top and bottom clear cover.

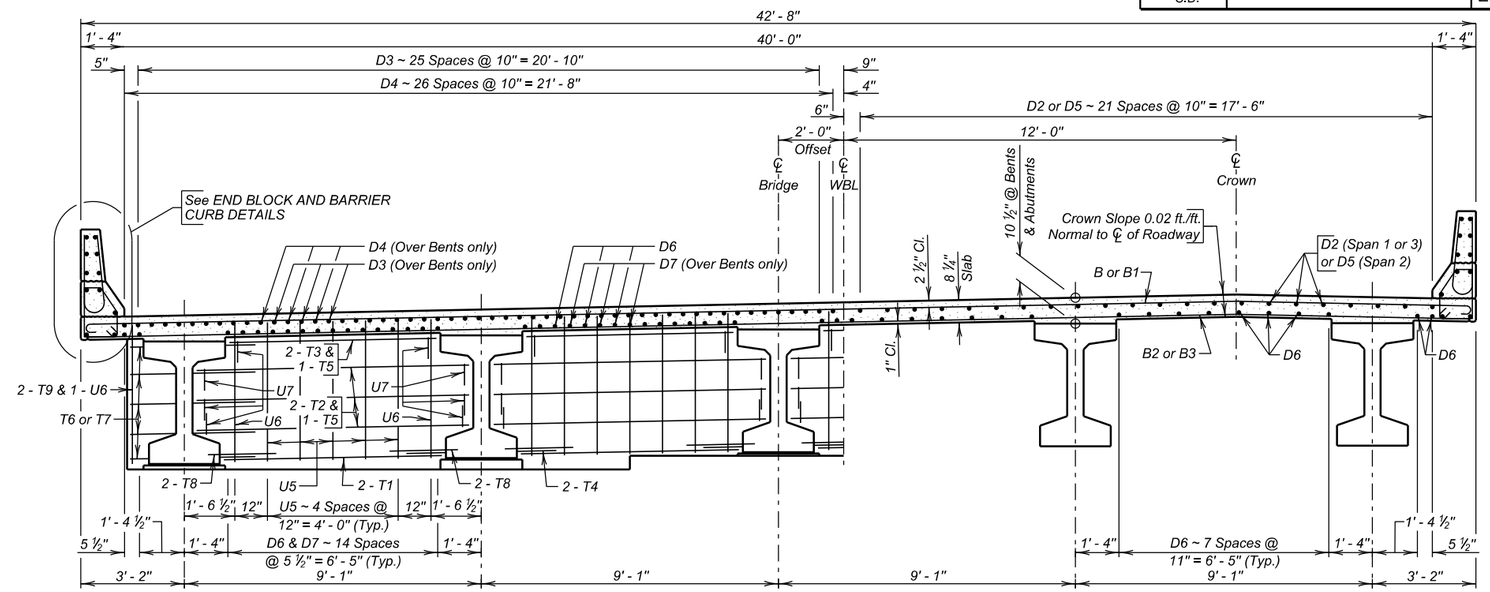

SEC. C - C

(Midspan diaphragm not shown in this section, see DIAPHRAGM DETAILS sheet.)

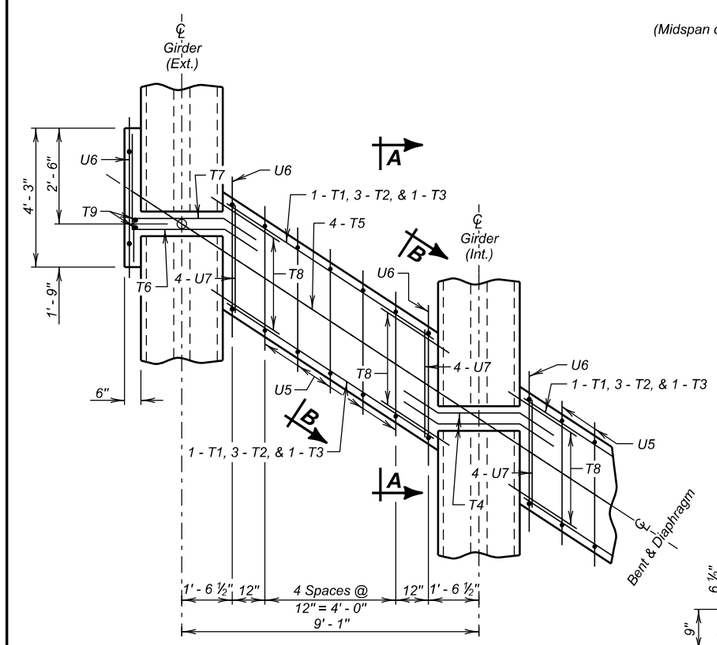

BENT DIAPHRAGMS

(Slab Not Shown)

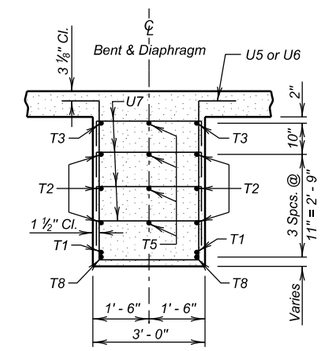

SEC. B - B

(Girders Not Shown)

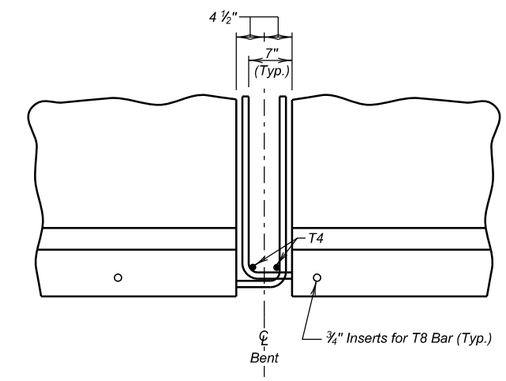

SEC. A - A

(Showing extended and bent strand detail and T4 bar placement at Pier. T6 & T7 similar at exterior girder.)

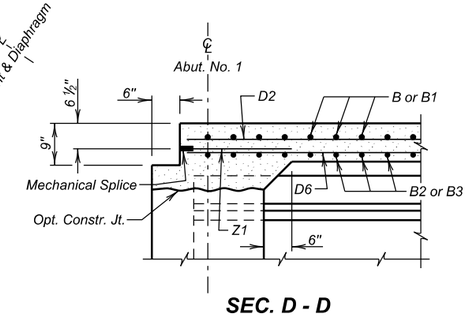

SEC. D - D

ESTIMATED QUANTITIES

	ITEM	UNIT	QUANTITY
☆	Class A45 Concrete, Bridge Deck	Cu.Yd.	292.6
⊡	Epoxy Coated Reinforcing Steel	Lb.	53586
⊡	Reinforcing Steel	Lb.	1996
	45" Minnesota Shape Prestressed Concrete Beam	Ft.	969
	No. 7 Rebar Splice	Each	106
	Concrete Penetrating Sealer	Sq.Yd.	875

⊡ Includes quantities for Bent Diaphragms, Barrier Curbs, and Slab.

☆ Includes quantities for Bent Diaphragms, Barrier Curbs, Slab and Haunch. (Average depth of 1 ¾" used for Haunch Quantity.) Concrete Quantity for Barrier Curbs is 0.0842 Cu.Yd. / Ft. and for End blocks is 1.1659 Cu.Yd. each.

SUPERSTRUCTURE DETAILS (B)

FOR

WESTBOUND LANES

197' - 11⅞" PRESTR. GIRDER BRIDGE

40' - 0" ROADWAY — 33° 13' 41" LHF SKEW
OVER DEER VIEW ROAD — SEC. 4/9-T3N-R6E
STA. 235 + 55.65 TO 237 + 53.63 — IM 0901(38)40
STR. NO. 47-088-550 — HL-93

MEADE COUNTY

S. D. DEPT. OF TRANSPORTATION

JANUARY 2014

DESIGNED BY	CK. DES. BY	DRAFTED BY	
BAF/PW	DC/TD	MG	Steve A Johnson BRIDGE ENGINEER
MEAD5580	5580GK13		

STATE OF	PROJECT	SHEET NO.	TOTAL SHEETS
S.D.	IM 0901(38)40	E143	E199

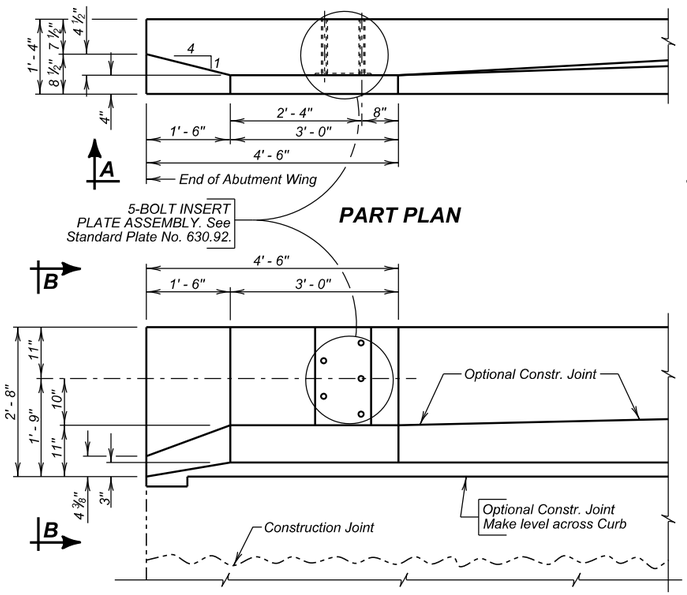

PART PLAN

VIEW A - A

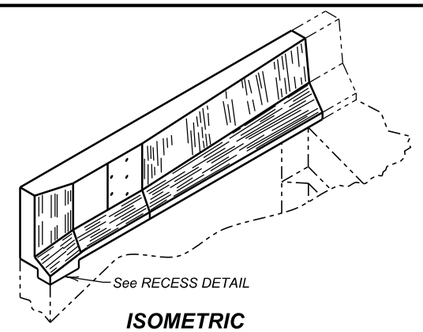

ISOMETRIC VIEW

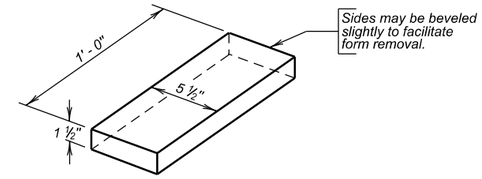

RECESS DETAIL

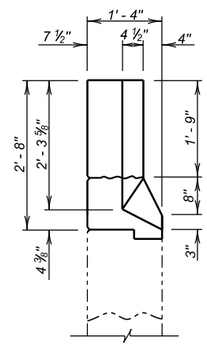

VIEW B - B

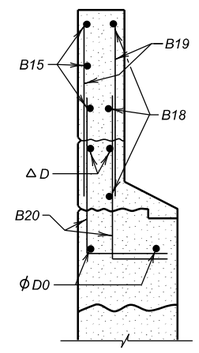

SEC. C - C

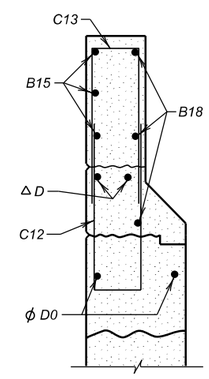

SEC. D - D

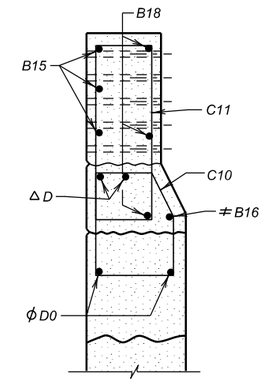

SEC. E - E

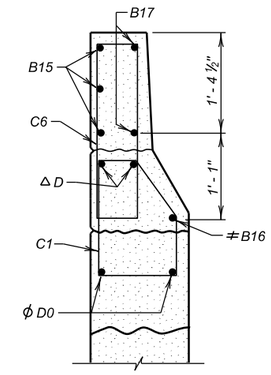

SEC. F - F

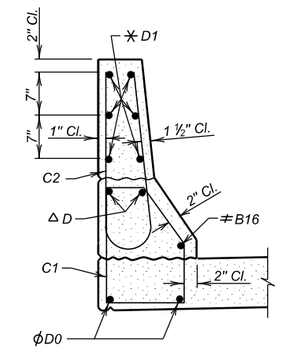

SEC. G - G

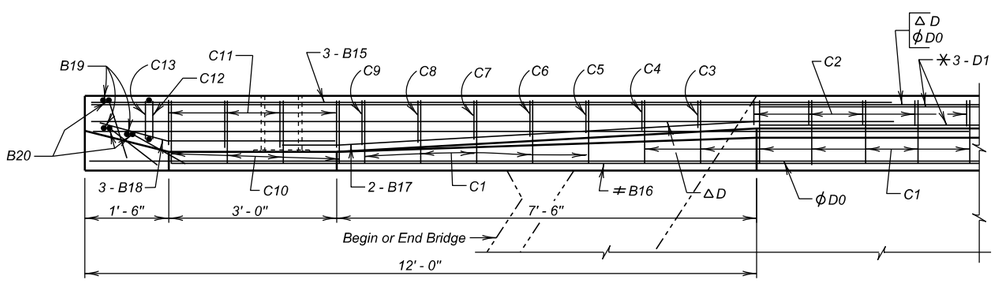

ϕ Min. Lap = 2' - 3"
✳ Min. Lap = 2' - 0"
△ Min. Lap = 1' - 9"
≠ Min. Lap = 1' - 0"

PLAN

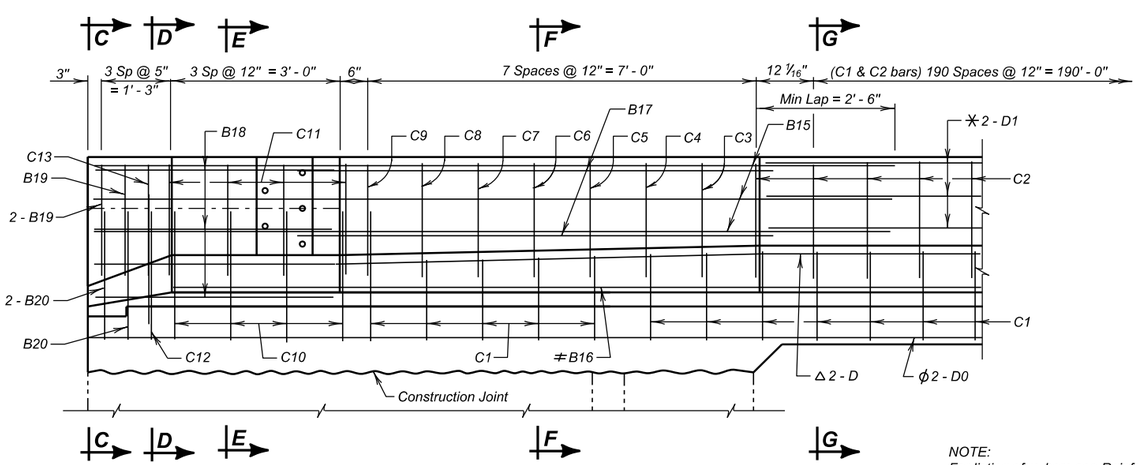

ELEVATION

NOTE:
For listing of re-bars see Reinforcing Schedule on SUPERSTRUCTURE DETAILS (B).

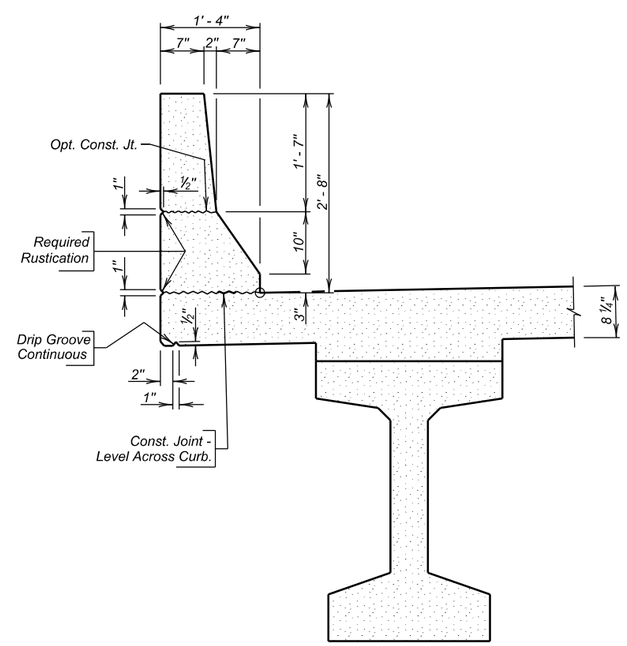

BARRIER DETAILS

END BLOCK & BARRIER CURB DETAILS
FOR
WESTBOUND LANES

197' - 11⅞" PRESTR. GIRDER BRIDGE

40' - 0" ROADWAY — 33° 13' 41" LHF SKEW
OVER DEER VIEW ROAD — SEC. 4/9-T3N-R6E
STA. 235 + 55.65 TO 237 + 53.63 — IM 0901(38)40
STR. NO. 47-088-550 — HL-93

MEADE COUNTY
S. D. DEPT. OF TRANSPORTATION
JANUARY 2014

DESIGNED BY	CK. DES. BY	DRAFTED BY	
PW	TD	MG	Steve A. Johnson BRIDGE ENGINEER
MEAD5580	5580GK14		

STATE OF	PROJECT	SHEET NO.	TOTAL SHEETS
S.D.	IM 0901(38)40	E144	E199

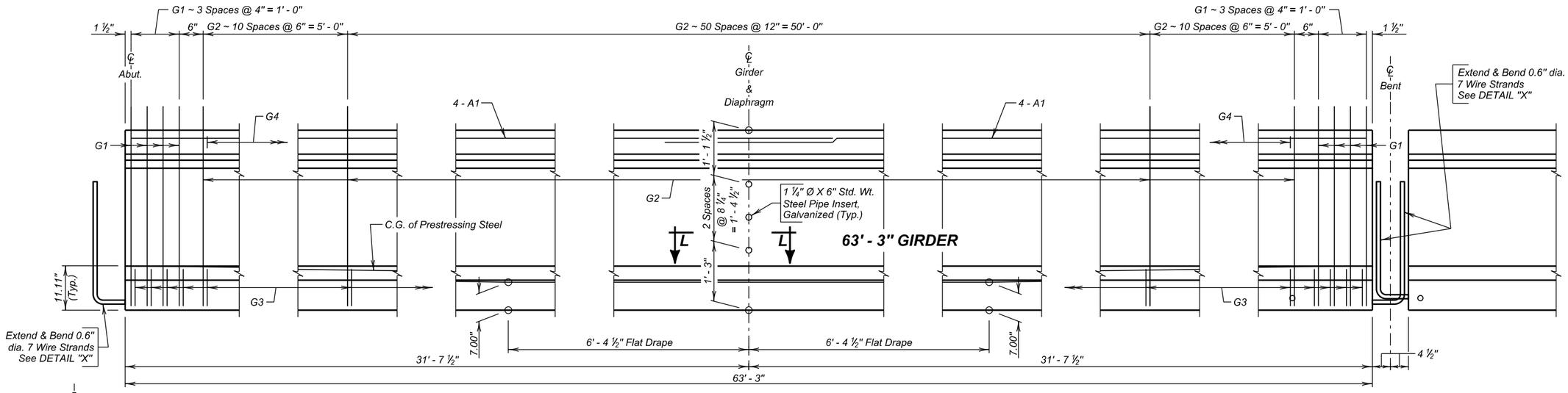

ELEVATION

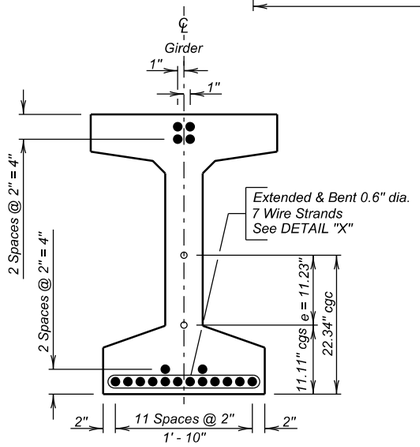

END VIEW

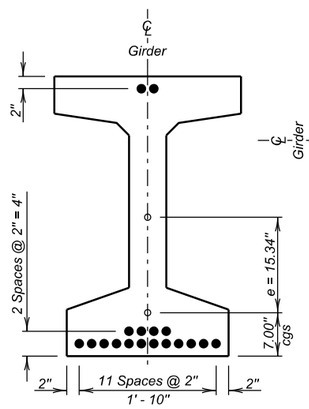

℄ SECTION

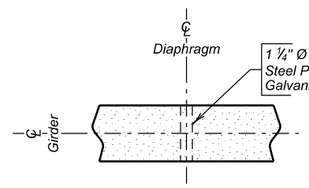

SEC. L - L

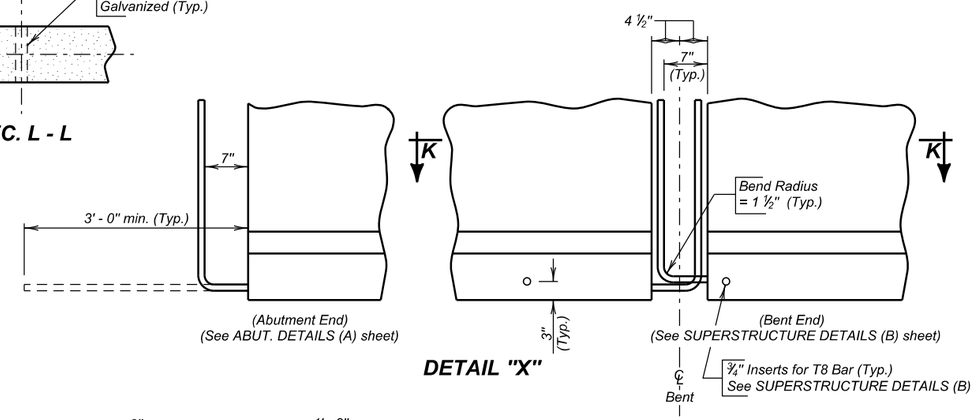

DETAIL "X"

REINFORCING SCHEDULE
(For One Girder)

Mk.	No.	Size	Length	Type	Bending Details
A1	8	7	33' - 3"	Str.	
G1	8	5	8' - 6"	S11	
G2	71	4	8' - 6"	S11	
G3	79	4	4' - 10"	S3A	
G4	16	4	2' - 8"	17	

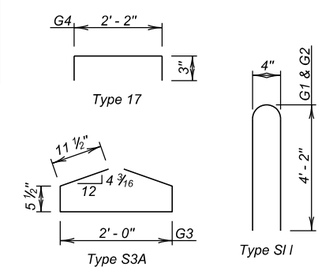

All dimensions are out to out of bars.

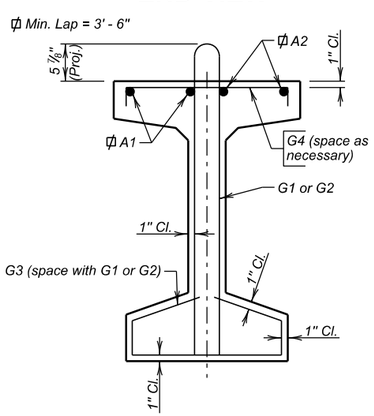

STIRRUP DETAILS

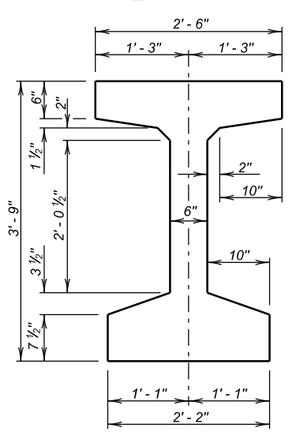

TYPE 45 GIRDER

63' - 3" GIRDERS
(18 ~ 0.6 Dia. Type 270 Low Lax. Strands)

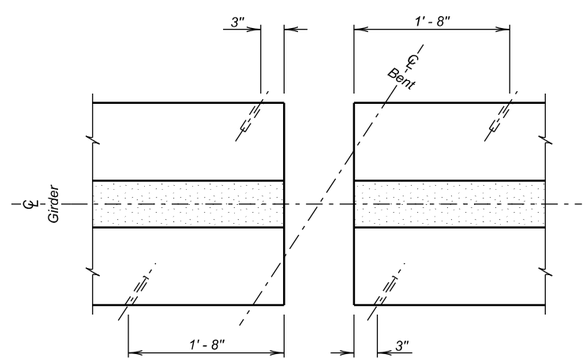

SEC. K - K
Layout for inserts at beam ends
(Bent only)

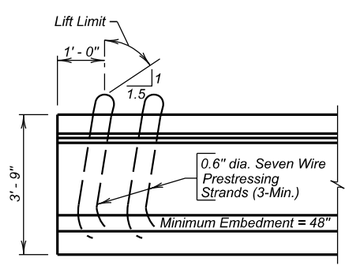

TYPICAL LIFTING DEVICE

63' - 3" GIRDER DETAILS
FOR
WESTBOUND LANES
197' - 11⅞" PRESTR. GIRDER BRIDGE

40' - 0" ROADWAY — 33° 13' 41" LHF SKEW
OVER DEER VIEW ROAD — SEC. 4/9-T3N-R6E
STA. 235 + 55.65 TO 237 + 53.63 — IM 0901(38)40
STR. NO. 47-088-550 — HL-93

MEADE COUNTY
S. D. DEPT. OF TRANSPORTATION
JANUARY 2014

DESIGNED BY	CK. DES. BY	DRAFTED BY	
BAF/PW	DC/TD	MG	Steve A. Johnson BRIDGE ENGINEER
MEAD5580	5580GK15		

STATE OF	PROJECT	SHEET NO.	TOTAL SHEETS
S.D.	IM 0901(38)40	E145	E199

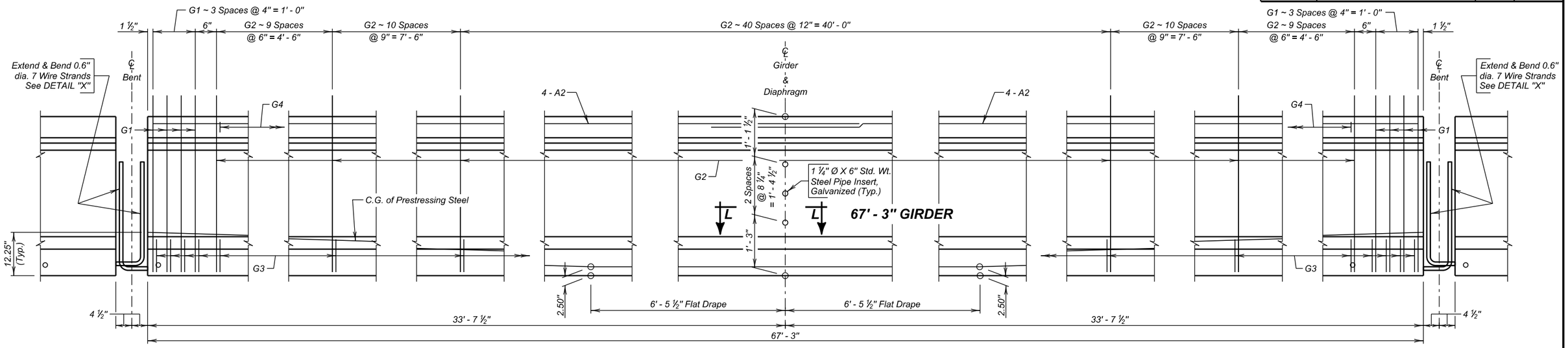

ELEVATION

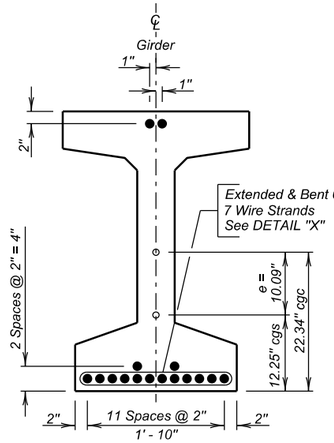

END VIEW

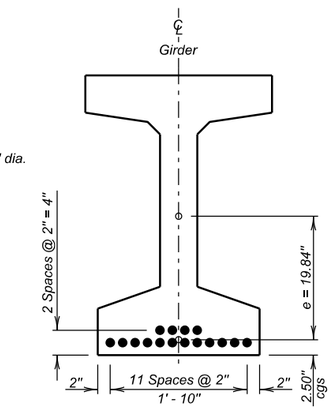

℄ SECTION

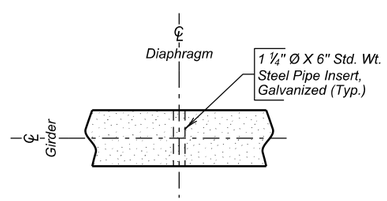

SEC. L - L

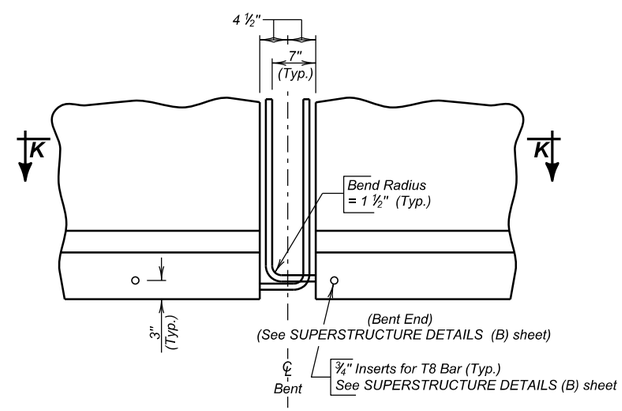

DETAIL "X"

REINFORCING SCHEDULE
(For One Girder)

Mk.	No.	Size	Length	Type	Bending Details
A2	8	7	35' - 3"	Str.	
G1	8	5	8' - 6"	S11	
G2	79	4	8' - 6"	S11	
G3	87	4	4' - 10"	S3A	
G4	17	4	2' - 8"	17	

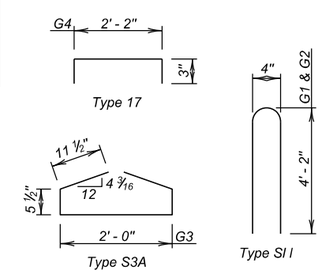

All dimensions are out to out of bars.

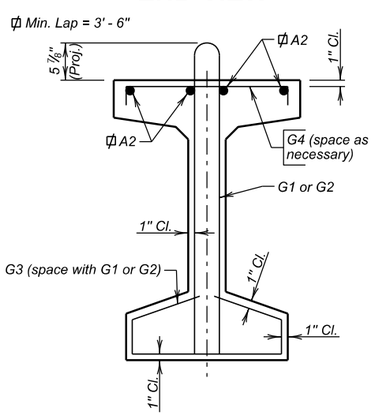

STIRRUP DETAILS

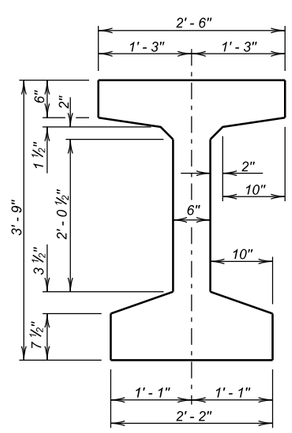

TYPE 45 GIRDER

67' - 3" GIRDERS
(16 ~ 0.6 Dia. Type 270 Low Lax. Strands)

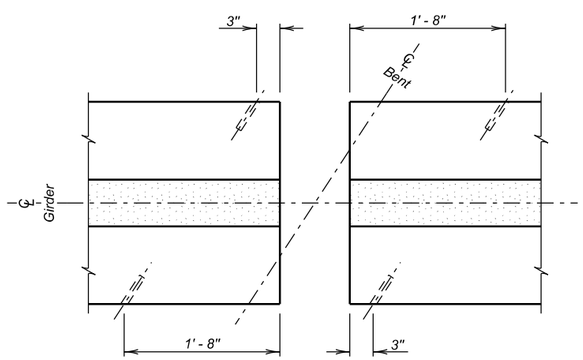

SEC. K - K
Layout for inserts at beam ends (Bent only)

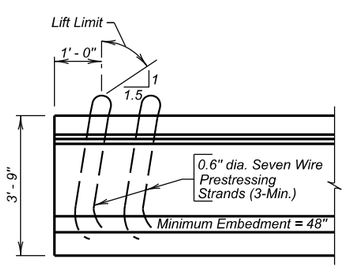

TYPICAL LIFTING DEVICE

67' - 3" GIRDER DETAILS
FOR
WESTBOUND LANES
197' - 11⅞" PRESTR. GIRDER BRIDGE

40' - 0" ROADWAY
OVER DEER VIEW ROAD
STA. 235 + 55.65 TO 237 + 53.63
STR. NO. 47-088-550

33° 13' 41" LHF SKEW
SEC. 4/9-T3N-R6E
IM 0901(38)40
HL-93

MEADE COUNTY
S. D. DEPT. OF TRANSPORTATION
JANUARY 2014

DESIGNED BY	CK. DES. BY	DRAFTED BY	
BAF/PW	DC/TD	MG	Steve A. Johnson BRIDGE ENGINEER
MEAD5580	5580GK16		

STATE OF	PROJECT	SHEET NO.	TOTAL SHEETS
S.D.	IM 0901(38)40	E146	E199

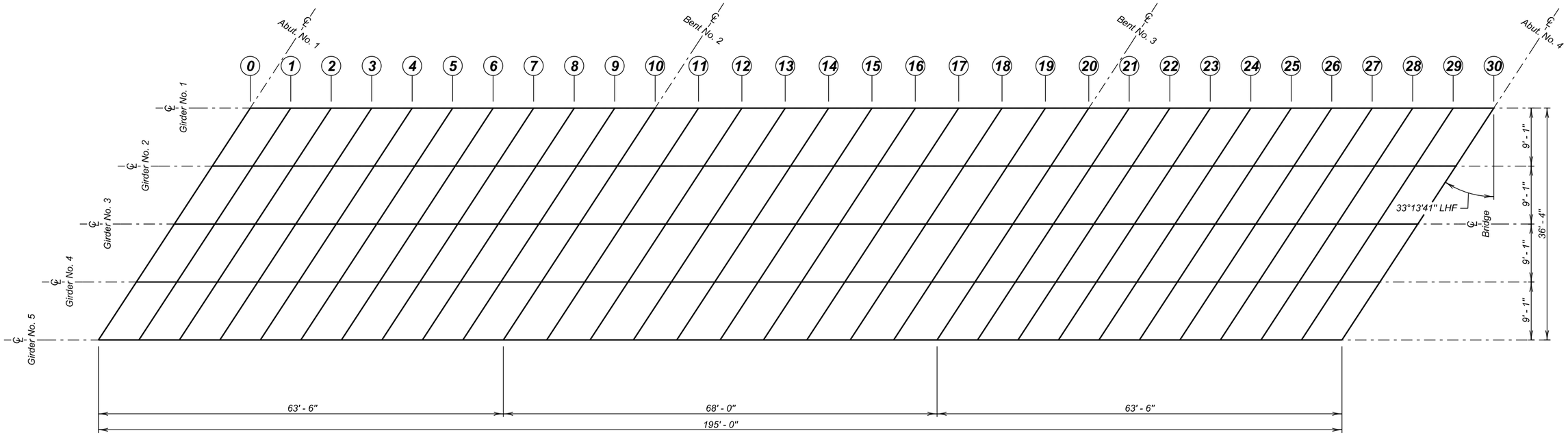

GIRDER LAYOUT

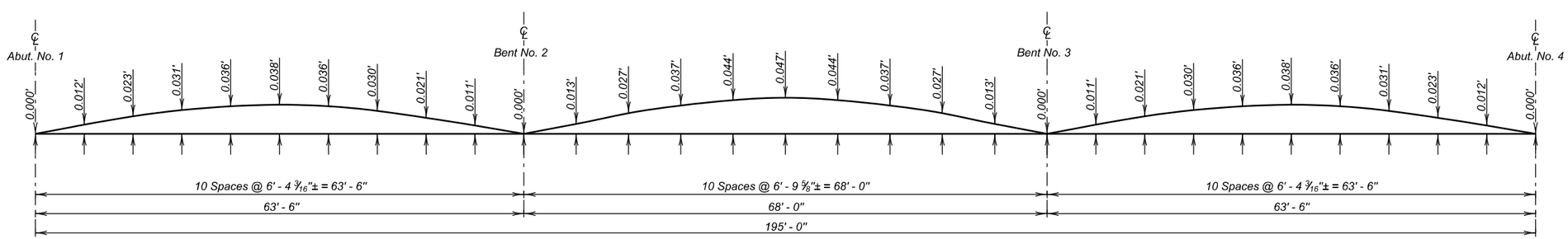

CAMBER DIAGRAM

The Camber shown is the amount which has been added to the theoretical slab elevations to get slab elevations shown in the table of Slab Form Elevations and Calculations on SLAB FORM ELEVATIONS sheet. Camber shown is for D. L. of slab, traffic barrier, and haunch, but does not include D. L. of beams.

ERECTION DATA

FOR

WESTBOUND LANES

197' - 11 7/8" PRESTR. GIRDER BRIDGE

40' - 0" ROADWAY — 33° 13' 41" LHF SKEW
OVER DEER VIEW ROAD — SEC. 4/9-T3N-R6E
STA. 235 + 55.65 TO 237 + 53.63 — IM 0901(38)40
STR. NO. 47-088-550 — HL-93

MEADE COUNTY

S. D. DEPT. OF TRANSPORTATION

JANUARY 2014

DESIGNED BY	CK. DES. BY	DRAFTED BY	
BAF/PW	DC/TD	MG	Steve A Johnson
MEAD5580	5580GK17		BRIDGE ENGINEER

STATE OF	PROJECT	SHEET NO.	TOTAL SHEETS
S.D.	IM 0901(38)40	E147	E199

TABLE OF SLAB FORM ELEVATIONS AND CALCULATIONS

		0	1	2	3	4	5	6	7	8	9	10	11	12	13	14	15
Girder No. 1	Elev. "M"	3535.403	3535.388	3535.370	3535.348	3535.322	3535.291	3535.256	3535.216	3535.172	3535.124	3535.076	3535.047	3535.018	3534.984	3534.946	3534.901
	(-) Elev."N"																
	(=) d																
	(-) 0. 688'																
	(=) h																
Girder No. 2	Elev. "M"	3535.610	3535.595	3535.578	3535.558	3535.533	3535.503	3535.469	3535.430	3535.387	3535.340	3535.293	3535.266	3535.237	3535.205	3535.167	3535.124
	(-) Elev."N"																
	(=) d																
	(-) 0. 688'																
	(=) h																
Girder No. 3	Elev. "M"	3535.816	3535.802	3535.786	3535.766	3535.743	3535.714	3535.681	3535.643	3535.601	3535.555	3535.509	3535.483	3535.456	3535.424	3535.388	3535.346
	(-) Elev."N"																
	(=) d																
	(-) 0. 688'																
	(=) h																
Girder No. 4	Elev. "M"	3536.020	3536.008	3535.993	3535.974	3535.951	3535.924	3535.892	3535.855	3535.814	3535.769	3535.724	3535.699	3535.673	3535.643	3535.607	3535.566
	(-) Elev."N"																
	(=) d																
	(-) 0. 688'																
	(=) h																
Girder No. 5	Elev. "M"	3535.777	3535.766	3535.752	3535.734	3535.713	3535.686	3535.655	3535.619	3535.579	3535.536	3535.492	3535.468	3535.443	3535.414	3535.379	3535.339
	(-) Elev."N"																
	(=) d																
	(-) 0. 688'																
	(=) h																

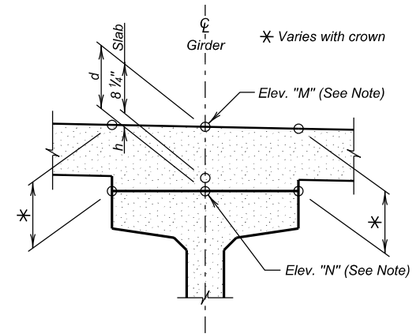

NOTE —

The table contains the information necessary to determine the depth of concrete over the girders at points shown. Calculations may be carried in the spaces provided. Elev. "M" is the design elevation of the top of slab before any concrete has been poured. This elevation includes correction for camber and dead load deflection. Elev. "N" is a field measured elevation taken on top of girders at the points shown with the girders in their positions. This elevation must be taken after erection is completed, but prior to placing any of the concrete. Girders shall not be supported between bearings when elevations are taken.

TABLE OF SLAB FORM ELEVATIONS AND CALCULATIONS

		16	17	18	19	20	21	22	23	24	25	26	27	28	29	30
Girder No. 1	Elev. "M"	3534.851	3534.795	3534.734	3534.668	3534.602	3534.562	3534.521	3534.476	3534.428	3534.375	3534.317	3534.254	3534.188	3534.117	3534.044
	(-) Elev."N"															
	(=) d															
	(-) 0. 688'															
	(=) h															
Girder No. 2	Elev. "M"	3535.075	3535.020	3534.960	3534.895	3534.830	3534.791	3534.751	3534.708	3534.660	3534.608	3534.551	3534.490	3534.424	3534.355	3534.283
	(-) Elev."N"															
	(=) d															
	(-) 0. 688'															
	(=) h															
Girder No. 3	Elev. "M"	3535.298	3535.244	3535.185	3535.122	3535.057	3535.019	3534.980	3534.938	3534.892	3534.841	3534.785	3534.724	3534.660	3534.591	3534.521
	(-) Elev."N"															
	(=) d															
	(-) 0. 688'															
	(=) h															
Girder No. 4	Elev. "M"	3535.519	3535.467	3535.409	3535.347	3535.284	3535.247	3535.209	3535.167	3535.122	3535.072	3535.017	3534.958	3534.894	3534.827	3534.757
	(-) Elev."N"															
	(=) d															
	(-) 0. 688'															
	(=) h															
Girder No. 5	Elev. "M"	3535.293	3535.242	3535.185	3535.124	3535.062	3535.026	3534.989	3534.949	3534.905	3534.856	3534.802	3534.744	3534.681	3534.615	3534.546
	(-) Elev."N"															
	(=) d															
	(-) 0. 688'															
	(=) h															

NOTE —

Based on a "d" of 10 ½" at the ℄ of each abutment and 10 ½" at the ℄ of the Bent (see SEC. C - C on SUPERSTRUCTURE DETAILS (B), it is anticipated that the midspan haunch dimension "h" over the ℄ of each girder will be 1 ¼". If when computing the dimensions in the table, it is found that any dimension "h" is less than zero or greater than 4" the Office of Bridge Design of the South Dakota Dept. of Transportation shall be notified immediately. After the "Table of Slab Form Elevations and Calculations" has been completely filled out and approved for deck forming, a copy shall be forwarded to the Office of Bridge Design for review and analysis for the purpose of securing information relative to camber growth in the beams. This information is necessary for preparing plans for future structures of this type.

SLAB FORM ELEVATIONS

FOR

WESTBOUND LANES

197' - 11⅞" PRESTR. GIRDER BRIDGE

40' - 0" ROADWAY — 33° 13' 41" LHF SKEW
OVER DEER VIEW ROAD — SEC. 4/9-T3N-R6E
STA. 235 + 55.65 TO 237 + 53.63 — IM 0901(38)40
STR. NO. 47-088-550 — HL-93

MEADE COUNTY

S. D. DEPT. OF TRANSPORTATION

JANUARY 2014

DESIGNED BY	CK. DES. BY	DRAFTED BY	
BAF/PW	DC/TD	MG	Steve A Johnson BRIDGE ENGINEER
MEAD5580	5580GK18		

STATE OF	PROJECT	SHEET NO.	TOTAL SHEETS
S.D.	IM 0901(38)40	E148	E199

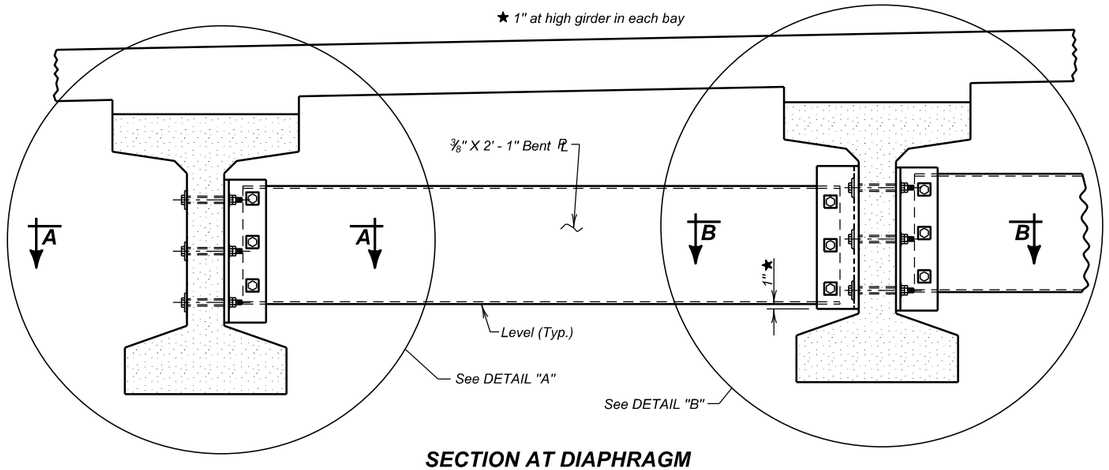

SECTION AT DIAPHRAGM

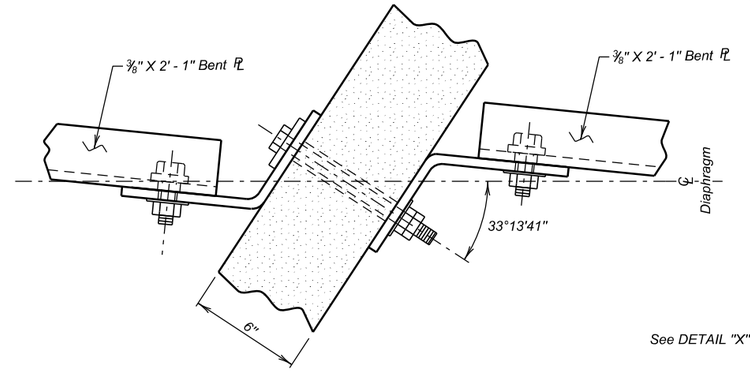

SEC. B - B

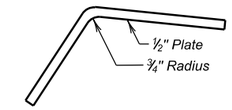

DETAIL "X"

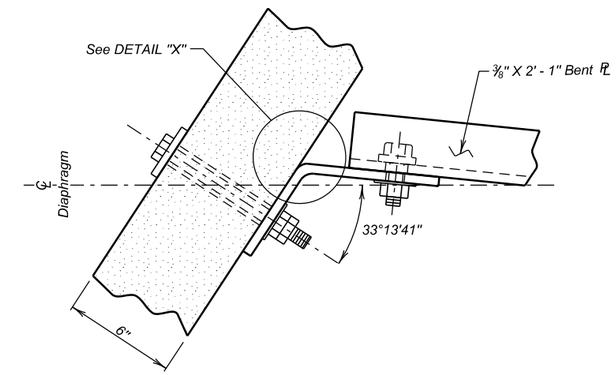

SEC. A - A

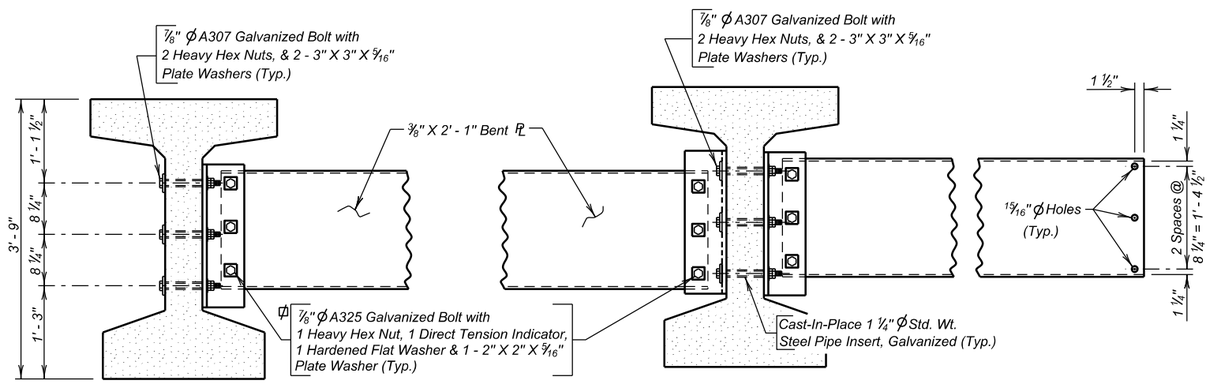

DETAIL "A"
(Typ. Exterior Girder)

℄ Bolt Head and Direct Tension Indicator shall be adjacent to 15/16" ϕ holes in Bent Plate Diaphragm.

DETAIL "B"
(Typ. Interior Girder)

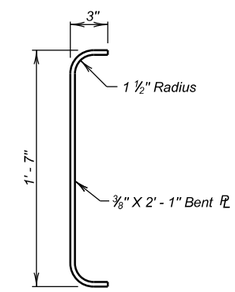

END VIEW BENT PLATE DIAPHRAGM

NOTES:

1. All steel for the diaphragms including plate washers shall conform to ASTM A36, and shall be galvanized in accordance with ASTM A123 or A153. Bolts, nuts and washers shall be galvanized in accordance with ASTM F2329.
2. The steel diaphragms between adjacent girders shall be installed as soon as possible and in conjunction with girder erection.
3. All costs associated with furnishing, fabricating, assembly and installation of diaphragms shall be included in the lump sum price for Structural Steel, Miscellaneous.

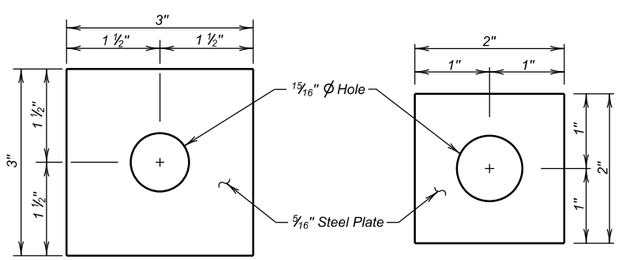

PLATE WASHER DETAILS

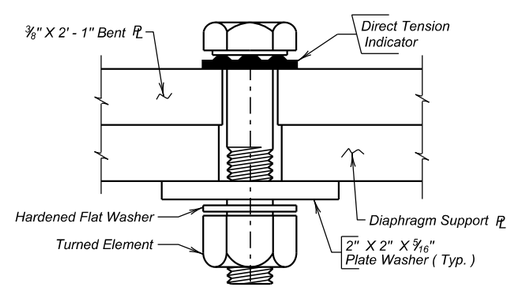

DIRECT TENSION INDICATOR DETAIL

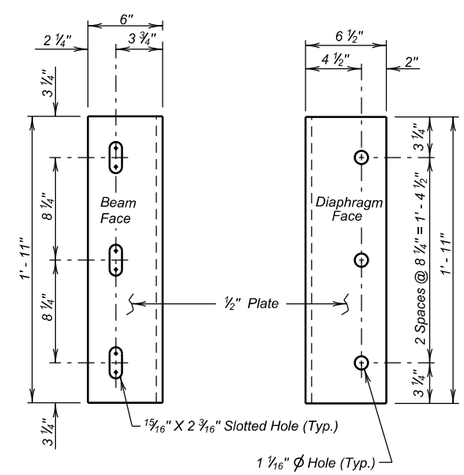

DIAPHRAGM SUPPORT PLATE

ESTIMATED QUANTITIES		
ITEM	UNIT	QUANTITY
△ Structural Steel, Miscellaneous	L.S.	Lump Sum

△ For informational purposes only, the estimated weight of structural steel is 3780 Lbs. for 12 diaphragms.

DIAPHRAGM DETAILS
FOR
WESTBOUND LANES
197' - 11⅞" PRESTR. GIRDER BRIDGE

40' - 0" ROADWAY — 33° 13' 41" LHF SKEW
OVER DEER VIEW ROAD — SEC. 4/9-T3N-R6E
STA. 235 + 55.65 TO 237 + 53.63 — IM 0901(38)40
STR. NO. 47-088-550 — HL-93

MEADE COUNTY
S. D. DEPT. OF TRANSPORTATION
JANUARY 2014

DESIGNED BY	CK. DES. BY	DRAFTED BY	
PW	TD	MG	Steve A Johnson BRIDGE ENGINEER
MEAD5580	5580GK19		

STATE OF	PROJECT	SHEET NO.	TOTAL SHEETS
S.D.	IM 0901(38)40	E149	E199

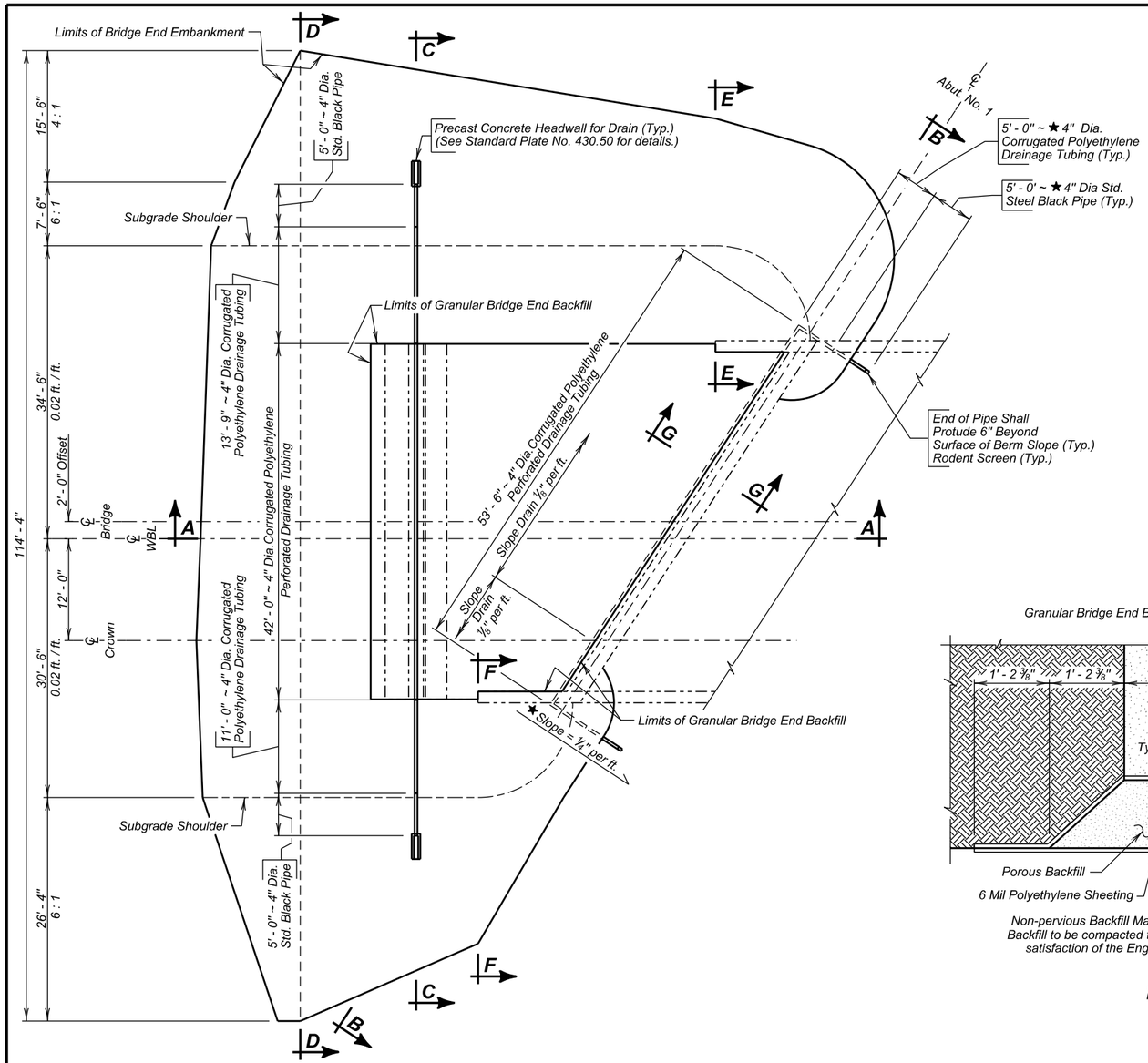

PLAN

(Bridge End Backfill shown adjacent to Abut. No. 1, Abut. No. 4 similar opposite hand.)

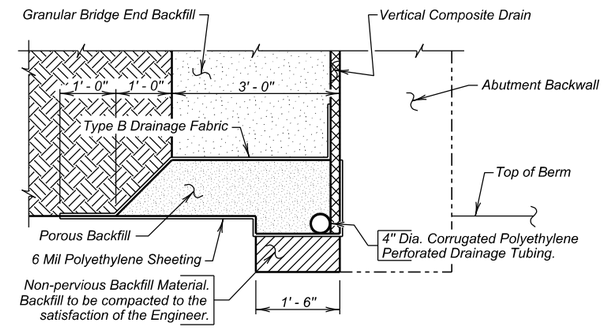

SEC. G - G

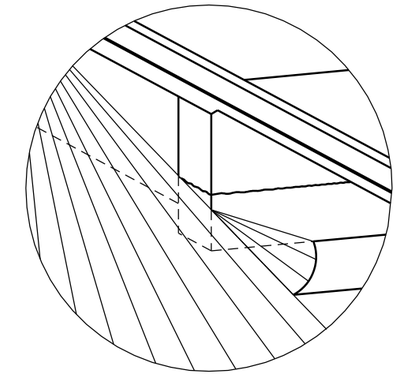

SPILL CONE DETAIL AT EMBANKMENT

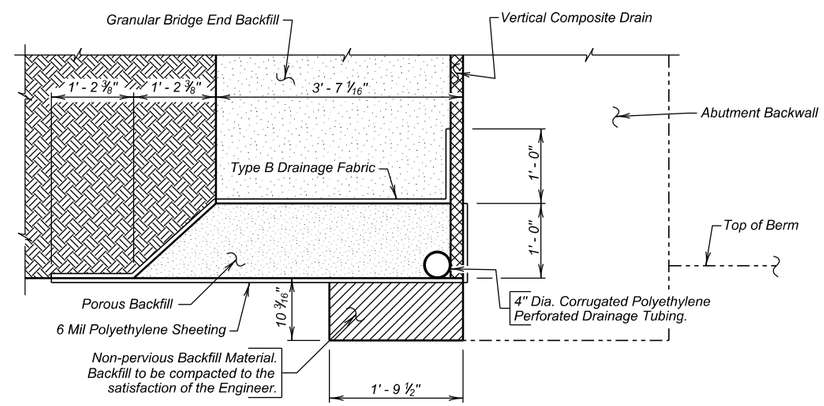

DETAIL "X"

ESTIMATED QUANTITIES
(For Two Abutments)

ITEM	UNIT	QUANTITY
Granular Bridge End Backfill	Cu. Yd.	104.8
⋔ Bridge End Embankment	Cu. Yd.	1984
⊕ ⌀ Porous Backfill	Ton	25.4
4" Underdrain Pipe	Ft.	301
⊕ Approach Slab Underdrain Excavation	Cu. Yd.	6.0
Precast Concrete Headwall for Drain	Each	4

1. 191 ft. 4" dia. Corrugated Polyethylene Perforated Drainage Tubing.
2. 70 ft. 4" dia. Corrugated Polyethylene Drainage Tubing.
3. 40 ft. 4" dia. Std. Black Steel Pipe with Rodent Screens.
4. 606 sq. ft. Vertical Composite Drain

Items 1 thru 4 are approximate quantities contained in the 4" Underdrain Pipe and are for information only.

5. 4751 sq. ft. 6 mil Polyethylene Sheeting, not including laps.
6. 352 sq. yd. Type B Drainage Fabric.

Items 5 and 6 are approximate quantities contained in the Granular Bridge End Backfill and are for information only.

⌀ For estimating purposes only, a factor of 1.89 tons/cu. yd. was used to convert cu. yds. to tons.

⋔ Shrinkage Factor of 1.25 Used.

⊕ Quantity based on a 12" wide trench.

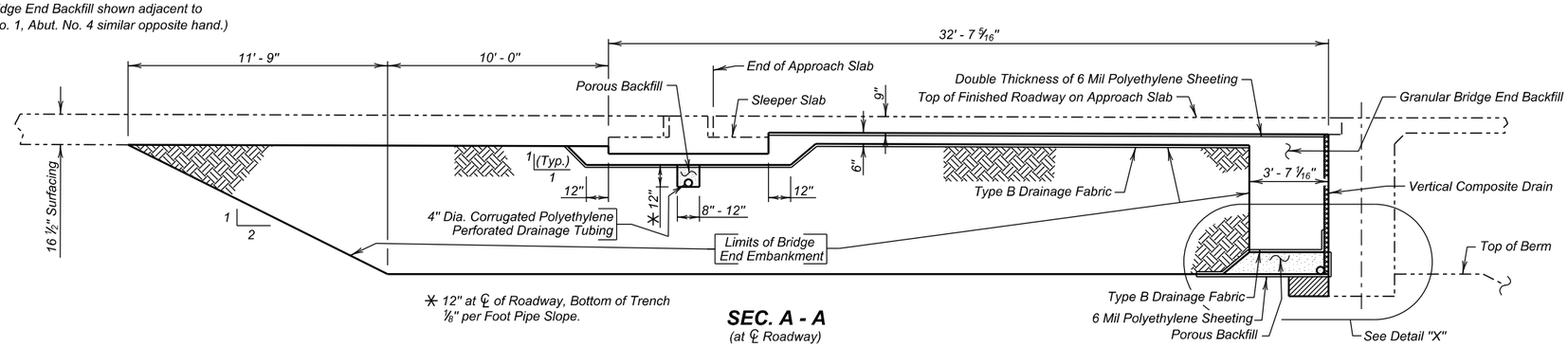

✳ 12" at ℄ of Roadway, Bottom of Trench ⅛" per Foot Pipe Slope.

SEC. A - A
(at ℄ Roadway)

DETAILS OF BRIDGE END BACKFILL (A)
FOR
WESTBOUND LANES
197' - 11⅞" PRESTR. GIRDER BRIDGE

40' - 0" ROADWAY — 33° 13' 41" LHF SKEW
OVER DEER VIEW ROAD — SEC. 4/9-T3N-R6E
STA. 235 + 55.65 TO 237 + 53.63 — IM 0901(38)40
STR. NO. 47-088-550 — HL-93

MEADE COUNTY
S. D. DEPT. OF TRANSPORTATION
JANUARY 2014

DESIGNED BY	CK. DES. BY	DRAFTED BY	
BAF/PW	JMH/TD	MG	Steve A. Johnson BRIDGE ENGINEER
MEAD5580	5580GK20		

STATE OF	PROJECT	SHEET NO.	TOTAL SHEETS
S.D.	IM 0901(38)40	E150	E199

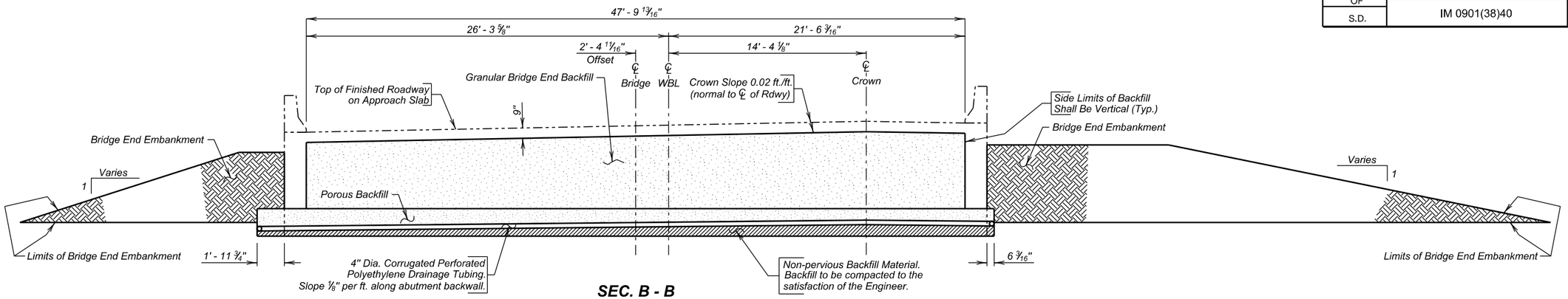

SEC. B - B

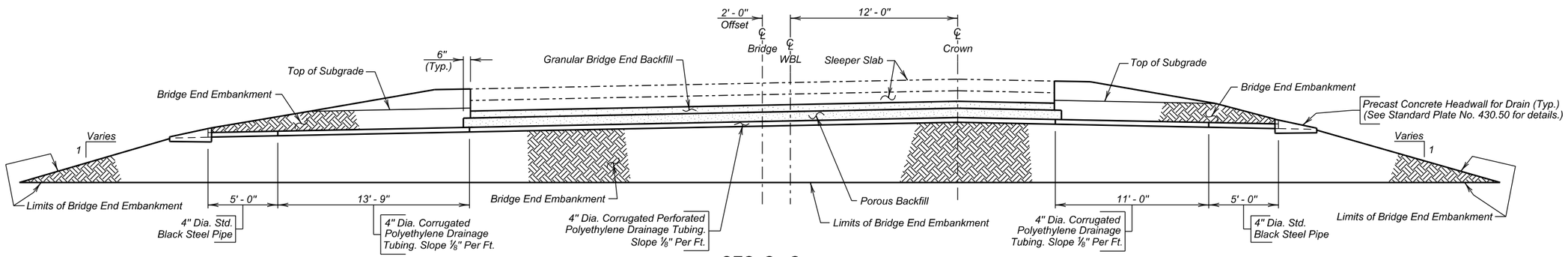

SEC. C - C

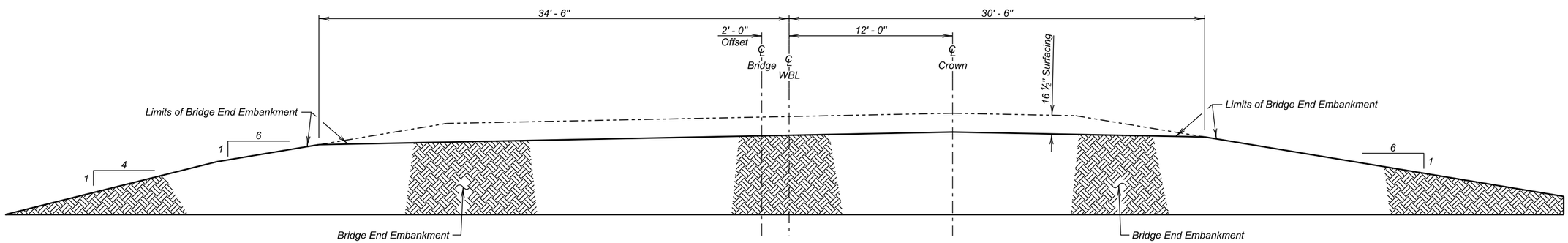

SEC. D - D

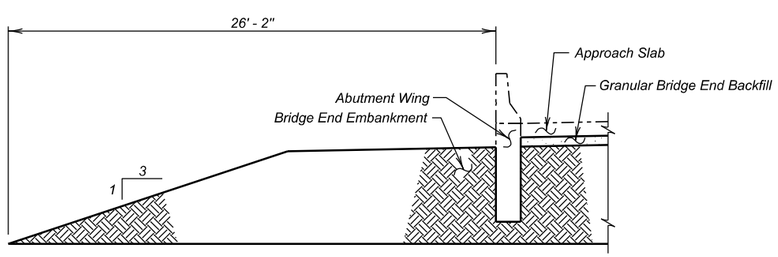

SEC. E - E

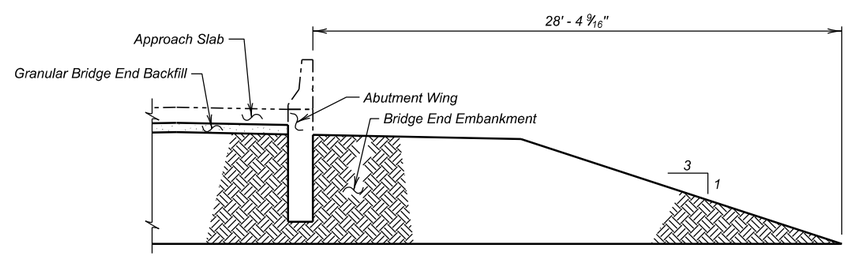

SEC. F - F

DETAILS OF BRIDGE END BACKFILL (B)

FOR

WESTBOUND LANES

197' - 11 7/8" PRESTR. GIRDER BRIDGE

40' - 0" ROADWAY — 33° 13' 41" LHF SKEW
OVER DEER VIEW ROAD — SEC. 4/9-T3N-R6E
STA. 235 + 55.65 TO 237 + 53.63 — IM 0901(38)40
STR. NO. 47-088-550 — HL-93

MEADE COUNTY

S. D. DEPT. OF TRANSPORTATION

JANUARY 2014

DESIGNED BY	CK. DES. BY	DRAFTED BY	
BAF/PW	JMH/TD	MG	Steve A Johnson BRIDGE ENGINEER
MEAD5580	5580GK21		

STATE OF	PROJECT	SHEET NO.	TOTAL SHEETS
S.D.	IM 0901(38)40	E151	E199

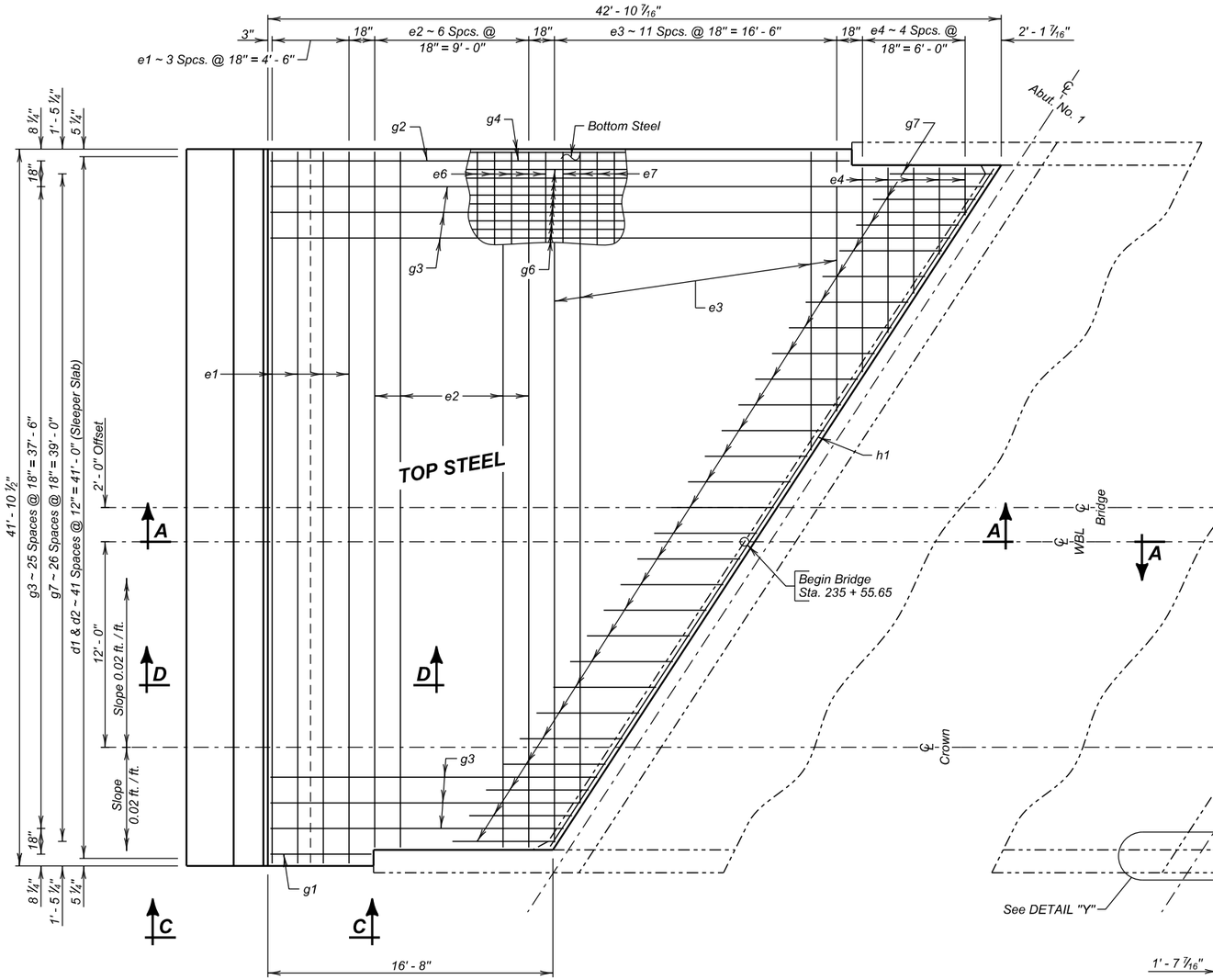

PLAN
(Begin Bridge)

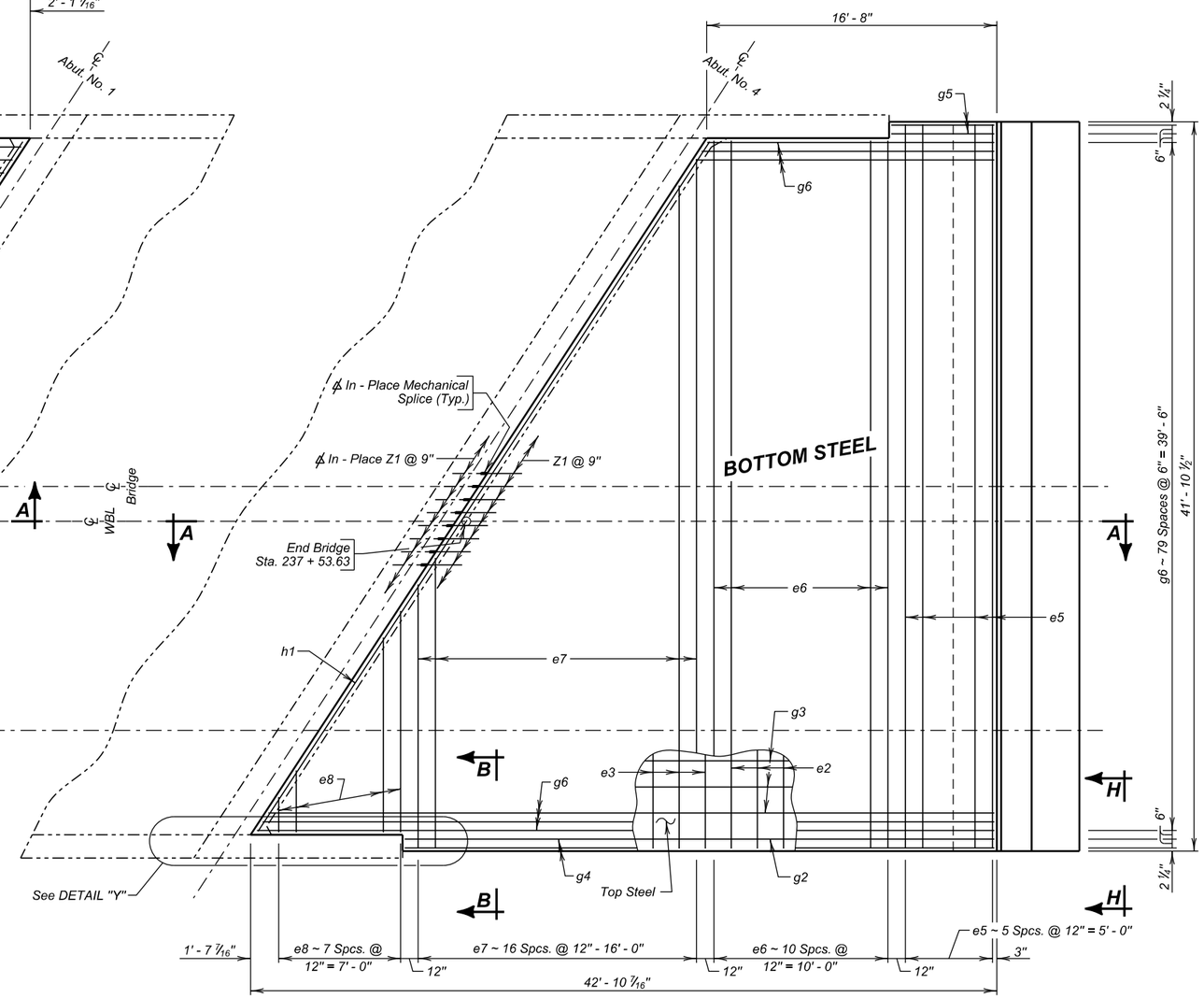

PLAN
(End Bridge)

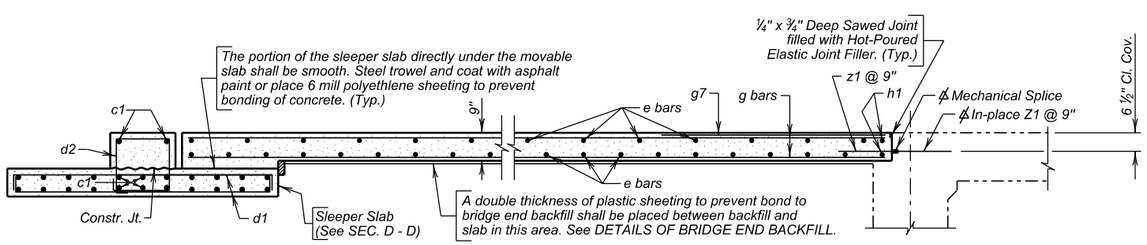

SEC. A - A

In-place Z1 bars and Mechanical Splices are listed and included in superstructure quantities. See SUPERSTRUCTURE DETAILS (B).

DETAILS OF APPROACH SLAB ADJACENT TO BRIDGE (A)

FOR

WESTBOUND LANES

197' - 11 7/8" PRESTR. GIRDER BRIDGE

40' - 0" ROADWAY — 33° 13' 41" LHF SKEW
OVER DEER VIEW ROAD — SEC. 4/9-T3N-R6E
STA. 235 + 55.65 TO 237 + 53.63 — IM 0901(38)40
STR. NO. 47-088-550 — HL-93

MEADE COUNTY
S. D. DEPT. OF TRANSPORTATION
JANUARY 2014

DESIGNED BY	CK. DES. BY	DRAFTED BY	
MG	PW/TD	MG	Steve A Johnson BRIDGE ENGINEER
MEAD5580	5580GK22		

STATE OF	PROJECT	SHEET NO.	TOTAL SHEETS
S.D.	IM 0901(38)40	E152	E199

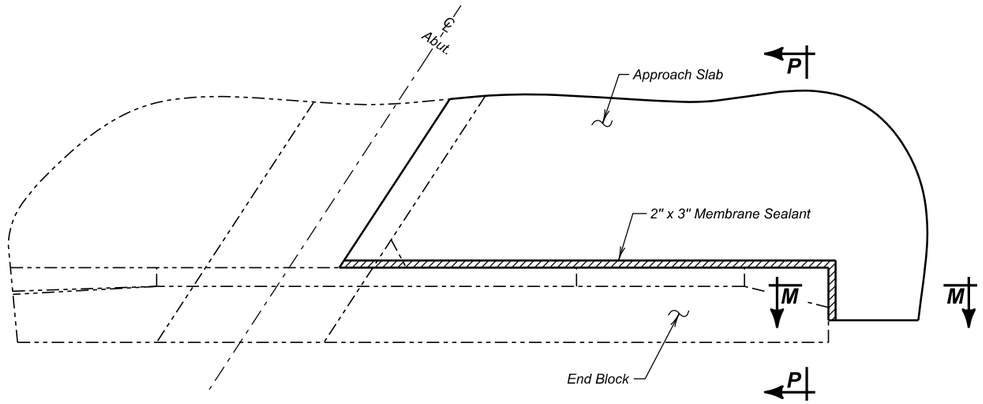

DETAIL "Y"

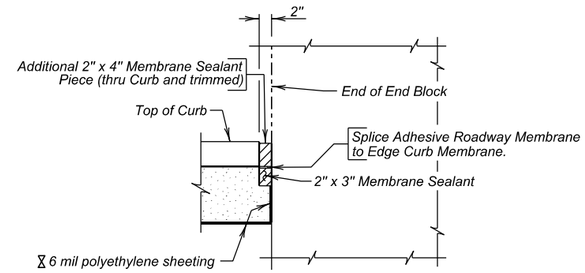

SEC. M - M

6 mil polyethylene sheeting shall not interfere with the bond between the Membrane Sealant and the approach slab.

REINFORCING SCHEDULE

(For Two Approach Slabs and Two Sleeper Slabs)

Mk.	No.	Size	Length	Type
Approach Slabs				
e1	8	4	41' - 7"	Str.
e2	14	4	40' - 8"	Str.
✂ e3	12	4	55' - 6"	Str.
✂ e4	5	4	14' - 8"	Str.
e5	12	6	41' - 7"	Str.
e6	22	6	40' - 8"	Str.
✂ e7	17	6	54' - 9"	Str.
✂ e8	8	6	14' - 8"	Str.
g1	2	4	5' - 11"	Str.
g2	2	4	33' - 10"	Str.
✂ g3	26	4	58' - 10"	Str.
g4	4	8	33' - 10"	Str.
g5	4	8	5' - 11"	Str.
✂ g6	80	8	58' - 10"	Str.
g7	54	4	6' - 0"	Str.
h1	4	6	47' - 4"	Str.
Z1	106	7	2' - 0"	Str.
Sleeper Slabs				
c1	48	5	41' - 7"	Str.
d1	168	4	7' - 9"	2
d2	84	4	6' - 4"	T2

Bending Details

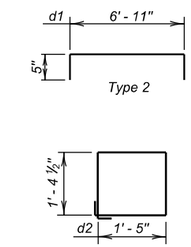

16' - 6"	42' - 4"	g6
17' - 2"	41' - 8"	g3
2' - 0"	12' - 8"	e8
15' - 2"	39' - 7"	e7
2' - 9"	11' - 11"	e4
15' - 2"	40' - 4"	e3

Cut 80	Cut 26	Cut 8	Cut 17	Cut 5	Cut 12
g6	g3	e8	e7	e4	e3

40' - 4"	15' - 2"	e3
11' - 11"	2' - 9"	e4
39' - 7"	15' - 2"	e7
12' - 8"	2' - 0"	e8
41' - 8"	17' - 2"	g3
42' - 4"	16' - 6"	g6

NOTE -
All bars to be Epoxy Coated.
All dimensions are out to out of bars.
✂ See cutting diagram.

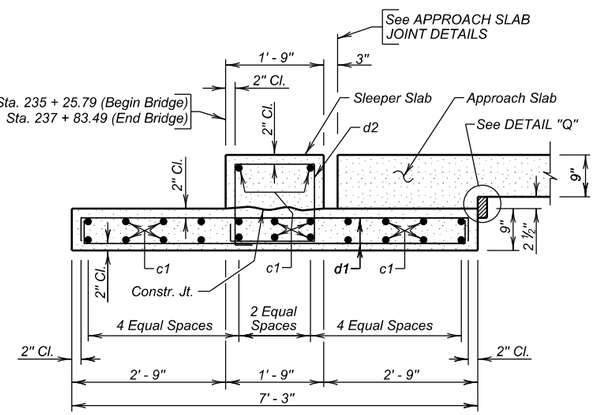

SEC. D - D
(Sleeper Slab)

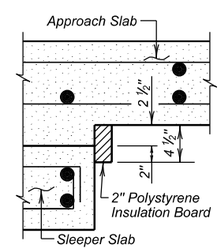

DETAIL "Q"

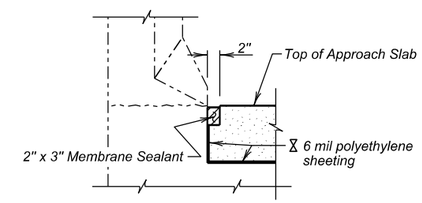

SEC. P - P

ESTIMATED QUANTITIES

(For Two Approach Slabs & Two Sleeper Slabs)

ITEM	UNIT	QUANTITY
Concrete Approach Slab for Bridge	Sq. Yd.	273.0
Concrete Approach Sleeper Slab for Bridge	Sq. Yd.	67.5

1. 69.9 Cu. Yds. Concrete in Approach Slabs.
2. 19764 Lbs. Epoxy coated Re-Steel in Approach Slabs.
3. 22.0 Cu. Yds. Concrete in Sleeper Slabs.
4. 3307 Lbs. Epoxy coated Re-Steel in Sleeper Slab.
5. 31 Sq. Ft. of 2" Polystyrene Insulation Board

Items 1 thru 5 are approximate quantities contained in the above bid items and are for information only.

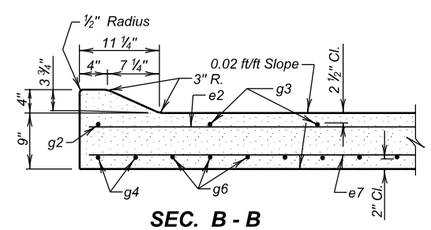

SEC. B - B

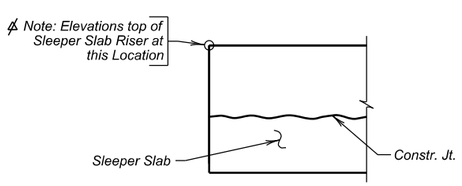

VIEW H - H

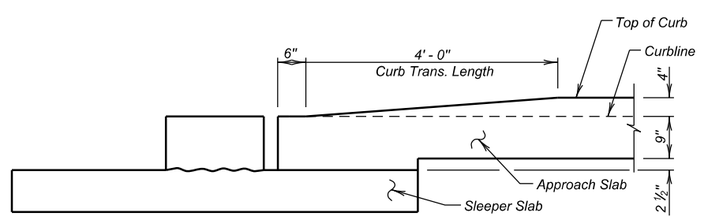

VIEW C - C

DETAILS OF APPROACH SLAB ADJACENT TO BRIDGE (B)

FOR

WESTBOUND LANES

197' - 11⅞" PRESTR. GIRDER BRIDGE

40' - 0" ROADWAY
OVER DEER VIEW ROAD
STA. 235 + 55.65 TO 237 + 53.63
STR. NO. 47-088-550

33° 13' 41" LHF SKEW
SEC. 4/9-T3N-R6E
IM 0901(38)40
HL-93

MEADE COUNTY

S. D. DEPT. OF TRANSPORTATION

JANUARY 2014

DESIGNED BY	CK. DES. BY	DRAFTED BY	
MG	PW/TD	MG	Steve A. Johnson BRIDGE ENGINEER
MEAD5580	5580GK23		

STATE OF	PROJECT	SHEET NO.	TOTAL SHEETS
S.D.	IM 0901(38)40	E153	E199

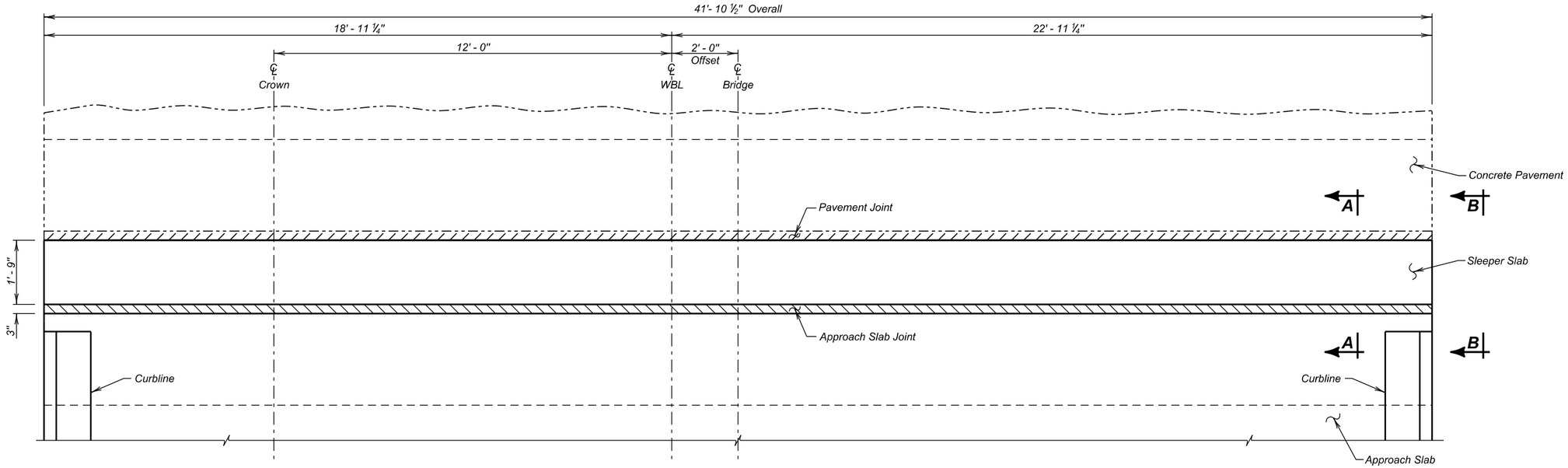

PLAN

GENERAL NOTES

1. The Membrane Sealant shall be on the approved product list for Membrane Sealant Expansion Joints.
2. The manufacturer shall supply the membrane sealant in packaging that precompresses the membrane sealant. The precompressed dimension shall be as recommended by the sealant manufacturer, however, in no case shall the precompressed dimension exceed 75% of the joint opening width. The foam sealant shall be slowly self expanding to permit workers ample time to install the membrane sealant before the membrane sealant exceeds the joint opening width.
3. The membrane sealant shall provide a water tight seal throughout a joint movement range of + 25% (minimum) from the specified joint opening dimension.
4. The membrane sealant shall be supplied in pieces a minimum of 5 feet in length. The foam sealant shall be ultra-violet and ozone resistant.
5. The bonding adhesive used to attach the membrane sealant to the adjacent concrete shall be approved by the membrane sealant manufacturer.
6. Adhesive used to join adjacent pieces of the membrane sealant shall be as recommended by the manufacturer.
7. If styrofoam filler material is used in the construction, it shall be closed cell and water-tight as approved by the Engineer.
8. The minimum ambient air temperature at the time of joint installation and adhesive curing shall be 40° F.
9. A technical representative of the membrane sealant manufacturer shall be present at the jobsite during installation. The technical representative shall be knowledgeable in the correct procedures for the preparation and installation of the joint material to ensure the Contractor installs the joint to the manufacturers' recommendations.
10. Surfaces that will be in contact with the membrane sealant shall be thoroughly cleaned by abrasive blasting to remove all laitance and contaminants (such as oil, curing compounds, etc.) from the surface. At a minimum, two passes of abrasive blasting with the nozzle held at an angle to within 1 to 2 inches of the surface will be required. Cleaning of the surfaces with solvents, wire brushing, or grinding shall not be permitted.
11. After abrasive blasting, but immediately prior to membrane joint installation, the entire joint contact surface shall be air blasted. The air compressor used for joint cleaning shall be equipped with trap devices capable of providing moisture-free and oil-free air at a recommended pressure of 90 psi. To obtain complete bonding with the adhesive, the adjacent surfaces must be dry and clean. The contact surfaces for the joint shall be visually inspected by the Engineer immediately prior to joint installation to verify the surface is dry and clean.
12. Individual spliced sections shall be installed as per the manufacturers' recommendations. The membrane joint sealant manufacturer shall submit a detailed installation procedure to the Engineer at least 5 days prior to joint installation for his review.
13. Traffic shall not be allowed on the joint until the bonding adhesive has had time to cure, as recommended by the manufacturer.
14. Use plywood or other material to protect concrete adjacent to the joint from spalling before any equipment is moved across the joint. Any spall areas will be repaired at the Contractor's expense by breaking out and replacing adjacent concrete, as approved by the Engineer.
15. The Membrane Sealant Expansion Joint will be measured in feet to the nearest one-tenth foot, complete in place. Measurement will be made of the overall horizontal length. The Membrane Sealant Expansion Joint will be paid for at the contract unit price per foot complete in place. Payment for this item shall be full compensation for furnishing all the required materials in place, including labor, equipment and incidentals necessary to complete the work in accordance with the plans and the foregoing specifications.

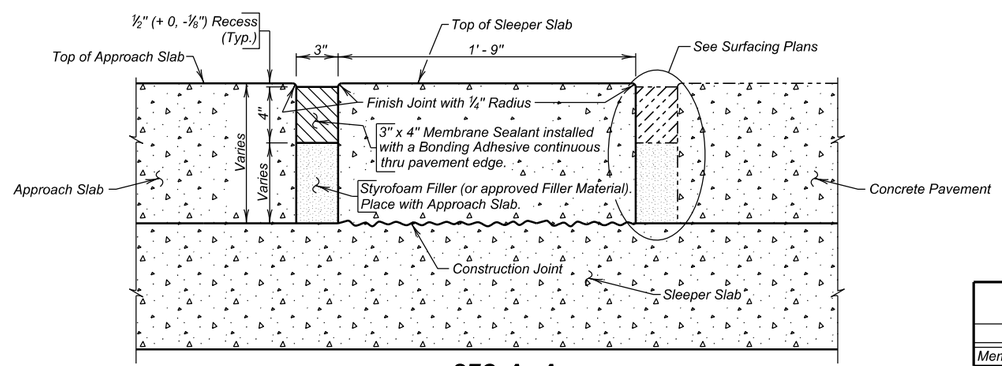

SEC. A - A

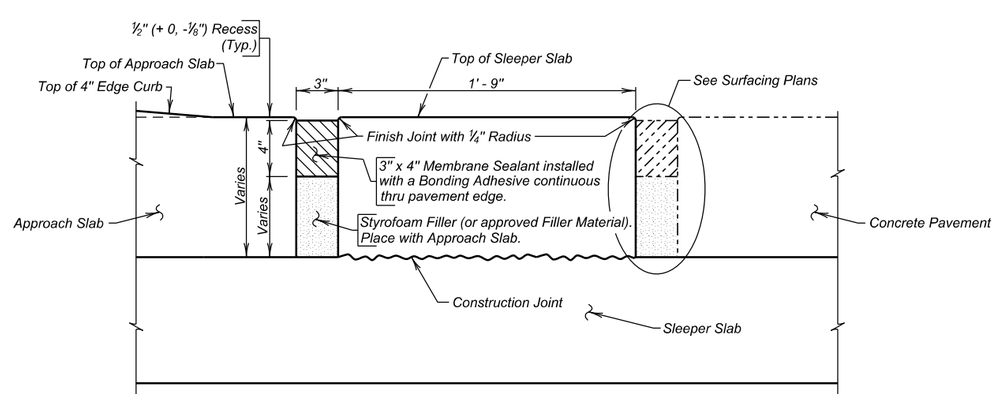

VIEW B - B

ESTIMATED QUANTITIES
(For Two Approach Slabs)

ITEM	UNIT	QUANTITY
Membrane Sealant Expansion Joint	Ft.	83.8

APPROACH SLAB JOINT DETAILS

FOR

WESTBOUND LANES

197' - 11 7/8" PRESTR. GIRDER BRIDGE

40' - 0" ROADWAY — 33° 13' 41" LHF SKEW
OVER DEER VIEW ROAD — SEC. 4/9-T3N-R6E
STA. 235 + 55.65 TO 237 + 53.63 — IM 0901(38)40
STR. NO. 47-088-550 — HL-93

MEADE COUNTY

S. D. DEPT. OF TRANSPORTATION

JANUARY 2014

DESIGNED BY	CK. DES. BY	DRAFTED BY	
PW	TD	MG	Steve A Johnson BRIDGE ENGINEER
MEAD5580	5580GK24		

STATE OF	PROJECT	SHEET NO.	TOTAL SHEETS
S.D.	IM 0901(38)40	E154	E199

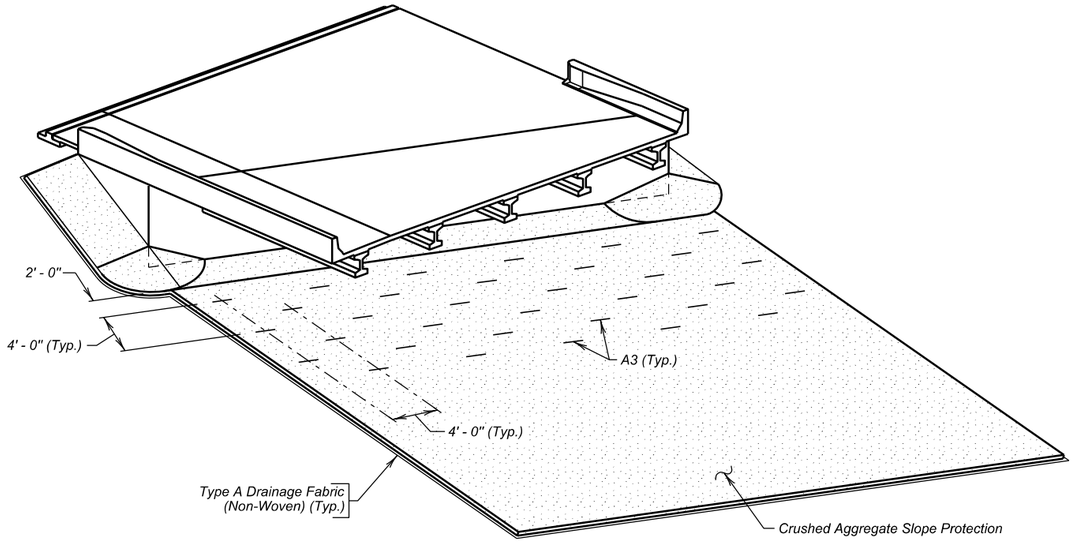

ISOMETRIC VIEW

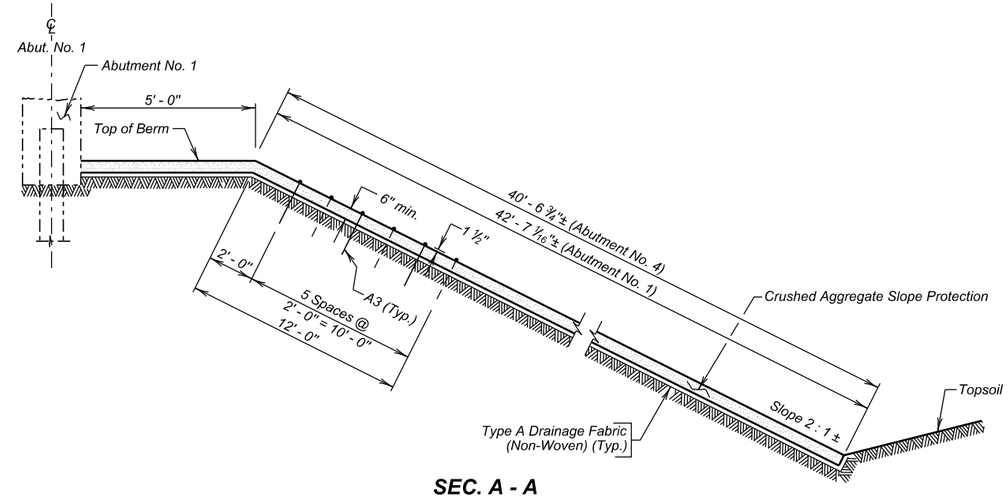

SEC. A - A

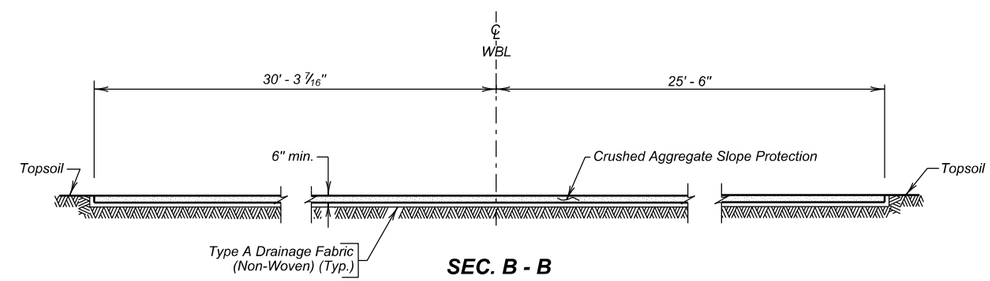

SEC. B - B

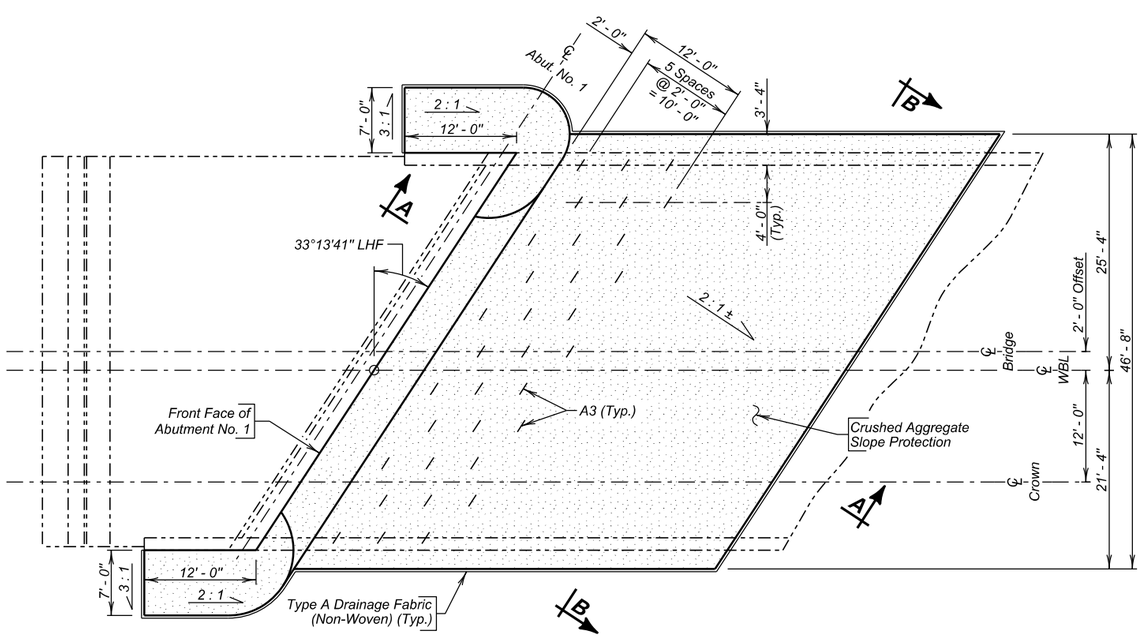

PLAN

(Shown adjacent to Abut. No. 1,
Abut. No. 4 similar by rotation)

REINFORCING SCHEDULE

(For Two Abutments)

Mk.	No.	Size	Length	Type	Bending Details
A3	66	6	5' - 6"	17	

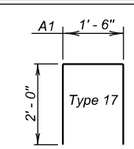

NOTE:
A3 bars shall be placed prior to placing the crushed aggregate slope protection. All costs associated with furnishing and installing A3 bars shall be incidental to the contract unit price per sq. yd. for Bridge Berm Slope Protection, Crushed Aggregate.

ESTIMATED QUANTITIES

(For Two Abutments)

ITEM	UNIT	QUANTITY
Bridge Berm Slope Protection, Crushed Aggregate	Sq. Yd.	727.9
Type A Drainage Fabric	Sq. Yd.	728

SLOPE PROTECTION DETAILS

FOR

WESTBOUND LANES

197' - 11 7/8" PRESTR. GIRDER BRIDGE

40' - 0" ROADWAY — 33° 13' 41" LHF SKEW
OVER DEER VIEW ROAD — SEC. 4/9-T3N-R6E
STA. 235 + 55.65 TO 237 + 53.63 — IM 0901(38)40
STR. NO. 47-088-550 — HL-93

MEADE COUNTY

S. D. DEPT. OF TRANSPORTATION

JANUARY 2014

DESIGNED BY	CK. DES. BY	DRAFTED BY	
BAF/PW	TD	MG	Steve A Johnson BRIDGE ENGINEER
MEAD5580	5580GK25		

The elevations shown in these plans are based on the National Geodetic Survey (NGS) North American Vertical Datum of 1988 (NAVD88).

STATE OF	PROJECT	SHEET NO.	TOTAL SHEETS
S.D.	IM 0901(38)40	E155	E199

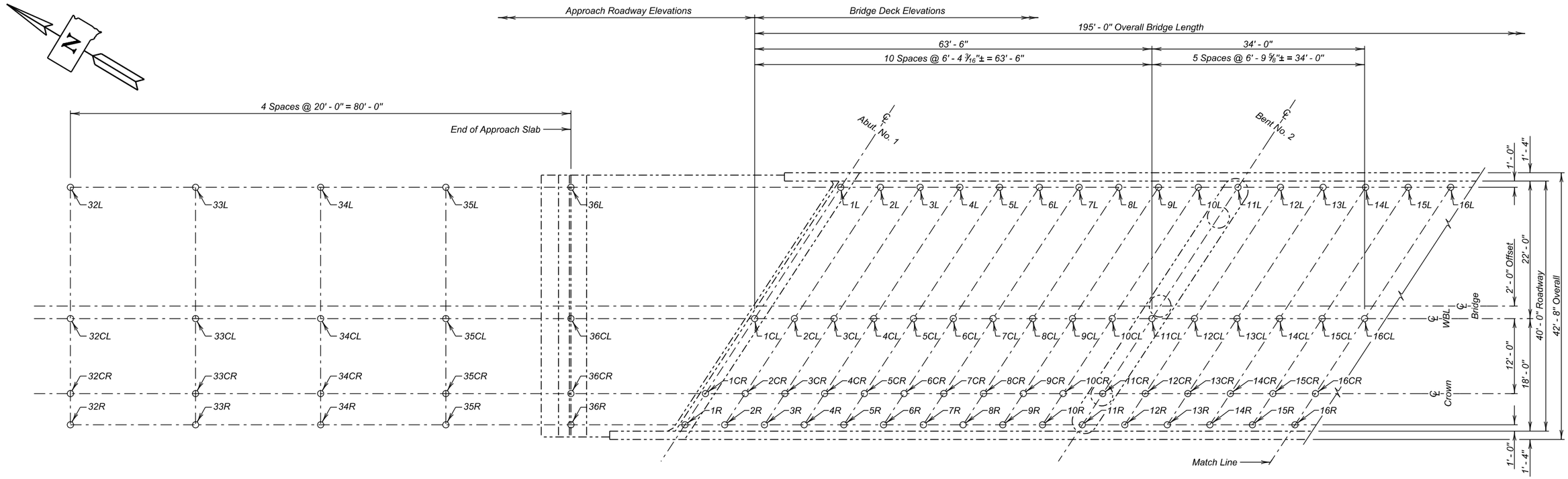

PLAN

Table of As-Built Elevations - Bridge Deck							
Location	Elevation	Location	Elevation	Location	Elevation	Location	Elevation
1L		1CL		1CR		1R	
2L		2CL		2CR		2R	
3L		3CL		3CR		3R	
4L		4CL		4CR		4R	
5L		5CL		5CR		5R	
6L		6CL		6CR		6R	
7L		7CL		7CR		7R	
8L		8CL		8CR		8R	
9L		9CL		9CR		9R	
10L		10CL		10CR		10R	
11L		11CL		11CR		11R	
12L		12CL		12CR		12R	
13L		13CL		13CR		13R	
14L		14CL		14CR		14R	
15L		15CL		15CR		15R	
16L		16CL		16CR		16R	

Table of As-Built Elevations - Approach Roadway							
Location	Elevation	Location	Elevation	Location	Elevation	Location	Elevation
32L		32CL		32CR		32R	
33L		33CL		33CR		33R	
34L		34CL		34CR		34R	
35L		35CL		35CR		35R	
36L		36CL		36CR		36R	

Table of Elevations - Bridge Survey Markers		
Location	Station - Offset	Elevation
Begin Bridge		

ESTIMATED QUANTITIES		
ITEM	UNIT	QUANTITY
Bridge Elevation Survey	L. S.	Lump Sum

NOTE :
The Contractor shall be responsible for producing the As - Built Elevation Survey soon after construction is complete and before the bridge is opened to traffic. The As-Built Elevations of the Bridge shall be taken and recorded at the locations shown in the table on this sheet. The completed table shall be given to the Engineer who will forward a copy to the Office of Bridge Design and the Region Office.

AS-BUILT ELEVATION SURVEY (A)
FOR
WESTBOUND LANES
197' - 11 7/8" PRESTR. GIRDER BRIDGE

40' - 0" ROADWAY — 33° 13' 41" LHF SKEW
OVER DEER VIEW ROAD — SEC. 4/9-T3N-R6E
STA. 235 + 55.65 TO 237 + 53.63 — IM 0901(38)40
STR. NO. 47-088-550 — HL-93

MEADE COUNTY
S. D. DEPT. OF TRANSPORTATION
JANUARY 2014

DESIGNED BY	CK. DES. BY	DRAFTED BY	
MG	PW/TD	MG	Steve A Johnson
MEAD5580	5580GK26		BRIDGE ENGINEER

The elevations shown in these plans are based on the National Geodetic Survey (NGS) North American Vertical Datum of 1988 (NAVD88).

STATE OF	PROJECT	SHEET NO.	TOTAL SHEETS
S.D.	IM 0901(38)40	E156	E199

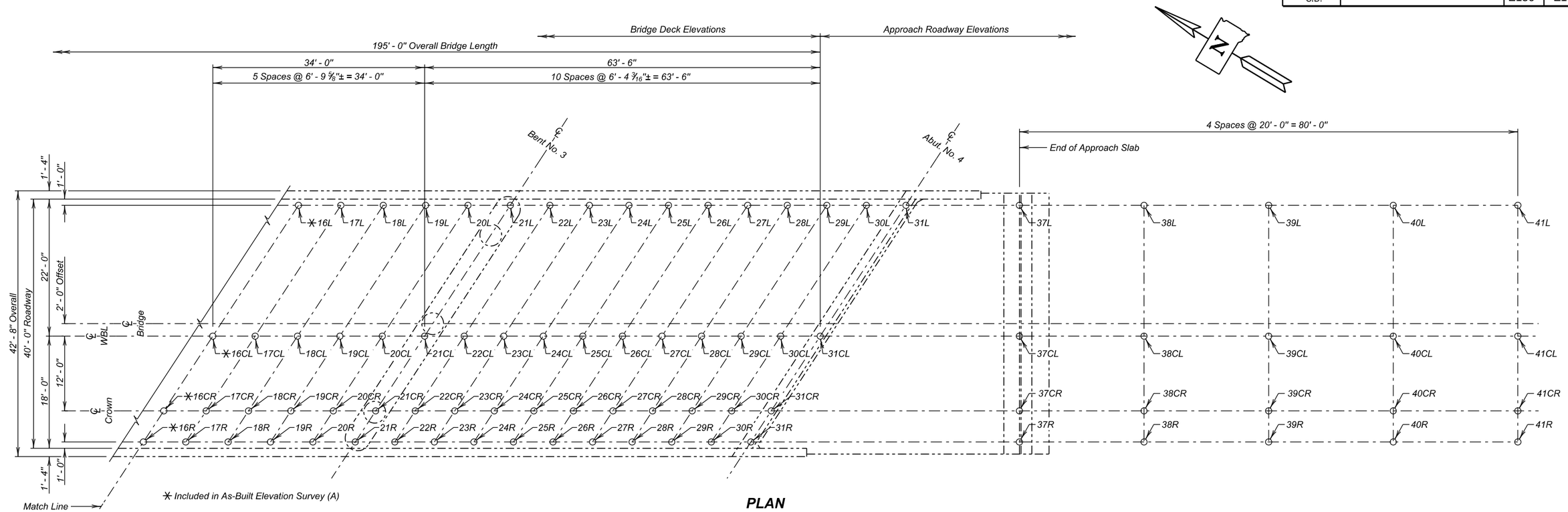

PLAN

Table of As-Built Elevations - Bridge Deck							
Location	**Elevation**	**Location**	**Elevation**	**Location**	**Elevation**	**Location**	**Elevation**
17L		17CL		17CR		17R	
18L		18CL		18CR		18R	
19L		19CL		19CR		19R	
20L		20CL		20CR		20R	
21L		21CL		21CR		21R	
22L		22CL		22CR		22R	
23L		23CL		23CR		23R	
24L		24CL		24CR		24R	
25L		25CL		25CR		25R	
26L		26CL		26CR		26R	
27L		27CL		27CR		27R	
28L		28CL		28CR		28R	
29L		29CL		29CR		29R	
30L		30CL		30CR		30R	
31L		31CL		31CR		31R	

Table of As-Built Elevations - Approach Roadway							
Location	**Elevation**	**Location**	**Elevation**	**Location**	**Elevation**	**Location**	**Elevation**
37L		37CL		37CR		37R	
38L		38CL		38CR		38R	
39L		39CL		39CR		39R	
40L		40CL		40CR		40R	
41L		41CL		41CR		41R	

Table of Elevations - Bridge Survey Markers		
Location	**Station - Offset**	**Elevation**
End Bridge		

NOTE :
The Contractor shall be responsible for producing the As - Built Elevation Survey soon after construction is complete and before the bridge is opened to traffic. The As-Built Elevations of the Bridge shall be taken and recorded at the locations shown in the table on this sheet. The completed table shall be given to the Engineer who will forward a copy to the Office of Bridge Design and the Region Office.

AS-BUILT ELEVATION SURVEY (B)
FOR
WESTBOUND LANES
197' - 11 7/8" PRESTR. GIRDER BRIDGE

40' - 0" ROADWAY — 33° 13' 41" LHF SKEW
OVER DEER VIEW ROAD — SEC. 4/9-T3N-R6E
STA. 235 + 55.65 TO 237 + 53.63 — IM 0901(38)40
STR. NO. 47-088-550 — HL-93

MEADE COUNTY
S. D. DEPT. OF TRANSPORTATION
JANUARY 2014

DESIGNED BY	CK. DES. BY	DRAFTED BY	
MG	PW/TD	MG	Steve A Johnson BRIDGE ENGINEER
MEAD5580	5580GK27		

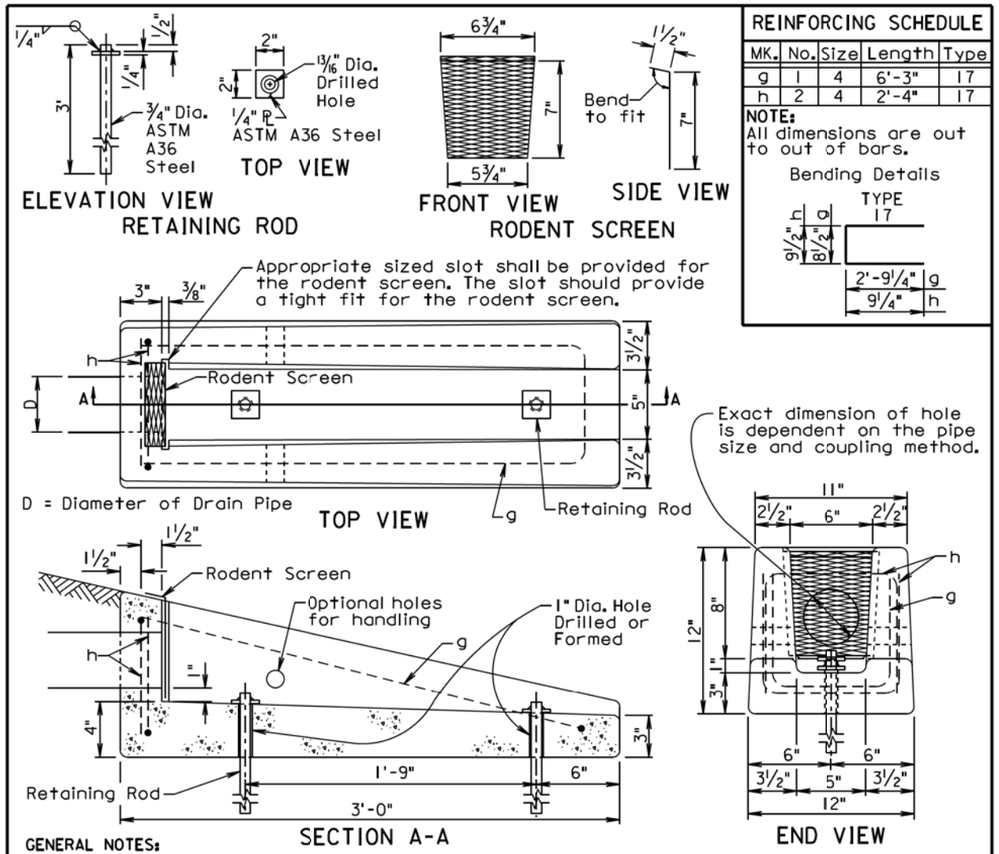

REINFORCING SCHEDULE

MK.	No.	Size	Length	Type
g	1	4	6'-3"	17
h	2	4	2'-4"	17

NOTE:
All dimensions are out to out of bars.

Bending Details

TYPE 17

GENERAL NOTES:

The concrete shall be Class M6. The concrete shall conform to the requirements of Section 462 of the Specifications. It is estimated that each unit weighs approximately 210 pounds.

All reinforcing steel shall conform to ASTM A615 Grade 60 and shall be epoxy coated. The reinforcing steel shall be securely retained to prevent displacement during placement of concrete. It is estimated that 7.3 pounds of reinforcing steel is required for each unit.

The pipe shall be placed in the concrete headwall with the pipe end flush with the concrete surface adjacent to the rodent screen.

The rodent screen shall be galvanized 13 Ga. steel with a diamond shaped flattened mesh pattern. The size shall be 1/2". The size refers to the measurement across the smallest diamond shaped opening measured from the centers of the wires.

The retaining rod shall be galvanized in accordance with ASTM A123 after all shop welding has been completed.

The drawing indicates using 1/2" fillets; however, 3/4" chamfers may be substituted for the 1/2" fillets.

All costs for furnishing and installing the concrete headwall including equipment, labor, and materials including concrete, reinforcing steel, retaining rods, and rodent screen shall be incidental to the contract unit price per each for "Precast Concrete Headwall for Drain".

June 26, 2015

Published Date: 3rd Qtr. 2016	SDDOT	PRECAST CONCRETE HEADWALL FOR DRAIN	PLATE NUMBER 430.50 Sheet 1 of 1

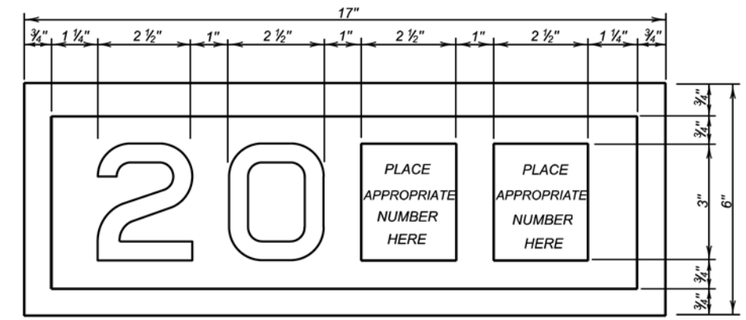

YEAR PLATE DETAILS

GENERAL NOTES:

1. Year plates of the general dimensions shown shall be constructed on all box culverts and bridges. The year plates shall be constructed in reverse and attached to the forms in such a manner that the finished imprint in the concrete does not exceed one-half (1/2) inch in depth.

2. Year plates shall be located on structure (s) as follows:

   a. On cast-in-place box culverts the year plates shall be four and one - half (4 1/2) inches below the top of the upstream parapet wall and centered laterally on the upstream face. On precast box culverts the year plate shall be centered laterally on the upstream face of the top slab. Where an extended interior wall interferes with this location, the year plate shall be centered in an adjacent barrel.

   b. On bridges with six (6) inch curbs or "Jersey" shaped barriers with no endblocks, the year plate shall be centered vertically on the curb face approximately six (6) inches from the end of the bridge, or as designated by the Engineer. On bridges with "Jersey" shaped barrier endblocks, the year plate shall be centered on the upper sloped portion of the barrier approximately 5'- 6" from the end of the bridge, or as designated by the Engineer. There shall be one year plate at each end of the bridge on opposite sides.

   c. When the plans specify that both the original date of construction and the date of reconstruction are to be shown, one date shall be placed as listed above and the other located adjacent to it. Both year plates shall be shown at each end of the bridge on opposite sides.

3. There will be no separate measurement or payment made for year plates on box culverts and bridges. All costs for this work shall be incidental to other contract items.

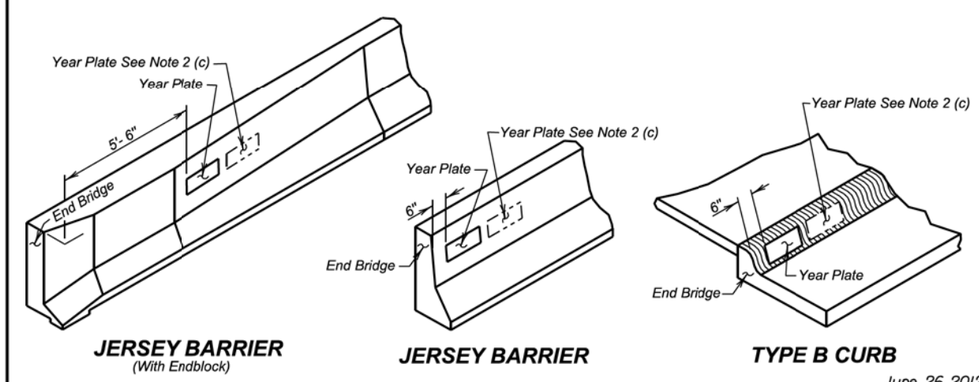

June 26, 2012

Published Date: 3rd Qtr. 2016	SDDOT	YEAR PLATE DETAILS	PLATE NUMBER 460.02 Sheet 1 Of 1

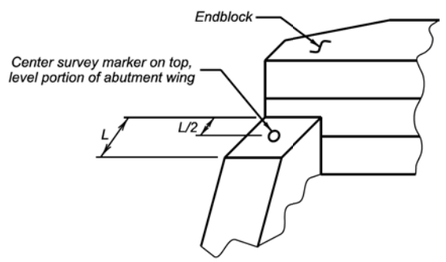

ABUTMENT WITH "STRAIGHT" WINGS

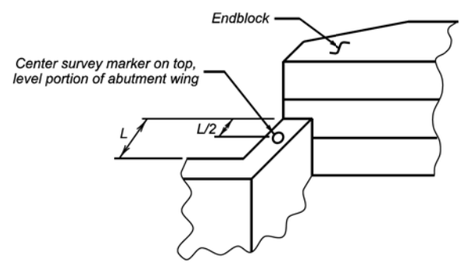

ABUTMENT WITH "SWEPT BACK" WINGS

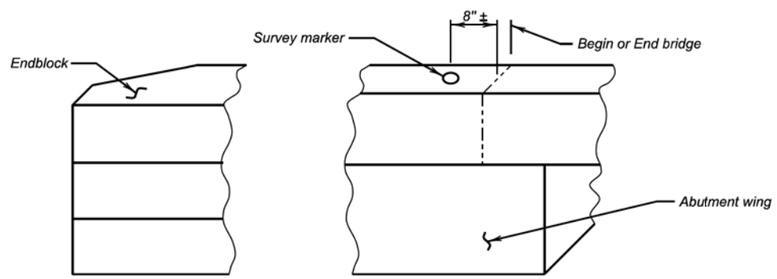

ABUTMENT WITH "SWEPT BACK" WINGS

(Endblock on top of wings)

GENERAL NOTES:

1. Survey markers shall be located at each abutment on the same side of the bridge as the year plate. Place survey markers on abutment wings as shown. Two survey markers will be required at each bridge.
2. Survey markers shall be of a type intended for installation in concrete, be made of solid brass or bronze, have a domed top and be either a 3" top diameter (with a ¾" X 2" long ribbed shank), or a US Army Corps of Engineers Type C Disc with a 3 ½" top diameter.
3. There will be no separate measurement or payment made for survey markers. All costs for this work shall be incidental to the other contract items.

June 26, 2012

Published Date: 3rd Qtr. 2016 | SDDOT | BRIDGE SURVEY MARKER | PLATE NUMBER 460.05 | Sheet 1 of 1

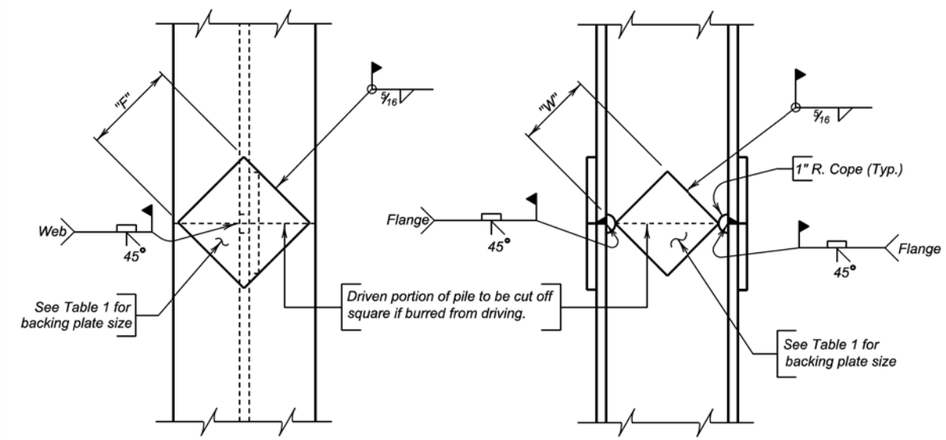

NOTE:

Prepare joint surfaces lower end of upper section on the ground and weld on backing plates; then place upper section on lower section and weld.

COMPLETE JOINT PENETRATION WELD DETAIL

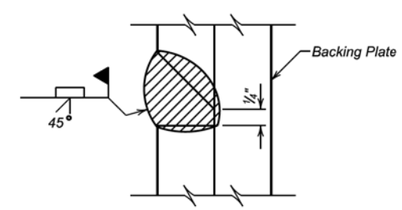

GENERAL NOTES:

1. Steel for backing plates shall conform to ASTM A709 Grade 50.
2. Welding and weld inspection shall be in conformance with AWS D1.5 (Current Year) Bridge Welding Code - Steel.
3. Welder must be certified and registered with the SDDOT.
4. Backing plate shall at a minimum be as thick as the web of the pile being spliced.
5. Web must be coped with 1 inch radius.
6. Submit Welding Procedure Specification (WPS) to Bridge Construction Engineer for approval prior to pile driving.

TABLE 1
(BACKING PLATES)

PILE	10"	12"	14"
"F" FLANGE	6 ½"	8"	10"
"W" WEB	4 ¾"	6 ¼"	7 ½"

December 23, 2012

Published Date: 3rd Qtr. 2016 | SDDOT | STEEL PILE SPLICE DETAILS | PLATE NUMBER 510.40 | Sheet 1 of 1

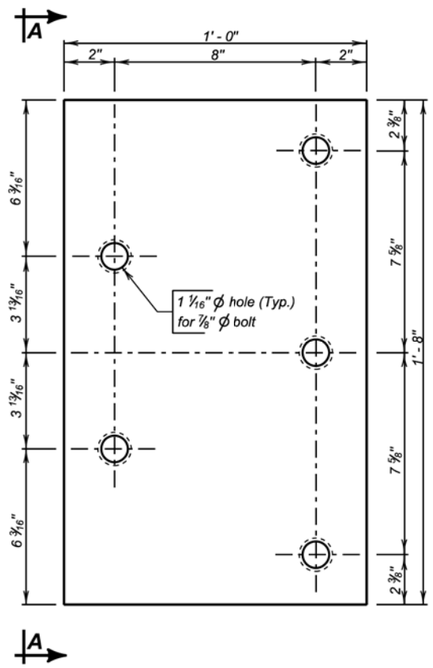

ELEVATION

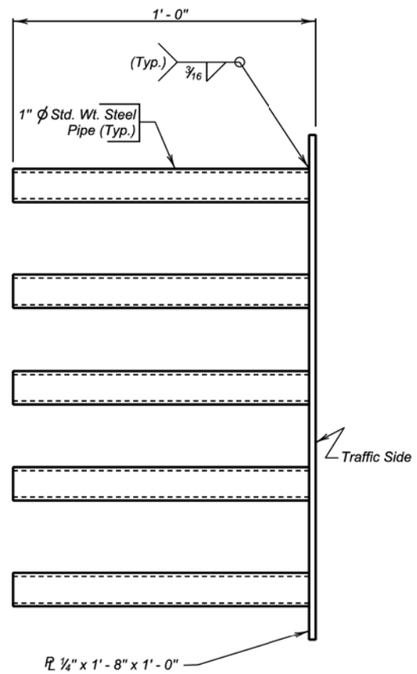

VIEW A - A

GENERAL NOTES:

1. Steel plate for the insert assembly shall conform to ASTM A709 Grade 36. The steel pipes shall conform to ASTM A53 or ASTM A500 Grade B.
2. Welding and weld inspection shall be in conformance with AWS D1.1 - (Current Year) Structural Welding Code - Steel.
3. After fabrication, galvanize in accordance with AASHTO M111 (ASTM A123).
4. Bolts, nuts, and washers shall be provided with each assembly. Bolts shall be galvanized and conform to the requirements of ASTM A307, A325, or A449. Plain washers shall be galvanized and conform to ASTM F844.
5. Bolt heads shall be placed on the traffic side of the endblock. Bolt projection at the back side of the insert shall not exceed 1 inch beyond the nut.
6. The cost of the 5 bolt insert plate assembly complete in place including welding and galvanizing shall be incidental to the contract unit price per Cubic Yard for " Class A45 Concrete, Miscellaneous ", " Class A45 Concrete, Bridge Deck ", or " Class A45 Concrete, Bridge Repair ", as applicable.

December 23, 2013

Published Date: 3rd Qtr. 2016	SDDOT	5 BOLT INSERT PLATE ASSEMBLY	PLATE NUMBER 630.92
			Sheet 1 of 1

The elevations shown in these plans are based on the National Geodetic Survey (NGS) North American Vertical Datum of 1988 (NAVD88).

STATE OF	PROJECT	SHEET NO.	TOTAL SHEETS
S.D.	IM 0901(38)40	E160	E199

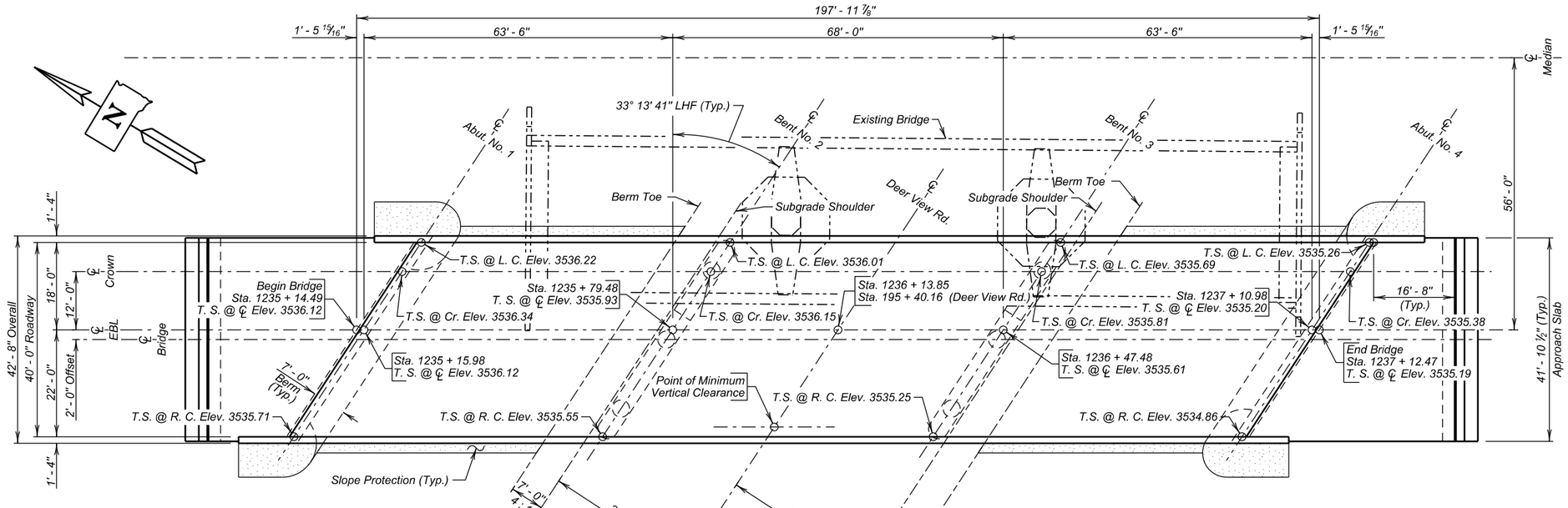

NOTE:
T. S. at L. C. Elev. = Top of Slab at Left Curb Elevation
T. S. at ℄ Elev. = Top of Slab at Centerline Elevation
T. S. at Cr. Elev. = Top of Slab at Crown Elevation
T. S. at R. C. Elev. = Top of Slab at Right Curb Elevation

PLAN

-X271-
INDEX OF BRIDGE SHEETS

Sheet No. 1 - General Drawing
Sheet No. 2 - Estimate of Structure Quantities and Notes
Sheet No. 3 - Notes (Continued)
Sheet No. 4 - Notes (Continued)
Sheet No. 5 - Notes (Continued)
Sheet No. 6 - Subsurface Investigation, Piling & Drilled Shaft Layout
Sheet No. 7 - Abutment No. 1 Details (A)
Sheet No. 8 - Abutment No. 1 Details (B)
Sheet No. 9 - Abutment No. 4 Details (A)
Sheet No. 10 - Abutment No. 4 Details (B)
Sheet No. 11 - Bent Details
Sheet No. 12 - Superstructure Details (A)
Sheet No. 13 - Superstructure Details (B)
Sheet No. 14 - End Block, Barrier Curb & Deck Drain Details
Sheet No. 15 - 63' - 3" Girder Details
Sheet No. 16 - 67' - 3" Girder Details
Sheet No. 17 - Erection Data
Sheet No. 18 - Slab Form Elevations
Sheet No. 19 - Diaphragm Details
Sheet No. 20 - Details of Bridge End Backfill (A)
Sheet No. 21 - Details of Bridge End Backfill (B)
Sheet No. 22 - Details of Approach Slab Adjacent to Bridge (A)
Sheet No. 23 - Details of Approach Slab Adjacent to Bridge (B)
Sheet No. 24 - Approach Slab Joint Details
Sheet No. 25 - Slope Protection Details
Sheet No. 26 - As-Built Elevation Survey (A)
Sheet No. 27 - As-Built Elevation Survey (B)
Sheet No. 28 - Details of Standard Plate No.'s 430.50 and 460.02
Sheet No. 29 - Details of Standard Plate No.'s 460.05 and 510.40
Sheet No. 30 - Details of Standard Plate No. 630.92

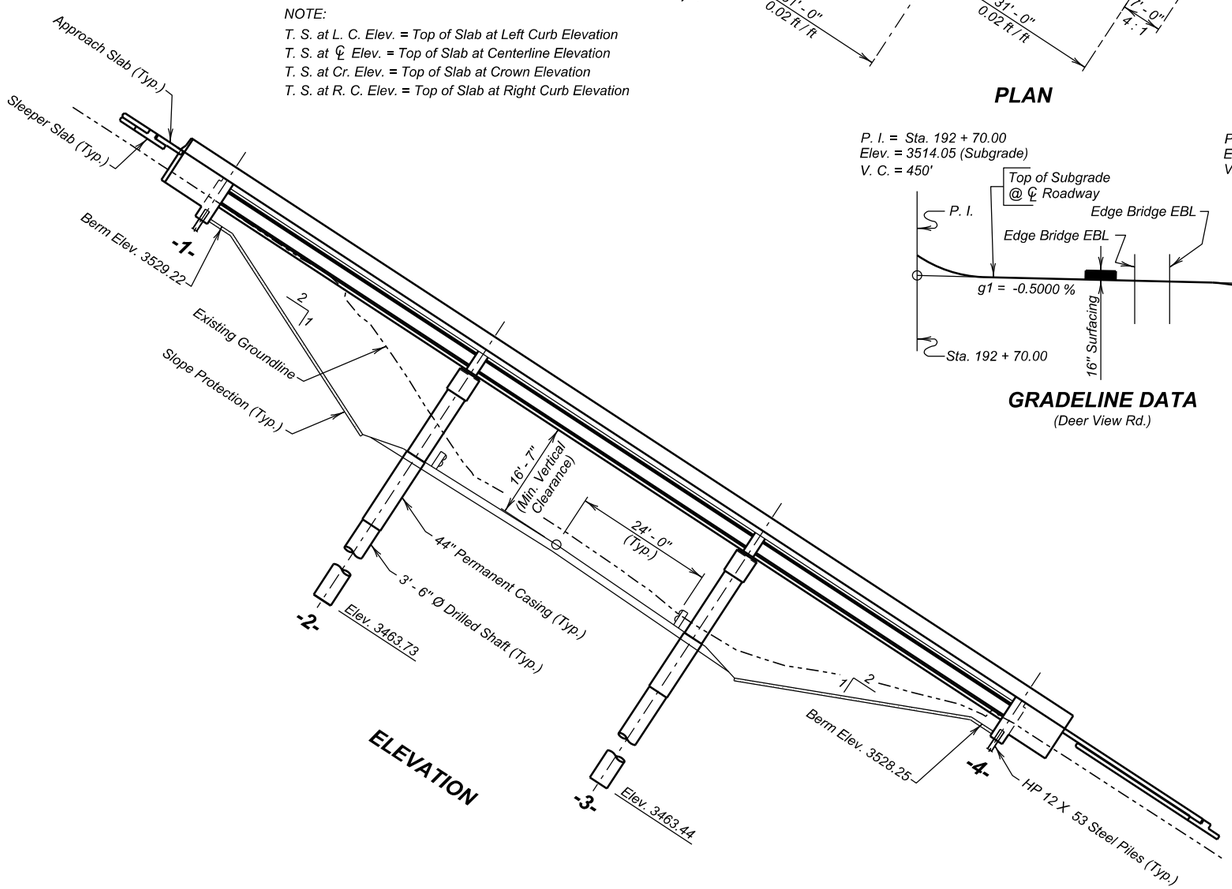

ELEVATION

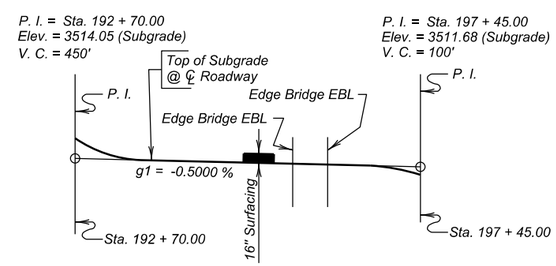

GRADELINE DATA
(Deer View Rd.)

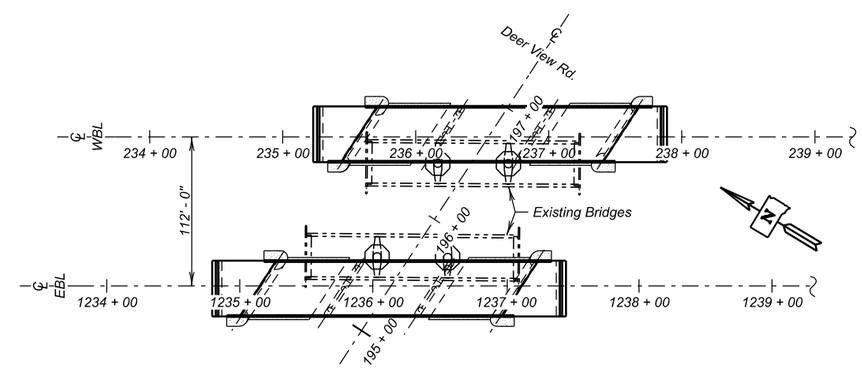

LAYOUT

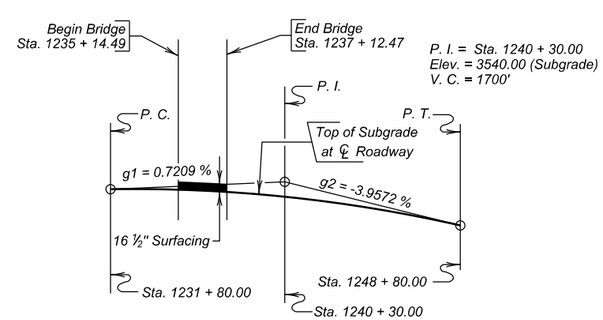

VERTICAL CURVE DATA
(I-90 EBL)

GENERAL DRAWING
FOR
EASTBOUND LANES

197' - 11 7/8" PRESTR. GIRDER BRIDGE

40' - 0" ROADWAY — 33° 13' 41" LHF SKEW
OVER DEER VIEW ROAD — SEC. 4/9-T3N-R6E
STA. 1235 + 14.49 TO 1237 + 12.47 — IM 0901(38)40
STR. NO. 47-088-551 — HL-93
PCN 5580

MEADE COUNTY
S. D. DEPT. OF TRANSPORTATION
JANUARY 2014

PLANS BY :
OFFICE OF BRIDGE DESIGN, SOUTH DAKOTA DEPARTMENT OF TRANSPORTATION

DESIGNED BY	CK. DES. BY	DRAFTED BY	
BAF/PW	DC/TD	MG	Steve A Johnson
MEAD5580	5580GL01		BRIDGE ENGINEER

ESTIMATE OF STRUCTURE QUANTITIES

DESCRIPTION	QUANTITY	UNIT	REMARKS
Bridge Elevation Survey	Lump Sum	LS	
Concrete Penetrating Sealer	875	SqYd	See Special Provision
Incidental Work, Structure	Lump Sum	LS	
Structural Steel, Miscellaneous	Lump Sum	LS	
Membrane Sealant Expansion Joint	83.8	Ft	
Structure Excavation, Bridge	28.0	CuYd	
Bridge End Embankment	1984	CuYd	
Granular Bridge End Backfill	104.8	CuYd	
Approach Slab Underdrain Excavation	6.0	CuYd	
Pecast Concrete Headwall for Drain	4	Each	
Class A45 Concrete, Bridge Deck	292.6	CuYd	
Class A45 Concrete, Bridge	159.0	CuYd	
Concrete Approach Slab for Bridge	273.0	CuYd	
Concrete Approach Sleeper Slab for Bridge	67.5	CuYd	
Class A45 Concrete, Drilled Shaft	96.9	CuYd	
Drilled Shaft Excavation	94.5	CuYd	
44" Permanent Casing	75	Ft	
Reinforcing Steel	78,179	Lb	
Epoxy Coated Reinforcing Steel	55,326	Lb	
No. 7 Rebar Splice	106	Each	
No. 14 Rebar Splice	108	Each	
Preboring Pile	140	Ft	
HP 12x53 Steel Test Pile, Furnish and Drive	95	Ft	
HP 12x53 Steel Bearing Pile, Furnish and Drive	630	Ft	
45" Minnesota Shape Prestressed Concrete Beam	969	Ft	
4" Underdrain Pipe	301	Ft	
Porous Backfill	25.4	Ton	
Bridge Berm Slope Protection, Crushed Aggregate	722.2	SqYd	
Type A Drainage Fabric	722	SqYd	

SPECIFICATIONS FOR BRIDGE

1. Design Specifications: AASHTO LRFD Bridge Design Specifications, 2014 Edition with 2015 interims.
2. Construction Specifications: South Dakota Standard Specifications for Roads and Bridges, 2015 Edition and required provisions, supplemental specifications, and special provisions as included in the proposal.

BRIDGE DESIGN LOADING

1. AASHTO HL-93.
2. Dead Load includes 22 psf for future wearing surface on the roadway.

DESIGN MATERIAL STRENGTHS*

Concrete	f'c = 4,500 psi
Reinforcing Steel	fy = 60,000 psi
Piling (ASTM A572 Grade 50)	fy = 50,000 psi

*For prestressed beams, see notes regarding Prestressed Girders.

GENERAL CONSTRUCTION

1. All mild reinforcing steel shall conform to ASTM A615, Grade 60.
2. All exposed concrete corners and edges shall be chamfered 3/4" unless noted otherwise.
3. Use 2" clear cover on all reinforcing steel except as shown.
4. Contractor shall imprint on the structure the date of new construction as specified and detailed on Standard Plate No. 460.02.
5. Barrier Curbs and End blocks shall be built normal to the grade.
6. Request for construction joints or resteel splices at points other than those shown, must be submitted to the Engineer for prior approval. If additional splices are approved, no payment will be allowed for the added quantity of resteel.
7. The elevation of the bridge deck is16.5" above subgrade elevation.

INCIDENTAL WORK, STRUCTURE

1. In place on E.B.L. centerline Sta. 1235+49.74-25.52' Lt. to centerline Sta. 1237+09.24-24.10' Lt. is a 159.5' 3 span steel girder bridge with a 30'-0" clear roadway. The superstructure consists of 4 steel girders with a reinforced concrete slab and steel railing. The deck has been overlaid with 2 inches of non-metallic fiber reinforced concrete overlay. The substructure consists of a single column reinforced concrete bents and reinforced concrete sill-type abutments, all of which are supported on timber piling.
2. Break down and remove the existing bridge, and approach/sleeper slabs if applicable, to 1 foot below finished groundline, or as required to construct the new structure in accordance with Section 110 of the Specifications. All portions of the existing bridge not salvaged for future highway related use shall be removed and disposed of by the Contractor on a site obtained by the Contractor and approved by the Engineer in accordance with the ENVIRONMENTAL COMMITMENTS found in Section A.
3. The existing approach guardrail, including posts shall be salvaged for future highway related use. See Section B for stockpiling location.
4. The foregoing is a general description of the in-place bridge and should not be construed to be complete in all details. Before preparing the bid it shall be the responsibility of the Contractor to make a visual inspection of the structure to verify the extent of the work and materials involved. If desired by the Contractor, a copy of the original construction plans may be obtained through the Office of Bridge Design.

NOTICE - LEAD BASED PAINT

Be advised that the paint on the steel surfaces of the existing structure contains lead. The Contractor should plan his/her operations accordingly, and inform his/her employees of the hazards of lead exposure.

DESIGN MIX OF CONCRETE

1. All structural concrete shall be Class A45 unless otherwise indicated.
2. Type II cement is required, except Type III may be used for the prestressed beams.
3. Coarse aggregate to be used in concrete shall consist of either crushed quartzite or other crushed ledge rock. If crushed ledge rock other than quartzite is to be used, it shall be from a source approved by the Engineer.
4. Grout design mix shall be as specified in Section 460.2 K of the Specifications. A compressive strength of 2000 psi shall be attained by the grout prior to erection of any beams. Chamfer edges of grout pads ¾". The quantity of grout is included in and shall be paid for at the contract unit price per cubic yard for Class A45 Concrete, Bridge.

ESTIMATE OF STRUCTURE QUANTITIES AND NOTES
FOR
EASTBOUND LANES
197' - 11⅞" PRESTR. GIRDER BRIDGE
STR. NO. 47-088-551
JANUARY 2014

DESIGNED BY	CK. DES. BY	DRAFTED BY	
PW	TD	TD	Steve A Johnson BRIDGE ENGINEER
MEAD5580	5580GL02		

ABUTMENTS

1. Preboring piling at each abutment is required to whichever is greater, ten feet or to natural ground.

2. The HP 12x53 Piling were designed using a factored bearing resistance of 98 tons per pile. Piling shall develop a field verified nominal bearing resistance of 245 tons per pile.

3. One test pile shall be driven at each abutment and will become part of the pile group.

4. The contractor shall have sufficient pile splice material on hand before pile driving is started. See Standard Plate No. 510.40.

5. Piles shall not be driven out of position by more than two inches in the direction normal to the abutment centerline. A pile-driving template shall be used to insure this accuracy.

6. Abutment backwalls above the construction joint may be cast separately from the deck slab. The concrete used for the backwalls and wings shall be Class A45 Concrete, Bridge. All abutment and bridge deck concrete shall have attained design strength prior to backfilling. Abutment wing walls shall not be cast until after the deck has been poured.

7. Each finished abutment shall include a Bridge Survey Marker. See Standard Plate No. 460.05.

ABUTMENT BACKWALL COATING

The material for waterproofing the abutment backwall shall be one of the products from the approved products list. The acceptable abutment backwall coating suppliers are listed on the approved products list at the following Internet address:

http://apps.sd.gov/applications/HC60ApprovedProducts/ProductList.aspx

The cost of furnishing and applying the coating shall be incidental to the contract unit price per cubic yard for Class A45 Concrete, Bridge.

PILE DRIVING

1. A drivability analysis was performed using the wave equation analysis program (GRLWEAP). The following pile hammers were evaluated and found to produce acceptable driving stresses:

   Delmag D-19-32 Delmag D-19-42 MVE M-19

2. Pile hammers not listed will require evaluation and approval prior to use from the Geotechnical Engineering Activity.

BENTS

1. The design of the drilled shafts is based upon encountering competent bedrock at elevation 3498, respectively. If competent bedrock is not encountered at or above this elevation, contact the Office of Bridge Design, through proper channels, before proceeding with the drilled shaft construction. Geotechnical Engineering Activity personnel shall be present during the drilling operations to confirm these elevations and to observe placement of the drilled shafts. The Geotechnical Engineering Activity shall be notified a minimum of two weeks prior to the start of excavation for the drilled shafts.

2. The drilled shafts shall be constructed using the permanent casing method in conformance with Section 465 of the Specifications. Permanent casings for the drilled shafts shall be installed and seated immediately prior to drilled shaft excavation. A construction joint shall be placed at the top of the permanent casing and the permanent casing shall extend a minimum of 1'-0" above the groundline, waterline, or construction platform elevation, whichever is higher.

3. The construction joint locations and quantities provided on the plans are based upon the estimated existing groundline and/or waterline elevations. It is the responsibility of the Contractor to verify the existing elevations and have a drilled shaft installation plan submitted and approved prior to ordering the casing. If the Contractor intends to use construction platforms, etc. that would require any of the construction joints to be at a location other than the location shown in the plans, the Contractor shall include these proposed changes in the drilled shaft installation plan for approval by the Office of Bridge Design.

4. The quantities for Drilled Shaft Excavation; 44" Permanent Casing; Class A45 Concrete, Drilled Shaft; and Class A45 Concrete, Bridge are based upon the construction joint locations as shown in the plans. Payment for these items shall be at the contract unit price for the plans shown quantities regardless of any approved changes in the location of the construction joints as requested by the Contractor due to the construction of work platforms, etc. Measurement and payment will be made at the contract unit prices for any changes due to variations in the competent foundation soil or in the locations of the existing groundline and/or waterline elevations as ordered by the Engineer.

5. The H1 and H2 bars are detailed alternating with staggered mechanical splices and are provided in the reinforcing schedule. Once the construction joint elevations have been verified and/or established, mechanical splice details showing location shall be submitted with the drilled shaft installation plan for approval. Any costs involved in cutting reinforcing steel and any other items incidental to providing the mechanical splice shall be included in the contract unit price per pound for Reinforcing Steel.

ACCESS TUBES

1. Access tubes shall be furnished and installed in each of the drilled shafts in accordance with Section 465 of the Specifications.

2. These access tubes are to be used for crosshole sonic log testing of the drilled shaft in the event that the Department deems that the quality of the drilled shaft is suspect. In order for the Department to determine if crosshole sonic log testing is necessary, no subsequent work above the construction joint will be allowed for 7 days or until authorized by the Engineer, whichever comes first. Upon authorization by the Engineer and prior to any subsequent concrete placement above the construction joint, the Contractor shall remove the water from the access tubes, cut the access tubes off flush with the top of the drilled shaft and completely fill the access tubes with grout.

NOTES (CONTINUED)
FOR
EASTBOUND LANES

197' - 11⅞" PRESTR. GIRDER BRIDGE

STR. NO. 47-088-551

JANUARY 2014

DESIGNED BY	CK. DES. BY	DRAFTED BY	
PW	TD	TD	Steve A Johnson BRIDGE ENGINEER
MEAD5580	5580GL03		

PRESTRESSED GIRDERS

1. Minimum concrete compressive strength f'c = 7,000 psi at 28 days and f'ci = 4,500 psi for all Girders.
2. All mild reinforcing steel shall be deformed bars conforming to ASTM A615, Grade 60.
3. Individual tendons in all pretensioned sections shall consist of seven wire uncoated Type 270K Strands having a nominal diameter of 0.6" and a minimum ultimate strength of 58600 lbs. per cable. An initial tensile force of 43940 lbs. shall be applied to all 0.6" cables in all girders. All prestressing steel shall conform to AASHTO M203. (low lax strands).
4. All prestressed girders within a span shall be cast within an 8 day period. If not, the newest girder shall be at least 6 weeks old before the deck slab is poured. The girders shall be poured in all steel forms.
5. Prestressed concrete girders shall always be lifted by the devices provided in the top flanges near the ends of the girders. Types of lifting devices other than those shown on the plans may be used provided they are approved by the Office of Bridge Design. The design of the lifting devices shall be the responsibility of the Fabricator.
6. Each beam shall be marked showing structure number, casting date, and beam number. Marking shall be on the face of the beam near the end and so located that they will be exposed after the diaphragms have been cast. Facia beams shall be marked on an inside face. All markings shall be stenciled and clearly legible. For beam designations and locations, see superstructure layout plan and Erection Data sheet.
7. The physical properties of the elastomeric bearing pads shall conform to the requirements of Section 18.2 of the AASHTO LFRD Bridge Construction Specification and the AASHTO Materials Specification M251. The elastomeric bearing pads shall conform to Grade 50 (durometer). The cost of the pads shall be incidental to the contract unit price per cubic yard for Class A45 Concrete, Bridge. Certification that pads are 50 durometer and meet the requirements of AASHTO LFRD Bridge Construction Specification Section 18.2 and AASHTO Materials Specification M251 shall be furnished to the Engineer with the shop drawings. No laminated bearing pads will be allowed.
8. All exposed corners shall be chamfered 3/4" or rounded to 3/4" radius.
9. Dead Load of girder taken as effective at transfer. Cut strands, except those extended and bent, flush with end of girder and coat end of strands with mortar.
10. The Contractor shall be responsible for ensuring that transportation stresses, handling and erection do not cause damage to the girders.
11. Furnish and Install Inserts for T8 Rebars as shown in the plans. All costs involved shall be incidental to the contract unit price per foot of girder.

SUPERSTRUCTURE

1. Girder lifting hooks shall be cut off before placement of concrete deck slab.
2. The diaphragms at the bents shall be poured integrally with the deck slab. Placement of diaphragms at the bents shall not slow down the rate of deck concrete placement and finishing. The Contractor shall place the concrete for the specified diaphragms ahead of the deck concrete in such a manner that advancement of the deck concrete reaches the diaphragm just as placement of concrete in the diaphragm is complete.
3. The deck-finishing machine shall be adjusted and operated in such a manner that the roller screed or screeds are parallel with the centerline of the bridge and the finish machine is parallel to the skew of the bridge. Concrete placement in front of the finish machine shall be kept parallel to the machine.
4. The bridge deck must be placed and finished continuously at a minimum rate of 45 ft. of deck per hour measured along Centerline Roadway. This rate is exclusive of concrete placed in the diaphragms. (See note 2 above.) If concrete cannot be placed and finished at this rate, the Engineer shall order a header installed and operations stopped. Notify the Bridge Construction Engineer if deck pour operations are stopped. Operations may resume only when the Engineer is satisfied that a rate of 45 ft. of deck per hour can be achieved and the concrete in the previous pour has attained a minimum compressive strength of 2000 psi.
5. Snap ties, if used in the barrier curb formwork, shall be epoxy coated. The epoxy coating shall be inert in concrete and compatible with the coating applied to the new epoxy coated reinforcing steel.
6. See Special Provision for Concrete Penetrating Sealer.

BOLT TESTING

The certified mill test reports for all bolts used on the project shall include the test results for all of the testing specified in Section 972.2 D of the Specifications. Some of these tests are supplemental tests that must be requested at the time the bolts are ordered. It is the responsibility of the Contractor to notify the bolt supplier of these requirements.

SHOP PLANS

Shop plans shall be required as specified by the Specifications.

FALSEWORK

The Contractor shall be required to include with the Falsework Plans, details for the construction of an adequate "Walk-Way" including railing.

FALL PROTECTION

1. The Contractor shall install a Fall Protection System conforming to OSHA Regulations. When working on the girders prior to decking installation, a Horizontal Lifeline – or other OSHA approved system shall be installed. The Contractor shall have one Personal Fall Arrest System (PFAS) available for use by a Department Inspector. The PFAS shall be compatible with the installed Fall Protection System.
2. Modifications to any bridge components used to accommodate the Fall Protection System shall be shown on the Falsework Plans and/or the appropriate Shop Plans. Field welding to bridge components will not be allowed. Field placed concrete inserts or drilled-in anchor bolts will be allowed if approved by the Engineer. All costs associated with providing the Fall Protection System shall be incidental to the other contract items.

NOTES (CONTINUED)
FOR
EASTBOUND LANES
197' - 11 7/8" PRESTR. GIRDER BRIDGE
STR. NO. 47-088-551
JANUARY 2014

DESIGNED BY	CK. DES. BY	DRAFTED BY	
PW	TD	TD	Steve A Johnson BRIDGE ENGINEER
MEAD5580	5580GL04		

CLASS B COMMERCIAL TEXTURE FINISH

1. A Class B commercial texture finish shall be applied to the following areas:

    a. **Abutments:** all exposed surfaces to an elevation 1-foot below finished ground line.
    b. **Barrier Rail:** all exposed surfaces (front, top and back).
    c. **Slab:** edge of slab.
    d. **Girder:** Outside face and bottom of facia girders.
    e. **Bents:** All exposed surfaces.

2. The Class B commercial texture finish shall be applied in accordance with Section 460.3 L.1.c of the Specifications.

3. Where the Class B commercial texture finish is to be applied, concrete curing shall be accomplished with cotton or burlap mats and polyethylene sheeting. Curing shall continue for not less than seven days after placing concrete before the commercial texture finish is applied. The commercial texture finish shall be applied in accordance with the manufacturer's recommendations. The commercial texture finish itself does not require a specific cure except for drying.

4. The cost of the Class B Commercial Texture Finish applied to the fascia girders shall be incidental to the contract unit price per cubic yard for Class A45 Concrete, Bridge Deck.

APPROACH SLABS

1. Sleeper slab riser shall be cast with the approach slab or cast after the approach slab is placed. Care shall be taken to ensure the correct grade is maintained across the joint.

2. The portion of the sleeper slab below the construction joint may be precast. If the bottom portion of the sleeper slab is precast, the Contractor shall submit proposed lifting and setting plans to the Bridge Construction Engineer for approval. In addition, if reinforcing or other details differ from those shown in the plans, the Contractor shall submit proposed alternate details for approval.

3. The use of an approved finishing machine will be required during placement of Class A45 Concrete for the approach slabs. Concrete placement in front of the machine shall be kept parallel to the screed.

4. The concrete in the approach slab shall be tined normal to centerline roadway.

5. Concrete Approach Sleeper Slab for Bridge, whether cast-in-place or precast, will be paid for at the contract unit price per square yard. This payment shall be full compensation for all excavation, furnishing, hauling, and placing all materials including concrete and reinforcing steel; for disposal of all excavated material and surplus materials; and for labor, tools, equipment and any incidentals necessary to complete this item of work.

6. Concrete Approach Slab for Bridge will be paid for at the contract unit price per square yard. This payment shall be full compensation for all excavation, furnishing, hauling and placing all materials including concrete, asphalt paint or 4 mil polyethylene sheeting, elastic joint sealer and reinforcing steel; for disposal of all excavated material and surplus materials and for labor, tools, equipment and any incidentals necessary to complete this item of work.

AS - BUILT ELEVATION SURVEY

The Contractor shall be responsible for recording the As-built deck elevations and bridge survey marker elevations at the locations shown in the Table of As-Built Elevations shown in the plans. All costs associated with obtaining the elevations including all equipment, labor and any incidentals required shall be incidental to the contract lump sum price for Bridge Elevation Survey.

CRUSHED AGGREGATE SLOPE PROTECTION

1. This work shall consist of paving the bridge berm slopes with crushed aggregate slope protection for control and prevention of berm erosion.

2. The aggregate used in the crushed aggregate slope protection shall be composed of durable fragments of quarried ledge rock or an approved alternative. The material shall be well graded with 90 – 100% passing a 6" sieve and 0 – 10% passing a 2" sieve or as approved by the Engineer.

3. The type A drainage fabric shall be non-woven.

4. The surface upon which the slope protection is to be placed shall be smooth, uniform, and free from foreign material. The top surface of the slope protection shall conform to the dimensions, elevations, and slopes shown in the plans.

5. The crushed aggregate shall be shaped and compacted to provide a stable, smooth and uniform surface.

6. Payment for crushed aggregate slope protection shall be at the contract unit price per square yard for Bridge Berm Slope Protection, Crushed Aggregate and shall include furnishing all materials, labor, and equipment necessary or incidental to the satisfactory completion of this work. Payment will be for plans quantity.

NOTES (CONTINUED)
FOR
EASTBOUND LANES

197' - 11⅞" PRESTR. GIRDER BRIDGE

STR. NO. 47-088-551

JANUARY 2014

DESIGNED BY	CK. DES. BY	DRAFTED BY	
PW	TD	TD	Steve A Johnson BRIDGE ENGINEER
MEAD5580	5580GL05		

Hole Number	V1	
Station	235+01	
Depth	30.5	ft
Soil Color	Red	
Classification	Silt-Clay	
Strength (Q_u)	8,192	psf
Dry Density	124.6	pcf
Wet Density	140.4	pcf
Moisture	12.7	%
Pass No. 10	100.0	%
Pass No. 40	99.2	%
Pass No. 200	95.0	%
Sand Content	5.0	%
Silt Content	64.4	%
Clay Content	30.6	%

Hole Number	V7	
Station	237+08	
Depth	10.5	ft
Soil Color	Red	
Classification	Clay-Silt	
Strength (Q_u)	6,784	psf
Dry Density	120.0	pcf
Wet Density	134.0	pcf
Moisture	11.7	%
Pass No. 10	100.0	%
Pass No. 40	93.1	%
Pass No. 200	78.6	%
Sand Content	21.4	%
Silt Content	58.4	%
Clay Content	20.2	%

Hole Number	V7	
Station	237+08	
Depth	25.0	ft
Soil Color	Red	
Classification	Silt-Clay	
Strength (Q_u)	4,480	psf
Dry Density	120.6	pcf
Wet Density	132.9	pcf
Moisture	10.2	%
Pass No. 10	100.0	%
Pass No. 40	98.1	%
Pass No. 200	94.6	%
Sand Content	5.4	%
Silt Content	54.4	%
Clay Content	40.2	%

Hole Number	V11	
Station	236+00	
Depth	25.5	ft
Soil Color	Red	
Classification	Silt-Clay	
Strength (Q_u)	4,529	psf
Dry Density	113.1	pcf
Wet Density	128.8	pcf
Moisture	14.0	%
Pass No. 10	100.0	%
Pass No. 40	98.6	%
Pass No. 200	93.1	%
Sand Content	6.9	%
Silt Content	52.5	%
Clay Content	40.6	%

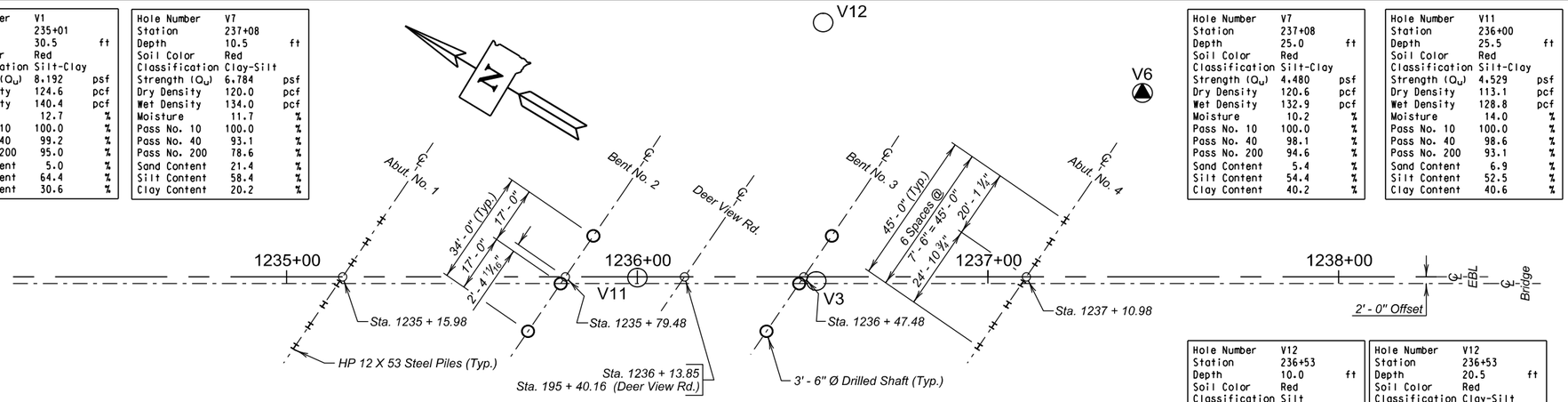

Hole Number	V12	
Station	236+53	
Depth	10.0	ft
Soil Color	Red	
Classification	Silt	
Strength (Q_u)	2,483	psf
Dry Density	125.9	pcf
Wet Density	134.6	pcf
Moisture	6.9	%
Pass No. 10	100.0	%
Pass No. 40	96.6	%
Pass No. 200	81.5	%
Sand Content	18.5	%
Silt Content	65.3	%
Clay Content	16.2	%

Hole Number	V12	
Station	236+53	
Depth	20.5	ft
Soil Color	Red	
Classification	Clay-Silt	
Strength (Q_u)	2,564	psf
Dry Density	120.5	pcf
Wet Density	134.7	pcf
Moisture	11.8	%
Pass No. 10	100.0	%
Pass No. 40	98.4	%
Pass No. 200	92.9	%
Sand Content	7.1	%
Silt Content	72.3	%
Clay Content	20.6	%

PILING & DRILLED SHAFT LAYOUT

* Values represent uncorrected "N" values from Penetration Test.

Sample Zone — 48 Blows Per Foot — V1 — V2

If refusal of the penatration test was achieved based on 50 blows within one of the 6 inch sets. The number of blows over inches is listed.

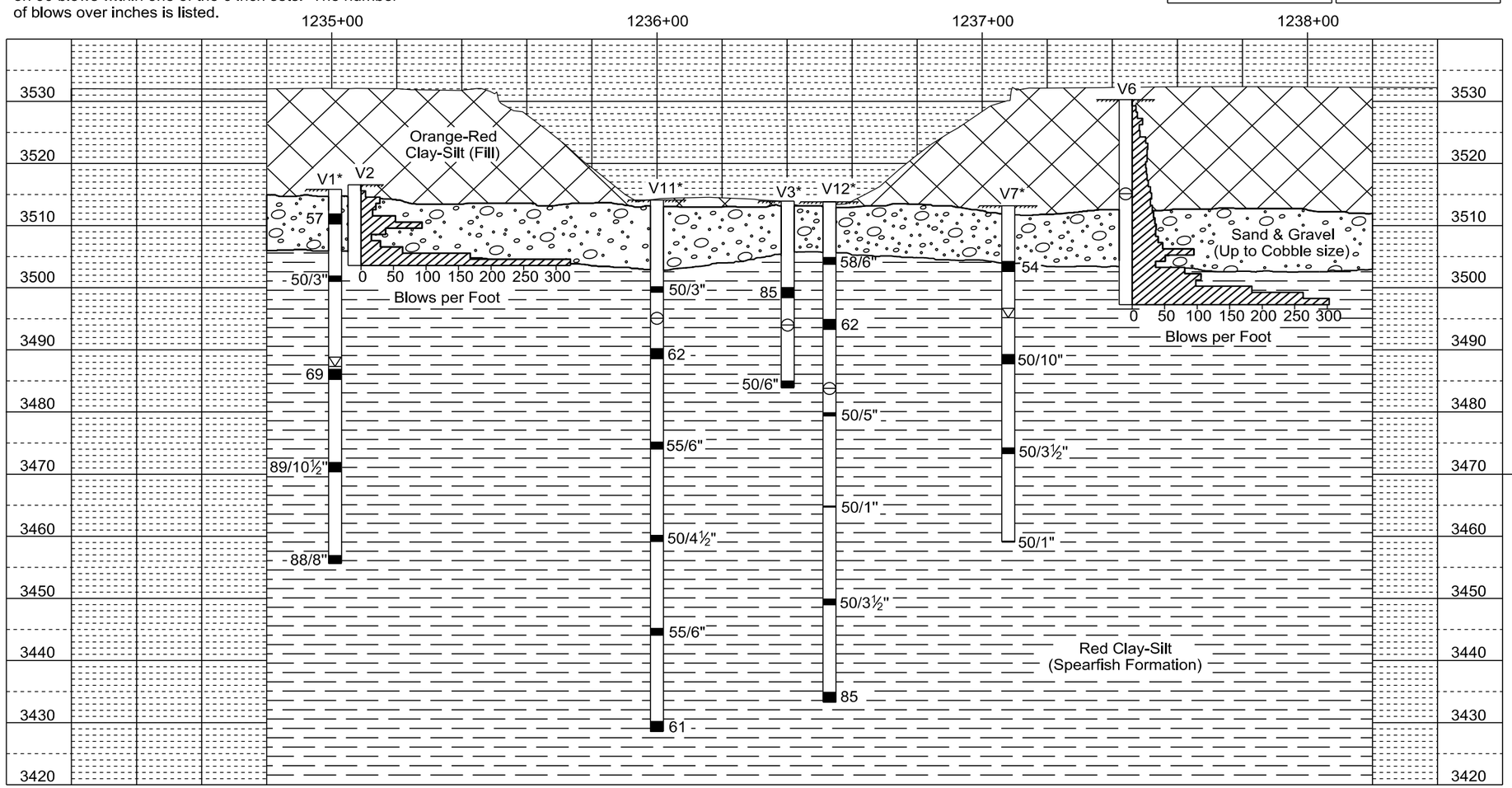

STATE OF	PROJECT	SHEET NO.	TOTAL SHEETS
S.D.	IM 0901(38)40	E165	E199

The Spearfish Formation is a relatively weak red sandy shale. Textural classification typically is a clay-silt. Gypsum is present throughout the formation that varies from thin stringers to massive deposits over 30 feet thick. Bedded layers of red stained sandstone can also be encountered. Unweathered Spearfish Formation is considered to be "Soft Rock", although massive unweathered gypsum may behave similar to weak limestone.

The Geotechnical Engineering Activity has on file all of the boring logs for this project. These logs and additional results of laboratory test, if any, are available for review at the Central Office in Pierre.

LEGEND

- Penetration Test
- Drive Test
- Water
- Caved
- Sample Zone

Drive test are conducted by dropping a 490 pound hammer 30 inches to drive a 2⅞ inch drill stem with attached retractable plug sampler for taking samples and to measure the resistance to penetration of the soil.

Penetration test holes are drilled with a 6⅝ inch diameter hollow stem auger. Penetration tests are conducted by dropping a 140 pound hammer 30 inches to obtain 2 inch nominal diameter samples and to measure the resistance to penetration of the soil.

GROUND WATER ELEVATIONS

as of MARCH 2013

V1	3487.3
V2	(DRY) 3503.6
V3	(DRY) 3494.0
V6	(DRY) 3515.3
V7	3495.2
V11	(DRY) 3495.1
V12	(DRY) 3483.8

MEASURED SKIN FRICTION

	ELEV.	PSF
V2	3503.6	3333
V6	3497.3	1667

SUBSURFACE INVESTIGATION, PILING, & DRILLED SHAFT LAYOUT

FOR

EASTBOUND LANES

197' - 11⅞" PRESTR. GIRDER BRIDGE

40' - 0" ROADWAY — 33° 13' 41" LHF SKEW
OVER DEER VIEW ROAD — SEC. 4/9-T3N-R6E
STA. 1235 + 14.49 TO 1237 + 12.47 — IM 0901(38)40
STR. NO. 47-088-551 — HL-93

MEADE COUNTY

S. D. DEPT. OF TRANSPORTATION

JANUARY 2014

DESIGNED BY	CK. DES. BY	DRAFTED BY	
PW	TD	MG	Steve A. Johnson BRIDGE ENGINEER
MEAD5580	5580GL06		

STATE OF	PROJECT	SHEET NO.	TOTAL SHEETS
S.D.	IM 0901(38)40	E166	E199

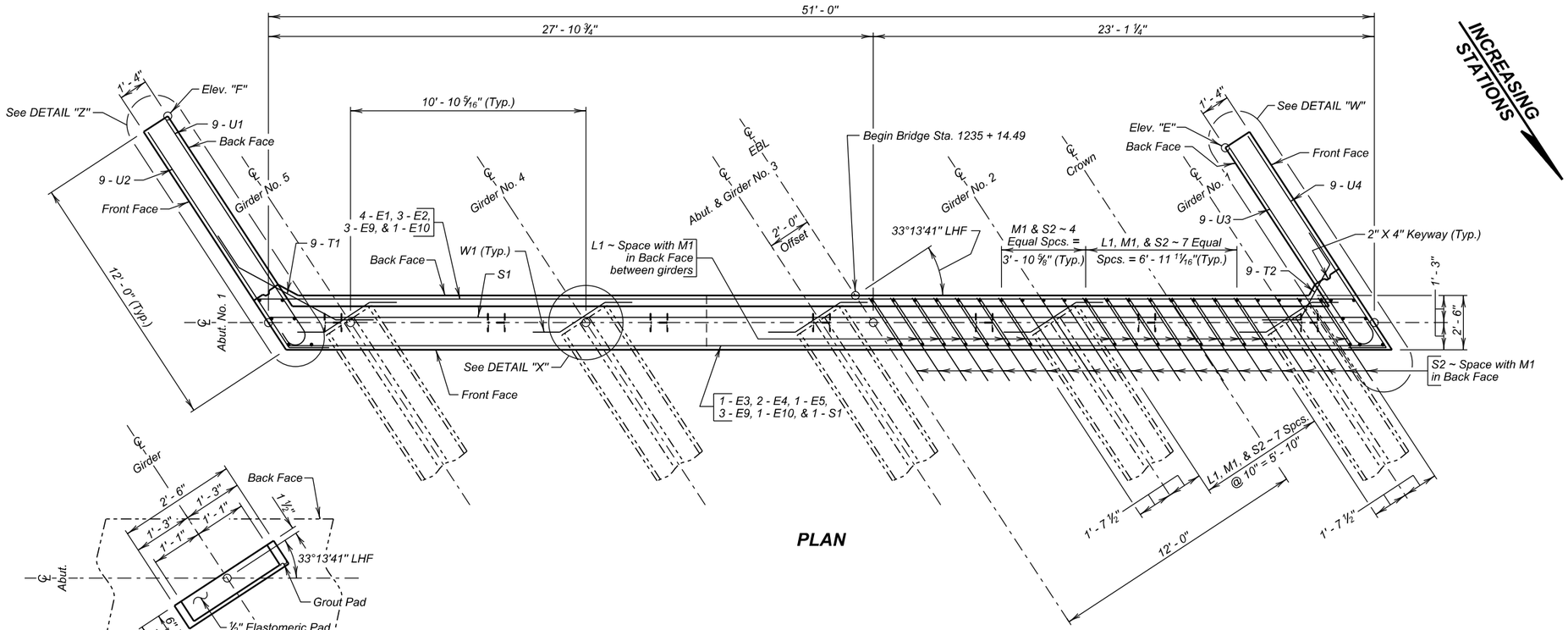

PLAN

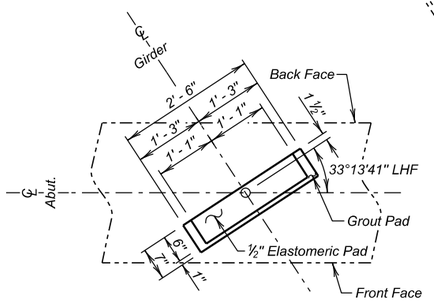

DETAIL "X"

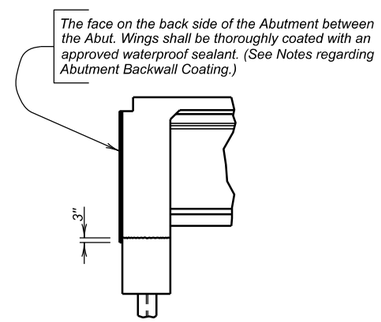

ABUT. BACKWALL COATING DETAILS

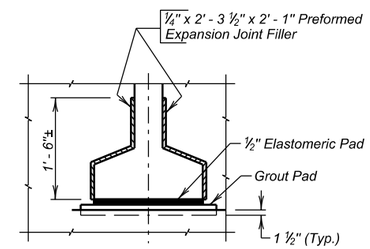

DETAIL "Y"

(Typical at Girder Ends; Abutments only)

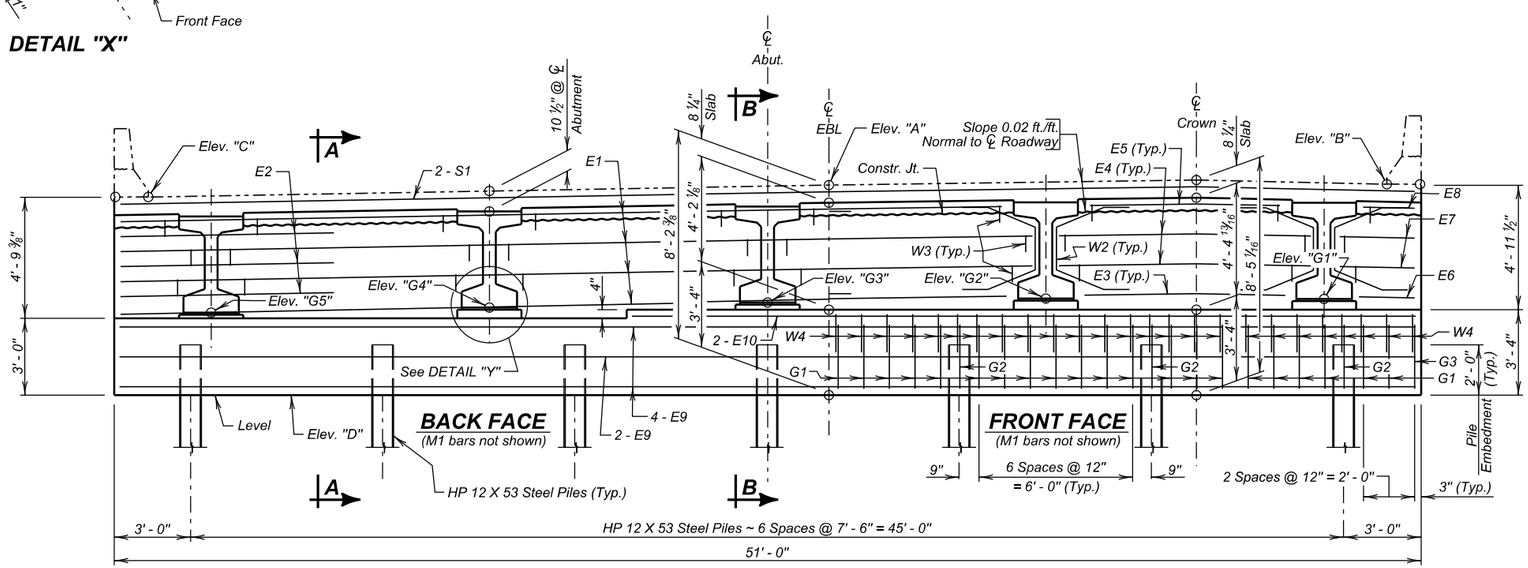

ELEVATION

(Along ℄ Abutment)

TABLE OF ELEVATIONS

Abut. No.	Elev. "A"	Elev. "B"	Elev. "C"	Elev. "D"	Elev. "E"	Elev. "F"
1	3536.12	3536.21	3535.70	3527.92	3535.05	3534.53

TABLE OF ELEVATIONS

Abut. No.	Elev. "G1"	Elev. "G2"	Elev. "G3"	Elev. "G4"	Elev. "G5"
1	3531.56	3531.56	3531.39	3531.22	3531.05

NOTE : Elev. "A", "B" and "C" are top of slab at ℄ of Abutment. Elev. "E" and "F" are at top of wingwall 14 1/4" below top of slab elevation. Elev. "G1", "G2", "G3", "G4", and "G5" are top of grout pad elevations at ℄ Abutment.
Top of Grout Pads shall be Level and Smooth.

ABUTMENT NO. 1 DETAILS (A)

FOR

EASTBOUND LANES

197' - 11 7/8" PRESTR. GIRDER BRIDGE

40' - 0" ROADWAY — 33° 13' 41" LHF SKEW
OVER DEER VIEW ROAD — SEC. 4/9-T3N-R6E
STA. 1235 + 14.49 TO 1237 + 12.47 — IM 0901(38)40
STR. NO. 47-088-551 — HL-93

MEADE COUNTY

S. D. DEPT. OF TRANSPORTATION

JANUARY 2014

DESIGNED BY	CK. DES. BY	DRAFTED BY	
BAF/PW	TD	MG	Steve A Johnson BRIDGE ENGINEER
MEAD5580	5580GL07		

STATE OF	PROJECT	SHEET NO.	TOTAL SHEETS
S.D.	IM 0901(38)40	E167	E199

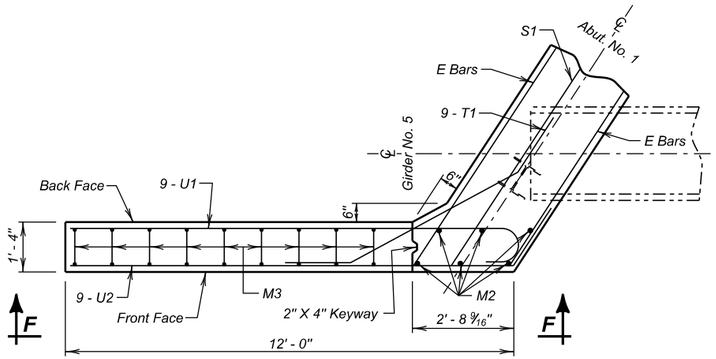

DETAIL "Z"

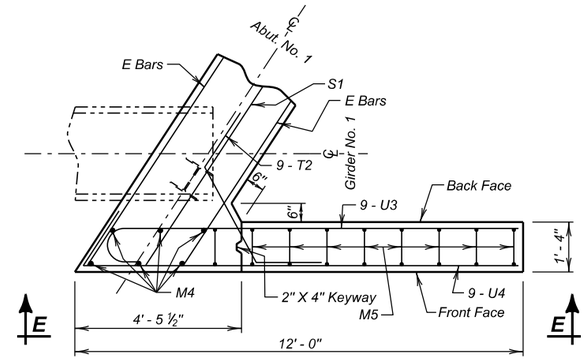

DETAIL "W"

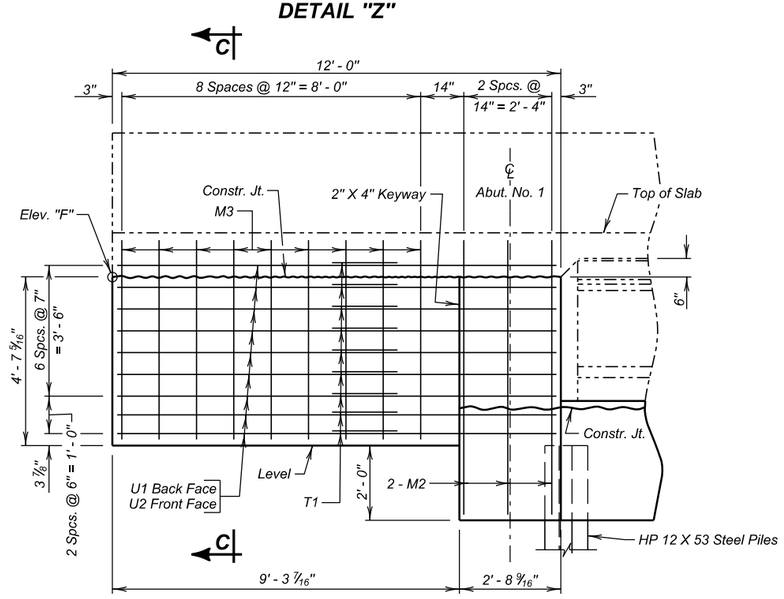

VIEW F - F

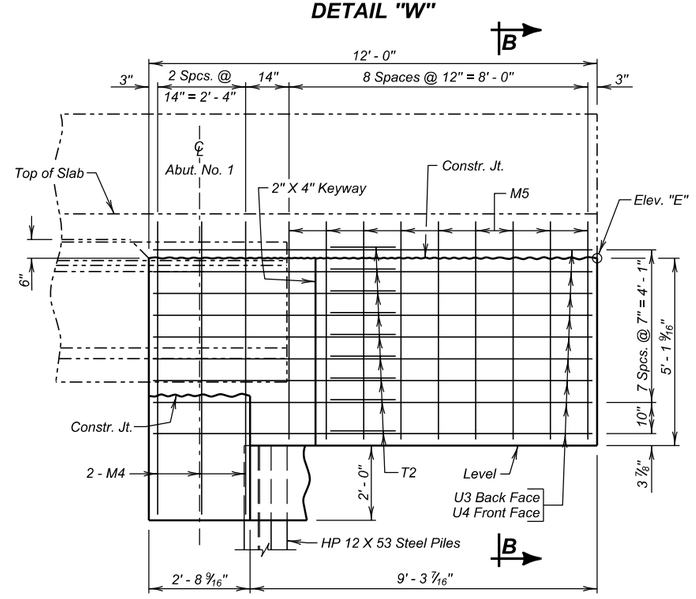

VIEW E - E

REINFORCING SCHEDULE

	Mk.	No.	Size	Length	Type
	E1	4	8	50' - 7"	Str.
	E2	6	8	9' - 6"	Str.
	E3	4	4	7' - 10"	Str.
	E4	8	4	9' - 10"	Str.
	E5	4	4	7' - 5"	Str.
	E6	2	4	2' - 3"	Str.
	E7	4	4	3' - 3"	Str.
	E8	2	4	2' - 1"	Str.
	E9	10	7	50' - 7"	Str.
	E10	2	4	30' - 7"	Str.
	G1	46	5	10' - 3"	T1
	G2	7	5	8' - 8"	S6
	G3	2	5	11' - 1"	T1
△	L1	34	4	4' - 7"	17A
	M1	83	5	6' - 7"	Str.
	M2	6	5	7' - 4"	Str.
	M3	9	5	11' - 6"	17
	M4	6	5	8' - 1"	Str.
	M5	9	5	13' - 0"	17
△	S1	2	9	50' - 7"	Str.
△	S2	49	5	8' - 3"	14A
	T1	9	6	9' - 1"	19
	T2	9	6	6' - 5"	19
	U1	9	9	13' - 5"	1A
	U2	9	5	13' - 6"	19A
	U3	9	9	12' - 5"	1A
	U4	9	5	13' - 3"	19A
	W1	5	5	5' - 8"	19
	W2	10	4	7' - 8"	14
	W3	30	4	3' - 11"	17
	W4	33	4	5' - 2"	17

Bending Details

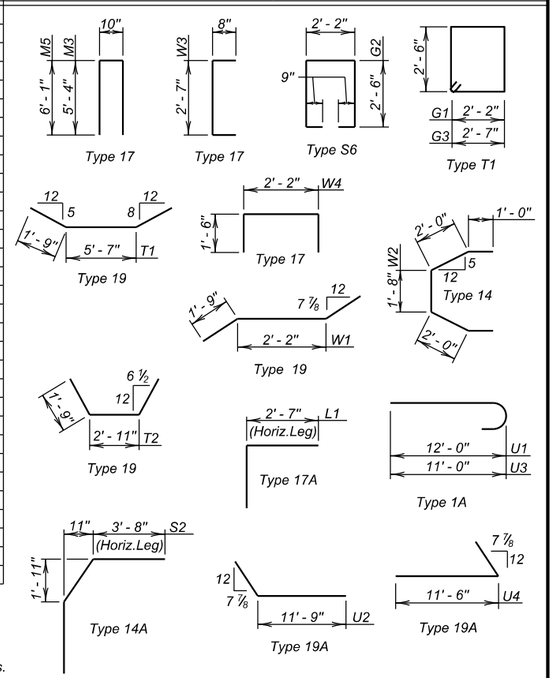

NOTES:
All dimensions are out to out of bars.
△ Bars to be Epoxy Coated.

ESTIMATED QUANTITIES

	ITEM	UNIT	QUANTITY
ϕ	Class A45 Concrete, Bridge	Cu. Yd.	37.0
	Reinforcing Steel	Lb.	4874
	Epoxy Coated Reinforcing Steel	Lb.	870
	Structure Excavation, Bridge	Cu. Yd.	14.0
	HP 12 x 53 Steel Test Pile, Furnish and Drive	Ft.	1 @ 45'
	HP 12 x 53 Steel Bearing Pile, Furnish and Drive	Ft.	6 @ 40' = 240'
	Preboring Pile	Ft.	7 @ 10' = 70'

ϕ Includes 0.1 cu. yds. for grout pads.

Note: Concrete shall be placed in the space under the beams (within the backwall width) during the pour. Care shall be taken to get the concrete vibrated into this area. If upon form removal the space is not completely filled and consolidated, the contractor shall grout the remaining voids.

✳ Z1 bars and mechanical splices are listed and included in superstructure.
See SUPERSTRUCTURE DETAILS (A) & (B).

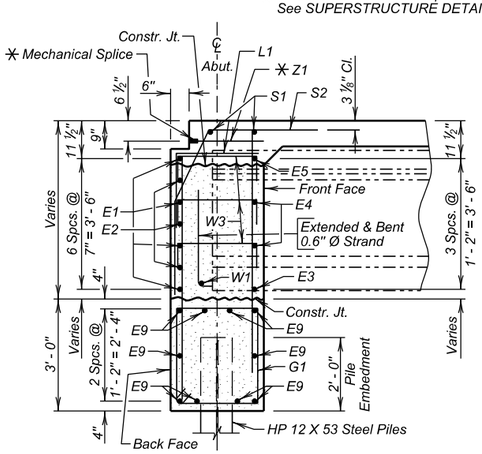

SEC. A - A

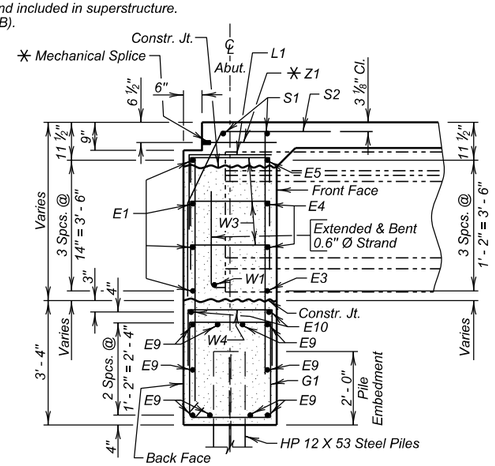

SEC. B - B

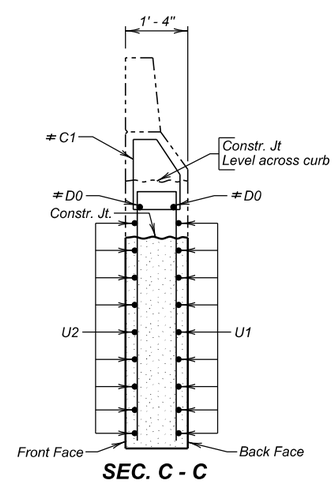

SEC. C - C

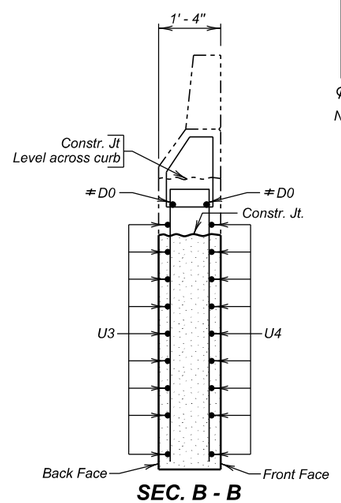

SEC. B - B

NOTE -
≠ Listed on SUPERSTRUCTURE DETAILS (B)

ABUTMENT NO. 1 DETAILS (B)

FOR

EASTBOUND LANES

197' - 11⅞" PRESTR. GIRDER BRIDGE

40' - 0" ROADWAY
OVER DEER VIEW ROAD
STA. 1235 + 14.49 TO 1237 + 12.47
STR. NO. 47-088-551

33° 13' 41" LHF SKEW
SEC. 4/9-T3N-R6E
IM 0901(38)40
HL-93

MEADE COUNTY
S. D. DEPT. OF TRANSPORTATION
JANUARY 2014

DESIGNED BY	CK. DES. BY	DRAFTED BY	
BAF/PW	TD	MG	Steve A. Johnson BRIDGE ENGINEER
MEAD5580	5580GL08		

STATE OF	PROJECT	SHEET NO.	TOTAL SHEETS
S.D.	IM 0901(38)40	E168	E199

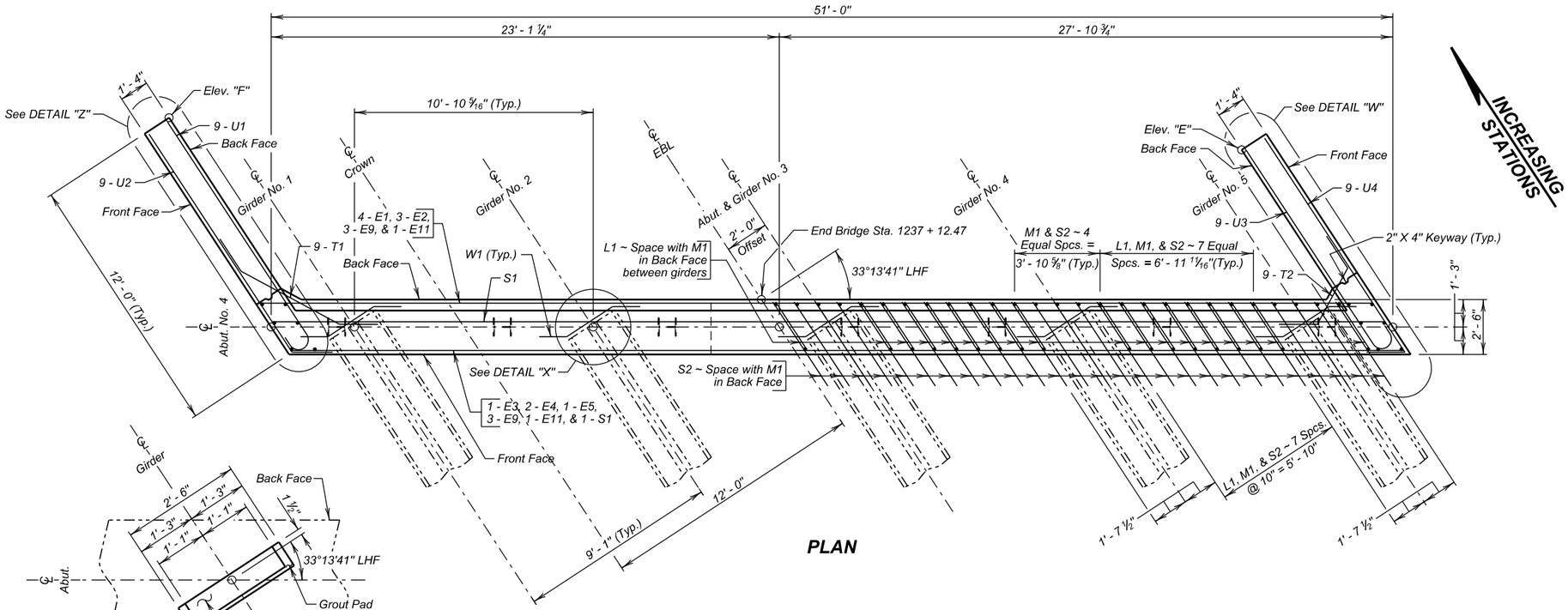

PLAN

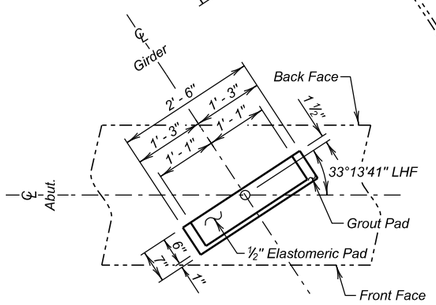

DETAIL "X"

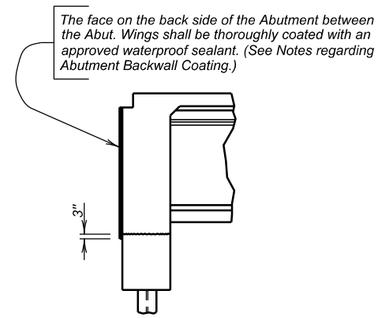

ABUT. BACKWALL COATING DETAILS

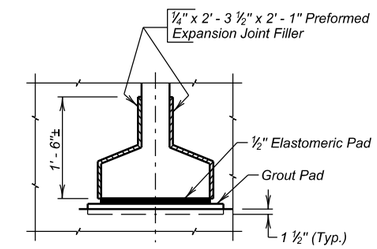

DETAIL "Y"
(Typical at Girder Ends; Abutments only)

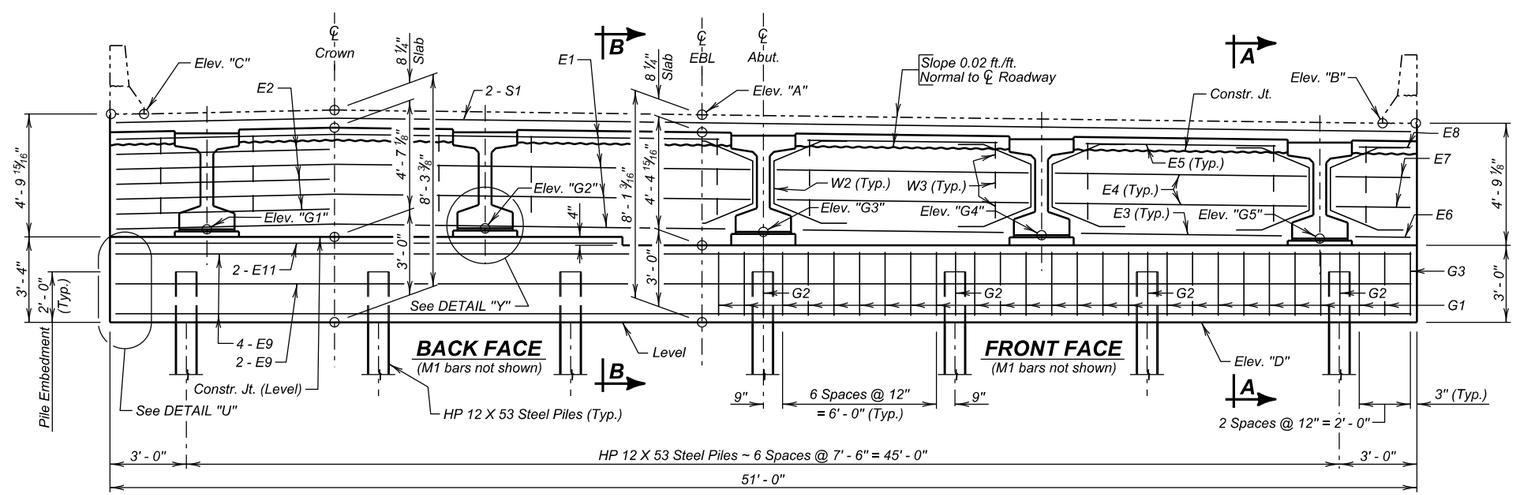

ELEVATION
(Along ℄ Abutment)

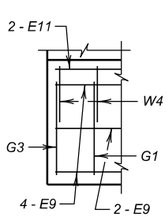

DETAIL "U"
FRONT FACE
(M bars not shown)

TABLE OF ELEVATIONS

Abut. No.	Elev. "A"	Elev. "B"	Elev. "C"	Elev. "D"	Elev. "E"	Elev. "F"
4	3535.20	3534.86	3535.26	3527.10	3533.60	3533.96

TABLE OF ELEVATIONS

Abut. No.	Elev. "G1"	Elev. "G2"	Elev. "G3"	Elev. "G4"	Elev. "G5"
4	3530.59	3530.62	3530.48	3530.34	3530.20

NOTE : Elev. "A", "B" and "C" are top of slab at ℄ of Abutment. Elev. "E" and "F" are at top of wingwall 14 ¼" below top of slab elevation. Elev. "G1", "G2", "G3", "G4", and "G5" are top of grout pad elevations at ℄ Abutment.
Top of Grout Pads shall be Level and Smooth.

ABUTMENT NO. 4 DETAILS (A)
FOR
EASTBOUND LANES
197' - 11⅞" PRESTR. GIRDER BRIDGE

40' - 0" ROADWAY — 33° 13' 41" LHF SKEW
OVER DEER VIEW ROAD — SEC. 4/9-T3N-R6E
STA. 1235 + 14.49 TO 1237 + 12.47 — IM 0901(38)40
STR. NO. 47-088-551 — HL-93

MEADE COUNTY
S. D. DEPT. OF TRANSPORTATION
JANUARY 2014

DESIGNED BY	CK. DES. BY	DRAFTED BY	
BAF/PW	TD	MG	Steve A Johnson BRIDGE ENGINEER
MEAD5580	5580GL09		

STATE OF	PROJECT	SHEET NO.	TOTAL SHEETS
S.D.	IM 0901(38)40	E169	E199

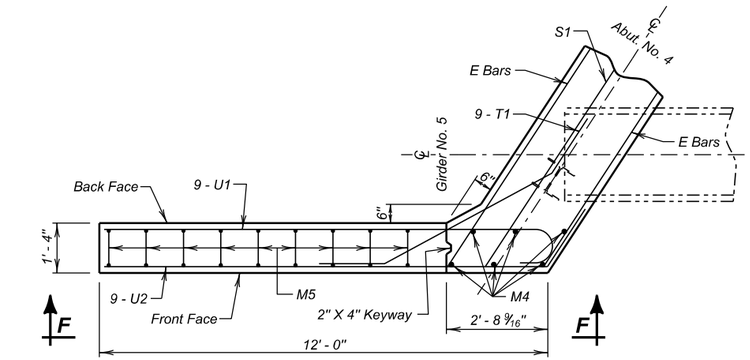

DETAIL "Z"

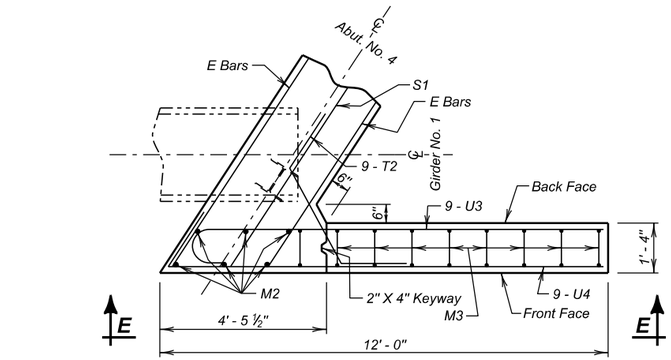

DETAIL "W"

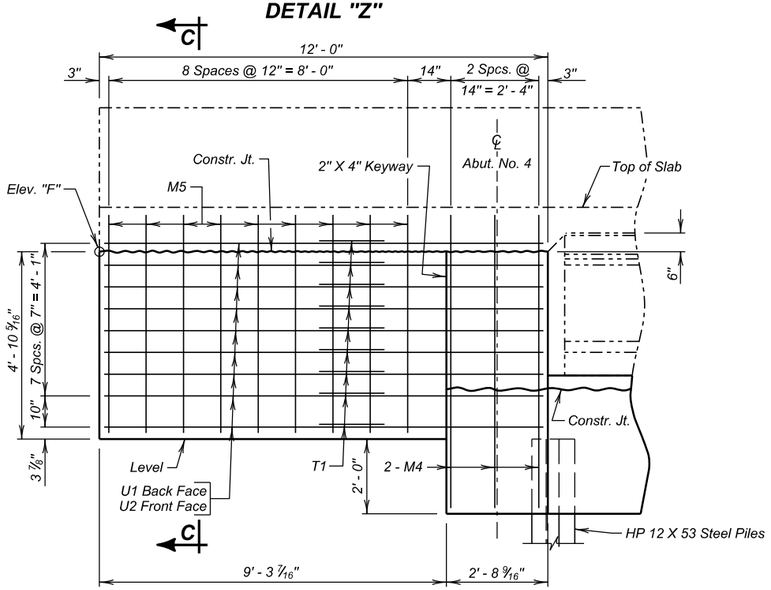

VIEW F - F

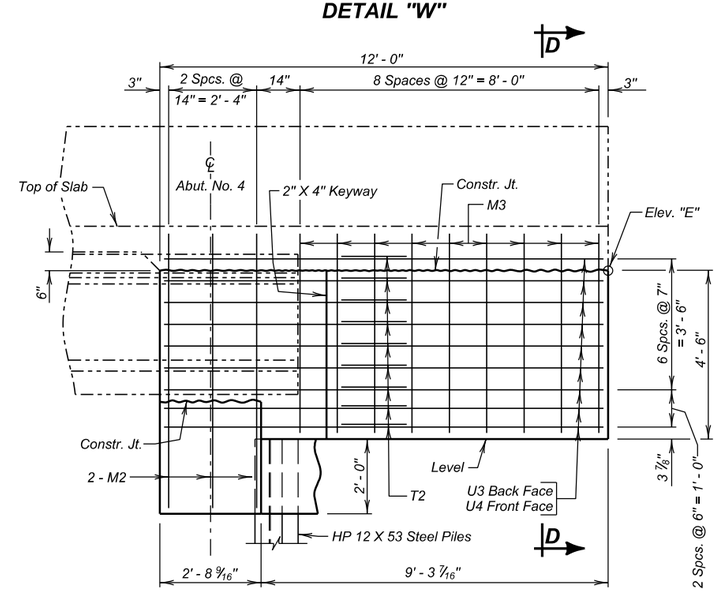

VIEW E - E

REINFORCING SCHEDULE

Mk.	No.	Size	Length	Type
E1	4	8	50' - 7"	Str.
E2	6	8	9' - 6"	Str.
E3	4	4	7' - 10"	Str.
E4	8	4	9' - 10"	Str.
E5	4	4	7' - 5"	Str.
E6	2	4	2' - 3"	Str.
E7	4	4	3' - 3"	Str.
E8	2	4	2' - 1"	Str.
E9	10	7	50' - 7"	Str.
E11	2	4	19' - 7"	Str.
G1	46	5	10' - 3"	T1
G2	7	5	8' - 8"	S6
G3	2	5	11' - 1"	T1
△ L1	34	4	4' - 7"	17A
M1	83	5	6' - 7"	Str.
M2	6	5	7' - 4"	Str.
M3	9	5	11' - 6"	17
M4	6	5	8' - 1"	Str.
M5	9	5	13' - 0"	17
△ S1	2	9	50' - 7"	Str.
△ S2	49	5	8' - 3"	14A
T1	9	6	9' - 1"	19
T2	9	6	6' - 5"	19
U1	9	9	13' - 5"	1A
U2	9	5	13' - 6"	19A
U3	9	9	12' - 5"	1A
U4	9	5	13' - 3"	19A
W1	5	5	5' - 8"	19
W2	10	4	7' - 8"	14
W3	30	4	3' - 11"	17
W4	22	4	5' - 2"	17

Bending Details

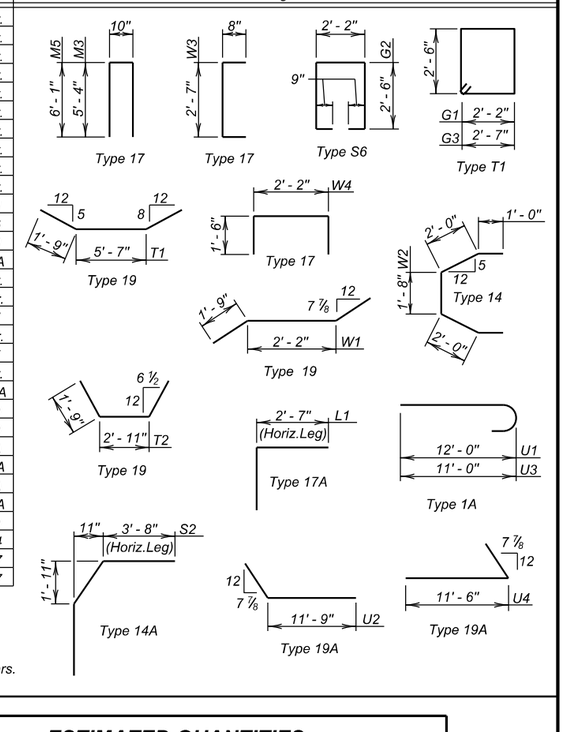

NOTES:
All dimensions are out to out of bars.
△ Bars to be Epoxy Coated.

ESTIMATED QUANTITIES

	ITEM	UNIT	QUANTITY
ϕ	Class A45 Concrete, Bridge	Cu. Yd.	36.9
	Reinforcing Steel	Lb.	4821
	Epoxy Coated Reinforcing Steel	Lb.	870
	Structure Excavation, Bridge	Cu. Yd.	14.0
	HP 12 x 53 Steel Test Pile, Furnish and Drive	Ft.	1 @ 50'
	HP 12 x 53 Steel Bearing Pile, Furnish and Drive	Ft.	6 @ 45' = 270'
	Preboring Pile	Ft.	7 @ 10' = 70'

ϕ Includes 0.1 cu. yds. for grout pads.

Note: Concrete shall be placed in the space under the beams (within the backwall width) during the pour. Care shall be taken to get the concrete vibrated into this area. If upon form removal the space is not completely filled and consolidated, the contractor shall grout the remaining voids.

✳ Z1 bars and mechanical splices are listed and included in superstructure.
See SUPERSTRUCTURE DETAILS (A) & (B).

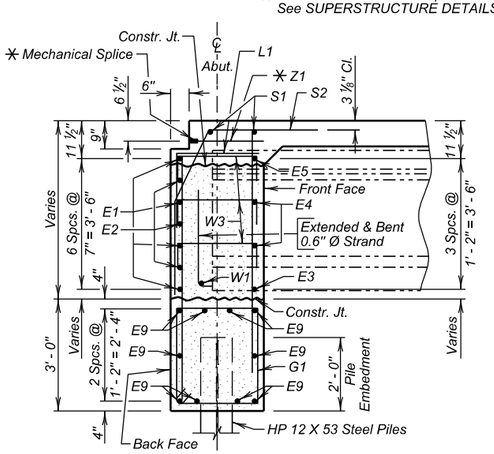

SEC. A - A

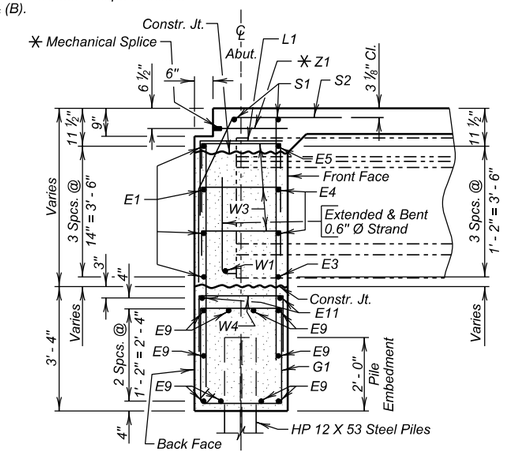

SEC. B - B

NOTE -
≠ Listed on SUPERSTRUCTURE DETAILS (B)

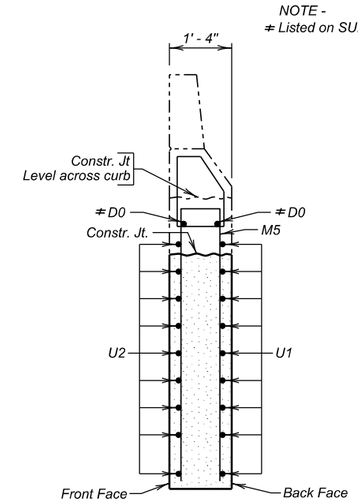

SEC. C - C

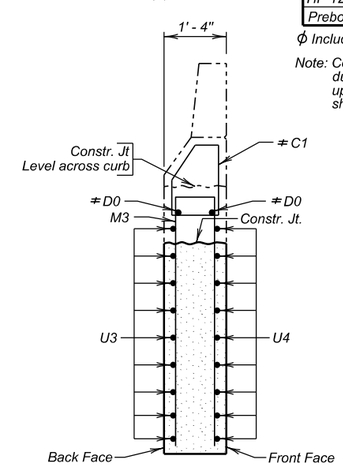

SEC. D - D

ABUTMENT NO. 4 DETAILS (B)

FOR

EASTBOUND LANES

197' - 11 7/8" PRESTR. GIRDER BRIDGE

40' - 0" ROADWAY — 33° 13' 41" LHF SKEW
OVER DEER VIEW ROAD — SEC. 4/9-T3N-R6E
STA. 1235 + 14.49 TO 1237 + 12.47 — IM 0901(38)40
STR. NO. 47-088-551 — HL-93

MEADE COUNTY
S. D. DEPT. OF TRANSPORTATION
JANUARY 2014

DESIGNED BY	CK. DES. BY	DRAFTED BY	
BAF/PW	TD	MG	Steve A. Johnson BRIDGE ENGINEER
MEAD5580	5580GL10		

STATE OF	PROJECT	SHEET NO.	TOTAL SHEETS
S.D.	IM 0901(38)40	E170	E199

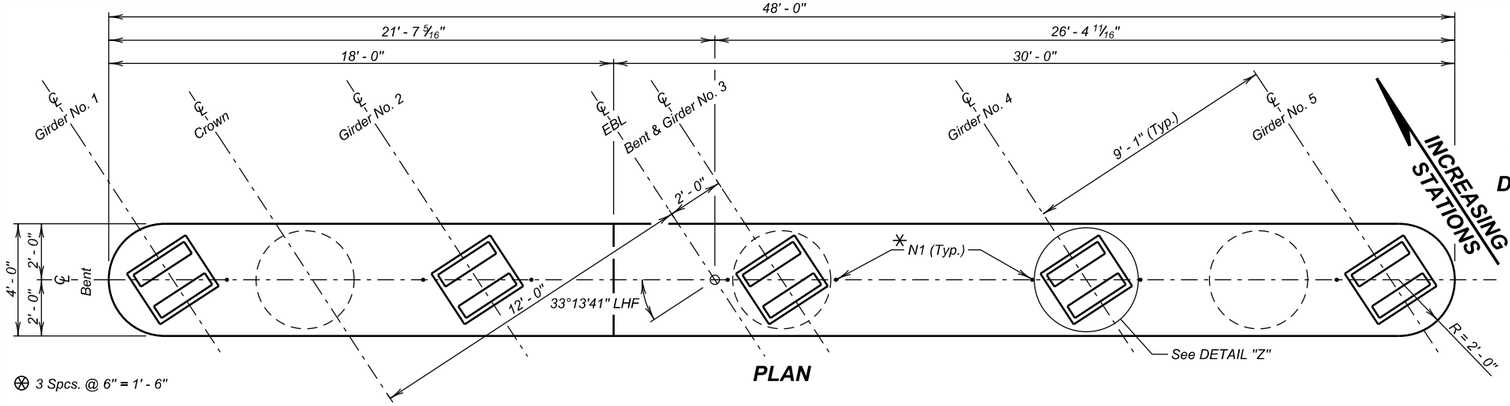

PLAN

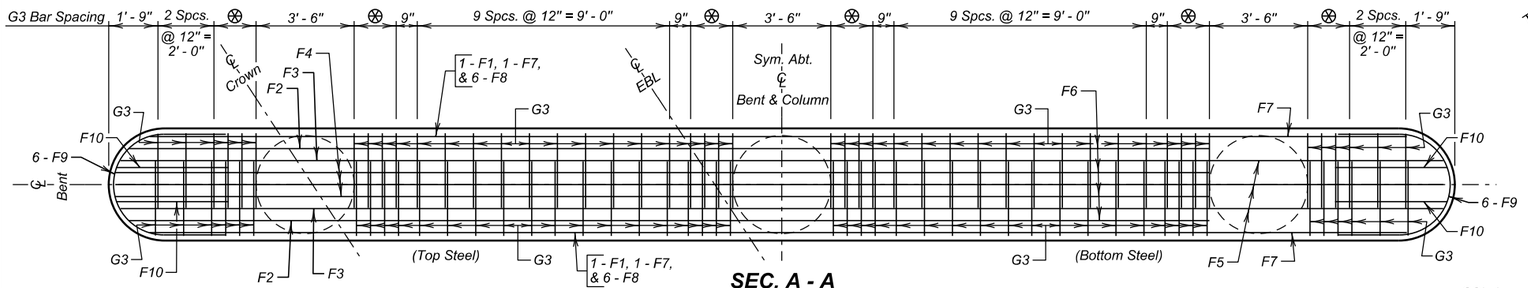

SEC. A - A

✳ NOTE:
The portion of the N1 bar above the bent cap is to be coated with asphalt paint or wrapped with tar paper to a minimum thickness of 1/16". N1 bar may be shifted slightly off ℄ Pier to avoid top mat of resteel.

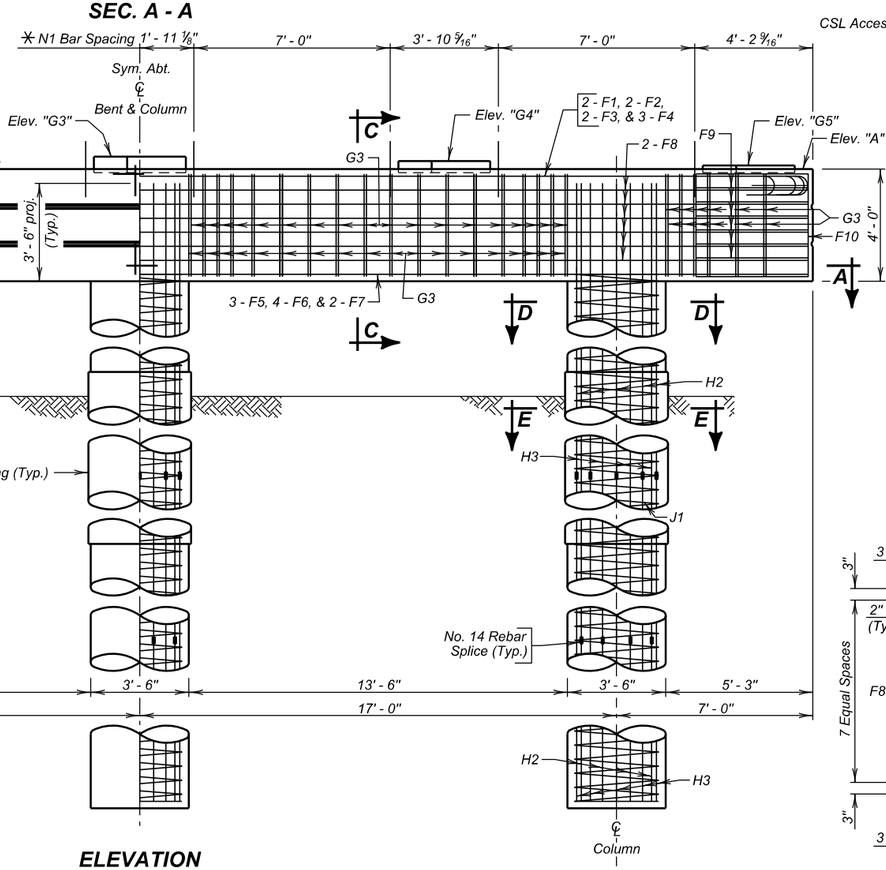

ELEVATION

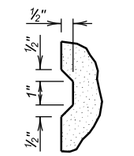

DETAIL "X"

TABLE OF ELEVATIONS

Bent No.	★Elev. "G1"	★Elev. "G2"	★Elev. "G3"	★Elev. "G4"	★Elev. "G5"	Elev. "A"	Elev. "B"	Elev. "C"	Elev. "D"	Elev. "E"
2	3531.36	3531.37	3531.21	3531.05	3530.89	3530.73	3530.98	3514.00	3500.00	3468.73
3	3531.02	3531.04	3530.89	3530.74	3530.59	3530.44	3530.69	3514.00	3503.00	3468.44

NOTE: Top of Grout Pad shall be level and smooth .
★Elevations are Top of Grout Pad at centerline of bent.

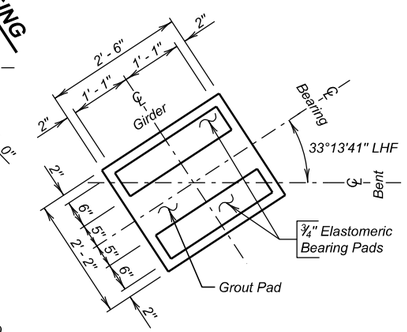

DETAIL "Z"

REINFORCING SCHEDULE

(For One Bent - 2 Required)

Mk.	No.	Size	Length	Type	Bending Details
F1	2	8	46' - 11"	1	
F2	2	8	48' - 5"	1	
F3	2	8	49' - 0"	1	
F4	3	8	49' - 4"	1	
F5	3	8	47' - 2"	Str.	
F6	4	8	30' - 6"	Str.	
F7	2	8	45' - 1"	Str.	
F8	12	4	45' - 1"	Str.	
F9	12	4	10' - 1"	S11	
F10	4	4	11' - 8"	17	
G3	96	4	12' - 9"	T1	
H2	54	14	24' - 0"	Str.	
H3	54	14	42' - 3"	Str.	
J2	3	4	1213' - 9"	Spiral	
N1	8	8	2' - 0"	Str.	

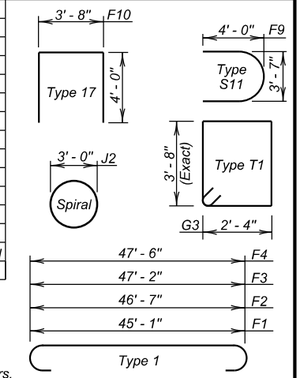

NOTES-
All dimensions are out to out of bars.
Spirals - Use 6" pitch and 1 ½ extra turns at each end. Use 1 ½ turns for lap at splice as required, or weld as approved by the Office of Bridge Design.
Use 4 vertical spacer bars per column. Spirals may be smooth bars.
Bar length shown does not not include splices.

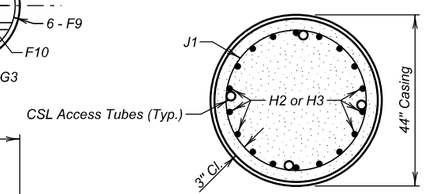

SEC. E - E

ESTIMATED QUANTITIES

ITEM	UNIT	QUANTITY Bent No. 2	QUANTITY Bent No. 3
⌀ Class A45 Concrete, Bridge	Cu. Yd.	42.7	42.4
Reinforcing Steel	Lb.	33244	33244
Drilled Shaft Excavation	Cu. Yd.	47.1	47.4
Class A45 Concrete, Drilled Shaft	Cu. Yd.	48.3	48.6
44" Permanent Casing	Ft.	42	33
No. 14 Rebar Splice	Each	54	54

⌀ Includes 0.3 Cu. Yds. for Grout Pads at Bents 2 & 3.

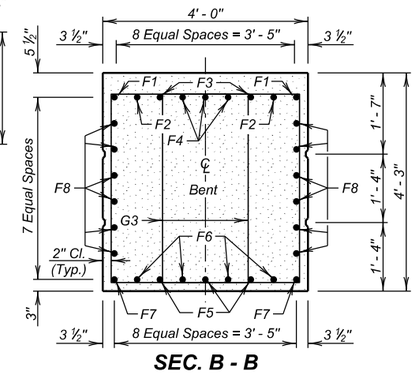

SEC. B - B

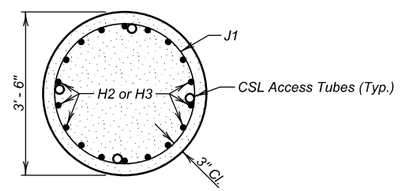

SEC. D - D

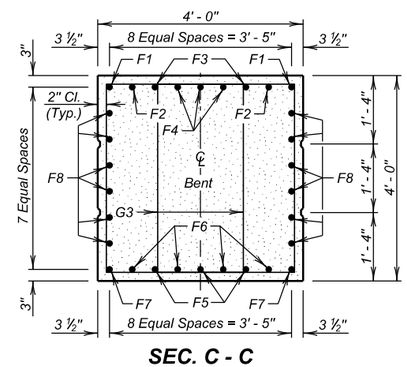

SEC. C - C

BENT DETAILS
FOR
EASTBOUND LANES

197' - 11⅞" PRESTR. GIRDER BRIDGE

40' - 0" ROADWAY
OVER DEER VIEW ROAD
STA. 1235 + 14.49 TO 1237 + 12.47
STR. NO. 47-088-551

33° 13' 41" LHF SKEW
SEC. 4/9-T3N-R6E
IM 0901(38)40
HL-93

MEADE COUNTY
S. D. DEPT. OF TRANSPORTATION
JANUARY 2014

DESIGNED BY	CK. DES. BY	DRAFTED BY	
JMH/PW	TD	MG	Steve A Johnson BRIDGE ENGINEER
MEAD5580	5580GL11		

STATE OF	PROJECT	SHEET NO.	TOTAL SHEETS
S.D.	IM 0901(38)40	E171	E199

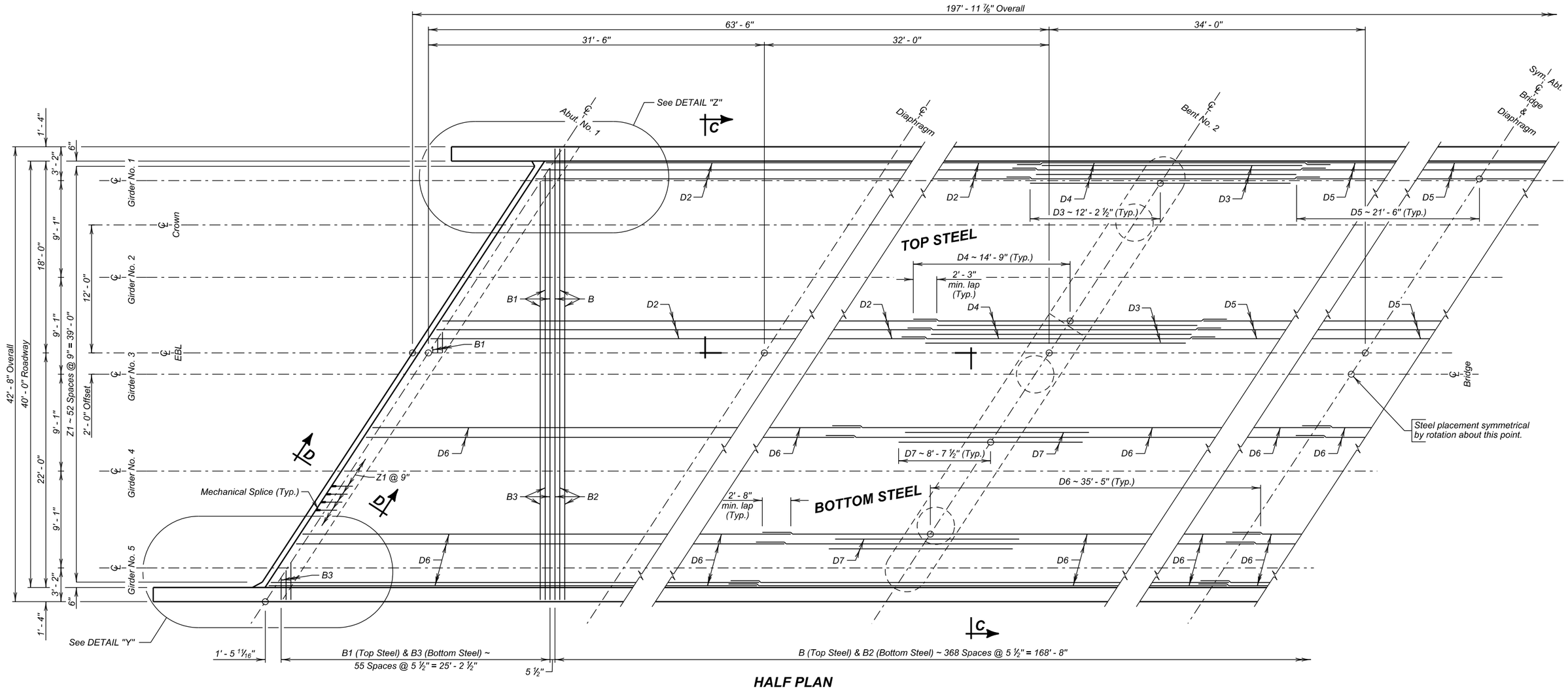

HALF PLAN

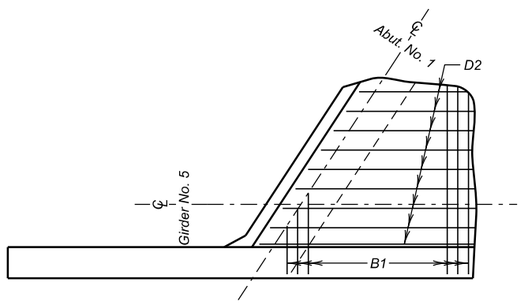

DETAIL "Y"
(Top Steel)

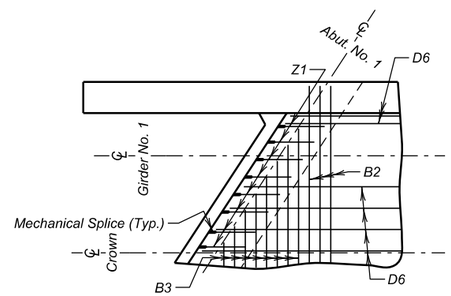

DETAIL "Z"
(Bottom Steel)

SUPERSTRUCTURE DETAILS (A)
FOR
EASTBOUND LANES

197' - 11 7/8" PRESTR. GIRDER BRIDGE

40' - 0" ROADWAY — 33° 13' 41" LHF SKEW
OVER DEER VIEW ROAD — SEC. 4/9-T3N-R6E
STA. 1235 + 14.49 TO 1237 + 12.47 — IM 0901(38)40
STR. NO. 47-088-551 — HL-93

MEADE COUNTY
S. D. DEPT. OF TRANSPORTATION
JANUARY 2014

DESIGNED BY	CK. DES. BY	DRAFTED BY	
BAF/PW	DC/TD	MG	Steve A. Johnson BRIDGE ENGINEER
MEAD5580	5580GL12		

STATE OF	PROJECT	SHEET NO.	TOTAL SHEETS
S.D.	IM 0901(38)40	E172	E199

REINFORCING SCHEDULE

	Mk.	No.	Size	Length	Type
∅	B	369	4	43' - 4"	1
≠ ∅	B1	56	4	43' - 7"	1A
	B2	369	4	42' - 4"	Str.
≠	B3	56	4	42' - 7"	Str.
	B15	12	5	14' - 6"	Str.
	B16	8	4	54' - 0"	Str.
	B17	8	4	8' - 6"	19B
	B18	12	8	4' - 3"	19B
	B19	12	5	2' - 4"	Str.
	B20	12	6	3' - 6"	17A
	C1	414	5	5' - 7"	T1A
	C2	386	5	5' - 1"	S11
	C3	4	5	5' - 0"	S11
	C4	4	5	5' - 0"	S11
	C5	4	5	5' - 0"	S11
	C6	4	5	6' - 8"	T1
	C7	4	5	6' - 9"	T1
	C8	4	5	6' - 11"	T1
	C9	4	5	7' - 0"	T1
	C10	16	6	5' - 11"	T1A
	C11	16	5	7' - 1"	T1
	C12	4	6	5' - 6"	17
	C13	4	5	5' - 4"	17
	D	16	4	55' - 4"	Str.
	D0	16	5	55' - 8"	Str.
	D1	48	4	49' - 6"	Str.
	D2	98	4	51' - 8"	Str.
	D3	96	5	24' - 5"	Str.
	D4	98	5	29' - 6"	Str.
	D5	49	4	43' - 0"	Str.
	D6	144	5	51' - 1"	Str.
	D7	56	5	17' - 3"	Str.
✳	T1	16	6	7' - 10"	Str.
✳	T2	48	5	9' - 10"	Str.
✳	T3	16	5	7' - 5"	Str.
✳	T4	12	5	5' - 0"	19C
✳	T5	8	6	47' - 2"	Str.
✳	T6	20	5	6' - 8"	19C
✳	T7	20	5	5' - 1"	19C
✳	T8	32	6	2' - 6"	Str.
✳	T9	4	5	3' - 7"	Str.
	U5	32	4	12' - 11"	S4
	U6	40	6	13' - 5"	S4
✳	U7	64	4	4' - 3"	17
	Z1	106	7	2' - 0"	Str.

Bending Details

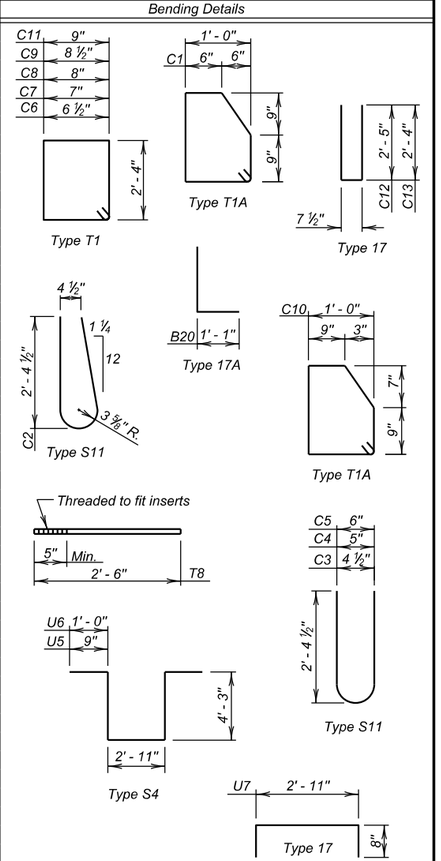

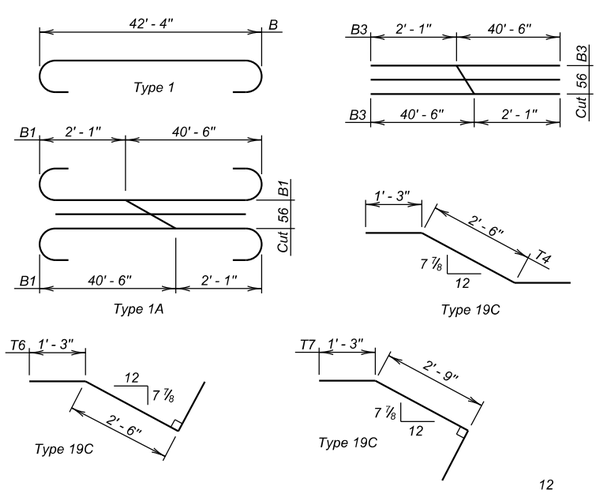

NOTES -

≠ See cutting diagram.

All reinforcing steel shall be epoxy coated except as noted.
See Approach Slab sheet for location of Z1 bars.
All dimensions are out to out of bars.

✳ Bars not to be epoxy coated.

∅ Tip bars as required to maintain top and bottom clear cover.

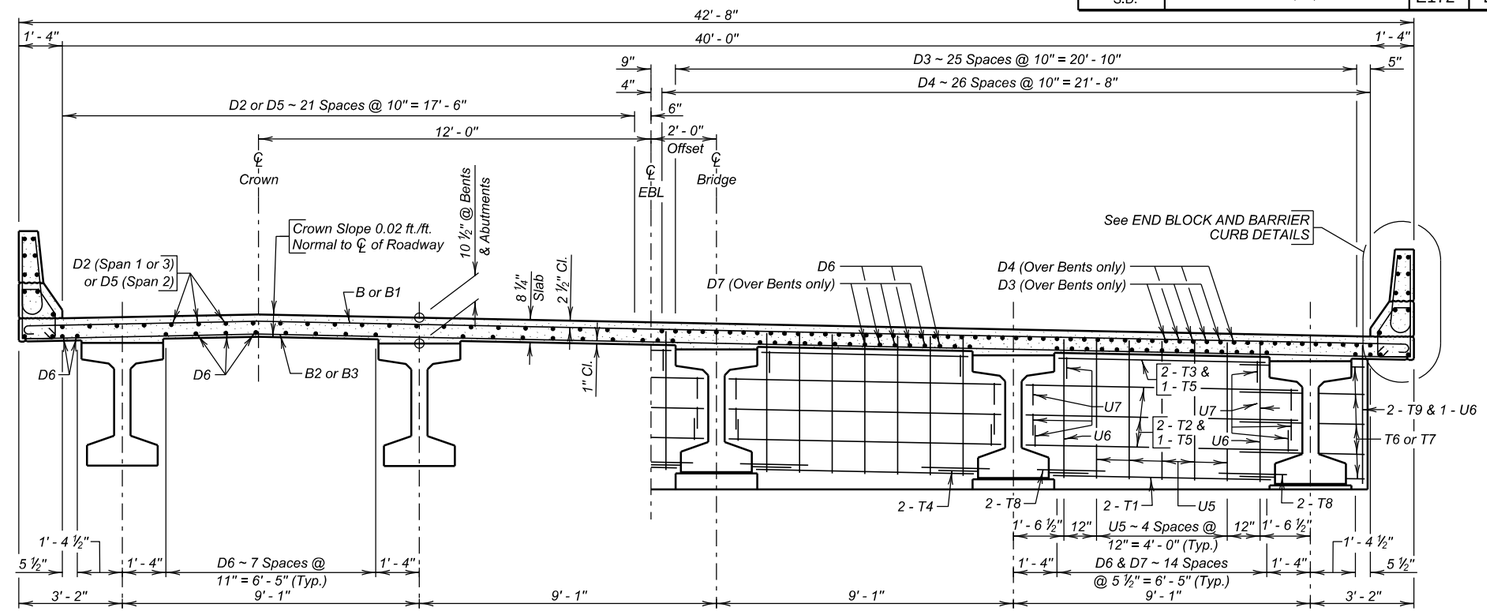

SEC. C - C

(Midspan diaphragm not shown in this section, see DIAPHRAGM DETAILS sheet.)

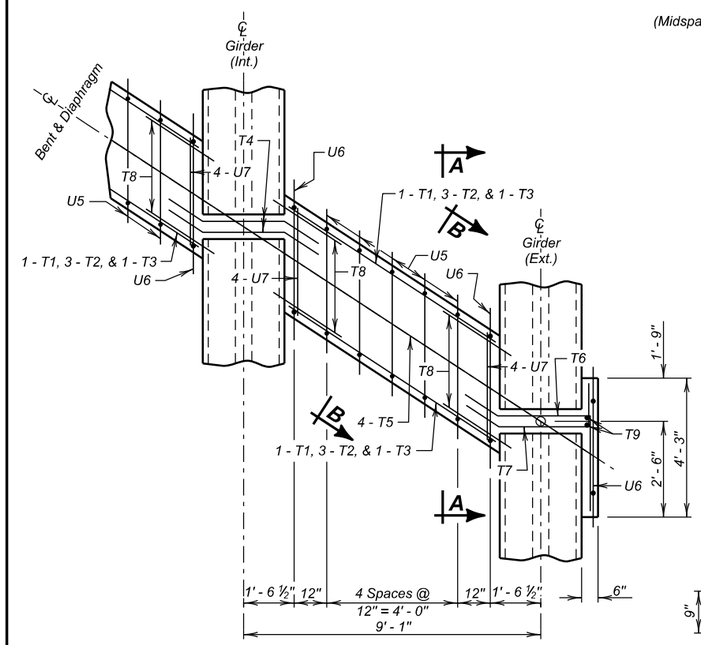

BENT DIAPHRAGMS

(Slab Not Shown)

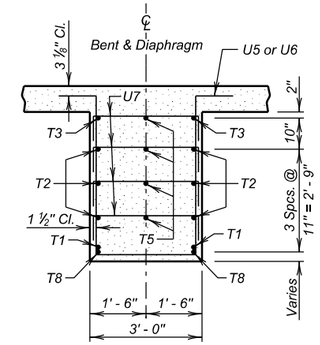

SEC. B - B

(Girders Not Shown)

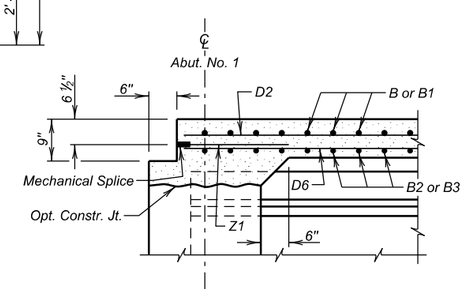

SEC. D - D

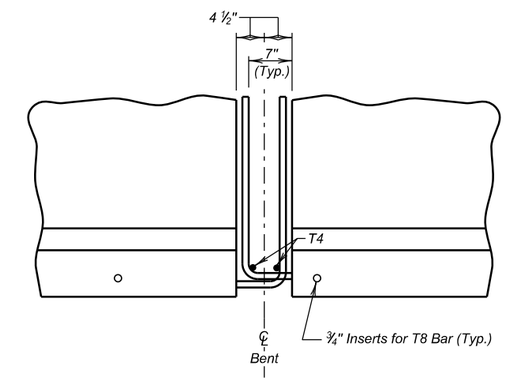

SEC. A - A

(Showing extended and bent strand detail and T4 bar placement at Pier. T6 & T7 similar at exterior girder.)

ESTIMATED QUANTITIES

	ITEM	UNIT	QUANTITY
☆	Class A45 Concrete, Bridge Deck	Cu.Yd.	292.6
∅	Epoxy Coated Reinforcing Steel	Lb.	53586
∅	Reinforcing Steel	Lb.	1996
	45" Minnesota Shape Prestressed Concrete Beam	Ft.	969
	No. 7 Rebar Splice	Each	106
	Concrete Penetrating Sealer	Sq.Yd.	875

∅ Includes quantities for Bent Diaphragms, Barrier Curbs, and Slab.

☆ Includes quantities for Bent Diaphragms, Barrier Curbs, Slab and Haunch. (Average depth of 1 ¾" used for Haunch Quantity.) Concrete Quantity for Barrier Curbs is 0.0842 Cu.Yd. / Ft. and for End blocks is 1.1659 Cu.Yd. each.

SUPERSTRUCTURE DETAILS (B)

FOR

EASTBOUND LANES

197' - 11⅞" PRESTR. GIRDER BRIDGE

40' - 0" ROADWAY — 33° 13' 41" LHF SKEW
OVER DEER VIEW ROAD — SEC. 4/9-T3N-R6E
STA. 1235 + 14.49 TO 1237 + 12.47 — IM 0901(38)40
STR. NO. 47-088-551 — HL-93

MEADE COUNTY

S. D. DEPT. OF TRANSPORTATION

JANUARY 2014

DESIGNED BY	CK. DES. BY	DRAFTED BY	
BAF/PW	DC/TD	MG	Steve A. Johnson BRIDGE ENGINEER
MEAD5580	5580GL13		

STATE OF	PROJECT	SHEET NO.	TOTAL SHEETS
S.D.	IM 0901(38)40	E173	E199

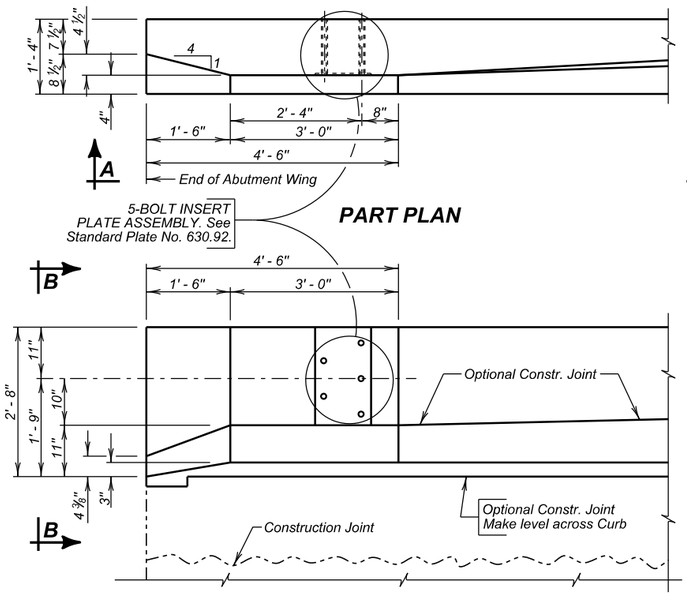

PART PLAN

VIEW A - A

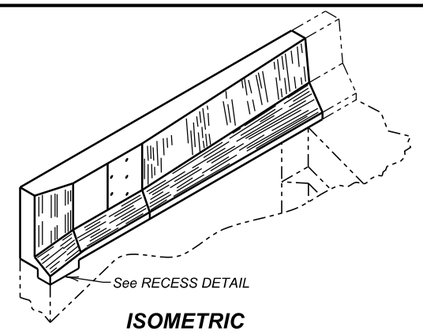

ISOMETRIC VIEW

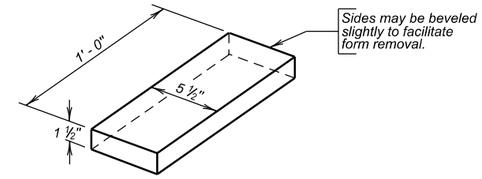

RECESS DETAIL

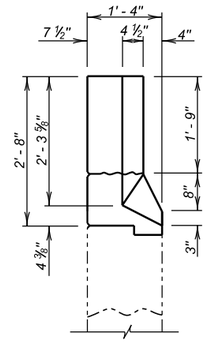

VIEW B - B

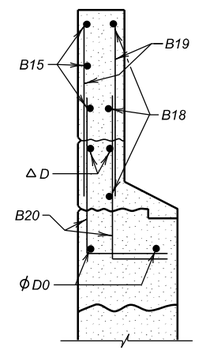

SEC. C - C

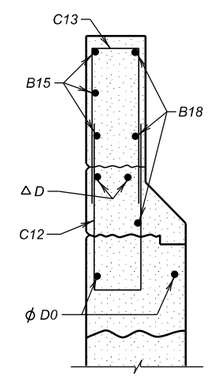

SEC. D - D

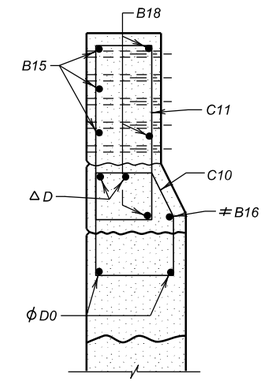

SEC. E - E

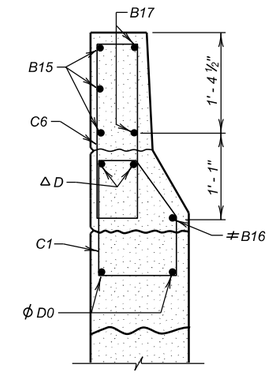

SEC. F - F

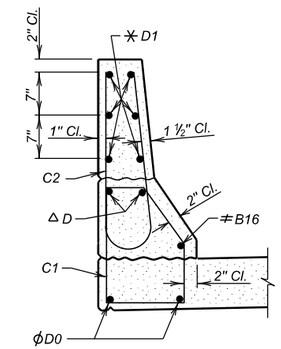

SEC. G - G

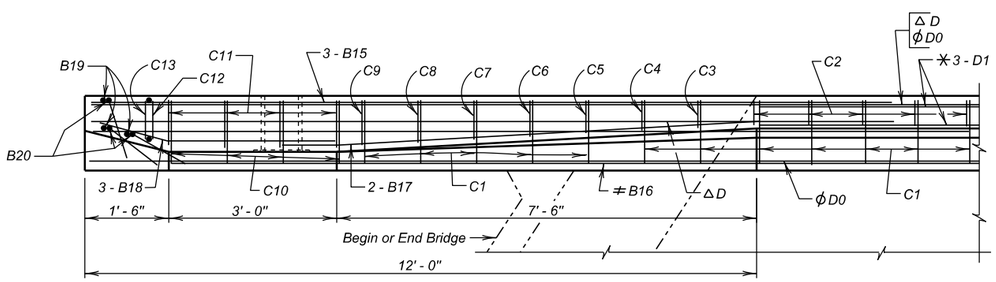

ϕ Min. Lap = 2' - 3"
✳ Min. Lap = 2' - 0"
△ Min. Lap = 1' - 9"
≠ Min. Lap = 1' - 0"

PLAN

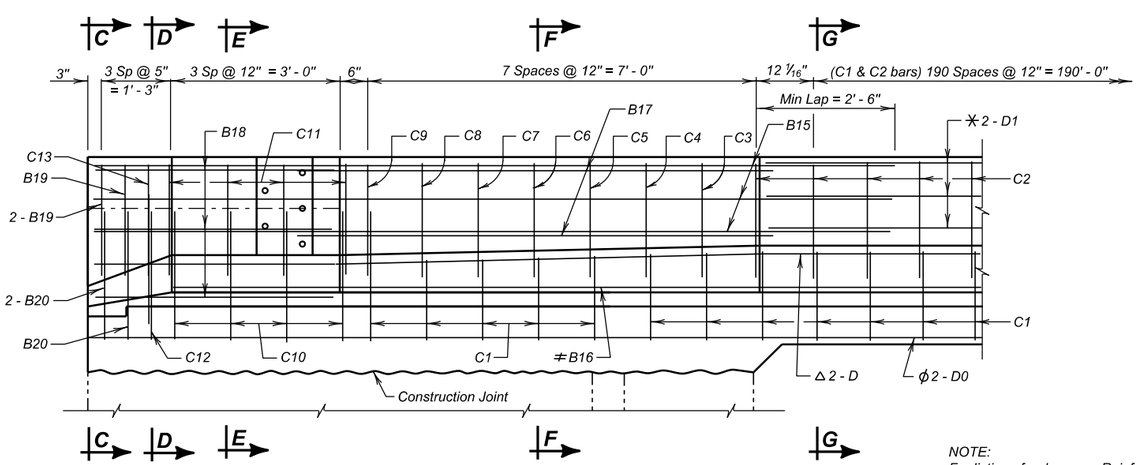

ELEVATION

NOTE:
For listing of re-bars see Reinforcing Schedule on SUPERSTRUCTURE DETAILS (B).

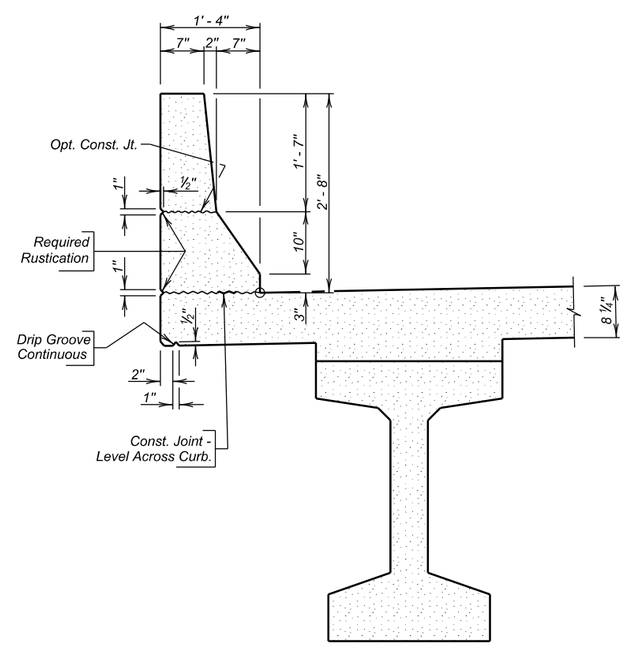

BARRIER DETAILS

END BLOCK & BARRIER CURB DETAILS
FOR
EASTBOUND LANES

197' - 11⅞" PRESTR. GIRDER BRIDGE

40' - 0" ROADWAY — 33° 13' 41" LHF SKEW
OVER DEER VIEW ROAD — SEC. 4/9-T3N-R6E
STA. 1235 + 14.49 TO 1237 + 12.47 — IM 0901(38)40
STR. NO. 47-088-551 — HL-93

MEADE COUNTY
S. D. DEPT. OF TRANSPORTATION
JANUARY 2014

DESIGNED BY	CK. DES. BY	DRAFTED BY	
PW	TD	MG	Steve A. Johnson BRIDGE ENGINEER
MEAD5580	5580GL14		

STATE OF	PROJECT	SHEET NO.	TOTAL SHEETS
S.D.	IM 0901(38)40	E174	E199

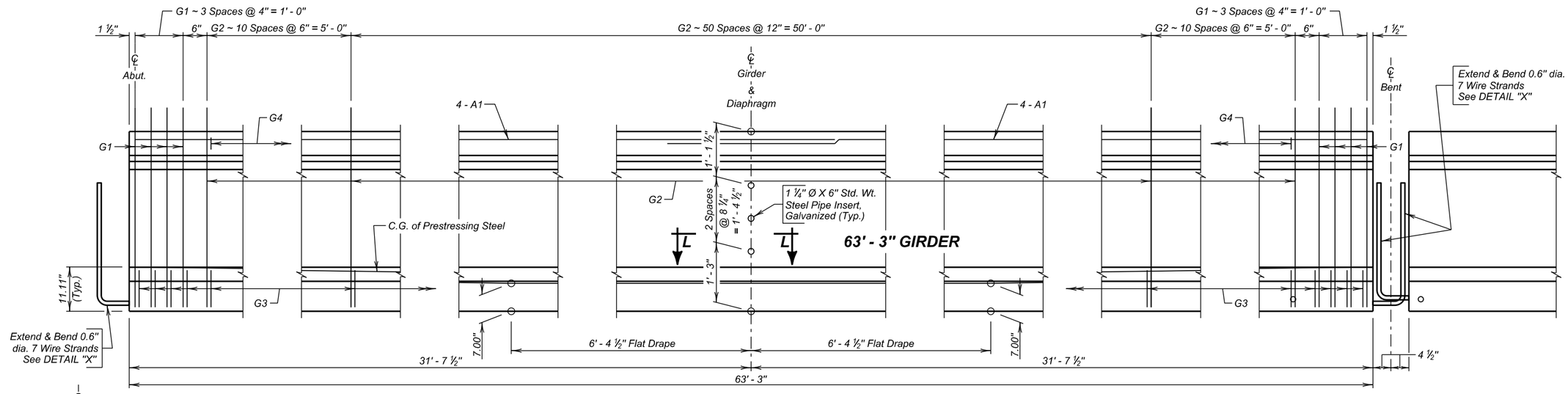

63' - 3" GIRDER

ELEVATION

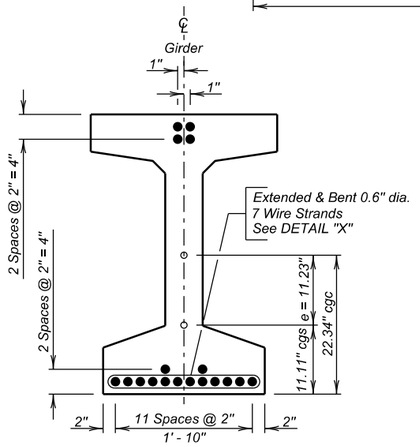

END VIEW

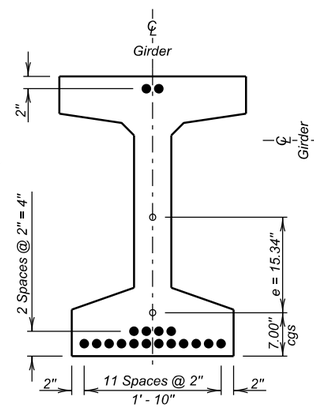

℄ SECTION

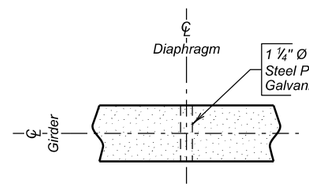

SEC. L - L

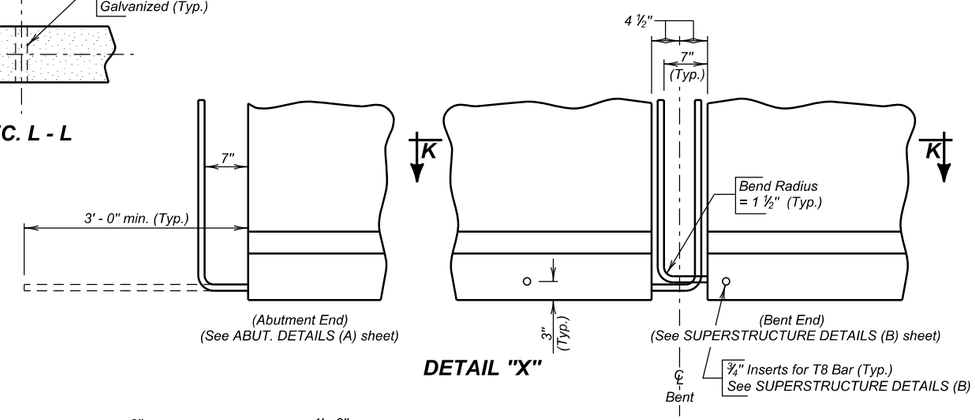

DETAIL "X"

REINFORCING SCHEDULE
(For One Girder)

Mk.	No.	Size	Length	Type	Bending Details
A1	8	7	33' - 3"	Str.	
G1	8	5	8' - 6"	S11	
G2	71	4	8' - 6"	S11	
G3	79	4	4' - 10"	S3A	
G4	16	4	2' - 8"	17	

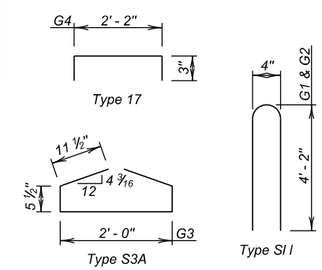

All dimensions are out to out of bars.

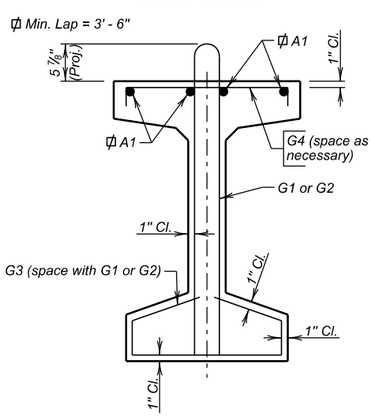

STIRRUP DETAILS

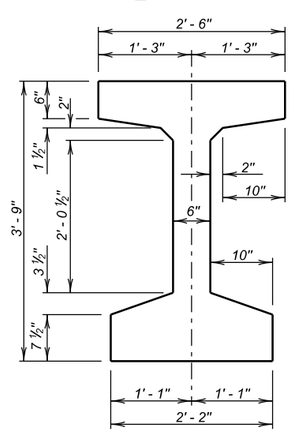

TYPE 45 GIRDER

63' - 3" GIRDERS
(18 ~ 0.6 Dia. Type 270 Low Lax. Strands)

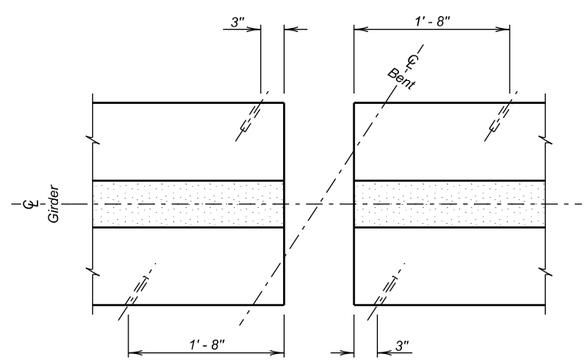

SEC. K - K
Layout for inserts at beam ends (Bent only)

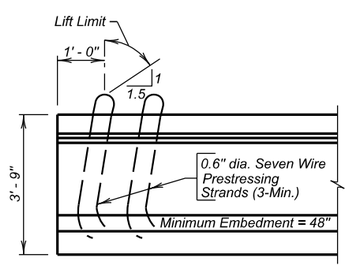

TYPICAL LIFTING DEVICE

63' - 3" GIRDER DETAILS
FOR
EASTBOUND LANES

197' - 11⅞" PRESTR. GIRDER BRIDGE

40' - 0" ROADWAY — 33° 13' 41" LHF SKEW
OVER DEER VIEW ROAD
STA. 1235 + 14.49 TO 1237 + 12.47 — IM 0901(38)40
STR. NO. 47-088-551 — HL-93

MEADE COUNTY
S. D. DEPT. OF TRANSPORTATION
JANUARY 2014

DESIGNED BY	CK. DES. BY	DRAFTED BY	
BAF/PW	DC/TD	MG	Steve A. Johnson BRIDGE ENGINEER
MEAD5580	5580GL15		

STATE OF	PROJECT	SHEET NO.	TOTAL SHEETS
S.D.	IM 0901(38)40	E175	E199

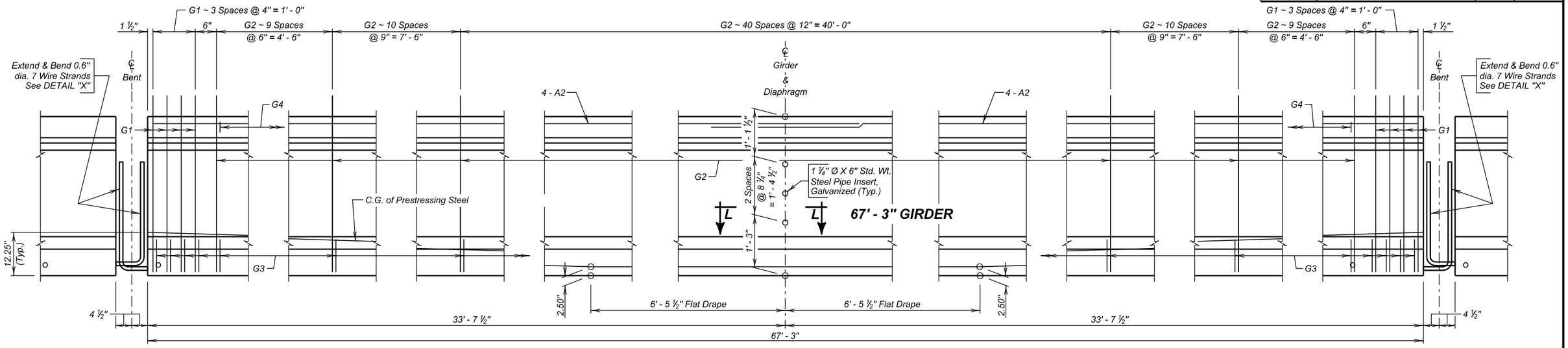

ELEVATION

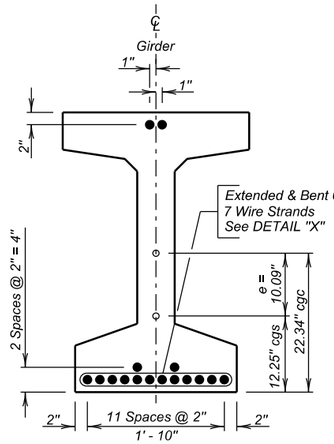

END VIEW

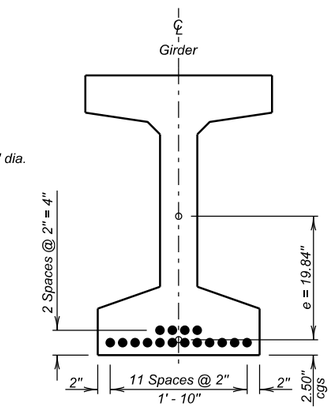

℄ SECTION

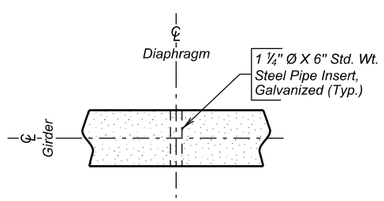

SEC. L - L

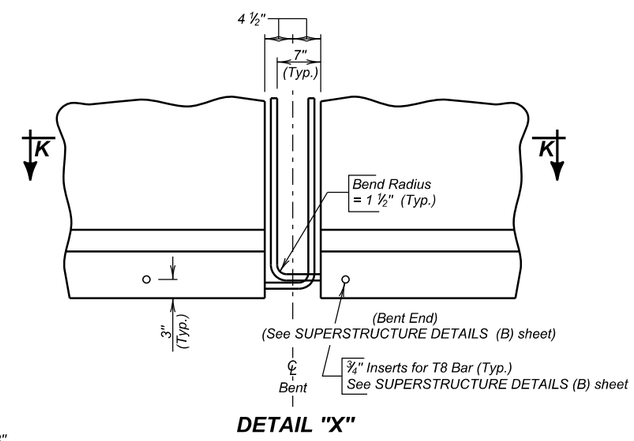

DETAIL "X"

REINFORCING SCHEDULE
(For One Girder)

Mk.	No.	Size	Length	Type	Bending Details
A2	8	7	35' - 3"	Str.	
G1	8	5	8' - 6"	S11	
G2	79	4	8' - 6"	S11	
G3	87	4	4' - 10"	S3A	
G4	17	4	2' - 8"	17	

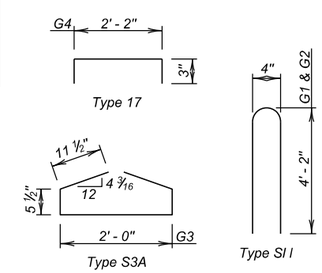

All dimensions are out to out of bars.

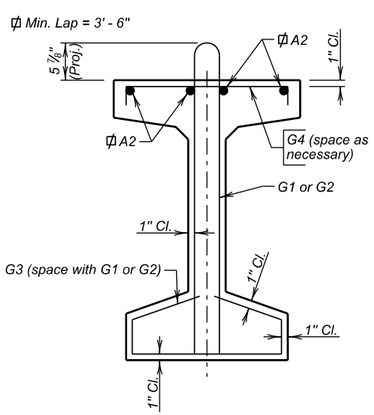

STIRRUP DETAILS

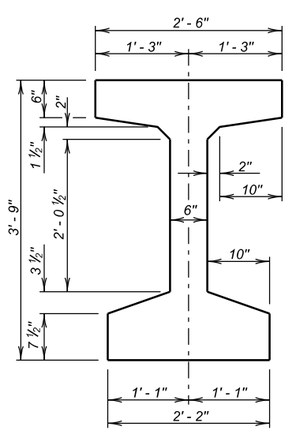

TYPE 45 GIRDER

67' - 3" GIRDERS
(16 ~ 0.6 Dia. Type 270 Low Lax. Strands)

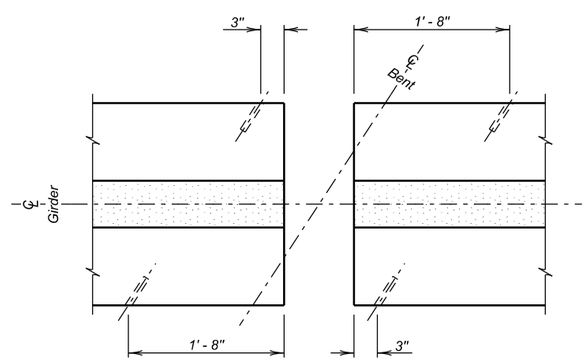

SEC. K - K
Layout for inserts at beam ends (Bent only)

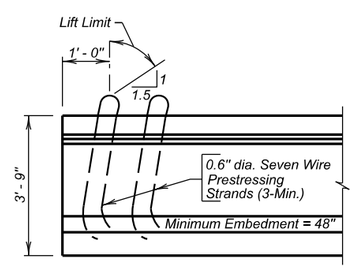

TYPICAL LIFTING DEVICE

67' - 3" GIRDER DETAILS
FOR
EASTBOUND LANES

197' - 11⅞" PRESTR. GIRDER BRIDGE

40' - 0" ROADWAY
OVER DEER VIEW ROAD
STA. 1235 + 14.49 TO 1237 + 12.47
STR. NO. 47-088-551

33° 13' 41" LHF SKEW
SEC. 4/9-T3N-R6E
IM 0901(38)40
HL-93

MEADE COUNTY
S. D. DEPT. OF TRANSPORTATION
JANUARY 2014

DESIGNED BY	CK. DES. BY	DRAFTED BY	
BAF/PW	DC/TD	MG	Steve A. Johnson BRIDGE ENGINEER
MEAD5580	5580GL16		

STATE OF	PROJECT	SHEET NO.	TOTAL SHEETS
S.D.	IM 0901(38)40	E176	E199

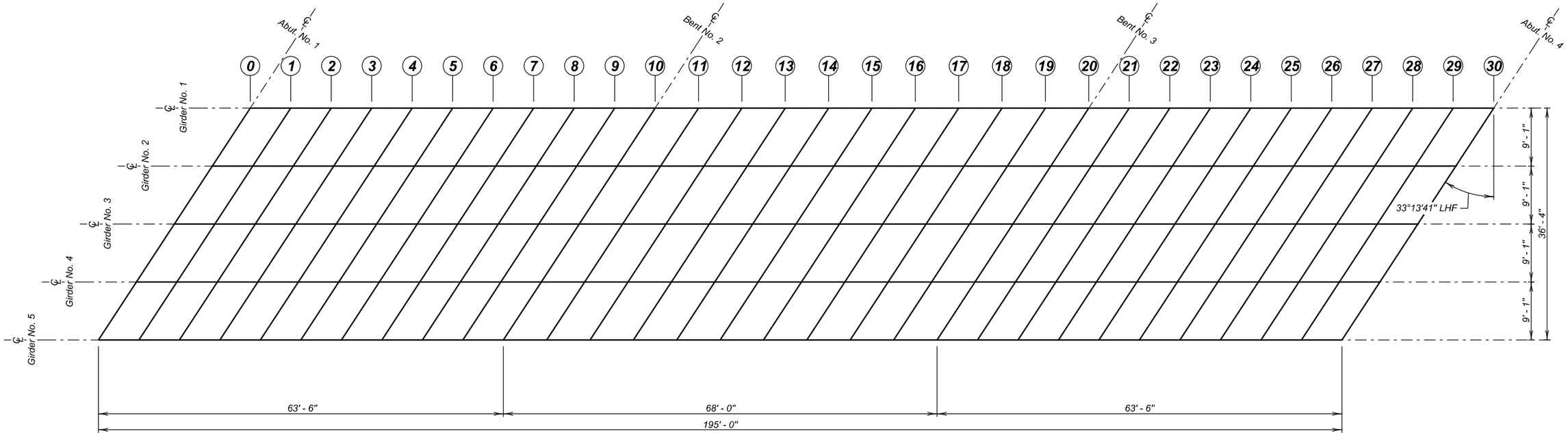

GIRDER LAYOUT

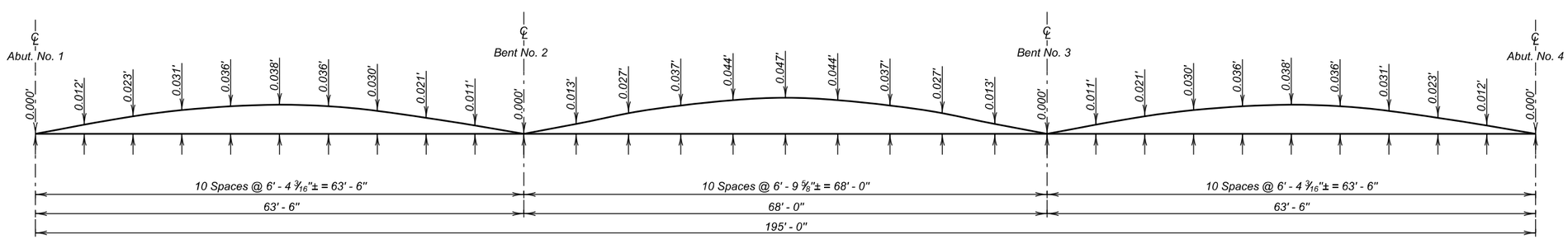

CAMBER DIAGRAM

The Camber shown is the amount which has been added to the theoretical slab elevations to get slab elevations shown in the table of Slab Form Elevations and Calculations on SLAB FORM ELEVATIONS sheet. Camber shown is for D. L. of slab, traffic barrier, and haunch, but does not include D. L. of beams.

ERECTION DATA

FOR

EASTBOUND LANES

197' - 11 7/8" PRESTR. GIRDER BRIDGE

40' - 0" ROADWAY	33° 13' 41" LHF SKEW
OVER DEER VIEW ROAD	SEC. 4/9-T3N-R6E
STA. 1235 + 14.49 TO 1237 + 12.47	IM 0901(38)40
STR. NO. 47-088-551	HL-93

MEADE COUNTY

S. D. DEPT. OF TRANSPORTATION

JANUARY 2014

DESIGNED BY	CK. DES. BY	DRAFTED BY	
BAF/PW	DC/TD	MG	Steve A Johnson BRIDGE ENGINEER
MEAD5580	5580GL17		

TABLE OF SLAB FORM ELEVATIONS AND CALCULATIONS

		0	1	2	3	4	5	6	7	8	9	10	11	12	13	14	15
Girder No. 1	Elev. "M"	3535.605	3535.584	3535.562	3535.536	3535.505	3535.470	3535.430	3535.385	3535.337	3535.285	3535.232	3535.198	3535.164	3535.126	3535.082	3535.033
	(-) Elev."N"																
	(=) d																
	(-) 0. 688'																
	(=) h																
Girder No. 2	Elev. "M"	3535.899	3535.880	3535.858	3535.833	3535.804	3535.769	3535.730	3535.687	3535.639	3535.588	3535.536	3535.504	3535.471	3535.434	3535.391	3535.343
	(-) Elev."N"																
	(=) d																
	(-) 0. 688'																
	(=) h																
Girder No. 3	Elev. "M"	3535.745	3535.727	3535.707	3535.683	3535.654	3535.621	3535.583	3535.541	3535.494	3535.444	3535.393	3535.362	3535.330	3535.294	3535.253	3535.206
	(-) Elev."N"																
	(=) d																
	(-) 0. 688'																
	(=) h																
Girder No. 4	Elev. "M"	3535.591	3535.574	3535.555	3535.531	3535.504	3535.472	3535.435	3535.394	3535.348	3535.299	3535.249	3535.220	3535.189	3535.153	3535.113	3535.067
	(-) Elev."N"																
	(=) d																
	(-) 0. 688'																
	(=) h																
Girder No. 5	Elev. "M"	3535.436	3535.420	3535.401	3535.379	3535.353	3535.322	3535.286	3535.246	3535.201	3535.153	3535.104	3535.076	3535.046	3535.012	3534.973	3534.928
	(-) Elev."N"																
	(=) d																
	(-) 0. 688'																
	(=) h																

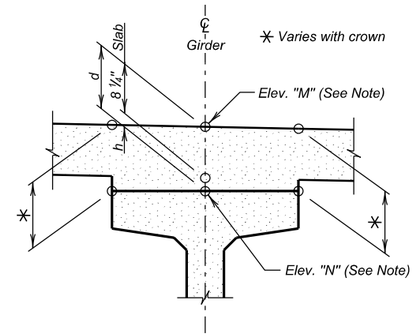

NOTE —

The table contains the information necessary to determine the depth of concrete over the girders at points shown. Calculations may be carried in the spaces provided. Elev. "M" is the design elevation of the top of slab before any concrete has been poured. This elevation includes correction for camber and dead load deflection. Elev. "N" is a field measured elevation taken on top of girders at the points shown with the girders in their positions. This elevation must be taken after erection is completed, but prior to placing any of the concrete. Girders shall not be supported between bearings when elevations are taken.

TABLE OF SLAB FORM ELEVATIONS AND CALCULATIONS

		16	17	18	19	20	21	22	23	24	25	26	27	28	29	30
Girder No. 1	Elev. "M"	3534.978	3534.917	3534.851	3534.781	3534.709	3534.665	3534.619	3534.570	3534.517	3534.460	3534.397	3534.330	3534.259	3534.184	3534.106
	(-) Elev."N"															
	(=) d															
	(-) 0. 688'															
	(=) h															
Girder No. 2	Elev. "M"	3535.289	3535.229	3535.164	3535.095	3535.025	3534.981	3534.937	3534.889	3534.837	3534.781	3534.719	3534.653	3534.583	3534.509	3534.433
	(-) Elev."N"															
	(=) d															
	(-) 0. 688'															
	(=) h															
Girder No. 3	Elev. "M"	3535.153	3535.094	3535.030	3534.962	3534.893	3534.851	3534.807	3534.760	3534.709	3534.654	3534.594	3534.529	3534.459	3534.386	3534.311
	(-) Elev."N"															
	(=) d															
	(-) 0. 688'															
	(=) h															
Girder No. 4	Elev. "M"	3535.015	3534.958	3534.895	3534.828	3534.760	3534.719	3534.676	3534.631	3534.581	3534.526	3534.467	3534.403	3534.335	3534.263	3534.189
	(-) Elev."N"															
	(=) d															
	(-) 0. 688'															
	(=) h															
Girder No. 5	Elev. "M"	3534.877	3534.821	3534.759	3534.693	3534.627	3534.586	3534.545	3534.500	3534.451	3534.398	3534.339	3534.277	3534.209	3534.139	3534.065
	(-) Elev."N"															
	(=) d															
	(-) 0. 688'															
	(=) h															

NOTE —

Based on a "d" of 10 ½" at the ℄ of each abutment and 10 ½" at the ℄ of the Bent (see SEC. C - C on SUPERSTRUCTURE DETAILS (B), it is anticipated that the midspan haunch dimension "h" over the ℄ of each girder will be 1 ¼". If when computing the dimensions in the table, it is found that any dimension "h" is less than zero or greater than 4" the Office of Bridge Design of the South Dakota Dept. of Transportation shall be notified immediately. After the "Table of Slab Form Elevations and Calculations" has been completely filled out and approved for deck forming, a copy shall be forwarded to the Office of Bridge Design for review and analysis for the purpose of securing information relative to camber growth in the beams. This information is necessary for preparing plans for future structures of this type.

SLAB FORM ELEVATIONS

FOR

EASTBOUND LANES

197' - 11⅞" PRESTR. GIRDER BRIDGE

40' - 0" ROADWAY — 33° 13' 41" LHF SKEW
OVER DEER VIEW ROAD — SEC. 4/9-T3N-R6E
STA. 1235 + 14.49 TO 1237 + 12.47 — IM 0901(38)40
STR. NO. 47-088-551 — HL-93

MEADE COUNTY

S. D. DEPT. OF TRANSPORTATION

JANUARY 2014

DESIGNED BY	CK. DES. BY	DRAFTED BY	
BAF/PW	DC/TD	MG	Steve A Johnson BRIDGE ENGINEER
MEAD5580	5580GL18		

STATE OF	PROJECT	SHEET NO.	TOTAL SHEETS
S.D.	IM 0901(38)40	E178	E199

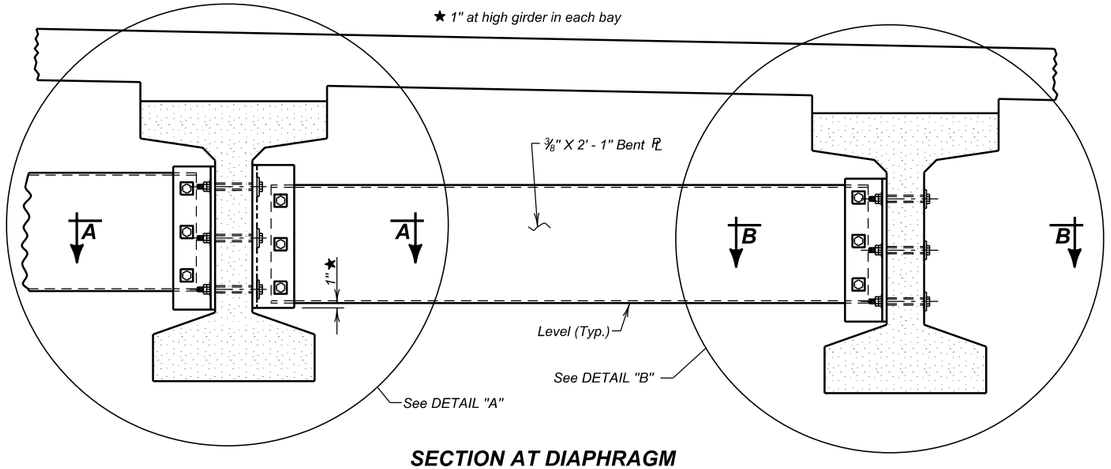

SECTION AT DIAPHRAGM

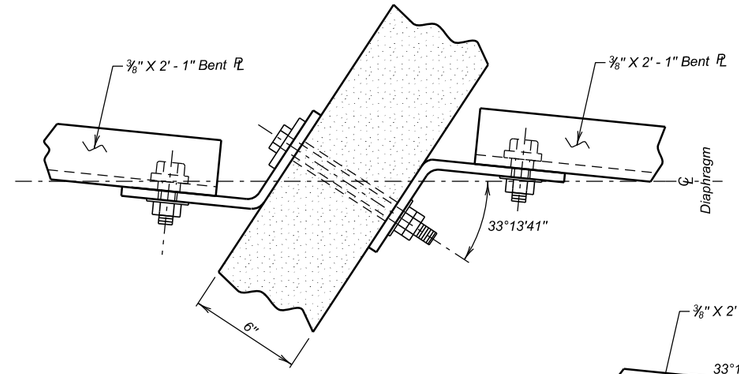

SEC. A - A

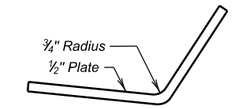

DETAIL "X"

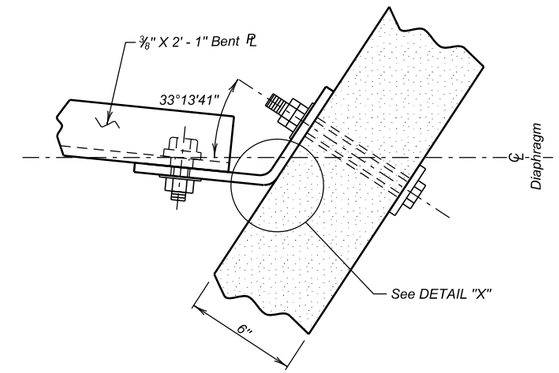

SEC. B - B

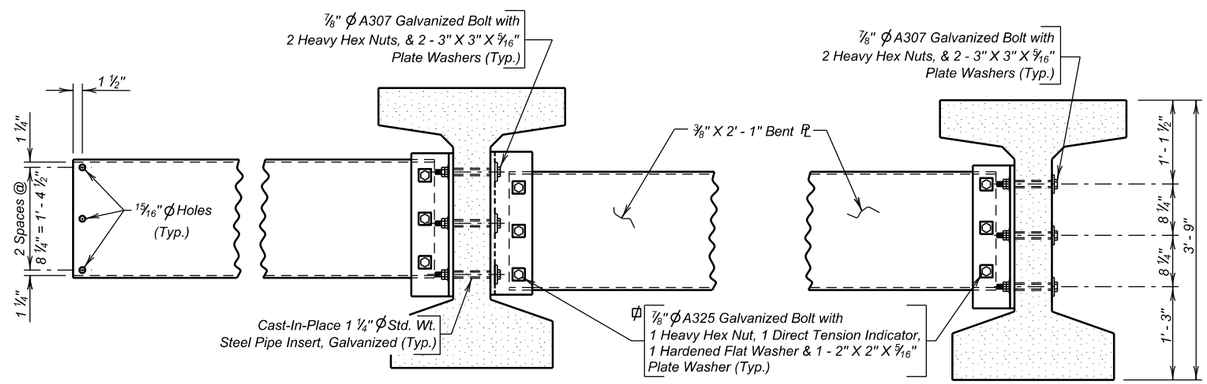

DETAIL "A"
(Typ. Interior Girder)

ϕ Bolt Head and Direct Tension Indicator shall be adjacent to 15/16" ϕ holes in Bent Plate Diaphragm.

DETAIL "B"
(Typ. Exterior Girder)

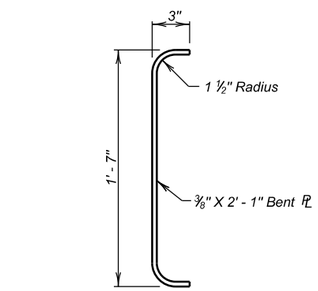

END VIEW BENT PLATE DIAPHRAGM

NOTES:

1. All steel for the diaphragms including plate washers shall conform to ASTM A36, and shall be galvanized in accordance with ASTM A123 or A153. Bolts, nuts and washers shall be galvanized in accordance with ASTM F2329.
2. The steel diaphragms between adjacent girders shall be installed as soon as possible and in conjunction with girder erection.
3. All costs associated with furnishing, fabricating, assembly and installation of diaphragms shall be included in the lump sum price for Structural Steel, Miscellaneous.

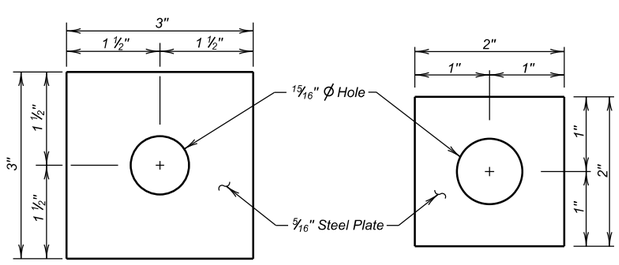

PLATE WASHER DETAILS

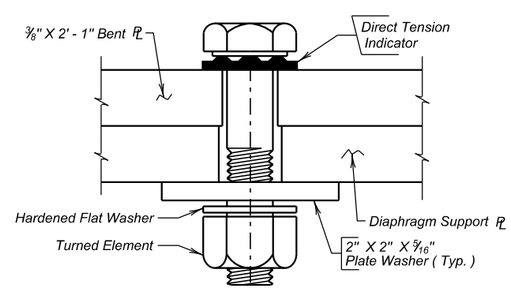

DIRECT TENSION INDICATOR DETAIL

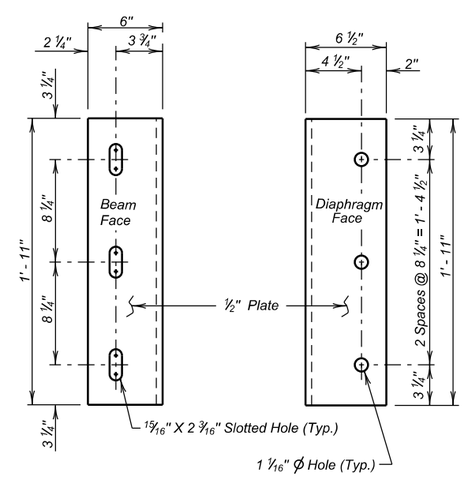

DIAPHRAGM SUPPORT PLATE

ESTIMATED QUANTITIES

ITEM	UNIT	QUANTITY
△ Structural Steel, Miscellaneous	L.S.	Lump Sum

△ For informational purposes only, the estimated weight of structural steel is 3780 Lbs. for 12 diaphragms.

DIAPHRAGM DETAILS
FOR
EASTBOUND LANES

197' - 11⅞" PRESTR. GIRDER BRIDGE

40' - 0" ROADWAY — 33° 13' 41" LHF SKEW
OVER DEER VIEW ROAD — SEC. 4/9-T3N-R6E
STA. 1235 + 14.49 TO 1237 + 12.47 — IM 0901(38)40
STR. NO. 47-088-551 — HL-93

MEADE COUNTY
S. D. DEPT. OF TRANSPORTATION
JANUARY 2014

DESIGNED BY	CK. DES. BY	DRAFTED BY	
PW	TD	MG	Steve A Johnson BRIDGE ENGINEER
MEAD5580	5580GL19		

STATE OF	PROJECT	SHEET NO.	TOTAL SHEETS
S.D.	IM 0901(38)40	E179	E199

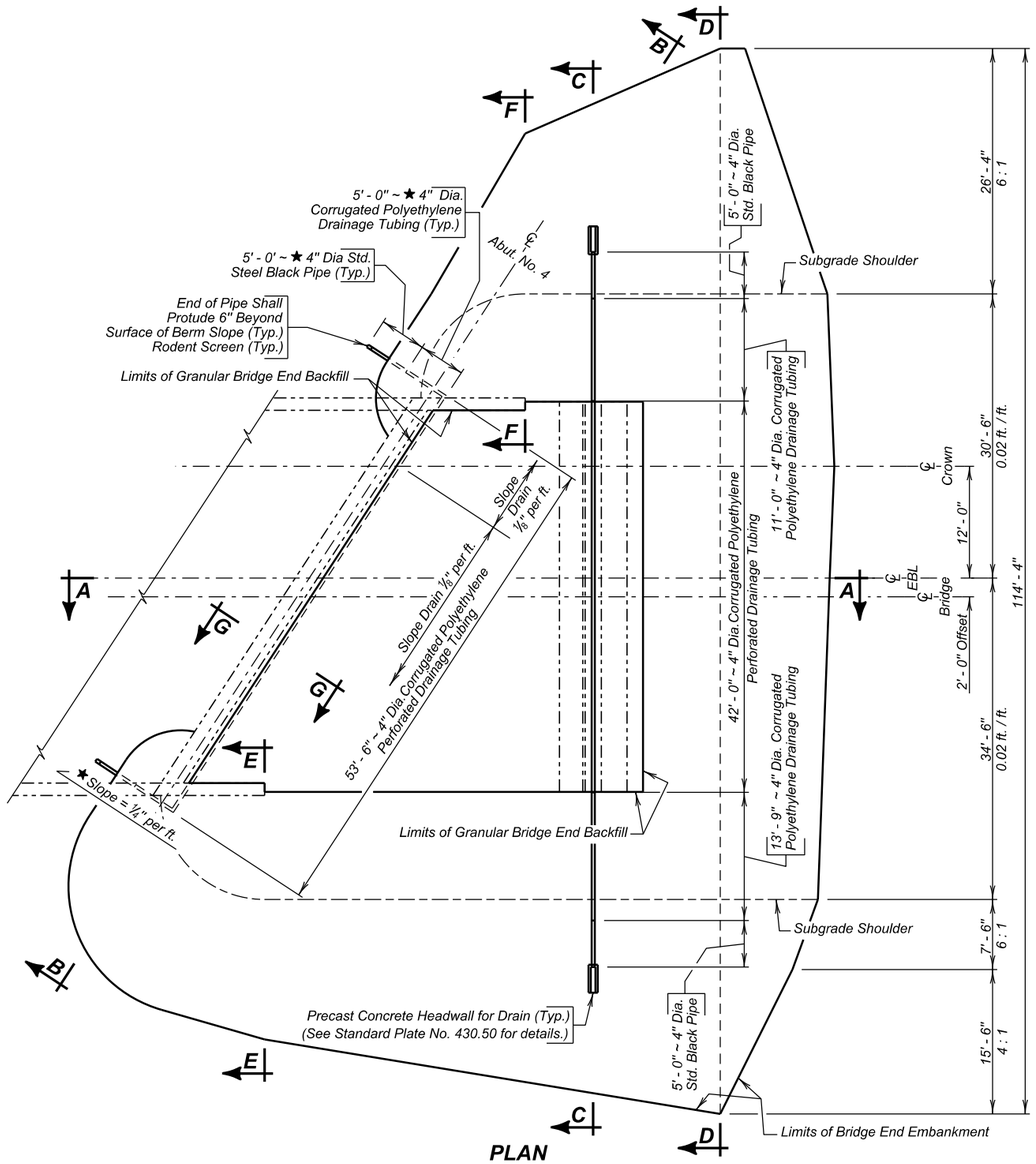

PLAN

(Bridge End Backfill shown adjacent to Abut. No. 4, Abut. No. 1 similar opposite hand.)

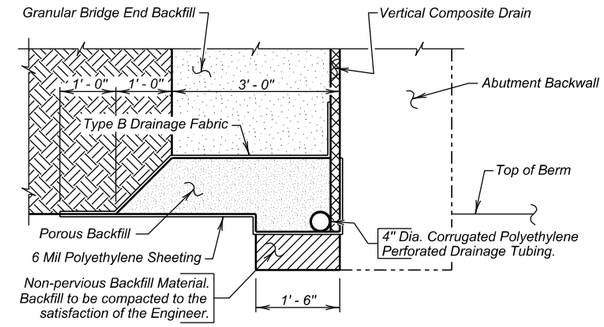

SEC. G - G

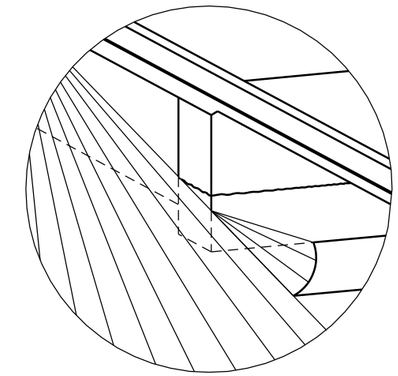

SPILL CONE DETAIL AT EMBANKMENT

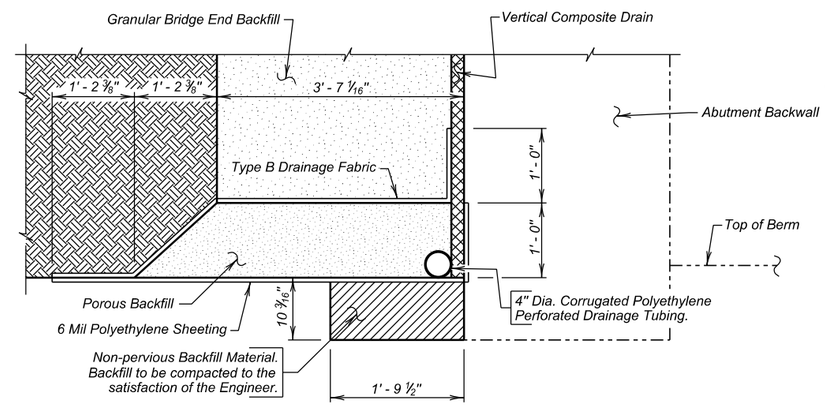

DETAIL "X"

ESTIMATED QUANTITIES
(For Two Abutments)

ITEM	UNIT	QUANTITY
Granular Bridge End Backfill	Cu. Yd.	104.8
∡ Bridge End Embankment	Cu. Yd.	1984
⊕ ⊡ Porous Backfill	Ton	25.4
4" Underdrain Pipe	Ft.	301
⊕ Approach Slab Underdrain Excavation	Cu. Yd.	6.0
Precast Concrete Headwall for Drain	Each	4

1. 191 ft. 4" dia. Corrugated Polyethylene Perforated Drainage Tubing.
2. 70 ft. 4" dia. Corrugated Polyethylene Drainage Tubing.
3. 40 ft. 4" dia. Std. Black Steel Pipe with Rodent Screens.
4. 606 sq. ft. Vertical Composite Drain

Items 1 thru 4 are approximate quantities contained in the 4" Underdrain Pipe and are for information only.

5. 4751 sq. ft. 6 mil Polyethylene Sheeting, not including laps.
6. 352 sq. yd. Type B Drainage Fabric.

Items 5 and 6 are approximate quantities contained in the Granular Bridge End Backfill and are for information only.

⊡ For estimating purposes only, a factor of 1.89 tons/cu. yd. was used to convert cu. yds. to tons.

∡ Shrinkage Factor of 1.25 Used.

⊕ Quantity based on a 12" wide trench.

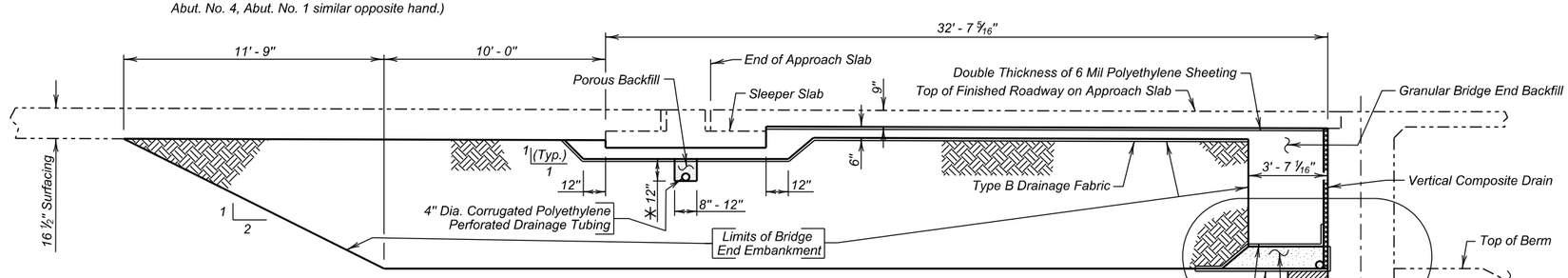

✳ 12" at ℄ of Roadway, Bottom of Trench ⅛" per Foot Pipe Slope.

SEC. A - A
(at ℄ Roadway)

DETAILS OF BRIDGE END BACKFILL (A)
FOR
EASTBOUND LANES

197' - 11⅞" PRESTR. GIRDER BRIDGE

40' - 0" ROADWAY — 33° 13' 41" LHF SKEW
OVER DEER VIEW ROAD — SEC. 4/9-T3N-R6E
STA. 1235 + 14.49 TO 1237 + 12.47 — IM 0901(38)40
STR. NO. 47-088-551 — HL-93

MEADE COUNTY
S. D. DEPT. OF TRANSPORTATION
JANUARY 2014

DESIGNED BY	CK. DES. BY	DRAFTED BY	
BAF/PW	JMH/TD	MG	Steve A Johnson BRIDGE ENGINEER
MEAD5580	5580GL20		

STATE OF	PROJECT	SHEET NO.	TOTAL SHEETS
S.D.	IM 0901(38)40	E180	E199

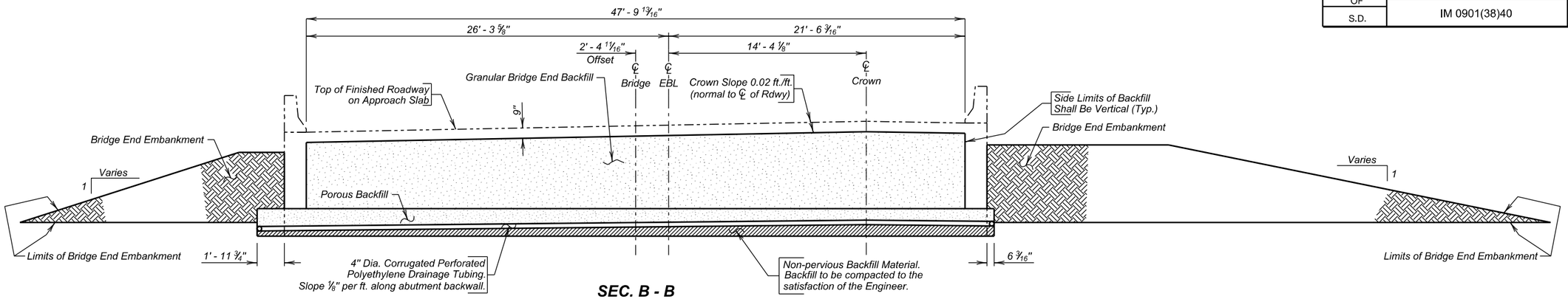

SEC. B - B

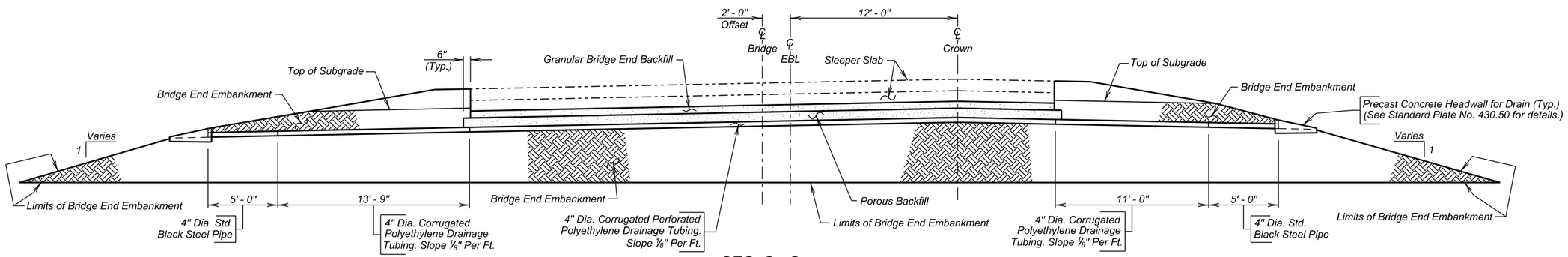

SEC. C - C

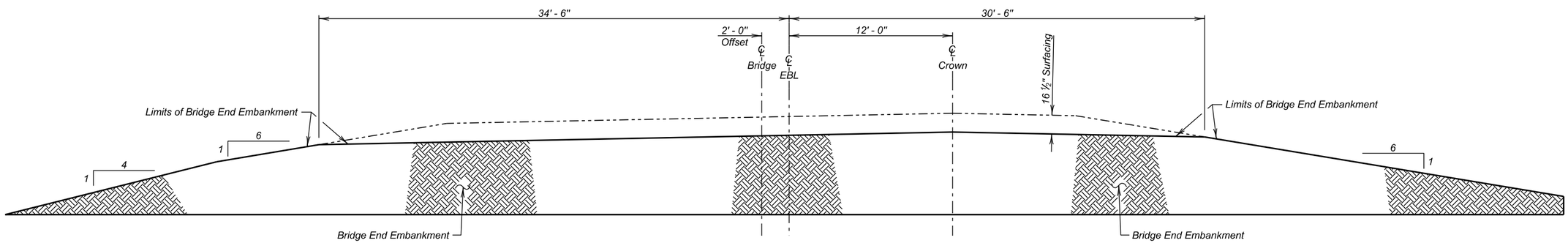

SEC. D - D

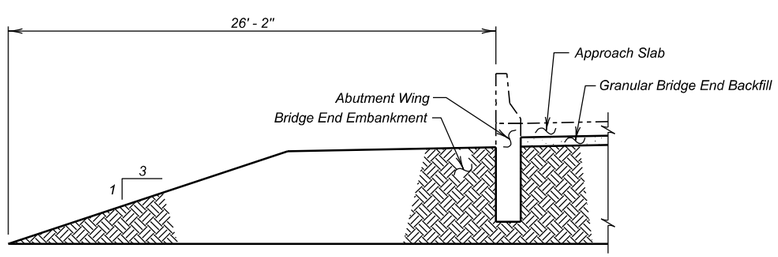

SEC. E - E

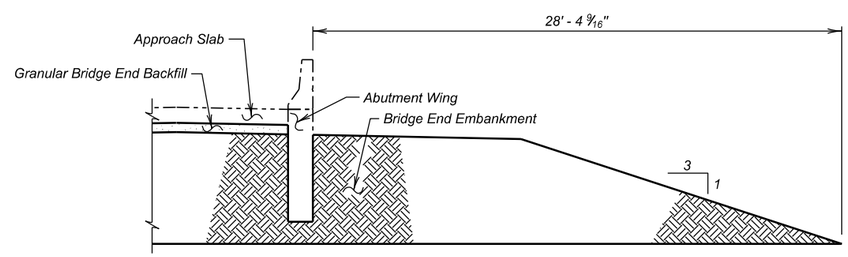

SEC. F - F

DETAILS OF BRIDGE END BACKFILL (B)

FOR

EASTBOUND LANES

197' - 11 7/8" PRESTR. GIRDER BRIDGE

40' - 0" ROADWAY — 33° 13' 41" LHF SKEW
OVER DEER VIEW ROAD — SEC. 4/9-T3N-R6E
STA. 1235 + 14.49 TO 1237 + 12.47 — IM 0901(38)40
STR. NO. 47-088-551 — HL-93

MEADE COUNTY

S. D. DEPT. OF TRANSPORTATION

JANUARY 2014

DESIGNED BY	CK. DES. BY	DRAFTED BY	
BAF/PW	JMH/TD	MG	Steve A Johnson BRIDGE ENGINEER
MEAD5580	5580GL21		

STATE OF	PROJECT	SHEET NO.	TOTAL SHEETS
S.D.	IM 0901(38)40	E181	E199

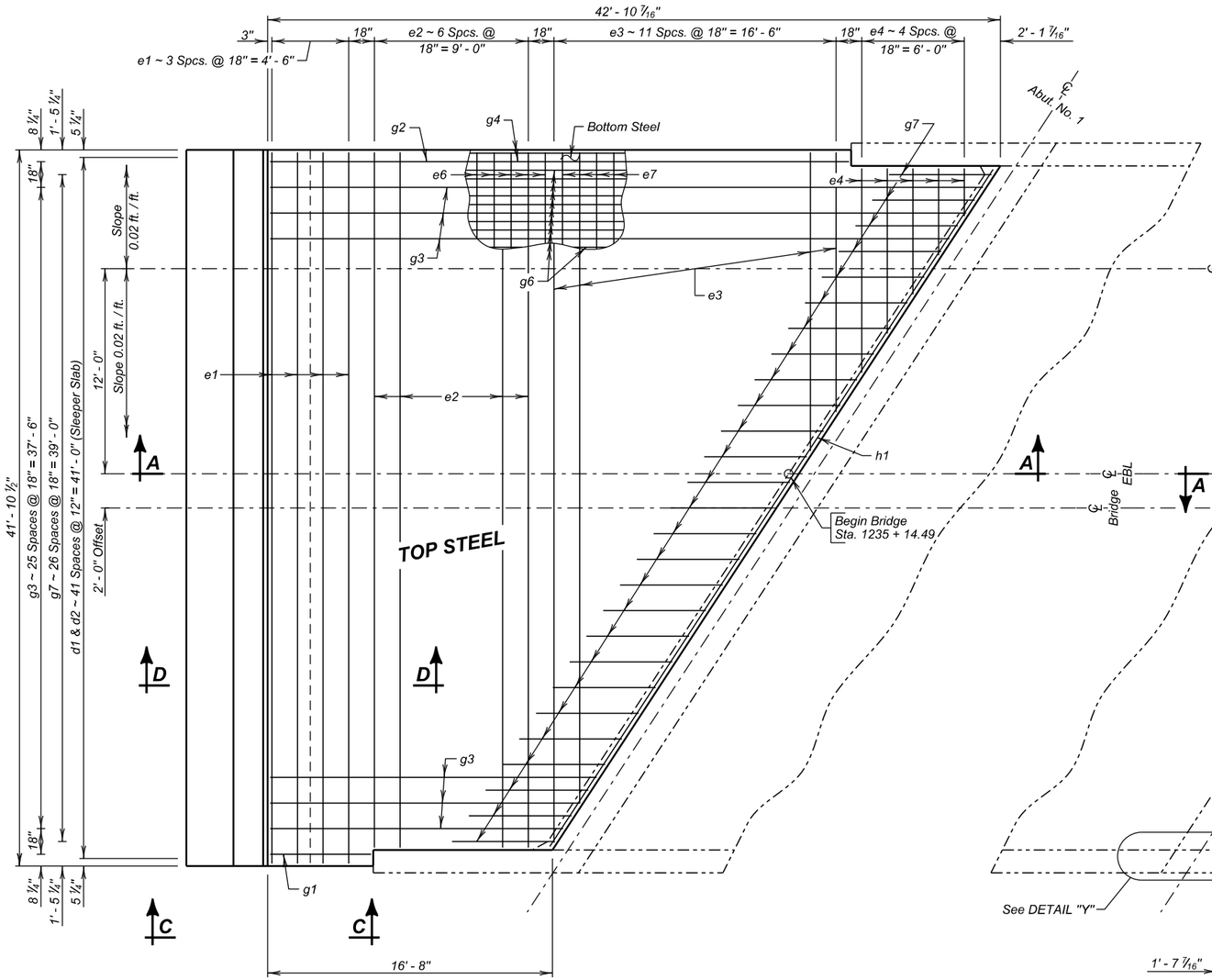

PLAN
(Begin Bridge)

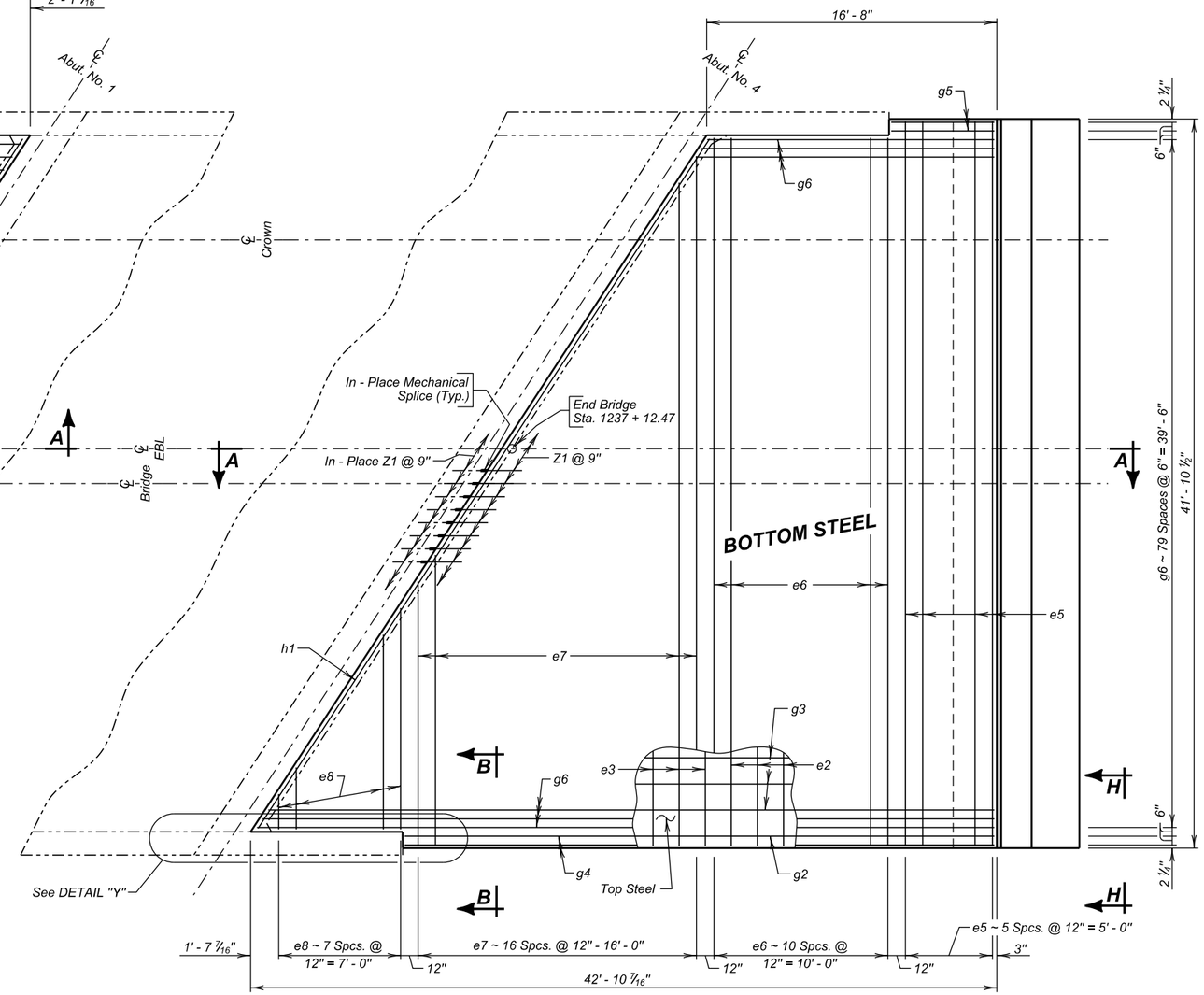

PLAN
(End Bridge)

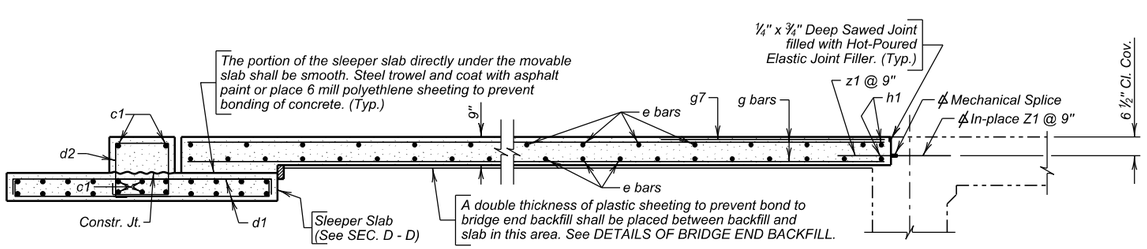

SEC. A - A

℄ In-place Z1 bars and Mechanical Splices are listed and included in superstructure quantities. See SUPERSTRUCTURE DETAILS (B).

DETAILS OF APPROACH SLAB ADJACENT TO BRIDGE (A)

FOR

EASTBOUND LANES

197' - 11 7/8" PRESTR. GIRDER BRIDGE

40' - 0" ROADWAY — 33° 13' 41" LHF SKEW
OVER DEER VIEW ROAD — SEC. 4/9-T3N-R6E
STA. 1235 + 14.49 TO 1237 + 12.47 — IM 0901(38)40
STR. NO. 47-088-551 — HL-93

MEADE COUNTY

S. D. DEPT. OF TRANSPORTATION

JANUARY 2014

DESIGNED BY	CK. DES. BY	DRAFTED BY	
MG	PW/TD	MG	Steve A Johnson BRIDGE ENGINEER
MEAD5580	5580GL22		

STATE OF	PROJECT	SHEET NO.	TOTAL SHEETS
S.D.	IM 0901(38)40	E182	E199

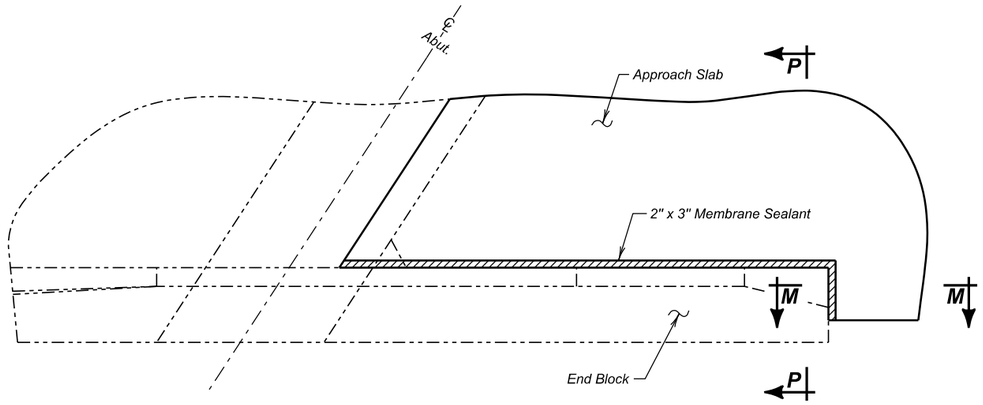

DETAIL "Y"

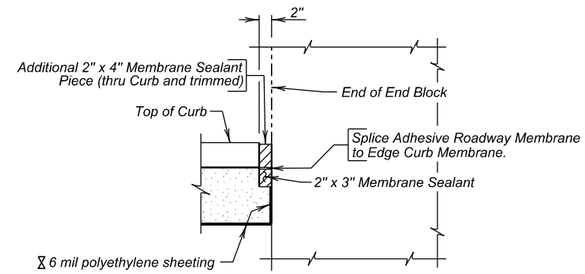

SEC. M - M

6 mil polyethylene sheeting shall not interfere with the bond between the Membrane Sealant and the approach slab.

REINFORCING SCHEDULE

(For Two Approach Slabs and Two Sleeper Slabs)

	Mk.	No.	Size	Length	Type
	Approach Slabs				
	e1	8	4	41' - 7"	Str.
	e2	14	4	40' - 8"	Str.
✠	e3	12	4	55' - 6"	Str.
✠	e4	5	4	14' - 8"	Str.
	e5	12	6	41' - 7"	Str.
	e6	22	6	40' - 8"	Str.
✠	e7	17	6	54' - 9"	Str.
✠	e8	8	6	14' - 8"	Str.
	g1	2	4	5' - 11"	Str.
	g2	2	4	33' - 10"	Str.
✠	g3	26	4	58' - 10"	Str.
	g4	4	8	33' - 10"	Str.
	g5	4	8	5' - 11"	Str.
✠	g6	80	8	58' - 10"	Str.
	g7	54	4	6' - 0"	Str.
	h1	4	6	47' - 4"	Str.
	Z1	106	7	2' - 0"	Str.
	Sleeper Slabs				
	c1	48	5	41' - 7"	Str.
	d1	168	4	7' - 9"	2
	d2	84	4	6' - 4"	T2

Bending Details

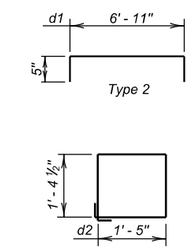

16' - 6"	42' - 4"	g6
17' - 2"	41' - 8"	g3
2' - 0"	12' - 8"	e8
15' - 2"	39' - 7"	e7
2' - 9"	11' - 11"	e4
15' - 2"	40' - 4"	e3

Cut 80	Cut 26	Cut 8	Cut 17	Cut 5	Cut 12	
g6	g3	e8	e7	e4	e3	

40' - 4"	15' - 2"	e3
11' - 11"	2' - 9"	e4
39' - 7"	15' - 2"	e7
12' - 8"	2' - 0"	e8
41' - 8"	17' - 2"	g3
42' - 4"	16' - 6"	g6

NOTE -
All bars to be Epoxy Coated.
All dimensions are out to out of bars.
✠ See cutting diagram.

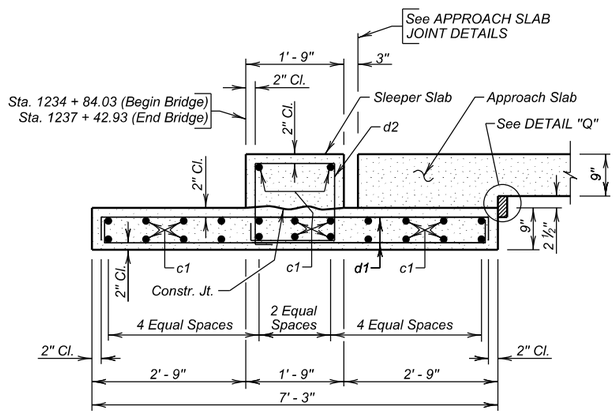

SEC. D - D
(Sleeper Slab)

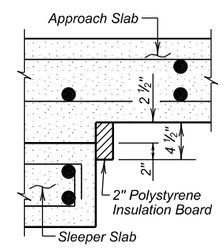

DETAIL "Q"

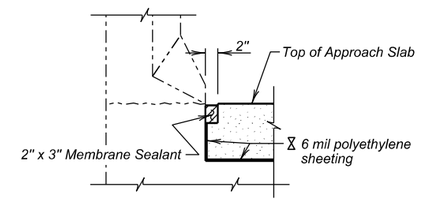

SEC. P - P

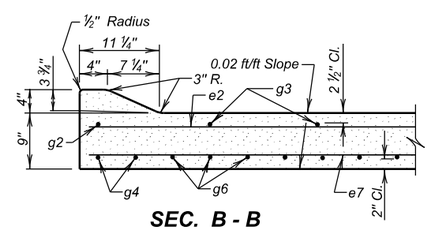

SEC. B - B

ESTIMATED QUANTITIES

(For Two Approach Slabs & Two Sleeper Slabs)

ITEM	UNIT	QUANTITY
Concrete Approach Slab for Bridge	Sq. Yd.	273.0
Concrete Approach Sleeper Slab for Bridge	Sq. Yd.	67.5

1. 69.9 Cu. Yds. Concrete in Approach Slabs.
2. 19764 Lbs. Epoxy coated Re-Steel in Approach Slabs.
3. 22.0 Cu. Yds. Concrete in Sleeper Slabs.
4. 3307 Lbs. Epoxy coated Re-Steel in Sleeper Slab.
5. 31 Sq. Ft. of 2" Polystyrene Insulation Board

Items 1 thru 5 are approximate quantities contained in the above bid items and are for information only.

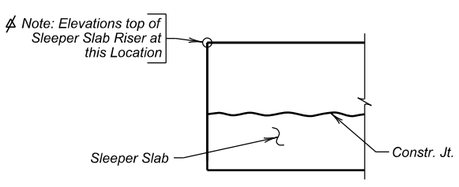

VIEW H - H

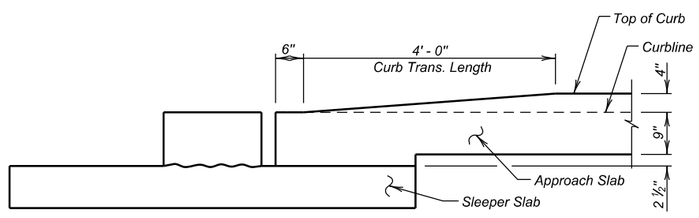

VIEW C - C

DETAILS OF APPROACH SLAB ADJACENT TO BRIDGE (B)

FOR

EASTBOUND LANES

197' - 11 7/8" PRESTR. GIRDER BRIDGE

40' - 0" ROADWAY — 33° 13' 41" LHF SKEW
OVER DEER VIEW ROAD — SEC. 4/9-T3N-R6E
STA. 1235 + 14.49 TO 1237 + 12.47 — IM 0901(38)40
STR. NO. 47-088-551 — HL-93

MEADE COUNTY

S. D. DEPT. OF TRANSPORTATION

JANUARY 2014

DESIGNED BY	CK. DES. BY	DRAFTED BY	
MG	PW/TD	MG	Steve A Johnson BRIDGE ENGINEER
MEAD5580	5580GL23		

STATE OF	PROJECT	SHEET NO.	TOTAL SHEETS
S.D.	IM 0901(38)40	E183	E199

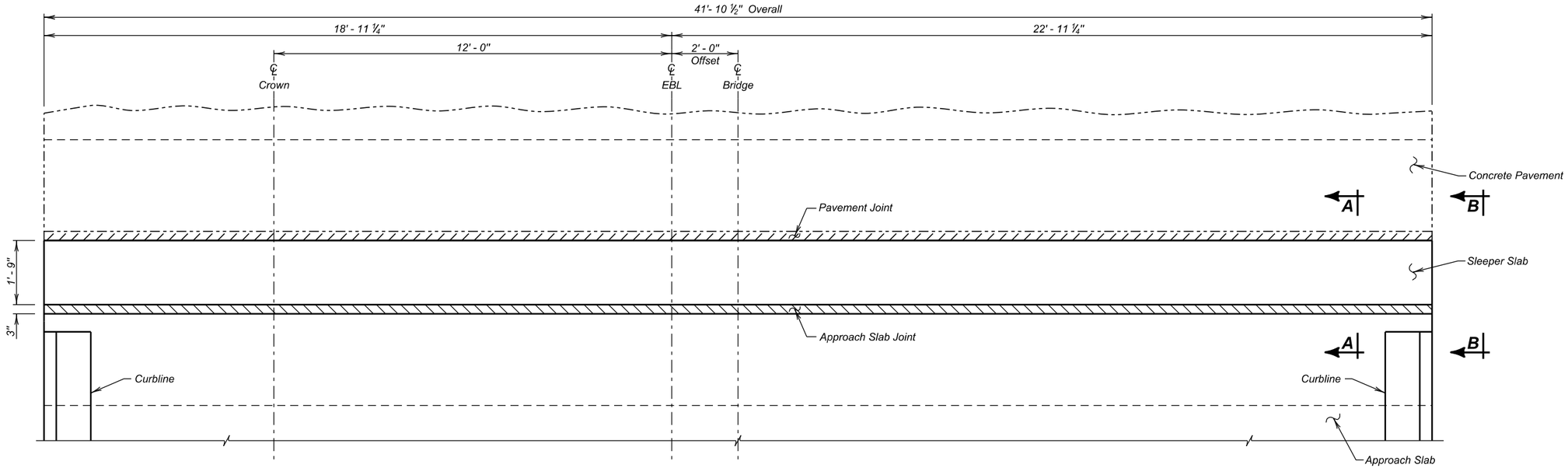

PLAN

GENERAL NOTES

1. The Membrane Sealant shall be on the approved product list for Membrane Sealant Expansion Joints.
2. The manufacturer shall supply the membrane sealant in packaging that precompresses the membrane sealant. The precompressed dimension shall be as recommended by the sealant manufacturer, however, in no case shall the precompressed dimension exceed 75% of the joint opening width. The foam sealant shall be slowly self expanding to permit workers ample time to install the membrane sealant before the membrane sealant exceeds the joint opening width.
3. The membrane sealant shall provide a water tight seal throughout a joint movement range of + 25% (minimum) from the specified joint opening dimension.
4. The membrane sealant shall be supplied in pieces a minimum of 5 feet in length. The foam sealant shall be ultra-violet and ozone resistant.
5. The bonding adhesive used to attach the membrane sealant to the adjacent concrete shall be approved by the membrane sealant manufacturer.
6. Adhesive used to join adjacent pieces of the membrane sealant shall be as recommended by the manufacturer.
7. If styrofoam filler material is used in the construction, it shall be closed cell and water-tight as approved by the Engineer.
8. The minimum ambient air temperature at the time of joint installation and adhesive curing shall be 40° F.
9. A technical representative of the membrane sealant manufacturer shall be present at the jobsite during installation. The technical representative shall be knowledgeable in the correct procedures for the preparation and installation of the joint material to ensure the Contractor installs the joint to the manufacturers' recommendations.
10. Surfaces that will be in contact with the membrane sealant shall be thoroughly cleaned by abrasive blasting to remove all laitance and contaminants (such as oil, curing compounds, etc.) from the surface. At a minimum, two passes of abrasive blasting with the nozzle held at an angle to within 1 to 2 inches of the surface will be required. Cleaning of the surfaces with solvents, wire brushing, or grinding shall not be permitted.
11. After abrasive blasting, but immediately prior to membrane joint installation, the entire joint contact surface shall be air blasted. The air compressor used for joint cleaning shall be equipped with trap devices capable of providing moisture-free and oil-free air at a recommended pressure of 90 psi. To obtain complete bonding with the adhesive, the adjacent surfaces must be dry and clean. The contact surfaces for the joint shall be visually inspected by the Engineer immediately prior to joint installation to verify the surface is dry and clean.
12. Individual spliced sections shall be installed as per the manufacturers' recommendations. The membrane joint sealant manufacturer shall submit a detailed installation procedure to the Engineer at least 5 days prior to joint installation for his review.
13. Traffic shall not be allowed on the joint until the bonding adhesive has had time to cure, as recommended by the manufacturer.
14. Use plywood or other material to protect concrete adjacent to the joint from spalling before any equipment is moved across the joint. Any spall areas will be repaired at the Contractor's expense by breaking out and replacing adjacent concrete, as approved by the Engineer.
15. The Membrane Sealant Expansion Joint will be measured in feet to the nearest one-tenth foot, complete in place. Measurement will be made of the overall horizontal length. The Membrane Sealant Expansion Joint will be paid for at the contract unit price per foot complete in place. Payment for this item shall be full compensation for furnishing all the required materials in place, including labor, equipment and incidentals necessary to complete the work in accordance with the plans and the foregoing specifications.

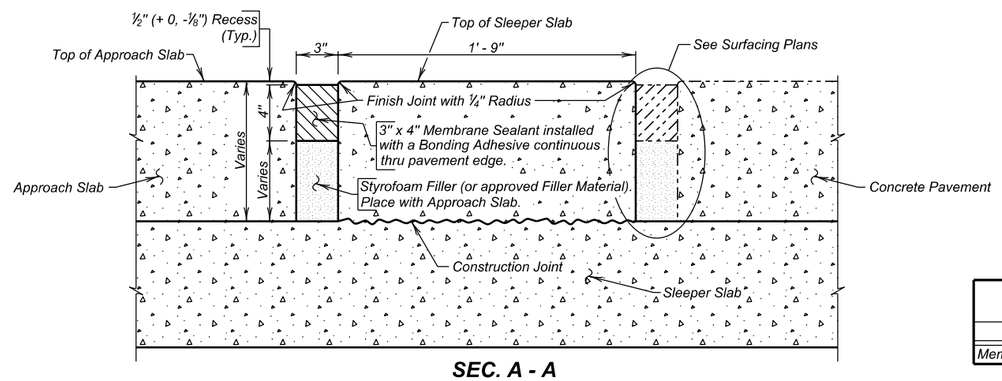

SEC. A - A

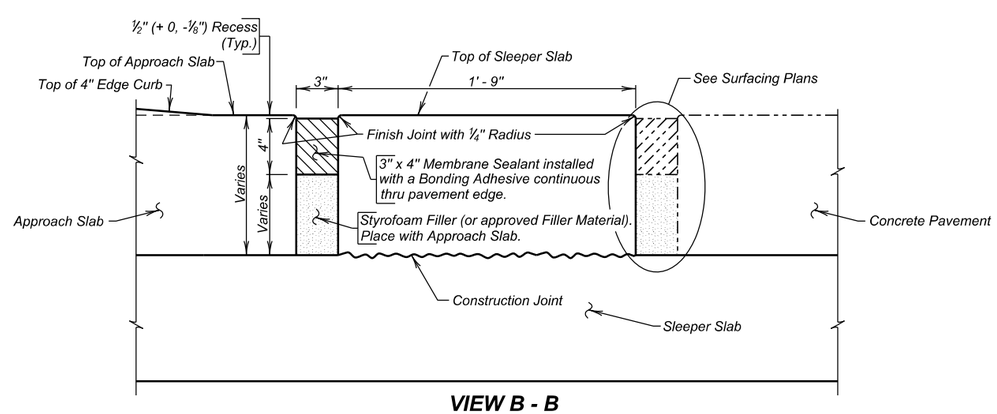

VIEW B - B

ESTIMATED QUANTITIES
(For Two Approach Slabs)

ITEM	UNIT	QUANTITY
Membrane Sealant Expansion Joint	Ft.	83.8

APPROACH SLAB JOINT DETAILS

FOR

EASTBOUND LANES

197' - 11⅞" PRESTR. GIRDER BRIDGE

40' - 0" ROADWAY — 33° 13' 41" LHF SKEW
OVER DEER VIEW ROAD — SEC. 4/9-T3N-R6E
STA. 1235 + 14.49 TO 1237 + 12.47 — IM 0901(38)40
STR. NO. 47-088-551 — HL-93

MEADE COUNTY

S. D. DEPT. OF TRANSPORTATION

JANUARY 2014

DESIGNED BY	CK. DES. BY	DRAFTED BY	
PW	TD	MG	Steve A. Johnson
MEAD5580	5580GL24		BRIDGE ENGINEER

STATE OF	PROJECT	SHEET NO.	TOTAL SHEETS
S.D.	IM 0901(38)40	E184	E199

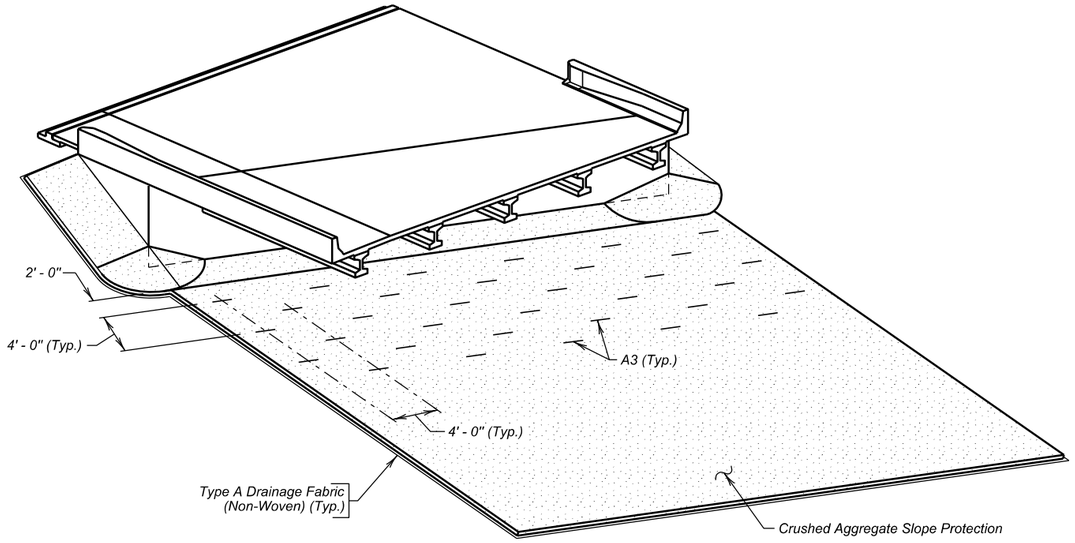

ISOMETRIC VIEW

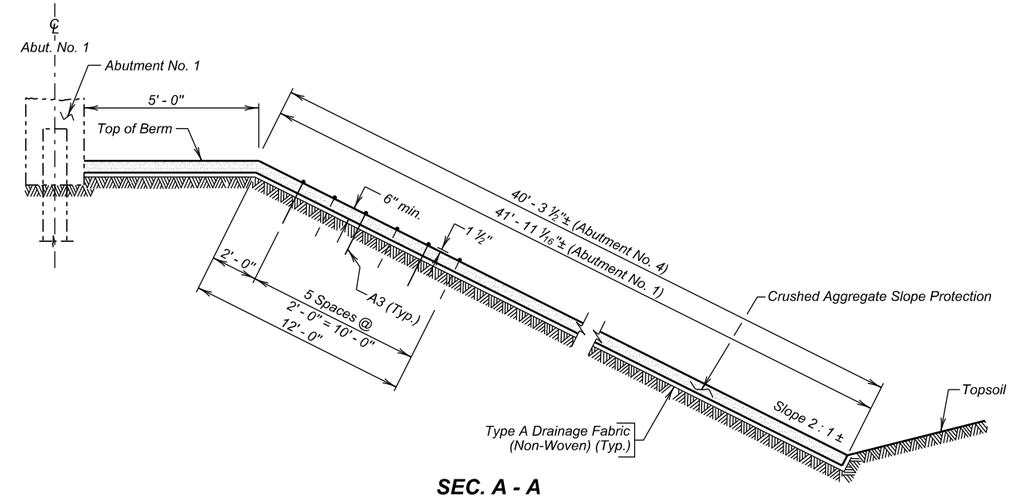

SEC. A - A

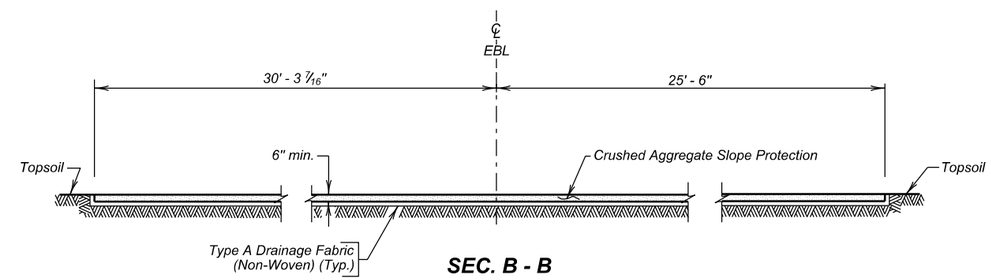

SEC. B - B

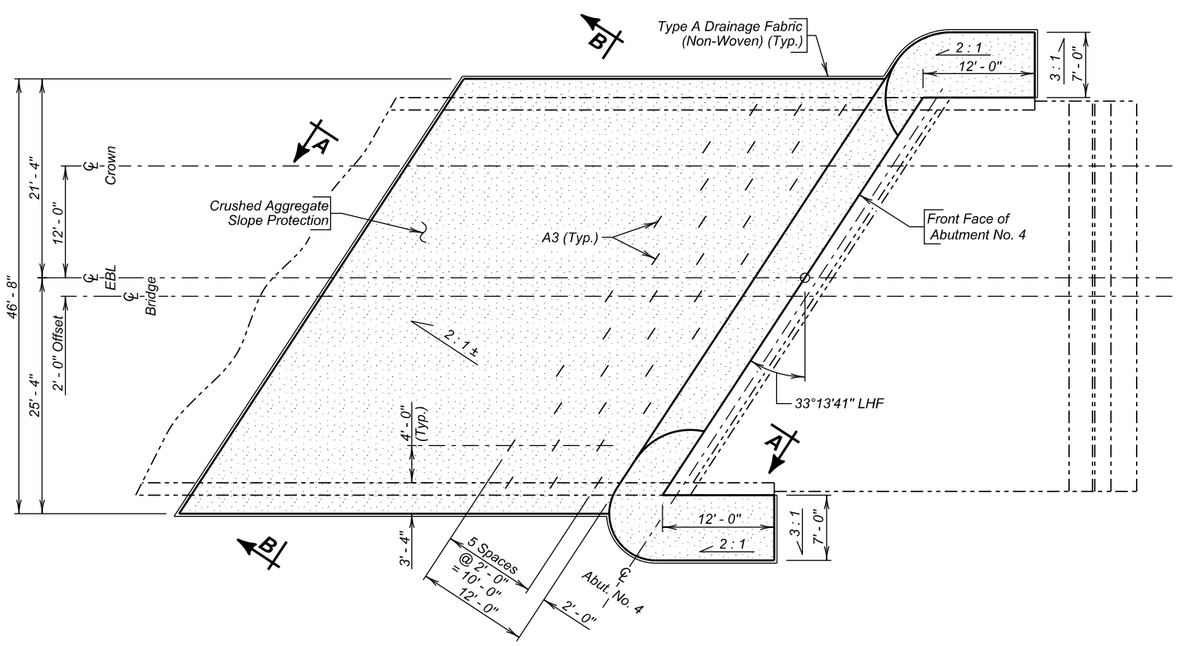

PLAN

(Shown adjacent to Abut. No. 4, Abut. No. 1 similar by rotation)

REINFORCING SCHEDULE

(For Two Abutments)

Mk.	No.	Size	Length	Type	Bending Details
A3	66	6	5' - 6"	17	

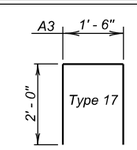

NOTE:
A1 bars shall be placed prior to placing the crushed aggregate slope protection. All costs associated with furnishing and installing A1 bars shall be incidental to the contract unit price per sq. yd. for Bridge Berm Slope Protection, Crushed Aggregate.

ESTIMATED QUANTITIES

(For Two Abutments)

ITEM	UNIT	QUANTITY
Bridge Berm Slope Protection, Crushed Aggregate	Sq. Yd.	722.2
Type A Drainage Fabric	Sq. Yd.	722

SLOPE PROTECTION DETAILS

FOR

EASTBOUND LANES

197' - 11 7/8" PRESTR. GIRDER BRIDGE

40' - 0" ROADWAY
OVER DEER VIEW ROAD
STA. 1235 + 14.49 TO 1237 + 12.47
STR. NO. 47-088-551

33° 13' 41" LHF SKEW
SEC. 4/9-T3N-R6E
IM 0901(38)40
HL-93

MEADE COUNTY
S. D. DEPT. OF TRANSPORTATION
JANUARY 2014

DESIGNED BY	CK. DES. BY	DRAFTED BY	
BAF	TD	MG	Steve A Johnson BRIDGE ENGINEER
MEAD5580	5580GL25		

The elevations shown in these plans are based on the National Geodetic Survey (NGS) North American Vertical Datum of 1988 (NAVD88).

STATE OF	PROJECT	SHEET NO.	TOTAL SHEETS
S.D.	IM 0901(38)40	E185	E199

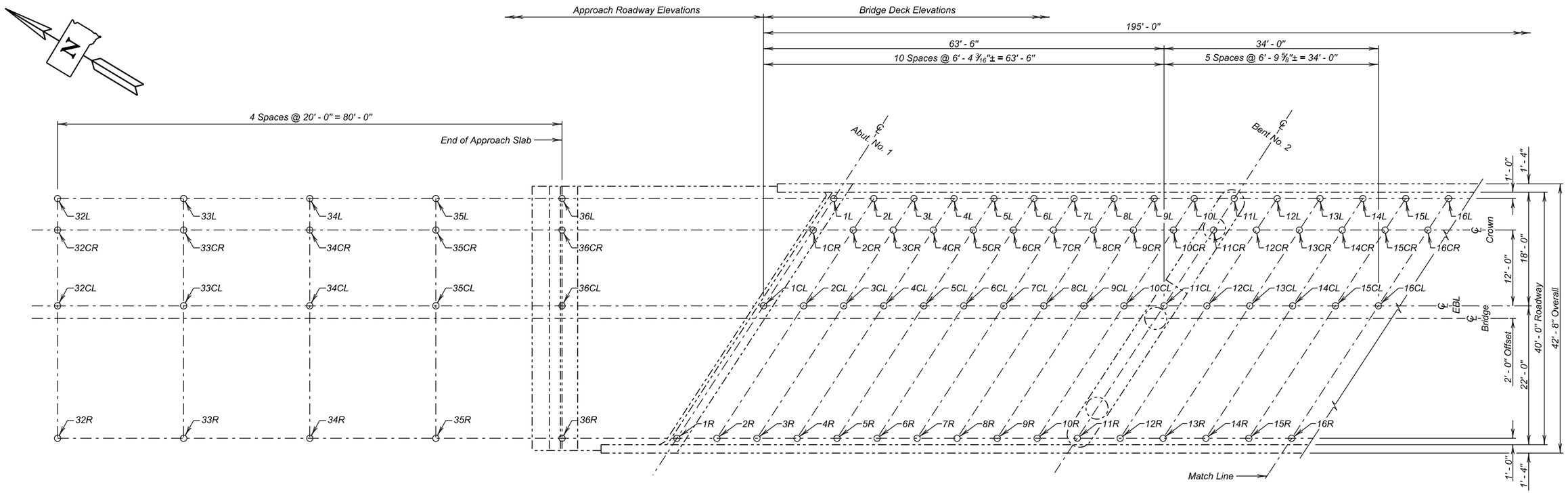

PLAN

Table of As-Built Elevations - Bridge Deck							
Location	**Elevation**	**Location**	**Elevation**	**Location**	**Elevation**	**Location**	**Elevation**
1L		1CR		1CL		1R	
2L		2CR		2CL		2R	
3L		3CR		3CL		3R	
4L		4CR		4CL		4R	
5L		5CR		5CL		5R	
6L		6CR		6CL		6R	
7L		7CR		7CL		7R	
8L		8CR		8CL		8R	
9L		9CR		9CL		9R	
10L		10CR		10CL		10R	
11L		11CR		11CL		11R	
12L		12CR		12CL		12R	
13L		13CR		13CL		13R	
14L		14CR		14CL		14R	
15L		15CR		15CL		15R	
16L		16CR		16CL		16R	

Table of As-Built Elevations - Approach Roadway							
Location	**Elevation**	**Location**	**Elevation**	**Location**	**Elevation**	**Location**	**Elevation**
32L		32CR		32CL		32R	
33L		33CR		33CL		33R	
34L		34CR		34CL		34R	
35L		35CR		35CL		35R	
36L		36CR		36CL		36R	

Table of Elevations - Bridge Survey Markers		
Location	**Station - Offset**	**Elevation**
Begin Bridge		

ESTIMATED QUANTITIES		
ITEM	UNIT	QUANTITY
Bridge Elevation Survey	L. S.	Lump Sum

NOTE :
The Contractor shall be responsible for producing the As - Built Elevation Survey soon after construction is complete and before the bridge is opened to traffic. The As-Built Elevations of the Bridge shall be taken and recorded at the locations shown in the table on this sheet. The completed table shall be given to the Engineer who will forward a copy to the Office of Bridge Design and the Region Office.

AS- BUILT ELEVATION SURVEY (A)
FOR
EASTBOUND LANES
197' - 11 7/8" PRESTR. GIRDER BRIDGE

40' - 0" ROADWAY — 33° 13' 41" LHF SKEW
OVER DEER VIEW ROAD — SEC. 4/9-T3N-R6E
STA. 1235 + 14.49 TO 1237 + 12.47 — IM 0901(38)40
STR. NO. 47-088-551 — HL-93

MEADE COUNTY
S. D. DEPT. OF TRANSPORTATION
JANUARY 2014

DESIGNED BY	CK. DES. BY	DRAFTED BY	
MG	PW/TD	MG	Steve A Johnson
MEAD5580	5580GL26		BRIDGE ENGINEER

The elevations shown in these plans are based on the National Geodetic Survey (NGS) North American Vertical Datum of 1988 (NAVD88).

STATE OF	PROJECT	SHEET NO.	TOTAL SHEETS
S.D.	IM 0901(38)40	E186	E199

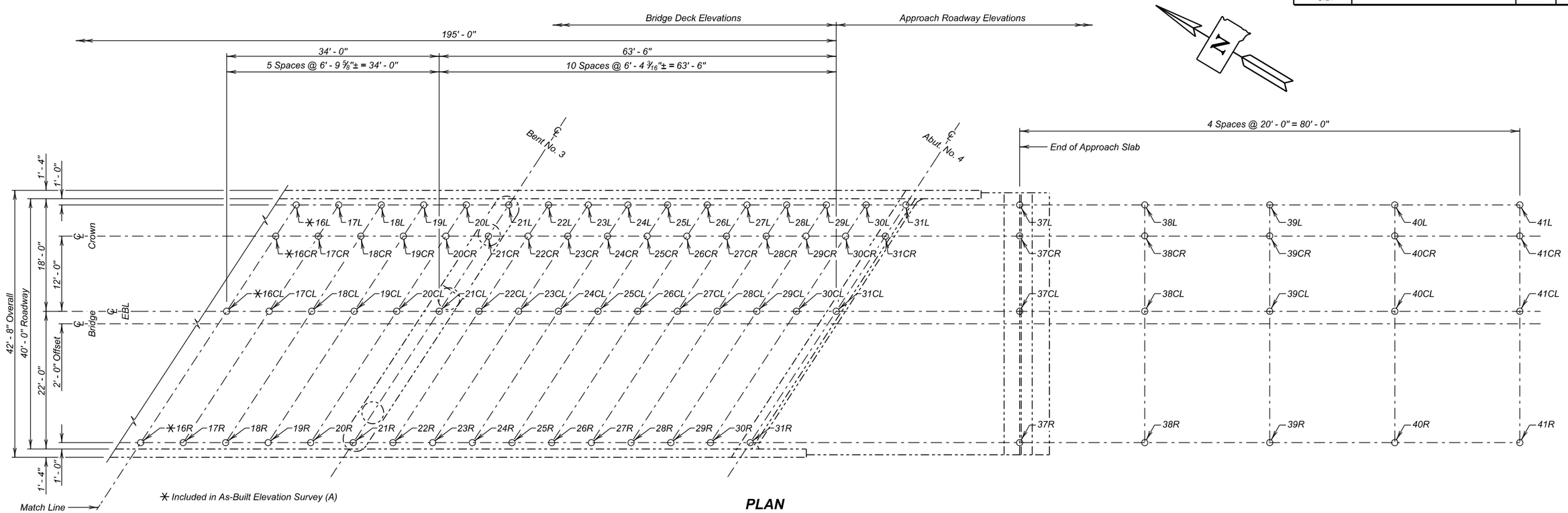

PLAN

Table of As-Built Elevations - Bridge Deck							
Location	**Elevation**	**Location**	**Elevation**	**Location**	**Elevation**	**Location**	**Elevation**
17L		17CR		17CL		17R	
18L		18CR		18CL		18R	
19L		19CR		19CL		19R	
20L		20CR		20CL		20R	
21L		21CR		21CL		21R	
22L		22CR		22CL		22R	
23L		23CR		23CL		23R	
24L		24CR		24CL		24R	
25L		25CR		25CL		25R	
26L		26CR		26CL		26R	
27L		27CR		27CL		27R	
28L		28CR		28CL		28R	
29L		29CR		29CL		29R	
30L		30CR		30CL		30R	
31L		31CR		31CL		31R	

Table of As-Built Elevations - Approach Roadway							
Location	**Elevation**	**Location**	**Elevation**	**Location**	**Elevation**	**Location**	**Elevation**
37L		37CR		37CL		37R	
38L		38CR		38CL		38R	
39L		39CR		39CL		39R	
40L		40CR		40CL		40R	
41L		41CR		41CL		41R	

Table of Elevations - Bridge Survey Markers		
Location	**Station - Offset**	**Elevation**
End Bridge		

NOTE :
The Contractor shall be responsible for producing the As - Built Elevation Survey soon after construction is complete and before the bridge is opened to traffic. The As-Built Elevations of the Bridge shall be taken and recorded at the locations shown in the table on this sheet. The completed table shall be given to the Engineer who will forward a copy to the Office of Bridge Design and the Region Office.

AS- BUILT ELEVATION SURVEY (B)
FOR
EASTBOUND LANES
197' - 11 7/8" PRESTR. GIRDER BRIDGE

40' - 0" ROADWAY — 33° 13' 41" LHF SKEW
OVER DEER VIEW ROAD — SEC. 4/9-T3N-R6E
STA. 1235 + 14.49 TO 1237 + 12.47 — IM 0901(38)40
STR. NO. 47-088-551 — HL-93

MEADE COUNTY
S. D. DEPT. OF TRANSPORTATION
JANUARY 2014

DESIGNED BY	CK. DES. BY	DRAFTED BY	
MG	PW/TD	MG	Steve A Johnson BRIDGE ENGINEER
MEAD5580	5580GL27		

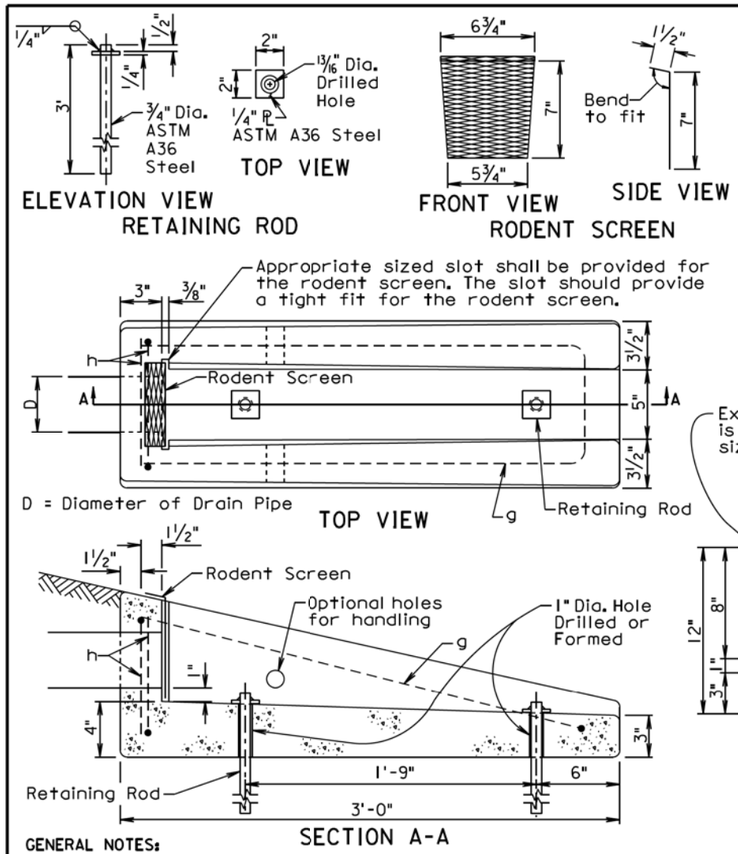

REINFORCING SCHEDULE

MK.	No.	Size	Length	Type
g	1	4	6'-3"	17
h	2	4	2'-4"	17

NOTE:
All dimensions are out to out of bars.

Bending Details

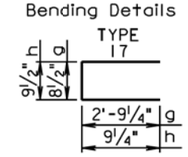

GENERAL NOTES:

The concrete shall be Class M6. The concrete shall conform to the requirements of Section 462 of the Specifications. It is estimated that each unit weighs approximately 210 pounds.

All reinforcing steel shall conform to ASTM A615 Grade 60 and shall be epoxy coated. The reinforcing steel shall be securely retained to prevent displacement during placement of concrete. It is estimated that 7.3 pounds of reinforcing steel is required for each unit.

The pipe shall be placed in the concrete headwall with the pipe end flush with the concrete surface adjacent to the rodent screen.

The rodent screen shall be galvanized 13 Ga. steel with a diamond shaped flattened mesh pattern. The size shall be 1/2". The size refers to the measurement across the smallest diamond shaped opening measured from the centers of the wires.

The retaining rod shall be galvanized in accordance with ASTM A123 after all shop welding has been completed.

The drawing indicates using 1/2" fillets; however, 3/4" chamfers may be substituted for the 1/2" fillets.

All costs for furnishing and installing the concrete headwall including equipment, labor, and materials including concrete, reinforcing steel, retaining rods, and rodent screen shall be incidental to the contract unit price per each for "Precast Concrete Headwall for Drain".

June 26, 2015

Published Date: 3rd Qtr. 2016	SDDOT	PRECAST CONCRETE HEADWALL FOR DRAIN	PLATE NUMBER 430.50 Sheet 1 of 1

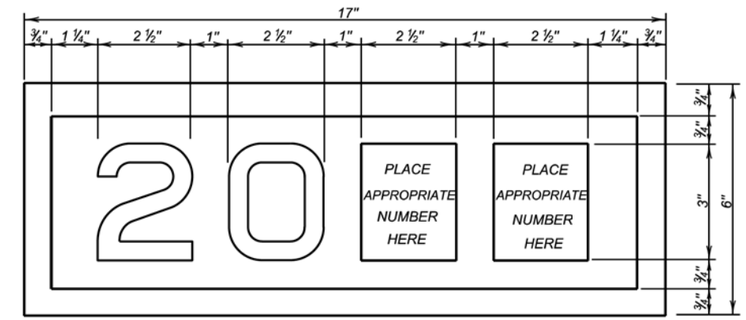

YEAR PLATE DETAILS

GENERAL NOTES:

1. Year plates of the general dimensions shown shall be constructed on all box culverts and bridges. The year plates shall be constructed in reverse and attached to the forms in such a manner that the finished imprint in the concrete does not exceed one-half (1/2) inch in depth.

2. Year plates shall be located on structure (s) as follows:

   a. On cast-in-place box culverts the year plates shall be four and one - half (4 1/2) inches below the top of the upstream parapet wall and centered laterally on the upstream face. On precast box culverts the year plate shall be centered laterally on the upstream face of the top slab. Where an extended interior wall interferes with this location, the year plate shall be centered in an adjacent barrel.

   b. On bridges with six (6) inch curbs or "Jersey" shaped barriers with no endblocks, the year plate shall be centered vertically on the curb face approximately six (6) inches from the end of the bridge, or as designated by the Engineer. On bridges with "Jersey" shaped barrier endblocks, the year plate shall be centered on the upper sloped portion of the barrier approximately 5'- 6" from the end of the bridge, or as designated by the Engineer. There shall be one year plate at each end of the bridge on opposite sides.

   c. When the plans specify that both the original date of construction and the date of reconstruction are to be shown, one date shall be placed as listed above and the other located adjacent to it. Both year plates shall be shown at each end of the bridge on opposite sides.

3. There will be no separate measurement or payment made for year plates on box culverts and bridges. All costs for this work shall be incidental to other contract items.

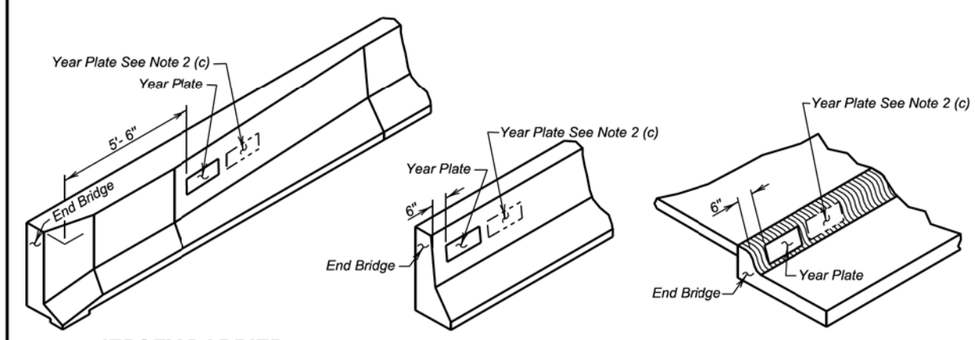

JERSEY BARRIER (With Endblock) | JERSEY BARRIER | TYPE B CURB

June 26, 2012

Published Date: 3rd Qtr. 2016	SDDOT	YEAR PLATE DETAILS	PLATE NUMBER 460.02 Sheet 1 Of 1

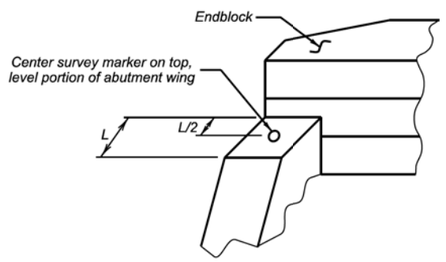

ABUTMENT WITH "STRAIGHT" WINGS

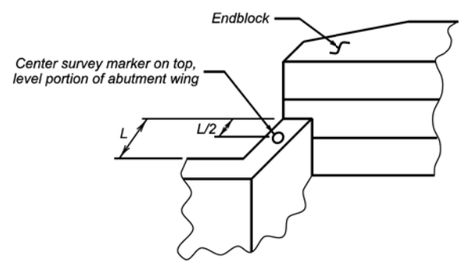

ABUTMENT WITH "SWEPT BACK" WINGS

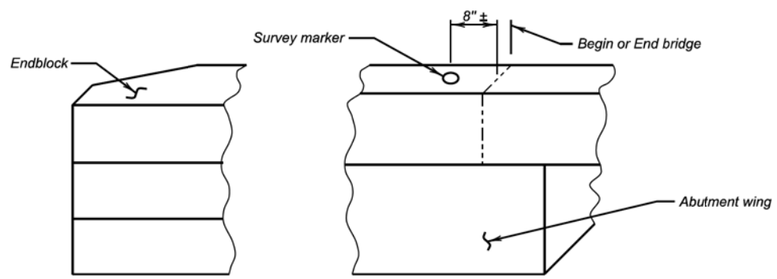

ABUTMENT WITH "SWEPT BACK" WINGS

(Endblock on top of wings)

GENERAL NOTES:

1. Survey markers shall be located at each abutment on the same side of the bridge as the year plate. Place survey markers on abutment wings as shown. Two survey markers will be required at each bridge.
2. Survey markers shall be of a type intended for installation in concrete, be made of solid brass or bronze, have a domed top and be either a 3" top diameter (with a ¾" X 2" long ribbed shank), or a US Army Corps of Engineers Type C Disc with a 3 ½" top diameter.
3. There will be no separate measurement or payment made for survey markers. All costs for this work shall be incidental to the other contract items.

June 26, 2012

Published Date: 3rd Qtr. 2016	SDDOT	BRIDGE SURVEY MARKER	PLATE NUMBER 460.05
			Sheet 1 of 1

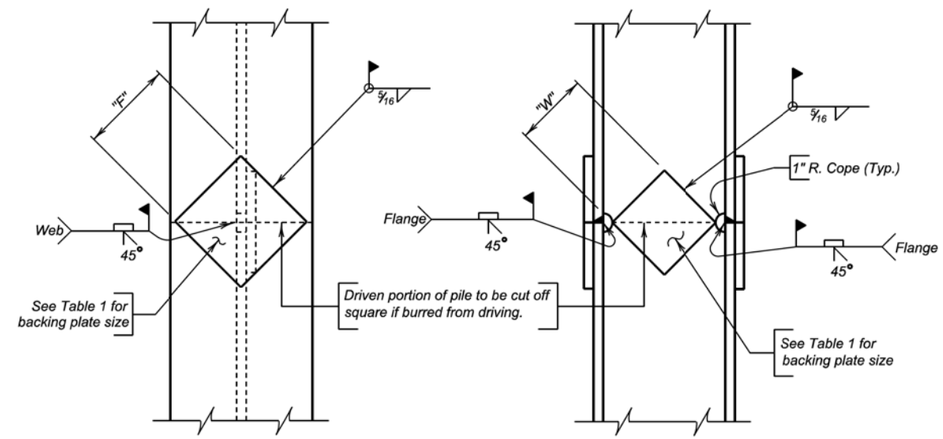

NOTE:

Prepare joint surfaces lower end of upper section on the ground and weld on backing plates; then place upper section on lower section and weld.

COMPLETE JOINT PENETRATION WELD DETAIL

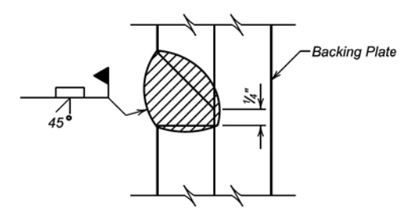

GENERAL NOTES:

1. Steel for backing plates shall conform to ASTM A709 Grade 50.
2. Welding and weld inspection shall be in conformance with AWS D1.5 (Current Year) Bridge Welding Code - Steel.
3. Welder must be certified and registered with the SDDOT.
4. Backing plate shall at a minimum be as thick as the web of the pile being spliced.
5. Web must be coped with 1 inch radius.
6. Submit Welding Procedure Specification (WPS) to Bridge Construction Engineer for approval prior to pile driving.

TABLE 1
(BACKING PLATES)

PILE	10"	12"	14"
"F" FLANGE	6 ½"	8"	10"
"W" WEB	4 ¾"	6 ¼"	7 ½"

December 23, 2012

Published Date: 3rd Qtr. 2016	SDDOT	STEEL PILE SPLICE DETAILS	PLATE NUMBER 510.40
			Sheet 1 of 1

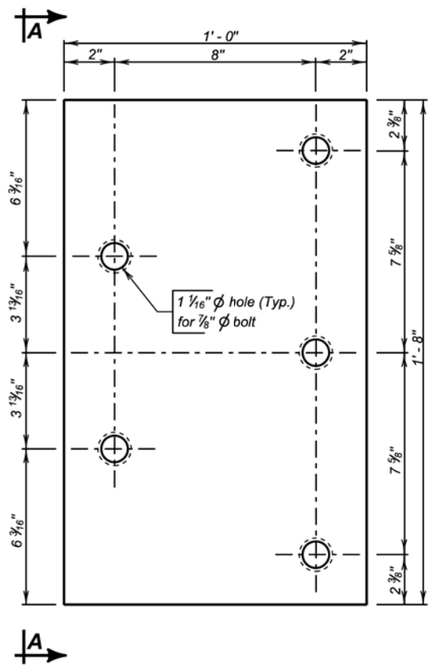

ELEVATION

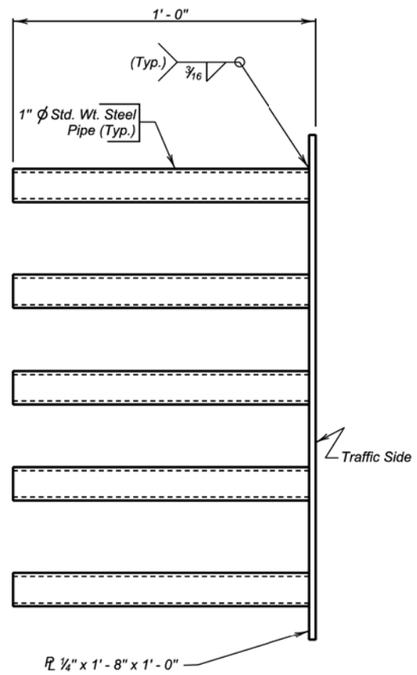

VIEW A - A

GENERAL NOTES:

1. Steel plate for the insert assembly shall conform to ASTM A709 Grade 36. The steel pipes shall conform to ASTM A53 or ASTM A500 Grade B.
2. Welding and weld inspection shall be in conformance with AWS D1.1 - (Current Year) Structural Welding Code - Steel.
3. After fabrication, galvanize in accordance with AASHTO M111 (ASTM A123).
4. Bolts, nuts, and washers shall be provided with each assembly. Bolts shall be galvanized and conform to the requirements of ASTM A307, A325, or A449. Plain washers shall be galvanized and conform to ASTM F844.
5. Bolt heads shall be placed on the traffic side of the endblock. Bolt projection at the back side of the insert shall not exceed 1 inch beyond the nut.
6. The cost of the 5 bolt insert plate assembly complete in place including welding and galvanizing shall be incidental to the contract unit price per Cubic Yard for " Class A45 Concrete, Miscellaneous ", " Class A45 Concrete, Bridge Deck ", or " Class A45 Concrete, Bridge Repair ", as applicable.

December 23, 2013

Published Date: 3rd Qtr. 2016	SDDOT	5 BOLT INSERT PLATE ASSEMBLY	PLATE NUMBER 630.92
			Sheet 1 of 1

The elevations shown in these plans are based on the National Geodetic Survey (NGS) North American Vertical Datum of 1988 (NAVD88).

STATE OF	PROJECT	SHEET NO.	TOTAL SHEETS
S.D.	IM 0901(38)40	E190	E199

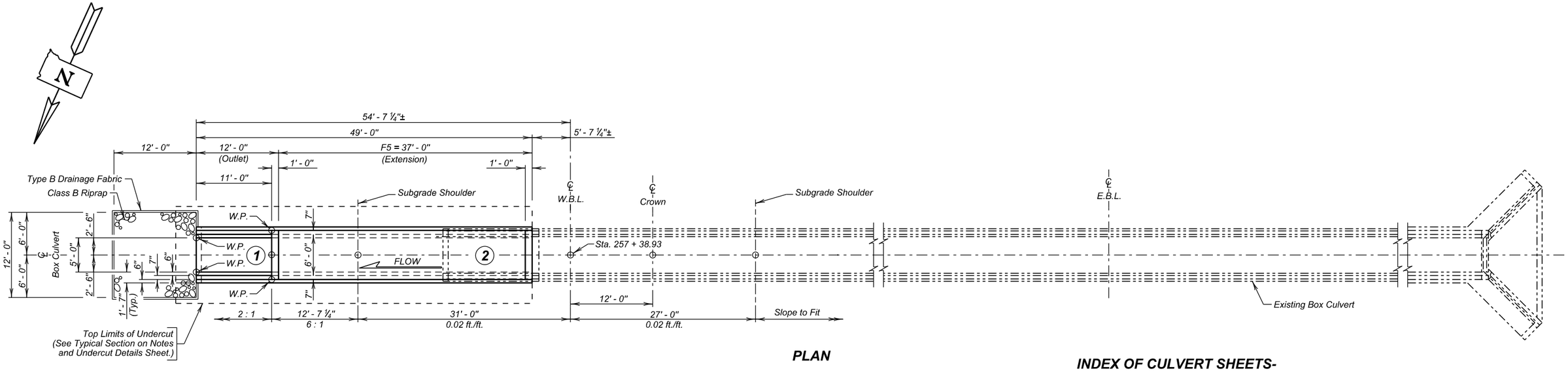

PLAN

INDEX OF CULVERT SHEETS-

Sheet No. 1 - General Drawing and Quantities
Sheet No. 2 - Notes and Undercut Details
Sheet No. 3 - Breakout and Dowel Placement Details
Sheet No. 4 - Outlet Details
Sheet No. 5 - F5 Barrel End Section Details (37' - 0")
Sheet No. 6 - Standard Plate No.'s 460.03 and 620.16

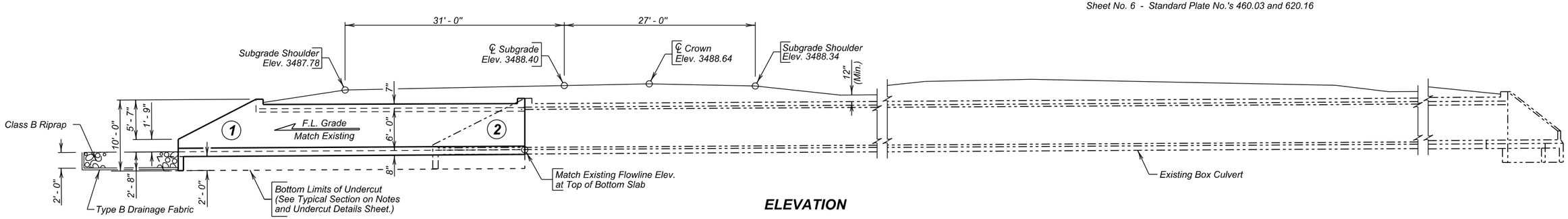

ELEVATION

NOTE:
All stations are based on the survey of the existing box culvert. The intent is to match the existing box culvert location, flowline and slope.

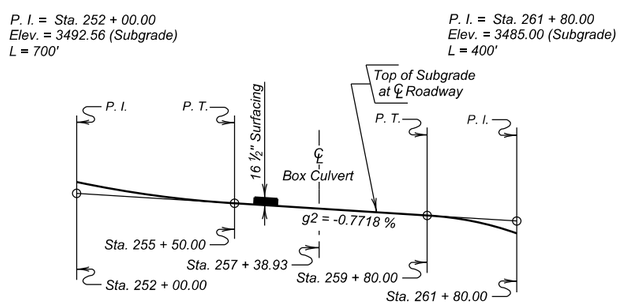

GRADELINE DATA

ESTIMATED QUANTITIES

	ITEM	UNIT	QUANTITY
	Class A45 Concrete, Box Culvert	Cu. Yd.	30.3
	Reinforcing Steel	Lb.	5008
	Structure Excavation, Box Culvert	Cu. Yd.	10.3
	Box Culvert Undercut	Cu. Yd.	51
	Breakout Structural Concrete	Cu. Yd.	15.9
	Install Dowel in Concrete	Each	18
#	Class B Riprap	Ton	14.9
	Type B Drainage Fabric	Sq. Yd.	27

For estimating purposes only, a factor of 1.4 tons/cu. yd. was used to convert Cu. Yd. to Tons.

GENERAL DRAWING AND QUANTITIES

FOR

6' X 6' BOX CULVERT EXTENSION

I90 OVER CREEK — 0° SKEW
STA. 257 + 38.93 (W.B.L.) — SEC. 9/10-T3N-R6E
STR. NO. 47-091-553 — IM 0901(38)40
PCN 5580 — HS 20-44 (& ALT.)

MEADE COUNTY

S. D. DEPT. OF TRANSPORTATION

FEBRUARY 2014

PLANS BY :
OFFICE OF BRIDGE DESIGN, SOUTH DAKOTA DEPARTMENT OF TRANSPORTATION

DESIGNED BY	CK. DES. BY	DRAFTED BY	
BAF	MM/PW	GW/MG	Steve A Johnson BRIDGE ENGINEER
MEAD5580	5580WM01		

STATE OF	PROJECT	SHEET NO.	TOTAL SHEETS
S.D.	IM 0901(38)40	E191	E199

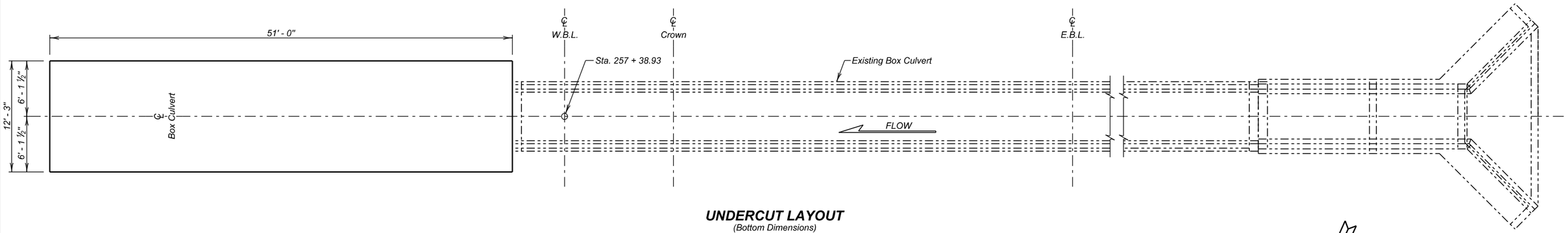

UNDERCUT LAYOUT
(Bottom Dimensions)

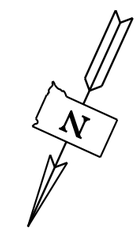

SPECIFICATIONS

1. Design Specifications: AASHTO Standard Specifications for Highway Bridges, 2002 Edition (Service Load).

2. Construction Specifications: South Dakota Standard Specifications for Roads and Bridges, 2015 Edition and required Provisions, Supplemental Specifications and Special Provisions as included in the Proposal.

GENERAL NOTES

1. Design Live Load: HS 20-44, Alternte Loading, and construction load consisting of one 7' - 6" gage axle with gross weight = 95,850 lbs. The construction load shall not be applied until a minimum of 4 ft. of fill has been placed over the Box Culvert. Other construction loads in excess of legal load must be submitted thru proper channels to the Office of Bridge Design for analysis.

2. The design of the barrel section on a minimum fill height of 1 foot and includes all subsequent fill heights up to and including the maximum fill height of 5 ft. (F5).

3. Unit Stresses: Concrete fc = 1800 p.s.i.
   Reinforcing Steel fs = 24000 p.s.i.

4. All concrete shall be Class A45 conforming to Section 460.

5. All reinforcing steel shall conform to ASTM A615 Grade 60.

6. All exposed edges shall be chamfered ¾ inch.

7. Use 1 inch clear cover on all reinforcing steel EXCEPT as shown.

8. The Contractor shall imprint on the structure the date of the existing box culvert construction as well as the date of new construction as specified and detailed on Standard Plate No. 460.03.

9. Care shall be taken to establish Working Points (W.P.) as shown on the wings.

10. Circled numbers in PLAN and ELEVATION views on the General Drawing are section I.D. Numbers (see SDDOT Materials Manual).

11. Compaction of earth embankment and box culvert backfill material shall be governed by the Specified Density method.

12. The subsurface soils throughout the project consist of clay-silt to gravelly clay-silt to gravel and cobbles.

13. It is anticipated that dewatering will be required to construct the box culvert extension. The Contractor will be responsible to verify groundwater location prior to construction and provide necessary means of dewatering the construction site and prevention of the inflow of additional water. The use of well points may be required in dewatering the site for construction.

DIMENSIONS OF EXISTING BOX CULVERT

All details and dimensions of the Existing Box Culvert, contained in these plans, are provided as information only. It is the Contractor's responsibility to inspect and verify actual field conditions and any necessary dimensions affecting the satisfactory completion of the work required for this project. Original construction plans can be obtained from the Office of Bridge Design.

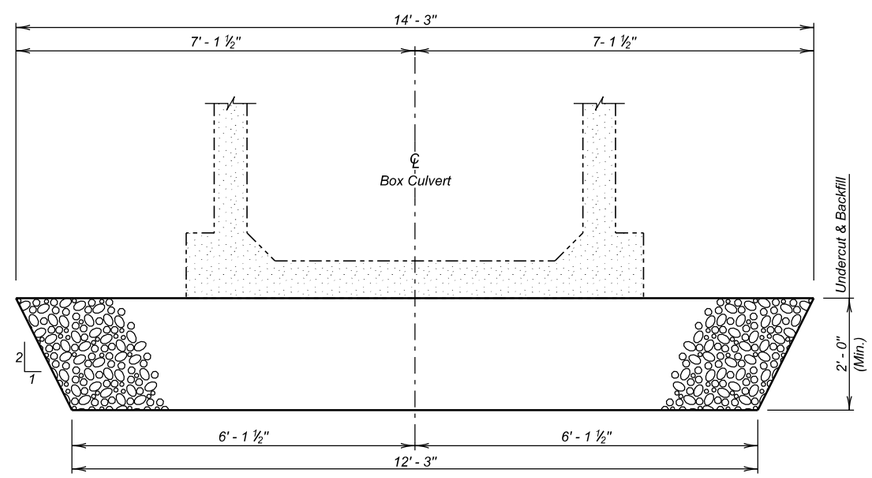

TYPICAL SECTION
(For Limits of Undercut)

ESTIMATED QUANTITIES

	ITEM	UNIT	QUANTITY
⌀	Box Culvert Undercut	Cu. Yd.	51

⌀ For payment, quantity is based on plan shown undercut dimensions and will not be measured unless the Engineer orders a change.

NOTES AND UNDERCUT DETAILS

FOR

6' X 6' BOX CULVERT EXTENSION

I90 OVER CREEK — 0° SKEW
STA. 257 + 38.93 (W.B.L.) — SEC. 9/10-T3N-R6E
STR. NO. 47-091-553 — IM 0901(38)40
HS 20-44
(& ALT.)

MEADE COUNTY

S. D. DEPT. OF TRANSPORTATION

FEBRUARY 2014

DESIGNED BY	CK. DES. BY	DRAFTED BY	
BAF	MM/PW	GW/MG	Steve A Johnson
MEAD5580	5580WM02		BRIDGE ENGINEER

STATE OF	PROJECT	SHEET NO.	TOTAL SHEETS
S.D.	IM 0901(38)40	E192	E199

BREAKOUT STRUCTURAL CONCRETE

1. This work shall consist of breaking out and disposing of structural concrete. All broken out concrete and other discarded material shall be disposed of in accordance with the ENVIRONMENTAL COMMITMENT notes found in Section A.
2. Define the breakout limits with ¾ inch saw cuts.
3. Any additional breakout required due to spalling or cracking of the existing structure will be determined by the Engineer. Where additional breakout in the barrel section of the existing structure is required, care shall be taken not to damage any of the existing reinforcing steel. All steel will be left in place and thoroughly cleaned by sandblasting.
4. Additional breakout in existing walls or top slab will require shoring up of the parapet and top slab, as directed by the Engineer.
5. Plans quantity payment will be full compensation for this item regardless of the quantity actually broken out, unless measurement is ordered by the Engineer. If the Engineer orders breakout beyond the limits shown, this additional breakout will be paid for at the contract unit price per cubic yard for Breakout Structural Concrete. If additional breakout is caused by the Contractor's operations, no additional payment will be made.
6. Breakout Structural Concrete will be paid for at the contract unit price per cubic yard. This payment shall be full compensation for furnishing all materials, labor, tools and equipment necessary or incidental to breaking out the structural concrete. Payment includes, but is not limited to, excavation required to perform the required breakout, sawcutting, breaking out concrete, cleaning, and sandblasting reinforcing steel and concrete surfaces, and removing and disposing of all waste materials to satisfactorily complete the work.

INSTALLING DOWELS IN CONCRETE

1. Dowels shall be installed as per Section 380.3 C.1.
2. No loads shall be applied to the epoxy grouted dowel bars until the epoxy resin has had sufficient time to cure as specified by the epoxy resin manufacturer.
3. Embed z2 dowels 8" into existing concrete.
4. Dowel bars shall be #6 deformed bars conforming to ASTM A615 Grade 60.
5. The cost of drilling holes, epoxy resin, dowels, installation, and other incidental items shall be included in the contract unit price per each for Install Dowel in Concrete.

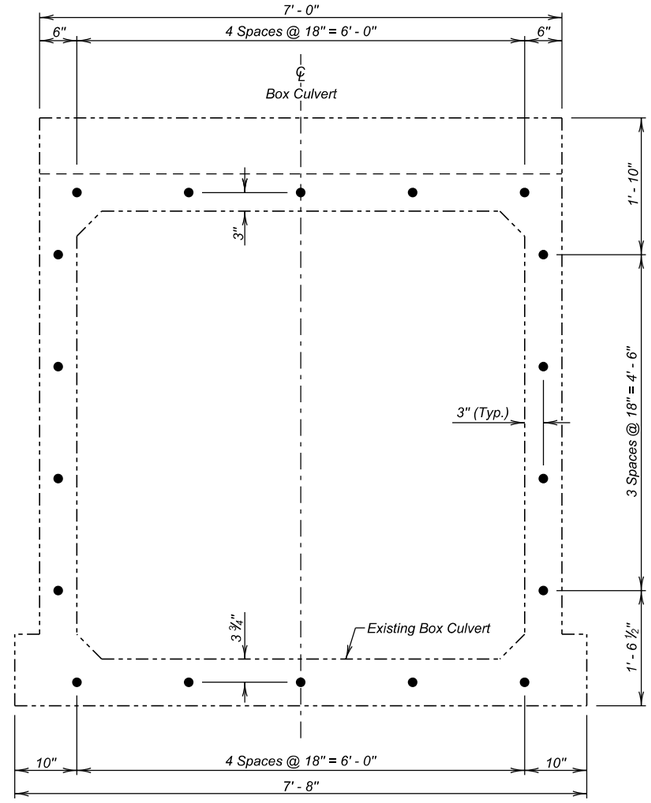

VIEW A - A
(Dowel Locations)

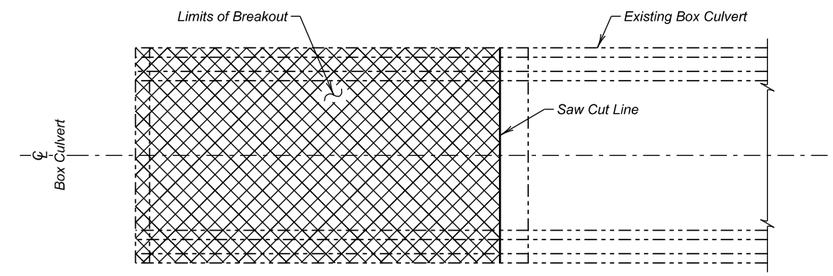

PLAN - BREAKOUT DETAILS

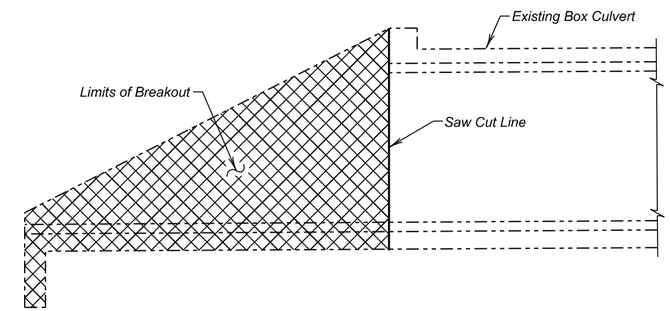

ELEVATION - BREAKOUT DETAILS

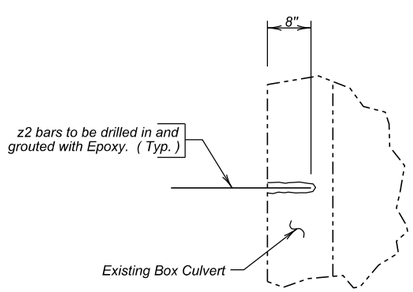

DETAIL "X"

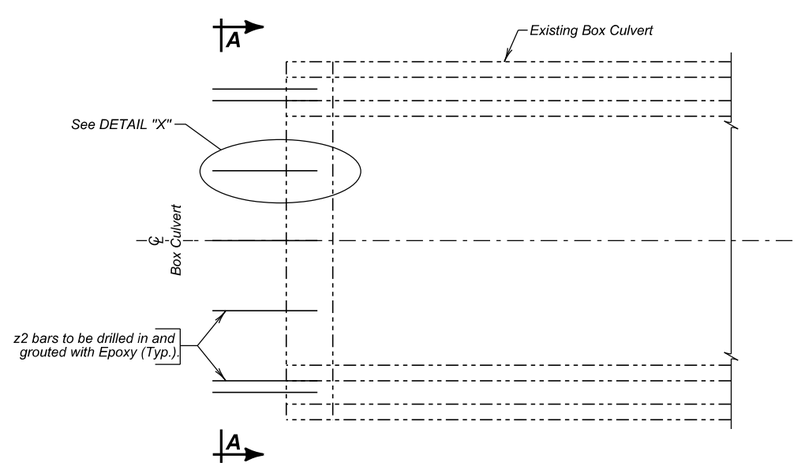

PLAN - DOWEL DETAILS

ESTIMATED QUANTITIES		
ITEM	UNIT	QUANTITY
Breakout Structural Concrete	Cu. Yd.	15.9
Install Dowel In Concrete	Each	18

BREAKOUT AND DOWEL PLACEMENT DETAILS
FOR
6' X 6' BOX CULVERT EXTENSION

I90 OVER CREEK — 0° SKEW
STA. 257 + 38.93 (W.B.L.) — SEC. 9/10-T3N-R6E
STR. NO. 47-091-553 — IM 0901(38)40
HS 20-44
(& ALT.)

MEADE COUNTY
S. D. DEPT. OF TRANSPORTATION
FEBRUARY 2014

DESIGNED BY	CK. DES. BY	DRAFTED BY	
BAF	MM/PW	GW/MG	Steve A Johnson
MEAD5580	5580WM03		BRIDGE ENGINEER

STATE OF	PROJECT	SHEET NO.	TOTAL SHEETS
S.D.	IM 0901(38)40	E193	E199

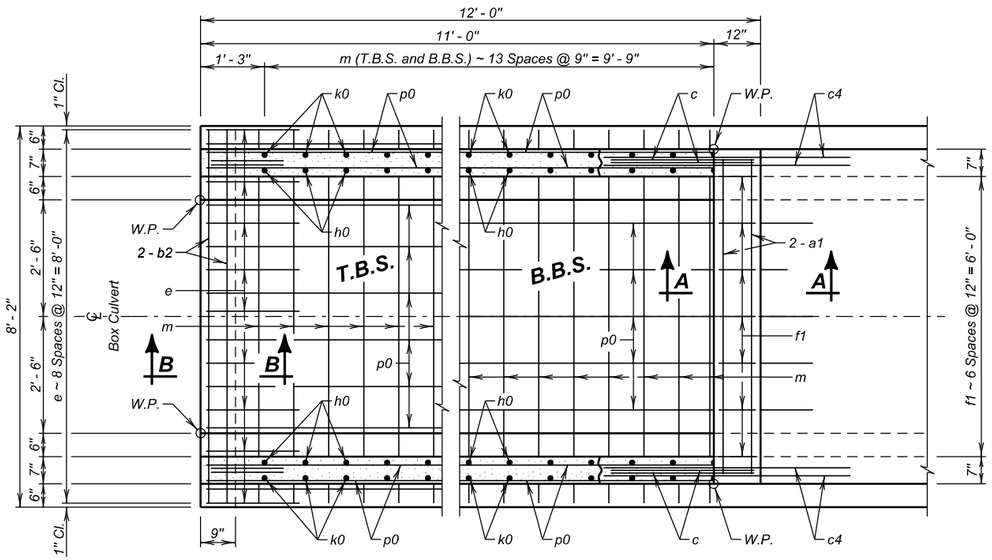

PLAN

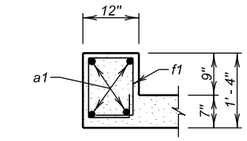

SEC. A - A
(At Top Slab)

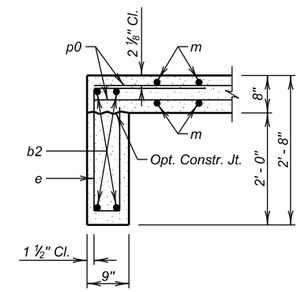

SEC. B - B

REINFORCING SCHEDULE

	Mk.	No.	Size	Length	Type
✳	a1	4	6	6' - 9"	Str.
	b2	4	6	8' - 0"	Str.
	c	4	5	4' - 6"	1A
	c3	8	5	12' - 3"	Str.
	c4	4	5	7' - 0"	19B
	d2	8	5	5' - 3"	19B
	e	9	4	7' - 0"	S12
	f1	7	4	5' - 0"	S6A
	g3	12	5	5' - 0"	Str.
ϕ	g4	10	4	15' - 3"	Str.
	g5	4	4	12' - 9"	Str.
ϕ	h0	12	4	12' - 3"	17A
ϕ	k0	12	4	15' - 0"	17A
	m	28	5	8' - 0"	Str.
	p0	15	4	13' - 0"	Str.

Bending Details

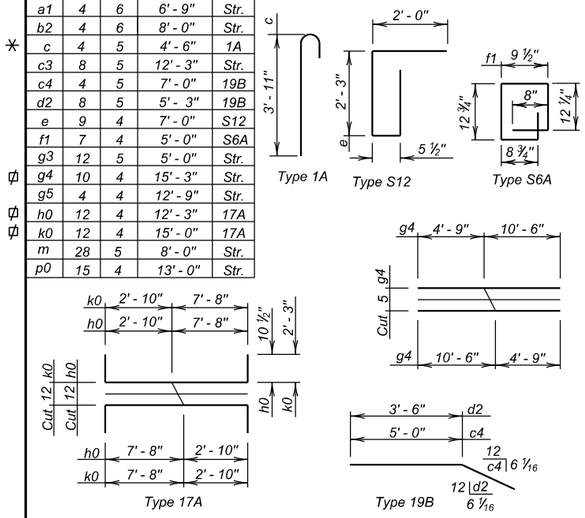

NOTES:
All dimensions are out to out of bars.
ϕ See cutting diagram.
✳ Bend in field as necessary to fit.

ESTIMATED QUANTITIES

ITEM	Class A45 Concrete, Box Culvert	Reinforcing Steel	Structure Excavation, Box Culvert
UNIT	Cu. Yd.	Lb.	Cu. Yd.
Outlet	5.9	1129	2.8

LEGEND FOR PLACING RE-STEEL

T. B. S - Top of Bottom Slab
B. B. S. - Bottom of Bottom Slab
O. F. W. W. - Outside Face of Wing Wall
I. F. W. W. - Inside Face of Wing Wall

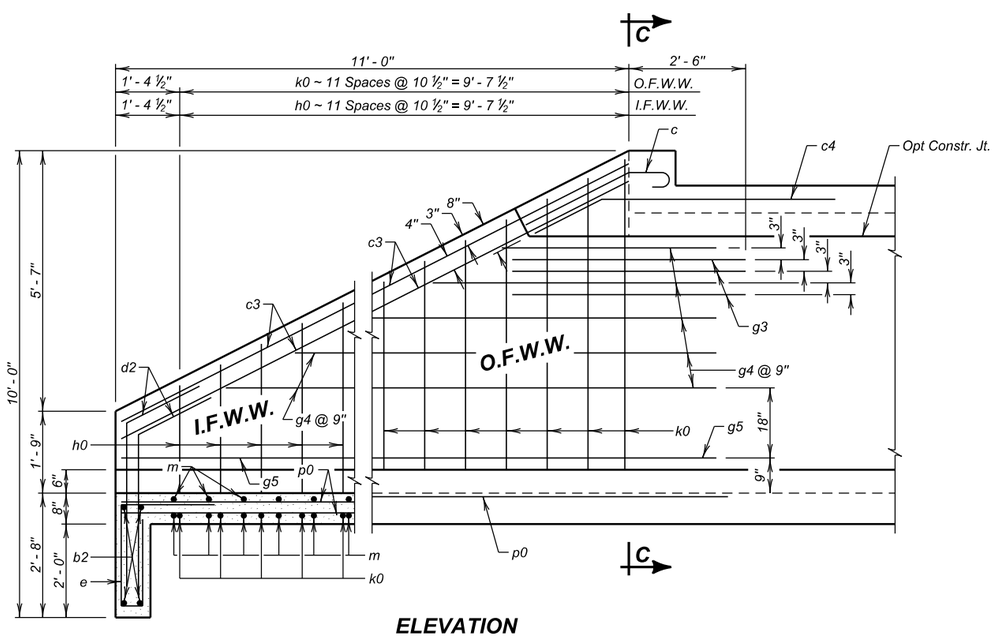

ELEVATION

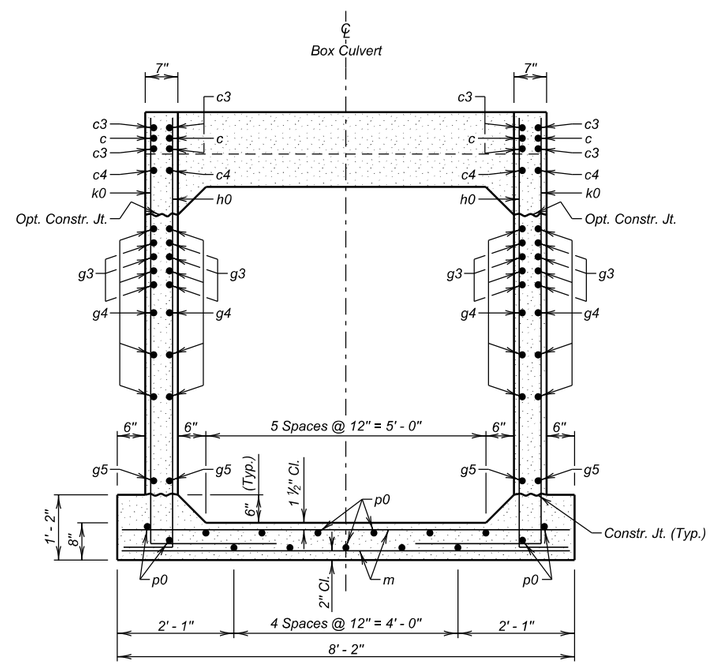

SEC. C - C

OUTLET DETAILS
FOR
6' X 6' BOX CULVERT EXTENSION

I90 OVER CREEK — 0° SKEW
STA. 257 + 38.93 (W.B.L.) — SEC. 9/10-T3N-R6E
STR. NO. 47-091-553 — IM 0901(38)40
HS 20-44
(& ALT.)

MEADE COUNTY
S. D. DEPT. OF TRANSPORTATION
FEBRUARY 2014

DESIGNED BY	CK. DES. BY	DRAFTED BY	
BAF	MM/PW	GW/MG	Steve A. Johnson BRIDGE ENGINEER
MEAD5580	5580WM04		

STATE OF	PROJECT	SHEET NO.	TOTAL SHEETS
S.D.	IM 0901(38)40	E194	E199

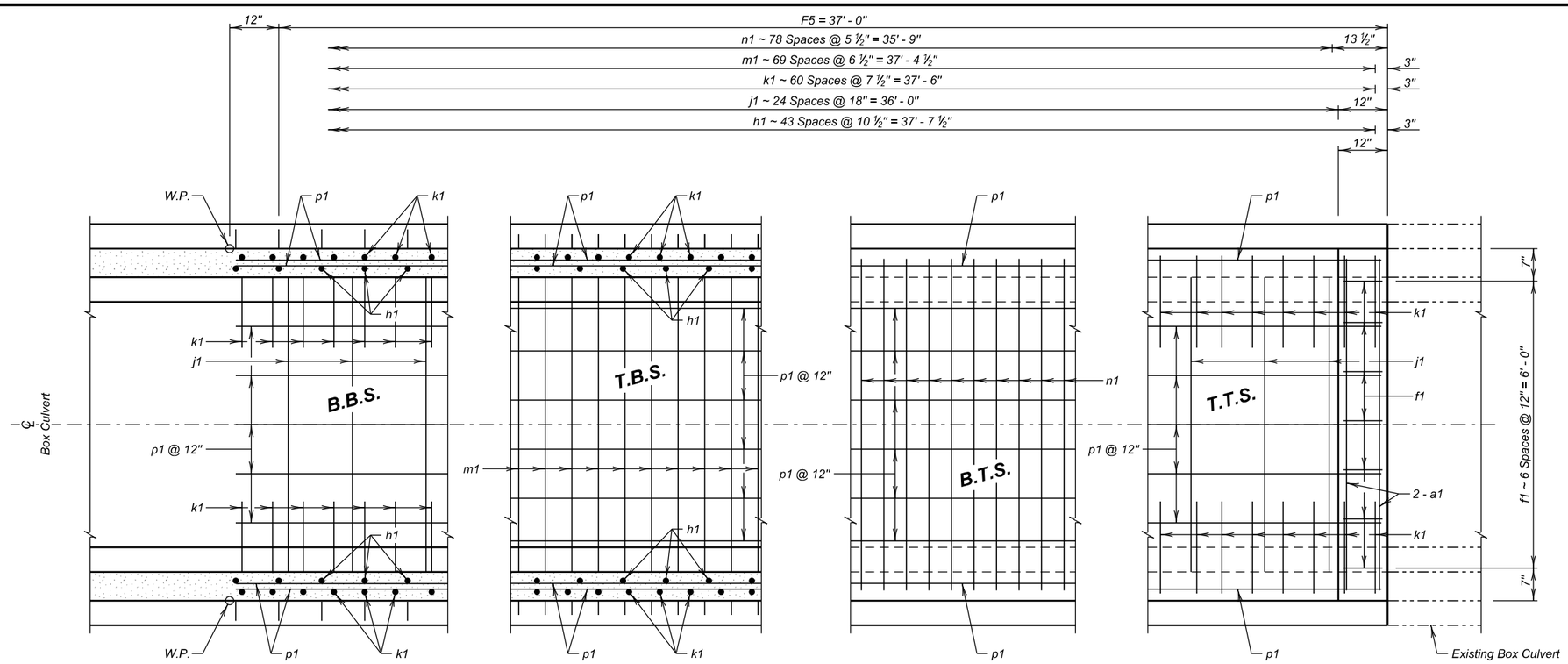

PLAN

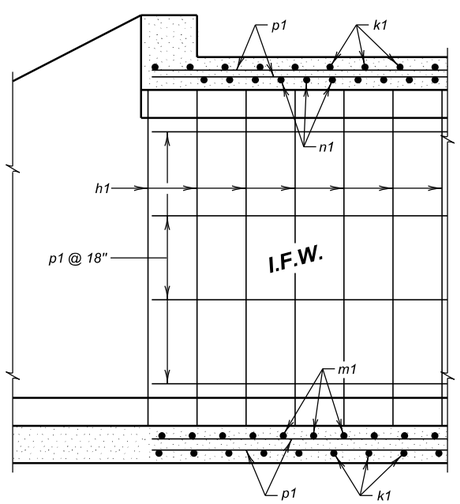

ELEVATION

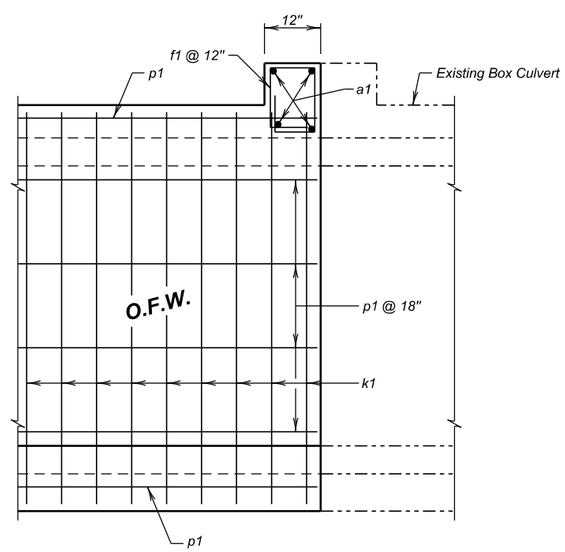

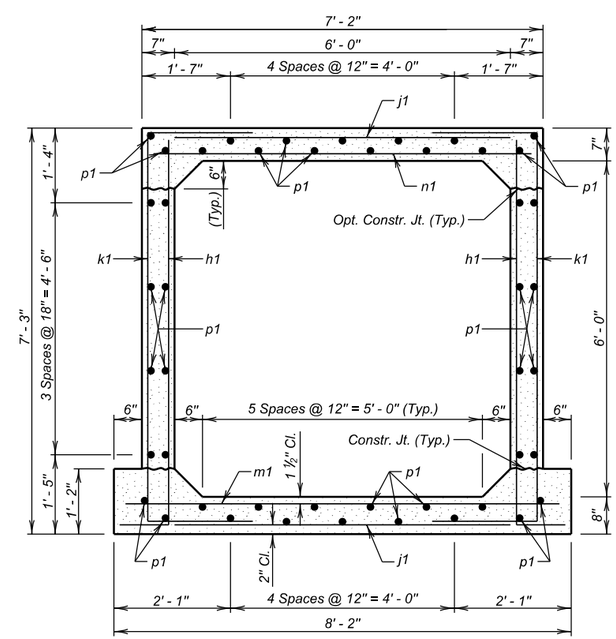

F5 BARREL SECTION

(5' - 0" Maximum Fill)

REINFORCING SCHEDULE

Mk.	No.	Size	Length	Type	Bending Details
a1	4	6	6' - 9"	Str.	
f1	7	4	5' - 0"	S6A	
h1	88	4	7' - 9"	17A	
j1	50	4	6' - 0"	Str.	
k1	122	4	10' - 9"	17	
m1	70	5	7' - 9"	Str.	
n1	79	5	6' - 9"	Str.	
p1	46	4	37' - 9"	Str.	
✳ z2	5	6	2' - 3"	Str.	

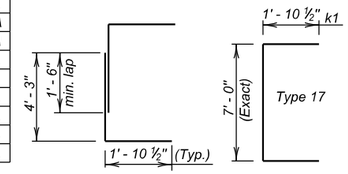

OPTIONAL k1 SPLICE DETAIL
Contractor may use optional reinforcing steel splice, as shown. The cost of the additional reinforcing steel shall be borne by the Contractor.

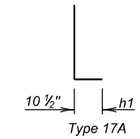

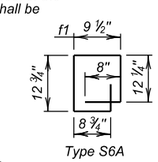

NOTES:
All dimensions are out to out of bars.

Request for additional reinforcing steel splices at points other than those shown, must be submitted to the Engineer for prior approval. If additional splices are approved, no payment will be allowed for the added quantity of reinforcing steel.

✳ Quantity of z2 dowel bars is not included in reinforcing steel quantity. (See BREAKOUT AND DOWEL PLACEMENT DETAILS Sheet.)

ESTIMATED QUANTITIES

ITEM	Class A45 Concrete, Box Culvert	Reinforcing Steel	Structure Excavation, Box Culvert
UNIT	Cu.Yd.	Lb.	Cu.Yd.
1 - F5 Barrel End Section @ 37' - 0"	24.4	3879	7.5

LEGEND FOR PLACING RE- STEEL

T.T.S.	- Top of Top Slab
B.T.S.	- Bottom of Top Slab
T.B.S.	- Top of Bottom Slab
B.B.S.	- Bottom of Bottom Slab
O.F.W.	- Outside Face of Wall
I.F.W.	- Inside Face of Wall

F5 BARREL END SECTION (37' - 0")

FOR

6' X 6' BOX CULVERT EXTENSION

I90 OVER CREEK — 0° SKEW
STA. 257 + 38.93 (W.B.L.) — SEC. 9/10-T3N-R6E
STR. NO. 47-091-553 — IM 0901(38)40
HS 20-44
(& ALT.)

MEADE COUNTY

S. D. DEPT. OF TRANSPORTATION

FEBRUARY 2014

DESIGNED BY	CK. DES. BY	DRAFTED BY	
BAF	MM/PW	GW/MG	Steve A Johnson
MEAD5580	5580WM05		BRIDGE ENGINEER

YEAR PLATE DETAILS FOR ORIGINAL CONSTRUCTION

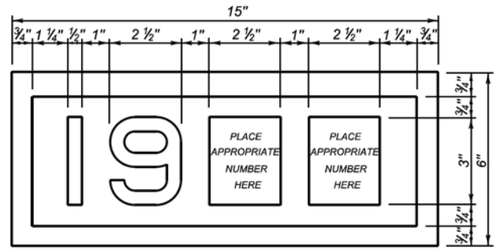

YEAR PLATE DETAILS FOR NEW CONSTRUCTION

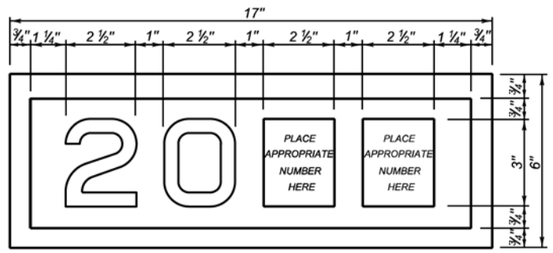

GENERAL NOTES:

1. Year plates of the general dimensions shown shall be constructed on all box culverts and bridges. The year plates shall be constructed in reverse and attached to the forms in such a manner that the finished imprint in the concrete does not exceed one-half (½) inch in depth.
2. Year plates shall be located on structure(s) as follows:
   a. On cast-in-place box culverts the year plates shall be four and one - half (4 ½) inches below the top of the upstream parapet wall and centered laterally on the upstream face. On precast box culverts the year plate shall be centered laterally on the upstream face of the top slab. Where an extended interior wall interferes with this location, the year plate shall be centered in an adjacent barrel.
   b. On bridges with six (6) inch curbs or "Jersey" shaped barriers with no endblocks, the year plate shall be centered vertically on the curb face approximately six (6) inches from the end of the bridge, or as designated by the Engineer. On bridges with "Jersey" shaped barrier endblocks, the year plate shall be centered on the upper sloped portion of the barrier approximately 5'- 6" from the end of the bridge, or as designated by the Engineer. There shall be one year plate at each end of the bridge on opposite sides.
   c. When the plans specify that both the original date of construction and the date of reconstruction are to be shown, one date shall be placed as listed above and the other located adjacent to it. Both year plates shall be shown at each end of the bridge on opposite sides.
3. There will be no separate measurement or payment made for year plates on box culverts and bridges. All costs for this work shall be incidental to other contract items.

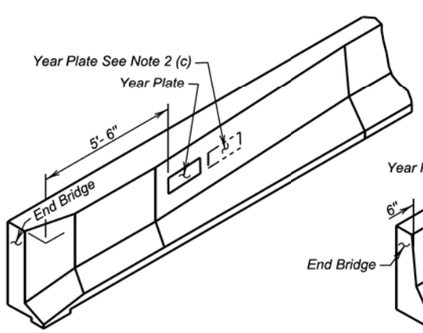

JERSEY BARRIER
(With Endblock)

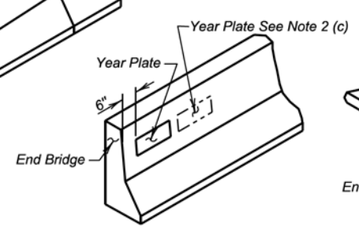

JERSEY BARRIER

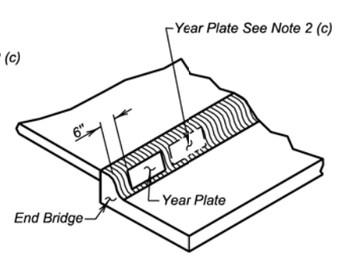

TYPE B CURB

June 26, 2012

Published Date: 3rd Qtr. 2016	SDDOT	DUAL DATE YEAR PLATE DETAILS	PLATE NUMBER 460.03
			Sheet 1 of 1

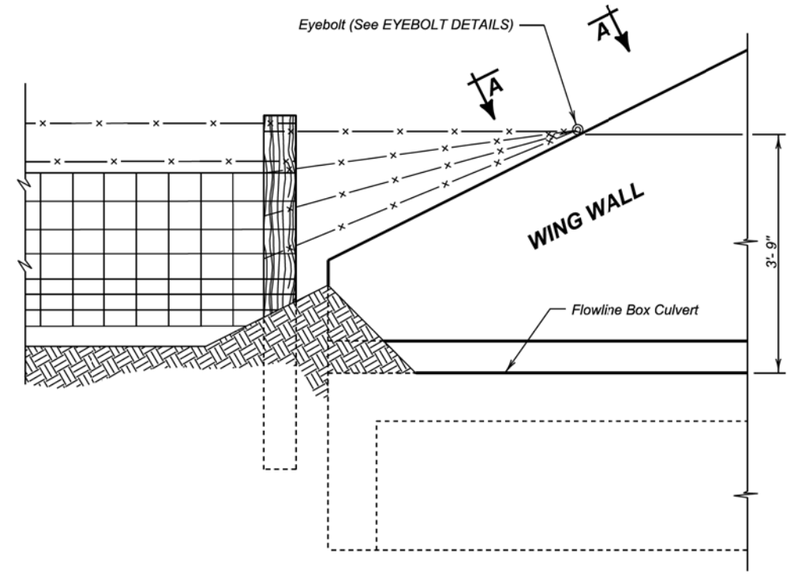

DETAIL FOR FENCE ANCHORS

GENERAL NOTES:

1. The fence and post details shown are for illustrative purpose only. The fence shall be as specified elsewhere in the plans.
2. Eyebolts shall be placed on all of the box culvert wing walls.
3. Eyebolts shall be ⅝ inch diameter and shall conform to ASTM A307.
4. Eyebolts, nuts, and concrete inserts shall be galvanized in accordance with AASHTO M232 (ASTM A153). Concrete inserts of corrosion resistant material need not be galvanized.
5. Cast-in-place eyebolts shall have a nut attached, be 4 ½ inches (Min.) in length and shall be embedded such that the eye of the bolt is flush with the concrete surface. (See Eyebolt Details) As an alternate, cast-in-place concrete inserts, capable of developing the full strength of the ⅝ inch diameter threaded eyebolt, may be used and shall be set in the concrete in accordance with the manufacturer's recommendations. The eyebolt shall be of sufficient length to develop its full strength. The eye of the eyebolt shall be flush with the concrete surface.
6. The cost for furnishing and installing eyebolts and/or concrete inserts shall be incidental to various contract items.

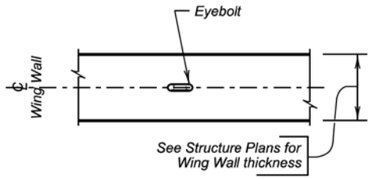

VIEW A - A

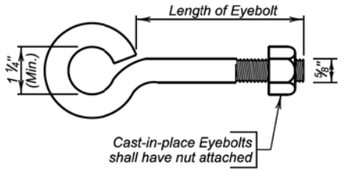

EYEBOLT DETAILS

December 23, 2012

Published Date: 3rd Qtr. 2016	SDDOT	FENCE ANCHORS FOR BOX CULVERT WING WALLS	PLATE NUMBER 620.16
			Sheet 1 of 1

STATE OF	PROJECT	SHEET NO.	TOTAL SHEETS
S.D.	IM 0901(38)40	E196	E199

△1 Revised Sep. 20, 2016 JSD/PW

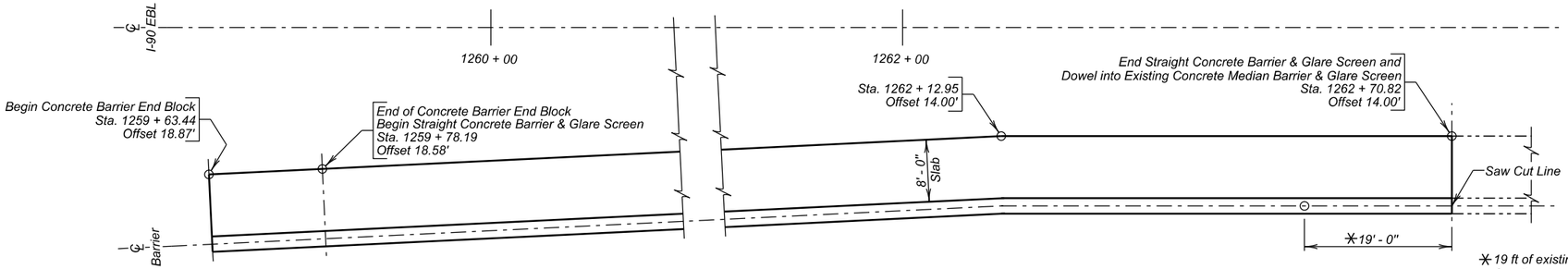

✳19 ft of existing barrier to be removed.
See Breakout Structural Concrete Notes.

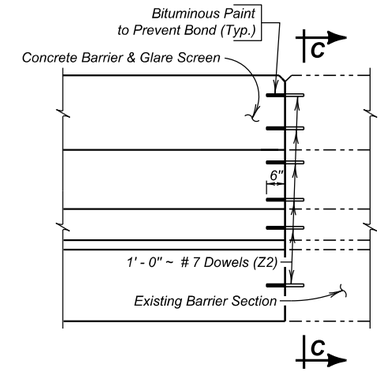

ELEVATION - TIE TO EXISTING BARRIER

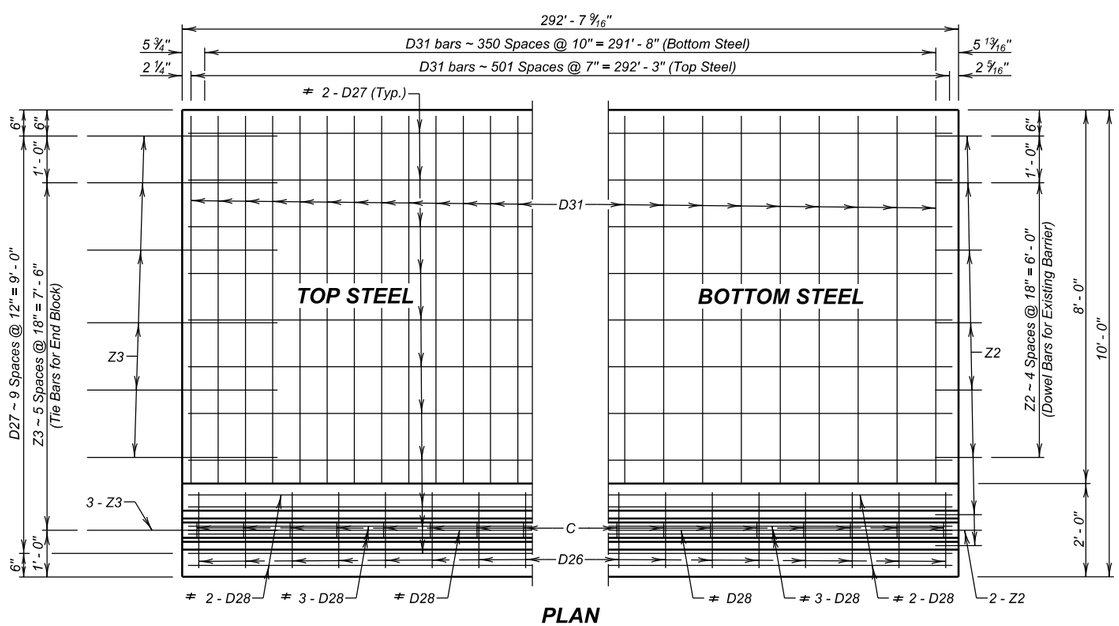

PLAN
(Glare Screen not shown)

NOTE :
See DETAILS FOR CONCRETE BARRIER
END BLOCK for Reinforcing Schedule.

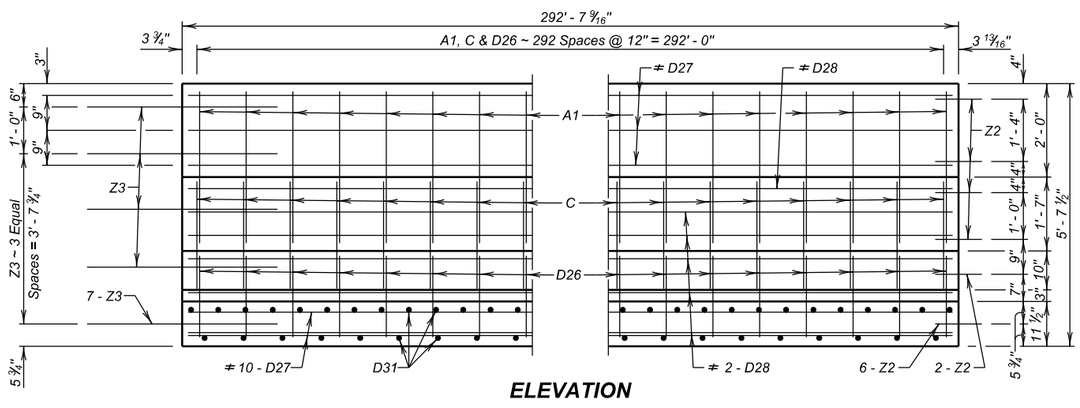

ELEVATION

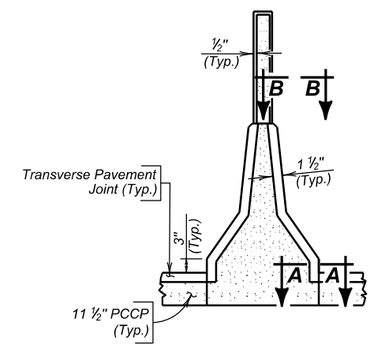

CONTRACTION JOINT

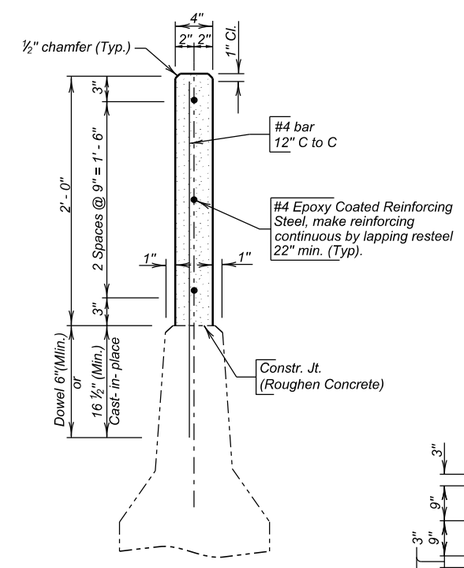

GLARE SCREEN FOR SLIPFORMING

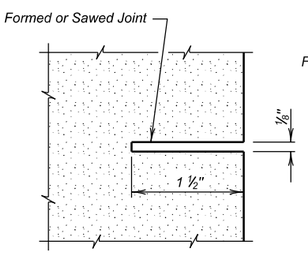

SEC. A - A

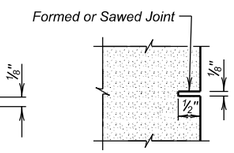

SEC. B - B

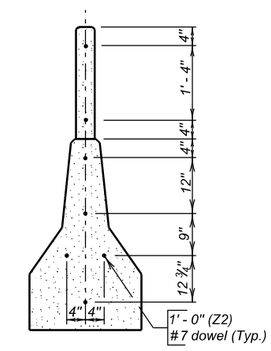

SEC. C - C

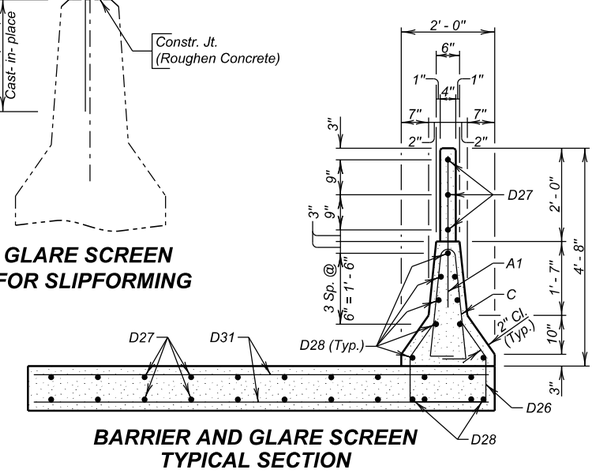

BARRIER AND GLARE SCREEN TYPICAL SECTION

INDEX OF SHEETS-

Sheet No. 1 - Layout & Details for Concrete Barrier & Concrete Glare Screen
Sheet No. 2 - Estimate of Structure Quantities & Notes
Sheet No. 3 - Notes (Continued)
Sheet No. 4 - Details for Concrete Barrier End Block

LAYOUT & DETAILS FOR CONCRETE BARRIER & CONCRETE GLARE SCREEN

I-90 IM 0901(38)40
PCN 5580

MEADE COUNTY
S. D. DEPT. OF TRANSPORTATION
SEPTEMBER 2016

1 OF 4

DESIGNED BY	CK. DES. BY	DRAFTED BY	
JSD	PW	MDG	Steve A Johnson BRIDGE ENGINEER
MEAD5580	5580GA01		

ESTIMATE OF STRUCTURE QUANTITIES

DESCRIPTION	QUANTITY	UNIT	REMARKS
Class A45 Concrete, Miscellaneous	148.8	C.Y.	
Epoxy Coated Reinforcing Steel	18826	LB	
Install Dowel in Concrete	12	Ea.	
Breakout Structural Concrete	2.4	C.Y.	

SPECIFICATIONS FOR BRIDGE

1. Design Specifications: AASHTO LRFD Bridge Design Specifications, 2014 with 2015 interims.

2. Construction Specifications: South Dakota Standard Specifications for Roads and Bridges, 2015 Edition and required provisions, supplemental specifications and special provisions as included in the proposal.

DESIGN MATERIAL STRENGTHS

Class A45 Concrete	f'c = 4,500 psi
Reinforcing Steel	fy = 60,000 psi

DESIGN MIX OF CONCRETE

1. All concrete shall be Class A45.

2. Type II cement is required.

3. Mix shall be designed to produce a concrete having a minimum 28 day compressive strength of 4,500 psi for Class A45.

4. Coarse aggregate to be used in concrete shall consist of either crushed quartzite or other crushed ledge rock. If crushed ledge rock other than quartzite is to be used, it shall be from a source approved by the Engineer.

GENERAL CONSTRUCTION

1. All mild reinforcing steel shall conform to ASTM A615, Grade 60.

2. All exposed concrete corners and edges shall be chamfered 3/4" unless noted otherwise.

3. Use 1" clear cover on all reinforcing steel except as shown.

4. Barrier and glare screen shall be built normal to the grade.

CONCRETE BARRIER AND GLARE SCREEN

The concrete barrier may be cast-in-place by using stationary forms, slipforming or a combination of the two construction methods. The glare screen shall be constructed using stationary forms only. See notes for STATIONARY FORM CONSTRUCTION or SLIPFORM CONSTRUCTION.

CONTRACTION JOINTS

1. Contraction joints are required at spacing of 30 ft. (maximum). Match joints in adjacent concrete pavement. Joints are required in both the concrete barrier and the concrete glare screen.

2. The contraction joints may be either sawed or formed. If sawed, the concrete must have reached a strength of 2,000 psi prior to sawing.

3. End of day joints or construction joints shall be roughened to provide aggregate interlock and shall have 39" of resteel extending beyond the joint to provide a 36" lap. These joints shall be located at a pavement joint or contraction joint location.

INSTALLING DOWELS IN CONCRETE

1. Holes drilled in the existing concrete shall be true and normal or as shown in the plans. Concrete shall have attained a strength of 2,000 psi before drilling dowel holes.

2. The epoxy resin mixture shall be of a type for bonding steel to hardened concrete and shall conform to AASHTO M235 Type IV, Grade 3 (Equivalent to ASTM C881, Type IV, Grade 3).

3. The diameter of the drilled holes shall not be less than 1/8 inch greater nor more than 3/8 inch greater than the diameter of the dowels or as per the Manufacturer's recommendations. Holes shall not be drilled using core bits. The drilled holes shall be blown out with compressed air using a device that will reach the back of the hole to ensure that all debris or loose material has been removed prior to epoxy injection.

4. Mix epoxy resin as recommended by the Manufacturer and apply by an injection method as approved by the Engineer. Beginning at the bottom/back of the drilled holes, fill the holes 1/3 to 1/2 full of epoxy, or as recommended by the Manufacturer, prior to insertion of the steel bar. Care shall be taken to prevent epoxy from running out of the horizontal holes prior to steel bar insertion. Rotate the steel bar during installation to eliminate voids and ensure complete bonding of the bar. Insertion of the bars by the dipping or painting method will not be allowed.

5. No loads shall be applied to the epoxy grouted dowel bars until the epoxy resin has had sufficient time to cure as specified by the epoxy resin manufacturer.

6. The cost of drilling holes, epoxy resin, dowels, installation and other incidental items shall be included in the contract unit price per each for Install Dowel in Concrete.

STATIONARY FORM CONSTRUCTION

1. Forms shall be maintained in a true position during the placement of concrete. External bracing for aligning and holding of the forms shall be required unless other methods are approved by the Engineer.

2. Snap ties, if used in concrete barrier, concrete end block, or glare screen formwork, shall be epoxy coated. The epoxy coating shall be inert in concrete and compatible with the coating applied to the new epoxy coated reinforcing steel.

SLIPFORM CONSTRUCTION

1. The concrete glare screen may not be constructed using slipform equipment.

2. Concrete barrier may be constructed using either cast-in-place or slipform equipment provided that the finished concrete barrier is true to the specified line and grade within a tolerance of + or – ¼ inch in 10 ft.

3. The concrete barrier shall present a smooth, uniform appearance in its final position, and shall conform to horizontal and vertical lines shown in the plans or as directed by the Engineer. The surfaces shall be free from humps, sags, or other irregularities. Should a section of the concrete barrier prove to be unsatisfactory in the judgement of the Engineer, that section shall be removed and reconstructed at the Contractor's expense.

4. The concrete shall be vibrated, rammed, tamped or worked with suitable appliances until the concrete has been consolidated to the maximum practical density, free of rock pockets, and snug against the form surfaces. The concrete shall be of such consistency after slipforming that it will maintain the shape of the concrete barrier without support. Prior to the beginning of operations, the Contractor shall insure that a continuous deposit of concrete can be made at the slipform machine to minimize starting and stopping.

5. The grade for the top of the concrete barrier shall be indicated by an offset guideline set by the Contractor from survey marks established by the Engineer. The forming portion of the slipform machine shall be readily adjustable vertically during the forward motion of the machine to conform to the predetermined grade line. The slipform machine shall be guided by horizontal sensors that ride along a wire line. A grade line gauge or pointer shall be attached to the machine in such a manner that a continual comparison can be made between the barrier being placed and the established grade line. The slipform machine shall not exceed the speed recommended by the manufacturer.

6. In lieu of the above method for maintaining the barrier grade, the slipform machine may be operated on rails or forms set at uniform depth below the predetermined finished top of the barrier grade, or on existing pavement.

7. Compensation for concrete barrier slump may be made by running the machine slightly higher and reducing the size of the forming area so that the end result is equivalent to the design section and acceptable to the Engineer. Concrete that is furnished to the slipform machine shall not exceed ¾ inch slump, unless directed otherwise by the Engineer, to further minimize the barrier slump.

Revised September 20, 2016 JSD/PW

BREAKOUT STRUCTURAL CONCRETE

1. This work shall consist of breaking out and disposing of structural concrete. All broken out concrete and other discarded material shall be disposed of in accordance with the ENVIRONMENTAL COMMITMENTS found in Section A.

2. Define the breakout limits with $^{3}/_{4}$ inch deep saw cuts.

3. Any additional breakout required due to spalling or cracking of the existing barrier will be determined by the Engineer.

4. Plans quantity payment will be full compensation for this item regardless of the quantity actually broken out, unless measurement is ordered by the Engineer. If the Engineer orders breakout beyond the limits shown, this additional breakout will be paid for at the contract unit price per cubic yard for Breakout Structural Concrete. If additional breakout is caused by the Contractor's operations, no additional payment will be made.

5. Breakout Structural Concrete will be paid for at the contract unit price per cubic yard. This payment shall be full compensation for furnishing all materials, labor, tools and equipment necessary or incidental to breaking out the structural concrete. Payment includes, but is not limited to, excavation required to perform the required breakout, saw cutting, breaking out concrete, cleaning and sandblasting reinforcing steel and concrete surfaces, and removing and disposing of all waste materials to satisfactorily complete the work.

STATE OF	PROJECT	SHEET NO.	TOTAL SHEETS
S.D.	IM 0901(38)40	E199	E199

△1 Revised Sep. 20, 2016 JSD/PW

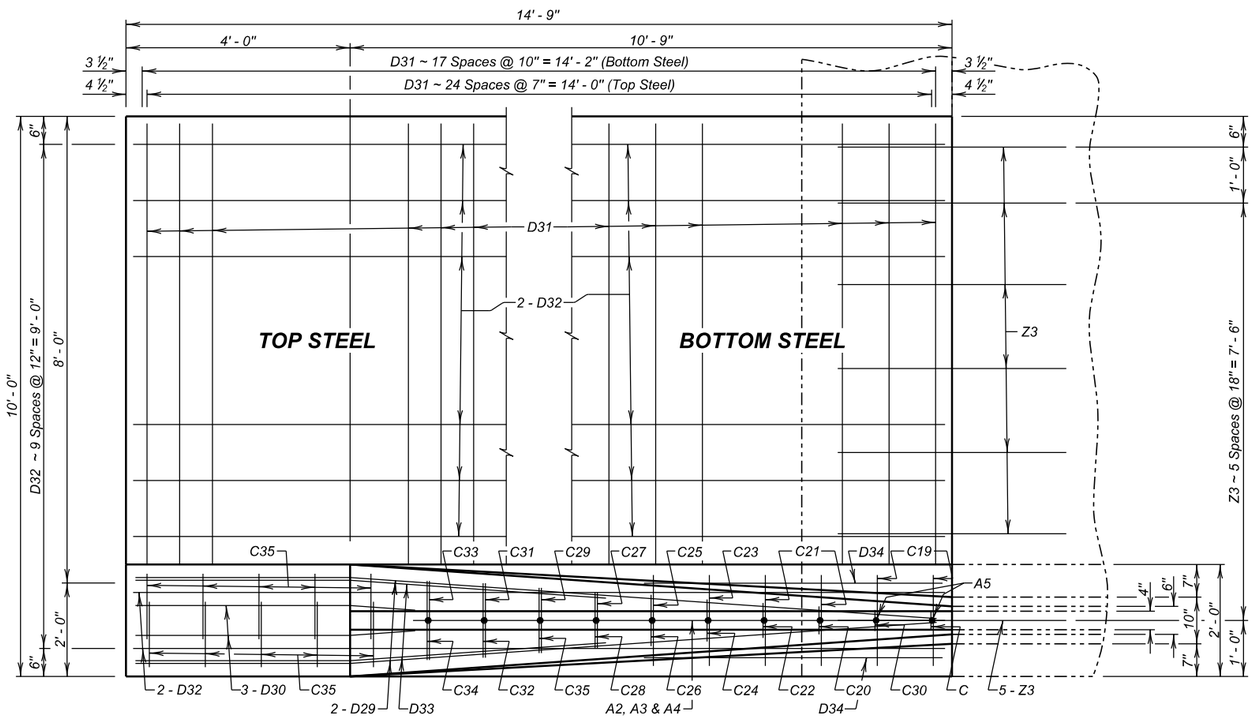

PLAN

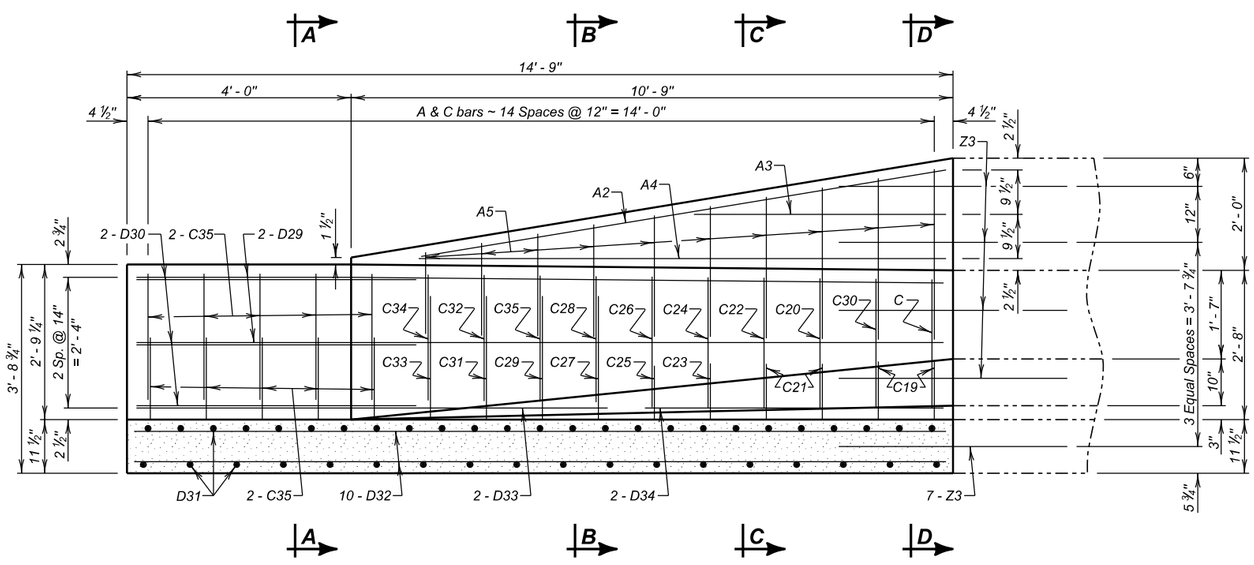

ELEVATION

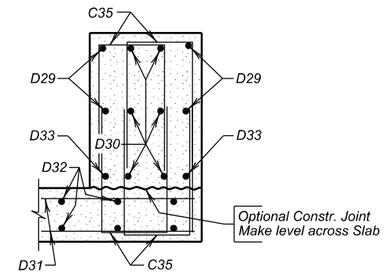

SEC. A - A

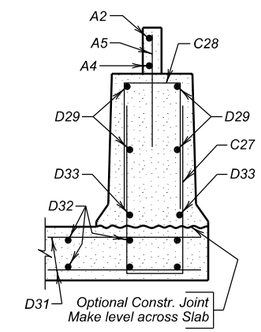

SEC. B - B

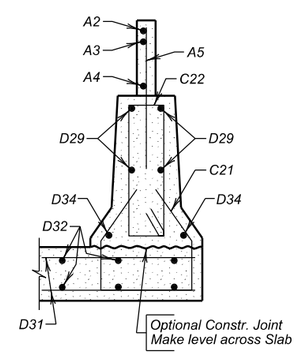

SEC. C - C

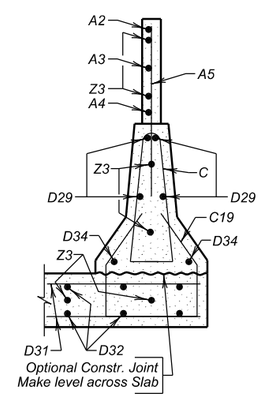

SEC. D - D

REINFORCING SCHEDULE

(For One Concrete Barrier with Glare Screen and Endblock)

Mk.	No.	Size	Length	Type
A2	1	4	9' - 6"	Str.
A3	1	4	4' - 6"	Str.
A4	1	4	9' - 5"	Str.
⌀ A5	5	4	4' - 6"	Str.
C	1	5	5' - 10"	T2B
C19	2	5	5' - 8"	14A
C20	1	5	6' - 7"	T1
C21	2	5	5' - 7"	14A
C22	1	5	6' - 10"	T1
C23	1	5	5' - 6"	14A
C24	1	5	7' - 1"	T1
C25	1	5	5' - 5"	14A
C26	1	5	7' - 5"	T1
C27	1	5	7' - 0"	17
C28	1	5	5' - 6"	17
C29	1	5	7' - 2"	17
C30	1	5	6' - 0"	T2B
C31	1	5	7' - 4"	17
C32	1	5	5' - 10"	17
C33	1	5	7' - 5"	17
C34	1	5	5' - 11"	17
C35	21	5	5' - 8"	17
D29	4	5	14' - 5"	19B
D30	6	5	5' - 0"	19B
D31	43	4	9' - 9"	Str.
D32	20	4	14' - 6"	Str.
D33	2	4	8' - 5"	19B
D34	2	5	5' - 4"	Str.
Z3	11	6	4' - 1"	Str.
Barrier/Glare Screen				
A1	293	4	3' - 3"	Str.
C	293	5	5' - 10"	T2B
D26	293	5	5' - 6"	14A
D27	161	4	43' - 5"	Str.
D28	77	5	44' - 5"	Str.
D31	853	4	9' - 9"	Str.
⌀ Z2	12	7	1' - 0"	Str.

Bending Details

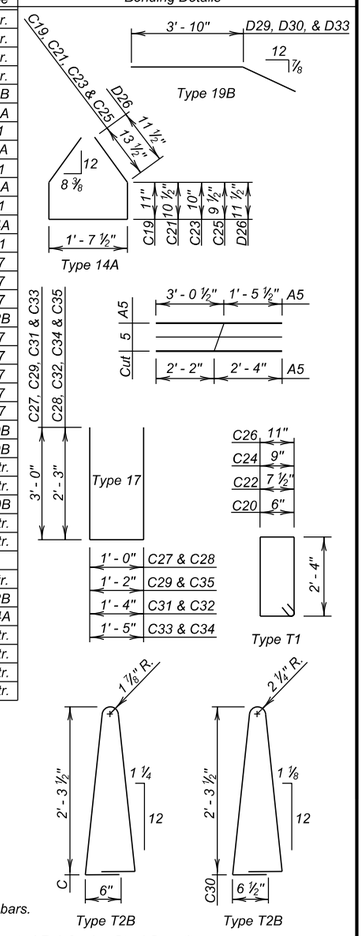

NOTES:
All bars to be epoxy coated.
All dimensions are out to out of bars.
⌀ See cutting diagram.
△ Z2 bars not included in Epoxy Coated Reinforcing Steel Quantity.

ESTIMATED QUANTITIES

ITEM	UNIT	QUANTITY
Class A45 Concrete, Miscellaneous	Cu. Yd.	148.8
⌀ Epoxy Coated Reinforcing Steel	Lb.	18826
Install Dowel in Concrete	Each	12

1. 7.9 Cu. Yd. Concrete in Barrier End Block
2. 934 Lbs. Epoxy Coated Reinforcing Steel in Barrier End Block
3. 140.9 Cu. Yd. Concrete in Concrete Barrier
4. 17892 Lbs. Epoxy Coated Reinforcing Steel in Concrete Barrier

Items 1 thru 4 are approximate quantities contained in above bid items and are for information only.

DETAILS FOR CONCRETE BARRIER END BLOCK

I-90 IM 0901(38)40

MEADE COUNTY
S. D. DEPT. OF TRANSPORTATION
SEPTEMBER 2016

DESIGNED BY	CK. DES. BY	DRAFTED BY	
JSD	PW	MDG	Steve A Johnson BRIDGE ENGINEER
MEAD5580	5580GA04		