Plotting Date: 08/08/2016

SECTION F: SURFACING PLANS

INDEX OF SHEETS

F1	General Layout W/Index
F2-F14	Estimate With General Notes & Tables
F15-F49	Typical Sections
F50-F61	PCC Pavement Joint Layouts
F62-F63	Layout Showing Removal and Surfacing Limits at Exit 40 Crossroad and Ramps
F64-F65	Driving Surface Transition Details
F66-F74	Guardrail Embankment Layout
F75-F77	Surfacing Details for Median Crossovers
F78-F79	Typical On Ramp Acceleration Lane and Off Ramp Deceleration Lane Details
F80	Membrane Sealant Expansion Joint Details
F81-F87	Standard Plates

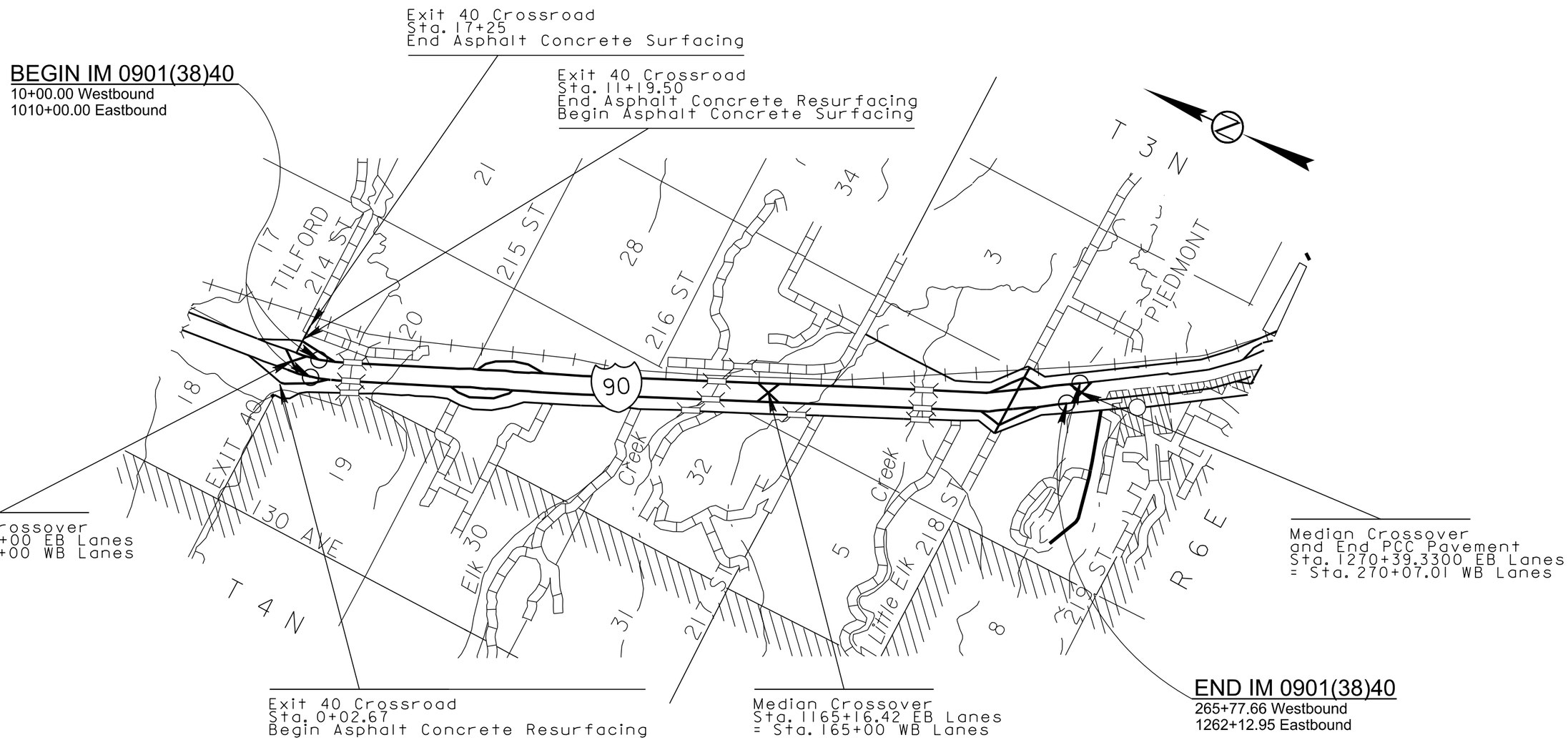

PLOT SCALE - 1:200
PLOT NAME - 1
FILE - U:\MS\PRJ\MEAD5580\TITLEF.DGN
PLOTTED FROM - TRPR18388

SECTION F ESTIMATE OF QUANTITIES

BID ITEM NUMBER	ITEM	QUANTITY	UNIT
120E6200	Water for Granular Material	1,963.0	MGal
260E1010	Base Course	708.2	Ton
260E1030	Base Course, Salvaged	76,123.3	Ton
260E2030	Gravel Cushion, Salvaged	86,765.7	Ton
320E5010	Saw and Seal Shoulder Joint	104,827	Ft
320E7012	Grind 12" Rumble Strip or Stripe in Asphalt Concrete	9.6	Mile
330E0010	MC-70 Asphalt for Prime	163.0	Ton
330E0100	SS-1h or CSS-1h Asphalt for Tack	43.5	Ton
330E0210	SS-1h or CSS-1h Asphalt for Flush Seal	28.0	Ton
330E1000	Blotting Sand for Prime	105.6	Ton
330E2000	Sand for Flush Seal	97.6	Ton
332E0010	Cold Milling Asphalt Concrete	58,101	SqYd
380E0050	8" Nonreinforced PCC Pavement	671.8	SqYd
380E0070	9" Nonreinforced PCC Pavement	4,620.2	SqYd
380E0110	11" Nonreinforced PCC Pavement	165,372.3	SqYd
380E6000	Dowel Bar	72,088	Each
380E6110	Insert Steel Bar in PCC Pavement	120	Each
410E2600	Membrane Sealant Expansion Joint	502.8	Ft

SECTION F ESTIMATE OF QUANTITIES – ALTERNATE A

BID ITEM NUMBER	ITEM	QUANTITY	UNIT
320E0004	PG 58-28 Asphalt Binder	905.4	Ton
320E1070	Class HR Asphalt Concrete	22,573.0	Ton

SECTION F ESTIMATE OF QUANTITIES – ALTERNATE B

BID ITEM NUMBER	ITEM	QUANTITY	UNIT
320E0004	PG 58-28 Asphalt Binder	835.4	Ton
320E1070	Class HR Asphalt Concrete	23,184.0	Ton

SURFACING THICKNESS DIMENSIONS

Plans tonnage will be applied even though the thickness may vary from that shown on the plans.

At those locations where material must be placed to achieve a required elevation, plans tonnage may be varied to achieve the required elevation.

COLD MILLING ASPHALT CONCRETE

Cold Milling Asphalt Concrete is estimated to produce 6,710 tons of salvaged asphalt concrete material (RAP). An estimated 6,497 tons for Alternate A and 6,707 tons for Alternate B of salvaged asphalt concrete (RAP) will be used on this project in the Class HR Asphalt Concrete mixture. The Contractor is responsible to assure enough RAP is available for the Class HR. The excess salvaged asphalt concrete material shall be used on this project as Base Course, Salvaged.

TABLE OF COLD MILLING ASPHALT CONCRETE

Location of Removal Areas	Cold Milling Asphalt Concrete	Width of Cold Milling Asphalt Concrete	Depth of Cold Milling Asphalt Concrete
	SqYd	Feet	Inches
I 90 Eastbound Lanes Outside Shoulder			
Sta. 1010+00 to Sta. 1014+33.83	479.3	10	#
Sta. 1025+41.33 to Sta. 1033+35.08	993.0	10	#
Sta. 1057+00 to Sta. 1073+77.67	1,864.0	10	#
Sta. 1084+15.27 to Sta. 1140+57.14	6,107.4	10	#
Sta. 1142+42.64 to Sta. 1206+29.58	6,764.7	10	#
Sta. 1208+03.58 to Sta. 1217+24.76	931.3	10	#
Sta. 1217+24.76 to Sta. 1224+05.38	645.0	10	#
Sta. 1228+34.96 to Sta. 1235+48.77	786.7	10	#
Sta. 1237+08.26 to Sta. 1244+40.82	1,925.1	10	#
Sta. 1251+74.75 to Sta. 1262+51.82	2,408.2	13	#
I 90 Eastbound Lanes Mainline			
Sta. 1262+51.82 to Sta. 1267+59.50	1,946.1	34.5	#
Sta. 1267+59.50 to Sta. 1270+39.33	948.3	30.5	#
Sta. 1270+39.33 to Sta. 1271+39.33	338.9	30.5	#
I-90 Westbound Lanes Outside Shoulder			
Sta. 10+00 to Sta. 17+38.30	825.0	10	#
Sta. 25+75.39 to Sta. 55+29.87	3,282.6	10	#
Sta. 65+62.12 to Sta. 83+20.37	1,952.8	10	#
Sta. 91+16.82 to Sta. 140+40.73	5,290.0	10	#
Sta. 142+26.23 to Sta. 206+13.17	6,764.2	10	#
Sta. 207+87.17 to Sta. 218+08.33	998.5	10	#
Sta. 218+08.33 to Sta. 224+23.03	683.0	10	#
Sta. 229+87.57 to Sta. 235+62.33	642.2	10	#
Sta. 237+21.83 to Sta. 246+14.48	991.8	10	#
Sta. 251+90.35 to Sta. 262+33.45	1,161.6	10	#
Subtotal:	51,932.2		

TABLE OF COLD MILLING ASPHALT CONCRETE - CONTINUED

Location of Removal Areas	Cold Milling Asphalt Concrete	Width of Cold Milling Asphalt Concrete	Depth of Cold Milling Asphalt Concrete
	SqYd	Feet	Inches
I-90 Westbound Lanes Mainline			
Sta. 262+33.45 to Sta. 265+77.67	1,234.0	32.5	#
Sta. 265+77.67 to Sta. 267+27.17	566.7	32.5-35.5	#
Sta. 267+27.17 to Sta. 270+07.01	1,101.8	35.5	#
Sta. 270+07.01 to Sta. 271+07.01	300.0	27	#
Exit 40 Crossroad and Ramps			
Crossroad Sta. 0+02.67 to Sta. 11+19.50	2,395.4	Variable	#
Ramp A – Sta. 21+91.33 to 23+00.46	479.6	Variable	##
Ramp B – WBL Sta. 3+97.31 – 399.86' L. to WBL Sta. 17+41.23 – 29.52' L.	2,901.0	Variable	##
Ramp D – Sta. 19+21.05 to Sta. 20+09.20	392.8	Variable	##
Subtotal:	6,168.8		
Grand Total:	58,101.0		

See Typical Surfacing Sections located elsewhere in these plans for additional details and limits.

See Typical Sections and Layouts Showing Removal and Surfacing Limits at Exit 40 Crossroad and Ramps located elsewhere in these plans.

GRAVEL CUSHION, SALVAGED

Gravel Cushion, Salvaged shall be obtained from the stockpile site(s) provided by the Contractor from the material salvaged on this project and may be used without further testing.

BASE COURSE, SALVAGED

Base Course, Salvaged shall be obtained from the stockpile site(s) provided by the Contractor from the material salvaged on this project and may be used without further testing.

CLASS HR ASPHALT CONCRETE

Virgin mineral aggregate for Class HR Asphalt Concrete Alternate A shall conform to the requirements for Class E, Type 1.

Virgin mineral aggregate for Class HR Asphalt Concrete Alternate B shall consist of a minimum of 80 percent crushed limestone ledgerock and shall conform to the requirements for Class E, Type 1.

The RAP shall be crushed so the particle size in the cold feed will meet the requirements specified in Section 884.2 C.1.

The Class HR Asphalt Concrete shall include 30 percent RAP in the mixture.

All other requirements for Class HR shall apply.

TABLE OF SAW AND SEAL SHOULDER JOINT

Location	Saw and Seal Shoulder Joint Feet
I 90 Eastbound Lanes – Median Shoulder	
Sta. 1010+00 to Sta. 1140+48.22	13,048.2
Sta. 1142+51.72 to Sta. 1206+19.32	6,367.6
Sta. 1208+13.82 to Sta. 1234+82.37	2,668.5
Sta. 1237+42.70 to Sta. 1270+39.33	3,296.6
I 90 Eastbound Lanes – Outside Shoulder	
Sta. 1010+00 to Sta. 1018+18.65	818.7
Sta. 1022+92.60 to Sta. 1055+04.99	3,212.4
Sta. 1057+69.71 to Sta. 1074+48.92	1,679.2
Sta. 1077+46.34 to Sta. 1140+48.22	6,301.9
Sta. 1142+51.72 to Sta. 1206+19.32	6367.6
Sta. 1208+13.82 to Sta. 1234+82.37	2668.5
Sta. 1237+42.70 to Sta. 1246+28.61	885.9
I 90 Westbound Lanes – Median Shoulder	
Sta. 10+00 to Sta. 140+31.80	13,031.8
Sta. 142+35.30 to Sta. 206+02.93	14,039.8
Sta. 207+97.43 to Sta. 235+26.13	2,728.7
Sta. 237+86.43 to Sta. 270+07.01	3,220.5
I 90 Westbound Lanes – Outside Shoulder	
Sta. 10+00 to Sta. 62+66.80	5,266.8
Sta. 65+63.17 to Sta. 82+47.23	1,684.1
Sta. 85+11.96 to Sta. 140+31.80	5,519.8
Sta. 142+35.30 to Sta. 206+02.93	6367.6
Sta. 207+97.43 to Sta. 222+45.35	1,447.9
Sta. 225+41.72 to Sta. 235+26.13	984.4
Sta. 237+86.46 to Sta. 270+07.01	3,220.5
Total:	104,827.0

8”, 9” and 11.5” NONREINFORCED CONCRETE PAVEMENT

The fine aggregate shall be screened over a 1 inch square opening screen just prior to introduction into the concrete paving mix. The Contractor will screen all of the aggregate to prevent the incorporation of foreign materials (i.e.: mud balls) into the concrete mix.

The concrete mix shall conform to the special provision for Contractor Furnished Mix Design for PCC Pavement.

There will be no direct payment for trimming of the Gravel Cushion for PCC pavement. The trimming will be considered incidental to the related items required for PCC Pavement. Trimming shall be performed as required by Section 380.3 C of the Specifications.

A minimum of 2 pavement blockouts may be required at various locations on the project to facilitate traffic during the paving activity.

A construction joint will be sawed whenever new concrete pavement is placed adjacent to existing concrete pavement.

The transverse contraction joints shall be perpendicular to the centerline as detailed in the special detail for PCC Pavement Transverse Contraction Joint Spacing and standard plate for PCC Pavement Dowel Bar Assembly for Transverse Contraction Joints. In multilane areas the transverse contraction joints shall be perpendicular to the centerline and be in a straight line across the width of the pavement. In special situations the Engineer may pre-approve transverse contraction joints that do not meet these requirements. All nonconforming transverse contraction joints shall be removed at the Contractor’s expense. Any method of placement that cannot produce these requirements shall not be allowed to continue.

The surface of the mainline paving shall be longitudinally tined. All other areas shall be tined as directed by the Engineer.

PAVEMENT SMOOTHNESS

The following locations will be tested for smoothness in accordance with the special provision for IRI PCC Pavement Smoothness:

I 90 Eastbound Lanes
Sta. 1010+00 to Sta. 1270+39.33 (Driving and Passing Lanes)

I 90 Westbound Lanes
Sta. 10+00 to Sta. 270+07.01 (Driving and Passing Lanes)

The following locations shall be tested for smoothness with a Contractor furnished and operated 25 foot California style profilograph in accordance with the Special Provision for PI PCC Pavement Smoothness with 0.2” Blanking Band:

I 90 Eastbound Lanes
Exit 40 On Ramp Acceleration Lane
Rest Area On Ramp Acceleration Lane
Exit 44 On Ramp Acceleration Lane

I 90 Westbound Lanes
Rest Area On Ramp Acceleration Lane
Exit 44 On Ramp Acceleration Lane

ALKALI SILICA REACTIVITY

Fine aggregate shall conform to Section 800.2 D. Alkali Silica Reactivity (ASR) Requirements.

Below is a list of known fine aggregate sources and the average corresponding 14 day expansion values:

Source	Location	Expansion Value
Bachman	Winner, SD	0.335*
Bitterman	Delmont, SD	0.316*
Concrete Materials	Corson, SD	0.170
Croell	Hot Springs, SD	0.089
Croell	Wasta, SD	0.212
Emme Sand & Gravel	Oneil, NE	0.217
Fisher S&G - Mickelson Pit	E of Nisland, SD	0.129
Fisher S&G - Vallery Pit	Nisland, SD	0.110
Fisher S&G	Rapid City, SD	0.092
Fisher S&G	Spearfish, SD	0.053
Fisher S&G	Wasta, SD	0.159
Fuchs	Pickstown, SD	0.275*
Higman	Akron, IA	0.203
Higman	Hudson, SD	0.187
Hilde	Madison, SD	0.116
Jensen	Herried, SD	0.276*
L.G. Everist	Brookings, SD	0.186
L.G. Everist	Hawarden, IA	0.166
L.G. Everist	Summit, SD	0.178
Morris	Blunt, SD	0.192
Morris - Richards Pit	Onida, SD	0.188
Morris - Shawn's Pit	E of Sturgis, SD	0.168
Myrl & Roys - Ode Pit	E Sioux Falls, SD	0.214
Myrl & Roys - Nelson Pit	NE Sioux Falls, SD	0.156
Northern Concrete Agg.	Rauville, SD	0.113
Northern Concrete Agg.	Luverne, MN	0.133
Opperman - Gunvordahl Pit	Burke, SD	0.362*
Opperman - Cahoy Pit	Herrick, SD	0.307*
Opperman - Jones Pit	Burke, SD	0.321*
Opperman - Randall Pit	Pickstown, SD	0.239
Pete Lien & Sons	Creston, SD	0.158
Pete Lien & Sons	Oral, SD	0.129
Pete Lien & Sons	Wasta, SD	0.192
Thorpe Pit	Britton, SD	0.098
Wagner Building Supplies	Pickstown (Wagner), SD	0.241
Winter Brothers- Whitehead Pit	Brookings, SD	0.197

* These sources will require Type V cement in the concrete mix design and Class F (Modified) fly ash as specified.

The Department will use the running average of the last three known expansion test results or less for determining acceptability of source and the required Type of cement. These expansion results are reported in the preceding table. Additional testing, when requested by the Contractor, will be performed by the Department at the Contractor's expense.

The values listed in the table are intended for use in bidding. If a previously tested pit by SDDOT with acceptable test values (less than 0.250) is discovered after letting to require Type V cement (greater than 0.250) the Department will accept financial responsibility for the change from Type II to Type V cement.

Type II or Type V cement will not change the requirement for the fly ash. The cost for either type of cement shall be subsidiary to the contract item.

RUMBLE STRIPS

Rumble Strips for the median shoulder shall be constructed as per Standard Plate 320.30 – 12" Rumble Strip In Asphalt Concrete On Interstate Median Shoulder located elsewhere in these plans. It is estimated that 9.6 miles of asphalt concrete rumble strip will be required for the median shoulder.

Rumble Strips for the outside shoulder shall be constructed as per Standard Plate 380.15 – Rumble Strip On PCC Pavement Shoulder located elsewhere in these plans.

STEEL BAR INSERTION

The Contractor shall insert the Steel Bars (1 ½" x 18 inch epoxy coated plain round steel bare and No. 10 x 18 inch epoxy coated deformed tie bars) into drilled holes in the existing concrete pavement.

The steel bars shall be cut to the specified length by sawing or shearing and shall be free from burring or other deformations.

Epoxy coated plain round steel bars shall be inserted on 12 inch centers in the transverse joint. The first steel bar shall be placed a minimum of 3 inches and a maximum of 6 inches from the outside edge of slab.

Epoxy coated deformed steel bars shall be inserted on 18 inch centers in the transverse joint. The first steel bar shall be placed a minimum of 3 inches and a maximum of 9 inches from the outside edge of slab.

TABLE OF INSERT STEEL BAR IN PCC PAVEMENT

Location	1 ½" X 18" Plain Round Dowel Bar Each	No. 10 X 18" Deformed Tie Bar Each
I 90 Eastbound Lanes		
Sta. 1010+00 – 14' L. to 12' R.	26	---
I 90 Westbound Lanes		
Sta. 10+00 – 12' L. to 14' R.	26	---
Rest Area Ramps		
Ramp A - Sta. 10+25 – 17' L. to 8' R.	---	17
Ramp B - Sta. 0+00 – 17' L. to 8' R.	---	17
Ramp C - Sta. 0+00 – 8' L. to 17' R.	---	17
Ramp D - Sta. 10+50 – 8' L. to 17' R.	---	17
Totals:	52	68

MEMBRANE SEALANT EXPANSION JOINT

For notes and details see Membrane Sealant Expansion Joint Details located elsewhere in these plans.

TABLE OF MEMBRANE SEALANT EXPANSION JOINT

Location	Length Feet
I 90 Eastbound Lanes	
Sta. 1140+48.22	41.9
Sta. 1142+51.72	41.9
Sta. 1206+19.32	41.9
Sta. 1208+13.82	41.9
Sta. 1234+82.37	41.9
Sta. 1237+42.70	41.9
I 90 Westbound Lanes	
Sta. 140+31.80	41.9
Sta. 142+35.30	41.9
Sta. 206+02.93	41.9
Sta. 207+97.43	41.9
Sta. 235+26.13	41.9
Sta. 237+86.43	41.9
Total:	502.8

SUMMARY OF ASPHALT CONCRETE

Location	Class HR Asphalt Concrete With Specified Density Alternate A Ton	Class HR Asphalt Concrete Without Specified Density Alternate A Ton	Class HR Asphalt Concrete With Specified Density Alternate B Ton	Class HR Asphalt Concrete Without Specified Density Alternate B Ton
I 90 Eastbound Lanes				
Mainline				
Sta. 1270+39.33 to Sta. 1271+39.33	28	---	28	---
Additional Surfacing Adjacent to Guardrail	---	75	---	75
Median Shoulders				
Sta. 1012+79.80 to Sta. 1140+48.22				
Sta. 1142+51.72 to Sta. 1162+36.55				
Sta. 1167+96.21 to Sta. 1206+19.32	2,995	---	3,075	---
Sta. 1208+13.82 to Sta. 1234+82.37				
Sta. 1237+42.70 to Sta. 1262+59.50				
Outside Shoulder - 8'				
Sta. 1010+00 to Sta. 1018+18.69				
Sta. 1031+70 to Sta. 1048+74.99				
Sta. 1057+69.71 to Sta. 1074+48.92				
Sta. 1091+26.34 to Sta. 1140+48.22	2,984	---	3,066	---
Sta. 1142+51.72 to Sta. 1206+19.32				
Sta. 1208+13.82 to Sta. 1217+11.52				
Sta. 1224+03.31 to Sta. 1234+82.37				
Sta. 1237+42.70 to Sta. 1246+28.61				
Sta. 1259+40.44 to Sta. 1262+51.82	---	18	---	18
Sta. 1270+07.63 to Sta. 1270+39.33				
Outside Shoulder – 6'				
Sta. 1022+92.60 to Sta. 1031+70				
Sta. 1048+74.99 to Sta. 1055+04.99	447	---	460	---
Sta. 1077+46.34 to Sta. 1091+26.34				
Sta. 1217+11.52 to Sta. 1224+03.31				
I 90 Westbound Lanes				
Mainline				
Sta. 270+07.01 to Sta. 271+07.01	28	---	29	---
Additional Surfacing Adjacent to Guardrail	---	73	---	74
Median Shoulders				
Sta. 12+79.70 to Sta. 140+31.80				
Sta. 142+35.30 to Sta. 162+20.15				
Sta. 167+79.80 to Sta. 206+02.93	2,990	---	3,071	---
Sta. 207+97.43 to Sta. 235+26.13				
Sta. 237+86.46 to Sta. 267+27.17				
Subtotals:	9,472	166	9,729	167

SUMMARY OF ASPHALT CONCRETE – CONTINUED

Location	Class HR Asphalt Concrete With Specified Density Alternate A Ton	Class HR Asphalt Concrete Without Specified Density Alternate A Ton	Class HR Asphalt Concrete With Specified Density Alternate B Ton	Class HR Asphalt Concrete Without Specified Density Alternate B Ton
I 90 Westbound Lanes - Continued				
Outside Shoulder - 8'				
Sta. 10+00 to Sta. 17+98.41				
Sta. 24+97.79 to Sta. 48+86.80				
Sta. 65+63.17 to Sta. 82+47.23				
Sta. 91+41.96 to Sta. 140+31.80				
Sta. 142+35.30 to Sta. 206+02.93	3,122	---	3,206	---
Sta. 207+97.43 to Sta. 208+65.35				
Sta. 225+41.72 to Sta. 235+26.13				
Sta. 237+86.46 to Sta. 247+59.82				
Sta. 254+50.62 to Sta. 265+77.67				
Sta. 265+77.67 to Sta. 270+07.01	69	---	71	---
Outside Shoulder - 6'				
Sta. 17+98.41 to Sta. 24+97.79				
Sta. 48+86.80 to Sta. 62+66.80				
Sta. 85+11.96 to Sta. 91+41.96	597	---	612	---
Sta. 208+65.35 to Sta. 222+45.35				
Sta. 247+59.82 to Sta. 254+50.62				
Exit 40 Crossroad and Ramps				
Crossroad				
Sta. 0+02.67 to Sta. 4+86	277	---	286	---
Sta. 7+14 to Sta. 11+19.50				
Sta. 11+19.50 to Sta. 17+25	362	---	372	---
Additional Surfacing Adjacent to Guardrail	---	48	---	51
Ramp A – Sta. 21+91.33 to Sta. 23+00.46	53	---	55	---
(Includes Radius L. & R. of 23+00.46)				
Ramp B – Sta. 0+12.08 to Sta. 8+00	228	---	235	---
(Includes Radius L. & R. of Sta. 0+12.08)				
Ramp B – Sta. 8+00 to Sta. 14+11.23	400	---	408	---
Ramp C – Sta. 0+12 to Sta. 16+60.35	1,120	---	1,150	---
(Includes Radius L. & R. of Sta. 0+12)				
Ramp D – Sta. 19+21.05 to Sta. 20+09.20	44	---	45	---
(Includes Radius L. & R. of Sta. 20+09.20)				
Subtotals:	6,272	48	6,440	51

SUMMARY OF ASPHALT CONCRETE – CONTINUED

Location	Class HR Asphalt Concrete With Specified Density Alternate A Ton	Class HR Asphalt Concrete Without Specified Density Alternate A Ton	Class HR Asphalt Concrete With Specified Density Alternate B Ton	Class HR Asphalt Concrete Without Specified Density Alternate B Ton
Exit 44 Crossroad and Ramps				
Crossroad				
Sta. 188+00 to Sta. 206+00	1,928	---	1,986	---
(Includes Radius L. & R. of Sta. 188+00)				
Additional Surfacing Adjacent to Guardrail	---	35	---	37
Ramp A – Sta. 4+59.85 to Sta. 16+29.50	785	---	807	---
(Includes Radius L. & R. of 16+29.50)				
Ramp B – Sta. 0+26.56 to Sta. 10+20.55	680	---	698	---
(Includes Radius L. & R. of Sta. 0+26.56)				
Ramp C – Sta. 0+28.62 to Sta. 11+77.71	781	---	802	---
(Includes Radius L. & R. of Sta. 0+28.62)				
Ramp D – Sta. 6+90.74 to Sta. 17+69.43	740	---	759	---
(Includes Radius L. & R. of Sta. 17+69.43)				
Median Crossovers				
EBL Sta. 1010+00 L. to Sta. 1012+79.80 L.	---	111	---	114
& WBL Sta. 10+00 R. to Sta. 12+79.80 R.				
EBL Sta. 1162+36.55 L. to Sta. 1167+96.21 L	---	1,333	---	1,366
& WBL Sta. 162+20.15 R. to Sta. 167+79.80 R.				
EBL Sta. 1267+59.50 L. to Sta. 1271+39.33 L.	---	204	---	210
& WBL Sta. 267+27.17 R. to Sta. 271+07.01 R.				
Cul De Sac				
XR1177 – 125.3' R. of EBL Sta. 1176+05.25 Private Drive	---	18	---	18
Subtotals:	4,914	1,701	5,052	1,745
Grand Totals:	20,658	1,915	21,221	1,963

TABLE OF PCC PAVEMENT

Location	8" Nonreinforced PCC Pavement SqYd	9" Nonreinforced PCC Pavement SqYd	11" Nonreinforced PCC Pavement SqYd
I 90 Eastbound Lanes			
Mainline			
Sta. 1010+00 to Sta. 1140+48.22	---	---	37,694.9
Sta. 1142+51.72 to Sta. 1206+19.32	---	---	18,395.3
Sta. 1208+13.82 to Sta. 1234+82.37	---	---	7,709.1
Sta. 1237+42.70 to Sta. 1270+39.33	---	---	9,523.6
Mainline – Outside Shoulder			
Sta. 1262+51.82 R. to Sta. 1270+07.63 R.	671.8	---	---
I 90 Westbound Lanes			
Mainline			
Sta. 10+00 to Sta. 140+31.80	---	---	37,647.4
Sta. 142+35.30 to Sta. 206+02.93	---	---	18,395.4
Sta. 207+97.43 to Sta. 235+26.13	---	---	7,882.9
Sta. 237+86.46 to Sta. 270+07.01	---	---	9,303.8
Ramp Gore Areas			
Exit 40			
Ramp B - WBL Sta. 17+98.14 L. to Sta. 24+97.79 L.	---	---	1,356.7
Ramp C - EBL Sta. 1018+18.65 R. to Sta. 1031+70 R.	---	---	2,065.7
Rest Area			
Ramp A WBL Sta. 48+86.80 L. to Sta. 65+63.17 L.	---	---	2,248.7
Ramp B - WBL Sta. 82+47.23 R. to Sta. 91+41.96 L.	---	---	1,433.1
Ramp C - EBL Sta. 1074+48.92 R. to Sta. 1091+26.34 R.	---	---	2,252.2
Ramp D - EBL Sta. 1048+74.99 R. to Sta. 1057+69.71 R.	---	---	1,433.1
Exit 44			
Ramp A - WBL Sta. 208+65.35 L. to Sta. 225+41.72 L.	---	---	2,248.7
Ramp B – WBL Sta. 247+59.82 L. to Sta. 254+50.32 L.	---	---	1,327.3
Ramp C – EBL Sta. 1246+28.61 R. to Sta. 1262+51.82 R.	---	---	3,123.1
Ramp D – EBL Sta. 1217+11.52 R. to Sta. 1224+03.31 R.	---	---	1,331.3
Rest Area Ramps			
Ramp A – Sta. 3+44.81 to Sta. 10+25	---	1,889.4	---
Ramp B – Sta. 0+00 to Sta. 2+75.35	---	764.9	---
Ramp C – Sta. 0+00 to Sta. 5+49.74	---	1,527.1	---
Ramp D – Sta. 8+92.02 to Sta. 10+50	---	438.8	---
Grand Totals	671.8	4,620.2	165,372.3

TABLE OF DOWEL BARS

Location	14 Bar Assembly Dowel Bar (size 1 ½") Each	12 Bar Assembly Dowel Bar (size 1 ½") Each	12 Bar Assembly Dowel Bar (size 1 ¼") Each
I 90 Eastbound Lanes			
Sta. 1010+00 to Sta. 1018+18.65			
Driving Lane	---	480	---
Passing Lane	---	480	---
Sta. 1018+18.65 to Sta. 1031+70			
Driving Lane	826	108	---
Passing Lane	---	816	---
Exit 40 – Ramp C Gore Area	---	839	---
Sta. 1031+70 to Sta. 1048+74.99			
Driving Lane	---	1,020	---
Passing Lane	---	1,020	---
Sta. 1048+74.99 to Sta. 1057+69.71			
Driving Lane	560	72	---
Passing Lane	---	552	---
Rest Area – Ramp D Gore Area	---	572	---
Sta. 1057+69.71 to Sta. 1074+48.92			
Driving Lane	---	996	---
Passing Lane	---	996	---
Sta. 1074+48.92 to Sta. 1091+26.34			
Driving Lane	1,092	72	---
Passing Lane	---	1,008	---
Rest Area – Ramp C Gore Area	---	938	---
Sta. 1091+26.34 to Sta. 1140+48.22			
Driving Lane	---	2,952	---
Passing Lane	---	2,952	---
Sta. 1142+51.72 to Sta. 1206+19.32			
Driving Lane	---	3,816	---
Passing Lane	---	3,816	---
Sta. 1208+13.82 to Sta. 1217+11.52			
Driving Lane	---	528	---
Passing Lane	---	528	---
Sta. 1217+11.52 to Sta. 1224+03.31			
Driving Lane	280	192	---
Passing Lane	---	432	---
Exit 44 – Ramp D Gore Area	---	452	---
Subtotals:	2,758	25,637	---

TABLE OF DOWEL BARS- CONTINUED

Location	14 Bar Assembly Dowel Bar (size 1 ½") Each	12 Bar Assembly Dowel Bar (size 1 ½") Each	12 Bar Assembly Dowel Bar (size 1 ¼") Each
I 90 Eastbound Lanes - Continued			
Sta. 1224+03.31 to Sta. 1234+82.37			
Driving Lane	---	636	---
Passing Lane	---	636	---
Sta. 1237+42.70 to Sta. 1246+28.61			
Driving Lane	---	528	---
Passing Lane	---	528	---
Sta. 1246+28.61 to Sta. 1262+51.82			
Driving Lane	1,064	72	---
Passing Lane	---	984	---
Exit 44 – Ramp C Gore Area	---	1,342	---
Sta. 1262+51.82 to Sta. 1270+39.33			
Driving Lane	---	468	---
Passing Lane	---	468	---
I 90 Westbound Lanes			
Sta. 10+00 to Sta. 17+98.41			
Driving Lane	---	468	---
Passing Lane	---	468	---
Sta. 17+98.41 to Sta. 24+97.79			
Driving Lane	280	180	---
Passing Lane	---	420	---
Exit 40 – Ramp B Gore Area	---	452	---
Sta. 24+97.79 to Sta. 48+86.80			
Driving Lane	---	1,452	---
Passing Lane	---	1,452	---
Sta. 48+89.80 to Sta. 65+63.17			
Driving Lane	1,092	72	---
Passing Lane	---	1,008	---
Rest Area – Ramp A Gore Area	---	942	---
Sta. 65+63.17 to Sta. 82+47.23			
Driving Lane	---	996	---
Passing Lane	---	996	---
Sta. 82+47.23 to Sta. 91+41.96			
Driving Lane	546	72	---
Passing Lane	---	540	---
Rest Area – Ramp B Gore Area	---	572	---
Subtotals	2,982	15,752	---

TABLE OF DOWEL BARS- CONTINUED

Location	14 Bar Assembly Dowel Bar (size 1 ½") Each	12 Bar Assembly Dowel Bar (size 1 ½") Each	12 Bar Assembly Dowel Bar (size 1 ¼") Each
I 90 Westbound Lanes - Continued			
Sta. 91+41.96 to Sta. 140+31.80			
Driving Lane	---	2,940	---
Passing Lane	---	2,940	---
Sta. 142+35.30 to Sta. 206+02.93			
Driving Lane	---	3,816	---
Passing Lane	---	3,816	---
Sta. 207+97.43 to Sta. 208+65.35			
Driving Lane	---	48	---
Passing Lane	---	48	---
Sta. 208+65.35 to Sta. 225+41.72			
Driving Lane	1,036	124	---
Passing Lane	---	1,012	---
Exit 44 – Ramp A Gore Area	---	938	---
Sta. 225+41.72 to Sta. 235+26.13			
Driving Lane	---	588	---
Passing Lane	---	588	---
Sta. 237+86.46 to Sta. 247+59.82			
Driving Lane	---	576	---
Passing Lane	---	576	---
Sta. 247+59.82 to Sta. 254+50.32			
Driving Lane	280	180	---
Passing Lane	---	420	---
Exit 44 – Ramp B Gore Area	---	449	---
Sta. 254+50.32 to Sta. 270+07.01			
Driving Lane	---	936	---
Passing Lane	---	936	---
Rest Area Ramps			
Ramp A – Sta. 3+44.81 to Sta. 10+25	---	---	1,104
Ramp B – Sta. 0+00 to Sta. 2+75.35	---	---	456
Ramp C – Sta. 0+00 to Sta. 5+49.74	---	---	888
Ramp D – Sta. 8+92.02 to Sta. 10+50	---	---	264
Subtotals	1,316	20,931	2,712
Grand Total	72,088		

RATES OF MATERIALS

The Estimate of Surfacing Quantities is based on the following quantities of materials per station.

MAINLINE
Eastbound Lanes
Sta. 1012+79.80 to Sta. 1022+00

Westbound Lanes
Sta. 12+79.80 to Sta. 22+00

GRAVEL CUSHION, SALVAGED

Crushed Material 140.18 tons

Water for Granular Material at the rate of 1.68 M Gallons

MAINLINE
Eastbound Lanes
Sta. 1025+75.81 to Sta. 1140+48.22
Sta. 1142+51.72 to Sta. 1206+19.32
Sta. .1208+13.82 to Sta. 1224+66.38
Sta. 1237+42.70 to Sta. 1259+40.44

Westbound Lanes
Sta. 22+50 to Sta. 140+31.80
Sta. 142+35.30 to Sta. 206+02.93
Sta. 207+97.43 to Sta. 224+42.05
Sta. 237+86.46 to Sta. 265+77.67

GRAVEL CUSHION, SALVAGED

Crushed Material 144.24 tons

Water for Granular Material at the rate of 1.73 M Gallons

MAINLINE
Eastbound Lanes
Sta. 1022+50 to Sta. 1025+75.81
Sta. 1224+66.38 to Sta. 1234+82.37

Westbound Lanes
Sta. 224+42.05 to Sta. 235+26.13

GRAVEL CUSHION, SALVAGED

Crushed Material 145.43 tons

Water for Granular Material at the rate of 1.75 M Gallons

RATES OF MATERIALS – CONTINUED

MAINLINE – 4' MEDIAN SHOULDER
Eastbound Lanes
Sta. 1012+79.80 to Sta. 1022+00

Westbound Lanes
Sta. 12+79.80 to Sta. 22+00

BASE COURSE, SALVAGED

Crushed Material 39.42 tons

Water for Granular Material at the rate of 0.47 M Gallons

MAINLINE – 6' MEDIAN SHOULDER
Eastbound Lanes
Sta. 1022+50 to Sta. 1140+48.22
Sta. 1142+51.72 to Sta. 1162+36.55
Sta. 1167+96.21 to Sta. 1206+19.32
Sta. 1208+13.82 to Sta. 1234+82.372
Sta. 1237+42.70 to Sta. 1262+13.32

Westbound Lanes
Sta. 22+50 to Sta. 140+31.80
Sta. 142+35.30 to Sta. 162+20.15
Sta. 167+79.80 to Sta. 206+02.93
Sta. 207+97.43 to Sta. 235+26.13
Sta. 237+86.46 to Sta. 261+00

BASE COURSE, SALVAGED

Crushed Material 49.34 tons

Water for Granular Material at the rate of 0.59 M Gallons

MAINLINE – 6' MEDIAN SHOULDER
Westbound Lanes
Sta. 261+00 to Sta. 265+77.67

BASE COURSE, SALVAGED

Crushed Material 42.83 tons

Water for Granular Material at the rate of 0.51 M Gallons

RATES OF MATERIALS – CONTINUED

MAINLINE – 8' OUTSIDE SHOULDER
Eastbound Lanes
Sta. 1010+00 to Sta. 1018+18.69
Sta. 1224+03.31 to Sta. 1232+58.53

Westbound Lanes
Sta. 10+00 to Sta. 17+98.41
Sta. 225+41.72 to Sta. 232+34.19

BASE COURSE, SALVAGED

Crushed Material 59.25 tons

Water for Granular Material at the rate of 0.71 M Gallons

MAINLINE – 8' OUTSIDE SHOULDER
Eastbound Lanes
Sta. 1031+70 to Sta. 1048+74.99
Sta. 1057+69.71 to Sta. 1074+48.92
Sta. 1091+26.34 to Sta. 1140+48.22
Sta. 1142+51.72 to Sta. 1206+19.32
Sta. 1208+13.82 to Sta. 1217+11.52
Sta. 1232+58.53 to Sta. 1234+82.37
Sta. 1237+42.70 to Sta. 1246+28.61

Westbound Lanes
Sta. 24+97.79 to Sta. 48+86.80
Sta. 65+63.17 to Sta. 82+47.23
Sta. 91+41.96 to Sta. 140+31.80
Sta. 142+35.30 to Sta. 206+02.93
Sta. 207+97.43 to Sta. 208+65.35
Sta. 232+34.19 to Sta. 235+26.13
Sta. 237+86.46 to Sta. 247+59.82
Sta. 254+50.62 to Sta. 265+77.67

BASE COURSE, SALVAGED

Crushed Material 57.02 tons

Water for Granular Material at the rate of 0.68 M Gallons

RATES OF MATERIALS – CONTINUED

MAINLINE – 6' OUTSIDE SHOULDER

Eastbound Lanes
Sta. 1022+92.60 to Sta. 1031+70
Sta. 1048+74.99 to Sta. 1055+04.99
Sta. 1077+46.34 to Sta. 1091+26.34
Sta. 1217+11.52 to Sta. 1224+03.31

Westbound Lanes
Sta. 17+98.41 to Sta. 24+97.79
Sta. 48+86.80 to Sta. 62+66.80
Sta. 85+11.95 to Sta. 91+41.96
Sta. 208+65.35 to Sta. 222+45.35
Sta. 247+59.82 to Sta. 254+50.32

BASE COURSE, SALVAGED

Crushed Material 42.04 tons

Water for Granular Material at the rate of 0.50 M Gallons

MAINLINE – 4' MEDIAN SHOULDER

Eastbound Lanes
Sta. 1012+79.80 to Sta. 1022+00

Westbound Lanes
Sta. 12+79.80 to Sta. 22+00

MC-70 Asphalt for Prime at the Rate of 0.09 ton applied 6.5 feet wide (Rate = 0.30 gallon per square yard).

CLASS HR ASPHALT CONCRETE

	Alt. A	Alt. B	
Crushed Aggregate	5.91	6.09	Tons
Salvaged Asphalt Concrete	2.53	2.61	Tons
PG 58-28 Asphalt Binder	0.35	0.32	Tons
Total Mix	8.79	9.02	Tons

The exact proportions of these materials will be determined on construction.

SS-1h or CSS-1h Asphalt for Tack at the rate of 0.02 ton applied 6 feet wide (Rate = 0.06 gallon per square yard).

FLUSH SEAL

SS-1h or CSS-1h Asphalt for Flush Seal at the rate of 0.01 ton applied 5.5 feet wide (Rate = 0.05 gallon per square yard).

RATES OF MATERIALS - CONTINUED

MAINLINE – 6' MEDIAN SHOULDER

Eastbound Lanes
Sta. 1022+50 to Sta. 1140+48.22
Sta. 1142+51.72 to Sta. 1162+36.55
Sta. 1167+96.21 to Sta. 1206+19.32
Sta. 1208+13.82 to Sta. 1234+82.37
Sta. 1237+42.70 to Sta. 1267+59.50

Westbound Lanes
Sta. 22+50 to Sta. 140+31.80
Sta. 142+35.30 to Sta. 162+20.15
Sta. 167+79.80 to Sta. 206+02.93
Sta. 207+97.43 to Sta. 235+26.13
Sta. 237+86.46 to Sta. 267+27.17

MC-70 Asphalt for Prime at the Rate of 0.11 ton applied 8.5 feet wide (Rate = 0.30 gallon per square yard).

CLASS HR ASPHALT CONCRETE

	Alt. A	Alt. B	
Crushed Aggregate	8.39	8.65	Tons
Salvaged Asphalt Concrete	3.60	3.71	Tons
PG 58-28 Asphalt Binder	0.50	0.46	Tons
Total Mix	12.49	12.82	Tons

The exact proportions of these materials will be determined on construction.

SS-1h or CSS-1h Asphalt for Tack at the rate of 0.02 ton applied 8 feet wide (Rate = 0.06 gallon per square yard).

FLUSH SEAL

SS-1h or CSS-1h Asphalt for Flush Seal at the rate of 0.02 ton applied 7.5 feet wide (Rate = 0.05 gallon per square yard).

RATES OF MATERIALS - CONTINUED

MAINLINE – 8' OUTSIDE SHOULDER

Eastbound Lanes
Sta. 1010+00 to Sta. 1018+18.65
Sta. 1031+70 to Sta. 1048+74.99
Sta. 1057+69.71 to Sta. 1074+48.92
Sta. 1091+26.34 to Sta. 1140+48.22
Sta. 1142+51.72 to Sta. 1206+19.32
Sta. 1208+13.82 to Sta. 1217+11.52
Sta. 1224+03.31 to Sta. 1234+82.37
Sta. 1237+42.70 to Sta. 1246+28.61

Westbound Lanes
Sta. 10+00 to Sta. 17+98.41
Sta. 24+97.79 to Sta. 48+86.80
Sta. 65+63.17 to Sta. 82+47.23
Sta. 91+41.96 to Sta. 140+31.80
Sta. 142+35.30 to Sta. 206+02.93
Sta. 207+97.43 to Sta. 208+65.35
Sta. 225+41.72 to Sta. 235+26.13
Sta. 237+86.46 to Sta. 247+59.82
Sta. 254+50.32 to Sta. 265+77.67

MC-70 Asphalt for Prime at the Rate of 0.14 ton applied 10.5 feet wide (Rate = 0.30 gallon per square yard).

CLASS HR ASPHALT CONCRETE

	Alt. A	Alt. B	
Crushed Aggregate	10.88	11.22	Tons
Salvaged Asphalt Concrete	4.66	4.81	Tons
PG 58-28 Asphalt Binder	0.65	0.60	Tons
Total Mix	16.19	16.63	Tons

The exact proportions of these materials will be determined on construction.

SS-1h or CSS-1h Asphalt for Tack at the rate of 0.03 ton applied 10 feet wide (Rate = 0.06 gallon per square yard).

FLUSH SEAL

SS-1h or CSS-1h Asphalt for Flush Seal at the rate of 0.02 ton applied 9.5 feet wide (Rate = 0.05 gallon per square yard).

RATES OF MATERIALS - CONTINUED

MAINLINE – 6' OUTSIDE SHOULDER

Eastbound Lanes
Sta. 1022+92.60 to Sta. 1031+70
Sta. 1048+74.99 to Sta. 1055+04.99
Sta. 1077+46.34 to Sta. 1091+26.34
Sta. 1217+11.52 to Sta. 1224+03.31

Westbound Lanes
Sta. 17+98.41 to Sta. 24+97.79
Sta. 48+86.80 to Sta. 62+66.80
Sta. 85+11.96 to Sta. 91+41.96
Sta. 208+65.35 to Sta. 222+45.35
Sta. 247+59.82 to Sta. 254+50.32

MC-70 Asphalt for Prime at the Rate of 0.14 ton applied 10.5 feet wide (Rate = 0.30 gallon per square yard).

CLASS HR ASPHALT CONCRETE

	Alt. A	Alt. B	
Crushed Aggregate	8.39	8.65	Tons
Salvaged Asphalt Concrete	3.60	3.71	Tons
PG 58-28 Asphalt Binder	0.50	0.46	Tons
Total Mix	12.49	12.82	Tons

The exact proportions of these materials will be determined on construction.

SS-1h or CSS-1h Asphalt for Tack at the rate of 0.02 ton applied 8 feet wide (Rate = 0.06 gallon per square yard).

FLUSH SEAL

SS-1h or CSS-1h Asphalt for Flush Seal at the rate of 0.02 ton applied 9.5 feet wide (Rate = 0.05 gallon per square yard).

EXIT 40 CROSSROAD
Sta. 0+02.67 to Sta. 4+41.70
Sta. 7+57.06 to Sta. 11+19.50

CLASS HR ASPHALT CONCRETE

	Alt. A	Alt. B	
Crushed Aggregate	20.89	21.54	Tons
Salvaged Asphalt Concrete	8.95	9.23	Tons
PG 58-28 Asphalt Binder	1.24	1.15	Tons
Total Mix	31.08	31.92	Tons

The exact proportions of these materials will be determined on construction.

SS-1h or CSS-1h Asphalt for Tack at the rate of 0.08 ton applied 27.4 feet wide (Rate = 0.06 gallon per square yard).

FLUSH SEAL

SS-1h or CSS-1h Asphalt for Flush Seal at the rate of 0.06 ton applied 26.4 feet wide (Rate = 0.05 gallon per square yard).

Sand for Flush Seal at the rate of 0.98 tons applied 22 feet wide (Rate = 8.0 lbs. per square yard).

RATES OF MATERIALS - CONTINUED

EXIT 40 CROSSROAD
Sta. 11+69.50 to Sta. 17+25

MC-70 Asphalt for Prime at the Rate of 0.36 ton applied 27 feet wide (Rate = 0.30 gallon per square yard).

Blotting Sand for Prime at the rate of 1.22 tons applied 22 feet wide (Rate = 10 lbs. per square yard).

CLASS HR ASPHALT CONCRETE – 1ST LIFT

	Alt. A	Alt. B	
Crushed Aggregate	19.89	20.51	Tons
Salvaged Asphalt Concrete	8.52	8.79	Tons
PG 58-28 Asphalt Binder	1.18	1.09	Tons
Total Mix	29.60	30.40	Tons

The exact proportions of these materials will be determined on construction.

SS-1h or CSS-1h Asphalt for Tack at the rate of 0.07 ton applied 26 feet wide (Rate = 0.06 gallon per square yard).

CLASS HR ASPHALT CONCRETE – 2ND LIFT

	Alt. A	Alt. B	
Crushed Aggregate	19.89	20.51	Tons
Salvaged Asphalt Concrete	8.52	8.79	Tons
PG 58-28 Asphalt Binder	1.18	1.09	Tons
Total Mix	29.60	30.40	Tons

The exact proportions of these materials will be determined on construction.

SS-1h or CSS-1h Asphalt for Tack at the rate of 0.07 ton applied 26 feet wide (Rate = 0.06 gallon per square yard).

FLUSH SEAL

SS-1h or CSS-1h Asphalt for Flush Seal at the rate of 0.06 ton applied 25 feet wide (Rate = 0.05 gallon per square yard).

Sand for Flush Seal at the rate of 0.98 tons applied 22 feet wide (Rate = 8.0 lbs. per square yard).

EXIT 40 RAMP B
Sta. 0+12.08 to Sta. 8+00

CLASS HR ASPHALT CONCRETE

	Alt. A	Alt. B	
Crushed Aggregate	17.40	17.95	Tons
Salvaged Asphalt Concrete	7.46	7.69	Tons
PG 58-28 Asphalt Binder	1.04	0.96	Tons
Total Mix	25.90	26.60	Tons

The exact proportions of these materials will be determined on construction.

SS-1h or CSS-1h Asphalt for Tack at the rate of 0.07 ton applied 25 feet wide (Rate = 0.06 gallon per square yard).

FLUSH SEAL

SS-1h or CSS-1h Asphalt for Flush Seal at the rate of 0.06 ton applied 24 feet wide (Rate = 0.05 gallon per square yard).

Sand for Flush Seal at the rate of 0.80 tons applied 18 feet wide (Rate = 8.0 lbs. per square yard).

RATES OF MATERIALS - CONTINUED

EXIT 40 RAMPS
Ramp B - Sta. 8+00 to Sta. 14+11.23
Ramp C - Sta. 0+12 to Sta. 16+60.35

EXIT 44 RAMPS
Ramp A – Sta. 4+59.85 to Sta. 16+29.50
Ramp B – Sta. 0+26.56 to Sta. 10+20.55
Ramp C – Sta. 0+28.62 to Sta. 11+77.71
Ramp D – Sta. 6+90.74 to Sta. 17+69.43

BASE COURSE, SALVAGED

Crushed Material 248.50 tons

Water for Granular Material at the rate of 2.98 M Gallons

MC-70 Asphalt for Prime at the Rate of 0.40 ton applied 30 feet wide (Rate = 0.30 gallon per square yard).

Blotting Sand for Prime at the rate of 1.00 tons applied 18 feet wide (Rate = 10 lbs. per square yard).

CLASS HR ASPHALT CONCRETE – 1ST LIFT

	Alt. A	Alt. B	
Crushed Aggregate	21.96	22.65	Tons
Salvaged Asphalt Concrete	9.41	9.71	Tons
PG 58-28 Asphalt Binder	1.31	1.21	Tons
Total Mix	32.68	33.57	Tons

The exact proportions of these materials will be determined on construction.

SS-1h or CSS-1h Asphalt for Tack at the rate of 0.08 ton applied 29 feet wide (Rate = 0.06 gallon per square yard).

CLASS HR ASPHALT CONCRETE – 2ND LIFT

	Alt. A	Alt. B	
Crushed Aggregate	21.96	22.65	Tons
Salvaged Asphalt Concrete	9.41	9.71	Tons
PG 58-28 Asphalt Binder	1.31	1.21	Tons
Total Mix	32.68	33.57	Tons

The exact proportions of these materials will be determined on construction.

SS-1h or CSS-1h Asphalt for Tack at the rate of 0.08 ton applied 29 feet wide (Rate = 0.06 gallon per square yard).

FLUSH SEAL

SS-1h or CSS-1h Asphalt for Flush Seal at the rate of 0.06 ton applied 28 feet wide (Rate = 0.05 gallon per square yard).

Sand for Flush Seal at the rate of 0.80 tons applied 18 feet wide (Rate = 8.0 lbs. per square yard).

RATES OF MATERIALS – CONTINUED

REST AREA RAMPS
Ramp A – Sta. 3+44.81 to Sta. 10+25
Ramp B – Sta. 0+00 to Sta. 2+75.35
Ramp C – Sta. 0+00 to Sta. 5=49.74
Ramp D – Sta. 8+92 to Sta. 10+50

BASE COURSE, SALVAGED

Crushed Material 159.25 tons

Water for Granular Material at the rate of 1.91 M Gallons

REST AREA RAMPS – SHOULDER WEDGES L. & R.
Ramp A – Sta. 3+44.81 to Sta. 10+25
Ramp B – Sta. 0+00 to Sta. 2+75.35
Ramp C – Sta. 0+00 to Sta. 5=49.74
Ramp D – Sta. 8+92 to Sta. 10+50

BASE COURSE, SALVAGED - RATES ARE FOR ONE SIDE

Crushed Material 13.13 tons

Water for Granular Material at the rate of 0.16 M Gallons

RATES OF MATERIALS – CONTINUED

EXIT 44 CROSSROAD
Sta. 188+00 to Sta. 191+72.50
Sta. 199+42.50 to Sta. 206+00

BASE COURSE, SALVAGED

Crushed Material 311.50 tons

Water for Granular Material at the rate of 3.74 M Gallons

MC-70 Asphalt for Prime at the Rate of 0.54 ton applied 41 feet wide
(Rate = 0.30 gallon per square yard).

Blotting Sand for Prime at the rate of 1.22 tons applied 22 feet wide
(Rate = 10 lbs. per square yard).

CLASS HR ASPHALT CONCRETE – 1ST LIFT

	Alt. A	Alt. B	
Crushed Aggregate	31.08	32.05	Tons
Salvaged Asphalt Concrete	13.32	13.74	Tons
PG 58-28 Asphalt Binder	1.85	1.71	Tons
Total Mix	46.25	47.50	Tons

The exact proportions of these materials will be determined on construction.

SS-1h or CSS-1h Asphalt for Tack at the rate of 0.11 ton applied 40 feet wide
(Rate = 0.06 gallon per square yard).

CLASS HR ASPHALT CONCRETE – 2ND LIFT

	Alt. A	Alt. B	
Crushed Aggregate	31.08	32.05	Tons
Salvaged Asphalt Concrete	13.32	13.74	Tons
PG 58-28 Asphalt Binder	1.85	1.71	Tons
Total Mix	46.25	47.50	Tons

The exact proportions of these materials will be determined on construction.

SS-1h or CSS-1h Asphalt for Tack at the rate of 0.11 ton applied 40 feet wide
(Rate = 0.06 gallon per square yard).

FLUSH SEAL

SS-1h or CSS-1h Asphalt for Flush Seal at the rate of 0.09 ton applied 39 feet wide (Rate = 0.05 gallon per square yard).

Sand for Flush Seal at the rate of 0.98 tons applied 22 feet wide
(Rate = 8.0 lbs. per square yard).

RATES OF MATERIALS – CONTINUED

EXIT 44 CROSSROAD
Sta. 192+95 to Sta. 198+20

BASE COURSE, SALVAGED

Crushed Material 395.50 tons

Water for Granular Material at the rate of 4.75 M Gallons

MC-70 Asphalt for Prime at the Rate of 0.70 ton applied 53 feet wide
(Rate = 0.30 gallon per square yard).

Blotting Sand for Prime at the rate of 1.83 tons applied 33 feet wide
(Rate = 10 lbs. per square yard).

CLASS HR ASPHALT CONCRETE – 1ST LIFT

	Alt. A	Alt. B	
Crushed Aggregate	41.03	42.31	Tons
Salvaged Asphalt Concrete	17.58	18.13	Tons
PG 58-28 Asphalt Binder	2.44	2.26	Tons
Total Mix	61.05	62.70	Tons

The exact proportions of these materials will be determined on construction.

SS-1h or CSS-1h Asphalt for Tack at the rate of 0.15 ton applied 52 feet wide
(Rate = 0.06 gallon per square yard).

CLASS HR ASPHALT CONCRETE – 2ND LIFT

	Alt. A	Alt. B	
Crushed Aggregate	41.03	42.31	Tons
Salvaged Asphalt Concrete	17.58	18.13	Tons
PG 58-28 Asphalt Binder	2.44	2.26	Tons
Total Mix	61.05	62.70	Tons

The exact proportions of these materials will be determined on construction.

SS-1h or CSS-1h Asphalt for Tack at the rate of 0.15 ton applied 52 feet wide
(Rate = 0.06 gallon per square yard).

FLUSH SEAL

SS-1h or CSS-1h Asphalt for Flush Seal at the rate of 0.12 ton applied 51 feet wide (Rate = 0.05 gallon per square yard).

Sand for Flush Seal at the rate of 1.47 tons applied 33 feet wide
(Rate = 8.0 lbs. per square yard).

TABLE OF ADDITIONAL QUANTITIES

					Alternate A		Alternate B								
Location	Water for Granular Material	Base Course	Base Course, Salvaged	Gravel Cushion, Salvaged	PG 58-28 Asphalt Binder	Class HR Asphalt Concrete	PG 58-28 Asphalt Binder	Class HR Asphalt Concrete	MC-70 Asphalt for Prime	Blotting Sand for Prime	SS-1h or CSS-1h Asphalt for Tack	SS-1h or CSS-1h Asphalt for Flush Seal	Sand for Flush Seal	Depth of Granular Material	Depth of Asphalt Material
	MGal	Ton	Ton	Ton	Ton	Ton	Ton	Ton	Tons	Tons	Ton	Ton	Ton	Inches	Inches
I 90 Eastbound Lanes															
Mainline															
Sta. 1010+00 to Sta. 1012+79.80	4.0	---	---	335.6	---	---	---	---	---	---	---	---	---	#	
Sta. 1022+00 to Sta. 1022+50 - Transition	0.9	---	---	71.4	---	---	---	---	---	---	---	---	---	#	
Sta. 1259+40.44 to Sta. 1270+39.33	15.3	---	---	1,283.2	---	---	---	---	---	---	---	---	---	#	
Sta. 1270+39.33 to Sta. 1271+39.71	---	---	---	---	1.1	28	1.0	28	---	---	0.10	0.10	---		#
Median Shoulder															
Sta. 1022+00 to Sta. 1022+50 - Transition	0.3	---	22.2	---	0.2	6	0.2	6	0.10	---	0.01	0.01	---	#	# & ##
Sta. 1262+13.32 to Sta. 1267+59.50	2.6	---	222.6	---	---	---	---	---	---	---	---	---	---	#	
Outside Shoulder															
Sta. 1259+40.44 to Sta. 1262+51.82	0.6	---	46.3	---	0.7	18	0.7	18			0.01	0.01		#	#
Sta. 1262+51.82 to Sta. 1270+39.33	1.2	---	104.8	---	---	---	---	---	---	---	---	---	---	#	
Sta. 1270+07.62 to Sta. 1270+39.33	---	---	---	---	0.5	13	0.5	14	---	---	0.01	0.01	---		# & ##
I 90 Westbound Lanes															
Mainline															
Sta. 10+00 to Sta. 12+79.80	4.0	---	---	335.6	---	---	---	---	---	---	---	---	---	#	
Sta. 22+00 to Sta. 22+50 - Transition	0.9	---	---	71.4	---	---	---	---	---	---	---	---	---	#	
Sta. 265+77.67 to Sta. 270+07.01	6.1	---	---	515.8	---	---	---	---	---	---	---	---	---	#	
Sta. 270+07.01 to Sta. 271+07.01	---	---	---	---	1.1	28	1.1	29	---	---	0.09	0.07	---		# & ##
Median Shoulder															
Sta. 22+00 to Sta. 22+50 - Transition	0.3	---	22.2	---	0.2	6	0.2	6	0.10	---	0.01	0.01	---	#	#
Sta. 265+77.67 to Sta. 267+27.17	0.7	---	61.1	---	---	---	---	---	---	---	---	---	---	#	
Outside Shoulder															
Sta. 265+77.67 to Sta. 270+07.01	2.3	---	190.2	---	2.8	69	2.5	71	0.60	---	0.12	0.09	---	#	#
Ramp Gore Areas															
Exit 40 Ramp B WBL Sta. 17+98.41 L. to Sta. 24+97.79 L.	3.5	---	---	292.9	---	---	---	---	---	---	---	---	---	#	
Exit 40 Ramp C EBL Sta. 1018+18.69 R. to Sta. 1031+70 R.	4.3	---	---	358.4										#	
Wedge Adjacent to PCC Pavement	1.2	---	---	103.3	---	---	---	---	---	---	---	---	---	#	
Rest Area Ramp A WBL Sta. 48+86.80 L. to Sta. 65+63.17 L.	5.1	---	---	421.9	---	---	---	---	---	---	---	---	---	#	
Wedge Adjacent to PCC Pavement	0.8	---	---	64.6	---	---	---	---	---	---	---	---	---	#	
Rest Area Ramp B WBL Sta. 82+47.23 L. to Sta. 91+41.96 L.	3.2	---	---	264.8	---	---	---	---	---	---	---	---	---	#	
Wedge Adjacent to PCC Pavement	0.7	---	---	57.7	---	---	---	---	---	---	---	---	---	#	
Rest Area Ramp C EBL Sta. 1074+48.92 R. to Sta. 1091+26.34 R.	5.1	---	---	422.6	---	---	---	---	---	---	---	---	---	#	
Wedge Adjacent to PCC Pavement	0.8	---	---	64.8	---	---	---	---	---	---	---	---	---	#	
Rest Area Ramp D EBL Sta. 1048+74.99 R. to Sta. 1057+69.71 R.	3.2	---	---	264.6	---	---	---	---	---	---	---	---	---	#	
Wedge Adjacent to PCC Pavement	0.7	---	---	57.7	---	---	---	---	---	---	---	---	---	#	
Exit 44 Ramp A WBL Sta. 208+65.35 L. to Sta. 225+41.72 L.	5.0	---	---	419.7	---	---	---	---	---	---	---	---	---	#	
Wedge Adjacent to PCC Pavement	0.8	---	---	64.6	---	---	---	---	---	---	---	---	---	#	
Exit 44 Ramp B WBL Sta. 247+59.82 L. to Sta. 254+50.62 L.	3.4	---	---	286.0	---	---	---	---	---	---	---	---	---	#	
Exit 44 Ramp C EBL Sta. 1246+28.61 R. to Sta. 1262+51.15 R.	5.2	---	---	435.8	---	---	---	---	---	---	---	---	---	#	
Wedge Adjacent to PCC Pavement	3.5	---	---	288.4	---	---	---	---	---	---	---	---	---	#	
Exit 44 Ramp D EBL Sta. 1217+11.52 R. to Sta. 1224+03.31 R.	3.4	---	---	286.9	---	---	---	---	---	---	---	---	---	#	
Subtotals	88.2	---	669.4	6,767.7	6.6	168	6.2	172	0.80	---	0.35	0.30	---		

See Typical Surfacing Sections ## See Surfacing Layouts for Median Crossovers ### See Additional Surfacing for Guardrail Layouts

TABLE OF ADDITIONAL QUANTITIES – CONTINUED

					Alternate A		Alternate B								
Location	Water for Granular Material	Base Course	Base Course, Salvaged	Gravel Cushion, Salvaged	PG 58-28 Asphalt Binder	Class HR Asphalt Concrete	PG 58-28 Asphalt Binder	Class HR Asphalt Concrete	MC-70 Asphalt for Prime	Blotting Sand for Prime	SS-1h or CSS-1h Asphalt for Tack	SS-1h or CSS-1h Asphalt for Flush Seal	Sand for Flush Seal	Depth of Granular Material	Depth of Asphalt Material
	MGal	Ton	Ton	Ton	Ton	Ton	Ton	Ton	Tons	Tons	Ton	Ton	Ton	Inches	Inches
Additional Surfacing Adjacent to Guardrail															
Structure No. 47-080-535 – Eastbound Lanes															
Begin Bridge L.	2.8	---	233.1	---	0.3	7	0.3	7	0.08	---	0.02	0.02	---	###	###
Begin Bridge R.	3.3	---	271.2	---	1.7	42	1.7	42	0.44	---	0.09	0.08	---	###	###
Structure No. 47-085-546 – Eastbound Lanes															
Begin Bridge L.	2.8	---	233.1	---	0.3	7	0.3	7	0.08	---	0.02	0.02	---	###	###
Begin Bridge R.	0.7	---	63.6	---	0.3	6	0.3	6	0.07	---	0.01	0.01	---	###	###
Structure No. 47-088-551 – Eastbound Lanes															
Begin Bridge L.	1.8	---	151.0	---	0.3	7	0.3	7	0.08	---	0.02	0.02	---	###	###
Begin Bridge R.	0.8	---	64.4	---	0.2	6	0.2	6	0.07	---	0.01	0.01	---	###	###
Structure No. 47-080-534 – Westbound Lanes															
Begin Bridge L.	0.4	---	30.3	---	---	---	---	---	---	---	---	---	---	###	
Begin Bridge R.	3.9	---	327.4	---	---	---	---	---	---	---	---	---	---	###	
End Bridge L.	0.6	---	48.6	---	0.2	6	0.2	6	0.06	---	0.01	0.01	---	###	###
End Bridge R.	2.6	---	216.3	---	0.3	7	0.3	7	0.09	---	0.02	0.02	---	###	###
Structure No. 47-085-545 – Westbound Lanes															
Begin Bridge L.	0.5	---	36.2	---	---	---	---	---	---	---	---	---	---	###	
Begin Bridge R.	3.9	---	319.0	---	---	---	---	---	---	---	---	---	---	###	
End Bridge L.	1.8	---	152.7	---	0.9	24	0.9	24	0.25	---	0.05	0.04	---	###	###
End Bridge R.	2.6	---	216.3	---	0.3	7	0.3	7	0.09	---	0.02	0.02	---	###	###
Structure No. 47-088-550 – Westbound Lanes															
Begin Bridge L.	0.7	---	59.3	---	0.2	6	0.2	6	0.07	---	0.01	0.01	---	###	###
Begin Bridge R	1.6	---	137.3	---	---	---	---	---	---	---	---	---	---	###	###
End Bridge L.	1.6	---	134.2	---	0.5	14	0.5	14	0.14	---	0.03	0.03	---	###	###
End Bridge R.	1.9	---	154.9	---	0.4	9	0.4	10	0.10	---	0.02	0.02	---	###	###
Exit 40 – Crossroad and Ramps															
Crossroad															
Sta. 4+41.70 to Sta. 4+86	---	---	---	---	0.5	14	0.5	15	---	---	0.03	0.03	0.5		2
Sta. 7+14 to Sta. 7+57.06	---	---	---	---	0.5	14	0.5	15	---	---	0.03	0.03	0.5		2
Sta. 11+19.50 to Sta. 11+69.50 - Transition	---	---	---	---	1.2	34	1.2	34	0.18	0.6	0.08	0.03	0.5		#
Ramp A – Sta. 21+91.33 to Sta. 23+00.46	---	---	---	---	2.2	53	2.2	55	---	---	0.12	0.11	1.9		2
(Includes Radius L. & R. of Sta. 23+00.46)															
Ramp B – Radius L. & R. of Sta. 0+12.08	---	---	---	---	1.0	24	1.0	25	---	---	0.06	0.05	0.9		2
Ramp C – Radius L. & R. of Sta. 0+12	1.2	---	97.4	---	1.8	42	1.8	44	0.10	0.8	0.10	0.04	0.8	12	4
Ramp D – Sta. 19+21.05 to Sta. 20+09.20	---	---	---	---	1.8	44	1.8	45	---	---	0.10	0.09	1.6		2
(Includes Radius L. & R. of Sta. 20+09.20)															
Additional Surfacing Adjacent to Guardrail – Str. No. 47-069-510															
Begin Bridge L.	0.3	---	28.8	---	0.4	10	0.4	11	0.05	---	0.02	0.02	---	###	###
Begin Bridge R.	0.5	---	41.3	---	0.6	16	0.6	17	0.07	---	0.04	0.03	---	###	###
End Bridge L.	0.4	---	31.2	---	0.5	12	0.5	13	0.05	---	0.03	0.02	---	###	###
End Bridge R.	0.3	---	28.8	---	0.4	10	0.4	10	0.05	---	0.02	0.02	---	###	###
Subtotals	37.0	---	3,076.4	---	16.8	421	16.8	433	2.12	1.4	0.96	0.78	6.7		

See Typical Surfacing Sections ## See Surfacing Layouts for Median Crossovers ### See Additional Surfacing for Guardrail Layouts

TABLE OF ADDITIONAL QUANTITIES – CONTINUED

					Alternate A		Alternate B								
Location	Water for Granular Material MGal	Base Course Ton	Base Course, Salvaged Ton	Gravel Cushion, Salvaged Ton	PG 58-28 Asphalt Binder Ton	Class HR Asphalt Concrete Ton	PG 58-28 Asphalt Binder Ton	Class HR Asphalt Concrete Ton	MC-70 Asphalt for Prime Tons	Blotting Sand for Prime Tons	SS-1h or CSS-1h Asphalt for Tack Ton	SS-1h or CSS-1h Asphalt for Flush Seal Ton	Sand for Flush Seal Ton	Depth of Granular Material Inches	Depth of Asphalt Material Inches
Exit 44 – Crossroad and Ramps															
Crossroad															
Sta. 191+72.50 to Sta. 192+95 – Transition	5.2	---	433.0	---	5.2	132	4.8	136	0.80	1.9	0.20	0.10	1.0	#	#
Sta. 198+20 to Sta. 199+42.50 – Transition	5.2	---	433.0	---	5.2	132	4.8	136	0.80	1.9	0.20	0.10	1.0	#	#
Radius L. & R. of Sta. 188+00	2.4	---	203.0	---	3.0	72	3.0	76	0.30	1.7	0.14	0.07	1.3	12	4
Additional Surfacing Adjacent to Guardrail															
Sta. 193+71.32 L. to Sta. 197+70.70 L.	1.2	---	103.7	---	0.6	16	0.6	17	0.10	---	0.03	0.03	---	###	###
Sta. 193+69.71 R. to Sta. 198+69.43 R.	1.5	---	125.7	---	0.8	19	0.8	20	0.20	---	0.04	0.04	---	###	###
Ramp A – Radius L. & R. of Sta. 16+29.50	0.7	---	62.1	---	0.8	20	0.8	22	0.10	0.5	0.04	0.02	0.4	12	4
Ramp B – Radius L. & R. of Sta. 0+26.56	1.0	---	80.3	---	1.2	30	1.2	30	0.10	0.7	0.06	0.03	0.5	12	4
Ramp C – Radius L. & R. of Sta. 0+28.62	1.0	---	82.1	---	1.2	30	1.2	30	0.10	0.7	0.06	0.03	0.5	12	4
Ramp D – Radius L. & R. of Sta. 17+69.43	1.1	---	91.4	---	1.4	34	1.4	34	0.10	0.8	0.06	0.03	0.6	12	4
Cul De Sac's															
XR118 – 83.6' R. of EBL Sta. 1117+71.64	2.5	204.8	---	---	---	---	---	---	---	---	---	---	---	4	
XR1177 – 125.3' R. of EBL Sta. 1176+05.25	2,9	245.5	---	---	---	---	---	---	---	---	---	---	---	4	
Private Drive	0.3	22.4	---	---	0.7	18	0.7	18	---	---	0.02	---	---	4	3
XR275 – 279.3' L. of WBL Sta. 275+36.44	2.5	210.6	---	---	---	---	---	---	---	---	---	---	---	4	
XR300 – 280.1' L. of WBL Sta. 304+17.44	0.3	24.9	---	---	---	---	---	---	---	---	---	---	---	4	
Median Crossovers															
EBL Sta. 1010+00 L. to Sta. 1012+79.80 L.	0.5	---	45.7	---	4.5	111	4.0	114	---	---	0.10	---	---	##	##
& WBL Sta. 10+00 R. to Sta. 12+79.80 R.															
EBL Sta. 1162+36.55 L. to Sta. 1167+96.21 L	8.8	---	479.5	253.2	54.0	1,333	48.6	1,366	---	---	1.24	---	---	##	##
& WBL Sta. 162+20.15 R. to Sta. 167+79.80 R.															
EBL Sta. 1267+59.50 L. to Sta. 1271+39.33 L.	0.5	---	45.7	---	8.4	204	7.3	210	---	---	0.28	---	---	##	##
& WBL Sta. 267+27.17 R. to Sta. 271+07.01 R.															
Inslope Tapers															
Eastbound Lanes	40.0	---	---	3,352.6	---	---	---	---	---	---	---	---	---	#	
Westbound Lanes	40.5	---	---	3392.6	---	---	---	---	---	---	---	---	---	#	
Subtotals	118.1	708.2	2,185.2	6964.3	87.0	2,151	79.2	2,209	2.60	8.2	2.47	0.45	5.3		
Grand Totals:	243.3	708.2	5,931.0	13,732.0	110.4	2,740	102.2	2,814	5.52	9.6	3.78	1.53	12.0		

See Typical Surfacing Sections ## See Surfacing Layouts for Median Crossovers ### See Additional Surfacing for Guardrail Layouts

TYPICAL SURFACING SECTIONS

Cold Milling Asphalt Concrete

Remove PCC Pavement (See Section B - Grading)

Unclassified Excavation - Granular Base Material and Asphalt Concrete to be salvaged and stockpiled (See Section B - Grading)

NOTE: Stationings shown on this sheet are approximate.

See SURFACING DETAILS FOR MEDIAN CROSSOVERS located elsewhere in these plans for additional details for removal.

EASTBOUND LANES

Sta. 1010+00 to Sta. 1012+79.80

WESTBOUND LANES - REVERSED

Sta. 10+00 to Sta. 12+79.80

In Place Section Showing Material to be Removed

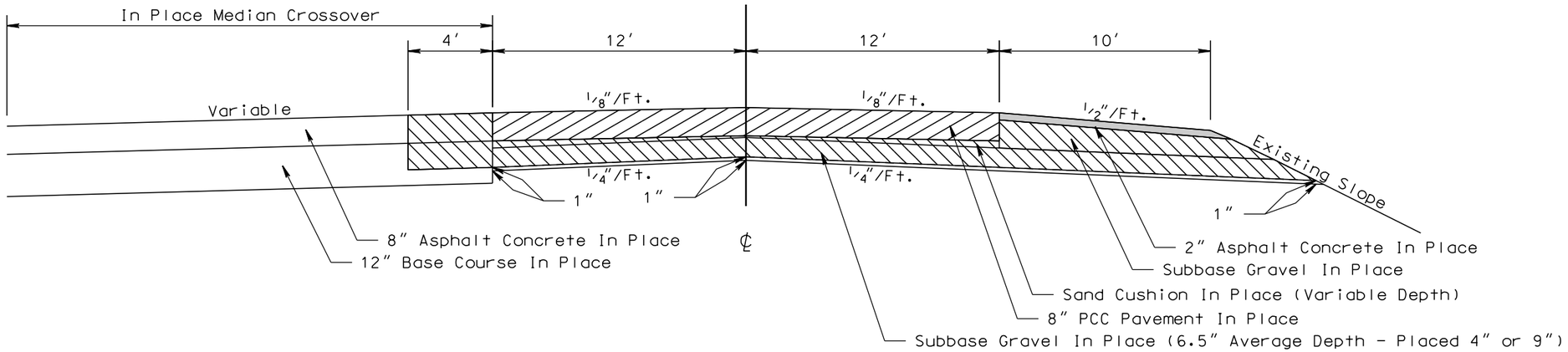

In Place Structures and Slabs - Eastbound Lanes
Sta. 1140+57.14 to Sta. 1142+42.64
Sta. 1206+29.58 to Sta. 1208+03.58

In Place Structures and Slabs - Westbound Lanes
Sta. 140+40.73 to Sta. 142+26.23
Sta. 206+13.17 to Sta. 207+87.17

* 6" PCC Shoulder In Place To Be Removed

Westbound Lanes
Sta. 139+76.81 to Sta. 140+40.73 - 4'
Sta. 142+26.23 to Sta. 142+93.19 - 4'
Sta. 205+30.09 to Sta. 206+13.17 - 4'
Sta. 207+87.17 to Sta. 208+62.26 - 4'

Eastbound Lanes
Sta. 1139+76.81 to Sta. 1140+57.14 - 4'
Sta. 1142+42.64 to Sta. 1143+13.36 - 4'
Sta. 1205+46.50 to Sta. 1206+29.58 - 4'
Sta. 1208+03.58 to Sta. 1208+86.61 - 4'

EASTBOUND LANES

Sta. 1012+79.80 to Sta. 1014+33.83
Sta. 1025+41.33 to Sta. 1033+35.08
Sta. 1057+00 to Sta. 1073+77.67
Sta. 1084+15.27 to Sta. 1140+57.14
Sta. 1142+42.64 to Sta. 1162+36.55
Sta. 1167+96.21 to Sta. 1206+29.58
Sta. 1208+03.58 to Sta. 1217+24.76

WESTBOUND LANES - REVERSED

Sta. 12+79.80 to Sta. 17+38.30
Sta. 25+75.39 to Sta. 55+29.87
Sta. 65+62.12 to Sta. 83+20.37
Sta. 91+16.82 to Sta. 140+40.73
Sta. 142+26.23 to Sta. 162+20.15
Sta. 167+79.80 to Sta. 206+13.17
Sta. 207+87.17 to Sta. 218+08.33

** 6" PCC Shoulder In Place To Be Removed

Westbound Lanes
Sta. 138+76.67 to Sta. 140+40.73 - 10'
Sta. 142+26.23 to Sta. 143+92.22 - 4' to 10'
Sta. 204+30.20 to Sta. 206+13.17 - 10'
Sta. 207+87.17 to Sta. 209+62.68 - 4' to 10'

Eastbound Lanes
Sta. 1138+74.21 to Sta. 1139+27.45 - 10'
Sta. 1139+27.45 to Sta. 1140+57.14 - 10' to 4'
Sta. 1142+42.64 to Sta. 1144+13.25 - 10'
Sta. 1204+46.60 to Sta. 1206+29.58 - 10' to 4'
Sta. 1208+03.58 to Sta. 1209+86.74 - 10'

In Place Section Showing Material to be Removed

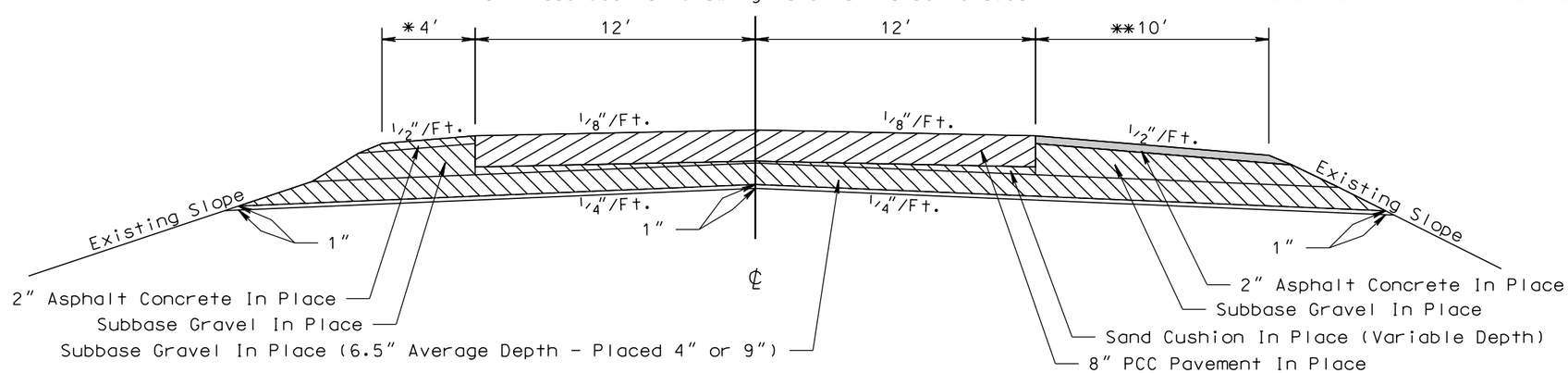

PLOT SCALE - 1:6
PLOT NAME - 2
FILE ...\MEAD5580\TYPICAL SECTION.DGN
PLOTTED FROM - TRPR18388

TYPICAL SURFACING SECTIONS

Remove PCC Pavement (See Section B - Grading)

Unclassified Excavation - Granular Base Material and Asphalt Concrete to be salvaged and stockpiled (See Section B - Grading)

NOTE: Stationings shown on this sheet are approximate.

EASTBOUND LANES
MAINLINE & EXIT 40 GORE AREA

Sta. 1014+33.83 to Sta. 1025+41.33 - Ramp C

WESTBOUND LANES - REVERSED
MAINLINE & EXIT 40 GORE AREA

Sta. 17+38.30 to Sta. 25+75.39 - Ramp B

In Place Section Showing Material to be Removed

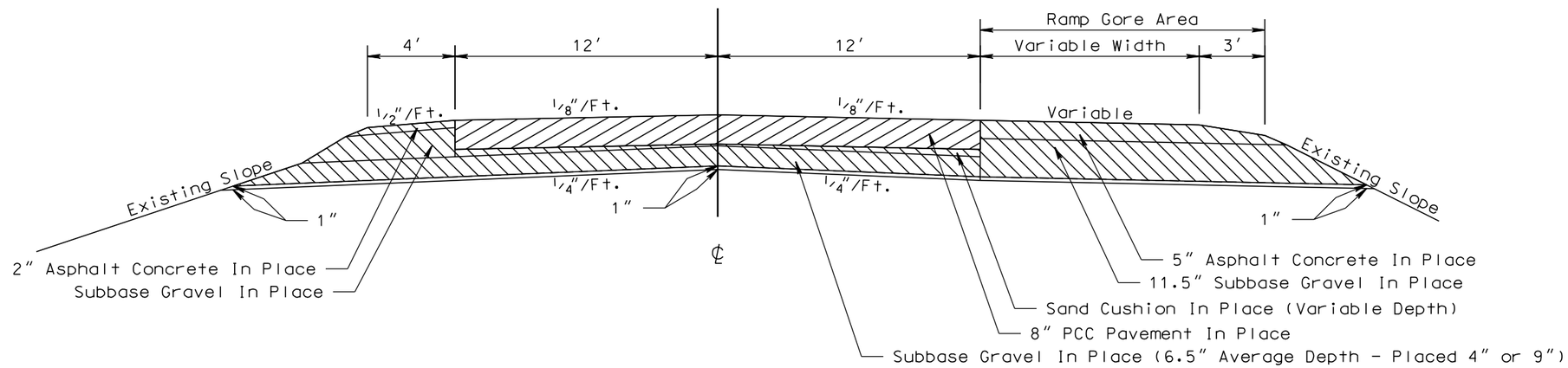

EASTBOUND LANES
MAINLINE & REST AREA GORE AREAS

Sta. 1048+97.29 to Sta. 1057+00 - Ramp D
Sta. 1073+77.67 to Sta. 1084+15.27 - Ramp C

WESTBOUND LANES - REVERSED
MAINLINE & REST AREA GORE AREAS

Sta. 55+29.87 to Sta. 65+62.12 - Ramp A
Sta. 83+20.37 to Sta. 91+16.82 - Ramp B

In Place Section Showing Material to be Removed

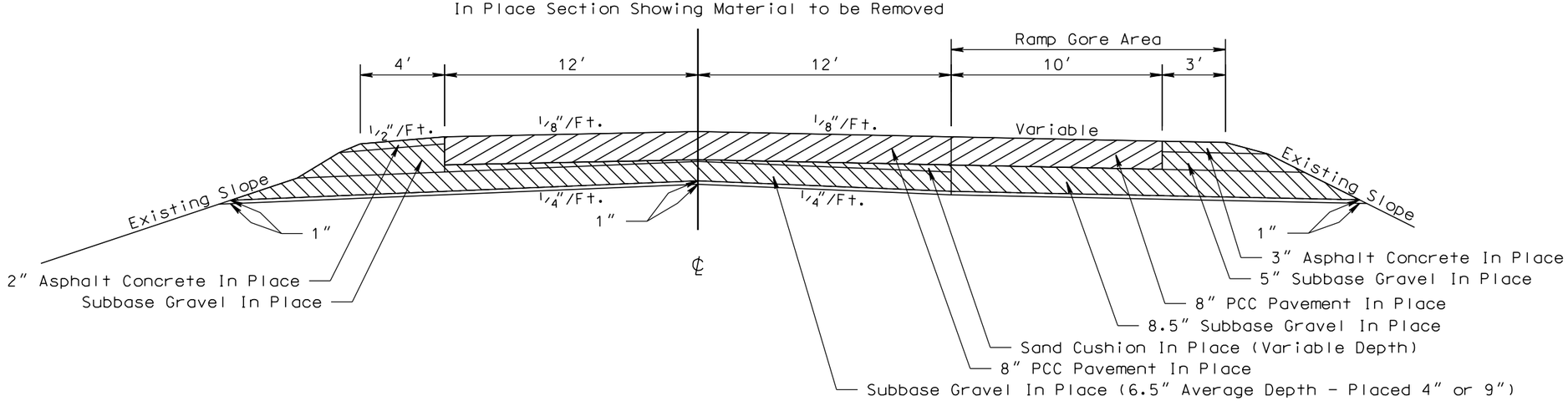

TYPICAL SURFACING SECTIONS

Cold Milling Asphalt Concrete

Remove PCC Pavement (See Section B - Grading)

Unclassified Excavation - Granular Base Material and Asphalt Concrete to be salvaged and stockpiled (See Section B - Grading)

NOTE: Stationings shown on this sheet are approximate.

See SURFACIN DETAILS FOR MEDIAN CROSSOVERS located elsewhere in these plans for additional details for removal.

EASTBOUND LANES

Sta. 1033+35.08 to Sta. 1048+97.29

In Place Section Showing Material to be Removed

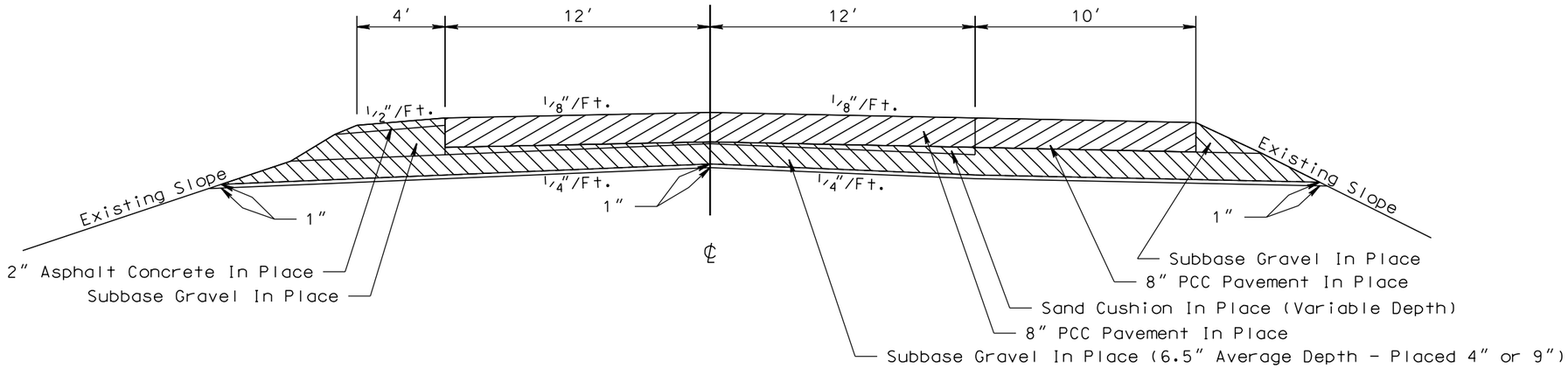

EASTBOUND LANES

Sta. 1162+36.55 to Sta. 1167+96.21

WESTBOUND LANES - REVERSED

Sta. 162+20.15 to Sta. 167+79.80

In Place Section Showing Material to be Removed

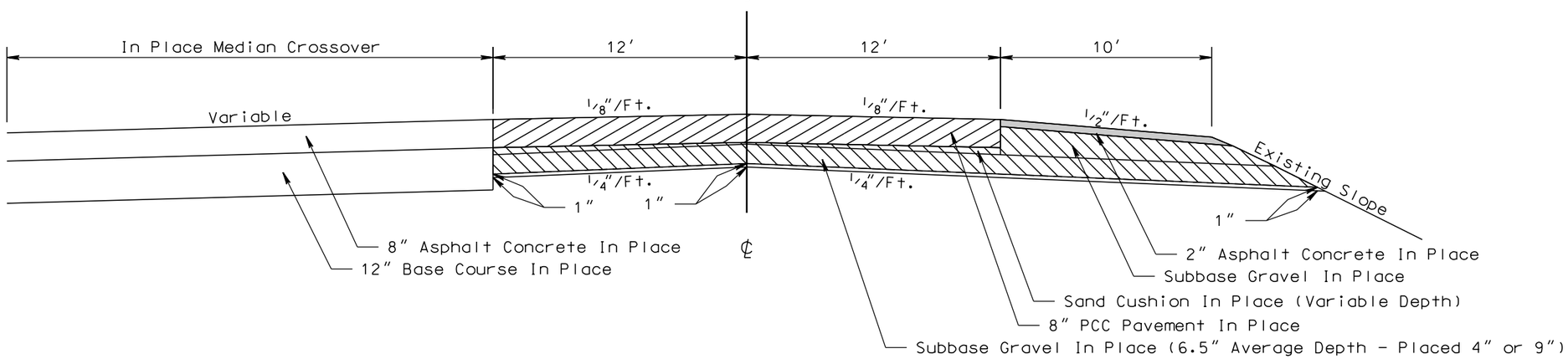

PLOT SCALE - 1:6

PLOTTED FROM - TRPR18388

PLOT NAME - 4

FILE - ...\MEAD5580\TYPICAL SECTION.DGN

TYPICAL SURFACING SECTIONS

Cold Milling Asphalt Concrete

Remove PCC Pavement (See Section B - Grading)

Unclassified Excavation - Granular Base Material and Asphalt Concrete to be salvaged and stockpiled (See Section B - Grading)

NOTE: Stationings shown on this sheet are approximate.

EASTBOUND LANES

Sta. 1217+24.76 to Sta. 1224+05.38
Sta. 1228+34.96 to Sta. 1235+48.77
Sta. 1237+08.26 to Sta. 1244+40.82
Sta. 1251+74.75 to Sta. 1259+40.44

WESTBOUND LANES - REVERSED

Sta. 218+08.33 to Sta. 224+23.03
Sta. 229+87.57 to Sta. 235+62.33
Sta. 237+21.83 to Sta. 246+14.48
Sta. 251+90.35 to Sta. 262+33.45

In Place Section Showing Material to be Removed

In Place Structures and Slabs - Eastbound Lanes
Sta. 1235+48.77 to Sta. 1237+08.26

In Place Structures and Slabs - Westbound Lanes
Sta. 235+62.33 to Sta. 237+21.83

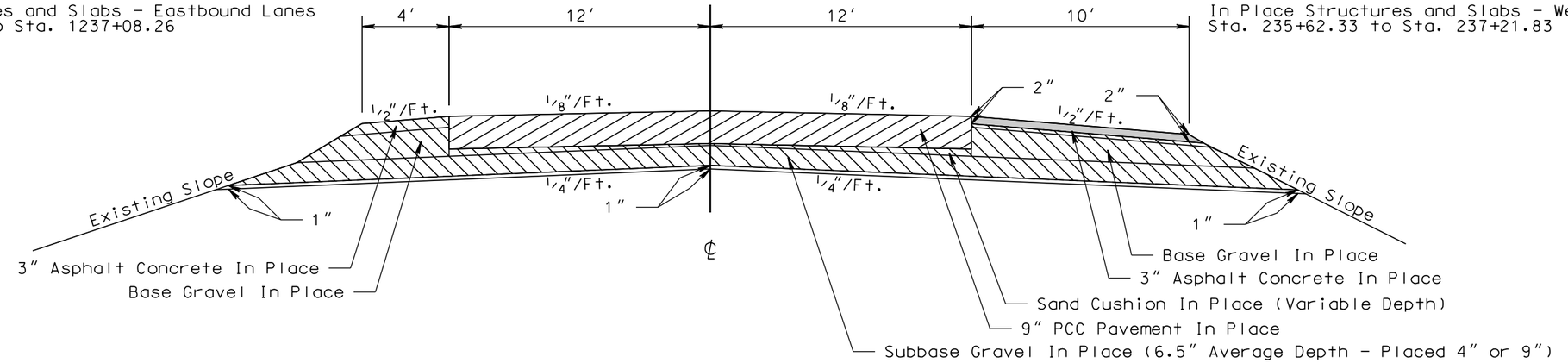

EASTBOUND LANES
MAINLINE & EXIT 44 GORE AREAS

Sta. 1224+05.38 to Sta. 1228+34.96 - Ramp D
Sta. 1244+40.82 to Sta. 1251+74.75 - Ramp C

WESTBOUND LANES - REVERSED
MAINLINE & EXIT 44 GORE AREAS

Sta. 224+23.03 to Sta. 229+87.57 - Ramp A
Sta. 246+14.48 to Sta. 251+90.35 - Ramp B

In Place Section Showing Material to be Removed

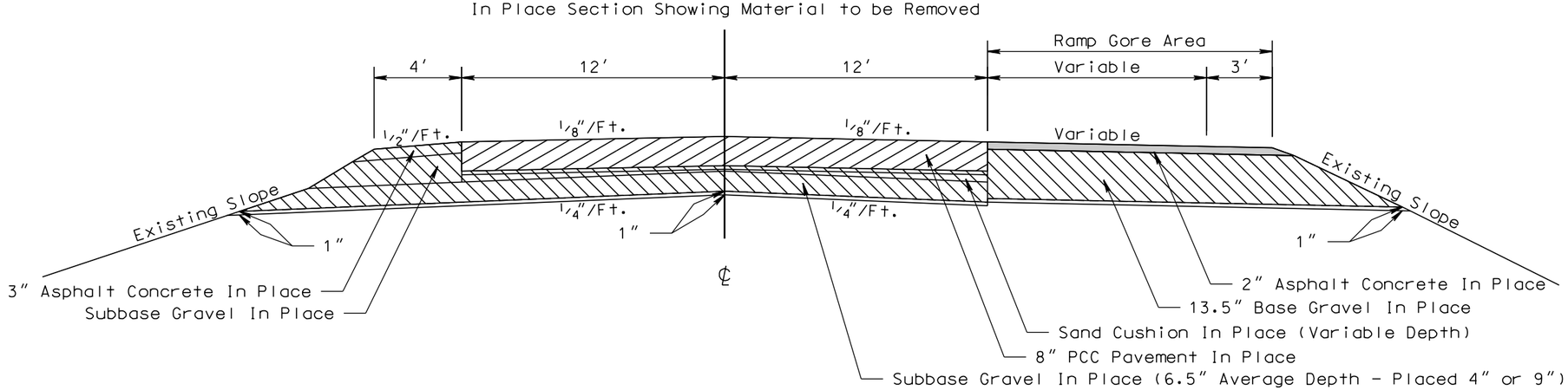

STATE OF SOUTH DAKOTA	PROJECT	SHEET	TOTAL SHEETS
	IM 0901(38)40	F19	F87

Plotting Date: 08/08/2016

TYPICAL SURFACING SECTIONS

Cold Milling Asphalt Concrete

Remove PCC Pavement (See Section B - Grading)

Unclassified Excavation - Granular Base Material and Asphalt Concrete to be salvaged and stockpiled (See Section B - Grading)

NOTE: Stationings shown on this sheet are approximate.

EASTBOUND LANES

Sta. 1259+40.44 to Sta. 1262+13.32

Sta. 1262+13.32 - End Grading

In Place Section Showing Material to be Removed

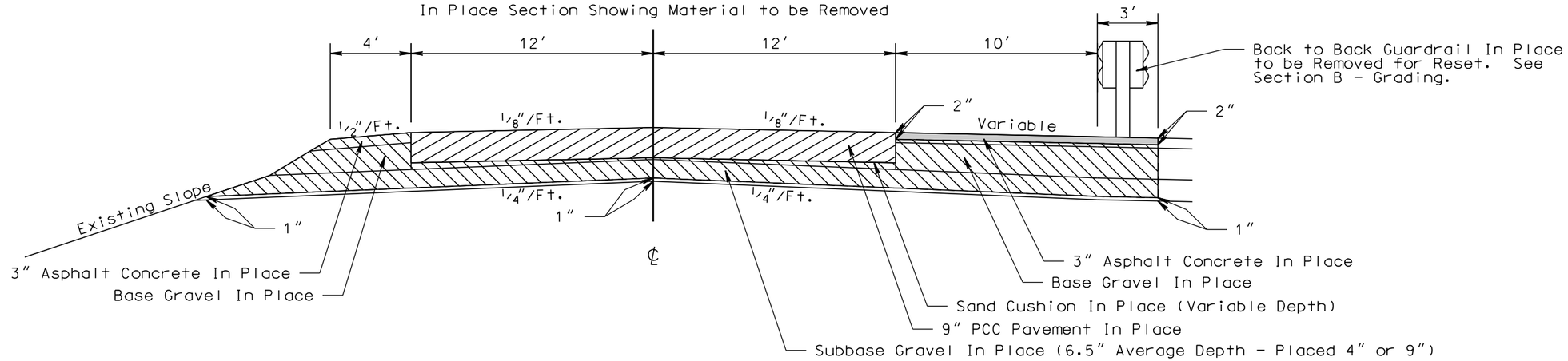

WESTBOUND LANES

Sta. 262+33.45 to Sta. 265+77.67

Sta. 265+77.67 - End Grading

Transition - Sta. 262+33.45 to Sta. 264+03.37
0" to 4.25"

In Place Section Showing Material to be Removed

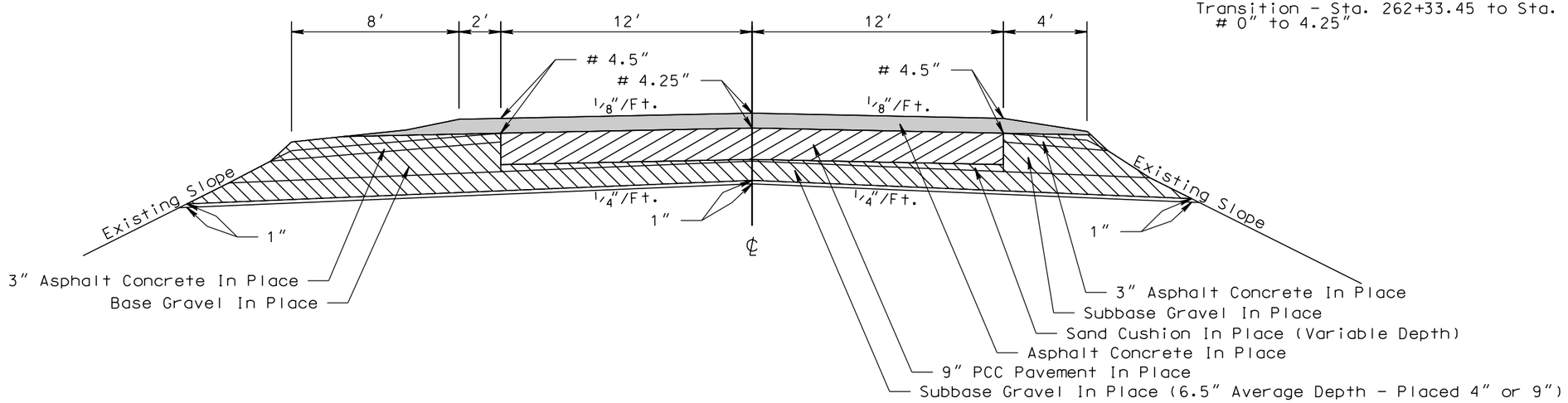

PLOT SCALE - 1:6

PLOT NAME - 6

FILE -...\MEAD5580\TYPICAL SECTION.DGN

PLOTTED FROM - TRPR18388

TYPICAL SURFACING SECTIONS

Cold Milling Asphalt Concrete

Unclassified Excavation - Granular Base Material and Asphalt Concrete to be salvaged and stockpiled (See Section B - Grading)

EXIT 44 CROSSROAD - XR236

Sta. 192+61.31 to Sta. 203+21.50

In Place Section Showing Material to be Removed

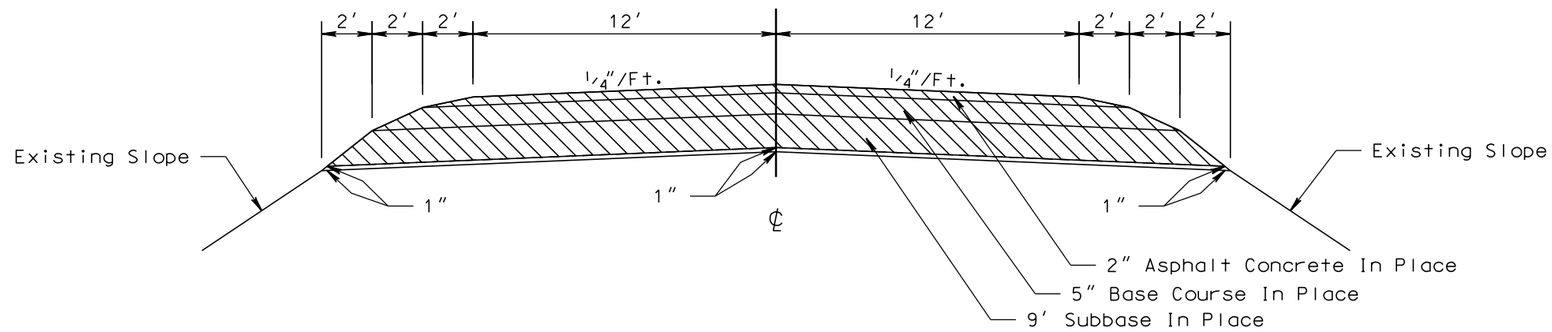

EXIT 44 CROSSROAD - XR236

Sta. 188+00 to Sta. 192+61.31
Sta. 203+21.50 to Sta. 206+00

In Place Section Showing Material to be Removed

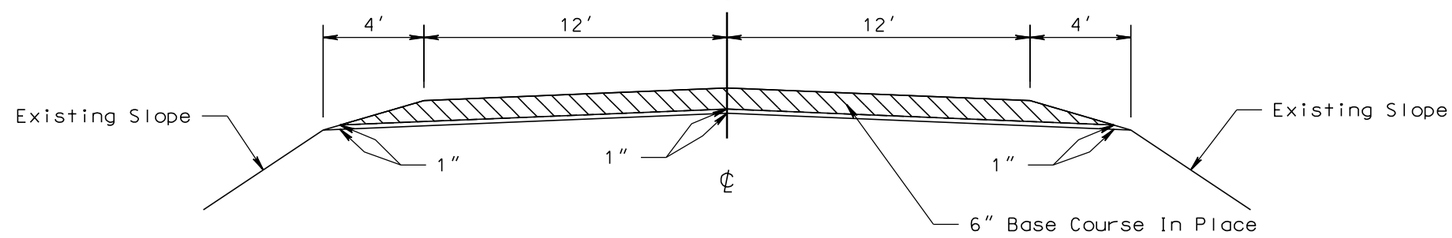

NOTE: Stationings and offsets shown for the Ramp on this sheet are approximate. Offsets are to center of ramp.

EXIT 40 RAMP

Ramp B - WBL Sta. 11+87.53 - 162.69′ L. to WBL Sta. 17+41.23 - 29.52′L.

In Place Section Showing Material to be Removed

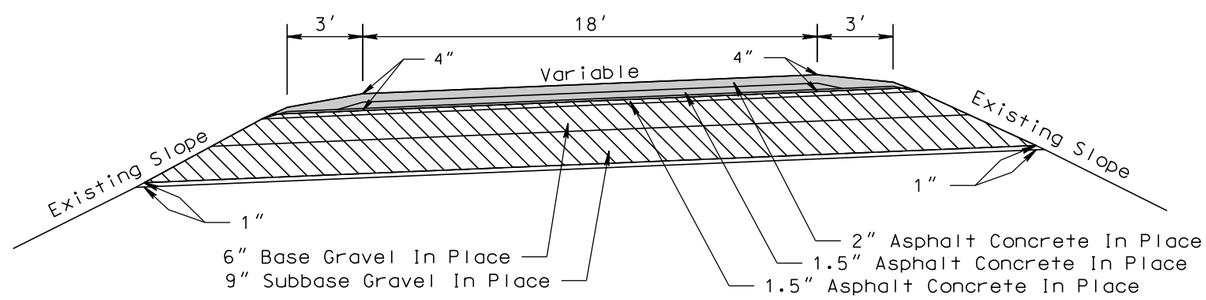

PLOT SCALE - 1:6
PLOTTED FROM - TRPR18388
PLOT NAME - 7
FILE - ...\MEAD5580\TYPICAL SECTION.DGN

TYPICAL SURFACING SECTIONS

Remove PCC Pavement (See Section B - Grading)

Unclassified Excavation - Granular Base Material and Asphalt Concrete to be salvaged and stockpiled (See Section B - Grading)

NOTE: Stationings and offsets shown on this sheet are approximate. Offsets are to center of ramp.

EXIT 40 RAMP

Ramp C - EBL Sta. 1003+00 - 446.02′ R. to EBL Sta. 1014+36.70 - 31.38′ R.

In Place Section Showing Material to be Removed

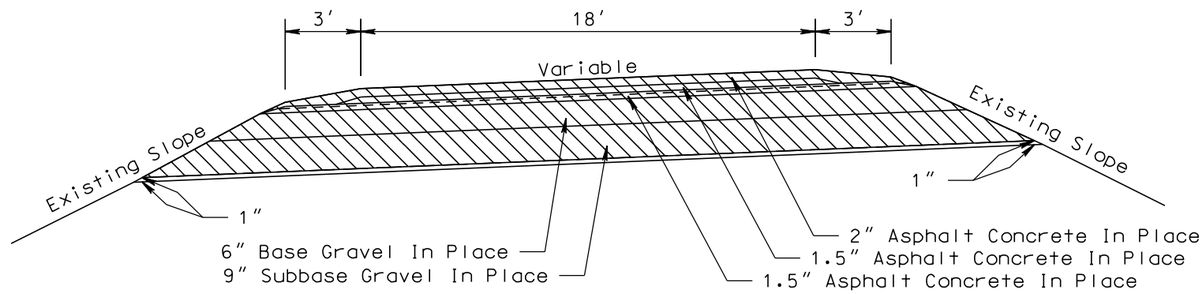

REST AREA RAMPs

Ramp A - WBL Sta. 65+60.18 - 18.29′ L. to WBL Sta. 72+34.17 - 107.50′ L.
Ramp B - WBL Sta. 79+79.68 - 89.95′ L. to WBL Sta. 83+22.49 - 23.85′ L.
Ramp C - EBL Sta. 1069+06.25 - 106.37′ R. to EBL Sta. 1073+79.40 - 21.75′ R.
Ramp D - EBL Sta. 1056+94.08 - 26.12′ R. to EBL Sta. 1059+21.11 - 73.46′ R.

In Place Section Showing Material to be Removed

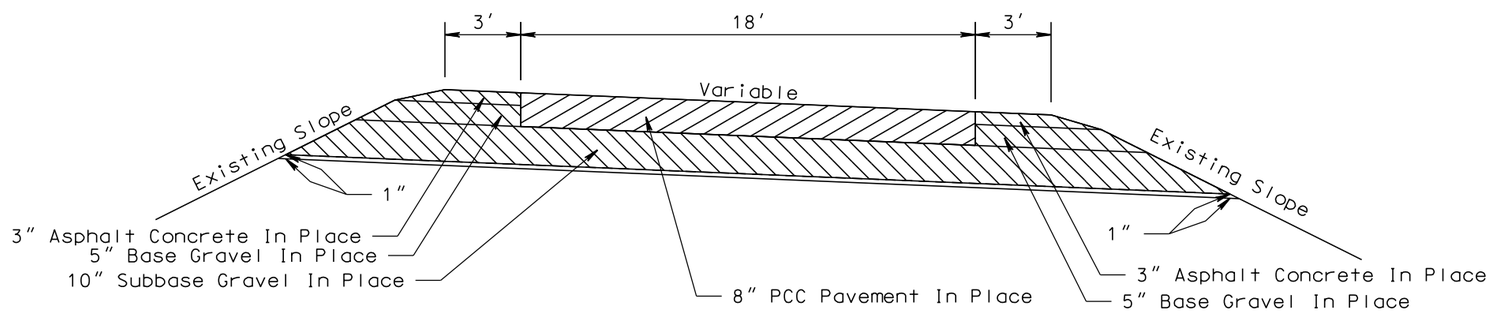

EXIT 44 RAMPS

Ramp A - WBL Sta. 229+85.47 - 23.75′ L. to WBL Sta. 237+02.54 - 94.50′ L.
Ramp B - WBL Sta. 237+57.53 - 134.65′ L. to WBL Sta. 246+15.95 - 10.14′ L.
Ramp C - EBL Sta. 1235+45.34 - 126.47′ R. to EBL Sta. 1244+43.99 - 31.10′ R.
Ramp D - EBL Sta. 1228+33.09 - 9.37′ R. to EBL Sta. 1235+17.28 - 125.51′ R.

In Place Section Showing Material to be Removed

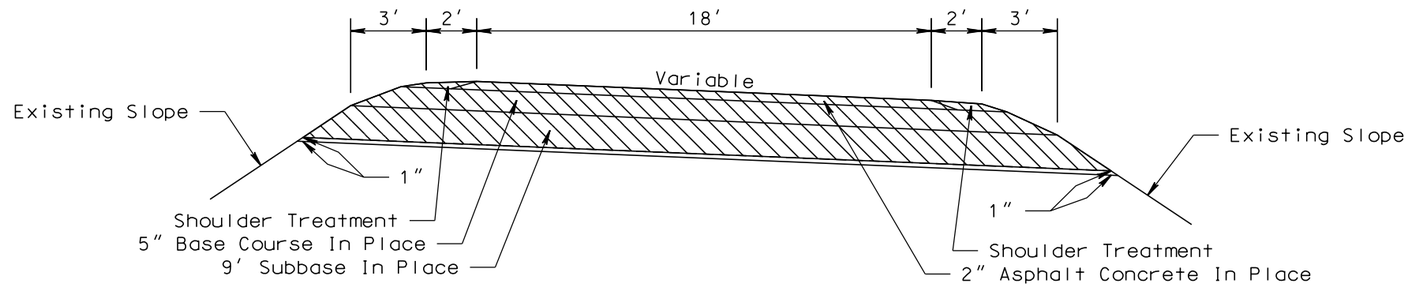

PLOT SCALE - 1:6
PLOT NAME - 8
FILE - ...\MEAD5580\TYPICAL SECTION.DGN
PLOTTED FROM - TRPR18388

TYPICAL SURFACING SECTIONS

See SURFACING DETAILS FOR MEDIAN CROSSOVERS located elsewhere in these plans for additional details for surfacing.

EASTBOUND LANES

Sta. 1010+00 to Sta. 1012+79.80

Superelevated Section

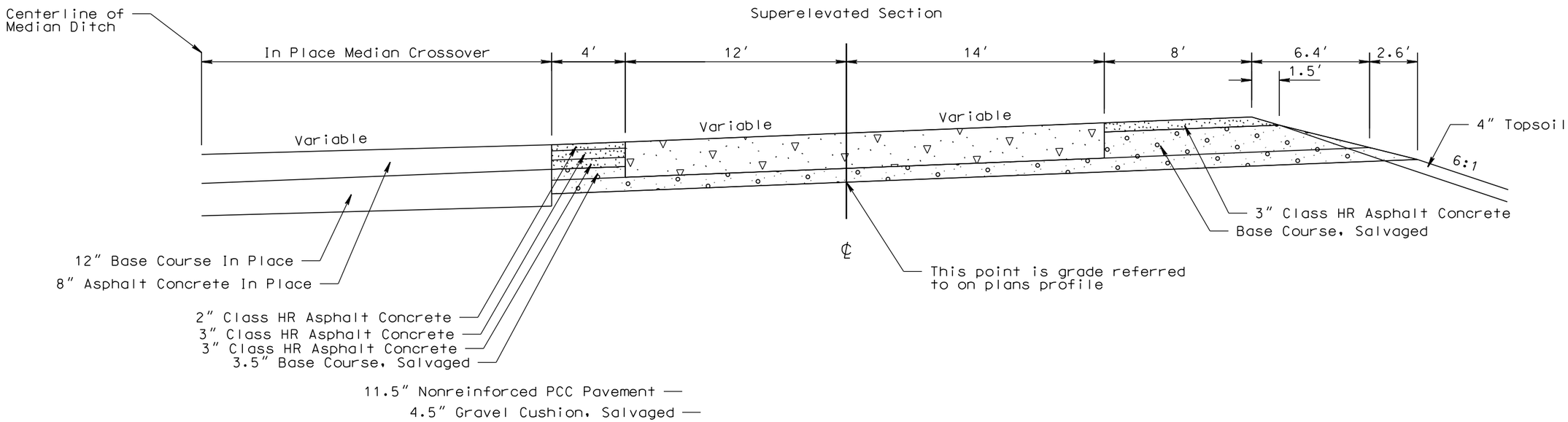

EASTBOUND LANES

Sta. 1012+79.80 to Sta. 1018+18.69

Superelevated Section

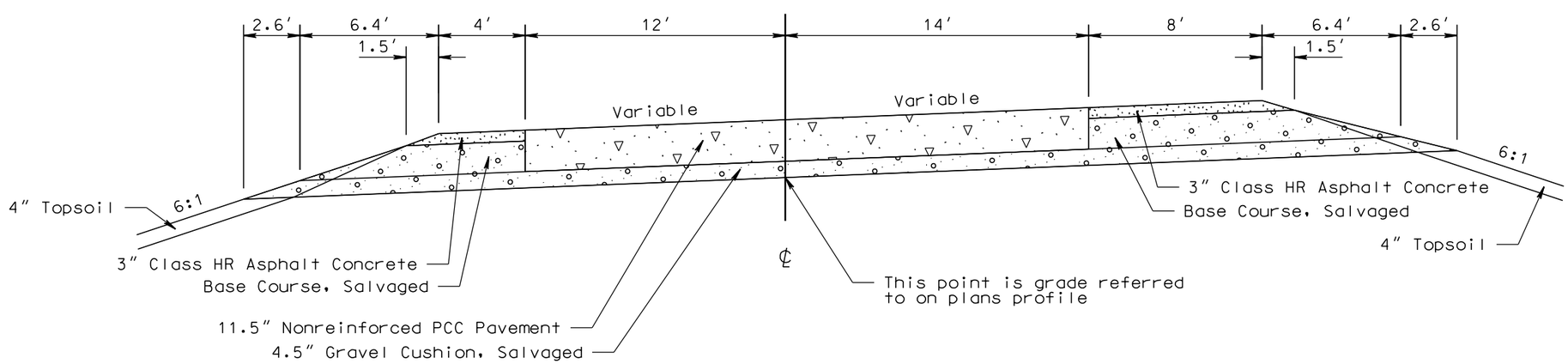

PLOT SCALE - 1:6

PLOTTED FROM - TRPR18388

PLOT NAME - 9

FILE - ...\MEAD5580\TYPICAL SECTION.DGN

TYPICAL SURFACING SECTIONS

See PCC PAVEMENT JOINT LAYOUTS located elsewhere in these plans for additional details for surfacing in the ramp gore areas.

EASTBOUND LANES

Sta. 1018+18.69 to Sta. 1025+75.81

Superelevated Section

Transition:
Sta. 1022+00 to Sta. 1022+50
4′ to 6′

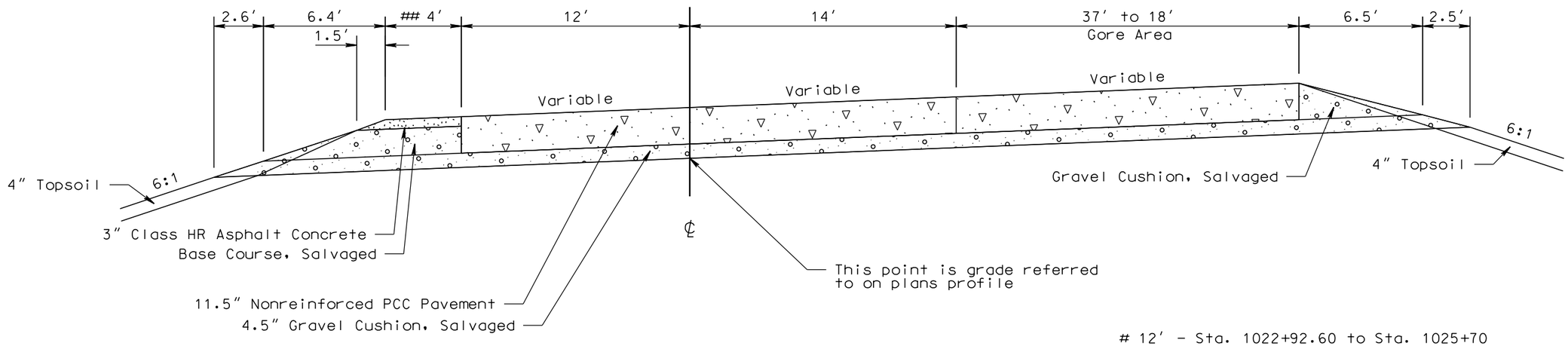

12′ - Sta. 1022+92.60 to Sta. 1025+70
12′ to 2′ - Sta. 1025+70 to Sta. 1030+70
2′ - Sta. 1030+70 to Sta. 1031+70

2′ - Sta. 1048+75 to Sta. 1049+15
2′ to 12′ - Sta. 1049+15 to Sta. 1051+15
12′ - Sta. 1051+15 to Sta. 1055+05
18′ to 41′ - Sta. 1055+05 to Sta. 1057+69.71

37′ to 18′ - Sta. 1074+48.92 to Sta. 1077+46.34
12′ - Sta. 1077+46.34 to Sta. 1085+26.34
12′ to 2′ - Sta. 1085+26.34 to Sta. 1090.26.34
2′ - Sta. 1090+26.34 to Sta. 1091+26.34

2′ - Sta. 1217+11.52 to Sta. 1217+51.52
2′ to 35′ - Sta. 1217+51.52 to Sta. 1224+03.31

0′ to 16′ - Sta. 1024+65 to Sta. 1025+15

EASTBOUND LANES

Sta. 1025+75.81 to Sta. 1031+70
Sta. 1048+75 to Sta. 1057+69.71
Sta. 1074+48.92 to Sta. 1091+26.34
Sta. 1217+11.52 to Sta. 1224+66.38

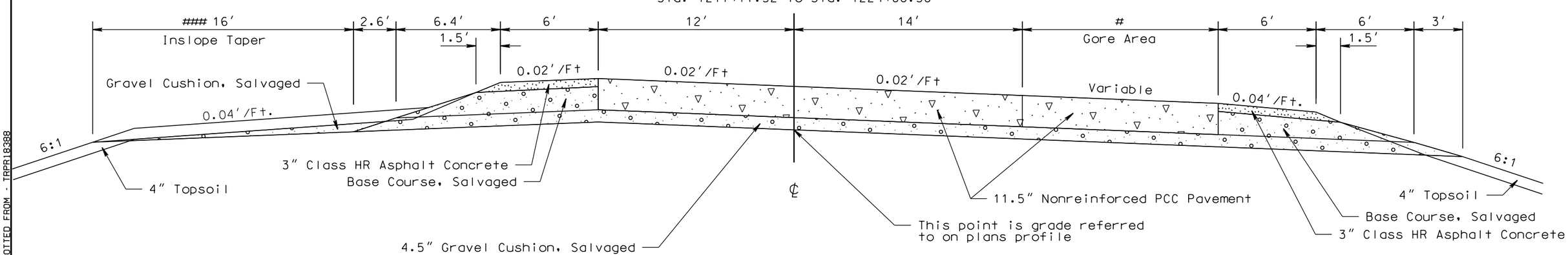

PLOT SCALE - 1:6
PLOT NAME - 10
FILE -...\MEAD5580\TYPICAL SECTION.DGN
PLOTTED FROM - TRPR19388

TYPICAL SURFACING SECTIONS

See SURFACING DETAILS FOR MEDIAN CROSSOVERS located elsewhere in these plans for additional details for surfacing.

EASTBOUND LANES

Sta. 1162+36.55 to Sta. 1167+96.21

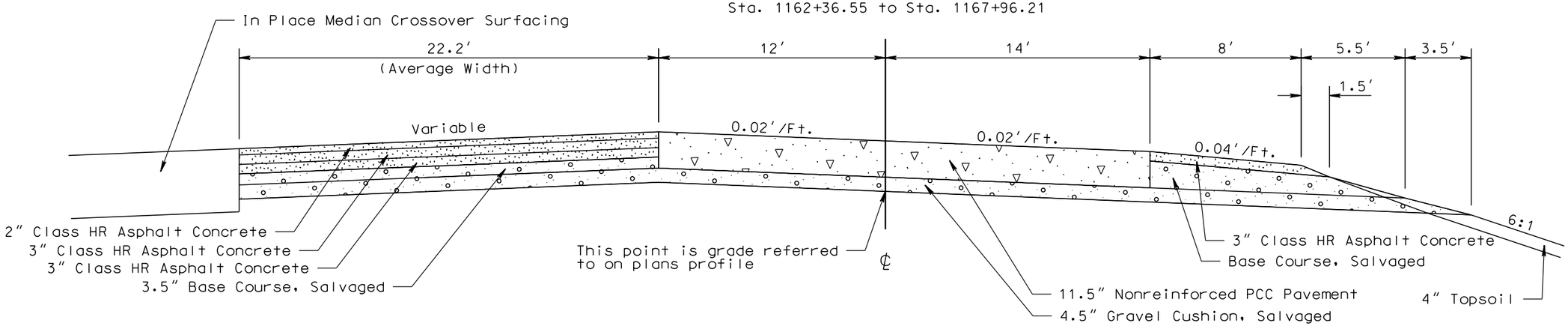

EASTBOUND LANES

Sta. 1224+66.38 to Sta. 1232+58.53

Superelevated Section

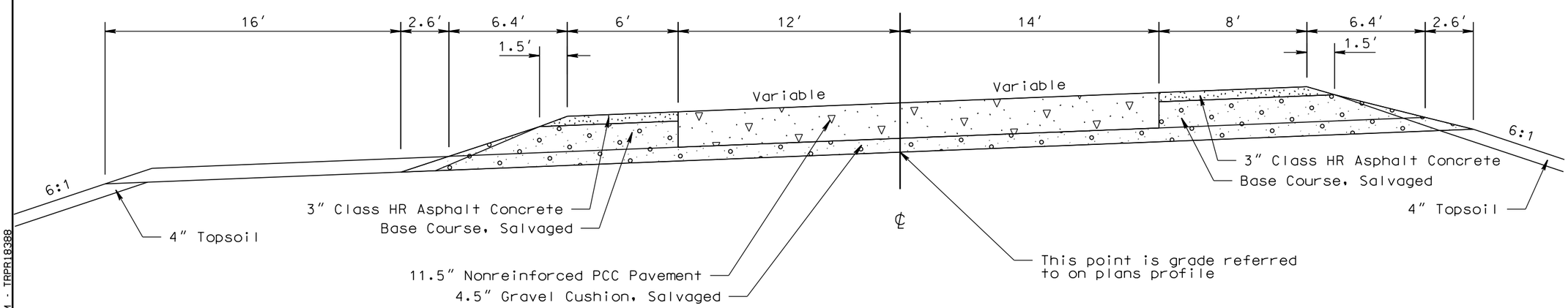

PLOT SCALE - 1:6
PLOT NAME - 11
FILE -...\MEAD5580\TYPICAL SECTION.DGN
PLOTTED FROM - TRPR18388

TYPICAL SURFACING SECTIONS

See PCC PAVEMENT JOINT LAYOUTS located elsewhere in these plans for additional details for surfacing in the ramp gore areas.

EASTBOUND LANES

Sta. 1031+70 to Sta. 1048+75
Sta. 1057+69.71 to Sta. 1074+48.92
Sta. 1091+26.34 to Sta. 1140+48.22
Sta. 1142+51.72 to Sta. 1162+36.55
Sta. 1167+96.21 to Sta. 1206+19.32
Sta. 1208+13.82 to Sta. 1217+11.52
Sta. 1232+58.53 to Sta. 1234+82.37
Sta. 1237+42.70 to Sta. 1246+28.61

Structures and Approach Slabs

Sta. 1140+48.22 to Sta. 1142+51.72
Sta. 1206+19.32 to Sta. 1208+13.82
Sta. 1234+82.37 to Sta. 1237+42.70

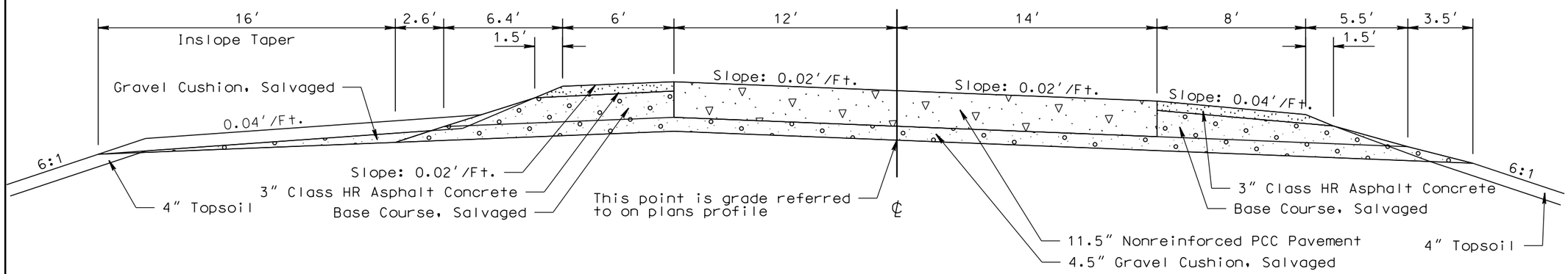

16′ to 0′ - Sta. 1252+17.57 to Sta. 1252+67.57

EASTBOUND LANES

Sta. 1246+28.61 to Sta. 1259+40.44

37′ to 18′ - 1246+28.61 to 1249+25
18′ - 1249+25 to 1257+05
18′ to 13.3′ - 1257+05 to 1259+40.44

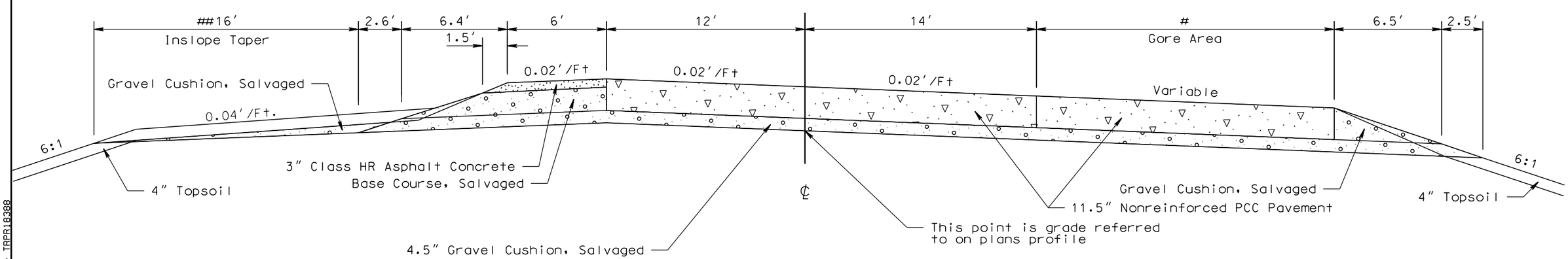

PLOT SCALE - 1:6
PLOT NAME - 12
FILE -...\MEAD5580\TYPICAL SECTION.DGN
PLOTTED FROM - TRPR18388

TYPICAL SURFACING SECTIONS

See PCC PAVEMENT JOINT LAYOUTS located elsewhere in these plans for additional details for surfacing in the ramp gore areas.

EASTBOUND LANES

Sta. 1259+40.44 to Sta. 1262+13.32

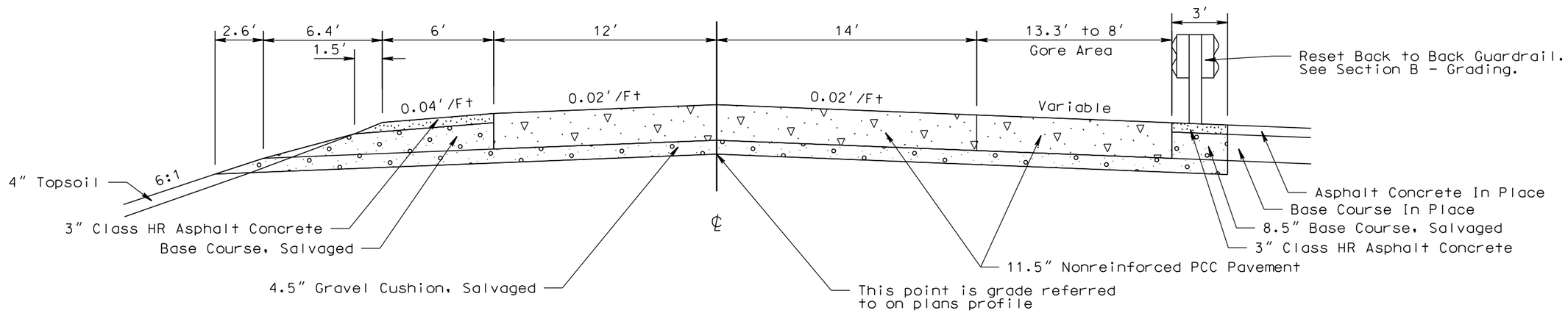

Crown Point Shifts from 12′ L to 0′ L - Sta. 1261+00 to Sta. 1262+51.15

PLOT SCALE - 1:6
PLOT NAME - 13
FILE - ...\MEAD5580\TYPICAL SECTION.DGN
PLOTTED FROM - TRPR19388

STATE OF SOUTH DAKOTA	PROJECT	SHEET	TOTAL SHEETS
	IM 0901(38)40	F27	F87

Plotting Date: 08/08/2016

TYPICAL SURFACING SECTIONS

Cold Milling Asphalt Concrete

Remove PCC Pavement (See Section B - Grading)

Unclassified Excavation - Granular Base Material and Asphalt Concrete to be salvaged and stockpiled (See Section B - Grading)

See PCC PAVEMENT JOINT LAYOUTS located elsewhere in these plans for additional details for surfacing in the ramp gore areas.

EASTBOUND LANES

Sta. 1262+13.32 to Sta. 1262+51.82 Bk.

In Place Section Showing Material to be Removed

Sta. 1262+13.32 - End Grading

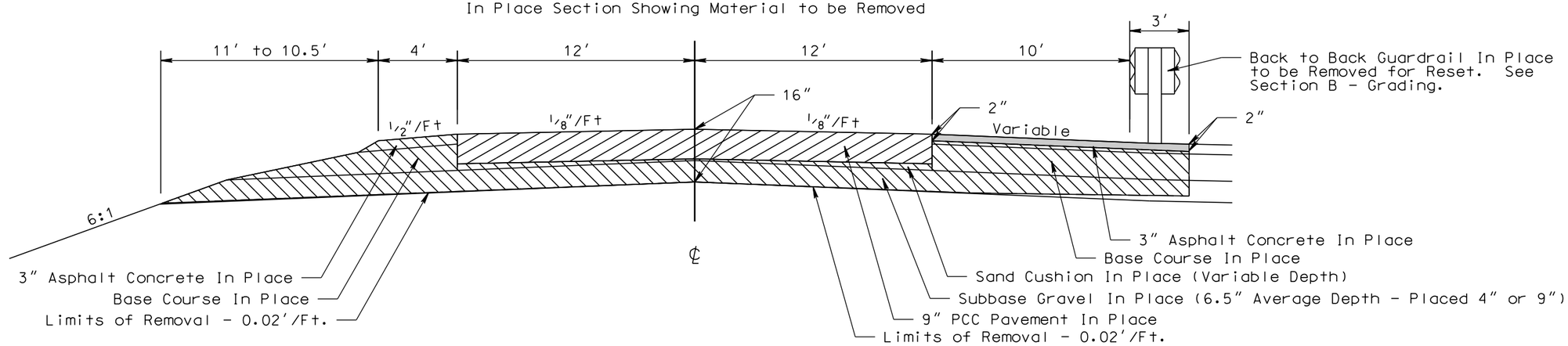

EASTBOUND LANES

Sta. 1262+13.32 to Sta. 1262+51.82 Bk.

Surfacing Section

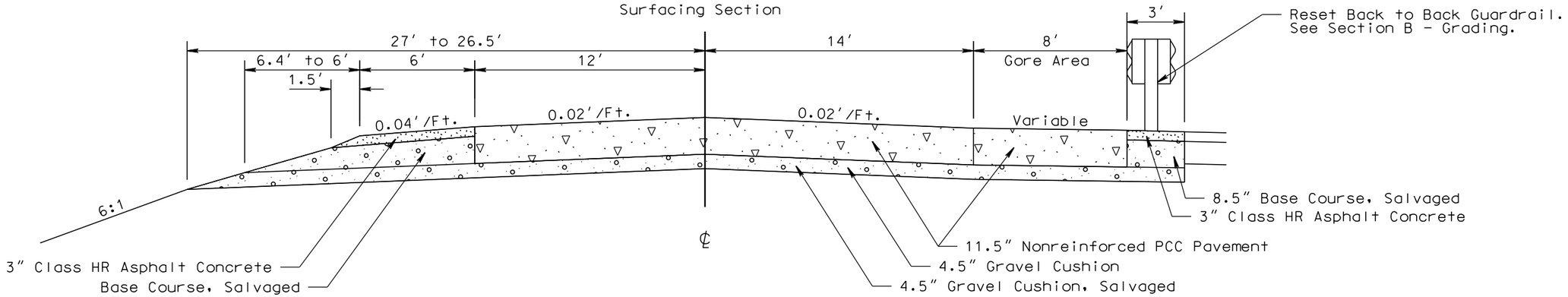

PLOT SCALE - 1:6

PLOTTED FROM - TRPR18388

PLOT NAME - 14

FILE - ...\MEAD5580\TYPICAL SECTION.DGN

STATE OF SOUTH DAKOTA	PROJECT	SHEET	TOTAL SHEETS
	IM 0901(38)40	F28	F87

Plotting Date: 08/08/2016

TYPICAL SURFACING SECTIONS

Cold Milling Asphalt Concrete

Remove PCC Pavement (See Section B - Grading)

Unclassified Excavation - Base Course and Asphalt Concrete to be salvaged and stockpiled (See Section B - Grading)

See PCC PAVEMENT JOINT LAYOUTS located elsewhere in these plans for additional details for surfacing adjacent to concrete barrier.

EASTBOUND LANES

Sta. 1262+51.82 Ah. to Sta. 1264+21.82 - Transition
Sta. 1264+21.82 to Sta. 1266+10.07

In Place Section Showing Material to be Removed

In Place Section and Surfacing Section Transitions from Sta. 1266+10.07 to Sta. 1267+59.50 Bk.

Transitions - Sta. 1262+51.82 to Sta. 1264+21.82
0" to 4.25"
16" to 14.7"
10.5' to 9.5'

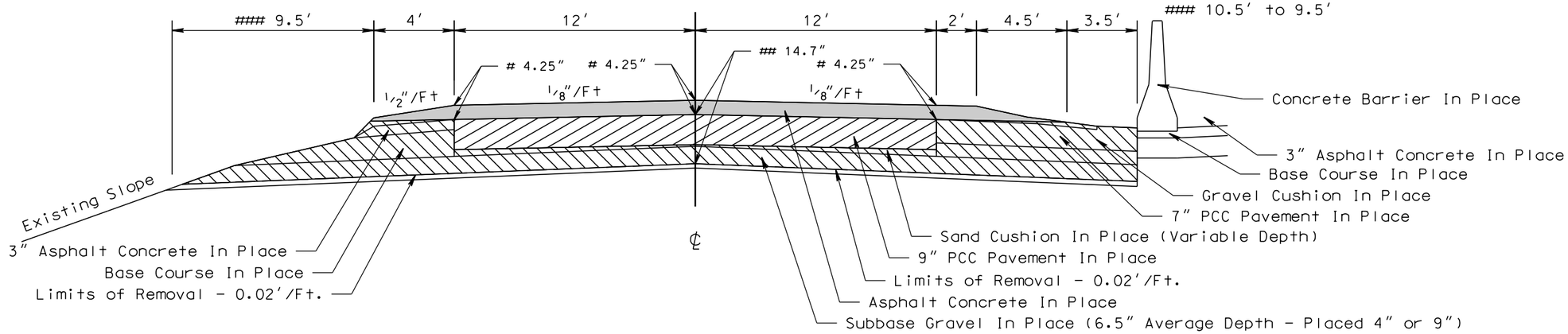

EASTBOUND LANES

Sta. 1262+51.82 Ah. to Sta. 1264+21.82 - Transition
Sta. 1264+21.82 to Sta. 1266+10.07

Surfacing Section

Transitions - Sta. 1262+51.82 to Sta. 1264+21.82
* Variable to 0.02'/Ft.
** 6' to 5.2'
*** 26.5' to 25.5'

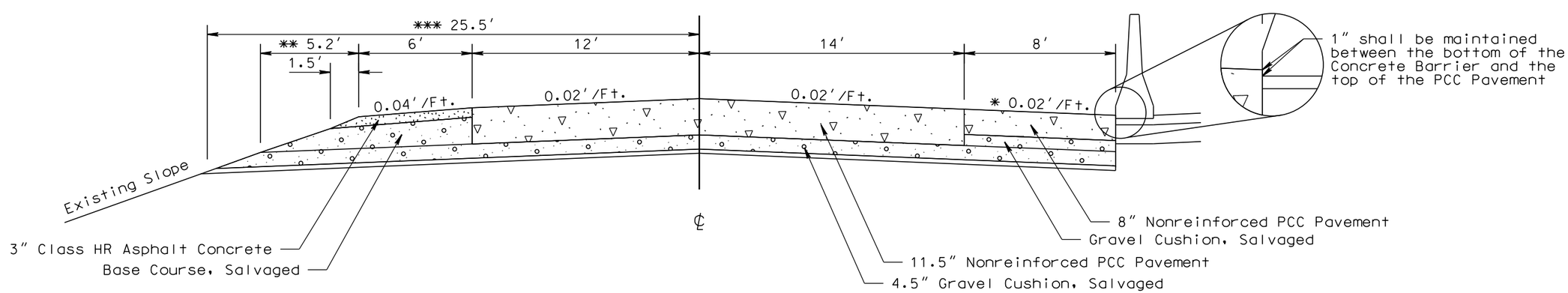

PLOT SCALE - 1:6

PLOTTED FROM - TRPR18388

PLOT NAME - 15

FILE -...\MEAD5580\TYPICAL SECTION.DGN

STATE OF SOUTH DAKOTA	PROJECT	SHEET	TOTAL SHEETS
	IM 0901(38)40	F29	F87

Plotting Date: 08/08/2016

TYPICAL SURFACING SECTIONS

Cold Milling Asphalt Concrete

Remove PCC Pavement (See Section B - Grading)

Unclassified Excavation - Base Course and Asphalt Concrete to be salvaged and stockpiled (See Section B - Grading)

Unclassified Excavation - Waste Material (See Section B - Grading)

In Place Section and Surfacing Section Transitions from Sta. 1266+10.07 to Sta. 1267+59.50 Bk.

EASTBOUND LANES

Sta. 1267+59.50 Bk.

In Place Section Showing Material to be Removed

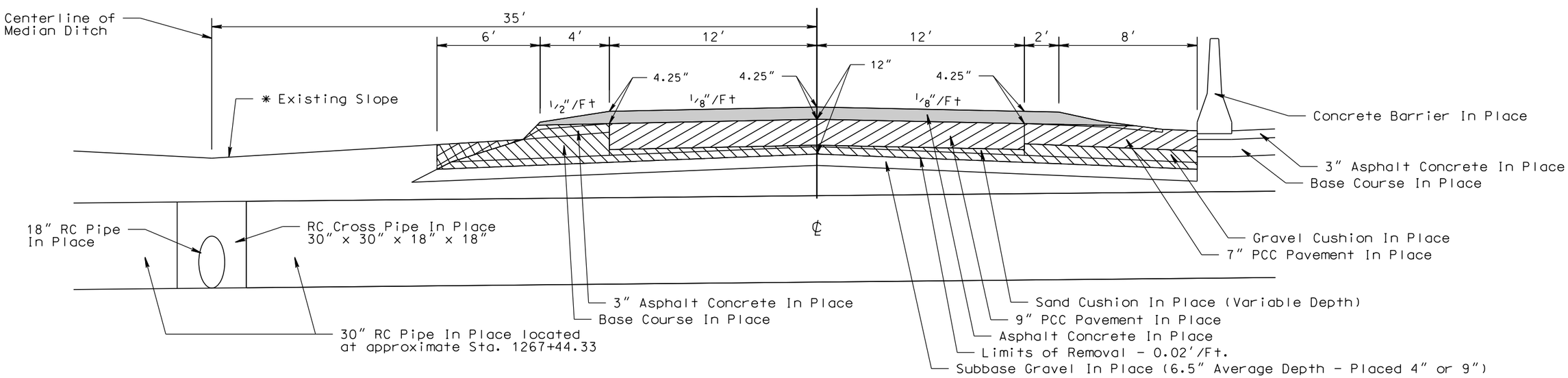

* Existing Slope varies from Sta. 1266+10.07 to Sta. 1267+59.50

EASTBOUND LANES

Sta. 1267+59.50 Bk.

Surfacing Section

Sta. 1266+10.07 to Sta. 1267+59.50 0.02′/Ft. to 0.05′/Ft.

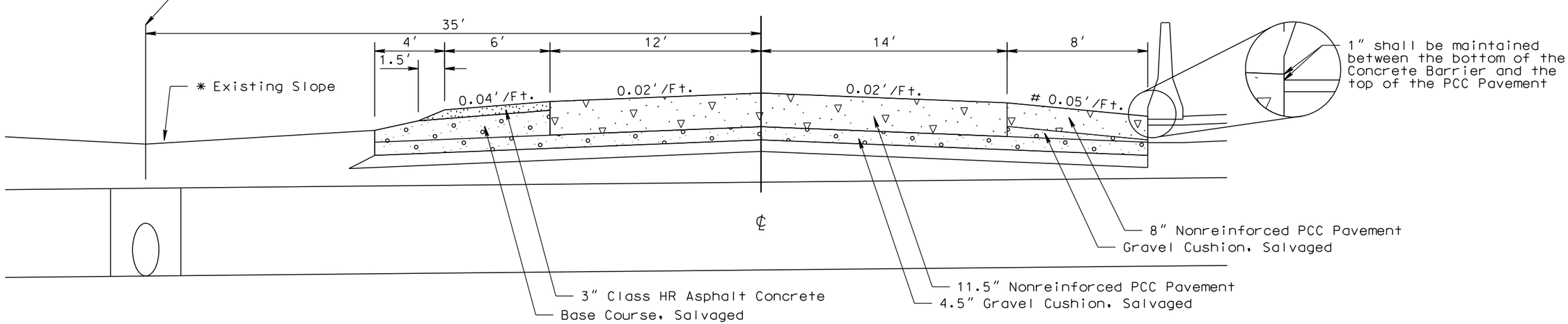

PLOT SCALE - 1:6

PLOT NAME - 16

FILE - ...\MEAD5580\TYPICAL SECTION.DGN

PLOTTED FROM - TRPR19388

STATE OF SOUTH DAKOTA	PROJECT	SHEET	TOTAL SHEETS
	IM 0901(38)40	F30	F87

Plotting Date: 08/08/2016

TYPICAL SURFACING SECTIONS

Cold Milling Asphalt Concrete

Remove PCC Pavement (See Section B - Grading)

Unclassified Excavation - Base Course and Asphalt Concrete to be salvaged and stockpiled (See Section B - Grading)

See SURFACING DETAILS FOR MEDIAN CROSSOVERS located elsewhere in these plans for additional details for removal and surfacing.

In Place Section and Surfacing Section Transitions from Sta. 1267+59.50 Ah. to Sta. 1269+64.33

EASTBOUND LANES

Sta. 1267+59.50 Ah.

In Place Section Showing Material to be Removed

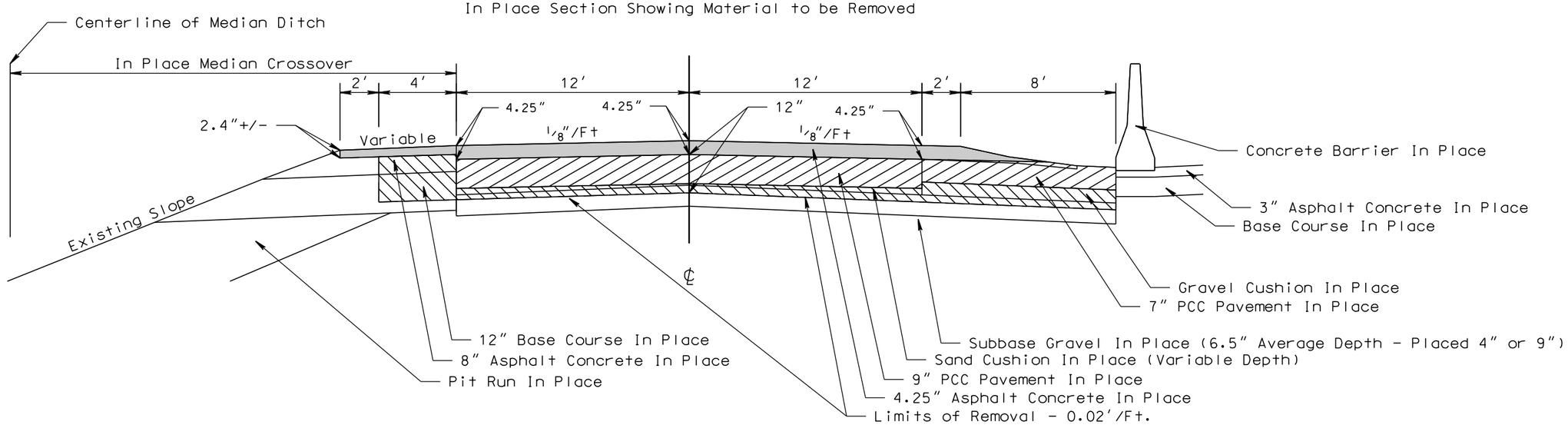

EASTBOUND LANES

Sta. 1267+59.50 Ah.

Surfacing Section

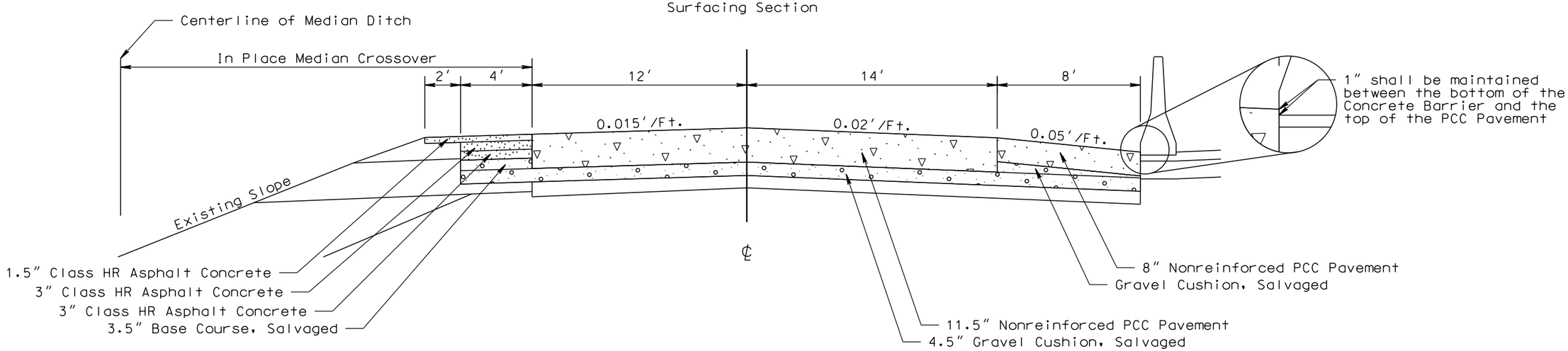

PLOT SCALE - 1:6

PLOTTED FROM - TRPR19388

PLOT NAME - 17

FILE - ...\MEAD5580\TYPICAL SECTION.DGN

TYPICAL SURFACING SECTIONS

Cold Milling Asphalt Concrete

Remove PCC Pavement (See Section B - Grading)

Unclassified Excavation - Base Course and Asphalt Concrete to be salvaged and stockpiled (See Section B - Grading)

See SURFACING DETAILS FOR MEDIAN CROSSOVERS located elsewhere in these plans for additional details for removal and surfacing.

EASTBOUND LANES

Sta. 1269+64.33 to Sta. 1270+39.33 Bk.

In Place Section Showing Material to be Removed

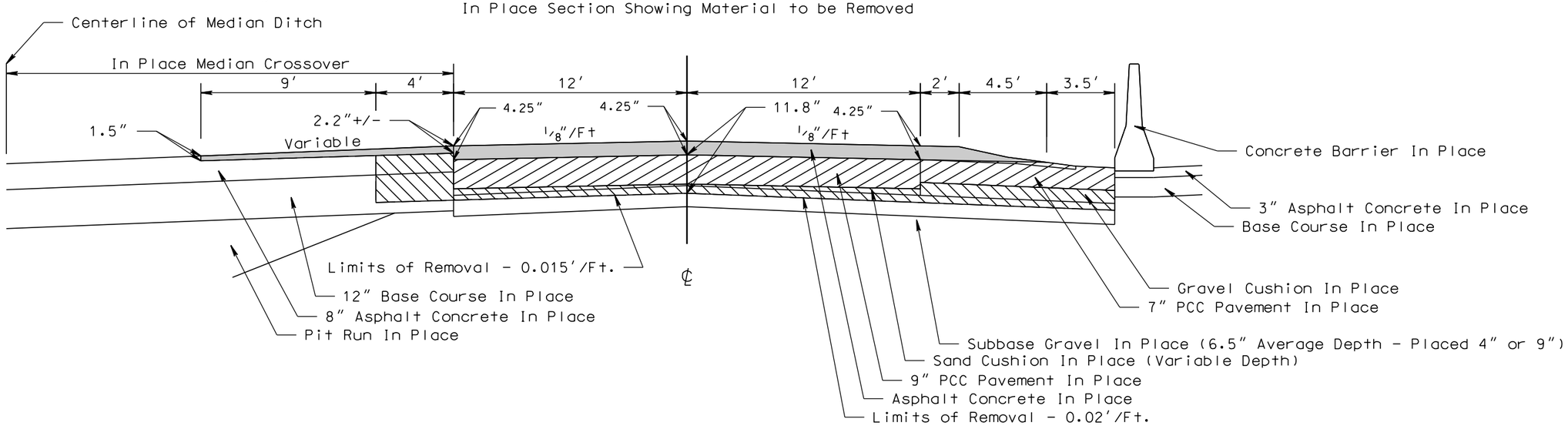

EASTBOUND LANES

Sta. 1269+64.33 to Sta. 1270+39.33 Bk.

Surfacing Section

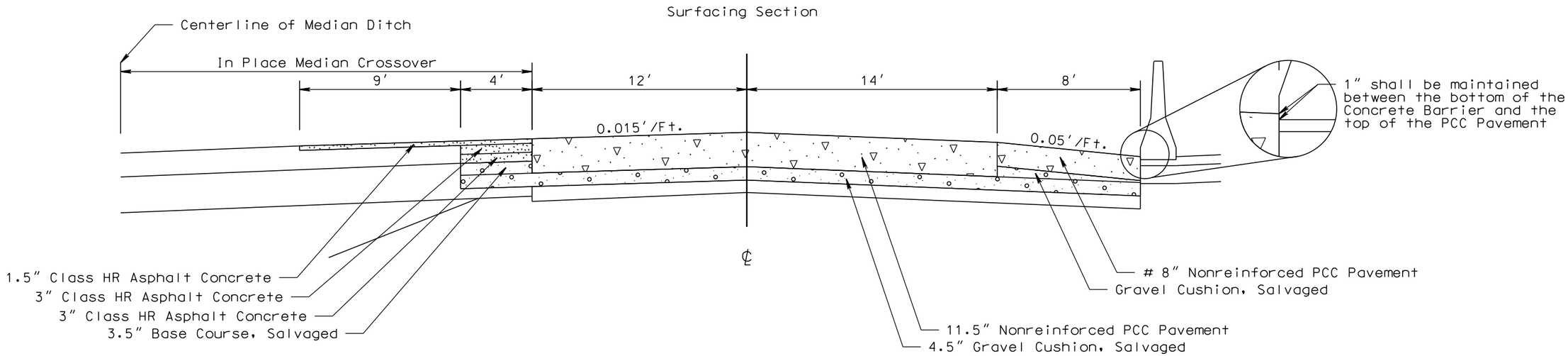

Sta. 1270+07.63 to Sta. 1270+39.33 8″ Class HR Asphalt Concrete for transitioning the new shoulder slope to the existing shoulder slope

PLOT SCALE - 1:6

PLOTTED FROM - TRPR19388

PLOT NAME - 18

FILE - ...\MEAD5580\TYPICAL SECTION.DGN

TYPICAL SURFACING SECTIONS

Cold Milling Asphalt Concrete

See SURFACING DETAILS FOR MEDIAN CROSSOVERS located elsewhere in these plans for additional details for removal and surfacing.

In Place Section and Surfacing Section Transitions from Sta. 1270+39.33 Ah. to Sta. 1271+39.33

EASTBOUND LANES

Sta. Sta. 1270+39.33 Ah.

In Place Section Showing Material to be Removed

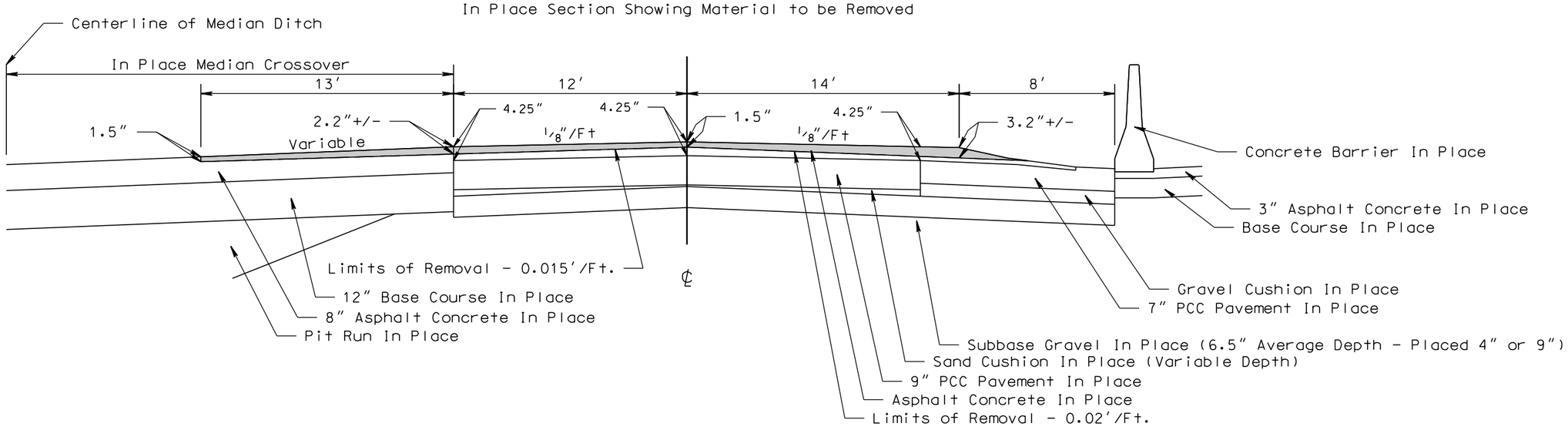

EASTBOUND LANES

Sta. 1270+39.33 Ah.

Surfacing Section

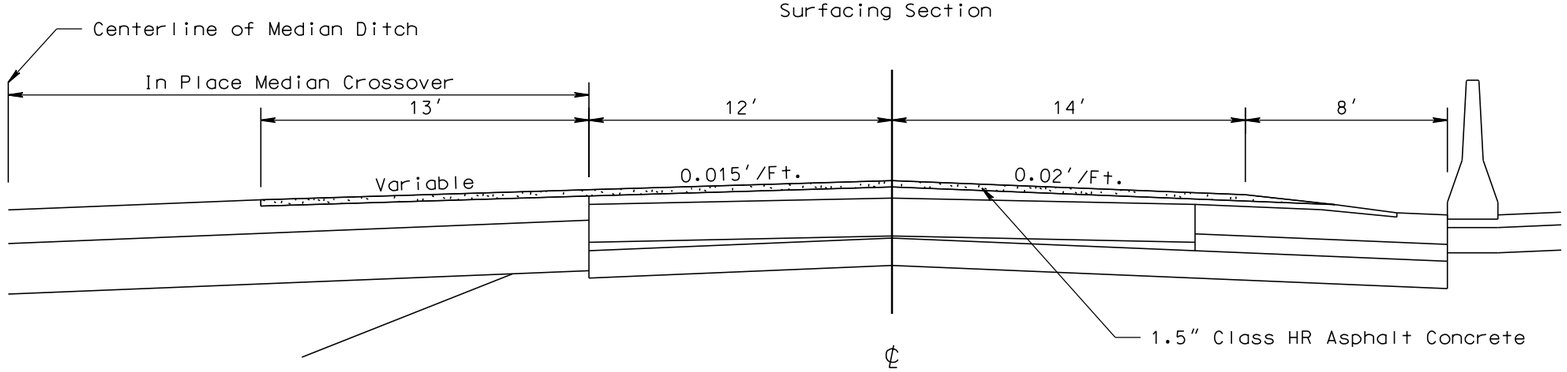

PLOT SCALE - 1:6
PLOT NAME - 19
FILE - ...\MEAD5580\TYPICAL SECTION.DGN
PLOTTED FROM - TRPR19388

STATE OF SOUTH DAKOTA	PROJECT	SHEET	TOTAL SHEETS
	IM 0901(38)40	F33	F87

Plotting Date: 08/08/2016

TYPICAL SURFACING SECTIONS

Cold Milling Asphalt Concrete

See SURFACING DETAILS FOR MEDIAN CROSSOVERS located elsewhere in these plans for additional details for removal and surfacing.

EASTBOUND LANES

Sta. Sta. 1271+39.33

In Place Section Showing Material to be Removed

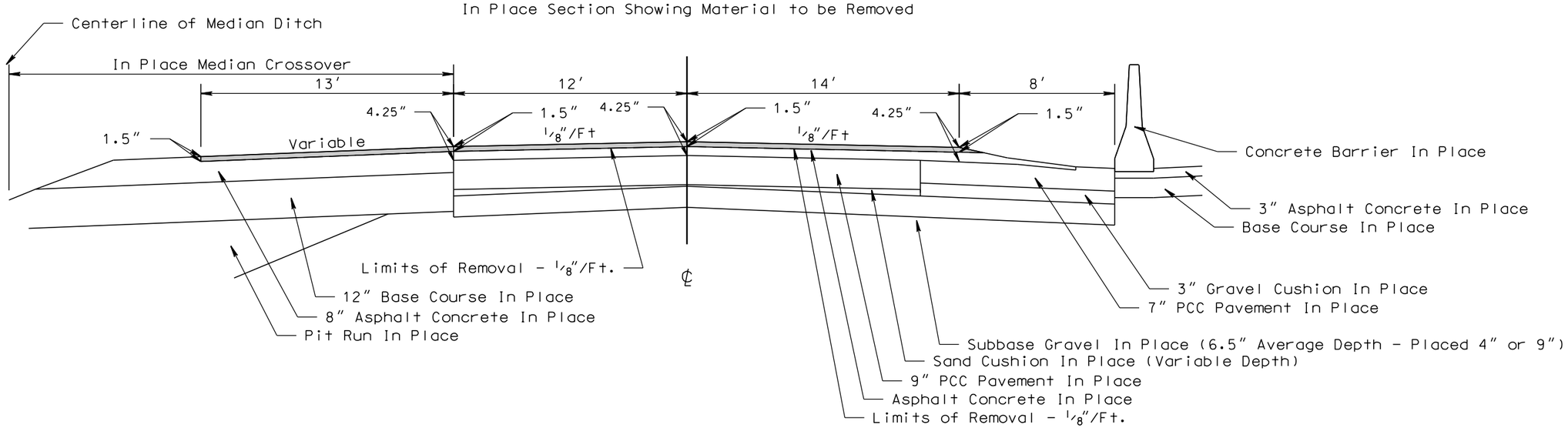

EASTBOUND LANES

Sta. 1271+39.33

Surfacing Section

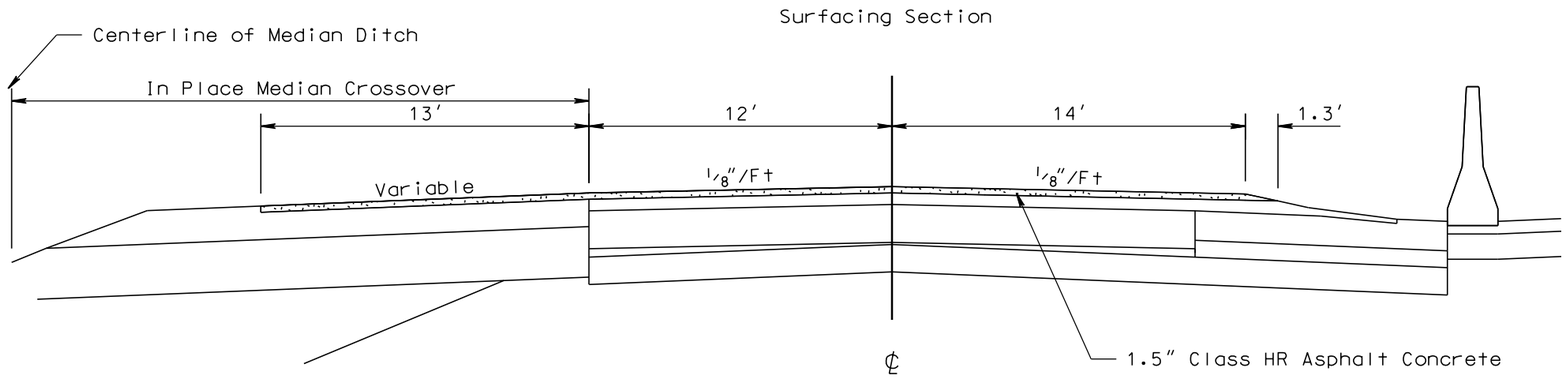

PLOT SCALE - 1:6

PLOT NAME - 20

FILE - ...\MEAD5580\TYPICAL SECTION.DGN

PLOTTED FROM - TRPR19388

TYPICAL SURFACING SECTIONS

See SURFACING DETAILS FOR MEDIAN CROSSOVERS located elsewhere in these plans for additional details for surfacing.

WESTBOUND LANES

Sta. 10+00 to Sta. 12+79.80

Superelevated Surfacing Section

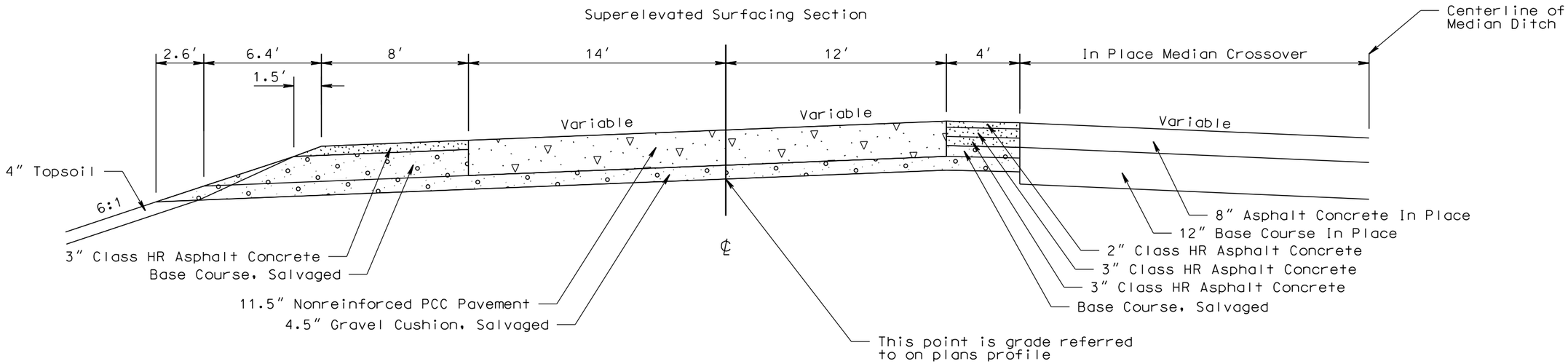

WESTBOUND LANES

Sta. 12+79.80 to Sta. 17+98.41

Superelevated Surfacing Section

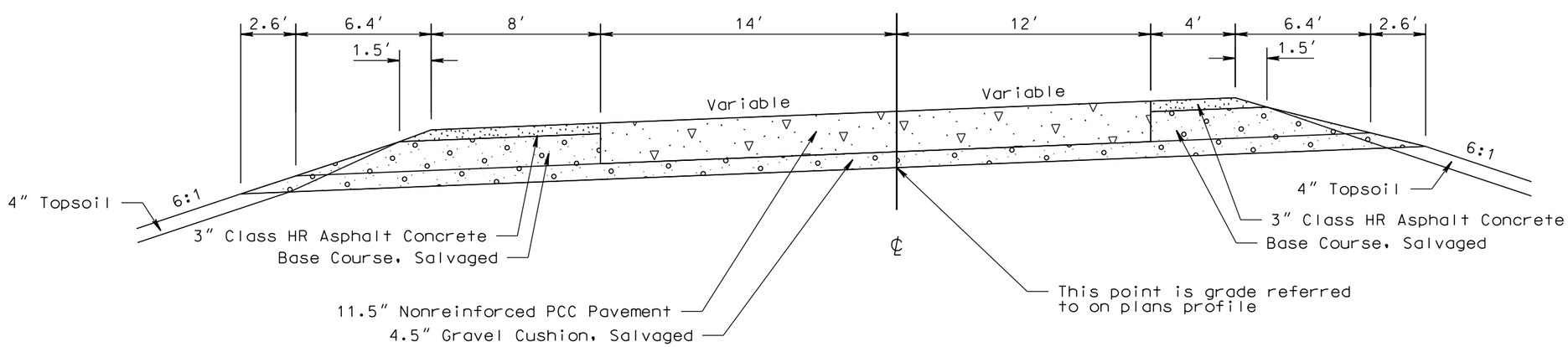

PLOT SCALE - 1:6

PLOTTED FROM - TRPR19388

PLOT NAME - 21

FILE - ...\MEAD5580\TYPICAL SECTION.DGN

TYPICAL SURFACING SECTIONS

See PCC PAVEMENT JOINT LAYOUTS located elsewhere in these plans for additional details for surfacing in the ramp gore areas.

35′ to 30.1′ - Sta. 17+98.41 to Sta. 18+95.65

WESTBOUND LANES

Sta. 17+98.41 to Sta. 18+95.65

Superelevated Surfacing Section

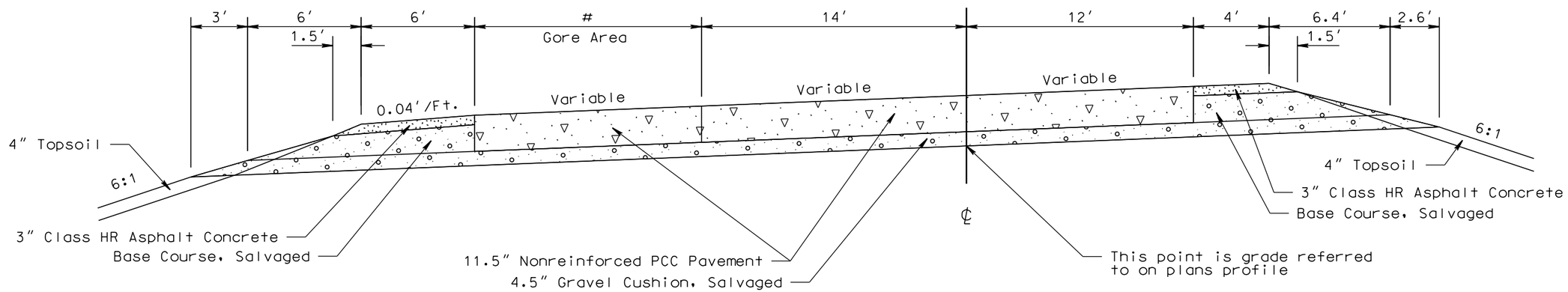

30.1 to 2′ - Sta. 18+95.65 to Sta. 24+57.79
2′ - Sta. 24+57.79 to Sta. 24+97.79

WESTBOUND LANES

Sta. 18+95.65 to Sta. 24+97.79

Surfacing Section

4′ to 6″ - Sta. 22+00 to Sta. 22+50

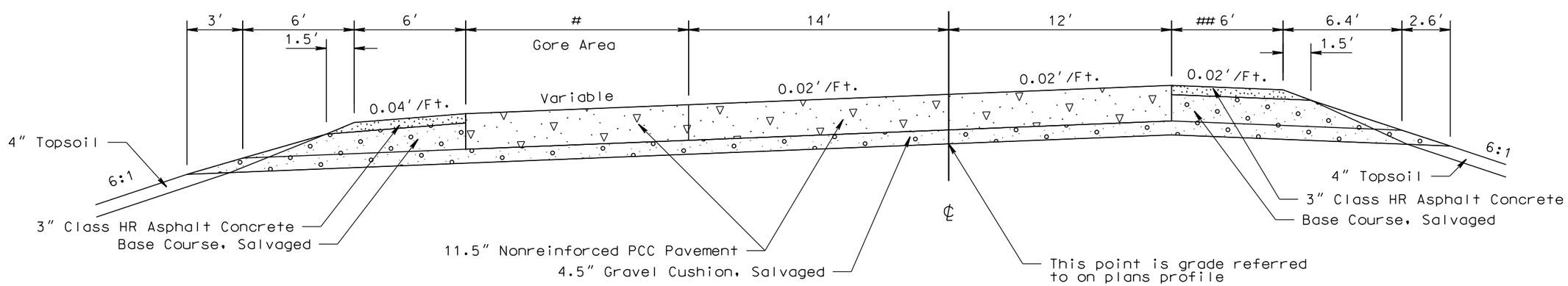

PLOT SCALE - 1:6
PLOTTED FROM - TRPR18388
PLOT NAME - 22
FILE -...\MEAD5580\TYPICAL SECTION.DGN

TYPICAL SURFACING SECTIONS

WESTBOUND LANES

Sta. 24+97.79 to Sta. 48+86.80
Sta. 65+63.17 to Sta. 82+47.23
Sta. 91+41.96 to Sta. 140+31.80
Sta. 142+35.30 to Sta. 162+20.15
Sta. 167+79.80 to Sta. 206+02.93
Sta. 207+97.43 to Sta. 208+65.35
Sta. 225+41.72 to Sta. 227+14.44
Sta. 232+34.19 to Sta. 235+26.13
Sta. 237+86.46 to Sta. 247+59.82

Surfacing Section

See SURFACING DETAILS FOR MEDIAN CROSSOVERS located elsewhere in these plans for additional details for surfacing.

Structures and Approach Slabs

Sta. 140+31.80 to Sta. 142+35.30
Sta. 206+02.93 to Sta. 207+97.43
Sta. 235+26.13 to Sta. 237+86.46

0' to 16' - 24+50 to 25+00

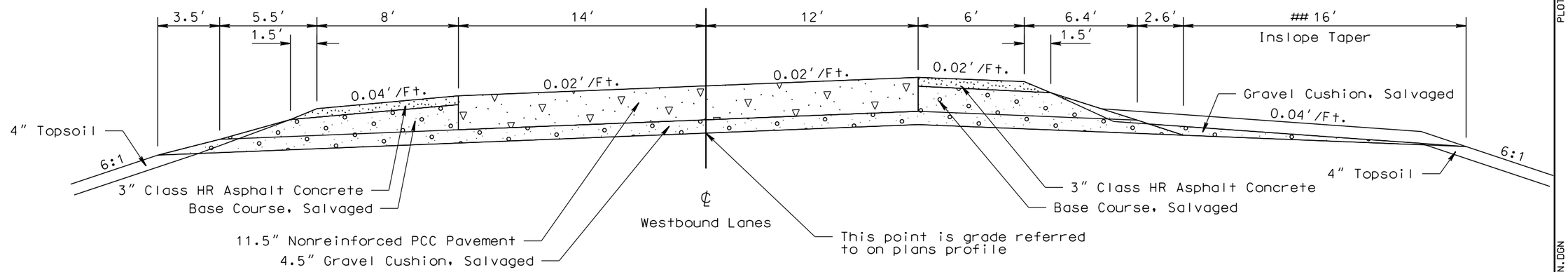

WESTBOUND LANES

Sta. 162+20.15 to Sta. 167+79.80

Surfacing Section

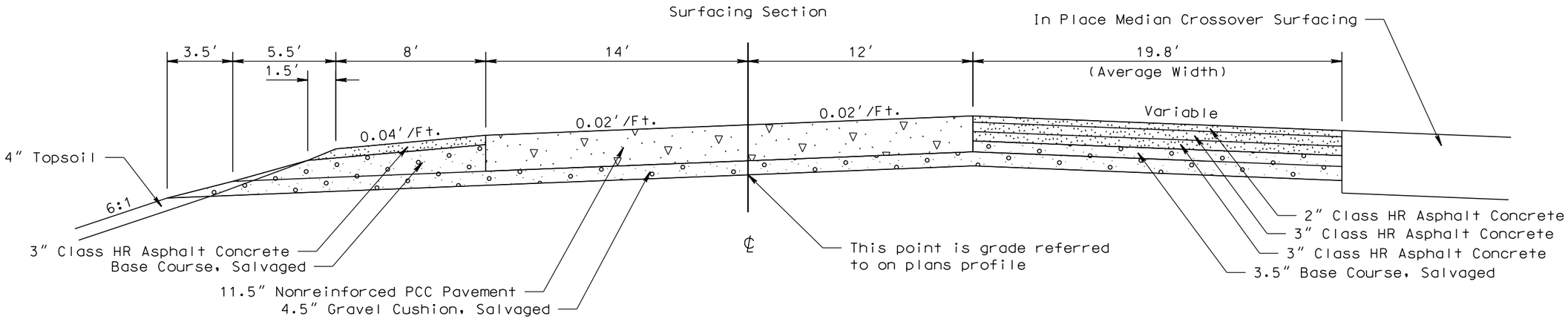

PLOT SCALE - 1:6
PLOT NAME - 23
FILE -...\MEAD5580\TYPICAL SECTION.DGN
PLOTTED FROM - TRPR18388

TYPICAL SURFACING SECTIONS

2′ - Sta. 48+86.80 to Sta. 49+86.80
2′ to 12′ - Sta. 49+86.80 to Sta. 54+86.80
12′ - Sta. 54+86.80 to Sta. 62+66.80

12′ - Sta. 85+11.96 to Sta. 89+01.96
12′ to 2′ - Sta. 89+01.96 to Sta. 91+01.96
2′ - sta. 91+01.96 to Sta. 91+41.96

2′ - Sta. 208+65.35 to Sta. 209+65.35
2′ to 12′ - Sta. 209+65.35 to Sta. 214+65.35
12′ - Sta. 214+65.35 to Sta. 222+45.35

35′ to 2′ - Sta. 247+59.82 to Sta. 254+10.62
2′ - Sta. 254+10.62 to Sta. 254+50.62

See PCC PAVEMENT JOINT LAYOUTS located elsewhere in these plans for additional details for surfacing in the ramp gore areas.

WESTBOUND LANES

Sta. 48+86.80 to Sta. 62+66.80
Sta. 85+11.96 to Sta. 91+41.96
Sta. 208+65.35 to Sta. 222+45.35
Sta. 247+59.82 to Sta. 254+50.62

Surfacing Section

16′ to 0′ - Sta. 251+85.34 to Sta. 252+35.34

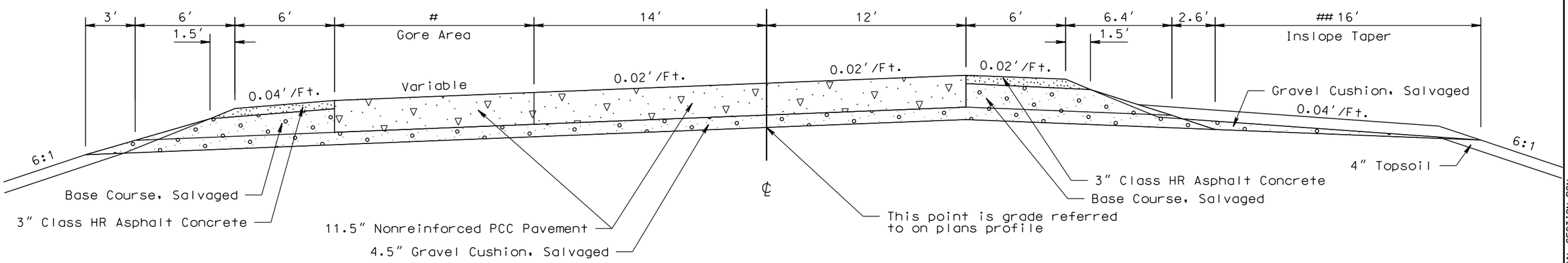

WESTBOUND LANES

Sta. 62+66.80 to Sta. 65+63.17
Sta. 82+47.23 to Sta. 85+11.96
Sta. 222+45.35 to Sta. 225+41.72

Surfacing Section

18′ to 37′ - Sta. 62+66.80 to Sta. 65+63.17
41′ to 18′ - Sta. 82+47.23 to Sta. 85+11.96
18′ to 37′ - Sta. 222+45.35 to Sta. 225+41.72

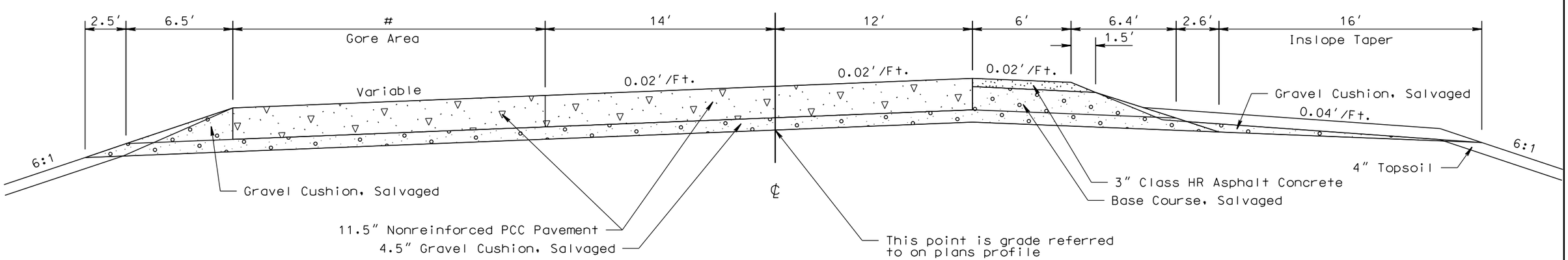

PLOT SCALE - 1:6
PLOT NAME - 24
FILE - ...\MEAD5580\TYPICAL SECTION.DGN
PLOTTED FROM - TRPR19388

TYPICAL SURFACING SECTIONS

STATE OF SOUTH DAKOTA	PROJECT	SHEET	TOTAL SHEETS
	IM 0901(38)40	F38	F87

Plotting Date: 08/08/2016

WESTBOUND LANES

Sta. 227+14.44 to Sta. 232+34.19

Superelevated Surfacing Section

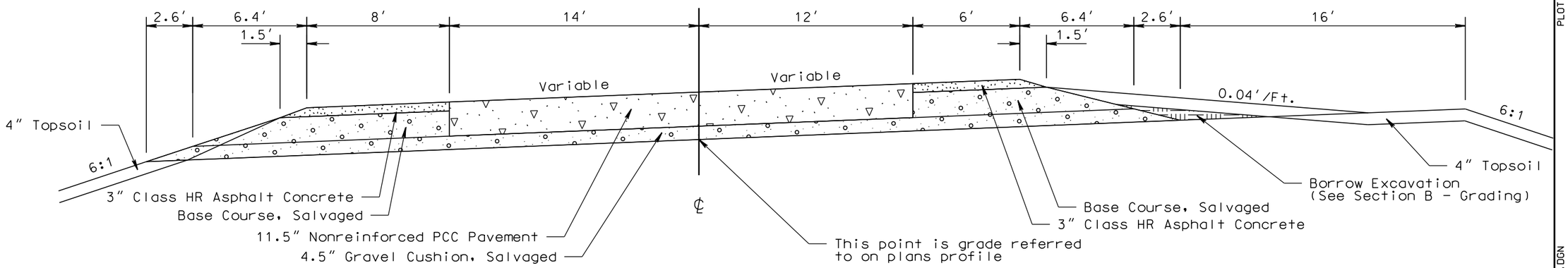

WESTBOUND LANES

Sta. 254+50.62 to Sta. 261+00

Surfacing Section

Crown Point Shifts from 12′ R to 0′ R - Sta. 260+00 to Sta. 261+00

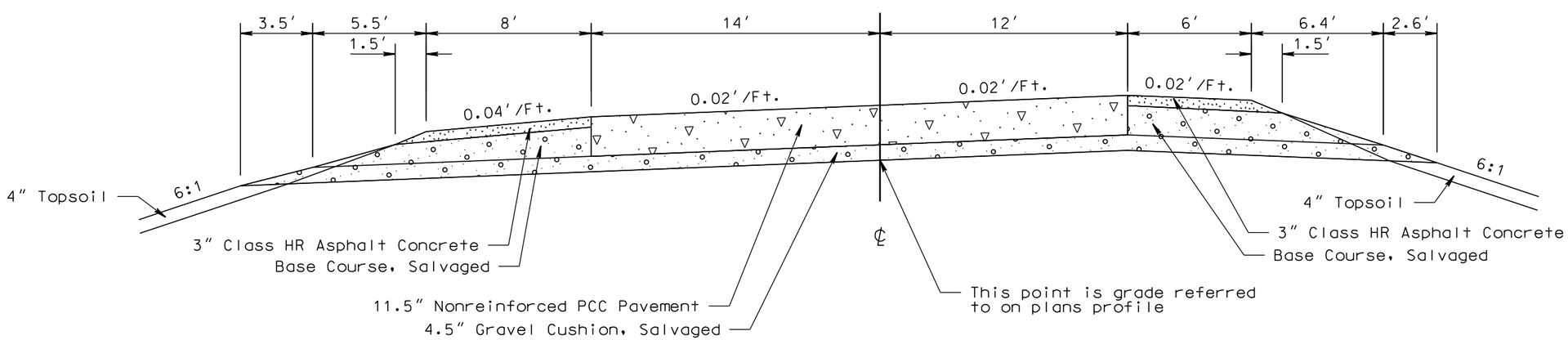

PLOT SCALE - 1:6

PLOT NAME - 25

FILE -...\MEAD5580\TYPICAL SECTION.DGN

PLOTTED FROM - TRPR18388

TYPICAL SURFACING SECTIONS

STATE OF SOUTH DAKOTA	PROJECT	SHEET	TOTAL SHEETS
	IM 0901(38)40	F39	F87

Plotting Date: 08/08/2016

In Place Section and Surfacing Section Transitions
from Sta. 265+77.67 to Sta. 267+27.17 Bk.

WESTBOUND LANES

Sta. 261+00 to Sta. 265+77.67

Surfacing Section

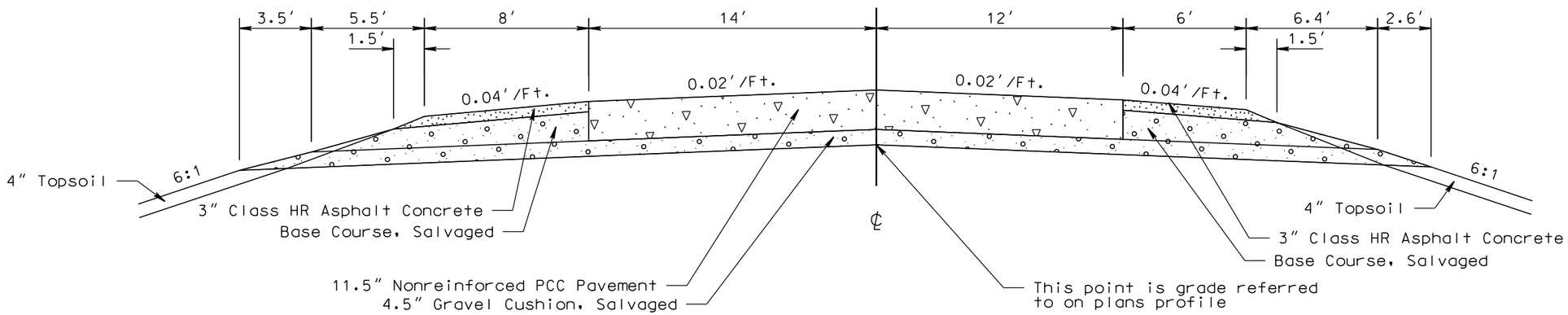

PLOT SCALE - 1:6

PLOTTED FROM - TRPR18388

PLOT NAME - 26

FILE - ...\MEAD5580\TYPICAL SECTION.DGN

STATE OF SOUTH DAKOTA	PROJECT	SHEET	TOTAL SHEETS
	IM 0901(38)40	F40	F87

Plotting Date: 08/08/2016

TYPICAL SURFACING SECTIONS

Cold Milling Asphalt Concrete

Remove PCC Pavement (See Section B - Grading)

Unclassified Excavation - Base Course and Asphalt Concrete to be salvaged and stockpiled (See Section B - Grading)

Unclassified Excavation - Waste Material (See Section B - Grading)

WESTBOUND LANES

Sta. 267+27.67 Bk.

In Place Section Showing Material to be Removed

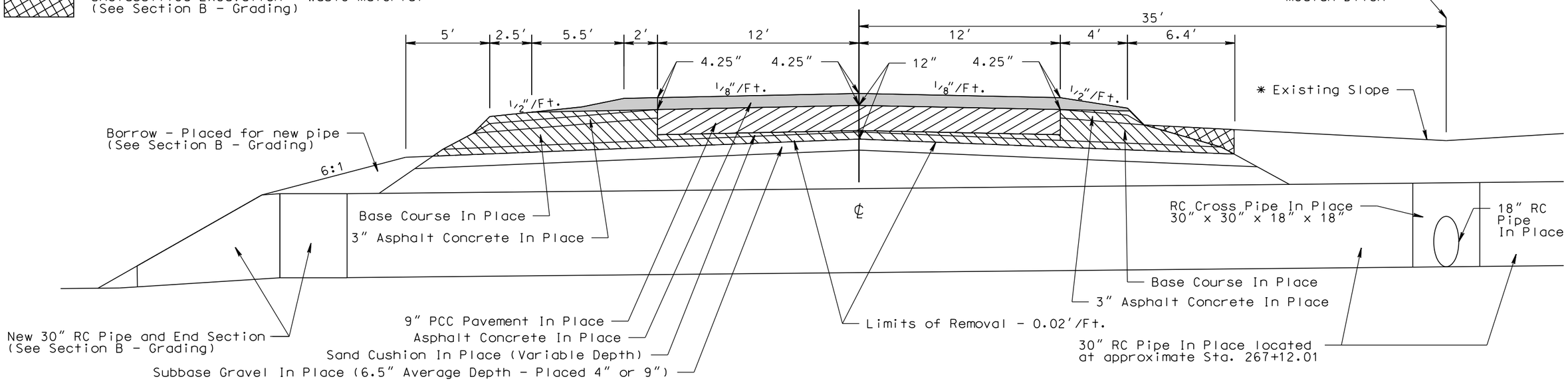

WESTBOUND LANES

Sta. 267+27.67 Bk.

Surfacing Section

* Existing Slope varies from Sta. 265+77.67 to Sta. 267+27.17

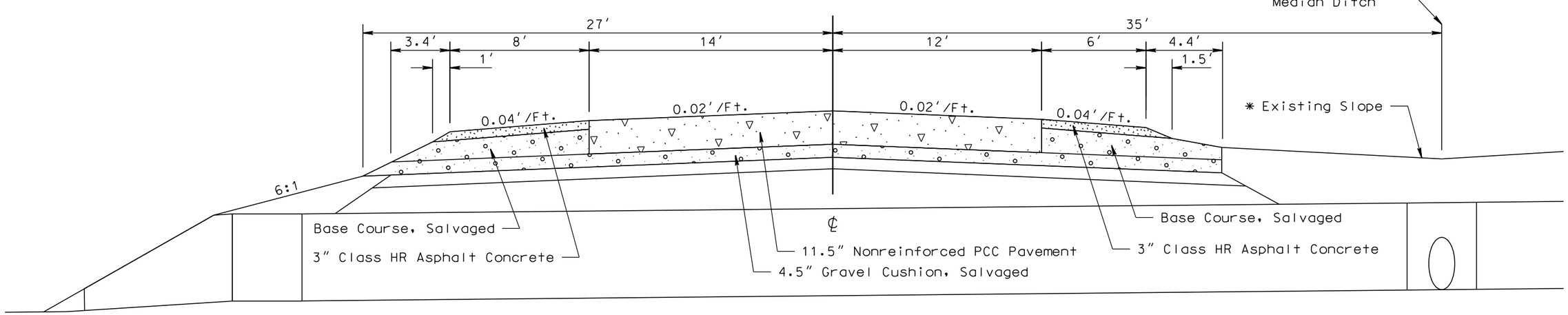

PLOT SCALE - 1:6

PLOT NAME - 27

FILE - ...\MEAD5580\TYPICAL SECTION.DGN

PLOTTED FROM - TRPR18388

STATE OF SOUTH DAKOTA	PROJECT	SHEET	TOTAL SHEETS
	IM 0901(38)40	F41	F87

Plotting Date: 08/08/2016

TYPICAL SURFACING SECTIONS

Cold Milling Asphalt Concrete

Remove PCC Pavement (See Section B - Grading)

Unclassified Excavation - Base Course and Asphalt Concrete to be salvaged and stockpiled (See Section B - Grading)

See SURFACING DETAILS FOR MEDIAN CROSSOVERS located elsewhere in these plans for additional details for removal and surfacing.

In Place Section and Surfacing Section Transitions from Sta. 267+27.6 Ah. to Sta. 269+32.01

WESTBOUND LANES

Sta. 267+27.67 Ah.

In Place Section Showing Material to be Removed

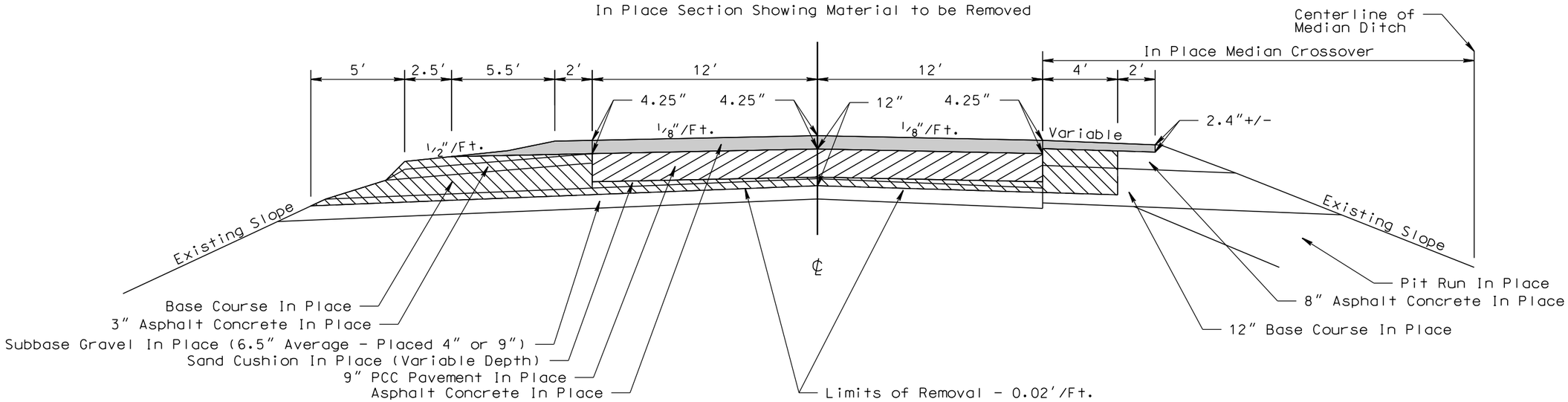

WESTBOUND LANES

Sta. 267+27.67 Ah.

Surfacing Section

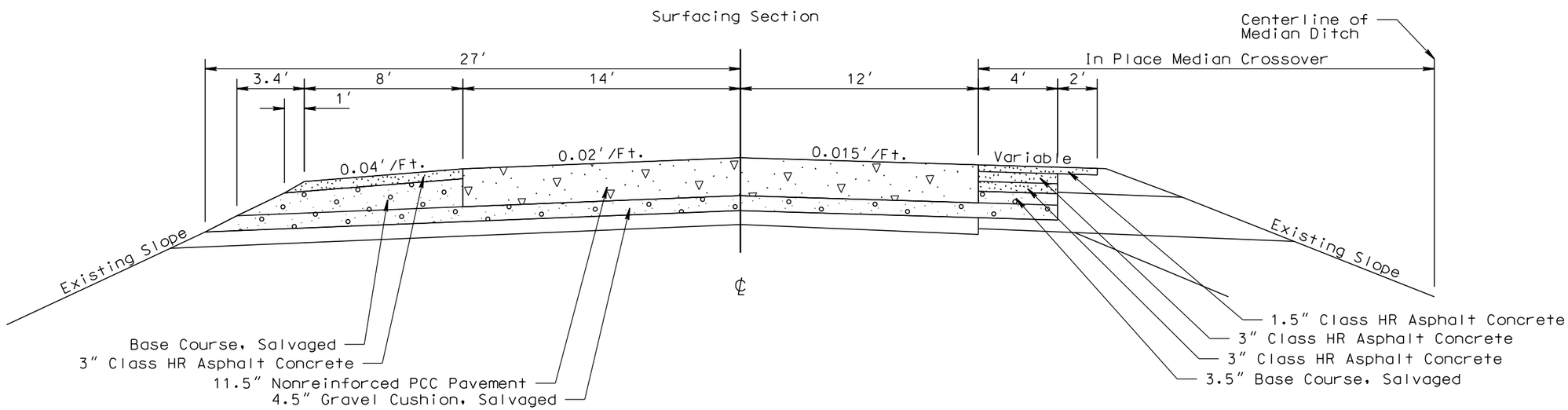

PLOT SCALE - 1:6

PLOT NAME - 28

FILE - ...\MEAD5580\TYPICAL SECTION.DGN

PLOTTED FROM - TRPR18388

STATE OF SOUTH DAKOTA	PROJECT	SHEET	TOTAL SHEETS
	IM 0901(38)40	F42	F87

Plotting Date: 08/08/2016

TYPICAL SURFACING SECTIONS

Cold Milling Asphalt Concrete

Remove PCC Pavement (See Section B - Grading)

Unclassified Excavation - Base Course and Asphalt Concrete to be salvaged and stockpiled (See Section B - Grading)

See SURFACING DETAILS FOR MEDIAN CROSSOVERS located elsewhere in these plans for additional details for removal and surfacing.

WESTBOUND LANES

Sta. 269+32.01 to Sta. 270+07.01 Bk.

In Place Section Showing Material to be Removed

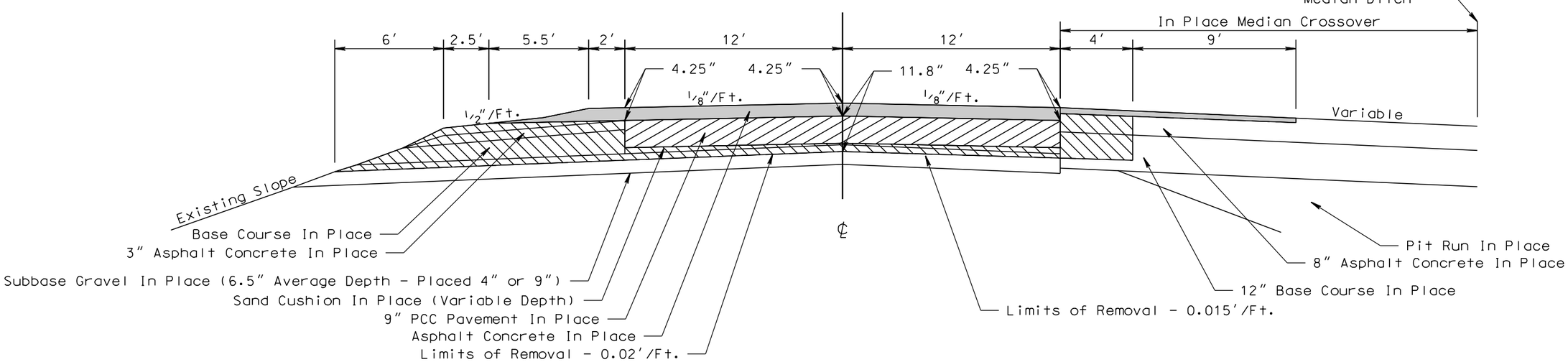

WESTBOUND LANES

Sta. 269+32.01 to Sta. 270+07.01 Bk.

Surfacing Section

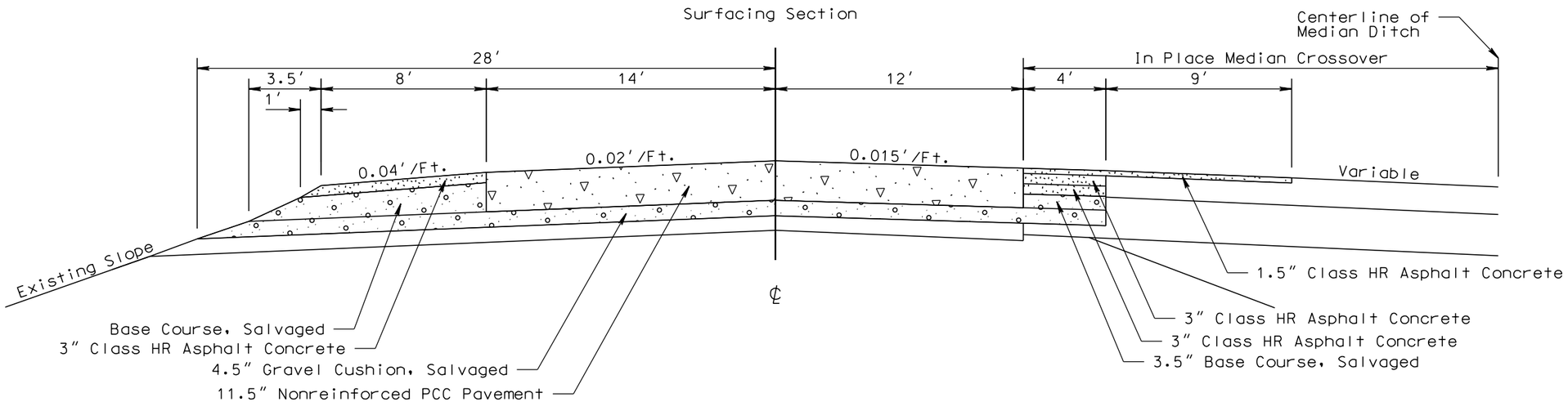

PLOT SCALE - 1:6

PLOTTED FROM - TRPR19388

PLOT NAME - 29

FILE - ...\MEAD5580\TYPICAL SECTION.DGN

STATE OF SOUTH DAKOTA	PROJECT	SHEET	TOTAL SHEETS
	IM 0901(38)40	F43	F87

Plotting Date: 08/08/2016

TYPICAL SURFACING SECTIONS

Cold Milling Asphalt Concrete

See SURFACING DETAILS FOR MEDIAN CROSSOVERS located elsewhere in these plans for additional details for removal and surfacing.

In Place Section and Surfacing Section Transitions from Sta. 270+07.01 Ah. to Sta. 271+07.01

WESTBOUND LANES

Sta. 270+07.01 Ah.

In Place Section Showing Material to be Removed

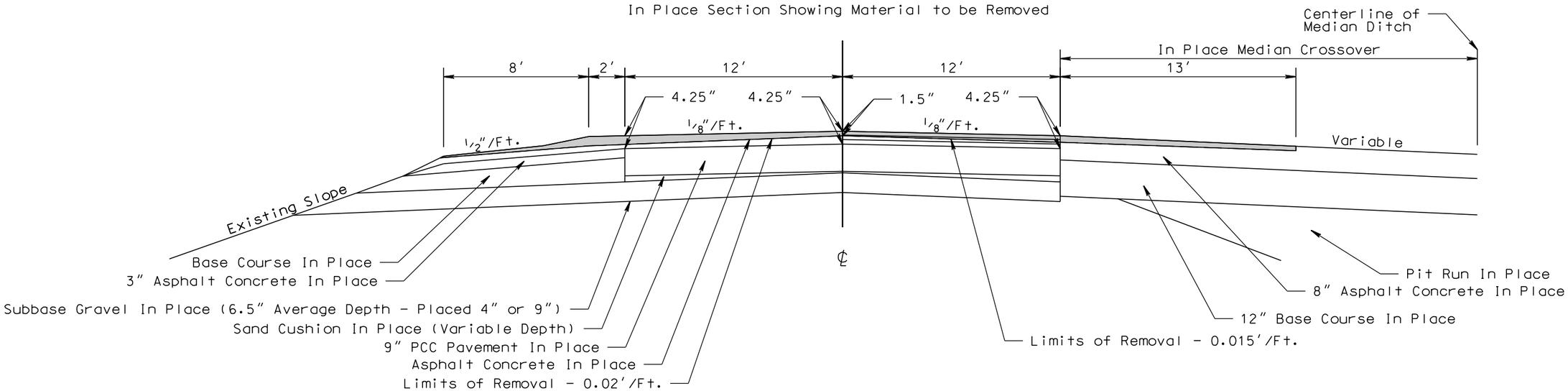

WESTBOUND LANES

Sta. 270+07.01 Ah.

Surfacing Section

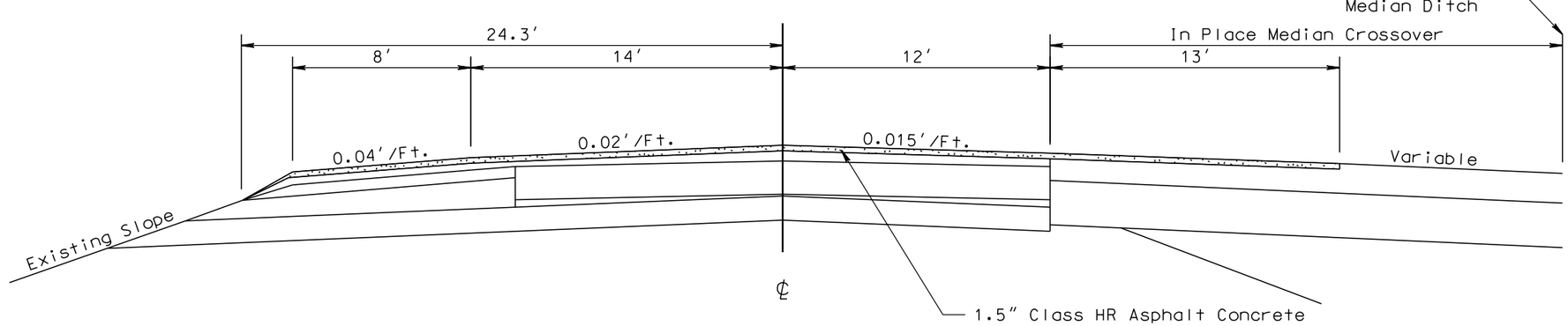

PLOT SCALE - 1:6

PLOT NAME - 30

FILE - ...\MEAD5580\TYPICAL SECTION.DGN

PLOTTED FROM - TRPR19388

TYPICAL SURFACING SECTIONS

Cold Milling Asphalt Concrete

See SURFACING DETAILS FOR MEDIAN CROSSOVERS located elsewhere in these plans for additional details for removal and surfacing.

WESTBOUND LANES

Sta. 271+07.01

In Place Section Showing Material to be Removed

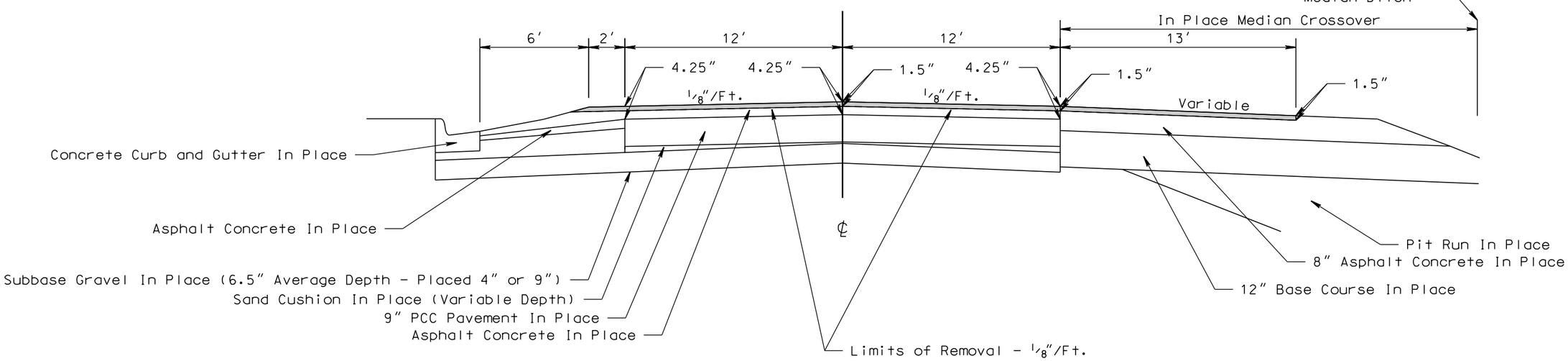

WESTBOUND LANES

Sta. 271+07.01

Surfacing Section

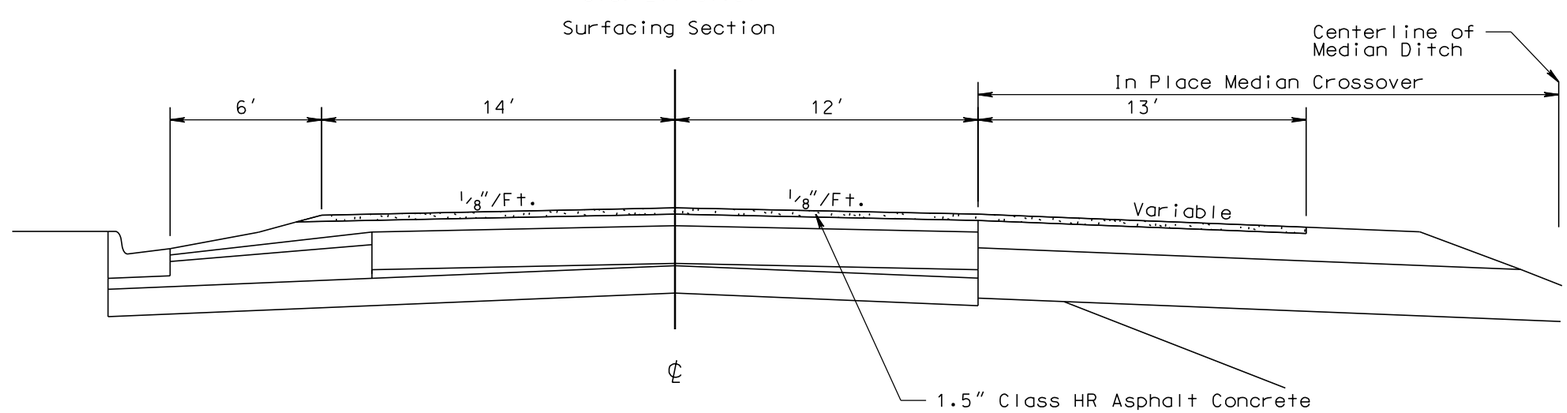

PLOT SCALE - 1:6

PLOTTED FROM - TRPR19388

PLOT NAME - 31

FILE - ...\MEAD5580\TYPICAL SECTION.DGN

TYPICAL SURFACING SECTIONS

Cold Milling Asphalt Concrete

Exit 40 Crossroad

Sta. 0+02.67 to Sta. 4+41.70
Sta. 7+57.06 to Sta. 11+19.50

In Place Section Showing Material to be Removed

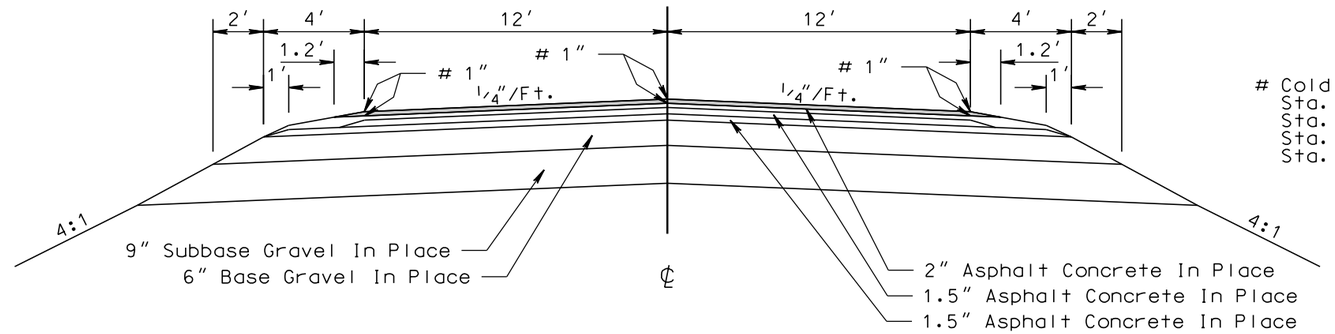

See LAYOUT SHOWING REMOVAL AND SURFACING LIMITS AT EXIT 40 CROSSROAD AND RAMPSlocated elsewhere in these plans for additional details for removal and surfacing.

Cold Milling Asphalt Concrete Transition
Sta. 0+02.67 to Sta. 0+42.67 - 2″ to 1″
Sta. 4+01.70 to Sta. 4+41.70 - 1″ to 2″
Sta. 7+57.06 to Sta. 7+97.06 - 2″ to 1″
Sta. 10+79.50 to Sta. 11+19.50 - 1″ to 2″

Exit 40 Crossroad

Sta. 0+02.67 to Sta. 4+41.70
Sta. 7+57.06 to Sta. 11+19.50

Surfacing Section

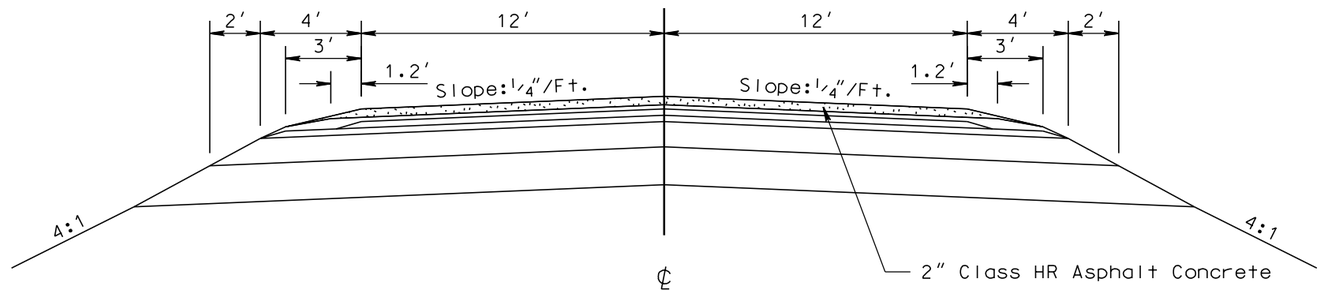

Exit 40 Crossroad

Sta. 11+19.50 to Sta. 17+25

Surfacing Section

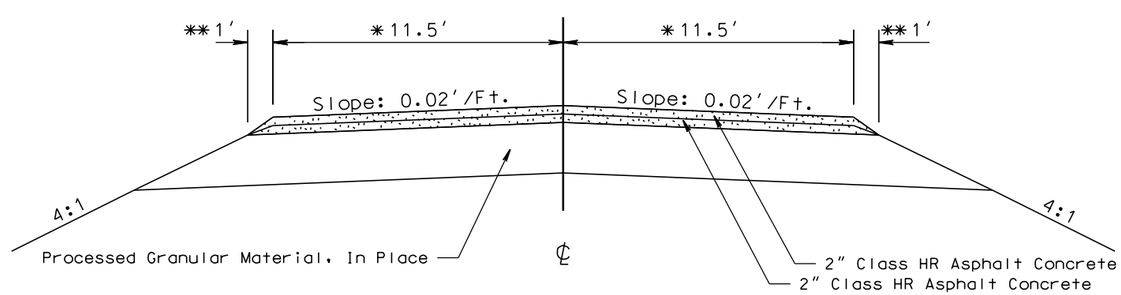

Transitions:

Sta. 11+19.50 to Sta. 11+69.50
* 12′ to 11.5′
** 3′ to 1′

PLOT SCALE - 1:6
PLOT NAME - 32
FILE - ...\MEAD5580\TYPICAL SECTION.DGN
PLOTTED FROM - TRPR18388

TYPICAL SURFACING SECTIONS

Cold Milling Asphalt Concrete

See LAYOUT SHOWING REMOVAL AND SURFACING LIMITS AT EXIT 40 CROSSROAD AND RAMPSlocated elsewhere in these plans for additional details for removal and surfacing.

The Contractor shall use care during the removal of the existing surfacing and placement of the new surfacing so as to not damage the the in place gutter and drop inlets. Any damage shall be repaired/replaced at the Contractor's expense and to the satisfaction of the Engineer.

Exit 40 Crossroad

Sta. 4+41.70 to Sta. 4+86
Sta. 7+14 to Sta. 7+57.06

In Place Section Showing Material to be Removed

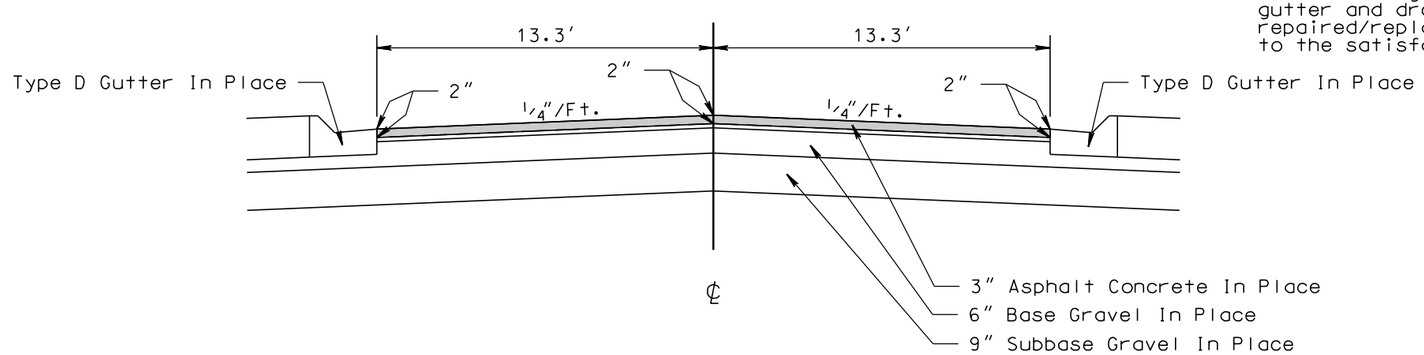

Exit 40 Crossroad

Sta. 4+41.70 to Sta. 4+86
Sta. 7+14 to Sta. 7+57.06

Surfacing Section

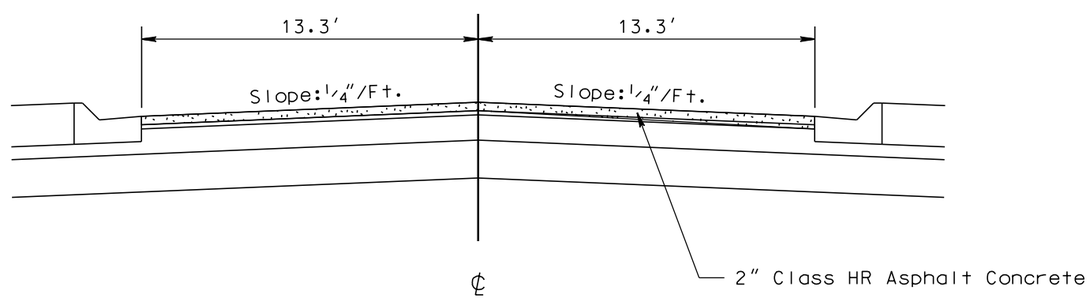

PLOT SCALE - 1:6
PLOT NAME - 33
FILE -...\MEAD5580\TYPICAL SECTION.DGN
PLOTTED FROM - TRPR18388

TYPICAL SURFACING SECTIONS

Cold Milling Asphalt Concrete

Exit 40 Ramp B

Sta. 0+12.07 to Sta. 8+00

In Place Section Showing Material to be Removed

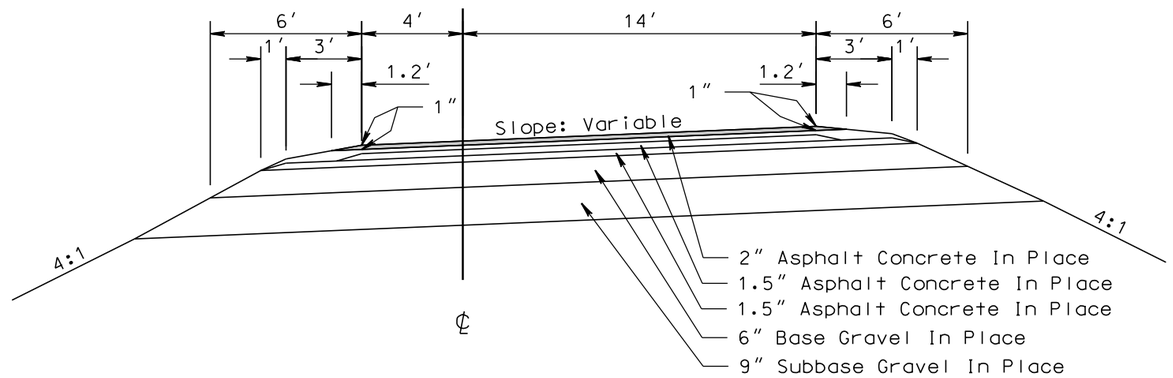

Exit 40 Ramp B

Sta. 0+12.07 to Sta. 8+00

Surfacing Section

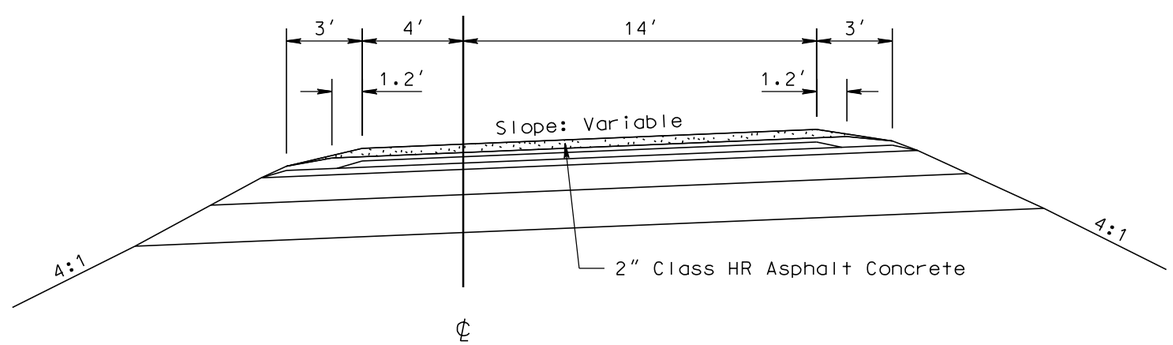

TYPICAL SURFACING SECTIONS

Exit 40 Ramp B
Sta. 8+00 to Sta. 14+11.23

Exit 44 Ramp A
Sta. 4+59.85 to Sta. 16+29.50

Exit 44 Ramp B
Sta. 0+26.56 to Sta. 10+20.55

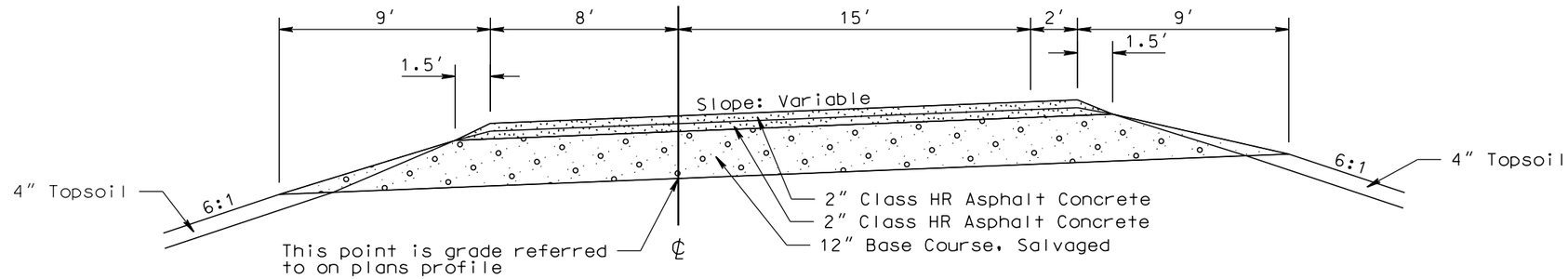

Exit 40 Ramp C
Sta. 0+12 to Sta. 12+88.38

Exit 44 Ramp C
Sta. 0+28.63 to Sta. 11+77.71

Exit 44 Ramp D
Sta. 6+90.74 to Sta. 17+69.43

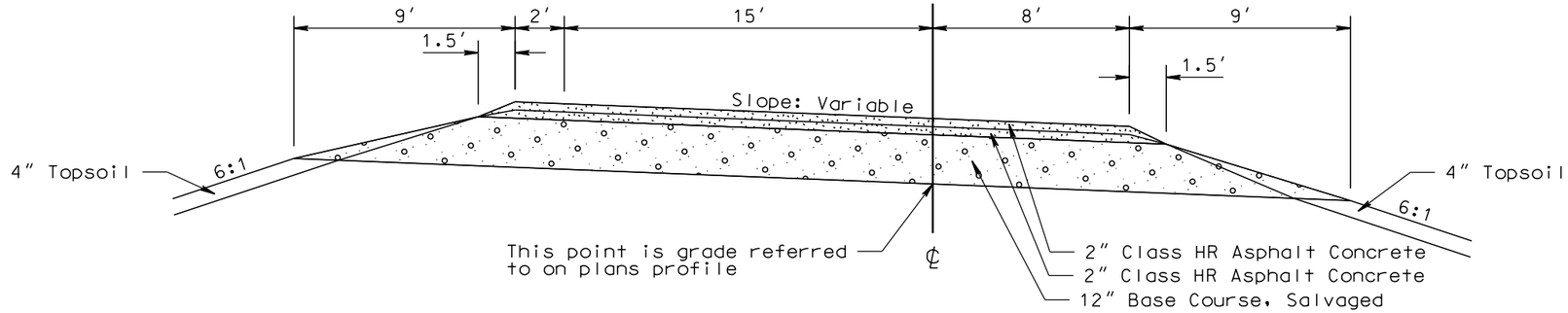

Rest Area Ramp A
Sta. 3+44.81 to Sta. 10+25

Rest Area Ramp B
Sta. 0+00 to Sta. 2+75.35

Transitions:

Rest Area Ramp B

Sta. 0+00 to Sta. 2+00
* 4:1

Sta. 2+00 to Sta. 3+00
* 4:1 to 6:1

Sta. 3+00 to Sta. 6+25.11
* 6:1

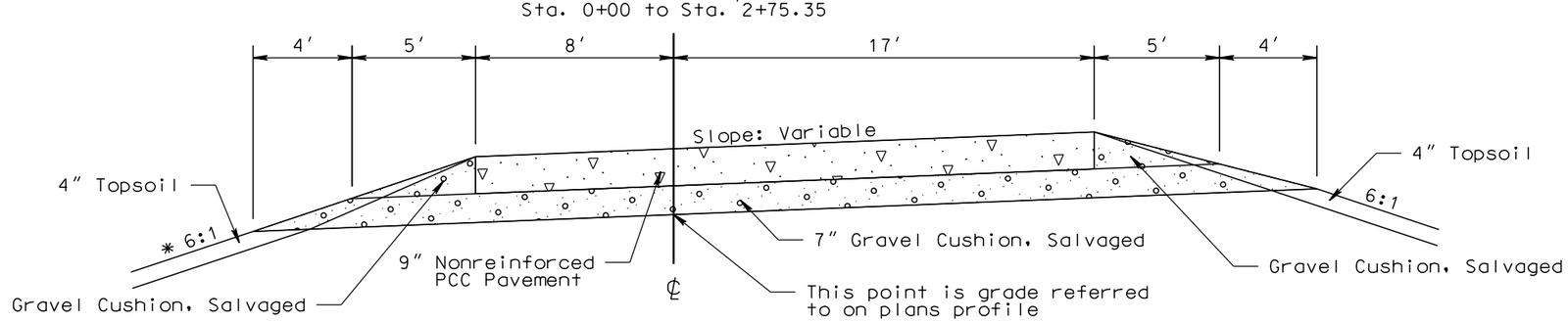

PLOT SCALE - 1:6
PLOT NAME - 35
FILE - ...\MEAD5580\TYPICAL SECTION.DGN
PLOTTED FROM - TRPR18398

STATE OF SOUTH DAKOTA	PROJECT	SHEET	TOTAL SHEETS
	IM 0901(38)40	F49	F87

Plotting Date: 08/08/2016

TYPICAL SURFACING SECTIONS

Rest Area Ramp C
Sta. 0+00 to Sta. 5+49.74

Rest Area Ramp D
Sta. 8+92.02 to Sta. 10+50

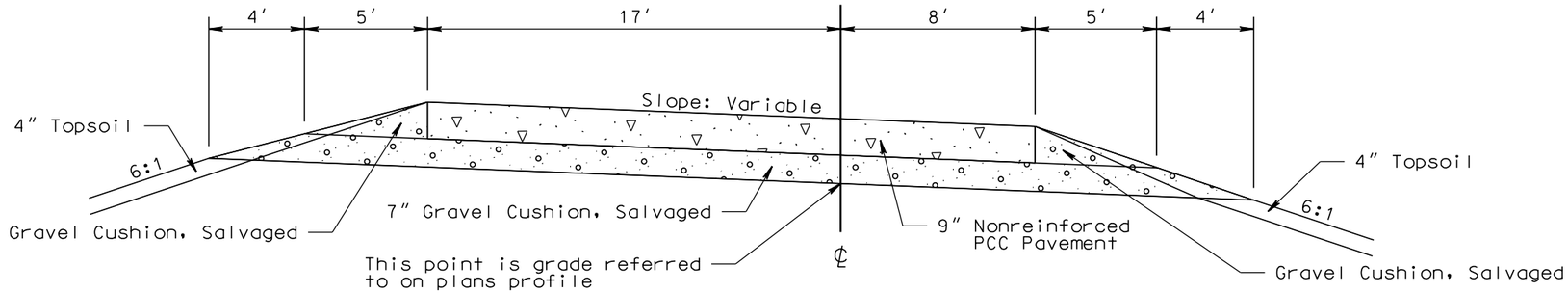

Exit 44 Cross Road - XR236
Sta. 188+00 to Sta. 206+00

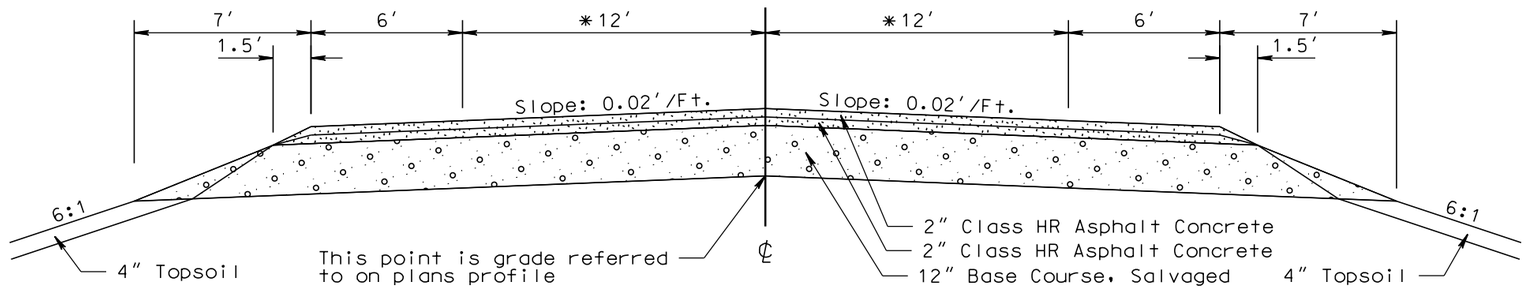

Transitions:

Sta. 191+72.5 to Sta. 192+95
* 12′ to 18′

Sta. 192+95 to Sta. 198+20
* 18′

Sta. 198+20 to Sta. 199+42.5
* 18′ to 12′

PLOT SCALE - 1:6

PLOT NAME - 36

FILE - ...\MEAD5580\TYPICAL SECTION.DGN

PLOTTED FROM - TRPR18388

WBL PCC PAVEMENT JOINT LAYOUT

STATE OF SOUTH DAKOTA	PROJECT	SHEET	TOTAL SHEETS
	IM 0901(38)40	F50	F87

Plotting Date: 08/08/2016

Scale 1 Inch = 40 Feet
Sheet 1 of 12 Sheets

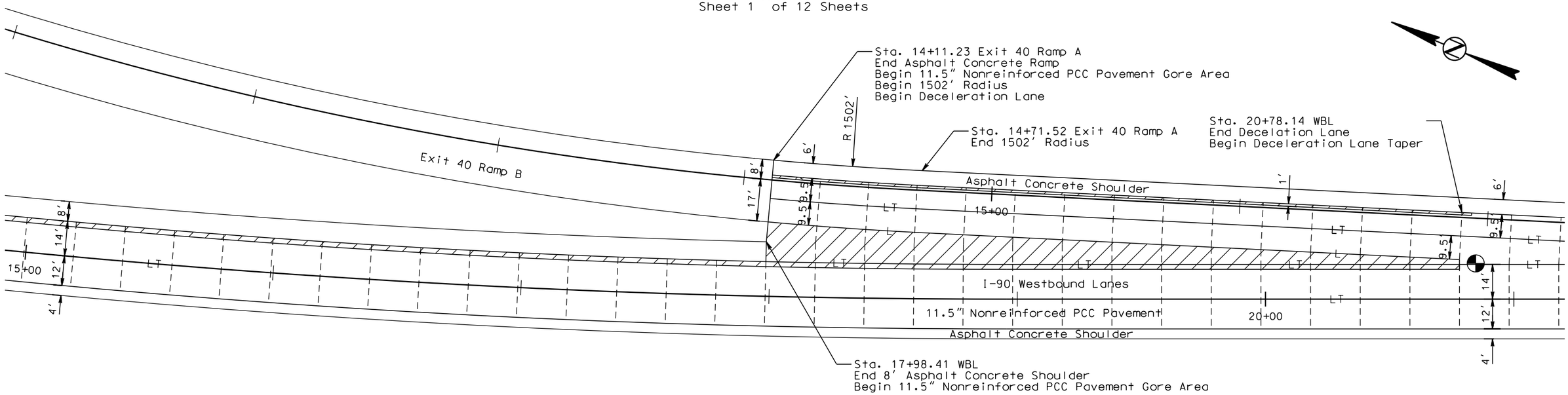

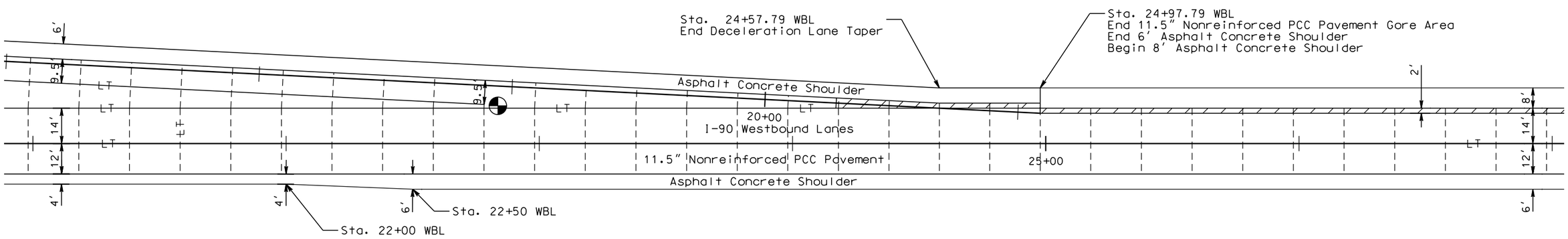

LEGEND:

Longitudinal Joint Without Tie Bars (Construction or Sawed) ——L——L——
Longitudinal Joint With Tie Bars (Construction or Sawed) ——LT——LT——
Transverse Contraction Joint — — — — — — — — — — — — — — — — — —
Steel Bar Installation in Longitudinal or Transverse Joint ——SB——SB——
Areas to be poured monolithically with adjacent slab ◐ (See Detail A)

Transverse contraction joints within these areas shall not have dowel bar assemblies. All other transverse contraction joints shall have dowel bar assemblies.

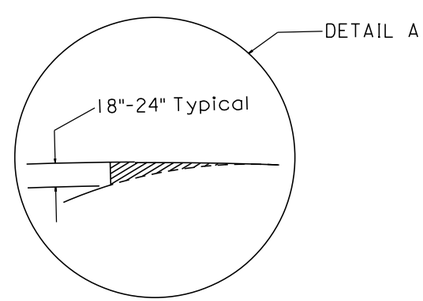

PLOT SCALE - 1:40
PLOT NAME - 37
FILE - ...\PCC PAVEMENT JOINT LAYOUTS.DGN
PLOTTED FROM - TRPR18388

WBL PCC PAVEMENT JOINT LAYOUT

STATE OF SOUTH DAKOTA	PROJECT	SHEET	TOTAL SHEETS
	IM 0901(38)40	F51	F87

Plotting Date: 08/08/2016

Scale 1 Inch = 40 Feet
Sheet 2 of 12 Sheets

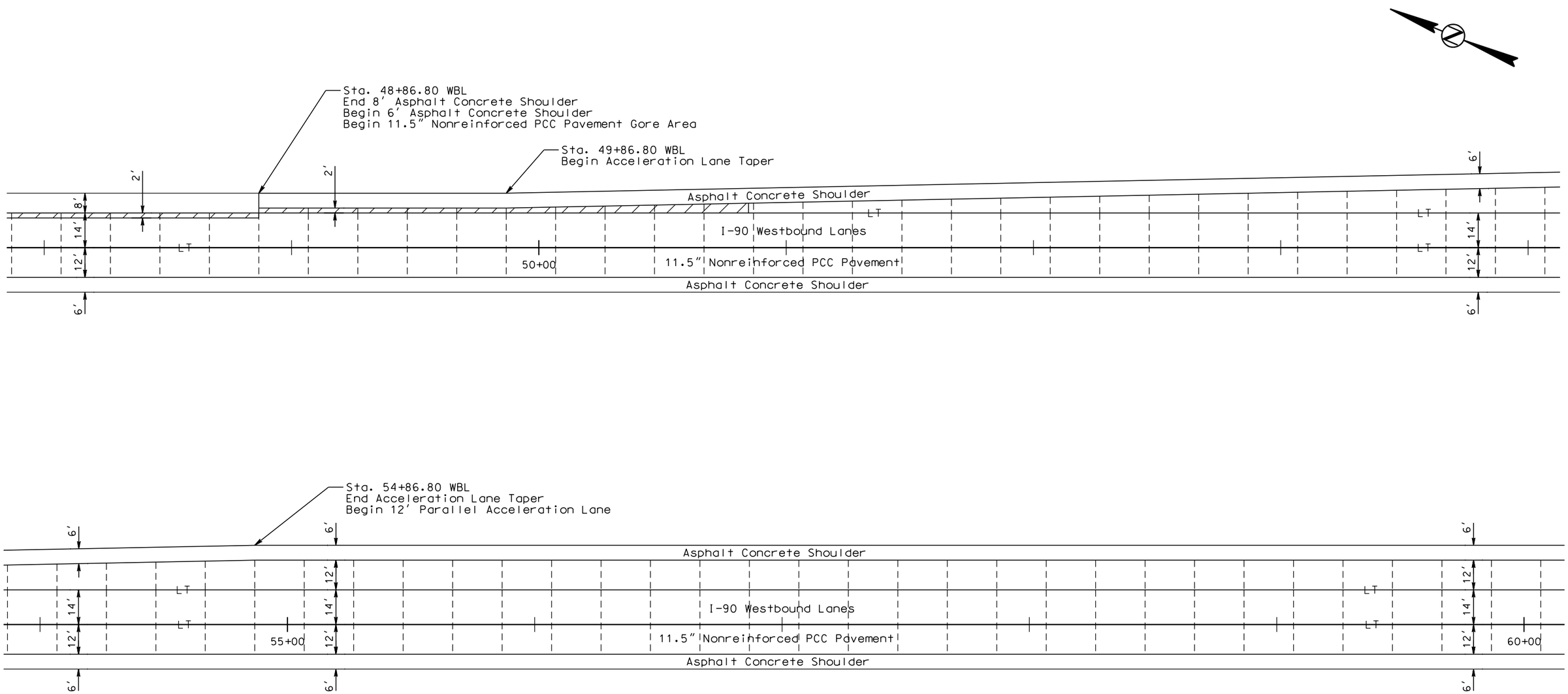

PLOT SCALE - 1:40

PLOT NAME - 38

FILE -...\PCC PAVEMENT JOINT LAYOUTS.DGN

PLOTTED FROM - TRPR18388

WBL PCC PAVEMENT JOINT LAYOUT

STATE OF SOUTH DAKOTA	PROJECT	SHEET	TOTAL SHEETS
	IM 0901(38)40	F52	F87

Plotting Date: 08/08/2016

Scale 1 Inch = 40 Feet
Sheet 3 of 12 Sheets

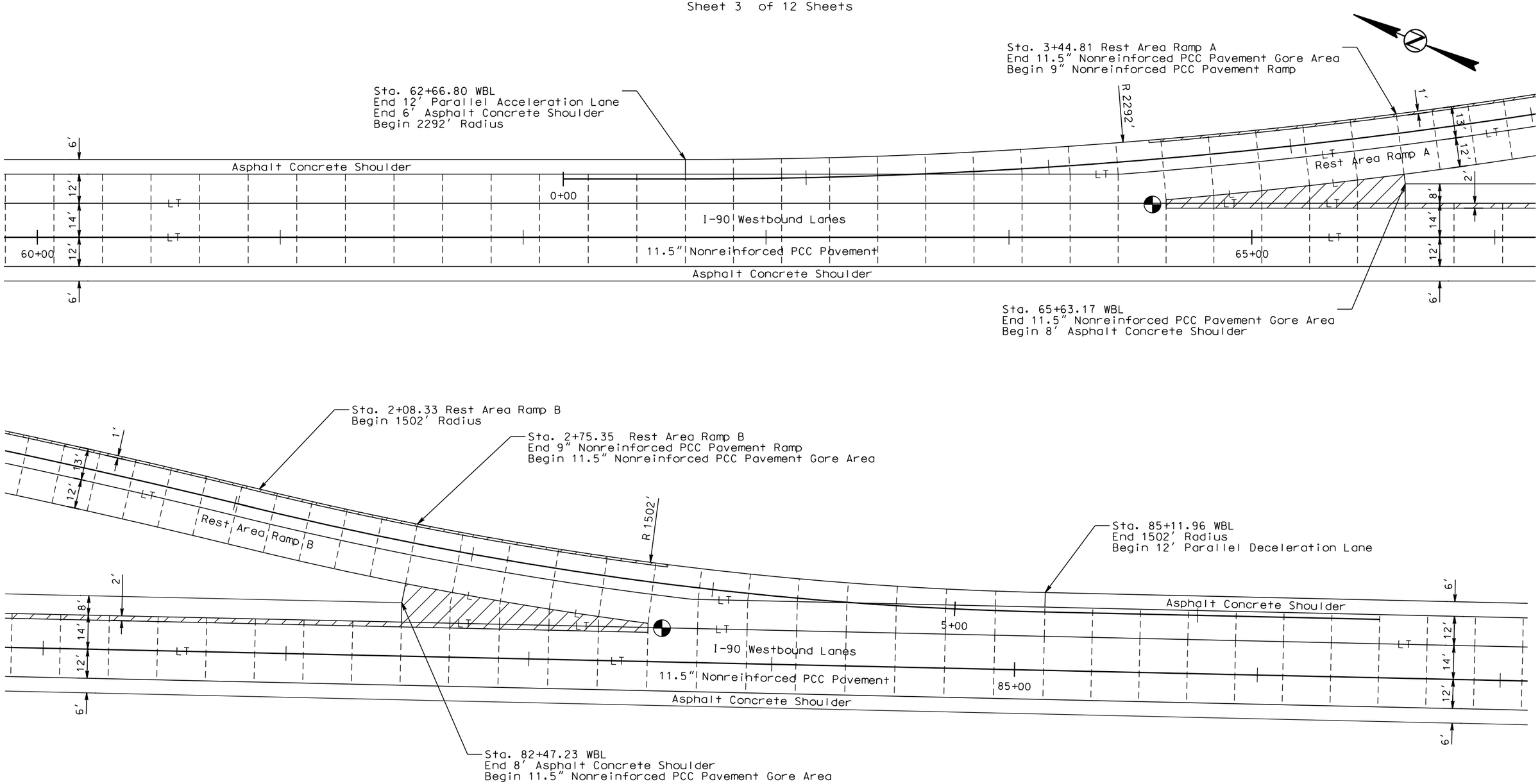

PLOT SCALE - 1:40

PLOT NAME - 39

FILE - ...\PCC PAVEMENT JOINT LAYOUTS.DGN

PLOTTED FROM - TRPR18388

WBL PCC PAVEMENT JOINT LAYOUT

STATE OF SOUTH DAKOTA	PROJECT	SHEET	TOTAL SHEETS
	IM 0901(38)40	F53	F87

Plotting Date: 08/08/2016

Scale 1 Inch = 40 Feet
Sheet 4 of 12 Sheets

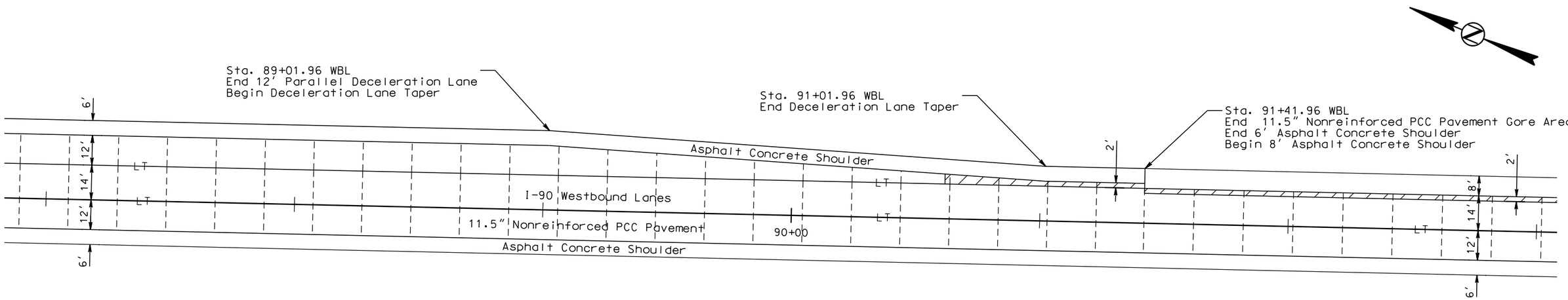

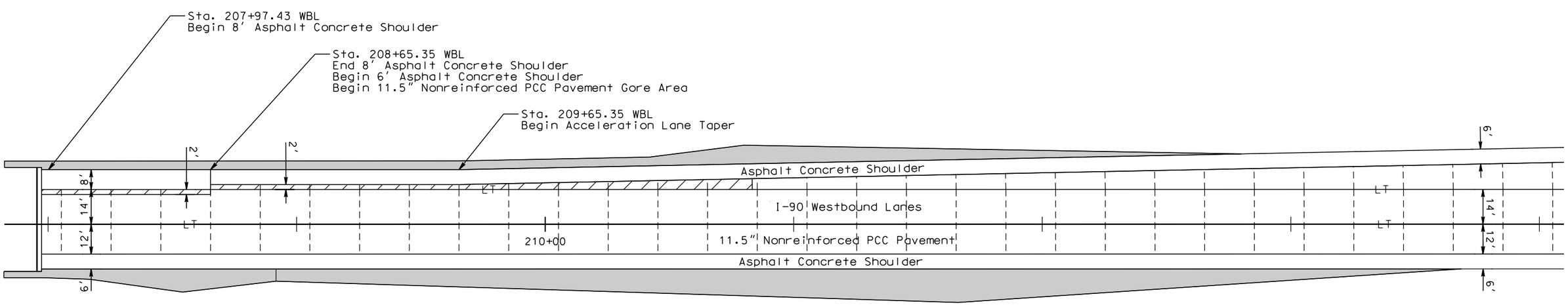

Areas of Guardrail Embankment Surfacing.
See ADDITIONAL SURFACING FOR GUARDRAIL LAYOUTS
located elsewhere in these plans for details.

PLOT SCALE - 1:40

PLOT NAME - 40

FILE - ...\PCC PAVEMENT JOINT LAYOUTS.DGN

PLOTTED FROM - TRPR18388

WBL PCC PAVEMENT JOINT LAYOUT

STATE OF SOUTH DAKOTA	PROJECT	SHEET	TOTAL SHEETS
	IM 0901(38)40	F54	F87

Plotting Date: 08/08/2016

Scale 1 Inch = 40 Feet
Sheet 5 of 12 Sheets

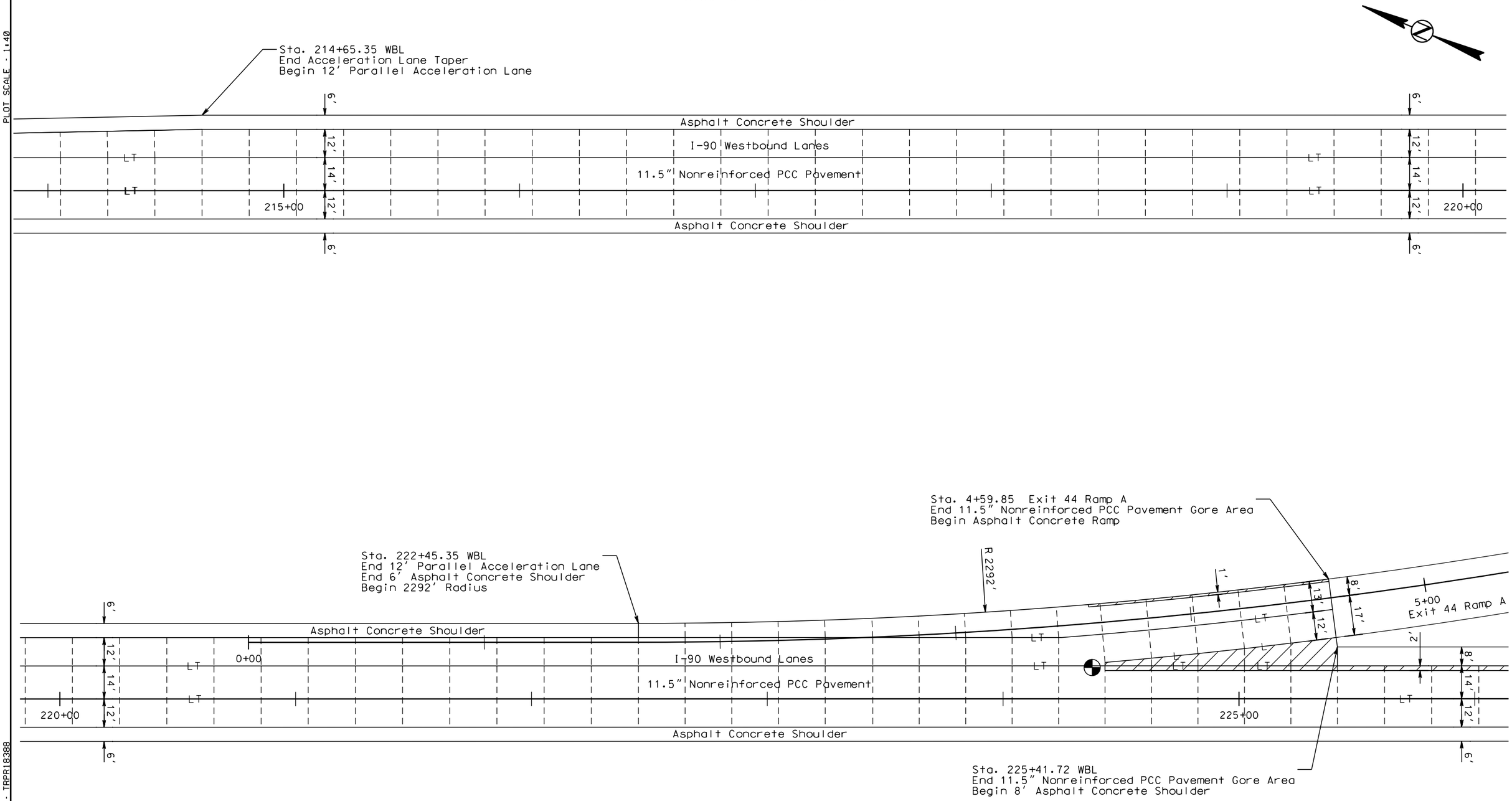

PLOT SCALE - 1:40

PLOT NAME - 41

FILE - ...\PCC PAVEMENT JOINT LAYOUTS.DGN

PLOTTED FROM - TRPR18388

WBL PCC PAVEMENT JOINT LAYOUT

STATE OF SOUTH DAKOTA	PROJECT	SHEET	TOTAL SHEETS
	IM 0901(38)40	F55	F87

Plotting Date: 08/08/2016

Scale 1 Inch = 40 Feet
Sheet 6 of 12 Sheets

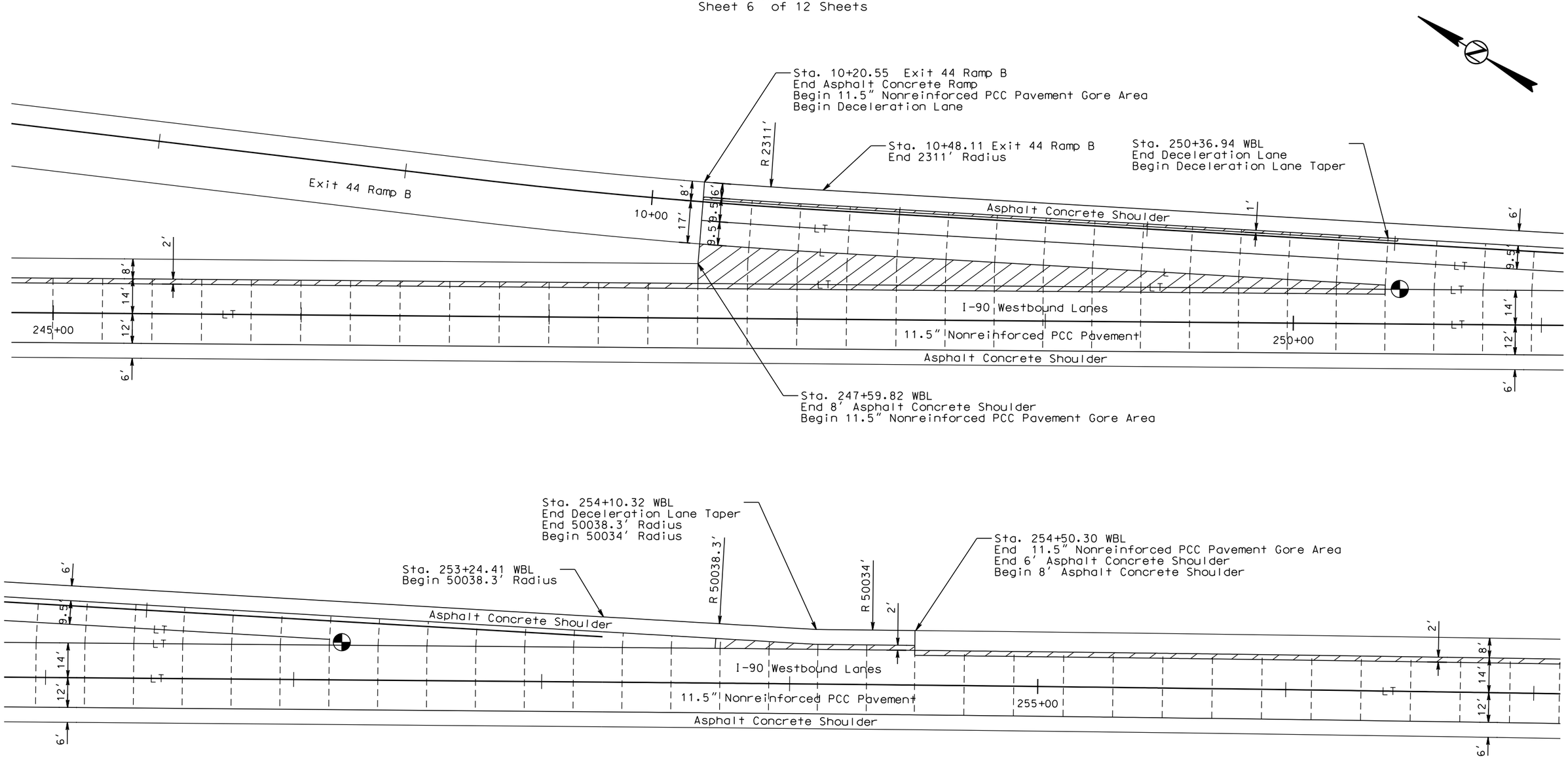

PLOT SCALE - 1:40

PLOTTED FROM - TRPR18388

PLOT NAME - 42

FILE - ...\PCC PAVEMENT JOINT LAYOUTS.DGN

EBL PCC PAVEMENT JOINT LAYOUT

STATE OF SOUTH DAKOTA	PROJECT	SHEET	TOTAL SHEETS
	IM 0901(38)40	F56	F87

Plotting Date: 08/08/2016

Scale 1 Inch = 40 Feet
Sheet 7 of 12 Sheets

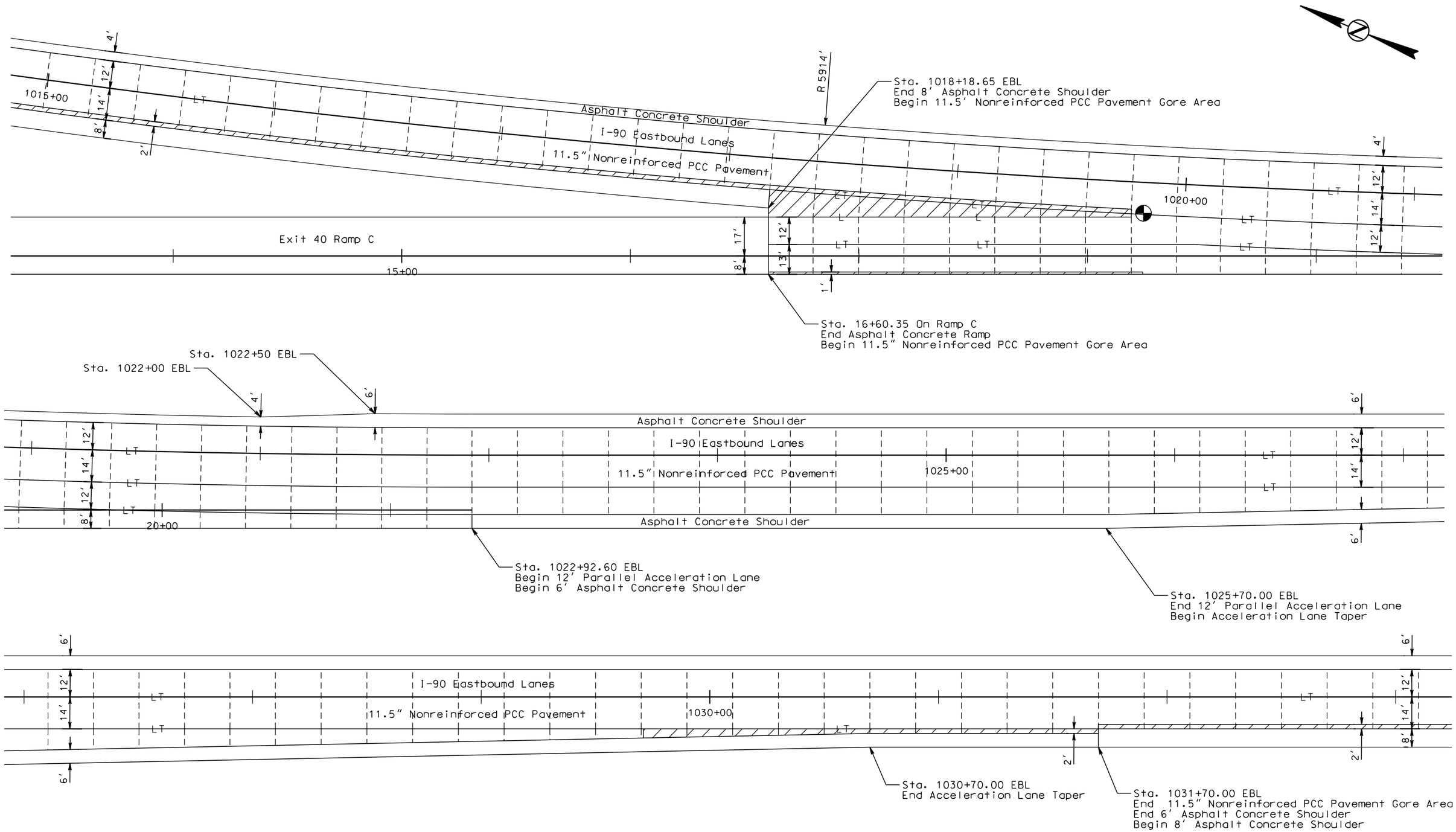

PLOT SCALE - 1:40

PLOT NAME - 43

FILE - ...\PCC PAVEMENT JOINT LAYOUTS.DGN

PLOTTED FROM - TRPR18388

EBL PCC PAVEMENT JOINT LAYOUT

STATE OF SOUTH DAKOTA	PROJECT	SHEET	TOTAL SHEETS
	IM 0901(38)40	F57	F87

Plotting Date: 08/08/2016

Scale 1 Inch = 40 Feet
Sheet 8 of 12 Sheets

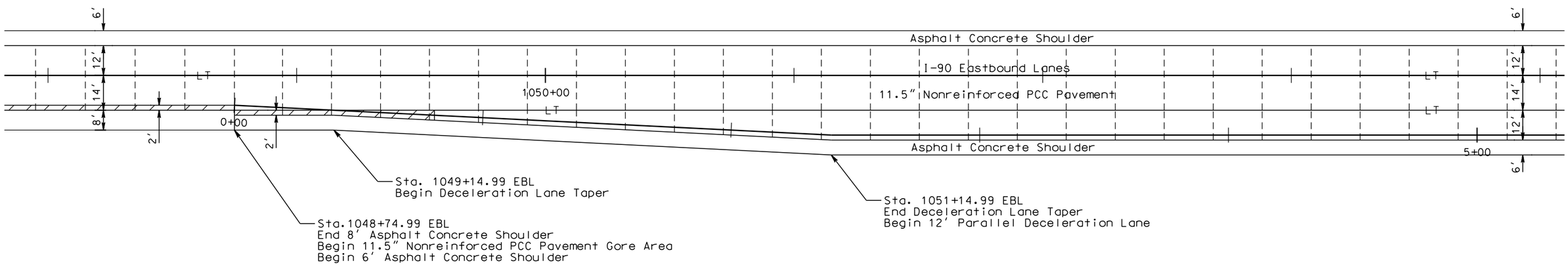

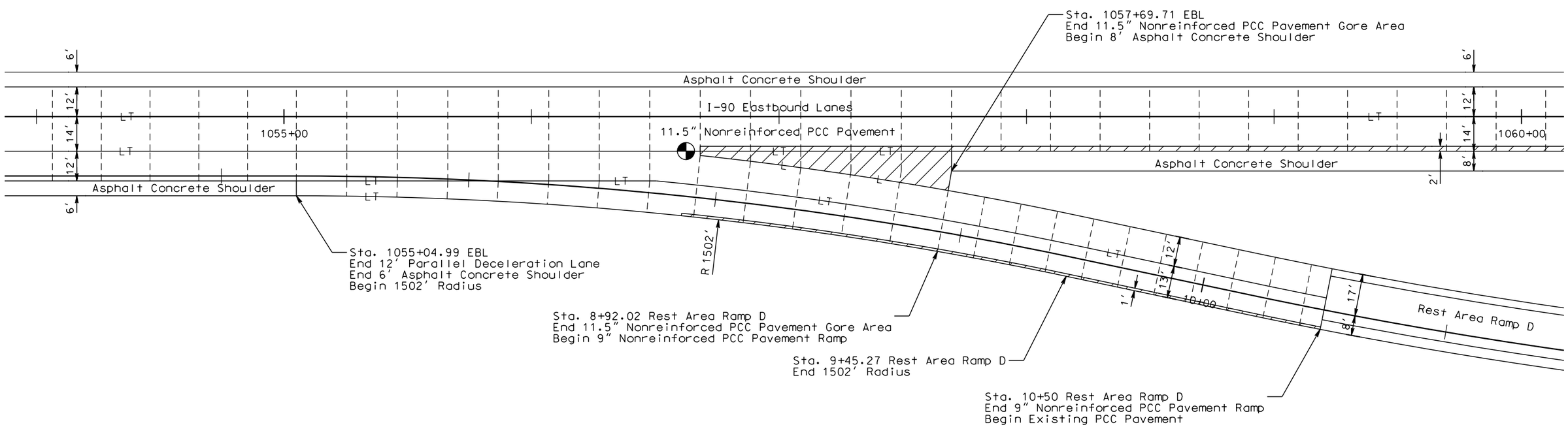

PLOT SCALE - 1:40

PLOT NAME - 44

FILE - ...\PCC PAVEMENT JOINT LAYOUTS.DGN

PLOTTED FROM - TRPR18388

EBL PCC PAVEMENT JOINT LAYOUT

STATE OF SOUTH DAKOTA	PROJECT	SHEET	TOTAL SHEETS
	IM 0901(38)40	F58	F87

Plotting Date: 08/08/2016

Scale 1 Inch = 40 Feet
Sheet 9 of 12 Sheets

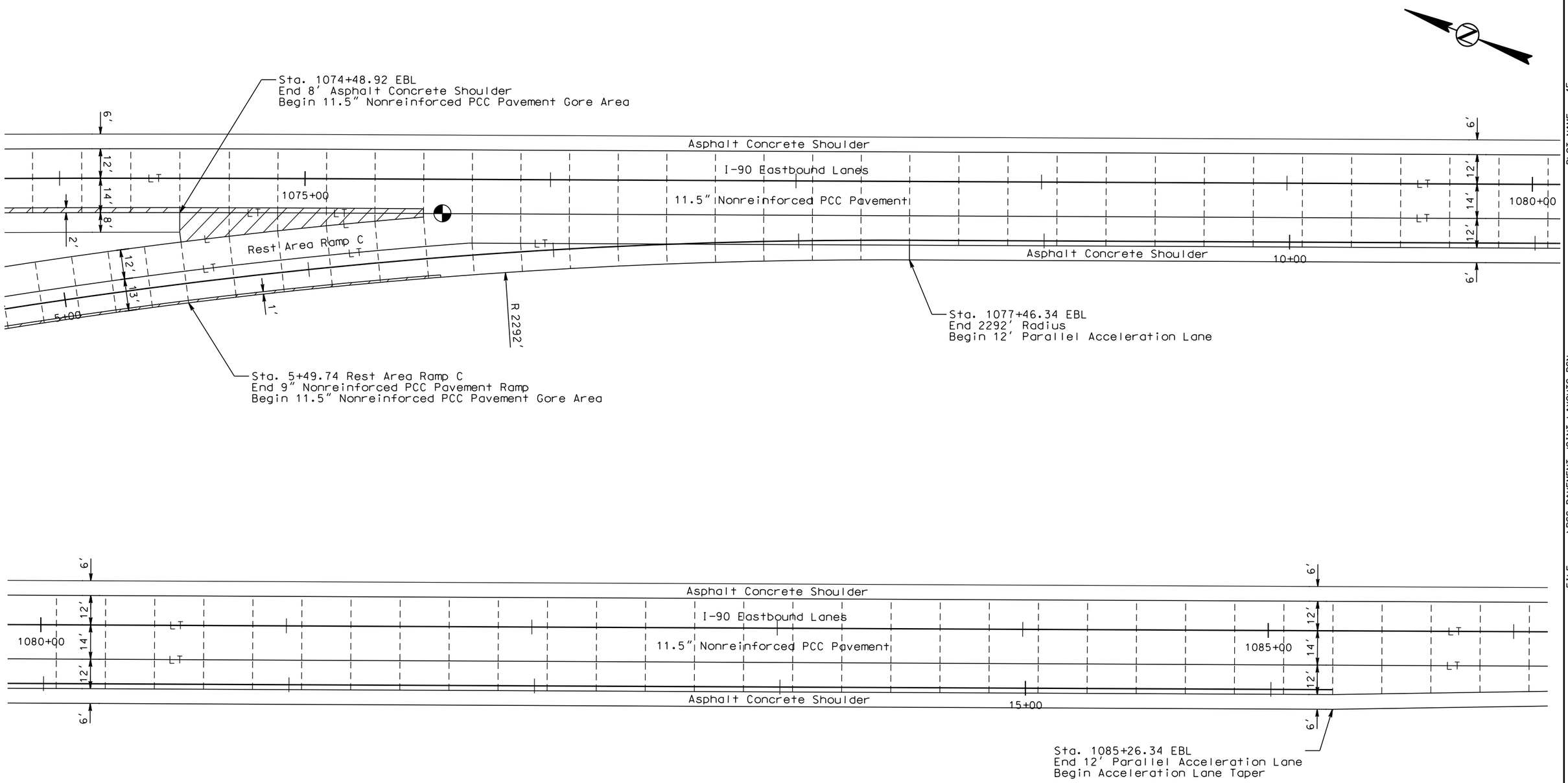

PLOT SCALE - 1:40

PLOT NAME - 45

FILE - ...\PCC PAVEMENT JOINT LAYOUTS.DGN

PLOTTED FROM - TRPR18388

EBL PCC PAVEMENT JOINT LAYOUT

STATE OF SOUTH DAKOTA	PROJECT	SHEET	TOTAL SHEETS
	IM 0901(38)40	F59	F87

Plotting Date: 08/08/2016

Scale 1 Inch = 40 Feet
Sheet 10 of 12 Sheets

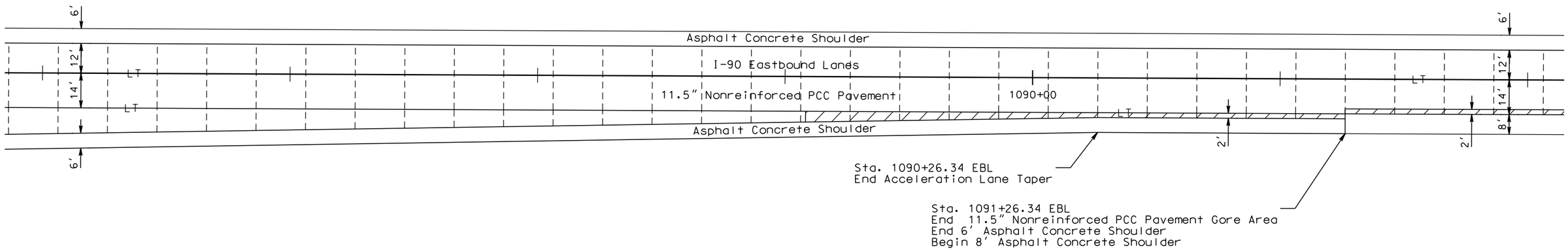

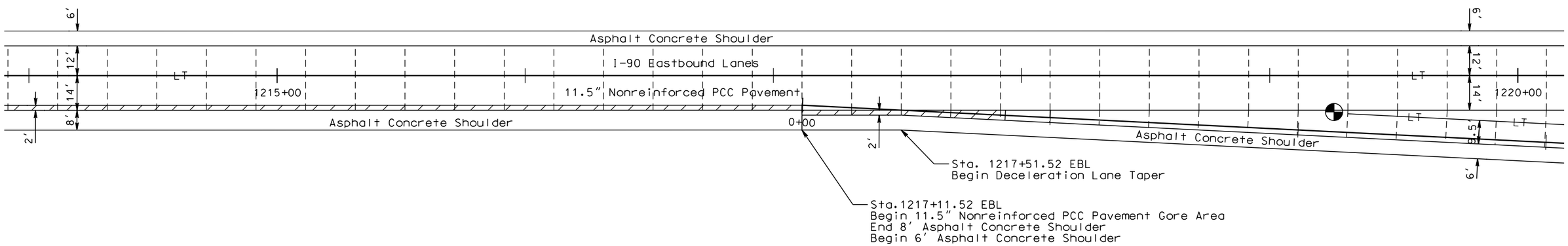

PLOT SCALE - 1:40

PLOTTED FROM - TRPR18388

PLOT NAME - 46

FILE - ...\PCC PAVEMENT JOINT LAYOUTS.DGN

EBL PCC PAVEMENT JOINT LAYOUT

STATE OF SOUTH DAKOTA	PROJECT	SHEET	TOTAL SHEETS
	IM 0901(38)40	F60	F87

Plotting Date: 08/08/2016

Scale 1 Inch = 40 Feet
Sheet 11 of 12 Sheets

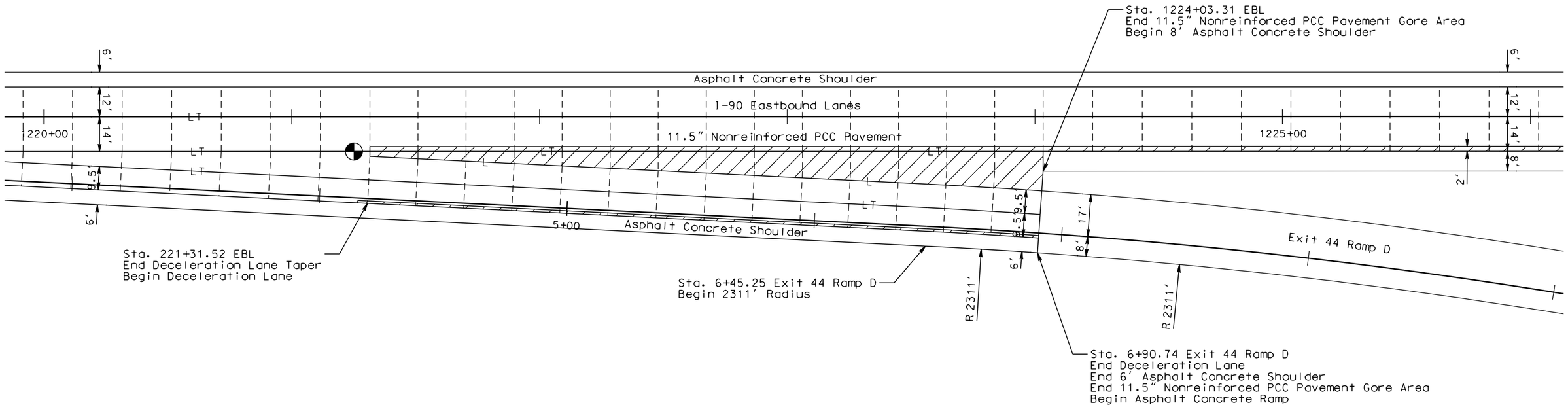

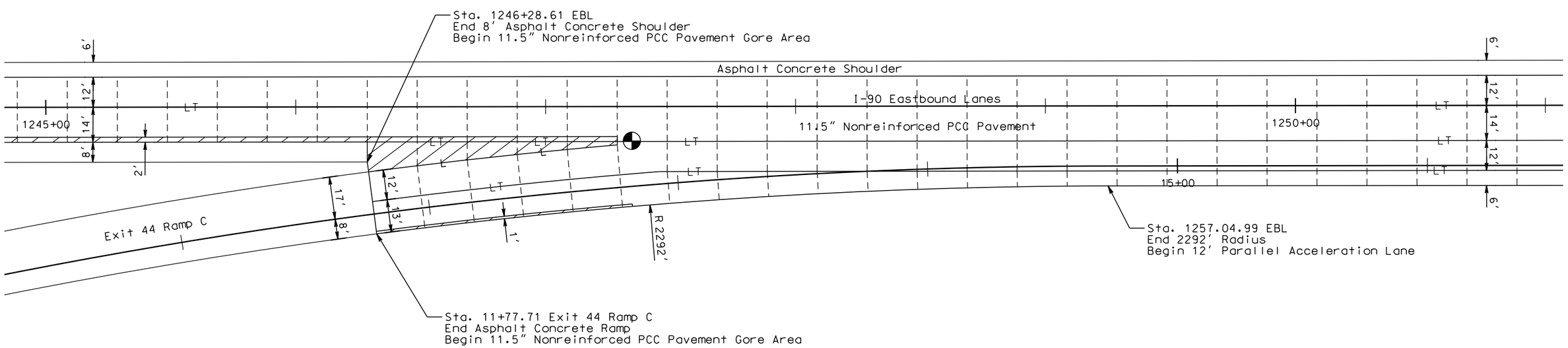

PLOT SCALE - 1:40

PLOT NAME - 47

FILE - ...\PCC PAVEMENT JOINT LAYOUTS.DGN

PLOTTED FROM - TRPR18388

EBL PCC PAVEMENT JOINT LAYOUT

Scale 1 Inch = 40 Feet
Sheet 12 of 12 Sheets

STATE OF SOUTH DAKOTA	PROJECT	SHEET	TOTAL SHEETS
	IM 0901(38)40	F61	F87

Plotting Date: 08/08/2016

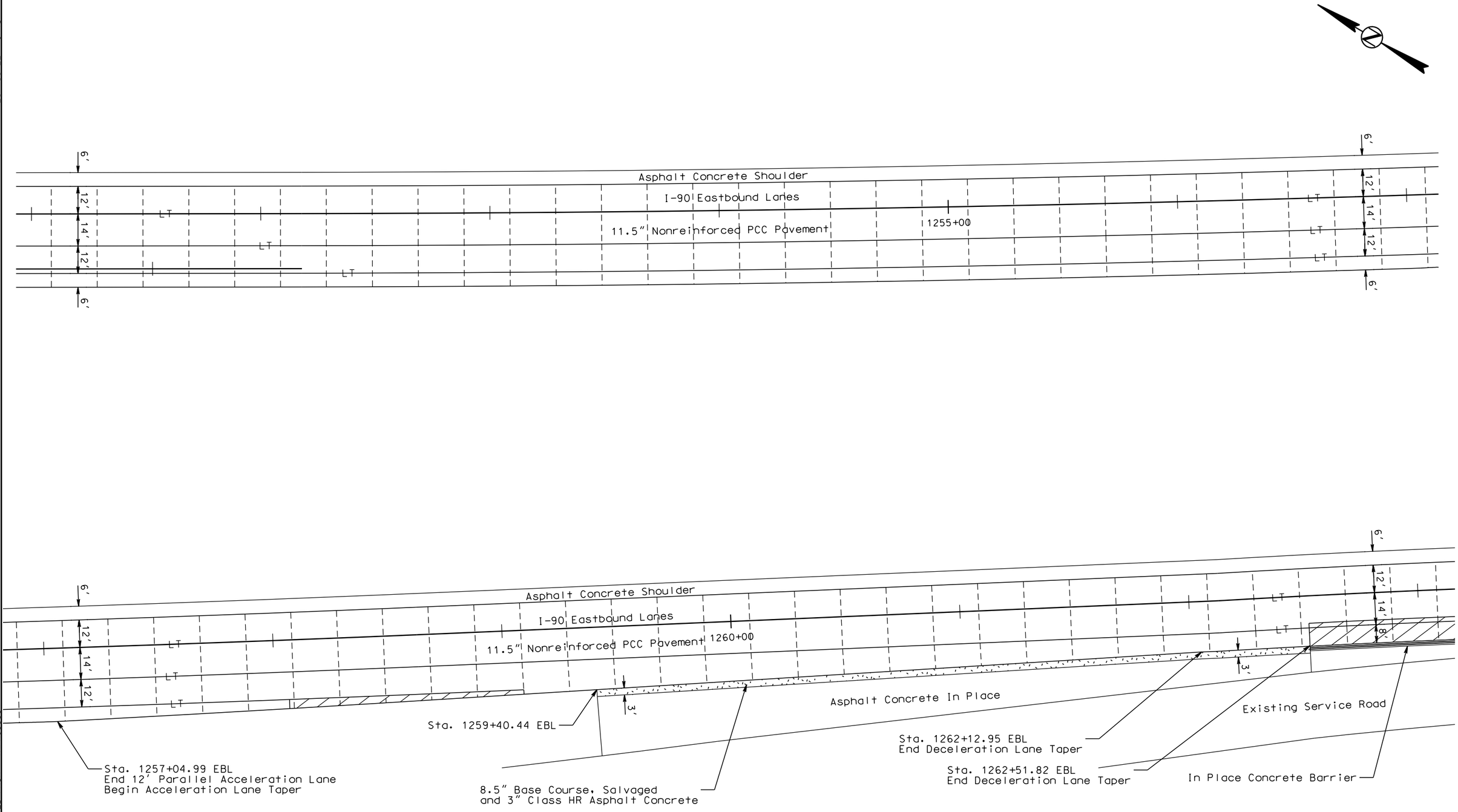

PLOT SCALE - 1:40

PLOTTED FROM - TRPR18388

PLOT NAME - 48

FILE - ...\PCC PAVEMENT JOINT LAYOUTS.DGN

LAYOUT SHOWING REMOVAL AND SURFACING LIMITS AT EXIT 40 CROSSROAD AND RAMPS

STATE OF SOUTH DAKOTA	PROJECT	SHEET	TOTAL SHEETS
	IM 0901(38)40	F62	F87

Plotting Date: 08/08/2016

Scale 1 Inch = 40 Feet
Sheet 1 of 2 Sheets

See TYPICAL SURFACING SECTIONS located elsewhere in these plans for additional details for removal and surfacing.

Alignment and Stationings shown for Ramp A & D are from underlying plans.

Area to receive 1" to 2" cold milling asphalt concrete and surfaced with 2" Class HR Asphalt Concrete to match existing surfacing as directed by the Engineer.

Area to receive 1" cold milling asphalt concrete and surfaced with 2" Class HR Asphalt Concrete as directed by the Engineer.

Area to receive 2" cold milling asphalt concrete and surfaced with 2" Class HR Asphalt Concrete as directed by the Engineer.

Area to be surfaced with 12" Base Course. Salvaged and/or 4" Class HR Asphalt Concrete. See Typical Surfacing Sections

Surfacing Adjacent to Guardrail. See ADDITIONAL SURFACING ADJACENT TO GUARDRAIL LAYOUTS located elsewhere in these plans for details.

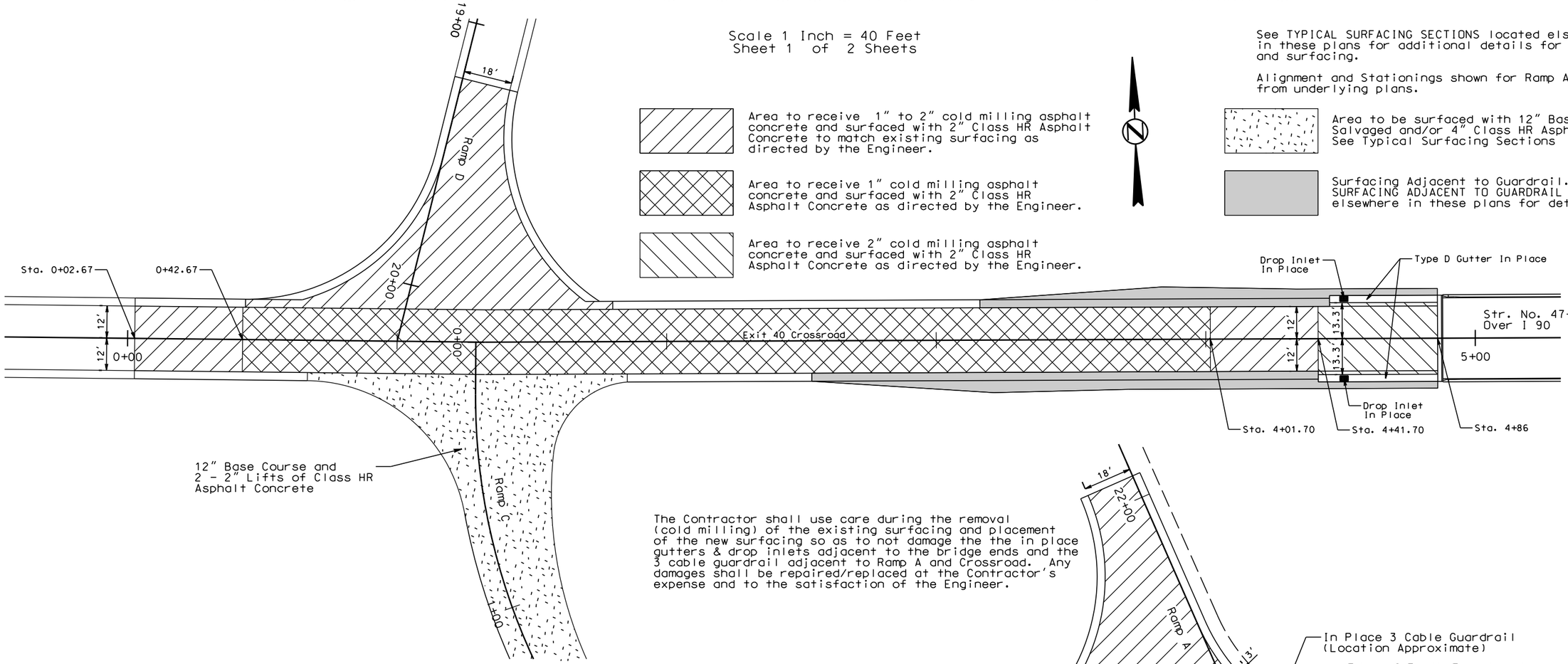

The Contractor shall use care during the removal (cold milling) of the existing surfacing and placement of the new surfacing so as to not damage the the in place gutters & drop inlets adjacent to the bridge ends and the 3 cable guardrail adjacent to Ramp A and Crossroad. Any damages shall be repaired/replaced at the Contractor's expense and to the satisfaction of the Engineer.

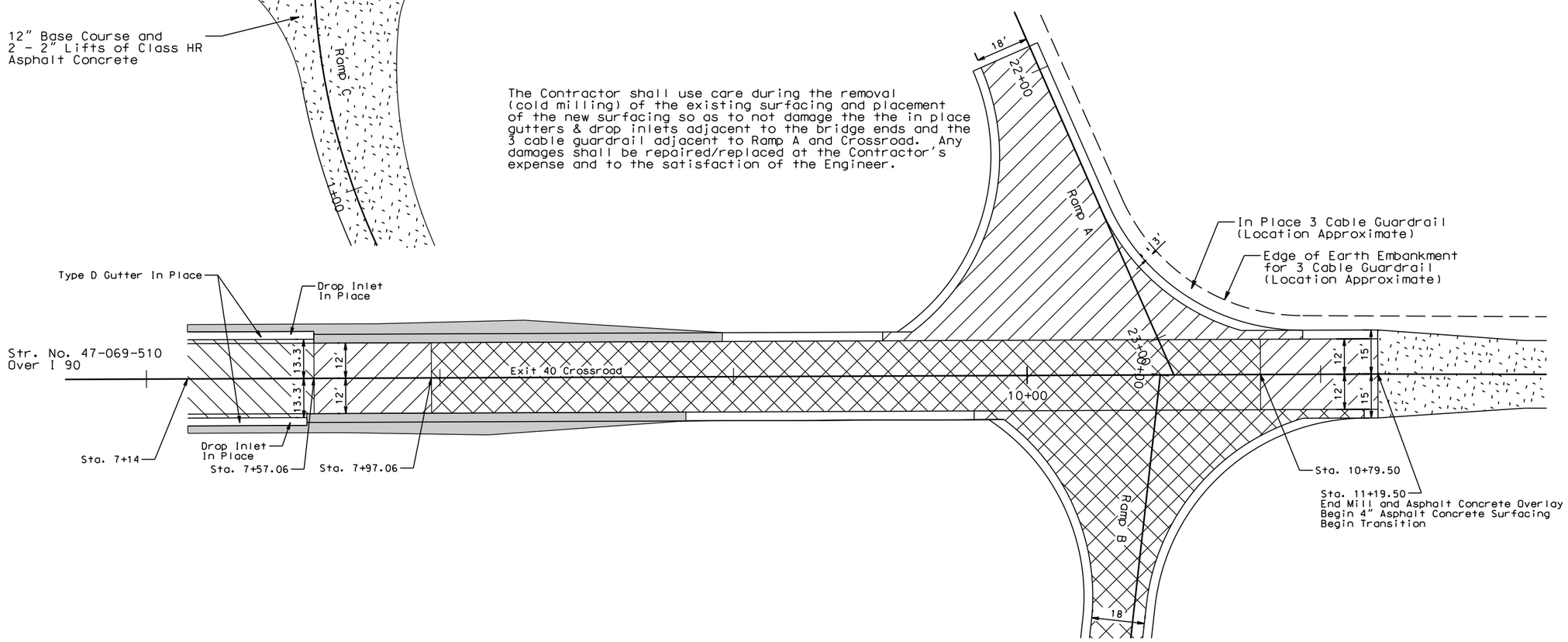

PLOT SCALE - 1:40

PLOT NAME - 49

FILE - ...\RAMP INTERSECTION LAYOUTS.DGN

PLOTTED FROM - TRPR18388

LAYOUT SHOWING REMOVAL AND SURFACING LIMITS AT EXIT 40 CROSSROAD AND RAMPS

STATE OF SOUTH DAKOTA	PROJECT	SHEET	TOTAL SHEETS
	IM 0901(38)40	F63	F87

Plotting Date: 08/08/2016

Scale 1 Inch = 40 Feet
Sheet 2 of 2 Sheets

The Contractor shall use care during the removal (cold milling) of the existing surfacing and placement of the new surfacing so as to not damage the the in place gutters & drop inlets adjacent to the bridge ends and the 3 cable guardrail adjacent to Ramp A and Crossroad. Any damages shall be repaired/replaced at the Contractor's expense and to the satisfaction of the Engineer.

See TYPICAL SURFACING SECTIONS located elsewhere in these plans for additional details for removal and surfacing.

Alignment and Stationings shown for Ramp A & D are from underlying plans.

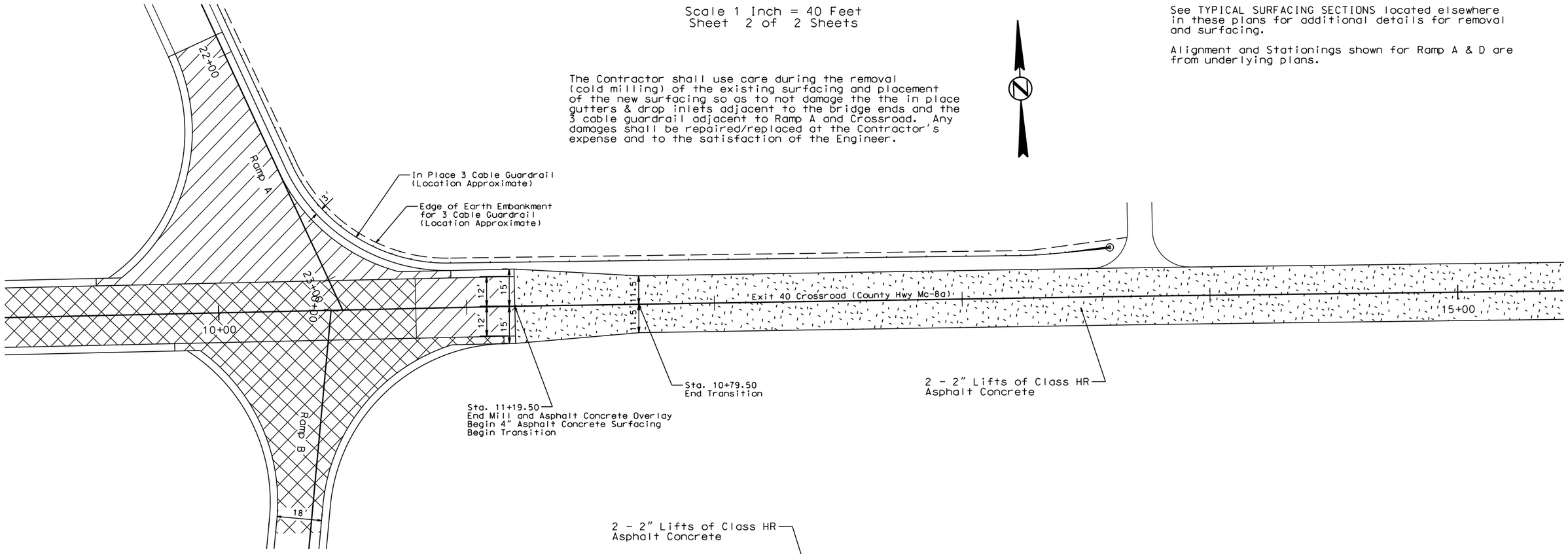

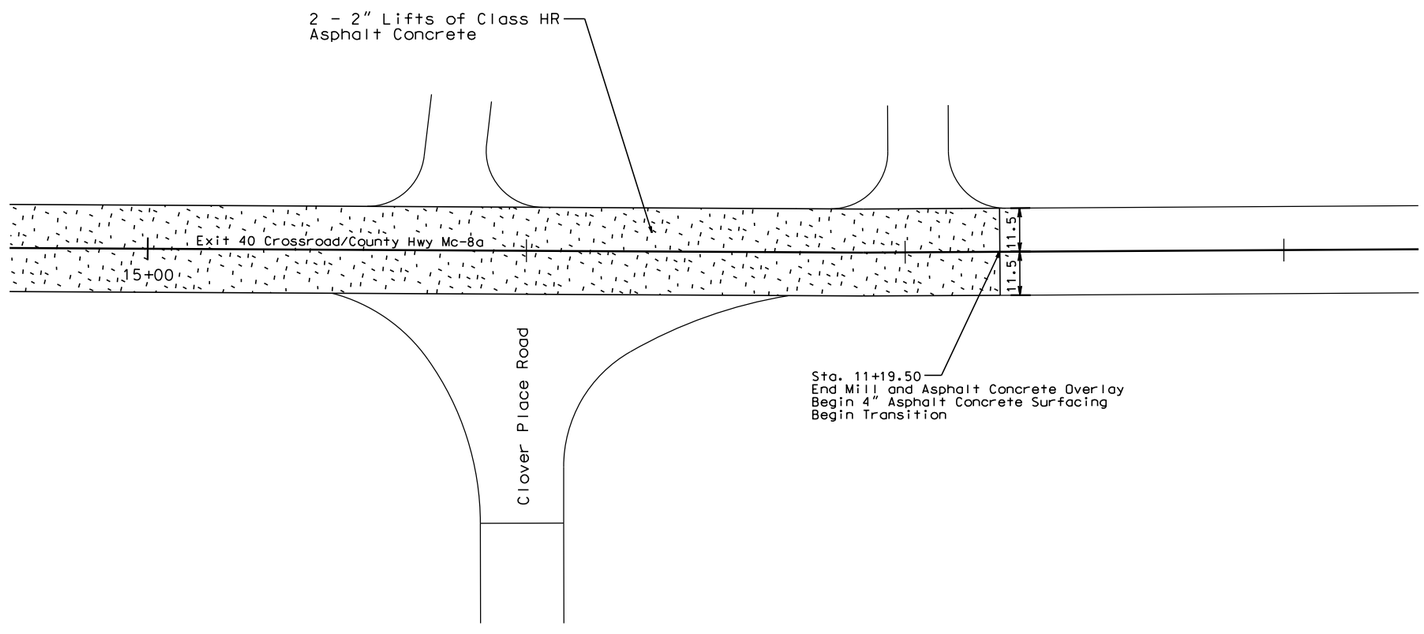

PLOT SCALE - 1:40

PLOTTED FROM - TRPR18388

PLOT NAME - 50

FILE - ...\RAMP INTERSECTION LAYOUTS.DGN

STATE OF SOUTH DAKOTA	PROJECT	SHEET	TOTAL SHEETS
	IM 0901(38)40	F64	F87

Plotting Date: 08/08/2016

DRIVING SURFACE TRANSITION DETAILS

Sheet 1 of 2 Sheets

NOT TO SCALE

Cold Milling Asphalt Concrete

Remove PCC Pavement (See Section B - Grading)

Unclassified Excavation - Granular Base Material to be salvaged and stockpiled (See Section B - Grading)

See TYPICAL SURFACING SECTIONSand SURFACING DETAILS FOR MEDIAN CROSSOVERS for additional details for removal and surfacing.

EASTBOUND LANES - STA. 1262+13.32 TO STA. 1271+39.33

LONGITUDINAL SECTION AT CENTERLINE SHOWING REMOVAL OF IN PLACE SURFACING

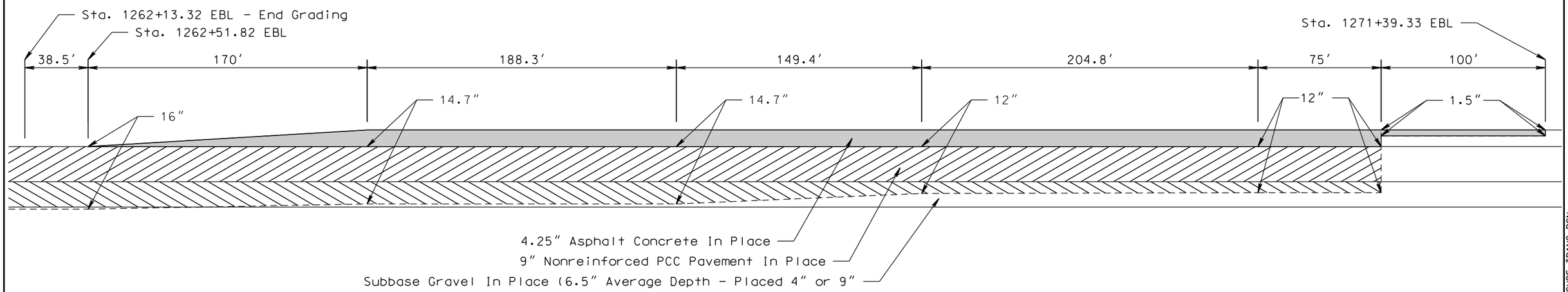

LONGITUDINAL SECTION AT CENTERLINE SHOWING SURFACING

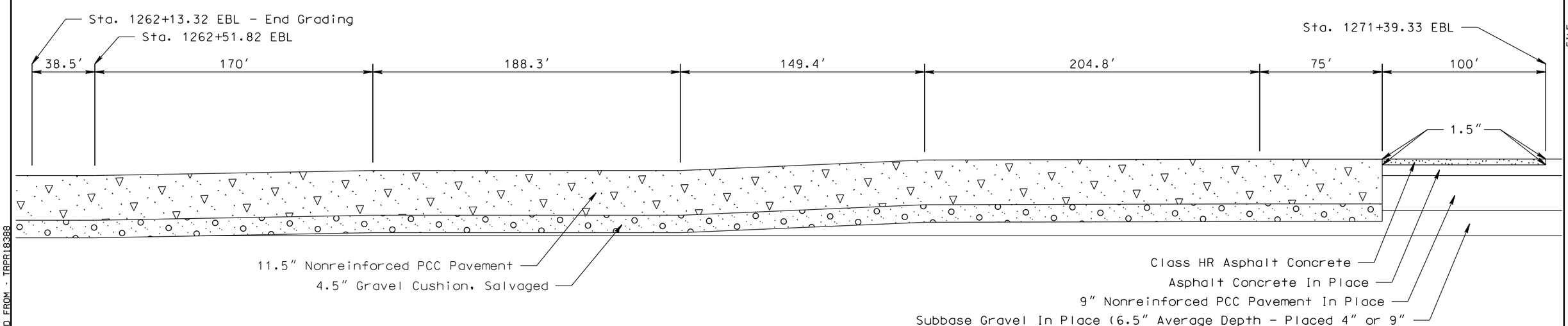

PLOT SCALE - 1:15

PLOTTED FROM - TRPR19388

PLOT NAME - 51

FILE - ...\DRIVING SURF TRANS.DGN

DRIVING SURFACE TRANSITION DETAILS

STATE OF SOUTH DAKOTA	PROJECT	SHEET	TOTAL SHEETS
	IM 0901(38)40	F65	F87

Plotting Date: 08/08/2016

Sheet 2 of 2 Sheets

NOT TO SCALE

Cold Milling Asphalt Concrete

Remove PCC Pavement (See Section B - Grading)

Unclassified Excavation - Granular Base Material to be salvaged and stockpiled (See Section B - Grading)

See TYPICAL SURFACING SECTIONSand SURFACING DETAILS FOR MEDIAN CROSSOVERS for additional details for removal and surfacing.

WESTBOUND LANES - STA. 262+33.45 TO STA. 271+07.01

LONGITUDINAL SECTION AT CENTERLINE SHOWING REMOVAL OF IN PLACE SURFACING

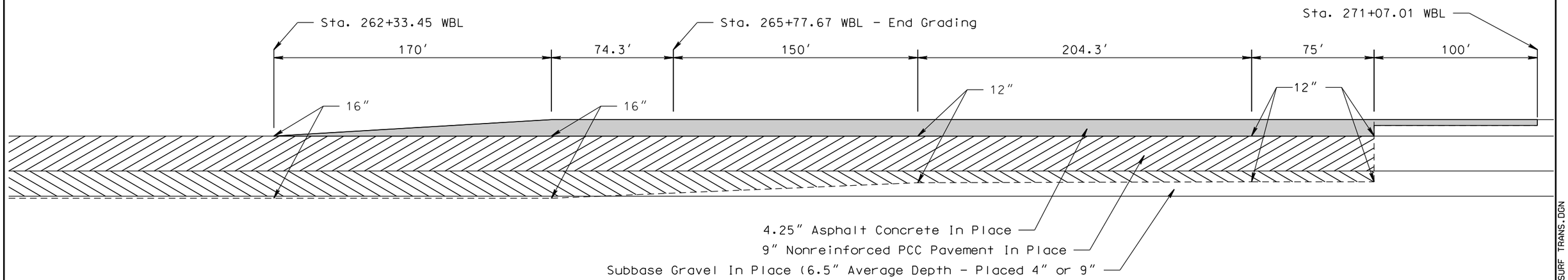

LONGITUDINAL SECTION AT CENTERLINE SHOWING SURFACING

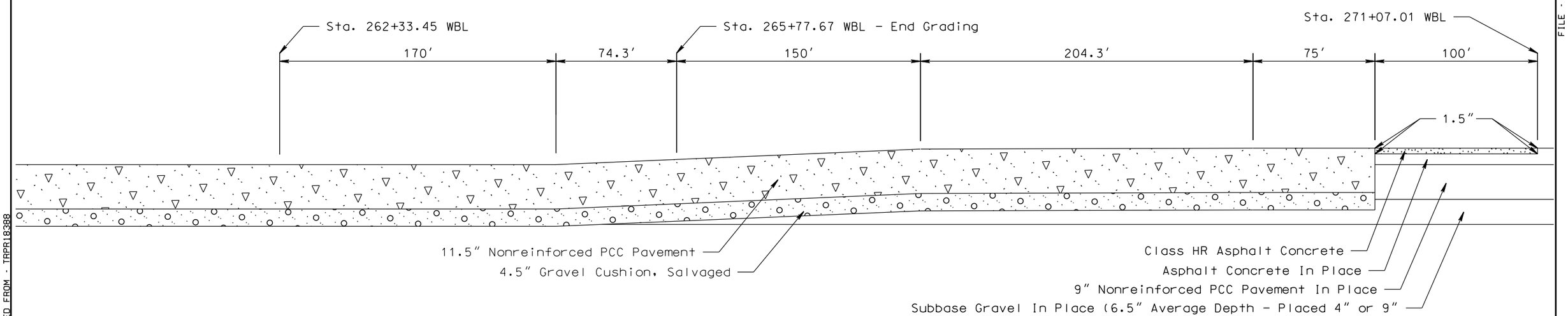

PLOT SCALE - 1:15

PLOT NAME - 52

FILE - ...\DRIVING SURF TRANS.DGN

PLOTTED FROM - TRPR18388

ADDITIONAL SURFACING FOR GUARDRAIL LAYOUT

STATE OF SOUTH DAKOTA	PROJECT	SHEET	TOTAL SHEETS
	IM 0901(38)40	F66	F87

Plotting Date: 08/08/2016

Scale 1 Inch = 30 Feet
Sheet 1 of 9 Sheets

Area to be surfaced with 14" Base Course, Salvaged and 2" Class HR Asphalt Concrete

Area to be surfaced with Base Course, Salvaged - Variable Depth (6" Minimum)

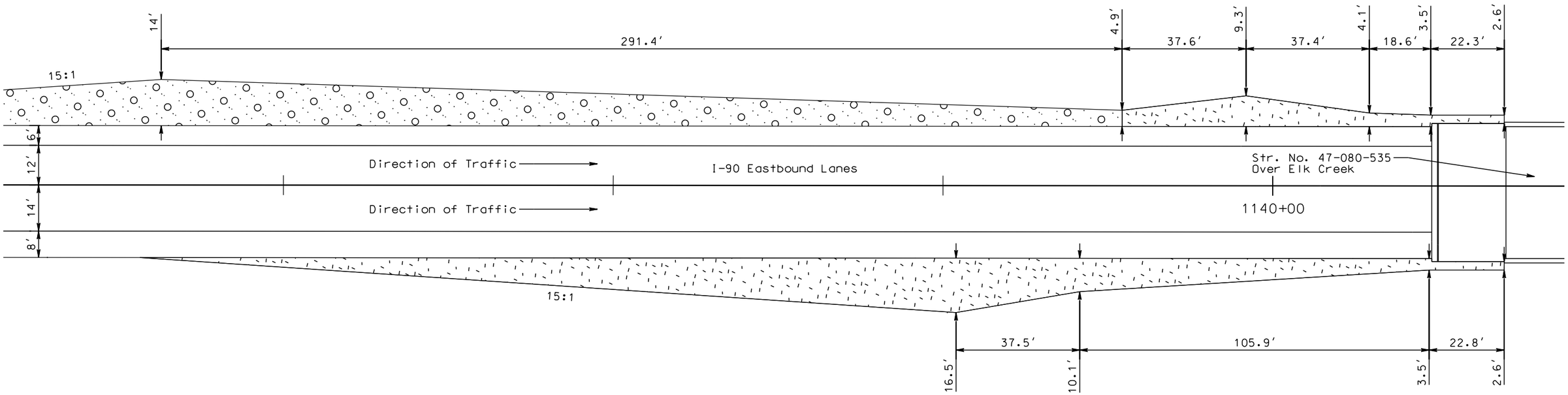

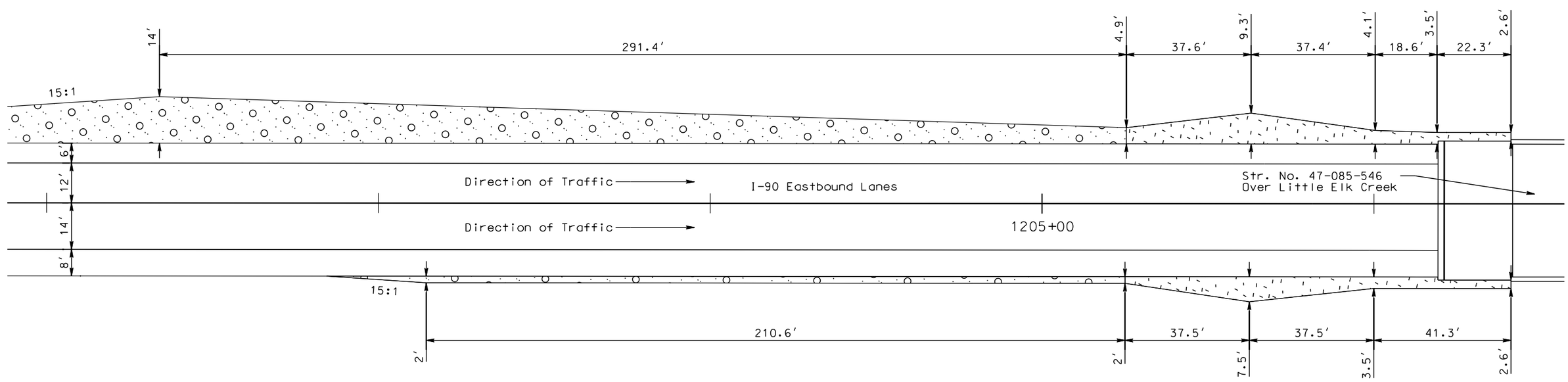

PLOT SCALE - 1:30

PLOT NAME - 53

FILE - ...\ADDITIONAL GUARDRAIL SURFACING.DGN

PLOTTED FROM - TRPR19388

ADDITIONAL SURFACING FOR GUARDRAIL LAYOUT

STATE OF SOUTH DAKOTA	PROJECT	SHEET	TOTAL SHEETS
	IM 0901(38)40	F67	F87

Plotting Date: 08/08/2016

Scale 1 Inch = 30 Feet
Sheet 2 of 9 Sheets

Area to be surfaced with 14" Base Course, Salvaged and 2" Class HR Asphalt Concrete

Area to be surfaced with Base Course, Salvaged - Variable Depth (6" Minimum)

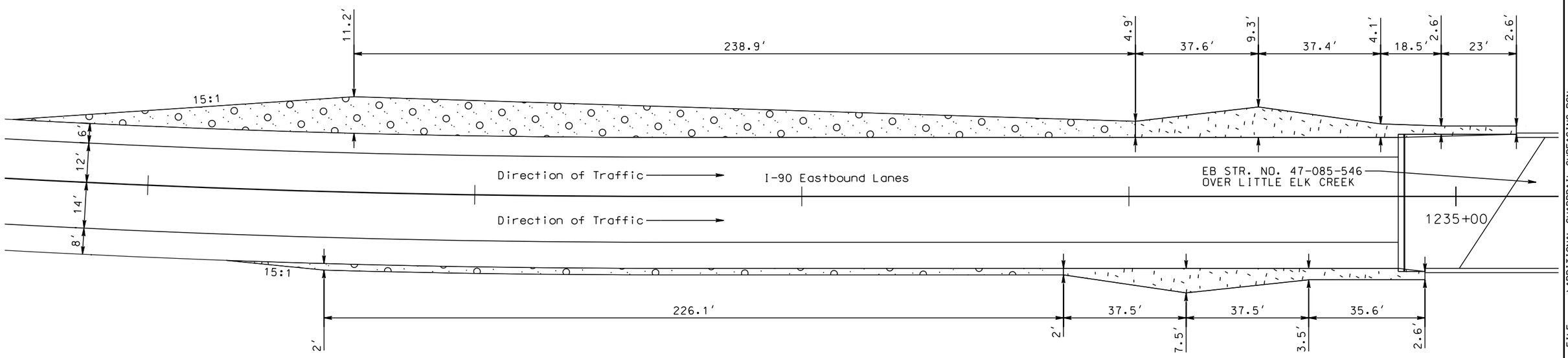

PLOT SCALE - 1:30

PLOT NAME - 54

FILE - ...\ADDITIONAL GUARDRAIL SURFACING.DGN

PLOTTED FROM - TRPR18388

ADDITIONAL SURFACING FOR GUARDRAIL LAYOUT

STATE OF SOUTH DAKOTA	PROJECT	SHEET	TOTAL SHEETS
	IM 0901(38)40	F68	F87

Plotting Date: 08/08/2016

Scale 1 Inch = 30 Feet
Sheet 3 of 9 Sheets

Area to be surfaced with 14" Base Course, Salvaged and 2" Class HR Asphalt Concrete

Area to be surfaced with Base Course, Salvaged - Variable Depth (6" Minimum)

Area to be surfaced with 16" Base Course, Salvaged and shall be removed upon completion of the project.

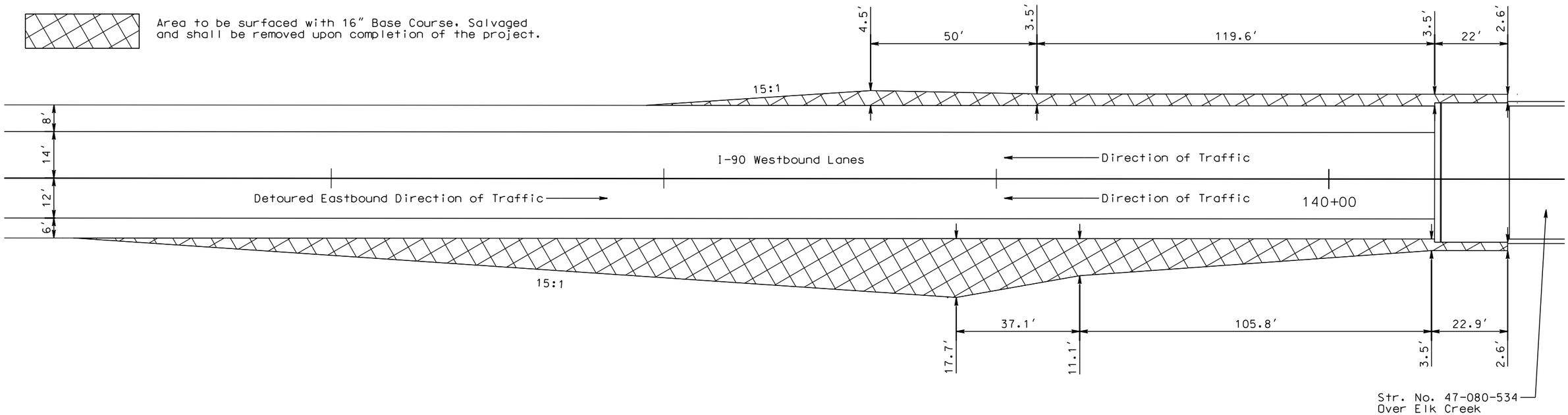

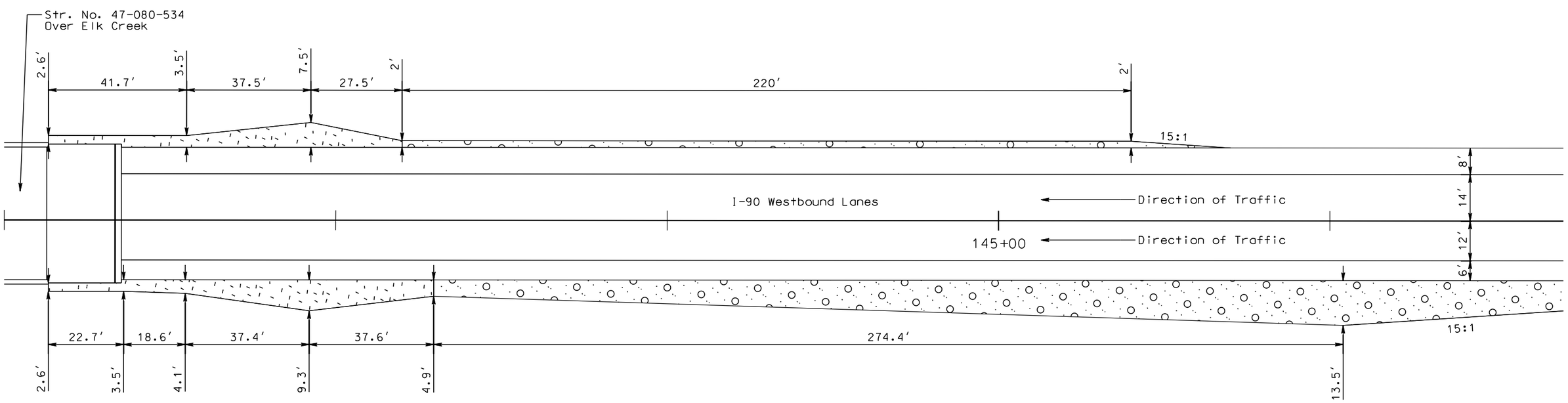

PLOT SCALE - 1:30

PLOTTED FROM - TRPR19388

PLOT NAME - 55

FILE - ...\ADDITIONAL GUARDRAIL SURFACING.DGN

ADDITIONAL SURFACING FOR GUARDRAIL LAYOUT

STATE OF SOUTH DAKOTA	PROJECT	SHEET	TOTAL SHEETS
	IM 0901(38)40	F69	F87

Plotting Date: 08/08/2016

Scale 1 Inch = 30 Feet
Sheet 4 of 9 Sheets

Area to be surfaced with 14" Base Course, Salvaged and 2" Class HR Asphalt Concrete

Area to be surfaced with Base Course, Salvaged - Variable Depth (6" Minimum)

Area to be surfaced with 16" Base Course, Salvaged and shall be removed upon completion of the project.

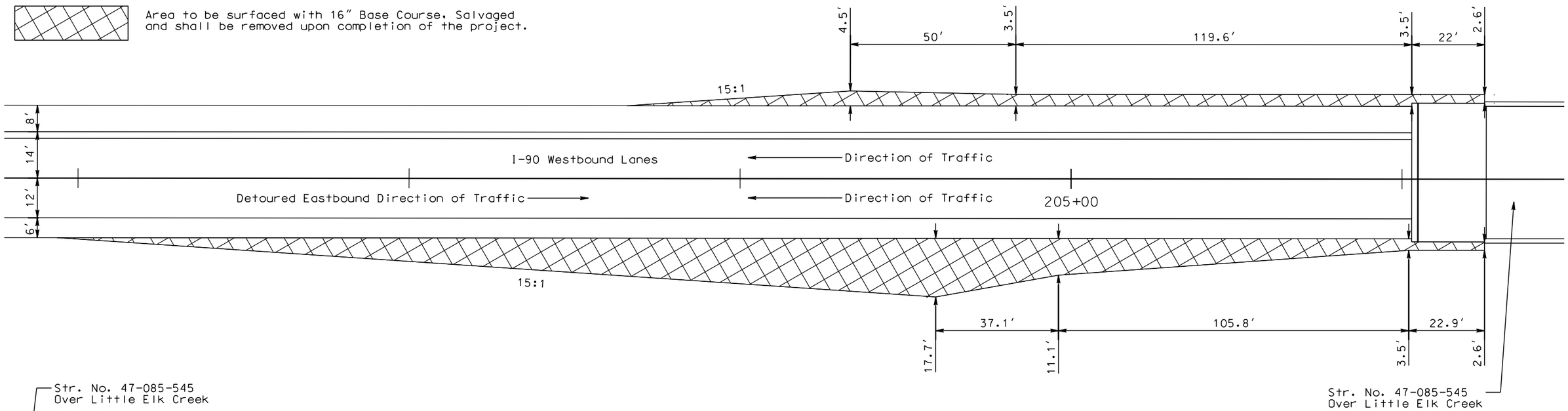

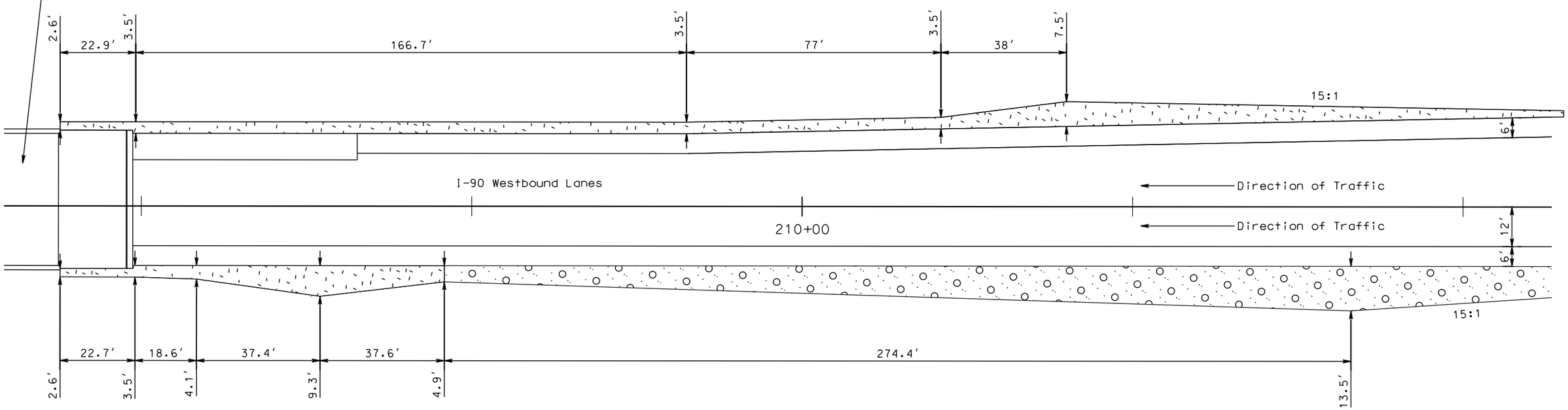

PLOT SCALE - 1:30

PLOT NAME - 56

FILE - ...\ADDITIONAL GUARDRAIL SURFACING.DGN

PLOTTED FROM - TRPR18398

ADDITIONAL SURFACING FOR GUARDRAIL LAYOUT

STATE OF SOUTH DAKOTA	PROJECT	SHEET	TOTAL SHEETS
	IM 0901(38)40	F70	F87

Plotting Date: 08/08/2016

Scale 1 Inch = 30 Feet
Sheet 5 of 9 Sheets

Area to be surfaced with 14" Base Course, Salvaged and 2" Class HR Asphalt Concrete

Area to be surfaced with Base Course, Salvaged - Variable Depth (6" Minimum)

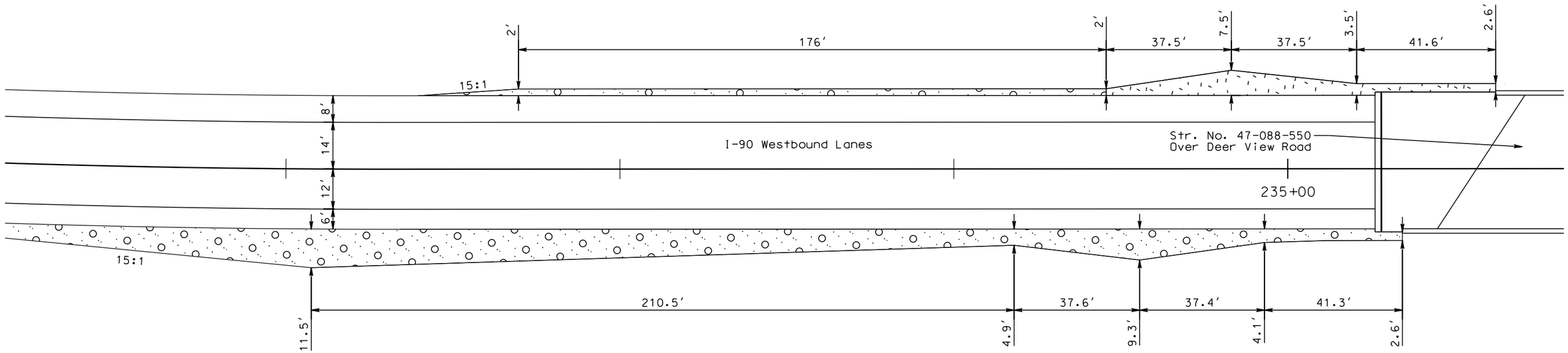

PLOT SCALE - 1:30

PLOT NAME - 57

FILE - ...\ADDITIONAL GUARDRAIL SURFACING.DGN

PLOTTED FROM - TRPR18398

ADDITIONAL SURFACING FOR GUARDRAIL LAYOUT

STATE OF SOUTH DAKOTA	PROJECT	SHEET	TOTAL SHEETS
	IM 0901(38)40	F71	F87

Plotting Date: 08/08/2016

Scale 1 Inch = 30 Feet
Sheet 6 of 9 Sheets

Area to be surfaced with 14" Base Course, Salvaged and 2" Class HR Asphalt Concrete

Area to be surfaced with Base Course, Salvaged - Variable Depth (6" Minimum)

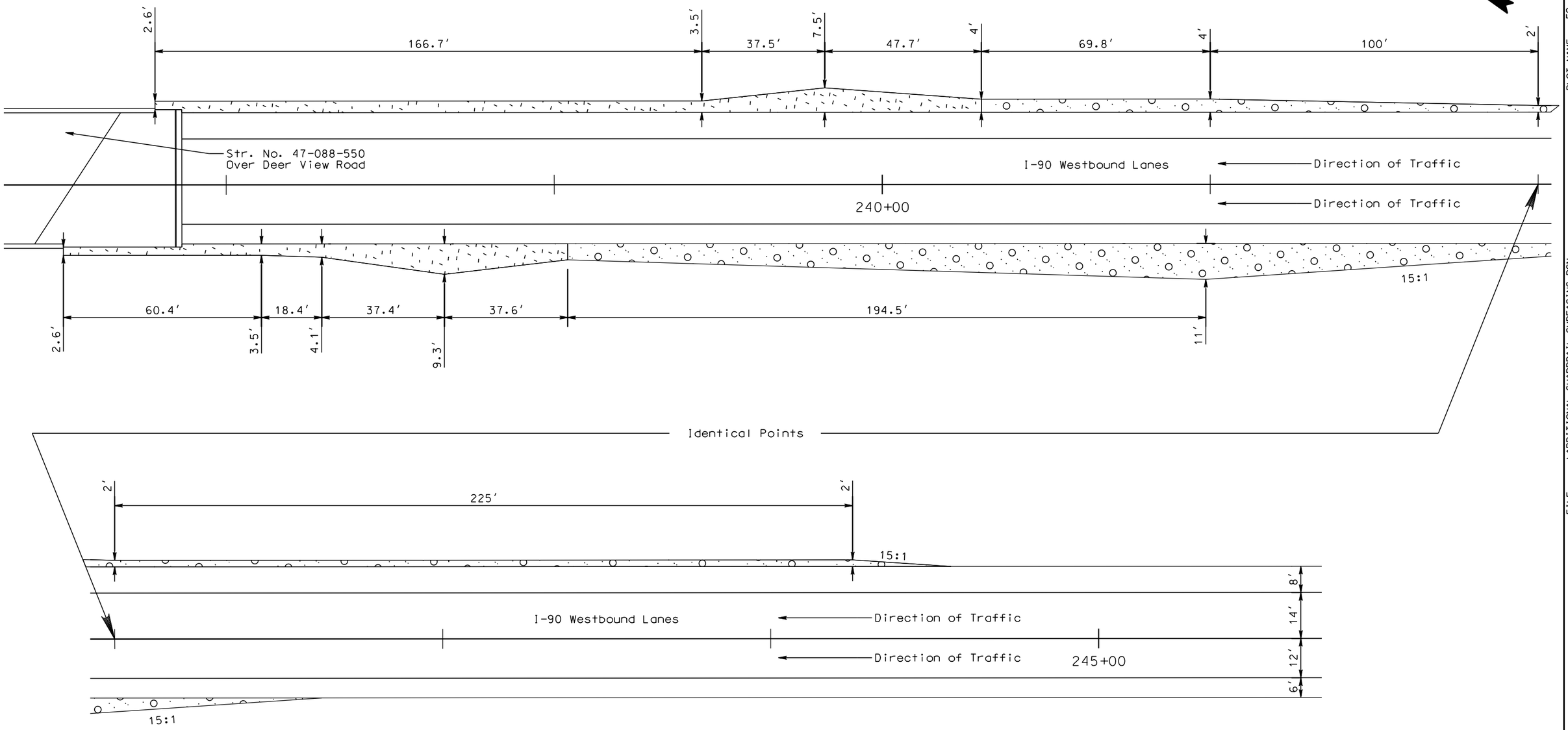

PLOT SCALE - 1:30

PLOT NAME - 58

FILE - ...\ADDITIONAL GUARDRAIL SURFACING.DGN

PLOTTED FROM - TRPR18388

ADDITIONAL SURFACING FOR GUARDRAIL LAYOUT

STATE OF SOUTH DAKOTA	PROJECT	SHEET	TOTAL SHEETS
	IM 0901(38)40	F72	F87

Plotting Date: 08/08/2016

Scale 1 Inch = 30 Feet
Sheet 7 of 9 Sheets

Areas to be excavated and reshaped for the placement of 10" Base Course, Salvaged and 2" Class HR Asphalt Concrete as directed by the Engineer.

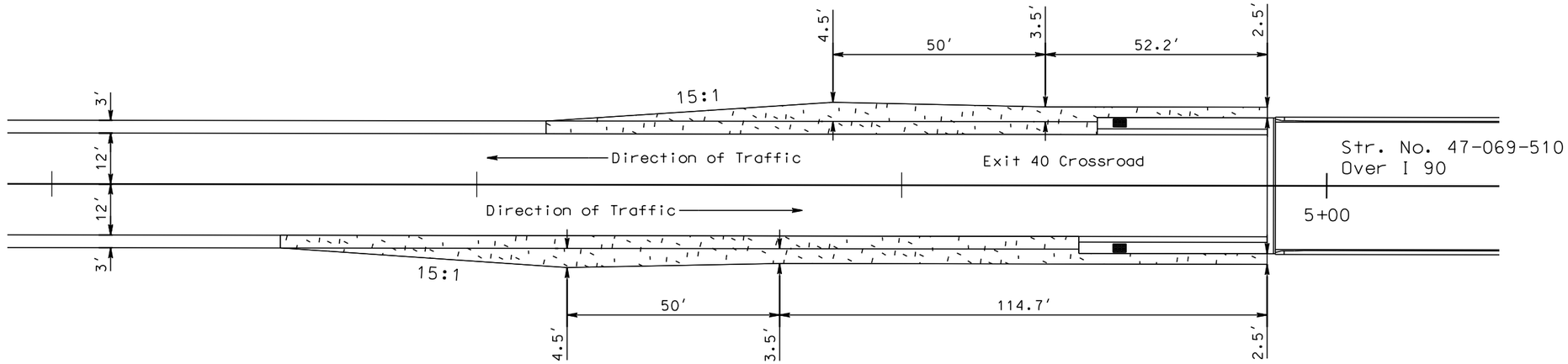

The Contractor shall use care during the removal of the existing surfacing and placement of the new surfacing so as to not damage the the in place gutter and drop inlets. Any damage shall be repaired/replaced at the Contractor's expense and to the satisfaction of the Engineer.

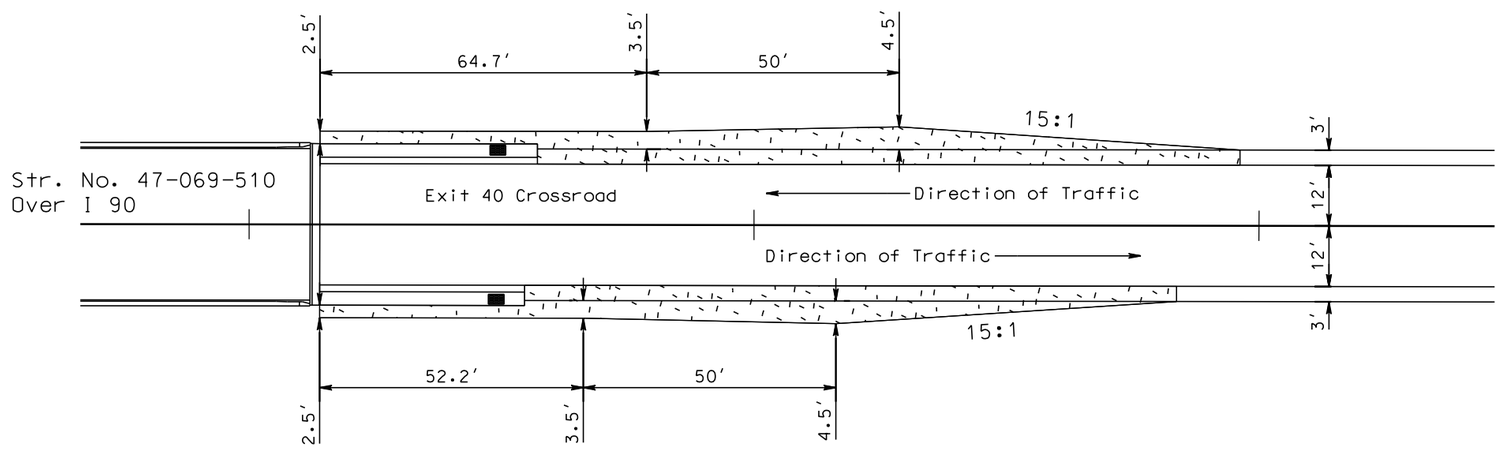

PLOT SCALE - 1:30

PLOTTED FROM - TRPR18388

PLOT NAME - 59

FILE - ...\ADDITIONAL GUARDRAIL SURFACING.DGN

ADDITIONAL SURFACING FOR GUARDRAIL LAYOUT

STATE OF SOUTH DAKOTA	PROJECT	SHEET	TOTAL SHEETS
	IM 0901(38)40	F73	F87

Plotting Date: 08/08/2016

Scale 1 Inch = 30 Feet
Sheet 8 of 9 Sheets

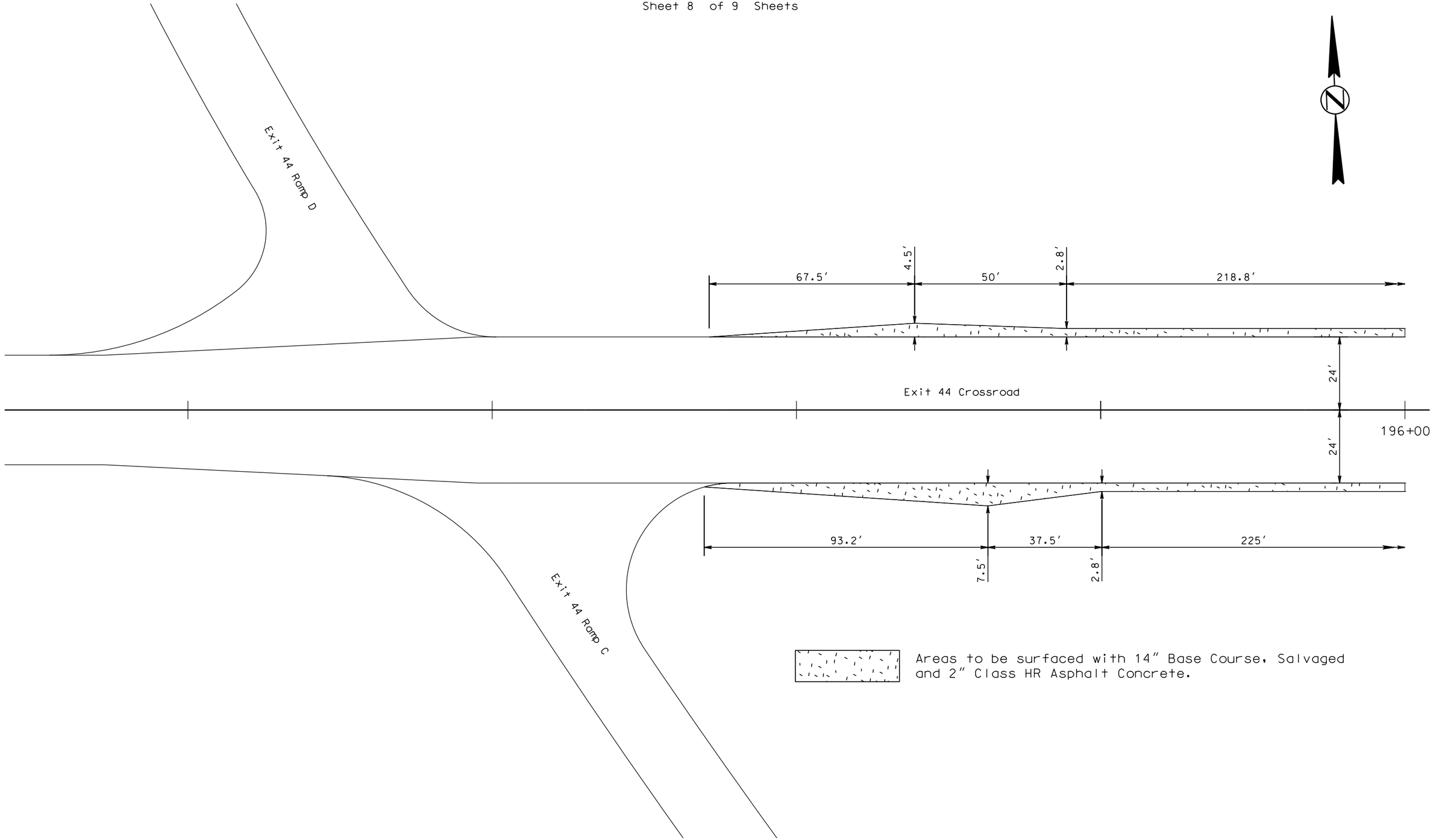

PLOT SCALE - 1:30

PLOT NAME - 60

FILE - ...\ADDITIONAL GUARDRAIL SURFACING.DGN

PLOTTED FROM - TRPR18388

ADDITIONAL SURFACING FOR GUARDRAIL LAYOUT

STATE OF SOUTH DAKOTA	PROJECT	SHEET	TOTAL SHEETS
	IM 0901(38)40	F74	F87

Plotting Date: 08/08/2016

Scale 1 Inch = 30 Feet
Sheet 9 of 9 Sheets

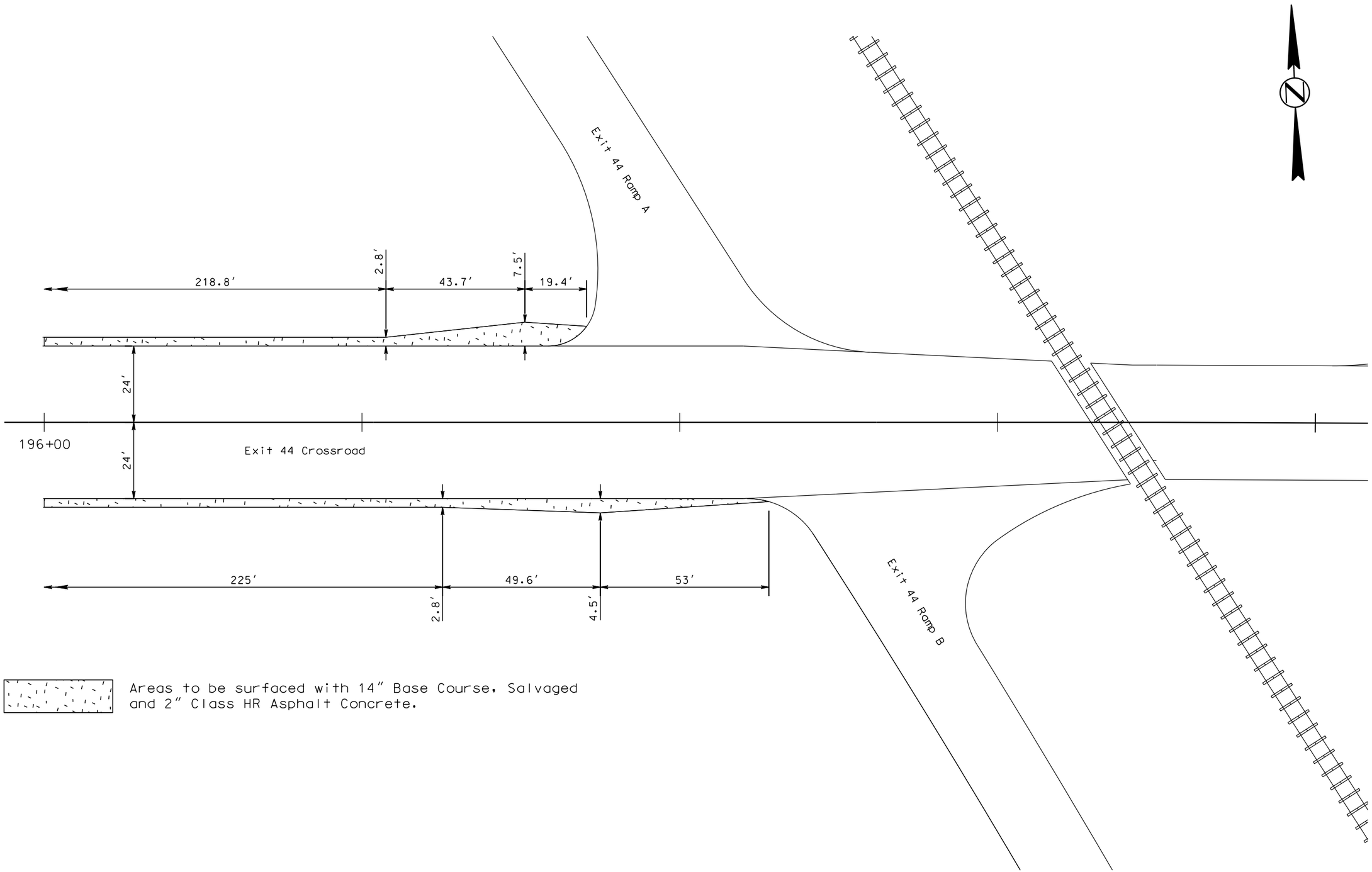

Areas to be surfaced with 14" Base Course, Salvaged and 2" Class HR Asphalt Concrete.

PLOT SCALE - 1:30

PLOT NAME - 61

FILE - ...\ADDITIONAL GUARDRAIL SURFACING.DGN

PLOTTED FROM - TRPR18388

STATE OF SOUTH DAKOTA	PROJECT	SHEET	TOTAL SHEETS
	IM 0901(38)40	F75	F87

Plotting Date: 08/08/2016

SURFACING DETAILS FOR MEDIAN CROSSOVER AT STA. 10+00 WBL & STA. 1010+00 EBL

See TYPICAL SURFACING SECTIONS located elsewhere in these plans for additional details for removal of existing surfacing and placing new surfacing.

Area to be surfaced with 4.5" Gravel Cushion, Salvaged, 3.5" Base Course, Salvaged and 2 - 3" Lifts & 1 - 2" Lift Class HR Asphalt Concrete

There are pipes and pipe ends located in the area of the median crossover that may be encountered during construction. The Contractor shall use care during the removal of the existig surfacing and placement of the new sufacing, so as to not damage the pipes and pipe ends. Any pipes or pipe ends damaged during construction shall be repaired/replaced at the Contractor's expense and to the satisfaction of the Engineer.

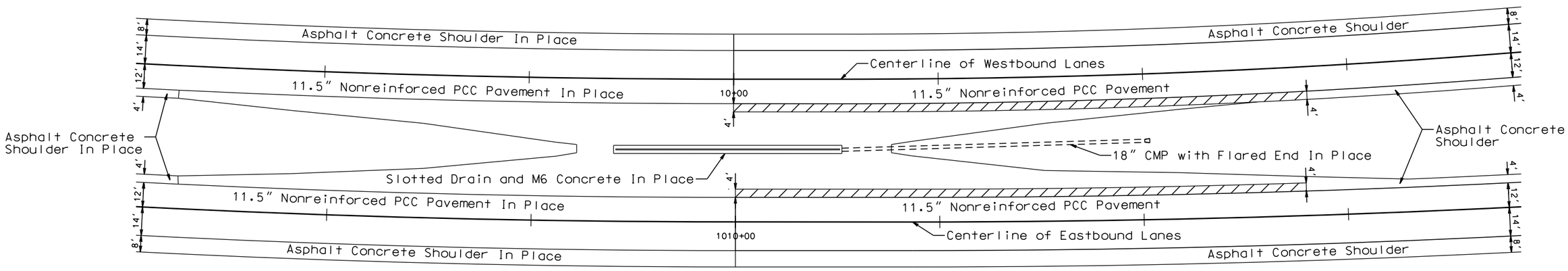

PLOT SCALE - 1:50

PLOTTED FROM - TRPR19388

PLOT NAME - 62

FILE - ...\MEAD5580\MEDIAN CROSSOVER.DGN

STATE OF SOUTH DAKOTA	PROJECT	SHEET	TOTAL SHEETS
	IM 0901(38)40	F76	F87

Plotting Date: 08/08/2016

SURFACING DETAILS FOR MEDIAN CROSSOVER AT STA. 165+00 WBL & STA. 1165+16.38 EBL

See TYPICAL SURFACING SECTIONS located elsewhere in these plans for additional details for removal of existing surfacing and placing new surfacing.

Area to be surfaced with 4.5" Gravel Cushion, Salvaged, 3.5" Base Course, Salvaged and 2 - 3" Lifts & 1 - 2" Lift Class HR Asphalt Concrete

Area to be surfaced with 2 - 3" Lifts & 1 - 2" Lift Class HR Asphalt Concrete

There are pipes and pipe ends located in the area of the median crossover that may be encountered during construction. The Contractor shall use care during the removal of the existig surfacing and placement of the new sufacing, so as to not damage the pipes and pipe ends. Any pipes or pipe ends damaged during construction shall be repaired/replaced at the Contractor's expense and to the satisfaction of the Engineer.

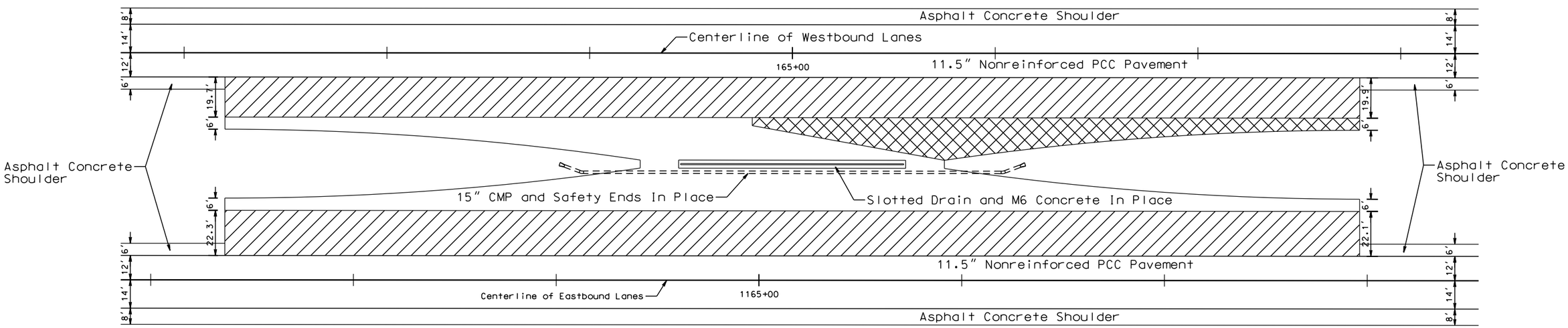

PLOT SCALE - 1:50

PLOT NAME - 63

FILE - ...\MEAD5580\MEDIAN CROSSOVER.DGN

PLOTTED FROM - TRPR19388

STATE OF SOUTH DAKOTA	PROJECT	SHEET	TOTAL SHEETS
	IM 0901(38)40	F77	F87

Plotting Date: 08/08/2016

SURFACING DETAILS FOR MEDIAN CROSSOVER AT STA. 270+07.01 WBL & STA. 1270+39.33 EBL

See TYPICAL SURFACING SECTIONS located elsewhere in these plans for additional details for removal of existing surfacing and placing new surfacing.

Area to be surfaced with 4.5" Gravel Cushion, Salvaged, 3.5" Base Course, Salvaged and 2 - 3" Lifts & 1 - 1.5" Lift Class HR Asphalt Concrete

Area to receive variable depth (1.5" to 4.25") of cold milling asphalt concrete and surfaced with 1.5" Class HR Asphalt Concrete

Area to be surfaced with Gravel Cushion, Salvaged (Variable Depth) and 2 - 3" Lifts & 1 - 2" LiftClass HR Asphalt Concrete to transition new shoulder slope to existing shoulder slope.

There are pipes and pipe ends located in the area of the median crossover that may be encountered during construction. The Contractor shall use care during the removal of the existig surfacing and placement of the new sufacing, so as to not damage the pipes and pipe ends. Any pipes or pipe ends damaged during construction shall be repaired/replaced at the Contractor's expense and to the satisfaction of the Engineer.

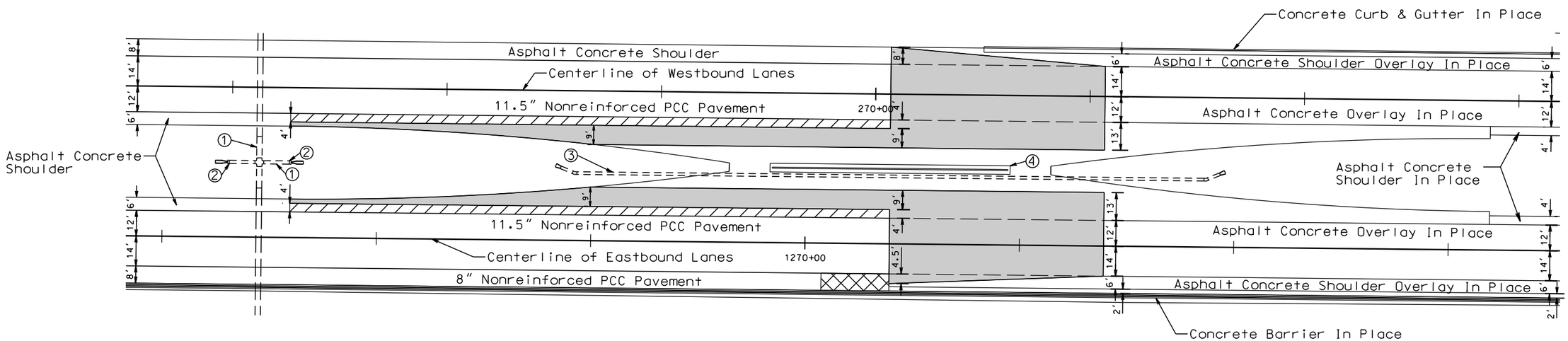

① 30" RCP In Place

② 18" RCP with Safety End In Place

③ 15" CMP with Safety Ends In Place

④ Slotted Drain and M6 Concrete In Place

PLOT SCALE - 1:50

PLOTTED FROM - TRPR18388

PLOT NAME - G4

FILE - ...\MEAD5580\MEDIAN CROSSOVER.DGN

STATE OF SOUTH DAKOTA	PROJECT	SHEET	TOTAL SHEETS
	IM 0901(38)40	F78	F87

Plotting Date: 08/08/2016

Typical On Ramp Acceleration Lane Details

Notes:

Stationing for existing ramp is for reference only.

2% Crown Slope for interstate may vary depending on horizontal geometrics.

See P.C.C. Pavement Joint Layout Sheets for Concrete Joint Pavement Details.

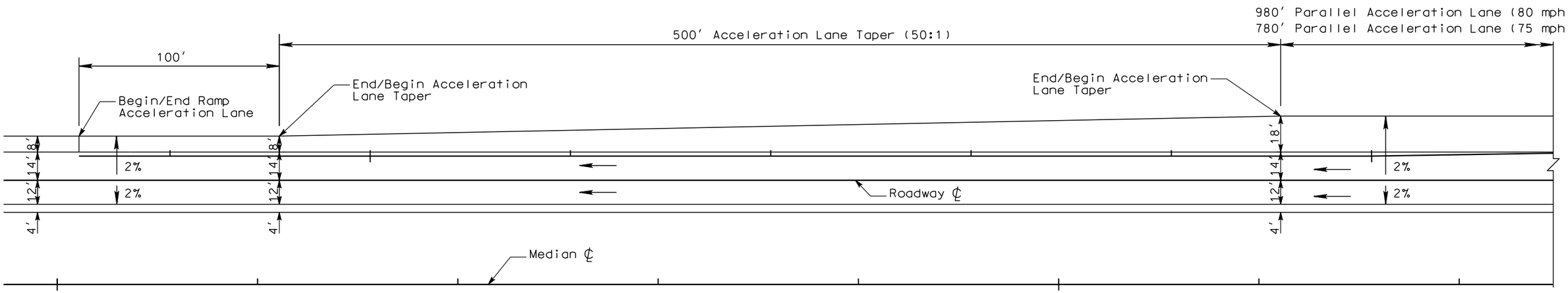

(#%) Slope Varies. See Section B - Grading.

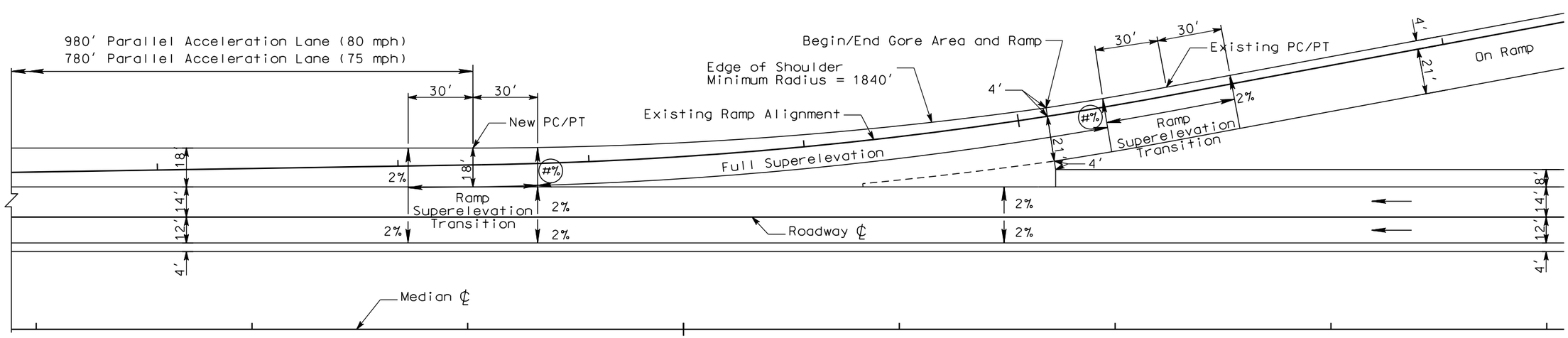

PLOT SCALE - 1:49.8506

PLOTTED FROM - TRPR18388

PLOT NAME - 65

FILE - ...\PRJ\MEAD5580\RAMP DETAILS.DGN

STATE OF SOUTH DAKOTA	PROJECT	SHEET	TOTAL SHEETS
	IM 0901(38)40	F79	F87

Plotting Date: 08/08/2016

Typical Off Ramp Deceleration Lane Details

Notes:

Stationing for existing ramp is for reference only.

2% Crown Slope for interstate may vary depending on horizontal geometrics.

See P.C.C. Pavement Joint Layout Sheets for Concrete Joint Pavement Details.

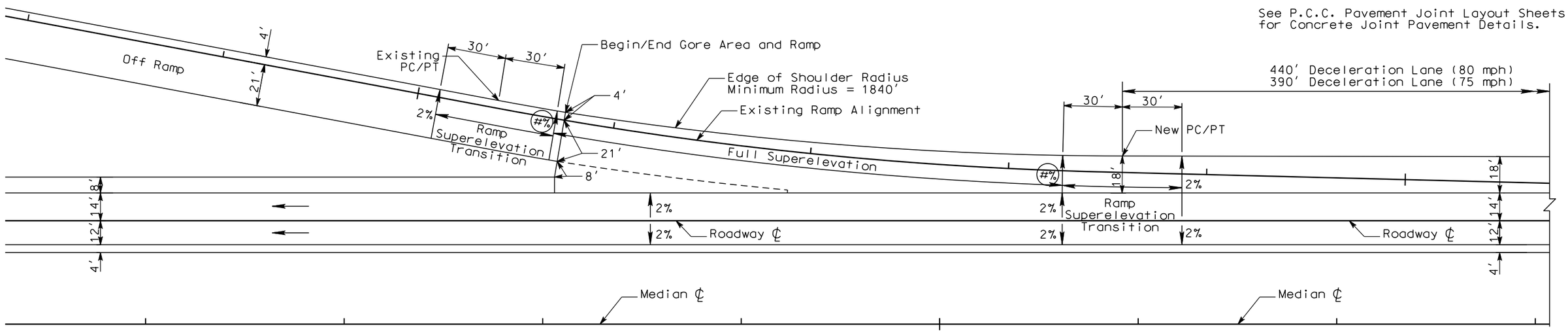

#% Slope Varies. See Section B - Grading.

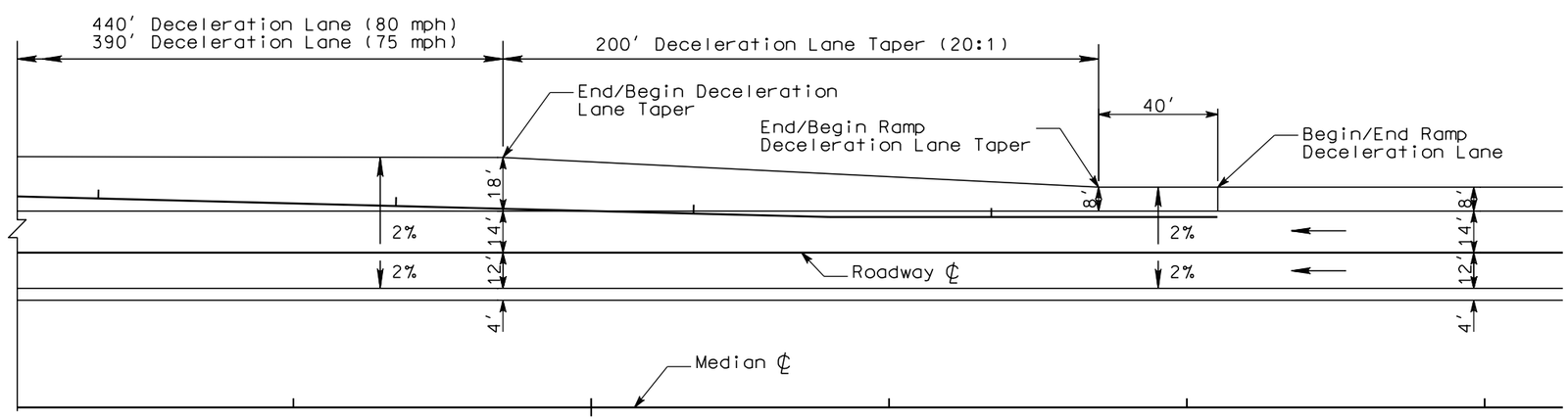

PLOT SCALE - 1:49.8506

PLOTTED FROM - TRPR18388

PLOT NAME - 66

FILE -...\PRJ\MEAD5580\RAMP DETAILS.DGN

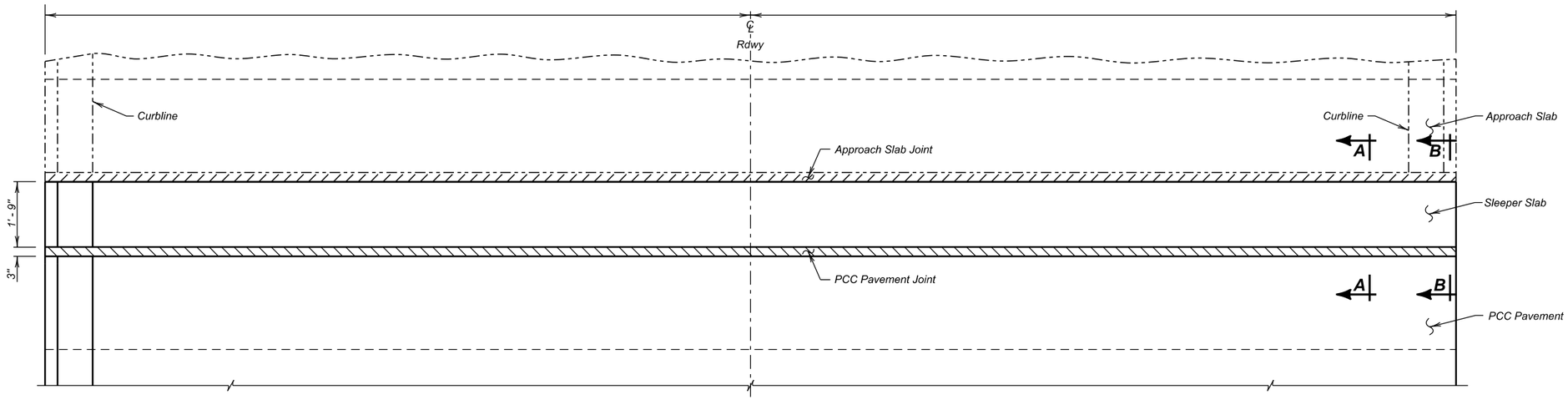

PLAN

GENERAL NOTES

1. The Membrane Sealant shall be on the approved product list for Membrane Sealant Expansion Joints.
2. The manufacturer shall supply the membrane sealant in packaging that precompresses the membrane sealant. The precompressed dimension shall be as recommended by the sealant manufacturer, however, in no case shall the precompressed dimension exceed 75% of the joint opening width. The foam sealant shall be slowly self expanding to permit workers ample time to install the membrane sealant before the membrane sealant exceeds the joint opening width.
3. The membrane sealant shall provide a water tight seal throughout a joint movement range of + 25% (minimum) from the specified joint opening dimension.
4. The membrane sealant shall be supplied in pieces a minimum of 5 feet in length. The foam sealant shall be ultra-violet and ozone resistant.
5. The bonding adhesive used to attach the membrane sealant to the adjacent concrete shall be approved by the membrane sealant manufacturer.
6. Adhesive used to join adjacent pieces of the membrane sealant shall be as recommended by the manufacturer.
7. If Styrofoam filler material is used in the construction, it shall be closed cell and water-tight as approved by the Engineer.
8. The minimum ambient air temperature at the time of joint installation and adhesive curing shall be 40° F.
9. A technical representative of the membrane sealant manufacturer shall be present at the jobsite during installation. The technical representative shall be knowledgeable in the correct procedures for the preparation and installation of the joint material to ensure the Contractor installs the joint to the Manufacturers recommendations.
10. Surfaces that will be in contact with the membrane sealant shall be thoroughly cleaned by abrasive blasting to remove all laitance and contaminants (such as oil, curing compounds, etc.) from the surface. At a minimum, two passes of abrasive blasting with the nozzle held at an angle to within 1 to 2 inches of the surface will be required. Cleaning of the surfaces with solvents, wire brushing, or grinding shall not be permitted.
11. After abrasive blasting, but immediately prior to membrane joint installation, the entire joint contact surface shall be air blasted. The air compressor used for joint cleaning shall be equipped with trap devices capable of providing moisture-free and oil-free air at a recommended pressure of 90 psi. To obtain complete bonding with the adhesive, the adjacent surfaces must be dry and clean. The contact surfaces for the joint shall be visually inspected by the Engineer immediately prior to joint installation to verify the surface is dry and clean.
12. Individual spliced sections shall be installed as per the manufacturers' recommendations. The membrane joint sealant manufacturer shall submit a detailed installation procedure to the Engineer at least 5 days prior to joint installation for his review.
13. Traffic shall not be allowed on the joint until the bonding adhesive has had time to cure, as recommended by the manufacturer.
14. Use plywood or other material to protect concrete adjacent to the joint from spalling before any equipment is moved across the joint. Any spall areas will be repaired at the Contractor's expense by breaking out and replacing adjacent concrete, as approved by the Engineer.
15. The Membrane Sealant Expansion Joint will be measured in feet to the nearest one-tenth foot, complete in place. Measurement will be made of the overall horizontal length. The Membrane Sealant Expansion Joint will be paid for at the contract unit price per foot complete in place. Payment for this item shall be full compensation for furnishing all the required materials in place, including labor, equipment and incidentals necessary to complete the work in accordance with the plans and the foregoing specifications.

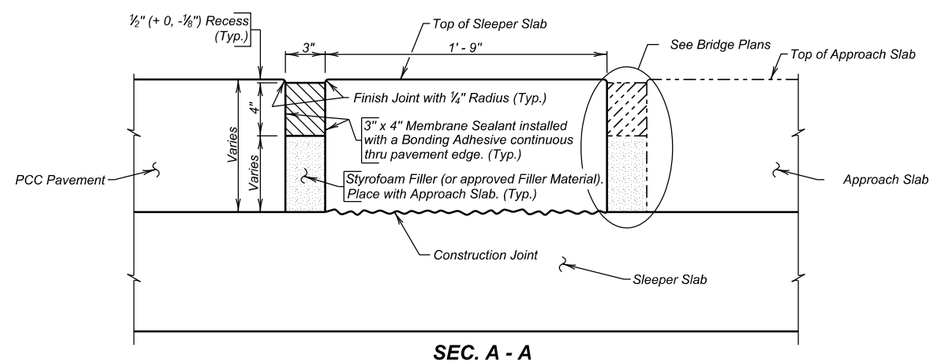

SEC. A - A

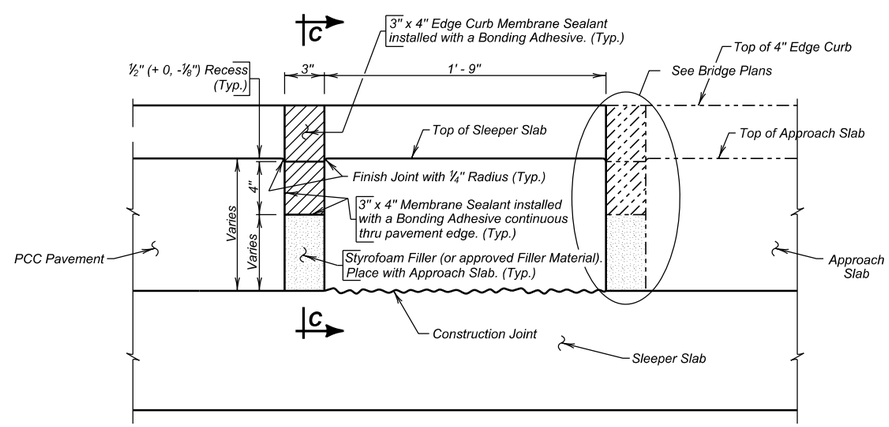

SEC. B - B

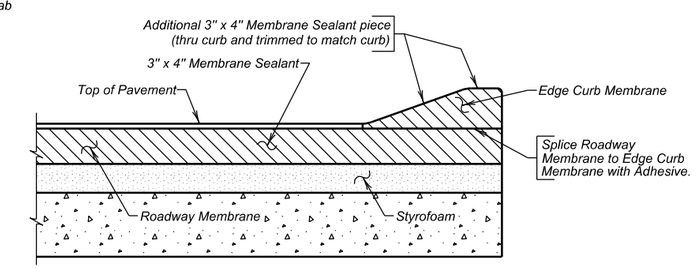

SEC. C - C

MEMBRANE SEALANT EXPANSION JOINT DETAILS FOR JOINT BETWEEN SLEEPER SLAB AND PCC PAVEMENT

PLOT SCALE - 1:0.176
PLOT NAME - 67
FILE - ...\MEMBRANE JOINT DETAIL.DGN
PLOTTED FROM - TRPR18388

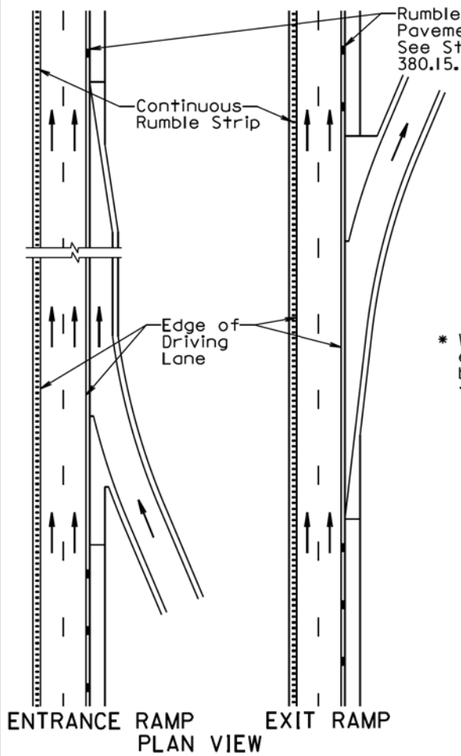

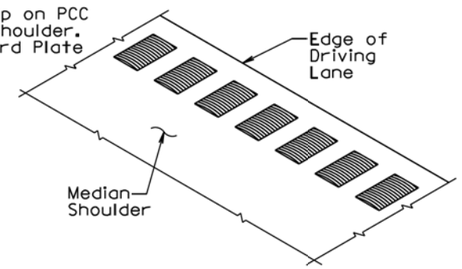

PERSPECTIVE OF TYPICAL RUMBLE STRIP IN ASPHALT CONCRETE

* When PCC pavement width from centerline to edge of pavement is 12', the rumble strip may be placed a maximum of 2' from the edge of the driving lane.

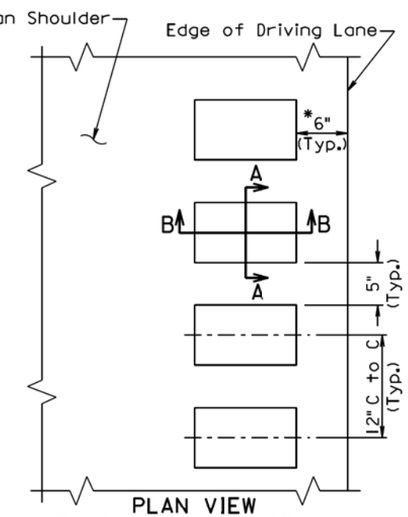

PLAN VIEW
TYPICAL RUMBLE STRIP IN ASPHALT CONCRETE

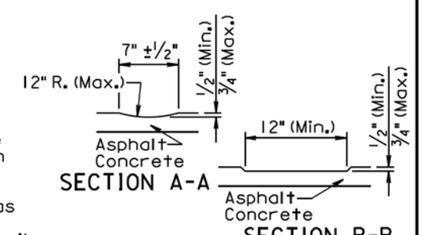

GENERAL NOTES:

A rumble strip shall be constructed on all of the asphalt concrete median shoulders by grinding continuous indentations in the asphalt concrete. The rumble strip shall receive a flush seal with the shoulder flush sealing or asphalt surface treatment.

A rumble strip should be placed through median crossovers as directed by the Engineer.

A rumble strip shall not be constructed through entrance ramps, exit ramps, and gore areas.

Prior to constructing the rumble strip the Contractor shall submit to the Engineer, for approval, the proposed method of constructing the rumble strip.

Measurement of the rumble strip in asphalt concrete shall be to the nearest 0.1 of a mile for each median shoulder. Measurement and payment of the rumble strip shall include the segments adjacent to median crossovers, entrance ramps, exit ramps, and gore areas without rumble strips. Payment for constructing the rumble strip shall be at the contract unit price per mile for "Grind 12" Rumble Strip or Stripe in Asphalt Concrete".

June 26, 2011

Published Date: 3rd Qtr. 2016	SDDOT	12" RUMBLE STRIP IN ASPHALT CONCRETE ON INTERSTATE MEDIAN SHOULDER	PLATE NUMBER 320.30
			Sheet 1 of 1

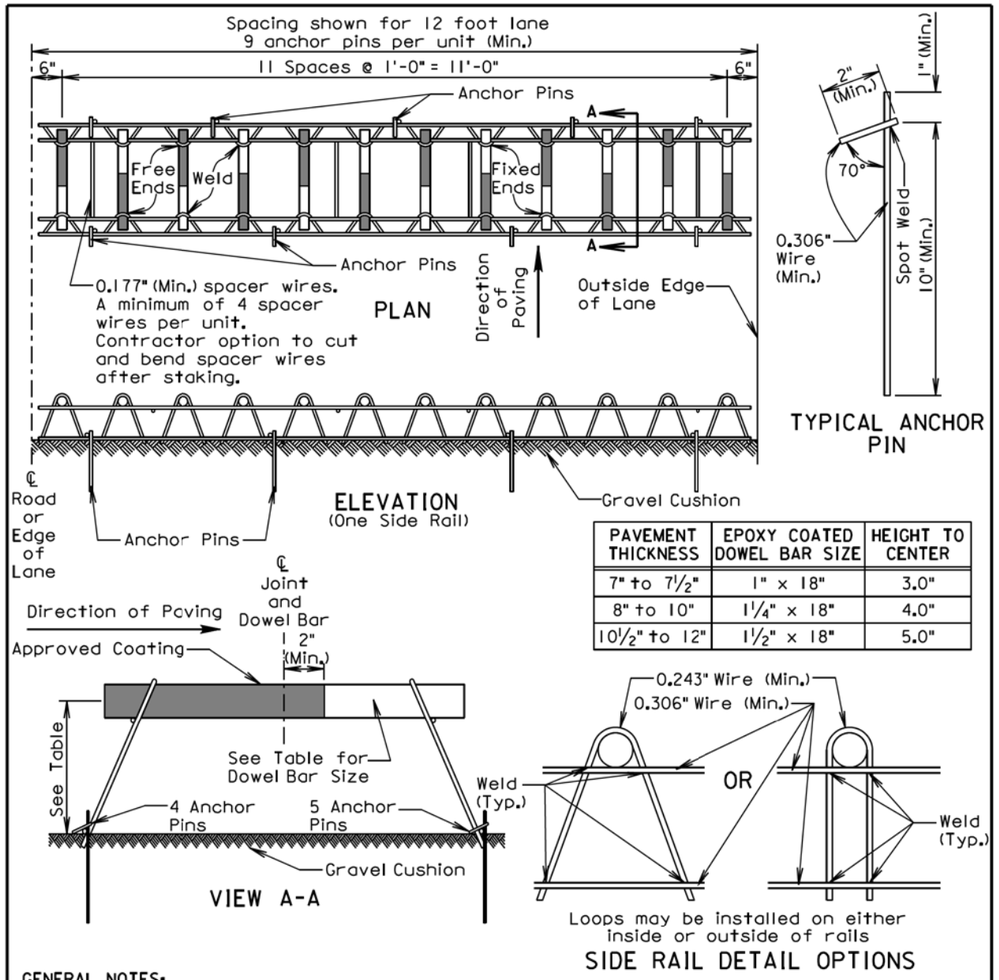

PAVEMENT THICKNESS	EPOXY COATED DOWEL BAR SIZE	HEIGHT TO CENTER
7" to 7½"	1" × 18"	3.0"
8" to 10"	1¼" × 18"	4.0"
10½" to 12"	1½" × 18"	5.0"

GENERAL NOTES:

Longitudinal joint tie bars shall be placed a minimum of 15 inches from the transverse contraction joint.

Centerline of individual dowel bars shall be parallel to top of subgrade ±1/8 inch in 18 inches and to all other dowel bars in the assembly ±1/16 inch in 18 inches.

Centerline of individual dowel bars shall be parallel to the centerline of the roadway ±1/2 inch in 18 inches.

The transverse contraction joints shall be sawed perpendicular to the centerline of the roadway and the dowel bars shall be centered on the sawed joint ±1 inch.

Supporting devices as shown on this sheet, or equivalent as approved by the Engineer, shall be used to maintain proper horizontal and vertical alignment of the dowel bars.

August 30, 2013

Published Date: 3rd Qtr. 2016	SDDOT	PCC PAVEMENT DOWEL BAR ASSEMBLY FOR TRANSVERSE CONTRACTION JOINTS 12 Bar Assembly on Granular Base Material	PLATE NUMBER 380.01
			Sheet 1 of 1

PLOT SCALE - 1:200
PLOT NAME - 68
FILE - U:\MS\PRJ\MEAD5580\SP1.DGN
PLOTTED FROM - TRPR18388

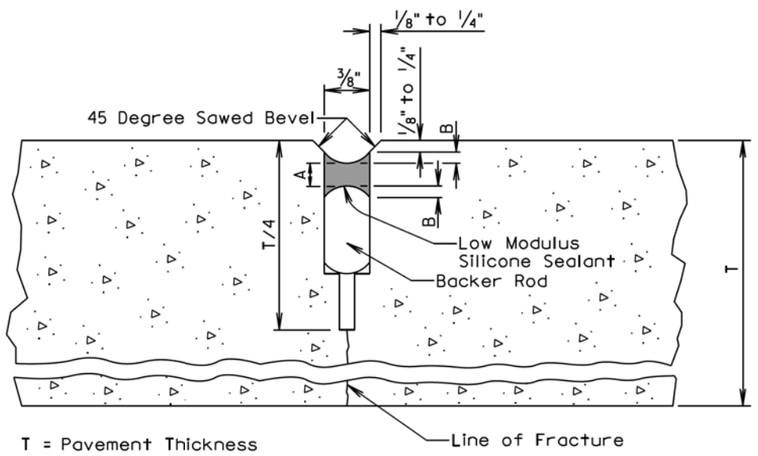

LOW MODULUS SILICONE SEALANT ALLOWABLE CONSTRUCTION TOLERANCES			
A (Min.) (In.)	A (Max.) (In.)	B (Min.) (In.)	B (Max.) (In.)
3/16	5/16	1/8	1/4

GENERAL NOTES:

The first saw cut to control cracking shall be a minimum of 1/4 the thickness of the pavement. Additional sawing for widening the saw cut to provide the width for the installation of the low modulus silicone joint sealant will be necessary.

The backer rod shall be a nonmoisture absorbing resilient material approximately 25% larger in diameter than the width of the joint to be sealed.

June 26, 2013

Published Date: 3rd Qtr. 2016

SDDOT

PCC PAVEMENT BEVELED TRANSVERSE CONTRACTION JOINT WITH OR WITHOUT DOWEL BAR ASSEMBLY

PLATE NUMBER 380.06

Sheet 1 of 1

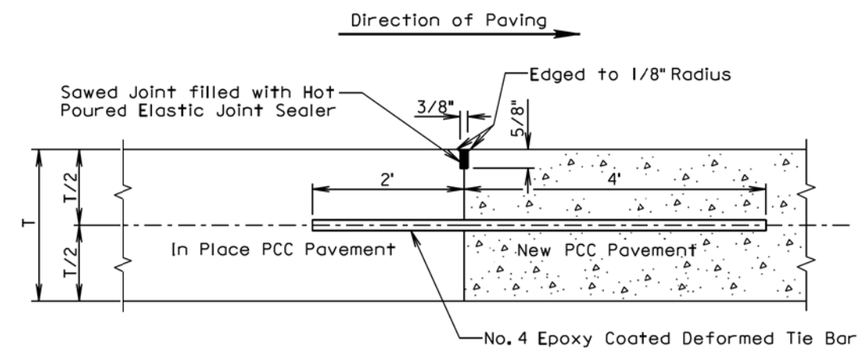

GENERAL NOTES:

No. 4 epoxy coated deformed tie bars shall be spaced 12 inches center to center and shall be a minimum of 3 inches and a maximum of 6 inches from the pavement edges.

The minimum distance between a transverse construction joint with tie bars and an adjacent transverse contraction joint shall be 5 feet.

When a transverse construction joint is made, paving will not be allowed in this area for 12 hours.

A transverse construction joint may be placed in lieu of the transverse contraction joint when shown in the plans.

The term "In Place PCC Pavement" in the above drawing indicates that the in place PCC pavement was placed on the current project.

June 26, 2013

Published Date: 3rd Qtr. 2016

SDDOT

PCC PAVEMENT MID PANEL TRANSVERSE CONSTRUCTION JOINT

PLATE NUMBER 380.07

Sheet 1 of 1

PLOT SCALE - 1:200
PLOT NAME - 69
FILE - U:\MS\PRJ\MEAD5580\SP2.DGN
-PLOTTED FROM - TRPR18388

DETAIL A
TRANSVERSE CONSTRUCTION JOINT WITH TIE BARS

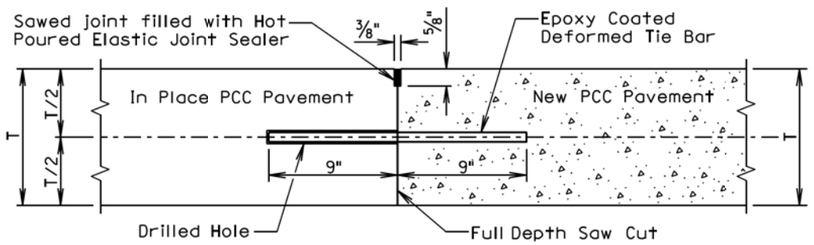

T = In Place PCC Pavement and New PCC Pavement Thickness

GENERAL NOTES:

The term "In Place PCC Pavement" in the above drawing indicates that the in place PCC pavement was placed on a previous project.

See sheet 2 of 2 of this standard plate to determine if Detail A shall be used.

The tie bars shall be embedded a minimum depth of 9 inches into the in place PCC pavement and anchored with an epoxy resin adhesive.

No. 9 epoxy coated deformed tie bars shall be used in 10 inch thickness and less PCC Pavement and No. 11 epoxy coated deformed tie bars shall be used in 10.5 inch thickness and greater PCC Pavement. The tie bar spacing shall be 18 inches center to center and shall be a minimum of 3 inches and a maximum of 9 inches from the pavement edges.

DETAIL B
TRANSVERSE CONSTRUCTION JOINT WITH DOWEL BARS

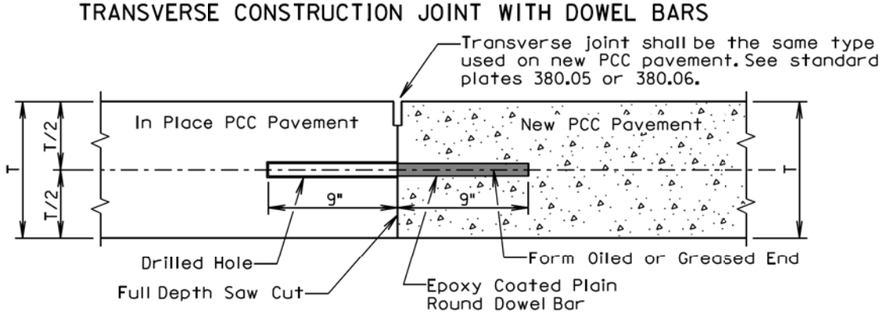

T = In Place PCC Pavement and New PCC Pavement Thickness

GENERAL NOTES:

The term "In Place PCC Pavement" in the above drawing indicates that the in place PCC pavement was placed on a previous project or current project.

See sheet 2 of 2 of this standard plate to determine if Detail B shall be used.

The plain round dowel bars shall be embedded a minimum depth of 9 inches into the in place PCC pavement and anchored with an epoxy resin adhesive.

The epoxy coated plain round dowel bar size, number, and spacing shall be the same as detailed on the corresponding dowel bar assembly standard plate (380.01, 380.02, 380.03, or 380.04). The epoxy coated plain round dowel bars shall be a minimum of 3 inches and a maximum of 6 inches from the pavement edges.

September 6, 2013

Published Date: 3rd Qtr. 2016	SDDOT	PCC PAVEMENT TRANSVERSE CONSTRUCTION JOINTS WITH TIE BARS OR DOWEL BARS	PLATE NUMBER 380.08
			Sheet 1 of 2

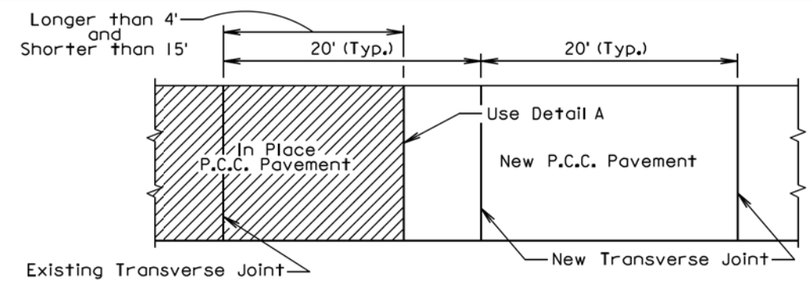

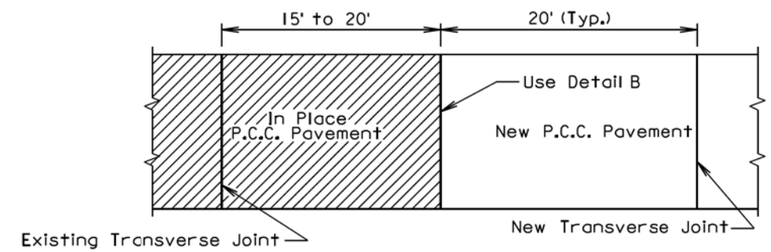

PLAN VIEW
(For typical transverse joint spacing of 20' on the current project)

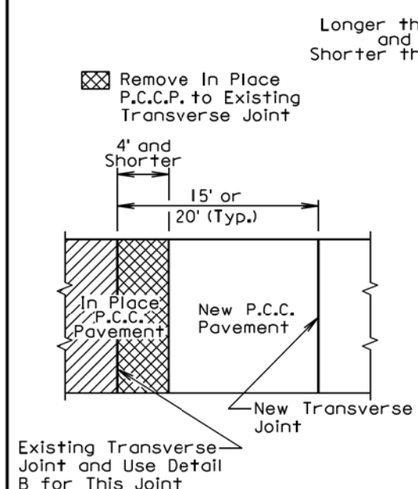

PLAN VIEW
(For typical transverse joint spacing of 15' or 20' on the current project)

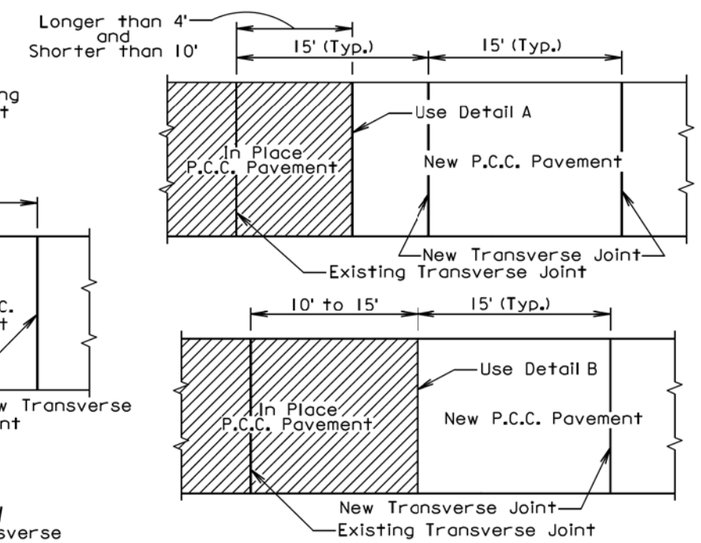

PLAN VIEW
(For typical transverse joint spacing of 15' on the current project)

September 6, 2013

Published Date: 3rd Qtr. 2016	SDDOT	PCC PAVEMENT TRANSVERSE CONSTRUCTION JOINTS WITH TIE BARS OR DOWEL BARS	PLATE NUMBER 380.08
			Sheet 2 of 2

PLOT SCALE - 1:200
PLOT NAME - 70
FILE - U:\MS\PRJ\MEAD5580\SP3.DGN
PLOTTED FROM - TRPR18388

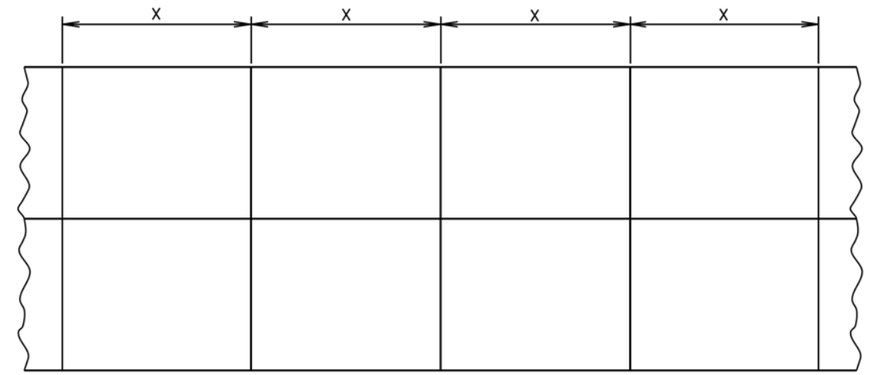

PCCP Thickness	Transverse Contraction Joint Spacing (X)
8" to 9.5"	15'
10" and Thicker	20'

August 31, 2013

Published Date: 3rd Qtr. 2016

SDDOT

PCC PAVEMENT TYPICAL CONTRACTION JOINT SPACING

PLATE NUMBER 380.09

Sheet 1 of 1

PLOT SCALE - 1:200

PLOT NAME - 71

FILE - U:\MS\PRJ\MEAD5580\SP4.DGN

-PLOTTED FROM - TRPR18388

LONGITUDINAL CONSTRUCTION JOINT WITH TIE BARS

(DRILLED IN BARS)

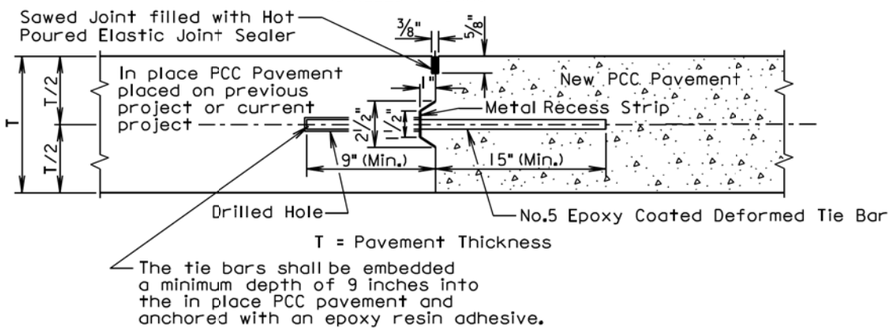

LONGITUDINAL CONSTRUCTION JOINT WITH TIE BARS

(INSERTED OR FORMED IN BARS)

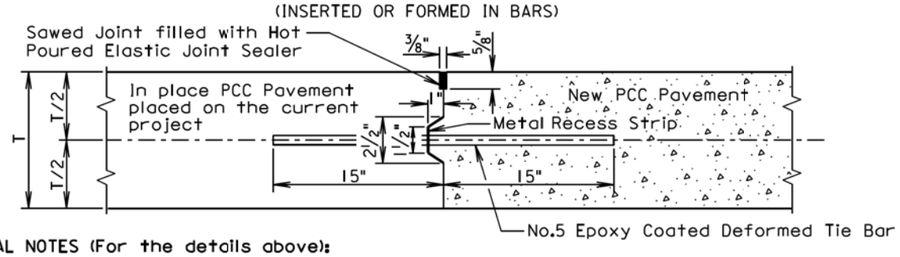

GENERAL NOTES (For the details above):

The epoxy coated deformed tie bars shall be spaced in accordance with the following tables:

Tie Bar Spacing 48" Maximum	
Transverse Contraction Joint Spacing	Number of Tie Bars
6.5' to 10'	2
10.5' to 14'	3
14.5' to 18'	4
18.5' to 22'	5

Tie Bar Spacing 30" Maximum	
Transverse Contraction Joint Spacing	Number of Tie Bars
5' to 7'	2
7.5' to 9.5'	3
10' to 12'	4
12.5' to 14.5'	5
15' to 17'	6
17.5' to 19.5'	7
20' to 22'	8

The tie bars shall be placed a minimum of 15 inches from transverse contraction joints.

The required number of tie bars as shown in the table shall be uniformly spaced within each panel. The uniformly spaced tie bars shall be spaced a maximum of 48 inches center to center for a female keyway and shall be spaced a maximum of 30 inches center to center for a vertical face and male keyway. The maximum tie bar spacing shall apply to tie bars within each panel.

The keyway illustrated in the above details depict a female keyway.

The keyway is optional and is not required. When concrete pavement is formed and a keyway is provided, a metal recess strip shall be used. When concrete pavement is slip formed, a metal recess strip is not required.

August 31, 2013

Published Date: 3rd Qtr. 2016	SDDOT	PCC PAVEMENT LONGITUDINAL JOINTS WITH TIE BARS	PLATE NUMBER 380.10
			Sheet 1 of 2

SAWED LONGITUDINAL JOINT WITH TIE BARS

(POURED MONOLITHICALLY)

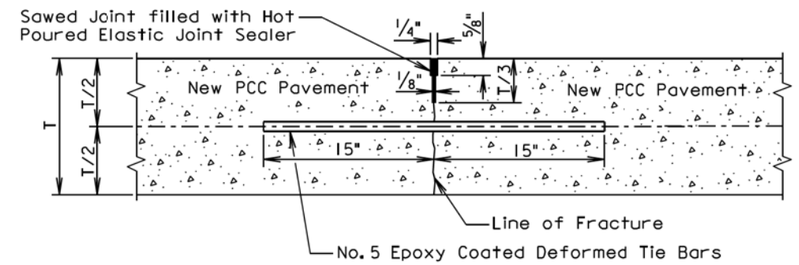

T = Pavement Thickness

GENERAL NOTES (For the detail above):

The epoxy coated deformed tie bars shall be spaced in accordance with the following table:

Tie Bar Spacing 48" Maximum	
Transverse Contraction Joint Spacing	Number of Tie Bars
6.5' to 10'	2
10.5' to 14'	3
14.5' to 18'	4
18.5' to 22'	5

The tie bars shall be placed a minimum of 15 inches from the transverse contraction joints.

The required number of tie bars as shown in the table shall be uniformly spaced within each panel with a maximum space of 48 inches center to center. The maximum tie bar spacing shall apply to tie bars within each panel.

The first saw cut to control cracking shall be a minimum of 1/3 the thickness of the pavement. Additional sawing for widening the saw cut to provide the width for the installation of the hot poured elastic joint sealer is necessary.

August 31, 2013

Published Date: 3rd Qtr. 2016	SDDOT	PCC PAVEMENT LONGITUDINAL JOINTS WITH TIE BARS	PLATE NUMBER 380.10
			Sheet 2 of 2

PLOT SCALE - 1:200
PLOT NAME - 72
FILE - U:\MS\PRJ\MEAD5580\SP5.DGN
PLOTTED FROM - TRPR18388

LONGITUDINAL CONSTRUCTION JOINT WITHOUT TIE BARS

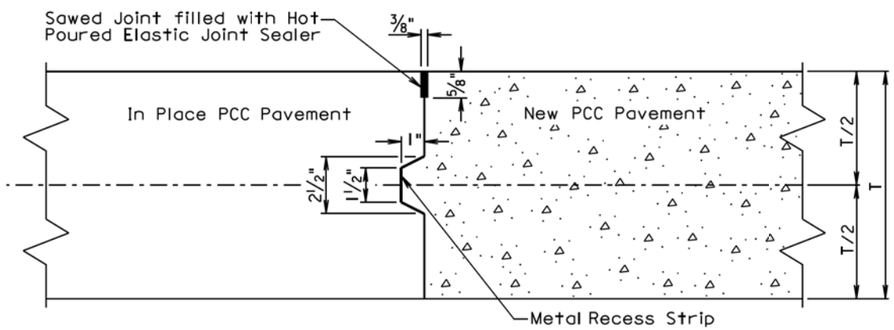

T = Pavement Thickness

GENERAL NOTES:

When concrete pavement is formed and a keyway is provided, a metal recess strip shall be used. When concrete pavement is slip formed, a metal recess strip is not required.

The term "In Place PCC Pavement" in the above drawing indicates that the in place PCC pavement was placed on the current project.

LONGITUDINAL CONSTRUCTION JOINT WITHOUT TIE BARS

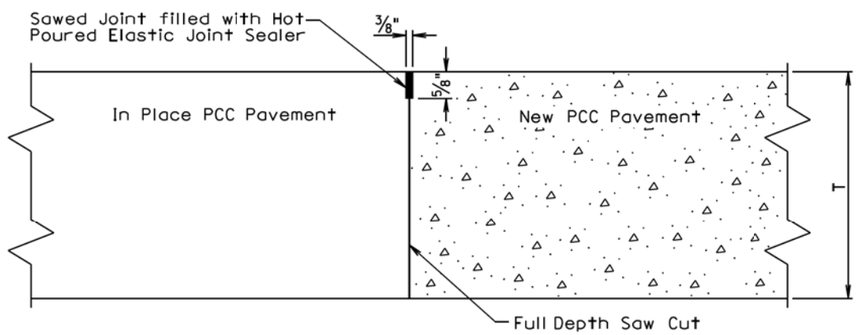

T = Pavement Thickness

GENERAL NOTE:

The term "In Place PCC Pavement" in the above drawing indicates that the in place PCC pavement was placed on a previous project.

September 14, 2001

Published Date: 3rd Qtr. 2016	SDDOT	PCC PAVEMENT LONGITUDINAL JOINTS WITHOUT TIE BARS	PLATE NUMBER 380.12
			Sheet 1 of 2

SAWED LONGITUDINAL JOINT WITHOUT TIE BARS

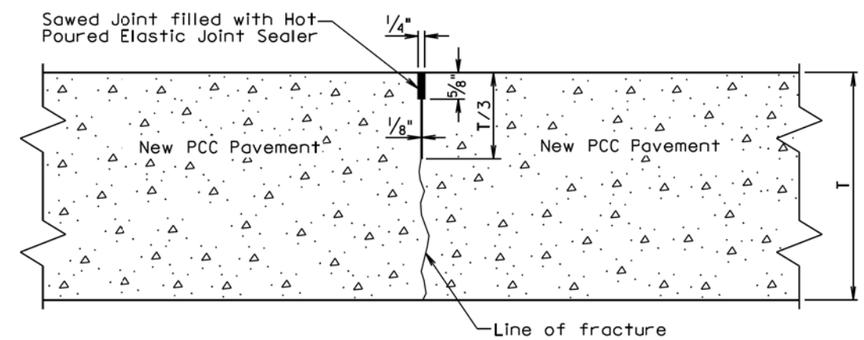

T = Pavement Thickness

GENERAL NOTE:

The first saw cut to control cracking shall be a minimum of 1/3 the thickness of the pavement. Additional sawing for widening the saw cut to provide the width for the installation of the hot poured elastic joint sealer will be necessary.

September 14, 2001

Published Date: 3rd Qtr. 2016	SDDOT	PCC PAVEMENT LONGITUDINAL JOINTS WITHOUT TIE BARS	PLATE NUMBER 380.12
			Sheet 2 of 2

PLOT SCALE - 1:200
PLOT NAME - 73
FILE - U:\MS\PRJ\MEAD5580\SP6.DGN
-PLOTTED FROM - TRPR18388

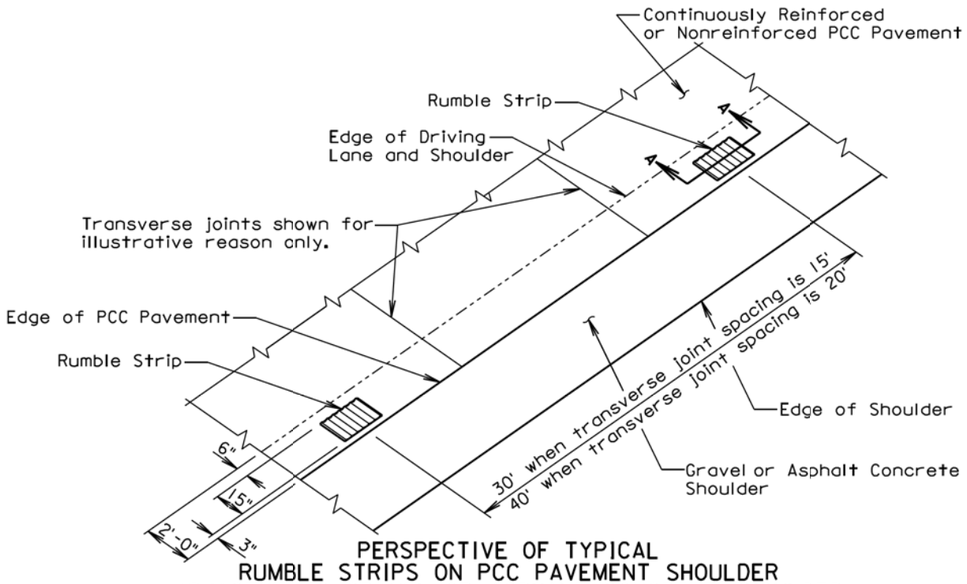

PERSPECTIVE OF TYPICAL
RUMBLE STRIPS ON PCC PAVEMENT SHOULDER
ADJACENT TO GRAVEL OR ASPHALT CONCRETE SHOULDER

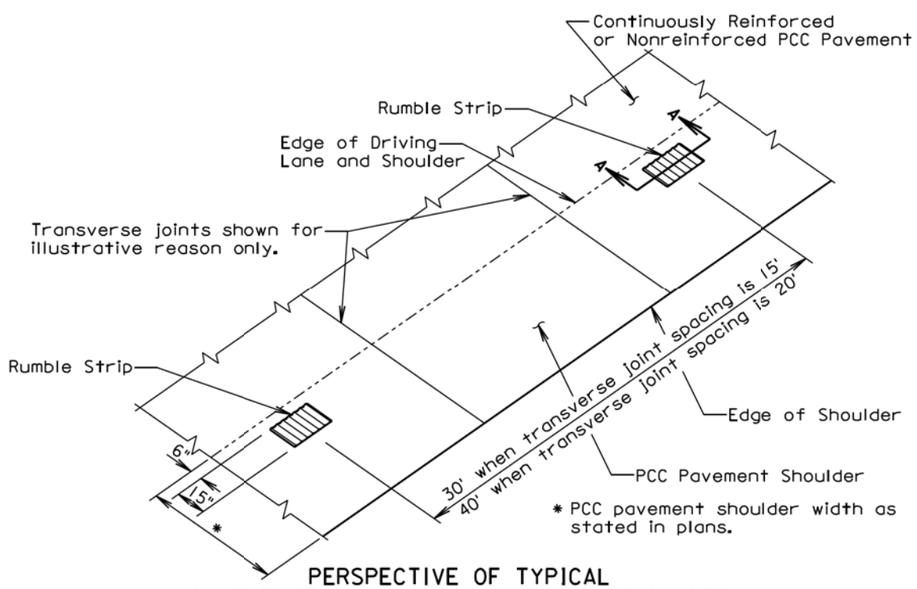

PERSPECTIVE OF TYPICAL
RUMBLE STRIPS ON PCC PAVEMENT SHOULDER

August 31, 2013

Published Date: 3rd Qtr. 2016	SDDOT	RUMBLE STRIP ON PCC PAVEMENT SHOULDER	PLATE NUMBER 380.15
			Sheet 1 of 2

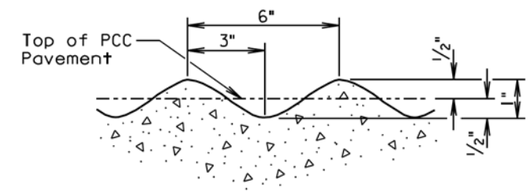

DETAIL B

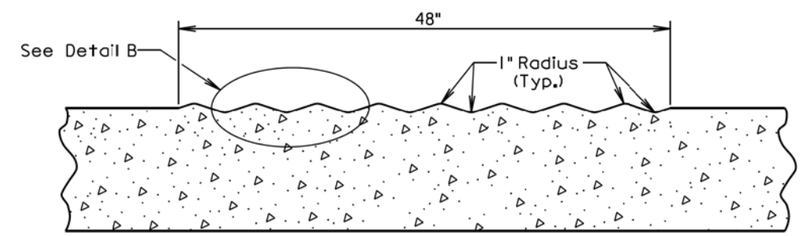

SECTION A-A

GENERAL NOTES:

The rumble strips shall be evenly spaced and shall not coincide with any transverse contraction joints.

The rumble strips shall NOT be placed along areas adjacent to entrance ramps, exit ramps, and gore areas.

Payment for constructing the PCC Pavement Rumble Strips shall be incidental to the contract unit price per square yard for the corresponding PCC Pavement bid item.

August 31, 2013

Published Date: 3rd Qtr. 2016	SDDOT	RUMBLE STRIP ON PCC PAVEMENT SHOULDER	PLATE NUMBER 380.15
			Sheet 2 of 2

PLOT SCALE - 1:200
PLOT NAME - 74
FILE - U:\MS\PRJ\MEAD5580\SP7.DGN
-PLOTTED FROM - TRPR18388