SECTION S: PERMANENT SIGNING PLANS

STATE OF SOUTH DAKOTA	PROJECT	SHEET	TOTAL SHEETS
	IM 0901(38)40	S1	S21

Plotting Date: 08/16/2016

INDEX OF SHEETS

S1	General Layout W/Index
S2-S6	Estimate w/General Notes & Tables
S7-S10	Sign Details
S11-S20	Standard Details
S21	Standard Plates

BEGIN IM 0901(38)40
10+00.00 Westbound
1010+00.00 Eastbound

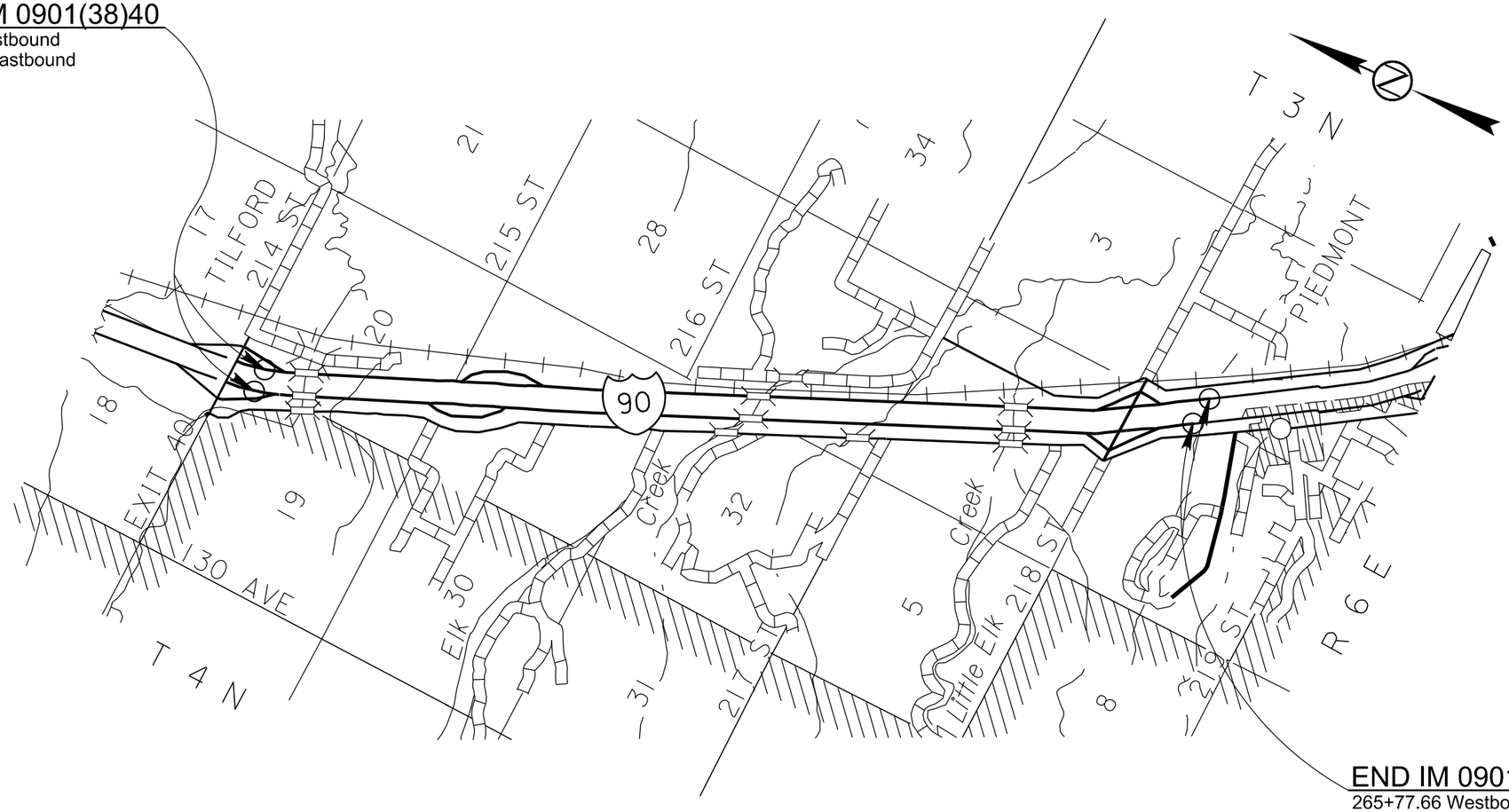

END IM 0901(38)40
265+77.66 Westbound
1262+12.95 Eastbound

Plot Scale - 1:40
Plotted From - trrc12695
File - ...\Permanent Signing\TitleS.dgn

ESTIMATE OF QUANTITIES

BID ITEM NUMBER	ITEM	QUANTITY	UNIT
110E5020	Salvage Traffic Sign	101	Each
110E5030	Salvage Extruded Panel Sign	31	Each
632E0014	1.75' Diameter Breakaway Support Concrete Footing	72.0	Ft
632E1225	W6x12 Steel Post	112.0	Ft
632E1230	W6x15 Steel Post	156.0	Ft
632E1340	2.5"x2.5" Perforated Tube Post	76.0	Ft
632E3005	Aluminum Overlay Sign, Nonremovable Copy Super/Very High Intensity	1,255.5	SqFt
632E3203	Flat Aluminum Sign, Nonremovable Copy High Intensity	220.1	SqFt
632E3205	Flat Aluminum Sign, Nonremovable Copy Super/Very High Intensity	281.3	SqFt
632E3520	Remove, Salvage, Relocate, and Reset Traffic Sign	8	Each

PERMANENT SIGNING

The Contractor shall furnish all signs, posts, stiffeners, bases, hardware, and labor for installation of permanent signs in size, type, and quantity as shown in these plans and/or as required by the Engineer.

The Contractor shall provide all labor and equipment necessary to install permanent signing, remove existing signs, and reset existing signs as detailed in these plans and/or as required by the Engineer. Payment for furnishing and installing permanent signs will be paid for at the contract unit price per square foot for each type of sign based on sheeting requirements. All signs shall have ASTM D4956 Type IV (High Intensity) or ASTM D4956 Type XI (Super /Very High Intensity) sheeting as noted on the table for Permanent Signing. Payment for new signposts, hardware, bases, and labor will be made at the contract unit price per foot for the associated size Perforated Tube Post or Steel Post. Breakaway post details regarding posts, hardware, and bases shall be followed as per the manufacturer's recommendations. The sign post contract items shall include post bases and all hardware. The lengths of the posts in the sign tables are approximate lengths only. The post lengths shall be verified by the Contractor. The Contractor is urged to cut posts to length on job site after site by site verification of post length.

The Contractor shall use Telespar brand (or equivalent) posts and bases on all new standard highway signs with perforated tube posts as approved by the Engineer. All post materials shall conform to Section 982 of the Specifications, and be in accordance with ASTM specifications. Signs designated as requiring a shear slip base shall have a 4 foot long base assembly with a shear breakaway base connecting the base to the signpost. The height of the post shall not exceed the minimum height needed by more than 0.5 feet. Any portion that extends above the sign shall be cut off. No separate payment will be made for cutting the post or for that length cut off. All posts and bases shall be accompanied by Certificates of Compliance and shall meet all safety standards as set forth in the current edition of the Manual on Uniform Traffic Control Devices (MUTCD).

The Contractor shall stake the signs and the Engineer will verify the location prior to installation. The lateral distance from the roadway and the height of the sign shall be established by the Contractor according to the Permanent Signing Typicals, as well as the Standard Plates in the plans and the MUTCD.

In sections of the project open to traffic, installation of a new sign assembly shall be completed immediately upon removal of the existing sign. The new sign to replace the existing sign shall be installed prior to nightfall. In sections of the project not open to traffic, installation of a new sign assembly shall be completed prior to the section being opened to traffic.

DATE DECAL

Each decal is approximately 2" X 2" with black numerals on a white background. The date decal displays the last two digits of the year the sign was manufactured (as illustrated).

PERFORATED TUBE POST

When telescoping 2.5" x 2.5" 10 gauge posts, the inner post shall be 2-3/16" x 2-3/16" 10 gauge posts and a minimum length of 4' measured from the base with a maximum length of that to where the bottom of the sign is. Costs for telescoped reinforced square steel perforated tube posts and anchor stub posts shall be incidental to the respective contract unit price per foot for the post size indicated, and are not included in the Estimate of Quantities.

REMOVE, SALVAGE, RELOCATE & RESET TRAFFIC SIGN

The Contractor shall salvage signs, posts, and bases as shown in the table for Permanent Signing. All existing signs, posts, and hardware salvaged as per these plans shall remain property of the State of South Dakota and shall be transported to the SDDOT Sturgis maintenance yard by the Contractor. The Contractor shall notify the Engineer two days prior to time of delivery to the maintenance yard so correct placement for storage and inventory of materials can be made upon receipt.

Any post assembly including sign, post, or bases that call for being removed, relocated or reset in the remarks column in the table for Permanent Signing shall be included in the contract unit price per each for "Remove, Salvage, Relocate & Reset Traffic sign". All other signs, posts, and bases that call for removal and stockpile shall be included in the contract unit price per each for "Salvage Traffic Sign". These payments shall include all cost for labor and equipment necessary to remove, dismantle, backfill holes, and deliver signs to the SDDOT Sturgis maintenance yard.

HARDWARE

Aluminum U-Channel stiffeners shall be used on all standard highway signs greater than or equal to 36” in width and shall conform to Alloy 6063-T6 or 6061-T6. The U-Channel shall be 2 inches in width and free of holes. The U-Channel stiffeners shall also be used to connect various signs and perforated tube posts together so that an entire sign can be erected as a single installation. Stiffeners may be fastened to signs by use of 1/4” drive rivets with a minimum of one on each end and one centered between each post. Installation of the stiffeners shall be incidental to other contract items.

A 3/8” diameter straight bolt (Grade 8) shall be used in all breakaway shear bases for the 2.5” perforated tube posts. All other perforated tube signpost base material shall be fastened with 5/16” diameter corner bolts (Grade 2).

All perforated tube signposts shall have a soil stabilizer attached to the base.

The Contractor shall use Xcessories Squared brand (or equivalent) Aluminum Universal Post Clamp for 2½” Telespar (Part Number UPCA250SQ) when attaching extruded aluminum signs to perforated tube posts.

SIGN LEGEND, BORDER, BACKGROUND, AND MOUNTING

All sign material shall comply with Section 982 of the Specifications.

All W-series warning signs and plaques shall be fluorescent yellow.

All other sign colors shall be as stipulated in the MUTCD.

When signs are vertically mounted in succession, they shall be 1-2 inches apart. Lateral placement of signs shall be determined by the Engineer.

CONCRETE FOOTINGS

The exposed portion of fixed base concrete footings shall be formed to provide a uniform diameter section and half-inch chamfer on the grout pad as shown on the footing details. The amount of exposed concrete footings, anchor bolts, or slip bases on the up-slope side of the footing shall not be greater than 4 inches as shown on the footing details.

Footings for breakaway signs shall be below ground as shown on the footing details and need not be formed.

Excavation for footings shall be accomplished from off the roadway and shoulders where feasible. The excavation areas shall be covered if not filled by nightfall. Concrete shall be placed within 24 hours of excavation.

ACCEPTABLE BREAKAWAY SIGN POSTS & FOOTING INFORMATION

				Footing Steel				
	Footing	Footing	Stub Post	Longitudinal Steel		Spiral, ft		
Post Size	Diameter, ft	Depth, ft	Legth, ft	Qty and Size	Length, ft	Diameter	Length	Quantity, lb
W 6 x 12	1.75	4	2	8 - #6 Bars	3.6667	1.4167	28.75	44.06
W 6 x 15	1.75	6	2	8 - #6 Bars	5.6667	1.4167	37.75	68.09

STATE OF SOUTH DAKOTA	PROJECT	SHEET	TOTAL SHEETS
	IM 0901(38)40	S4	S21

PERMANENT SIGNING - Hwy #: 090 E MRM: 39.00+0.018 To 44.66+0.228

EXISTING MRM (Approx.)	NEW MRM (Approx.)	SIGN								POST					SIGN DESCRIPTION	WORK TO BE DONE
		Number	Width (in)	Height (in)	Facing Traffic	New Sign	Remove Existing	Square Footage	Sheeting Type	New Post	Length (ft)	Size (in)	# of Posts	Shear Slip Base		
39.00+0.018	SAME	E1-5	108	30	EASTBOUND	OVERLAY	YES	22.5	XI	NO	-	-	-	-	EXIT W/NUMBERS (EB0010)	REMOVE EXISTING SIGN PANEL & OVERLAY NEW SIGN PANEL ON EXISTING EXTRUDED ALUMINUM & POST
39.00+0.018	SAME	E1-1	144	60	EASTBOUND	OVERLAY	YES	60.0	XI	NO	-	-	-	-	INTERCHANGE ADVANCE GUIDE SIGN (EB0010)	REMOVE EXISTING SIGN PANEL & OVERLAY NEW SIGN PANEL ON EXISTING EXTRUDED ALUMINUM & POST
39.00+0.105	SAME	R2-1	48	60	EASTBOUND	N/A	NO	-	-	NO	-	-	-	-	SPEED LIMIT --	LEAVE AS IS
39.00+0.121	SAME	R1-2	48	48	EASTBOUND	FLAT ALUM	YES	6.9	XI	NO	-	-	-	-	YIELD	REMOVE EXISTING SIGN & REPLACE WITH NEW SIGN ON EXISTING POST
39.45+0.081	SAME	D5-1	168	72	EASTBOUND	N/A	NO	-	-	NO	-	-	-	-	REST AREA --- MILE/S (1 1/2 MILES)	LEAVE AS IS
39.45+0.097	SAME	R2-1	48	60	EASTBOUND	N/A	NO	-	-	NO	-	-	-	-	SPEED LIMIT --	LEAVE AS IS
39.45+0.340	SAME	SR3-1	24	30	EASTBOUND	FLAT ALUM	YES	5.0	IV	NO	-	-	-	-	MAINTENANCE & AUTHORIZED VEHICLES ONLY	REMOVE EXISTING SIGN & REPLACE WITH NEW SIGN ON EXISTING POST
39.45+0.340	SAME	SR3-1	24	30	WESTBOUND	FLAT ALUM	YES	5.0	IV	NO	-	-	-	-	MAINTENANCE & AUTHORIZED VEHICLES ONLY	REMOVE EXISTING SIGN & REPLACE WITH NEW SIGN ON EXISTING POST
39.45+0.344	SAME	EXIT DIR	144	84	EASTBOUND	OVERLAY	YES	84.0	XI	NO	-	-	-	-	INTERCHANGE EXIT DIRECTION SIGN (EB0030)	REMOVE EXISTING SIGN PANEL & OVERLAY NEW SIGN PANEL ON EXISTING EXTRUDED ALUMINUM & POST
39.45+0.344	SAME	E1-5	108	30	EASTBOUND	OVERLAY	YES	22.5	XI	NO	-	-	-	-	EXIT W/NUMBERS	REMOVE EXISTING SIGN PANEL & OVERLAY NEW SIGN PANEL ON EXISTING EXTRUDED ALUMINUM & POST
39.45+0.501	SAME	E5-1A	72	60	EASTBOUND	OVERLAY	YES	30.0	XI	NO	-	-	-	-	EXIT W/NUMBER/ARROW (EB0040)	REMOVE EXISTING SIGN PANEL & OVERLAY NEW SIGN PANEL ON EXISTING EXTRUDED ALUMINUM & POST
39.88+0.133	SAME	D1-1L	96	24	EASTBOUND	OVERLAY	YES	16.0	XI	NO	-	-	-	-	DESTINATION - 1 LINE W/ARROW-LEFT (EB0050)	REMOVE EXISTING SIGN PANEL & OVERLAY NEW SIGN PANEL ON EXISTING EXTRUDED ALUMINUM & POST
39.88+0.280	SAME	R5-1A	48	36	WESTBOUND	FLAT ALUM	YES	12.0	XI	NO	-	-	-	-	WRONG WAY	REMOVE EXISTING SIGN & REPLACE WITH NEW SIGN ON EXISTING POST
39.88+0.302	SAME	R5-1	36	36	WESTBOUND	FLAT ALUM	YES	9.0	XI	NO	-	-	-	-	DO NOT ENTER	REMOVE EXISTING SIGN & REPLACE WITH NEW SIGN ON EXISTING POST
39.88+0.302	SAME	R1-1	36	36	EASTBOUND	FLAT ALUM	YES	7.5	XI	NO	-	-	-	-	STOP	REMOVE EXISTING SIGN & REPLACE WITH NEW SIGN ON EXISTING POST
39.88+0.302	SAME	R6-1L	36	12	SOUTHBOUND	FLAT ALUM	YES	3.0	IV	NO	-	-	-	-	ONE WAY ON LEFT ARROW	REMOVE EXISTING SIGN & REPLACE WITH NEW SIGN ON EXISTING POST
39.88+0.302	SAME	R6-1R	36	12	NORTHBOUND	FLAT ALUM	YES	3.0	IV	NO	-	-	-	-	ONE WAY ON RIGHT ARROW	REMOVE EXISTING SIGN & REPLACE WITH NEW SIGN ON EXISTING POST
39.88+0.317	SAME	M1-4	24	24	NORTHBOUND	FLAT ALUM	YES	4.0	IV	NO	-	-	-	-	ROUTE MARKER (US HIGHWAYS)	REMOVE EXISTING SIGN & REPLACE WITH NEW SIGN ON EXISTING POST
39.88+0.317	SAME	M3-3	24	12	NORTHBOUND	FLAT ALUM	YES	2.0	IV	NO	-	-	-	-	DIRECTIONAL MARKER - SOUTH	REMOVE EXISTING SIGN & REPLACE WITH NEW SIGN ON EXISTING POST
39.88+0.317	SAME	M1-1	24	24	NORTHBOUND	FLAT ALUM	YES	4.0	IV	NO	-	-	-	-	ROUTE MARKER (INTERSTATE)	REMOVE EXISTING SIGN & REPLACE WITH NEW SIGN ON EXISTING POST
39.88+0.317	SAME	M6-1	21	15	NORTHBOUND	FLAT ALUM	YES	2.2	IV	NO	-	-	-	-	DIR ARROW - HORIZONTAL SINGLE	REMOVE EXISTING SIGN & REPLACE WITH NEW SIGN ON EXISTING POST
39.88+0.317	SAME	M3-2	24	12	NORTHBOUND	FLAT ALUM	YES	2.0	IV	NO	-	-	-	-	DIRECTIONAL MARKER - EAST	REMOVE EXISTING SIGN & REPLACE WITH NEW SIGN ON EXISTING POST
40.00+0.122	SAME	D5-1	168	72	EASTBOUND	N/A	NO	-	-	NO	-	-	-	-	REST AREA --- MILE/S (1 MILE)	LEAVE AS IS
40.00+0.122	SAME	D5-6	168	48	EASTBOUND	N/A	NO	-	-	NO	-	-	-	-	NEXT REST AREA -- MILE/S (59 MILES)	LEAVE AS IS
40.00+0.203	SAME	S3-1	36	36	NORTHBOUND	N/A	NO	-	-	NO	-	-	-	-	SCHOOL BUS STOP AHEAD - SYMBOL	LEAVE AS IS
40.29+0.002	SAME	M1-5	24	24	SOUTHBOUND	FLAT ALUM	YES	4.0	IV	NO	-	-	-	-	ROUTE MARKER (STATE/COUNTY ROADS)	REMOVE EXISTING SIGN & REPLACE WITH NEW SIGN ON EXISTING POST
40.29+0.002	SAME	M1-1	24	24	SOUTHBOUND	FLAT ALUM	YES	4.0	IV	NO	-	-	-	-	ROUTE MARKER (INTERSTATE)	REMOVE EXISTING SIGN & REPLACE WITH NEW SIGN ON EXISTING POST
40.29+0.002	SAME	M3-3	24	12	SOUTHBOUND	FLAT ALUM	YES	2.0	IV	NO	-	-	-	-	DIRECTIONAL MARKER - SOUTH	REMOVE EXISTING SIGN & REPLACE WITH NEW SIGN ON EXISTING POST
40.29+0.002	SAME	M6-1	21	15	SOUTHBOUND	FLAT ALUM	YES	2.2	IV	NO	-	-	-	-	DIR ARROW - HORIZONTAL SINGLE	REMOVE EXISTING SIGN & REPLACE WITH NEW SIGN ON EXISTING POST
40.29+0.002	SAME	M3-2	24	12	SOUTHBOUND	FLAT ALUM	YES	2.0	IV	NO	-	-	-	-	DIRECTIONAL MARKER - EAST	REMOVE EXISTING SIGN & REPLACE WITH NEW SIGN ON EXISTING POST
40.31+0.088	SAME	R1-2	48	48	EASTBOUND	FLAT ALUM	YES	6.9	XI	NO	-	-	-	-	YIELD	REMOVE EXISTING SIGN & POST & RESET WITH NEW SIGN ON EXISTING POST
40.31+0.328	N/A	D5-1	168	72	EASTBOUND	N/A	YES	-	-	NO	-	-	-	-	REST AREA --- MILE/S (1/2 MILE)	SALVAGE EXISTING SIGN & POST
40.31+0.328	N/A	D9-18	168	30	EASTBOUND	N/A	YES	-	-	NO	-	-	-	-	GENERAL SERVICES	SALVAGE EXISTING SIGN & POST
40.31+0.401	SAME	R2-1	48	60	EASTBOUND	N/A	YES	-	-	NO	-	-	-	-	SPEED LIMIT --	REMOVE EXISTING SIGN & POST & RESET ON EXISTING POST
40.31+0.444	40.31+0.364	SR3-1	24	30	EASTBOUND	FLAT ALUM	YES	5.0	IV	NO	-	-	-	-	MAINTENANCE & AUTHORIZED VEHICLES ONLY	REMOVE EXISTING SIGN & POST & REPLACE WITH NEW SIGN ON EXISTING POST
40.31+0.444	40.31+0.364	SR3-1	24	30	WESTBOUND	FLAT ALUM	YES	5.0	IV	NO	-	-	-	-	MAINTENANCE & AUTHORIZED VEHICLES ONLY	REMOVE EXISTING SIGN & POST & REPLACE WITH NEW SIGN ON EXISTING POST
41.00+0.246	N/A	D5-2	72	84	EASTBOUND	N/A	YES	-	-	NO	-	-	-	-	REST AREA WITH ARROW	SALVAGE EXISTING SIGN & POST
41.00+0.300	SAME	R5-1A	48	36	WESTBOUND	FLAT ALUM	YES	12.0	XI	NO	-	-	-	-	WRONG WAY	REMOVE EXISTING SIGN & REPLACE WITH NEW SIGN ON EXISTING POST
41.00+0.300	SAME	SS1-1	48	18	EASTBOUND	N/A	NO	-	-	NO	-	-	-	-	SPECIAL SERVICES	LEAVE AS IS
41.00+0.354	SAME	R5-1	48	48	WESTBOUND	FLAT ALUM	YES	16.0	XI	NO	-	-	-	-	DO NOT ENTER	REMOVE EXISTING SIGN & REPLACE WITH NEW SIGN ON EXISTING POST
41.00+0.465	SAME	R6-1R	36	12	NORTHBOUND	FLAT ALUM	YES	3.0	XI	NO	-	-	-	-	ONE WAY ON RIGHT ARROW	REMOVE EXISTING SIGN & REPLACE WITH NEW SIGN ON EXISTING POST
41.00+0.570	SAME	R1-2	48	48	EASTBOUND	FLAT ALUM	YES	6.9	XI	NO	-	-	-	-	YIELD	REMOVE EXISTING SIGN & POST & REPLACE WITH NEW SIGN ON EXISTING POST
41.00+0.859	SAME	M1-5	24	24	EASTBOUND	FLAT ALUM	YES	4.0	IV	NO	-	-	-	-	ROUTE MARKER (STATE/COUNTY ROADS)	REMOVE EXISTING SIGN & POST & REPLACE WITH NEW SIGN ON EXISTING POST
41.00+0.859	SAME	M3-3	24	12	EASTBOUND	FLAT ALUM	YES	2.0	IV	NO	-	-	-	-	DIRECTIONAL MARKER - SOUTH	REMOVE EXISTING SIGN & POST & REPLACE WITH NEW SIGN ON EXISTING POST
41.00+0.859	SAME	M1-5	24	24	EASTBOUND	FLAT ALUM	YES	4.0	IV	NO	-	-	-	-	ROUTE MARKER (STATE/COUNTY ROADS)	REMOVE EXISTING SIGN & POST & REPLACE WITH NEW SIGN ON EXISTING POST
41.00+0.859	SAME	M1-1	36	36	EASTBOUND	FLAT ALUM	YES	9.0	IV	NO	-	-	-	-	ROUTE MARKER (INTERSTATE)	REMOVE EXISTING SIGN & POST & REPLACE WITH NEW SIGN ON EXISTING POST
41.00+0.859	SAME	M3-2	36	18	EASTBOUND	FLAT ALUM	YES	4.5	IV	NO	-	-	-	-	DIRECTIONAL MARKER - EAST	REMOVE EXISTING SIGN & POST & REPLACE WITH NEW SIGN ON EXISTING POST
41.00+0.859	SAME	M3-2	24	12	EASTBOUND	FLAT ALUM	YES	2.0	IV	NO	-	-	-	-	DIRECTIONAL MARKER - EAST	REMOVE EXISTING SIGN & POST & REPLACE WITH NEW SIGN ON EXISTING POST
41.00+0.947	SAME	R2-1	48	60	EASTBOUND	N/A	YES	-	-	NO	-	-	-	-	SPEED LIMIT --	REMOVE EXISTING SIGN & POST & RESET ON EXISTING POST
42.00+0.398	SAME	SR3-1	24	30	EASTBOUND	FLAT ALUM	YES	5.0	IV	NO	-	-	-	-	MAINTENANCE & AUTHORIZED VEHICLES ONLY	REMOVE EXISTING SIGN & POST & REPLACE WITH NEW SIGN ON EXISTING POST
42.00+0.398	SAME	SR3-1	24	30	WESTBOUND	FLAT ALUM	YES	5.0	IV	NO	-	-	-	-	MAINTENANCE & AUTHORIZED VEHICLES ONLY	REMOVE EXISTING SIGN & POST & REPLACE WITH NEW SIGN ON EXISTING POST
42.00+0.811	SAME	OM-3L	12	36	EASTBOUND	FLAT ALUM	YES	3.0	XI	NO	-	-	-	-	OBJECT MARKER - TYPE 3 - LEFT MOUNT	REMOVE EXISTING SIGN & POST & REPLACE WITH NEW SIGN ON EXISTING POST
42.00+0.814	SAME	OM-3R	12	36	EASTBOUND	FLAT ALUM	YES	3.0	XI	NO	-	-	-	-	OBJECT MARKER - TYPE 3 - RIGHT MOUNT	REMOVE EXISTING SIGN & POST & REPLACE WITH NEW SIGN ON EXISTING POST
42.00+0.837	SAME	I-3E	30	18	EASTBOUND	FLAT ALUM	YES	3.8	IV	NO	-	-	-	-	--- CREEK (EB120)	REMOVE EXISTING SIGN & POST & REPLACE WITH NEW SIGN ON EXISTING POST
42.81+0.184	SAME	D1-1D	132	60	EASTBOUND	OVERLAY	YES	55.0	XI	YES	18	W6x12	2	YES	NEXT XX EXITS (EB0130)	REMOVE EXISTING SIGN PANEL & POST & OVERLAY NEW SIGN PANEL ON EXISTING EXTR ALUM & NEW POST
42.81+0.184	N/A	D9-18	132	30	EASTBOUND	N/A	YES	-	-	NO	-	-	-	-	GENERAL SERVICES (SYMBOLS ONLY)	SALVAGE EXISTING SIGN
43.00+0.357	SAME	E1-5	108	30	EASTBOUND	OVERLAY	YES	22.5	XI	YES	20	W6x12	2	YES	EXIT W/NUMBERS (EB0140)	REMOVE EXISTING SIGN PANEL & POST & OVERLAY NEW SIGN PANEL ON EXISTING EXTR ALUM & NEW POST
43.00+0.357	SAME	E1-1	216	60	EASTBOUND	OVERLAY	YES	90.0	XI	NO	-	-	-	-	DISTANCE - 2 LINES W/MILEAGE ONLY (EB0140)	REMOVE EXISTING SIGN PANEL & POST & OVERLAY NEW SIGN PANEL ON EXISTING EXTR ALUM & NEW POST
44.00+0.069	SAME	I-3E	42	18	EASTBOUND	FLAT ALUM	YES	5.3	IV	NO	-	-	-	-	--- CREEK (EB0150)	REMOVE EXISTING SIGN & POST & REPLACE WITH NEW SIGN ON EXISTING POST
44.00+0.071	SAME	OM-3R	12	36	EASTBOUND	FLAT ALUM	YES	3.0	XI	NO	-	-	-	-	OBJECT MARKER - TYPE 3 - RIGHT MOUNT	REMOVE EXISTING SIGN & POST & REPLACE WITH NEW SIGN ON EXISTING POST
44.00+0.071	SAME	OM-3L	12	36	EASTBOUND	FLAT ALUM	YES	3.0	XI	NO	-	-	-	-	OBJECT MARKER - TYPE 3 - LEFT MOUNT	REMOVE EXISTING SIGN & POST & REPLACE WITH NEW SIGN ON EXISTING POST
44.10+0.164	SAME	SR3-1	24	30	EASTBOUND	FLAT ALUM	YES	5.0	IV	NO	-	-	-	-	MAINTENANCE & AUTHORIZED VEHICLES ONLY	REMOVE EXISTING SIGN & POST & REPLACE WITH NEW SIGN ON EXISTING POST
44.10+0.164	SAME	SR3-1	24	30	WESTBOUND	FLAT ALUM	YES	5.0	IV	NO	-	-	-	-	MAINTENANCE & AUTHORIZED VEHICLES ONLY	REMOVE EXISTING SIGN & POST & REPLACE WITH NEW SIGN ON EXISTING POST
44.10+0.277	SAME	E1-5	108	30	EASTBOUND	OVERLAY	N/A	22.5	XI	YES	22	W6x15	2	YES	EXIT W/NUMBERS (EB0160)	REMOVE EXISTING SIGN PANEL & POST & OVERLAY NEW SIGN PANEL ON EXISTING EXTR ALUM & NEW POST
44.10+0.277	SAME	EXIT DIR	216	84	EASTBOUND	OVERLAY	NO	126.0	XI	NO	-	-	-	-	INTERCHANGE EXIT DIRECTION SIGN (EB0160)	REMOVE EXISTING SIGN PANEL & POST & OVERLAY NEW SIGN PANEL ON EXISTING EXTR ALUM & NEW POST
44.10+0.380	SAME	E5-1A	72	60	EASTBOUND	OVERLAY	YES	30.0	XI	NO	-	-	-	-	EXIT WITH ARROW (EB0170)	REMOVE EXISTING SIGN PANEL & POST & OVERLAY NEW SIGN PANEL ON EXISTING EXTR ALUM & POST
44.10+0.402	SAME	W3-1	48	48	EASTBOUND	FLAT ALUM	YES	16.0	XI	NO	-	-	-	-	STOP AHEAD	REMOVE EXISTING SIGN & POST & REPLACE WITH NEW SIGN ON EXISTING POST
44.10+0.473	N/A	D1-1R	132	24	EASTBOUND	N/A	YES	-	-	NO	-	-	-	-	DESTINATION - 1 LINE W/ARROW-RIGHT	SALVAGE EXISTING SIGN & POST
44.10+0.495	SAME	R5-1A	36	24	WESTBOUND	FLAT ALUM	YES	6.0	XI	NO	-	-	-	-	WRONG WAY	REMOVE EXISTING SIGN & POST & REPLACE WITH NEW SIGN ON EXISTING POST
44.10+0.501	SAME	R1-1	36	36	EASTBOUND	FLAT ALUM	YES	7.5	XI	NO	-	-	-	-	STOP	REMOVE EXISTING SIGN & POST & REPLACE WITH NEW SIGN ON EXISTING POST
44.10+0.501	SAME	R5-1	36	36	WESTBOUND	FLAT ALUM	YES	9.0	XI	NO	-	-	-	-	DO NOT ENTER	REMOVE EXISTING SIGN & POST & REPLACE WITH NEW SIGN ON EXISTING POST
44.10+0.501	SAME	R6-1L	36	12	SOUTHBOUND	FLAT ALUM	YES	3.0	IV	NO	-	-	-	-	ONE WAY ON LEFT ARROW	REMOVE EXISTING SIGN & POST & REPLACE WITH NEW SIGN ON EXISTING POST

PERMANENT SIGNING - Hwy #: 090 E MRM: 39.00+0.018 To 44.66+0.228

EXISTING MRM (Approx.)	NEW MRM (Approx.)	SIGN								POST					SIGN DESCRIPTION	WORK TO BE DONE
		Number	Width (in)	Height (in)	Facing Traffic	New Sign	Remove Existing	Square Footage	Sheeting Type	New Post	Length (ft)	Size (in)	# of Posts	Shear Slip Base		
44.10+0.501	SAME	R6-1R	36	12	NORTHBOUND	FLAT ALUM	YES	3.0	IV	NO	-	-	-	-	ONE WAY ON RIGHT ARROW	REMOVE EXISTING SIGN & POST & REPLACE WITH NEW SIGN ON EXISTING POST
44.10+0.511	SAME	M1-4	24	24	SOUTHBOUND	FLAT ALUM	YES	4.0	IV	NO	-	-	-	-	ROUTE MARKER (US HIGHWAYS)	REMOVE EXISTING SIGN & POST & REPLACE WITH NEW SIGN ON EXISTING POST
44.10+0.511	SAME	M3-3	24	12	SOUTHBOUND	FLAT ALUM	YES	2.0	IV	NO	-	-	-	-	DIRECTIONAL MARKER - SOUTH	REMOVE EXISTING SIGN & POST & REPLACE WITH NEW SIGN ON EXISTING POST
44.10+0.511	SAME	M1-1	24	24	SOUTHBOUND	FLAT ALUM	YES	4.0	IV	NO	-	-	-	-	ROUTE MARKER (INTERSTATE)	REMOVE EXISTING SIGN & POST & REPLACE WITH NEW SIGN ON EXISTING POST
44.10+0.511	SAME	M6-1L	21	15	SOUTHBOUND	FLAT ALUM	YES	2.2	IV	NO	-	-	-	-	DIR ARROW HORIZONTAL SINGLE-LEFT	REMOVE EXISTING SIGN & POST & REPLACE WITH NEW SIGN ON EXISTING POST
44.10+0.511	SAME	M3-2	24	12	SOUTHBOUND	FLAT ALUM	YES	2.0	IV	NO	-	-	-	-	DIRECTIONAL MARKER - EAST	REMOVE EXISTING SIGN & POST & REPLACE WITH NEW SIGN ON EXISTING POST
44.10+0.534	SAME	W12-2	36	36	NORTHBOUND	FLAT ALUM	YES	9.0	XI	NO	-	-	-	-	LOW CLEARANCE W/NUMBERS (14'5")	REMOVE EXISTING SIGN & POST & REPLACE WITH NEW SIGN ON EXISTING POST
44.10+0.534	SAME	W12-2B	24	18	NORTHBOUND	FLAT ALUM	YES	3.0	XI	NO	-	-	-	-	EDUC. PLAQUE - LOW CLEARANCE - WORDS	REMOVE EXISTING SIGN & POST & REPLACE WITH NEW SIGN ON EXISTING POST
44.10+0.538	SAME	M1-4	24	24	EASTBOUND	FLAT ALUM	YES	4.0	IV	NO	-	-	-	-	ROUTE MARKER (US HIGHWAYS)	REMOVE EXISTING SIGN & POST & REPLACE WITH NEW SIGN ON EXISTING POST
44.10+0.538	SAME	M3-3	24	12	EASTBOUND	FLAT ALUM	YES	2.0	IV	NO	-	-	-	-	DIRECTIONAL MARKER - SOUTH	REMOVE EXISTING SIGN & POST & REPLACE WITH NEW SIGN ON EXISTING POST
44.10+0.538	SAME	M1-1	24	24	EASTBOUND	FLAT ALUM	YES	4.0	IV	NO	-	-	-	-	ROUTE MARKER (INTERSTATE)	REMOVE EXISTING SIGN & POST & REPLACE WITH NEW SIGN ON EXISTING POST
44.10+0.538	SAME	M6-2L	21	15	EASTBOUND	FLAT ALUM	YES	2.2	IV	NO	-	-	-	-	DIR ARROW 45 DEGREE SINGLE-LEFT	REMOVE EXISTING SIGN & POST & REPLACE WITH NEW SIGN ON EXISTING POST
44.10+0.538	SAME	M3-2	24	12	EASTBOUND	FLAT ALUM	YES	2.0	IV	NO	-	-	-	-	DIRECTIONAL MARKER - EAST	REMOVE EXISTING SIGN & POST & REPLACE WITH NEW SIGN ON EXISTING POST
44.10+0.547	SAME	W12-2	60	18	SOUTHBOUND	FLAT ALUM	YES	7.5	XI	NO	-	-	-	-	LOW CLEARANCE W/NUMBERS (EB0180)	REMOVE EXISTING SIGN & POST & REPLACE WITH NEW SIGN ON EXISTING POST
44.10+0.548	SAME	W12-2	60	18	NORTHBOUND	FLAT ALUM	YES	7.5	XI	NO	-	-	-	-	LOW CLEARANCE W/NUMBERS (EB0180)	REMOVE EXISTING SIGN & POST & REPLACE WITH NEW SIGN ON EXISTING POST
44.66+0.055	SAME	D1-2	144	60	EASTBOUND	N/A	YES	-	-	YES	20	2.5	3	YES	DESTINATION - 2 LINES W/ARROW ONLY	REMOVE EXISTING SIGN & RESET ON NEW 10 GUAGE TELESCOPED POST
44.66+0.228	SAME	R1-2	48	48	EASTBOUND	FLAT ALUM	YES	6.9	XI	NO	-	-	-	-	YIELD	REMOVE EXISTING SIGN & POST & REPLACE WITH NEW SIGN ON EXISTING POST
44.66+0.391	SAME	E1-5	108	30	EASTBOUND	OVERLAY	YES	22.5	XI	YES	18	W6x15	2	YES	EXIT W/NUMBERS	REMOVE EXISTING SIGN PANEL & POST & OVERLAY NEW SIGN PANEL ON EXISTING EXTR ALUM & NEW POST
44.66+0.391	SAME	E1-1	204	72	EASTBOUND	OVERLAY	YES	102.0	XI	NO	-	-	-	-	INTERCHANGE ADVANCE GUIDE SIGN	REMOVE EXISTING SIGN PANEL & POST & OVERLAY NEW SIGN PANEL ON EXISTING EXTR ALUM & POST

STATE OF SOUTH DAKOTA	PROJECT	SHEET	TOTAL SHEETS
	IM 0901(38)40	S6	S21

PERMANENT SIGNING - Hwy #: 090 W MRM: 39.45+0.275 To 45.00+0.839

EXISTING MRM (Approx.)	NEW MRM (Approx.)	SIGN								POST					SIGN DESCRIPTION	WORK TO BE DONE
		Number	Width (in)	Height (in)	Facing Traffic	New Sign	Remove Existing	Square Footage	Sheeting Type	New Post	Length (ft)	Size (in)	# of Posts	Shear Slip Base		
39.45+0.275	SAME	SW3-1	24	18	WESTBOUND	N/A	NO	-	-	NO	-	-	-	-	--- MILE/S	LEAVE AS IS
39.45+0.275	SAME	W11-3B	48	48	WESTBOUND	N/A	NO	-	-	NO	-	-	-	-	EDUC. PLAQUE - DEER CROSSING - WORDS	LEAVE AS IS
39.45+0.537	SAME	R1-2	48	48	WESTBOUND	FLAT ALUM	YES	6.9	XI	NO	-	-	-	-	YIELD	REMOVE EXISTING SIGN & REPLACE WITH NEW SIGN ON EXISTING POST
40.20+0.006	SAME	W3-5	36	36	NORTHBOUND	N/A	NO	-	-	NO	-	-	-	-	Speed Reduction - Symbol - Specific Speed	LEAVE AS IS
40.20+0.008	SAME	M1-5	24	24	NORTHBOUND	FLAT ALUM	YES	4.0	IV	NO	-	-	-	-	ROUTE MARKER (STATE/COUNTY ROADS)	REMOVE EXISTING SIGN & REPLACE WITH NEW SIGN ON EXISTING POST
40.20+0.008	SAME	M1-1	24	24	NORTHBOUND	FLAT ALUM	YES	4.0	IV	NO	-	-	-	-	ROUTE MARKER (INTERSTATE)	REMOVE EXISTING SIGN & REPLACE WITH NEW SIGN ON EXISTING POST
40.20+0.008	SAME	M3-1	24	12	NORTHBOUND	FLAT ALUM	YES	2.0	IV	NO	-	-	-	-	DIRECTIONAL MARKER - NORTH	REMOVE EXISTING SIGN & REPLACE WITH NEW SIGN ON EXISTING POST
40.20+0.008	SAME	M6-1	21	15	NORTHBOUND	FLAT ALUM	YES	2.2	IV	NO	-	-	-	-	DIR ARROW - HORIZONTAL SINGLE	REMOVE EXISTING SIGN & REPLACE WITH NEW SIGN ON EXISTING POST
40.20+0.008	SAME	M3-4	24	12	NORTHBOUND	FLAT ALUM	YES	2.0	IV	NO	-	-	-	-	DIRECTIONAL MARKER - WEST	REMOVE EXISTING SIGN & REPLACE WITH NEW SIGN ON EXISTING POST
40.31+0.117	SAME	E5-1A	72	60	WESTBOUND	OVERLAY	YES	30.0	XI	NO	-	-	-	-	EXIT W/NUMBER/ARROW (WB0150)	REMOVE EXISTING SIGN PANEL & POST & OVERLAY NEW SIGN PANEL ON EXISTING EXTR ALUM & POST
40.31+0.290	SAME	EXIT DIR	144	84	WESTBOUND	OVERLAY	YES	84.0	XI	YES	18	W6x15	2	YES	INTERCHANGE EXIT DIRECTION SIGN (WB0140)	REMOVE EXISTING SIGN PANEL & POST & OVERLAY NEW SIGN PANEL ON EXISTING EXTR ALUM & NEW POST
40.31+0.290	SAME	E1-5	108	30	WESTBOUND	OVERLAY	YES	22.5	XI	NO	-	-	-	-	EXIT W/NUMBERS (WB0140)	REMOVE EXISTING SIGN PANEL & POST & OVERLAY NEW SIGN PANEL ON EXISTING EXTR ALUM & NEW POST
40.71+0.040	SAME	D1-1R	96	24	WESTBOUND	OVERLAY	YES	16.0	XI	NO	-	-	-	-	DESTINATION - 1 LINE W/ARROW-RIGHT (WB0130)	REMOVE EXISTING SIGN PANEL & OVERLAY NEW SIGN PANEL ON EXISTING EXTR ALUM & POST
40.71+0.097	SAME	R5-1A	48	36	EASTBOUND	FLAT ALUM	YES	12.0	XI	NO	-	-	-	-	WRONG WAY	REMOVE EXISTING SIGN & POST & REPLACE WITH NEW SIGN ON EXISTING POST
40.71+0.118	SAME	R1-1	36	36	WESTBOUND	FLAT ALUM	YES	7.5	XI	NO	-	-	-	-	STOP	REMOVE EXISTING SIGN & POST & REPLACE WITH NEW SIGN ON EXISTING POST
40.71+0.118	SAME	R5-1	36	36	EASTBOUND	FLAT ALUM	YES	9.0	XI	NO	-	-	-	-	DO NOT ENTER	REMOVE EXISTING SIGN & POST & REPLACE WITH NEW SIGN ON EXISTING POST
40.71+0.118	SAME	R6-1L	36	12	NORTHBOUND	FLAT ALUM	YES	3.0	IV	NO	-	-	-	-	ONE WAY ON LEFT ARROW	REMOVE EXISTING SIGN & POST & REPLACE WITH NEW SIGN ON EXISTING POST
40.71+0.118	SAME	R6-1R	36	12	SOUTHBOUND	FLAT ALUM	YES	3.0	IV	NO	-	-	-	-	ONE WAY ON RIGHT ARROW	REMOVE EXISTING SIGN & POST & REPLACE WITH NEW SIGN ON EXISTING POST
41.00+0.036	SAME	R2-1	48	60	WESTBOUND	N/A	NO	20.0	-	NO	-	-	-	-	SPEED LIMIT --	REMOVE EXISTING SIGN & POST & RESET ON EXISTING POST
41.00+0.406	SAME	R1-2	48	48	WESTBOUND	FLAT ALUM	YES	6.9	XI	NO	-	-	-	-	YIELD	REMOVE EXISTING SIGN & POST & REPLACE WITH NEW SIGN ON EXISTING POST
41.00+0.549	SAME	E1-5	108	30	WESTBOUND	OVERLAY	YES	22.5	XI	YES	18	W6x12	2	YES	EXIT W/NUMBERS (WB0120)	REMOVE EXISTING SIGN PANEL & POST & OVERLAY NEW SIGN PANEL ON EXISTING EXTR ALUM & NEW POST
41.00+0.549	SAME	E1-1	168	72	WESTBOUND	OVERLAY	YES	84.0	XI	NO	-	-	-	-	INTERCHANGE ADVANCE GUIDE SIGN (WB0120)	REMOVE EXISTING SIGN PANEL & POST & OVERLAY NEW SIGN PANEL ON EXISTING EXTR ALUM & NEW POST
41.00+0.677	SAME	R5-1	36	36	EASTBOUND	FLAT ALUM	YES	9.0	XI	NO	-	-	-	-	DO NOT ENTER	REMOVE EXISTING SIGN & POST & REPLACE WITH NEW SIGN ON EXISTING POST
41.00+0.706	SAME	SS1-1	48	18	WESTBOUND	N/A	NO	-	-	NO	-	-	-	-	SPECIAL SERVICES	LEAVE AS IS
41.00+0.706	SAME	R5-1A	48	36	EASTBOUND	FLAT ALUM	YES	12.0	XI	NO	-	-	-	-	WRONG WAY	REMOVE EXISTING SIGN & POST & REPLACE WITH NEW SIGN ON EXISTING POST
41.00+0.748	SAME	D5-2	72	84	WESTBOUND	N/A	NO	-	-	NO	-	-	-	-	REST AREA WITH ARROW	LEAVE AS IS
41.00+0.900	SAME	D5-2	168	72	WESTBOUND	N/A	NO	-	-	NO	-	-	-	-	REST AREA WITH ARROW	LEAVE AS IS
41.00+0.900	SAME	D9-18	168	30	WESTBOUND	N/A	NO	-	-	NO	-	-	-	-	GENERAL SERVICES	LEAVE AS IS
42.00+0.837	SAME	I-3E	30	18	WESTBOUND	FLAT ALUM	YES	3.8	IV	NO	-	-	-	-	--- CREEK (WB0070)	REMOVE EXISTING SIGN & POST & REPLACE WITH NEW SIGN ON EXISTING POST
42.00+0.839	SAME	OM-3L	12	36	WESTBOUND	FLAT ALUM	YES	3.0	XI	NO	-	-	-	-	OBJECT MARKER - TYPE 3 - LEFT MOUNT	REMOVE EXISTING SIGN & POST & REPLACE WITH NEW SIGN ON EXISTING POST
42.81+0.000	SAME	OM-3R	12	36	WESTBOUND	FLAT ALUM	YES	3.0	XI	NO	-	-	-	-	OBJECT MARKER - TYPE 3 - RIGHT MOUNT	REMOVE EXISTING SIGN & POST & REPLACE WITH NEW SIGN ON EXISTING POST
42.81+0.046	SAME	D5-1	168	72	WESTBOUND	N/A	NO	-	-	NO	-	-	-	-	REST AREA --- MILE/S	LEAVE AS IS
43.00+0.839	SAME	D5-1	168	72	WESTBOUND	N/A	NO	-	-	NO	-	-	-	-	REST AREA --- MILE/S	LEAVE AS IS
44.00+0.095	SAME	OM-3R	12	36	WESTBOUND	FLAT ALUM	YES	3.0	XI	NO	-	-	-	-	OBJECT MARKER - TYPE 3 - RIGHT MOUNT	REMOVE EXISTING SIGN & POST & REPLACE WITH NEW SIGN ON EXISTING POST
44.00+0.096	SAME	OM-3L	12	36	WESTBOUND	FLAT ALUM	YES	3.0	XI	NO	-	-	-	-	OBJECT MARKER - TYPE 3 - LEFT MOUNT	REMOVE EXISTING SIGN & POST & REPLACE WITH NEW SIGN ON EXISTING POST
44.00+0.098	SAME	I-3E	42	18	WESTBOUND	FLAT ALUM	YES	5.3	IV	NO	-	-	-	-	--- CREEK (WB0040)	REMOVE EXISTING SIGN & POST & REPLACE WITH NEW SIGN ON EXISTING POST
44.10+0.015	SAME	R2-1	48	60	WESTBOUND	N/A	YES	-	-	NO	-	-	-	-	SPEED LIMIT --	REMOVE EXISTING SIGN & POST & RESET ON EXISTING POST
44.10+0.143	SAME	M1-5	24	24	WESTBOUND	FLAT ALUM	YES	4.0	IV	NO	-	-	-	-	ROUTE MARKER (STATE/COUNTY ROADS)	REMOVE EXISTING SIGN & POST & REPLACE WITH NEW SIGN ON EXISTING POST
44.10+0.143	SAME	M1-4	24	24	WESTBOUND	FLAT ALUM	YES	4.0	IV	NO	-	-	-	-	ROUTE MARKER (US HIGHWAYS)	REMOVE EXISTING SIGN & POST & REPLACE WITH NEW SIGN ON EXISTING POST
44.10+0.143	SAME	M1-1	36	36	WESTBOUND	FLAT ALUM	YES	9.0	IV	NO	-	-	-	-	ROUTE MARKER (INTERSTATE)	REMOVE EXISTING SIGN & POST & REPLACE WITH NEW SIGN ON EXISTING POST
44.10+0.143	SAME	M3-1	24	12	WESTBOUND	FLAT ALUM	YES	2.0	IV	NO	-	-	-	-	DIRECTIONAL MARKER - NORTH	REMOVE EXISTING SIGN & POST & REPLACE WITH NEW SIGN ON EXISTING POST
44.10+0.143	SAME	M3-4	24	12	WESTBOUND	FLAT ALUM	YES	2.0	IV	NO	-	-	-	-	DIRECTIONAL MARKER - WEST	REMOVE EXISTING SIGN & POST & REPLACE WITH NEW SIGN ON EXISTING POST
44.10+0.143	SAME	M3-4	36	18	WESTBOUND	FLAT ALUM	YES	4.5	IV	NO	-	-	-	-	DIRECTIONAL MARKER - WEST	REMOVE EXISTING SIGN & POST & REPLACE WITH NEW SIGN ON EXISTING POST
44.10+0.391	SAME	R1-2	36	36	WESTBOUND	FLAT ALUM	YES	3.9	XI	NO	-	-	-	-	YIELD	REMOVE EXISTING SIGN & POST & REPLACE WITH NEW SIGN ON EXISTING POST
44.10+0.548	SAME	W12-2	36	36	SOUTHBOUND	FLAT ALUM	YES	9.0	XI	NO	-	-	-	-	LOW CLEARANCE W/NUMBERS	REMOVE EXISTING SIGN & POST & REPLACE WITH NEW SIGN ON EXISTING POST
44.10+0.548	SAME	W12-2P	24	18	SOUTHBOUND	FLAT ALUM	YES	3.0	XI	NO	-	-	-	-	Low Clearance (words)	REMOVE EXISTING SIGN & POST & REPLACE WITH NEW SIGN ON EXISTING POST
44.16+0.008	SAME	M3-4	24	12	NORTHBOUND	FLAT ALUM	YES	2.0	IV	NO	-	-	-	-	DIRECTIONAL MARKER - WEST	REMOVE EXISTING SIGN & POST & REPLACE WITH NEW SIGN ON EXISTING POST
44.16+0.008	SAME	M1-4	24	24	NORTHBOUND	FLAT ALUM	YES	4.0	IV	NO	-	-	-	-	ROUTE MARKER (US HIGHWAYS)	REMOVE EXISTING SIGN & POST & REPLACE WITH NEW SIGN ON EXISTING POST
44.16+0.008	SAME	M1-1	24	24	NORTHBOUND	FLAT ALUM	YES	4.0	IV	NO	-	-	-	-	ROUTE MARKER (INTERSTATE)	REMOVE EXISTING SIGN & POST & REPLACE WITH NEW SIGN ON EXISTING POST
44.16+0.008	SAME	M1-5	24	24	NORTHBOUND	FLAT ALUM	YES	4.0	IV	NO	-	-	-	-	ROUTE MARKER (STATE/COUNTY ROADS)	REMOVE EXISTING SIGN & POST & REPLACE WITH NEW SIGN ON EXISTING POST
44.16+0.008	SAME	M6-1	21	15	NORTHBOUND	FLAT ALUM	YES	2.2	IV	NO	-	-	-	-	DIR ARROW - HORIZONTAL SINGLE	REMOVE EXISTING SIGN & POST & REPLACE WITH NEW SIGN ON EXISTING POST
44.66+0.016	SAME	R1-1	36	36	WESTBOUND	FLAT ALUM	YES	7.5	XI	NO	-	-	-	-	STOP	REMOVE EXISTING SIGN & POST & REPLACE WITH NEW SIGN ON EXISTING POST
44.66+0.016	SAME	R5-1	36	36	EASTBOUND	FLAT ALUM	YES	9.0	XI	NO	-	-	-	-	DO NOT ENTER	REMOVE EXISTING SIGN & POST & REPLACE WITH NEW SIGN ON EXISTING POST
44.66+0.016	SAME	R6-1L	36	12	NORTHBOUND	FLAT ALUM	YES	3.0	IV	NO	-	-	-	-	ONE WAY ON LEFT ARROW	REMOVE EXISTING SIGN & POST & REPLACE WITH NEW SIGN ON EXISTING POST
44.66+0.016	SAME	R6-1R	36	12	SOUTHBOUND	FLAT ALUM	YES	3.0	IV	NO	-	-	-	-	ONE WAY ON RIGHT ARROW	REMOVE EXISTING SIGN & POST & REPLACE WITH NEW SIGN ON EXISTING POST
44.66+0.023	N/A	OM-3L	12	36	WESTBOUND	N/A	YES	-	-	NO	-	-	-	-	OBJECT MARKER - TYPE 3 - LEFT MOUNT	SALVAGE EXISTING SIGN & POST
44.66+0.061	SAME	W10-2R	36	36	WESTBOUND	FLAT ALUM	YES	9.0	XI	NO	-	-	-	-	RAILROAD WARNING (INTERSECTION/RIGHT PARALLEL TRACKS)	REMOVE EXISTING SIGN & POST & REPLACE WITH NEW SIGN ON EXISTING POST
44.66+0.072	SAME	R5-1	48	48	EASTBOUND	N/A	YES	-	-	NO	-	-	-	-	DO NOT ENTER	REMOVE EXISTING SIGN & POST & RESET ON EXISTING POST
44.66+0.094	N/A	D1-1R	132	24	WESTBOUND	N/A	YES	-	-	NO	-	-	-	-	DESTINATION - 1 LINE W/ARROW-RIGHT	SALVAGE EXISTING SIGN & POST
44.66+0.094	SAME	R5-1	30	30	EASTBOUND	N/A	YES	-	-	YES	16	2.5	1	NO	DO NOT ENTER	REMOVE EXISTING SIGN & POST & RESET ON NEW POST
44.66+0.150	SAME	W3-1A	48	48	WESTBOUND	N/A	YES	-	-	NO	-	-	-	-	STOP AHEAD SYMBOL	REMOVE EXISTING SIGN & POST & RESET ON EXISTING POST
44.66+0.172	SAME	E5-1A	72	60	WESTBOUND	OVERLAY	YES	30.0	XI	NO	-	-	-	-	EXIT W/NUMBER/ARROW (WB0030)	REMOVE EXISTING SIGN PANEL & POST & OVERLAY NEW SIGN PANEL ON EXISTING EXTR ALUM & POST
44.66+0.312	SAME	E1-5	108	30	WESTBOUND	OVERLAY	YES	22.5	XI	YES	20	W6x15	2	YES	EXIT W/NUMBERS (WB0020)	REMOVE EXISTING SIGN PANEL & POST & OVERLAY NEW SIGN PANEL ON EXISTING EXTR ALUM & NEW POST
44.66+0.312	SAME	EXIT DIR	216	84	WESTBOUND	OVERLAY	YES	126.0	XI	NO	-	-	-	-	INTERCHANGE EXIT DIRECTION SIGN (WB0020)	REMOVE EXISTING SIGN PANEL & POST & OVERLAY NEW SIGN PANEL ON EXISTING EXTR ALUM & NEW POST
45.00+0.839	SAME	E1-5	108	30	WESTBOUND	OVERLAY	YES	22.5	XI	NO	-	-	-	-	EXIT W/NUMBERS (WB0010)	REMOVE EXISTING SIGN PANEL & OVERLAY NEW SIGN PANEL ON EXISTING EXTRUDED ALUMINUM & POST
45.00+0.839	SAME	D2-1	216	60	WESTBOUND	OVERLAY	YES	90.0	XI	NO	-	-	-	-	DISTANCE - 1 LINE W/MILEAGE ONLY (WB0010)	REMOVE EXISTING SIGN PANEL & OVERLAY NEW SIGN PANEL ON EXISTING EXTRUDED ALUMINUM & POST

STATE OF SOUTH DAKOTA	PROJECT	SHEET NO.	TOTAL SHEETS
	IM 0901(38)40	S7	S21

Plotting Date: 08/16/2016
Revise Date: - -
Initials:

SIGN DETAIL

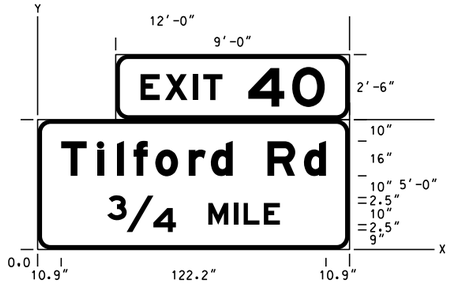

DIMENSIONS IN INCHES

SPACINGS ARE TO START OF NEXT LETTER

SIGN NUMBER	EB0010
WIDTH x HEIGHT	12'-0" x 7'-6"
BORDER WIDTH	2.0"
CORNER RADIUS	6.0"
MOUNTING	GROUND
BACKGROUND	TYPE: XI
	COLOR: GREEN
LEGEND/BORDER	TYPE: XI
	COLOR: WHITE

SYMBOL	X	Y	WID	HT

LETTER SPACINGS

Y FONT																									HT LEN
69.0 EM		E	X	I	T																				12.0
	47.5	11.3	12.8	4.8	8.8	12.0	46.7																		37.8
66.0 EM		4	O																						18.0
	97.3	20.3	14.9	11.5																					35.2
34.0 EM		T	i	l	f	o	r	d		R	d														16.0 12.0
	10.9	16.5	9.2	7.7	10.0	15.4	10.2	10.1	16.0	16.9	10.1	10.9													122.2
11.5 EM		M	I	L	E																				10.0
	78.8	11.8	4.5	9.4	7.3	32.1																			33.0
9.0 EM		3	/	4																					15.0 15.0
	32.1	9.0	12.3	10.4	15.0	65.2																			31.7

SIGN DETAIL

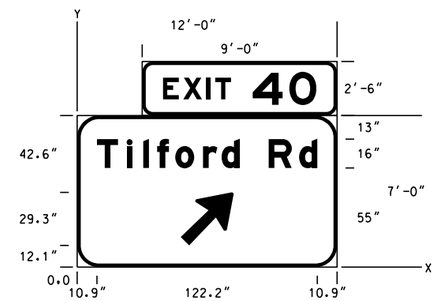

DIMENSIONS IN INCHES

SPACINGS ARE TO START OF NEXT LETTER

SIGN NUMBER	EB0030 & WB0140
WIDTH x HEIGHT	12'-0" x 9'-6"
BORDER WIDTH	2.0"
CORNER RADIUS	12.0"
MOUNTING	GROUND
BACKGROUND	TYPE: XI
	COLOR: GREEN
LEGEND/BORDER	TYPE: XI
	COLOR: WHITE

SYMBOL	X	Y	WID	HT
ARLONG.45deg	57.3	12.1	29.4	29.4

LETTER SPACINGS

Y FONT																									HT LEN
93.0 EM		E	X	I	T																				12.0
	47.5	11.3	12.8	4.8	8.8	12.0	46.7																		37.8
90.0 EM		4	O																						18.0
	97.3	20.3	14.9	11.5																					35.2
55.0 EM		T	i	l	f	o	r	d		R	d														16.0 12.0
	10.9	16.5	9.2	7.7	10.0	15.4	10.2	10.1	16.0	16.9	10.1	10.9													122.2

SIGN DETAIL

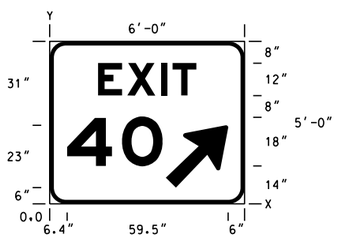

DIMENSIONS IN INCHES

SPACINGS ARE TO START OF NEXT LETTER

SIGN NUMBER	EB0040 & WB0150
WIDTH x HEIGHT	6'-0" x 5'-0"
BORDER WIDTH	1.5"
CORNER RADIUS	6.0"
MOUNTING	GROUND
BACKGROUND	TYPE: XI
	COLOR: GREEN
LEGEND/BORDER	TYPE: XI
	COLOR: WHITE

SYMBOL	X	Y	WID	HT
ARLONG.45deg	42.9	6.0	23.0	23.0

LETTER SPACINGS

Y FONT																									HT LEN
40.0 EM		E	X	I	T																				12.0
	17.9	10.8	12.3	4.3	8.8	17.8																			36.3
14.0 EM		4	O																						18.0
	6.4	20.3	14.9	30.4																					35.2

SIGN DETAIL

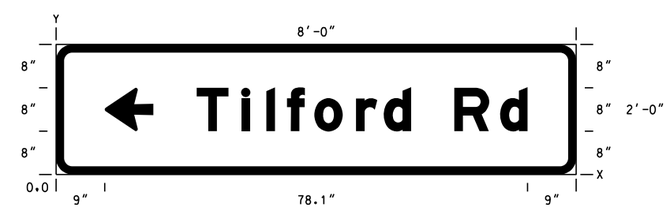

DIMENSIONS IN INCHES

SPACINGS ARE TO START OF NEXT LETTER

SIGN NUMBER	EB0050
WIDTH x HEIGHT	8'-0" x 2'-0"
BORDER WIDTH	1.5"
CORNER RADIUS	3.0"
MOUNTING	GROUND
BACKGROUND	TYPE: XI
	COLOR: GREEN
LEGEND/BORDER	TYPE: XI
	COLOR: WHITE

SYMBOL	X	Y	WID	HT
ARSHRT.180deg	9.0	8.0	9.0	8.0

LETTER SPACINGS

Y FONT																									HT LEN
8.0 EM		T	i	l	f	o	r	d		R	d														8.0 6.0
	26.0	8.3	4.6	3.8	5.0	7.7	5.1	5.1	8.0	8.5	5.1	9.0													61.1

PLOT SCALE - 1:5.83

PLOTTED FROM - TRRC12695

PLOT NAME - 2

FILE - ...\5580-SIGN DETAILS.DGN

SHEET OF SHEETS

STATE OF SOUTH DAKOTA	PROJECT	SHEET NO.	TOTAL SHEETS
	IM 0901(38)40	S8	S21

Plotting Date: 08/16/2016
Revise Date: - -
Initials:

SIGN DETAIL
1:25

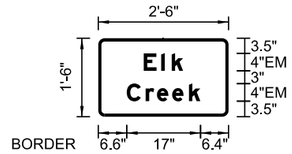

Panel Style: guide_con_destination.ssi
M.U.T.C.D.: 2009 Edition

Panel Style: guide_con_destination.ssi
Dimensions are in inches.tenths
Letter locations are panel edge to lower left corner

SIGN NUMBER	EB0120 & WB0070
WIDTH x HGHT.	2'-6" x 1'-6"
BORDER WIDTH	0.75"
CORNER RADIUS	1.5"
MOUNTING	Ground
BACKGROUND	TYPE: IV
	COLOR: Green
LEGEND/BORDER	TYPE: IV
	COLOR: White

SYMBOL	ROT	X	Y	WID	HT

LETTER POSITIONS (X)																LENGTH	SERIES/SIZE
E	l	k															EM 2000
10.5	14.6	17														9.2	4/3
C	r	e	e	k													EM 2000
6.6	11	13.6	17.1	21												17	4/3

Panel Style: tab1.bsi
M.U.T.C.D.: 2009 Edition

SIGN DETAIL

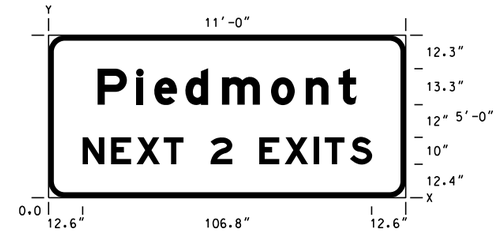

DIMENSIONS IN INCHES

SPACINGS ARE TO START OF NEXT LETTER

SIGN NUMBER	EB0130
WIDTH x HEIGHT	11'-0" x 5'-0"
BORDER WIDTH	2.0"
CORNER RADIUS	6.0"
MOUNTING	GROUND
BACKGROUND	TYPE: XI
	COLOR: GREEN
LEGEND/BORDER	TYPE: XI
	COLOR: WHITE

SYMBOL	X	Y	WID	HT

Y FONT	LETTER SPACINGS																							HT LEN
34.4 EM		P	l	e	d	m	o	n	t															13.3
	18.2	14.3	6.6	11.5	13.5	18.1	12.8	12.1	6.7	18.2														10.0
																								95.7
12.4 EM		N	E	X	T		2		E	X	I	T	S											10.0
	12.6	10.5	9.4	10.0	7.3	10.0	8.0	10.0	9.4	10.7	4.0	9.4	8.0	12.6										106.8

SIGN DETAIL
1:50

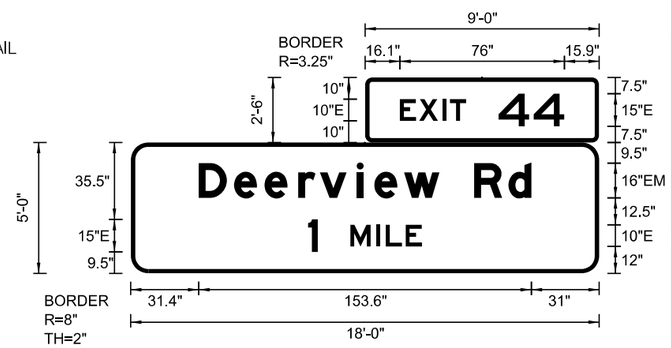

SIGN NUMBER	EB0140 & WB0010
WIDTH x HGHT.	18'-0" x 5'-0"
BORDER WIDTH	2"
CORNER RADIUS	8"
MOUNTING	Ground
BACKGROUND	TYPE: XI
	COLOR: Green
LEGEND/BORDER	TYPE: XI
	COLOR: White

SYMBOL	ROT	X	Y	WID	HT

Panel Style: guide_fwy_advance_b.ssi
Dimensions are in inches.tenths

Panel Style: guide_fwy_advance_b.ssi
M.U.T.C.D.: 2009 Edition

Letter locations are panel edge to lower left corner

LETTER POSITIONS (X)																					LENGTH	SERIES/SIZE
E	X	I	T	4	4																	E 2000
16	24.9	35.6	39.1	61.6	77.8																76	10,15
D	e	e	r	v	i	e	w		R	d												EM 2000
31.4	47.7	61.8	77.3	87.4	104.3	112.5	126.2	142.6	158.6	174.4											153.7	16/12
1	M	I	L	E																		E 2000
81.9	101.4	113.4	117.8	127																	52.6	15,10

SIGN DETAIL
1:25

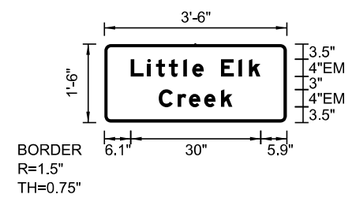

Panel Style: guide_con_destination.ssi
M.U.T.C.D.: 2009 Edition

Panel Style: guide_con_destination.ssi
Dimensions are in inches.tenths
Letter locations are panel edge to lower left corner

SIGN NUMBER	EB0150 & WB0040
WIDTH x HGHT.	3'-6" x 1'-6"
BORDER WIDTH	0.75"
CORNER RADIUS	1.5"
MOUNTING	Ground
BACKGROUND	TYPE: IV
	COLOR: Green
LEGEND/BORDER	TYPE: IV
	COLOR: White

SYMBOL	ROT	X	Y	WID	HT

LETTER POSITIONS (X)																					LENGTH	SERIES/SIZE
L	i	t	t	l	e		E	l	k													EM 2000
6.1	9.9	11.9	14.9	18.2	20.3	22.9	26.9	31	33.4												30	4/3
C	r	e	e	k																		EM 2000
12.6	16.9	19.5	23	26.9																	17.1	4/3

PLOT SCALE - 1:5.83

PLOTTED FROM - TRRC12695

PLOT NAME - 3

FILE - ...\5580-SIGN DETAILS.DGN

SHEET OF SHEETS

STATE OF SOUTH DAKOTA	PROJECT	SHEET NO.	TOTAL SHEETS
	IM 0901(38)40	S9	S21

Plotting Date: 08/16/2016
Revise Date: - -
Initials:

Panel Style: tab1.bsi
M.U.T.C.D.: 2009 Edition

SIGN DETAIL
1:50

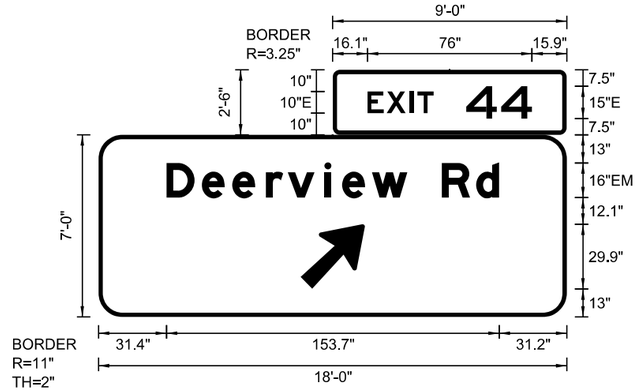

SIGN NUMBER	EB0160 & WB0020
WIDTH x HGHT.	18'-0" x 7'-0"
BORDER WIDTH	2"
CORNER RADIUS	11"
MOUNTING	Ground
BACKGROUND	TYPE: XI
	COLOR: Green
LEGEND/BORDER	TYPE: XI
	COLOR: White

SYMBOL	ROT	X	Y	WID	HT
AR_Type A	315	93.2	13	24.1	37.9

Panel Style: guide_fwy_advance_b.ssi
Dimensions are in inches.tenths

Panel Style: guide_fwy_advance_b.ssi
M.U.T.C.D.: 2009 Edition

Letter locations are panel edge to lower left corner

LETTER POSITIONS (X)																						LENGTH	SERIES/SIZE
E	X	I	T	4	4																		E 2000
16.1	25	35.7	39.2	61.7	77.9																	75.9	10.15
D	e	e	r	v	i	e	w		R	d													EM 2000
31.4	47.7	61.8	77.3	87.4	104.4	112.5	126.3	142.6	158.6	174.5												153.6	16.12

SIGN DETAIL

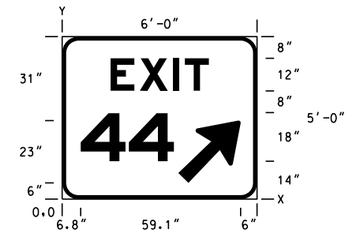

SIGN NUMBER	EB0170 & WB0030
WIDTH x HEIGHT	6'-0" x 5'-0"
BORDER WIDTH	1.5"
CORNER RADIUS	6.0"
MOUNTING	GROUND
BACKGROUND	TYPE: XI
	COLOR: GREEN
LEGEND/BORDER	TYPE: XI
	COLOR: WHITE

SYMBOL	X	Y	WID	HT
ARLONG.45deg	42.9	6.0	23.0	23.0

DIMENSIONS IN INCHES

SPACINGS ARE TO START OF NEXT LETTER

Y FONT																								HT LEN
40.0 EM		E	X	I	T																			12.0
	17.9	10.8	12.3	4.3	8.8	17.8																		36.3
14.0 EM		4	4																					18.0
	6.8	17.8	16.6	30.8																				34.4

SIGN DETAIL
1:25

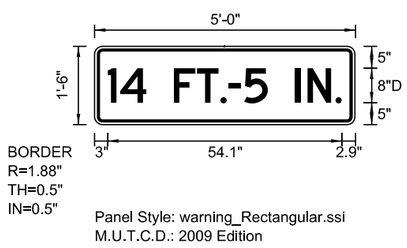

Panel Style: warning_Rectangular.ssi
M.U.T.C.D.: 2009 Edition

SIGN NUMBER	EB0180
WIDTH x HGHT.	5'-0" x 1'-6"
BORDER WIDTH	0.5"
CORNER RADIUS	1.88"
MOUNTING	Overhead
BACKGROUND	TYPE: XI
	COLOR: Yellow
LEGEND/BORDER	TYPE: XI
	COLOR: Black

SYMBOL	ROT	X	Y	WID	HT

Panel Style: warning_Rectangular.ssi
Dimensions are in inches.tenths
Letter locations are panel edge to lower left corner

LETTER POSITIONS (X)																LENGTH	SERIES/SIZE
1	4		F	T	.	–	5		I	N	.						D 2000
3.1	6	12	18.4	23.7	29.1	31	34.6	40.1	46.4	49.2	55.7					54.1	8

SIGN DETAIL

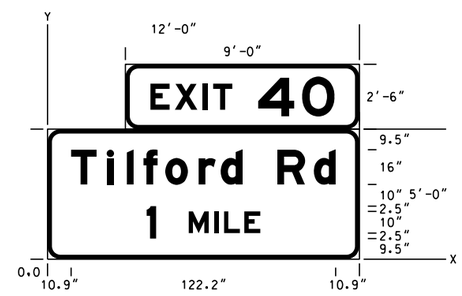

SIGN NUMBER	WB0120
WIDTH x HEIGHT	12'-0" x 7'-6"
BORDER WIDTH	2.0"
CORNER RADIUS	6.0"
MOUNTING	GROUND
BACKGROUND	TYPE: XI
	COLOR: GREEN
LEGEND/BORDER	TYPE: XI
	COLOR: WHITE

SYMBOL	X	Y	WID	HT

DIMENSIONS IN INCHES

SPACINGS ARE TO START OF NEXT LETTER

Y FONT																								HT LEN
69.0 EM		E	X	I	T																			12.0
	47.5	11.3	12.8	4.8	8.8	12.0	46.7																	37.8
66.0 EM		4	O																					18.0
	97.3	20.3	14.9	11.5																				35.2
34.5 EM		T	i	l	f	o	r	d		R	d													16.0 12.0
	10.9	16.5	9.2	7.7	10.0	15.4	10.2	10.1	16.0	16.9	10.1	10.9												122.2
12.0 EM		M	I	L	E																			10.0
	65.2	11.8	4.5	9.4	7.3	45.8																		33.0
9.5 EM		1																						15.0
	45.8	4.4	15.0	78.8																				4.4

PLOT SCALE - 1:5.83

PLOTTED FROM - TRRC12695

PLOT NAME - 4

FILE - ...\5580-SIGN DETAILS.DGN

SHEET OF SHEETS

STATE OF SOUTH DAKOTA	PROJECT	SHEET NO.	TOTAL SHEETS
	IM 0901(38)40	S10	S21

Plotting Date: 08/16/2016
Revise Date: - -
Initials:

SIGN DETAIL

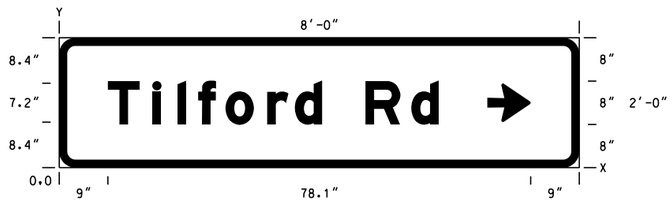

DIMENSIONS IN INCHES

SPACINGS ARE TO START OF NEXT LETTER

SIGN NUMBER	WB0130
WIDTH x HEIGHT	8'-0" x 2'-0"
BORDER WIDTH	1.5"
CORNER RADIUS	3.0"
MOUNTING	GROUND
BACKGROUND	TYPE: XI
	COLOR: GREEN
LEGEND/BORDER	TYPE: XI
	COLOR: WHITE

SYMBOL	X	Y	WID	HT
ARSHRT	79.1	8.4	8.0	7.1

LETTER SPACINGS

Y FONT																						HT LEN
8.0		T	i	l	f	o	r	d		R	d											8.0
EM	9.0	8.3	4.6	3.8	5.0	7.7	5.1	5.1	8.0	8.5	5.1	26.0										6.0 / 61.1

PLOT SCALE - 1:5.83

PLOTTED FROM - TRRC12695

PLOT NAME - 5

FILE ...\5580-SIGN DETAILS.DGN

SHEET OF SHEETS

STATE OF SOUTH DAKOTA	PROJECT	SHEET	TOTAL SHEETS
	IM 0901(38)40	S11	S21

Plotting Date: 08/16/2016 REVISED 08/16/16 JRS

SITE LOCATION	POST SIZE	FOOTING DIMENSIONS		STUB POST LENGTH	LONGITUDINAL STEEL QUANTITIES			# SPIRAL STEEL QUANTITIES	
		DIA.	DEPTH		NO.	SIZE	LENGTH	DIA.	LENGTH

⧖ # Spirals - Use 6" pitch and 1 ½ extra turns at each end. Use 1 ½ turns for lap at splice as required, or weld as approved by the Office of Bridge Design, Spirals may be smooth bars, Bar length shown does not include Splices. Dimensions are out to out of bars.

NOTE: The above is a Site Specific data entry table and the inserted information is the responsibility of the Region Traffic Engineer.

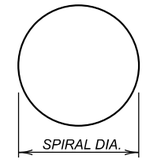

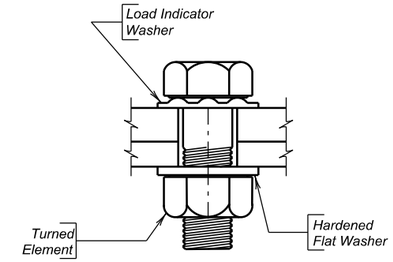

LOAD INDICATOR WASHER DETAIL

TRAFFIC DIRECTION

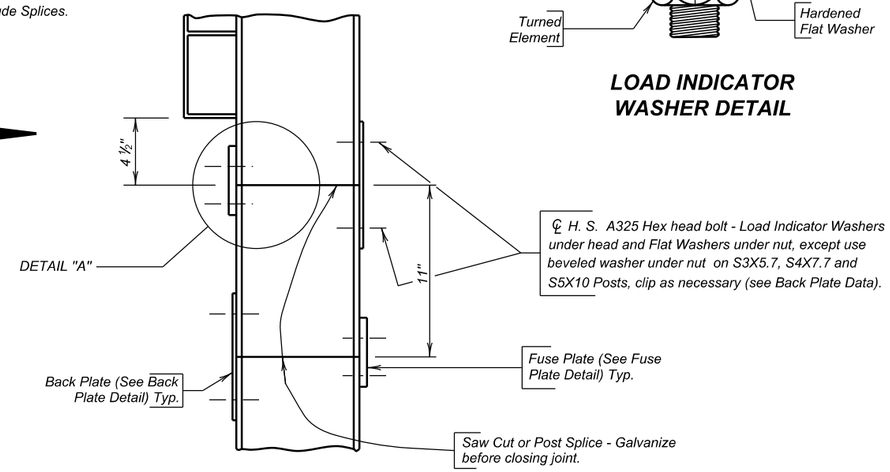

FUSE & BACK PLATE INSTALLATION

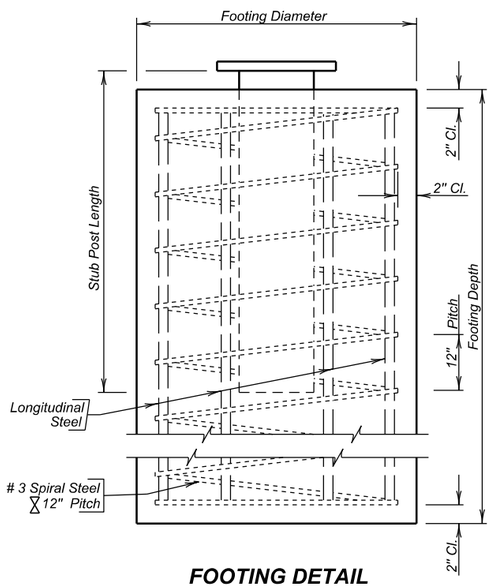

FOOTING DETAIL

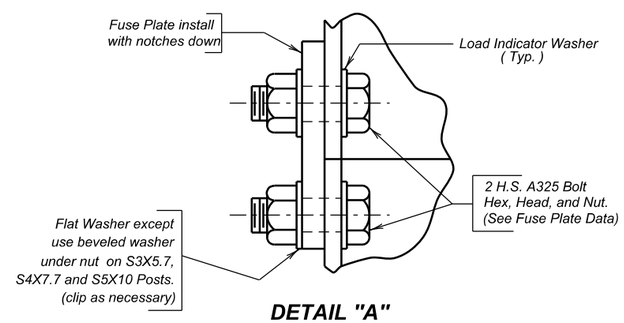

DETAIL "A"

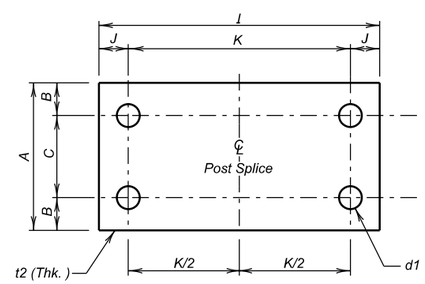

BACK PLATE DETAIL

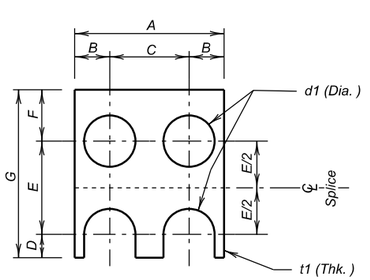

FUSE PLATE DETAIL

TABLE 1 - FUSE PLATE DATA

Post Size	A	B	C	D	E	F	G	d1	t1	Bolt Size
S3X5. 7	2 5/8"	9/16"	1 1/2"	1/2"	1 1/2"	1 1/8"	3 1/8"	5/8" ø	1/4"	1/2" ø
S4X7. 7	2 5/8"	9/16"	1 1/2"	1/2"	1 1/2"	1 1/8"	3 1/8"	5/8" ø	1/4"	1/2" ø
S5X10	3"	11/16"	1 7/8"	5/8"	2 1/4"	1 1/8"	4"	3/4" ø	3/8"	5/8" ø
W6X12	4"	15/16"	2 1/8"	5/8"	2 1/2"	1 3/8"	4 1/2"	3/4" ø	3/8"	5/8" ø
W6X15	6"	1 3/8"	3 1/4"	5/8"	2 1/2"	1 3/8"	4 1/2"	3/4" ø	3/8"	5/8" ø
W6X20	6"	1 3/8"	3 1/4"	5/8"	2 1/2"	1 3/8"	4 1/2"	3/4" ø	3/8"	5/8" ø
W8X18	5 1/4"	1 5/16"	2 5/8"	3/4"	2 1/2"	1 3/8"	4 5/8"	7/8" ø	1/2"	3/4" ø
W8X21	5 1/4"	1 5/16"	2 5/8"	3/4"	2 1/2"	1 3/8"	4 5/8"	7/8" ø	1/2"	3/4" ø
W8X24	6 1/2"	1 1/2"	3 1/2"	7/8"	3"	1 5/8"	5 1/2"	1" ø	9/16"	7/8" ø
W8X28	6 1/2"	1 9/16"	3 3/8"	7/8"	3"	1 3/4"	5 5/8"	1" ø	1/2"	7/8" ø
W8X31	8"	1 5/8"	4 3/4"	1"	3 1/2"	2"	6 1/2"	1 1/8" ø	5/8"	1" ø
W10X33	8"	1 7/8"	4 1/4"	1 1/8"	4 1/2"	2 1/4"	7 7/8"	1 1/4" ø	3/4"	1 1/8" ø

TABLE 5 - BACK PLATE DATA

Post Size	A	B	C	J	K	I	d1	t2	Bolt Size
S3X5. 7	2 5/8"	9/16"	1 1/2"	1 1/4"	4 1/2"	7"	5/8" ø	1/4"	1/2" ø
S4X7. 7	2 5/8"	9/16"	1 1/2"	1 1/4"	4 1/2"	7"	5/8" ø	1/4"	1/2" ø
S5X10	3"	11/16"	1 7/8"	1 1/4"	4 3/4"	7 1/4"	3/4" ø	1/4"	5/8" ø
W6X12	4"	15/16"	2 1/8"	1 1/4"	4 3/4"	7 1/4"	3/4" ø	1/4"	5/8" ø
W6X15	6"	1 3/8"	3 1/4"	1 1/4"	5 1/4"	7 3/4"	3/4" ø	1/4"	5/8" ø
W6X20	6"	1 3/8"	3 1/4"	1 1/4"	5 1/4"	7 3/4"	3/4" ø	1/4"	5/8" ø
W8X18	5 1/4"	1 5/16"	2 5/8"	1 3/8"	5 3/4"	8 1/2"	7/8" ø	1/4"	3/4" ø
W8X21	5 1/4"	1 5/16"	2 5/8"	1 3/8"	5 3/4"	8 1/2"	7/8" ø	1/4"	3/4" ø
W8X24	6 1/2"	1 1/2"	3 1/2"	1 5/8"	6"	9 1/4"	1" ø	5/16"	7/8" ø
W8X28	6 1/2"	1 9/16"	3 3/8"	1 3/4"	6"	9 1/2"	1" ø	3/8"	7/8" ø
W8X31	8"	1 5/8"	4 3/4"	2"	6 1/2"	10 1/2"	1 1/8" ø	3/8"	1" ø
W10X33	8"	1 7/8"	4 1/4"	2 1/2"	7"	1'- 0"	1 1/4" ø	7/16"	1 1/8" ø

NOTES-

1. Design Specification: AASHTO Standard Specifications for Structural Supports for Highway Signs, Luminaires and Traffic Signals, 2001 Edition with 2003 Interims.
2. Concrete Footings shall be Class M6 - fc = 4000 p. s. i.
3. Structural Steel shall comform to ASTM A36.
4. All Reinforcing Steel, except spirals, shall conform to ASTM 615 Grade 60.
5. Spiral Reinforcing Steel may be fabricated from cold drawn wire ASTM A1064, or hot rolled plain or deformed bars conforming to the strength requirements of ASTM A615, Grade 60.
6. All Bolts and Nuts shall conform to ASTM A325 except that ½" diameter bolts may conform to either ASTM A325 or ASTM A449. Washers shall conform to ASTM F436. All hardware shall be galvanized in accordance with ASTM F2329.
7. All structural steel including Posts and Post Stubs shall be galvanized in accordance with ASTM A123.
8. All Bolt Holes shall be drilled. All plate cuts shall preferably be saw cuts. However, Flame Cutting will be permitted providing all edges are ground smooth (metal projecting beyond the plane of the plate face will NOT be allowed).
9. All welding and weld inspection shall be in accordance with the latest edition of AWS D 1.5 Structural Welding Code.

PROCEDURE FOR ASSEMBLING SLIP BASE-

1. Place galvanized Sheet Metal Diaphrams on top of the lower slip plate.
2. Connect main post to Stub Post with clean unlubricated bolts and nuts with one Hardened Washer on each bolt between slip plates.
3. Plumb post by adding shims between slip plates.
4. Tighten bolts to a practical maximum, using a 12" - 15" wrench in order to bed surfaces and clean threads. DO NOT TIGHTEN TO PROOF LOAD.
5. Loosen all bolts and retighten in increments, using a systematic order, until each bolt has been tightened to the specified torque corresponding to the post size used (See Slip Base Plate Data). Tighten bolts only to the torque specified. DO NOT OVERTIGHTEN. Check torque on each bolt after entire sign has been erected.

ASSEMBLY OF FRICTION FUSE PLATES, BACK PLATES AND STIFFENERS-

High strength bolts shall be tightened so as to obtain a residual tension by the use of load indicator washers.

SHOP PLANS-

The fabricator shall submit shop plans in accordance with the Specifications or in Adobe PDF format. Shop plan submittals shall be sent to the Office of Bridge Design. Include design and check design, if applicable, with initial submittal.

ERECTION DETAILS

FOR

TWO-POST ONE-DIRECTION BREAKAWAY SIGN SUPPORTS

S. D. DEPT. OF TRANSPORTATION

DECEMBER 1994

1 OF 2

MK	REVISION	DATED	BY
⧖	Pitch Correction	3/24/11	DM
✳	Specification Update	7/11/05	AV

DESIGNED BY	DRAWN BY	CHECKED BY	
RH/DM	RH/TB	RH/DM	Kevin N. Boeden
CNTYPCNX	PCNXDSPG	BSTDBS2C	BRIDGE ENGINEER

Plot Scale - 1:200

Plotted From - trrc12695

File - ...\5580-SignSupportStandards.dgn

STATE OF SOUTH DAKOTA	PROJECT	SHEET	TOTAL SHEETS
	IM 0901(38)40	S12	S21

Plotting Date: 08/16/2016 REVISED 08/16/16 JRS

NOTE-
Sign face details shown are those for extruded aluminum panels.
See Erection Details for SHEET ALUMINUM SIGNS for mounting flat sheet sign face.

△ Mounting height as recommended by latest edition of AASHTO ROADSIDE DESIGN GUIDE.

ϕ Clear distance as recommended by latest edition of MANUAL ON UNIFORM TRAFFIC CONTROL DEVICES.

NOTE - N = Number of Stiffeners to be used
H = Vertical dimension of sign
L = Horizontal dimension of Main Sign

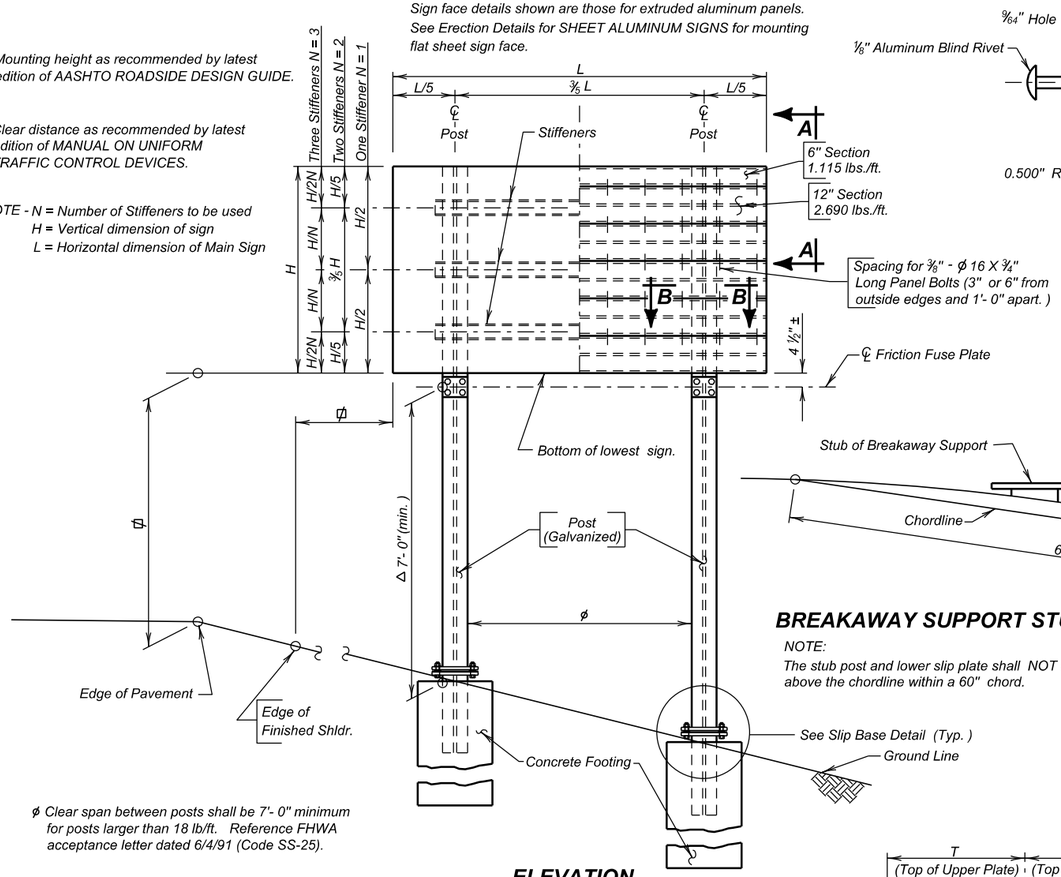

ϕ Clear span between posts shall be 7'- 0" minimum for posts larger than 18 lb/ft. Reference FHWA acceptance letter dated 6/4/91 (Code SS-25).

ELEVATION

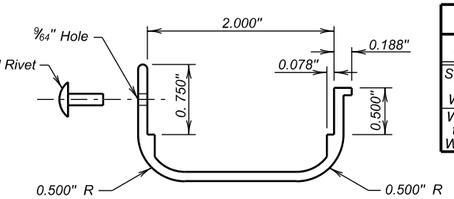

SIDE TRIM MOLDING

Side Trim Molding is required on all vertical edges of extruded panels. They shall be fastened at a minimum of one (1) rivet per panel.

STIFFENER DATA

Post	Stiffener	a	b	c	d	Bolt (A325)	Plate Thk.
S3X5. 7 thru W8X21	C3X5	10 1/2"	5"	1 1/4"	8"	5/8" ϕ	5/16"
W8X24 thru W10x33	C5X6. 7	13 1/2"	6"	1 1/2"	10 1/2"	7/8" ϕ	3/8"

STIFFENER NOTES-

1. Stiffeners must always be used on Two Post Breakaway signs regardless of type of sign face employed.
2. Number of stiffeners used, N, shall be as follows:
   If H < = 2' - 0" then N = 1
   if 2' - 0" < H < = 8' - 0" then N = 2
   if 8' - 0" < H < = 15' - 0" then N = 3

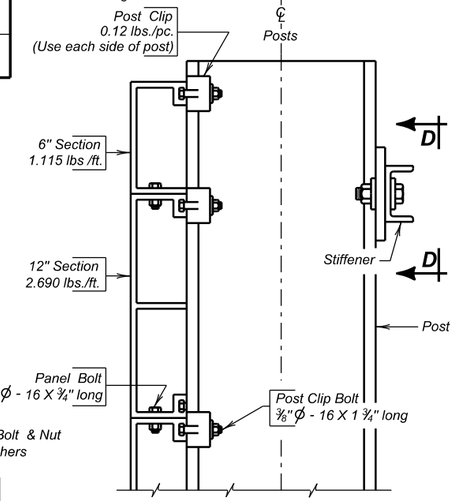

SEC. A - A

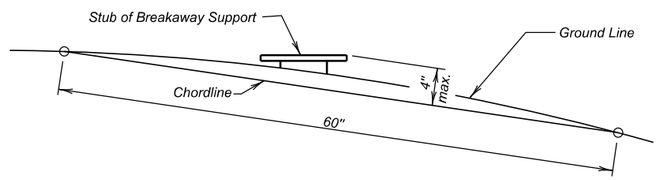

BREAKAWAY SUPPORT STUB CLEARANCE DIAGRAM

NOTE:
The stub post and lower slip plate shall NOT extend more than 4" max. above the chordline within a 60" chord.

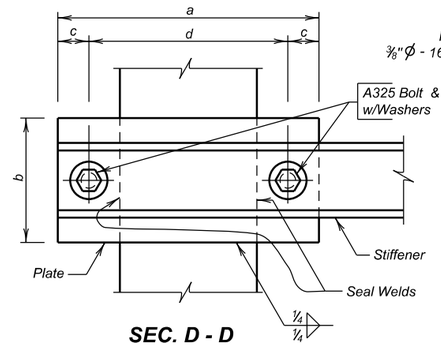

SEC. D - D

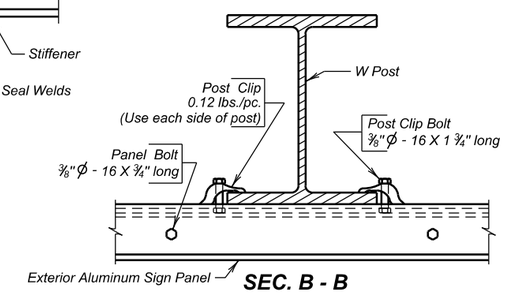

SEC. B - B

(Stiffener not shown)

≠ See Erection Details for SLIP BASE ALTERNATE.

TRAFFIC DIRECTION

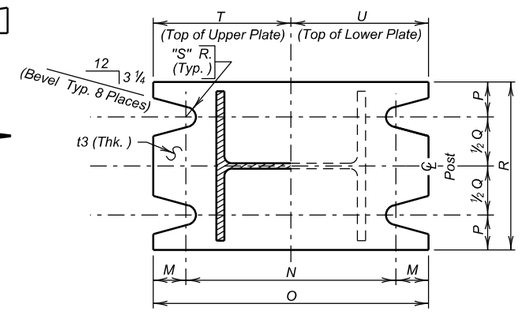

SEC. C - C

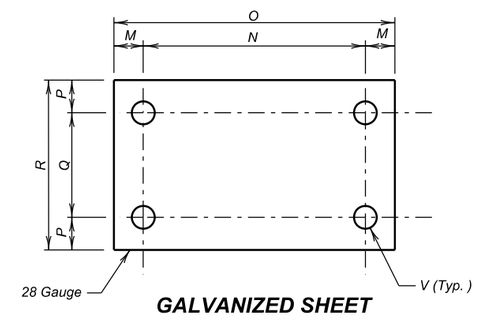

GALVANIZED SHEET METAL DIAPHRAGM

TABLE 3 - SHEET METAL DIAPHRAGM DATA

Post Size	M	N	O	P	Q	R	V
S3X5. 7	3/4"	6"	7 1/2"	3/4"	1 1/2"	3"	5/8"
S4X7. 7	3/4"	6"	7 1/2"	3/4"	1 1/2"	3"	5/8"
S5X10	7/8"	7 1/4"	9"	3/4"	2"	3 1/2"	3/4"
W6X12	7/8"	8 1/4"	10"	7/8"	2 3/4"	4 1/2"	3/4"
W6X15	1 1/8"	8 1/2"	10 3/4"	1 1/4"	4"	6 1/2"	7/8"
W6X20	1 1/8"	10"	1'- 0 1/4"	1 1/4"	4"	6 1/2"	7/8"
W8X18	1 1/8"	10 1/2"	1'- 0 3/4"	1 1/4"	3 1/2"	6"	7/8"
W8X21	1 1/4"	11 1/4"	1'- 1 3/4"	1 1/4"	3 1/2"	6"	1"
W8X24	1 1/2"	11"	1'- 2"	1 5/8"	4 1/4"	7 1/2"	1"
W8X28	1 5/8"	11 1/4"	1'- 2 1/2"	1 5/8"	4 1/4"	7 1/2"	1 1/8"
W8X31	1 3/4"	11 1/4"	1'- 2 3/4"	1 7/8"	5 1/4"	9"	1 1/8"
W10X33	1 3/4"	1'- 2"	1'- 5 1/2"	1 7/8"	5 1/4"	9"	1 1/8"

NOTE: Diaphragm need not be regalvanized after cutting to size and drilling of holes.

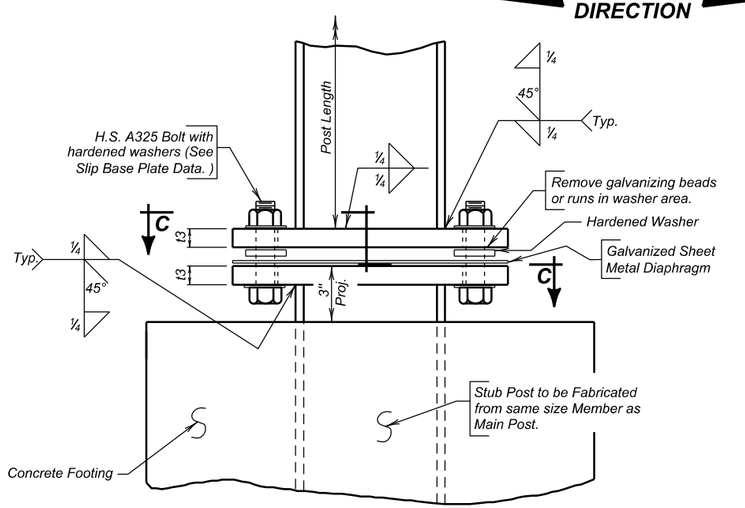

≠ SLIP BASE DETAIL

TABLE 4 - SLIP BASE PLATE DATA

Post Size	M	N	O	P	Q	R	S	T	U	t3	Bolt Size	Bolt Torque
S3X5. 7	3/4"	6"	7 1/2"	3/4"	1 1/2"	3"	9/32"	3 3/4"	3 3/4"	5/8"	1/2" ϕ	142" - #
S4X7. 7	3/4"	6"	7 1/2"	3/4"	1 1/2"	3"	9/32"	3 3/4"	3 3/4"	5/8"	1/2" ϕ	142" - #
S5X10	7/8"	7 1/4"	9"	3/4"	2"	3 1/2"	11/32"	4 1/2"	4 1/2"	7/8"	5/8" ϕ	345" - #
W6X12	7/8"	8 1/4"	10"	7/8"	2 3/4"	4 1/2"	11/32"	5"	5"	7/8"	5/8" ϕ	345" - #
W6X15	1 1/8"	8 1/2"	10 3/4"	1 1/4"	4"	6 1/2"	13/32"	5 3/8"	5 3/8"	1"	3/4" ϕ	554" - #
W6X20	1 1/8"	10"	1'- 0 1/4"	1 1/4"	4"	6 1/2"	13/32"	6 1/8"	6 1/8"	1"	3/4" ϕ	554" - #
W8X18	1 1/8"	10 1/2"	1'- 0 3/4"	1 1/4"	3 1/2"	6"	13/32"	6 3/8"	6 3/8"	1"	3/4" ϕ	554" - #
W8X21	1 1/4"	11 1/4"	1'- 1 3/4"	1 1/4"	3 1/2"	6"	15/32"	6 7/8"	6 7/8"	1"	7/8" ϕ	645" - #
W8X24	1 1/2"	11"	1'- 2"	1 5/8"	4 1/4"	7 1/2"	15/32"	7"	7"	1"	7/8" ϕ	645" - #
W8X28	1 5/8"	11 1/4"	1'- 2 1/2"	1 5/8"	4 1/4"	7 1/2"	17/32"	7 1/4"	7 1/4"	1 1/8"	1" ϕ	735" - #
W8X31	1 3/4"	11 1/4"	1'- 2 3/4"	1 7/8"	5 1/4"	9"	17/32"	7 3/8"	7 3/8"	1 1/8"	1" ϕ	735" - #
W10X33	1 3/4"	1'- 2"	1'- 5 1/2"	1 7/8"	5 1/4"	9"	17/32"	8 3/4"	8 3/4"	1 1/4"	1" ϕ	735" - #

ERECTION DETAILS
FOR
TWO-POST ONE-DIRECTION
BREAKAWAY SIGN SUPPORTS
S. D. DEPT. OF TRANSPORTATION
DECEMBER 1994

(2) OF (2)

DESIGNED BY	DRAWN BY	CHECKED BY	
RH/DM	TB	RH/DM	Kevin N. Goeden
CNTYPCNX	PCNXDSPG	BSTDBS2D	BRIDGE ENGINEER

Plot Scale - 1:200
Plotted From - trrc12695
File - ...\5580-SignSupportStandards.dgn

STATE OF SOUTH DAKOTA	PROJECT	SHEET	TOTAL SHEETS
	IM 0901(38)40	S13	S21

Plotting Date: 08/16/2016 REVISED 08/16/16 JRS

△ *Select correct bracket number by selecting the intersection of sign height (vertical distance from bottom of sign to top of sign) and post length (vertical distance from bottom of post to top of sign) in the bracket selecion matrix. The intersection will be either zone 1, 2, or 3 which corresponds to bracket numbers 1, 2, or 3. All brackets to be permanently labeled with the appropriate bracket type and bracket selection number.*

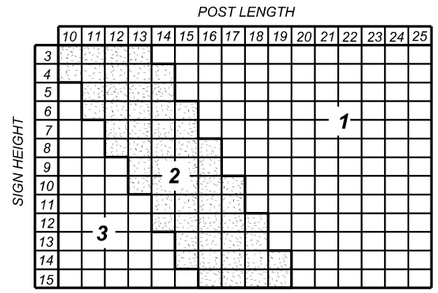

△ **BRACKET SELECTION TABLE**

(6" W-Shape)

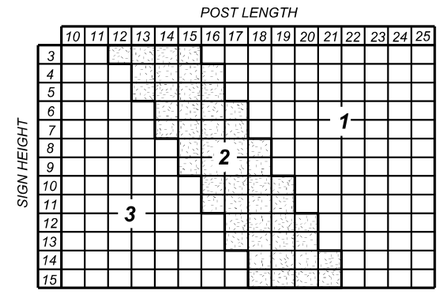

△ **BRACKET SELECTION TABLE**

(8" W-Shape)

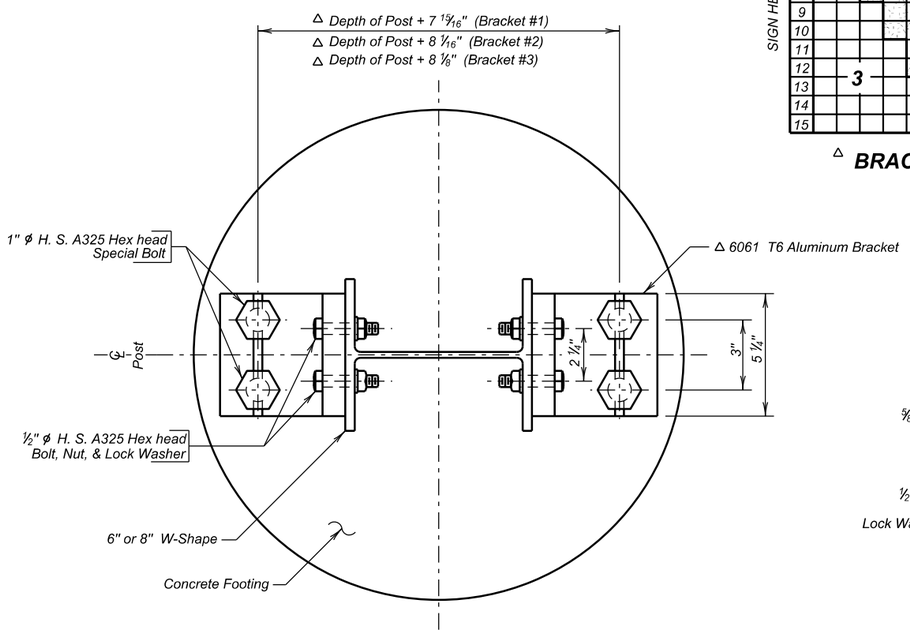

PLAN

(6" or 8" W-Shape)

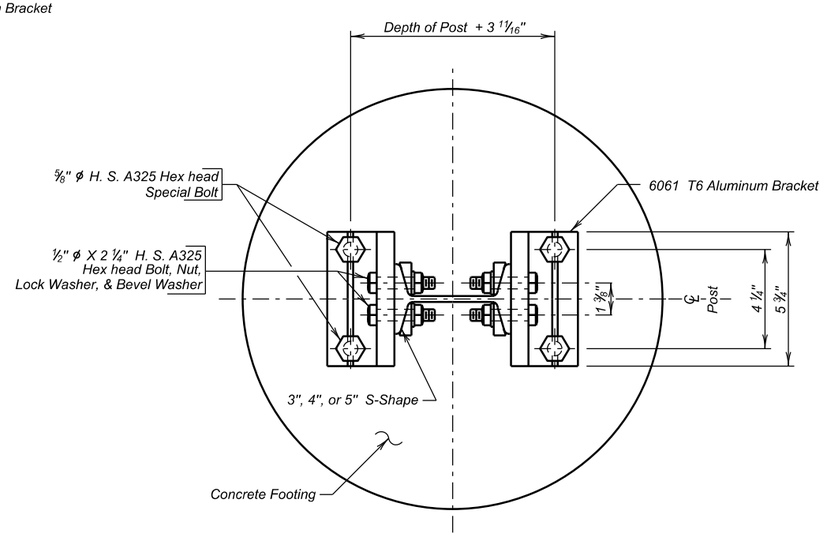

PLAN

(3", 4", or 5" S-Shape)

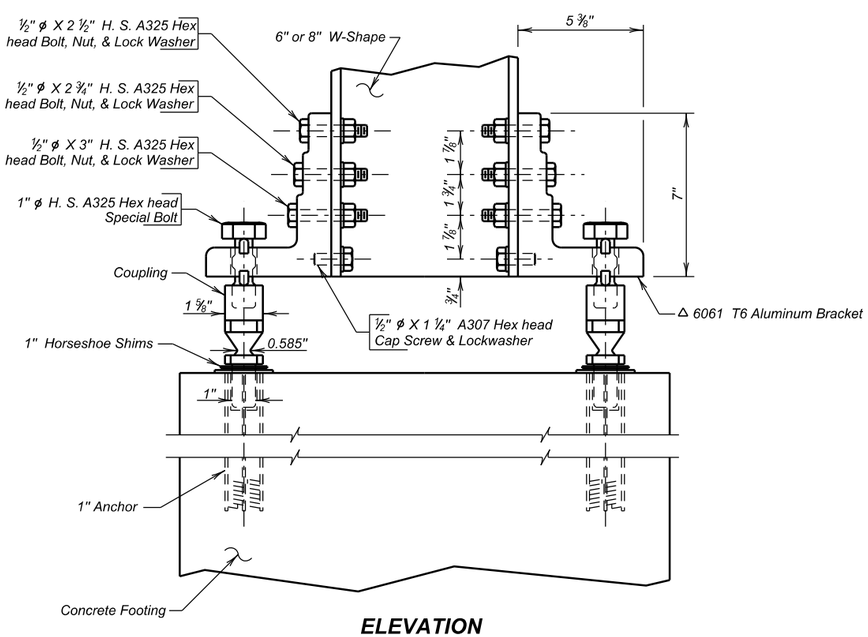

ELEVATION

(6" or 8" W-Shape)

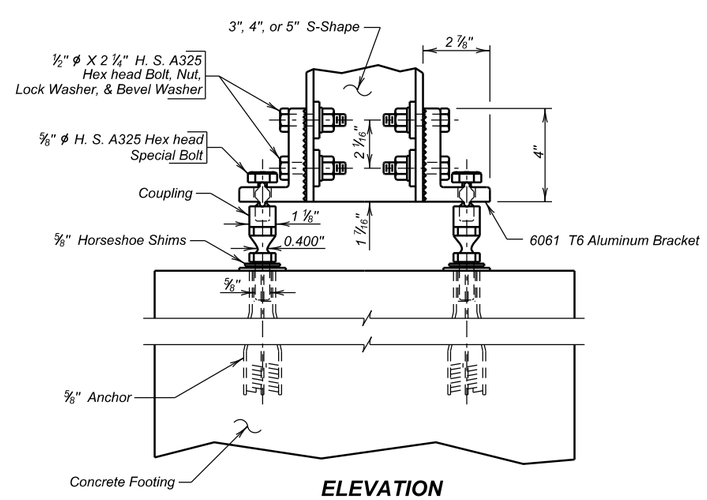

ELEVATION

(3", 4", or 5" S-Shape)

NOTES-

✳ 1. *Design Specification: AASHTO Standard Specifications for Structural Supports for Highway Signs, Luminaires and Traffic Signals, 2001 Edition with 2003 Interims.*

2. *Transpo Industries shall provide certification that the hardware furnished has essentially the same chemistry, mechanical properties, and geometry as that used in the FHWA tests, and that it will meet the FHWA change in velocity requirements. Reference FHWA acceptance letter dated 1/8/90 (Code SS-17).*

3. *Transpo Industries shall also provide certification that the "break-safe" system furnished meets the structural requirements set forth in the AASHTO Standard Specifications for Structural Supports for Highway Signs, Luminaires and Traffic Signals, 1994 Edition.*

4. *All structural steel shall be galvanized in accordance with ASTM A123.*

5. *All hardware shall be galvanized in accordance with ASTM F2329.*

6. *Fasteners, except for special bolt and coupling, are installed with lockwashers or locknuts and do not have specific torque requirements. Fasteners should be made as tight as possible with conventional wrenches unless noted otherwise.*

7. *Square and level individual components to minimize need for shimming.*

8. *No more than two shims underneath any one coupling and no more than three shims underneath any two couplings.*

9. *Use of this slip base alternate is limited to situations where the TOTAL weight of all posts below the hinges is 45 lbs/ft.*

ANCHOR ASSEMBLY-

1. *Assemble coupling anchors to installation template (not shown).*
2. *Lower entire anchor assembly into fresh concrete and vibrate into position so that the tops of the individual anchors are flush with the finished top surface of the footings.*

COUPLING ASSEMBLY-

1. *Suspend post over footing and insert special bolts through brackets.*
2. *Below bracket, thread couplings into anchors but leave loose.*
3. *Lower post with special bolts onto loose couplings and thread special bolts into couplings. Thread couplings all the way into anchors.*
4. *Tighten special bolts with 1 5/8" wrench. Do NOT place torque across necked down portion of coupling. Wrench flats are provided on either side for proper tightening.*
5. *If post is not plumb, insert shims between couplings and anchors.*

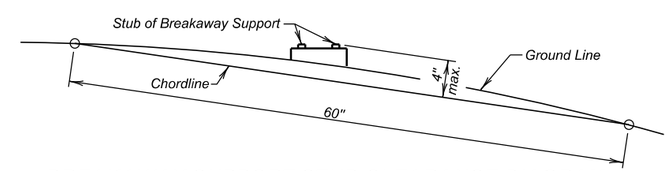

BREAKAWAY SUPPORT STUB CLEARANCE DIAGRAM

NOTE:
The stub shall NOT extend more than 4" max. above the chordline within a 60" chord.

ERECTION DETAILS

FOR

SLIP BASE ALTERNATE

(FOR BREAKAWAY SIGN SUPPORTS)

S. D. DEPT. OF TRANSPORTATION

DECEMBER 1994

1 OF 1

MK	REVISION	DATED	BY
✳	Specification Update	7/11/05	AV

DESIGNED BY	DRAWN BY	CHECKED BY	
RH/DM	RH	RH/DM	Kevin N. Goeden
CNTYPCNX	PCNXDSPG	BSTDBST	BRIDGE ENGINEER

Plot Scale - 1:200

Plotted From - trrc12695

File - ...\5580-SignSupportStandards.dgn

STATE OF SOUTH DAKOTA	PROJECT	SHEET	TOTAL SHEETS
	IM 0901(38)40	S14	S21

Plotting Date: 08/16/2016

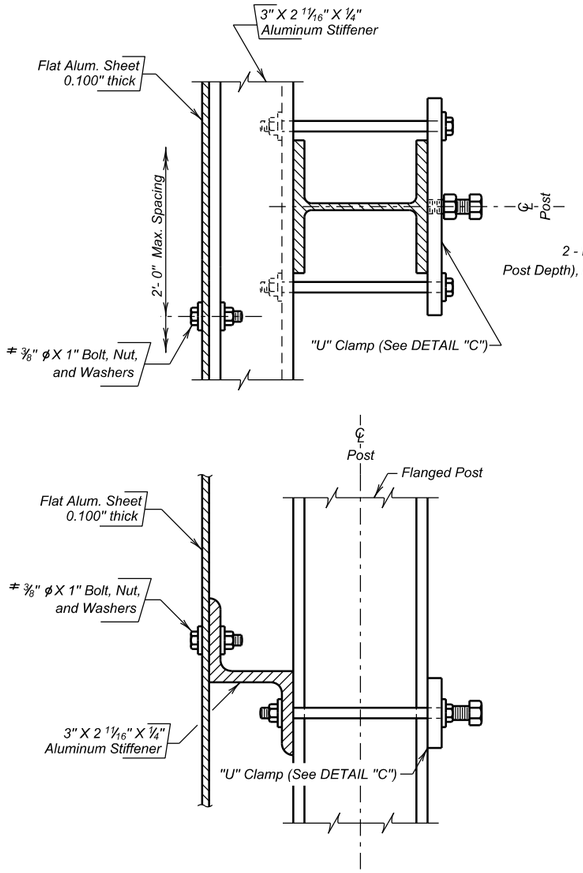

DETAILS FOR MOUNTING SHEET ALUMINUM SIGNS ON STEEL FLANGED POSTS

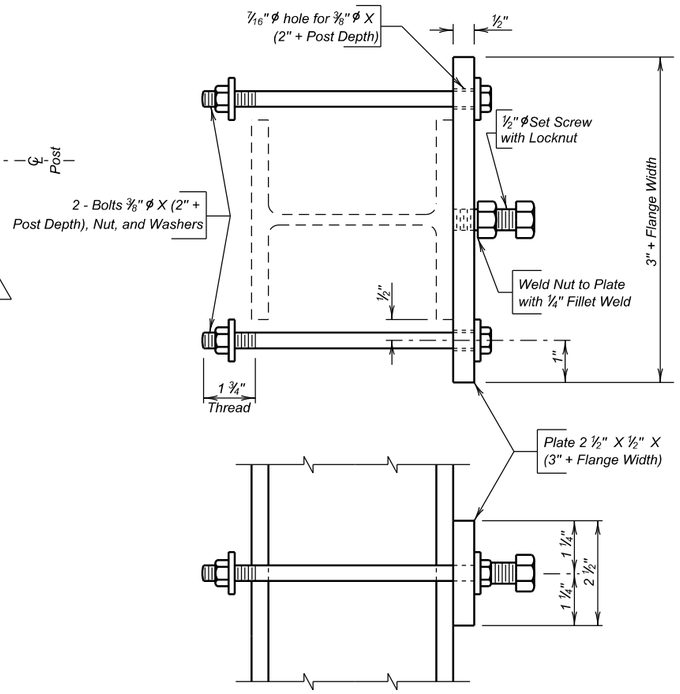

DETAIL "C"

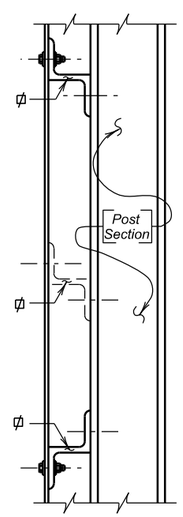

POSITIONING OF TOP AND BOTTOM STIFFENERS

A plastic washer, as recommended by the sheeting manufacturer, shall be installed between the sign face and the metal washer shown.

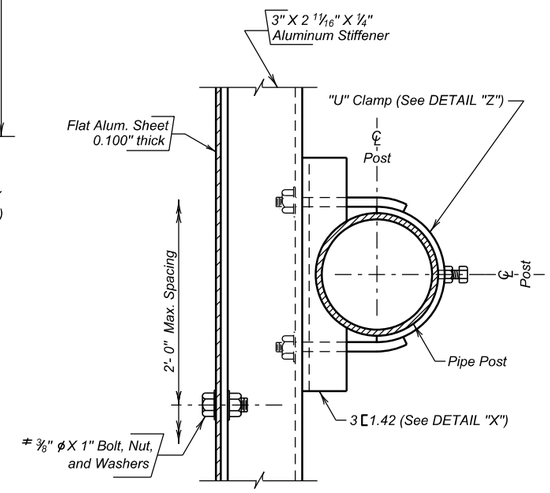

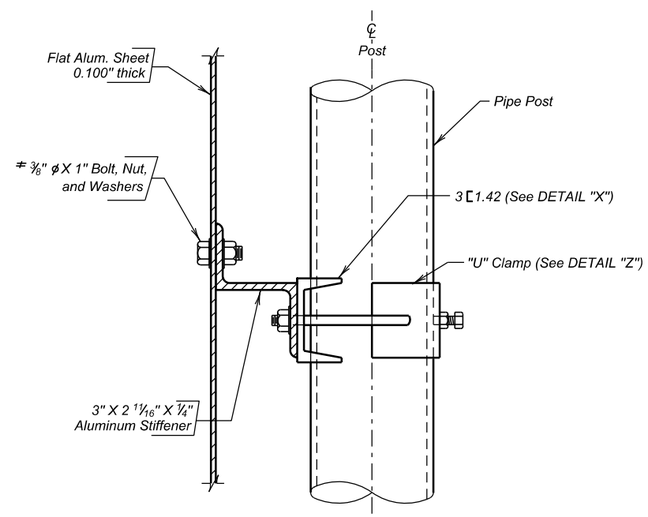

DETAILS FOR MOUNTING SHEET ALUMINUM SIGNS ON STEEL PIPE POSTS

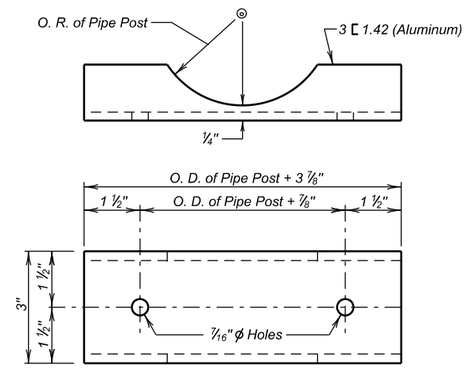

DETAIL "X"

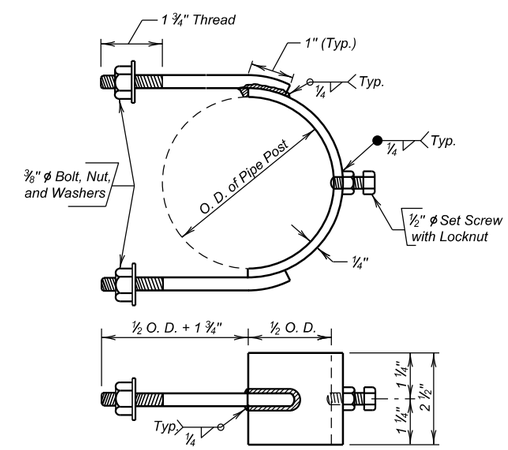

DETAIL "Z"

STIFFENER NOTES-

1. Stiffeners must always be used on multiple post breakaway signs regardless of type of sign face employed.
2. ⌀ Number of stiffeners used, N, shall be as follows:
   If H < = 2'- 0" then N = 1
   if 2'- 0" < H < = 8'- 0" then N = 2
   if 8'- 0" < H < = 15'- 0" then N = 3
   where H equals the vertical dimension of the sign panel of sign cluster.
3. All stiffener Bolts and Nuts shall conform to ASTM A307. Washers shall conform to ASTM F436. All hardware shall be galvanized in accordance with ASTM A153.

ERECTION DETAILS
FOR
SHEET ALUMINUM SIGNS
(ON FLANGED AND PIPE POSTS)
S. D. DEPT. OF TRANSPORTATION
DECEMBER 1994

1 OF 1

MK	REVISION	DATED	BY

DESIGNED BY	DRAWN BY	CHECKED BY	
RH/DM	RH/TB	RH/DM	Kevin N. Goeden
CNTYPCNX	PCNXDSPG	BSTDSAS1	BRIDGE ENGINEER

Plot Scale - 1:200
Plotted From - trrc12695
File - ...\5580-SignSupportStandards.dgn

STATE OF SOUTH DAKOTA	PROJECT	SHEET	TOTAL SHEETS
	IM 0901(38)40	S15	S21

Plotting Date: 08/16/2016

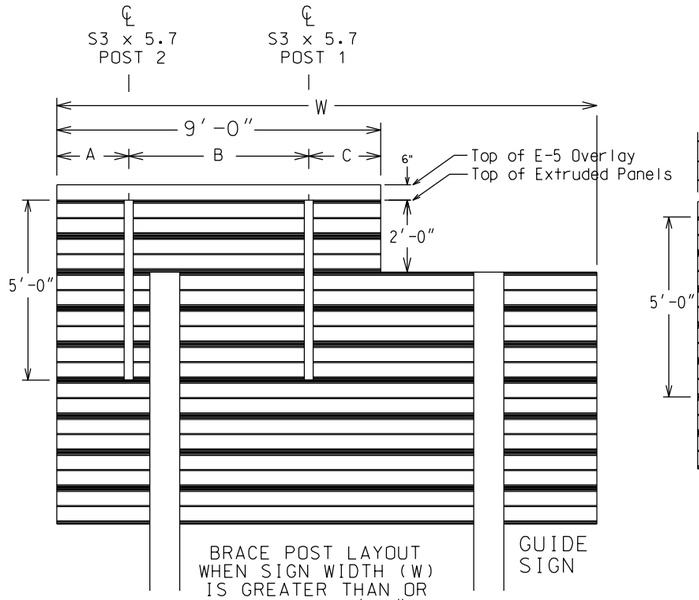

BRACE POST LAYOUT WHEN SIGN WIDTH (W) IS GREATER THAN OR EQUAL TO 12'-0".

Case 1

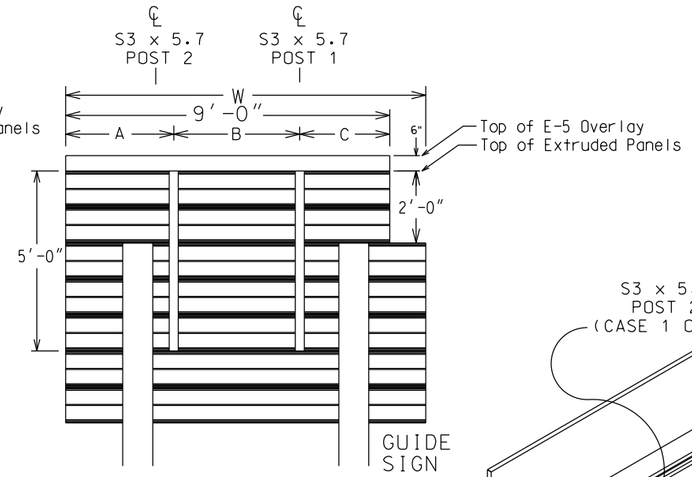

BRACE POST LAYOUT WHEN SIGN WIDTH (W) IS BETWEEN 9'-0" AND 11'-0".

Case 2

BRACE POST LOCATION TABLE				
	SIGN WIDTH (W)	* A	B	C
CASE 2	9'-0"	2'-6"	4'-0"	2'-6"
	10'-0" to 11'-0"	3'-0"	3'-6"	2'-6"
CASE 1	12'-0" to 13'-0"	1'-6"	5'-6"	2'-0"
	14'-0" and up	2'-0"	5'-0"	2'-0"

* The A dimension may be adjusted (1" max.) to allow room for post clips.

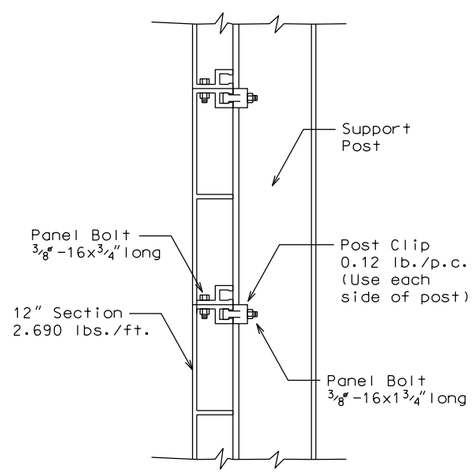

Section A-A

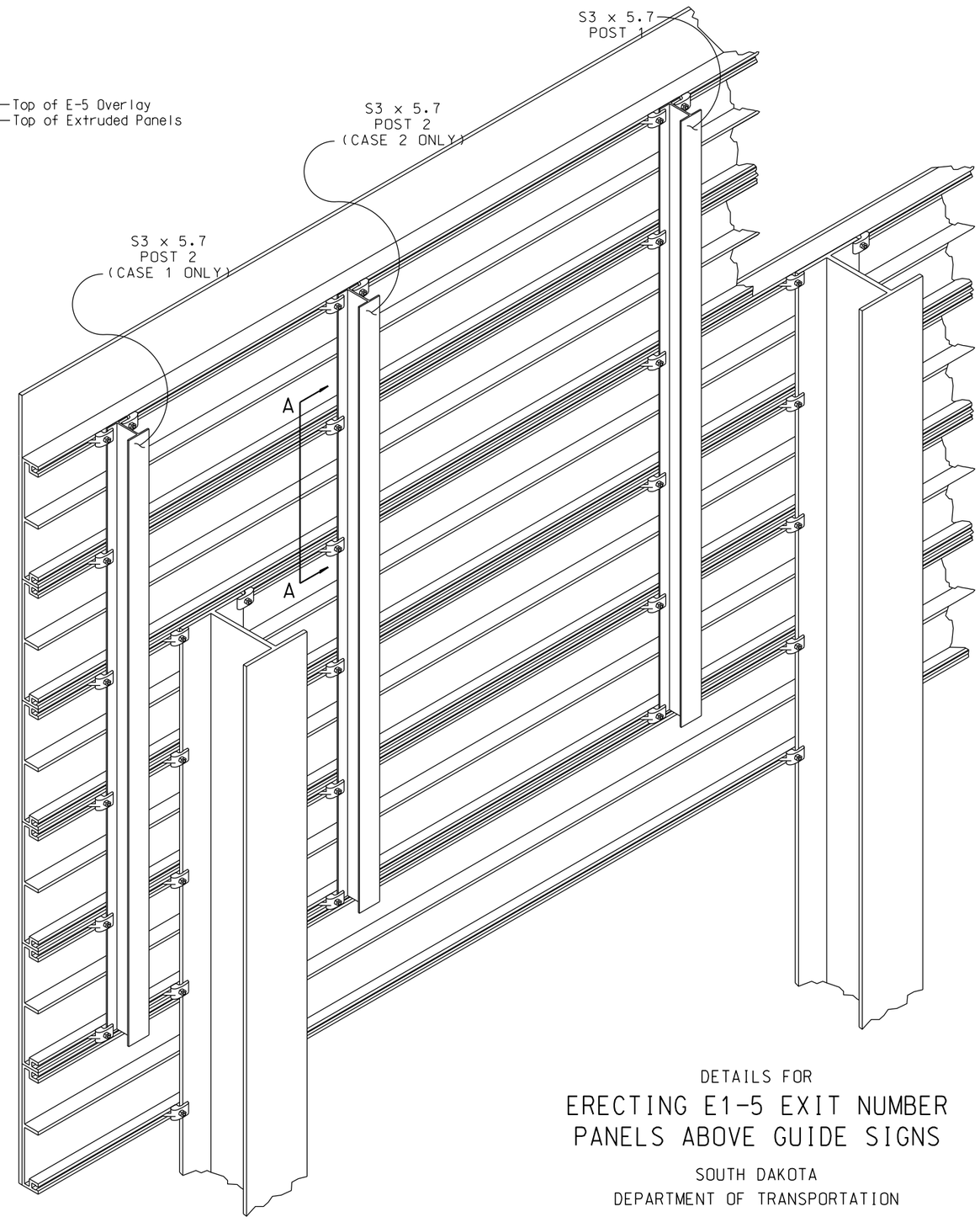

DETAILS FOR

ERECTING E1-5 EXIT NUMBER PANELS ABOVE GUIDE SIGNS

SOUTH DAKOTA
DEPARTMENT OF TRANSPORTATION

Plot Scale - 1:200

Plotted From - trrc12695

File - ...\5580-SignSupportStandards.dgn

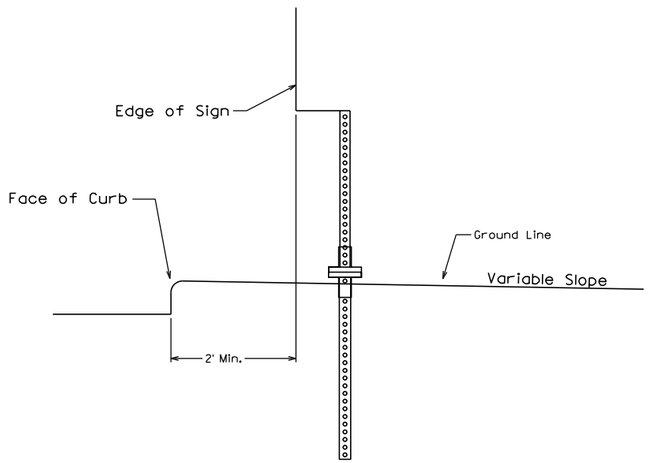

URBAN LOCATION WITH 1 POST
(Drawing shown from face of sign)

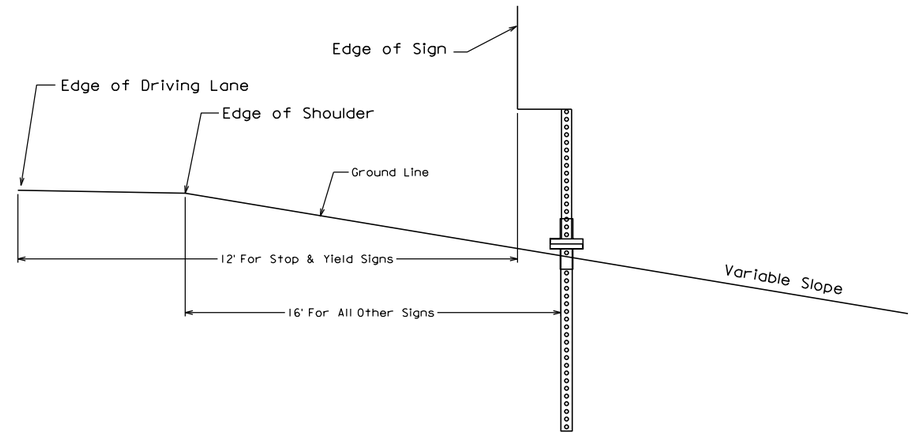

RURAL LOCATION WITH 1 POST
(Drawing shown from face of sign)

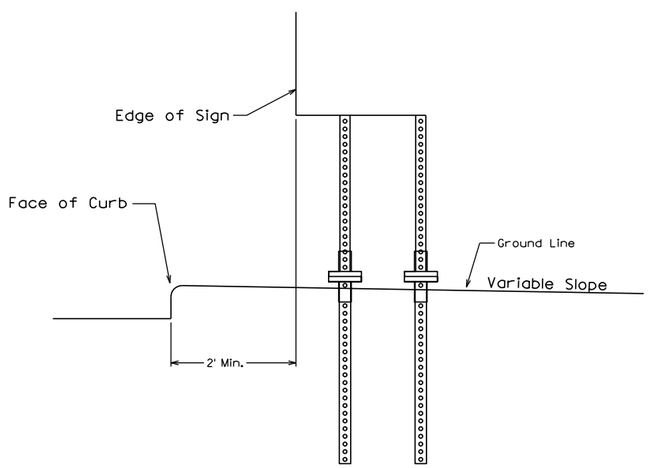

URBAN LOCATION WITH 2 POSTS
(Drawing shown from face of sign)

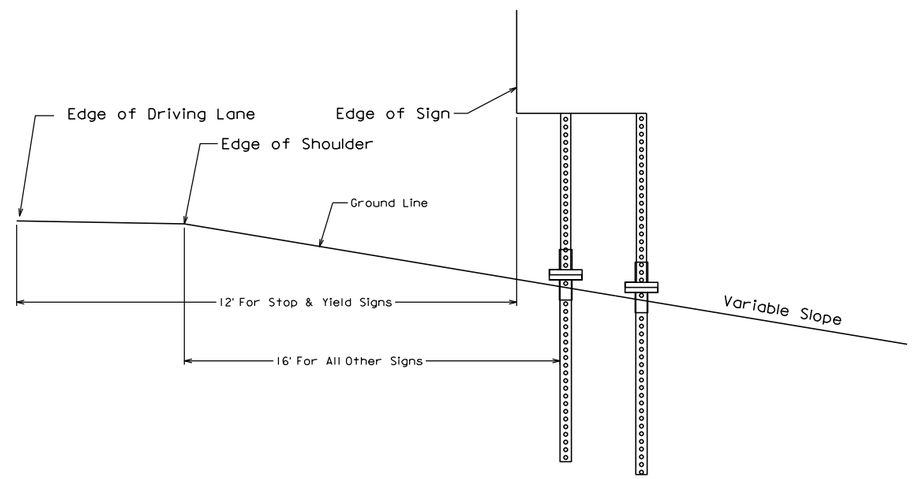

RURAL LOCATION WITH 2 POSTS
(Drawing shown from face of sign)

Plot Scale - 1:200
Plotted From - trrc12695
File - ...\5580-SignSupportStandards.dgn

STATE OF SOUTH DAKOTA	PROJECT	SHEET	TOTAL SHEETS
	IM 0901(38)40	S17	S21

Plotting Date: 08/16/2016

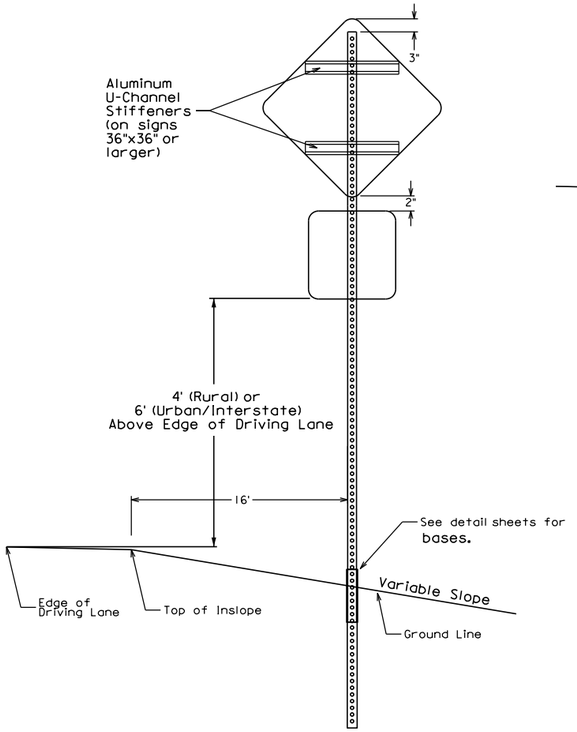

WARNING SIGN WITH SUPPLEMENTAL SIGN
(Drawing shown from face of sign)

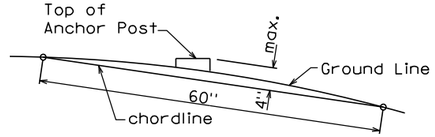

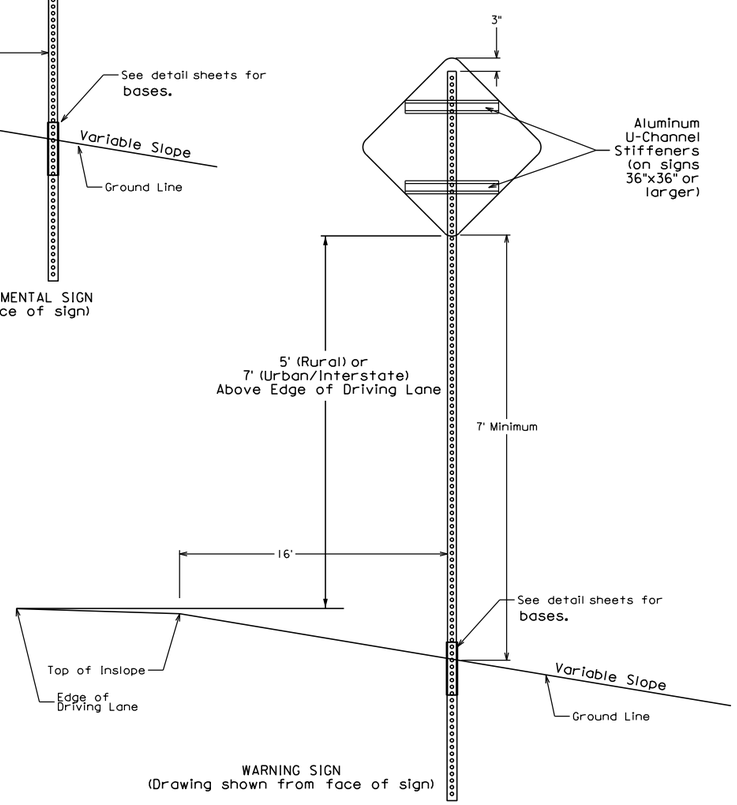

WARNING SIGN
(Drawing shown from face of sign)

TYPICAL ERECTION DETAILS FOR WARNING SIGNS

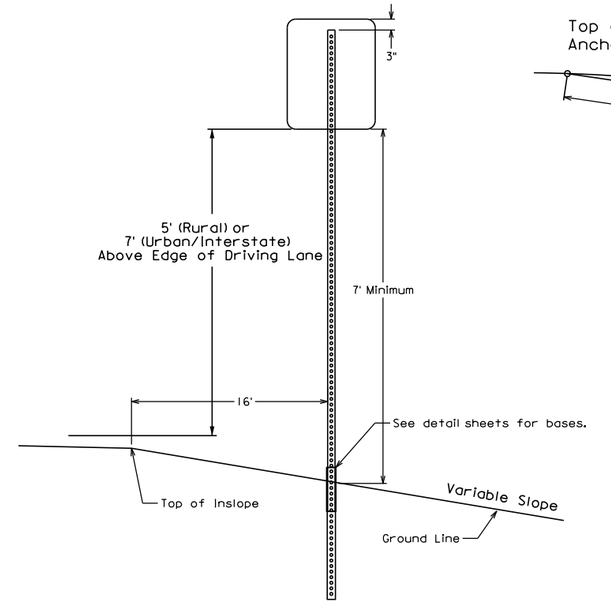

RECTANGULAR OR SQUARE SIGN < 36" IN WIDTH
(Drawing shown from face of sign)

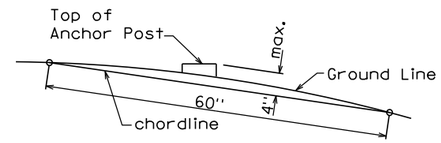

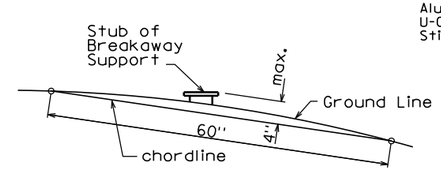

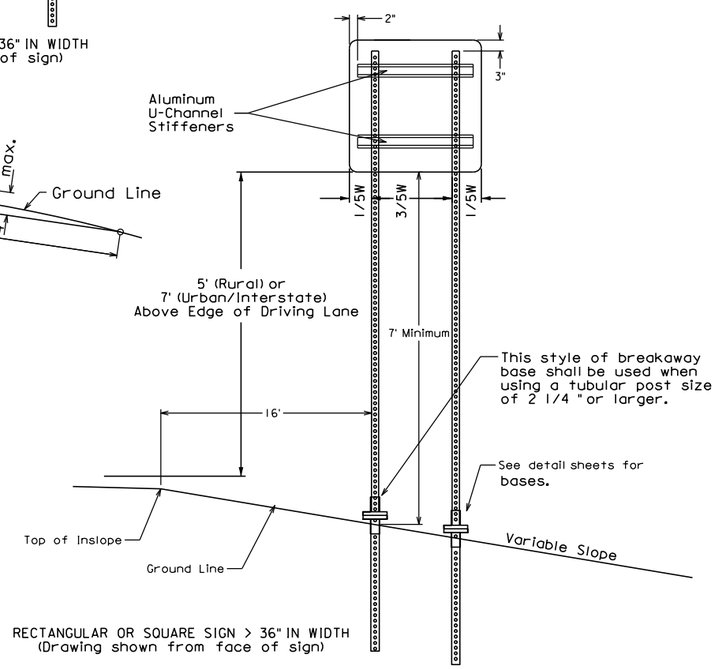

RECTANGULAR OR SQUARE SIGN > 36" IN WIDTH
(Drawing shown from face of sign)

TYPICAL ERECTION DETAILS FOR SQUARE OR RECTANGULAR SIGNS

Plot Scale - 1:200

Plotted From - trrc12695

File - ...\5580-SignSupportStandards.dgn

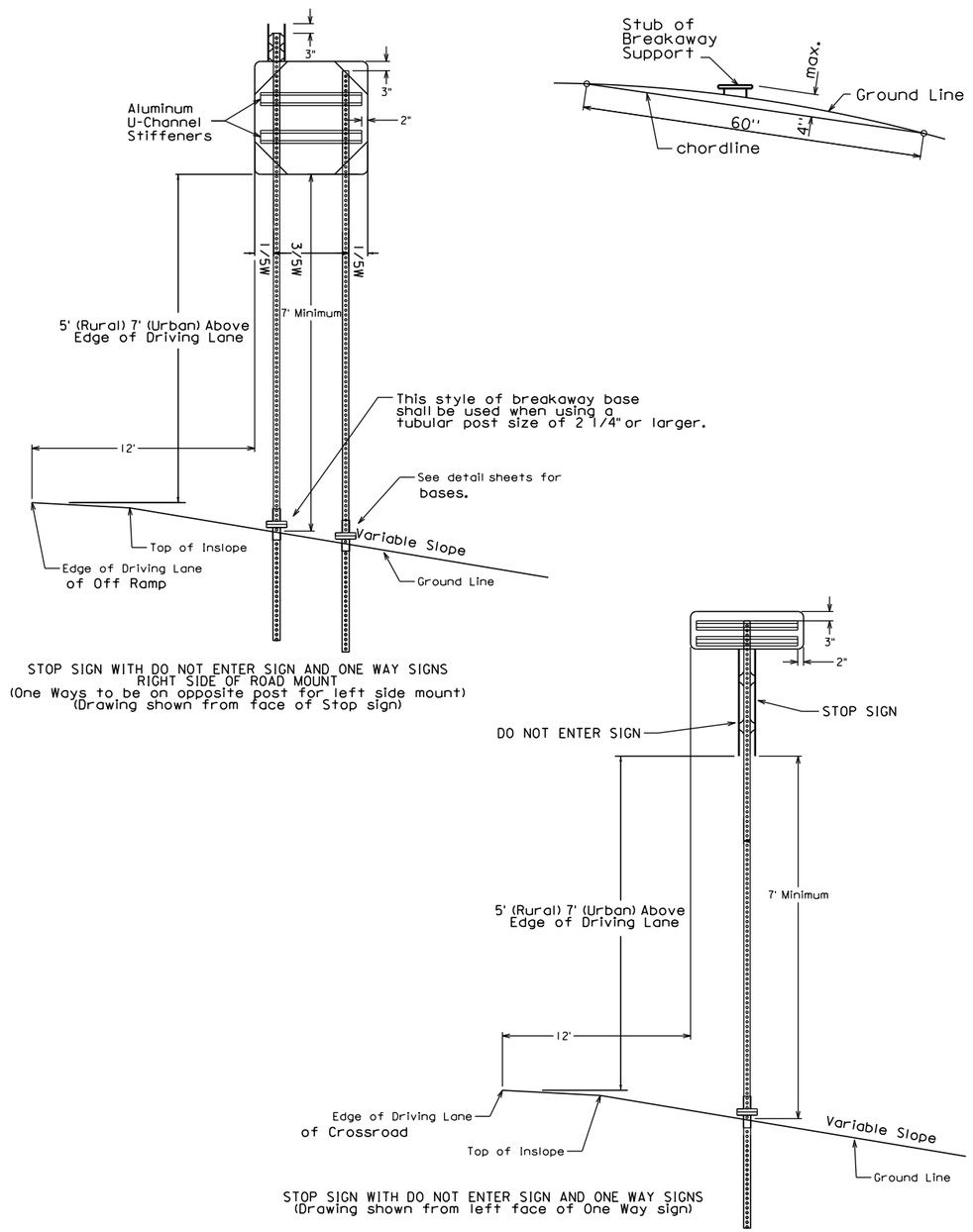

TYPICAL ERECTION DETAILS FOR STOP SIGNS WITH DO NO ENTER AND ONE WAY SIGNS ON INTERSTATE OFF RAMPS

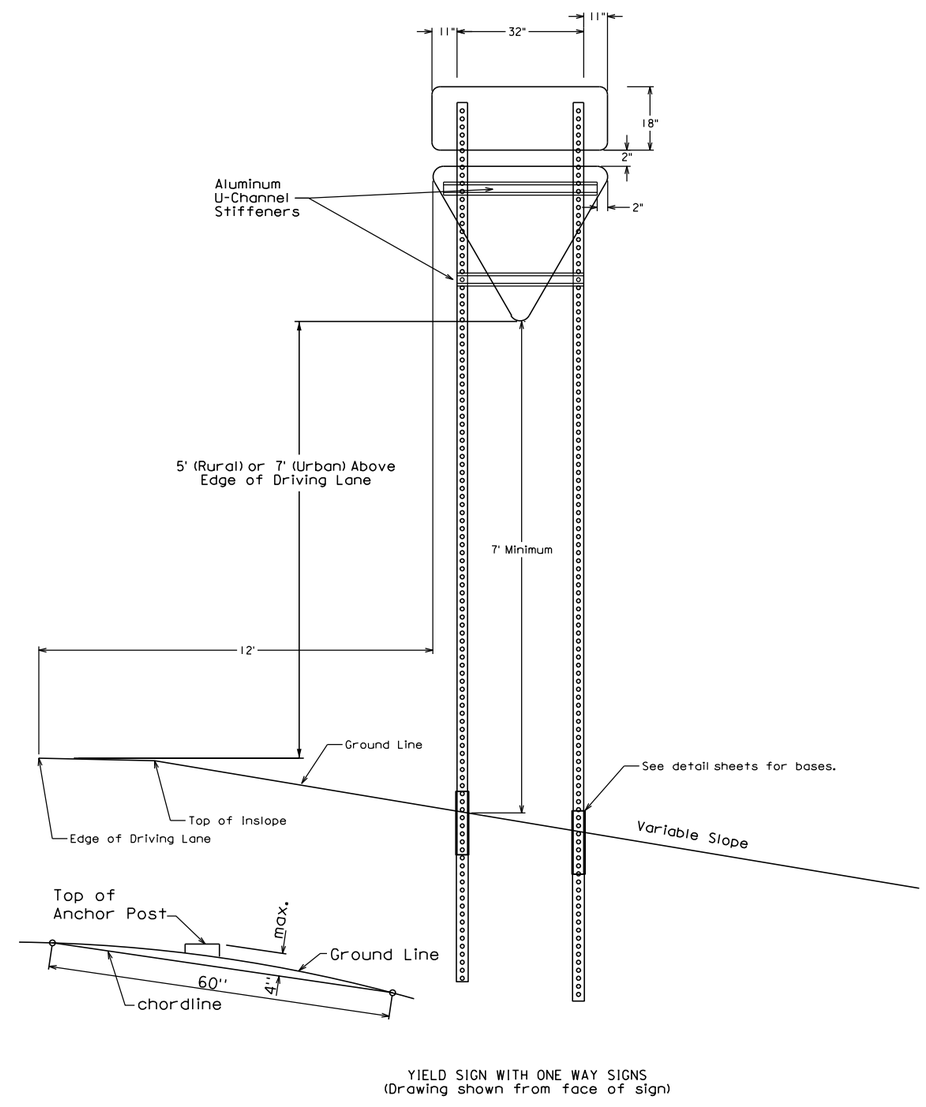

TYPICAL ERECTION DETAILS FOR YIELD SIGNS ON DIVIDED HIGHWAYS

Plot Scale - 1:200
Plotted From - trnc12695
File - ...\5580-SignSupportStandards.dgn

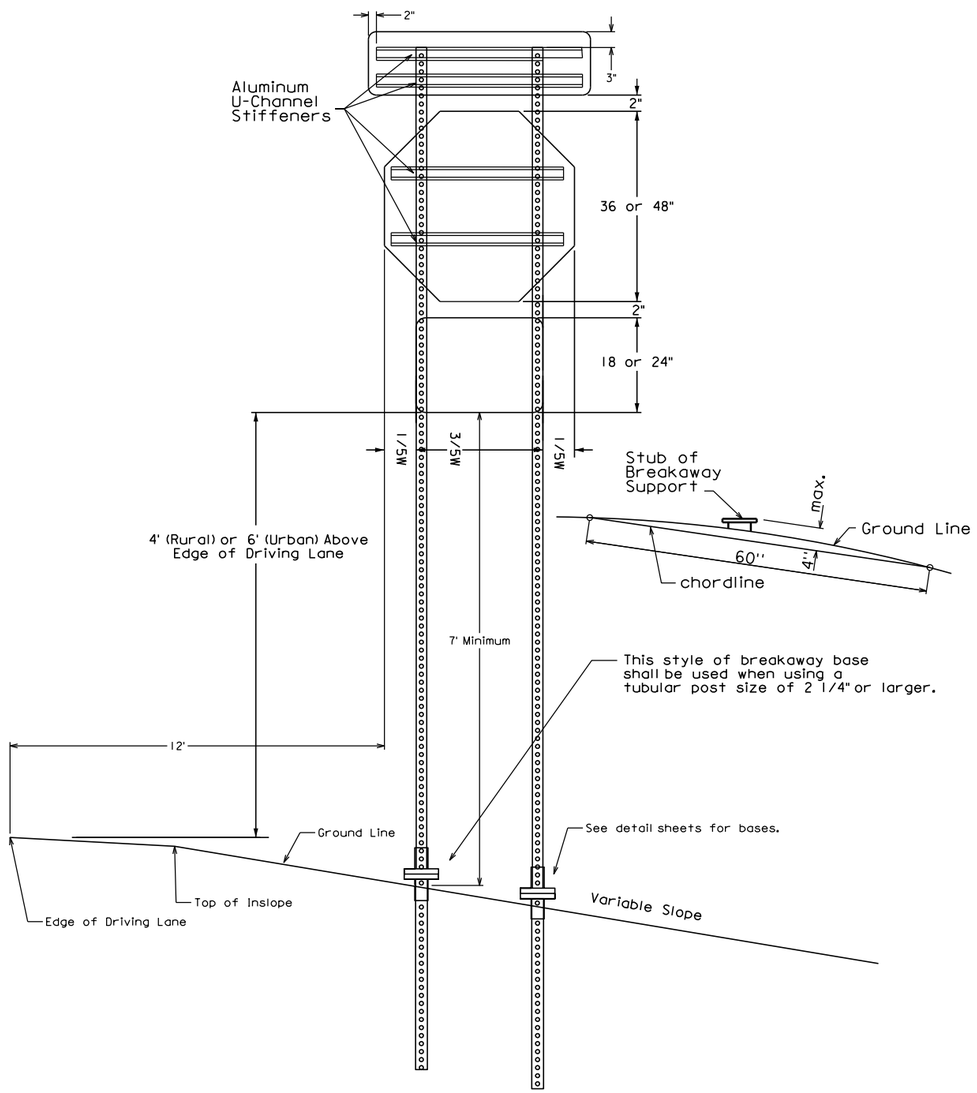

STOP SIGN WITH DIVIDED HIGHWAY SIGN AND ONE WAY SIGNS
(Drawing shown from face of sign)

TYPICAL ERECTION DETAILS FOR STOP SIGNS ON DIVIDED HIGHWAYS

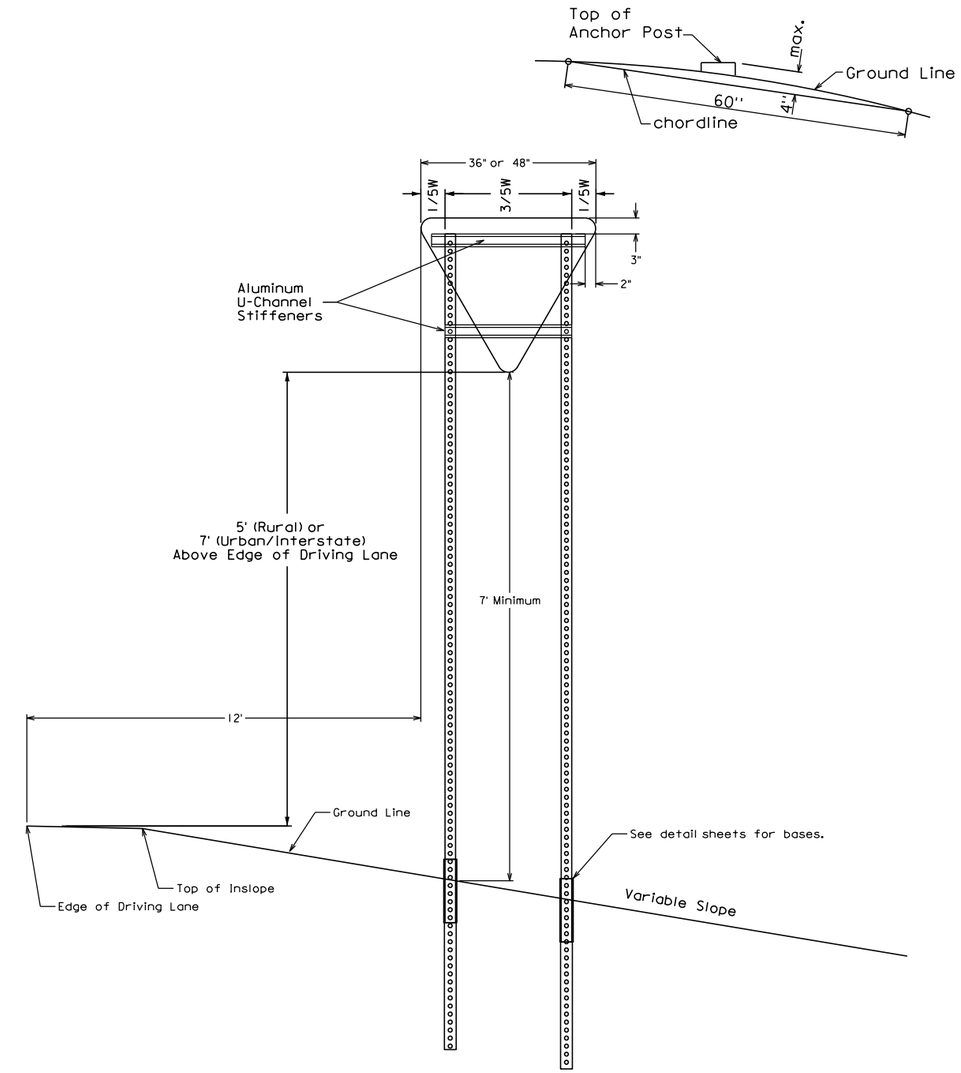

(Drawing shown from face of sign)

TYPICAL ERECTION DETAILS FOR YIELD SIGNS

Plot Scale - 1:200
Plotted From - trrc12695
File - ...\5580-SignSupportStandards.dgn

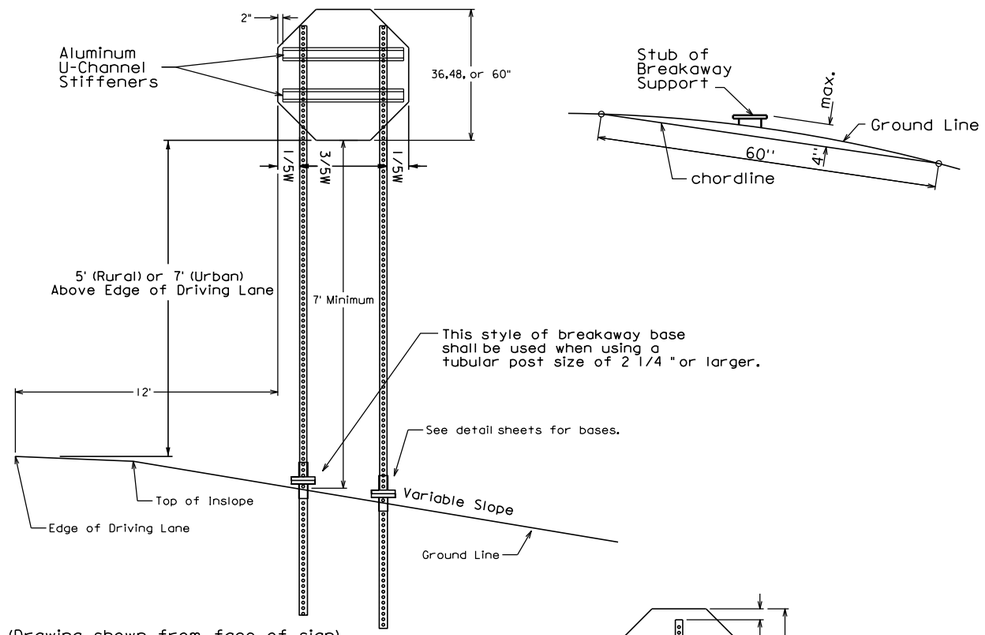

(Drawing shown from face of sign)
TWO-POST ASSEMBLY

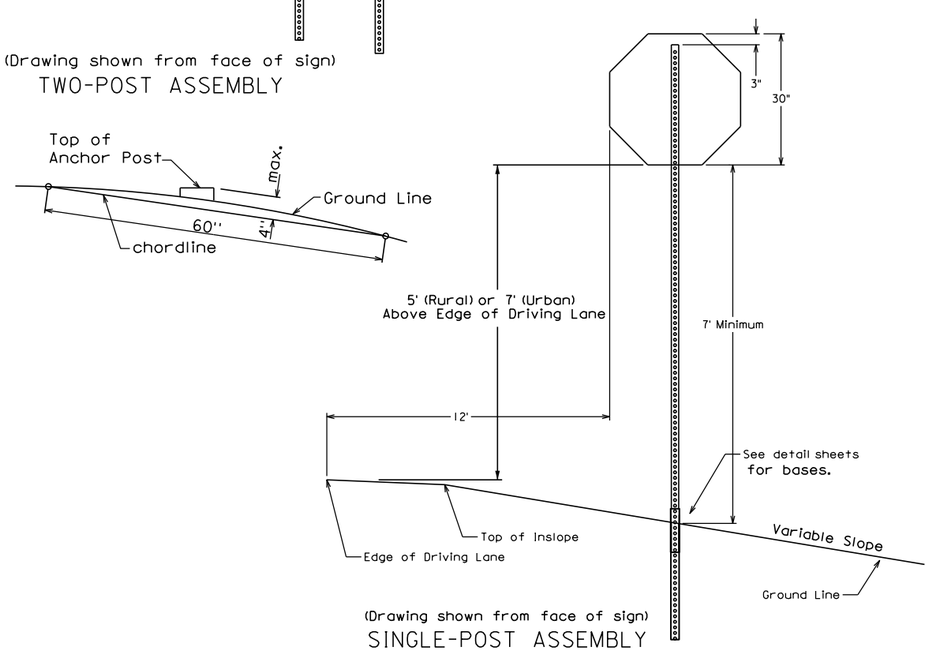

(Drawing shown from face of sign)
SINGLE-POST ASSEMBLY

TYPICAL ERECTION DETAILS FOR STOP SIGNS

SIGN BASE DETAILS FOR A 2½" SIGN POST

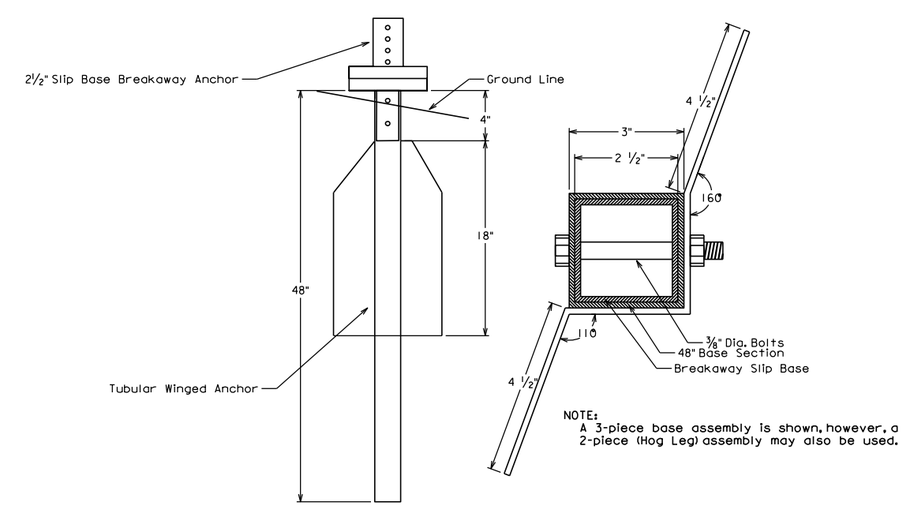

NOTE:
A 3-piece base assembly is shown, however, a 2-piece (Hog Leg) assembly may also be used.

Plot Scale - 1:200
Plotted From - trrc12695
File - ...\5580-SignSupportStandards.dgn

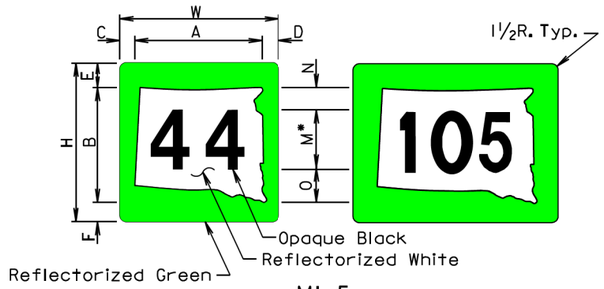

MI-5

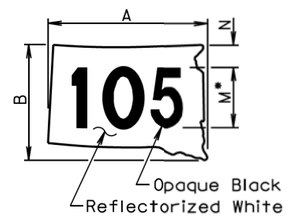

STG

SIGN CODE	WxH	A	B	C	D	E	F	M*	N	O
MI-5	24x24	20½	18	2	1½	3½	2½	12D	2	4
MI-5**	30x24	24	18	2¼	1¾	3½	2½	12D	2	4
MI-5	30x30	25⅝	22½	2½	1⅞	4⅜	3⅛	15D	2½	5
MI-5	36x36	30¾	27	3	2¼	5¼	3¾	18D	3	6

SIGN CODE	AxB	M*	N
STG-24	24x18	10D	4
STG-32	32x24	12D	4¾
STG-48	48x36	18D	7
STG-64	64x48	24D	9½

*In the few cases where there is not enough space for the numerals, the standard "D" series font may be replaced with "C" series font if approved by the Engineer.

** 3 Digits

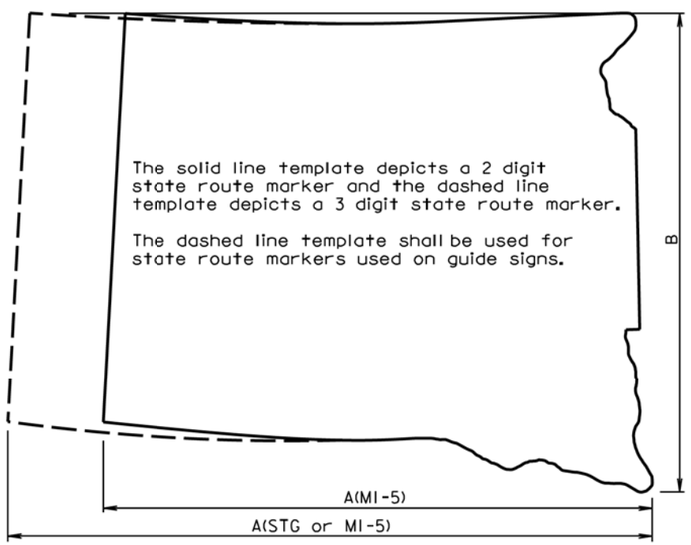

TEMPLATE FOR STATE ROUTE MARKER

GENERAL NOTES:

The unit for all dimensions shown is inches.

Numerals shall be "D" series font for all state route markers except as noted above.

December 23, 2003

Published Date: 3rd Qtr. 2016	SDDOT	STATE ROUTE MARKERS	PLATE NUMBER 632.20
			Sheet 1 of 1

PLOT SCALE - 1:200

PLOT NAME - 16

FILE - ...\5580-STANDARD PLATE1.DGN

-PLOTTED FROM - TRRC12695