STATE OF SOUTH DAKOTA	PROJECT	SHEET	TOTAL SHEETS
	P 0047(18)136	F1	F17

Plotting Date: 06/17/2014

SECTION F: SURFACING PLANS

INDEX OF SHEETS

F1	General Layout W/Index
F2 to F7	Estimate With General Notes & Tables
F8 to F16	Typical Sections
F17	Standard Plates

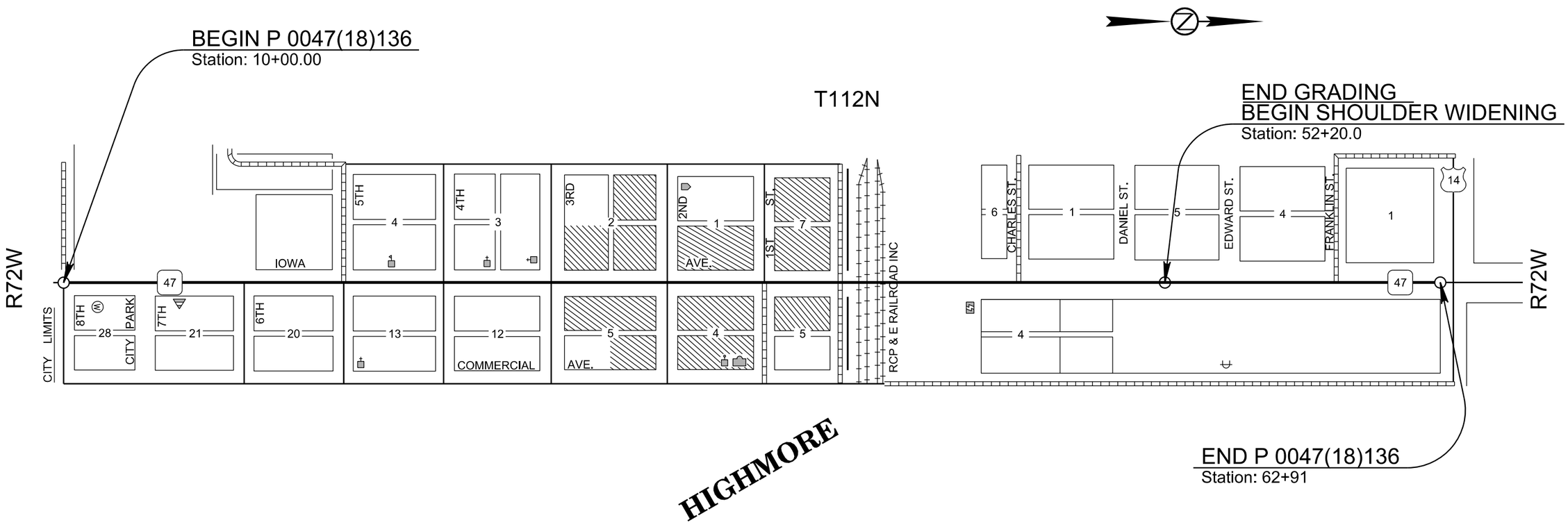

PLOT SCALE - 1:200

PLOT NAME - 1

FILE - ...\PROJHYDE6161\TITLE F 6161.DGN

PLOTTED FROM - TRPR16032

SECTION F ESTIMATE OF QUANTITIES

Bid Item Number	Item	Quantity	Unit
120E0100	Unclassified Excavation, Digouts	50	CuYd
120E6200	Water for Granular Material	492.8	MGal
260E1010	Base Course	17,072.5	Ton
260E1030	Base Course, Salvaged	23,989.6	Ton
320E0007	PG 64-28 Asphalt Binder	505.6	Ton
320E1002	Class Q2 Hot Mixed Asphalt Concrete	8,230.9	Ton
320E4000	Hydrated Lime	81.5	Ton
320E5020	Saw Joint in Asphalt Concrete	2,142	Ft
330E0010	MC-70 Asphalt for Prime	0.5	Ton
330E0100	SS-1h or CSS-1h Asphalt for Tack	8.0	Ton
330E0210	SS-1h or CSS-1h Asphalt for Flush Seal	7.1	Ton
330E2000	Sand for Flush Seal	120.5	Ton
332E0010	Cold Milling Asphalt Concrete	3,142	SqYd
831E0300	MSE Geotextile Fabric	3,663	SqYd

SURFACING THICKNESS DIMENSIONS

Plans tonnage will be applied even though the thickness may vary from that shown on the plans.

At those locations where material must be placed to achieve a required elevation, plans tonnage may be varied to achieve the required elevation.

SAWING IN EXISTING SURFACING

Where new Portland Cement Concrete Pavement (PCCP) or new asphalt concrete is placed adjacent to existing asphalt concrete or PCCP, the existing pavement shall be sawed full depth to a true line with a vertical face.

No separate payment shall be made for sawing except for the following locations:

Shoulder Widening Area
Sta. 52+20.0 Lt. to Sta. 62+91.0 Lt.
Sta. 52+20.0 Rt. to Sta. 62+91.0 Rt.

UNCLASSIFIED EXCAVATION, DIGOUTS

Included in the Estimate of Quantities are 50 cubic yards of Unclassified Excavation, Digouts for the necessary removal of unstable material from the shoulder widening areas, Sta. 52+20.0 to Sta. 62+91.

The Contractor must ensure any water that collects in the digouts can escape the subgrade. The Contractor can accomplish this by ensuring the digouts daylight to the inslope or a drain tube is placed at the bottom of the digouts and the outlet is placed at the closest available point.

Backfill shall be Base Course paid for at the contract unit price per ton.

COLD MILLING ASPHALT CONCRETE

The Los Angeles Abrasion Loss value on the aggregate used for the in place asphalt concrete was 20 percent. These values were obtained from testing during construction of the in place asphalt concrete.

Cold milling asphalt is estimated to produce 157.4 tons of salvaged asphalt concrete material. Cold milled asphalt concrete may be reused as Base Course, Salvaged (see typical sections).

TABLE OF COLD MILLING ASPHALT CONCRETE

Location of Removal Areas	Cold Milling Asphalt Concrete	
	Sq. Yds.	Tons
Sta. 52+20.0 to Sta. 62+91.0	3,141.6	157.4

SALVAGED MATERIAL

Water and Sewer work

If the water and sewer work is accomplished in the Fall, the in place surfacing will be removed from Sta. 10+00 to Sta. 46+78 as “Salvage and Stockpile Asphalt Mix and Granular Material”. See typical sections for location and quantity of salvaged material. An estimated 13,331.1 tons (7053.6 cu.yds.) will be salvaged during this operation and 1,282.6 tons (678.6 cu.yds.) of waste material will be removed as Unclassified Excavation. Total replacement tonnage needed will be 14,613.7 tons. The salvaged material will be reused as Base Course, Salvaged to surface the roadway at the end of the construction season. An estimated 11,998.0 tons of salvaged material will be available due to an estimated 10 percent loss during the removal and replacement operation. Due to the loss an additional 2,615.7 tons of granular material will be needed to return the roadway to the previous elevation plus 584.3 tons for Winter maintenance, see typical sections. The additional 3,200 tons of granular material will be virgin Base Course.

Grading and Final Surfacing work

The in place surfacing will be removed from Sta. 10+00 to Sta. 62+91 as “Salvage and Stockpile Asphalt Mix and Granular Material” and “Cold Milling Asphalt Concrete”. See typical sections for location and quantity of salvaged material. An estimated 14,989.5 tons (7,931.0 cu.yds.) will be removed to be reused as Base Course, Salvaged (14,832.1 tons from the Salvage and Stockpile Asphalt Mix and Granular Material operation and 157.4 tons from the Cold Milling operation). Additional 1,463.4 tons (774.3 cu.yds.) of waste material will be removed as Unclassified Excavation. An estimated 11,991.6 tons of salvaged/cold milled material will be available to be reused as Base Course, Salvaged due to an estimated 20 percent loss during the removal and replacement operation.

An estimated 25,864.1 tons of Base Course/Base Course, Salvaged is needed for the final surfacing of this project. With the 11,991.6 tons of Base Course, Salvaged available, an additional 13,872.5 tons of virgin Base Course is needed for the final surfacing.

The quantity of salvaged material may vary from the plans. The Contractor will be required to construct the roadway according to the depths shown in typical sections. The Contractor will be required to use all the Base Course, Salvaged on this project by decreasing or increasing the quantity of Base Course necessary, or as directed by the Engineer.

No adjustment in the contract unit price for salvage material will be made because of a variation in salvaged material quantities, see Section B.

PLACEMENT OF SALVAGED MATERIAL TABLE

	Water and Sewer work Sta. 10+00 to Sta. 46+78 (tons)	Grading and Final Surfacing work Sta. 10+00 to Sta. 62+91 (tons)	Total (tons)
Salvage and Stockpile Asphalt Mix and Granular Base Material (tons)	13,331.1	14,832.1	28,163.2
Unclassified Excavation of waste material (tons)	1,282.6	1,463.4	2,746.0
Cold Milled Asphalt Concrete (tons)	---	157.4	157.4
Base Course, Salvaged (tons)	11,998.0	11,991.6	23,989.6
Virgin Base Course (tons)	3,200.0	13,872.5	17,072.5

BASE COURSE, SALVAGED

The Base Course, Salvaged shall be obtained from the stockpile site(s) provided by the Contractor from the material salvaged on this project and may be used without further testing.

Base Course, Salvaged taken from stockpile sites shall be run over a 1 1/2 inch screen prior to placement.

All other requirements for Base Course, Salvaged shall apply.

BACKFILLING OF DIGOUTS

Included in the Estimate of Quantities are 100 tons of Base Course or Base Course, Salvaged and 1.2 MGal of Water for Granular Material for backfilling of digouts from the shoulder widening areas, Sta. 52+20.0 to Sta. 62+91. Compaction of the Base Course for the digouts shall be to the satisfaction of the Engineer.

TEMPORARY TRAFFIC CONTROL SURFACING

An estimated 1,000 tons of Base Course or Base Course, Salvaged and 12.0 MGal of Water for Granular Material will be used to maintain traffic to businesses, residences and at other locations designated by the Engineer.

CLASS Q2 HOT MIXED ASPHALT CONCRETE

Mineral aggregate for Class Q2 Hot Mixed Asphalt Concrete shall conform to the requirements included in the Special Provision for Gyratory Controlled Quality Control/Quality Assurance Hot Mixed Asphalt Concrete Pavement.

The asphalt concrete on the shoulders will not be compacted to a specified density. The shoulders shall be compacted using the same rolling pattern used on the adjacent mainline asphalt concrete or as directed by the Engineer.

Summary of Class Q2 Hot Mixed Asphalt Concrete Compaction

Location	With Specified Density Ton	Without Specified Density Ton
SD 47 Mainline		
Sta. 10+00.0 to Sta. 11+10.7		
Mainline	41.4 / 33.1	---
Shoulders	---	25.8 / 17.9
Sta. 11+10.7 to Sta. 40+48.8	2,731.0 / 2,184.9	---
Sta. 40+58.8 to Sta. 40+91.5		
Mainline	---	12.2 / 9.8
Shoulders	---	5.1 / 4.0
Sta. 41+14.3 to Sta. 41+57.8		
Mainline	---	16.3 / 13.0
Shoulders	---	6.7 / 5.4
Sta. 41+67.8 to Sta. 50+74.0	560.7 / 448.1	---
Sta. 50+74.0 to Sta. 52+20.0		
Mainline	54.6 / 43.7	
Shoulders		44.4 / 30.8
Sta. 52+20.0 to Sta. 62+91.0		
Mainline	320.2	---
Shoulders	---	325.2 / 226.9
Miscellaneous Areas		
Intersecting Streets	---	444.2 / 355.2
Entrances	---	70.3
Spot Leveling & Repairs	---	200.0
TOTALS	6,417.7	1,813.2

UNSTABLE SUBGRADE AREA

Geotextile Specification:

The geotextile will conform to the specification for Geotextiles and Impermeable Plastic Membrane, MSE Geotextile Fabric (Section 831.1 of the Specifications). The geotextile will be on the Approved Products List for this material or will be certified by the supplier to meet this specification prior to installation.

Geotextile will be paid for at the contract unit price per square yard for MSE Geotextile Fabric. Payment quantities will be based on area covered plus 15%. Overlaps are accounted for by the additional 15%. Payment will be full compensation for furnishing and installing the geotextile only. 3,663 sq. yds. of MSE Geotextile have been included in the materials quantities for bidding purposes. Granular backfill materials will be paid for under a different bid item.

Granular Material

Granular Material will conform to the specification for Aggregates for Granular Bases and Surfacing, Base Course (Section 882 of the Specifications). Included in the Estimate of Quantities are 2,007 tons of Base Course and 24.1 MGal of Water for Granular Material for use in this application at locations to be designated by the Engineer. This quantity is based on 1 foot of coverage for 3,185 sq. yds. of subgrade. Granular Material will be paid for at the contract unit price for Base Course. Payment will be full compensation for furnishing and placing this material.

TABLE OF QUANTITIES FOR WATER AND SEWER WORK (Sta. 10+00 to Sta. 46+78)

Location-Description	Water for Granular Material	Base Course or Base Course, Salvaged 1st / 2nd Lift
	MGal	Ton
MAINLINE		
Sta. 10+00.0 to Sta. 10+72.2	1.7	141.2
Sta. 10+72.2 to Sta. 14+36.6	19.9	1379.0 / 282.1
Sta. 14+36.6.0 to Sta. 21+20.0	29.8	2216.4 / 263.2
Sta. 21+20.0 to Sta. 24+99.0	19.4	1619.8
Sta. 24+99.0.8 to Sta. 29+21.0	22.4	1868.5
Sta. 29+21.0 to Sta. 33+51.0	24.8	2066.9
Sta. 33+51.0 to Sta. 39+99.0	42.4	3532.5
Sta. 39+99.0 to Sta. 40+48.8	1.2	97.4
Sta. 40+48.8 to Sta. 40+91.5	0.8	63.9
Sta. 41+14.3 to Sta. 41+57.8	1.0	85.1
Sta. 41+67.8 to Sta. 46+78.0	12.0	997.7
Winter Maintenance	7.0	584.3
TOTAL	182.4	15,198.0

The above quantities are included in the Surfacing Estimate of Quantities.

RATES OF MATERIALS FOR FINAL SURFACING (Sta. 10+00 to Sta. 62+91)

The Estimate of Surfacing Quantities is based on the following quantities of materials per **station**.

SD 47 MAINLINE

Sta. 14+06.0 to Sta. 24+78.0

BASE COURSE OR BASE COURSE, SALVAGED – 1st Lift

Crushed Aggregate or Salvaged Material 284.31 Tons.

Water for Granular Material at the rate of 3.41 M. Gallons.

BASE COURSE – 2nd Lift

Crushed Aggregate 102.08 Tons.

Water for Granular Material at the rate of 1.22 M. Gallons.

CLASS Q2 HOT MIXED ASPHALT CONCRETE – 1st Lift

Crushed Aggregate		72.30 Tons
PG 64-28 Asphalt Binder		4.78 Tons
	Total Mix	77.08 Tons
Hydrated Lime		0.77 Tons
Total:		77.85 Tons

The exact proportions of this material will be determined on construction.

SS-1h or CSS-1h Asphalt for Tack at the rate of 0.12 ton applied 50.0 feet wide (Rate = 0.05 gallon per square yard).

CLASS Q2 HOT MIXED ASPHALT CONCRETE – 2nd Lift

Crushed Aggregate		57.84 Tons
PG 64-28 Asphalt Binder		3.82 Tons
	Total Mix	61.66 Tons
Hydrated Lime		0.62 Tons
Total:		62.28 Tons

The exact proportions of this material will be determined on construction.

FLUSH SEAL

SS-1h or CSS-1h Asphalt for Flush Seal at the rate of 0.12 ton applied 50.0 feet wide (Rate = 0.05 gallon per square yard).

Sand for Flush Seal at the rate of 2.18 tons applied 49.0 feet wide (Rate = 8.00 lbs. per square yard).

SD 47 MAINLINE

Sta. 29+06.1 to Sta. 40+02.1

BASE COURSE OR BASE COURSE, SALVAGED – 1st Lift

Crushed Aggregate or Salvaged Material 383.48 Tons.

Water for Granular Material at the rate of 4.60 M. Gallons.

BASE COURSE – 2nd Lift

Crushed Aggregate 142.92 Tons.

Water for Granular Material at the rate of 1.72 M. Gallons.

CLASS Q2 HOT MIXED ASPHALT CONCRETE – 1st Lift

Crushed Aggregate		101.22 Tons
PG 64-28 Asphalt Binder		6.69 Tons
	Total Mix	107.91 Tons
Hydrated Lime		1.08 Tons
Total:		108.99 Tons

The exact proportions of this material will be determined on construction.

SS-1h or CSS-1h Asphalt for Tack at the rate of 0.17 ton applied 70.0 feet wide (Rate = 0.05 gallon per square yard).

CLASS Q2 HOT MIXED ASPHALT CONCRETE – 2nd Lift

Crushed Aggregate		80.98 Tons
PG 64-28 Asphalt Binder		5.35 Tons
	Total Mix	86.33 Tons
Hydrated Lime		0.86 Tons
Total:		87.19 Tons

The exact proportions of this material will be determined on construction.

FLUSH SEAL

SS-1h or CSS-1h Asphalt for Flush Seal at the rate of 0.17 ton applied 70.0 feet wide (Rate = 0.05 gallon per square yard).

Sand for Flush Seal at the rate of 3.07 tons applied 69.0 feet wide (Rate = 8.00 lbs. per square yard).

SD 47 MAINLINE

Sta. 42+68.7 to Sta. 50+45.6

BASE COURSE OR BASE COURSE, SALVAGED – 1st Lift

Crushed Aggregate or Salvaged Material 234.73 Tons.

Water for Granular Material at the rate of 2.82 M. Gallons.

BASE COURSE – 2nd Lift

Crushed Aggregate 81.67 Tons.

Water for Granular Material at the rate of 0.98 M. Gallons.

CLASS Q2 HOT MIXED ASPHALT CONCRETE – 1st Lift

Crushed Aggregate		57.84 Tons
PG 64-28 Asphalt Binder		3.82 Tons
	Total Mix	61.66 Tons
Hydrated Lime		0.62 Tons
Total:		62.28 Tons

The exact proportions of this material will be determined on construction.

SS-1h or CSS-1h Asphalt for Tack at the rate of 0.09 ton applied 40.0 feet wide (Rate = 0.05 gallon per square yard).

CLASS Q2 HOT MIXED ASPHALT CONCRETE – 2nd Lift

Crushed Aggregate		46.27 Tons
PG 64-28 Asphalt Binder		3.06 Tons
	Total Mix	49.33 Tons
Hydrated Lime		0.49 Tons
Total:		49.82 Tons

The exact proportions of this material will be determined on construction.

FLUSH SEAL

SS-1h or CSS-1h Asphalt for Flush Seal at the rate of 0.09 ton applied 40.0 feet wide (Rate = 0.05 gallon per square yard).

Sand for Flush Seal at the rate of 1.73 tons applied 39.0 feet wide (Rate = 8.00 lbs. per square yard).

SD 47 SHOULDERS

Sta. 52+20.0 to Sta. 62+91.0 Lt. & Rt.
Rates are for one shoulder only.

BASE COURSE or BASE COURSE, SALVAGED

Crushed Aggregate or Salvaged Material 89.25 Tons.

Water for Granular Material at the rate of 1.07 M. Gallons.

CLASS Q2 HOT MIXED ASPHALT CONCRETE

Crushed Aggregate		14.10 Tons
PG 64-28 Asphalt Binder		0.93 Tons
	Total Mix	15.03 Tons
Hydrated Lime		0.15 Tons
Total:		15.18 Tons

The exact proportions of this material will be determined on construction.

SD 47 MAINLINE OVERLAY

Sta. 52+20.0 to Sta. 62+91.0

SS-1h or CSS-1h Asphalt for Tack at the rate of 0.10 ton applied 43.0 feet wide (Rate = 0.05 gallon per square yard).

CLASS Q2 HOT MIXED ASPHALT CONCRETE

Crushed Aggregate		47.43 Tons
PG 64-28 Asphalt Binder		3.14 Tons
	Total Mix	50.57 Tons
Hydrated Lime		0.51 Tons
Total:		51.08 Tons

The exact proportions of this material will be determined on construction.

FLUSH SEAL

SS-1h or CSS-1h Asphalt for Flush Seal at the rate of 0.11 ton applied 45.0 feet wide (Rate = 0.05 gallon per square yard).

Sand for Flush Seal at the rate of 0.98 tons applied 22.0 feet wide (Rate = 8.00 lbs. per square yard).

STATE OF SOUTH DAKOTA	PROJECT	SHEET NO.	TOTAL SHEETS
	P 0047(18)136	F7	F17

TABLE OF ADDITIONAL QUANTITIES FOR FINAL SURFACING (Sta. 10+00 to Sta. 62+91)

Location-Description	Water for Granular Material	Base Course or Base Course, Salvaged 1st / 2nd Lift	Class Q2 Hot Mixed Asphalt Concrete 1st / 2nd Lift	PG 64-28 Asphalt Binder 1st / 2nd Lift	Hydrated Lime 1st / 2nd Lift	MC-70 Asphalt for Prime	SS-1h or CSS-1h Asphalt for Tack	SS-1h or CSS-1h Asphalt for Flush Seal	Sand for Flush Seal
	MGal	Ton	Ton	Ton	Ton	Ton	Ton	Ton	Ton
MAINLINE									
Sta. 10+00.0 to Sta. 11+10.7	4.1	341.0	67.2 / 51.0	4.1 / 3.1	0.7 / 0.5	---	0.1	0.1	1.1
Sta. 11+10.7 to Sta. 14+06.0	16.3	989.3 / 363.0	275.8 / 220.7	16.9 / 13.6	2.7 / 2.2	---	0.4	0.4	7.7
Sta. 24+78.0 to Sta. 29+06.1	23.5	1429.4 / 524.4	399.9 / 320.0	24.5 / 19.6	3.9 / 3.2	---	0.6	0.6	11.2
Sta. 40+02.1 to Sta. 40+48.8	1.6	101.0 / 34.6	26.2 / 21.0	1.6 / 1.3	0.3 / 0.2	---	---	---	0.7
Sta. 40+58.8 to Sta. 40+91.5	0.9	77.8	17.3 / 13.8	1.1 / 0.9	0.2 / 0.1	---	---	---	0.5
Sta. 41+14.3 to Sta. 41+57.8	1.2	103.5	23.0 / 18.4	1.4 / 1.1	0.2 / 0.2	---	---	---	0.6
Sta. 41+67.8 to Sta. 42+68.7	3.6	222.5 / 76.5	58.3 / 46.7	3.6 / 2.9	0.6 / 0.5	---	0.1	0.1	1.6
Sta. 50+45.6 to Sta. 50+74.0	1.1	66.5 / 25.0	18.5 / 14.3	1.1 / 0.9	0.2 / 0.1	---	---	---	0.3
Sta. 50+74.0 to Sta. 52+20.0	6.1	505.9	99.0 / 74.5	6.1 / 4.5	1.0 / 0.7	---	0.1	0.1	1.5
MISCELLANEOUS ITEMS									
Spot Leveling & Repair of Shoulder Widening Area	---	---	200.0	12.3	2.0	---	---	---	---
Leveling & Repair throughout Project	---	---				---	1.0	---	---
INTERSECTING STREETS									
Sta. 10+59 Rt.	2.8	236.5	50.3 / 40.2	3.1 / 2.5	0.5 / 0.4	---	0.1	0.1	1.4
Sta. 10+59 Lt.	2.9	245.2	40.1 / 32.1	2.5 / 2.0	0.4 / 0.3	---	0.1	0.1	1.2
Sta. 17+40 Rt.	1.4	112.6	19.9 / 16.0	1.2 / 1.0	0.2 / 0.2	---	---	---	0.6
Sta. 21+19 Lt.	2.3	193.3	17.8 / 14.2	1.1 / 0.9	0.2 / 0.1	---	---	---	0.5
Sta. 21+21 Rt.	1.3	110.4	17.2 / 13.8	1.1 / 0.9	0.2 / 0.1	---	---	---	0.5
Sta. 24+98 Lt.	2.0	163.0	18.2 / 14.5	1.1 / 0.9	0.2 / 0.1	---	0.1	0.1	0.9
Sta. 25+01 Rt.	1.2	102.9	30.3 / 24.2	1.9 / 1.5	0.3 / 0.2	---	---	---	0.5
Sta. 29+24 Lt.	1.6	135.1	25.0 / 20.0	1.5 / 1.2	0.3 / 0.2	---	---	---	0.7
Sta. 29+26 Rt.	1.9	161.5	30.0 / 24.0	1.8 / 1.5	0.3 / 0.2	---	0.1	0.1	0.9
Sta. 33+51 Rt.	2.5	210.2	41.2 / 32.9	2.5 / 2.0	0.4 / 0.3	---	0.1	0.1	1.2
Sta. 33+52 Lt.	2.5	210.4	41.9 / 33.5	2.6 / 2.1	0.4 / 0.3	---	0.1	0.1	1.2
Sta. 37+02 Rt.	1.0	83.1	8.1 / 6.5	0.5 / 0.4	0.1 / 0.1	---	---	---	0.2
Sta. 37+32 Lt.	2.1	177.2	33.9 / 27.1	2.1 / 1.7	0.3 / 0.3	---	0.1	0.1	1.0
Sta. 39+79 Rt.	2.5	208.1	28.1 / 22.5	1.7 / 1.4	0.3 / 0.2	---	---	---	0.8
Sta. 39+89 Lt.	1.1	88.7	8.2 / 6.5	0.5 / 0.4	0.1 / 0.1	---	---	---	0.2
Sta. 46+78 Lt.	1.4	118.6	9.5 / 7.6	0.6 / 0.5	0.1 / 0.1	---	---	---	0.3
Sta. 59+00 Lt.	1.5	125.2	24.5 / 19.6	1.5 / 1.2	0.2 / 0.2	---	---	---	0.7
ENTRANCES									
Sta. 31+62 Rt.	1.2	102.0	---	---	---	---	---	---	---
Sta. 41+89 Rt.	0.6	46.0	14.4	0.9	0.1	0.1	---	---	0.3
Sta. 43+06 Lt.	1.4	119.2	27.1	1.7	0.3	0.2	---	---	0.6
Sta. 44+67 Lt.	0.3	23.1	---	---	---	---	---	---	---
Sta. 50+56 Rt.	0.2	20.1	9.2	0.6	0.1	0.1	---	---	0.2
Sta. 51+97 Rt.	1.2	99.7	---	---	---	---	---	---	---
Sta. 53+29 Rt.	1.1	91.1	---	---	---	---	---	---	---
Sta. 58+94 Rt.	1.4	116.3	---	---	---	---	---	---	---
Sta. 61+02 Lt.	1.3	108.6	---	---	---	---	---	---	---
Sta. 62+40 Lt.	0.8	64.8	19.6	1.2	0.2	0.1	---	---	0.3
Entrances – 30 each	1.8	147.1	---	---	---	---	---	---	---
TOTAL	101.5	8,475.8	2,835.3	174.4	28.1	0.5	3.0	2.0	39.6

The above quantities are included in the Surfacing Estimate of Quantities.

IN PLACE SURFACING SECTIONS

STATE OF SOUTH DAKOTA	PROJECT	SHEET NO.	TOTAL SHEETS
	P 0047(18)136	F8	F17

Plotting Date: 06/17/2014

Salvage and Stockpile Asphalt Mix And Granular Base Material

Unclassified Excavation (Waste Material) See Section B

WATER AND SEWER WORK
Sta. 10+00 to Sta. 10+72.2
Sta. 39+99 to Sta. 40+48.8
Sta. 40+58.8 to Sta. 40+91.5
Sta. 41+14.3 to Sta. 41+57.8
Sta. 41+67.8 to Sta. 46+78.0

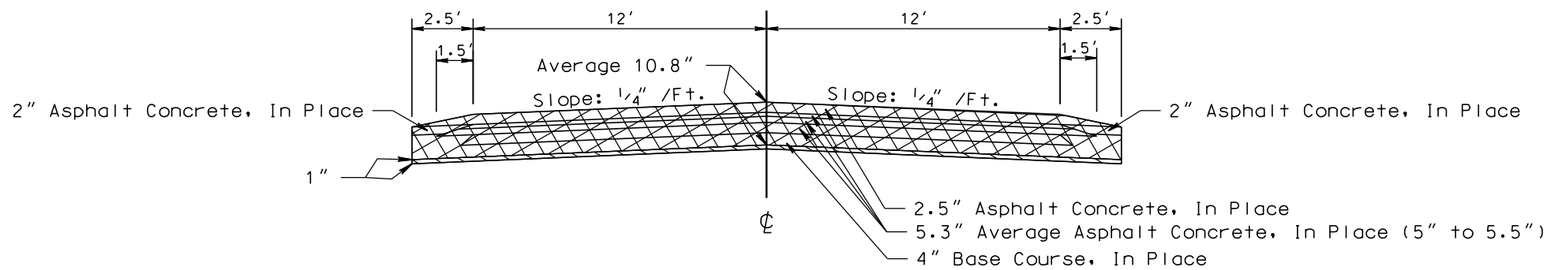

WATER AND SEWER WORK
Sta. 10+72.2 to Sta. 14+36.6

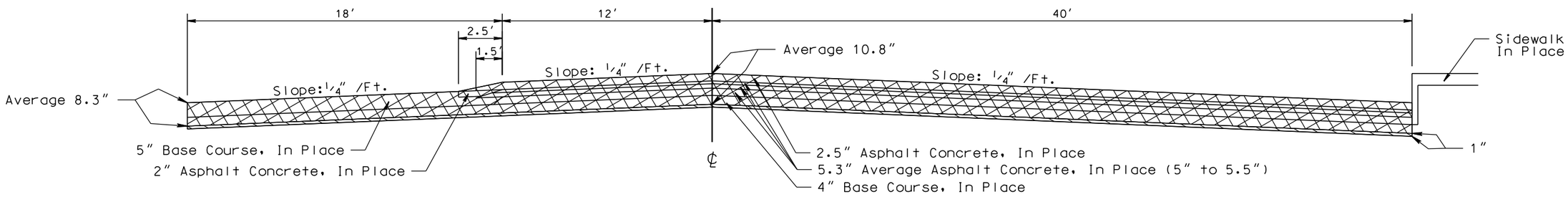

WATER AND SEWER WORK
Sta. 14+36.6 to Sta. 21+20

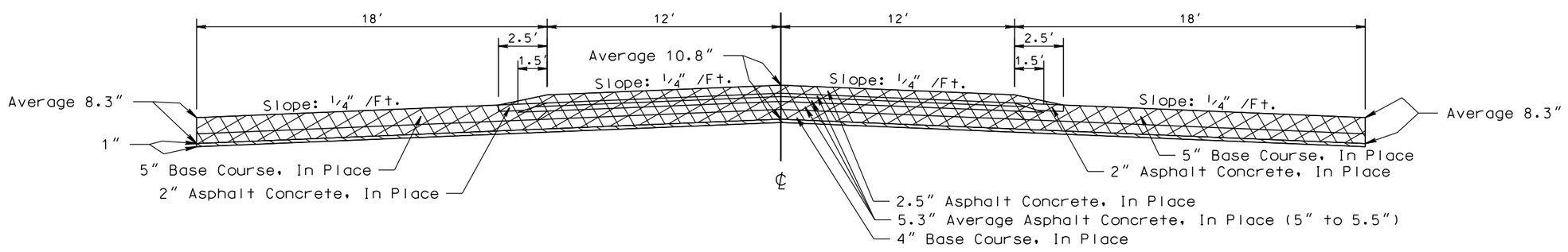

PLOT SCALE - 1:6.19298

PLOTTED FROM - TRPR16032

PLOT NAME - 2

FILE - ...\TYPICAL SECTION 6161.DGN

IN PLACE SURFACING SECTIONS

STATE OF SOUTH DAKOTA	PROJECT	SHEET NO.	TOTAL SHEETS
	P 0047(18)136	F9	F17

Plotting Date: 06/17/2014

Salvage and Stockpile Asphalt Mix And Granular Base Material

Unclassified Excavation (Waste Material) See Section B

WATER AND SEWER WORK
Sta. 21+20 to Sta. 24+99

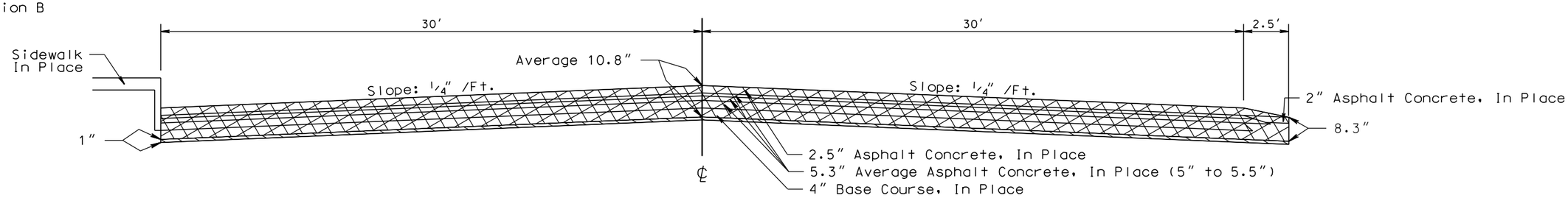

WATER AND SEWER WORK
Sta. 24+99 to Sta. 29+21

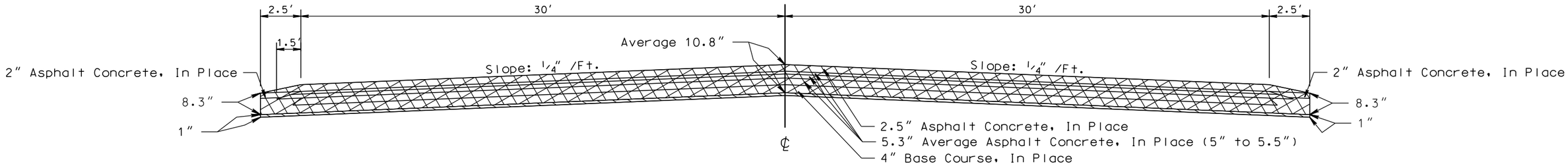

Transition:

Sta. 29+21 to Sta. 33+51
* 35′

WATER AND SEWER WORK
Sta. 29+21 to Sta. 39+99

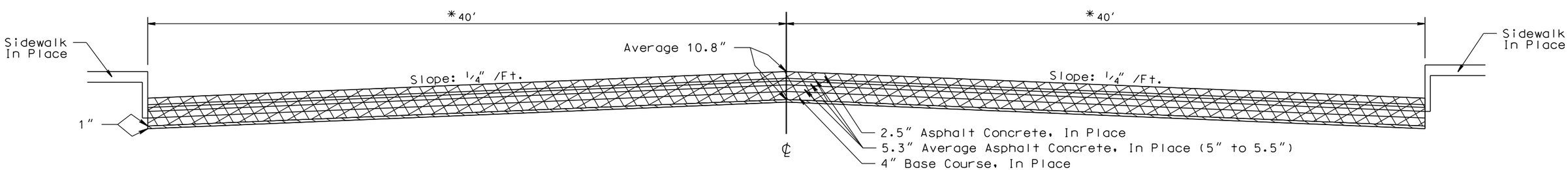

PLOT SCALE - 1:6.19298

PLOTTED FROM - TRPR16032

PLOT NAME - 3

FILE - ...\TYPICAL SECTION 6161.DGN

TYPICAL SURFACING SECTIONS

STATE OF SOUTH DAKOTA	PROJECT	SHEET NO.	TOTAL SHEETS
	P 0047(18)136	F10	F17

Plotting Date: 06/17/2014

WATER AND SEWER WORK
Sta. 10+00 to Sta. 10+72.2
Sta. 39+99 to Sta. 40+48.8
Sta. 40+58.8 to Sta. 40+91.5
Sta. 41+14.3 to Sta. 41+57.8
Sta. 41+67.8 to Sta. 46+78.0

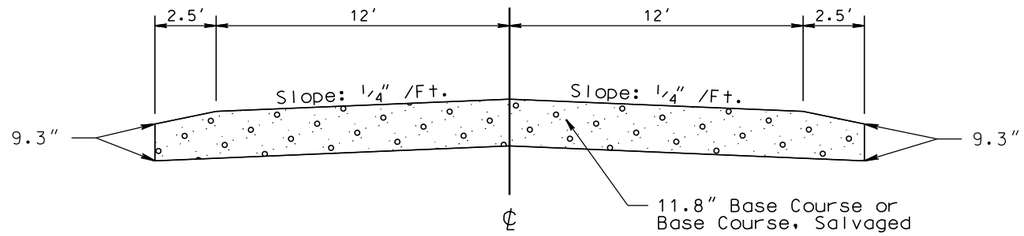

WATER AND SEWER WORK
Sta. 10+72.2 to Sta. 14+36.6

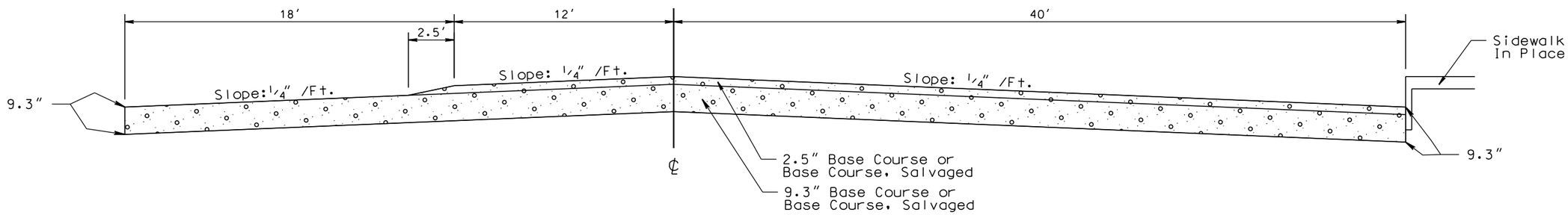

WATER AND SEWER WORK
Sta. 14+36.6 to Sta. 21+20

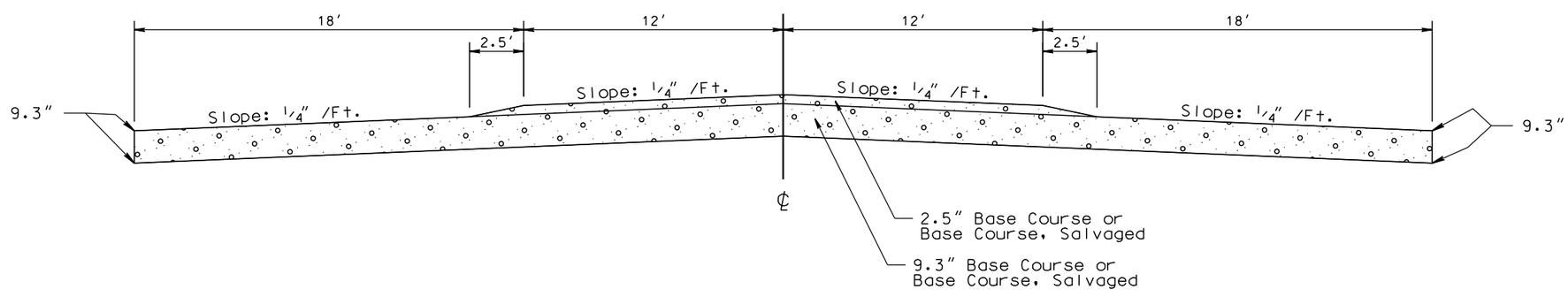

PLOT SCALE - 1:6.19298
PLOT NAME - 4
FILE -...\TYPICAL SECTION 6161.DGN
PLOTTED FROM - TRPR16032

TYPICAL SURFACING SECTIONS

STATE OF SOUTH DAKOTA	PROJECT	SHEET NO.	TOTAL SHEETS
	P 0047(18)136	F11	F17

Plotting Date: 06/17/2014

WATER AND SEWER WORK
Sta. 21+20 to Sta. 24+99

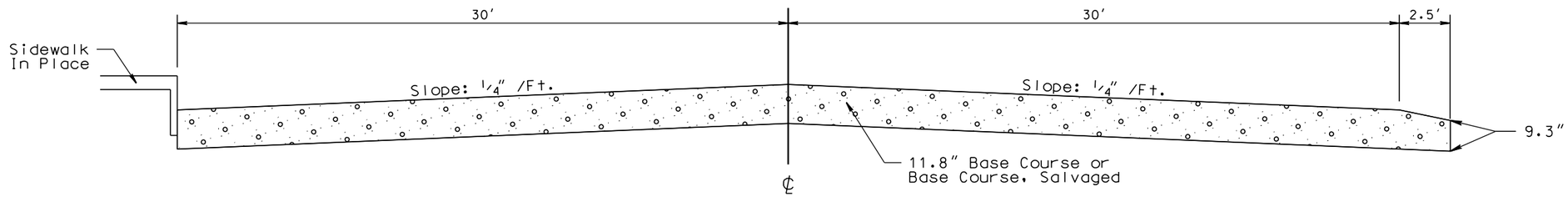

WATER AND SEWER WORK
Sta. 24+99 to Sta. 29+21

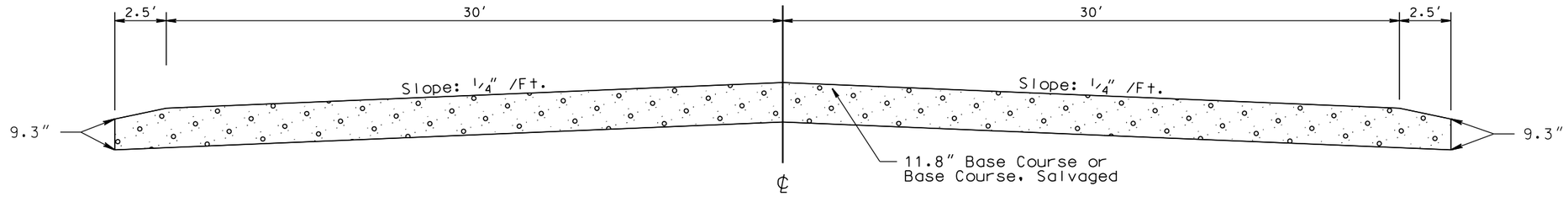

Transition:

Sta. 29+21 to Sta. 33+51
* 35'

WATER AND SEWER WORK
Sta. 29+21 to Sta. 39+99

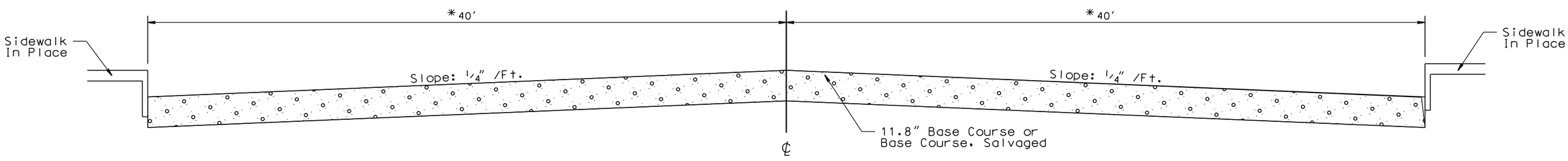

PLOT SCALE - 1:6.19298

PLOTTED FROM - TRPR16032

PLOT NAME - 5

FILE - ...\TYPICAL SECTION 6161.DGN

IN PLACE SURFACING SECTIONS

STATE OF SOUTH DAKOTA	PROJECT	SHEET NO.	TOTAL SHEETS
	P 0047(18)136	F12	F17

Plotting Date: 06/17/2014

Salvage and Stockpile Asphalt Mix And Granular Base Material

Unclassified Excavation (Waste Material) See Section B

GRADING AND FINAL SURFACING WORK
Sta. 10+00 to Sta. 10+72.2
Sta. 39+99 to Sta. 40+48.8
Sta. 40+58.8 to Sta. 40+91.5
Sta. 41+14.3 to Sta. 41+57.8
Sta. 41+67.8 to Sta. 46+78.0

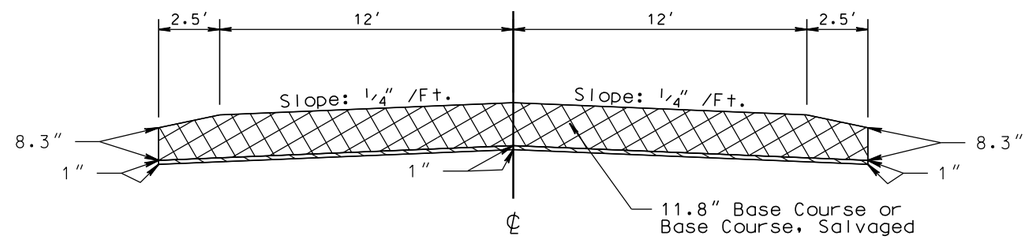

GRADING AND FINAL SURFACING WORK
Sta. 10+72.2 to Sta. 14+36.6

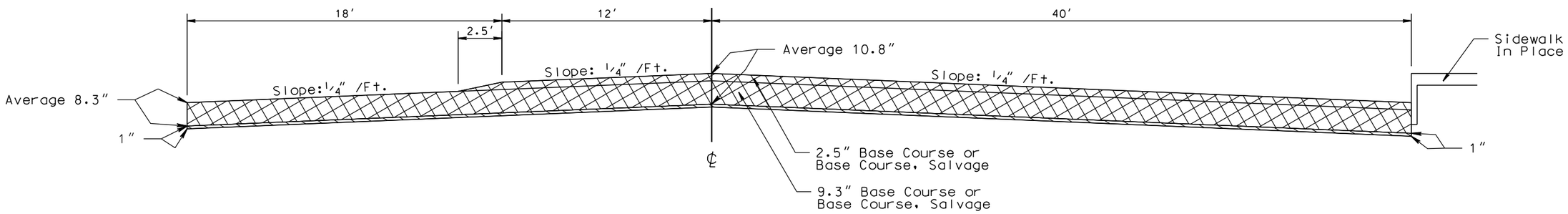

GRADING AND FINAL SURFACING WORK
Sta. 14+36.6 to Sta. 21+20

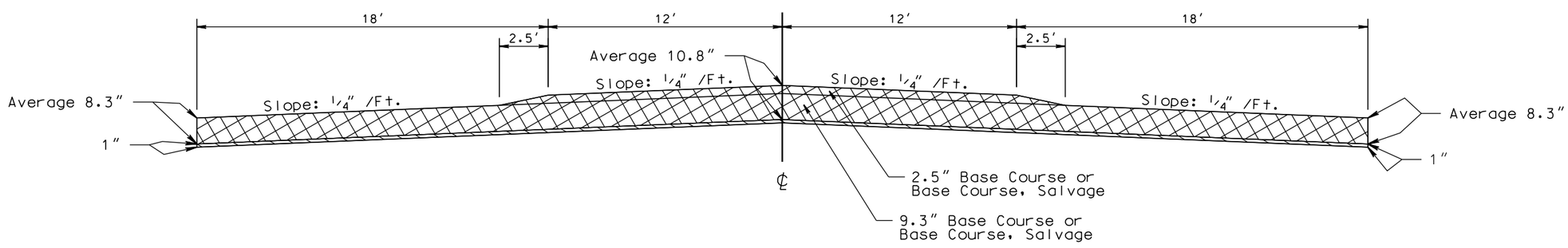

PLOT SCALE - 1:6.19298

PLOT NAME - 6

FILE -...\TYPICAL SECTION 6161.DGN

PLOTTED FROM - TRPR16032

IN PLACE SURFACING SECTIONS

STATE OF SOUTH DAKOTA	PROJECT	SHEET NO.	TOTAL SHEETS
	P 0047(18)136	F13	F17

Plotting Date: 06/17/2014

Salvage and Stockpile Asphalt Mix And Granular Base Material

Unclassified Excavation (Waste Material) See Section B

GRADING AND FINAL SURFACING WORK
Sta. 21+20 to Sta. 24+99

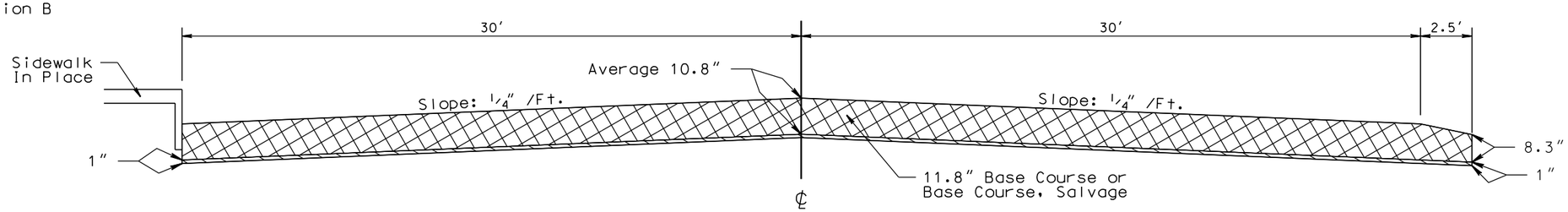

GRADING AND FINAL SURFACING WORK
Sta. 24+99 to Sta. 29+21

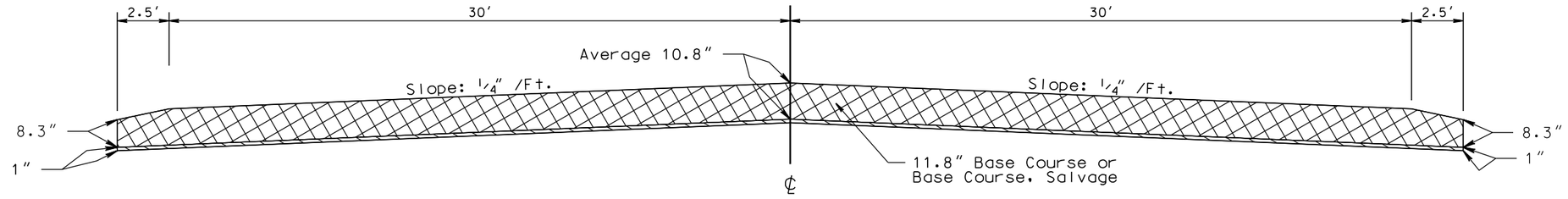

Transition:

Sta. 29+21 to Sta. 33+51
* 35'

GRADING AND FINAL SURFACING WORK
Sta. 29+21 to Sta. 39+99

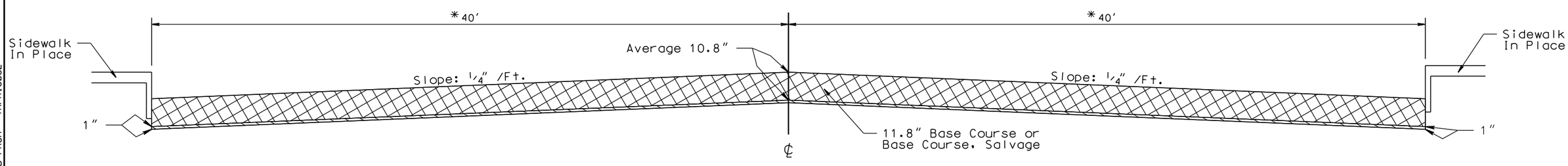

PLOT SCALE - 1:6.19298

PLOTTED FROM - TRPR16032

PLOT NAME - 7

FILE - ...\TYPICAL SECTION 6161.DGN

IN PLACE SURFACING SECTIONS

STATE OF SOUTH DAKOTA	PROJECT	SHEET NO.	TOTAL SHEETS
	P 0047(18)136	F14	F17

Plotting Date: 06/17/2014

Cold Mill Asphalt Concrete

Salvage and Stockpile Asphalt Mix And Granular Base Material

Unclassified Excavation (Waste Material) See Section B

GRADING AND FINAL SURFACING WORK
Sta. 46+78.0 to Sta. 50+61.4

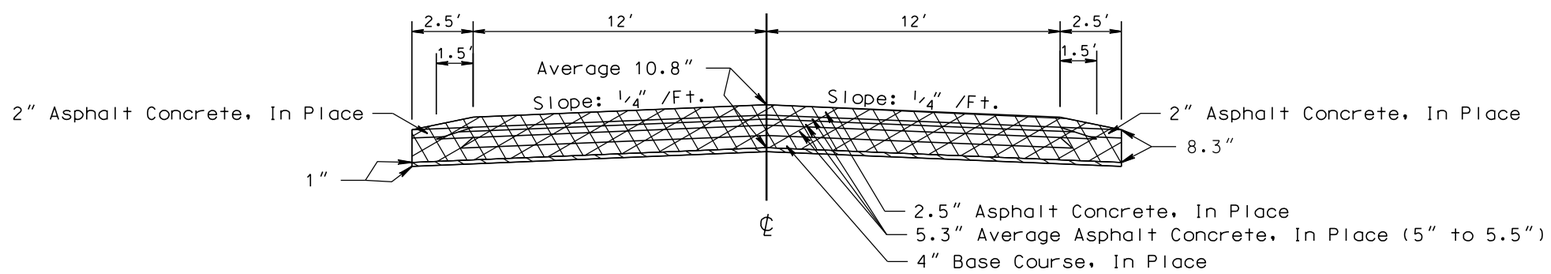

GRADING AND FINAL SURFACING WORK
Sta. 50+61.4 to Sta. 52+20.0

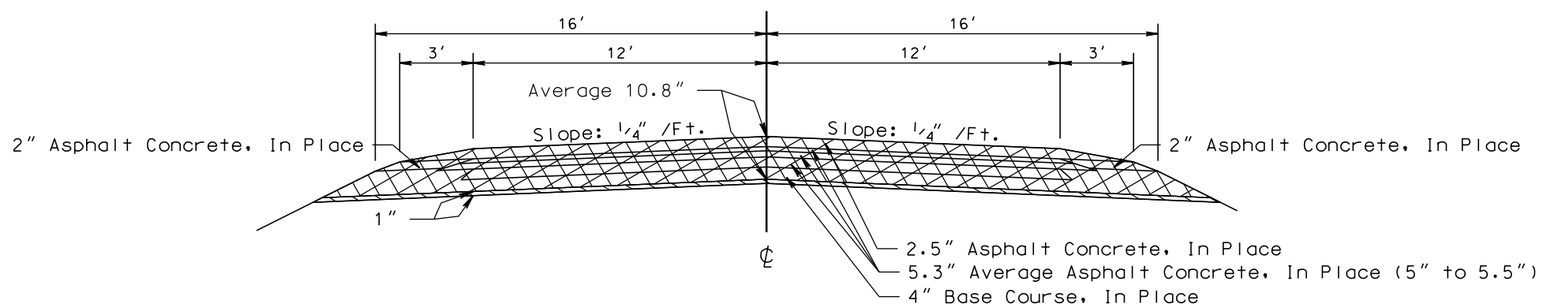

GRADING AND FINAL SURFACING WORK
Sta. 52+20.0 to Sta. 62+91.0

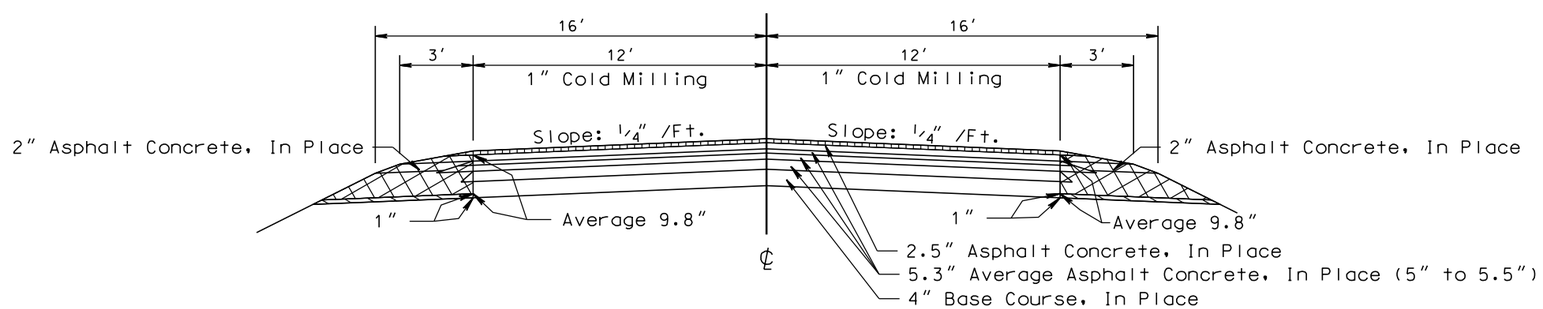

PLOT SCALE - 1:6.19298

PLOTTED FROM - TRPR16032

PLOT NAME - 8

FILE - ...\TYPICAL SECTION 6161.DGN

TYPICAL SURFACING SECTIONS

STATE OF SOUTH DAKOTA	PROJECT	SHEET NO.	TOTAL SHEETS
	P 0047(18)136	F15	F17

Plotting Date: 06/17/2014

GRADING AND FINAL SURFACING WORK
Sta. 10+00 to Sta. 11+04.1 Rt./Sta. 11+15.4 Lt.

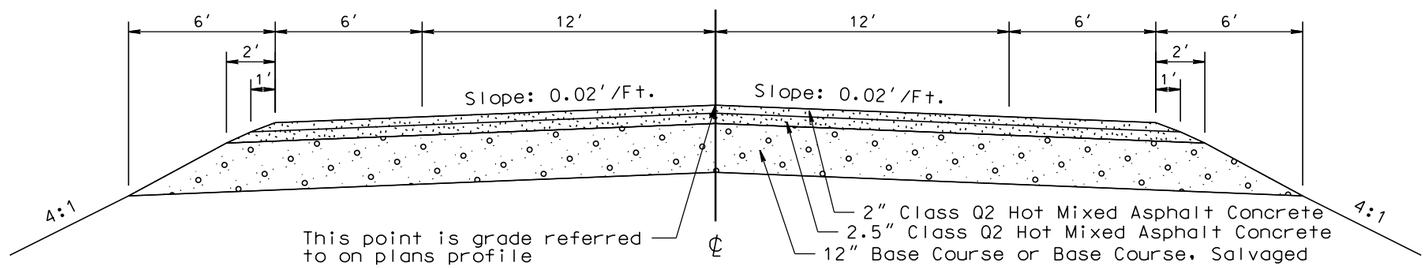

Transitions:

Sta. 24+78.0 to Sta. 40+02.1
* 23′

GRADING AND FINAL SURFACING WORK
Sta. 11+04.1 Rt./Sta. 11+15.4 Lt. to Sta. 40+02.1

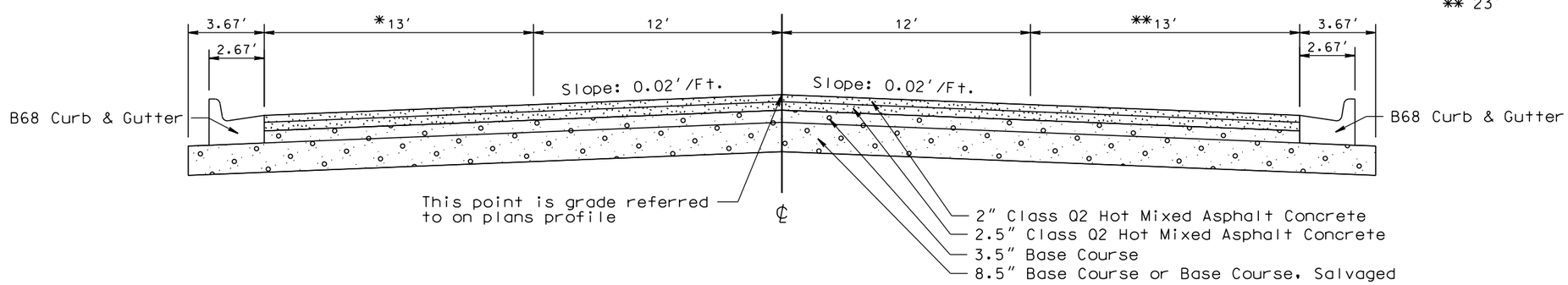

Transitions:

Sta. 11+04.1 to Sta. 14+06.0
Sta. 29+06.1 to Sta. 40+02.1
** 23′

Transitions:

Sta. 40+02.1 to Sta. 40+48.8
Sta. 41+67.8 to Sta. 42+55.6
* 5′

Sta. 42+55.6 to Sta. 42+68.7
* 5′ to 8′

GRADING AND FINAL SURFACING WORK
Sta. 40+02.1 to Sta. 40+48.8
Sta. 41+67.8 to Sta. 50+45.6 Lt./Sta. 50+74.0 Rt.

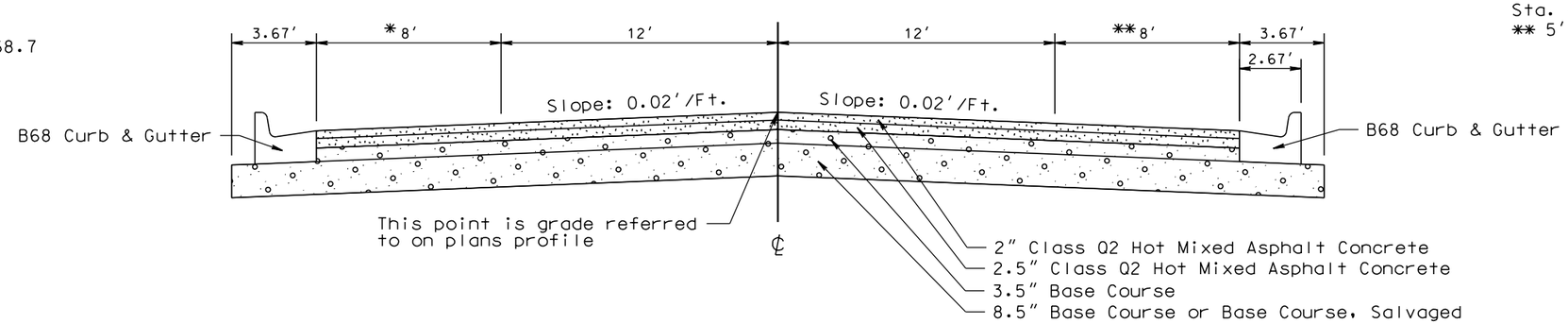

Transitions:

Sta. 40+02.1 to Sta. 40+48.8
** 5′

PLOT SCALE - 1:6.19298
PLOT NAME - 9
FILE ...\TYPICAL SECTION 6161.DGN
PLOTTED FROM - TRPR16032

TYPICAL SURFACING SECTIONS

STATE OF SOUTH DAKOTA	PROJECT	SHEET NO.	TOTAL SHEETS
	P 0047(18)136	F16	F17

Plotting Date: 06/17/2014

GRADING AND FINAL SURFACING WORK
Sta. 40+58.8 to Sta. 40+91.5
Sta. 41+14.3 to Sta. 41+57.8

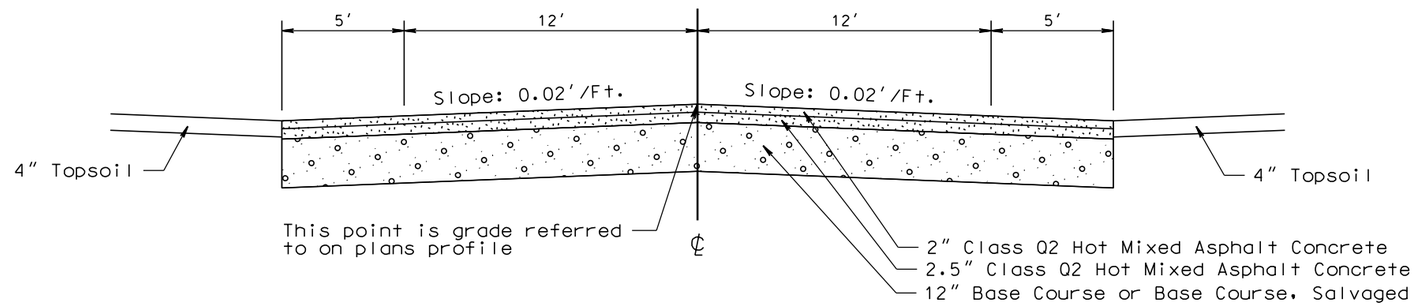

GRADING AND FINAL SURFACING WORK
Sta. 50+45.6 Lt./Sta. 50+74.0 Rt. to Sta. 52+20.0

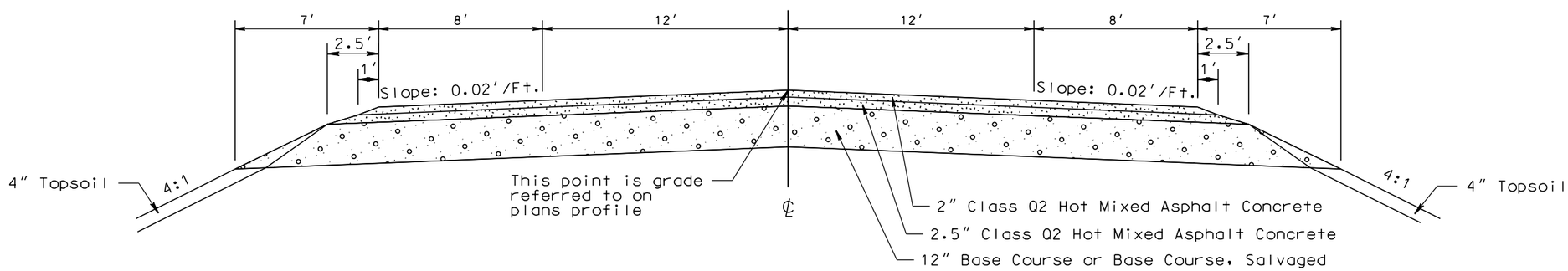

GRADING AND FINAL SURFACING WORK
Sta. 52+20.0 to Sta. 62+91.0

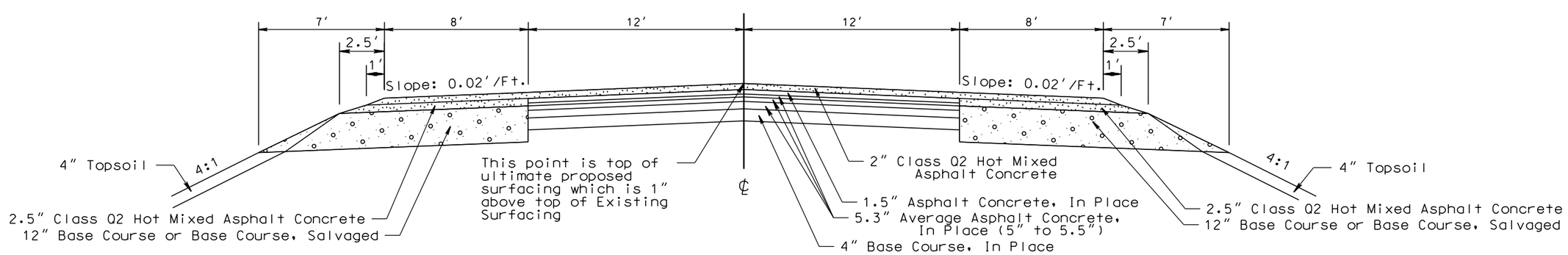

PLOT SCALE - 1:6.19298

PLOTTED FROM - TRPR16032

PLOT NAME - 10

FILE - ...\TYPICAL SECTION 6161.DGN

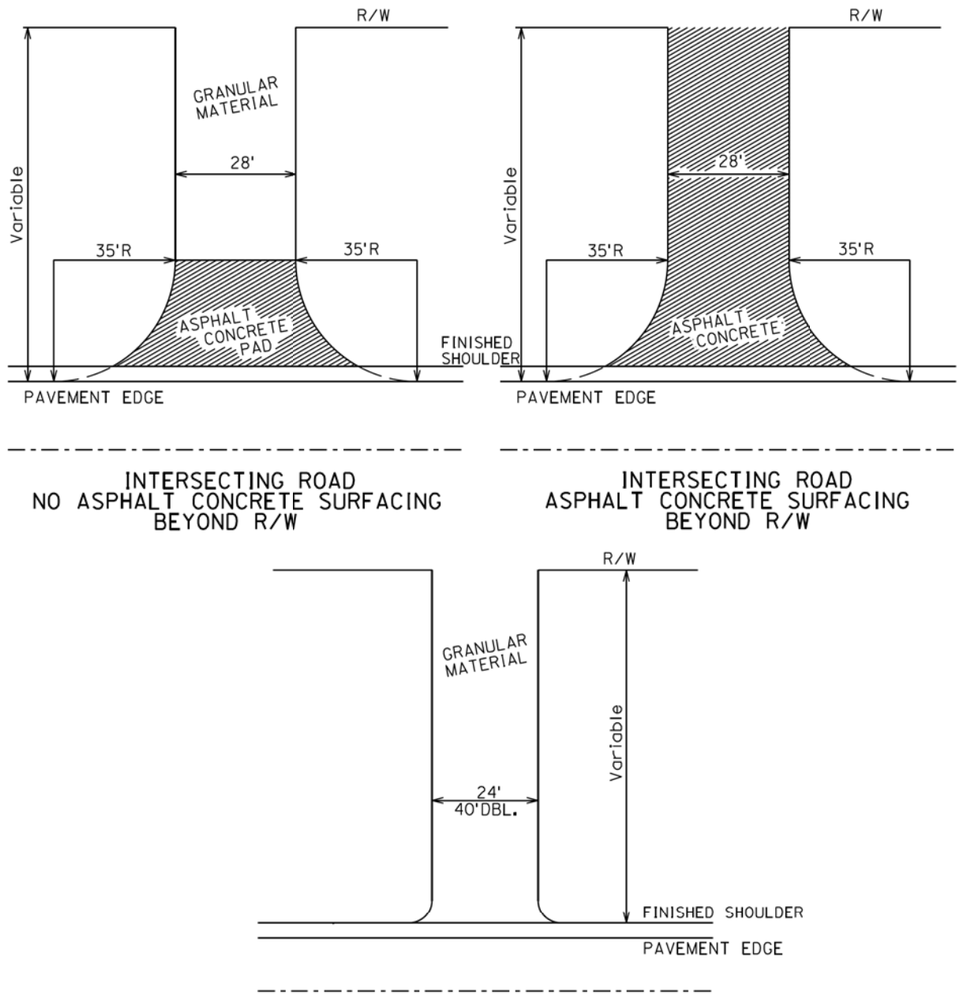

INTERSECTING ROAD
NO ASPHALT CONCRETE SURFACING
BEYOND R/W

INTERSECTING ROAD
ASPHALT CONCRETE SURFACING
BEYOND R/W

ENTRANCE

The surfacing details shown on this sheet are provided as a guide for surfacing these facilities. The precise construction limits for situations other than the standards shown will be determined by the Engineer, at the time of construction.

ROADWAY WITH SHOULDER

March 31, 2000

Published Date: 2nd Qtr. 2014	SDDOT	SURFACING OF INTERSECTING ROADS AND ENTRANCES	PLATE NUMBER 320.04
			Sheet 1 of 1

PLOT SCALE - 1:200
PLOT NAME - 11
FILE - ...\PRJ\HYDE6161\STDPLATE - 2.DGN
PLOTTED FROM - TRPR16032