STATE OF	PROJECT	SHEET NO.	TOTAL SHEETS
S.D.	P 0044(149)40	E1	E6

Section E: Structure Plans

INDEX OF SHEETS -

Sheet E1	Layout Map and Index
Sheet E2	Estimate of Structure Quantities
Sheet E3 to E6	Reinforced Concrete Retaining Wall

END P 0044(149)40
Station 70+88 = 70+91 on EM-P 0044(129)42
651.80 feet South and 351.60 feet West of the
Southwest corner of Section 3 - Township 1 North -
Range 7 East of the B.H.M.
MRM = 42.15 + 0.003

BEGIN P 0044(149)40
Station 4+30 = 0+00 on S 6591(2)
179.55 feet South and 997.10 feet West of the
Southwest corner of Section 8 - Township 1 North -
Range 7 East of the B.H.M.
MRM = 40.95 + 0.002

R 7 E

T 1 N

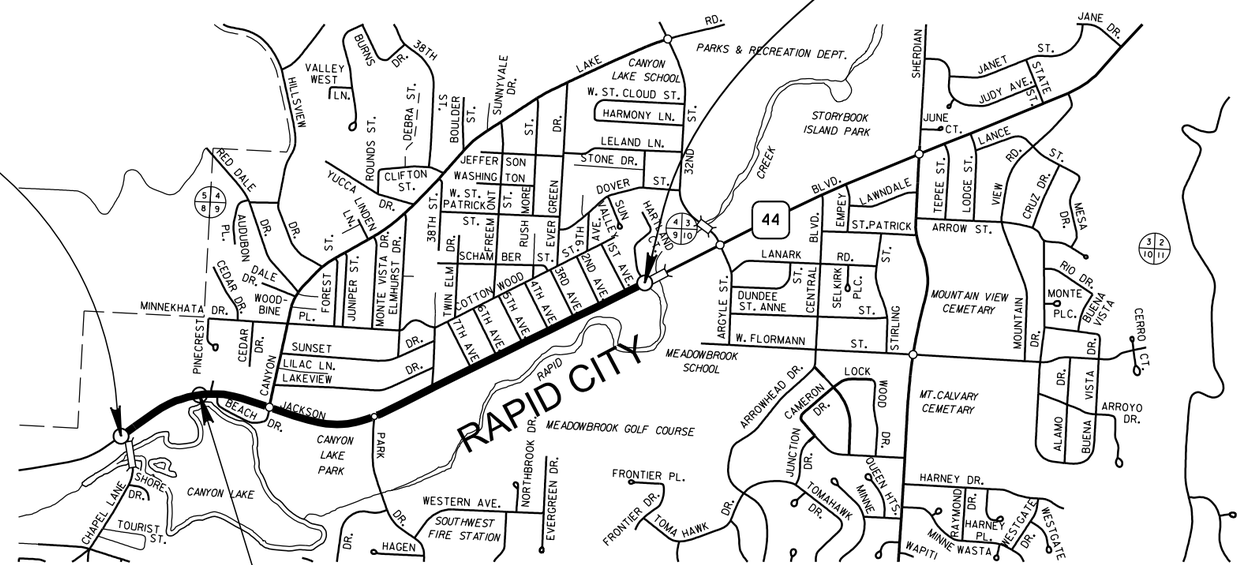

R 7 E

T 1 N

Sta. 18 + 45.00 to Sta. 22 + 79.00
446' - 2 3/4'' REINFORCED CONCRETE RETAINING WALL

SECTION E - ESTIMATE OF STRUCTURE QUANTITIES

Section E - Structure

Bid Item Number	Item	Quantity	Unit
120E7000	Select Granular Backfill	291.2	Ton
260E2010	Gravel Cushion	33.0	Ton
420E0300	Structure Excavation, Retaining Wall	308	CuYd
462E0100	Class M6 Concrete	143.8	CuYd
480E0200	Epoxy Coated Reinforcing Steel	8,996	Lb
680E0040	4" Underdrain Pipe	466	Ft

The elevations shown in these plans are based on the National Geodetic Survey (NGS) North American Vertical Datum of 1988 (NAVD88).

Revised 4/09/2014

STATE OF	PROJECT	SHEET NO.	TOTAL SHEETS
S.D.	P 0044(149)40	E3	E6

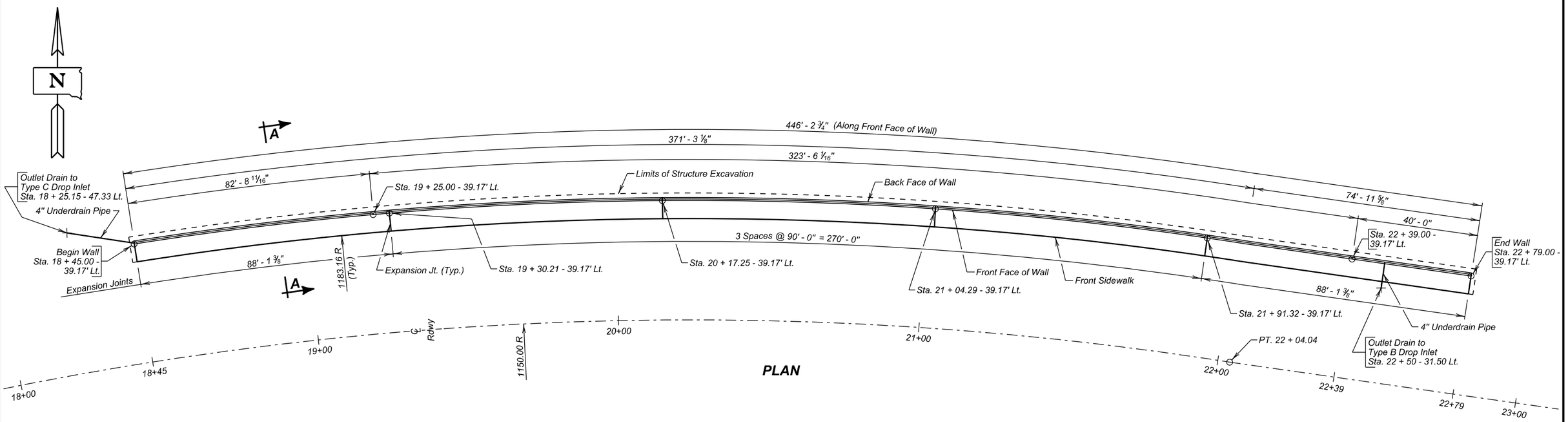

PLAN

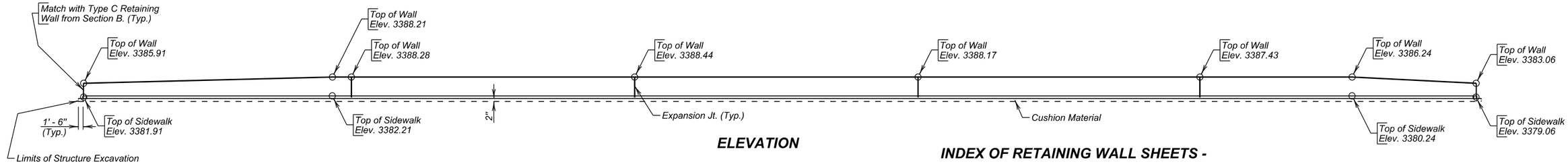

ELEVATION

INDEX OF RETAINING WALL SHEETS -

Sheet No. 1 - General Drawing
Sheet No. 2 - Estimate of Structure Quantities and Notes
Sheet No. 3 - Undercut Layout and Wall Sections
Sheet No. 4 - Details

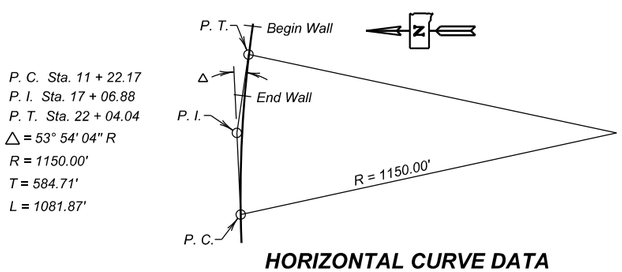

P. C. Sta. 11 + 22.17
P. I. Sta. 17 + 06.88
P. T. Sta. 22 + 04.04
△ = 53° 54' 04" R
R = 1150.00'
T = 584.71'
L = 1081.87'

HORIZONTAL CURVE DATA

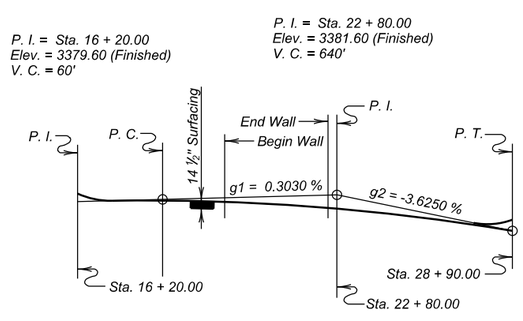

VERTICAL CURVE DATA

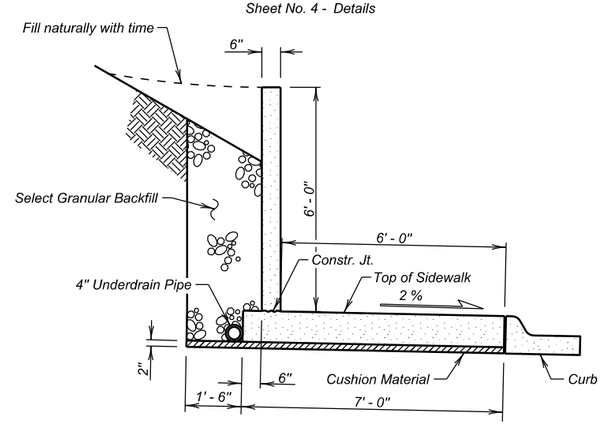

SEC. A - A

PLANS BY :
OFFICE OF BRIDGE DESIGN, SOUTH DAKOTA DEPARTMENT OF TRANSPORTATION

GENERAL DRAWING

FOR

REINFORCED CONCRETE RETAINING WALL

ADJACENT TO JACKSON BLVD.
Sta. 18 + 45.00 Lt. to Sta. 22 + 79.00 Lt.
PCN 6925

SEC. 8/9-T1N-R7E
P 0044(149)40

PENNINGTON COUNTY
S. D. DEPT. OF TRANSPORTATION
MARCH 2013

DESIGNED BY	CK. DES. BY	DRAFTED BY	
BAF	BB	GW	Kevin N. Boeden
PENN6925	6925WA01		BRIDGE ENGINEER

ESTIMATE OF STRUCTURE QUANTITIES

DESCRIPTION	QUANTITY	UNIT
Select Granular Backfill	291.2	Ton
Gravel Cushion	33.0	Ton
Structure Excavation, Retaining Wall	308	CuYd
Class M6 Concrete	143.8	CuYd
Epoxy Coated Reinforcing Steel	8,996	Lb
4" Underdrain Pipe	466	Ft

SPECIFICATIONS

1. Design Specifications: AASHTO LRFD Bridge Design Specifications, 2012 Edition with 2013 Interims.

2. Construction Specifications: South Dakota Standard Specifications for Roads and Bridges, 2004 Edition and required provisions, supplemental specifications and/or special provisions as included in the proposal.

REINFORCED CONCRETE RETAINING WALL GENERAL NOTES

1. The design of the reinforced concrete retaining wall is based on a maximum retained fill height of 6 feet.

2. Design Material Strengths: Concrete f_c' = 4000 p.s.i.
   Reinforcing Steel f_y=60000 p.s.i.

3. All concrete shall be Class M6 conforming to Section 462.

4. All reinforcing steel shall be epoxy coated and shall conform to ASTM A615 Grade 60.

5. All exposed edges shall be chamfered ¾ inch.

6. All b bars shall be lapped a minimum of 12 inches.

7. The exposed retaining wall surfaces shall receive a finish in accordance with Section 460.3M. The exposed surface of the sidewalk shall receive a broom finish. Gravel cushion shall conform to South Dakota Specification 651.2C.

8. Horizontal dimensions shown are measured along front face of retaining wall.

9. The maximum expansion joint spacing shall be 90 feet and the maximum contraction joint spacing shall be 30 feet. The contraction and expansion joints shall be placed to match pavement or curb joints where possible.

10. A layer of Type B Drainage Fabric shall be placed over the top of the Granular Backfill. The intent of this fabric is to act as a separator and keep fines from intruding into the granular material. All costs in furnishing and installing the Type B Drainage Fabric shall be incidental to the contract unit price per ton for Select Granular Backfill.

UNDERDRAINS

1. Underdrains shall consist of 4" diameter corrugated polyethylene drainage tubing conforming to Section 990 of the Construction Specifications. Outlet underdrains into Type B Drop Inlet or Type C Drop Inlet as shown on plans.

2. All costs in furnishing and installing the underdrains shall be incidental to the contract unit price per foot for 4" Underdrain Pipe.

ESTIMATE OF QUANTITIES AND NOTES

FOR

REINFORCED CONCRETE RETAINING WALL

ADJACENT TO JACKSON BLVD. SEC. 8/9-T1N-R7E
Sta. 18 + 45.00 Lt. to Sta. 22 + 79.00 Lt. P 0044(149)40
PCN 6925

PENNINGTON COUNTY
S. D. DEPT. OF TRANSPORTATION
MARCH 2013

DESIGNED BY	CK. DES. BY	DRAFTED BY	
BAF	BB	GW	Kevin N. Goeden
PENN6925	6925WA02		BRIDGE ENGINEER

Revised 4/09/2014

STATE OF	PROJECT	SHEET NO.	TOTAL SHEETS
S.D.	P 0044(149)40	E5	E6

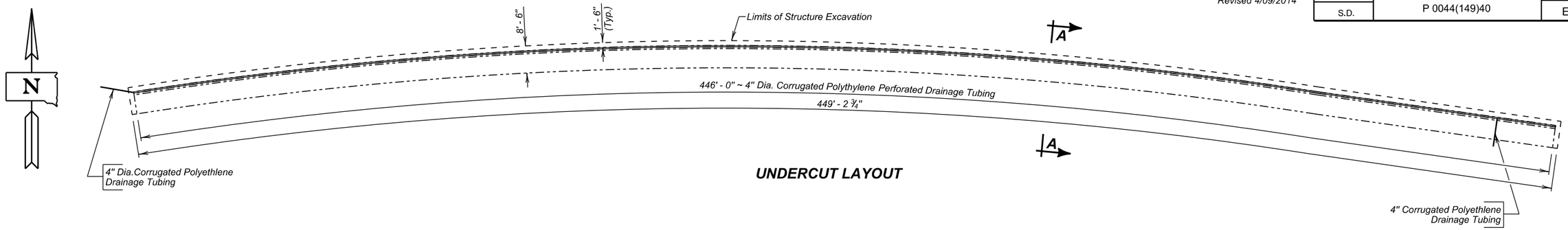

UNDERCUT LAYOUT

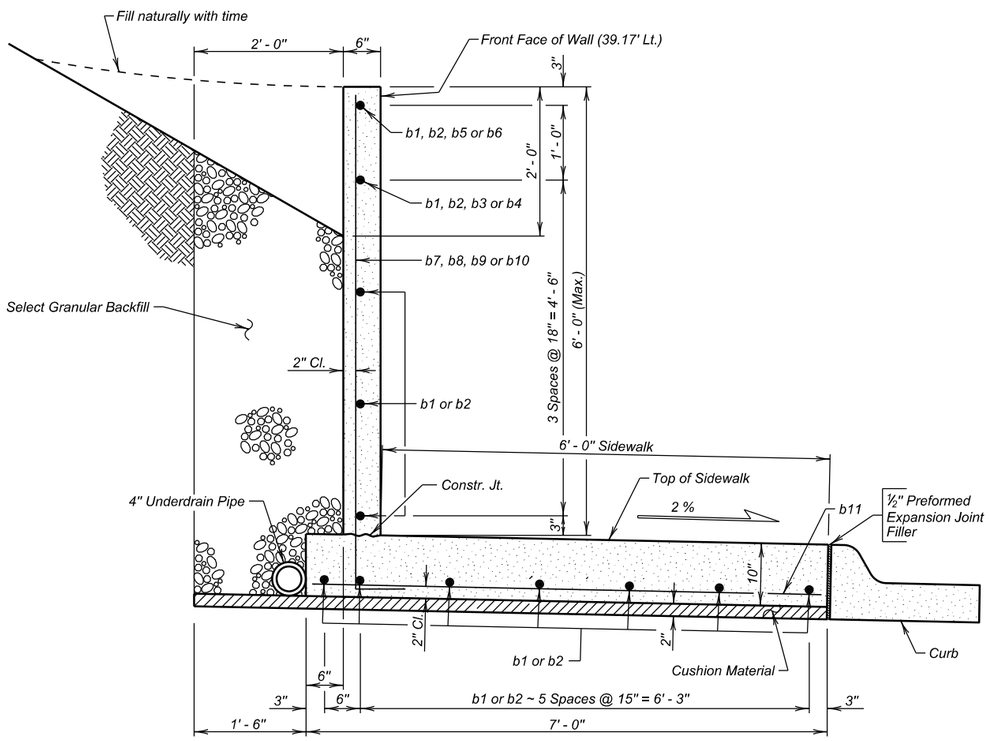

SEC. A - A

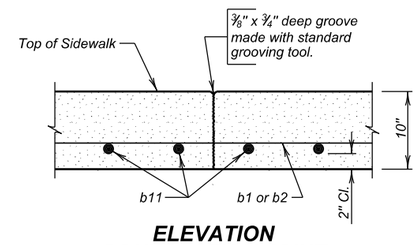

ELEVATION CONTRACTION JOINT
(Footing)

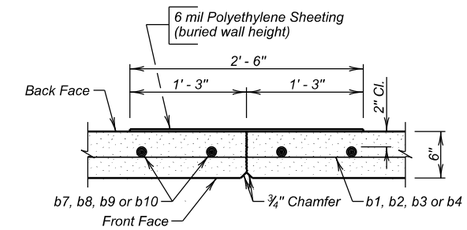

PLAN CONTRACTION JOINT
(Wall)

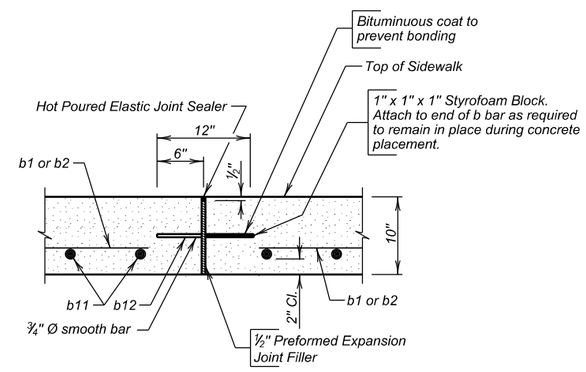

ELEVATION EXPANSION JOINT
(Footing)

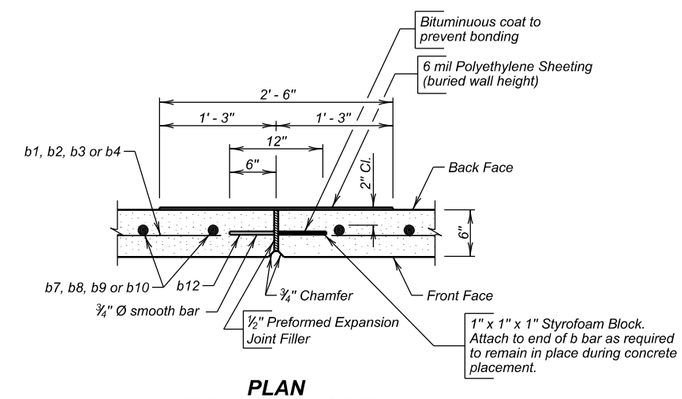

PLAN EXPANSION JOINT
(Wall)

ESTIMATED QUANTITIES

	ITEM	UNIT	QUANTITY
	Class M6 Concrete	Cu. Yd.	143.8
	Epoxy Coated Reinforcing Steel	Lb.	8996
	Structure Excavation, Retaining Wall	Cu. Yd.	308
¶	Select Granular Backfill	Ton	291.2
¶	Cushion Material	Ton	33.0
	4" Underdrain Pipe	Ft.	466

1. 446 ft. 4" Dia. Corrugated Polyethylene Perforated Drainage Tubing
2. 20 ft. 4" Dia. Corrugated Polyethylene Drainage Tubing
3. 127 sq. ft. 6 mil Polyethylene Sheeting, not included laps
4. 372 sq. ft. ½" Preformed Expansion Joint Filler

¶ For estimating purposes only, a factor of 1.89 tons/cu. ft. was used to convert Cu. Yds. to Tons.

Note: Information quantities shall be incidental to Select Granular Backfill.

UNDERCUT LAYOUT AND WALL SECTIONS

FOR

REINFORCED CONCRETE RETAINING WALL

ADJACENT TO JACKSON BLVD. SEC. 8/9-T1N-R7E
Sta. 18 + 45.00 Lt. to Sta. 22 + 79.00 Lt. P 0044(149)40

PENNINGTON COUNTY

S. D. DEPT. OF TRANSPORTATION

MARCH 2013

DESIGNED BY	CK. DES. BY	DRAFTED BY	
BAF	BB	GW	Kevin N. Goeden
PENN6925	6925WA03		BRIDGE ENGINEER

STATE OF	PROJECT	SHEET NO.	TOTAL SHEETS
S.D.	P 0044(149)40	E6	E6

REINFORCING SCHEDULE

	Mk.	No.	Size	Length	Type
	b1	43	4	44' - 5"	Str.
	b2	72	4	45' - 4"	Str.
	b3	1	4	40' - 7"	Str.
	b4	1	4	21' - 3"	Str.
	b5	1	4	44' - 6"	19B
	b6	1	4	44' - 6"	19B
	b7	1	4	5' - 2"	17A
⊡	b8	55	4	12' - 4"	17A
	b9	432	4	7' - 2"	17A
⊡	b10	26	4	12' - 4"	17A
	b11	595	4	6' - 8"	Str.
⊕ ϕ	b12	48	6	1' - 0"	Str.

Bending Details

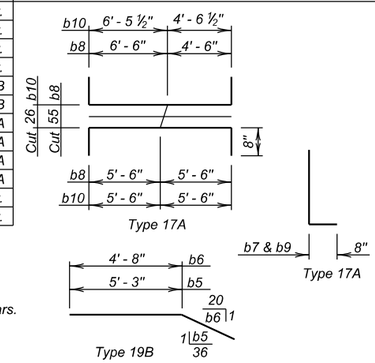

NOTES:
All dimensions are out to out of bars.
All bars epoxy coated.
⊡ See cutting diagram.
⊕ Smooth bar
ϕ Align with each b bar in wall and sidewalk. Quantity for 4 contraction joints.

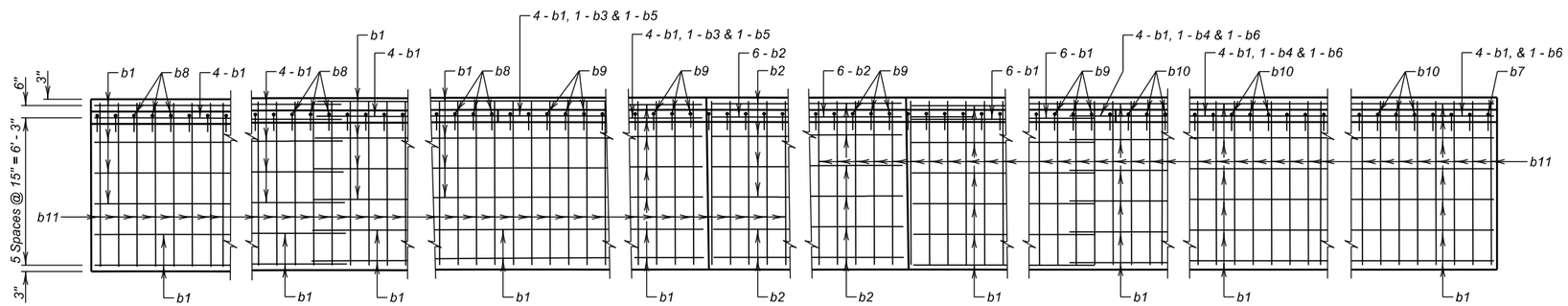

PLAN
(Wall shown straightened)

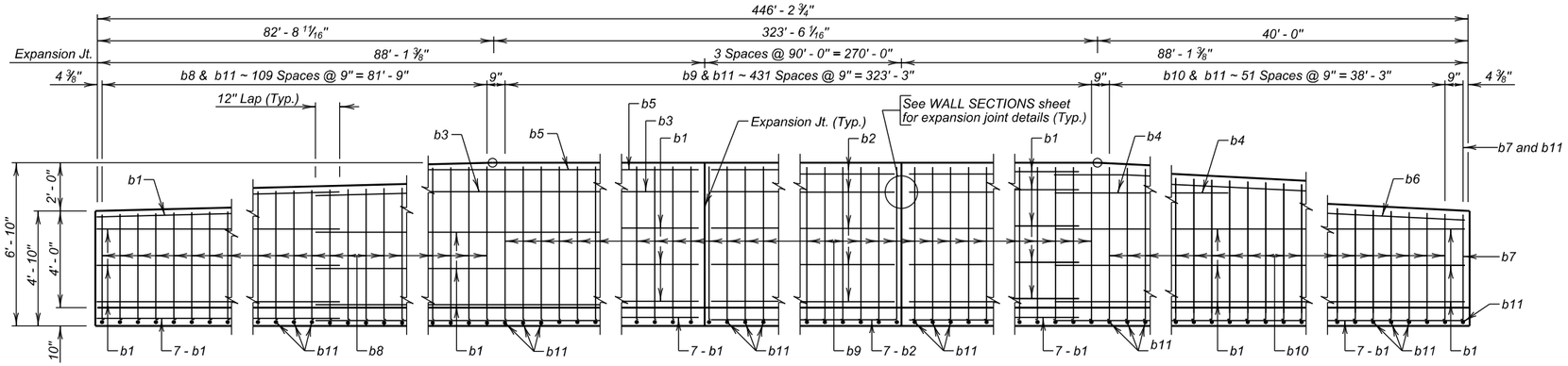

ELEVATION
(Wall shown straightened)

DETAILS
FOR
REINFORCED CONCRETE RETAINING WALL

ADJACENT TO JACKSON BLVD.
Sta. 18 + 45.00 Lt. to Sta. 22 + 79.00 Lt.

SEC. 8/9-T1N-R7E
P 0044(149)40

PENNINGTON COUNTY
S. D. DEPT. OF TRANSPORTATION
MARCH 2013

DESIGNED BY	CK. DES. BY	DRAFTED BY	
BAF	BB	GW	Kevin N. Goeden
PENN6925	6925WA04		BRIDGE ENGINEER