Section B: Grading Plans

FOR BIDDING PURPOSES ONLY

STATE OF SOUTH DAKOTA	PROJECT	SHEET	TOTAL SHEETS
	NH 0050(99)381	B1	B106

Plotting Date: 7/03/2015

INDEX OF SHEETS

B1	General Layout W/Index
B2-B11	General Notes
B12-B13	Pipe Tables
B14	Fence Table
B15	Pavement, Curb & Gutter, Sidewalk Table
B16-B17	Typical Sections
B18	Horizontal Alignment Sheet
B19	Control Data
B20	Subsurface Utility Locations
B21	Symbology Legend
B22-B23	Landowner Tables
B24-B41	Plan & Profile Sheets
B42-B49	Curb & Gutter Layouts
B50-B58	Curb Ramp Details
B59-B64	Junction Box Details
B65-B71	Retaining Wall Details
B72	Ornamental Fence
B73-B106	Standard Details

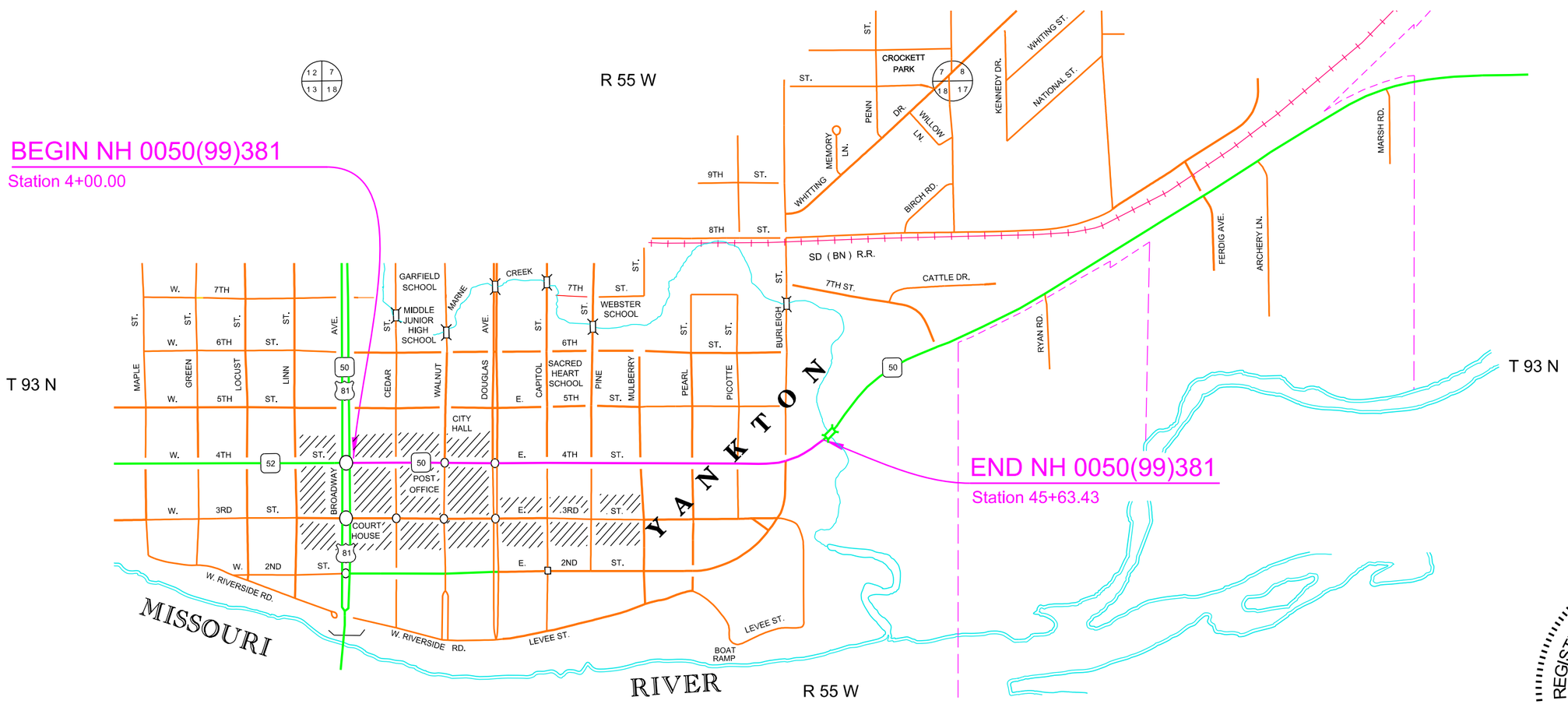

REGISTERED PROFESSIONAL ENGINEER
REG NO.
8161
JOSH
LARSON
7-3-15
SOUTH DAKOTA

Rev 07/30/15 JDL

SECTION B ESTIMATE OF QUANTITIES

BID ITEM NUMBER	ITEM	QUANTITY	UNIT
009E0010	Mobilization	Lump Sum	LS
009E3220	Reestablish Property Corner	10	Each
009E3230	Grade Staking	2.710	Mile
009E3250	Miscellaneous Staking	0.542	Mile
009E3280	Slope Staking	0.542	Mile
009E3290	Structure Staking	13	Each
009E3300	Three Man Survey Crew	20.0	Hour
009E4300	Construction Schedule, Category III	Lump Sum	LS
100E0020	Clear and Grub Tree	12	Each
100E0100	Clearing	Lump Sum	LS
110E0300	Remove Concrete Curb and Gutter	218	Ft
110E0320	Remove Concrete Gutter	29	Ft
110E0400	Remove Drop Inlet	27	Each
110E0460	Remove Manhole	10	Each
110E0605	Remove Chain Link Fence	109	Ft
110E1010	Remove Asphalt Concrete Pavement	2,168.9	SqYd
110E1100	Remove Concrete Pavement	24,929.9	SqYd
110E1110	Remove Concrete Approach Pavement	1,494.5	SqYd
110E1130	Remove Concrete Driveway Pavement	1,657.8	SqYd
110E1140	Remove Concrete Sidewalk	4,656.9	SqYd
110E1300	Remove Concrete Retaining Wall	795.1	Ft
120E0010	Unclassified Excavation	16,337	CuYd
120E0900	Contaminated Material Excavation	100	CuYd
120E2000	Undercutting	9,870	CuYd
120E6100	Water for Embankment	118.4	MGal
250E0020	Incidental Work, Grading	Lump Sum	LS
260E2010	Gravel Cushion	2,321.9	Ton
380E3520	6" PCC Approach Pavement	214.1	SqYd
380E3540	8" PCC Approach Pavement	1,230.7	SqYd
380E3545	8" Reinforced PCC Approach Pavement	12.4	SqYd
380E4070	9" PCC Fillet Section	472.7	SqYd
420E0400	Structure Excavation, Miscellaneous	18	CuYd
450E0102	12" RCP Class 2, Furnish	20	Ft
450E0110	12" RCP, Install	20	Ft
450E0122	18" RCP Class 2, Furnish	1,498	Ft
450E0130	18" RCP, Install	1,498	Ft
450E0142	24" RCP Class 2, Furnish	392	Ft
450E0150	24" RCP, Install	392	Ft
450E0162	30" RCP Class 2, Furnish	2,530	Ft
450E0170	30" RCP, Install	2,530	Ft
450E0182	36" RCP Class 2, Furnish	50	Ft
450E0190	36" RCP, Install	50	Ft
450E0192	42" RCP Class 2, Furnish	858	Ft
450E0200	42" RCP, Install	858	Ft
450E0202	48" RCP Class 2, Furnish	266	Ft
450E0210	48" RCP, Install	266	Ft
450E2204	30" RCP Sloped End, Furnish	1	Each
450E2205	30" RCP Sloped End, Install	1	Each
451E6080	Adjust Water Valve Box	2	Each
462E0100	Class M6 Concrete	184.4	CuYd
464E0100	Controlled Density Fill	4.4	CuYd
470E0020	Pipe Handrail	69.2	Ft
480E0100	Reinforcing Steel	32,700	Lb
480E0200	Epoxy Coated Reinforcing Steel	576	Lb

SECTION B ESTIMATE OF QUANTITIES (CONTINUED)

BID ITEM NUMBER	ITEM	QUANTITY	UNIT
530E0300	Type C Concrete Retaining Wall	858	SqFt
530E0410	MSE Segmental Block Wall	1,883	SqFt
530E0820	Reconstruct Stone and Masonry Retaining Wall	858	SqFt
600E0300	Type III Field Laboratory	1	Each
621E0040	4' Chain Link Fence with Top Rail	101	Ft
621E0410	Pedestrian Swing Gate	1	Each
650E0090	Type B69 Concrete Curb and Gutter	5,832	Ft
650E0390	Type BL69 Concrete Curb and Gutter	107	Ft
650E4690	Type P9 Concrete Gutter	936	Ft
651E0040	4" Concrete Sidewalk	21,875	SqFt
651E0060	6" Concrete Sidewalk	17,676	SqFt
651E0140	4" Reinforced Concrete Sidewalk	609	SqFt
651E0160	6" Reinforced Concrete Sidewalk	104	SqFt
651E0540	4" Colored Concrete Sidewalk	14,645	SqFt
651E0560	6" Colored Concrete Sidewalk	1,729	SqFt
651E0740	4" Reinforced Colored Concrete Sidewalk	230	SqFt
651E0760	6" Reinforced Colored Concrete Sidewalk	348	SqFt
651E3000	Grinding Miscellaneous Concrete	57.0	SqFt
651E5000	Sidewalk Drain	18.4	Ft
651E7000	Type 1 Detectable Warnings	780	SqFt
670E1200	Type B Frame and Grate Assembly	38	Each
670E5200	Special Frame and Grate Assembly	6	Each
670E5340	4' x 11' Precast Concrete Type S Drop Inlet Lid	9	Each
670E5400	Precast Drop Inlet Collar	44	Each
671E4548	48" Manhole Cone Section	10.0	Ft
671E5502	2" Adjusting Ring for Manhole	41	Each
671E6009	Type A9 Manhole Frame and Lid	16	Each
720E1015	Bank and Channel Protection Gabion	36.0	CuYd
831E0300	Reinforcement Fabric (MSE)	4,239	SqYd
900E1085	Ornamental Metal Fence	32	Ft

CONDITION OF OLD/HISTORIC PROPERTIES

The contractor is encouraged to investigate old/historic properties that may possibly be affected with the construction of this project. If possible, take photos of the building structure (walls and foundation), and note any other existing conditions. These records would provide confirmation, as to the condition of the buildings prior to construction, in the case that damages were claimed following the construction of the project.

There is an existing historic wall at Sta 9+04 – 40.3' R to Sta 9+42 – 40.2' R and Sta 9+57 – 40.2' R to Sta 10+02 – 80' R. The contractor shall take precautions to protect this wall during construction.

GRADING OPERATIONS

Water for Embankment is estimated at the rate of 10 gallons of water per cubic yard of Embankment minus Waste.

The estimated cubic yards of excavation and/or embankment required to construct outlet ditches, ditch blocks, and approaches are included in the earthwork balance notes on the profile sheets.

Special ditch grades and other sections of the roadway different than the typical section(s) shall be constructed to the limits shown on the cross sections. If significant changes to the cross sections are necessary during construction, the Engineer shall contact the Designer for the proposed change.

A copy of the soils profile is available for review at the Mitchell Region and Yankton Area offices.

RESTRICTED WORK AREA

The Contractor's work limits shall be confined to the area within the existing right-of-way for the parcels noted in the table below until the late spring of 2016. The Engineer will notify the Contractor of the date when work outside of the existing right-of-way may proceed.

Parcel No.	Station	to	Station	L/R
A42	33+85		34+35	L

TYPE III FIELD LABORATORY

The lab shall be equipped with an internet connection such as DSL, cable modem, or other approved service. The internet connection shall be provided with a multi-port wireless router. The internet connection shall be a minimum speed of 512 Kb unless limited by job location and approved by the DOT. Prior to installing the wireless router the Contractor shall submit the wireless router's technical data to the Area Office to check for compatibility with the state's computer equipment. The internet connection is intended for state personnel usage only. The Contractor's personnel are prohibited from using the internet connection unless pre-approved by the Project Engineer.

REGISTERED PROFESSIONAL ENGINEER
REG NO.
8161
JOSH
LARSON
7-30-15
SOUTH DAKOTA

TYPE III FIELD LABORATORY (CONTINUED)

The Contractor shall submit a copy of each monthly bill for calls charged to this phone at the end of each month. The Project Engineer will then audit the bills to ensure all calls are legitimate and then initiate a Construction Change Order (CCO) to reimburse the Contractor for the actual phone calls made, including local and long distance calls. Reimbursement will not be made for fees associated with the purchase, installation, disconnection, monthly line charges, and incidentals involved in the installation, maintenance, and disconnection of the phone (including attachments). These items shall be incidental to the contract unit price per each for "Type III Field Laboratory".

UTILITIES

The Contractor shall be aware that the existing utilities shown in the plans were surveyed prior to the design of this project and might have been relocated or replaced by a new utility facility prior to construction of this project, might be relocated or replaced by a new utility facility during the construction of this project, or might not require adjustment and may remain in its current location. The Contractor shall contact each utility owner and confirm the status of all existing and new utility facilities. The utility contact information is provided elsewhere in the plans or bidding documents.

Subsurface utility explorations were done for this project. The findings can be found in the SUBSURFACE UTILITY LOCATIONS table elsewhere in the plans. The table is provided to aid the Contractor during construction. All information in the table is approximate and shall be verified by the Contractor prior to construction in those areas.

Do not disturb concrete vault under the Highway at stations 4+36 L, 8+38 L, and 11+24 L. Manhole lids shall be adjusted by Century Link.

The underground power lines at stations 39+97.25 - 83.83'Rt and 41+79.31 - 78.64'Rt are 34.5kV high profile power lines which require coordination between the highway contractor and Utility prior to installing the storm sewer in these locations. The contractor shall contact Northwestern Energy no less than 7 working days prior to any excavation near the underground power lines. A Utility Company Representative shall be on site while work is performed within 10 feet of these underground power cables. Contact Northwestern Energy, Brad Wenande – 605-668-4607

CLEAR AND GRUB TREE

The Contractor shall remove the trees in the table below. All costs to completely remove and dispose of each tree and stump shall be incidental to the contract unit price per each for "Clear and Grub Tree".

If additions or reductions to the number of trees removed are ordered by the Engineer, payment shall be made at the contract unit price per each for "Clear and Grub Tree."

TABLE OF CLEAR AND GRUB TREE

11+32 - 39' L	20+02 - 42' L
11+64 - 39' L	20+14 - 42' L
12+27 - 39' L	20+65 - 39' L
12+97 - 39' L	21+45 - 70' R
19+49 - 48' L	21+71 - 44' R
19+68 - 41' L	22+92 - 40' L

SHRINKAGE FACTOR Embankment +20%

TABLE OF EXCAVATION QUANTITIES BY BALANCES

Station to	Station	Excavation (CuYd)	* Undercut (CuYd)	Total Excavation (CuYd)	** Waste (CuYd)
4+00	38+62	2,860	9,870	12,730	886
Miscellaneous Grading		3,090	0	3,090	3,090
	TOTALS:	5,950	9,870	15,820	3,976

* The quantities for these items are in the Estimate of Quantities under their respective bid items.

** The quantities for these items are for information only.

It shall be the responsibility of the Contractor to obtain a location for disposal of all waste excavation generated by this project.

TABLE OF UNCLASSIFIED EXCAVATION

	(CuYd)
Excavation	5,950
Undercut	9,870
Topsoil	517
Total:	16,337

PROCEDURES FOR DETERMINING UNCLASSIFIED EXCAVATION QUANTITY

Plan quantities shall be used for payment, the Unclassified Excavation quantity shall be used for final payment.

The following paragraphs are general earthwork information and information in regards to computing the Unclassified Excavation quantity:

The Unstable Material Excavation quantity is included in the Excavation quantity listed in the Table of Unclassified Excavation. When finaling a project, the Unstable Material Excavation quantity shall be added to the Excavation quantity to compute the Unclassified Excavation quantity.

The Topsoil quantity in the Table of Unclassified Excavation is an estimate. The quantity of Topsoil from the cuts will be paid for twice as Unclassified Excavation, as it will be in both the Excavation and Topsoil quantities. This will be full compensation for Excavation, which includes necessary undercutting to provide space for placement of topsoil.

The Excavation quantities from individual balances and the Table of Unclassified Excavation have been reduced by the volume of in place surfacing that will be removed and/or salvaged.

The volume of in place Concrete Surfacing removed will NOT be paid for as Unclassified Excavation.

The Excavation quantities from individual balances and the table above have been reduced by the volume of in place concrete pavement that will be removed.

UNDERCUTTING

In all cut sections the earthen subgrade shall be undercut 1 foot below the earthen subgrade surface. The undercut material or other suitable material, as directed by the Engineer, shall then be replaced and compacted to the density specified for the section being constructed.

Shallow embankment sections, fills less than 1 foot in height measured at the finished subgrade shoulders, shall be undercut to ensure a minimum 1 foot height of earth embankment for the entire width of roadbed. The undercut material or other suitable material, as directed by the engineer, shall then be replaced and recompacted to the density specified for the section being constructed.

The plan shown quantity will be the basis of payment. However, if there are additional areas of undercut other than what is shown in the plans, the Engineer shall direct removal of these areas and the additional areas will be measured according to the Engineer.

TABLE OF UNDERCUTTING

Station	to	Station	Quantity (CuYd)
4+00		38+62	9,870
Miscellaneous Grading			0
		Total:	9,870

UNSTABLE SUBGRADE

There is a possibility that the subgrade in the vicinity of Station 5+55 may become unstable after the pavement is removed. Should this area or any other area become unstable, additional undercut and or replacement of the undercut material with suitable material should be considered.

If, in the opinion of the Engineer, the area will not stabilize by the method listed above or there are conflicts with utilities, Reinforcement Fabric (MSE) and granular material may be used. Stabilization will be accomplished by undercutting the subgrade and placing a layer of Reinforcement Fabric (MSE) at the bottom of the undercut. The undercut will then be backfilled with granular material and compacted. Contact the Geotechnical Engineering Activity (605-773-3725) for assistance should the use of geotextile become necessary. 4,239 sq. yds of Reinforcement Fabric (MSE) have been included in the materials quantities for bidding purposes. This quantity is assumed to cover 3,685.5 sq. yds. of subgrade. This is assuming full width coverage of the mainline subgrade for a distance of 500 feet. The bid quantity has been increased by 15% to account for overlaps. Additional quantities of granular material are included in the Gravel Cushion bid item for use in this application. These quantities can be adjusted or eliminated by CCO, depending on field conditions.

The geotextile will conform to specification for Geotextiles and Impermeable Plastic Membranes, Reinforcement Fabric (MSE) (Section 831 of the Specifications). The geotextile will be on the Approved Products List for this material or will be certified by the supplier to meet this specification prior to installation.

Geotextile will be paid for at the contract unit price per square yard for Reinforcement Fabric (MSE). Payment quantities will be based on area covered plus 15%. Overlaps are accounted for by the additional 15%. Payment will be full compensation for furnishing and installing the geotextile only. Granular backfill materials will be paid for under a different bid item.

The geotextile will be placed as taut as possible with minimal wrinkles. Placement will be done so that subsequent granular cover does not shove, wrinkle, or distort the in place geotextile. The overlaps will be shingled in a manner that assures that granular material will not be forced under the geotextile during backfilling operations. The geotextile may be held in place with small piles of granular material or staples.

The top of the subgrade shall be prepared by smoothing the surface to minimize any ruts, ridges, and depressions. Any rocks or other protrusions that might damage the geotextile will be removed. The geotextile will be unrolled parallel to centerline and overlapped a minimum of 2 feet.

UNSTABLE SUBGRADE (CONTINUED)

Granular Material will conform to the specification for Aggregates for Granular Bases and Surfacing, Gravel Cushion (Section 882 of the Specifications). 2,321.9 tons have been included in Gravel Cushion item for use in this application. This quantity is based on 1 foot of coverage for 3,685.5 sq. yds. of subgrade.

The granular material will be placed by back dumping onto the geotextile from the truck and dozing or pushing the granular material from the covered areas to the uncovered areas. No traffic will be allowed on the uncovered geotextile. The first lift of granular material will be placed in an 8 inch lift or as directed by the Engineer. After the subgrade is stabilized, the remaining granular material will be placed in 4 inch max. lifts. The granular material will be compacted by the Specified Density Method. Granular Material will be paid for at the contract unit price per ton of Gravel Cushion. Payment will be full compensation for furnishing and placing this material.

TABLE OF IN PLACE SURFACING AND GRANULAR MATERIAL

Station 4+00 to Station 38+61

Station	Centerline Feet Lt	Centerline Feet Rt	Depth PCCP (Inches)	Depth Granular Base (Inches)	Pvmt Width (Ft)
5+55		21.4	7.5	5.0	52
11+82		22.5	8.0	4.0	52.4
20+41		22.3	8.0	4.0	52.6
25+95		22.6	8.0	4.0	52
33+00		21.7	8.0	4.0	52.2
		Average:	7.9	4.2	52.2

Based on the above thicknesses the average amount of in place surfacing per station is as follows:

Station 4+00 to Station 38+61……193 cu.yd./ sta.

These quantities were used in calculating the total amount of unclassified excavation.

WATER LEVELS

Station	Offset	Boring Depth (Ft)	Initial Depth (Ft)	Final Depth (Ft)	Time Between Readings (hrs)
5+55	21.4 Rt	14.5	Dry /Caved 13.0	Dry /Caved 12.1	21
11+92	22.5 Rt	14.5	Dry /Caved 10.1	Dry /Caved 9.9	18.5
20+41	22.3 Rt	14.5	Dry /Caved 12.1	Dry /Caved 11.4	15
25+95	22.8 Rt	14.5	Dry /Caved 13.1	Dry /Caved 12.5	17
33+00	21.7 Rt	14.5	Dry /Caved 11.9	Dry /Caved 11.8	14
48+00	24.5 Lt	14.5	Dry /Caved 13.6	Dry /Caved 12.9	16
53+00	24.0 Lt	14.5	Dry /Caved 13.2	Dry /Caved 13.2	17.5
60+00	24.0 Lt	14.5	Dry /Caved 13.0	Dry /Caved 12.9	20
67+00	24.5 Lt	14.5	Dry /Caved 12.3	Dry /Caved 9.0	20
74+00	23.5 Lt	14.5	Dry /Caved 13.2	Dry /Caved 12.7	21
81+00	30.8 Lt	14.5	Dry /Caved 13.5	Dry /Caved 13.5	15
88+00	27.2 Lt	14.5	Dry /Caved 13.8	Dry /Caved 13.6	16

Proper protective measures will be required for the storm sewer construction. Seasonal changes also may affect groundwater elevations. Sumps and/or other dewatering methods may also be required. All protective measures required to install the storm sewer shall be incidental to the contract unit price per foot for the corresponding RCP Install bid item.

EXCAVATION FROM STORM SEWER, JUNCTION BOXES, AND DROP INLET INSTALLATION

The excavation and excess material which will result from installing drop inlets, junction boxes and storm sewer which are larger than previously existed or where no features existed before is not included in the Excavation or Waste quantity listed in the Table of Excavation Quantities. Storm sewer includes all concrete pipes for this project. Excavation and disposal of this excess material will be incidental to the corresponding contract pay items which required excavation and generated the excess material.

INCIDENTAL WORK, GRADING

	Station	Remarks
5+95 - 45' R	6+25 - 6' R	Take out 18" - 50' RCP
5+96 - 41' L	6+25 - 6' R	Take out 18" - 56' RCP
6+25 - 6' R	6+63 - 41' L	Take out 18" - 62' RCP
6+25 - 6' R	6+63 - 45' R	Take out 18" - 55' RCP
6+25 - 6' R	6+25 - 47' R	Take out 18" - 41' RCP
6+25 - 6' R	10+52 - 5' R	Take out 30' - 428' RCP
9+32 - 47' L	10+02 - 71' L	Take out Landscaping
10+02 - 24' L	10+52 - 5' R	Take out 18" - 58' RCP
10+22 - 43' R	10+52 - 5' R	Take out 18" - 49' RCP
10+51 - 51' L	10+52 - 5' R	Take out 18" - 57' RCP
10+52 - 5' R	11+04 - 27' R	Take out 18" - 57' RCP
10+52 - 5' R	14+37 - 2' R	Take out 30" - 385' RCP
14+35 - 26' L	14+37 - 2' R	Take out 18" - 28' RCP
14+37 - 2' R	14+41 - 44' R	Take out 18" - 43' RCP
14+37 - 2' R	15+48 - 2' R	Take out 30" - 112' RCP
15+30 - 26' L	15+48 - 2' R	Take out 18" - 34' RCP
15+48 - 26' R	15+48 - 2' R	Take out 18" - 25' RCP
15+48 - 2' R	19+17 - 1' R	Take out 30" - 369' RCP
19+17 - 1' R	23+38 - 4' R	Take out 30" - 421' RCP
20+08 -37' L	20+08 - 40' L	Remove Concrete Steps
20+86 - 37' L	20+86 - 41' L	Remove Concrete Steps
21+63 - 34' L	21+64 - 39' L	Remove Concrete Steps
21+66 - 38' R	21+66 - 40' R	Remove Concrete Steps
21+92 - 38' R	21+92 - 40' R	Remove Concrete Steps
22+27 - 34' L	22+27 - 39' L	Remove Concrete Steps
22+92 - 25' L	23+16 - 42' L	Take out 18" - 29' RCP
23+12 - 44' R	23+38 - 4' R	Take out 18" - 48' RCP
23+15 - 42' L	23+38 - 4' R	Take out 18" - 52' RCP
23+38 - 4' R	23+60 - 43' L	Take out 18" - 52' RCP
23+38 - 4' R	25+36 - 2' R	Take out 30" - 198' RCP
24+42 - 36' L	24+42 - 41' L	Remove Concrete Steps
25+18 - 36' L	25+18 - 41' L	Remove Concrete Steps
25+36 - 2' R	27+57 - 4' R	Take out 30" - 222' RCP
26+46 - 26' L	27+12 - 26' L	Take out 18" - 66' RCP
27+12 - 26' L	27+38 - 42' L	Take out 18" - 32' RCP
27+39 - 44' R	27+57 - 4' R	Take out 18" - 44' RCP
27+38 - 42' L	27+57 - 4' R	Take out 18" - 50' RCP
27+57 - 4' R	27+57 - 53' R	Take out 12" - 50' RCP
27+57 - 4' R	27+82 - 43' L	Take out 18" - 53' RCP
27+57 - 4' R	31+71 - 4' R	Take out 36" - 415' RCP
27+82 - 43' L	27+81 - 99' L	Take out 18" - 56' RCP
31+33 - 26' L	31+71 - 3' R	Take out 18" - 48' RCP
31+51 - 43' R	31+71 - 3' R	Take out 18" - 45' RCP
31+71 - 66' L	31+71 - 3' R	Take out 12" - 70' RCP
31+71 - 62' R	31+71 - 3' R	Take out 12" - 59' RCP
31+71 - 3' R	32+12 - 26' L	Take out 18" - 50' RCP
31+71 - 3' R	35+76 - 2' R	Take out 36" - 405' RCP
34+02 - 36' L	34+03 - 40' L	Remove Concrete Steps
34+37 - 36' L	34+37 - 40' L	Remove Concrete Steps
35+37 - 27' L	35+76 - 2' R	Take out 18" - 49' RCP
35+56 - 42' R	35+76 - 2' R	Take out 18" - 46' RCP
35+75 - 66' R	35+76 - 2' R	Take out 18" - 65' RCP
35+75 - 62' L	35+76 - 2' R	Take out 18" - 64' RCP

INCIDENTAL WORK, GRADING (CONTINUED)

	Station	Remarks
35+76 - 2' R	36+00 - 42' R	Take out 18" - 47' RCP
35+76 - 2' R	36+16 - 28' L	Take out 18" - 51' RCP
35+76 - 2' R	38+54 - 31' L	Take out 42" - 277' RCP

REMOVAL OF EXISTING CONCRETE PAVEMENT
STA. 4+00.00 to STA. 38+62.00

Existing asphalt concrete and/or existing asphalt concrete patch work that was placed above the existing concrete pavement is included in the quantity for "Remove Concrete Pavement". The Contractor shall dispose of the concrete pavement and asphalt concrete at a site approved by the Engineer.

The existing 8 inch P.C.C. Pavement is typically 52 feet wide.

The existing contraction joints are spaced at approximately 20 feet.

The aggregate in the existing P.C.C. pavement is quartzite.

TABLE OF CONCRETE PAVEMENT REMOVAL

Station	to	Station	L/R	Quantity (SqYd)
4+00		38+62	L&R	20,870.2
			Total:	20,870.2

***TABLE OF MISCELLANEOUS CONCRETE PAVEMENT REMOVAL**

Station	to	Station	L/R	Quantity (SqYd)
5+81		6+78	L	160.9
5+81		6+78	R	252.0
10+03		11+00	R	381.3
10+06		10+99	L	348.2
14+25		15+46	R	472.7
14+37		15+28	L	249.2
18+66		19+66	R	281.8
18+74		19+58	L	189.2
22+98		23+78	R	107.0
23+01		23+74	L	235.3
27+23		27+97	L	215.0
27+24		27+96	R	171.4
31+36		32+10	L	229.4
31+37		32+08	R	234.5
35+39		36+14	R	82.9
35+41		36+12	L	173.0
39+15		40+00	R	275.9
			Total:	4,059.7

*Note: Table of Miscellaneous Concrete Pavement Removal includes concrete pavement that is not considered part of the mainline pavement. All costs for removal of the miscellaneous concrete pavement shall be incidental to the contract unit price per square yard for "Remove Concrete Pavement".

REGISTERED PROFESSIONAL ENGINEER
REG NO.
8161
JOSH
LARSON
7-3-15
SOUTH DAKOTA

TABLE OF ASPHALT CONCRETE PAVEMENT REMOVAL

Station	to	Station	L/R	Quantity (SqYd)
4+08		4+28	L	25.8
4+84		5+82	R	35.2
5+22		5+80	L	21.5
6+17		6+43	L	147.3
7+17		7+44	R	10.2
7+70		7+88	L	6.7
7+92		8+26	R	12.3
7+95		8+51	L	37.5
8+98		10+02	R	37.6
8+98		9+30	L	48.3
9+30		9+90	L	20.7
10+12		10+18	L	5.4
11+06		13+24	L	79.1
11+17		12+48	R	46.7
12+78		12+84	R	2.4
13+07		13+11	R	1.5
13+54		14+27	L	27.0
13+55		14+23	R	24.9
14+33		14+42	L	1.9
15+53		15+93	R	14.5
15+76		16+20	L	16.3
16+31		16+70	R	14.0
16+41		16+95	L	41.9
16+65		16+91	L	9.6
16+95		17+14	L	24.1
17+18		18+70	R	54.2
17+18		18+67	L	52.5
19+61		20+67	R	37.3
19+62		21+12	L	52.2
20+72		21+12	R	14.3
21+19		21+37	R	18.6
21+40		21+99	R	21.8
21+40		22+93	L	55.7
22+23		22+93	R	25.8
23+24		23+53	R	107.1
23+87		24+39	L	20.4
23+84		25+35	R	56.2
24+63		25+34	L	25.3
25+43		25+59	L	15.5
25+63		26+62	L	34.9
26+50		27+14	L	72.6
27+00		27+13	L	5.0
27+20		27+36	L	47.0
27+90		28+01	R	5.0
28+09		28+49	L	14.0
28+11		29+19	R	37.2
28+97		29+53	L	20.3
29+52		29+78	L	27.7
29+85		30+27	L	15.5
29+87		30+23	R	13.0

FOR BIDDING PURPOSES ONLY

STATE OF SOUTH DAKOTA	PROJECT	SHEET	TOTAL SHEETS
	NH 0050(99)381	B6	B106

TABLE OF ASPHALT CONCRETE PAVEMENT REMOVAL (CONTINUED)

Station	to Station	L/R	Quantity (SqYd)
30+49	31+37	R	32.1
30+65	31+37	L	25.6
32+08	32+55	L	16.8
32+79	33+61	L	30.9
33+68	35+42	R	150.1
33+89	34+53	L	23.1
34+06	35+41	R	49.5
34+86	35+39	L	76.4
35+19	35+39	L	7.1
35+58	35+99	R	141.8
36+12	37+62	L	54.0
		Total :	2,168.9

TABLE OF CONCRETE CURB AND GUTTER REMOVAL

Station	to Station	Quantity (Ft)
4+02.20 - 40.14' R	4+02.36 - 44.48' R	4.4
5+95.24 - 44.87' L	6+14.44 - 76.57' L	38.5
6+45.60 - 76.68' L	6+48.37 - 66.42' L	11.1
6+60.24 - 49.57' L	6+63.97 - 43.99' L	6.7
13+13.32 - 46.78' L	13+26.36 - 35.59' L	18.8
23+11.19 - 41.70' R	23+23.12 - 66.71' R	30.6
23+54.50 - 65.88' R	23+64.73 - 41.19' R	29.4
27+75.90 - 92.50' L	27+76.05 - 77.72' L	14.8
35+54.60 - 40.40' R	35+55.23 - 71.92' R	31.5
36+00.39 - 39.18' R	36+01.01 - 70.87' R	31.7
	Total:	217.5

TABLE OF CONCRETE GUTTER REMOVAL

Station	to Station	Quantity (Ft)
6+48.37 - 66.42' L	6+60.24 - 49.57' L	20.6
27+76.05 - 77.72' L	27+76.08 - 69.20' L	8.5
	Total:	29

TABLE OF CONCRETE APPROACH PAVEMENT REMOVAL

Station	to Station	Quantity (SqYd)
4+02.20 - 40.14' R	4+52.18 - 41.46' R	52.7
6+45.63 - 76.68' L	6+71.58 - 70.66' L	56.4
6+64.41 - 61.00' R	6+79.70 - 61.00' R	23.1
6+82.94 - 38.27' R	7+17.18 - 38.34' R	35.7
7+44.40 - 38.19' R	7+92.12 - 38.11' R	49.8
8+25.68 - 32.08' R	8+98.50 - 38.28' R	58.8
8+30.93 - 27.93' L	9+02.02 - 28.18' L	25.2
10+84.70 - 71.03' L	10+91.46 - 71.07' L	4.9
12+51.33 - 37.33' R	12+77.68 - 37.00' R	30.6
12+84.25 - 30.93' R	13+07.10 - 30.70' R	8.6
13+11.05 - 36.68' R	13+55.18 - 36.57' R	45.6
13+23.88 - 29.39' L	13+53.77 - 29.53' L	11.4
15+13.23 - 58.53' L	15+31.74 - 52.50' L	17.7
15+41.32 - 37.72' L	15+75.62 - 37.59' L	42.5
15+93.53 - 36.20' R	16+31.11 - 36.28' R	39.3
16+20.50 - 37.41' L	16+65.16 - 37.23' L	53.4
16+70.31 - 36.38' R	17+18.35 - 36.28' R	49.8
16+90.75 - 36.03' L	17+18.06 - 35.89' L	28.4
20+67.30 - 30.12' R	20+72.25 - 30.09' R	1.7
21+12.06 - 36.49' R	21+40.09 - 36.42' R	29.2
21+12.32 - 35.59' L	21+40.37 - 33.91' L	26.3
21+98.88 - 36.48' R	22+23.35 - 36.54' R	24.6
24+39.55 - 35.90' L	24+63.21 - 35.94' L	24.8
25+34.40 - 35.57' L	25+62.66 - 35.52' L	28.8
25+34.70 - 36.35' R	25+62.56 - 36.44' R	28.9
26+61.89 - 35.27' L	26+99.85 - 35.24' L	38.1
27+25.53 - 49.66' R	27+44.81 - 62.50' R	26.8
27+36.61 - 68.97' L	27+44.98 - 68.97' L	7.3
27+75.95 - 82.23' L	28+00.19 - 78.25' L	90.3
28+48.62 - 35.45' L	28+96.82 - 35.42' L	49.7
29+18.62 - 35.68' R	29+86.37 - 35.87' R	64.9
29+51.77 - 35.40' L	29+84.83 - 35.62' L	33.6
30+22.61 - 36.46' R	30+48.68 - 36.31' R	27.0
30+27.30 - 35.57' L	30+65.12 - 35.53' L	39.1
31+43.57 - 74.54' R	31+56.56 - 77.23' R	14.6
32+55.14 - 35.93' L	32+79.29 - 35.69' L	25.1
33+38.20 - 36.20' R	34+06.14 - 36.13' R	70.7
33+61.21 - 35.94' L	33+89.24 - 35.95' L	29.0
34+53.14 - 36.16' L	35+18.82 - 36.78' L	68.7
35+45.02 - 66.32' L	35+61.83 - 66.89' L	42.7
37+62.29 - 41.92' L	37+91.77 - 41.99' L	29.2
37+94.43 - 41.97' L	38+34.29 - 41.79' L	39.5
	Total:	1,494.5

TABLE OF CONCRETE DRIVEWAY PAVEMENT REMOVAL

Station	to Station	Quantity (SqYd)
4+03.01 - 46.57' R	4+52.08 - 44.85' R	27.1
4+67.00 - 44.17' L	4+93.38 - 44.17' L	25.8
5+03.49 - 44.17' L	5+14.23 - 44.17' L	10.9
6+75.47 - 43.36' L	6+79.16 - 43.36' L	2.9
6+79.87 - 47.28' R	9+04.80 - 42.16' R	132.8
6+82.25 - 42.47' L	7+56.90 - 47.17' L	66.0
8+29.01 - 41.59' L	8+98.40 - 44.46' L	72.8
12+53.87 - 51.26' R	12+83.55 - 46.26' R	37.3
13+13.31 - 51.94' L	13+71.48 - 51.91' L	89.5
15+36.74 - 44.17' L	16+40.93 - 44.17' L	76.8
15+70.64 - 44.17' R	18+69.69 - 61.00' R	290.0
19+61.12 - 58.29' R	21+24.65 - 40.15' R	87.1
21+17.57 - 39.17' L	21+35.58 - 39.95' L	9.5
22+07.27 - 47.85' R	22+25.57 - 47.77' R	20.9
24+84.08 - 42.17' R	27+20.53 - 48.59' R	129.2
25+58.76 - 44.17' L	25+83.89 - 40.02' L	15.7
27+76.75 - 62.50' R	28+00.58 - 62.50' R	49.6
28+05.72 - 43.17' L	28+94.69 - 49.17' L	98.9
28+06.58 - 42.17' R	29+61.89 - 47.17' R	128.6
30+31.82 - 43.77' L	30+64.98 - 45.17' L	34.7
30+33.50 - 47.17' R	30+41.51 - 47.17' R	10.1
32+58.87 - 49.17' L	32+75.67 - 49.17' L	15.3
34+50.49 - 56.17' L	34+86.01 - 48.16' L	64.2
37+87.11 - 60.17' L	38+40.39 - 57.58' L	94.3
40+46.01 - 88.18' L	40+69.66 - 48.35' L	67.8
	Total:	1,657.8

REGISTERED PROFESSIONAL ENGINEER
REG NO.
8161
JOSH
LARSON
7-3-15
SOUTH DAKOTA

*TABLE OF REMOVE CONCRETE RETAINING WALL

Station	to	Station	Remarks	Qty (Ft)
19+63.17 - 45.93' L		21+17.32 - 49.73' L	Remove Concrete Retaining Wall	186.1
21+35.75 -34.0' L		22+94.03 - 48.00' L	Remove Concrete Retaining Wall	159.9
21+37.41 - 36.91' R		22+06.82 - 42.77' R	Remove Concrete Retaining Wall	87.2
23+83.16 - 35.95' L		24+44.00 - 40.97' L	Remove Concrete Retaining Wall	60.8
30+65.12 - 45.27' L		31+36.09 - 65.79' L	Remove Segmental Retaining Wall	104.8
33+17.60 - 38.26' L		33+59.99 - 38.45' L	Remove Timber Retaining Wall	42.4
36+11.80 - 38.29' L		37+66.35 - 41.98' L	Remove Concrete Retaining Wall	153.9
			Total:	795.1

* The bid item "Remove Concrete Retaining Wall" shall cover all types of retaining wall removals

TABLE OF RECONSTRUCT STONE AND MASONRY RETAINING WALL

Station	to	Station	Remarks	Quantity (SqFt)
21+36.73 – 40.07' L		22+92.59 - 68.51' L	Reconstruct Stone and Masonry Retaining Wall	858.0
			Total:	858.0

TABLE OF SIDEWALK REMOVAL

Station	to	Station	Quantity (SqYd)
4+00.00 - 38.74' R		4+02.20 - 38.77' R	1.7
4+00.47 - 41.97' L		5+94.23 - 34.87' L	176.1
4+52.33 - 36.40' R		5+93.09 - 38.00' R	120.9
6+64.25 - 37.88' L		10+17.19 - 34.15' L	413.3
6+64.25 - 47.66' R		6+82.94 - 38.27' R	28.6
7+17.18 - 38.34' R		7+44.40 - 38.19' R	18.2
7+92.12 - 38.11' R		8+50.92 - 37.68' R	39.2
8+98.50 - 40.28' R		10+16.59 - 76.88' R	166.9
10+84.96 - 38.52' L		14+50.78 - 35.87- L	288.2
10+86.98 - 75.40' R		12+53.87 - 39.67' R	219.4
12+77.65 - 40.24' R		14+35.80 - 76.36' R	177.6
15+13.38 - 45.73' L		15+41.32 - 37.72' L	54.2
15+30.36 - 73.62' R		15+93.53 - 36.20' R	83.4
15+75.62 - 37.59' L		16+20.50 - 37.41' L	37.7
16+31.11 - 36.28' R		16+70.31 - 36.38' R	26.9
16+65.18 - 35.93' L		16+90.75 - 36.03' L	16.9
17+18.06 - 35.89' L		18+94.46 - 36.07' L	152.6
17+18.35 - 36.28' R		18+80.65 - 61.00' R	140.1
19+37.27 - 36.10' L		21+12.32 - 35.59' L	135.1
19+55.32 - 58.22' R		21+12.06 - 36.49' R	127.7
20+06.55 - 39.99' L		20+10.41 - 48.47' L	3.6
20+83.18 - 40.56' L		20+98.38 - 45.66' L	6.2
21+40.09 - 36.42' R		21+98.88 - 36.48' R	39.2
21+40.37 - 33.91' L		23+14.10 - 35.75' L	114.6
21+64.88 - 50.21' R		21+67.67 - 40.26' R	3.2
21+61.48 - 39.40' L		21+72.67 - 51.09' L	5.6
21+90.40 - 50.21' R		21+93.02 - 40.09' R	3.1
22+14.34 - 49.46' L		22+29.55 - 39.09' L	9.0
22+23.35 - 36.54' R		23+10.96 - 38.91' R	79.0
23+61.37 - 35.79' L		24+39.55 - 35.90' L	93.7
23+65.16 - 38.38' R		25+34.70 - 36.35' R	128.4
24+39.57 - 40.94' L		24+43.62 - 47.96' L	3.3
24+63.21 - 35.94' L		25+34.40 - 35.57' L	47.1
25+16.27 - 40.62' L		25+26.05 - 44.66' L	2.2
25+62.56 - 36.44' R		27+37.69 - 40.00' R	185.2
25+62.66 - 35.52' L		26+61.89 - 35.27' L	107.8
26+99.85 - 35.24' L		27+36.55 - 35.35' L	38.2
27+83.17 - 40.10' L		28+48.62 - 35.45' L	62.8
27+83.35 - 41.25' R		29+18.55 - 35.68' R	107.7
28+96.82 - 35.42' L		29+51.77 - 39.84' L	42.8
29+84.88 - 35.62' L		30+27.30 - 35.57' L	28.1
29+86.37 - 35.87' R		30+22.61 - 36.46' R	23.7
30+48.68 - 36.31' R		31+49.26 - 37.53' R	91.6
30+65.12 - 35.53' L		31+48.81 - 35.70' L	75.0
31+95.22 - 41.23' R		32+08.15 - 60.54' R	28.7
31+96.83 - 36.04' L		32+55.14 - 35.93' L	58.7
32+79.29 - 35.69' L		33+61.21 - 35.94' L	52.8
33+89.24 - 35.95' L		34+53.14 - 36.16' L	42.2
34+00.39 - 40.05' L		34+05.76 - 46.00' L	3.7
34+06.14 - 36.13' R		35+54.56 - 38.95' R	116.8
34+35.60 - 39.59' L		34+50.95 - 45.81' L	7.0
35+18.82 - 36.78' L		35+52.18 - 37.60' L	43.5
35+99.88 - 38.28' L		37+62.29 - 41.92' L	126.6

TABLE OF SIDEWALK REMOVAL (CONTINUED)

Station	to	Station	Quantity (SqYd)
36+00.55 - 36.11' R		39+21.12 - 77.38' R	267.9
37+91.77 - 41.99' L		37+94.43 - 41.97' L	1.7
38+34.29 - 41.79' L		38+61.88 - 42.07' L	17.3
39+21.96 - 51.45' L		39+63.32 - 67.48' L	55.9
39+87.41 - 98.76' R		40+19.90 - 48.69' R	49.4
40+40.46 - 89.16' L		40+69.65 - 48.31' L	37.6
41+62.01 - 46.50' L		42+13.77 - 46.74' L	21.3
		Total:	4,656.9

TABLE OF MANHOLE REMOVAL

Station	Offset	Quantity (Each)
6+25	6' R	1
10+52	5' R	1
14+37	1' R	1
15+48	2' R	1
19+17	1' R	1
23+38	4' R	1
25+36	2' R	1
27+57	4' R	1
31+71	3' R	1
35+76	2' R	1
	Total:	10

TABLE OF DROP INLET REMOVAL

All costs for removal of the frame and grate assembly shall be incidental to the contract unit price per each for "Remove Drop Inlet".

Station	Offset	Quantity (Each)
5+95	45' R	1
5+96	41' L	1
6+63	41' L	1
6+63	45' R	1
10+02	24' L	1
10+22	43' R	1
11+04	27' R	1
14+35	26' L	1
14+41	44' R	1
15+30	26' L	1
15+48	26' R	1
22+92	25' L	1
23+12	44' R	1
23+15	42' L	1
23+60	43' L	1
26+46	26' L	1
27+12	26' L	1
27+38	42' L	1
27+39	44' R	1
27+82	43' L	1
31+33	26' L	1
31+51	43' R	1
32+12	26' L	1
35+37	27' L	1
35+55	42' R	1
36+00	42' R	1
36+16	28' L	1
	Total:	27

CONCRETE PIPE CONNECTIONS

Pipe connections to existing pipes, manholes, junction boxes, and drop inlets shall be done by breaking a hole into the existing structure and inserting the pipe. A concrete collar shall then be poured around the pipe in the area of the connection.

When it is not possible to use a normal pipe joint (male-female ends), connections to existing pipe shall be made by placing a 2' wide by 6" thick M6 concrete collar around the outside of the connection. The concrete collar shall be reinforced with 6x6 W2.9 x W2.9 wire mesh.

All costs for constructing the concrete collars including materials and labor shall be incidental to the contract unit price per foot for the corresponding pipe bid item.

STORM SEWER

Reinforced concrete pipe may be either bell and spigot or tongue and groove. The pipe sections shall be adjoined such that the ends are fully entered and the inner surfaces are reasonably flush and even.

Lift holes in the reinforced concrete pipe shall be plugged with grout.

Watertight joints are required for reinforced concrete pipe, drop inlets, manholes, and junction boxes where storm sewers run parallel to and within 10 feet horizontally from existing or proposed water mains.

Watertight joints are required where reinforced concrete pipes, drop inlets, manholes, or junction boxes cross water mains and are separated a distance of 18 inches or less, above or below, the water main.

If watertight joints are required then the watertight joints shall extend for a distance of 10 feet beyond the water main. This measurement shall be from the sealed concrete joint to the outer most surface of the water main.

Watertight joint seals shall conform to the following requirements:

1. Reinforced Concrete Pipe (Circular): Gasketed pipe shall conform to the requirements of ASTM C443. Non-gasketed concrete pipe shall be sealed with a mastic joint seal conforming to the requirements of ASTM C990 and encased with a minimum 2' wide by 6" thick M6 concrete collar reinforced with 6x6 W2.9 x W2.9 wire mesh.

2. Reinforced Concrete Pipe (Arch): Joints shall be sealed with a waterstop seal meeting the requirements of ASTM C990. Waterstop seals shall consist of hydrophilic compounds such as Waterstop-RX or ConSeal CS-231.

3. Drop Inlets, Manholes, and Junction Boxes: Joints shall be sealed with a waterstop seal or seal wrap meeting the requirements of ASTM C990 or encased with a minimum 2' wide by 6" thick M6 concrete collar reinforced with 6x6 W2.9 x W2.9 wire mesh. Waterstop seal shall contain hydrophilic compounds such as Waterstop-RX or ConSeal CS-231. Seal wrap shall be a self adhesive external joint wrap such as ConWrap CS-217 or Mar Mac Seal Wrap.

Gaskets and seals (mastic, waterstop, and seal wraps) shall be installed in accordance with the manufacturer's recommendations.

The cost for furnishing and installing all gaskets, mastic joint seal, waterstop seal, seal wrap, concrete collars, and for plugging the lift holes shall be incidental to the contract unit price per foot for the corresponding pipe bid item.

The underground power lines at stations 39+95-80' Rt to 42+66-68' Rt are 34.5kV high profile power lines which require coordination between the highway contractor and Utility prior to installing the storm sewer in these locations. The contractor shall contact Northwestern Energy no less than 7 working days prior to any excavation near the underground power lines. A Utility Company Representative shall be on site while work is performed within 10 feet of these underground power cables. Contact Northwestern Energy, Brad Wenande – 605-668-4607

DRAIN CONNECTION TO STORM SEWER

An edge of building drain at station 11+60 – 39.67' R and station 12+83 – 39.67' R shall be connected to the 12" RCP. At station 11+60 it is assumed that there is an existing underground building drain connected to the existing storm sewer. The contractor shall locate this underground drain pipe and connect to the 12" RCP along with 1 above ground roof drain at each location listed. The contractor shall maintain these existing roof drains at all times during construction by whatever means necessary to ensure proper drainage from the roof. All costs for furnishing, installing, locating, maintaining, and connecting the underground and above ground building drains to the 12" RCP shall be incidental to the contract unit price per foot for "12" RCP, Install".

DROP INLETS

Where drop inlets are constructed within areas of curb and gutter, the Contractor shall construct weep holes of at least 3 inches in diameter in the drop inlet walls. The weep holes shall be constructed at the same elevation as the adjacent top of the earthen subgrade and shall be maintained clean and open at all times until the permanent surfacing is placed. The drop inlets shall be covered throughout construction operations as necessary with an Engineer approved cover to provide safe travel for motorists and to prevent materials from entering the storm sewer system. After the permanent surfacing has been placed, the Contractor shall seal the weep holes with grout and remove all debris from the drop inlet. All costs involved with the coverings, weep holes, and removing debris from the drop inlets shall be incidental to the contract unit prices for the components of the drop inlets.

The plan shown quantities of the drop inlet components such as Class M6 Concrete, Reinforcing Steel, Type B Frame and Grate Assembly, Special Frame and Grate Assembly, Precast Drop Inlet Collar, and Precast Concrete Type S Drop Inlet Lid will be the basis of payment for these items.

The Type "B Spec" Frame and Grate Assembly shown in the "Table of Drop Inlets and Quantities" shall be Neenah Foundry R-3295-2 or equivalent.

If additions or reductions to the number of drop inlets are ordered by the Engineer, payment for the components required to construct the drop inlets will be made at the contract unit prices for the components of the drop inlets.

REGISTERED PROFESSIONAL ENGINEER
REG NO.
8161
JOSH
LARSON
7-3-15
SOUTH DAKOTA

TABLE OF TYPE B DROP INLETS AND QUANTITIES

Station	L / R	Drop Inlet Size	Drop Inlet Type	Class M6 Concrete (CuYd)	Reinf. Steel (Lb)	Conc. Collar (Each)	Frame & Grate Type
5+81.04 - 29.17'	L	2 X 3	B	0.73	84	1	B
5+98.67 - 45.08'	R	2 X 3	B	0.85	96	1	B
6+10.94 - 63.50'	L	2 X 3	B	0.87	102	1	B
6+49.55 - 63.50'	L	2 X 3	B	0.86	96	1	B
6+64.48 - 45.25'	R	2 X 3	B	0.85	96	1	B
8+00.00 - 29.17'	L	3 X 6.5	B	2.10	505	1*	B Spec
8+00.00 - 29.17'	R	3 X 6.5	B	2.49	602	1*	B Spec
10+01.02 - 29.17'	R	4 X 3	B	2.10	254	1	B
10+03.27 - 29.17'	L	2 X 3	B	0.85	96	1	B
10+98.57 - 29.17'	R	4 X 3	B	2.14	258	1	B
11+60.00 - 29.17'	R	4 X 3	B	2.16	260	1	B
12+83.00 - 29.17'	R	4 X 3	B	2.20	263	1	B
14+16.14 - 29.17'	R	4 X 3	B	2.24	267	1	B
15+37.28 - 29.17'	L	2 X 3	B	0.88	103	1	B
15+47.71 - 29.17'	R	3 X 6.5	B	3.22	724	1*	B Spec
15+81.00 - 29.17'	L	2 X 3	B	0.85	96	1	B
17+23.50 - 29.17'	R	4 X 3	B	2.96	329	1	B
19+80.69 - 29.17'	R	4 X 3	B	3.32	363	1	B
21+04.25 - 29.17'	L	2 X 3	B	0.85	96	1	B
21+04.25 - 29.17'	R	4 X 3	B	2.92	330	1	B
22+87.28 - 29.17'	R	3 X 6.5	B	3.91	831	1*	B Spec
22+88.27 - 29.17'	L	3 X 6.5	B	2.86	631	1*	B Spec
23+15.67 - 63.00'	L	3 X 4	B	1.82	227	1	B
23+59.01 - 63.00'	L	2 X 3	B	0.85	96	1	B
25+31.00 - 29.17'	R	4 X 3	B	1.87	232	1	B
27+06.94 - 29.17'	R	4 X 3	B	1.59	212	1	B
27+45.67 - 50.41'	R	2 X 3	B	0.85	96	1	B
27+45.96 - 50.54'	L	2 X 3	B	0.85	96	1	B
27+75.24 - 50.32'	L	3 X 4	B	1.62	215	1	B
28+44.00 - 29.17'	R	5.5 X 3	B	2.05	575	1	B
29+04.50 - 29.17'	R	5.5 X 3	B	2.03	578	1	B
31+18.57 - 29.17'	L	2 X 3	B	0.85	96	1	B
31+18.57 - 29.17'	R	5.5 X 3	B	2.25	614	1	B
31+50.82 - 59.04'	R	2 X 3	B	0.85	96	1	B
31+50.99 - 63.50'	L	2 X 3	B	0.85	96	1	B
31+94.16 - 59.04'	R	2 X 3	B	0.85	96	1	B
31+94.33 - 63.50'	L	2 X 3	B	0.85	96	1	B
33+51.50 - 29.17'	R	5.5 X 3	B	2.39	627	1	B
35+22.67 - 29.17'	R	5.5 X 3	B	2.45	638	1	B
35+26.65 - 29.17'	L	3 X 6.5	B	2.10	505	1*	B Spec
35+55.91 - 62.95'	R	2 X 3	B	0.85	96	1	B
35+62.11 - 58.97'	L	2 X 3	B	0.86	96	1	B
35+87.49 - 59.33'	L	2 X 3	B	0.85	96	1	B
35+99.93 - 64.07'	R	2 X 3	B	0.85	96	1	B
			Totals	72.59	12,057	44	

Total Type B Frame and Grate Assembly 38

Total Type B Special Frame and Grate Assembly 6

* = Special Precast Drop Inlet Collar

The cost of furnishing and installing Special Precast Drop Inlet Collars, including labor, materials, and incidentals shall be incidental to the contract unit price per each for "Precast Drop Inlet Collar".

TABLE OF TYPE S DROP INLETS AND QUANTITIES

Station	L / R	Drop Inlet Size	Drop Inlet Type	Class M6 Concrete (CuYd)	Reinf. Steel (Lb)
5+70.55 - 31.63'	R	4 X 11	S	3.46	617
10+23.00 - 65.30'	R	4 X 11	S	4.00	672
10+79.82 - 59.23'	R	4 X 11	S	4.44	728
14+23.92 - 31.63'	L	4 X 11	S	3.32	595
25+27.49 - 31.63'	L	4 X 11	S	3.32	595
27+07.21 - 31.63'	L	4 X 11	S	3.32	595
29+04.50 - 31.63'	L	4 X 11	S	3.32	595
36+40.00 - 31.63'	L	4 X 11	S	3.32	595
36+40.00 - 33.13'	R	7 X 11	S	7.08	2,017
			Totals	35.58	7,009

Total 4'x11' Precast Concrete Type S Drop Inlet Lid 9

TABLE OF JUNCTION BOXES AND QUANTITIES

Station	L / R	Width Size L' x W' x H'	Class M6 Conc. (CuYd)	Reinf. Steel (Lb)	2" Adj. Ring (Each)	Ecc. MH Cone (Ft)
6+24.88 - 29.17'	R	5 X 5 X 4.0	4.13	821	2	
6+24.88 - 44.61'	R	5 X 5 X 4.5	4.41	846	5	
10+51.34 - 48.97'	L	5 X 5 X 5.5	5.06	933	3	
27+57.16 - 50.41'	R	5 X 5 X 4.0	4.29	821	2	
27+60.44 - 29.18'	R	5 X 5 X 4.0	3.77	821	1	
31+71.00 - 63.50'	L	5 X 5 X 4.0	4.15	821	2	
31+71.34 - 29.17'	R	5 X 5 X 4.5	3.95	846	3	
31+71.42 - 52.39'	R	5 X 5 X 4.0	4.19	821	4	
35+74.58 - 59.10'	L	5 X 5 X 4.0	4.19	821	2	
35+74.93 - 30.66'	L	5 X 5 X 4.0	4.13	821	2	
35+75.27 - 29.04'	R	5 X 5 X 5.0	4.11	908	3	
35+75.44 - 63.47'	R	5 X 5 X 4.0	4.19	821	2	
38+51.52 - 37.00'	R	5 X 5 X 5.5	4.50	933	2	2
38+51.52 - 31.41'	L	5 X 5 X 4.5	4.09	846	3	2
40+07.01 - 83.04'	R	5 X 5 X 4.0	4.09	821	3	3
42+53.74 - 90.13'	R	5 X 5 X 5.5	4.82	933	2	3
		Totals:	68.07	13,634	41	10

Total Type A9 Frame and Lid 16

CONTROLLED DENSITY FILL FOR JUNCTION BOX

Controlled density fill shall be in conformance with Section 464 of the Specifications.

The controlled density fill shall be placed in the bottom of the corresponding junction boxes to raise the floor elevation to the invert of the outlet pipe.

TABLE OF CONTROLLED DENSITY FILL FOR JUNCTION BOX

Station	Quantity (CuYd)
6+24.88 - 29.17' R	0.46
27+57.16 - 50.41' R	0.83
35+74.58 - 59.10' L	1.12
35+74.93 - 30.66' L	0.93
35+75.44 - 63.47' R	1.02
Total:	4.36

REGISTERED PROFESSIONAL ENGINEER
REG NO.
8161
JOSH
LARSON
7-3-15
SOUTH DAKOTA

TABLE FOR ADJUSTMENT OF WATER VALVE BOXES

Station	Adjustment	Quantity	Unit
31+78.40 - 55.55' L	0.23	1	Each
40+40.93 - 81.96' L	-0.04	1	Each
	Total:	2	Each

TABLE OF BANK AND CHANNEL PROTECTION GABIONS

Station	L/R	Quantity (CuYd)
43+49.1	285.4' R	36.0
	Total:	36.0

9" PCC FILLET SECTIONS

Payment for "9" PCC Fillet Section" shall be based on plans quantity. If additions or reductions to the area of PCC fillet sections are ordered by the Engineer, payment will be made in accordance with the contract unit price per square yard for "9" PCC Fillet Section".

TYPE 1 DETECTABLE WARNINGS

Detectable warnings shall be in compliance with the Americans with Disability Act regulations.

The detectable warnings shall be installed according to the manufacturer's installation instructions.

A concrete thickness equal to the adjacent concrete sidewalk thickness and 2 inches of granular cushion material shall be placed below the Type 1 Detectable Warnings. When concrete is placed below the detectable warnings then the concrete thickness shall be transitioned at the rate of 1" per foot to match the adjacent concrete sidewalk thickness.

The detectable warnings shall be a brick red color for application in concrete curb ramps. Cast iron plates may be a natural patina (weathered steel).

When Type 1 Detectable Warnings are specified, the Contractor shall furnish and install only one of the products listed in the Type 1 Detectable Warnings table.

TYPE 1 DETECTABLE WARNINGS (CONTINUED)

Type 1 Detectable Warnings

Product	Manufacturer
Detectable Warning Plate Cast Iron Plate	Neenah Foundry Company Neenah, WI 800-558-5075 http://www.neenahfoundry.com/
Detectable Warning Plate Cast Iron Plate	Deeter Foundry Lincoln, NE 800-234-7466 http://www.deeter.com/
Detectable Warning Plate Cast Iron Plate(No Coating)	East Jordan Iron Works, Inc. 301 Spring Street East Jordan, MI 49727 800-626-4653 http://www.ejiw.com

COLORED CONCRETE SIDEWALK IN BOULEVARDS

The 4", 6", 4" Reinforced, and 6" Reinforced Colored Concrete Sidewalks shall be integrally colored per manufacturer recommendations. The color noted on the Curb and Gutter Layout sheets shall be Solomon 242 – Sandalwood SRI 24 or equivalent. The Contractor shall submit a sample piece of colored concrete to the Field Engineer for approval before placing the colored sidewalk for the boulevard. All costs for coloring shall be incidental to the contract unit price per square foot for the corresponding Colored Concrete Sidewalk bid item.

Two coats of a non-yellowing acrylic curing and sealing compound shall be applied to the surface of the colored concrete. The curing and sealing compound shall be the product listed below or an equal approved by the Engineer.

DECRA-SEAL
W.R. Meadows, Inc.
1-800-342-5976
www.wrmeadows.com

All cost for furnishing, handling, and applying the curing and sealing compound, including the materials, equipment, labor and incidentals necessary shall be incidental to the contract unit price per square foot for the corresponding Colored Concrete Sidewalk bid item.

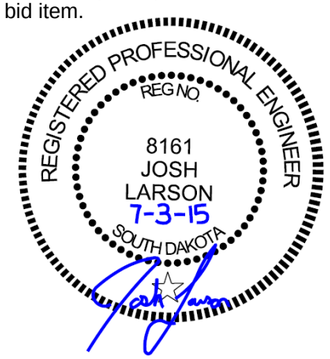

CONCRETE SIDEWALK ADJACENT TO BUILDINGS

When placing sidewalk adjacent to buildings, the elevation of the new sidewalk may be either higher or lower than the existing sidewalk. This may require that modifications be made to building exteriors, such as removal of siding, installation of flashing, etc. Building modifications shall be approved by the Engineer. All costs associated with modifying buildings for sidewalk placement shall be incidental to the contract unit price per square foot for the corresponding Concrete Sidewalk bid item.

Sidewalk placed adjacent to building doorways should nearly match the doorway threshold and shall have a maximum ½" vertical rise at the doorway threshold. Sidewalk landings shall be provided at building doorways according to the curb and gutter layout sheets. Sidewalk will ramp down from the landing to the typical sidewalk with an 8.3% maximum slope. The limits of the steepened concrete sidewalk shown on the curb and gutter layout sheets may need to be adjusted o the actual doorway location and to meet sidewalk slope requirements.

SIDEWALK DRAINS

At the locations noted in the Table of Sidewalk Drains, drainage from adjacent buildings will be carried through the sidewalk to the gutter. The sidewalk drains shall be constructed in accordance with the details shown on Standard Plate 651.50.

TABLE OF SIDEWALK DRAINS

Station	L/R	Length (Ft)
4+85	R	9.0
5+27	R	9.4
	Totals:	18.4

SLIP RESISTANT COATING FOR CONCRETE STAIRWAY

Curing compounds shall not be utilized on concrete stairway treads during the concrete curing process. Curing shall be accomplished with a double layer of burlap mats and polyethylene sheeting.

The Contractor shall apply a 2" wide slip resistant coating at the front of each stairway tread for the full width of the tread.

The slip resistant coating shall be a red, tile red, or brick red color. The coating shall be a single component epoxy and have a minimum coefficient of friction value of 0.9 for dry and 0.9 for wet as determined by ASTM F 609.

The slip resistant coating shall be applied in accordance with the manufacturer's recommendations.

All cost for furnishing and applying the slip resistant epoxy coating including equipment, labor, and materials shall be incidental to various contract items.

TABLE OF CONCRETE STAIRWAYS IN RETAINING WALLS

Station	L/R	Top Landing Elev.	Bottom Landing Elev.	No. of Steps (w)	Class M6 Concrete (CuYd)	Epoxy Coated Reinf. Steel (Lb)	* Str. Exc. (CuYd)	Pipe Handrail (Ft)
20+08.5	L	1205.31	1203.16	3	1.22	89	1.95	12.94
24+41.5	L	1195.82	1194.32	3	1.22	89	1.95	12.94
34+02.5	L	1188.21	1187.16	1	0.88	66	1.33	8.46
					3.32	244	5.23	34.34

TABLE OF CONCRETE STAIRWAYS IN TYPE C RETAINING WALLS

Station	L/R	Top Landing Elev.	Bottom Landing Elev.	No. of Steps (w)	Class M6 Concrete (CuYd)	Epoxy Coated Reinf. Steel (Lb)	* Str. Exc. (CuYd)	Pipe Handrail (Ft)
21+71.0	L	1203.69	1200.43	5	2.45	166	6.33	17.42
22+19.5	L	1202.86	1199.61	5	2.44	166	6.32	17.42
					4.89	332	12.65	34.84

* The quantities for structural excavation for stairways in retaining walls have been added as quantities for "Structure Excavation, Miscellaneous". Payment for all work necessary for structural excavation for stairways in retaining walls shall be incidental to the contract unit price per cubic yard for "Structure Excavation, Miscellaneous".

TABLE OF GRAVITY SEGMENTAL BLOCK RETAINING WALLS

Station	to Station	R/L	Gravity Segmental Block Wall	* Drainage Fill (Cu Yd)	* Structure Excavation (CuYd)
19+62.8	21+17.3	L	575	26	47
21+39.9	22+06.8	R	203	10	18
23+87.6	25+38.1	L	266	13	23
26+46.5	26+58.0	L	15	1	2
30+65.1	31+32.7	L	188	9	16
33+91.0	34+49.8	L	137	7	12
36+15.0	37+65.7	L	499	22	40
			1883	88	158

* Drainage Fill and Excavation are incidental to the contract unit price per square foot for Gravity Segmental Block Wall. Quantities are shown for informational purposes only.

FOR BIDDING PURPOSES ONLY

TABLE OF SUPERELEVATION / CROSS SLOPE TRANSITIONS

Eastbound Lanes

Station	to	Station	Cross Slope	Description
4+00.00		36+41.00	-0.02 ft/ft	Normal Crown Section
36+41.00		37+73.00	-	Superelevation Transition
37+73.00		38+62.03	0.0066 ft/ft	Full Superelevation
		38+62.03	0.0066 ft/ft	Match Existing Superelevation

Two Way Left Turn Lane

Station	to	Station	Cross Slope	Description
		4+00.00	0.025 ft/ft	Cross Slope Left
4+00.00		4+90.00	-	Cross Slope Transition
4+90.00		18+80.00	0.02 ft/ft	Cross Slope Left
18+80.00		20+40.00	-	Cross Slope Transition
20+40.00		33+00.00	-0.02 ft/ft	Cross Slope Right
33+00.00		34+60.00	-	Cross Slope Transition
34+60.00		36+41.00	0.02 ft/ft	Cross Slope Left
36+41.00		37+73.00	-	Superelevation Transition
37+73.00		38+62.03	0.0066 ft/ft	Full Superelevation
		38+62.03	0.0066 ft/ft	Match Existing Superelevation

Westbound Lanes

Station	to	Station	Cross Slope	Description
		4+00.00	0.025 ft/ft	Increased Cross Slope Left
4+00.00		4+90.00	-	Cross Slope Transition
4+90.00		38+62.03	0.02 ft/ft	Normal Crown Section
		38+62.03	0.02 ft/ft	Match Existing Cross Slope

TABLE OF CONSTRUCTION STAKING

(See Special Provision for Contractor Staking)

Roadway and Description	Begin Station	End Station	Number of Lanes	Length (Ft)	Grade Staking: Length (Mile)	Grade Staking: Lane Factor	Grade Staking: *Sets of Stakes	Grade Staking: **Grade Staking Quantity (Mile)	Miscellaneous Staking Quantity (Mile)	Slope Staking Quantity (Mile)	Structure Staking Quantity (Each)
4th Street (5 Lane PCCP)	4+00	32+62	5	2862	0.542	2.5	2	2.710	0.542	0.542	
Retaining Wall (MSE Modular Wall)	19+63	20+06		56	0.011						1
Retaining Wall (MSE Modular Wall)	20+11	21+17		126	0.024						1
Retaining Wall (Type C)	21+37	21+68		38	0.007						1
Retaining Wall (Type C)	21+74	22+17		56	0.011						1
Retaining Wall (Type C)	22+22	22+93		101	0.019						1
Retaining Wall (MSE Modular Wall)	21+40	22+07		71	0.013						1
Retaining Wall (MSE Modular Wall)	23+88	24+40		62	0.012						1
Retaining Wall (MSE Modular Wall)	24+74	25+38		64	0.012						1
Retaining Wall (MSE Modular Wall)	26+47	26+55		14	0.003						1
Retaining Wall (MSE Modular Wall)	30+65	31+33		98	0.019						1
Retaining Wall (MSE Modular Wall)	33+91	34+00		12	0.002						1
Retaining Wall (MSE Modular Wall)	34+05	34+50		48	0.009						1
Retaining Wall (MSE Modular Wall)	36+15	37+61		150	0.028						1
							Totals:	2.710	0.542	0.542	13

* 1 = Blue Top Stakes Only (Asphalt Concrete Pavement)
2 = Blue Top and Paving Hub Stakes (PCC Pavement)

** Grade Staking Quantity = (Length) x (Lane Factor) x (Sets of Stakes)

REESTABLISH PROPERTY CORNER

The Contractor shall have a Licensed Land Surveyor in the State of South Dakota reestablish property corners as directed by the Engineer. The engineer shall determine the final corners to be reestablished. It is estimated that 10 corners shall be reestablished. The Land Surveyor shall preserve the location and reestablish all corners in accordance with South Dakota DOT Survey Manual, Chapter 8 Section J – Marking of Public Land Corners. All corners shall be set after all surfacing operations are completed.

http://sddot.com/business/design/docs/survey/smchap8.pdf

All costs associated with Reestablishing Property Corners in accordance with South Dakota DOT Survey Manual, including all costs to furnish all materials shall be incidental to the contract unit price per each for "Reestablish Property Corner".

PIPE QUANTITIES

FOR BIDDING PURPOSES ONLY

STATE OF SOUTH DAKOTA	PROJECT	SHEET	TOTAL SHEETS
	NH 0050(99)381	B12	B106

	Circular							Sloped End
	12" Cl 2	18" Cl 2	24" Cl 2	30" Cl 2	36" Cl 2	42" Cl 2	48" Cl 2	30"
Station to Station/Offset L& R	Ft	Ft	Ft	Ft	Ft	Ft	Ft	Each
5+70.6-31.63' R to 5+81.0-29.17' L		60						
5+70.6-31.63' R to 6+24.9-29.17' R		46						
5+98.7-45.08' R to 6+24.9-44.61' R		24						
6+10.9-63.50' L to 6+49.6-63.50' L		38						
6+10.9-63.50' L to 6+24.9-29.17' R		90						
6+24.9-44.61' R to 6+64.5-45.25' R		38						
6+24.9-44.61' R to 6+24.9-29.17' R		12						
6+24.9-29.17' R to 8+00.0-29.17' R			170					
8+00.0-29.17' L to 8+00.0-29.17' R		56						
8+00.0-29.17' R to 10+01.0-29.17' R				198				
10+01.0-29.17' R to 10+98.6-29.17' R				96				
10+03.3-29.17' L to 10+01.0-29.17' R		56						
10+23.0-65.30' R to 10+79.8-59.23' R		48						
10+79.8-59.23' R to 10+98.6-29.17' R		32						
10+98.6-29.17' R to 11+60.0-29.17' R				60				
11+60.0-29.17' R to 12+83.0-29.17' R				120				
11+60.0-29.17' R to 11+60.0-39.67' R	10							
12+83.0-29.17' R to 14+16.1-29.17' R				130				
12+83.0-29.17' R to 12+83.0-39.67' R	10							
14+16.1-29.17' R to 14+23.9-31.63' L		58						
14+16.1-29.17' R to 15+47.7-29.17' R				128				
15+37.3-29.17' L to 15+81.0-29.17' L		42						
15+37.3-29.17' L to 15+47.7-29.17' R		58						
15+47.7-29.17' R to 17+23.5-29.17' R				172				
17+23.5-29.17' R to 19+80.7-29.17' R				256				
19+80.7-29.17' R to 21+04.3-29.17' R				122				
21+04.3-29.17' L to 21+04.3-29.17' R		56						
21+04.3-29.17' R to 22+87.3-29.17' R				180				
22+87.3-29.17' R to 25+31.0-29.17' R				240				
22+87.3-29.17' R to 22+88.3-29.17' L		56						
22+88.3-29.17' L to 23+15.7-63.00' L		42						
23+15.7-63.00' L to 23+59.0-63.00' L		42						
25+27.5-31.62' L to 25+31.0-29.17' R		58						
25+31.0-29.17' R to 27+06.9-29.17' R				174				
27+06.9-29.17' R to 27+60.4-29.18' R					50			
27+07.2-31.63' L to 27+06.9-29.17' R		58						
27+45.7-50.41' R to 27+57.2-50.41' R		8						
27+46.0-50.54' L to 27+75.2-50.32' L		28						
27+57.2-50.41' R to 27+60.4-29.18' R		18						
27+60.4-29.18' R to 28+44.0-29.17' R						80		
27+60.4-29.18' R to 27+75.2-50.32' L			78					
27+75.2-50.32' L to 27+81.2-98.55' L		48						
28+44.0-29.17' R to 29+04.5-29.17' R						58		
29+04.5-31.62' L to 29+04.5-29.17' R		56						
29+04.5-29.17' R to 31+18.6-29.17' R						212		
31+18.6-29.17' L to 31+18.6-29.17' R		56						
31+18.6-29.17' R to 31+71.3-29.17' R						50		
31+50.8-59.04' R to 31+71.4-52.39' R		20						
31+51.0-63.50' L to 31+71.0-63.50' L		18						
31+71.0-63.50' L to 31+94.3-63.50' L		20						
31+71.0-63.50' L to 31+71.3-29.17' R			88					
31+71.4-52.39' R to 31+94.2-59.04' R		22						
31+71.4-52.39' R to 31+71.3-29.17' R		20						
31+71.3-29.17' R to 33+51.5-29.17' R						176		
33+51.5-29.17' R to 35+22.7-29.17' R						168		
SHEET 1 SUBTOTAL:	20	1284	336	1876	50	744	0	0

PIPE QUANTITIES

FOR BIDDING PURPOSES ONLY

STATE OF SOUTH DAKOTA	PROJECT	SHEET	TOTAL SHEETS
	NH 0050(99)381	B13	B106

	Circular							Sloped End
	12" Cl 2	18" Cl 2	24" Cl 2	30" Cl 2	36" Cl 2	42" Cl 2	48" Cl 2	30"
Station to Station/Offset L& R	Ft	Ft	Ft	Ft	Ft	Ft	Ft	Each
35+22.7-29.17' R to 35+75.3-29.04' R						50		
35+26.7-29.17' L to 35+74.9-30.66' L		44						
35+55.9-62.95' R to 35+75.4-63.47' R		16						
35+62.1-58.97' L to 35+74.6-59.10' L		10						
35+74.6-59.10' L to 35+87.5-59.33' L		10						
35+74.6-59.10' L to 35+74.9-30.66' L		24						
35+74.9-30.66' L to 36+40.0-31.63' L		58						
35+74.9-30.66' L to 35+75.3-29.04' R			56					
35+75.3-29.04' R to 36+40.0-33.13' R							58	
35+75.4-63.47' R to 35+75.3-29.04' R		30						
35+75.4-63.47' R to 35+99.9-64.07' R		22						
36+40.0-33.13' R to 38+51.5-37.00' R							208	
38+51.5-37.00' R to 38+51.5-31.41' L						64		
38+51.5-37.00' R to 40+07.0-83.04' R				170				
40+07.0-83.04' R to 42+53.7-90.13' R				268				
42+53.7-90.13' R to 43+48.4-283.81' R				216				1
SHEET 2 SUBTOTAL:	0	214	56	654	0	114	266	1
TOTAL:	20	1498	392	2530	50	858	266	1

REGISTERED PROFESSIONAL ENGINEER
REG NO.
8161
JOSH
LARSON
7-3-15
SOUTH DAKOTA

FENCE QUANTITIES

FOR BIDDING PURPOSES ONLY

STATE OF SOUTH DAKOTA	PROJECT	SHEET	TOTAL SHEETS
	NH 0050(99)381	B14	B106

Station to Station		Side (L/R)	4' Chain Link Fence with Top Rail (FT)	Pedestrian Swing Gate (Each)	Ornamental Metal Fence (FT)	Remove (Chain Link) (FT)
13+85	14+17	L			32	
21+37	22+16	L	101	1		109
		TOTALS:	101	1	32	109

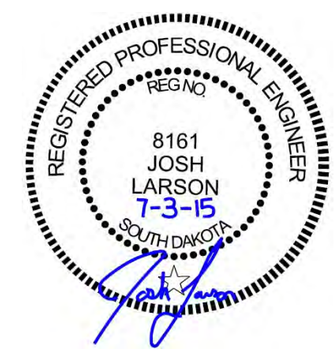

FOR BIDDING PURPOSES ONLY

PAVEMENT, CURB AND GUTTER, AND SIDEWALK QUANTITIES

STATE OF SOUTH DAKOTA	PROJECT	SHEET	TOTAL SHEETS
	NH 0050(99)381	B15	B106

		PCC Fillet Section	Concrete Curb and Gutter		Concrete Gutter	Type A PCC Approach Pavement			Type B PCC Approach Pavement				Concrete Sidewalk								Detectable Warning	Grinding
			Type B	Type BL	Type P			Reinforced							Reinforced		Colored		Colored-Reinforced		Type 1	PCC
			69	69	9	6"	8"	8"	6"	8"			4"	6"	4"	6"	4"	6"	4"	6"		
Station	to Station	9" SqYd	Ft	Ft	Ft	SqYd	SqYd	SqYd	SqYd	SqYd			SqFt	SqFt	SqFt	SqFt	SqFt	SqFt	SqFt	SqFt	SqFt	SqFt
Broadway to Cedar Street																						
4+00.00 R	6+01.55 R	25.9	161		24		14.7			23.8			721	189	95		407		31	34	10	
4+00.34 L	6+16.87 L		197		52	56.0	34.8						481	423			368	106			20	
Cedar to Walnut Street																						
6+42.99 L	10+35.77 L		388		80		116.0						1164	828			905	361			40	
6+61.66 R	10+33.68 R	25.9	307		93		122.0						1204	766		25	824	180		180	30	
Walnut to Douglas Street																						
10+65.63 R	14+57.13 R		465		20		33.8						1632	996		27	1387	450		134	50	
10+67.77 L	14+54.46 L	25.9	409		31		53.3						1402	704	47	52	969	221	5		50	
14+69.36 R	14+85.43 R			66																		
14+74.42 L	14+85.19 L			41																		
Douglas to Capitol Street																						
15+09.48 R	18+83.16 R	25.9	364		40		52.0						1442	675			998	204			50	
15+10.71 L	19+02.38 L	25.8	317		87		118.3			6.9			1097	796			827	37			50	
Capitol to Pine Street																						
19+28.27 L	23+17.34 L	26.5	392		20		35.0						1003	916			1460				40	
19+49.39 R	23+25.85 R	25.9	338		38		32.3		20.0				1511	670			933				40	
Pine to Mulberry Street																						
23+51.83 R	27+47.43 R		380		24		39.8						1561	637			1199	30			40	
23+57.34 L	27+47.71 L		307		68	32.6	73.8	6.4					1613	589	231		765	31	68		40	
Mulberry to Pearl Street																						
27+73.24 L	31+59.51 L	53.5	299		96		132.9	6.0		28.0			1103	580	97		675	27	38		40	
27+74.08 R	31+59.23 R	27.0	285		79	42.8	100.4						1260	526			827	30			40	
Pearl to Picotte Street																						
31+84.00 L	35+63.93 L	78.9	300		100	44.0	84.3		18.7				1021	752	139		583	52			40	
31+86.01 R	35+57.61 R	105.5	328		32		44.0						1430	639			959				40	
Picotte to Burleigh Street																						
35+85.69 L	39+63.45 L		251		52		84.6						675	766			559		88		50	15.5
35+97.76 R	39+32.66 R	26.0	301										1389	769							50	9.5
Burleigh to Marne Creek																						
39+78.03 R	43+43.99 R		43											631							30	10.5
40+38.42 L	45+63.43 L												166	4824							30	21.5
Total:		472.7	5832	107	936	175.4	1172.0	12.4	38.7	58.7			21875	17676	609	104	14645	1729	230	348	780	57

REGISTERED PROFESSIONAL ENGINEER
REG NO.
8161
JOSH
LARSON
7-3-15
SOUTH DAKOTA

TYPICAL GRADING SECTIONS

FOR BIDDING PURPOSES ONLY

STATE OF SOUTH DAKOTA	PROJECT	SHEET	TOTAL SHEETS
	NH 0050(99)381	B16	B106

SD50 (EAST 4TH STREET)
4+00.00 TO 4+70.00
37+46.89 TO 38+62.03

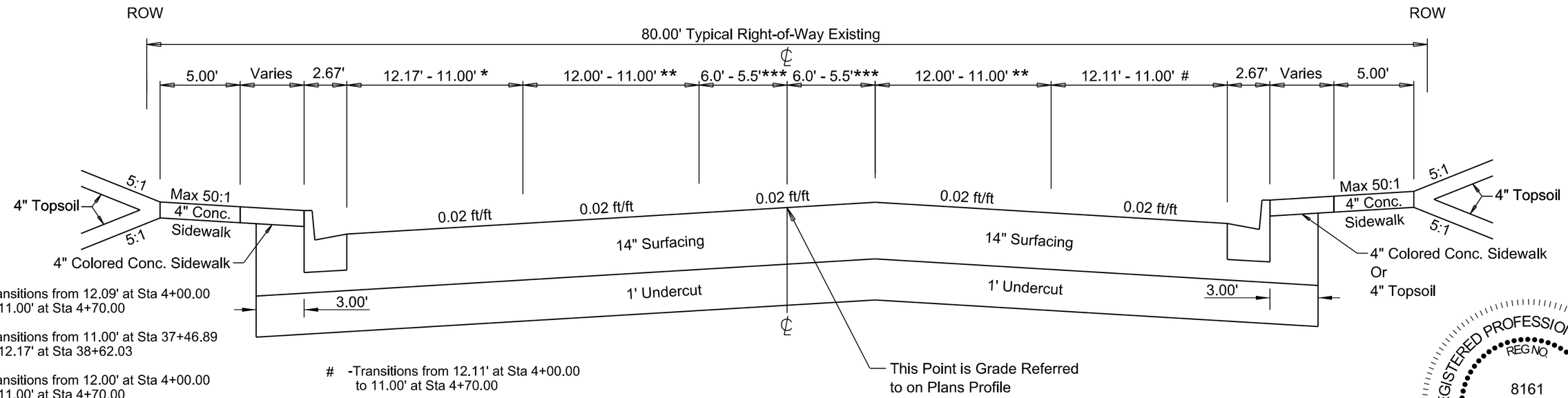

* -Transitions from 12.09' at Sta 4+00.00 to 11.00' at Sta 4+70.00

-Transitions from 11.00' at Sta 37+46.89 to 12.17' at Sta 38+62.03

** -Transitions from 12.00' at Sta 4+00.00 to 11.00' at Sta 4+70.00

-Transitions from 11.00' at Sta 37+46.89 to 12.00' at Sta 38+62.03

*** -Transitions from 6.00' at Sta 4+00.00 to 5.50' at Sta 4+70.00

-Transitions from 5.50' at Sta 37+46.89 to 6.00' at Sta 38+62.03

\# -Transitions from 12.11' at Sta 4+00.00 to 11.00' at Sta 4+70.00

-Transitions from 11.00' at Sta 37+46.89 to 11.59' at Sta 38+62.03

REGISTERED PROFESSIONAL ENGINEER
REG NO.
8161
JOSH
LARSON
7-3-15
SOUTH DAKOTA

SD50 (EAST 4TH STREET)
4+70.00 TO 20+40.00
33+00.00 TO 37+46.89

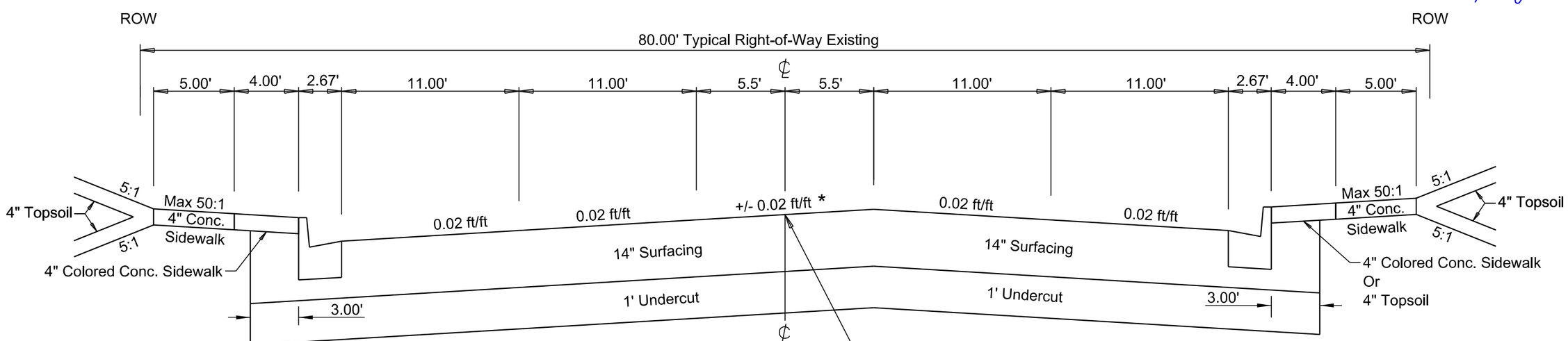

* -Crown transitions from right of centerline at Sta 18+80.00 to left of centerline at Sta 20+40.00

-Crown transitions from left of centerline at Sta 33+00.00 to right of centerline at Sta 34+60.00

TYPICAL GRADING SECTIONS

FOR BIDDING PURPOSES ONLY

STATE OF SOUTH DAKOTA	PROJECT	SHEET	TOTAL SHEETS
	NH 0050(99)381	B17	B106

SD50 (EAST 4TH STREET)
20+40.00 TO 33+00.00

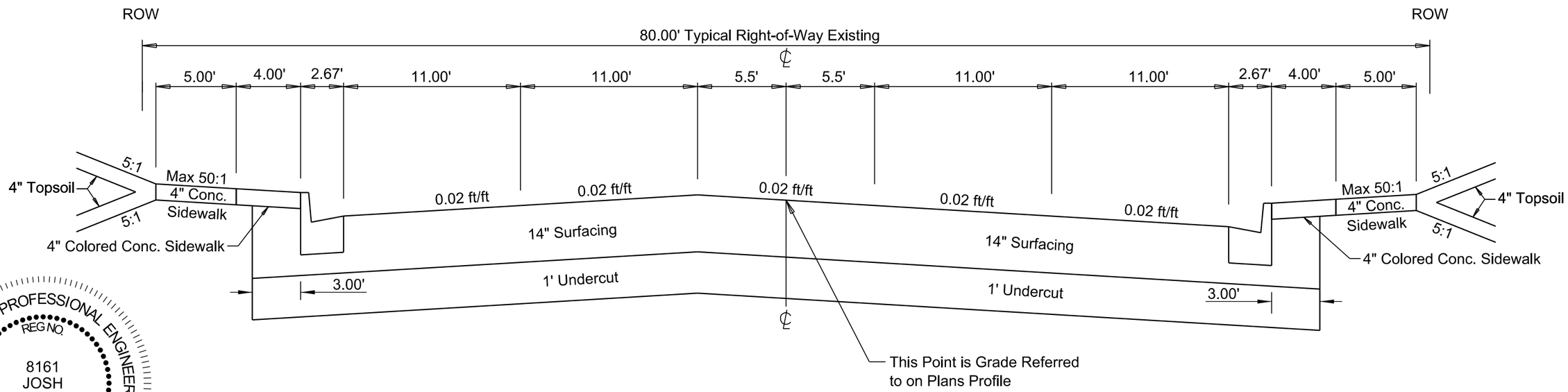

REGISTERED PROFESSIONAL ENGINEER
REG NO.
8161
JOSH
LARSON
7-3-15
SOUTH DAKOTA

HORIZONTAL ALIGNMENT DATA

FOR BIDDING PURPOSES ONLY

STATE OF SOUTH DAKOTA	PROJECT	SHEET	TOTAL SHEETS
	NH 0050(99)381	B18	B106

4th Street/SD Highway 50

Type	Station			Northing	Easting
POB	0+00.00			209936.110	2755317.244
		TL= 400.00	N 89°02'14" E		
PI	4+00.00			209942.831	2755717.190
		TL= 213.87	N 88°23'43" E		
PI	6+13.87			209948.820	2755930.973
		TL= 388.15	N 89°03'21" E		
PI	10+02.02			209955.216	2756319.071
		TL= 420.72	N 89°15'30" E		
PI	14+22.74			209960.661	2756739.757
		TL= 120.00	N 89°01'17" E		
PI	15+42.74			209962.711	2756859.740
		TL= 745.57	N 89°03'19" E		
PI	22+88.31			209975.002	2757605.208
		TL= 100.01	N 89°41'11" E		
PI	23+88.32			209975.549	2757705.214
		TL= 315.49	N 89°05'39" E		
PI	27+03.81			209980.537	2758020.662
		TL= 693.92	N 89°16'03" E		
PC	33+97.73			209989.407	2758714.525
PI	35+47.73	R= 10880.00	Delta = 01°34'47" R	209991.325	2758864.521
PT	36+97.72			209989.107	2759014.513
		TL= 300.00	N 89°16'03" E		
PI	36+97.72			209989.107	2759014.513
		TL= 49.16	S 89°09'09" E		
PC	37+46.89			209988.379	2759063.672
PI	41+92.42	R= 808.07	Delta = 57°44'27" L	209981.790	2759509.158
PT	45+61.24			210354.996	2759752.508
		TL= 814.35	S 89°09'09" E		
PI	45+61.24			210354.996	2759752.508
		TL= 71.36	N 33°06'23" E		
PC	46+32.60			210414.774	2759791.486
PI	50+72.67	R= 1432.14	Delta = 34°09'45" R	210783.403	2760031.852
PT	54+86.51			210953.449	2760437.745
		TL= 853.91	N 33°06'23" E		
PI	54+86.51			210953.449	2760437.745
		TL= 79.29	N 67°16'09" E		
PC	55+65.80			210984.087	2760510.877
PI	62+61.62	R= 7639.49	Delta = 10°24'31" L	211252.954	2761152.652
PT	69+53.61			211633.342	2761735.291
		TL= 1387.81	N 67°16'09" E		
PI	69+53.61			211633.342	2761735.291
		TL= 1446.39	N 56°51'38" E		
PI	84+00.00			212424.049	2762946.415
		TL= 500.00	N 57°11'46" E		
PI	89+00.00			212694.933	2763366.679
		TL= 400.57	N 56°27'33" E		
POE	93+00.57			212916.263	2763700.554

Connection to Shared Use Path

Type	Station			Northing	Easting
POB	0+00.00			210239.317	2759614.128
		TL= 90.91	N 47°47'59" W		
PC	0+90.91			210300.383	2759546.782
CC		R= 47.00	Delta = 195°43'42" R	210335.201	2759578.353
PT	2+51.47			210360.156	2759618.181
		TL= 21.19	S 32°04'17" E		
POE	2+72.65			210342.203	2759629.430

Connection to Shared Use Path Auxiliary

Type	Station			Northing	Easting
PC	0+00.00			210349.935	2759533.722
PI	0+81.07	R= 585.84	Delta = 15°45'28" L	210426.920	2759559.137
PT	1+61.12			210507.913	2759562.690
		TL= 17.83	N 2°30'42" E		
POE	1+78.95			210525.730	2759563.472

REGISTERED PROFESSIONAL ENGINEER
REG NO.
8161
JOSH
LARSON
7-3-15
SOUTH DAKOTA

The coordinates shown on this sheet are based on the South Dakota State Plane Corrdinate System. South Zone (NAD 83/2007); Geoid 09; SF=0.99993757

CONTROL DATA

FOR BIDDING PURPOSES ONLY

STATE OF SOUTH DAKOTA	PROJECT	SHEET	TOTAL SHEETS
	NH 0050(99)381	B19	B106

HORIZONTAL AND VERTICAL CONTROL POINTS

POINT	STATION & OFFSET	DESCRIPTION	NORTHING	EASTING	ELEVATION
CP1	1+36.92 - 92.86' L	NW CORNER OF 4TH & BROADWAY TOP OF INLET	210031.2610	2755452.5800	1208.0610
CP2	3+62.50 - 32.44' R	TOP OF CURB NORTH OF FIRST NATIONAL BANK	209909.7630	2755680.2390	1207.5380
CP3	5+98.68 - 62.17' L	NW CORNER OF 4TH & CEDAR ST. IN GRASS	210010.5450	2755914.0480	1205.6970
CP4	9+63.81 - 24.59' L	TOP OF CURB - CORNER OF 4TH & WALNUT	209979.1730	2756280.4580	1204.8700
CP5	14+77.43 - 58.90' R	IN GRASS MEDIAN IN CENTER OF DOUGLAS AVE. SOUTH SIDE OF 4TH ST.	209902.7040	2756795.4440	1204.3370
CP6	18+26.65 - 26.50' R	TOP OF CURB SOUTH SIDE OF 4TH ST. BETWEEN CAPITAL & DOUGLAS	209940.8940	2757144.0510	1203.9400
CP7	21+16.21 - 36.03' L	NW CORNER OF ALLEY (TOP OF CONCRETE RETAINING WALL) BETWEEN PINE & CAPITAL	210008.1890	2757432.5370	1203.6230
CP8	27+31.37 - 86.66' R	SW CORNER OF MULBERRY & 4TH IN GRASS BOULEVARD - SOUTH OF CONCRETE PARKING	209894.2380	2758049.3300	1188.5950
CP9	31+23.13 - 39.24' L	NW CORNER OF 4TH & PEARL IN GRASS - STARBRITE INN	210025.1360	2758439.4540	1188.9030
CP10	39+00.80 - 66.59' R	SW CORNER OF 4TH & BURLEIGH IN GRASS BEHIND SIDEWALK	209935.1630	2759228.4910	1186.9660
CP11	43+87.26 - 31.70' R	TOP OF WINGWALL @ SW CORNER OF BRIDGE	210197.9860	2759664.8280	1186.1900
CP12	48+04.49 - 39.52' R	2' NORTH OF CHAMBER OF COMMERCE SIGN	210527.3990	2759924.0800	1183.5590
CP13	56+91.43 - 52.24' L	NE CORNER OF 7TH ST. & 4TH ST. - TOP OF CURB (PARKING LOT) NEAR SOMSEN INSURANCE	211081.4190	2760605.3650	1185.4800
CP14	65+58.20 - 49.90' L	IN GRASS BOULEVARD WEST OF STOCKMAN'S MAIN ENTRANCE	211468.9830	2761373.6690	1182.3780
CP15	74+80.78 - 49.01' L	IN GRASS BOULEVARD @ WEST SIDE OF FAR EAST ENTRANCE TO STOCKMANS LIVESTOCK	211962.5720	2762149.9190	1181.5850
CP16	83+91.50 - 45.23' L	NE CORNER OF HWY 50 & FERDIG AVE. - IN GRASS	212457.2730	2762914.5670	1179.3270

The coordinates shown on this sheet are based on the South Dakota State Plane Corrdinate System. South Zone (NAD 83/2007); Geoid 09; SF=0.99993757
The elevations shown on this sheet are based on NAVD 88.

REGISTERED PROFESSIONAL ENGINEER
REG.NO.
8161
JOSH
LARSON
7-3-15
SOUTH DAKOTA

SUBSURFACE UTILITY LOCATIONS

FOR BIDDING PURPOSES ONLY

Subsurface utility explorations were done at the following locations. The information below states what was located in the specified areas. This table is provided to aid the Contractor during construction and does not substitute or replace the requirements of SD One Call. All information is approximate and the Contractor shall verify all utility locations before construction in those areas as mandated in SDCL 49-7A.

Test Hole	Station	Offset	Finding	Existing Ground Elev.	Utility Depth (Ft.)	Utility Elevation	Northing	Easting
1	5+83.24	32.11' L	Found Fiber Optic Cable - 2 conduit sets 3 wide (18" x 10") at 3.5' deep	1206.17	3.50	1202.67	209980.0610	2755899.4520
2	7+14.44	30.65' L	Found Fiber Optic Cable - 3 conduit sets 2 wide (10" x 18") at 3.35' deep	1205.59	3.35	1202.24	209981.1260	2756031.0260
3	8+00.64	32.52' L	Found Fiber Optic Cable - 18" Concrete Vault (18" Across) at 3.1' deep	1205.22	3.10	1202.12	209984.4140	2756117.1790
4	9+00.53	32.95' L	Found Fiber Optic Cable - 3 conduit sets 2 wide (12" x 19") at 3.5' deep	1205.17	3.50	1201.67	209986.4910	2756217.0510
5	9+93.25	32.48' L	Found Fiber Optic Cable - 3 conduit sets 2 wide (10" x 18") at 3.5' deep	1204.88	3.50	1201.38	209987.5450	2756309.7630
6	5+82.29	33.76' L	Found Fiber Optic Cable - with C.L. duct (2") at 3.0' deep	1206.21	3.00	1203.21	209981.6870	2755898.4620
7	7+15.11	31.72' L	Found Fiber Optic Cable - with C.L. duct (2") at 3.1' deep	1205.60	3.10	1202.50	209982.2070	2756031.6780
8	8+01.63	32.44' L	Found Fiber Optic Cable - with C.L. duct (2") at 2.85' deep	1205.22	2.85	1202.37	209984.3460	2756118.1740
9	39+97.25	83.83' R	Found High profile power line	1186.57	4.15	1182.42	209942.9950	2759334.9690
10	41+79.31	78.64' R	Found High profile power line	1185.33	3.60	1181.73	210027.0030	2759516.4700

Test Hole Owner Identification
1 – 8 = Century Link / Qwest
9 – 10 = Northwestern Energy

REGISTERED PROFESSIONAL ENGINEER
REG NO.
8161
JOSH
LARSON
7-3-15
SOUTH DAKOTA

The coordinates shown on this sheet are based on the South Dakota State Plane Coordinate System. South Zone (NAD 83/2007); Geoid 09; SF = 0.99993757 The elevations shown on this sheet are based on NAVD 88.

STATE OF SOUTH DAKOTA	PROJECT	SHEET	TOTAL SHEETS
	NH 0050(99)381	B21	B106

FOR BIDDING PURPOSES ONLY

EXISTING TOPOGRAPHY SYMBOLOGY AND LEGEND

Anchor
Antenna
Approach
Assumed Corner
Azimuth Marker
BBQ Grill/ Fireplace
Bearing Tree
Bench Mark
Box Culvert
Bridge
Brush
Buildings
Bulk Tank
Cattle Guard
Cemetery
Centerline
Cistern
Clothes Line
Commercial Sign Double Face
Commercial Sign One Post
Commercial Sign Overhead
Commercial Sign Two Post
Concrete Symbol
Creek Edge
Curb/Gutter
Curb
Dam Grade/Dike/Levee
Deck Edge
Ditch Block
Doorway Threshold
Drainage Profile
Drop Inlet
Edge Of Asphalt
Edge Of Concrete
Edge Of Gravel
Edge Of Other
Edge Of Shoulder
Elec. Trans./Power Jct. Box
Fence Barbwire
Fence Chainlink
Fence Electric
Fence Misc.
Fence Rock
Fence Snow
Fence Wood
Fence Woven
Fire Hydrant
Flag Pole
Flower Bed
Gas Valve Or Meter
Gas Pump Island
Grain Bin
Guardrail
Guide Sign One Post
Guide Sign Two Post
Gutter
Guy Pole
Haystack

Hedge
Highway R.O.W. Marker
Interstate Close Gate
Iron Pin
Irrigation Ditch
Lake Edge
Lawn Sprinkler
Mailbox
Manhole Electric
Manhole Gas
Manhole Misc
Manhole Sanitary Sewer
Manhole Storm Sewer
Manhole Telephone
Manhole Water
Merry-Go-Round
Microwave Radio Tower
Misc. Line
Misc. Property Corner
Misc. Post
Overhang Or Encroachment
Overhead Utility Line — OH —
Parking Meter
Pipe With End Section
Pipe With Headwall
Pipe Without End Section
Playground Slide
Playground Swing
Power And Light Pole
Power And Telephone Pole
Power Meter
Power Pole
Power Pole And Transformer
Power Tower Structure
Propane Tank
Property Pipe
Property Pipe With Cap
Property Stone
Public Telephone
Railroad Crossing Signal
Railroad Milepost Marker
Railroad Profile
Railroad R.O.W. Marker
Railroad Signs
Railroad Switch
Railroad Track
Railroad Trestle
Rebar
Rebar With Cap
Reference Mark
Regulatory Sign One Post
Regulatory Sign Two Post
Retaining Wall
Riprap
River Edge
Rock And Wire Baskets
Rockpiles
Satellite Dish
Septic Tank

Shrub Tree
Sidewalk
Sign Face
Sign Post
Slough Or Marsh
Spring
Stream Gauge
Street Marker
Subsurface Utility Exploration Test Hole
Telephone Fiber Optics — T/F —
Telephone Junction Box
Telephone Pole
Television Cable Jct Box
Television Tower
Test Wells/Bore Holes
Traffic Signal
Trash Barrel
Tree Belt
Tree Coniferous
Tree Deciduous
Tree Stumps
Triangulation Station
Underground Electric Line — P —
Underground Gas Line — G —
Underground High Pressure Gas Line — HG —
Underground Sanitary Sewer — S —
Underground Storm Sewer — S —
Underground Tank
Underground Telephone Line — T —
Underground Television Cable — TV —
Underground Water Line — W —
Warning Sign One Post
Warning Sign Two Post
Water Fountain
Water Hydrant
Water Meter
Water Tower
Water Valve
Water Well
Weir Rock
Windmill
Wingwall
Witness Corner

State and National Line
County Line
Section Line
Quarter Line
Sixteenth Line
Property Line
Construction Line
R. O. W. Line
New R. O. W. Line
Cut and Fill Limits
Control of Access
New Control of Access
Proposed ROW
(After Property Disposal)

RIGHT OF WAY AND EASEMENT OWNERSHIP TABLE

FOR BIDDING PURPOSES ONLY

STATE OF SOUTH DAKOTA	PROJECT	SHEET NO.	TOTAL SHEETS
	NH 0050(99)381	B22	B106

Parcel No.	Station (Begin)	Station (End)	Side	Type	Purpose	Area	Property Owner	Property Description
A1	4+28.61 to	4+66.63	LT	TEMP	Cut, Fill, Driveway	250 Sq.Ft.	Connie Bornitz	The West Quarter (W1/4) of Lot 10, Block 35 Todd's Addition, City and County of Yankton, South Dakota.
A2	4+66.00 to	5+04.68	LT	TEMP	Cut, Fill, Driveway	342 Sq.Ft.	JRD Enterprises, LLC	East Half of the West Half (E1/2W1/2) of Lot Ten (10), Block Thirty-Five (35), Todd's Addition, City and county of Yankton, South Dakota.
A3	5+04.68 to	5+42.69	LT	TEMP	Cut, Fill, Driveway	304 Sq.Ft.	Yankton Homeless Shelters, Inc.	The West Half (W1/2) of the East Half (E1/2) of Lot Ten (10), Block Thirty-Five (35), Todd's Addition, City and County of Yankton, South Dakota.
A4	5+42.69 to	5+80.84	LT	TEMP	Cut, Fill	308 Sq.Ft.	Hansen Properties, L.L.C.	The East Quarter (E1/4) of Lot Ten (10), Block Thirty-five (35), Todd's Addition to the City of Yankton, Yankton County, South Dakota.
A5	3+94.00 to	4+07.15	RT	TEMP	Cut, Fill, Driveway	142 Sq.Ft.	First National Bank South Dakota	Lots One through Seven (1-7), Block Twenty-four (24), Todd's Addition to the City of Yankton, Yankton County, South Dakota.
A6	4+27.13 to	5+79.07	RT	TEMP	Cut, Fill, Driveway	1361 Sq.Ft.	Scottish Rite Bodiee of Freemasonry	Lot Number Eighteen (18) in Block numbered Twenty four (24), Todd's Addition, of that part of the City of Yankton.
A7	6+80.20 to	7+70.50	LT	TEMP	Cut, Fill, Driveway	1103 Sq.Ft.	Roger and Mary Jo Renner Revocable Trust	West 90 Feet (W90') of Lots Eight (8) and Nine (9), Block Thirty-Four (34), Todd's Addition, City and County of Yankton, South Dakota
A8	7+95.45 to	8+30.65	LT	TEMP	Cut, Fill, Driveway	270 Sq.Ft.	Roger and Mary Jo Renner Revocable Trust	East Sixty Feet (E60') of Lot Nine (9), Block Thirty-four (34), Todd's Addition, City and County of Yankton, South Dakota.
A9	8+50.65 to	9+00.81	LT	TEMP	Cut, Fill, Driveway	332 Sq.Ft.	Roger C. Smith	West One-Third (W1/3) of Lot Ten (10), Block Thirty-Four (34), Todd's Addition, City and County of Yankton, South Dakota.
A10	8+98.52 to	10+01.50	LT	TEMP	Cut, Fill, Driveway	1048 Sq.Ft.	Roy D. Wilcox and Linda R. Wilcox	East Two-thirds (E2/3) of Lot Ten (10), Block Thirty-four (34), Todd's Addition, City and County of Yankton, South Dakota.
A11	6+79.83 to	8+31.11	RT	TEMP	Cut, Fill, Driveway	1447 Sq.Ft.	Kim K. Cotton	Lot one, except the west sixty feet of the south seven and six-tenths feet and the east ninety feet of the north twenty-four feet of Lot two, Block twenty-five, in that part of the city of Yankton, Todd's Addition.
A12	8+51.11 to	10+02.73	RT	TEMP	Cut, Fill, Driveway	1306 Sq.Ft.	Grand-Chateau, LLC	Lots numbered Sixteen, 16, Seventeen, 17, and Eighteen, 18, in Block Twenty-five (25), Todd's Addition, in the City of Yankton.
A13	11+01.22 to	12+51.99	LT	TEMP	Cut, Fill	1084 Sq.Ft.	City of Yankton, A Municipal Corporation	The West One-third of Lot 9, and The East Two-thirds of Lot 9, Block 33, Todd's Addition, in the City of Yankton, South Dakota.
A14	12+72.00 to	13+52.53	LT	TEMP	Cut, Fill, Driveway	942 Sq.Ft.	City of Yankton, A Municipal Corporation	The West One-third of Lot 10, and The West 30 Feet of the East 100 Feet of Lot 10, Block 33, Todd's Addition, in that part of the City of Yankton, South Dakota.
A15	13+52.53 to	14+22.53	LT	TEMP	Cut, Fill, Driveway	588 Sq.Ft.	John P. Blackburn	The East 70 feet of Lot Ten (10) and the South Half (1/2) of Lot Eleven (11), Block Thirty-three (33), "Yankton", City of Yankton
A16	11+02.63 to	11+09.49	RT	TEMP	Cut, Fill	52 Sq.Ft.	Marquis X. Erickson	Lot One (1), except the South Eight Feet (S8') thereof, Block Twenty-Six (26), Todd's Addition, City and County of Yankton, South Dakota
A17	12+72.79 to	12+83.55	RT	TEMP	Cut, Fill, Driveway	118 Sq.Ft.	Robert L. Peterson and Carol E. Peterson	Lot Eighteen (18), Block Twenty-Six (26) Todd's Addition to the City of Yankton, Yankton County, South Dakota.
A18	15+42.74 to	16+93.83	LT	TEMP	Cut, Fill, Driveway	1814 Sq.Ft.	Annisproperties, Inc.	Lot Nine (9), in Block Four (4), Lower Yankton, City and County of Yankton, South Dakota
A19	17+13.83 to	18+64.91	LT	TEMP	Cut, Fill, Driveway	1259 Sq.Ft.	YC Library, L.L.C.	Lot Ten (10), Block Four (4), Lower Yankton, City and County of Yankton, South Dakota.
A20	15+42.77 to	16+94.96	RT	TEMP	Cut, Fill, Driveway	1471 Sq.Ft.	Spady Real Estate, LLC	Lots One (1) AND Eighteen (18), in Block Three (3), Lower Yankton, City and County of Yankton, South Dakota.
A21	17+14.97 to	18+65.03	RT	TEMP	Cut, Fill, Driveway	1605 Sq.Ft.	Spady Real Estate, LLC	Lot Eighteen (18), in Block Three (3), Lower Yankton, City and County of Yankton, South Dakota.
A22	19+64.91 to	20+40.68	LT	TEMP	Cut, Fill, Driveway Retaining Wall	880 Sq.Ft.	Mikael L. Covey	The West Half (W1/2) of Lot Nine (9), Block Twenty-one (21), Lower Yankton and County of Yankton, State of South Dakota.
A23	20+40.68 to	21+16.44	LT	TEMP	Cut, Fill, Driveway Retaining Wall	907 Sq.Ft.	John M. Nielsen III, Inc.	The East Half (E1/2) of Lot Nine (9), Block Twenty-one (21), Lower Yankton, city and County of Yankton, South Dakota.
A24	21+36.44 to	22+87.92	LT	TEMP	Cut, Fill, Driveway Retaining Wall	1913 Sq.Ft.	Douglas G. Larson	Lot Ten (10), Block Twenty-One (21), Lower Yankton, in the City of Yankton, County of Yankton, State of South Dakota.
A25	19+65.02 to	21+16.32	RT	TEMP	Cut, Fill, Driveway	924 Sq.Ft.	Spady Real Estate, LLC	Lot One (1) in Block Twenty-two (22), Lower Yankton, City and County of Yankton, South Dakota.
A26	21+36.33 to	22+02.63	RT	TEMP	Cut, Fill, Driveway Retaining Wall	930 Sq.Ft.	Debora Welter & Gary Welter, Co-Trustees of the Gary Welter Revocable Living Trust	The West Sixty-Six Feet (W66') of Lot Eighteen (18), block Twenty-two (22), Lower Yankton, City and County of Yankton, South Dakota.
A27	22+02.63 to	22+45.81	RT	TEMP	Cut, Fill, Driveway	551 Sq.Ft.	John W. Varvel and Lois Varvel	The East Forty-three and one-half feet (E43 1/2') of the West One hundred nine and one-half feet (W109 1/2') of Lot Eighteen (18), Block Twenty-two (22) in that part of the City of Yankton, State of South Dakota, Platted and know as Lower Yankton.
A28	22+45.81 to	22+89.13	RT	TEMP	Cut, Fill, Driveway	300 Sq.Ft.	Lorraine E. Kressig	Lot Eighteen (18), except the West 109.5 feet thereof, Block Twenty-two (22), Lower Yankton, Yankton, South Dakota.
A29	23+87.47 to	25+38.82	LT	TEMP	Cut, Fill, Driveway Retaining Wall	1693 Sq.Ft.	John M. Nielsen III, Inc.	Lot Nine (9), Block Twenty-eight (28), in the part of the City of Yankton platted and know as Lower Yankton, City and County of Yankton, State of South Dakota.
A30	25+58.82 to	27+09.54	LT	TEMP	Cut, Fill, Driveway	879 Sq.Ft.	Robert Jefferson	Lot Ten (10), Block Twenty-eight (28), Lower Yankton, Yankton County, South Dakota.
A31	23+88.65 to	24+82.21	RT	TEMP	Cut, Fill, Driveway	583 Sq.Ft.	The Black Steer, Inc., a Corporation	Lots 1A and 2A, Block Twenty-seven (27), in that part of the City of Yankton, South Dakota, platted and known as "Lower Yankton".

RIGHT OF WAY AND EASEMENT OWNERSHIP TABLE

FOR BIDDING PURPOSES ONLY

STATE OF SOUTH DAKOTA	PROJECT	SHEET NO.	TOTAL SHEETS
	NH 0050(99)381	B23	B106

Parcel No.	Station (Begin)	Station (End)	Side	Type	Purpose	Area	Property Owner	Property Description
A32	24+82.21 to	25+39.26	RT	TEMP	Cut, Fill, Driveway	453 Sq.Ft.	Dennis and Irene Reiner Revocable Trust	Lots 1B and 2B, Block Twenty-seven (27), in that part of the City of Yankton, South Dakota, platted and known as "Lower Yankton"
A33	25+59.26 to	27+10.00	RT	TEMP	Cut, Fill, Driveway	917 Sq.Ft.	Dennis and Irene Reiner Revocable Trust	Lot Eighteen (18), Block 27, in that part of the City of Yankton, South Dakota, platted and known as "Lower Yankton".
A34	28+09.53 to	29+10.64	LT	TEMP	Cut, Fill, Driveway	1188 Sq.Ft.	Yankton Diesel Injection, Inc., a South Dakota Corporation	The West two-thirds of Lots Eight (8) and Nine (9), Block Forty-five (45), Lower Yankton, City and County of Yankton, South Dakota.
A35	29+49.00 to	29+61.24	LT	TEMP	Cut, Fill, Driveway	100 Sq.Ft.	Jim Vavra	East One-third (E1/3) of Lot Nine (9), Block Forty-five (45), Lower Yankton, City and County of Yankton, South Dakota.
A36	29+81.25 to	31+32.73	LT	TEMP	Cut, Fill, Driveway Retaining Wall	1573 Sq.Ft.	Dennis K. Berkland and Terre Berkland	Lot Ten (10), Block Forty-five (45) in that part of the City of Yankton, platted and known as "Lower Yankton", Yankton County, South Dakota.
A37	28+10.13 to	29+60.39	RT	TEMP	Cut, Fill, Driveway	1349 Sq.Ft.	4th Street Plaza, LLC.	Lot One (1), Block Forty-six (46), Lower Yankton, City and County of Yankton, South Dakota.
A38	29+80.39 to	30+30.50	RT	TEMP	Cut, Fill, Driveway	597 Sq.Ft.	Duane Brue and Deborah Brue	The West 50 Feet of Lot 18, Block 46, Lower Yankton, City of Yankton, Yankton County, South Dakota.
A39	30+30.50 to	30+71.65	RT	TEMP	Cut, Fill, Driveway	131 Sq.Ft.	Duane A. Brue and Albert Brue	The West 41 Feet 2 Inches of the East 100 Feet of Lot 18, Block 46, Lower Yankton, City of Yankton, Yankton County, South Dakota.
A40	30+71.65 to	31+30.83	RT	TEMP	Cut, Fill, Driveway	206 Sq.Ft.	Duane Brue	The East 58 Feet 10 Inches of Lot 18, Block 46, Lower Yankton, City of Yankton, Yankton County, South Dakota.
A41	32+12.80 to	33+64.32	LT	TEMP	Cut, Fill, Driveway	1457 Sq.Ft.	Yankton Rental Properties, LLC	Lot Nine (9), Block Fifty-one (51), Lower Yankton, City and County of Yankton, South Dakota.
A42	33+84.32 to	34+34.64	LT	TEMP	Cut, Fill, Driveway Retaining Wall	539 Sq.Ft.	Russell J. Reiman and Kathy A. Reiman	West One-Third (W1/3) of Lot Ten (10), Block Fifty-one (51), Lower Yankton, City and County of Yankton, South Dakota.
A43	34+34.64 to	34+84.82	LT	TEMP	Cut, Fill, Driveway Retaining Wall	955 Sq.Ft.	Jason Harris	The East Half (E1/2) of the West Two-thirds (W2/3) of Lot 10 in Block 51 of Lower Yankton of the City of Yankton, Yankton County, South Dakota.
1	PLAT					5 Sq.Ft. 0.00 Acres	Rob's Enterprises, Inc.	The East Fifty Feet (50') of Lot Ten (10), Block Fifty-one (51), Lower Yankton, City and County of Yankton, South Dakota.
1	34+84.90 to	35+35.27	LT	TEMP	Cut, Fill, Driveway	744 Sq.Ft.	Rob's Enterprises, Inc.	The East Fifty Feet (50') of Lot Ten (10), Block Fifty-one (51), Lower Yankton, City and County of Yankton, South Dakota.
A44	32+10.89 to	33+64.35	RT	TEMP	Cut, Fill, Driveway	1246 Sq.Ft.	Daniel R. Pederson & Sandra D. Pederson	Lot 1, Block 50, Lower Yankton, City of Yankton, County of Yankton, State of South Dakota.
A45	33+84.35 to	35+38.92	RT	TEMP	Cut, Fill, Driveway	1319 Sq.Ft.	Bos Commercial Properties, Inc. a South Dakota corporation	Lot Eighteen (18), Block Fifty (50), Lower Yankton, in that part of the City and County of Yankton, State of South Dakota.
A46	36+14.71 to	37+65.61	LT	TEMP	Cut, Fill, Retaining Wall	1876 Sq.Ft.	Ruth Fischer	Lot Nine (9), Block Sixty-eight (68), Lower Yankton, City and County of Yankton, South Dakota.
A47	37+87.32 to	39+58.76	LT	TEMP	Cut, Fill, Driveway	1526 Sq.Ft.	Larry Olson	Lot Ten (10) and the West Fifty Feet (W 50') of Lot Eleven (11), and the East Two-thirds (2/3) of Lot 11, Block Sixty-eight (68) in that part of the City of Yankton platted and known as Lower Yankton, Yankton County, South Dakota.
A48	36+19.47 to	37+68.11	RT	TEMP	Cut, Fill	883 Sq.Ft.	City of Yankton, A Municipal Corporation	Lot 1, Block Sixty-nine (69), in Lower Yankton, City and County of Yankton, South Dakota.
A49	37+86.97 to	39+16.08	RT	TEMP	Cut, Fill, Sidewalk	800 Sq.Ft.	City of Yankton, A Municipal Corporation	Lot 18, Block Sixty-nine (69), including Parcel B, in Lower Yankton, City and County of Yankton, South Dakota.
2	PERMANENT EASEMENT EXHIBIT		LT	PERM	Pedestrian Access Route	202 Sq.Ft. 0.00 Acres	F & L Partnership, L.L.P.	Lot 1 of Railroad Subdivision, in the City of Yankton, Yankton County, South Dakota.
2	40+50.55 to 42+07.64 to	41+03.13 42+17.02	LT LT	TEMP TEMP	Cut, Fill, Sidewalk Cut, Fill, Sidewalk	934 Sq.Ft. 30 Sq.Ft.	F & L Partnership, L.L.P.	Lot 1 of Railroad Subdivision, in the City of Yankton, Yankton County, South Dakota.
3	42+17.02 to	46+06.59	LT	TEMP	Cut, Fill, Sidewalk	27634 Sq.Ft.	City of Yankton, South Dakota, A Municipal Corporation	Lot 20 of Railroad Subdivision, in the City of Yankton, Yankton County, South Dakota.
3	PURCHASE BY DESCRIPTION					0.06 Acres	City of Yankton, South Dakota, A Municipal Corporation	Lot 21 of Railroad Subdivision, in the City of Yankton, Yankton County, South Dakota.
3A	PLAT PERMANENT EASESMENT		LT	PERM	Drainage	1351 Sq.Ft. 0.03 Acres	City of Yankton, South Dakota, A Municipal Corporation	Lot 20 of Railroad Subdivision, in the City of Yankton, Yankton County, South Dakota.
A51	OMITTED							
23	PLAT PERMANENT EASESMENT		RT	PERM	Drainage	15801 Sq.Ft. 0.36 Acres	City of Yankton, A Municipal Corporation	Lot 1, East Cornerstone Subdivision in the City and County of Yankton, South Dakota.
23	40+04.17 to	40+64.03	RT	TEMP	Cut, Fill, Sidewalk	827 Sq.Ft.	City of Yankton, A Municipal Corporation	Lot 1, East Cornerstone Subdivision in the City and County of Yankton, South Dakota.

STATE OF SOUTH DAKOTA	PROJECT	SHEET	TOTAL SHEETS
	NH 0050(99)381	B24	B106

FOR BIDDING PURPOSES ONLY

5+95-45' R to 6+25-6' R
Take out 18"-50' RCP
(Incidental Work, Grading)

5+96-41' L to 6+25-6' R
Take out 18"-56' RCP
(Incidental Work, Grading)

Take out Drop Inlets
with Frame and Grate
at the following locations:
5+95-45' R
5+96-41' L

Install 4'x11' Type S Drop Inlet Base with
Precast Concrete Type S Drop Inlet Lid
at the following locations:
5+70.55-31.63' R

Install 2'x3' Type B Drop Inlet
with 6" Concrete Collar and
Type B Frame & Grate
at the following locations:
5+81.04-29.17' L
5+98.67-45.08' R

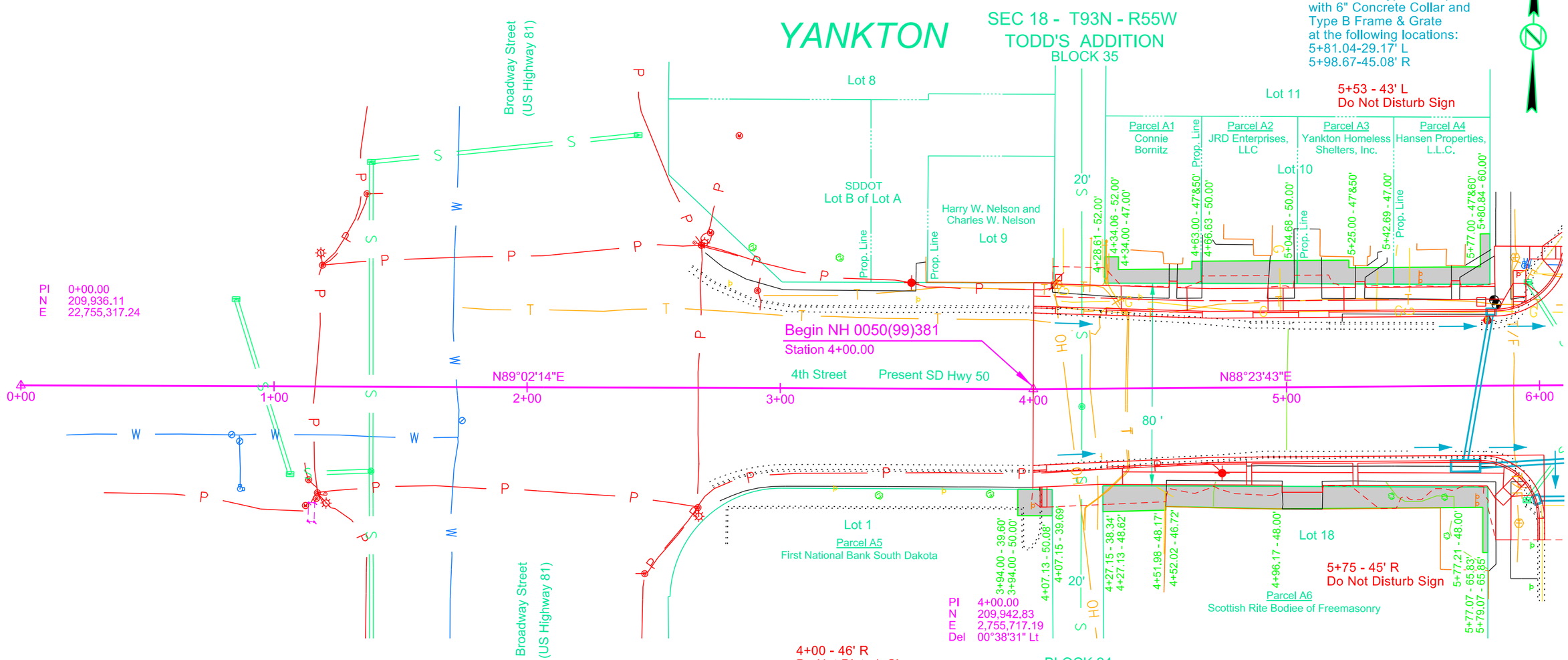

5+70.55-31.63' R to 5+81.04-29.17' L
Install 18" - 60' RCP
(Between Drop Inlets)

5+70.55-31.63' R to 6+24.88-29.17' R
Install 18" - 46' RCP
(Between Drop Inlet & Junction Box)

5+98.67-45.08' R to 6+24.88-44.61' R
Install 18" - 24' RCP
(Between Drop Inlet & Junction Box)

REGISTERED PROFESSIONAL ENGINEER
REG NO.
8161
JOSH
LARSON
7-3-15
SOUTH DAKOTA

STATE OF SOUTH DAKOTA	PROJECT	SHEET	TOTAL SHEETS
	NH 0050(99)381	B25	B106

FOR BIDDING PURPOSES ONLY

REGISTERED PROFESSIONAL ENGINEER
REG NO.
8161
JOSH
LARSON
7-3-15
SOUTH DAKOTA

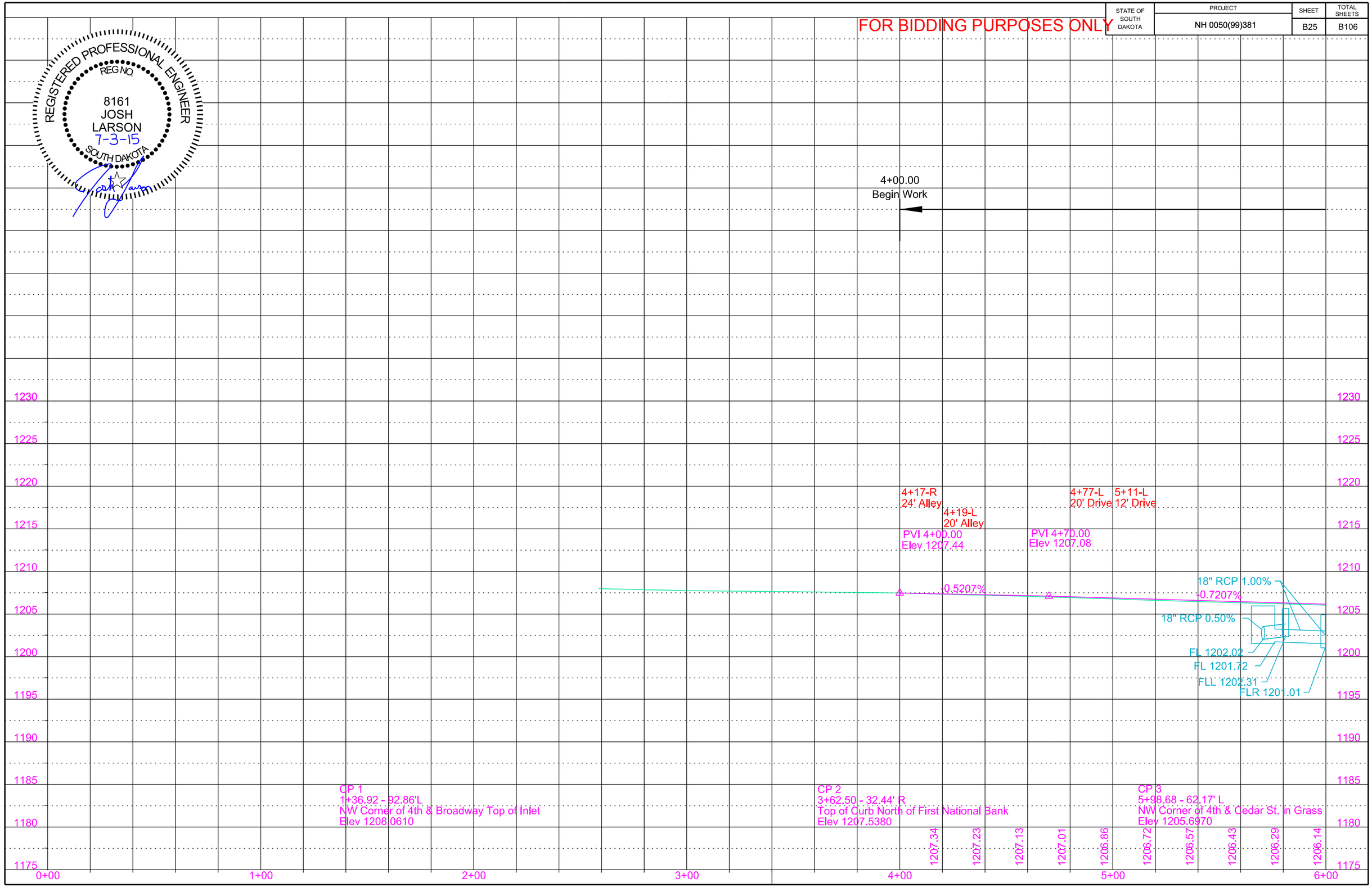

STATE OF SOUTH DAKOTA	PROJECT	SHEET	TOTAL SHEETS
	NH 0050(99)381	B26	B106

FOR BIDDING PURPOSES ONLY

6+25-6' R to 6+63-41' L
Take out 18"-62' RCP
(Incidental Work, Grading)

6+25-6' R to 6+63-45' R
Take out 18"-55' RCP
(Incidental Work, Grading)

6+10.94-63.50' L to 6+49.55-63.50' L
Install 18" - 38' RCP
(Between Drop Inlets)

6+10.94-63.50' L to 6+24.88-29.17' R
Install 18" - 90' RCP
(Between Drop Inlet & Junction Box)

6+24.88-44.61' R to 6+64.48-45.25' R
Install 18" - 38' RCP
(Between Junction Box & Drop Inlet)

6+25-6' R to 6+25-47' R
Take out 18"-41' RCP
(Incidental Work, Grading)

6+25-6' R to 10+52-5' R
Take out 30"-428' RCP
(Incidental Work, Grading)

6+24.88-44.61' R to 6+24.88-29.17' R
Install 18" - 12' RCP
(Between Junction Boxes)

6+24.88-29.17' R to 8+00.00-29.17' R
Install 24" - 170' RCP
(Between Junction Box & Drop Inlet)

8+00.00-29.17' L to 8+00.00-29.17' R
Install 18" - 56' RCP
(Between Drop Inlets)

8+00.00-29.17' R to 10+01.02-29.17' R
Install 30" - 198' RCP
(Between Drop Inlets)

10+02-24' L to 10+52-5' R
Take out 18"-58' RCP
(Incidental Work, Grading)

10+22-43' R to 10+52-5' R
Take out 18"-49' RCP
(Incidental Work, Grading)

10+51-51' L to 10+52-5' R
Take out 18"-57' RCP
(Incidental Work, Grading)

10+52-5' R to 11+04-27' R
Take out 18"-57' RCP
(Incidental Work, Grading)

10+52-5' R to 14+37-2' R
Take out 30"-385' RCP
(Incidental Work, Grading)

9+32-47' L to 10+02-71' L
Take out Landscaping
(Incidental Work, Grading)

Take out Manholes
at the following locations:
6+25-6' R
10+52-5'R

Take out Drop Inlets
with Frame and Grate
at the following locations:
6+63-41' L
6+63-45' R
10+02-24' L
10+22-43' R
11+04-27' R

Install 2'x3' Type B Drop Inlet
with 6" Concrete Collar and
Type B Frame & Grate
at the following locations:
6+10.94-63.50' L
6+49.55-63.50' L
6+64.48-45.25' R
10+03.27-29.17' L

YANKTON

SEC 18 - T93N - R55W
TODD'S ADDITION
BLOCK 34

8+04 - 41' L
Do Not Disturb Building Overhang

9+56 - 44' L
Do Not Disturb Building Overhang

11+00 - 65' L
Do Not Disturb Curb & Gutter

11+48 - 44' L
Do Not Disturb Light Pole

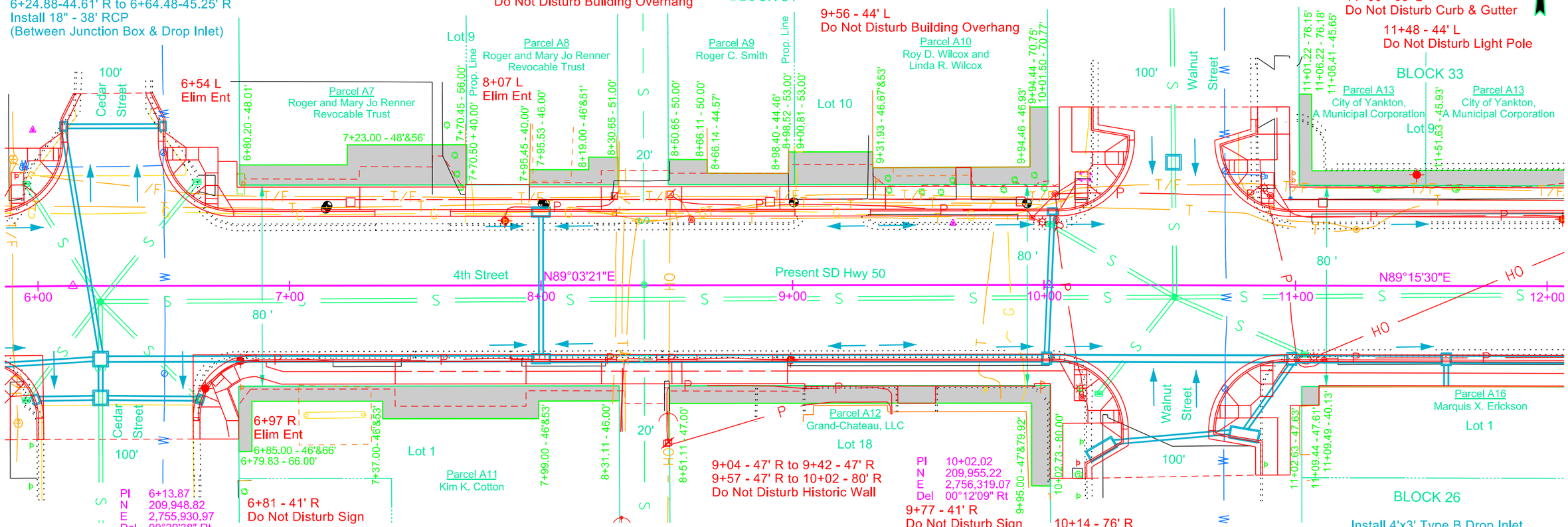

6+81 - 41' R
Do Not Disturb Sign

7+18 - 40' R
Do Not Disturb Awning

9+04 - 47' R to 9+42 - 47' R
9+57 - 47' R to 10+02 - 80' R
Do Not Disturb Historic Wall

9+77 - 41' R
Do Not Disturb Sign

9+99 - 43' R
Do Not Disturb Flag Pole

10+14 - 76' R
Do Not Disturb Tree

TODD'S ADDITION
SEC 18 - T93N - R55W
BLOCK 25

10+01.02-29.17' R to 10+98.57-29.17' R
Install 30" - 96' RCP
(Between Drop Inlets)

10+03.27-29.17' L to 10+01.02-29.17' R
Install 18" - 56' RCP
(Between Drop Inlets)

10+23.00-65.30' R to 10+79.82-59.23' R
Install 18" - 48' RCP
(Between Drop Inlets)

10+79.82-59.23' R to 10+98.57-29.17' R
Install 18" - 32' RCP
(Between Drop Inlets)

10+98.57-29.17' R to 11+60.00-29.17' R
Install 30" - 60' RCP
(Between Drop Inlets)

11+60.00-29.17' R to 12+83.00-29.17' R
Install 30" - 120' RCP
(Between Drop Inlets)

11+60.00-29.17' R to 11+60.00-39.67' R
Install 12" - 10' RCP
(Pipe Stub Out)

Install 5'x5' Junction Box
with Type A9 Manhole Frame & Lid
at the following locations:
6+24.88-29.17' R
6+24.88-44.61' R
10+51.34-48.97' L

Install 4'x3' Type B Drop Inlet
with 6" Concrete Collar and
Type B Frame & Grate
at the following locations:
10+01.02-29.17' R
10+98.57-29.17' R
11+60.00-29.17' R

Install 3'x6.5' Type B Drop Inlet with
Special 6" Concrete Collar and
Special Frame & Grate
at the following locations:
8+00.00-29.17' L
8+00.00-29.17' R

Install 4'x11' Type S Drop Inlet Base with
Precast Concrete Type S Drop Inlet Lid
at the following locations:
10+23.00-65.30' R
10+79.82-59.23' R

REGISTERED PROFESSIONAL ENGINEER
REG NO.
8161
JOSH
LARSON
7-3-15
SOUTH DAKOTA

STATE OF SOUTH DAKOTA	PROJECT	SHEET	TOTAL SHEETS
	NH 0050(99)381	B27	B106

FOR BIDDING PURPOSES ONLY

REGISTERED PROFESSIONAL ENGINEER
REG NO.
8161
JOSH
LARSON
7-3-15
SOUTH DAKOTA

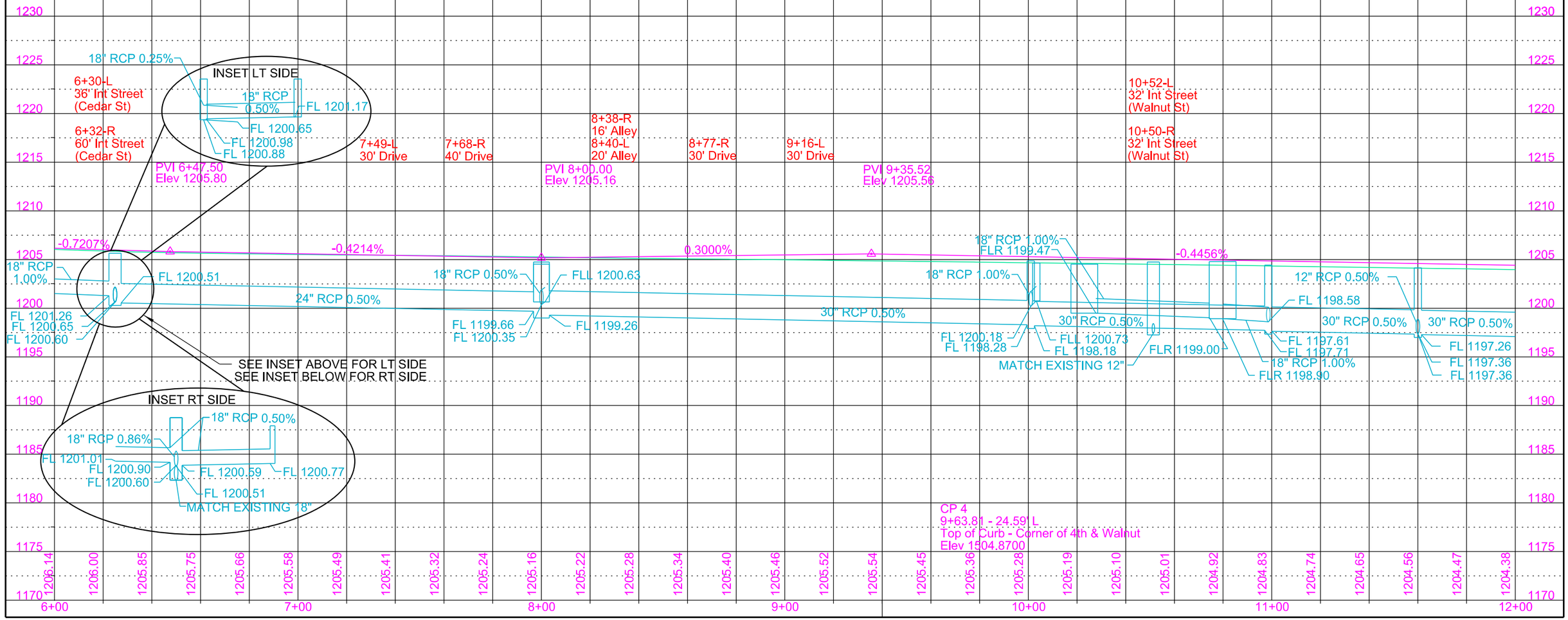

STATE OF SOUTH DAKOTA	PROJECT	SHEET	TOTAL SHEETS
	NH 0050(99)381	B28	B106

FOR BIDDING PURPOSES ONLY

12+83.00-29.17' R to 14+16.14-29.17' R
Install 30" - 130' RCP
(Between Drop Inlets)

12+83.00-29.17' R to 12+83.00-39.67' R
Install 12" - 10' RCP
(Pipe Stub Out)

14+35-26' L to 14+37-2' R
Take out 18"-28' RCP
(Incidental Work, Grading)

14+37-2' R to 14+41-44' R
Take out 18"-43' RCP
(Incidental Work, Grading)

14+16.14-29.17' R to 14+23.92-31.63' L
Install 18" - 58' RCP
(Between Drop Inlets)

14+16.14-29.17' R to 15+47.71-29.17' R
Install 30" - 128' RCP
(Between Drop Inlets)

14+37-2' R to 15+48-2' R
Take out 30"-112' RCP
(Incidental Work, Grading)

15+30-26' L to 15+48-2' R
Take out 18"-34' RCP
(Incidental Work, Grading)

15+37.28-29.17' L to 15+81.00-29.17' L
Install 18" - 42' RCP
(Between Drop Inlets)

15+37.28-29.17' L to 15+47.71-29.17' R
Install 18" - 58' RCP
(Between Drop Inlets)

15+47.71-29.17' R to 17+23.50-29.17' R
Install 30" - 172' RCP
(Between Drop Inlets)

15+48-26' R to 15+48-2' R
Take out 18"-25' RCP
(Incidental Work, Grading)

15+48-2' R to 19+17-1' R
Take out 30"-369' RCP
(Incidental Work, Grading)

17+23.50-29.17' R to 19+80.69-29.17' R
Install 30" - 256' RCP
(Between Drop Inlets)

Take out Manholes
at the following locations:
14+37-2' R
15+48-2' R

Take out Drop Inlets
with Frame and Grate
at the following locations:
14+35-26' L
14+41-44' R
15+30-26' L
15+48-26' R

Install 4'x3' Type B Drop Inlet
with 6" Concrete Collar and
Type B Frame & Grate
at the following location:
12+83.00-29.17' R
14+16.14-29.17' R
17+23.50-29.17' R

Install 4'x11' Type S Drop Inlet Base with
Precast Concrete Type S Drop Inlet Lid
at the following locations:
14+23.92-31.63' L

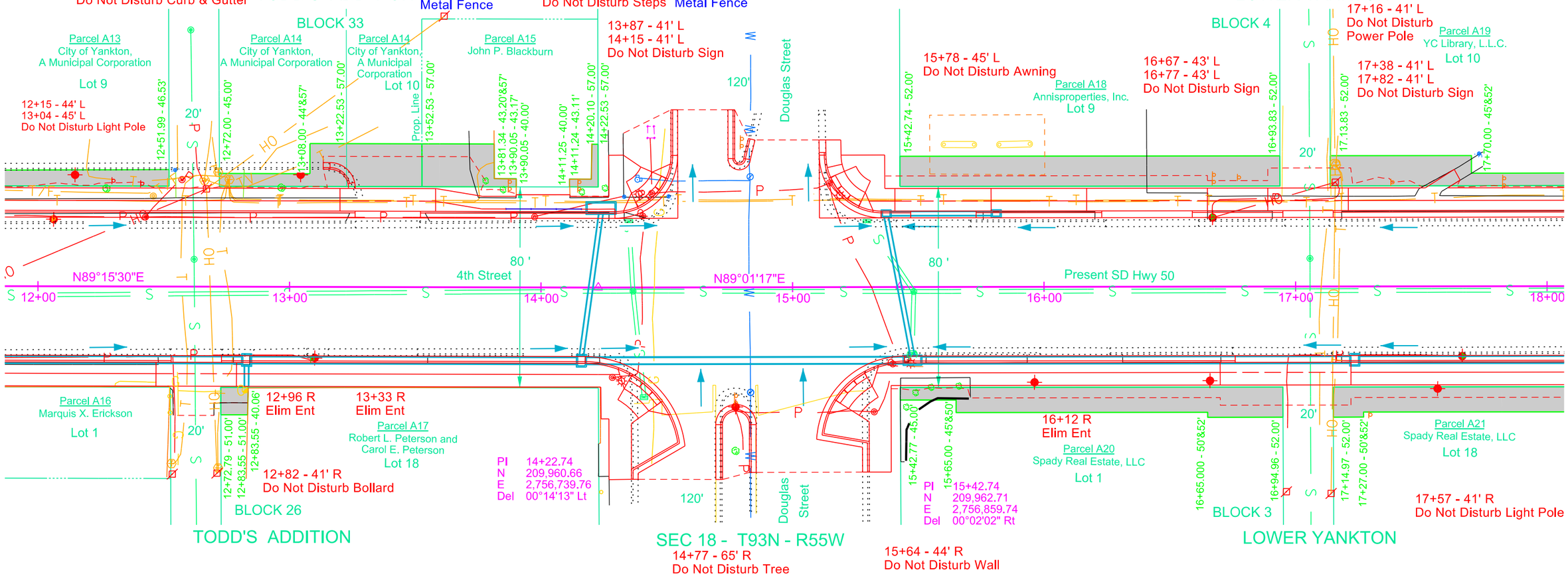

REGISTERED PROFESSIONAL ENGINEER
REG NO.
8161
JOSH
LARSON
7-3-15
SOUTH DAKOTA

Install 2'x3' Type B Drop Inlet
with 6" Concrete Collar and
Type B Frame & Grate
at the following location:
15+37.28-29.17' L
15+81.00-29.17' L

Install 3'x6.5' Type B Drop Inlet with
Special 6" Concrete Collar and
Special Frame & Grate
at the following locations:
15+47.71-29.17' R

STATE OF SOUTH DAKOTA	PROJECT	SHEET	TOTAL SHEETS
	NH 0050(99)381	B29	B106

FOR BIDDING PURPOSES ONLY

REGISTERED PROFESSIONAL ENGINEER
REG NO.
8161
JOSH
LARSON
7-3-15
SOUTH DAKOTA

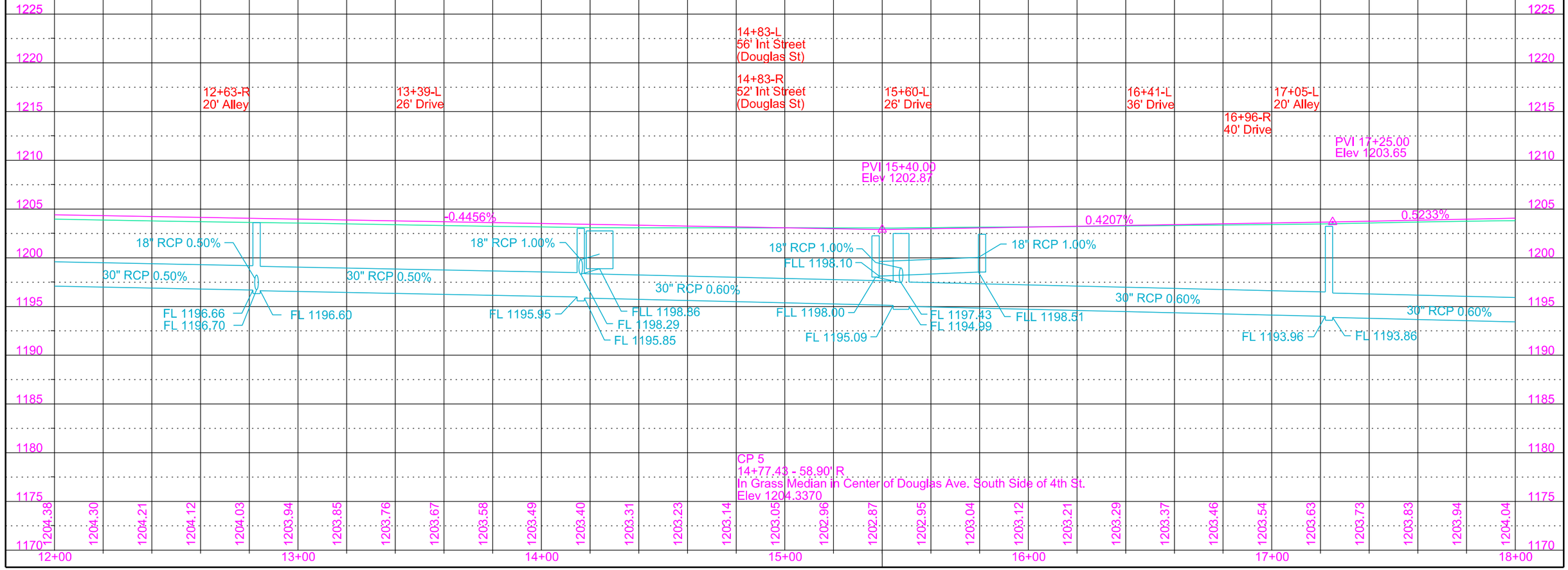

STATE OF SOUTH DAKOTA	PROJECT	SHEET	TOTAL SHEETS
	NH 0050(99)381	B30	B106

FOR BIDDING PURPOSES ONLY

19+17-1' R to 23+38-4' R
Take out 30"-421' RCP
(Incidental Work, Grading)

20+08-37' L to 20+08-40' L
Take out Concrete Steps
(Incidental Work, Grading)

20+86-37' L to 20+86-41' L
Take out Concrete Steps
(Incidental Work, Grading)

21+63-34' L to 21+64-39' L
Take out Concrete Steps
(Incidental Work, Grading)

21+66-38' R to 21+66-40' R
Take out Concrete Steps
(Incidental Work, Grading)

21+92-38' R to 21+92-40' R
Take out Concrete Steps
(Incidental Work, Grading)

22+27-34' L to 22+27-39' L
Take out Concrete Steps
(Incidental Work, Grading)

22+92-25' L to 23+16-42' L
Take out 18"-29' RCP
(Incidental Work, Grading)

19+80.69-29.17' R to 21+04.25-29.17' R
Install 30" - 122' RCP
(Between Drop Inlets)

21+04.25-29.17' L to 21+04.25-29.17' R
Install 18" - 56' RCP
(Between Drop Inlets)

21+04.25-29.17' R to 22+87.28-29.17' R
Install 30" - 180' RCP
(Between Drop Inlets)

23+12-44' R to 23+38-4' R
Take out 18"-48' RCP
(Incidental Work, Grading)

23+15-42' L to 23+38-4' R
Take out 18"-52' RCP
(Incidental Work, Grading)

22+87.28-29.17' R to 25+31.00-29.17' R
Install 30" - 240' RCP
(Between Drop Inlets)

22+87.28-29.17' R to 22+88.27-29.17' L
Install 18" - 56' RCP
(Between Drop Inlets)

23+38-4' R to 26+60-43' L
Take out 18"-52' RCP
(Incidental Work, Grading)

23+38-4' R to 25+36-2' R
Take out 30"-198' RCP
(Incidental Work, Grading)

21+38 - 42'L to 22+15 - 50'L
Take Out Fence

22+88.27-29.17' L to 23+15.67-63.00' L
Install 18" - 42' RCP
(Between Drop Inlets)

23+15.67-63.00' L to 23+59.01-63.00' L
Install 18" - 42' RCP
(Between Drop Inlets)

Take out Manholes
at the following locations:
19+17-1' R
23+38-4' R

Take out Drop Inlets
with Frame and Grate
at the following locations:
22+92-25' L
23+12-44' R
23+15-42' L
23+60-43' L

Install 4'x3' Type B Drop Inlet
with 6" Concrete Collar and
Type B Frame & Grate
at the following locations:
19+80.69-29.17' R
21+04.25-29.17' R

Install 2'x3' Type B Drop Inlet
with 6" Concrete Collar and
Type B Frame & Grate
at the following locations:
21+04.25-29.17' L
23+59.01-63.00' L

YANKTON

SEC 18 - T93N - R55W
LOWER YANKTON

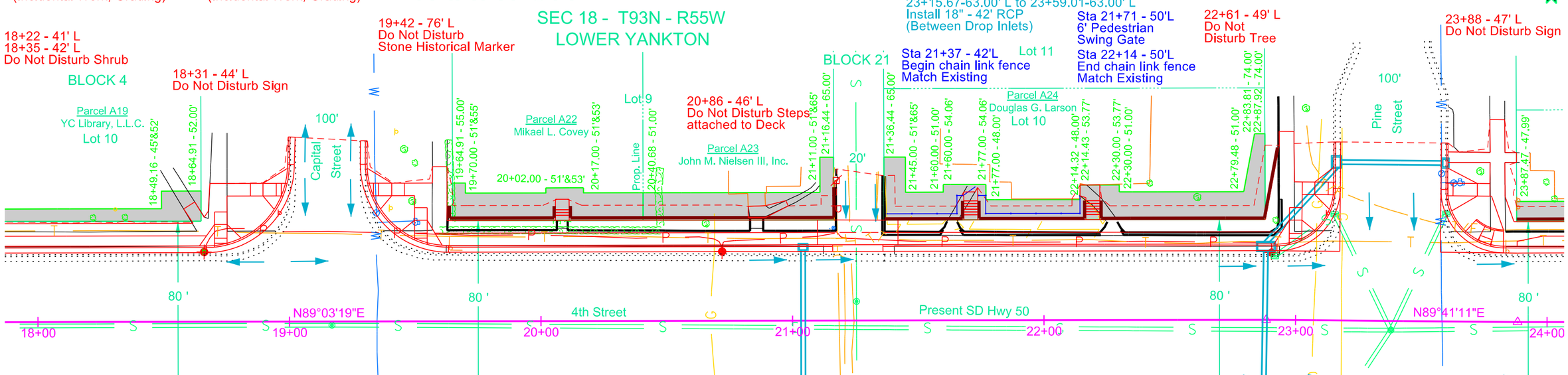

LOWER YANKTON
SEC 18 - T93N - R55W

21+92 - 51' R
22+21 - 48' R
Do Not Disturb Building Overhang

Install 3'x6.5' Type B Drop Inlet with
Special 6" Concrete Collar and
Special Frame & Grate
at the following locations:
22+87.28-29.17' R
22+88.27-29.17' L

Install 3'x4' Type B Drop Inlet
with 6" Concrete Collar and
Type B Frame & Grate
at the following locations:
23+15.67-63.00' L

REGISTERED PROFESSIONAL ENGINEER
REG NO.
8161
JOSH
LARSON
7-3-15
SOUTH DAKOTA

STATE OF SOUTH DAKOTA	PROJECT	SHEET	TOTAL SHEETS
	NH 0050(99)381	B31	B106

FOR BIDDING PURPOSES ONLY

REGISTERED PROFESSIONAL ENGINEER
REG NO.
8161
JOSH
LARSON
7-3-15
SOUTH DAKOTA

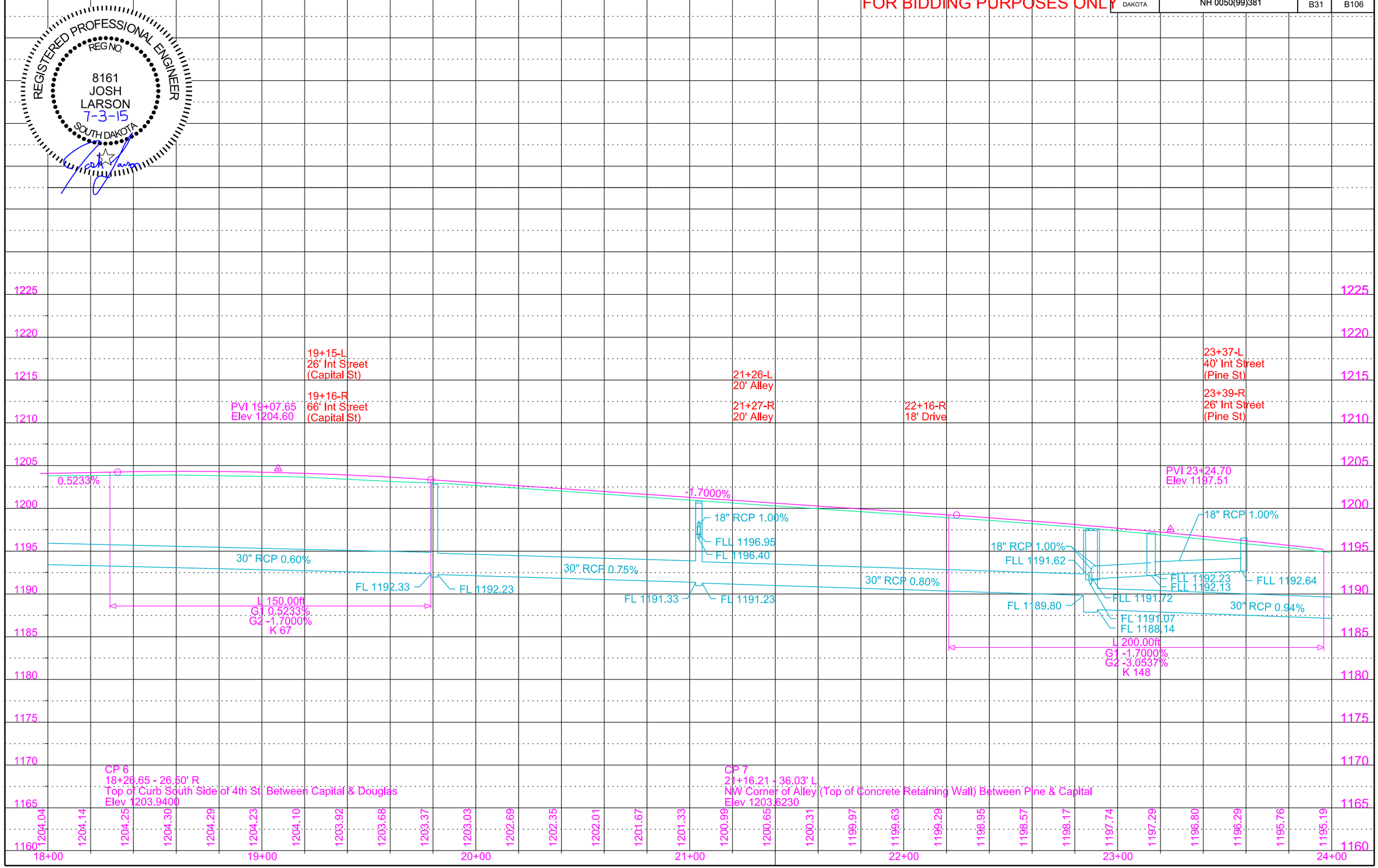

STATE OF SOUTH DAKOTA	PROJECT	SHEET	TOTAL SHEETS
	NH 0050(99)381	B32	B106

Rev 07/30/15 JDL

FOR BIDDING PURPOSES ONLY

24+42-36' L to 24+42-41' L
Take out Concrete Steps
(Incidental Work, Grading)

25+18-36' L to 25+18-41' L
Take out Concrete Steps
(Incidental Work, Grading)

25+36-2' R to 27+57-4' R
Take out 30"-222' RCP
(Incidental Work, Grading)

26+46-26' L to 27+12-26' L
Take out 18"-66' RCP
(Incidental Work, Grading)

25+27.49-31.63' L to 25+31.00-29.17' R
Install 18" - 58' RCP
(Between Drop Inlets)

25+31.00-29.17' R to 27+06.94-29.17' R
Install 30" - 174 RCP
(Between Drop Inlets)

27+12-26' L to 27+38-42' L
Take out 18"-32' RCP
(Incidental Work, Grading)

27+06.94-29.17' R to 27+60.44-29.18' R
Install 36" - 50' RCP
(Between Drop Inlet & Junction Box)

27+07.21-31.63' L to 27+06.94-29.17' R
Install 18" - 58' RCP
(Between Drop Inlets)

27+45.67-50.41' R to 27+57.16-50.41' R
Install 18" - 8' RCP
(Between Drop Inlet & Junction Box)

27+39-44' R to 27+57-4' R
Take out 18"-44' RCP
(Incidental Work, Grading)

27+38-42' L to 27+57-4' R
Take out 18"-50' RCP
(Incidental Work, Grading)

27+45.96-50.54' L to 27+75.24-50.32' L
Install 18" - 28' RCP
(Between Drop Inlets)

27+57.16-50.41' R to 27+60.44-29.18' R
Install 18" - 18' RCP
(Between Junction Boxes)

27+57-4' R to 27+57-53' R
Take out 12"-50' RCP
(Incidental Work, Grading)

27+57-4' R to 27+82-43' L
Take out 18"-53' RCP
(Incidental Work, Grading)

27+57-4' R to 31+71-4' R
Take out 36"-415' RCP
(Incidental Work, Grading)

27+82-43' L to 27+81-99' L
Take out 18"-56' RCP
(Incidental Work, Grading)

Take out Manholes
at the following locations:
25+36-2' R
27+57-4' R

Take out Drop Inlets
with Frame and Grate
at the following locations:
26+46-26' L
27+12-26' L
27+38-42' L
27+39-44' R
27+82-43' L

Install 4'x11' Type S Drop Inlet Base with
Precast Concrete Type S Drop Inlet Lid
at the following locations:
25+27.49-31.63' L
27+07.21-31.63' L
29+04.50-31.63' L

Install 4'x3' Type B Drop Inlet
with 6" Concrete Collar and
Type B Frame & Grate
at the following locations:
25+31.00-29.17' R
27+06.94-29.17' R

29+85 - 42' L
Do Not Disturb Steps

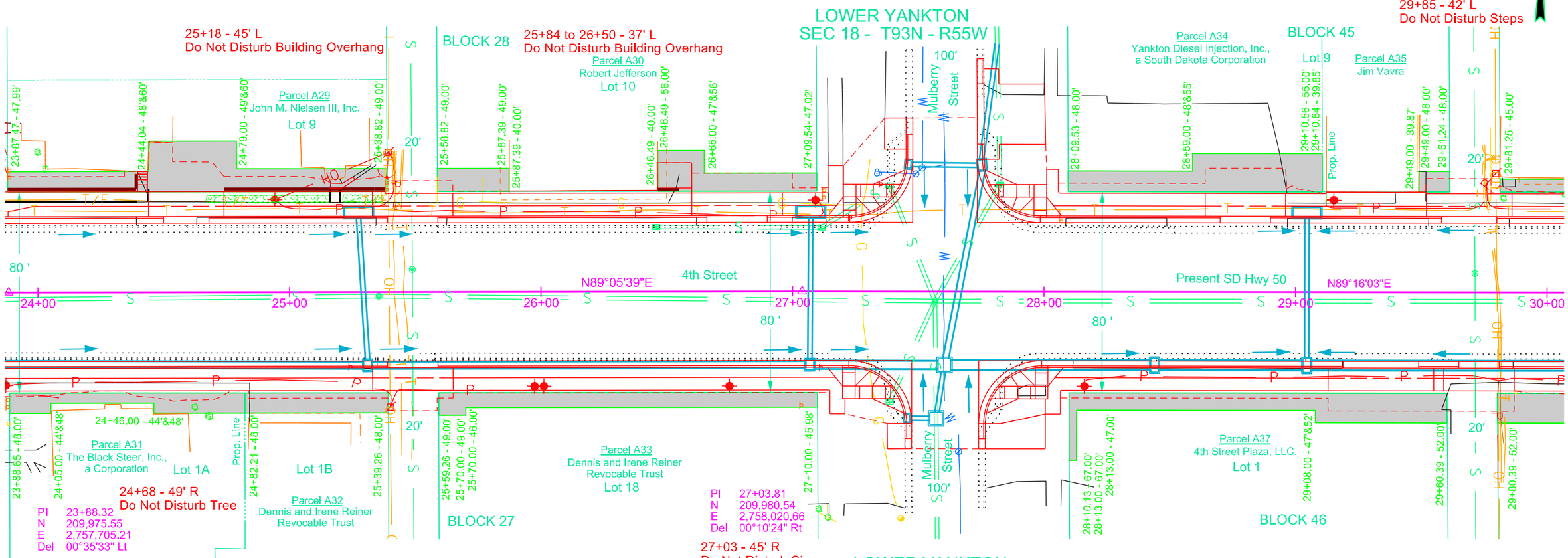

YANKTON

LOWER YANKTON
SEC 18 - T93N - R55W

27+60.44-29.18' R to 28+44.00-29.17' R
Install 42" - 80' RCP
(Between Junction Box & Drop Inlet)

27+60.44-29.18' R to 27+75.24-50.32' L
Install 24" - 78' RCP
(Between Junction Box & Drop Inlet)

27+75.24-50.32' L to 27+81.18-98.55' L
Install 18" - 48' RCP
(Between Drop Inlet & Existing Pipe)

28+44.00-29.17' R to 29+04.50-29.17' R
Install 42" - 58' RCP
(Between Drop Inlets)

Install 2'x3' Type B Drop Inlet
with 6" Concrete Collar and
Type B Frame & Grate
at the following locations:
27+45.67-50.41' R
27+45.96-50.54' L

29+04.50-31.63' L to 29+04.50-29.17' R
Install 18" - 56' RCP
(Between Drop Inlets)

29+04.50-29.17' R to 31+18.57-29.17' R
Install 42" - 212' RCP
(Between Drop Inlets)

Install 5'x5' Junction Box with
Type A9 Manhole Frame & Lid
at the following locations:
27+57.16-50.41' R
27+60.44-29.18' R

Install 3'x4' Type B Drop Inlet
with 6" Concrete Collar and
Type B Frame & Grate
at the following locations:
27+75.24-50.32' L

Install 5.5'x3' Type B Drop Inlet
with 6" Concrete Collar and
Type B Frame & Grate
at the following locations:
28+44.00-29.17' R
29+04.50-29.17' R

REGISTERED PROFESSIONAL ENGINEER
REG NO.
8161
JOSH
LARSON
7-30-15
SOUTH DAKOTA

STATE OF SOUTH DAKOTA	PROJECT	SHEET	TOTAL SHEETS
	NH 0050(99)381	B33	B106

FOR BIDDING PURPOSES ONLY

REGISTERED PROFESSIONAL ENGINEER
REG NO.
8161
JOSH
LARSON
7-3-15
SOUTH DAKOTA

Exc	2,860	Emb	0	
Undercut	9,870	+20%	0	0
Total	12,730	Undercut	9,870	
		+20%	1,974	11,844
		Waste		866
		Total		12,730

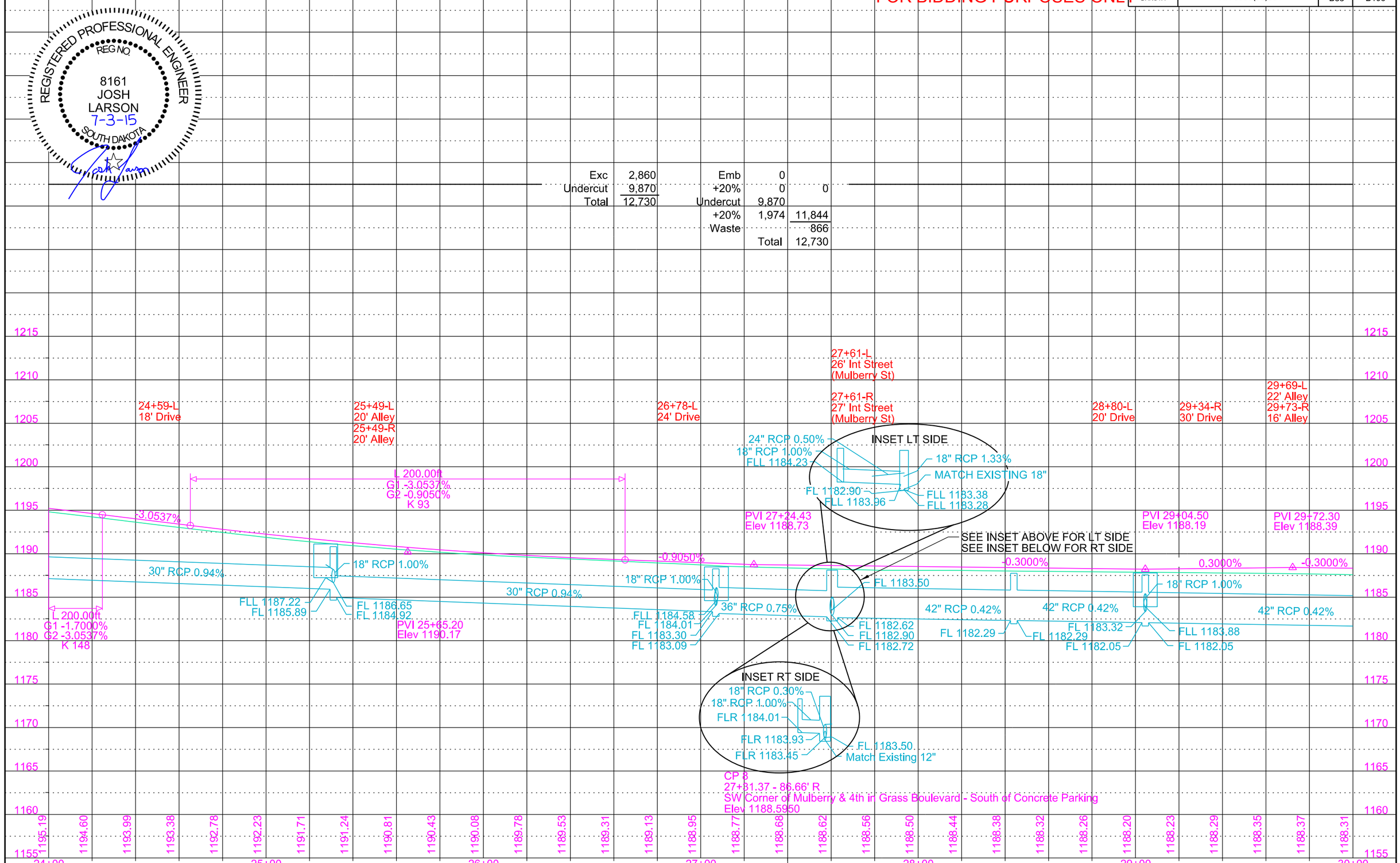

STATE OF SOUTH DAKOTA	PROJECT	SHEET	TOTAL SHEETS
	NH 0050(99)381	B34	B106

FOR BIDDING PURPOSES ONLY

31+33-26' L to 31+71-3' R
Take out 18"-48' RCP
(Incidental Work, Grading)

31+51-43' R to 31+71-3' R
Take out 18"-45' RCP
(Incidental Work, Grading)

31+71-66' L to 31+71-3' R
Take out 12"-70' RCP
(Incidental Work, Grading)

31+71-62' R to 31+71-3' R
Take out 12"-59' RCP
(Incidental Work, Grading)

31+71-3' R to 32+12-26' L
Take out 18"-50' RCP
(Incidental Work, Grading)

31+71-3' R to 35+76-2' R
Take out 36"-405' RCP
(Incidental Work, Grading)

31+18.57-29.17' L to 31+18.57-29.17' R
Install 18" - 56' RCP
(Between Drop Inlets)

31+18.57-29.17' R to 31+71.34-29.17' R
Install 42" - 50' RCP
(Between Drop Inlet & Junction Box)

31+50.82-59.04' R to 31+71.42-52.39' R
Install 18" - 20' RCP
(Between Drop Inlet & Junction Box)

31+50.99-63.50' L to 31+71.00-63.50' L
Install 18" - 18' RCP
(Between Drop Inlet & Junction Box)

31+71.00-63.50' L to 31+94.33-63.50' L
Install 18" - 20' RCP
(Between Junction Box & Drop Inlet)

31+71.00-63.50' L to 31+71.34-29.17' R
Install 24" - 88' RCP
(Between Junction Boxes)

31+71.42-52.39' R to 31+94.16-59.04' R
Install 18" - 22' RCP
(Between Junction Box & Drop Inlet)

35+37-27' L to 35+76-2' R
Take out 18"-49' RCP
(Incidental Work, Grading)

35+56-42' R to 35+76-2' R
Take out 18"-46' RCP
(Incidental Work, Grading)

34+02-36' L to 34+03-40' L
Take out Concrete Steps
(Incidental Work, Grading)

34+37-36' L to 34+37-40' L
Take out Concrete Steps
(Incidental Work, Grading)

35+75-66' R to 35+76-2' R
Take out 18"-63' RCP
(Incidental Work, Grading)

35+75-62' L to 35+76-2' R
Take out 18"-64' RCP
(Incidental Work, Grading)

35+76-2' R to 36+00-42' R
Take out 18"-47' RCP
(Incidental Work, Grading)

35+76-2' R to 36+16-28' L
Take out 18"-51' RCP
(Incidental Work, Grading)

35+76-2' R to 38+54-31' L
Take out 42"-277' RCP
(Incidental Work, Grading)

Take out Manholes
at the following locations:
31+71-3' R
35+76-2' R

Take out Drop Inlets
with Frame and Grate
at the following locations:
31+33-26' L
31+51-43' R
32+12-26' L
35+37-27' L
35+55-42' R
36+00-42' R

Install 2'x3' Type B Drop Inlet with 6"
Concrete Collar and Type B Frame & Grate
at the following locations:
31+18.57-29.17' L
31+50.82-59.04' R
31+50.99-63.50' L
31+94.16-59.04' R
31+94.33-63.50' L
35+55.91-62.95' R
35+62.11-58.97' L
35+87.49-59.33' L
35+99.93-64.07' R

29+89 - 43' L to 30+52 - 43' L
Do Not Disturb
Building Overhang

30+34 - 44' L
Do Not Disturb Steps

31+02 - 45' L
Do Not Disturb Sign

34+16 - 45' L
Do Not Disturb Sign

34+29 - 50' L
Do Not Disturb Tree

34+40 - 50' L 34+50 - 48' L
Do Not Disturb Deck

34+81 - 41' L
Do Not Disturb
Bollards

35+35 - 49' L
Do Not Disturb Sign

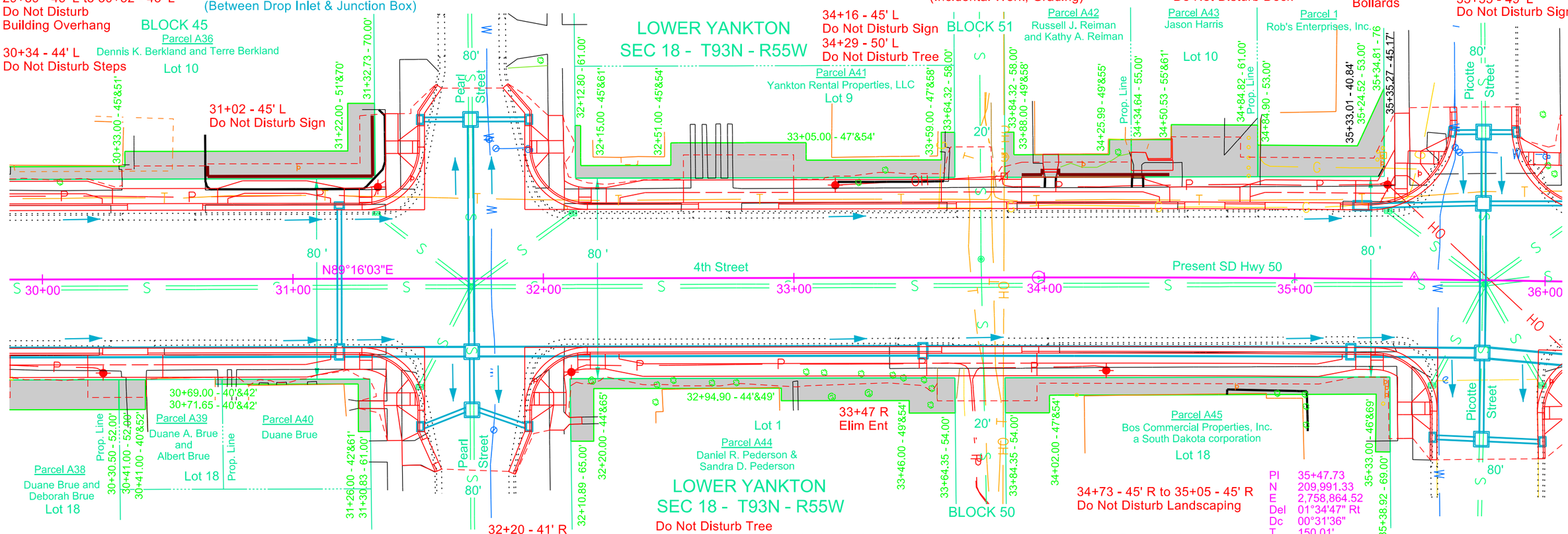

32+20 - 41' R
Do Not Disturb Tree

Do Not Disturb Tree
33+15 - 47' R
33+30 - 46' R
33+55 - 52' R

34+73 - 45' R to 35+05 - 45' R
Do Not Disturb Landscaping

PI	35+47.73
N	209,991.33
E	2,758,864.52
Del	01°34'47" Rt
Dc	00°31'36"
T	150.01'
L	300.00'
R	10,880.00'

Do Not Disturb Sign
34+77 - 43' R
35+37 - 41' R
35+37 - 45' R

REGISTERED PROFESSIONAL ENGINEER
REG NO.
8161
JOSH
LARSON
7-3-15
SOUTH DAKOTA

31+71.42-52.39' R to 31+71.34-29.17' R
Install 18" - 20' RCP
(Between Junction Boxes)

31+71.34-29.17' R to 33+51.50-29.17' R
Install 42" - 176' RCP
(Between Junction Box & Drop Inlet)

33+51.50-29.17' R to 35+22.67-29.17' R
Install 42" - 168' RCP
(Between Drop Inlets)

35+22.67-29.17' R to 35+75.27-29.04' R
Install 42" - 50' RCP
(Between Drop Inlet & Junction Box)

35+26.65-29.17' L to 35+74.93-30.66' L
Install 18" - 44' RCP
(Between Drop Inlet & Junction Box)

35+55.91-62.95' R to 35+75.44-63.47' R
Install 18" - 16' RCP
(Between Drop Inlet & Junction Box)

35+62.11-58.97' L to 35+74.58-59.10' L
Install 18" - 10' RCP
(Between Drop Inlet & Junction Box)

35+74.58-59.10' L to 35+87.49-59.33' L
Install 18" - 10' RCP
(Between Junction Box & Drop Inlet)

35+74.58-59.10' L to 35+74.93-30.66' L
Install 18" - 24' RCP
(Between Junction Boxes)

35+74.93-30.66' L to 36+40.00-31.63' L
Install 18" - 58' RCP
(Between Junction Box & Drop Inlet)

35+74.93-30.66' L to 35+75.27-29.04' R
Install 24" - 56' RCP
(Between Junction Boxes)

35+75.27-29.04' R to 36+40.00-33.13' R
Install 48" - 58' RCP
(Between Junction Box & Drop Inlet)

35+75.44-63.47' R to 35+75.27-29.04' R
Install 18" - 30' RCP
(Between Junction Boxes)

35+75.44-63.47' R to 35+99.93-64.07' R
Install 18" - 22' RCP
(Between Junction Box & Drop Inlet)

Install 5.5' x 3' Type B Drop Inlet with
6" Concrete Collar and Type B Frame & Grate
at the following locations:
31+18.57-29.17' R
33+51.50-29.17' R
35+22.67-29.17' R

Install 5'x5' Junction Box
with Type A9 Manhole Frame & Lid
at the following locations:
31+71.00-63.50' L
31+71.34-29.17' R
31+71.42-52.39' R
35+74.58-59.10' L
35+74.93-30.66' L
35+75.27-29.04' R
35+75.44-63.47' R

Install 3'x6.5' Type B Drop Inlet with
Special 6" Concrete Collar and
Special Frame & Grate
at the following locations:
35+26.65-29.17' L

STATE OF SOUTH DAKOTA	PROJECT	SHEET	TOTAL SHEETS
	NH 0050(99)381	B35	B106

FOR BIDDING PURPOSES ONLY

REGISTERED PROFESSIONAL ENGINEER
REG NO.
8161
JOSH
LARSON
7-3-15
SOUTH DAKOTA

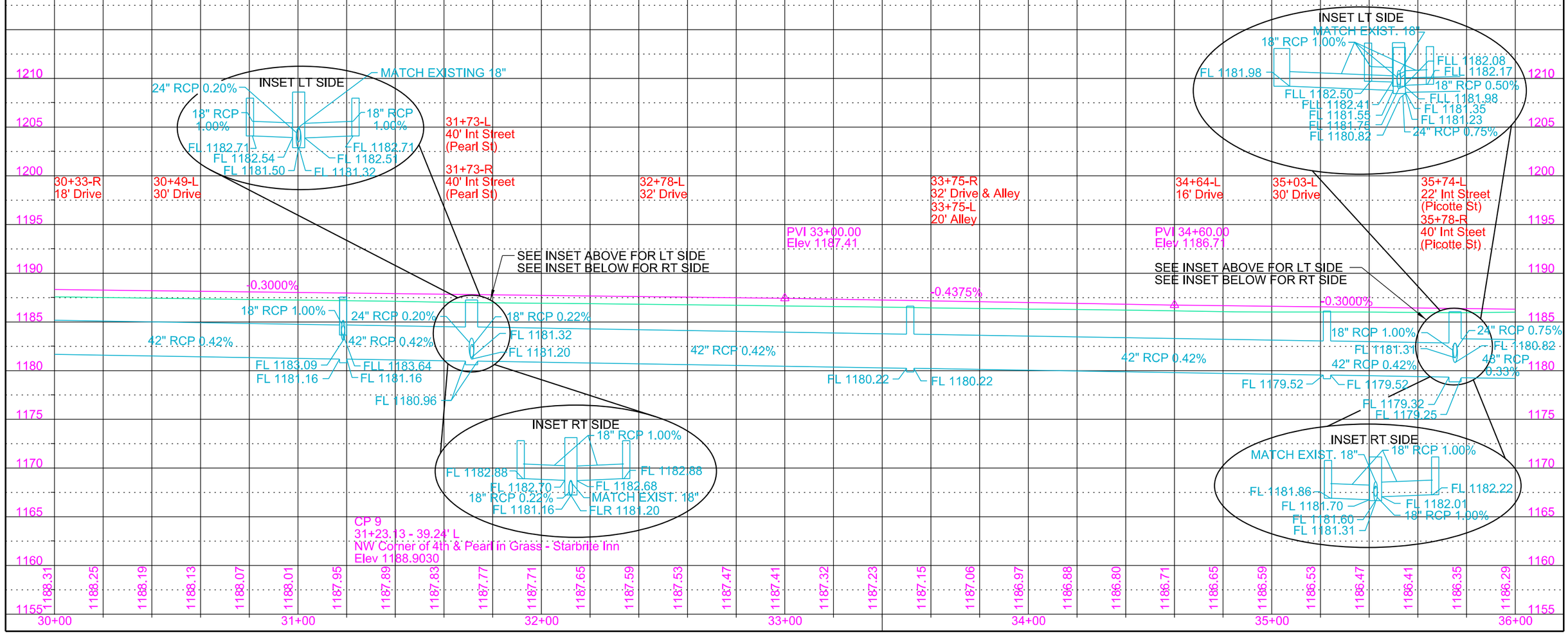

STATE OF SOUTH DAKOTA	PROJECT	SHEET	TOTAL SHEETS
	NH 0050(99)381	B36	B106

FOR BIDDING PURPOSES ONLY

36+40.00-33.13' R to 38+51.52-37.00' R
Install 48" - 208' RCP
(Between Drop Inlet & Junction Box)

38+51.52-37.00' R to 38+51.52-31.41' L
Install 42" - 64' RCP
(Between Junction Boxes)

38+51.52-37.00' R to 40+07.01 - 83.04' R
Install 30" - 170' RCP
(Between Junction Boxes)

40+07.01 - 83.04' R to 42+53.74 - 90.13' R
Install 30" - 268' RCP
(Between Junction Boxes)

Take out Drop Inlets
with Frame and Grate
at the following locations:
36+16-28' L

Install 7'x11' Type S Drop Inlet Base with
Precast Concrete Type S Drop Inlet Lid
at the following locations:
36+40.00-33.13' R

Install 4'x11' Type S Drop Inlet Base with
Precast Concrete Type S Drop Inlet Lid
at the following locations:
36+40.00-31.63' L

Install 5'x5' Junction Box
with Type A9 Manhole Frame & Lid
at the following locations:
38+51.52-37.00' R
38+51.52-31.41' L
40+07.01-83.04' R

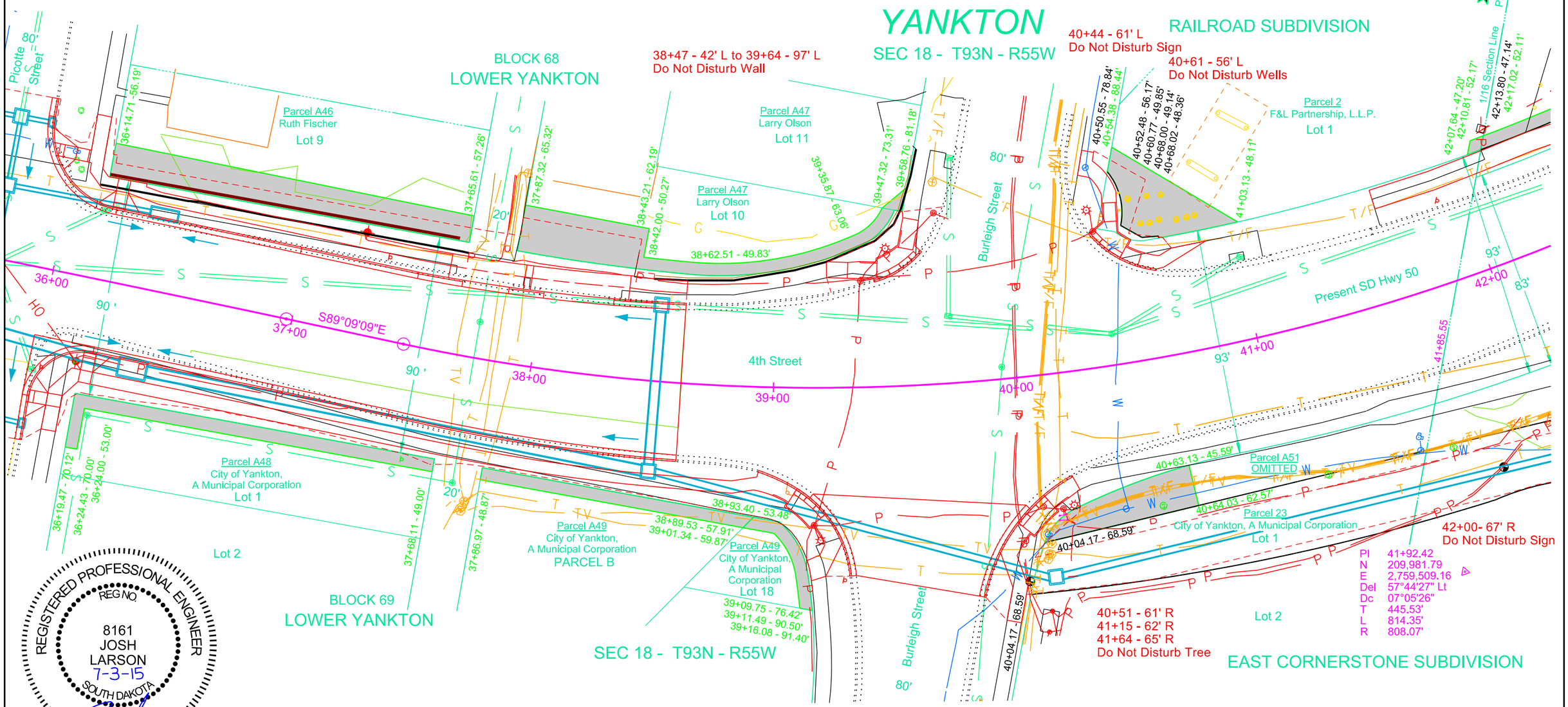

REGISTERED PROFESSIONAL ENGINEER
REG NO.
8161
JOSH
LARSON
7-3-15
SOUTH DAKOTA

STATE OF SOUTH DAKOTA	PROJECT	SHEET	TOTAL SHEETS
	NH 0050(99)381	B37	B106

FOR BIDDING PURPOSES ONLY

REGISTERED PROFESSIONAL ENGINEER
REG NO.
8161
JOSH
LARSON
7-3-15
SOUTH DAKOTA

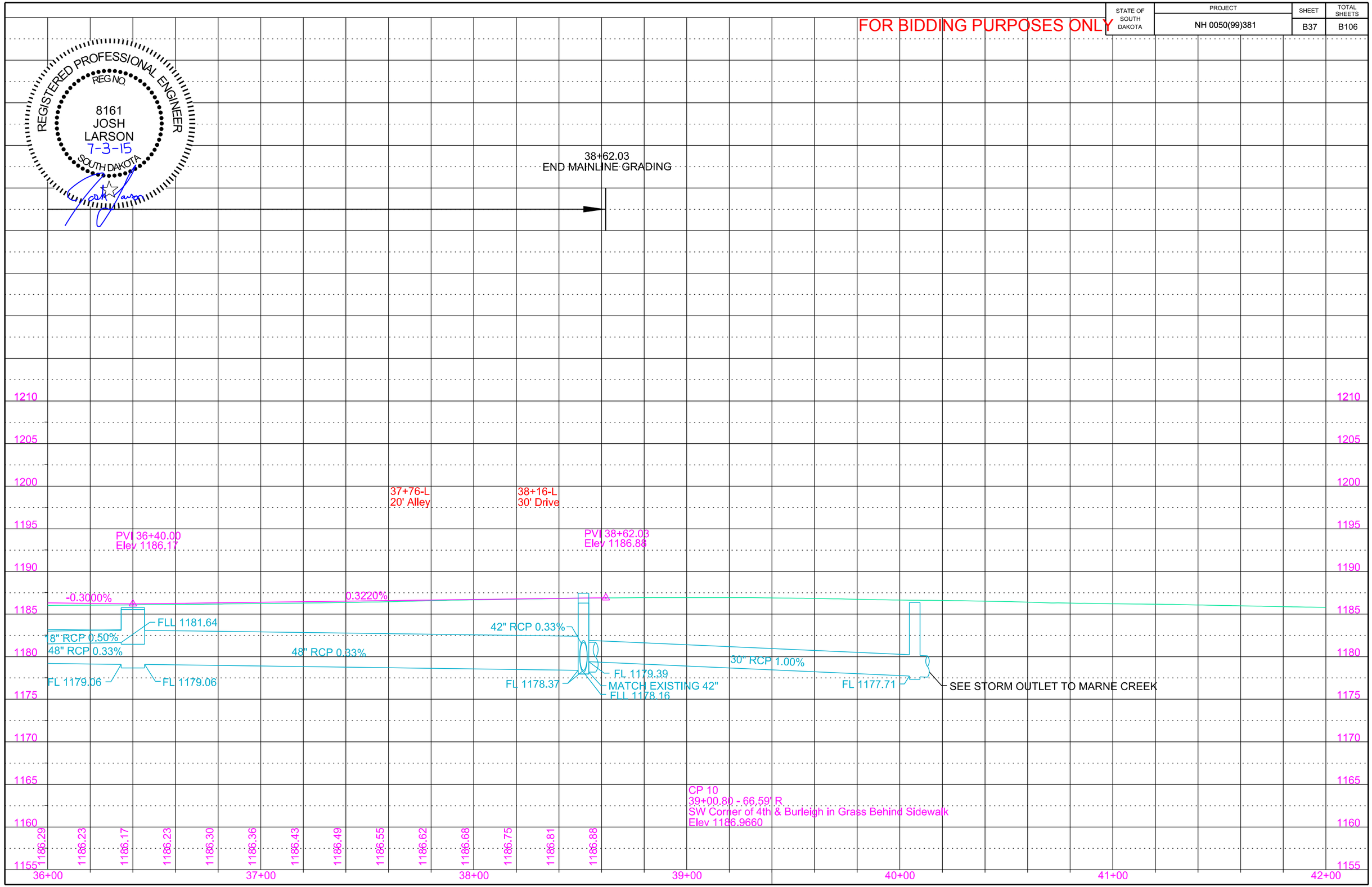

STATE OF SOUTH DAKOTA	PROJECT	SHEET	TOTAL SHEETS
	NH 0050(99)381	B38	B106

FOR BIDDING PURPOSES ONLY

REGISTERED PROFESSIONAL ENGINEER
REG NO.
8161
JOSH
LARSON
7-3-15
SOUTH DAKOTA

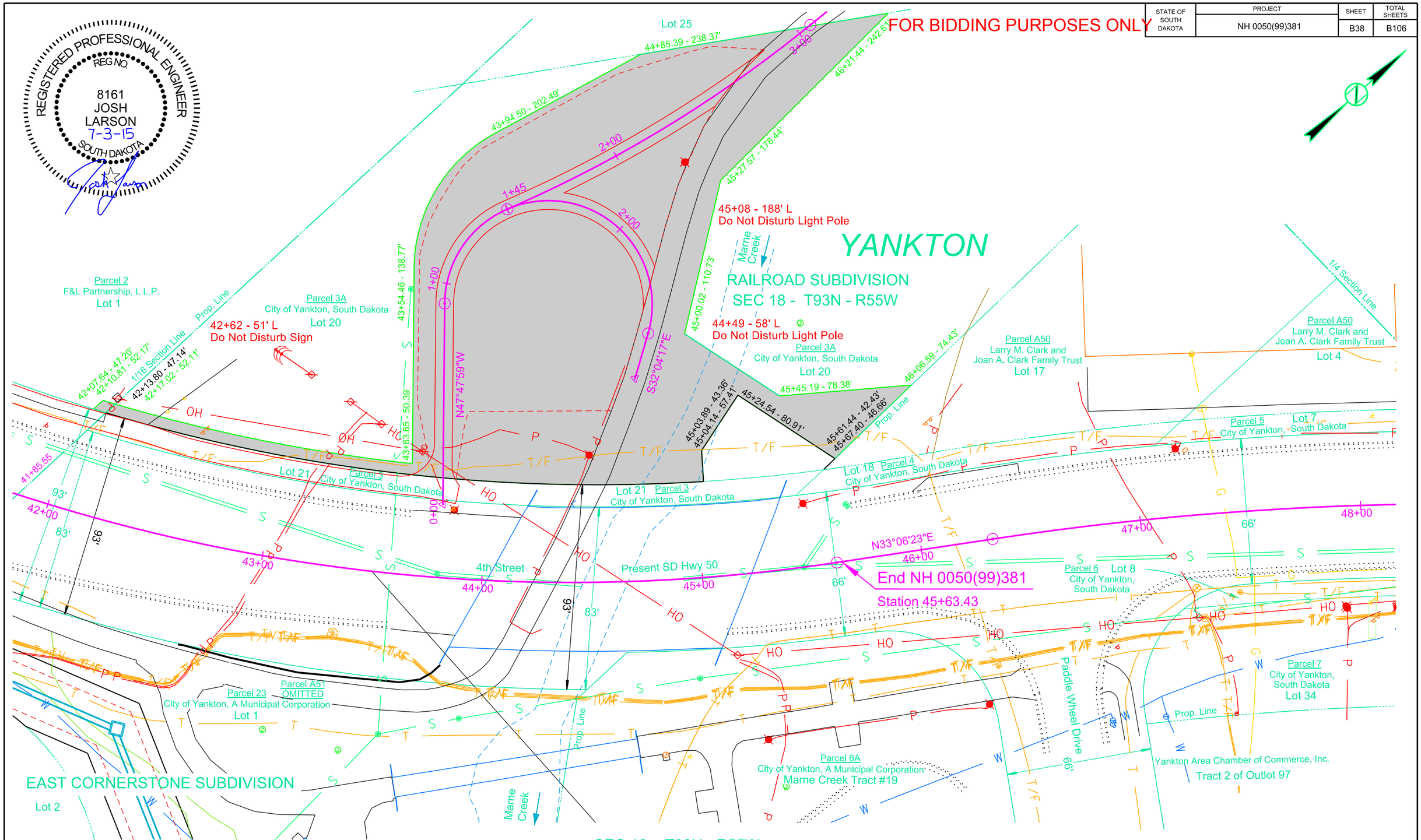

SEC 18 - T93N - R55W

STATE OF SOUTH DAKOTA	PROJECT	SHEET	TOTAL SHEETS
	NH 0050(99)381	B39	B106

FOR BIDDING PURPOSES ONLY

CONNECTION TO SHARED USE PATH AT MARNE CREEK

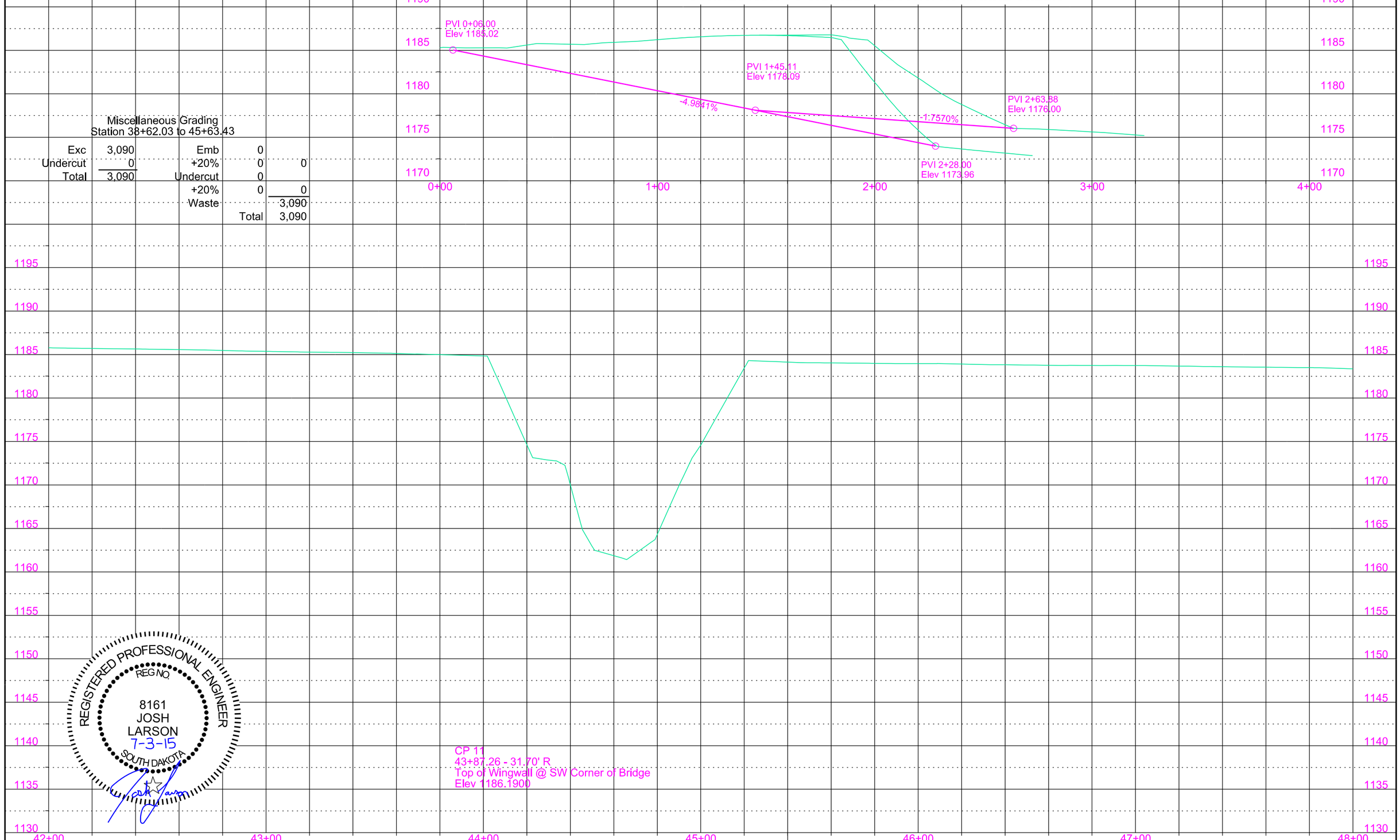

Miscellaneous Grading
Station 38+62.03 to 45+63.43

Exc	3,090	Emb	0	
Undercut	0	+20%	0	0
Total	3,090	Undercut	0	
		+20%	0	0
		Waste		3,090
		Total		3,090

REGISTERED PROFESSIONAL ENGINEER
REG NO.
8161
JOSH
LARSON
7-3-15
SOUTH DAKOTA

STORM OUTLET TO MARNE CREEK

FOR BIDDING PURPOSES ONLY

STATE OF SOUTH DAKOTA	PROJECT	SHEET	TOTAL SHEETS
	NH 0050(99)381	B40	B106

42+53.74 - 90.13' R to 43+48.43 - 283.81' R
Install 30" - 216' RCP
& 1 Sloped End

43+48.43 - 283.81' R
Install Bank and Channel
Protection Gabions (36.0 CY)

Install 5'x5' Junction Box
with Type A9 Manhole Frame & Lid
at the following locations:
42+53.74 - 90.13' R

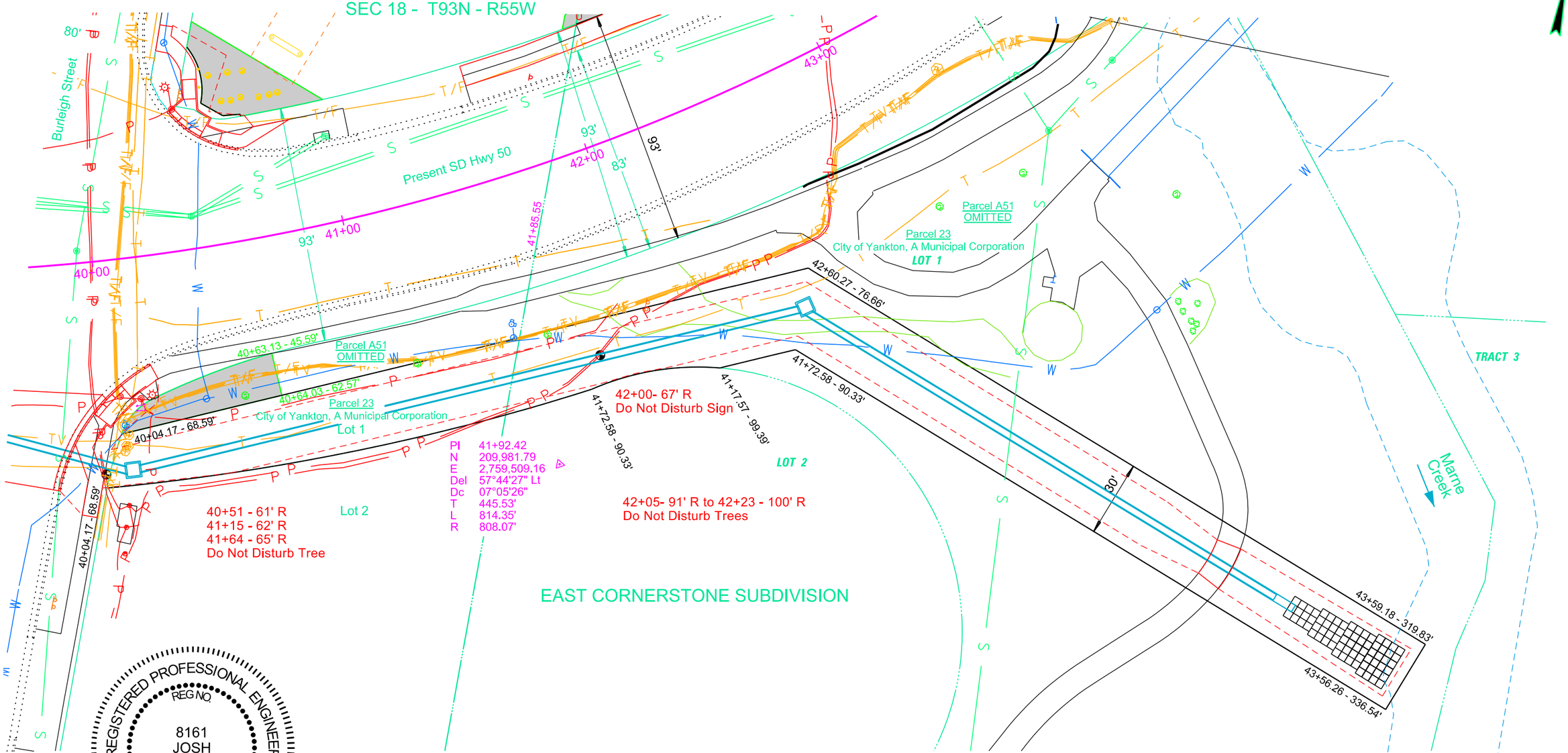

REGISTERED PROFESSIONAL ENGINEER
REG NO.
8161
JOSH
LARSON
7-3-15
SOUTH DAKOTA

STORM OUTLET TO MARNE CREEK

FOR BIDDING PURPOSES ONLY

STATE OF SOUTH DAKOTA	PROJECT	SHEET	TOTAL SHEETS
	NH 0050(99)381	B41	B106

REGISTERED PROFESSIONAL ENGINEER
REG NO.
8161
JOSH
LARSON
7-3-15
SOUTH DAKOTA

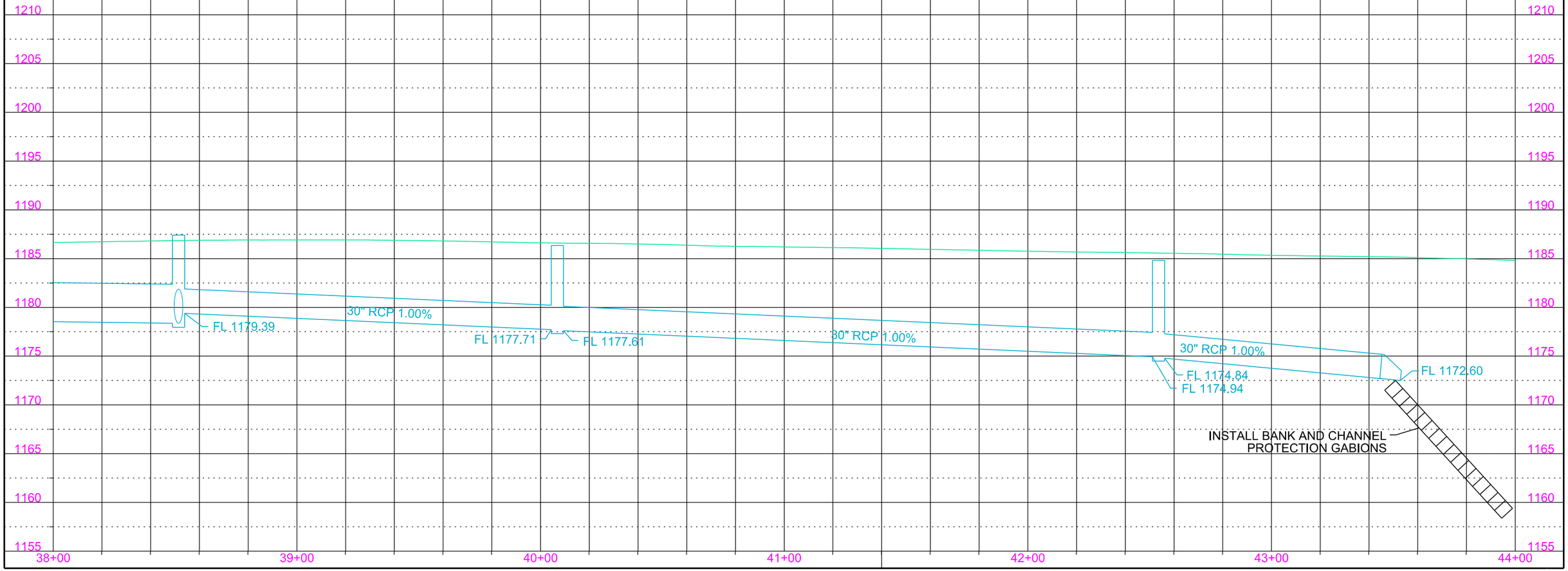

STATE OF SOUTH DAKOTA	PROJECT	SHEET	TOTAL SHEETS
	NH 0050(99)381	B42	B106

CURB & GUTTER LAYOUT

FOR BIDDING PURPOSES ONLY

1 4+00.34 - 30.09' L
BEGIN STR. C&G
TC ELEV. (MATCH EXISTING)

2 4+09.00 - 29.77' L
END STR. C&G
BEGIN TYPE P GUTTER
TC ELEV. 1207.07 (THEOR.)

3 4+29.00 - 29.02' L
END TYPE P GUTTER
BEGIN STR. C&G
TC ELEV. 1207.01 (THEOR.)

4 4+67.00 - 27.61' L
END STR. C&G
BEGIN TYPE P GUTTER
TC ELEV. 1206.91 (THEOR.)

5 4+70.00 - 27.50' L
END TYPE P GUTTER
BEGIN TYPE P GUTTER
TC ELEV. 1206.90 (THEOR.)

6 4+87.00 - 27.50' L
END TYPE P GUTTER
BEGIN STR. C&G
TC ELEV. 1206.80 (THEOR.)

7 5+05.00 - 27.50' L
END STR. C&G
BEGIN TYPE P GUTTER
TC ELEV. 1206.68 (THEOR.)

8 5+17.00 - 27.50' L
END TYPE P GUTTER
BEGIN STR. C&G
TC ELEV. 1206.59 (THEOR.)

9 5+82.54 - 27.50' L
END STR. C&G
BEGIN 30.00' RAD C&G
TC ELEV. 1206.12

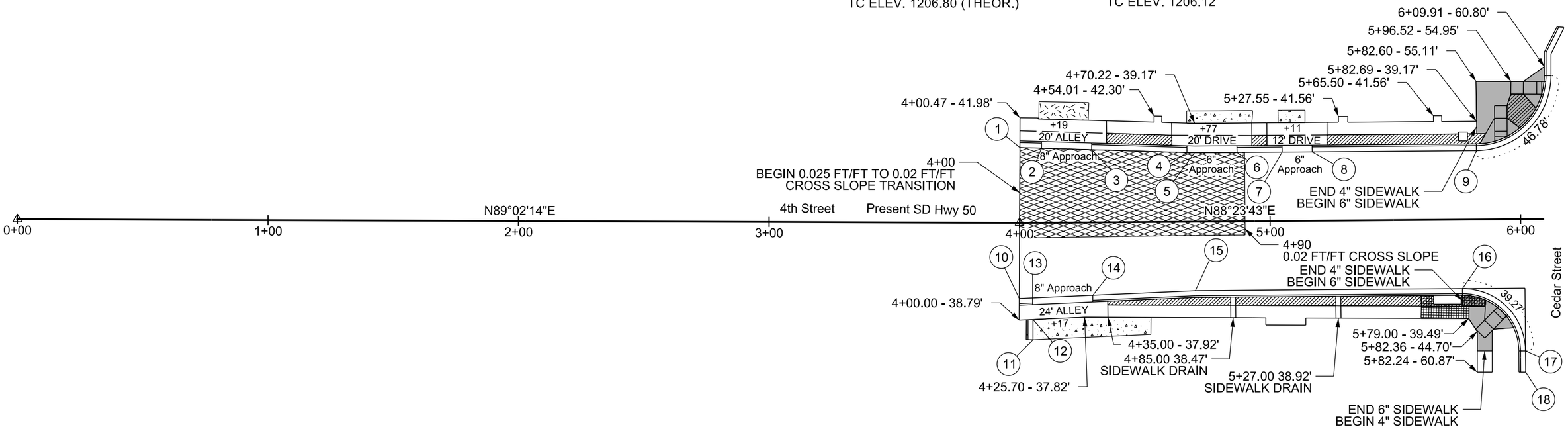

10 4+00.00 - 30.11' R
BEGIN STR. C&G
TC ELEV. (MATCH EXISTING)

11 4+05.01 - 46.60' R
BEGIN STR. C&G
TC ELEV. 1208.16

12 4+05.10 - 38.59' R
END STR. C&G
TC ELEV. 1207.85 (THEOR.)

13 4+05.00 - 29.91' R
END STR. C&G
BEGIN TYPE P GUTTER
TC ELEV. 1207.48 (THEOR.)

14 4+29.00 - 29.02' R
END TYPE P GUTTER
BEGIN STR. C&G
TC ELEV. 1207.36 (THEOR.)

15 4+70.00 - 27.50' R
END C&G
BEGIN C&G
TC ELEV. 1207.15

16 5+76.55 - 27.50' R
END C&G
BEGIN 25.00' RAD C&G
TC ELEV. 1206.38

17 6+01.55 - 52.50' R
END 25.00' RAD C&G
BEGIN STR. C&G
TC ELEV. 1205.46

18 6+01.55 - 61.00' R
END STR. C&G
TC ELEV. (MATCH EXISTING)

- 6" Concrete Sidewalk
- Colored Concrete Sidewalk
- Reinforced Concrete Sidewalk
- Asphalt (Quantity in Section F)
- Concrete (Quantity in Section F)
- Gravel (Quantity in Section F)
- Cross Slope Differs From Typ. (See General Notes)

REGISTERED PROFESSIONAL ENGINEER
REG NO.
8161
JOSH
LARSON
7-3-15
SOUTH DAKOTA

Note: All Curb & Gutter shown on this sheet is Type B69 and all P gutter is Type P9 except as noted.
All curbside sidewalk is 6' wide and all boulevard sidewalk is 5' wide except as noted.

STATE OF SOUTH DAKOTA	PROJECT	SHEET	TOTAL SHEETS
	NH 0050(99)381	B43	B106

CURB & GUTTER LAYOUT

FOR BIDDING PURPOSES ONLY

1 6+12.54 - 57.15' L
END 30.00' RAD C&G
BEGIN STR. C&G
TC ELEV. 1205.72 (THEOR.)

2 6+12.64 - 65.89' L
END STR. C&G
BEGIN STR. C&G
TC ELEV. 1205.58

3 6+16.87 - 76.47' L
END STR. C&G
TC ELEV. (MATCH EXISTING)

4 6+42.99 - 76.66' L
BEGIN STR. C&G
TC ELEV. (MATCH EXISTING)

5 6+47.88 - 66.00' L
END STR. C&G
BEGIN STR. C&G
TC ELEV. 1205.61

6 6+47.88 - 57.50' L
END STR. C&G
BEGIN 30.00' RAD C&G
TC ELEV. 1205.68 (THEOR.)

7 6+77.88 - 27.50' L
END 30.00' RAD C&G
BEGIN STR. C&G
TC ELEV. 1205.52

8 7+34.00 - 27.50' L
END STR. C&G
BEGIN TYPE P GUTTER
TC ELEV. 1205.28 (THEOR.)

9 7+64.00 - 27.50' L
END TYPE P GUTTER
BEGIN STR. C&G
TC ELEV. 1205.16 (THEOR.)

10 8+30.00 - 27.50' L
END STR. C&G
BEGIN TYPE P GUTTER
TC ELEV. 1205.10 (THEOR.)

11 8+50.00 - 27.50' L
END TYPE P GUTTER
BEGIN STR. C&G
TC ELEV. 1205.16 (THEOR.)

12 9+01.00 - 27.50' L
END STR. C&G
BEGIN TYPE P GUTTER
TC ELEV. 1205.31 (THEOR.)

13 9+31.00 - 27.50' L
END TYPE P GUTTER
BEGIN STR. C&G
TC ELEV. 1205.40 (THEOR.)

14 10+05.77 - 27.50' L
END STR. C&G
BEGIN 30.00' RAD C&G
TC ELEV. 1205.10

15 10+35.77 - 57.72' L
END 30.00' RAD C&G
BEGIN STR. C&G
TC ELEV. 1204.85 (THEOR.)

16 10+35.74 - 61.36' L
END STR. C&G
BEGIN STR. C&G
TC ELEV. 1204.85

17 10+21.33 - 63.79' L
END STR. C&G
BEGIN STR. C&G
TC ELEV. 1204.52

18 10+21.31 - 70.83' L
END STR. C&G
TC ELEV. (MATCH EXISTING)

19 10+82.04 - 71.01' L
BEGIN TYPE P GUTTER
TC ELEV. (MATCH EXISTING)

20 10+82.07 - 66.01' L
END TYPE P GUTTER
BEGIN STR. C&G
TC ELEV. 1204.66 (THEOR.)

21 10+82.10 - 62.13' L
END STR. C&G
BEGIN STR. C&G
TC ELEV. 1204.73

22 10+67.77 - 57.66' L
END STR. C&G
BEGIN 30.00' RAD C&G
TC ELEV. 1204.91

23 10+97.77 - 27.50' L
END 30.00' RAD C&G
BEGIN STR. C&G
TC ELEV. 1204.69

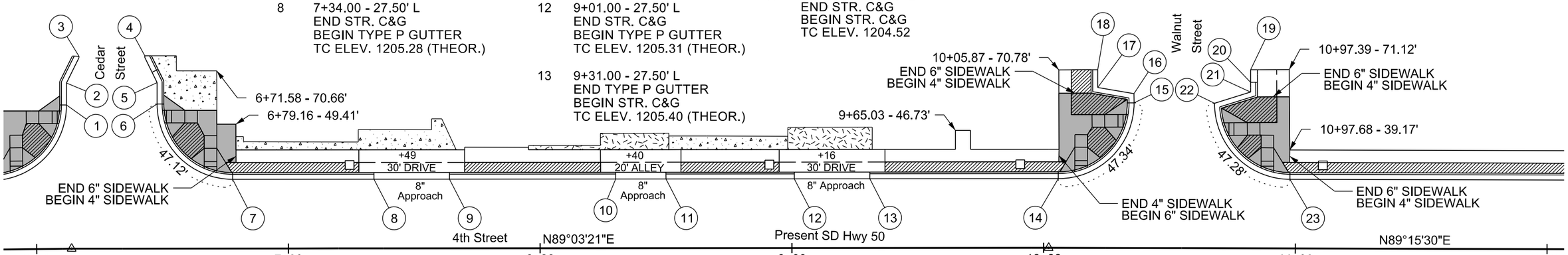

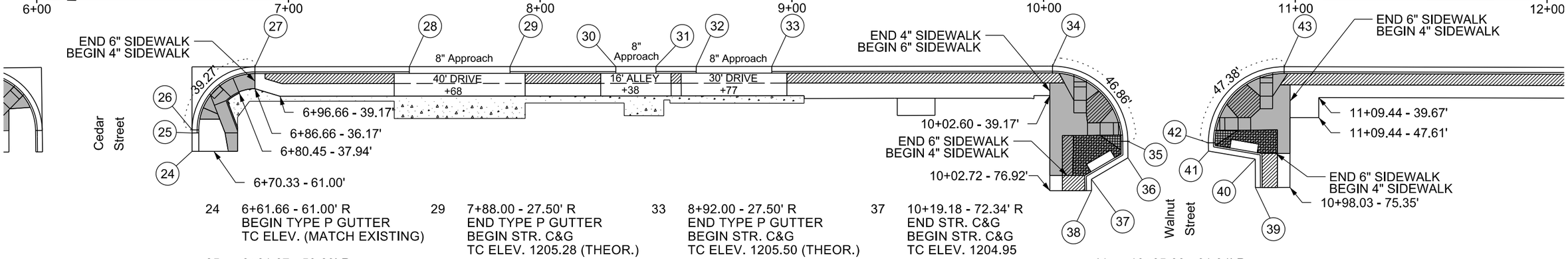

24 6+61.66 - 61.00' R
BEGIN TYPE P GUTTER
TC ELEV. (MATCH EXISTING)

25 6+61.67 - 53.69' R
END TYPE P GUTTER
BEGIN STR. C&G
TC ELEV. 1205.20 (THEOR.)

26 6+61.66 - 52.50' R
END STR. C&G
BEGIN 25.00' RAD C&G
TC ELEV. 1205.20 (THEOR.)

27 6+86.66 - 27.50' R
END 25.00' RAD C&G
BEGIN STR. C&G
TC ELEV. 1205.70

28 7+48.00 - 27.50' R
END STR. C&G
BEGIN TYPE P GUTTER
TC ELEV. 1205.45 (THEOR.)

29 7+88.00 - 27.50' R
END TYPE P GUTTER
BEGIN STR. C&G
TC ELEV. 1205.28 (THEOR.)

30 8+30.00 - 27.50' R
END STR. C&G
BEGIN TYPE P GUTTER
TC ELEV. 1205.32 (THEOR.)

31 8+46.00 - 27.50' R
END TYPE P GUTTER
BEGIN STR. C&G
TC ELEV. 1205.36 (THEOR.)

32 8+62.00 - 27.50' R
END STR. C&G
BEGIN TYPE P GUTTER
TC ELEV. 1205.41 (THEOR.)

33 8+92.00 - 27.50' R
END TYPE P GUTTER
BEGIN STR. C&G
TC ELEV. 1205.50 (THEOR.)

34 10+03.63 - 27.50' R
END STR. C&G
BEGIN 30.00' RAD C&G
TC ELEV. 1205.33

35 10+33.63 - 57.24' R
END 30.00' RAD C&G
BEGIN STR. C&G
TC ELEV. 1205.42 (THEOR.)

36 10+33.68 - 63.80' R
END STR. C&G
BEGIN STR. C&G
TC ELEV. 1205.39

37 10+19.18 - 72.34' R
END STR. C&G
BEGIN STR. C&G
TC ELEV. 1204.95

38 10+19.26 - 76.83' R
END STR. C&G
TC ELEV. (MATCH EXISTING)

39 10+84.31 - 75.42' R
BEGIN STR. C&G
TC ELEV. (MATCH EXISTING)

40 10+84.25 - 64.15' R
END STR. C&G
BEGIN STR. C&G
TC ELEV. 1205.20

41 10+65.66 - 61.04' R
END STR. C&G
BEGIN STR. C&G
TC ELEV. 1205.57

42 10+65.63 - 57.76' R
END STR. C&G
BEGIN 30.00' RAD C&G
TC ELEV. 1205.54 (THEOR.)

43 10+95.63 - 27.50' R
END 30.00' RAD C&G
BEGIN STR. C&G
TC ELEV. 1204.92 (THEOR.)

Note: All Curb & Gutter shown on this sheet is Type B69 and all P gutter is Type P9 except as noted.
All curbside sidewalk is 6' wide and all boulevard sidewalk is 5' wide except as noted.

- 6" Concrete Sidewalk
- Colored Concrete Sidewalk
- Reinforced Concrete Sidewalk
- Asphalt (Quantity in Section F)
- Concrete (Quantity in Section F)
- Gravel (Quantity in Section F)
- Cross Slope Differs From Typ. (See General Notes)

REGISTERED PROFESSIONAL ENGINEER
REG NO.
8161
JOSH
LARSON
7-3-15
SOUTH DAKOTA

STATE OF SOUTH DAKOTA	PROJECT	SHEET	TOTAL SHEETS
	NH 0050(99)381	B44	B106

CURB & GUTTER LAYOUT

FOR BIDDING PURPOSES ONLY

1 13+13.31 - 49.44' L
BEGIN STR. C&G
TC ELEV. 1204.51

2 13+15.99 - 49.45' L
END STR. C&G
BEGIN 10.00' RAD C&G
TC ELEV. 1204.42

3 13+25.99 - 39.17' L
END 10.00' RAD C&G
TC ELEV. 1204.95 (THEOR.)

4 13+26.00 - 27.50' L
END STR. C&G
BEGIN TYPE P GUTTER
TC ELEV. 1203.67 (THEOR.)

5 13+52.00 - 27.50' L
END TYPE P GUTTER
BEGIN STR. C&G
TC ELEV. 1203.56 (THEOR.)

6 14+22.80 - 27.50' L
END STR. C&G
BEGIN STR. C&G
TC ELEV. 1203.24

7 14+29.42 - 27.50' L
END STR. C&G
BEGIN 25.00' RAD C&G
TC ELEV. 1203.21

8 14+54.42 - 52.50' L
END 25.00' RAD C&G
BEGIN STR. C&G
TC ELEV. 1202.94

9 14+54.46 - 70.66' L
END STR. C&G
TC ELEV. (MATCH EXISTING)

10 14+74.46 - 70.61' L
BEGIN TYPE BL69 STR. C&G
TC ELEV. (MATCH EXISTING)

11 14+74.42 - 51.20' L
END TYPE BL69 STR. C&G
BEGIN 4.47' RAD TYPE BL69 C&G
TC ELEV. 1203.25

12 14+83.34 - 50.80' L
END 4.47' RAD TYPE BL69 C&G
BEGIN STR. C&G
TC ELEV. 1203.31

13 14+85.19 - 58.53' L
END TYPE BL69 STR. C&G
TC ELEV. (MATCH EXISTING)

14 15+10.71 - 58.53' L
BEGIN TYPE P GUTTER
TC ELEV. (MATCH EXISTING)

15 15+10.71 - 53.53' L
END TYPE P GUTTER
BEGIN STR. C&G
TC ELEV. 1202.94 (THEOR.)

16 15+10.73 - 52.50' L
END STR. C&G
BEGIN 25.00' RAD C&G
TC ELEV. 1202.94 (THEOR.)

17 15+35.23 - 27.50' L
END 25.00' RAD C&G
BEGIN STR. C&G
TC ELEV. 1202.74

18 15+42.74 - 27.50' L
END STR. C&G
BEGIN STR. C&G
TC ELEV. 1202.73

19 15+47.00 - 27.50' L
END STR. C&G
BEGIN TYPE P GUTTER
TC ELEV. 1202.75 (THEOR.)

20 15+73.00 - 27.50' L
END TYPE P GUTTER
BEGIN STR. C&G
TC ELEV. 1202.86 (THEOR.)

21 16+23.00 - 27.50' L
END STR. C&G
BEGIN TYPE P GUTTER
TC ELEV. 1203.07 (THEOR.)

22 16+59.00 - 27.50' L
END TYPE P GUTTER
BEGIN STR. C&G
TC ELEV. 1203.22 (THEOR.)

23 16+95.00 - 27.50' L
END STR. C&G
BEGIN TYPE P GUTTER
TC ELEV. 1203.37 (THEOR.)

24 17+15.00 - 27.50' L
END TYPE P GUTTER
BEGIN STR. C&G
TC ELEV. 1203.46 (THEOR.)

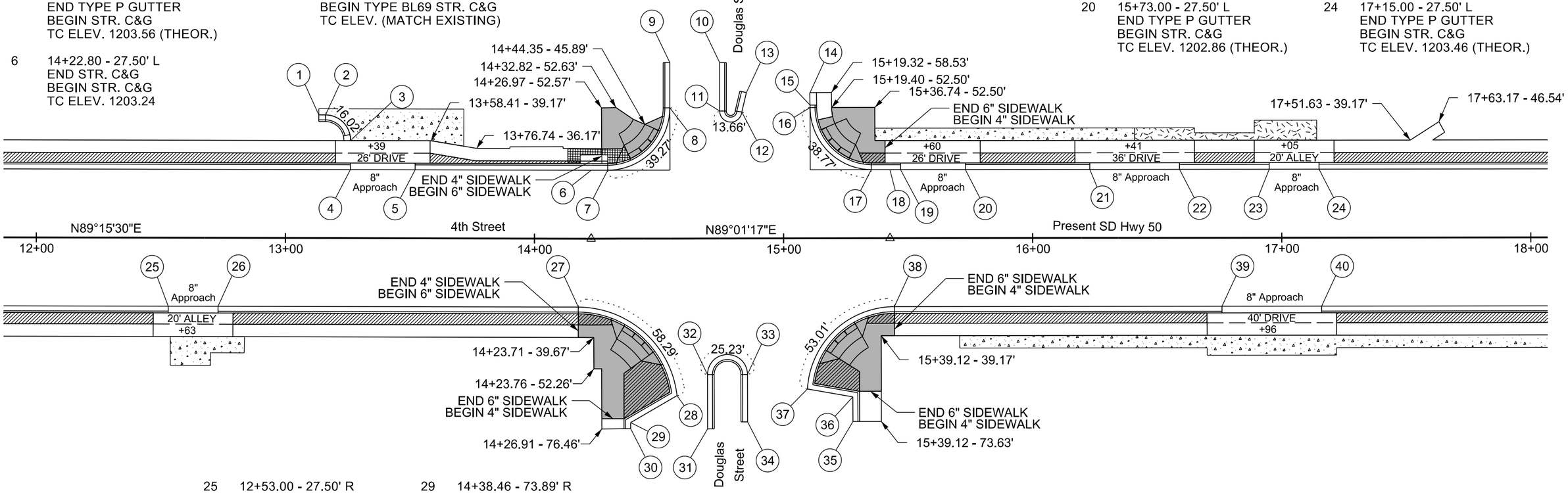

25 12+53.00 - 27.50' R
END STR. C&G
BEGIN TYPE P GUTTER
TC ELEV. 1204.22 (THEOR.)

26 12+73.00 - 27.50' R
END TYPE P GUTTER
BEGIN STR. C&G
TC ELEV. 1204.13 (THEOR.)

27 14+17.64 - 27.50' R
END STR. C&G
BEGIN 40.00' RAD C&G
TC ELEV. 1203.48

28 14+57.13 - 63.11' R
END 40.00' RAD C&G
BEGIN STR. C&G
TC ELEV. 1203.81

29 14+38.46 - 73.89' R
END STR. C&G
BEGIN STR. C&G
TC ELEV. 1203.15

30 14+38.45 - 76.37' R
END STR. C&G
TC ELEV. (MATCH EXISTING)

31 14+69.36 - 76.47' R
BEGIN TYPE BL69 STR. C&G
TC ELEV. (MATCH EXISTING)

32 14+69.36 - 54.65' R
END TYPE BL69 STR. C&G
BEGIN 8.03' RAD C&G
TC ELEV. 1204.07

33 14+85.42 - 54.65' R
END 8.03' RAD TYPE BL69 C&G
BEGIN STR. C&G
TC ELEV. 1204.17

34 14+85.43 - 73.68' R
END TYPE BL69 STR. C&G
TC ELEV. (MATCH EXISTING)

35 15+27.71 - 73.63' R
BEGIN STR. C&G
TC ELEV. (MATCH EXISTING)

36 15+27.9 - 63.72' R
END STR. C&G
BEGIN STR. C&G
TC ELEV. 1203.28

37 15+09.48 - 60.51' R
END STR. C&G
BEGIN 35.00' RAD C&G
TC ELEV. 1203.65

38 15+44.46 - 27.50' R
END 35.00' RAD C&G
BEGIN STR. C&G
TC ELEV. 1202.96

39 16+76.00 - 27.50' R
END STR. C&G
BEGIN TYPE P GUTTER
TC ELEV. 1203.51 (THEOR.)

40 17+16.00 - 27.50' R
END TYPE P GUTTER
BEGIN STR. C&G
TC ELEV. 1203.68 (THEOR.)

REGISTERED PROFESSIONAL ENGINEER
REG NO.
8161
JOSH
LARSON
7-3-15
SOUTH DAKOTA

Note: All Curb & Gutter shown on this sheet is Type B69 and all P gutter is Type P9 except as noted.
All curbside sidewalk is 6' wide and all boulevard sidewalk is 5' wide except as noted.

- 6" Concrete Sidewalk
- Colored Concrete Sidewalk
- Reinforced Concrete Sidewalk
- Asphalt (Quantity in Section F)
- Concrete (Quantity in Section F)
- Gravel (Quantity in Section F)
- Cross Slope Differs From Typ. (See General Notes)

CURB & GUTTER LAYOUT

FOR BIDDING PURPOSES ONLY

STATE OF SOUTH DAKOTA	PROJECT	SHEET	TOTAL SHEETS
	NH 0050(99)381	B45	B106

1 18+67.02 - 27.50' L
END STR. C&G
BEGIN 35.00' RAD C&G
TC ELEV. 1204.15 (THEOR.)

2 19+02.02 - 62.50' L
END 35.00' RAD C&G
BEGIN STR. C&G
TC ELEV. 1204.34

3 19+02.38 - 73.36' L
END STR. C&G
TC ELEV. (MATCH EXISTING)

4 19+28.33 - 71.89' L
BEGIN STR. C&G
TC ELEV. (MATCH EXISTING)

5 19+28.27 - 62.49' L
END STR. C&G
BEGIN 35.00' RAD C&G
TC ELEV. 1204.00

6 19+63.27 - 27.50' L
END 35.00' RAD C&G
BEGIN STR. C&G
TC ELEV. 1203.59

7 21+16.00 - 27.50' L
END STR. C&G
BEGIN TYPE P GUTTER
TC ELEV. 1201.13 (THEOR.)

8 21+36.00 - 27.50' L
END TYPE P GUTTER
BEGIN STR. C&G
TC ELEV. 1200.79 (THEOR.)

9 22+92.34 - 27.50' L
END STR. C&G
BEGIN 25.00' RAD C&G
TC ELEV. 1197.98 (THEOR.)

10 23+17.34 - 52.50' L
END 25.00' RAD C&G
BEGIN STR. C&G
TC ELEV. 1197.63 (THEOR.)

11 23+17.34 - 71.00' L
END STR. C&G
TC ELEV. (MATCH EXISTING)

12 23+57.34 - 71.00' L
BEGIN STR. C&G
TC ELEV. (MATCH EXISTING)

13 23+57.34 - 52.50' L
END STR. C&G
BEGIN 25.00' RAD C&G
TC ELEV. 1196.85 (THEOR.)

14 23+82.34 - 27.50' L
END 25.00' RAD C&G
BEGIN STR. C&G
TC ELEV. 1195.76

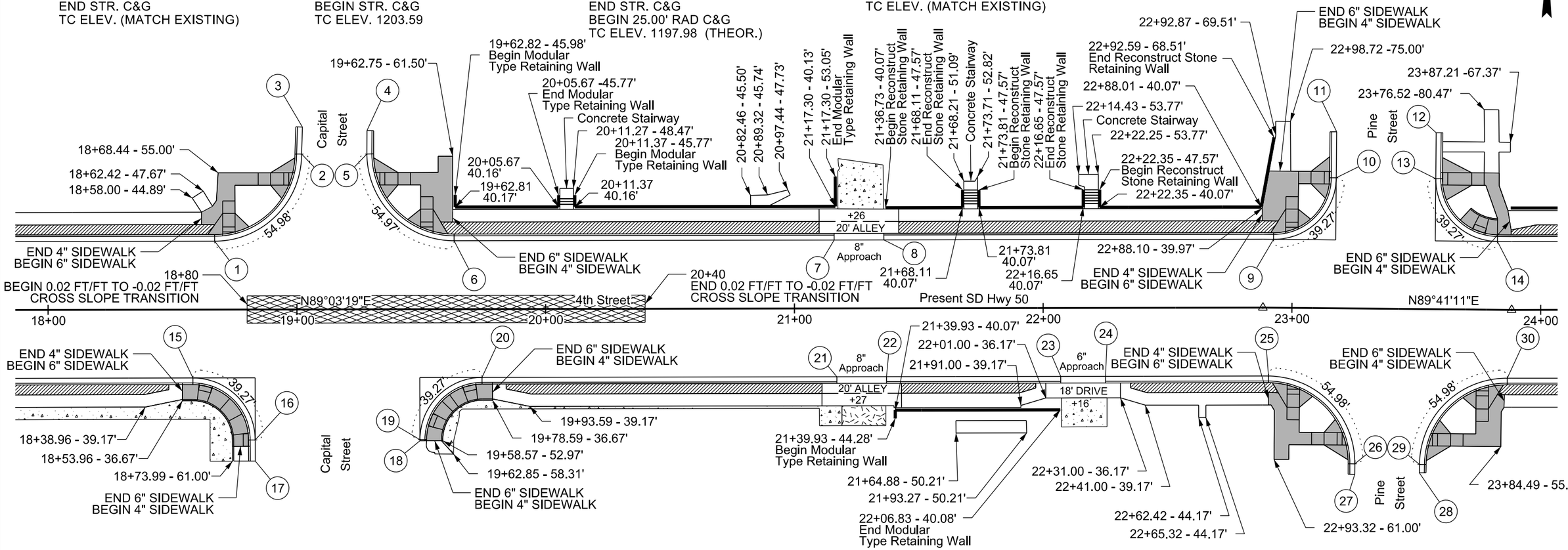

15 18+58.16 - 27.50' R
END STR. C&G
BEGIN 25.00' RAD C&G
TC ELEV. 1204.37 (THEOR.)

16 18+83.16 - 52.50' R
END 25.00' RAD C&G
BEGIN STR. C&G
TC ELEV. 1204.00 (THEOR.)

17 18+83.16 - 61.00' R
END STR. C&G
TC ELEV. (MATCH EXISTING)

18 19+49.39 - 52.97' R
BEGIN STR. C&G
TC ELEV. (MATCH EXISTING)

19 19+49.39 - 52.50' R
END STR. C&G
BEGIN 25.00' RAD C&G
TC ELEV. 1203.77 (THEOR.)

20 19+74.39 - 27.50' R
END 25.00' RAD C&G
BEGIN STR. C&G
TC ELEV. 1203.40 (THEOR.)

21 21+17.00 - 27.50' R
END STR. C&G
BEGIN TYPE P GUTTER
TC ELEV. 1200.89 (THEOR.)

22 21+37.00 - 27.50' R
END TYPE P GUTTER
BEGIN STR. C&G
TC ELEV. 1200.55 (THEOR.)

23 22+07.00 - 27.50' R
END STR. C&G
BEGIN TYPE P GUTTER
TC ELEV. 1199.36 (THEOR.)

24 22+25.00 - 27.50' R
END TYPE P GUTTER
BEGIN STR. C&G
TC ELEV. 1199.06 (THEOR.)

25 22+90.85 - 27.50' R
END STR. C&G
BEGIN 35.00' RAD C&G
TC ELEV. 1197.79

26 23+25.85 - 62.50' R
END 35.00' RAD C&G
BEGIN STR. C&G
TC ELEV. 1196.40

27 23+25.85 - 66.71' R
END STR. C&G
TC ELEV. (MATCH EXISTING)

28 23+51.83 - 65.88' R
BEGIN STR. C&G
TC ELEV. (MATCH EXISTING)

29 23+51.83 - 62.50' R
END STR. C&G
BEGIN 35.00' RAD C&G
TC ELEV. 1195.95

30 23+86.83 - 27.50' R
END 35.00' RAD C&G
BEGIN STR. C&G
TC ELEV. 1195.42

REGISTERED PROFESSIONAL ENGINEER
REG NO.
8161
JOSH
LARSON
7-3-15
SOUTH DAKOTA

Note: All Curb & Gutter shown on this sheet is Type B69 and all P gutter is Type P9 except as noted.
All curbside sidewalk is 6' wide and all boulevard sidewalk is 5' wide except as noted.

- 6" Concrete Sidewalk
- Colored Concrete Sidewalk
- Reinforced Concrete Sidewalk
- Asphalt (Quantity in Section F)
- Concrete (Quantity in Section F)
- Gravel (Quantity in Section F)
- Cross Slope Differs From Typ. (See General Notes)

CURB & GUTTER LAYOUT

FOR BIDDING PURPOSES ONLY

STATE OF SOUTH DAKOTA	PROJECT	SHEET	TOTAL SHEETS
	NH 0050(99)381	B46	B106

1 24+50.00 - 27.50' L
END STR. C&G
BEGIN TYPE P GUTTER
TC ELEV. 1193.76 (THEOR.)

2 24+68.00 - 27.50' L
END TYPE P GUTTER
BEGIN STR. C&G
TC ELEV. 1193.21 (THEOR.)

3 25+39.00 - 27.50' L
END STR. C&G
BEGIN TYPE P GUTTER
TC ELEV. 1191.33 (THEOR.)

4 25+59.00 - 27.50' L
END TYPE P GUTTER
BEGIN STR. C&G
TC ELEV. 1190.90 (THEOR.)

5 26+66.00 - 27.50' L
END STR. C&G
BEGIN TYPE P GUTTER
TC ELEV 1189.33 (THEOR.)

6 26+90.00 - 27.50' L
END TYPE P GUTTER
BEGIN STR. C&G
TC ELEV 1189.11 (THEOR.)

7 27+22.71 - 27.50' L
END STR. C&G
BEGIN 25.00' RAD C&G
TC ELEV. 1188.81 (THEOR.)

8 27+47.71 - 52.50' L
END 25.00' RAD C&G
BEGIN STR. C&G
TC ELEV. 1188.61

9 27+47.71 - 62.50' L
END STR. C&G
BEGIN TYPE P GUTTER
TC ELEV. 1188.89 (THEOR.)

10 27+47.68 - 68.98' L
END TYPE P GUTTER
TC ELEV. (MATCH EXISTING)

11 27+73.17 - 92.50' L
BEGIN STR. C&G
TC ELEV. (MATCH EXISTING)

12 27+73.24 - 82.58' L
END STR. C&G
BEGIN TYPE P GUTTER
TC ELEV. 1188.81 (THEOR.)

13 27+73.42 - 58.58' L
END TYPE P GUTTER
BEGIN STR. C&G
TC ELEV. 1188.46 (THEOR.)

14 27+73.47 - 52.50' L
END STR. C&G
BEGIN 25.00' RAD C&G
TC ELEV. 1188.38

15 27+98.47 - 27.50' L
END 25.00' RAD C&G
BEGIN STR. C&G
TC ELEV. 1188.58 (THEOR.)

16 28+70.00 - 27.50' L
END STR. C&G
BEGIN TYPE P GUTTER
TC ELEV. 1188.36 (THEOR.)

17 28+90.00 - 27.50' L
END TYPE P GUTTER
BEGIN STR. C&G
TC ELEV. 1188.30 (THEOR.)

18 29+58.00 - 27.50' L
END STR. C&G
BEGIN TYPE P GUTTER
TC ELEV. 1188.42 (THEOR.)

19 29+80.00 - 27.50' L
END TYPE P GUTTER
BEGIN STR. C&G
TC ELEV. 1188.44 (THEOR.)

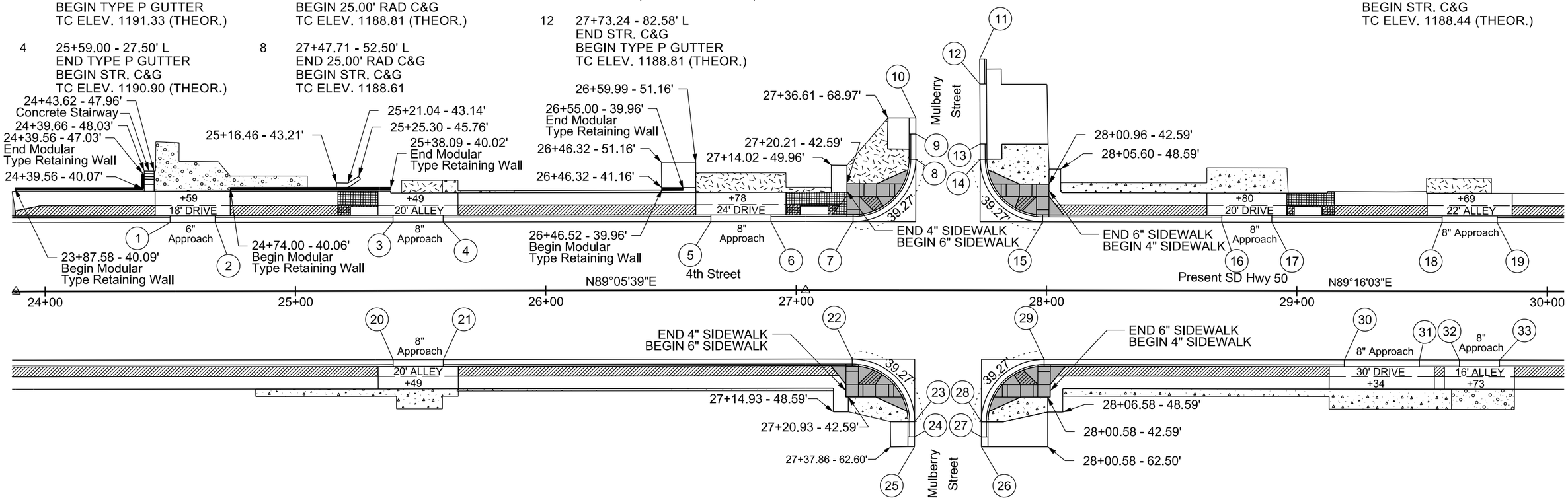

20 25+39.00 - 27.50' R
END STR. C&G
BEGIN TYPE P GUTTER
TC ELEV. 1191.11 (THEOR.)

21 25+59.00 - 27.50' R
END TYPE P GUTTER
BEGIN STR. C&G
TC ELEV. 1190.68 (THEOR.)

22 27+22.43 - 27.50' R
END STR. C&G
BEGIN 25.00' RAD C&G
TC ELEV. 1188.60 (THEOR.)

23 27+47.43 - 52.50' R
END 25.00' RAD C&G
BEGIN STR. C&G
TC ELEV. 1188.39

24 27+47.43 - 58.50' R
END STR. C&G
BEGIN TYPE P GUTTER
TC ELEV. 1188.54 (THEOR.)

25 27+47.43 - 62.50' R
END TYPE P GUTTER
TC ELEV. (MATCH EXISTING)

26 27+74.08 - 62.50' R
BEGIN TYPE P GUTTER
TC ELEV. (MATCH EXISTING)

27 27+74.08 - 58.50' R
END TYPE P GUTTER
BEGIN STR. C&G
TC ELEV. 1188.57 (THEOR.)

28 27+74.08 - 52.50' R
END STR. C&G
BEGIN 25.00' RAD C&G
TC ELEV. 1188.55

29 27+99.08 - 27.50' R
END 25.00' RAD C&G
BEGIN STR. C&G
TC ELEV. 1188.35 (THEOR.)

30 29+19.00 - 27.50' R
END STR. C&G
BEGIN TYPE P GUTTER
TC ELEV. 1188.08 (THEOR.)

31 29+49.00 - 27.50' R
END TYPE P GUTTER
BEGIN STR. C&G
TC ELEV. 1188.17 (THEOR.)

32 29+65.00 - 27.50' R
END STR. C&G
BEGIN TYPE P GUTTER
TC ELEV. 1188.22 (THEOR.)

33 29+81.00 - 27.50' R
END TYPE P GUTTER
BEGIN STR. C&G
TC ELEV. 1188.21 (THEOR.)

REGISTERED PROFESSIONAL ENGINEER
REG NO.
8161
JOSH
LARSON
7-3-15
SOUTH DAKOTA

Note: All Curb & Gutter shown on this sheet is Type B69 and all P gutter is Type P9 except as noted.
All curbside sidewalk is 6' wide and all boulevard sidewalk is 5' wide except as noted.

- 6" Concrete Sidewalk
- Colored Concrete Sidewalk
- Reinforced Concrete Sidewalk
- Asphalt (Quantity in Section F)
- Concrete (Quantity in Section F)
- Gravel (Quantity in Section F)
- Cross Slope Differs From Typ. (See General Notes)

CURB & GUTTER LAYOUT

FOR BIDDING PURPOSES ONLY

STATE OF SOUTH DAKOTA	PROJECT	SHEET	TOTAL SHEETS
	NH 0050(99)381	B47	B106

1 30+34.00 - 27.50' L
END STR. C&G
BEGIN TYPE P GUTTER
TC ELEV. 1188.28 (THEOR.)

2 30+64.00 - 27.50' L
END TYPE P GUTTER
BEGIN STR. C&G
TC ELEV. 1188.19 (THEOR.)

3 31+27.66 - 27.50' L
END STR. C&G
BEGIN 25.00' RAD C&G
TC ELEV. 1188.00 (THEOR.)

4 31+52.66 - 52.50' L
END 25.00' RAD C&G
BEGIN STR. C&G
TC ELEV. 1187.18 (THEOR.)

5 31+52.66 - 66.00' L
END STR. C&G
BEGIN STR. C&G
TC ELEV. 1187.11

6 31+59.51 - 76.00' L
END STR. C&G
TC ELEV. (MATCH EXISTING)

7 31+84.00 - 76.00' L
BEGIN STR. C&G
TC ELEV. (MATCH EXISTING)

8 31+92.66 - 66.00' L
END STR. C&G
BEGIN END STR. C&G
TC ELEV. 1187.11

9 31+92.66 - 52.50' L
END STR. C&G
BEGIN 25.00' RAD C&G
TC ELEV. 1187.18 (THEOR.)

10 32+17.66 - 27.50' L
END 25.00' RAD C&G
BEGIN STR. C&G
TC ELEV. 1187.73 (THEOR.)

11 32+62.00 - 27.50' L
END STR. C&G
BEGIN TYPE P GUTTER
TC ELEV. 1187.59 (THEOR.)

12 32+94.00 - 27.50' L
END TYPE P GUTTER
BEGIN STR. C&G
TC ELEV. 1187.50 (THEOR.)

13 33+65.00 - 27.50' L
END STR. C&G
BEGIN TYPE P GUTTER
TC ELEV. 1187.11 (THEOR.)

14 33+85.00 - 27.50' L
END TYPE P GUTTER
BEGIN STR. C&G
TC ELEV. 1186.99 (THEOR.)

15 33+97.73 - 27.50' L
END STR. C&G
BEGIN 10907.50' RAD
C&G
TC ELEV. 1186.92

16 34+56.00 - 27.50' L
END 10907.50' RAD C&G
BEGIN 10907.50' RAD TYPE P GUTTER
TC ELEV. 1186.58 (THEOR.)

17 34+72.00 - 27.50' L
END 10907.50' RAD TYPE P GUTTER
BEGIN 10907.50' RAD C&G
TC ELEV. 1186.52 (THEOR.)

18 34+88.00 - 27.50' L
END 10907.50' RAD C&G
BEGIN 10907.50' RAD TYPE P GUTTER
TC ELEV. 1186.47 (THEOR.)

19 35+18.00 - 27.50' L
END 10907.50' RAD TYPE P GUTTER
BEGIN 10907.50' RAD C&G
TC ELEV. 1186.38 (THEOR.)

20 35+29.15 - 27.50' L
END 10907.50' RAD C&G
BEGIN 35.00' RAD C&G
TC ELEV. 1186.35

21 35+63.93 - 63.66' L
END 35.00' RAD C&G
BEGIN STR. C&G
TC ELEV. 1186.96 (THEOR.)

22 35+63.82 - 66.96' L
END STR. C&G
BEGIN TYPE P GUTTER
TC ELEV. 1187.01 (THEOR.)

23 35+63.75 - 68.91' L
END TYPE P GUTTER
TC ELEV. (MATCH EXISTING)

24 35+85.54 - 69.36' L
BEGIN STR. C&G
TC ELEV. (MATCH EXISTING)

25 35+85.69 - 61.78' L
END STR. C&G
BEGIN 35.00' RAD C&G
TC ELEV. 1186.57

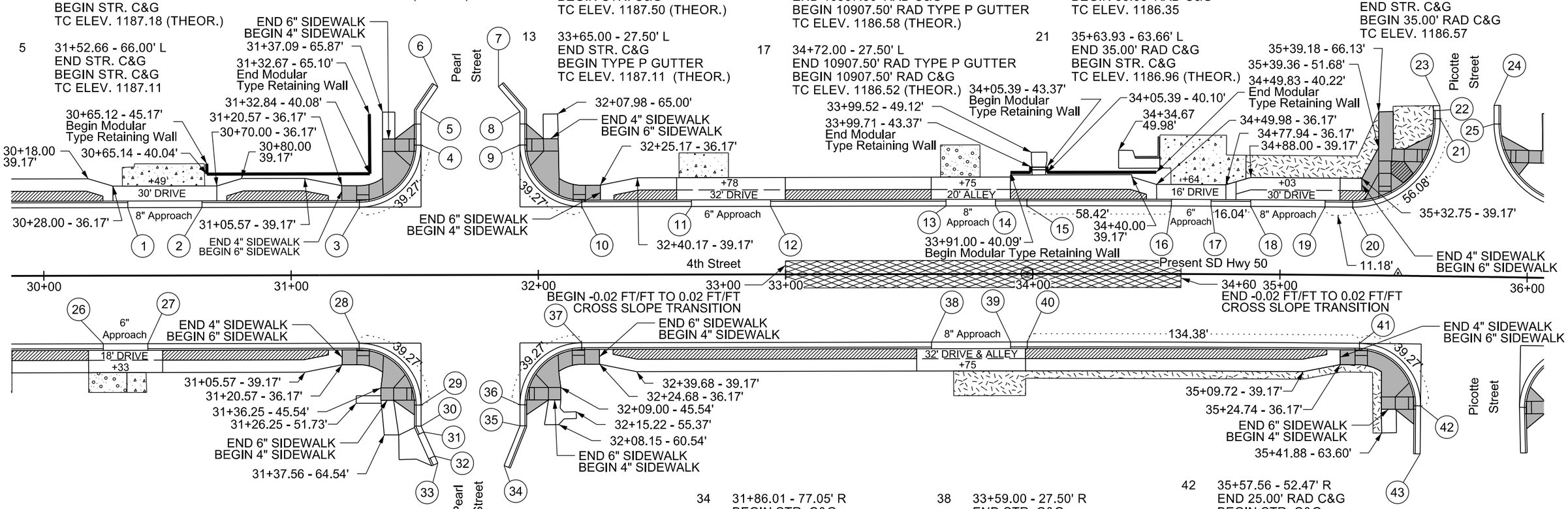

26 30+24.00 - 27.50' R
END STR. C&G
BEGIN TYPE P GUTTER
TC ELEV. 1188.09 (THEOR.)

27 30+42.00 - 27.50' R
END TYPE P GUTTER
BEGIN STR. C&G
TC ELEV. 1188.03 (THEOR.)

28 31+27.49 - 27.50' R
END STR. C&G
BEGIN 25.00' RAD C&G
TC ELEV. 1187.78 (THEOR.)

29 31+52.49 - 52.50' R
END 25.00' RAD C&G
BEGIN STR. C&G
TC ELEV. 1187.36 (THEOR.)

30 31+52.49 - 61.00' R
END STR. C&G
BEGIN STR. C&G
TC ELEV. 1187.29

31 31+53.57 - 63.42' R
END STR. C&G
BEGIN TYPE P GUTTER
TC ELEV. 1187.31 (THEOR.)

32 31+57.95 - 73.14' R
END TYPE P GUTTER
BEGIN STR. C&G
TC ELEV. 1187.37 (THEOR.)

33 31+59.23 - 76.00' R
END STR. C&G
TC ELEV. (MATCH EXISTING)

34 31+86.01 - 77.05' R
BEGIN STR. C&G
TC ELEV. (MATCH EXISTING)

35 31+92.49 - 61.00' R
END STR. C&G
BEGIN STR. C&G
TC ELEV. 1187.29

36 31+92.49 - 52.50' R
END STR. C&G
BEGIN 25.00' RAD C&G
TC ELEV. 1187.36 (THEOR.)

37 32+17.49 - 27.50' R
END 25.00' RAD C&G
BEGIN STR. C&G
TC ELEV. 1187.51 (THEOR.)

38 33+59.00 - 27.50' R
END STR. C&G
BEGIN TYPE P GUTTER
TC ELEV. 1187.08 (THEOR.)

39 33+91.00 - 27.50' R
END TYPE P GUTTER
BEGIN STR. C&G
TC ELEV. 1186.98 (THEOR.)

40 33+97.73 - 27.50' R
END STR. C&G
BEGIN 10852.50' RAD C&G
TC ELEV. 1186.96

41 35+32.44 - 27.50' R
END 10852.50' RAD C&G
BEGIN 25.00' RAD C&G
TC ELEV. 1186.56 (THEOR.)

42 35+57.56 - 52.47' R
END 25.00' RAD C&G
BEGIN STR. C&G
TC ELEV. 1186.30 (THEOR.)

43 35+57.61 - 71.87' R
END STR. C&G
TC ELEV. (MATCH EXISTING)

REGISTERED PROFESSIONAL ENGINEER
REG NO.
8161
JOSH
LARSON
7-3-15
SOUTH DAKOTA

Note: All Curb & Gutter shown on this sheet is Type B69 and all P gutter is Type P6 except as noted.
All curbside sidewalk is 6' wide and all boulevard sidewalk is 5' wide except as noted.

- 6" Concrete Sidewalk
- Colored Concrete Sidewalk
- Reinforced Concrete Sidewalk
- Asphalt (Quantity in Section F)
- Concrete (Quantity in Section F)
- Gravel (Quantity in Section F)
- Cross Slope Differs From Typ. (See General Notes)

STATE OF SOUTH DAKOTA	PROJECT	SHEET	TOTAL SHEETS
	NH 0050(99)381	B48	B106

CURB & GUTTER LAYOUT

FOR BIDDING PURPOSES ONLY

1 36+20.48 - 27.50' L
END 35.00' RAD C&G
BEGIN 10907.50' RAD C&G
TC ELEV. 1186.08 (THEOR.)

2 36+97.72 - 27.50' L
END 10907.50' RAD C&G
BEGIN STR. C&G
TC ELEV. 1186.24

3 37+46.89 - 27.50' L
END STR. C&G
BEGIN 747.86' RAD C&G
TC ELEV. 1186.42

4 37+66.00 - 27.90' L
END 747.86' RAD C&G
BEGIN 747.86' RAD TYPE P GUTTER
TC ELEV. 1186.49 (THEOR.)

5 37+86.00 - 28.35' L
END 747.86' RAD TYPE P GUTTER
BEGIN 747.86' RAD C&G
TC ELEV. 1186.55 (THEOR.)

6 38+01.00 - 28.69' L
END 747.86' RAD C&G
BEGIN 747.86' RAD TYPE P GUTTER
TC ELEV. 1186.59 (THEOR.)

7 38+31.00 - 29.42' L
END 747.86' RAD TYPE P GUTTER
BEGIN 747.86' RAD C&G
TC ELEV. 1186.67 (THEOR.)

8 38+59.98 - 30.16' L
END 747.86' RAD C&G
BEGIN STR. C&G
TC ELEV. 1186.75

9 38+61.93 - 30.17' L
END STR. C&G
TC ELEV. 1186.76

36+41
BEGIN 0.02 FT/FT TO 0.066 FT/FT
CROSS SLOPE TRANSITION

37+73
END 0.02 FT/FT TO -0.066 FT/FT
CROSS SLOPE TRANSITION
BEGIN FULL SUPERELEVATION

* 36+41 R
BEGIN -0.02 FT/FT TO 0.066 FT/FT
CROSS SLOPE TRANSITION

** 37+73 R
END -0.02 FT/FT TO 0.066 FT/FT
CROSS SLOPE TRANSITION
BEGIN FULL SUPERELEVATION

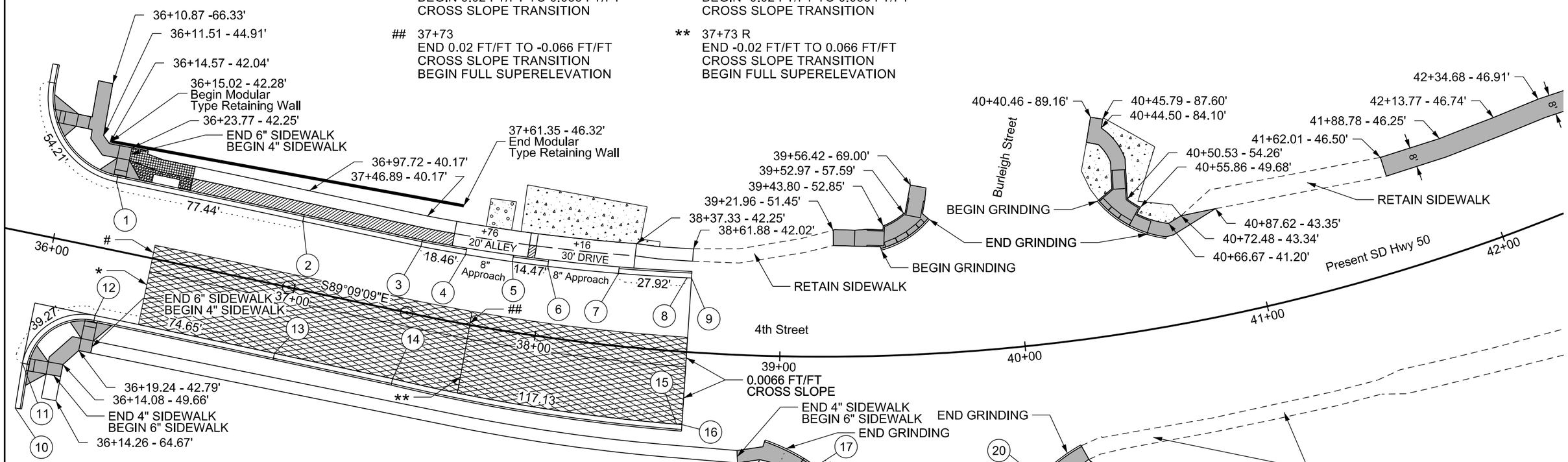

10 35+98.53 - 70.93' R
BEGIN STR. C&G
TC ELEV. (MATCH EXISTING)

11 35+97.76 - 52.47' R
END STR. C&G
BEGIN 25.00' RAD C&G
TC ELEV. 1186.54 (THEOR.)

12 36+22.88 - 27.50' R
END 25.00' RAD C&G
BEGIN 10852.50' RAD C&G
TC ELEV. 1186.29 (THEOR.)

13 36+97.72 - 27.50' R
END 10852.50' RAD C&G
BEGIN STR. C&G
TC ELEV. 1186.64

14 37+46.89 - 27.50' R
END STR. C&G
BEGIN 755.54' RAD C&G
TC ELEV. 1186.99

15 38+59.98 - 29.56' R
END 755.54' RAD C&G
BEGIN STR. C&G
TC ELEV. 1187.47

16 38+62.12 - 29.59' R
END STR. C&G
TC ELEV. 1187.47

17 39+16.34 - 43.57' R
BEGIN 50.00' RAD C&G
TC ELEV. 1186.98 (THEOR.)

18 39+32.66 - 77.17' R
END 50.00' RAD C&G
TC ELEV. (MATCH EXISTING)

19 39+78.03 - 88.00' R
BEGIN 75.00' RAD C&G
TC ELEV. (MATCH EXISTING)

20 39+98.55 - 52.44' R
END 75.00' RAD C&G
TC ELEV. 1186.77 (THEOR.)

REGISTERED PROFESSIONAL ENGINEER
REG NO.
8161
JOSH
LARSON
7-3-15
SOUTH DAKOTA

Note: All Curb & Gutter shown on this sheet is Type B69 and all P gutter is Type P9 except as noted.
All curbside sidewalk is 6' wide and all boulevard sidewalk is 5' wide except as noted.

- 6" Concrete Sidewalk
- Colored Concrete Sidewalk
- Reinforced Concrete Sidewalk
- Asphalt (Quantity in Section F)
- Concrete (Quantity in Section F)
- Gravel (Quantity in Section F)
- Cross Slope Differs From Typ. (See General Notes)

STATE OF SOUTH DAKOTA	PROJECT	SHEET	TOTAL SHEETS
	NH 0050(99)381	B49	B106

FOR BIDDING PURPOSES ONLY

CURB & GUTTER LAYOUT

REGISTERED PROFESSIONAL ENGINEER
REG NO.
8161
JOSH
LARSON
7-3-15
SOUTH DAKOTA

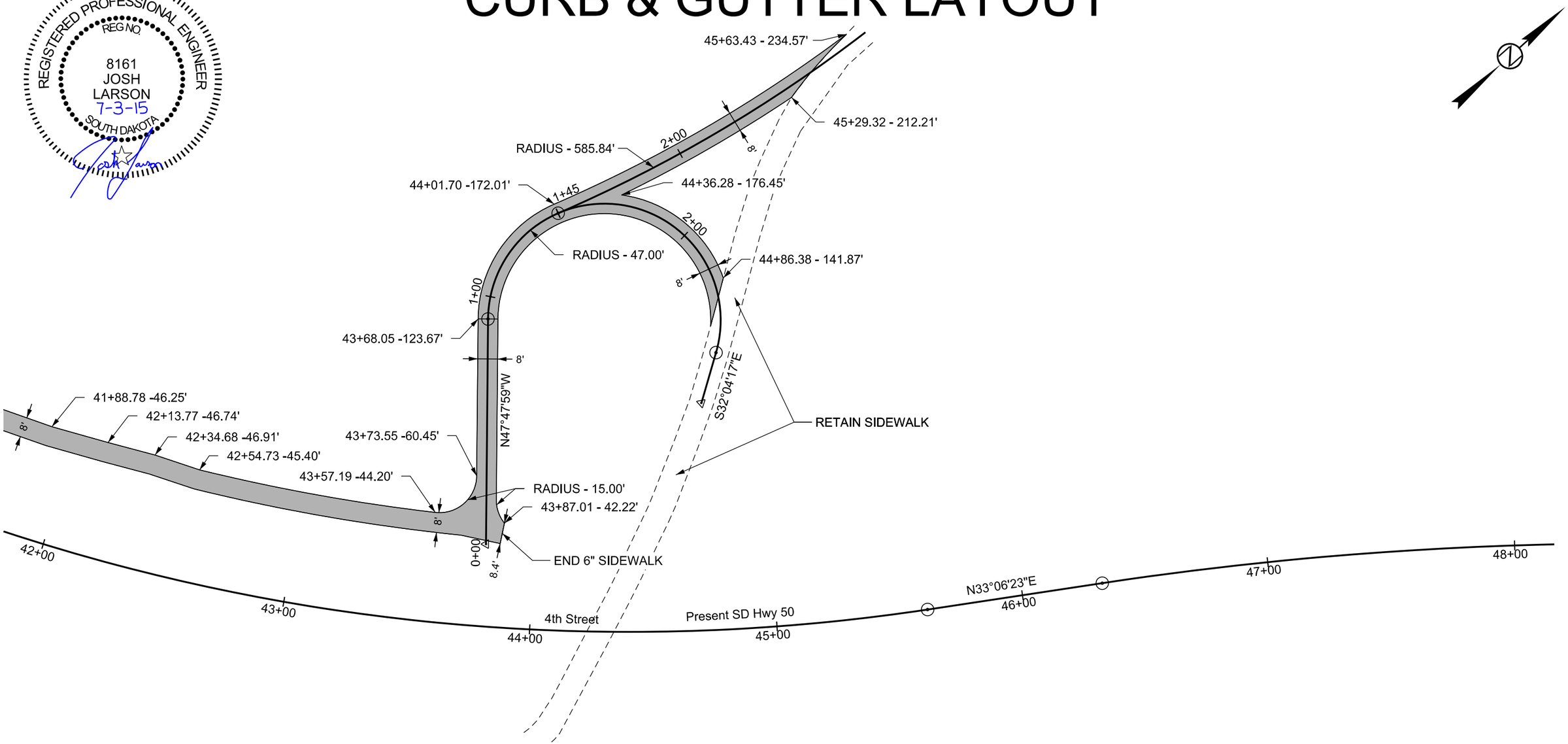

6" Concrete Sidewalk
Colored Concrete Sidewalk
Reinforced Concrete Sidewalk
Asphalt (Quantity in Section F)
Concrete (Quantity in Section F)
Gravel (Quantity in Section F)
Cross Slope Differs From Typ. (See General Notes)

Note: All Curb & Gutter shown on this sheet is Type B69 and all P gutter is Type P9 except as noted.
All curbside sidewalk is 6' wide and all boulevard sidewalk is 5' wide except as noted.

STATE OF SOUTH DAKOTA	PROJECT	SHEET	TOTAL SHEETS
	NH 0050(99)381	B50	B106

FOR BIDDING PURPOSES ONLY

CURB RAMP LAYOUT

REGISTERED PROFESSIONAL ENGINEER
REG NO.
8161
JOSH
LARSON
7-3-15
SOUTH DAKOTA

1 5+92.37 - 33.11' L
Center Type 1
Curb Ramp

2 6+08.79 - 52.31' L
Center Type 1
Curb Ramp

3 6+51.60 - 52.50' L
Center Type 1
Curb Ramp

4 6+69.08 - 32.59' L
Center Type 1
Curb Ramp

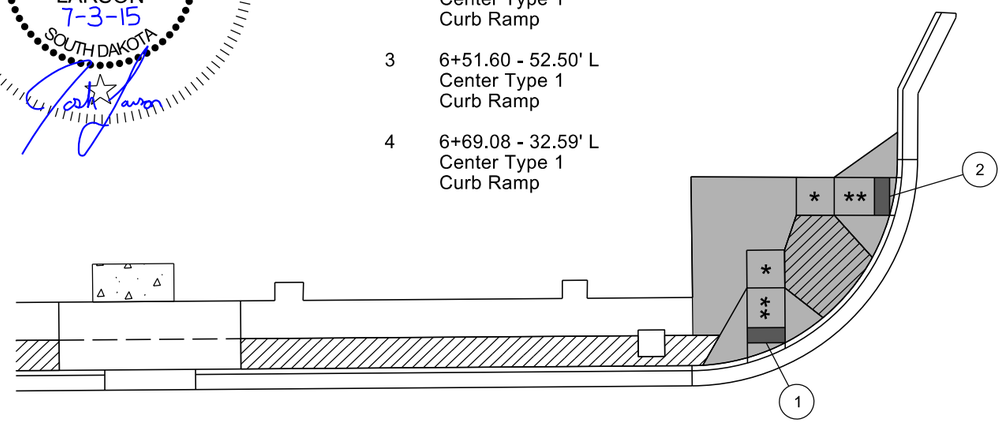

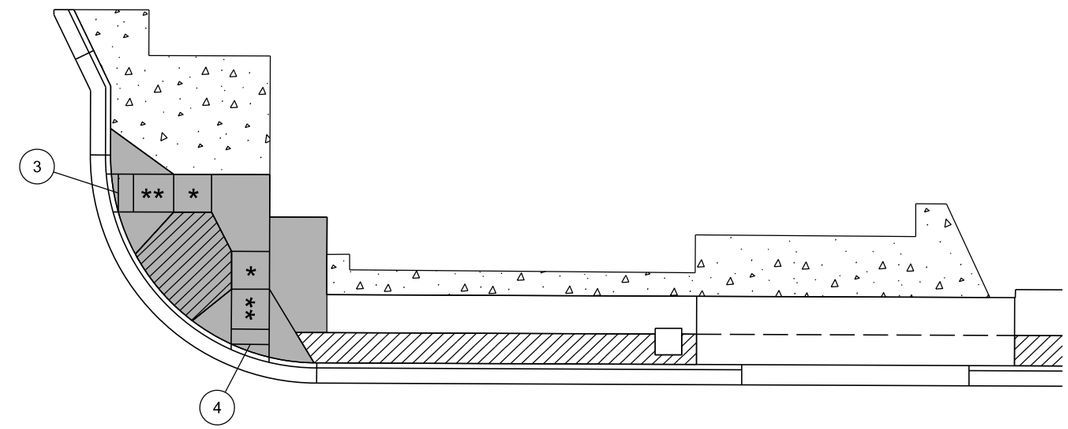

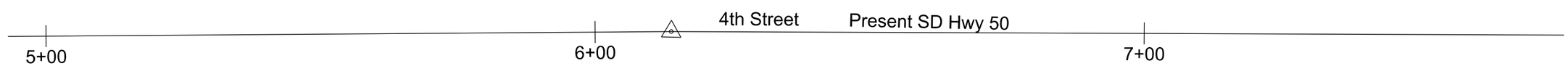

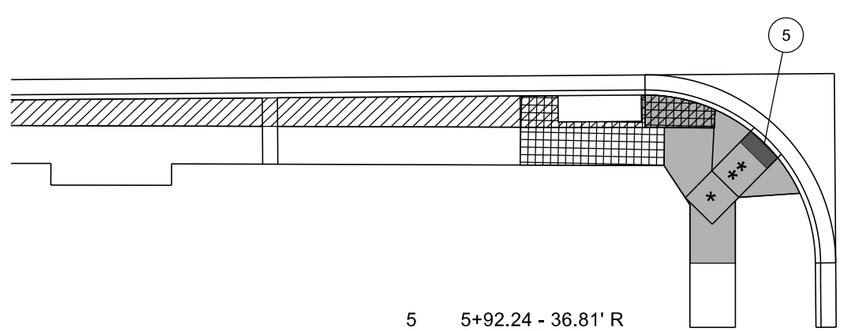

Cedar Street

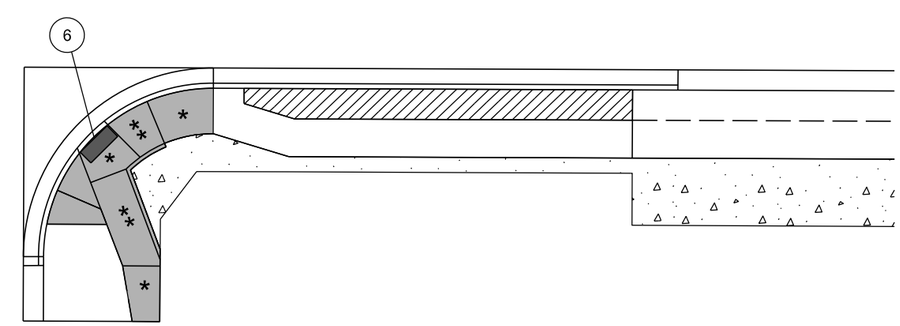

5 5+92.24 - 36.81' R
Center Type 2
Curb Ramp

6 6+70.97 - 36.81' R
Center Type 3
Curb Ramp

6" Concrete Sidewalk

Colored Concrete Sidewalk

Reinforced Concrete Sidewalk

Asphalt (Quantity in Section F)

Concrete (Quantity in Section F)

Gravel (Quantity in Section F)

Legend:

* Turning Space with 2% maximum slope

** Curb Ramp with 8.3% maximum slope and 2% maximum cross slope

Detectable Warning

STATE OF SOUTH DAKOTA	PROJECT	SHEET	TOTAL SHEETS
	NH 0050(99)381	B51	B106

CURB RAMP LAYOUT

FOR BIDDING PURPOSES ONLY

REGISTERED PROFESSIONAL ENGINEER
REG NO.
8161
JOSH
LARSON
7-3-15
SOUTH DAKOTA

1 10+14.81 - 32.72' L
Center Type 1
Curb Ramp

2 10+31.41 - 50.58' L
Center Type 1
Curb Ramp

3 10+73.51 - 47.39' L
Center Type 1
Curb Ramp

4 10+88.81 - 32.69' L
Center Type 1
Curb Ramp

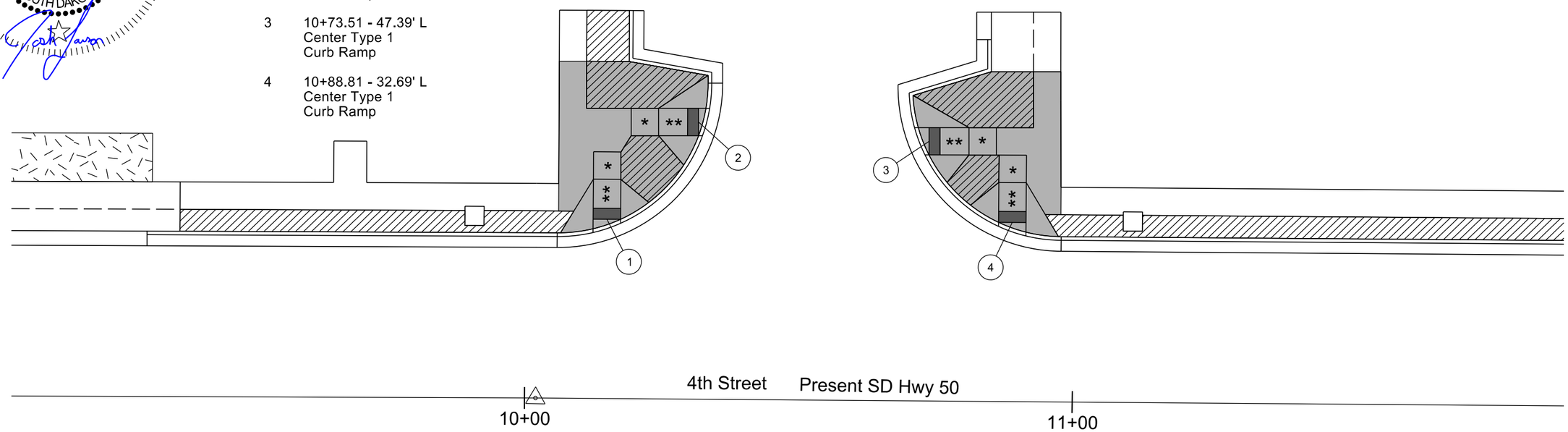

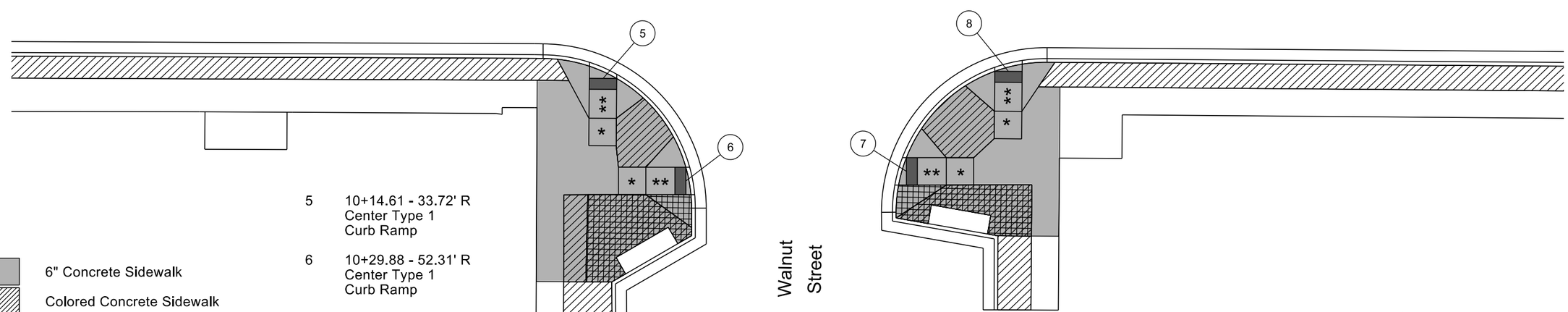

5 10+14.61 - 33.72' R
Center Type 1
Curb Ramp

6 10+29.88 - 52.31' R
Center Type 1
Curb Ramp

7 10+70.12 - 50.26' R
Center Type 1
Curb Ramp

8 10+88.61 - 31.88' R
Center Type 1
Curb Ramp

6" Concrete Sidewalk

Colored Concrete Sidewalk

Reinforced Concrete Sidewalk

Asphalt (Quantity in Section F)

Concrete (Quantity in Section F)

Gravel (Quantity in Section F)

Legend:

* Turning Space with 2% maximum slope

** Curb Ramp with 8.3% maximum slope and 2% maximum cross slope

Detectable Warning

STATE OF SOUTH DAKOTA	PROJECT	SHEET	TOTAL SHEETS
	NH 0050(99)381	B52	B106

CURB RAMP LAYOUT

FOR BIDDING PURPOSES ONLY

REGISTERED PROFESSIONAL ENGINEER
REG NO.
8161
JOSH
LARSON
7-3-15
SOUTH DAKOTA

1 14+45.10 - 36.81' L
Center Type 2
Curb Ramp

2 15+19.88 - 36.97' L
Center Type 2
Curb Ramp

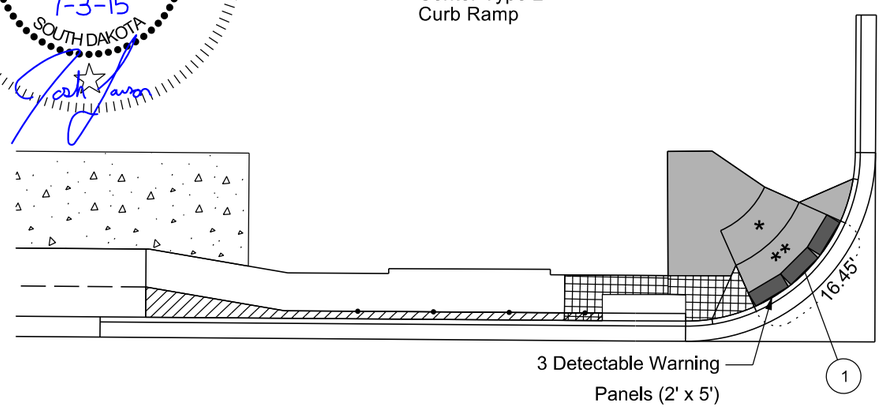

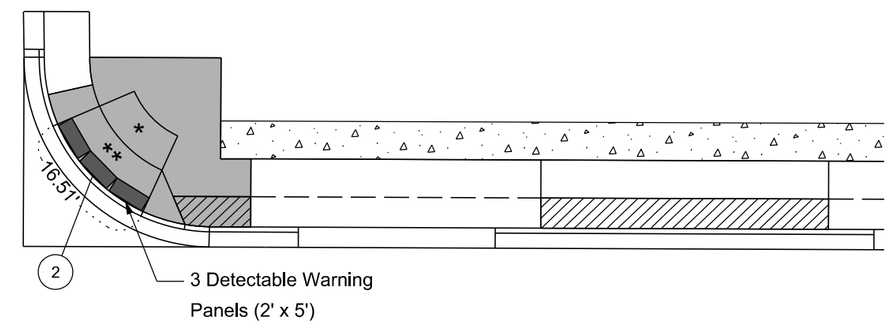

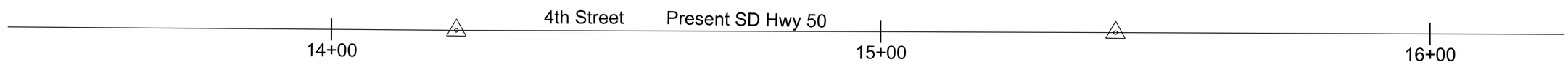

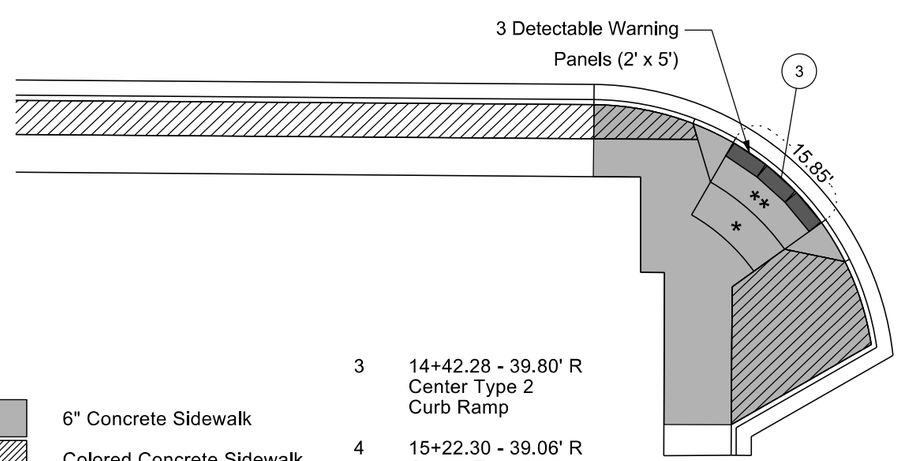

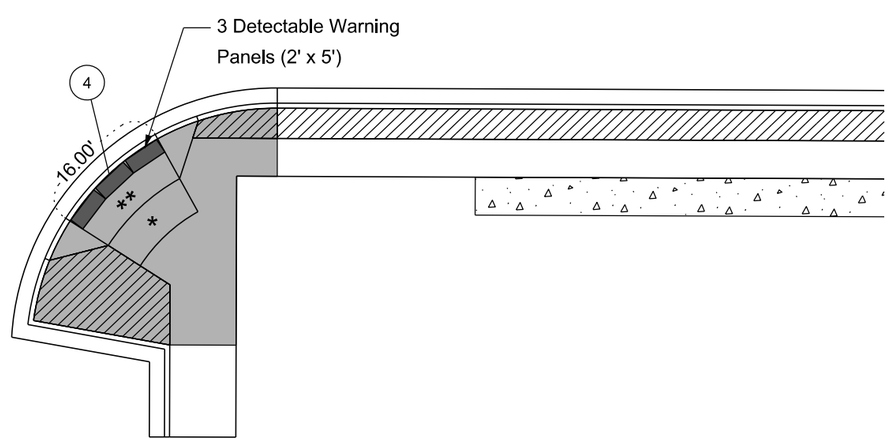

Douglas Street

3 14+42.28 - 39.80' R
Center Type 2
Curb Ramp

4 15+22.30 - 39.06' R
Center Type 2
Curb Ramp

- 6" Concrete Sidewalk
- Colored Concrete Sidewalk
- Reinforced Concrete Sidewalk
- Asphalt (Quantity in Section F)
- Concrete (Quantity in Section F)
- Gravel (Quantity in Section F)

Legend:

- * Turning Space with 2% maximum slope
- ** Curb Ramp with 8.3% maximum slope and 2% maximum cross slope
- Detectable Warning

STATE OF SOUTH DAKOTA	PROJECT	SHEET	TOTAL SHEETS
	NH 0050(99)381	B53	B106

CURB RAMP LAYOUT

FOR BIDDING PURPOSES ONLY

REGISTERED PROFESSIONAL ENGINEER
REG NO.
8161
JOSH
LARSON
7-3-15
SOUTH DAKOTA

1 18+72.72 - 31.23' L
Center Type 1
Curb Ramp

2 18+96.83 - 52.50' L
Center Type 1
Curb Ramp

3 19+33.46 - 52.50' L
Center Type 1
Curb Ramp

4 19+52.32 - 33.10' L
Center Type 1
Curb Ramp

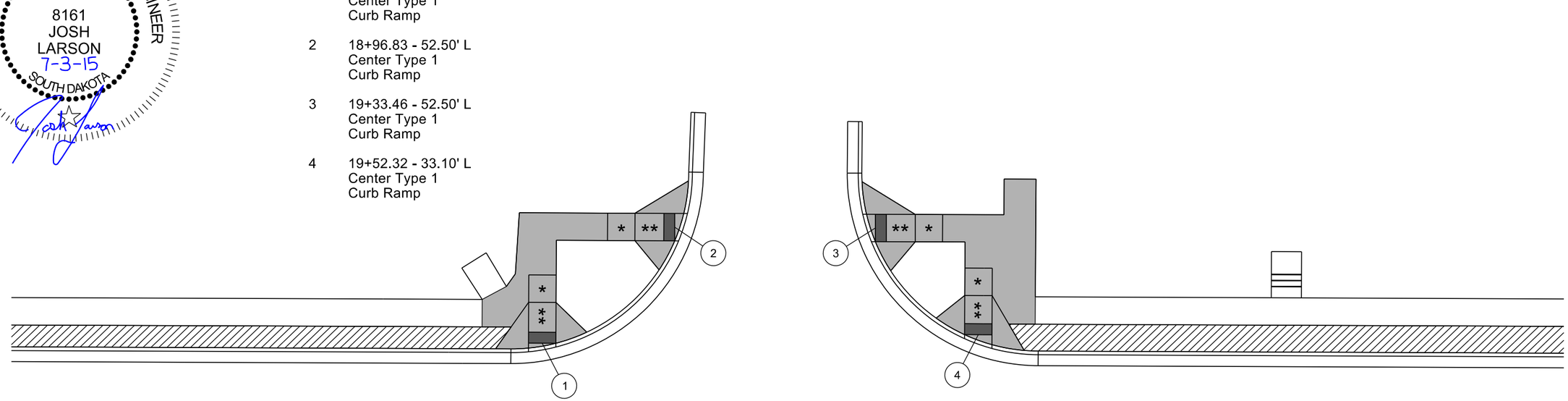

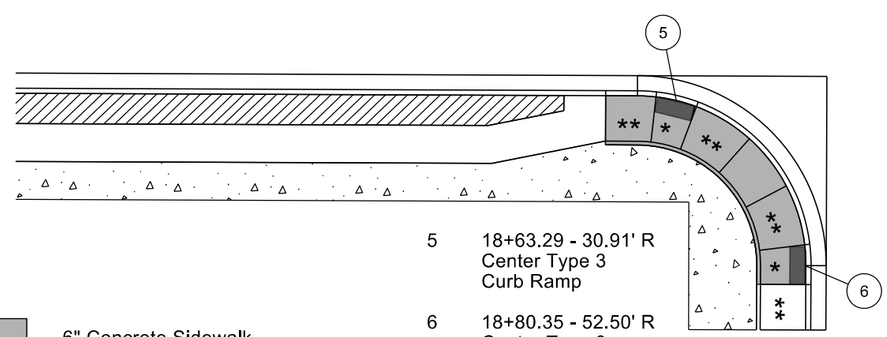

5 18+63.29 - 30.91' R
Center Type 3
Curb Ramp

6 18+80.35 - 52.50' R
Center Type 3
Curb Ramp

7 19+53.72 - 44.44' R
Center Type 3
Curb Ramp

8 19+69.25 - 30.91' R
Center Type 3
Curb Ramp

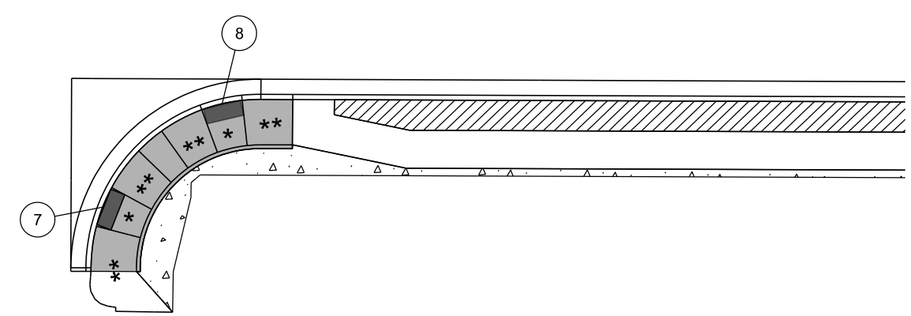

Capital Street

6" Concrete Sidewalk

Colored Concrete Sidewalk

Reinforced Concrete Sidewalk

Asphalt (Quantity in Section F)

Concrete (Quantity in Section F)

Gravel (Quantity in Section F)

Legend:

* Turning Space with 2% maximum slope

** Curb Ramp with 8.3% maximum slope and 2% maximum cross slope

Detectable Warning

STATE OF SOUTH DAKOTA	PROJECT	SHEET	TOTAL SHEETS
	NH 0050(99)381	B54	B106

CURB RAMP LAYOUT

FOR BIDDING PURPOSES ONLY

REGISTERED PROFESSIONAL ENGINEER
REG NO.
8161
JOSH
LARSON
7-3-15
SOUTH DAKOTA

1	22+94.64 - 54.87' L Begin Ramp Slope	5	23+60.15 - 52.50' L Center Type 1 Curb Ramp	7	23+84.55 - 37.92' L Begin Ramp Slope	9	23+79.80 - 55.00' L Begin Ramp Slope
2	22+95.83 - 70.00' L End Ramp Slope	6	23+74.83 - 31.62' L Center Type 1 Curb Ramp	8	23+80.14 - 50.01' L End Ramp Slope	10	23+79.73 - 63.45' L End Ramp Slope
3	22+99.67 - 32.45' L Center Type 1 Curb Ramp						
4	23+14.53 - 52.50' L Center Type 1 Curb Ramp						

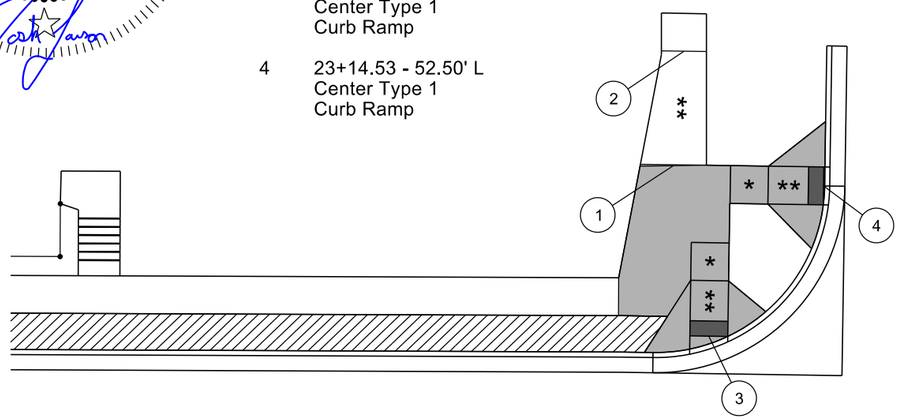

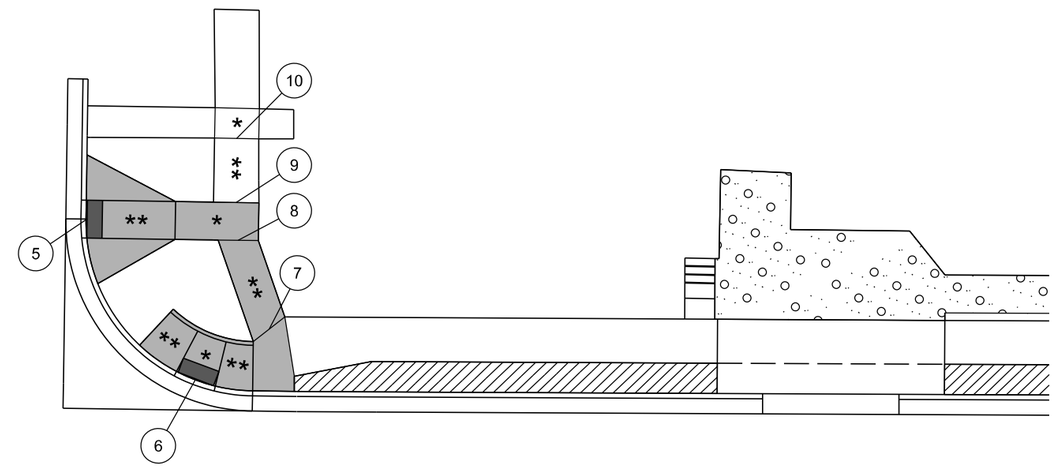

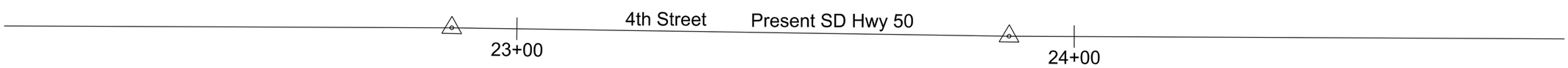

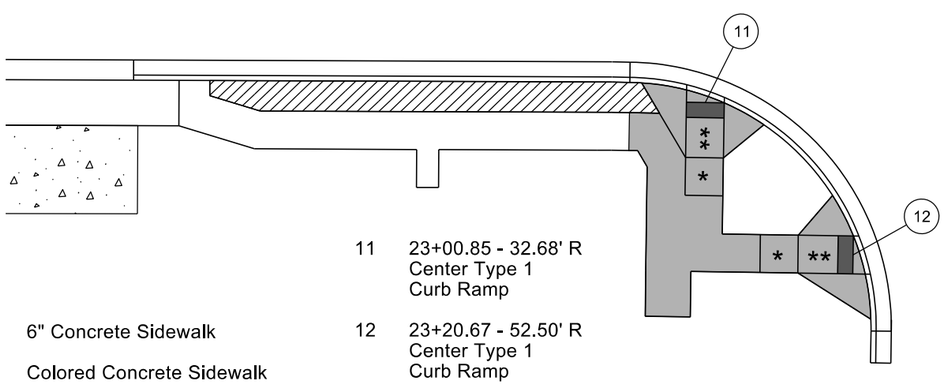

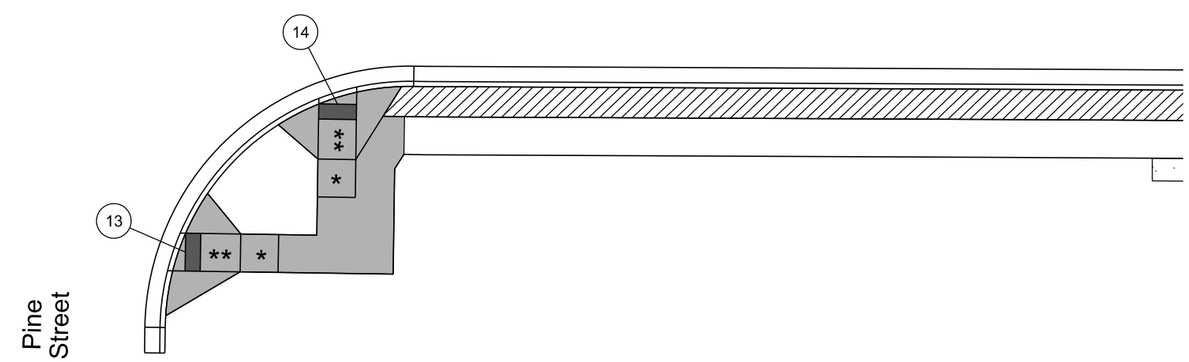

11	23+00.85 - 32.68' R Center Type 1 Curb Ramp	
12	23+20.67 - 52.50' R Center Type 1 Curb Ramp	
13	23+57.01 - 52.50' R Center Type 1 Curb Ramp	
14	23+76.83 - 32.68' R Center Type 1 Curb Ramp	

- 6" Concrete Sidewalk
- Colored Concrete Sidewalk
- Reinforced Concrete Sidewalk
- Asphalt (Quantity in Section F)
- Concrete (Quantity in Section F)
- Gravel (Quantity in Section F)

Legend:

- * Turning Space with 2% maximum slope
- ** Curb Ramp with 8.3% maximum slope and 2% maximum cross slope
- Detectable Warning

STATE OF SOUTH DAKOTA	PROJECT	SHEET	TOTAL SHEETS
	NH 0050(99)381	B55	B106

CURB RAMP LAYOUT

FOR BIDDING PURPOSES ONLY

REGISTERED PROFESSIONAL ENGINEER
REG NO.
8161
JOSH
LARSON
7-3-15
SOUTH DAKOTA

1 27+22.71 - 30.31' L
Center Type 1
Curb Ramp

2 27+39.33 - 40.09' L
Center Type 1
Curb Ramp

3 27+81.85 - 40.09' L
Center Type 1
Curb Ramp

4 27+98.47 - 30.31' L
Center Type 1
Curb Ramp

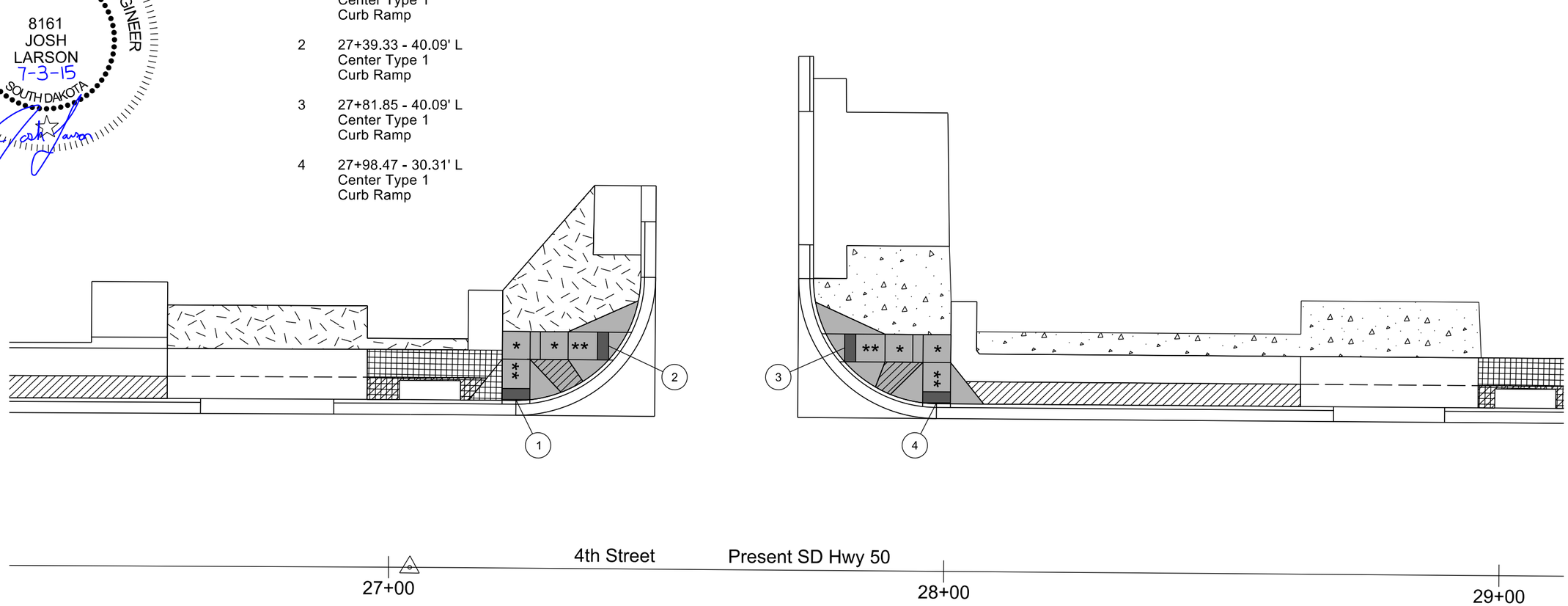

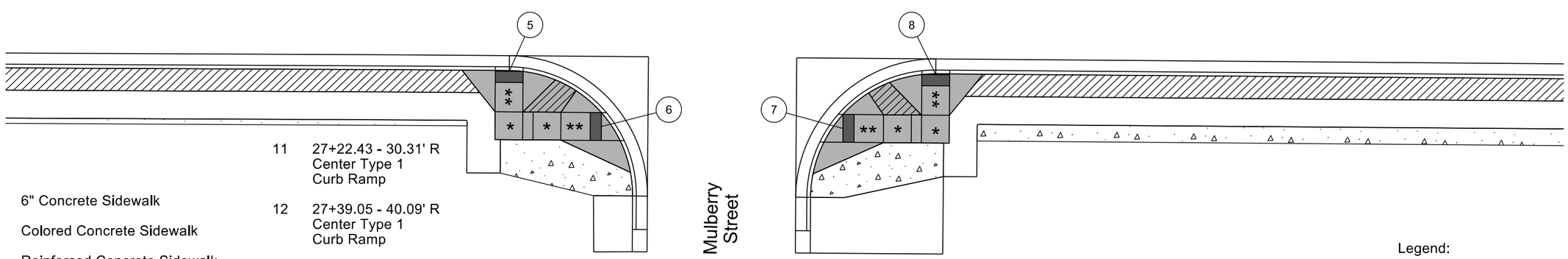

11 27+22.43 - 30.31' R
Center Type 1
Curb Ramp

12 27+39.05 - 40.09' R
Center Type 1
Curb Ramp

13 27+82.46 - 40.09' R
Center Type 1
Curb Ramp

14 27+99.08 - 30.31' R
Center Type 1
Curb Ramp

6" Concrete Sidewalk

Colored Concrete Sidewalk

Reinforced Concrete Sidewalk

Asphalt (Quantity in Section F)

Concrete (Quantity in Section F)

Gravel (Quantity in Section F)

Legend:

* Turning Space with 2% maximum slope

** Curb Ramp with 8.3% maximum slope and 2% maximum cross slope

Detectable Warning

STATE OF SOUTH DAKOTA	PROJECT	SHEET	TOTAL SHEETS
	NH 0050(99)381	B56	B106

CURB RAMP LAYOUT

FOR BIDDING PURPOSES ONLY

REGISTERED PROFESSIONAL ENGINEER
REG NO.
8161
JOSH
LARSON
7-3-15
SOUTH DAKOTA

1 31+29.07 - 30.52' L
Center Type 3
Curb Ramp

2 31+49.85 - 52.50' L
Center Type 1
Curb Ramp

3 31+95.47 - 52.50' L
Center Type 1
Curb Ramp

4 32+16.67 - 30.45' L
Center Type 3
Curb Ramp

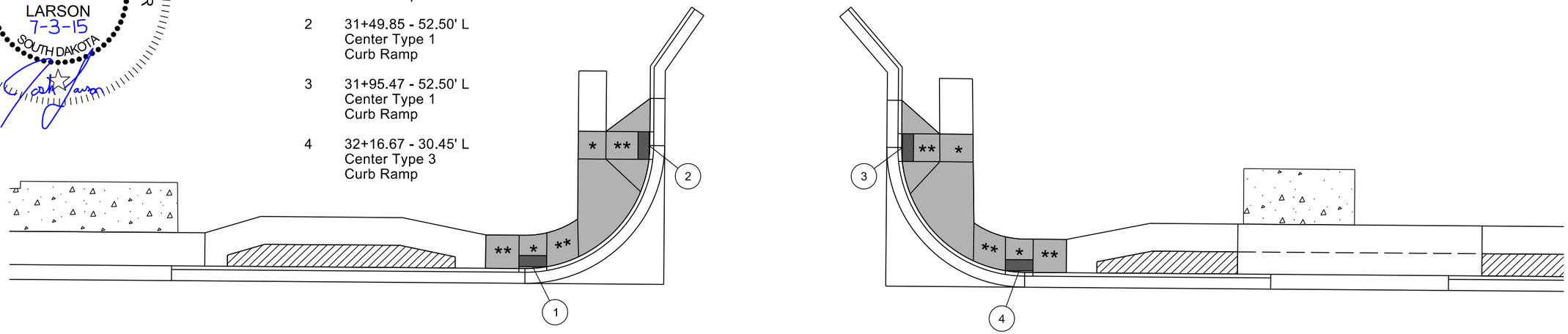

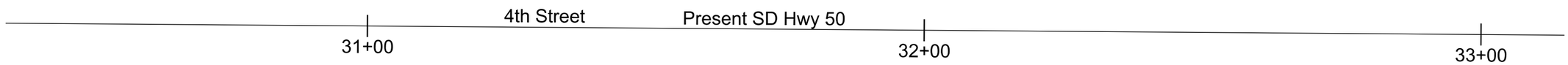

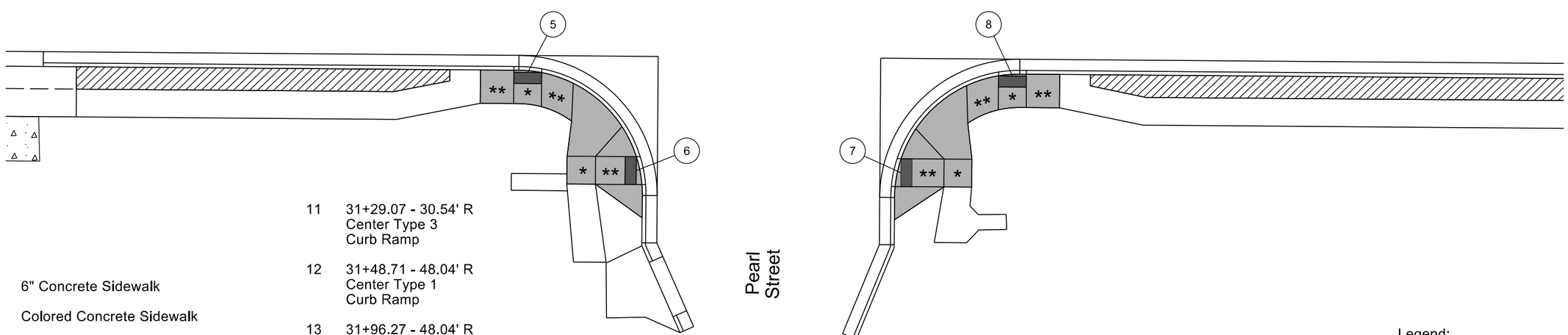

11 31+29.07 - 30.54' R
Center Type 3
Curb Ramp

12 31+48.71 - 48.04' R
Center Type 1
Curb Ramp

13 31+96.27 - 48.04' R
Center Type 1
Curb Ramp

14 32+16.18 - 30.50' R
Center Type 3
Curb Ramp

6" Concrete Sidewalk

Colored Concrete Sidewalk

Reinforced Concrete Sidewalk

Asphalt (Quantity in Section F)

Concrete (Quantity in Section F)

Gravel (Quantity in Section F)

Legend:

* Turning Space with 2% maximum slope

** Curb Ramp with 8.3% maximum slope and 2% maximum cross slope

Detectable Warning

STATE OF SOUTH DAKOTA	PROJECT	SHEET	TOTAL SHEETS
	NH 0050(99)381	B57	B106

CURB RAMP LAYOUT

FOR BIDDING PURPOSES ONLY

REGISTERED PROFESSIONAL ENGINEER
REG NO.
8161
JOSH
LARSON
7-3-15
SOUTH DAKOTA

1 35+42.08 - 34.09' L
Center Type 1
Curb Ramp

2 35+56.91 - 48.62' L
Center Type 1
Curb Ramp

3 35+92.60 - 48.90' L
Center Type 1
Curb Ramp

4 36+21.28 - 30.45' L
Center Type 1
Curb Ramp

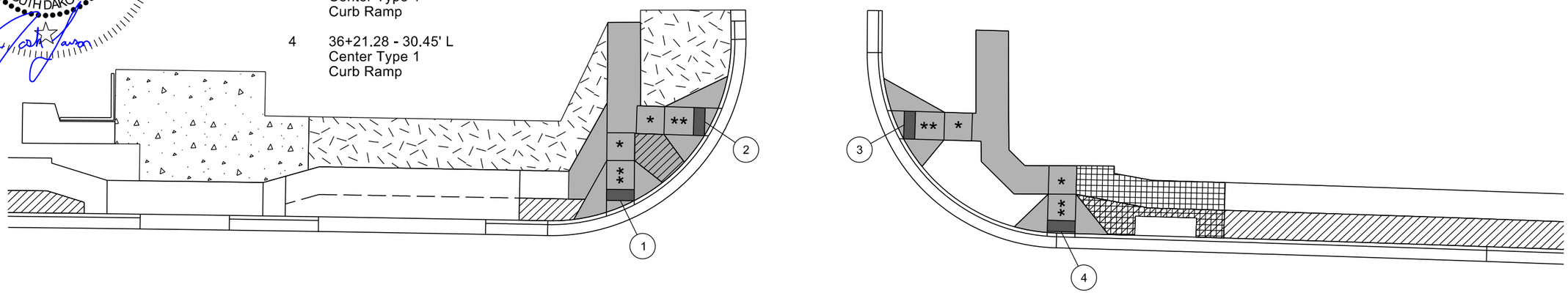

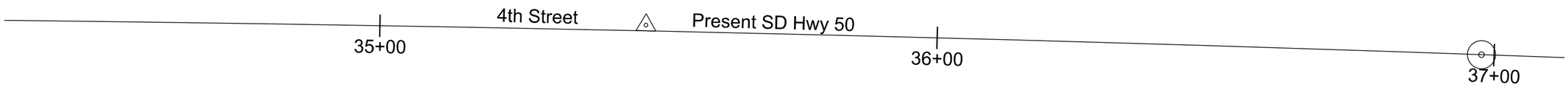

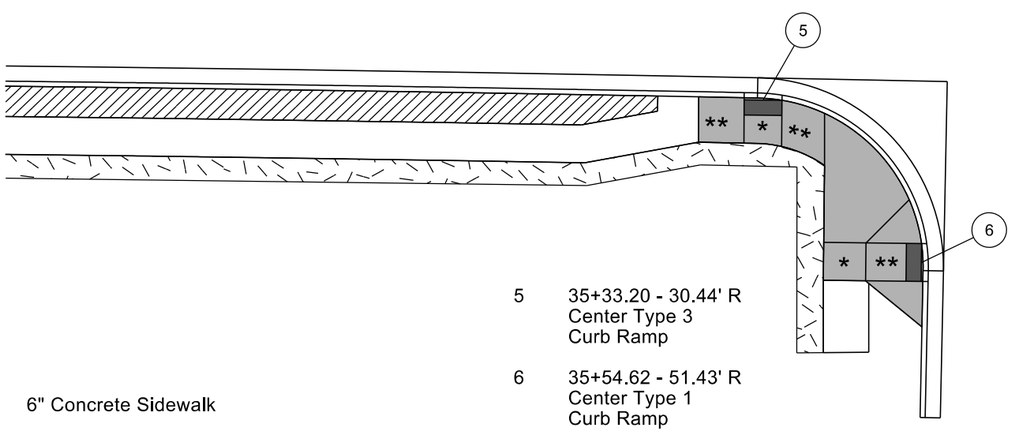

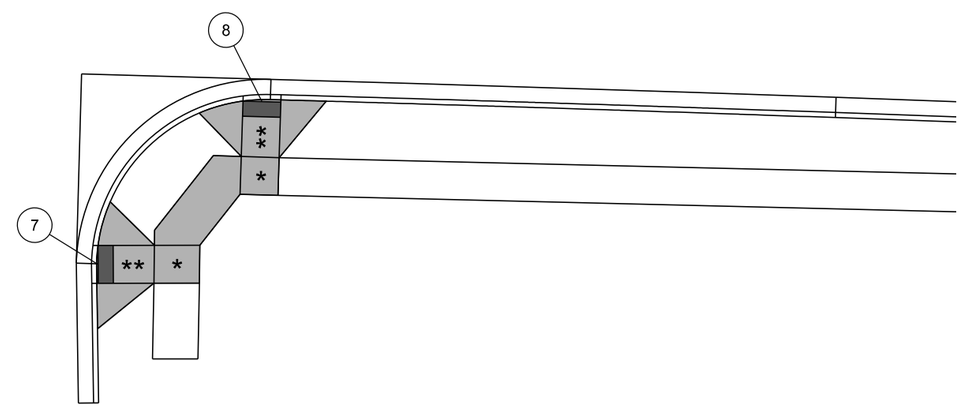

Picotte Street

5 35+33.20 - 30.44' R
Center Type 3
Curb Ramp

6 35+54.62 - 51.43' R
Center Type 1
Curb Ramp

7 36+00.65 - 52.56' R
Center Type 1
Curb Ramp

8 36+21.77 - 30.47' R
Center Type 1
Curb Ramp

6" Concrete Sidewalk

Colored Concrete Sidewalk

Reinforced Concrete Sidewalk

Asphalt (Quantity in Section F)

Concrete (Quantity in Section F)

Gravel (Quantity in Section F)

Legend:

* Turning Space with 2% maximum slope

** Curb Ramp with 8.3% maximum slope and 2% maximum cross slope

Detectable Warning

STATE OF SOUTH DAKOTA	PROJECT	SHEET	TOTAL SHEETS
	NH 0050(99)381	B58	B106

CURB RAMP LAYOUT

FOR BIDDING PURPOSES ONLY

REGISTERED PROFESSIONAL ENGINEER
REG NO.
8161
JOSH
LARSON
7-3-15
SOUTH DAKOTA

1 39+52.22 - 47.14' L
Center Type 3 Mod.
Curb Ramp

2 40+43.85 - 48.62' L
Center Type 3 Mod.
Curb Ramp

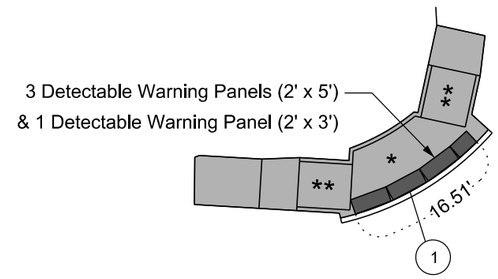

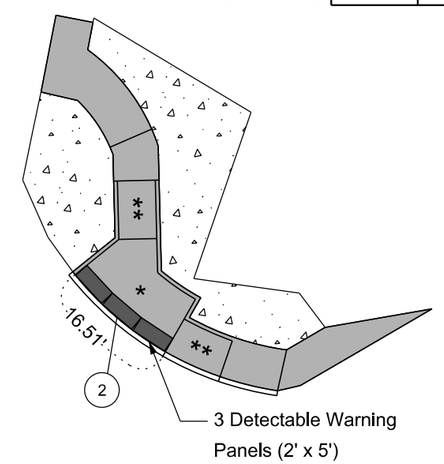

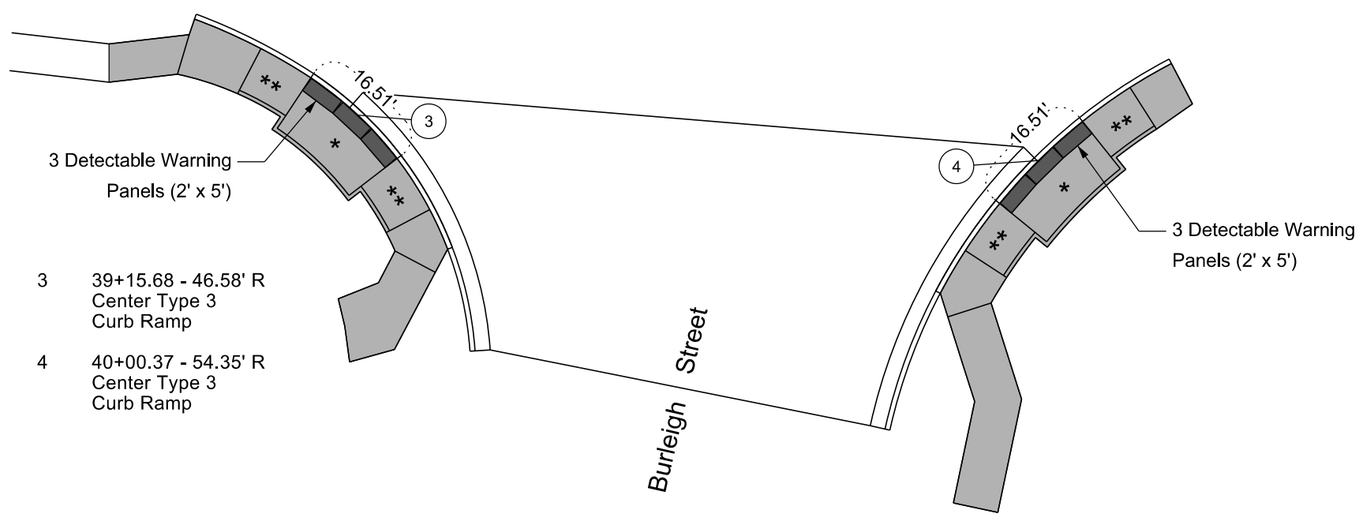

3 39+15.68 - 46.58' R
Center Type 3
Curb Ramp

4 40+00.37 - 54.35' R
Center Type 3
Curb Ramp

6" Concrete Sidewalk
Colored Concrete Sidewalk
Reinforced Concrete Sidewalk
Asphalt (Quantity in Section F)
Concrete (Quantity in Section F)
Gravel (Quantity in Section F)

Legend:

* Turning Space with 2% maximum slope

** Curb Ramp with 8.3% maximum slope and 2% maximum cross slope

Detectable Warning

JUNCTION BOX LAYOUT

FOR BIDDING PURPOSES ONLY

STATE OF SOUTH DAKOTA	PROJECT	SHEET	TOTAL SHEETS
	NH 0050(99)381	B59	B106

REGISTERED PROFESSIONAL ENGINEER
REG NO.
8161
JOSH
LARSON
7-3-15
SOUTH DAKOTA

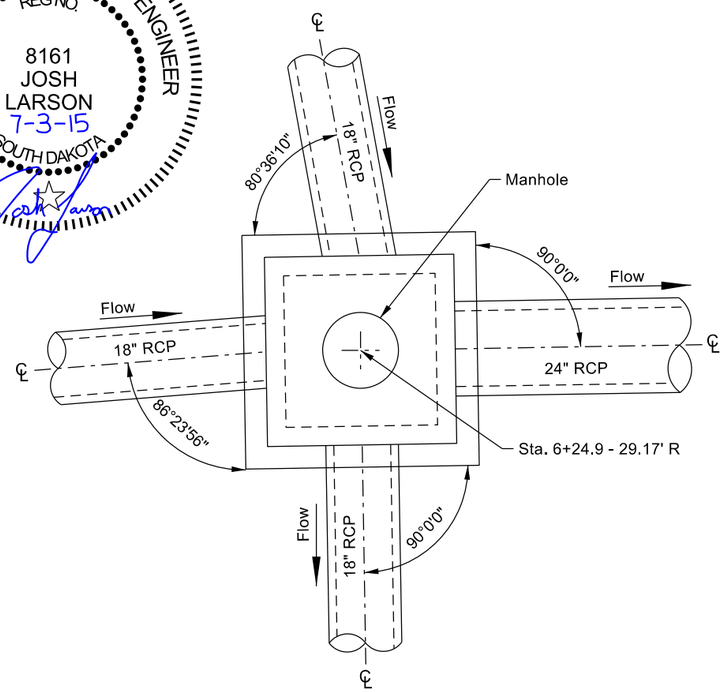

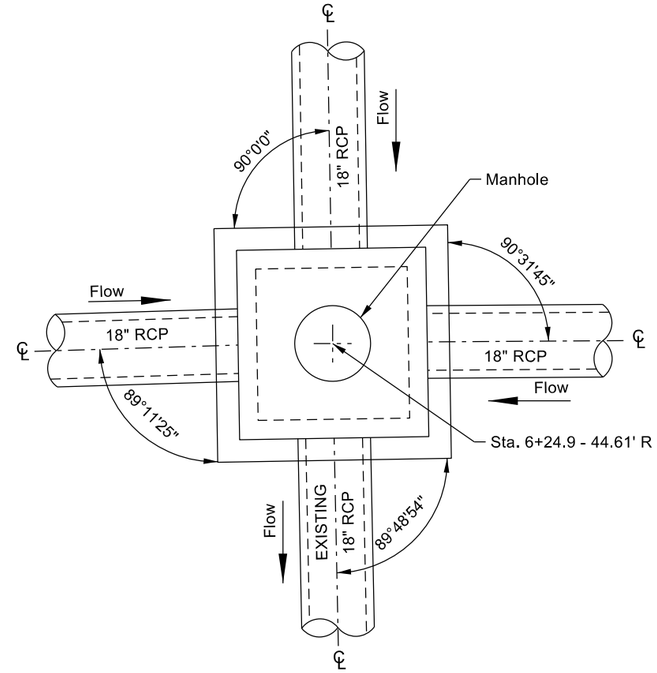

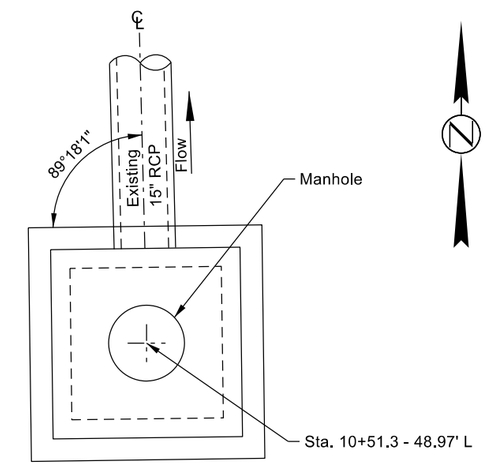

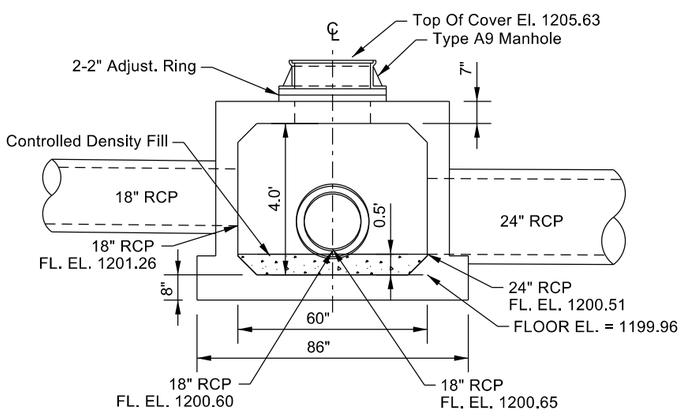

Sta. 6+24.9 - RT29.17'
5' X 5' Junction Box

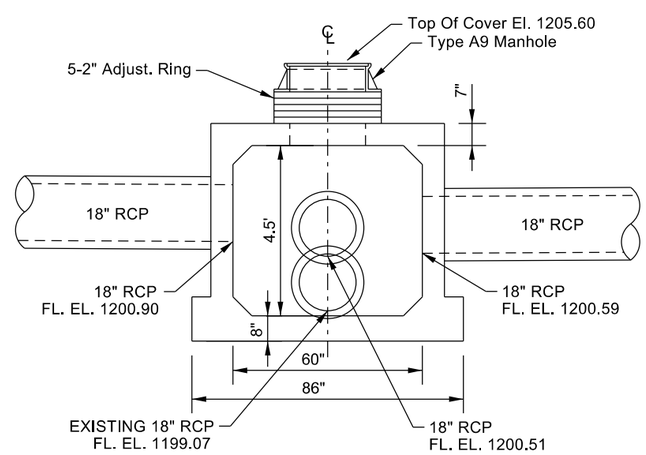

Sta. 6+24.9 - RT44.61'
5' X 5' Junction Box

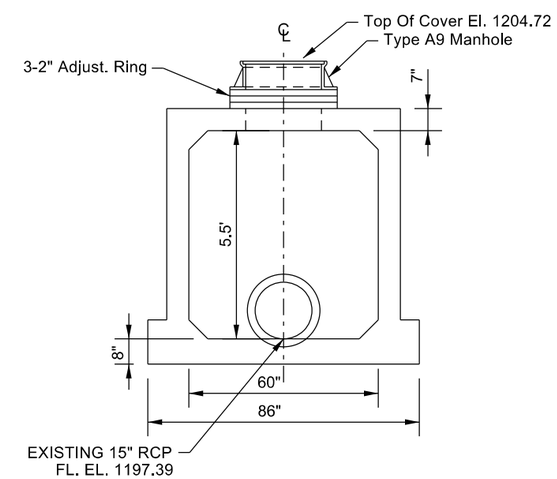

Sta. 10+51.3 - LT48.97'
5' X 5' Junction Box

JUNCTION BOX LAYOUT

FOR BIDDING PURPOSES ONLY

STATE OF SOUTH DAKOTA	PROJECT	SHEET	TOTAL SHEETS
	NH 0050(99)381	B60	B106

REGISTERED PROFESSIONAL ENGINEER
REG NO.
8161
JOSH
LARSON
7-3-15
SOUTH DAKOTA

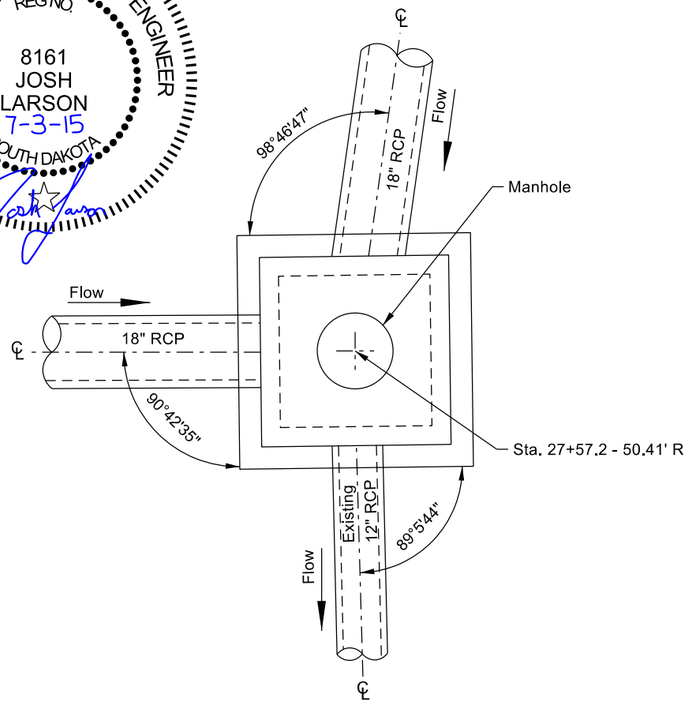

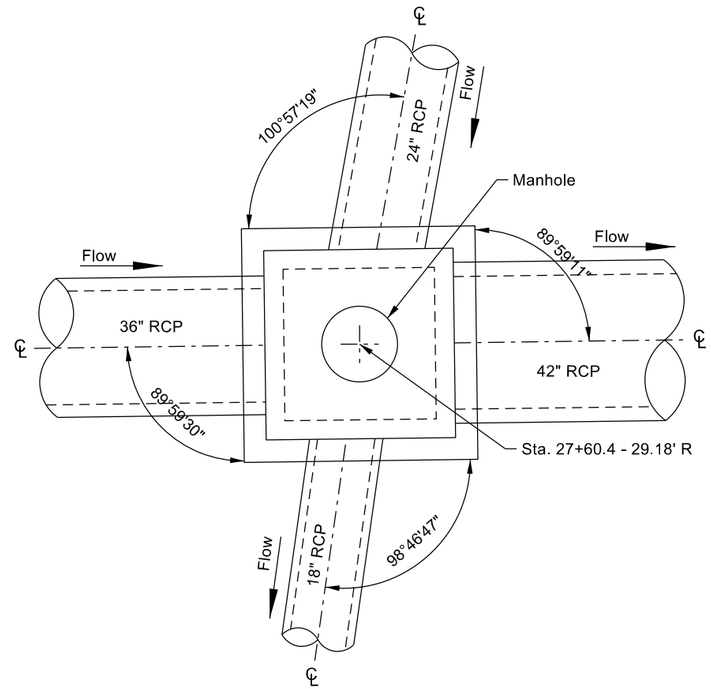

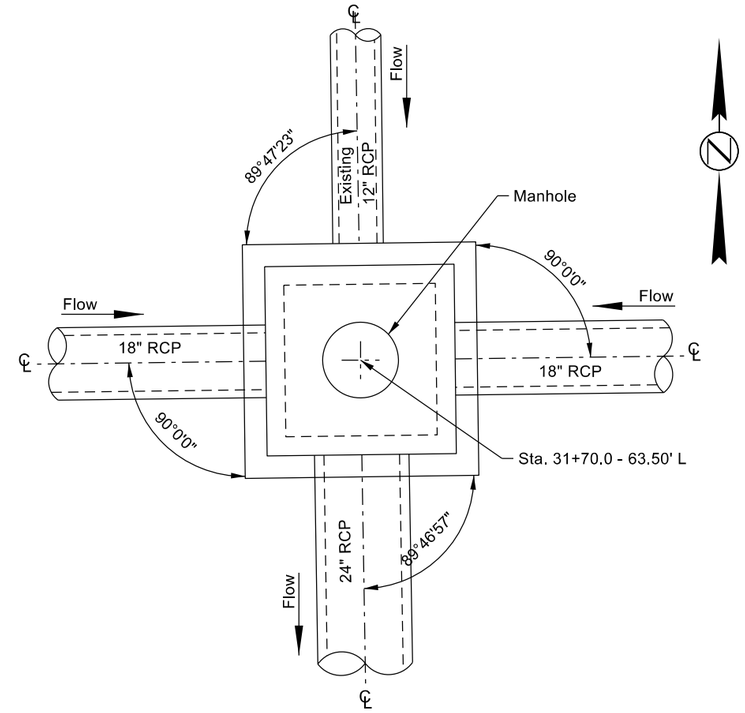

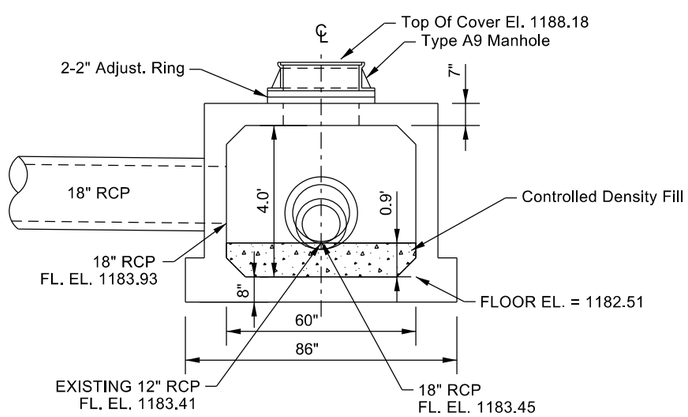

Sta. 27+57.2 - RT50.41'
5' X 5' Junction Box

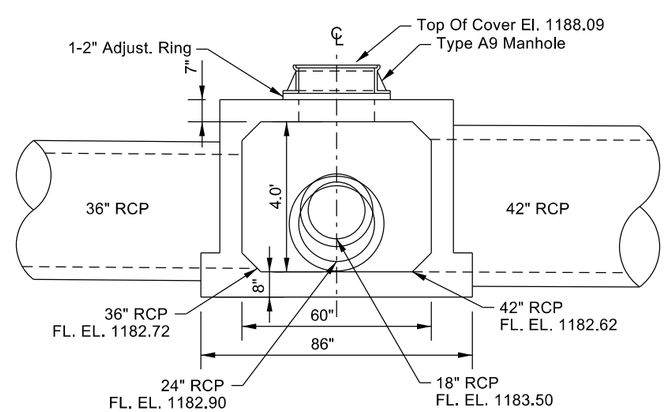

Sta. 27+60.4 - RT29.18'
5' X 5' Junction Box

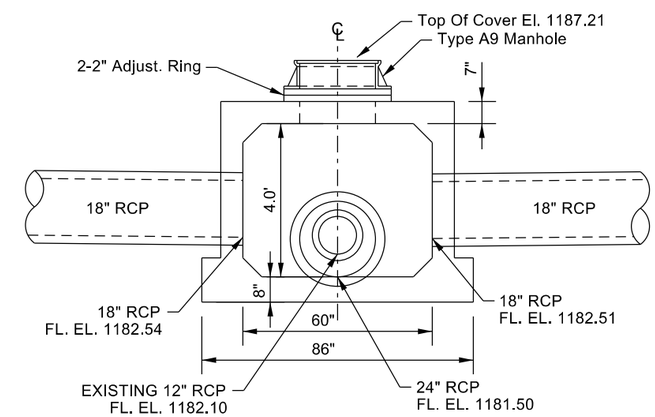

Sta. 31+71.0 - LT63.50'
5' X 5' Junction Box

JUNCTION BOX LAYOUT

FOR BIDDING PURPOSES ONLY

STATE OF SOUTH DAKOTA	PROJECT	SHEET	TOTAL SHEETS
	NH 0050(99)381	B61	B106

REGISTERED PROFESSIONAL ENGINEER
REG NO.
8161
JOSH
LARSON
7-3-15
SOUTH DAKOTA

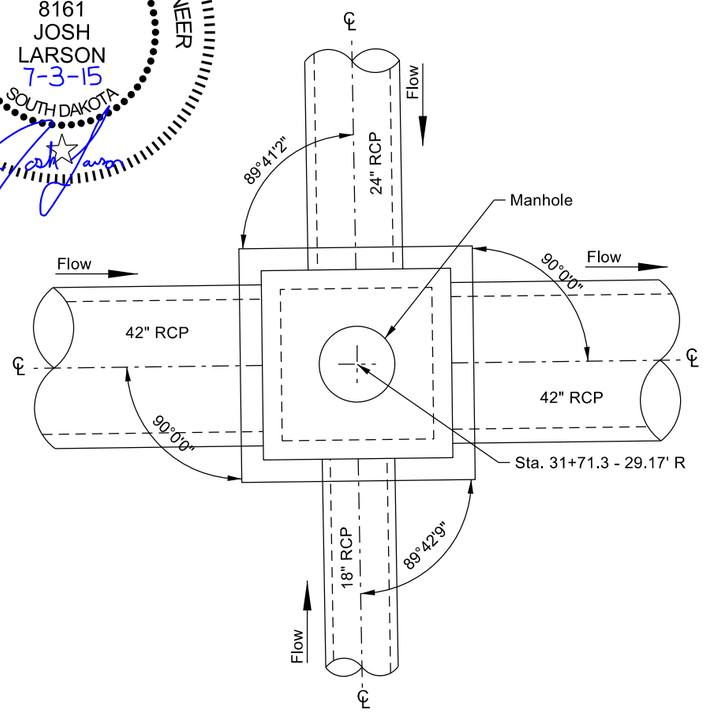

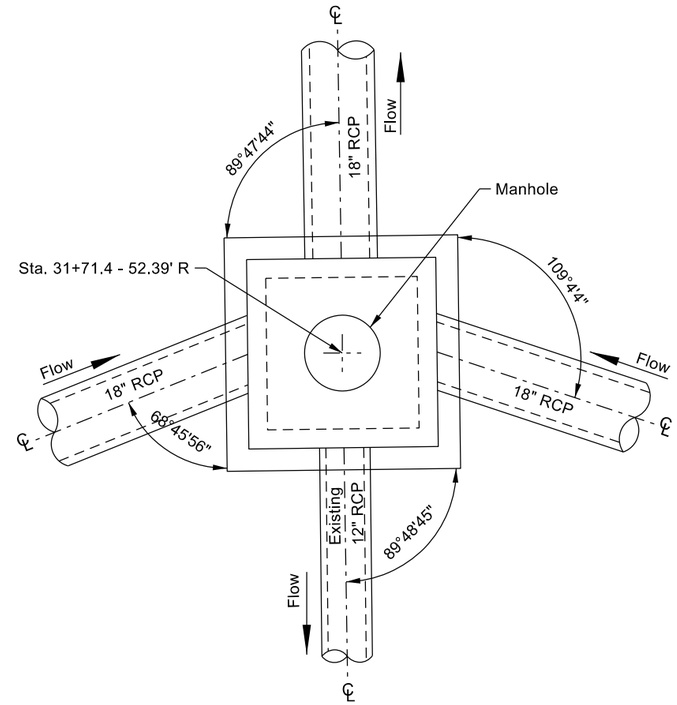

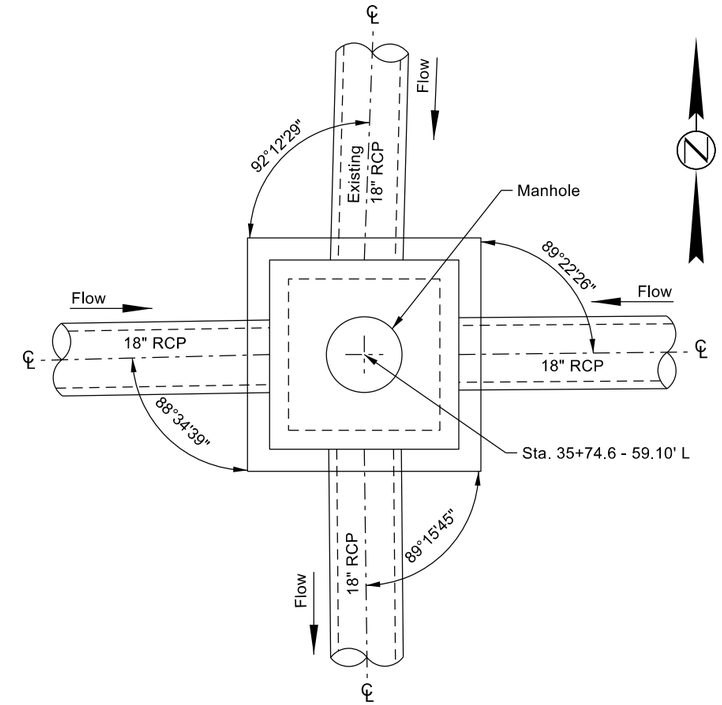

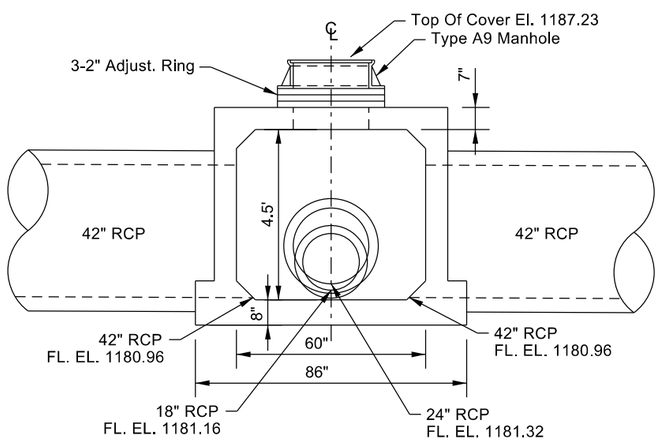

Sta. 31+71.3 - RT29.17'
5' X 5' Junction Box

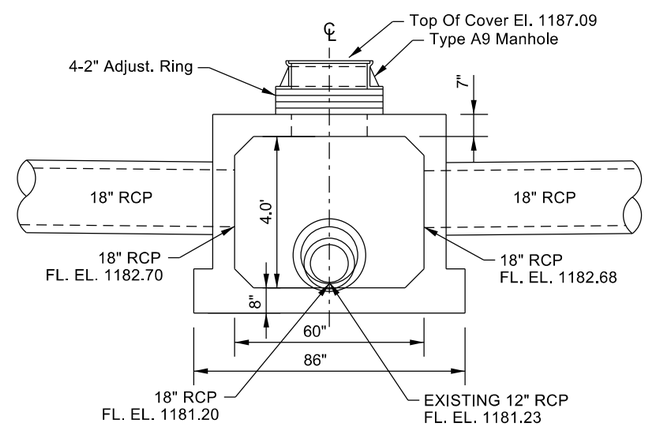

Sta. 31+71.4 - RT52.39'
5' X 5' Junction Box

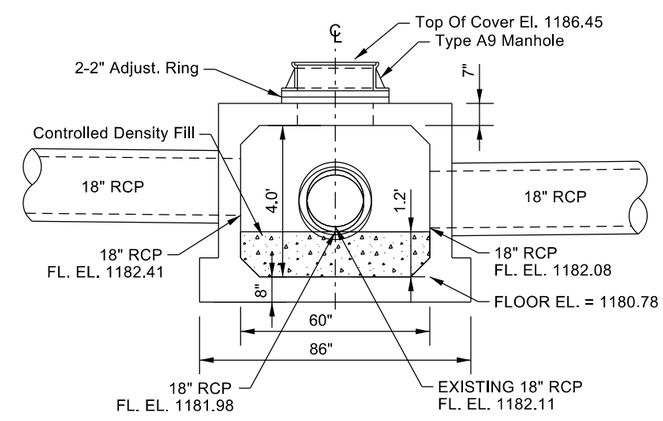

Sta. 35+74.6 - LT59.10'
5' X 5' Junction Box

JUNCTION BOX LAYOUT

FOR BIDDING PURPOSES ONLY

STATE OF SOUTH DAKOTA	PROJECT	SHEET	TOTAL SHEETS
	NH 0050(99)381	B62	B106

REGISTERED PROFESSIONAL ENGINEER
REG NO.
8161
JOSH
LARSON
7-3-15
SOUTH DAKOTA

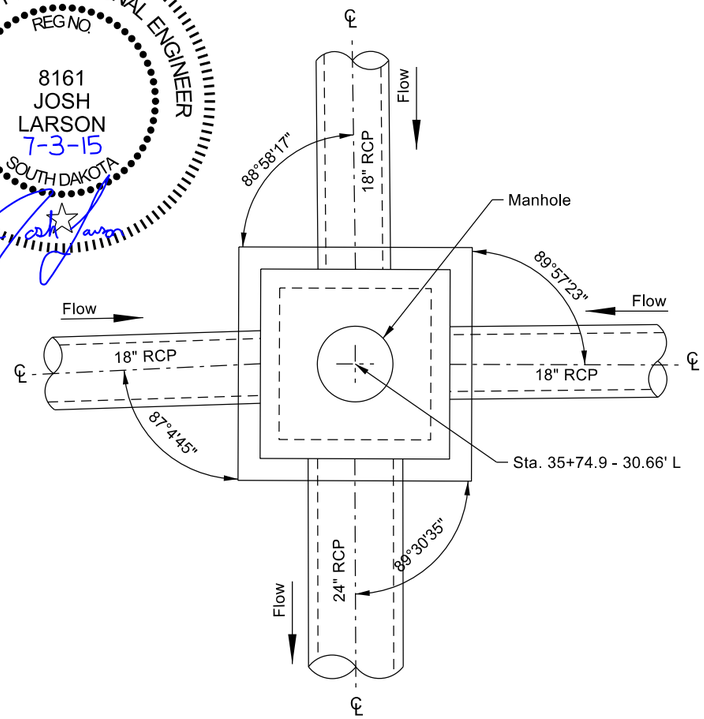

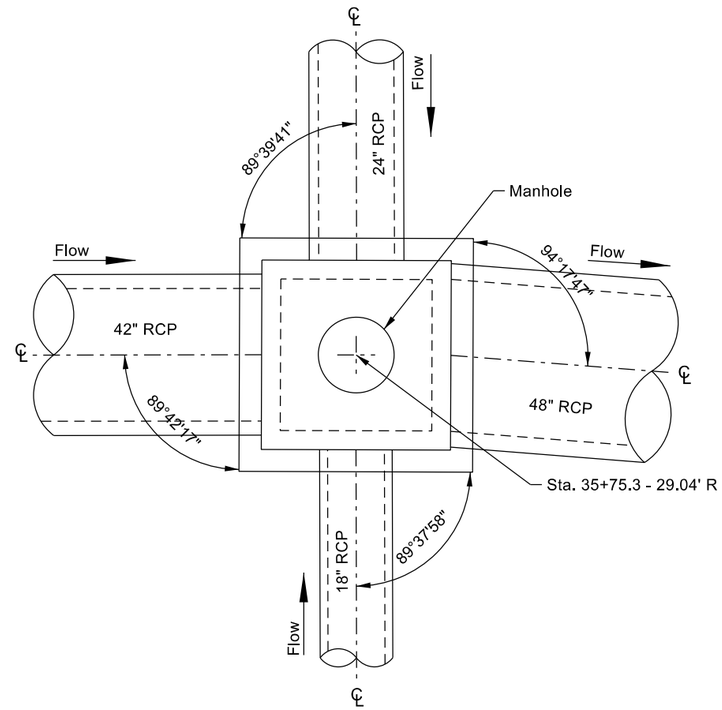

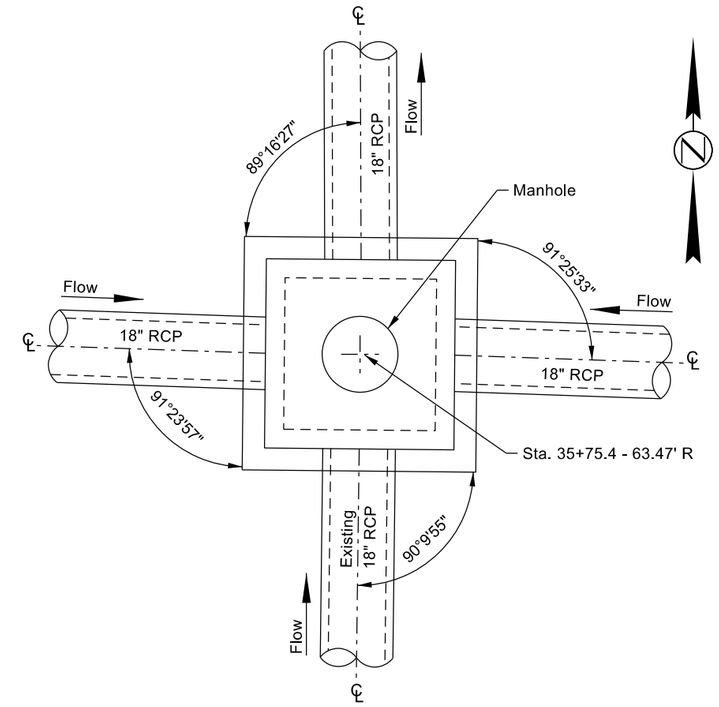

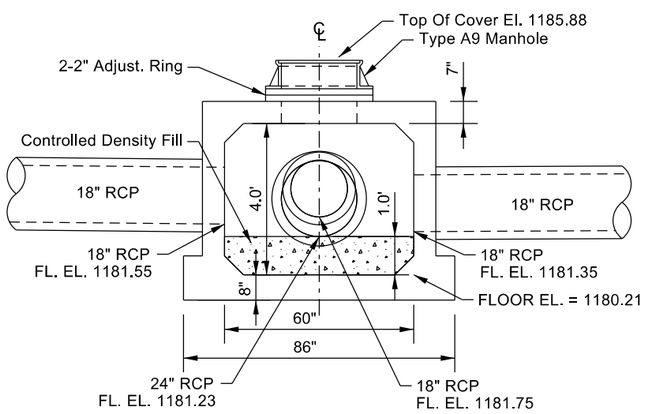

Sta. 35+74.9 - LT30.66'
5' X 5' Junction Box

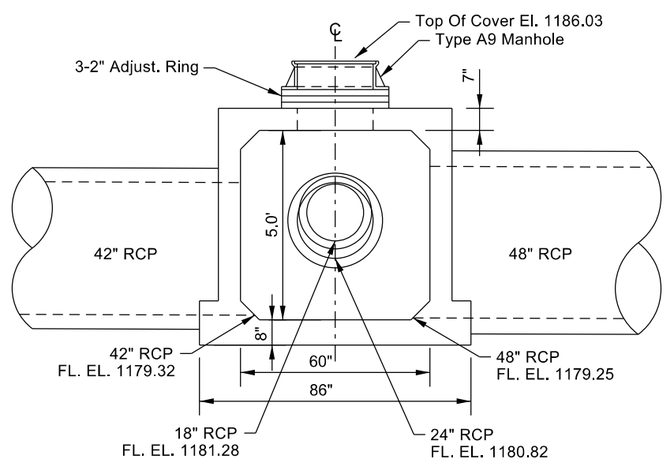

Sta. 35+75.3 - RT29.04'
5' X 5' Junction Box

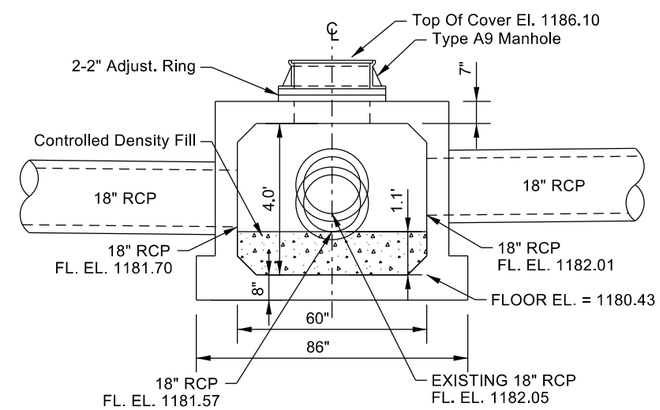

Sta. 35+75.4 - RT63.47'
5' X 5' Junction Box

JUNCTION BOX LAYOUT

FOR BIDDING PURPOSES ONLY

STATE OF SOUTH DAKOTA	PROJECT	SHEET	TOTAL SHEETS
	NH 0050(99)381	B63	B106

REGISTERED PROFESSIONAL ENGINEER
REG NO.
8161
JOSH
LARSON
7-3-15
SOUTH DAKOTA

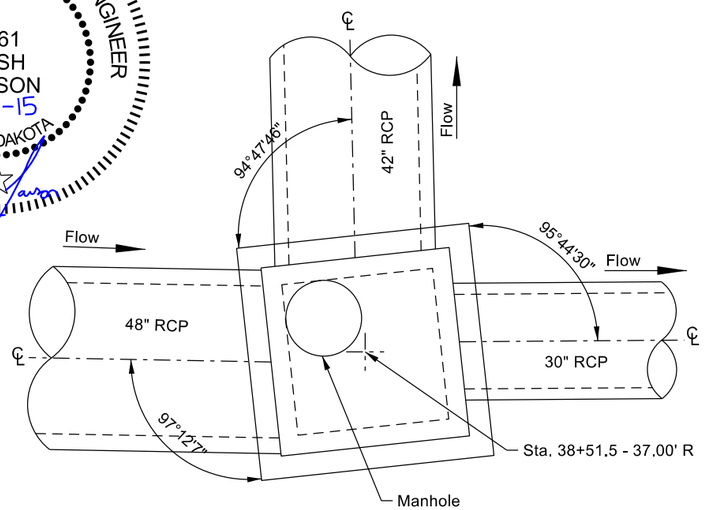

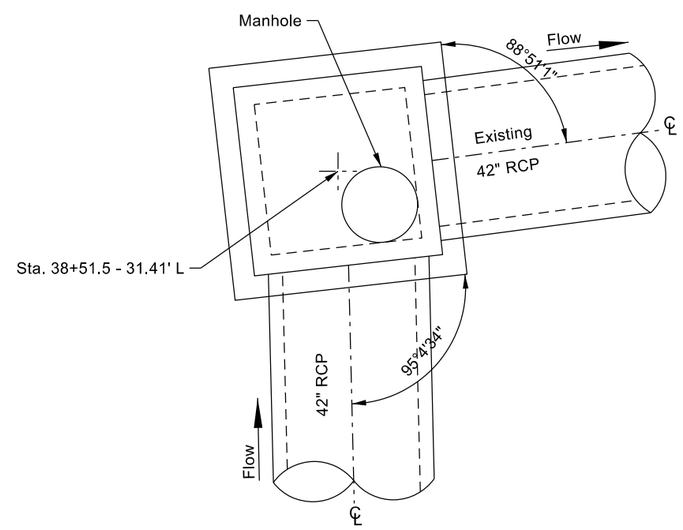

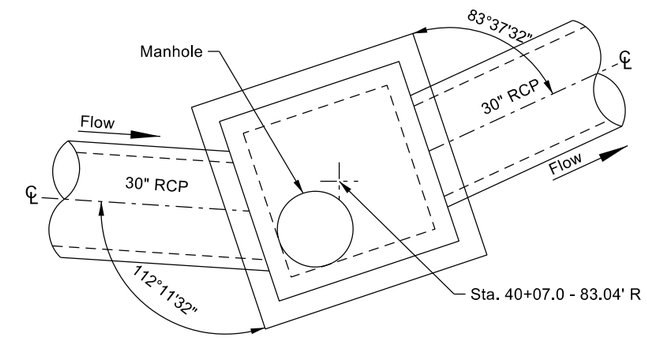

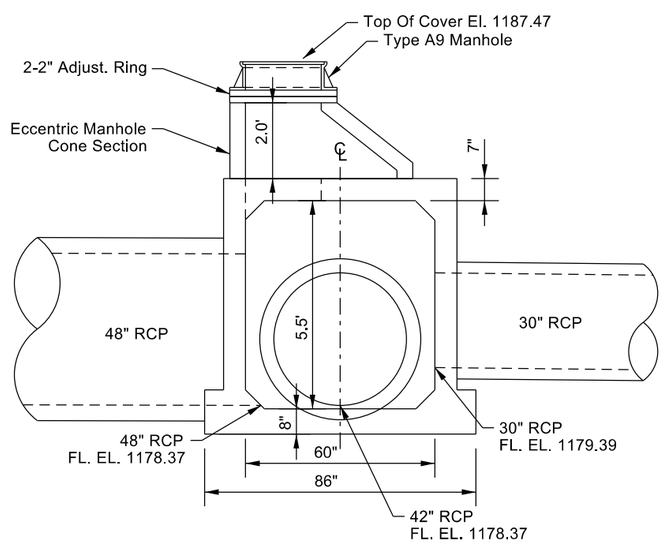

Sta. 38+51.5 - RT37.00'
5' X 5' Junction Box

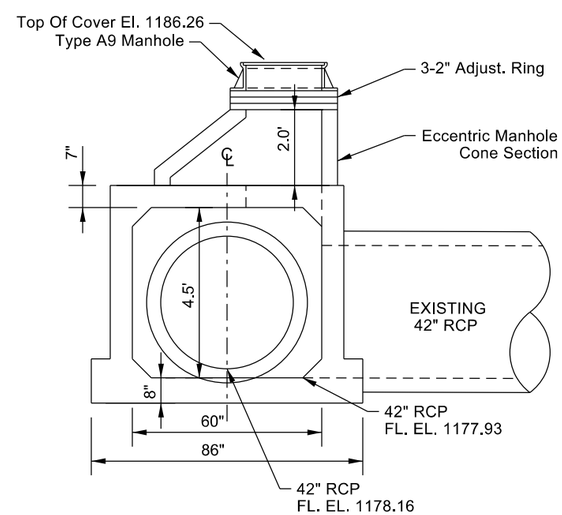

Sta. 38+51.5 - LT31.41'
5' X 5' Junction Box

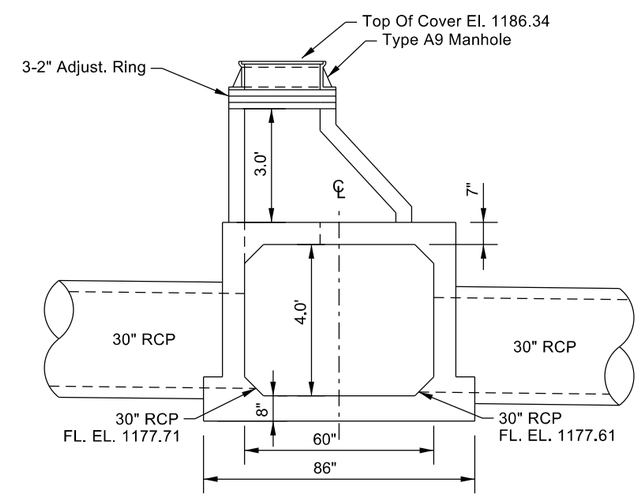

Sta. 40+07.0 - RT83.04'
5' X 5' Junction Box

JUNCTION BOX LAYOUT

FOR BIDDING PURPOSES ONLY

STATE OF SOUTH DAKOTA	PROJECT	SHEET	TOTAL SHEETS
	NH 0050(99)381	B64	B106

REGISTERED PROFESSIONAL ENGINEER
REG NO.
8161
JOSH
LARSON
7-3-15
SOUTH DAKOTA

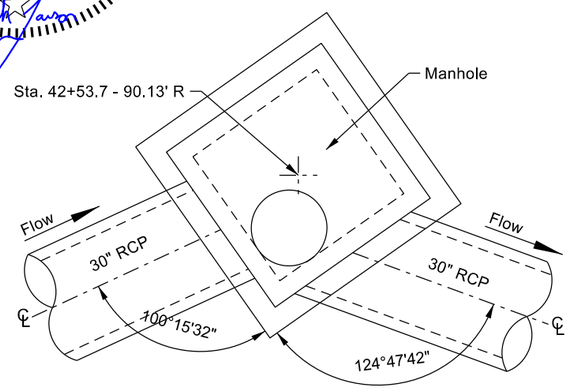

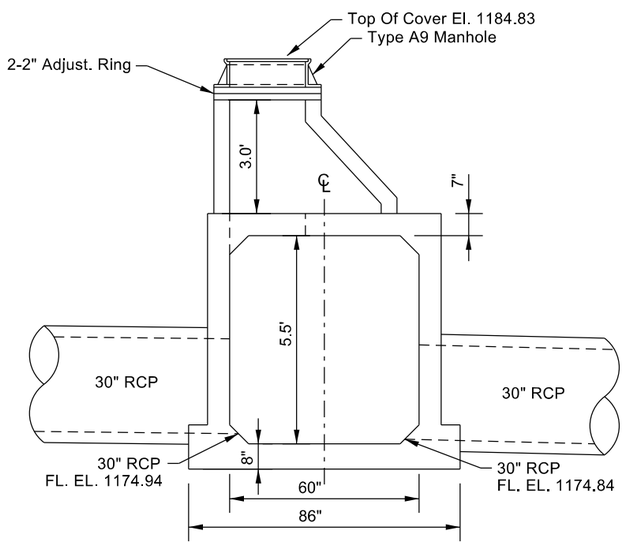

Sta. 42+53.7 - RT90.13'
5' X 5' Junction Box

STATE OF SOUTH DAKOTA	PROJECT	SHEET	TOTAL SHEETS
	NH 0050(99)381	B65	B106

FOR BIDDING PURPOSES ONLY

LAYOUT, QUANTITIES & DETAILS FOR

GRAVITY SEGMENTAL BLOCK RETAINING WALL

19+62.8 to 21+17.3

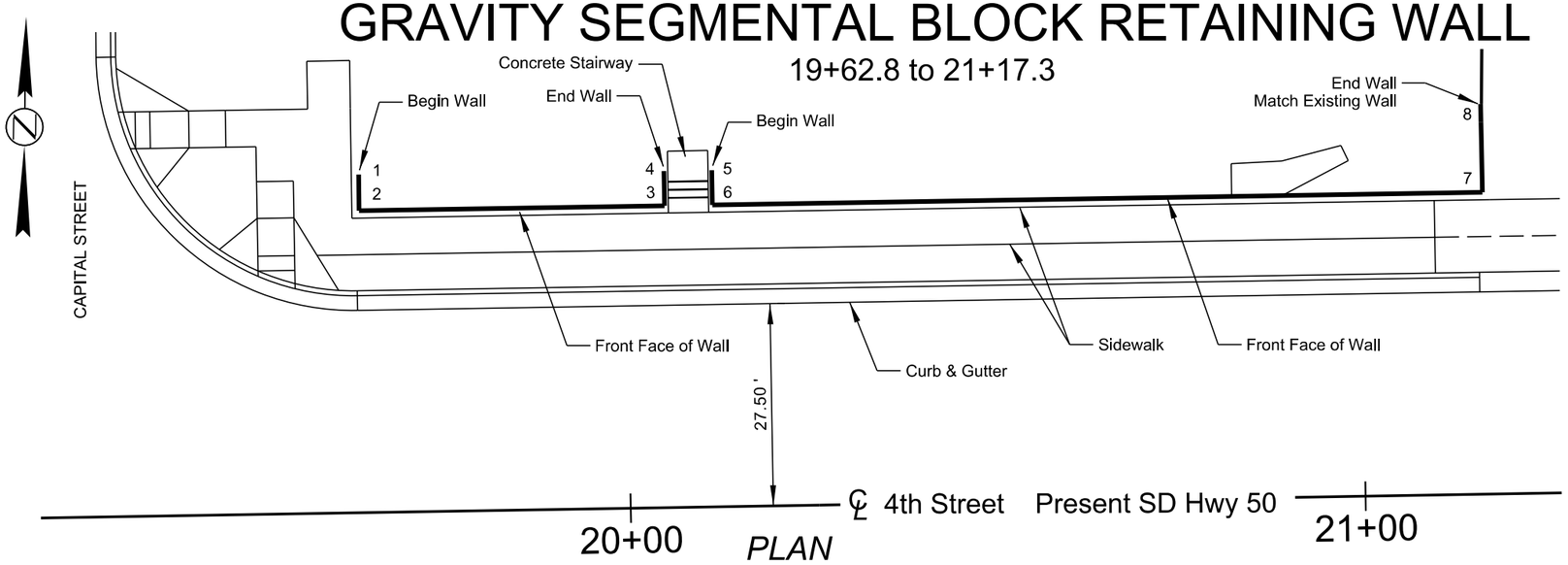

PLAN

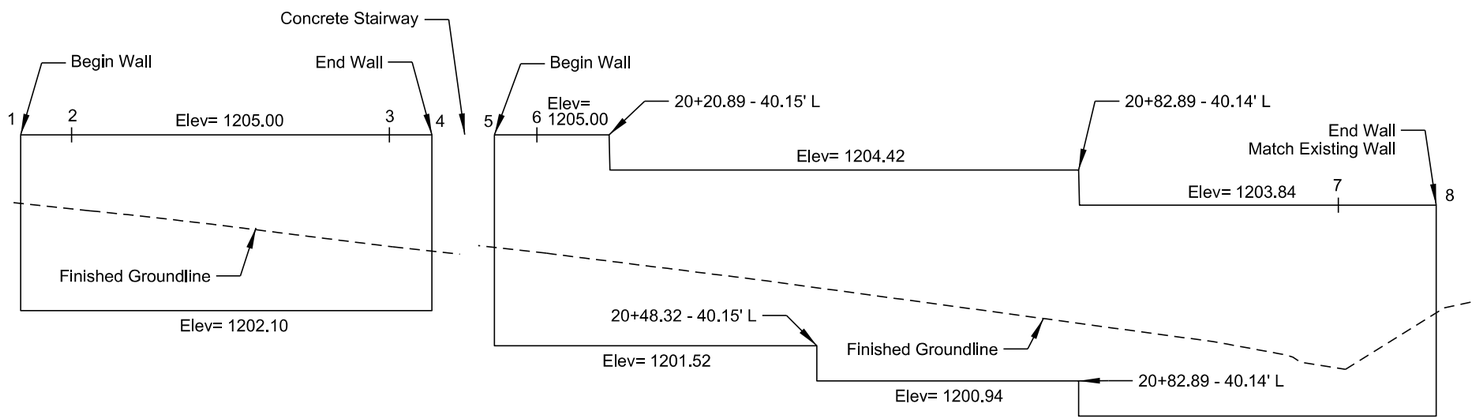

ELEVATION

Note: Drainage Fill and Excavation are incidental to the contract unit price per square foot for Gravity Segmental Block Wall. Quantities are shown for informational purposes only.

ESTIMATED QUANTITES		
ITEM	UNIT	QUANTITY
Gravity Segmental Block Wall	Sq. Ft.	575
Drainage Fill for Gravity Segmental Wall	Cu. Yd.	26
Structure Excavation, Retaining Wall	Cu. Yd.	47

TABLE OF CONCRETE STAIRWAYS IN RETAINING WALLS		
ITEM	UNIT	QUANTITY
Class M6 Concrete	Cu. Yd.	1.22
Structure Excavation (Misc.)	Cu. Yd.	1.95
Epoxy Coated Reinforcing Steel	Lb.	89
Pipe Handrail	Ft.	12.94

Offset Point	Baseline Station	Offset	Northing	Easting	Elevation
1	19+62.82	-45.98	210015.610	2757279.001	1205.00
2	19+62.81	-40.17	210008.900	2757279.099	1205.00
3	20+05.67	-40.16	210009.607	2757321.961	1205.00
4	20+05.67	-45.77	210016.106	2757321.854	1205.00
5	20+11.37	-45.77	210016.200	2757327.553	1205.00
6	20+11.37	-40.16	210009.701	2757327.661	1205.00
7	21+17.30	-40.13	210011.447	2757433.571	1203.84
8	21+17.30	-53.05	210025.227	2757433.344	1203.84

SPECIFICATIONS

1. Design Specifications: AASHTO LRFD Bridge Design Specifications, 2014 Edition with 2015 Interims.
2. Construction Specifications: South Dakota Standard Specifications for Roads and Bridges, 2015 Edition and Required Provisions, Supplemental Specifications, and Special Provisions as included in the Proposal.

RETAINING WALL

1. The Gravity Segmental Block Retaining Wall shall be on the current approved products list located at the following website address: http://apps.sd.gov/HC60ApprovedProducts/main.aspx.
2. The segmental blocks shall be a commercially available block, colored and sized to match the existing retaining walls along Hwy 81 in Yankton. Submit block pattern, colors, and method of achieving colors to the Engineer for approval a minimum of 2 weeks prior to fabrication.
3. The Contractor shall consult with an approved wall manufacturer to obtain construction plans and all the necessary instructions and specifications needed to install the Gravity Segmental Block Retaining Wall. The construction plans shall be forwarded to the Bridge Construction Engineer a minimum of 2 weeks in advance of construction for approval. Construction plans shall include plan and elevation views, typical cross sections, and the quantity of blocks required.
4. After the required excavation has been completed to the leveling pad elevation, the foundation material shall be compacted to provide an adequate foundation for the wall system. Any voids encountered shall be filled and brought up to grade with compacted granular material conforming to the specifications for Aggregate Base Course in Section 882 of the Specifications.
5. A granular leveling pad is required for the gravity segmental block retaining wall system. The minimum embedment depth to the top of the leveling pad shall be 1 foot. The leveling pad shall be constructed using granular material conforming to the specifications for Aggregate Base Course in Section 882 of the Specifications.
6. Drainage fill material for the gravity segmental block wall shall be granular material meeting the criteria as set by the wall block manufacturer.
7. All costs associated with furnishing and installing the wall complete in-place including the construction plans, leveling pad, concrete blocks, granular drainage material, granular material to bring the site up to grade, all excavation, materials, tools, labor, and any other incidentals necessary to build the wall as determined by the wall manufacturer shall be incidental to the contract unit price per square foot for Gravity Segmental Block Wall.

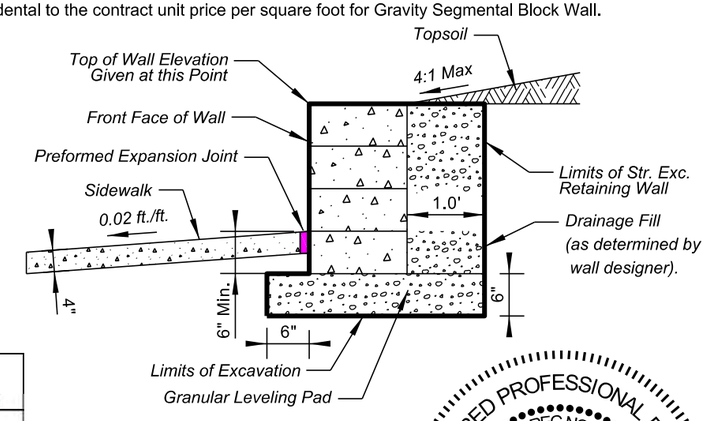

TYPICAL SECTION

REGISTERED PROFESSIONAL ENGINEER
REG NO.
8161
JOSH
LARSON
7-3-15
SOUTH DAKOTA

STATE OF SOUTH DAKOTA	PROJECT	SHEET	TOTAL SHEETS
	NH 0050(99)381	B66	B106

FOR BIDDING PURPOSES ONLY

LAYOUT, QUANTITIES & DETAILS FOR

RECONSTRUCT STONE RETAINING WALL

21+36.7 to 22+92.6

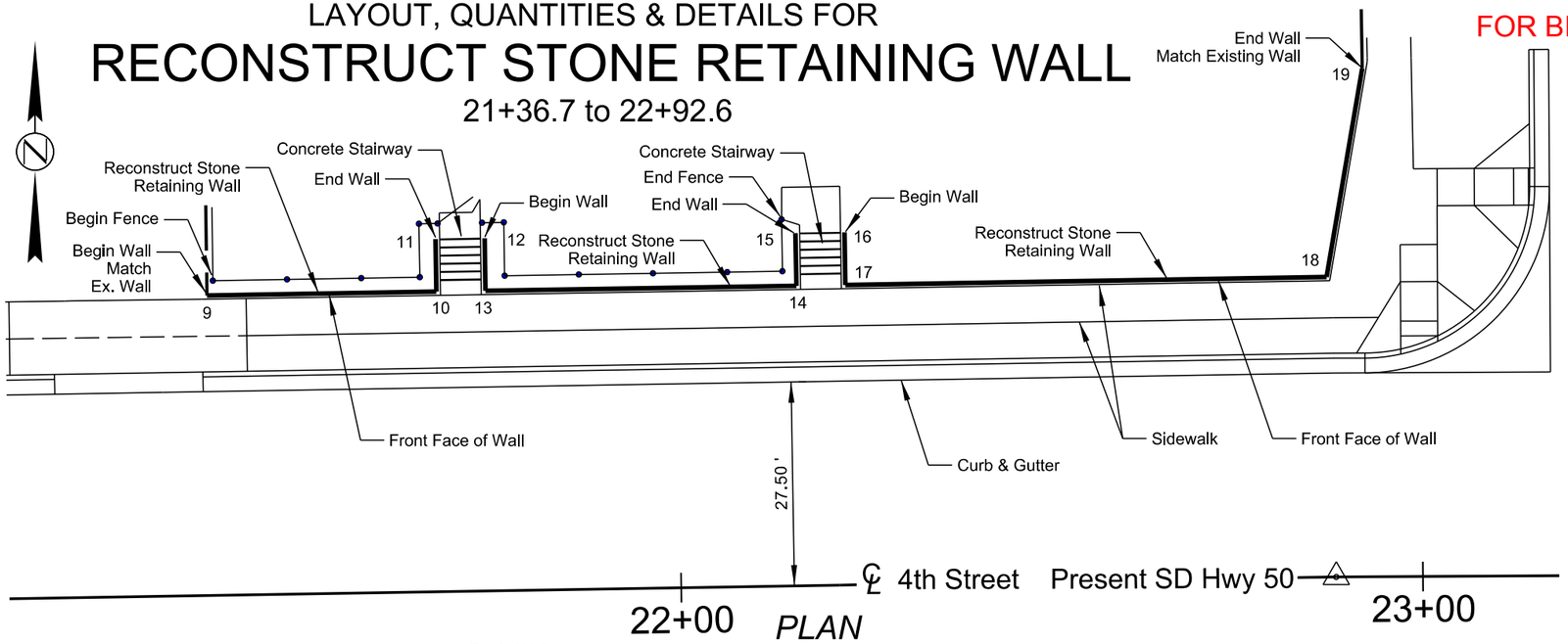

PLAN

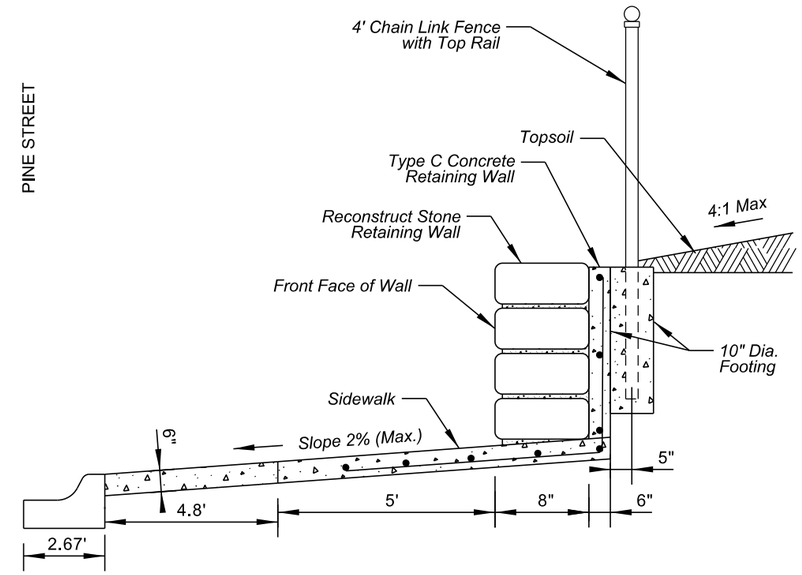

RECONSTRUCT STONE WALL SECTION

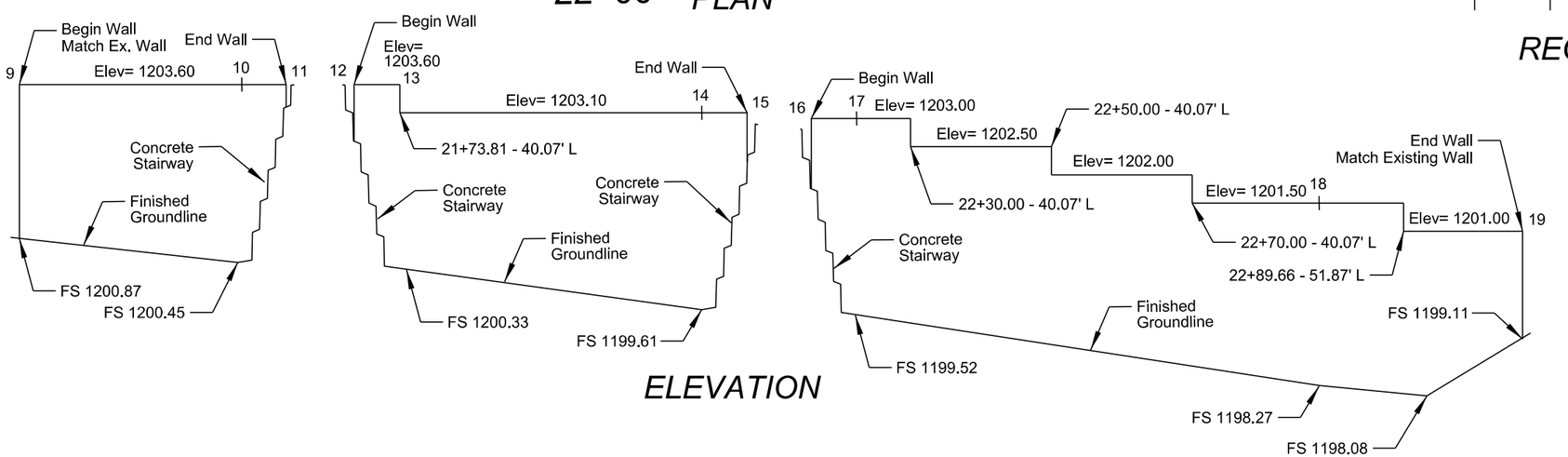

ELEVATION

STONE RETAINING WALL

The existing stone walls from Station 21+36.7 to 22+92.6 shall be replaced with Type C retaining wall set back approximately 7' behind the existing walls. The existing stone walls shall be reconstructed in front of the Type C wall on top of the sidewalk slab. The contractor shall salvage the existing rock and reinstall. If there is not sufficient existing rock to salvage the contractor shall submit a new rock sample to the Engineer for approval.

The contractor shall submit their plan for reconstructing these walls to the Engineer for approval prior to removing the existing walls. All items necessary to install the stone walls shall be incidental to the unit price per square foot for "Reconstruct Stone and Masonry Retaining Wall".

Offset Point	Baseline Station	Offset	Northing	Easting	Elevation
9	21+36.73	-40.07	210012.567	2757452.984	1203.60
10	21+68.11	-40.07	210013.085	2757484.365	1203.60
11	21+68.11	-47.57	210020.584	2757484.241	1203.60
12	21+73.81	-47.57	210020.678	2757489.941	1203.60
13	21+73.81	-40.07	210013.179	2757490.064	1203.60
14	22+16.65	-40.07	210013.885	2757532.892	1230.10
15	22+16.65	-47.57	210021.384	2757532.769	1203.10
16	22+22.35	-47.57	210021.478	2757538.468	1203.00
17	22+22.35	-40.07	210013.979	2757538.591	1203.00
18	22+88.01	-40.07	210015.061	2757604.249	1201.50
19	22+92.59	-68.51	210043.533	2757609.114	1201.00

ESTIMATED QUANTITES

ITEM	UNIT	QUANTITY
Reconstruct Stone and Masonry Retaining Wall	Sq. Ft.	858
Type C Concrete Retaining Wall	Sq. Ft.	858

TABLE OF CONCRETE STAIRWAYS IN TYPE C RETAINING WALLS

ITEM	UNIT	QUANTITY
Class M6 Concrete	Cu. Yd.	4.89
Structure Excavation (Misc.)	Cu. Yd.	12.65
Epoxy Coated Reinforcing Steel	Lb.	332
Pipe Handrail	Ft.	34.84

STATE OF SOUTH DAKOTA	PROJECT	SHEET	TOTAL SHEETS
	NH 0050(99)381	B67	B106

FOR BIDDING PURPOSES ONLY

LAYOUT, QUANTITIES & DETAILS FOR

GRAVITY SEGMENTAL BLOCK RETAINING WALL

21+39.9 to 22+06.8

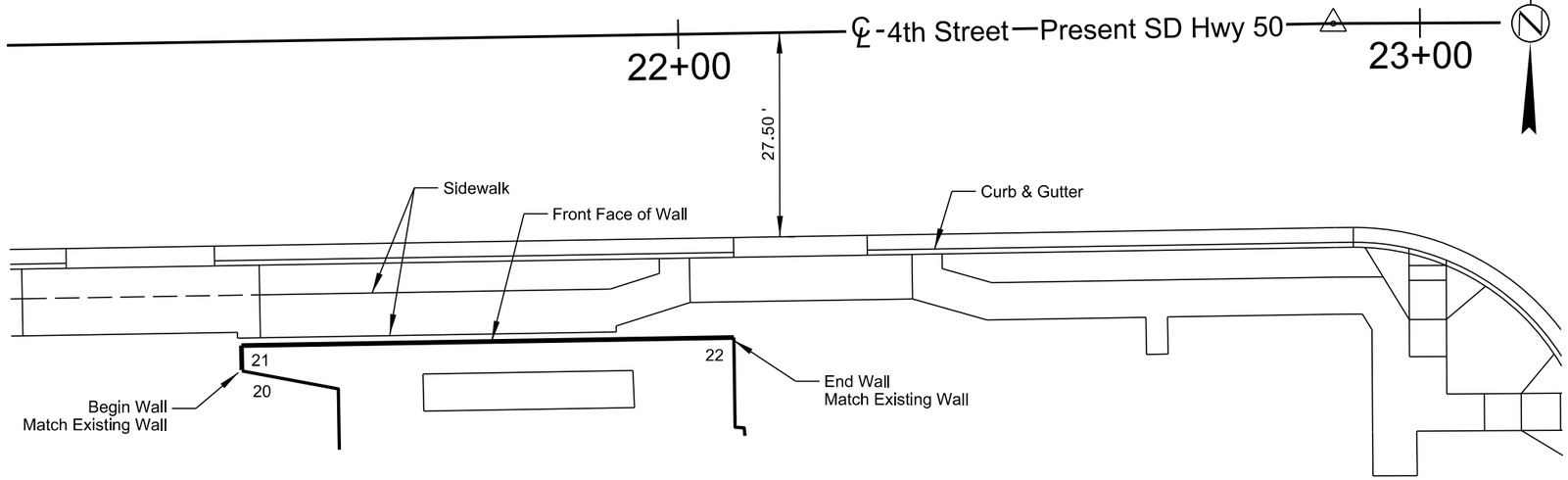

PLAN

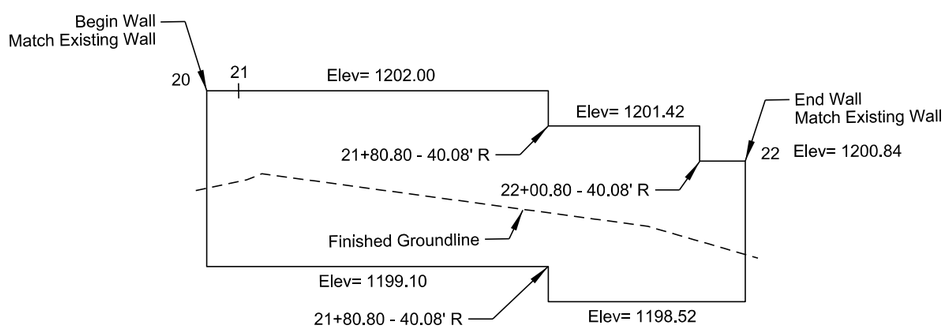

ELEVATION

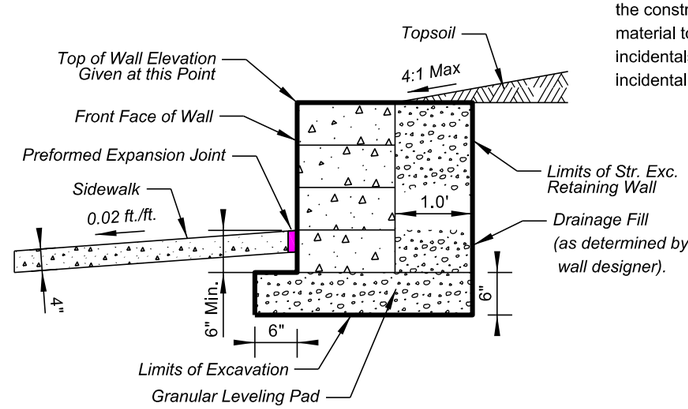

TYPICAL SECTION

SPECIFICATIONS

1. Design Specifications: AASHTO LRFD Bridge Design Specifications, 2014 Edition with 2015 Interims.
2. Construction Specifications: South Dakota Standard Specifications for Roads and Bridges, 2015 Edition and Required Provisions, Supplemental Specifications, and Special Provisions as included in the Proposal.

RETAINING WALL

1. The Gravity Segmental Block Retaining Wall shall be on the current approved products list located at the following website address: http://apps.sd.gov/HC60ApprovedProducts/main.aspx.
2. The segmental blocks shall be a commercially available block, colored and sized to match the existing retaining walls along Hwy 81 in Yankton. Submit block pattern, colors, and method of achieving colors to the Engineer for approval a minimum of 2 weeks prior to fabrication.
3. The Contractor shall consult with an approved wall manufacturer to obtain construction plans and all the necessary instructions and specifications needed to install the Gravity Segmental Block Retaining Wall. The construction plans shall be forwarded to the Bridge Construction Engineer a minimum of 2 weeks in advance of construction for approval. Construction plans shall include plan and elevation views, typical cross sections, and the quantity of blocks required.
4. After the required excavation has been completed to the leveling pad elevation, the foundation material shall be compacted to provide an adequate foundation for the wall system. Any voids encountered shall be filled and brought up to grade with compacted granular material conforming to the specifications for Aggregate Base Course in Section 882 of the Specifications.
5. A granular leveling pad is required for the gravity segmental block retaining wall system. The minimum embedment depth to the top of the leveling pad shall be 1 foot. The leveling pad shall be constructed using granular material conforming to the specifications for Aggregate Base Course in Section 882 of the Specifications.
6. Drainage fill material for the gravity segmental block wall shall be granular material meeting the criteria as set by the wall block manufacturer.
7. All costs associated with furnishing and installing the wall complete in-place including the construction plans, leveling pad, concrete blocks, granular drainage material, granular material to bring the site up to grade, all excavation, materials, tools, labor, and any other incidentals necessary to build the wall as determined by the wall manufacturer shall be incidental to the contract unit price per square foot for Gravity Segmental Block Wall.

REGISTERED PROFESSIONAL ENGINEER
REG NO.
8161
JOSH
LARSON
7-3-15
SOUTH DAKOTA

Offset Point	Baseline Station	Offset	Northing	Easting	Elevation
20	21+39.93	44.28	209928.286	2757457.581	1202.00
21	21+39.93	40.07	209932.491	2757457.512	1202.00
22	22+06.83	40.08	209933.580	2757524.399	1200.84

Note: Drainage Fill and Excavation are incidental to the contract unit price per square foot for Gravity Segmental Block Wall. Quantities are shown for informational purposes only.

ESTIMATED QUANTITES		
ITEM	UNIT	QUANTITY
Gravity Segmental Block Wall	Sq. Ft.	203
Drainage Fill for Gravity Segmental Wall	Cu. Yd.	10
Structure Excavation, Retaining Wall	Cu. Yd.	18

STATE OF SOUTH DAKOTA	PROJECT	SHEET	TOTAL SHEETS
	NH 0050(99)381	B68	B106

FOR BIDDING PURPOSES ONLY

LAYOUT, QUANTITIES & DETAILS FOR

GRAVITY SEGMENTAL BLOCK RETAINING WALL

23+87.6 to 25+38.1

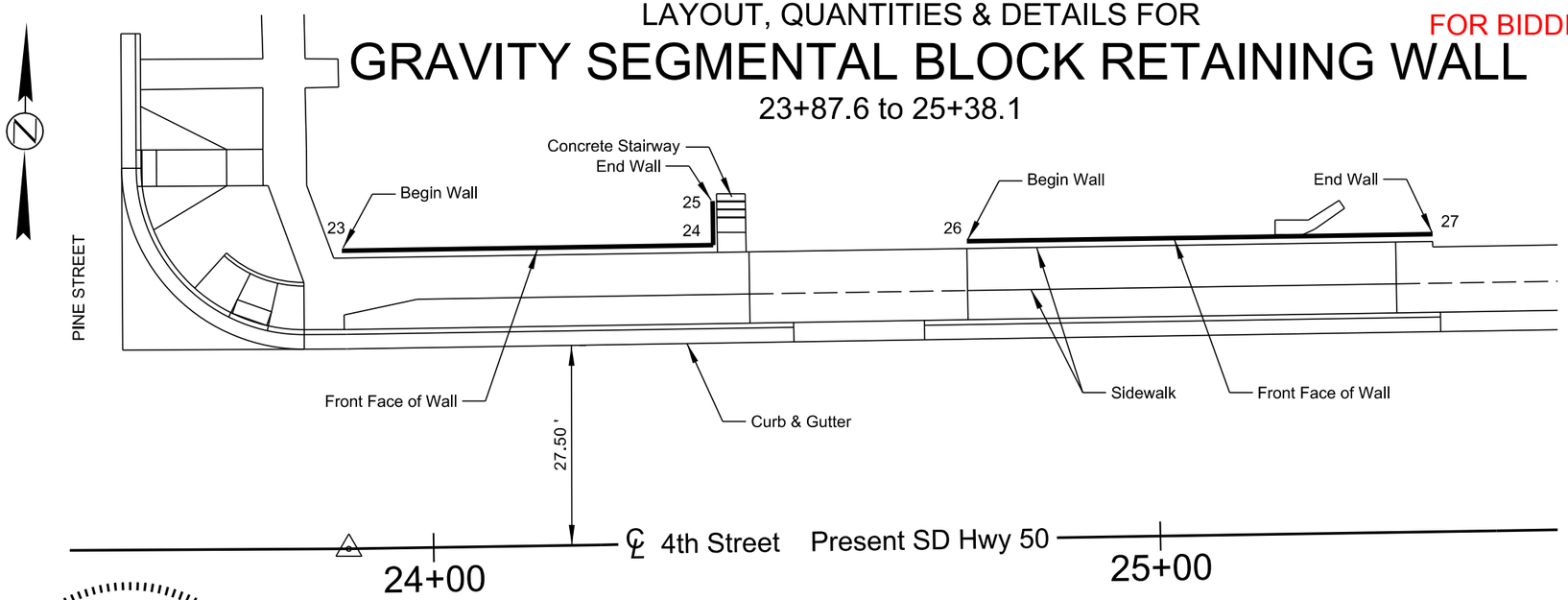

PLAN

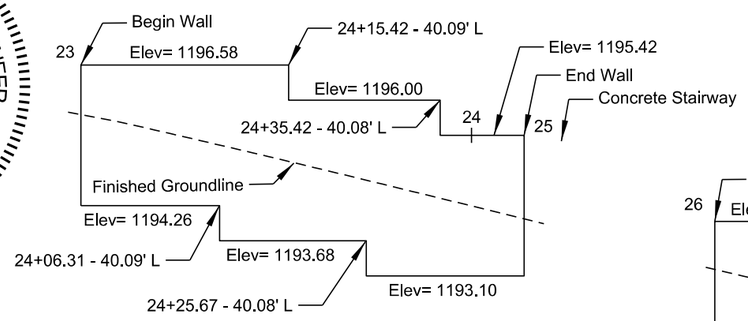

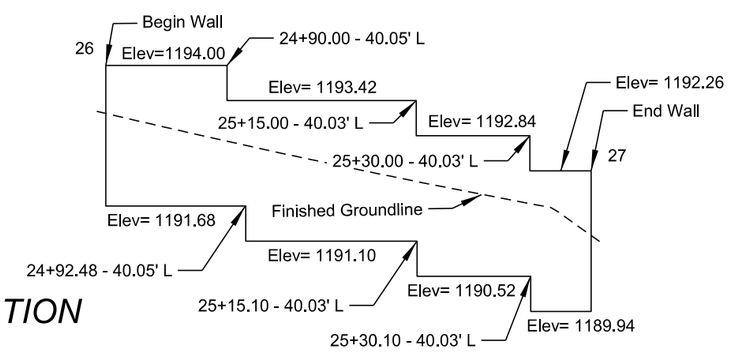

ELEVATION

REGISTERED PROFESSIONAL ENGINEER
REG NO.
8161
JOSH
LARSON
7-3-15
SOUTH DAKOTA

Note: Drainage Fill and Excavation are incidental to the contract unit price per square foot for Gravity Segmental Block Wall. Quantities are shown for informational purposes only.

ESTIMATED QUANTITES

ITEM	UNIT	QUANTITY
Gravity Segmental Block Wall	Sq. Ft.	266
Drainage Fill for Gravity Segmental Wall	Cu. Yd.	13
Structure Excavation, Retaining Wall	Cu. Yd.	23

TABLE OF CONCRETE STAIRWAYS IN RETAINING WALLS

ITEM	UNIT	QUANTITY
Class M6 Concrete	Cu. Yd.	1.22
Structure Excavation (Misc.)	Cu. Yd.	1.95
Epoxy Coated Reinforcing Steel	Lb.	89
Pipe Handrail	Ft.	12.94

Offset Point	Baseline Station	Offset	Northing	Easting	Elevation
23	23+87.58	-40.09	210015.639	2757704.256	1196.58
24	24+39.56	-40.07	210016.427	2757755.819	1195.42
25	24+39.56	-47.03	210023.381	2757755.705	1195.42
26	24+74.00	-40.06	210016.954	2757790.252	1194.00
27	25+38.09	-40.02	210017.933	2757854.329	1192.26

SPECIFICATIONS

1. Design Specifications: AASHTO LRFD Bridge Design Specifications, 2014 Edition with 2015 Interims.
2. Construction Specifications: South Dakota Standard Specifications for Roads and Bridges, 2015 Edition and Required Provisions, Supplemental Specifications, and Special Provisions as included in the Proposal.

RETAINING WALL

1. The Gravity Segmental Block Retaining Wall shall be on the current approved products list located at the following website address: http://apps.sd.gov/HC60ApprovedProducts/main.aspx.
2. The segmental blocks shall be a commercially available block, colored and sized to match the existing retaining walls along Hwy 81 in Yankton. Submit block pattern, colors, and method of achieving colors to the Engineer for approval a minimum of 2 weeks prior to fabrication.
3. The Contractor shall consult with an approved wall manufacturer to obtain construction plans and all the necessary instructions and specifications needed to install the Gravity Segmental Block Retaining Wall. The construction plans shall be forwarded to the Bridge Construction Engineer a minimum of 2 weeks in advance of construction for approval. Construction plans shall include plan and elevation views, typical cross sections, and the quantity of blocks required.
4. After the required excavation has been completed to the leveling pad elevation, the foundation material shall be compacted to provide an adequate foundation for the wall system. Any voids encountered shall be filled and brought up to grade with compacted granular material conforming to the specifications for Aggregate Base Course in Section 882 of the Specifications.
5. A granular leveling pad is required for the gravity segmental block retaining wall system. The minimum embedment depth to the top of the leveling pad shall be 1 foot. The leveling pad shall be constructed using granular material conforming to the specifications for Aggregate Base Course in Section 882 of the Specifications.
6. Drainage fill material for the gravity segmental block wall shall be granular material meeting the criteria as set by the wall block manufacturer.
7. All costs associated with furnishing and installing the wall complete in-place including the construction plans, leveling pad, concrete blocks, granular drainage material, granular material to bring the site up to grade, all excavation, materials, tools, labor, and any other incidentals necessary to build the wall as determined by the wall manufacturer shall be incidental to the contract unit price per square foot for Gravity Segmental Block Wall.

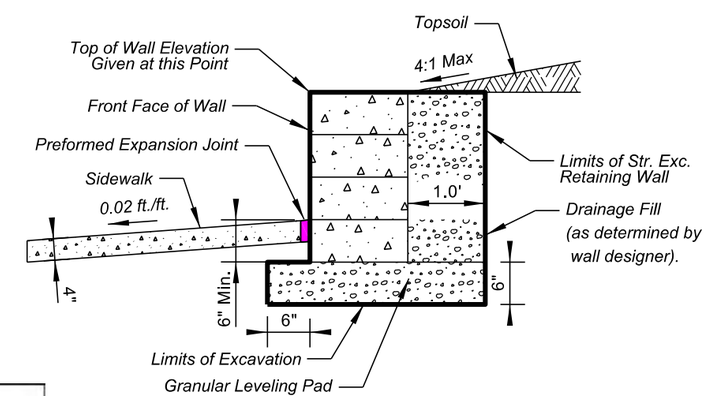

TYPICAL SECTION

STATE OF SOUTH DAKOTA	PROJECT	SHEET	TOTAL SHEETS
	NH 0050(99)381	B69	B106

FOR BIDDING PURPOSES ONLY

LAYOUT, QUANTITIES & DETAILS FOR

GRAVITY SEGMENTAL BLOCK RETAINING WALL

26+46.5 to 26+58.0

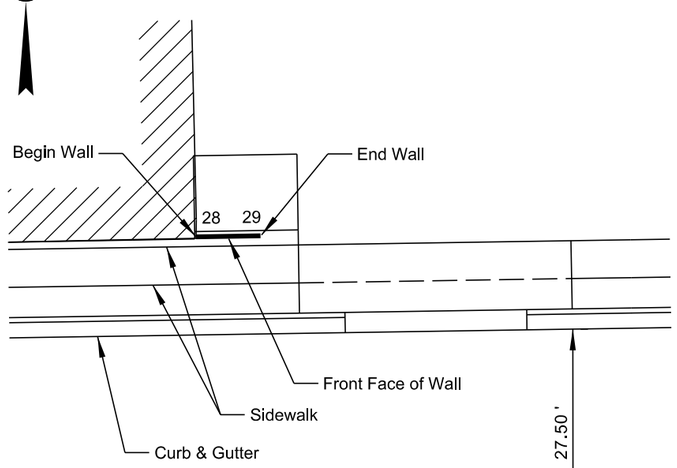

PLAN

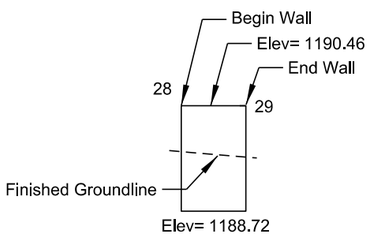

ELEVATION

30+65.1 to 31+32.7

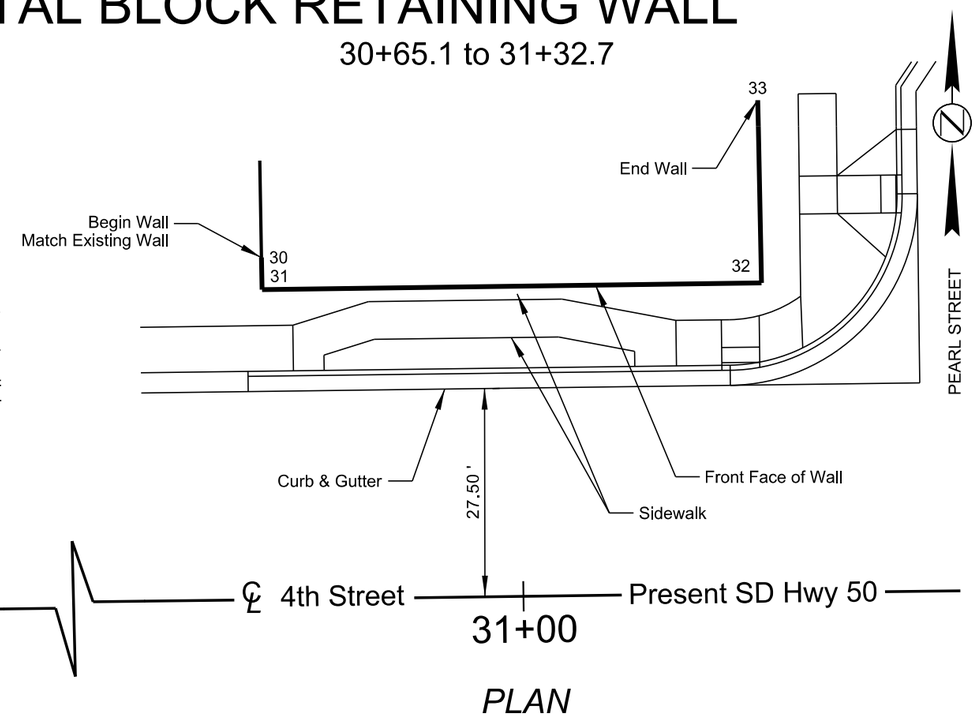

PLAN

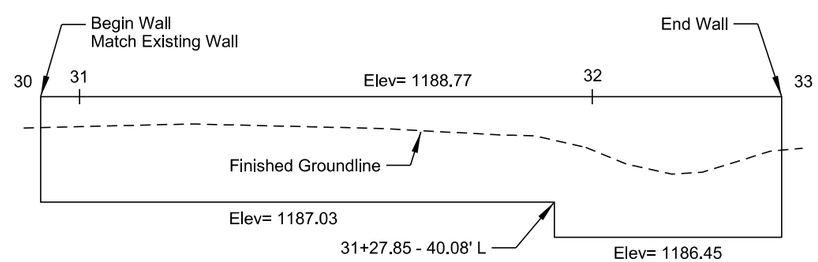

ELEVATION

SPECIFICATIONS

1. Design Specifications: AASHTO LRFD Bridge Design Specifications, 2014 Edition with 2015 Interims.
2. Construction Specifications: South Dakota Standard Specifications for Roads and Bridges, 2015 Edition and Required Provisions, Supplemental Specifications, and Special Provisions as included in the Proposal.

RETAINING WALL

1. The Gravity Segmental Block Retaining Wall shall be on the current approved products list located at the following website address: http://apps.sd.gov/HC60ApprovedProducts/main.aspx.
2. The segmental blocks shall be a commercially available block, colored and sized to match the existing retaining walls along Hwy 81 in Yankton. Submit block pattern, colors, and method of achieving colors to the Engineer for approval a minimum of 2 weeks prior to fabrication.
3. The Contractor shall consult with an approved wall manufacturer to obtain construction plans and all the necessary instructions and specifications needed to install the Gravity Segmental Block Retaining Wall. The construction plans shall be forwarded to the Bridge Construction Engineer a minimum of 2 weeks in advance of construction for approval. Construction plans shall include plan and elevation views, typical cross sections, and the quantity of blocks required.
4. After the required excavation has been completed to the leveling pad elevation, the foundation material shall be compacted to provide an adequate foundation for the wall system. Any voids encountered shall be filled and brought up to grade with compacted granular material conforming to the specifications for Aggregate Base Course in Section 882 of the Specifications.
5. A granular leveling pad is required for the gravity segmental block retaining wall system. The minimum embedment depth to the top of the leveling pad shall be 1 foot. The leveling pad shall be constructed using granular material conforming to the specifications for Aggregate Base Course in Section 882 of the Specifications.
6. Drainage fill material for the gravity segmental block wall shall be granular material meeting the criteria as set by the wall block manufacturer.
7. All costs associated with furnishing and installing the wall complete in-place including the construction plans, leveling pad, concrete blocks, granular drainage material, granular material to bring the site up to grade, all excavation, materials, tools, labor, and any other incidentals necessary to build the wall as determined by the wall manufacturer shall be incidental to the contract unit price per square foot for Gravity Segmental Block Wall.

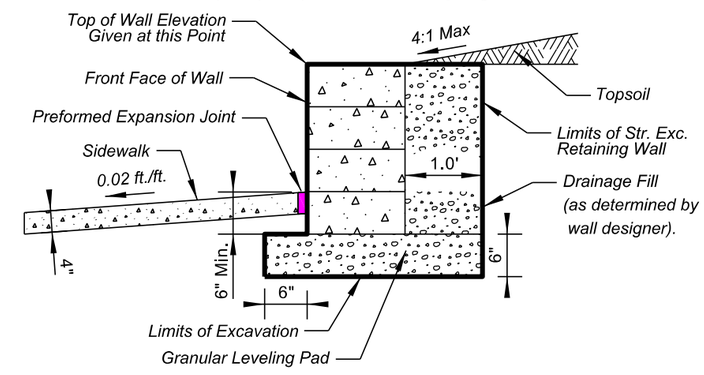

TYPICAL SECTION

Note: Drainage Fill and Excavation are incidental to the contract unit price per square foot for Gravity Segmental Block Wall. Quantities are shown for informational purposes only.

ESTIMATED QUANTITES		
ITEM	UNIT	QUANTITY
Gravity Segmental Block Wall	Sq. Ft.	203
Drainage Fill for Gravity Segmental Wall	Cu. Yd.	10
Structure Excavation, Retaining Wall	Cu. Yd.	18

REGISTERED PROFESSIONAL ENGINEER
REG NO.
8161
JOSH
LARSON
7-3-15
SOUTH DAKOTA

Offset Point	Baseline Station	Offset	Northing	Easting	Elevation
28	26+46.52	-39.96	210019.591	2757962.747	1190.46
29	26+55.00	-39.96	210019.721	2757971.251	1190.46
30	30+65.12	-45.17	210030.319	2758381.366	1188.77
31	30+65.14	-40.04	210025.195	2758381.454	1188.77
32	31+32.84	-40.08	210026.100	2758449.149	1188.77
33	31+32.67	-65.10	210051.110	2758448.655	1188.77

STATE OF SOUTH DAKOTA	PROJECT	SHEET	TOTAL SHEETS
	NH 0050(99)381	B70	B106

FOR BIDDING PURPOSES ONLY

LAYOUT, QUANTITIES & DETAILS FOR

GRAVITY SEGMENTAL BLOCK RETAINING WALL

33+91.0 to 34+49.8

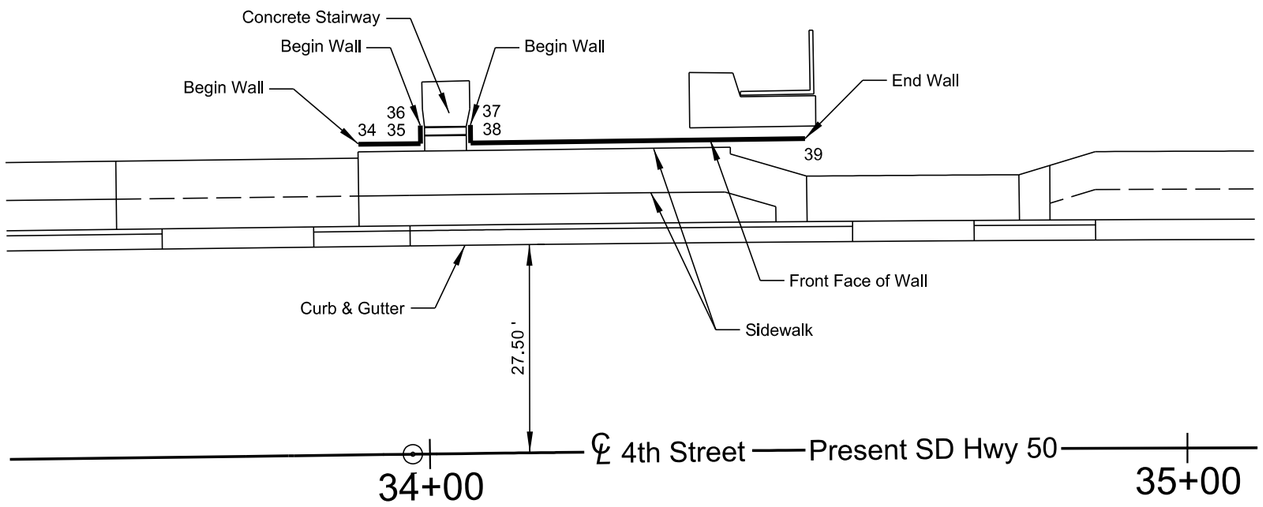

PLAN

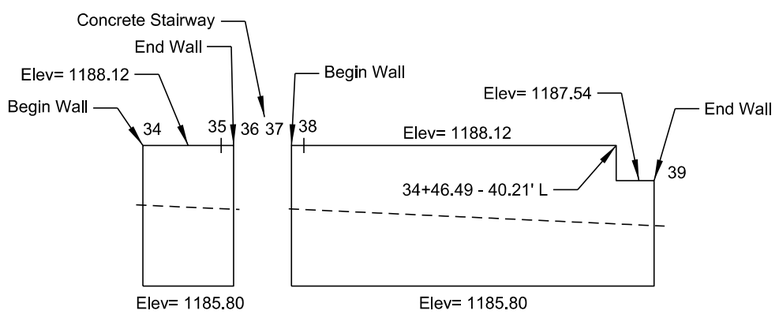

ELEVATION

Note: Drainage Fill and Excavation are incidental to the contract unit price per square foot for Gravity Segmental Block Wall. Quantities are shown for informational purposes only.

ESTIMATED QUANTITES		
ITEM	UNIT	QUANTITY
Gravity Segmental Block Wall	Sq. Ft.	137
Drainage Fill for Gravity Segmental Wall	Cu. Yd.	7
Structure Excavation, Retaining Wall	Cu. Yd.	12

TABLE OF CONCRETE STAIRWAYS IN RETAINING WALLS		
ITEM	UNIT	QUANTITY
Class M6 Concrete	Cu. Yd.	0.88
Structure Excavation (Misc.)	Cu. Yd.	1.33
Epoxy Coated Reinforcing Steel	Lb.	66
Pipe Handrail	Ft.	8.46

REGISTERED PROFESSIONAL ENGINEER
REG NO.
8161
JOSH
LARSON
7-3-15
SOUTH DAKOTA

SPECIFICATIONS

1. Design Specifications: AASHTO LRFD Bridge Design Specifications, 2014 Edition with 2015 Interims.
2. Construction Specifications: South Dakota Standard Specifications for Roads and Bridges, 2015 Edition and Required Provisions, Supplemental Specifications, and Special Provisions as included in the Proposal.

RETAINING WALL

1. The Gravity Segmental Block Retaining Wall shall be on the current approved products list located at the following website address: http://apps.sd.gov/HC60ApprovedProducts/main.aspx.
2. The segmental blocks shall be a commercially available block, colored and sized to match the existing retaining walls along Hwy 81 in Yankton. Submit block pattern, colors, and method of achieving colors to the Engineer for approval a minimum of 2 weeks prior to fabrication.
3. The Contractor shall consult with an approved wall manufacturer to obtain construction plans and all the necessary instructions and specifications needed to install the Gravity Segmental Block Retaining Wall. The construction plans shall be forwarded to the Bridge Construction Engineer a minimum of 2 weeks in advance of construction for approval. Construction plans shall include plan and elevation views, typical cross sections, and the quantity of blocks required.
4. After the required excavation has been completed to the leveling pad elevation, the foundation material shall be compacted to provide an adequate foundation for the wall system. Any voids encountered shall be filled and brought up to grade with compacted granular material conforming to the specifications for Aggregate Base Course in Section 882 of the Specifications.
5. A granular leveling pad is required for the gravity segmental block retaining wall system. The minimum embedment depth to the top of the leveling pad shall be 1 foot. The leveling pad shall be constructed using granular material conforming to the specifications for Aggregate Base Course in Section 882 of the Specifications.
6. Drainage fill material for the gravity segmental block wall shall be granular material meeting the criteria as set by the wall block manufacturer.
7. All costs associated with furnishing and installing the wall complete in-place including the construction plans, leveling pad, concrete blocks, granular drainage material, granular material to bring the site up to grade, all excavation, materials, tools, labor, and any other incidentals necessary to build the wall as determined by the wall manufacturer shall be incidental to the contract unit price per square foot for Gravity Segmental Block Wall.

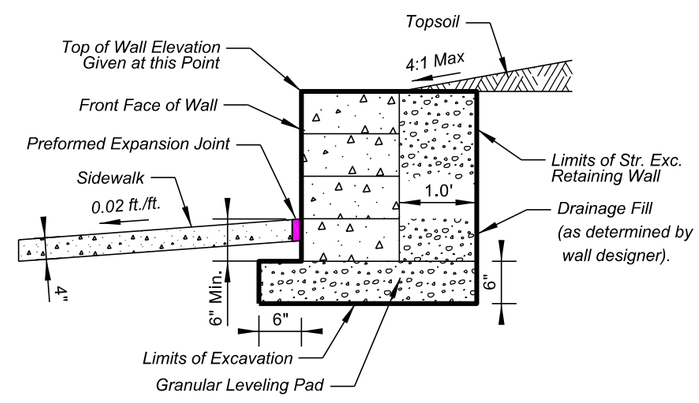

TYPICAL SECTION

Offset Point	Baseline Station	Offset	Northing	Easting	Elevation
34	33+91.00	-40.09	210029.412	2758707.287	1188.12
35	33+99.71	-40.09	210029.523	2758716.002	1188.12
36	33+99.71	-43.37	210032.799	2758715.962	1188.12
37	34+05.39	-43.37	210032.870	2758721.662	1188.12
38	34+05.39	-40.10	210029.596	2758721.702	1188.12
39	34+49.83	-40.22	210030.169	2758766.310	1187.54

STATE OF SOUTH DAKOTA	PROJECT	SHEET	TOTAL SHEETS
	NH 0050(99)381	B71	B106

FOR BIDDING PURPOSES ONLY

LAYOUT, QUANTITIES & DETAILS FOR

GRAVITY SEGMENTAL BLOCK RETAINING WALL

36+15.0 to 37+65.7

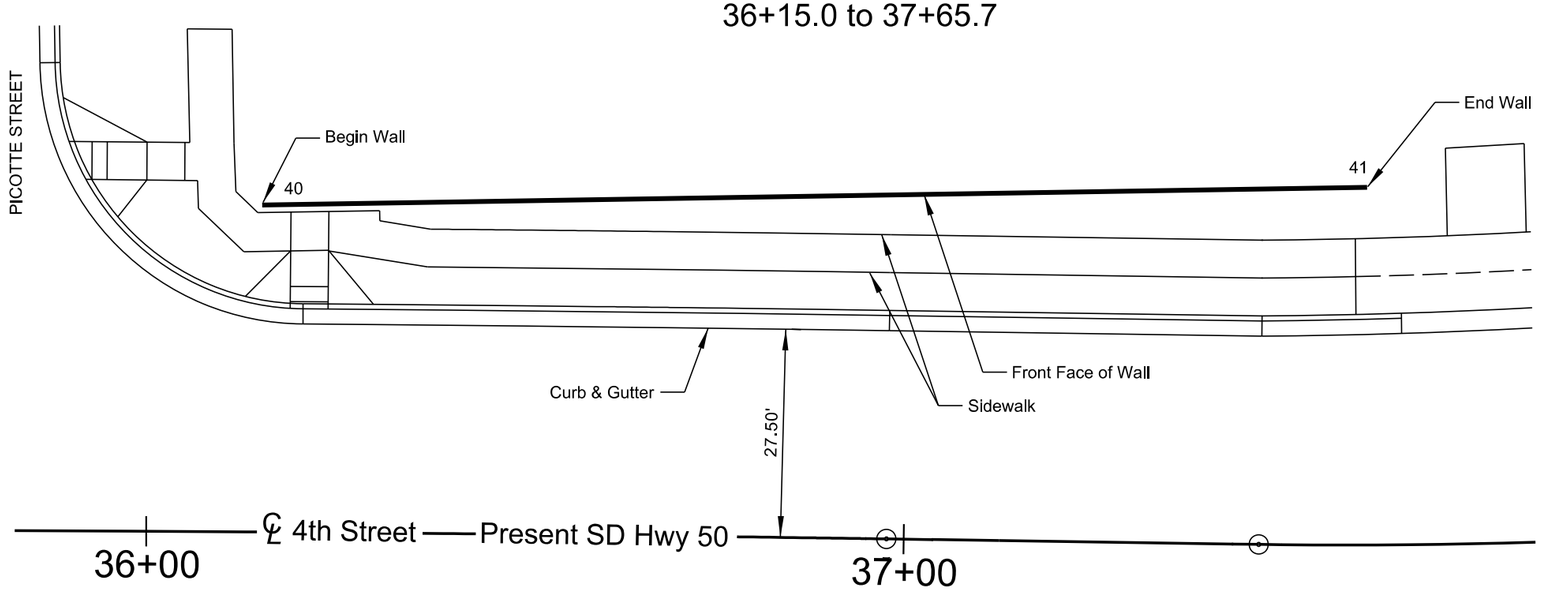

PLAN

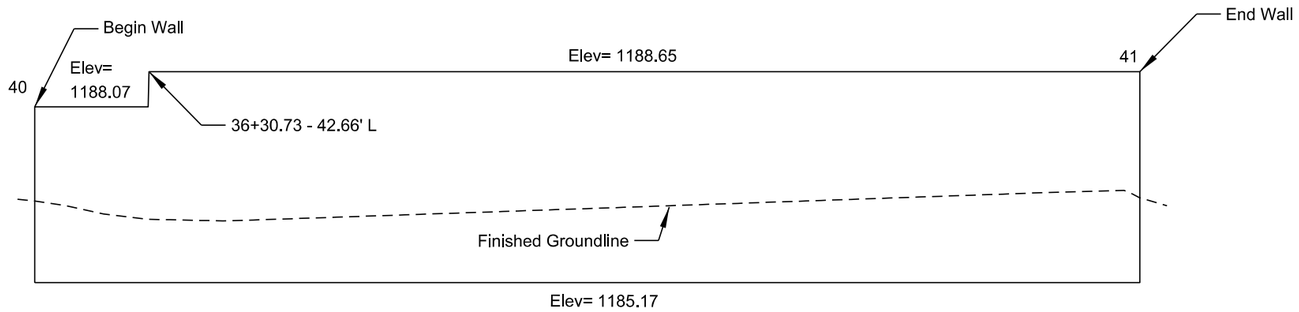

ELEVATION

Note: Drainage Fill and Excavation are incidental to the contract unit price per square foot for Gravity Segmental Block Wall. Quantities are shown for informational purposes only.

ESTIMATED QUANTITES		
ITEM	UNIT	QUANTITY
Gravity Segmental Block Wall	Sq. Ft.	499
Drainage Fill for Gravity Segmental Wall	Cu. Yd.	22
Structure Excavation, Retaining Wall	Cu. Yd.	40

Offset Point	Baseline Station	Offset	Northing	Easting	Elevation
40	36+15.02	-42.28	210032.296	2758932.116	1188.07
41	37+61.35	-46.32	210034.612	2759077.990	1188.65

REGISTERED PROFESSIONAL ENGINEER
REG NO.
8161
JOSH
LARSON
7-3-15
SOUTH DAKOTA

SPECIFICATIONS

1. Design Specifications: AASHTO LRFD Bridge Design Specifications, 2014 Edition with 2015 Interims.
2. Construction Specifications: South Dakota Standard Specifications for Roads and Bridges, 2015 Edition and Required Provisions, Supplemental Specifications, and Special Provisions as included in the Proposal.

RETAINING WALL

1. The Gravity Segmental Block Retaining Wall shall be on the current approved products list located at the following website address: http://apps.sd.gov/HC60ApprovedProducts/main.aspx.
2. The segmental blocks shall be a commercially available block, colored and sized to match the existing retaining walls along Hwy 81 in Yankton. Submit block pattern, colors, and method of achieving colors to the Engineer for approval a minimum of 2 weeks prior to fabrication.
3. The Contractor shall consult with an approved wall manufacturer to obtain construction plans and all the necessary instructions and specifications needed to install the Gravity Segmental Block Retaining Wall. The construction plans shall be forwarded to the Bridge Construction Engineer a minimum of 2 weeks in advance of construction for approval. Construction plans shall include plan and elevation views, typical cross sections, and the quantity of blocks required.
4. After the required excavation has been completed to the leveling pad elevation, the foundation material shall be compacted to provide an adequate foundation for the wall system. Any voids encountered shall be filled and brought up to grade with compacted granular material conforming to the specifications for Aggregate Base Course in Section 882 of the Specifications.
5. A granular leveling pad is required for the gravity segmental block retaining wall system. The minimum embedment depth to the top of the leveling pad shall be 1 foot. The leveling pad shall be constructed using granular material conforming to the specifications for Aggregate Base Course in Section 882 of the Specifications.
6. Drainage fill material for the gravity segmental block wall shall be granular material meeting the criteria as set by the wall block manufacturer.
7. All costs associated with furnishing and installing the wall complete in-place including the construction plans, leveling pad, concrete blocks, granular drainage material, granular material to bring the site up to grade, all excavation, materials, tools, labor, and any other incidentals necessary to build the wall as determined by the wall manufacturer shall be incidental to the contract unit price per square foot for Gravity Segmental Block Wall.

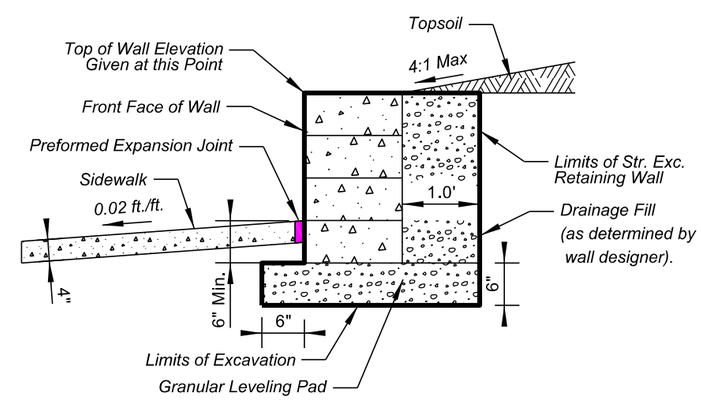

TYPICAL SECTION

ORNAMENTAL METAL FENCE

FOR BIDDING PURPOSES ONLY

STATION 13+85 TO STATION 14+17 - 32 FT

STATE OF SOUTH DAKOTA	PROJECT	SHEET	TOTAL SHEETS
	NH 0050(99)381	B72	B106

POST DETAIL

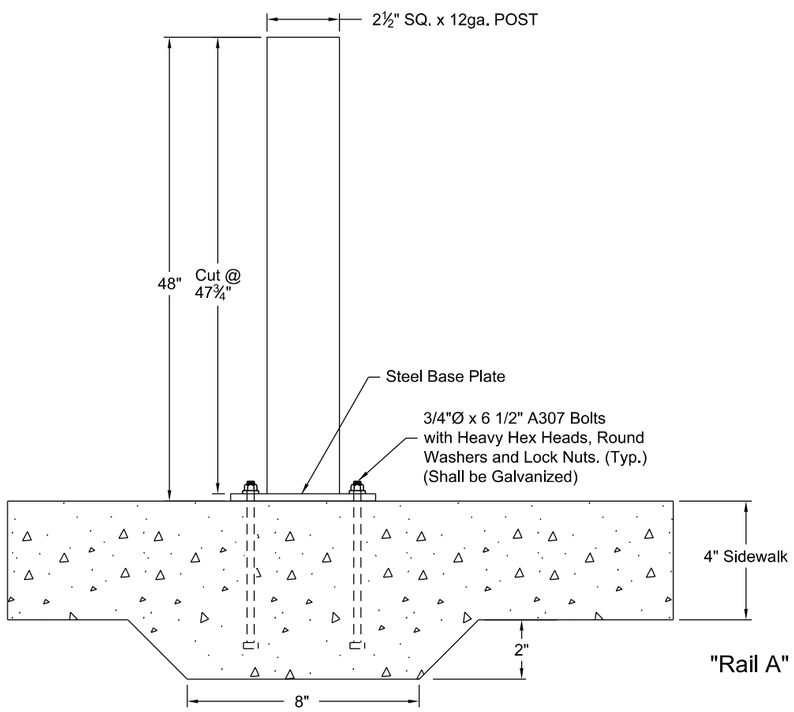

METAL FENCE DETAIL

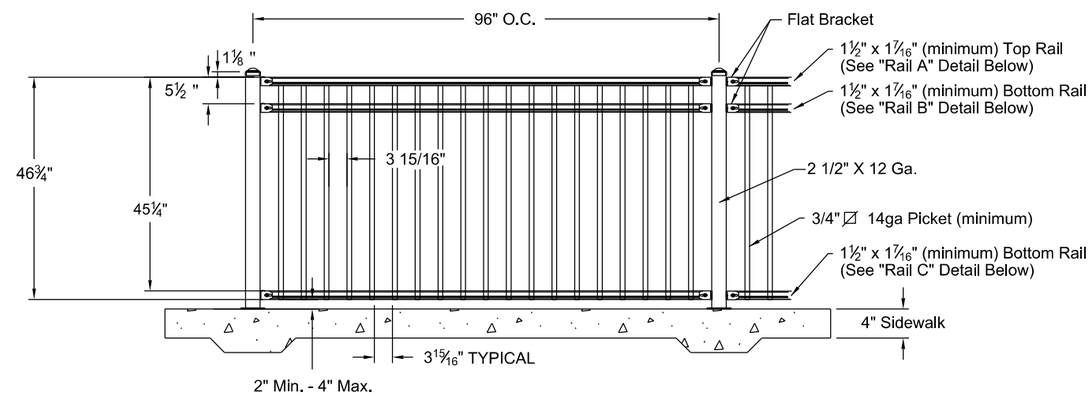

"Rail A" Detail

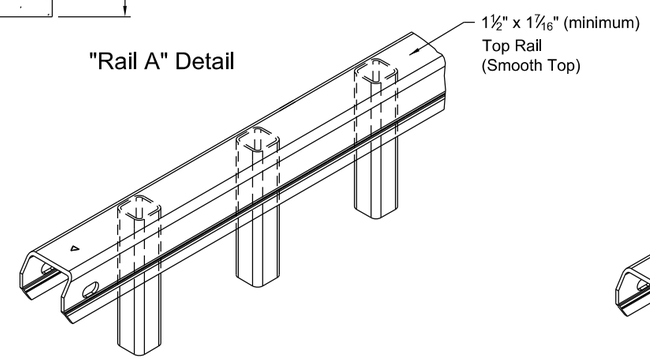

"Rail B" Detail

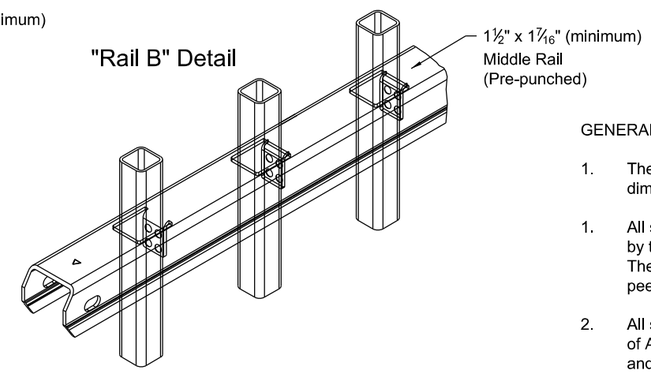

BASE PLATE DETAIL

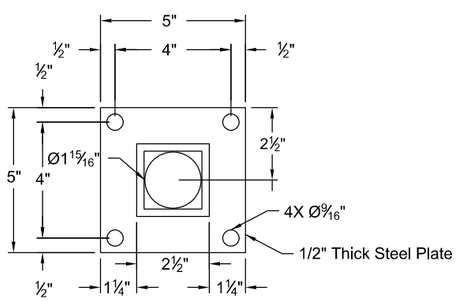

"Rail C" Detail

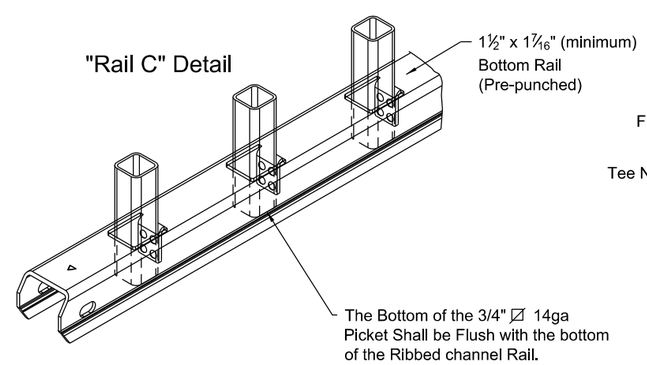

FLAT BRACKET DETAIL

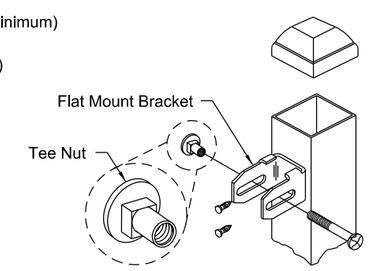

GENERAL NOTES:

1. The contractor shall submit shop drawings of ornamental fence with all dimensions, details and finishes to the Engineer for approval.

1. All structural fence components (rails, pickets, and posts) shall be warranted by the manufacturer for a period of 20 years from date of original purchase. The warranty shall cover any defects in material finish, including cracking, peeling, chipping, blistering or corroding.

2. All steel material for fence panels and posts shall conform to the requirements of ASTM A-653 with a minimum yield strength of 45,000 psi and a minimum zinc coating weight of 0.60 oz/fl2, Coating Designation G60.

3. All posts and panels shall be finished with an inline electrode position coating (E-Coat) process consisting of a multi-stage pretreatment/wash (with zinc phosphate), a duplex application of an epoxy primer and an acrylic topcoat. The color shall be Black.

4. Anchor Bolts and nuts shall conform to ASTM A307. Washers shall be in accordance with ASTM F436. Hardware shall be galvanized in accordance with ASTM F2329. Bolts shall be hex head Structural type with heavy hex lock nuts and round washers.

5. All anchor bolts shall be tightened to a Torque of 120 ft-lbs (approximated without the use of a calibrated torque wrench).

6. All labor, materials and appurtenances necessary for installation of the ornamental metal fence shall be incidental to the contract unit price per foot for "Ornamental Metal Fence".

REGISTERED PROFESSIONAL ENGINEER
REG NO.
8161
JOSH
LARSON
7-3-15
SOUTH DAKOTA

STATE OF SOUTH DAKOTA	PROJECT	SHEET	TOTAL SHEETS
	NH 0050(99)381	B73	B106

FOR BIDDING PURPOSES ONLY

SPECIAL DETAILS

3' X 6.5' TYPE B MODIFIED DROP INLET

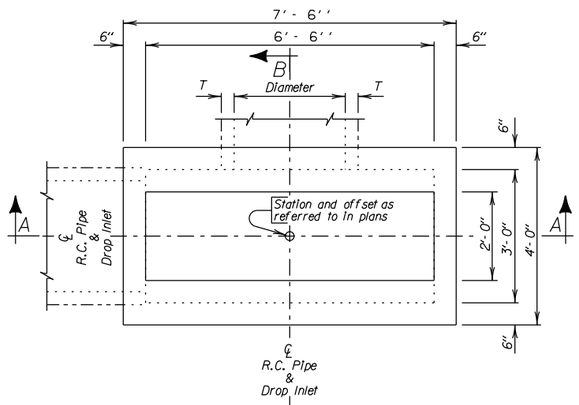

PLAN

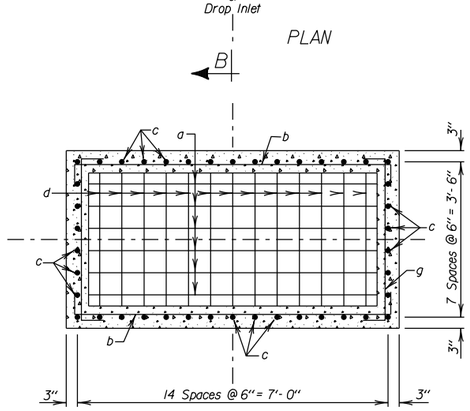

PLAN
(Bottom Steel)

PIPE DISPLACEMENT REDUCTIONS		
R. C. Pipe Diameter Inches	T Inches	Class M6 Concrete Cu'd
12	2	0.03
15	2 1/4	0.04
18	2 1/2	0.05
24	3	0.09
27	3 1/4	0.11
30	3 1/2	0.14
36	4	0.20
42	4 1/2	0.26
48	5	0.34
54	5 1/2	0.43

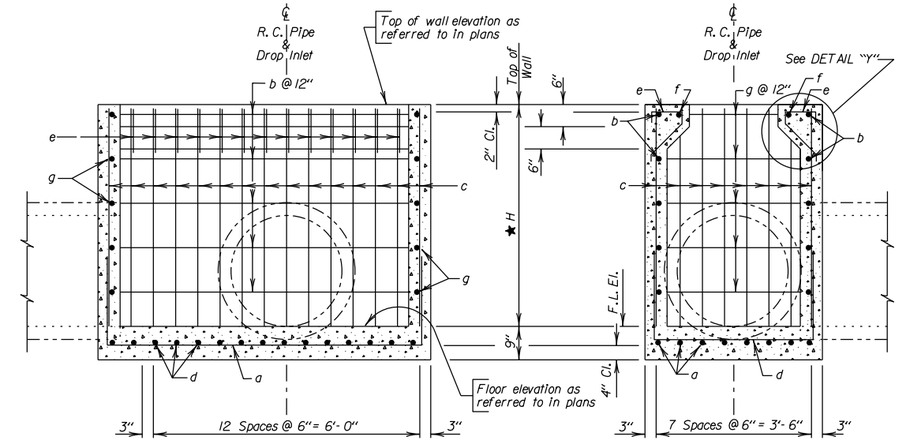

SEC. A-A

★ Maximum H is 10'- 0''

SEC. B - B

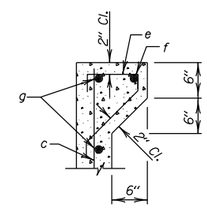

DETAIL "Y"

ESTIMATED QUANTITIES			
ITEM	UNIT	CONSTANT QUANTITY	VARIABLE QUANTITY
✳ Class M6 Concrete	Cu'd	1.01	0.39H
Reinforcing Steel	Lb	327	61.00H
Frame and Grate Assembly	Each	1	———

GENERAL NOTES:

✳ Reduce total quantities of concrete by the amount of concrete displaced by the pipe. The total quantity of concrete shall be computed to the nearest hundredth of a cubic yard. The total quantity of reinforcing steel shall be computed to the nearest pound.

Drop inlets shown may be modified by the addition or omission of connecting pipes as shown on the layouts.

Reinforcing steel shall conform to ASTM A615 Grade 60. Cut and bend reinforcing steel as required to place pipe(s) through the drop inlet wall.

Pipe shall not enter through a corner of the drop inlet.

Use 2" clear cover on all reinforcing steel unless otherwise noted.

Precasting of reinforced drop inlets will be permissible. Prior to precasting, the Contractor shall submit details to the Engineer for approval.

Maximum pipe diameter shall not exceed 30 inches on the 4 foot wide side of the drop inlet.

The dimension of H is in feet.

Frames shall be a Neenah Foundry R-3295-2 or an approved equal.

REGISTERED PROFESSIONAL ENGINEER AND LAND SURVEYOR
REG. NO.
5801
KIM LaRUE
McLAURY
7-3-15
SOUTH DAKOTA

Kim L McLaury

REINFORCING SCHEDULE					
Mk.	No.	Size	Length	Type	Bending Details
a	8	6	11'- 0''	17	
b	2H	4	8'- 0''	17	
c	42	5	H- 2''	Str.	
d	15	6	7'- 6''	17	
e	26	5	2'- 6''	16A	
f	2	5	8'- 0''	17	
g	2H	4	4'- 6''	17	

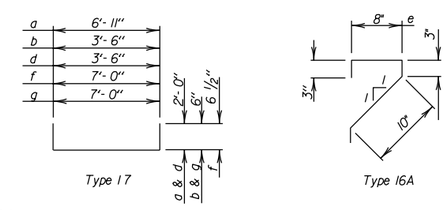

Type 17

Type 16A

NOTE: All dimensions are out to out of bars.

SPECIAL DETAILS

FOR BIDDING PURPOSES ONLY

GRADE BREAK FOR TYPE A APPROACH PAVEMENT

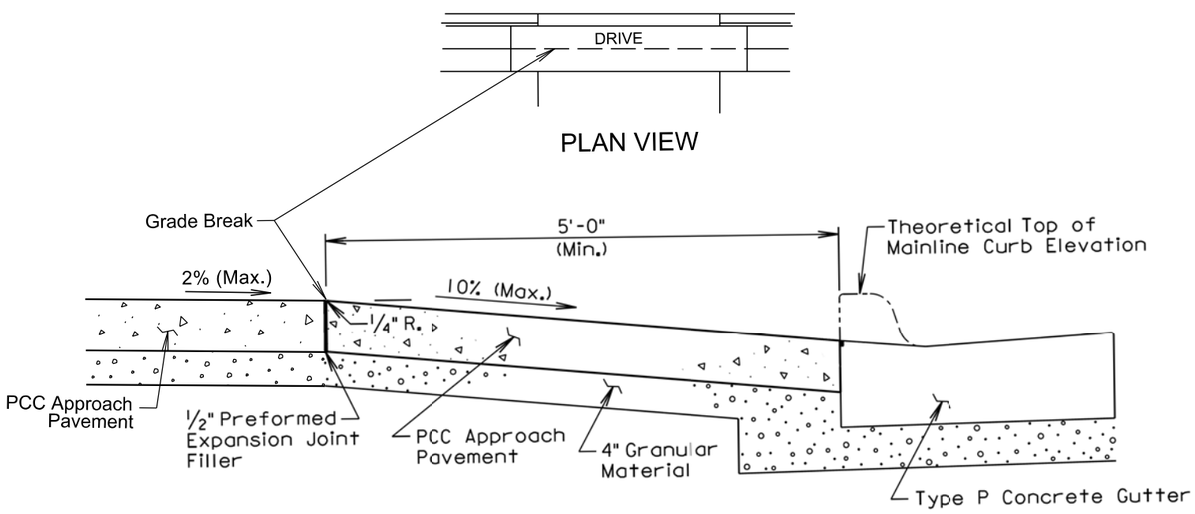

GRINDING MISCELLANEOUS CONCRETE

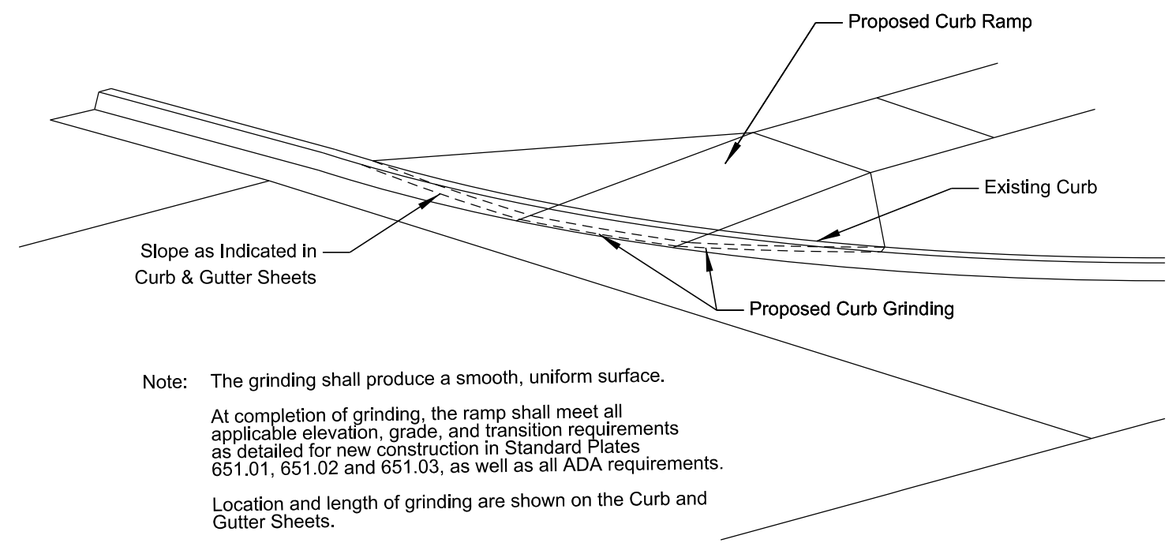

Note: The grinding shall produce a smooth, uniform surface.

At completion of grinding, the ramp shall meet all applicable elevation, grade, and transition requirements as detailed for new construction in Standard Plates 651.01, 651.02 and 651.03, as well as all ADA requirements.

Location and length of grinding are shown on the Curb and Gutter Sheets.

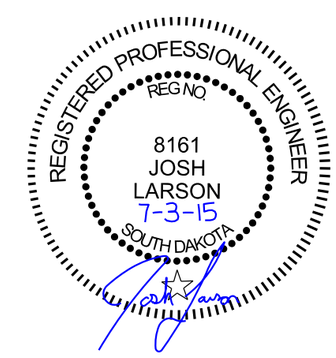

SPECIAL DETAILS

FOR BIDDING PURPOSES ONLY

STATE OF SOUTH DAKOTA	PROJECT	SHEET	TOTAL SHEETS
	NH 0050(99)381	B75	B106

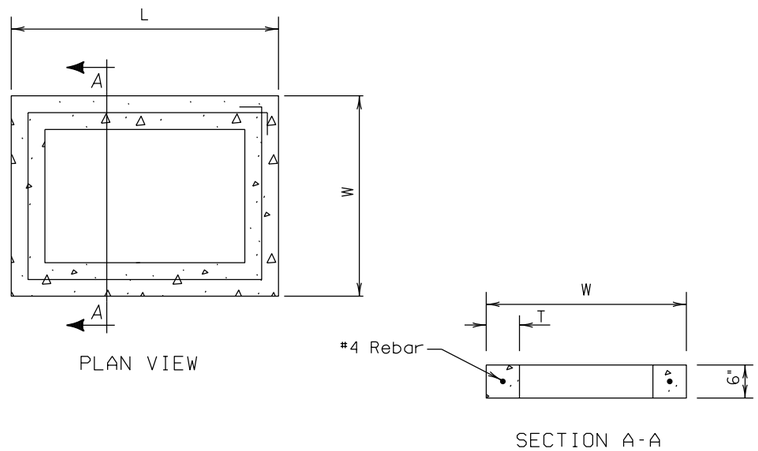

INFORMATIONAL QUANTITIES					
FRAME AND GRATE TYPE	L Ft-In	W Ft-In	T In	CLASS M6 CONCRETE CuYd	REINFORCING STEEL Lb
SPECIAL TYPE B	7'-6"	3'-0"	6"	0.18	14

REGISTERED PROFESSIONAL ENGINEER
REG NO.
8161
JOSH
LARSON
7-3-15
SOUTH DAKOTA

GENERAL NOTES:

All reinforcing steel shall conform to ASTM A615, Grade 60.

The ½" diameter bar shall lap 6"+/- and shall be centered in the concrete.

The cost of furnishing and installing Special Precast Drop Inlet Collars, including labor, materials, and incidentals shall be incidental to the contract unit price per Each for "Precast Drop Inlet Collar".

SPECIAL PRECAST DROP INLET COLLAR

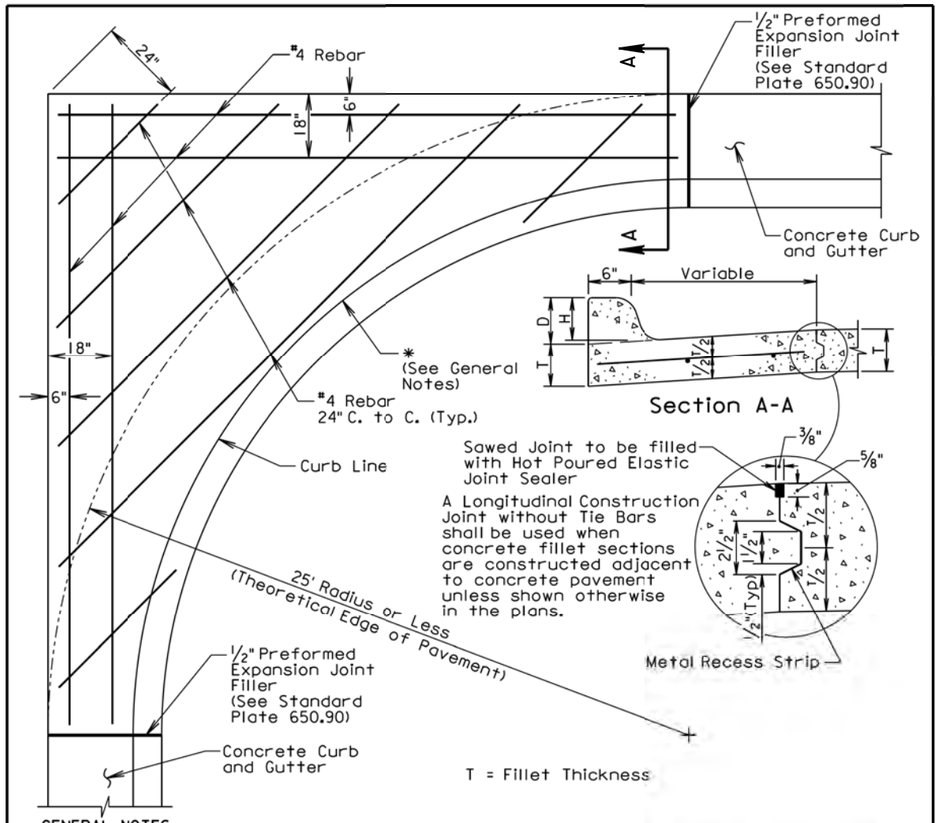

GENERAL NOTES:

* If a curb ramp is constructed adjacent to a PCC fillet section, the curb will need to be modified. Refer to the corresponding curb ramp standard plate or other special details in the plans for modification of the PCC fillet section.

Dimensions D, H, and T shall conform to those shown on the appropriate curb and gutter standard plate.

All rebar shall conform to A.S.T.M. A615 Grade 60 and the Standard Specifications Sections 480 and 1010. All rebar shall have a minimum of 3" clear cover.

Class M6 Concrete shall be used in construction of the fillets.

The concrete curb shall be monolithic with the concrete fillet. No separate payment for this curb will be made as the curb is considered a part of the fillet.

Joints shall be constructed at 10' intervals except when fillets are constructed adjacent to PCC Pavement. If there is adjacent PCC Pavement the joints shall be extended from edge of pavement through the fillet section as directed by the Engineer.

The cost for all materials, labor, and incidentals necessary to construct the PCC fillet section with curb and gutter shall be incidental to the contract unit price per square yard for the corresponding PCC fillet section bid item.

September 6, 2013

Published Date: 2nd Qtr. 2015	SDDOT	PCC FILLET SECTION WITH TYPE B CURB AND GUTTER	PLATE NUMBER 380.16
			Sheet 1 of 1

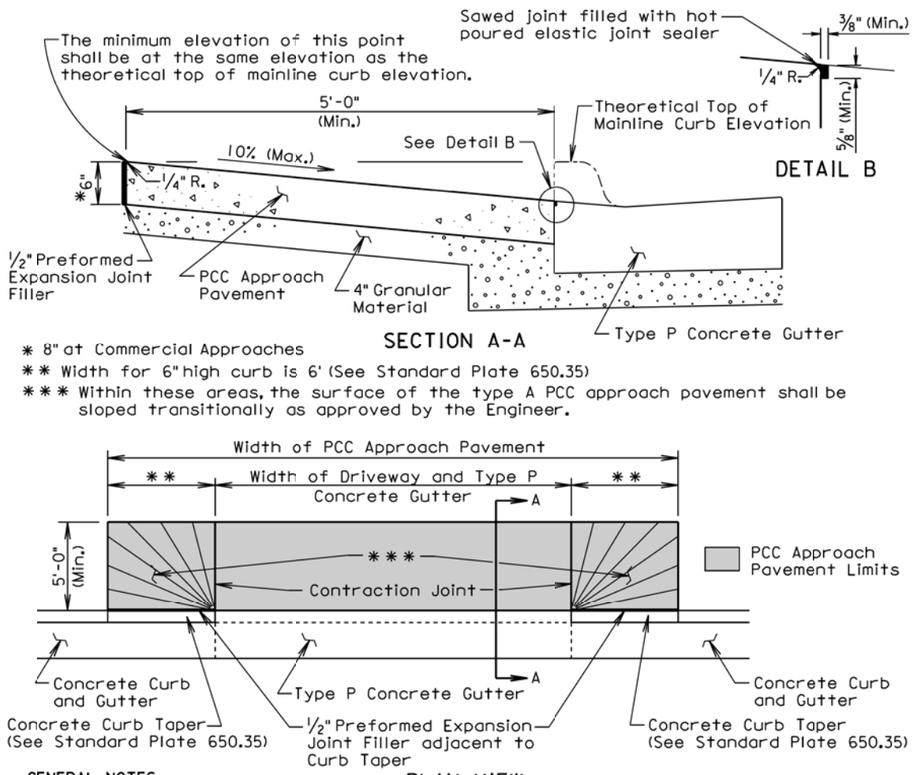

* 8" at Commercial Approaches

** Width for 6" high curb is 6' (See Standard Plate 650.35)

*** Within these areas, the surface of the type A PCC approach pavement shall be sloped transitionally as approved by the Engineer.

GENERAL NOTES:

The concrete for the type A PCC approach pavement and adjacent driveway shall comply with the requirements of the Standard Specifications for class M6 concrete unless otherwise stated in the plans.

Contraction joints in the type A PCC approach pavement shall be 1½ inches deep if formed in the fresh concrete using a suitable grooving tool. If a saw is used to cut the contraction joints, then the depth of the joint shall be at least ¼ the thickness of the approach pavement. Additional contraction joints not shown in the Plan View shall be spaced as follows:

One joint at the center of the approach for driveways 16' to 24' wide.
Two joints spaced at equal intervals for driveways greater than 24' to 40' wide.

All costs for furnishing and placing the type A PCC approach pavement and constructing the expansion and contraction joints including labor, equipment, and materials including the earthen backfill shall be incidental to the contract unit price per square yard for the corresponding PCC Approach Pavement bid item.

All costs for excavation required for placing the type A PCC approach pavement and granular material shall be incidental to the contract unit price per cubic yard for "Unclassified Excavation". All costs for furnishing and placing the granular material shall be incidental to the contract unit price per ton for the corresponding granular material bid item.

September 6, 2013

Published Date: 2nd Qtr. 2015	SDDOT	TYPE A PCC APPROACH PAVEMENT	PLATE NUMBER 380.40 Sheet 1 of 1

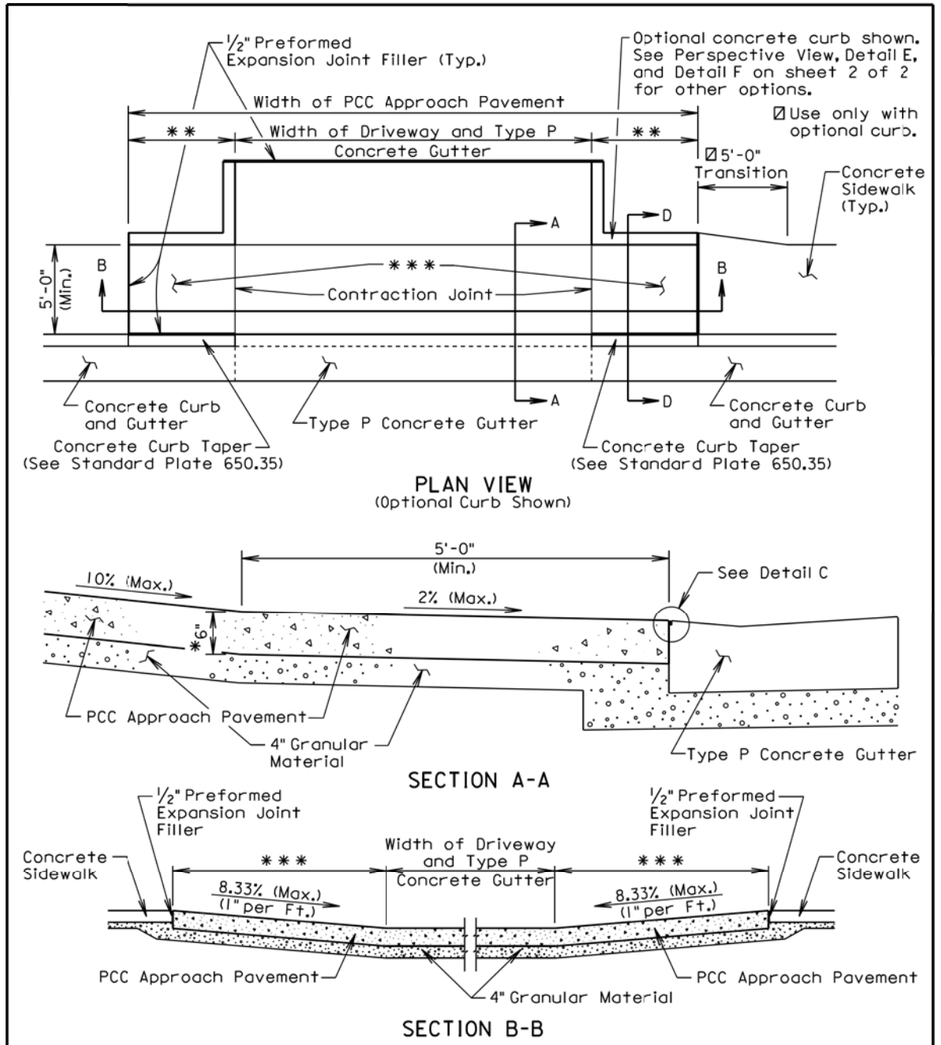

* 8" at Commercial Approaches

** Width for 6" high curb is 6' (See Standard Plate 650.35)

*** The slope of the type B PCC approach pavement in these areas shall match the slope of the concrete curb taper. The slope shall not be steeper than a 1" per foot slope.

September 6, 2013

Published Date: 2nd Qtr. 2015	SDDOT	TYPE B PCC APPROACH PAVEMENT	PLATE NUMBER 380.41 Sheet 1 of 2

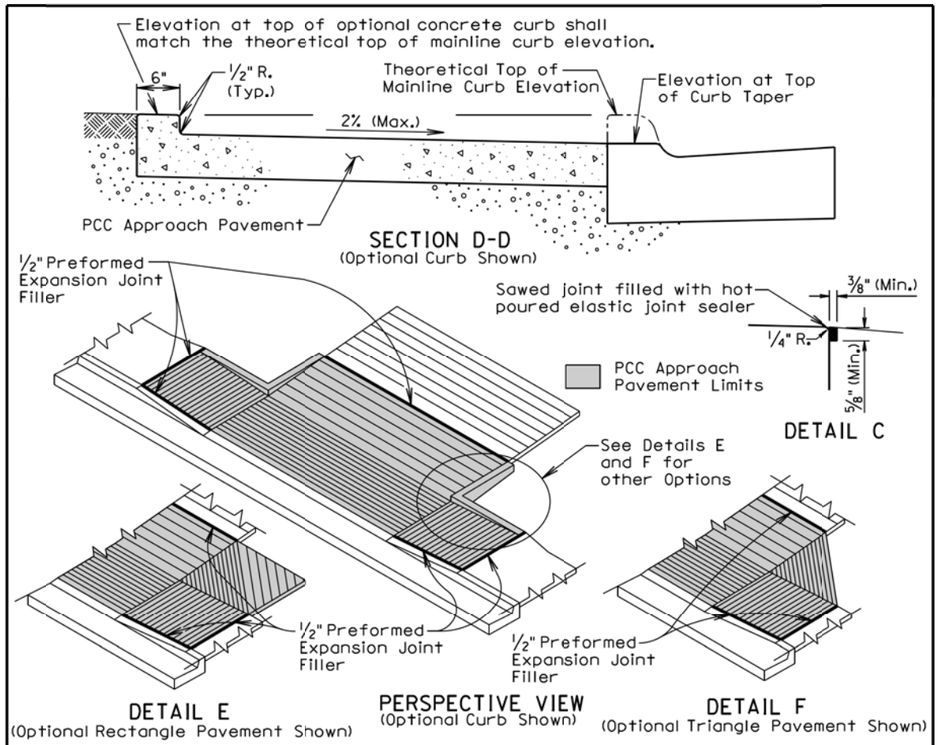

GENERAL NOTES:

Use the plan specified option for the pavement adjacent to the driveway and sidewalk. The options are shown above in the Perspective View, Detail E, and Detail F.

The concrete for the type B PCC approach pavement and adjacent driveway shall comply with the requirements of the Standard Specifications for class M6 concrete unless otherwise stated in the plans.

Contraction joints in the type B PCC approach pavement shall be 1½ inches deep if formed in the fresh concrete using a suitable grooving tool. If a saw is used to cut the contraction joints, then the depth of the joint shall be at least ¼ the thickness of the approach pavement. Additional contraction joints not shown in the Plan View shall be spaced as follows:

One joint at the center of the approach for driveways 16' to 24' wide.
Two joints spaced at equal intervals for driveways greater than 24' to 40' wide.

All costs for furnishing and placing the type B PCC approach pavement and constructing the expansion and contraction joints including labor, equipment, and materials including the earthen backfill shall be incidental to the contract unit price per square yard for the corresponding PCC Approach Pavement bid item.

All costs for excavation required for placing the type B PCC approach pavement and granular material shall be incidental to the contract unit price per cubic yard for "Unclassified Excavation". All costs for furnishing and placing the granular material shall be incidental to the contract unit price per ton for the corresponding granular material bid item.

September 6, 2013

Published Date: 2nd Qtr. 2015	SDDOT	TYPE B PCC APPROACH PAVEMENT	PLATE NUMBER 380.41	Sheet 2 of 2

TOLERANCES IN DIMENSIONS

Diameter: ±1.5% for 24" Dia. or less and ±1% or ⅜" whichever is more for 27" Dia. or greater.
Diameters at Joints: ±3/16" for 30" Dia. or less and ±1/4" for 36" or greater.
Length of joint (j): ±1/4".
Wall thickness (T): not less than design T by more than 5% or ⅜", whichever is greater.
Laying length: shall not underrun by more than ½".

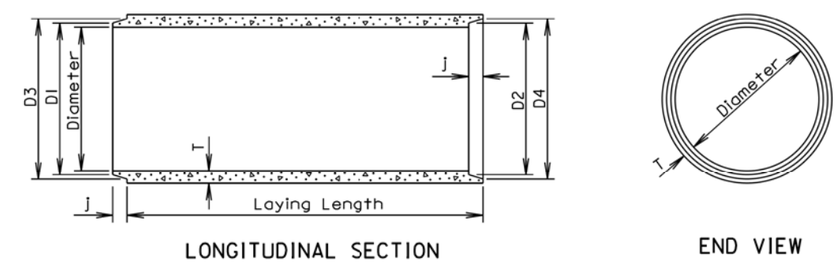

LONGITUDINAL SECTION

END VIEW

GENERAL NOTES:

Construction of R.C.P. shall conform to the requirements of Section 990 of the Standard Specifications for Roads and Bricges.

Not more than 2 four foot sections shall be permitted near the ends of any culvert. Four foot lengths shall be used only to secure the required length of culvert.

Diam. (in.)	Approx. Wt. /Ft. (lb.)	T (in.)	J (in.)	D1 (in.)	D2 (in.)	D3 (in.)	D4 (in.)
12	92	2	1¾	13¼	13⅝	13⅞	14¼
15	127	2¼	2	16½	16⅞	17¼	17⅝
18	168	2½	2¼	19⅝	20	20⅜	20¾
21	214	2¾	2½	22⅞	23¼	23¾	24⅛
24	265	3	2¾	26	26⅜	27	27⅜
27	322	3¼	3	29¼	29⅝	30¼	30⅝
30	384	3½	3¼	32⅜	32¾	33½	33⅞
36	524	4	3¾	38¾	39¼	40	40½
42	685	4½	4	45⅛	45⅝	46½	47
48	867	5	4½	51½	52	53	53½
54	1070	5½	4½	57⅞	58⅜	59⅜	59⅞
60	1296	6	5	64¼	64¾	66	66½
66	1542	6½	5½	70⅝	71⅛	72½	73
72	1810	7	6	77	77½	79	79½
78	2098	7½	6½	83⅜	83⅞	85⅝	86⅛
84	2410	8	7	89¾	90¼	92⅛	92⅝
90	2740	8½	7	95¾	96¼	98⅛	98⅝
96	2950	9	7	102⅛	102⅝	104½	105
102	3075	9½	7½	109	109½	111½	112
108	3870	10	7½	115½	116	118	118½

March 31, 2000

Published Date: 2nd Qtr. 2015	SDDOT	REINFORCED CONCRETE PIPE	PLATE NUMBER 450.01	Sheet 1 of 1

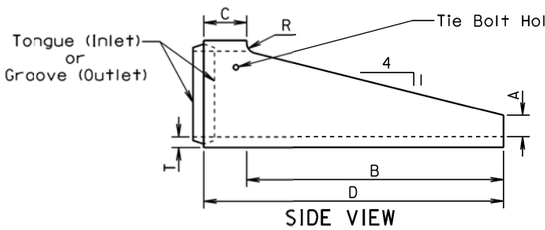

SIDE VIEW

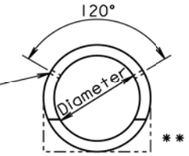

END VIEW
"CIRCULAR"

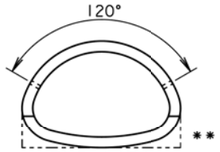

END VIEW
"ARCH"

Dia. (in.)	T (in.)	A (in.)	B (in.)	C (in.)	D (in.)	R (in.)
FOR CIRCULAR PIPE						
24	3	6	72	12	84	3
30	3½	7½	90	12	102	3½
FOR ARCH PIPE						
* 24	3	6	48	12	60	3
* 30	3½	7½	60	12	72	3½
* 36	4½	8⅝	66	30	96	0
* 42	4½	10	77¼	18¾	96	0

ALTERNATE

Dia. (in.)	T (in.)	A (in.)	B (in.)	C (in.)	D (in.)	R (in.)
FOR CIRCULAR PIPE						
24	3	9	72	12	84	0
30	3½	11	90	12	102	0
FOR ARCH PIPE						
* 24	3	9	48	12	60	0
* 30	3½	11	60	12	72	0

* Equivalent Diameter of Circular R.C.P.

** Acceptable Flat Bottom Alternate.

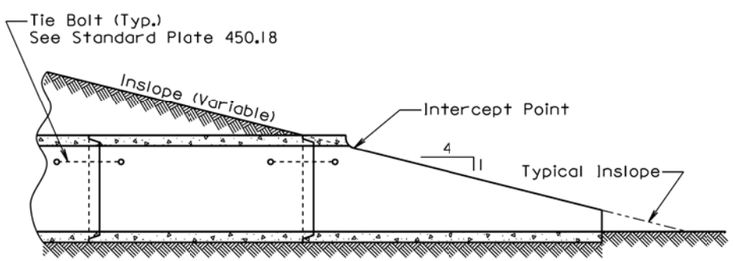

SECTION
(Along Centerline of Pipe)

GENERAL NOTE:

The length of concrete pipe shown in the construction plans is between sloped ends.

September 22, 2006

Published Date: 2nd Qtr. 2015 | SDDOT | R. C. P. SLOPED ENDS | PLATE NUMBER 450.13 | Sheet 1 of 1

Wall "t" (in.)	Rod Dia. (in.)	Pipe Sleeve Dia. (nominal)
≤ 3¼	⅝	¾
3½-6½	¾	1
≥ 7	1	1¼

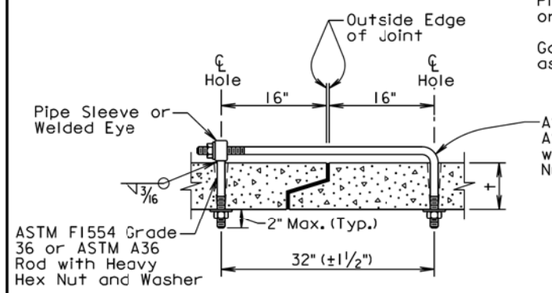

ADJUSTABLE EYE BOLT TIE

GENERAL NOTES:

Tie bolts shall conform to ASTM F1554 Grade 36 or ASTM A36. Nuts shall be heavy hex conforming to ASTM A563. Washers shall conform to ASTM F436.

Pipe Sleeve shall conform to ASTM A500 or A53, Grade B.

Galvanize adjustible eye bolt tie assembly in accordance with ASTM A153.

Pipe Dia. (in.)	"L" (in.)	Bolt Dia. (in.)
≤ 48	4	¾
> 48	6	1

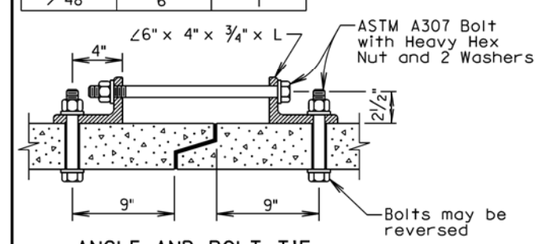

ANGLE AND BOLT TIE

GENERAL NOTES:

Angles shall conform to ASTM A36.

Bolts shall conform to ASTM A307. Nuts shall be heavy hex conforming to ASTM A563. Washers shall conform to ASTM F436.

Galvanize angles, bolts, nuts, and washers in accordance with ASTM A153.

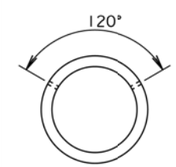

END VIEW
"CIRCULAR"

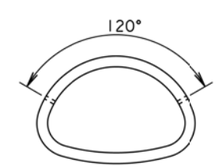

END VIEW
"ARCH"

GENERAL NOTES:

In lieu of the tie bolts detailed above other types of tie bolt connections may be installed as approved by the Office of Bridge Design.

All pipe sections of R.C.P. and R.C.P. Arch shall be tied with tie bolts except for pipe located between drop inlets, manholes, and junction boxes. All pipe sections of pipes that only enter or exit drop inlets, manhole, and junction boxes shall be tied with tie bolts.

There will be no seperate measurement or payment for the tie bolts. The cost for furnishing and installing the tie bolts shall be incidental to the contract unit price per foot for the corresponding bid item for R.C.P. or R.C.P. Arch.

February 28, 2013

Published Date: 2nd Qtr. 2015 | SDDOT | TIE BOLTS FOR R.C.P. AND R.C.P. ARCH | PLATE NUMBER 450.18 | Sheet 1 of 1

GENERAL NOTES:

1. All concrete shall be Class M6 in accordance with Section 462.
2. All reinforcing steel shall be epoxy coated and shall conform to ASTM A615, Grade 60. Epoxy coating shall conform to ASTM A775.
3. Use 2 inch clear cover on all reinforcing steel except as shown.
4. All concrete shall be thoroughly tamped and spaded against forms to leave a smooth surface without honeycomb. Finish of step treads to be steel troweled and then brush finished with brush strokes on treads at right angles to width. All exposed edges shall be chamfered 3/4 inch except as shown.
5. Place concrete on undisturbed soil. If backfilling is necessary, compact with mechanical tampers to the satisfaction of the Engineer.
6. The concrete sidewalk shall be constructed in accordance with Section 651.
7. Cost of the double thickness of ½ inch Preformed Expansion Joint Filler shall be incidental to the contract unit price per cubic yard for "Class M6 Concrete".

SPECIAL NOTE:

Details for construction of the concrete stairway and handrails shown on sheet 2 of 2 are typical only, and are not intended to depict specific installations. Adjust the length of the stairway as required to fit specific site requirements. Use the formulas given on this sheet to adjust the unit price bid quantities to the required length of the stairway. Refer to project plans for requirements of individual locations. Alternate design details may be submitted through proper channels to the Office of Bridge Design for approval, including aluminum handrail installation.

REINFORCING SCHEDULE

Mk.	△No.	Size	△ Length	Type	Bending Details
b1	★	4	2h + 5	Str.	
b2	6	4	h + 1.67	17A	
b3	⌀	4	h + 4.67	17A	
e	7	4	5' - 8"	S12	
g1	7	4	1.12w + 2.0	19B	
g2	2	4	1.12w + 3.7	19B	
p	2w + 7	4	6' - 2"	Str.	

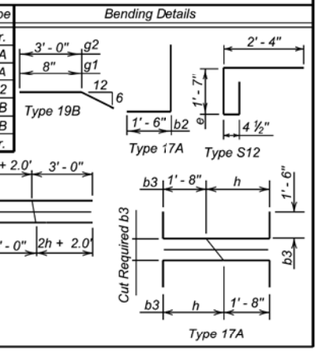

★2 bars for h = 0 - 2.0'
3 bars for h = 2.1' - 3.5'
4 bars for h = 3.6' - 5.0'

⌀ 2.67h - 3.33

ESTIMATED QUANTITIES

ITEM	UNIT	△QUANTITY
Class M6 Concrete	Cu. Yd.	$0.87 + 0.23w + 0.04h^2$
Structure Excavation, Miscellaneous	Cu. Yd.	$1.79 + 0.59w + 0.15h^2$
Epoxy Coated Reinforcing Steel	Lb.	⌀
Pipe Handrail	Ft.	6.22 + 2.24w
Sidewalk	Sq. Ft.	33

⌀ $72.62 + 14.97w + 1.78h^2 + 12.78h$ for h = 0 - 2.0'
$75.96 + 14.97w + 1.78h^2 + 14.12h$ for h = 2.1' - 3. 5'
$79.30 + 14.97w + 1.78h^2 + 15.46h$ for h = 3.6' - 5.0'

△ w = Number of steps NOT including landings (i. e. w = 9 in Sec. A - A).

August 8, 2014

Published Date: 2nd Qtr. 2015	SDDOT	CONCRETE STAIRWAY FOR TYPE C CONCRETE RETAINING WALL	PLATE NUMBER 460.20
			Sheet 1 of 2

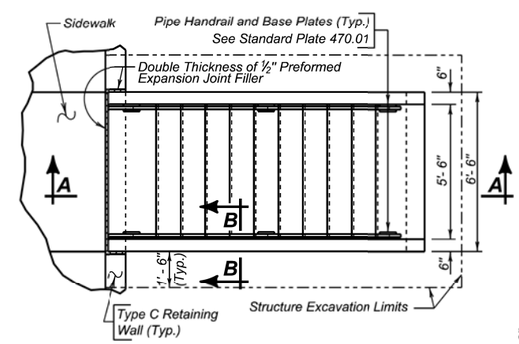

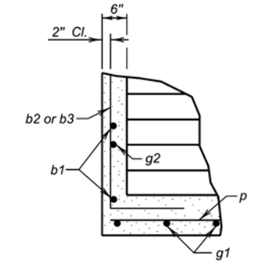

SEC. B - B

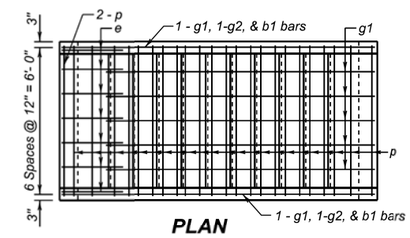

PLAN

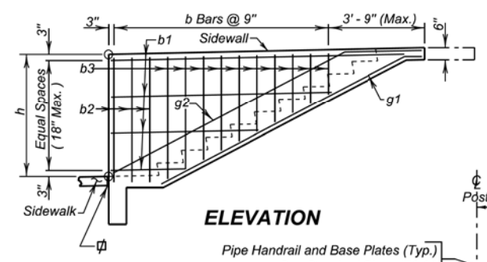

ELEVATION

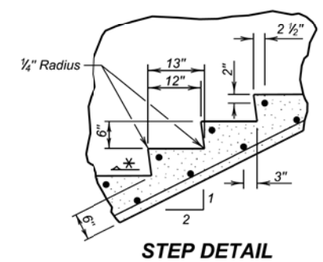

STEP DETAIL

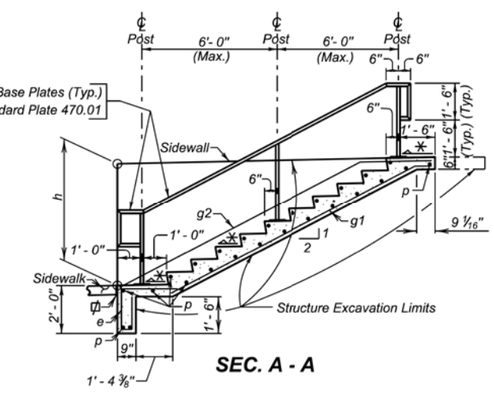

SEC. A - A

⌀ Double Thickness of ½" Preformed Expansion Joint Filler
✳ Slope ¼" per foot.

August 8, 2014

Published Date: 2nd Qtr. 2015	SDDOT	CONCRETE STAIRWAY FOR TYPE C CONCRETE RETAINING WALL	PLATE NUMBER 460.20
			Sheet 2 of 2

FOR BIDDING PURPOSES ONLY

STATE OF SOUTH DAKOTA	PROJECT	SHEET	TOTAL SHEETS
	NH 0050(99)381	B80	B106

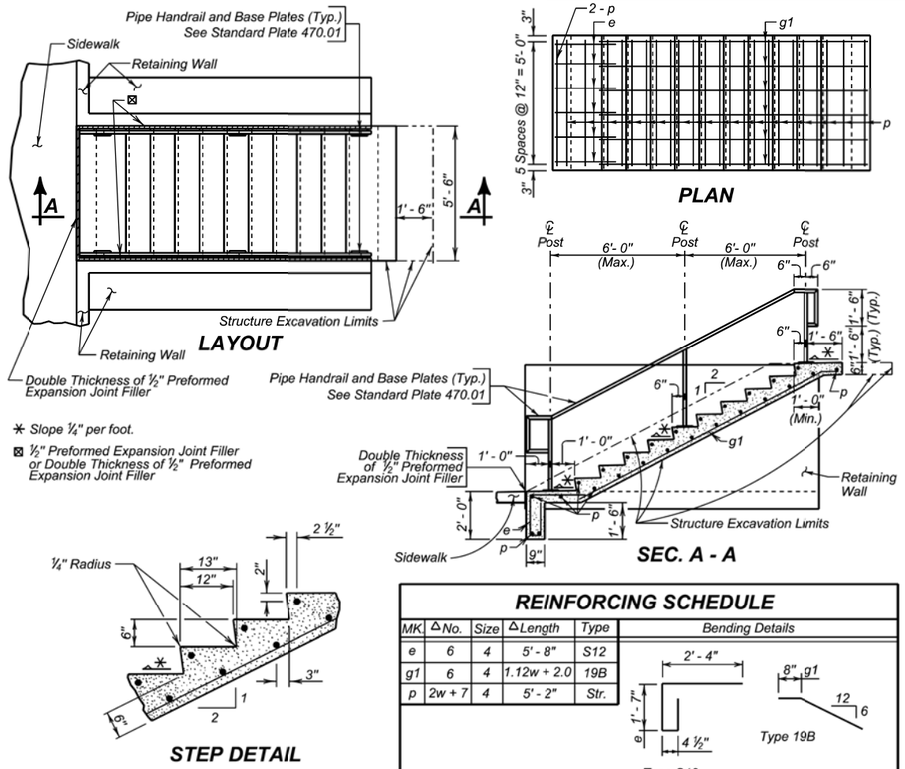

REINFORCING SCHEDULE

MK	△No.	Size	△Length	Type
e	6	4	5' - 8"	S12
g1	6	4	1.12w + 2.0	19B
p	2w + 7	4	5' - 2"	Str.

Bending Details

ESTIMATED QUANTITIES

ITEM	UNIT	△QUANTITY
Class M6 Concrete	Cu. Yd.	0.71 + 0.17w
Structure Excavation (Misc.)	Cu. Yd.	1.02 + 0.31w
Epoxy Coated Reinforcing Steel	Lb.	54.89 + 11.39w
Pipe Handrail	Ft.	6.22 + 2.24w

△ w = Number of steps NOT including landings (i. e. w = 9 in Sec. A-A).

GENERAL NOTES:

1. All concrete shall be Class M6 in accordance with Section 462.
2. All reinforcing steel shall be epoxy coated and shall conform to ASTM A615, Grade 60. Epoxy coating shall conform to ASTM A775.
3. Use 2 inch clear cover on all reinforcing steel except as shown.
4. All concrete shall be thoroughly tamped and spaded against forms to leave a smooth surface without honeycomb. Finish of step treads to be steel troweled and then brush finished with brush strokes on treads at right angles to width. All exposed edges shall be chamfered ¾ inch except as shown.
5. Place concrete on undisturbed soil. If backfilling is necessary, compact with mechanical tampers to the satisfaction of the Engineer.
6. The concrete sidewalk shall be constructed in accordance with Section 651.
7. Cost of the ½ inch Preformed Expansion Joint Filler shall be incidental to the contract unit price per cubic yard for "Class M6 Concrete".
8. ⊠ Use double thickness of ½ inch Preformed Expansion Joint Filler if retaining wall parallel to sidewalk is longer than 75 feet.

SPECIAL NOTE:

Details for construction of the concrete stairway and handrails shown on this sheet are typical only, and are not intended to depict specific installations. Adjust the length of the stairway as required to fit specific site requirements. Use the formulas given on this sheet to adjust the unit price bid quantities to the required length of the stairway. Refer to project plans for requirements of individual locations. Alternate design details may be submitted through proper channels to the Office of Bridge Design for approval, including aluminum handrail installation.

August 8, 2014

Published Date: 2nd Qtr. 2015 | SDDOT | CONCRETE STAIRWAY IN RETAINING WALL | PLATE NUMBER 460.30 | Sheet 1 of 1

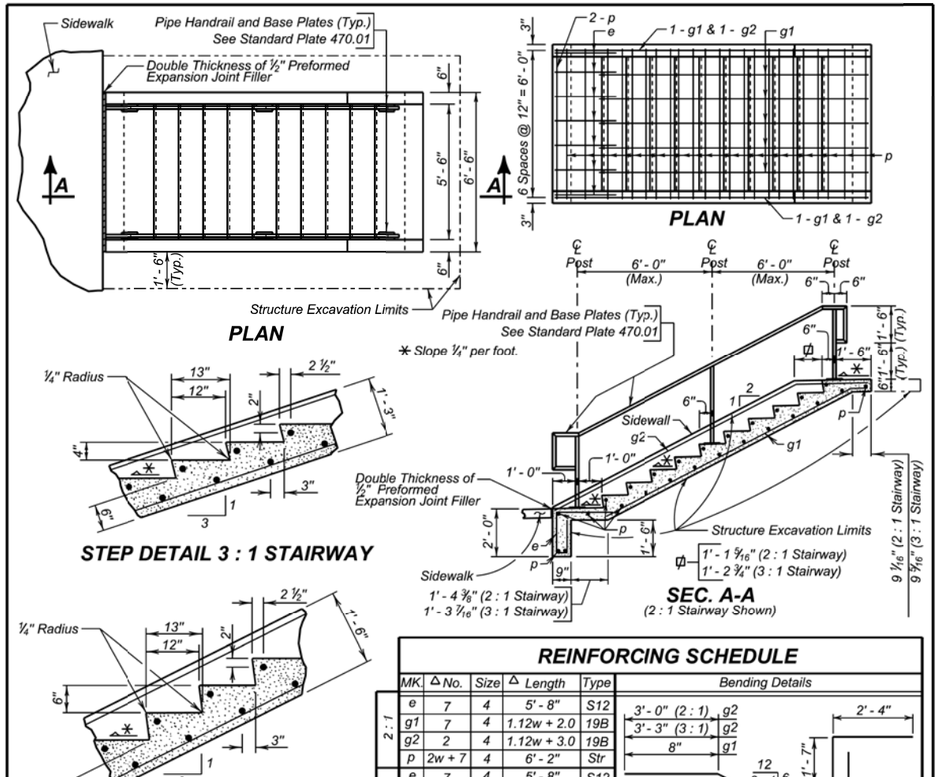

REINFORCING SCHEDULE

	MK	△No.	Size	△ Length	Type
2 : 1	e	7	4	5' - 8"	S12
	g1	7	4	1.12w + 2.0	19B
	g2	2	4	1.12w + 3.0	19B
	p	2w + 7	4	6' - 2"	Str
3 : 1	e	7	4	5' - 8"	S12
	g1	7	4	1.05w + 2.0	19B
	g2	2	4	1.05w + 3.7	19B
	p	2w + 7	4	6' - 2"	Str

Bending Details

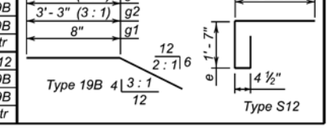

ESTIMATED QUANTITIES

ITEM	UNIT	△QUANTITY 2 : 1 STAIRWAY	△QUANTITY 3 : 1 STAIRWAY
Class M6 Concrete	Cu. Yd.	0.87 + 0.23w	0.83 + 0.19w
Structure Excavation (Misc.)	Cu. Yd.	1.79 + 0.59w	1.65 + 0.46w
Epoxy Coated Reinforcing Steel	Lb.	69.63 + 14.97w	69.63 + 14.55w
Pipe Handrail	Ft.	6.22 + 2.24w	6.10 + 2.10w

△ w = Number of steps NOT including landings (i. e. w = 9 in Sec. A-A).

GENERAL NOTES:

1. All concrete shall be Class M6 in accordance with Section 462.
2. All reinforcing steel shall be epoxy coated and shall conform to ASTM A615, Grade 60. Epoxy coating shall conform to ASTM A775.
3. Use 2 inch clear cover on all reinforcing steel except as shown.
4. All concrete shall be thoroughly tamped and spaded against forms to leave a smooth surface without honeycomb. Finish of step treads to be steel troweled and then brush finished with brush strokes on treads at right angles to width. All exposed edges shall be chamfered ¾ inch except as shown.
5. Place concrete on undisturbed soil. If backfilling is necessary, compact with mechanical tampers to the satisfaction of the Engineer.
6. The concrete sidewalk shall be constructed in accordance with Section 651.
7. Cost of the ½ inch Preformed Expansion Joint Filler shall be incidental to the contract unit price per cubic yard for "Class M6 Concrete".

SPECIAL NOTE:

Details for construction of the concrete stairway and handrails shown on this sheet are typical only, and are not intended to depict specific installations. Adjust the length of the stairway as required to fit specific site requirements. Use the formulas given on this sheet to adjust the unit price bid quantities to the required length of the stairway. Refer to project plans for requirements of individual locations. Alternate design details may be submitted through proper channels to the Office of Bridge Design for approval, including aluminum handrail installation.

August 8, 2014

Published Date: 2nd Qtr. 2015 | SDDOT | CONCRETE STAIRWAY | PLATE NUMBER 460.31 | Sheet 1 of 1

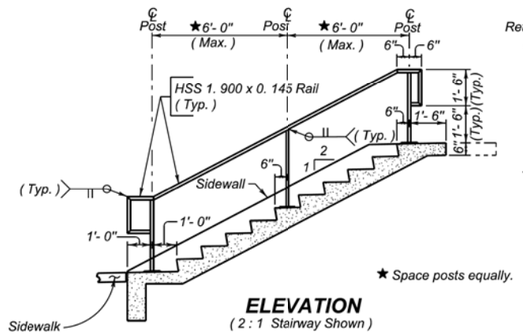

ELEVATION
(2 : 1 Stairway Shown)

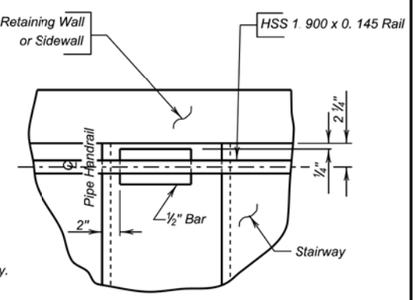

VIEW F - F

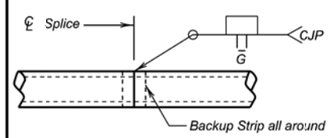

RAIL SPLICE DETAILS

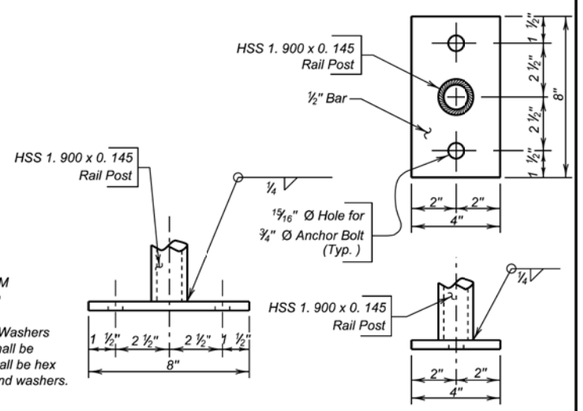

BASE PLATE DETAILS

GENERAL NOTES:

1. All rail posts shall be built vertical.
2. Steel pipe for railing and posts shall conform to ASTM A500, Grade B. Railpost base plates shall conform to ASTM A709, Grade 36.
3. Anchor Bolts and nuts shall conform to ASTM A307. Washers shall be in accordance with ASTM F436. Hardware shall be galvanized in accordance with ASTM F2329. Bolts shall be hex head Structural type with heavy hex lock nuts and round washers.
4. All anchor bolts shall be tightened to a Torque of 120 ft-lbs (approximated without the use of a calibrated torque wrench).
5. Painting of steel railing shall be done in accordance with Section 411 of the Standard Specifications. The finish color shall be Federal Standard 595B, color 27038 (semi-gloss black) unless stated otherwise in the plans.
6. Welding and weld inspection shall be done in accordance with AWS D1. 1-(Current Year) Structural Welding Code - Steel.
7. The cost of structural steel, anchor bolts, painting, galvanizing, fabrication and installation of the Pipe Handrail shall be incidental to welding, weld inspection and that which is incidental to the the contract unit price per foot for "Pipe Handrail".
8. Alternate rail designs, including aluminum rail, may be submitted through proper channels to the Office of Bridge Design for approval.

SHOP PLANS

The fabricator shall submit shop drawings in accordance with the Standard Specifications.

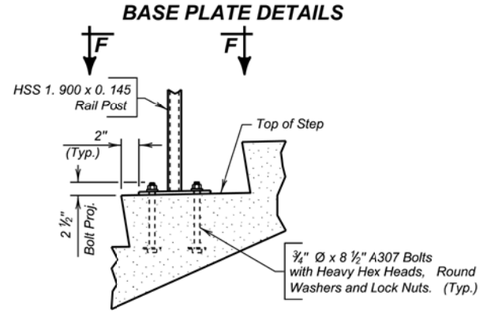

ANCHOR BOLT DETAIL

December 23, 2013

Published Date: 2nd Qtr. 2015	SDDOT	STAIRWAY HANDRAIL	PLATE NUMBER 470.01
			Sheet 1 of 1

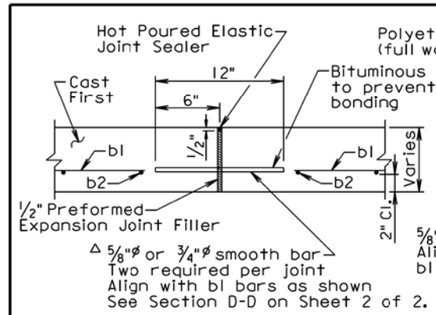

ELEVATION VIEW
EXPANSION JOINT FOR FOOTING

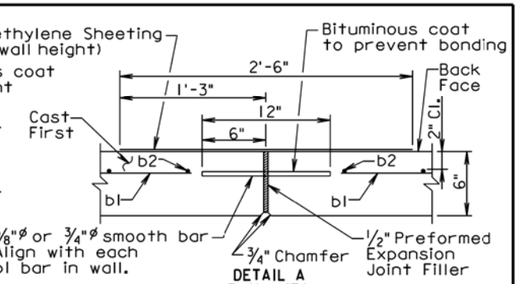

DETAIL A
PLAN VIEW
EXPANSION JOINT FOR WALL

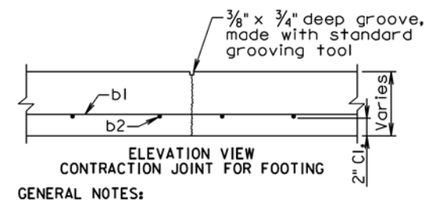

ELEVATION VIEW
CONTRACTION JOINT FOR FOOTING

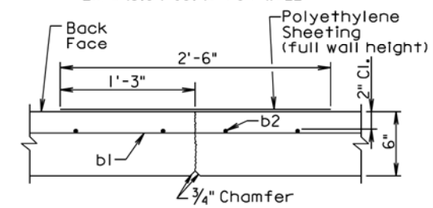

PLAN VIEW
CONTRACTION JOINT FOR WALL

GENERAL NOTES:

The Type C Concrete Retaining Wall shall be placed adjacent to pavement or curb and gutter as shown in Section D-D on sheet 2 of 2.

* The sidewalk width of the Type C Concrete Retaining Wall shall not be wider than 8 feet or narrower than 5 feet. See plans for specified width.

In the areas where the retaining wall footing is to be placed, a 2 inch thickness of cushion material shall be placed and compacted. The cushion material shall conform to Section 651.2 C. of the Specifications.

All concrete shall be Class M6 and conform to Section 462 of the Specifications.

All reinforcing steel shall be epoxy coated and shall conform to ASTM A615, Grade 60. The smooth bar may conform to ASTM A615, Grade 40. The epoxy coating shall conform to ASTM A775.

For variable height walls, the top b1 bar shall be placed parallel to the top of the wall.

The b1 bars shall be lapped a minimum of 12 inches.

A ¾ inch chamfer shall be provided on all exposed retaining wall edges.

Use Detail B on sheet 2 of 2 for constructing corners in the retaining wall.

The maximum expansion joint spacing shall be 90 feet and the maximum contraction joint spacing shall be 30 feet. The contraction and expansion joints shall be placed to match pavement or curb joints where possible.

The exposed retaining wall surfaces shall receive a finish in accordance with 460.3 M. of the Specifications. The exposed surface of the retaining wall footing, when used as a sidewalk, shall receive a broom finish.

The Type C Concrete Retaining Wall shall be measured to the nearest square foot of front face area.

All costs for excavation, furnishing and placing backfill and cushion material, labor, equipment, preformed expansion joint filler, all reinforcing steel including the smooth bars, and all concrete except in the areas of PCC driveway and approach pavement, shall be incidental to the contract unit price per square foot for "Type C Concrete Retaining Wall".

The concrete used for the retaining wall footing that extends into the approach and/or driveway pavement shall be paid for at the contract unit price per square yard for the corresponding "PCC Approach Pavement" and/or "PCC Driveway Pavement" bid items. August 8, 2014

Published Date: 2nd Qtr. 2015	SDDOT	TYPE C CONCRETE RETAINING WALL	PLATE NUMBER 530.01
			Sheet 1 of 2

Use No. 4 bars for all reinforcing steel unless specified otherwise.

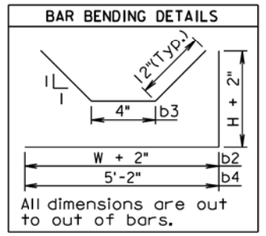

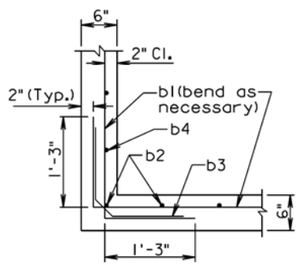

DETAIL B
PLAN VIEW OF WALL CORNER DETAIL

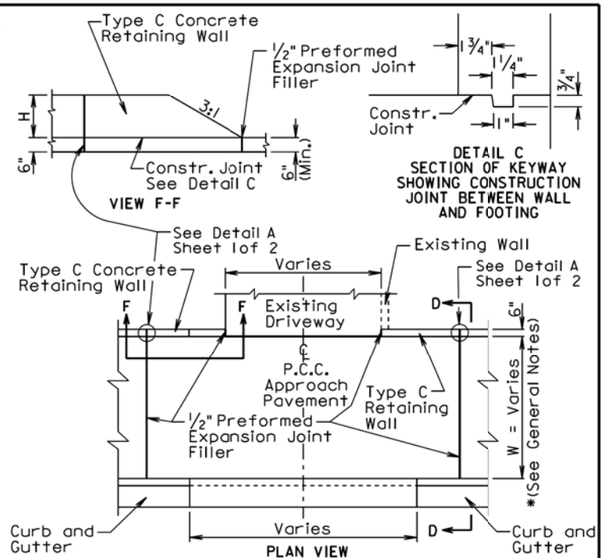

DETAIL C
SECTION OF KEYWAY SHOWING CONSTRUCTION JOINT BETWEEN WALL AND FOOTING

PLAN VIEW
TYPE C CONCRETE RETAINING WALL ON P.C.C. APPROACH PAVEMENT

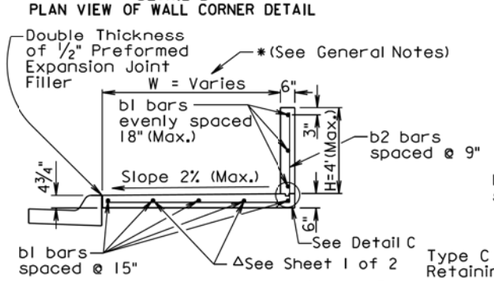

SECTION D-D

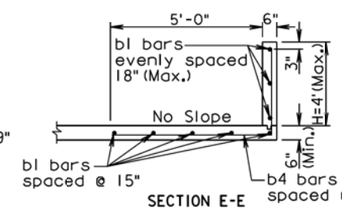

SECTION E-E

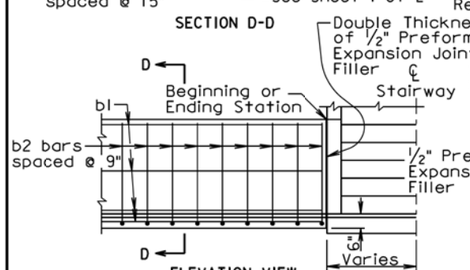

ELEVATION VIEW
TYPE C CONCRETE RETAINING WALL ADJACENT TO CURB & GUTTER AND STAIRWAY
(Curb and Gutter not shown)

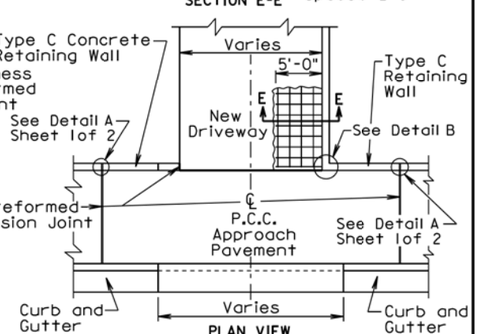

PLAN VIEW
TYPE C CONCRETE RETAINING WALL ON P.C.C. DRIVEWAY AND APPROACH PAVEMENT

August 8, 2014

Published Date: 2nd Qtr. 2015	SDDOT	TYPE C CONCRETE RETAINING WALL	PLATE NUMBER 530.01
			Sheet 2 of 2

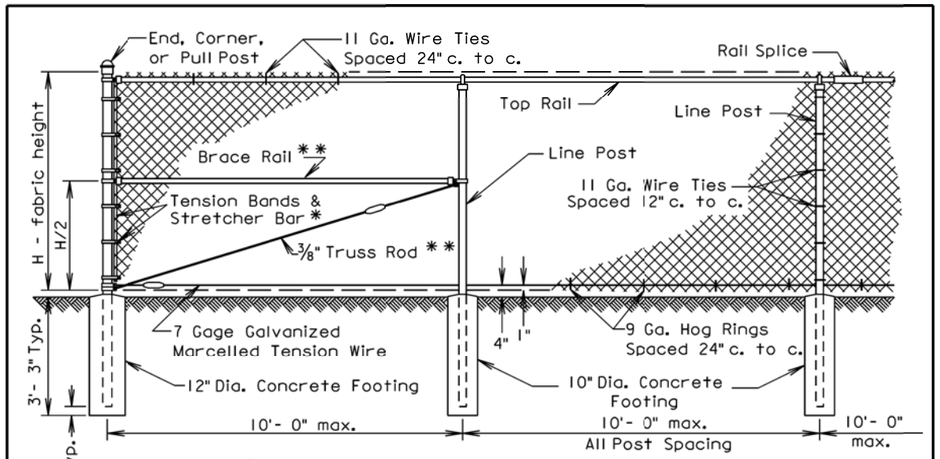

* Tension Bands shall be spaced 12" c. to c.
** Are not required for 3' thru 5' fences.
⬭ Tightening Device such as shown on Plate No. 621.03

Component	End, Corner & Pull Post		Line Post			Top & Brace Rail	
Type of Fabrication	Round Pipe Nominal	Roll Formed Steel	Round Pipe Nominal	"C" Section	H-Beam Steel	Round Pipe Nominal	Roll Formed Steel
Size	3.00" O. D.	3.5" x 3.5"	2.50" O. D.	1.875"x1.625"	2.25"x1.70"	1.625" O. D.	1.625"x1.25"
Weight (lb. / ft.)	5.79 or 4.64	5.14	3.65 or 3.12	2.34	3.43	2.27 or 1.84	1.35

GENERAL NOTES:

Specific details of manufacture of component parts of the complete fence construction shall be subject to the approval of the Engineer. Commercially available items produced specifically for the use intended shall be used wherever possible in the construction of the fence.

"H" (Height of Fabric) shall be as shown on the Plans. Fabric is available in the the following heights; 36", 42", 48", 60", 72", 84", 96", 108", 120", & 144". Fabric heights 60 inches and under shall be knuckled at both selvages. Fabric heights 72 inches and over shall be knuckled at one selvage and twisted at the other selvage.

Chain Link Fabric shall be 2" mesh, No. 9 gage galvanized wire securely fastened to Tension Wire, Line Post, Rails, Braces and Stretcher Bars spaced as shown hereon.

Fence may be constructed with either Round Pipe, "C" Section, "H" Beam, or roll Formed Steel components as shown in the table above. Line post may be Round Pipe, "C" Section, or "H" Beam. The Corner Post and Rails shall be either Round Pipe or Roll Formed Steel. The type of components used shall have prior approval by the Engineer before construction.

Where fence must cross small bodies of water (such as drainage areas or ponds) that could freeze during the winter, use 11 gage Hog Rings. Provide only two ties per Tension Wire and Top Rail between line posts.

A suitable method of rail splicing shall be used to allow for expansion and contraction while maintaining proper position of the Top Rail.

March 31, 2000

Published Date: 2nd Qtr. 2015	SDDOT	CHAIN LINK FENCE WITH TOP RAIL	PLATE NUMBER 621.01
			Sheet 1 of 1

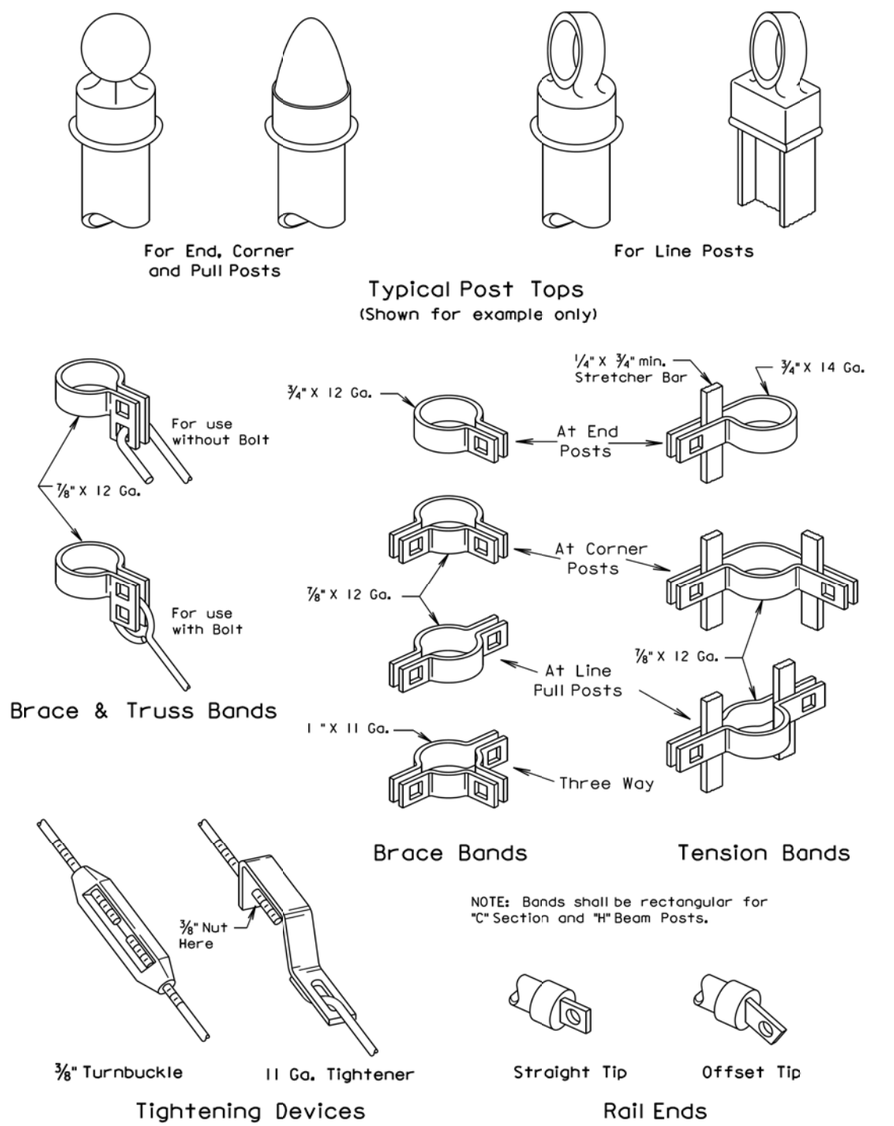

March 31, 2000

Published Date: 2nd Qtr. 2015

SDDOT

HARDWARE FOR CHAIN LINK FENCE

PLATE NUMBER 621.03

Sheet 1 of 1

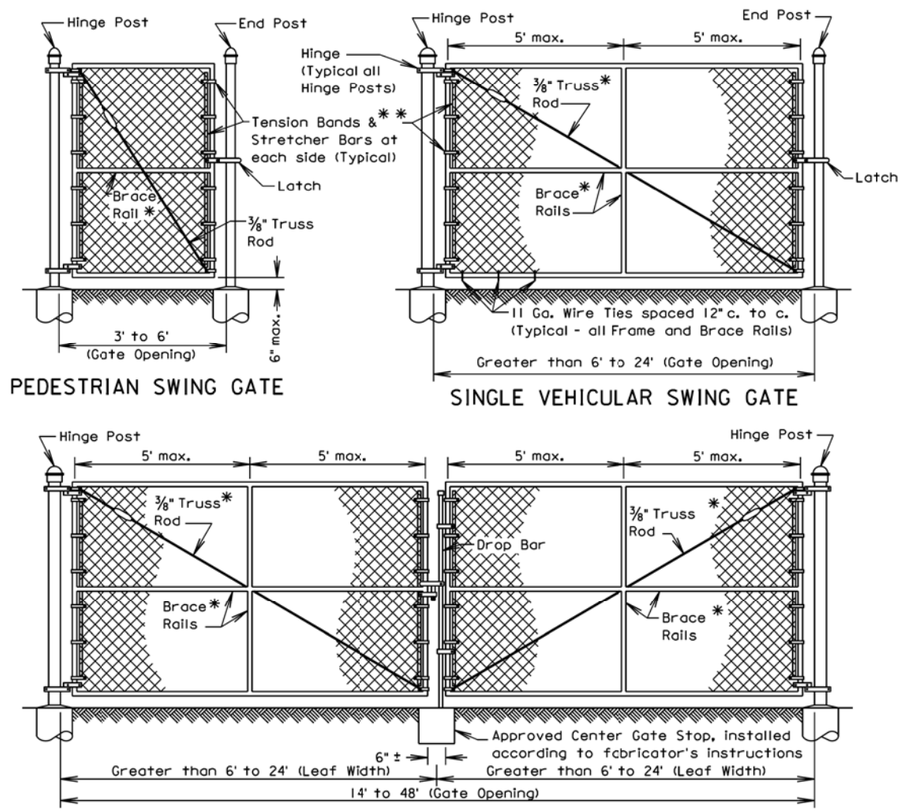

Gate Opening		Frame Pipe Nominal	Brace Rail - Pipe Nominal
Width [1]	Height [2]		
3' to 8'	3' to 6'	1.50"	1.50"
>8' to 23'	6'	1.90"	1.50"
>8' to 23'	> 6' to 12'	1.90"	1.90"

Gate Opening Width [1]	Hinge Post		Concrete Footing	
	Round Pipe Nominal	Roll Formed Steel	Depth	Diameter
3' to 6'	3.00"	3.50"X3.50"	36"	12"
> 6' to 13'	4.00"	—	42"	12"
> 13' to 18'	6.625"	—	48"	18"
> 18' to 23'	8.625"	—	48"	24"

NOTE: Gate frames may be constructed of bent or welded steel tubing installed according to fabricator's instructions and subject to the Engineer's approval.

* Are not required for gates 3' to 5' height or 5' or less in width.

** Tension Bands shall be spaced 12" c. to c.

⬭ Tightening Device such as shown on standard plate 621.03

1 Leaf width for Double Vehicular Swing Gate

2 Shall coincide with fence height

September 14, 2001

Published Date: 2nd Qtr. 2015

SDDOT

SWING GATES FOR CHAIN LINK FENCE

PLATE NUMBER 621.10

Sheet 1 of 1

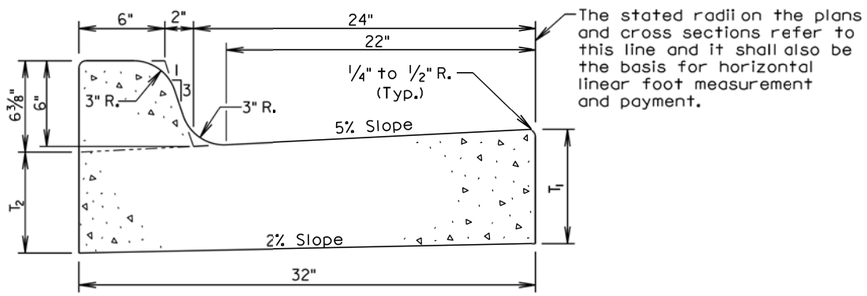

Type	T_1 (Inches)	T_2 (Inches)	Cu. Yd. Per Lin. Ft.	Lin. Ft. Per Cu. Yd.
B66	6	5 1/16	0.057	17.7
B67	7	6 1/16	0.065	15.4
B68	8	7 1/16	0.073	13.7
B68.5	8.5	7 9/16	0.077	13.0
B69	9	8 1/16	0.081	12.3
B69.5	9.5	8 9/16	0.085	11.7
B610	10	9 1/16	0.090	11.2
B610.5	10.5	9 9/16	0.094	10.7
B611	11	10 1/16	0.098	10.2
B611.5	11.5	10 9/16	0.102	9.8
B612	12	11 1/16	0.106	9.4

GENERAL NOTES:

When concrete curb and gutter longitudinally adjoins new concrete pavement, the method of attachment shall be by one of the methods shown on Standard Plate 380.11.

See Standard Plate 650.90 for expansion and contraction joints in the curb and gutter.

September 6, 2008

Published Date: 2nd Qtr. 2015

SDDOT

TYPE B CONCRETE CURB AND GUTTER

PLATE NUMBER 650.01

Sheet 1 of 1

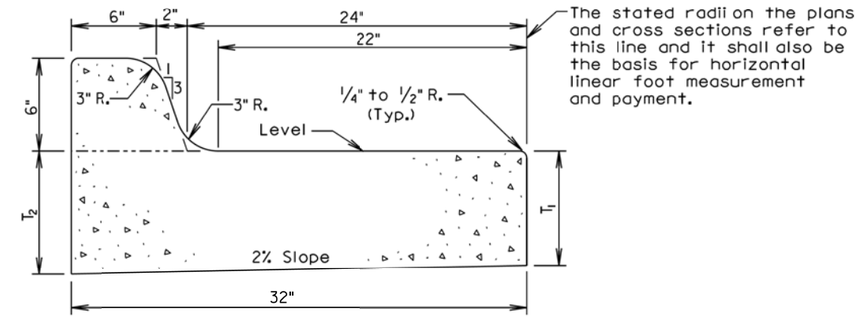

Type	T_1 (Inches)	T_2 (Inches)	Cu. Yd. Per Lin. Ft.	Lin. Ft. Per Cu. Yd.
BL66	6	6 5/8	0.063	15.9
BL67	7	7 5/8	0.071	14.1
BL68	8	8 5/8	0.080	12.5
BL68.5	8.5	9 1/8	0.084	11.9
BL69	9	9 5/8	0.088	11.4
BL69.5	9.5	10 1/8	0.092	10.9
BL610	10	10 5/8	0.096	10.4
BL610.5	10.5	11 1/8	0.100	10.0
BL611	11	11 5/8	0.104	9.6
BL611.5	11.5	12 1/8	0.108	9.3
BL612	12	12 5/8	0.112	8.9

GENERAL NOTES:

When concrete curb and gutter longitudinally adjoins new concrete pavement, the method of attachment shall be by one of the methods shown on Standard Plate 380.11.

See Standard Plate 650.90 for expansion and contraction joints in the curb and gutter.

September 6, 2006

Published Date: 2nd Qtr. 2015

SDDOT

TYPE BL CONCRETE CURB AND GUTTER

PLATE NUMBER 650.05

Sheet 1 of 1

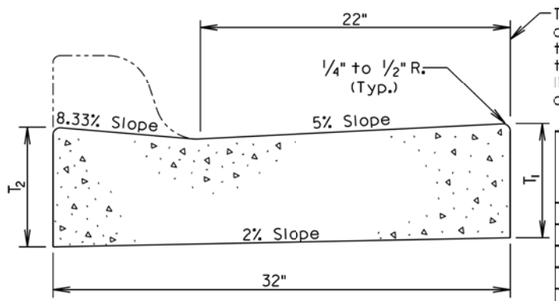

The stated radii on the plans and cross sections refer to this line and it shall also be the basis for horizontal linear foot measurement and payment.

TRANSVERSE SECTION

Type	T_1 (Inches)	T_2 (Inches)	Cu. Yd. Per Lin. Ft.	Lin. Ft. Per Cu. Yd.
P6	6	6 3/8	0.047	21.2
P7	7	7 3/8	0.055	18.1
P8	8	8 3/8	0.064	15.7
P8.5	8.5	8 7/8	0.068	14.8
P9	9	9 3/8	0.072	13.9
P9.5	9.5	9 7/8	0.076	13.2
P10	10	10 3/8	0.080	12.5
P10.5	10.5	10 7/8	0.084	11.9
P11	11	11 3/8	0.088	11.3
P11.5	11.5	11 7/8	0.092	10.8
P12	12	12 3/8	0.096	10.4

Type P Concrete Gutter Limits

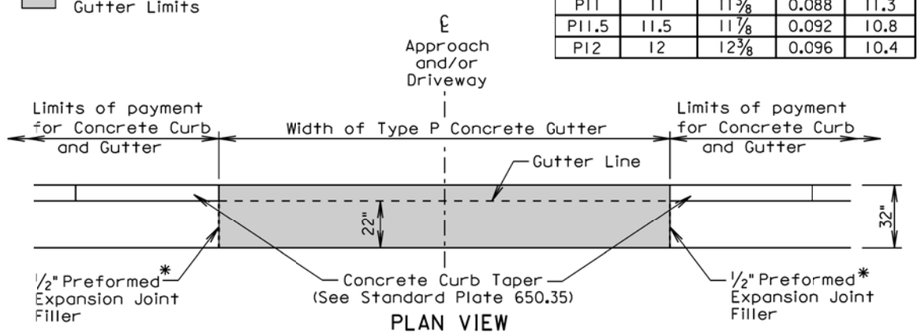

PLAN VIEW

* Joint will not be needed if concrete curb and gutter and type P concrete gutter is placed at the same time. If the 1/2" Preformed Expansion Joint Filler is provided, then the joint shall be sealed in accordance with standard plate 650.90.

GENERAL NOTES:

The concrete for the Type P Concrete Gutter shall comply with the requirements of the Standard Specifications for Class M6 Concrete.

When concrete gutter longitudinally adjoins new concrete pavement, the method of attachment shall be by one of the methods shown on Standard Plate 380.11.

Transverse contraction joints shall be constructed at 10' intervals in the concrete gutter except when concrete gutter is constructed adjacent to mainline PCC pavement. When concrete gutter is constructed adjacent to mainline PCC pavement, a transverse contraction joint shall be constructed in the concrete gutter at each mainline PCC pavement transverse contraction joint location.

When concrete gutter is placed monolithically with mainline PCC pavement, the transverse contraction joints in the concrete gutter shall be sawed and sealed the same as the transverse contraction joints in the mainline PCC pavement.

When concrete gutter is not placed monolithically with the mainline PCC pavement and when the adjacent mainline surfacing is not PCC concrete, the transverse contraction joints in the concrete gutter shall be 1 1/2 inches deep if formed in the fresh concrete using a suitable grooving tool. If a saw is used to cut the contraction joints, then the depth of the joint shall be at least 1/4 the thickness of the concrete.

September 6, 2013

Published Date: 2nd Qtr. 2015	SDDOT	TYPE P CONCRETE GUTTER	PLATE NUMBER 650.30
			Sheet 1 of 1

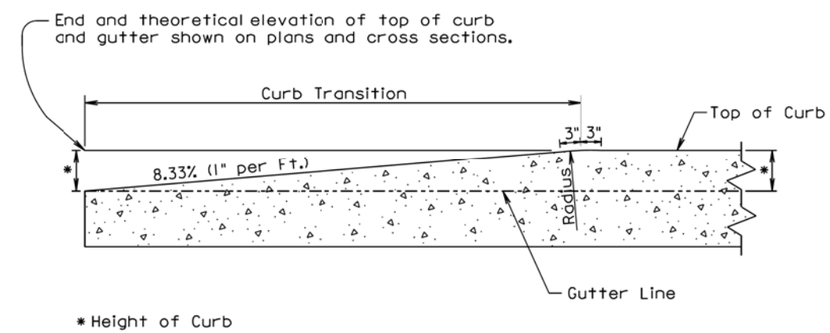

* Height of Curb

LONGITUDINAL SECTION OF CONCRETE CURB TAPER

September 14, 2005

Published Date: 2nd Qtr. 2015	SDDOT	CONCRETE CURB TAPER	PLATE NUMBER 650.35
			Sheet 1 of 1

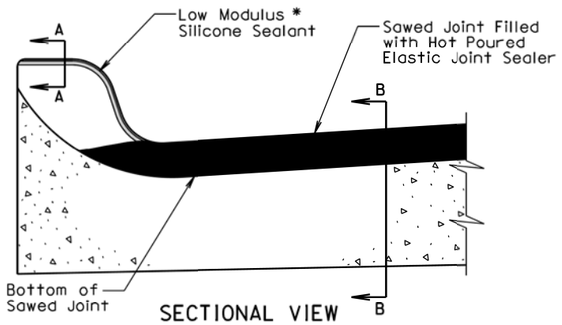

SECTIONAL VIEW

(Curb and Gutter Placed Monolithic with Adjacent Mainline PCC Pavement)

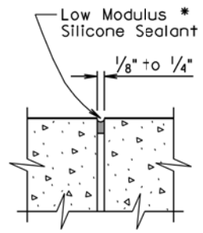

SECTION A-A

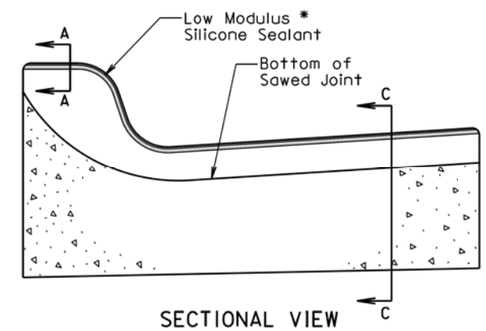

SECTIONAL VIEW

(Curb and Gutter not Placed Monolithic with Adjacent Mainline PCC Pavement or Mainline Surfacing is not PCC Pavement)

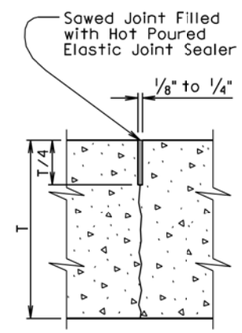

SECTION B-B

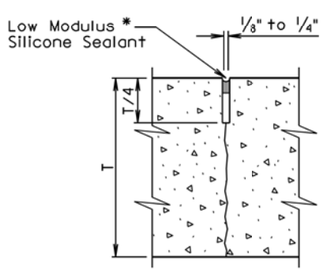

SECTION C-C

* The silicone sealant shall be placed such that it completely seals the joint and is bonded to the sides of the clean joint as approved by the Engineer.

September 6, 2013

Published Date: 2nd Qtr. 2015	SDDOT	JOINTS IN CONCRETE CURB AND GUTTER	PLATE NUMBER 650.90
			Sheet 1 of 2

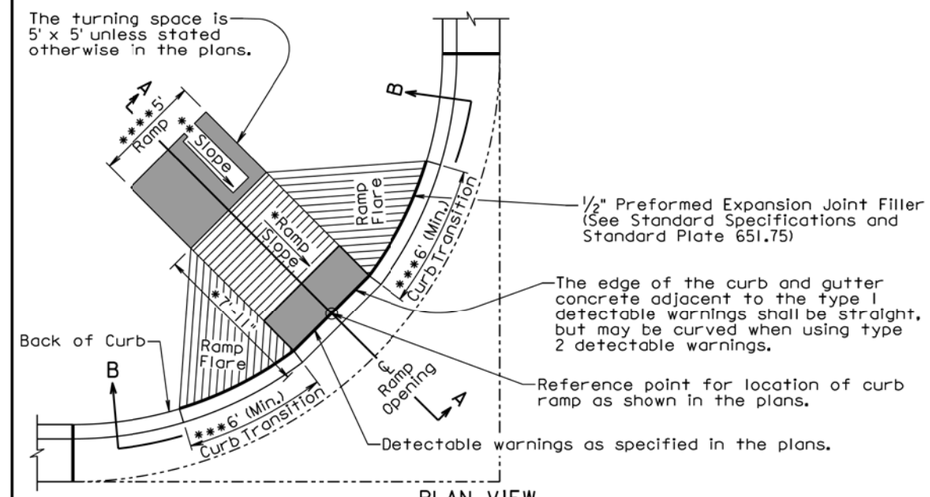

PLAN VIEW

(With 6'+ Curb Transition)

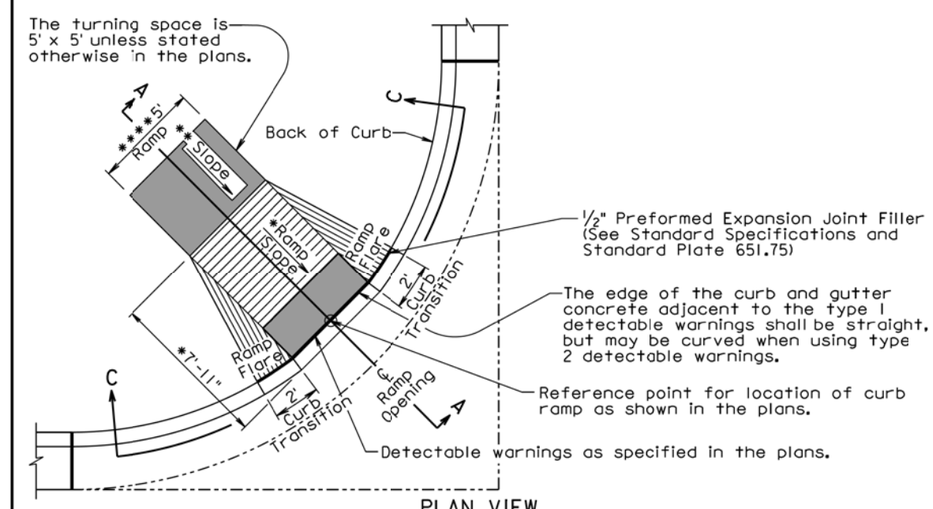

PLAN VIEW

(With 2' Curb Transition)

September 6, 2013

Published Date: 2nd Qtr. 2015	SDDOT	TYPE 1 CURB RAMP (PERPENDICULAR CURB RAMP)	PLATE NUMBER 651.01
			Sheet 1 of 3

The ramp slope shall be 12:1 (8.3%) maximum. The ramp length shall not exceed 15' unless stated otherwise in the plans. Ramp slopes are designed at 12:1 (8.3%) unless stated otherwise in the plans.

* The cross slope of the ramp shall not be steeper than 50:1 (2%).

The 7'-11" dimension was computed based on a flat roadway profile, a continuous 2% theoretical slope from top of theoretical curb to the top of ramp, and a 6" high curb. The dimension shall be adjusted based on the curb type shown in the plans, the roadway geometrics, and the sidewalk geometrics.

** The slope in the turning space shall not be steeper than 50:1 (2%) in any direction of pedestrian travel.

*** The curb transition shall be a minimum of 6' long, a maximum of 10' long, and the curb transition slope shall not be steeper than 10:1 (10%) unless stated otherwise in the plans.

**** The ramp width is 5' unless stated otherwise in the plans.

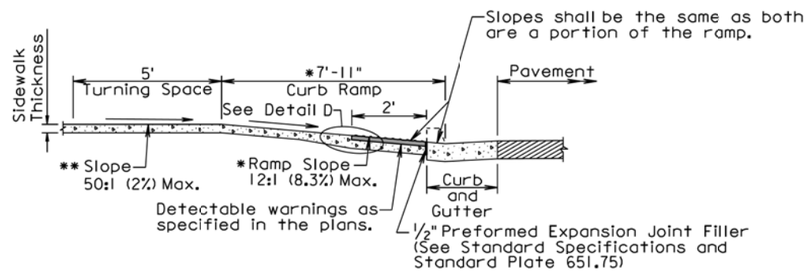

SECTION A-A

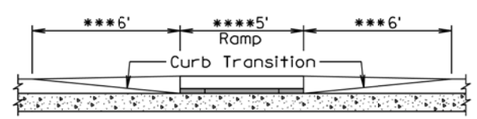

SECTIONAL VIEW B-B

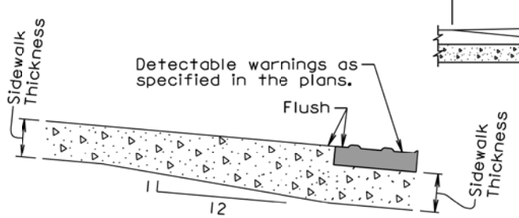

DETAIL D

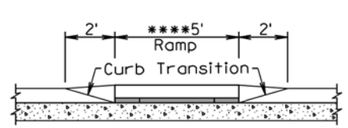

SECTIONAL VIEW C-C

September 6, 2013

Published Date: 2nd Qtr. 2015	SDDOT	TYPE 1 CURB RAMP (PERPENDICULAR CURB RAMP)	PLATE NUMBER 651.01
			Sheet 2 of 3

GENERAL NOTES:

For illustrative purpose only, type 1 detectable warnings are shown in the drawings.

For illustrative purpose only, PCC fillet sections are shown in the drawings. The curb ramp depicted on this standard plate may be used with a PCC fillet section, with curved curb and gutter, or with straight curb and gutter.

For illustrative purpose only, the curb ramp location is shown at the center of a PCC fillet section. The curb ramp shall be placed at the location stated in the plans.

Sidewalk shall not be placed adjacent to the ramp flares when a 2' curb transition is used unless shown otherwise in the plans.

* Care shall be taken to ensure a uniform grade on the ramp, free of sags and short grade changes.

Surface texture of the ramp shall be obtained by coarse brooming transverse to the slope of the ramp.

The normal gutter line profile shall be maintained through the area of the ramp.

Joints shall be sawed or tooled into the concrete adjacent to the detectable warnings to alleviate possible corner cracking.

Care shall be taken to ensure that the surface of the detectable warnings are clean and maintains a uniform color.

The detectable warnings shall be cut as necessary to fit the plan specified limits of the detectable warnings. Cost for cutting the detectable warnings shall be incidental to the corresponding detectable warning bid item.

There will be no separate payment for curb ramps. The curb ramp shall be measured and paid for at the contract unit price per square foot for the corresponding concrete sidewalk bid item. The square foot area of the detectable warnings shall be included in the measured and paid for quantity of sidewalk.

The curb transitions and ramp opening shall be measured and paid for at the contract unit price per foot for the corresponding curb and gutter bid item when curb and gutter is used. The curb transitions and ramp opening shall be measured and paid for at the contract unit price per square yard for the corresponding PCC fillet section bid item when a PCC fillet section is used.

The type 1 detectable warnings shall be measured to the nearest square foot. All costs for furnishing and installing the type 1 detectable warnings including labor, equipment, materials, and incidentals shall be paid for at the contract unit price per square foot for "Type 1 Detectable Warnings".

The type 2 detectable warnings shall be measured to the nearest square foot. All costs for furnishing and installing the type 2 detectable warnings including labor, equipment, and materials, including adhesive, necessary sealant or grout, and necessary grinding shall be paid for at the contract unit price per square foot for "Type 2 Detectable Warnings".

September 6, 2013

Published Date: 2nd Qtr. 2015	SDDOT	TYPE 1 CURB RAMP (PERPENDICULAR CURB RAMP)	PLATE NUMBER 651.01
			Sheet 3 of 3

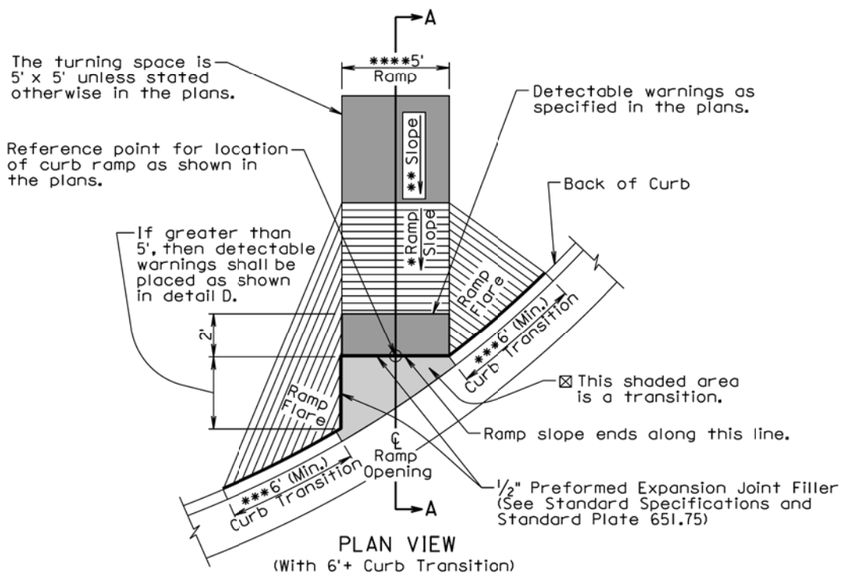

PLAN VIEW
(With 6'+ Curb Transition)

⊠ The slope within the transition area shall not be steeper than a 20:1 (5%). The concrete within the transition shall be placed monolithic with the curb and gutter or fillet section concrete. The concrete thickness within the transition shall be the same as the curb and gutter or fillet section concrete thickness.

*** The curb transition shall be a minimum of 6' long, a maximum of 10' long, and the curb transition slope shall not be steeper than a 10:1 (10%) unless stated otherwise in the plans.

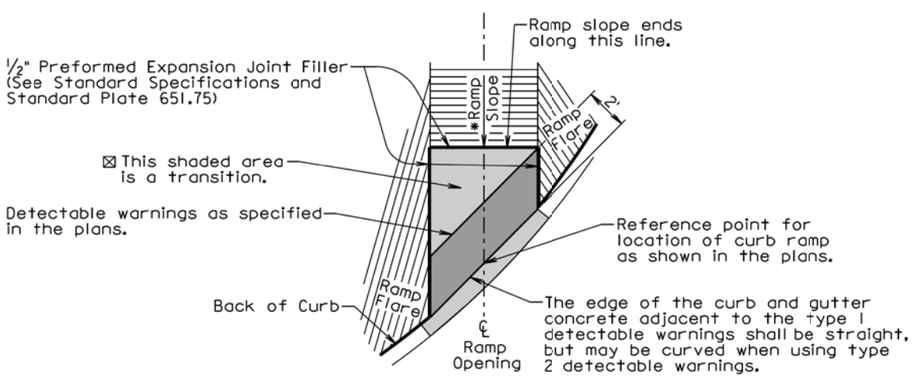

DETAIL D

September 6, 2013

Published Date: 2nd Qtr. 2015	SDDOT	TYPE 2 CURB RAMP (DIRECTIONAL CURB RAMP)	PLATE NUMBER 651.02
			Sheet 1 of 3

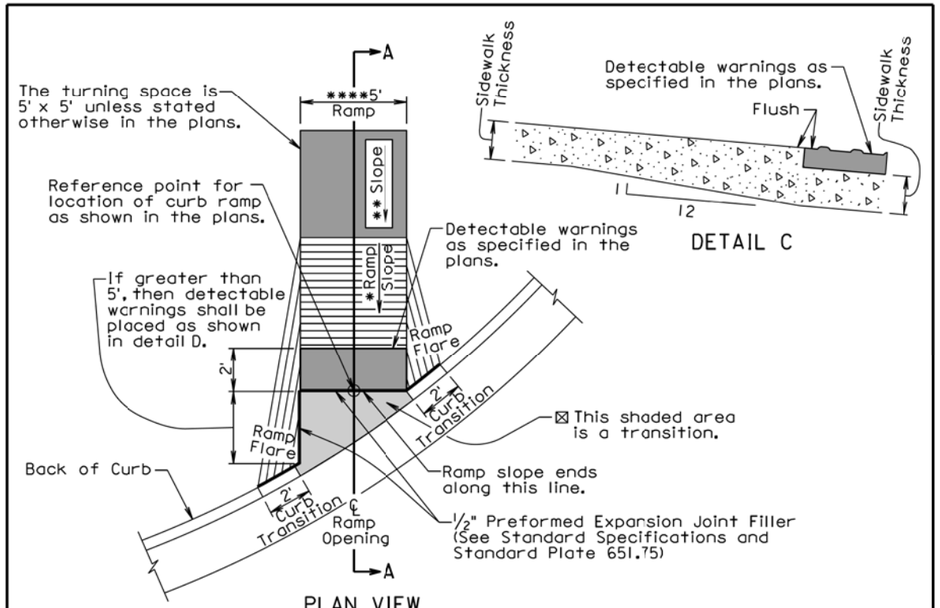

DETAIL C

PLAN VIEW
(With 2' Curb Transition)

* The ramp slope shall be 12:1 (8.3%) maximum. The ramp length shall not exceed 15' unless stated otherwise in the plans. Ramp slopes are designed ct 12:1 (8.3%) unless stated otherwise in the plans.

The cross slope of the ramp shall not be steeper than 50:1 (2%).

** The slope in the turning space shall not be steeper than a 50:1 (2%) in any direction of pedestrian travel.

**** The ramp width is 5' unless stated otherwise in the plans.

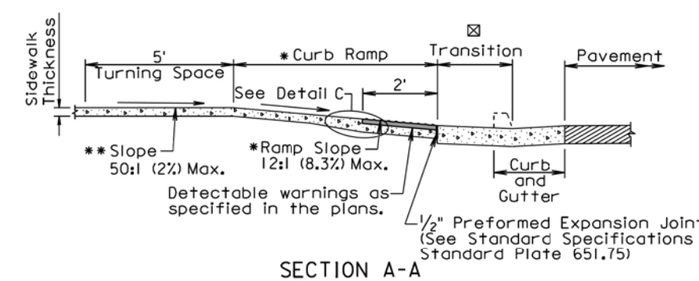

SECTION A-A

September 6, 2013

Published Date: 2nd Qtr. 2015	SDDOT	TYPE 2 CURB RAMP (DIRECTIONAL CURB RAMP)	PLATE NUMBER 651.02
			Sheet 2 of 3

GENERAL NOTES:

For illustrative purpose only, type 1 detectable warnings are shown in the drawings.

The curb ramp depicted on this standard plate may be used with a PCC fillet section, with curved curb and gutter, or with straight curb and gutter. The curb ramp shall be placed at the location stated in the plans.

Sidewalk shall not be placed adjacent to the ramp flares when a 2' curb transition is used unless shown otherwise in the plans.

* Care shall be taken to ensure a uniform grade on the ramp, free of sags and short grade changes.

Surface texture of the ramp shall be obtained by cocrse brooming transverse to the slope of the ramp.

The normal gutter line profile shall be maintained through the area of the ramp.

Joints shall be sawed or tooled into the concrete adjacent to the detectable warnings to alleviate possible corner cracking.

Care shall be taken to ensure that the surface of the detectable warnings are clean and maintains a uniform color.

The detectable warnings shall be cut as necessary to fit the plan specified limits of the detectable warnings. Cost for cutting the detectable warnings shall be incidental to the corresponding detectable warning bid item.

There will be no separate payment for curb ramps. The curb ramp shall be measured and paid for at the contract unit price per square foot for the corresponding concrete sidewalk bid item. The square foot area of the detectable warnings shall be included in the measured and paid for quantity of sidewalk.

The curb transitions and ramp opening shall be measured and paid for at the contract unit price per foot for the corresponding curb and gutter bid item when curb and gutter is used. The curb transitions and ramp opening shall be measured and paid for at the contract unit price per square yard for the corresponding PCC fillet section bid item when a PCC fillet section is used.

All costs for furnishing and installing the transition crea at the base of the ramp shall be incidental to the contract unit price per foot for the corresponding curb and gutter bid item when curb and gutter is used and shall be incidental to the contract unit price per square yard for the corresponding PCC fillet section bid item when a PCC fillet section is used.

The type 1 detectable warnings shall be measured to the nearest square foot. All costs for furnishing and installing the type 1 detectable warnings including labor, equipment, materials, and incidentals shall be paid for at the contract unit price per square foot for "Type 1 Detectable Warnings".

The type 2 detectable warnings shall be measured to the nearest square foot. All costs for furnishing and installing the type 2 detectable warnings including labor, equipment, and materials, including adhesive, necessary sealant or grout, and necessary grinding shall be paid for at the contract unit price per square foot for "Type 2 Detectable Warnings".

September 6, 2013

Published Date: 2nd Qtr. 2015	SDDOT	TYPE 2 CURB RAMP (DIRECTIONAL CURB RAMP)	PLATE NUMBER 651.02 Sheet 3 of 3

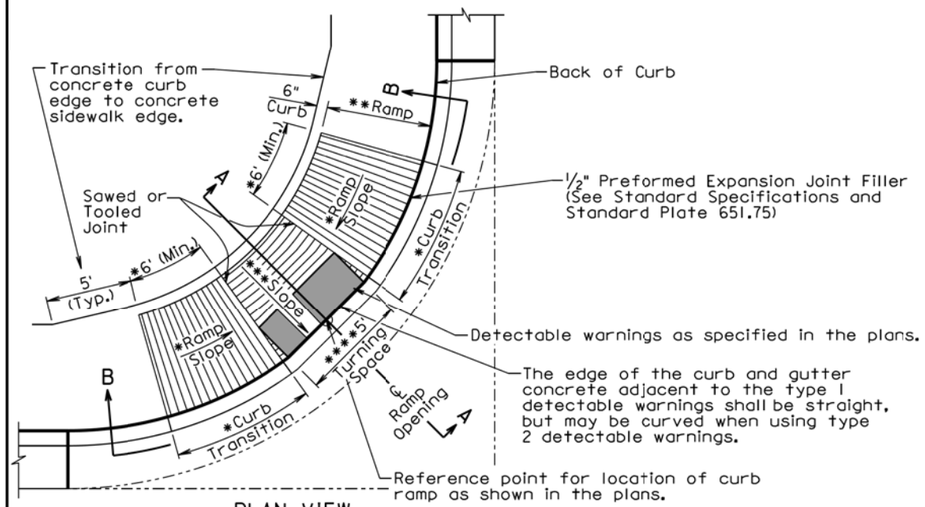

PLAN VIEW
(With Curved Curb and Gutter)

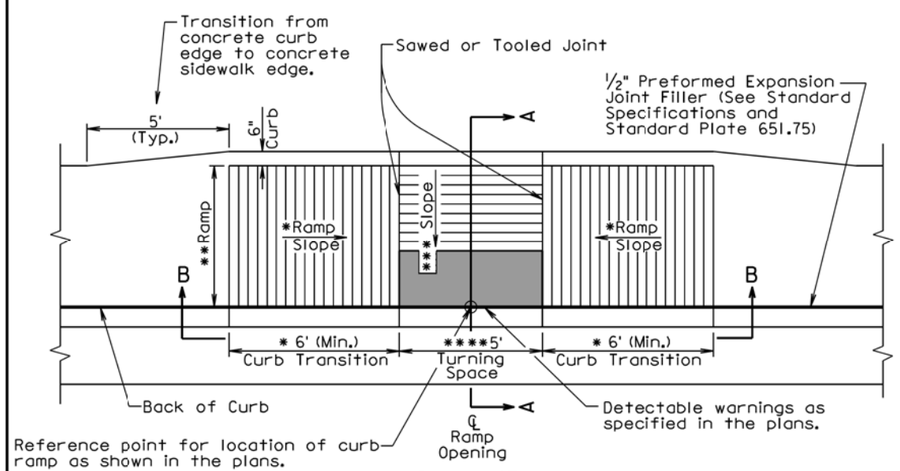

PLAN VIEW
(With Straight Curb and Gutter)

September 6, 2013

Published Date: 2nd Qtr. 2015	SDDOT	TYPE 3 CURB RAMP (PARALLEL CURB RAMP)	PLATE NUMBER 651.03 Sheet 1 of 3

* The curb transition slope shall match the ramp slope. The ramp slope, at any location of the ramp, shall be 12:1 (8.3%) maximum. The ramp length shall not exceed 15' unless stated otherwise in the plans. Ramp slopes are designed at 12:1 (8.3%) unless stated otherwise in the plans. The minimum length of the curb transition shall be 6'.

** The ramp cross slope shall not be steeper than a 50:1 (2%) and the ramp width is 5' unless stated otherwise in the plans.

*** The slope in the turning space shall not be steeper than 50:1 (2%) in any direction of pedestrian travel.

**** The turning space is 5' x 5' unless stated otherwise in the plans.

☒ The curb height shall be 6" unless stated otherwise in the plans.

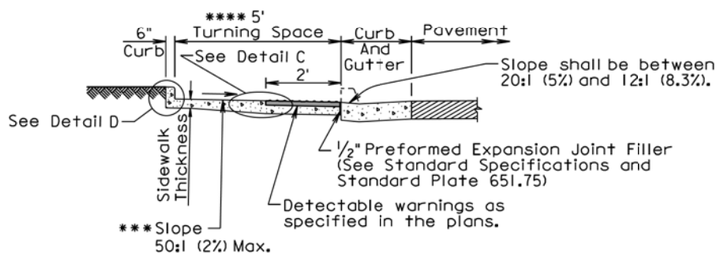

SECTION A-A

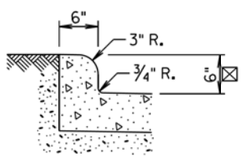

DETAIL D

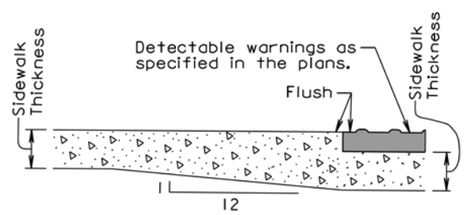

DETAIL C

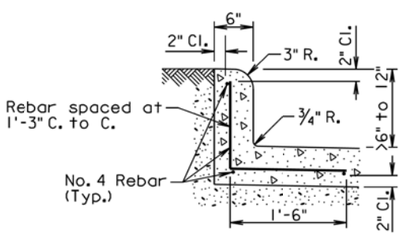

DETAIL D
(Use this detail when the curb height is greater than 6" and less than 12")

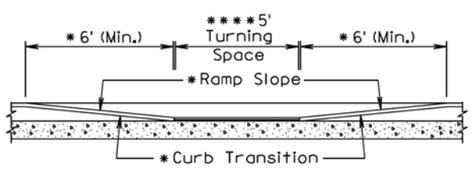

SECTIONAL VIEW B-B

September 6, 2013

Published Date: 2nd Qtr. 2015	SDDOT	TYPE 3 CURB RAMP (PARALLEL CURB RAMP)	PLATE NUMBER 651.03
			Sheet 2 of 3

GENERAL NOTES:

For illustrative purpose only, type 1 detectable warnings are shown in the drawings.

For illustrative purpose only, a PCC fillet section is shown in one of the drawings. The curb ramp depicted on this standard plate may be used with a PCC fillet section, with curved curb and gutter, or with straight curb and gutter.

The curb ramp shall be placed at the location stated in the plans.

Sidewalk adjacent to the curb ramp shall be as shown in the plans.

Care shall be taken to ensure a uniform grade on the ramp, free of sags and short grade changes.

Surface texture of the ramp shall be obtained by coarse broming transverse to the slope of the ramp.

The normal gutter line profile shall be maintained through the area of the ramp.

Joints shall be sawed or tooled into the concrete adjacent to the detectable warnings to alleviate possible corner cracking (see plan view for joint location).

Care shall be taken to ensure that the surface of the detectable warnings are clean and maintains a uniform color.

The detectable warnings shall be cut as necessary to fit the plan specified limits of the detectable warnings. Cost for cutting the detectable warnings shall be incidental to the corresponding detectable warning bid item.

When curb height is greater than 6" and less than 12", reinforcing steel is required in accordance with the detail on sheet 2 of 3. The reinforcing steel shall conform to ASTM A615, Grade 60. Cost for furnishing and installing the reinforcing steel shall be incidental to the contract unit price per square foot for the corresponding concrete sidewalk bid item.

There will be no separate payment for curb ramps. The curb ramp shall be measured and paid for at the contract unit price per square foot for the corresponding concrete sidewalk bid item. The square foot area of the detectable warnings and the curb along the short radius shall be included in the measured and paid for quantity of sidewalk.

The curb transitions and ramp opening shall be measured and paid for at the contract unit price per foot for the corresponding curb and gutter bid item when curb and gutter is used. The curb transitions and ramp opening shall be measured and paid for at the contract unit price per square yard for the corresponding PCC fillet section bid item when a PCC fillet section is used.

The type 1 detectable warnings shall be measured to the nearest square foot. All costs for furnishing and installing the type 1 detectable warnings including labor, equipment, materials, and incidentals shall be paid for at the contract unit price per square foot for "Type 1 Detectable Warnings".

The type 2 detectable warnings shall be measured to the nearest square foot. All costs for furnishing and installing the type 2 detectable warnings including labor, equipment, and materials, including adhesive, necessary sealant or grout, and necessary grinding shall be paid for at the contract unit price per square foot for "Type 2 Detectable Warnings".

September 6, 2013

Published Date: 2nd Qtr. 2015	SDDOT	TYPE 3 CURB RAMP (PARALLEL CURB RAMP)	PLATE NUMBER 651.03
			Sheet 3 of 3

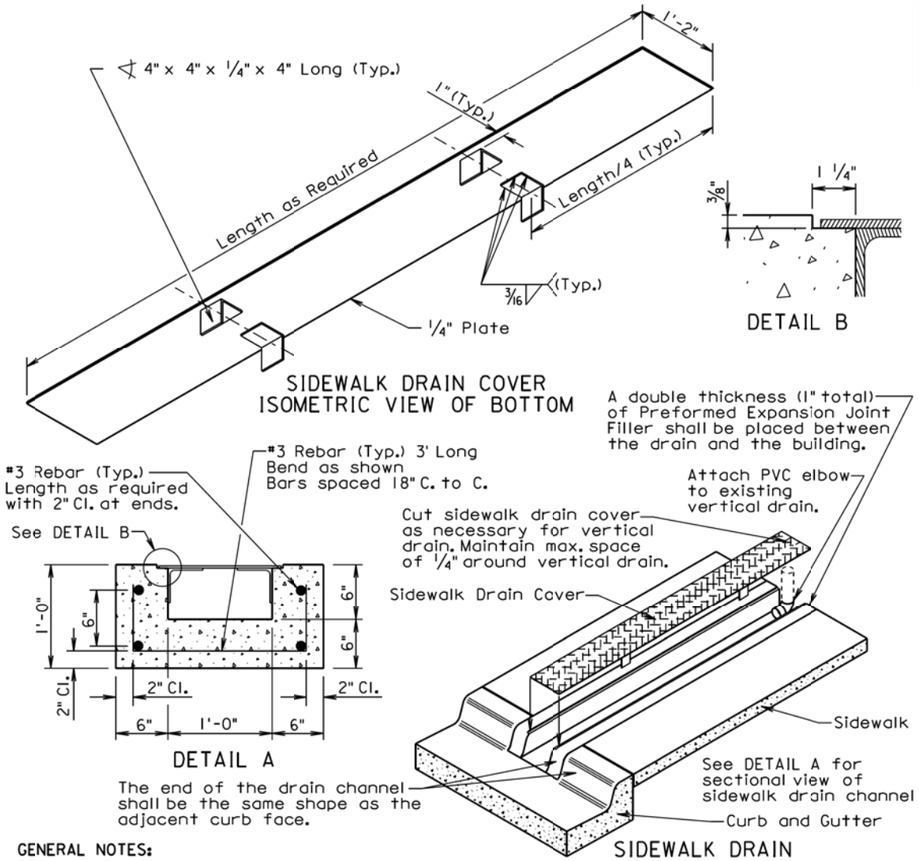

GENERAL NOTES:

Concrete shall be Class M6 in accordance with Section 462 of the Standard Specifications.

Reinforcing steel shall conform to ASTM A615, Grade 60.

Structural Steel shall conform to ASTM A36. The sidewalk drain cover shall conform to ASTM A786.

Welding and weld inspection shall be in conformance with the current edition of the AWS D1.1 Structural Welding Code-Steel.

The cover plate assembly shall be galvanized after fabrication. Galvanizing shall be in accordance with ASTM 123.

All costs associated for providing the required curb cut shall be incidental to the contract unit price per foot for the corresponding curb and gutter bid item.

The sidewalk drain shall be measured and paid for to the nearest tenth of a foot. The length of the drain shall be measured from the gutter to the necessary end location adjacent to the building. All costs associated with furnishing and installing the sidewalk drain channel and cover including the attachment to the vertical drain shall be incidental to the contract unit price per foot for "Sidewalk Drain".

June 26, 2013

Published Date: 2nd Qtr. 2015	SDDOT	SIDEWALK DRAIN	PLATE NUMBER 651.50
			Sheet 1 of 1

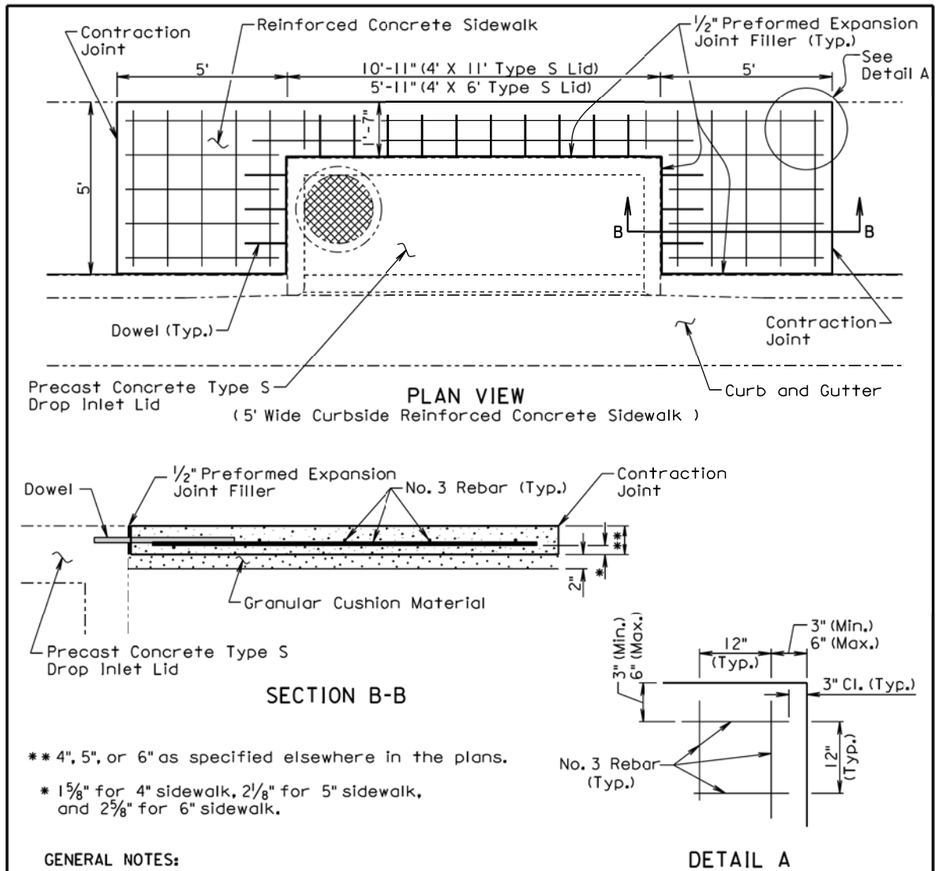

** 4", 5", or 6" as specified elsewhere in the plans.

* 1 5/8" for 4" sidewalk, 2 1/8" for 5" sidewalk, and 2 5/8" for 6" sidewalk.

GENERAL NOTES:

The precast concrete Type S lids shown are 4' X 11' for illustrative purpose.

The cross slope of the sidewalk and precast concrete type S drop inlet lid shall be as specified elsewhere in the plans.

The reinforcing steel shall conform to Section 1010 of the Standard Specifications. The Contractor shall be in conformance with the construction requirements of Section 480.3 of the Standard Specifications.

When lapping of reinforcing steel is necessary, the No. 3 rebar shall be lapped 12".

The reinforced concrete sidewalk shall conform to the requirements of Section 651 of the Standard Specifications.

All costs for constructing the reinforced concrete sidewalk including labor, equipment, tools, backfilling, furnishing and placing materials, including granular cushion, reinforcing steel, preformed expansion joint filler, and incidentals shall be included in the contract unit price per square foot for the corresponding reinforced concrete sidewalk bid item.

September 6, 2013

Published Date: 2nd Qtr. 2015	SDDOT	REINFORCED CONCRETE SIDEWALK ADJACENT TO PRECAST CONCRETE TYPE S DROP INLET LID	PLATE NUMBER 651.70
			Sheet 1 of 2

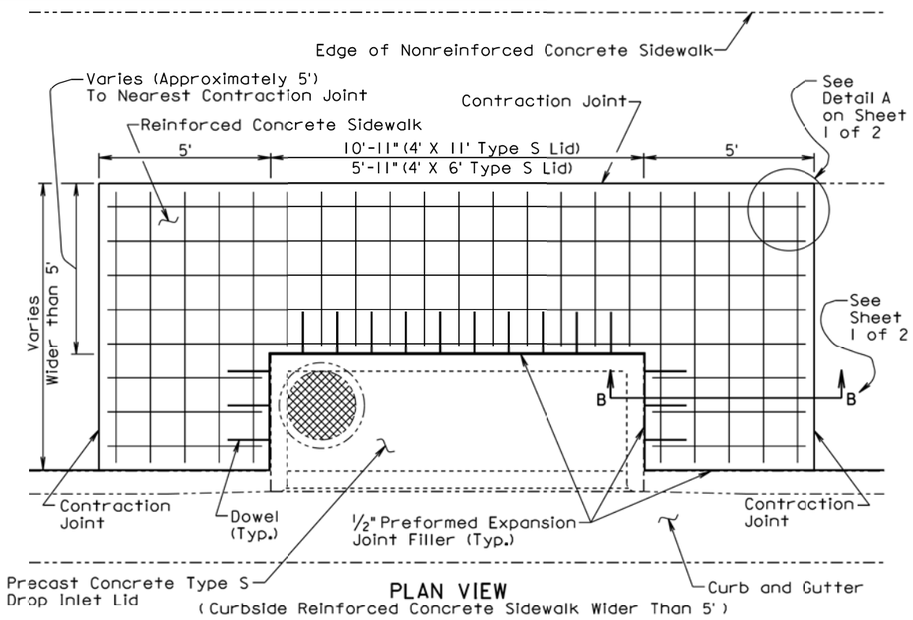

PLAN VIEW
(Curbside Reinforced Concrete Sidewalk Wider Than 5')

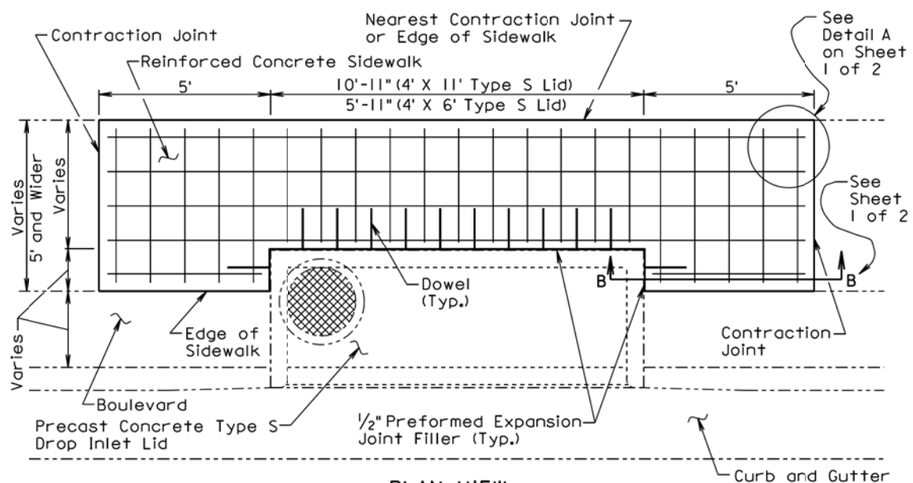

PLAN VIEW
(Reinforced Concrete Sidewalk With Boulevard)

September 6, 2013

Published Date: 2nd Qtr. 2015	SDDOT	REINFORCED CONCRETE SIDEWALK ADJACENT TO PRECAST CONCRETE TYPE S DROP INLET LID	PLATE NUMBER 651.70 / Sheet 2 of 2

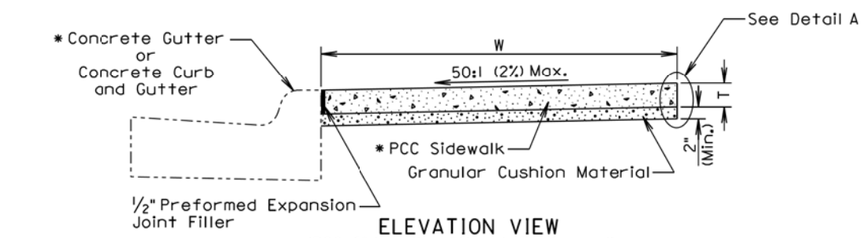

ELEVATION VIEW
(PCC Sidewalk without Boulevard)

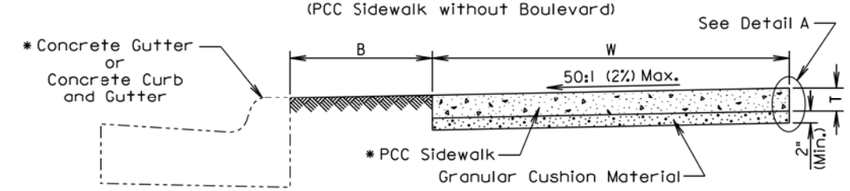

ELEVATION VIEW
(PCC Sidewalk with Boulevard)

B Width of boulevard as specified in the plans.
T Thickness of PCC sidewalk as specified in the plans.
W Width of PCC sidewalk as specified in the plans.
* Type as specified in the plans.

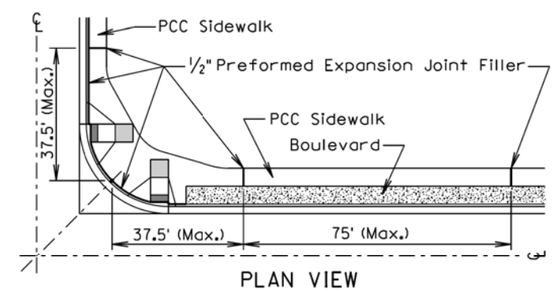

PLAN VIEW

GENERAL NOTES:

The PCC sidewalk shall be constructed in accordance with Section 651 of the Standard Specifications.

The maximum length between expansion joints in PCC sidewalk is 75 feet.

PCC sidewalk placed adjacent to intersection of roadways shall have an expansion joint placed transversely a maximum of 37.5 feet from the intersection. See PLAN VIEW.

An expansion joint in PCC sidewalk shall consist of a 1/2 inch thick preformed expansion joint filler material placed full depth and width of the PCC sidewalk.

** Large areas of PCC pavement adjacent to PCC sidewalk may require a different joint treatment than shown in the detail. If a different joint detail is necessary, plans will contain the joint detail and the Contractor shall construct the joint treatment in accordance with the plans.

August 31, 2013

Published Date: 2nd Qtr. 2015	SDDOT	PCC SIDEWALK	PLATE NUMBER 651.75 / Sheet 1 of 2

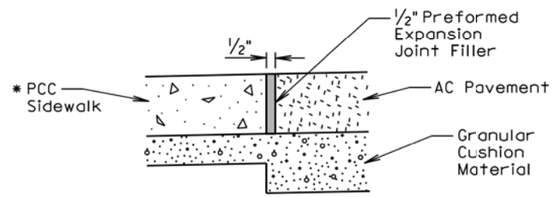

ELEVATION VIEW
(PCC sidewalk adjacent to asphalt concrete pavement)

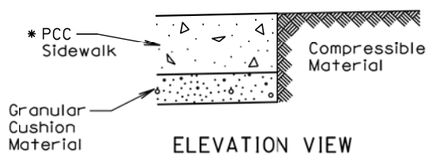

ELEVATION VIEW
(PCC sidewalk adjacent to earthen material, landscape rock, or other compressible materials)

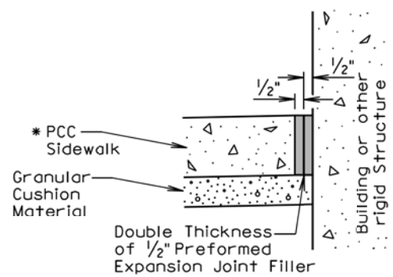

ELEVATION VIEW
(PCC sidewalk adjacent to building or other rigid structure)

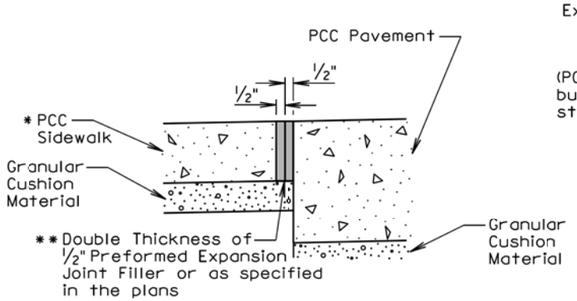

ELEVATION VIEW
(PCC sidewalk adjacent to PCC pavement)

Detail A
(Use Appropriate Detail(s))

August 31, 2013

Published Date: 2nd Qtr. 2015	SDDOT	PCC SIDEWALK	PLATE NUMBER 651.75
			Sheet 2 of 2

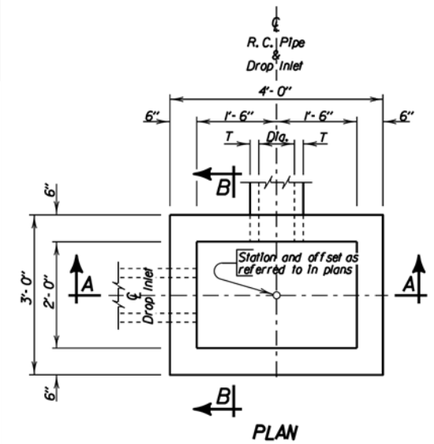

PLAN

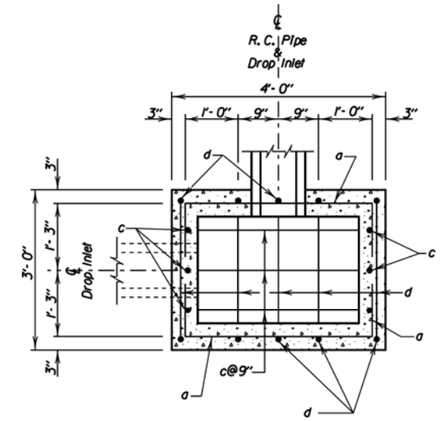

BOTTOM SECTION

ESTIMATED QUANTITIES			
ITEM	UNIT	CONSTANT QUANTITY	VARIABLE QUANTITY
✳ Class M6 Concrete	Cu'd	0.26	0.22H
Reinforcing Steel	Lb	37	20.04H
Frame and Grate Assembly	Each	1	———

PIPE DISPLACEMENT REDUCTIONS		
R.C. Pipe Diameter Inches	T Inches	Class M6 Concrete Cu'd
12	2	0.03
15	2 1/4	0.04
18	2 1/2	0.05
24	3	0.09
27	3 1/4	0.11

DROP INLETS FOR 12" TO 27" DIAMETER PIPE

GENERAL NOTES:

✳ Reduce total quantities of concrete by the amount of concrete displaced by the pipe. The total quantity of concrete shall be computed to the nearest hundredth of a cubic yard. The total quantity of reinforcing steel shall be computed to the nearest pound.

Drop inlets shown may be modified by the addition or omission of connecting pipes as shown on the layouts.

Reinforcing steel shall conform to ASTM A615 Grade 60. The b bars shall be lapped 12 inches. Cut and bend reinforcing steel as required to place pipe(s) through the drop inlet wall.

Pipe shall not enter through a corner of the drop inlet.

Use 2" clear cover on all reinforcing steel unless otherwise noted.

Precasting of reinforced drop inlets will be permissible. Prior to precasting, the Contractor shall submit details to the Engineer for approval.

Maximum pipe diameter shall not exceed 18 inches on the 3 foot wide side and shall not exceed 27 inches on the 4 foot wide side of the drop inlet.

The dimension of H is in feet.

December 23, 2009

Published Date: 2nd Qtr. 2015	SDDOT	2' X 3' TYPE B REINFORCED CONCRETE DROP INLET	PLATE NUMBER 670.01
			Sheet 1 of 2

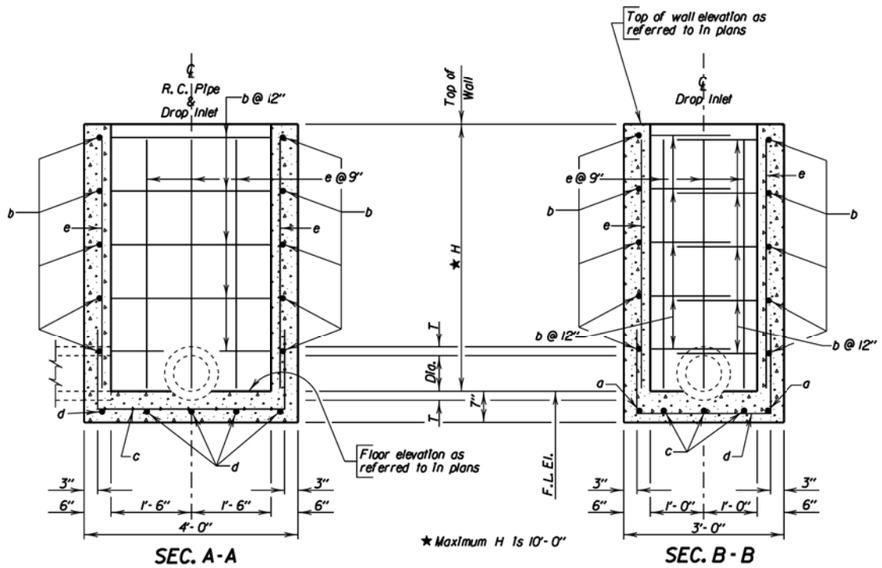

DROP INLETS FOR 12" TO 27" DIAMETER PIPE

REINFORCING SCHEDULE

MK.	No.	Size	Length	Type
a	2	4	5'-6"	17
b	2H	4	7'-0"	17
c	3	4	6'-6"	17
d	5	4	5'-6"	17
e	16	4	H - 2"	Str.

Bending Details

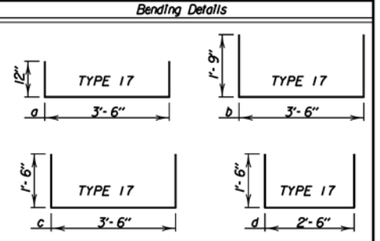

NOTE:
All dimensions are out to out of bars.

December 23, 2009

Published Date: 2nd Qtr. 2015

SDDOT

2'X 3' TYPE B
REINFORCED CONCRETE DROP INLET

PLATE NUMBER
670.01

Sheet 2 of 2

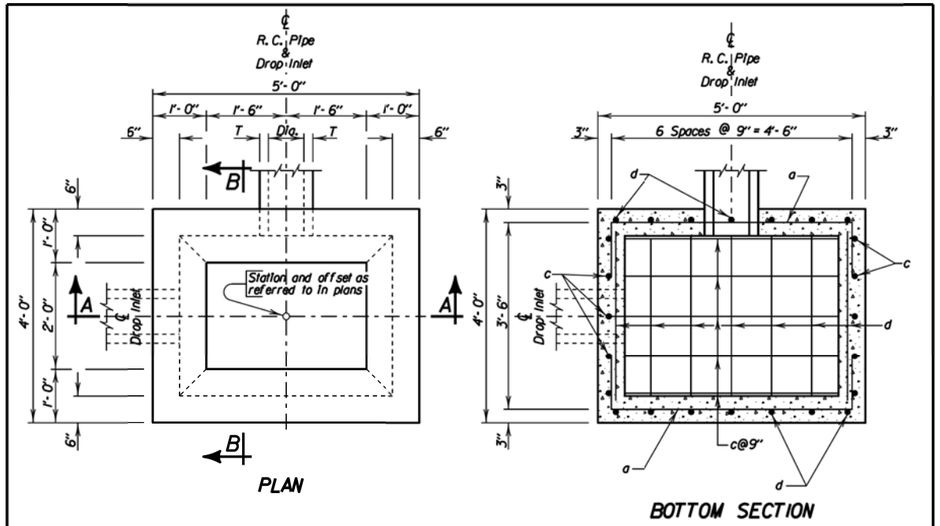

PIPE DISPLACEMENT REDUCTIONS

R.C. Pipe Diameter Inches	T Inches	Class M6 Concrete Cu'd
12	2	0.03
15	2 1/4	0.04
18	2 1/2	0.05
24	3	0.09
30	3 1/2	0.14
36	4	0.20

ESTIMATED QUANTITIES

ITEM	UNIT	CONSTANT QUANTITY	VARIABLE QUANTITY
✳ Class M6 Concrete	Cu'd	0.72	0.30H
Reinforcing Steel	Lb	98	32.06H
Frame and Grate Assembly	Each	1	———

DROP INLETS FOR 12" TO 36" DIAMETER PIPE

GENERAL NOTES:

✳ Reduce total quantities of concrete by the amount of concrete displaced by the pipe. The total quantity of concrete shall be computed to the nearest hundredth of a cubic yard. The total quantity of reinforcing steel shall be computed to the nearest pound.

Drop inlets shown may be modified by the addition or omission of connecting pipes as shown on the layouts.

Reinforcing steel shall conform to ASTM A615 Grade 60. The b and f bars shall be lapped 12 inches. Cut and bend reinforcing steel as required to place pipe(s) through the drop inlet wall.

Pipe shall not enter through a corner of the drop inlet.

Use 2" clear cover on all reinforcing steel unless otherwise noted.

Precasting of reinforced drop inlets will be permissible. Prior to precasting, the Contractor shall submit details to the Engineer for approval.

Maximum pipe diameter shall not exceed 27 inches on the 4 foot wide side and shall not exceed 36 inches on the 5 foot wide side of the drop inlet.

The dimension of H is in feet.

December 23, 2009

Published Date: 2nd Qtr. 2015

SDDOT

3'X 4' TYPE B
REINFORCED CONCRETE DROP INLET

PLATE NUMBER
670.02

Sheet 1 of 2

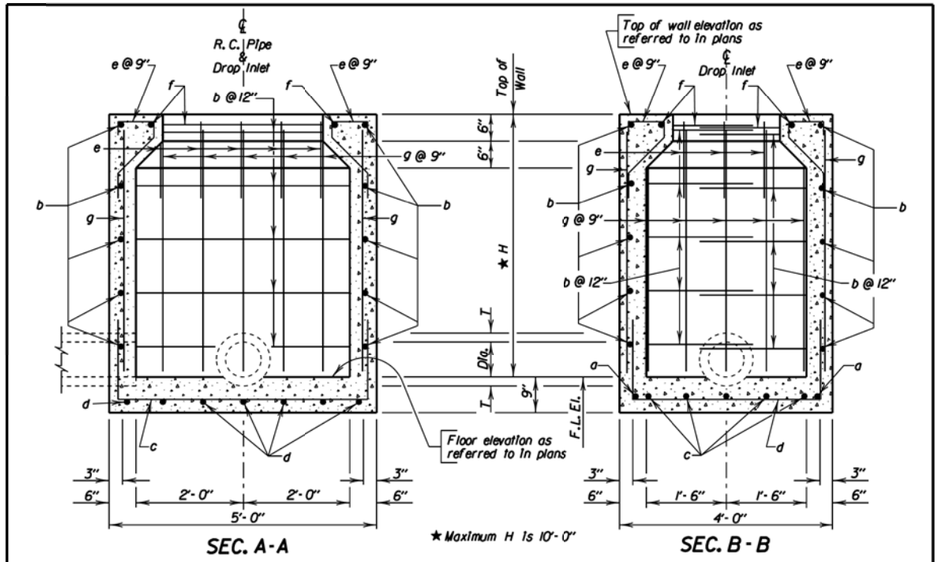

DROP INLETS FOR 12" TO 36" DIAMETER PIPE

REINFORCING SCHEDULE

MK.	No.	Size	Length	Type
a	2	4	6'- 6"	17
b	2H	4	9'- 0"	17
c	5	4	7'- 6"	17
d	7	4	6'- 6"	17
e	16	4	2'- 6"	16A
f	2	4	7'- 0"	17
g	24	4	H - 2"	Str.

Bending Details

NOTE:
All dimensions are out to out of bars.

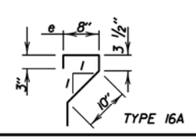

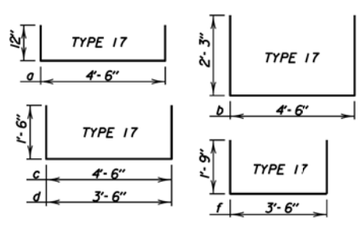

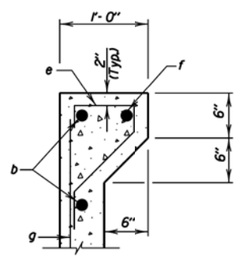

TYPICAL SEC. TOP OF WALL

December 23, 2009

Published Date: 2nd Qtr. 2015

SDDOT

3' X 4' TYPE B
REINFORCED CONCRETE DROP INLET

PLATE NUMBER
670.02

Sheet 2 of 2

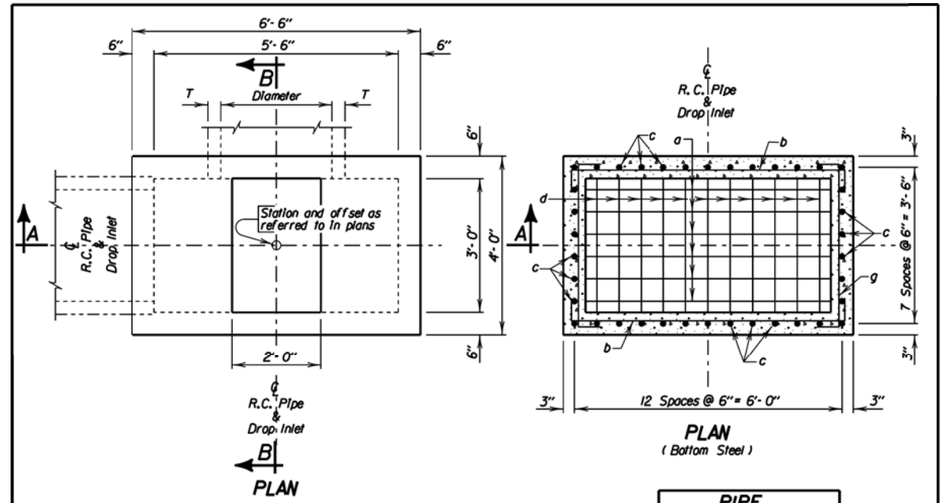

PIPE DISPLACEMENT REDUCTIONS

R.C. Pipe Diameter Inches	T Inches	Class M6 Concrete Cu'd
12	2	0.03
15	2 1/4	0.04
18	2 1/2	0.05
24	3	0.09
27	3 1/4	0.11
30	3 1/2	0.14
36	4	0.20
42	4 1/2	0.26
48	5	0.34
54	5 1/2	0.43

ESTIMATED QUANTITIES

ITEM	UNIT	CONSTANT QUANTITY	VARIABLE QUANTITY
✳ Class M6 Concrete	Cu'd	1.01	0.35H
Reinforcing Steel	Lb	329	55.00H
Frame and Grate Assembly	Each	1	——

DROP INLETS FOR 12" TO 54" DIAMETER PIPE

GENERAL NOTES:

✳ Reduce total quantities of concrete by the amount of concrete displaced by the pipe. The total quantity of concrete shall be computed to the nearest hundredth of a cubic yard. The total quantity of reinforcing steel shall be computed to the nearest pound.

Drop inlets shown may be modified by the addition or omission of connecting pipes as shown on the layouts.

Reinforcing steel shall conform to ASTM A615 Grade 60. Cut and bend reinforcing steel as required to place pipe(s) through the drop inlet wall.

Pipe shall not enter through a corner of the drop inlet.

Use 2" clear cover on all reinforcing steel unless otherwise noted.

Precasting of reinforced drop inlets will be permissible. Prior to precasting, the Contractor shall submit details to the Engineer for approval.

Maximum pipe diameter shall not exceed 27 inches on the 4 foot wide side and shall not exceed 54 inches on the 6.5 foot wide side of the drop inlet.

The dimension of H is in feet.

December 23, 2009

Published Date: 2nd Qtr. 2015

SDDOT

5.5' X 3' TYPE B
REINFORCED CONCRETE DROP INLET

PLATE NUMBER
670.05

Sheet 1 of 2

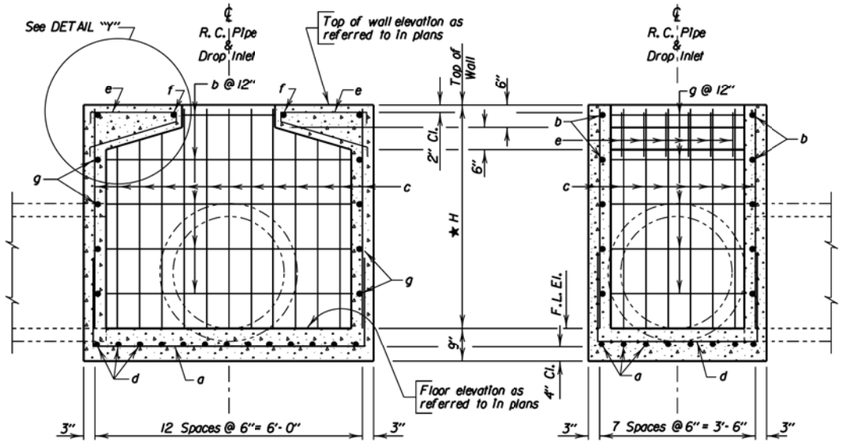

SEC. A-A

★Maximum H is 10'-0"

SEC. B-B

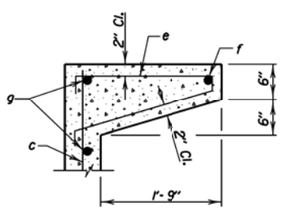

DETAIL "Y"

DROP INLETS FOR 12" TO 54" DIAMETER PIPE

REINFORCING SCHEDULE

Mk.	No.	Size	Length	Type
a	8	6	10'-0"	17
b	2H	4	7'-0"	17
c	38	5	H-2"	Str.
d	13	6	7'-6"	17
e	12	5	4'-9"	16A
f	2	5	4'-6"	17
g	2H	4	4'-6"	17

Bending Details

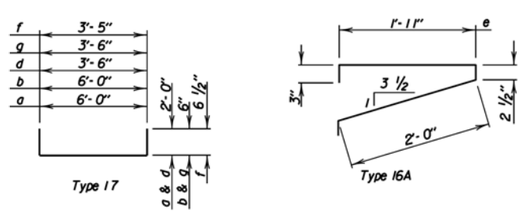

NOTE: All dimensions are out to out of bars.

December 23, 2009

Published Date: 2nd Qtr. 2015

SDDOT

5.5' X 3' TYPE B
REINFORCED CONCRETE DROP INLET

PLATE NUMBER 670.05

Sheet 2 of 2

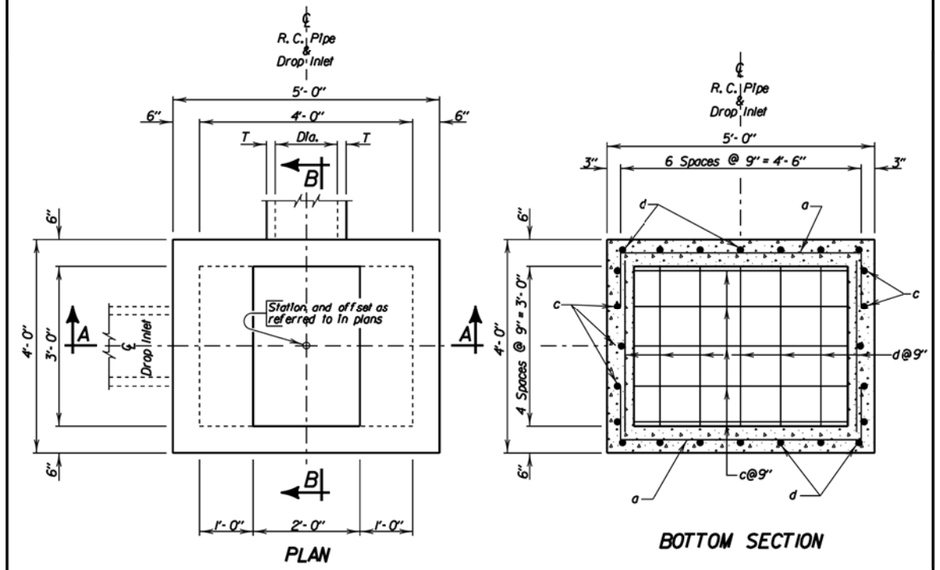

PLAN

BOTTOM SECTION

ESTIMATED QUANTITIES

ITEM	UNIT	CONSTANT QUANTITY	VARIABLE QUANTITY
✳ Class M6 Concrete	Cu Yd	0.72	0.30H
Reinforcing Steel	Lb	94	28.06H
Frame and Grate Assembly	Each	1	———

DROP INLETS FOR 12" TO 36" DIAMETER PIPE

GENERAL NOTES:

✳ Reduce total quantities of concrete by the amount of concrete displaced by the pipe. The total quantity of concrete shall be computed to the nearest hundredth of a cubic yard. The total quantity of reinforcing steel shall be computed to the nearest pound.

Drop inlets shown may be modified by the addition or omission of connecting pipes as shown on the layouts.

Reinforcing steel shall conform to ASTM A615 Grade 60. The b and f bars shall be lapped 12 inches. Cut and bend reinforcing steel as required to place pipe(s) through the drop inlet wall.

Pipe shall not enter through a corner of the drop inlet.

Use 2" clear cover on all reinforcing steel unless otherwise noted.

Precasting of reinforced drop inlets will be permissible. Prior to precasting, the Contractor shall submit details to the Engineer for approval.

Maximum pipe diameter shall not exceed 27 inches on the 4 foot wide side and shall not exceed 36 inches on the 5 foot wide side of the drop inlet.

The dimension of H is in feet.

PIPE DISPLACEMENT REDUCTIONS

R.C. Pipe Diameter Inches	T Inches	Class M6 Concrete Cu Yd
12	2	0.03
15	2 1/4	0.04
18	2 1/2	0.05
24	3	0.09
30	3 1/2	0.14
36	4	0.20

December 23, 2009

Published Date: 2nd Qtr. 2015

SDDOT

4' X 3' TYPE B
REINFORCED CONCRETE DROP INLET

PLATE NUMBER 670.07

Sheet 1 of 2

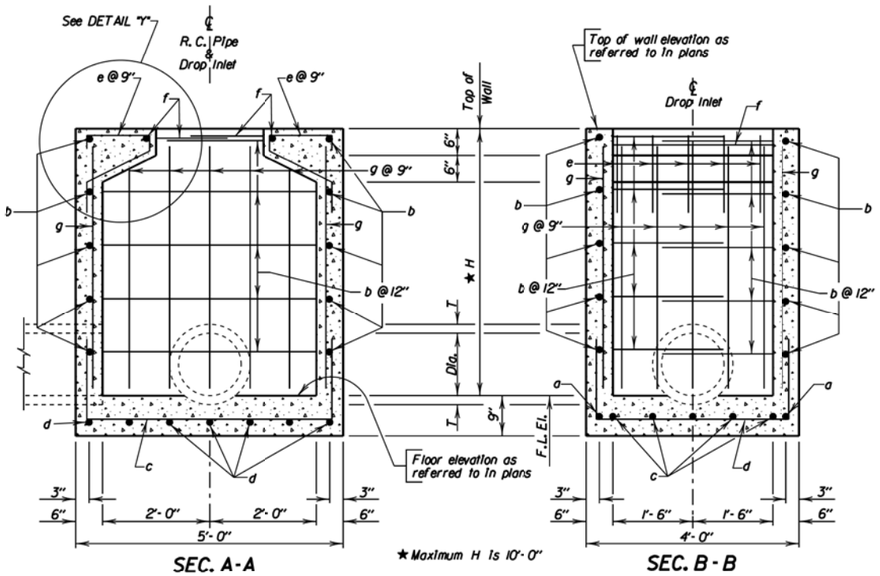

DROP INLETS FOR 12" TO 36" DIAMETER PIPE

REINFORCING SCHEDULE

MK.	No.	Size	Length	Type
a	2	4	6'- 6"	17
b	2H	4	9'- 0"	17
c	5	4	7'- 6"	17
d	7	4	6'- 6"	17
e	10	4	3'- 6"	16A
f	2	4	7'- 0"	17
g	24	4	H - 2"	Str.

Bending Details

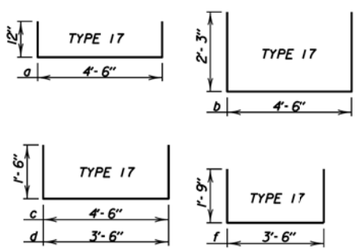

NOTE:
All dimensions are out to out of bars.

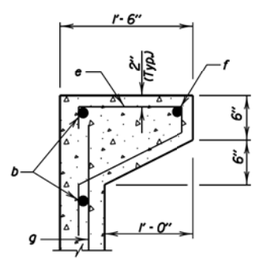

DETAIL "Y"

December 23, 2009

Published Date: 2nd Qtr. 2015

SDDOT

4' X 3' TYPE B
REINFORCED CONCRETE DROP INLET

PLATE NUMBER 670.07

Sheet 2 of 2

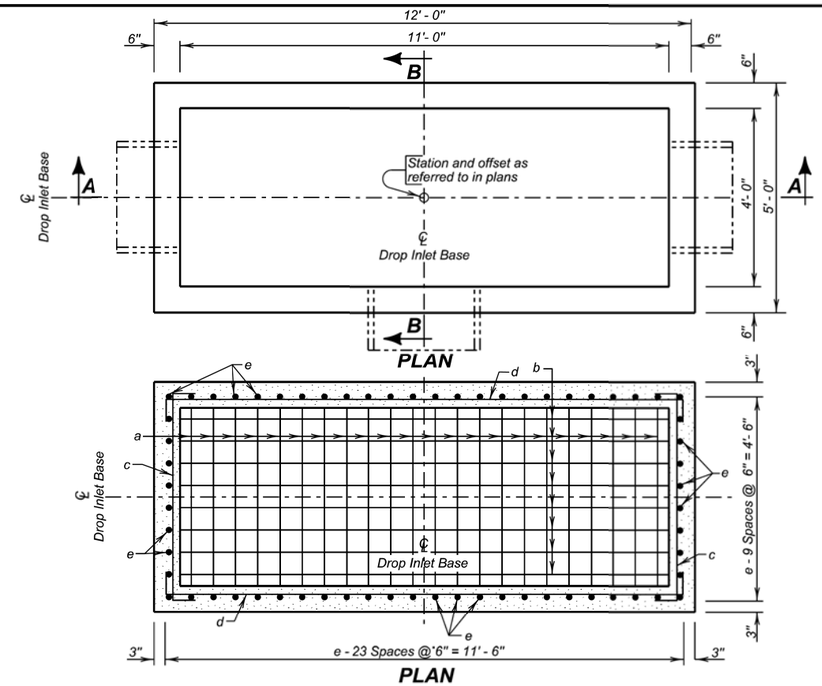

SPECIFICATIONS:

1. Design Specifications: AASHTO LRFD Bridge Design Specifications 2012 Edition.
2. Construction Specifications: South Dakota Standard Specifications for Roads and Bridges, 2004 Edition and required Provisions, Supplemental Specifications and/or Special Provisions.

GENERAL NOTES:

1. Design Live Load: HL-93 loading. No construction loading in excess of legal load was considered.
2. Base is intended for use with a Precast Concrete Type S Drop Inlet Lid, Standard Plate 670.40. Base may be precast. If precast base used, and details differ from that shown, the precast base must be on the current approved list. The current approved list is available through proper channels from the SDDOT Office of Bridge Design.
3. To qualify for addition to the approved list, submit a checked design, by South Dakota Registered Professional Engineers and shop plans to the Office of Bridge Design for approval. Design shall be in accordance with the current edition of the AASHTO LRFD Bridge Design Specifications.
4. ✳ Reduce total quantities of concrete by the amount of concrete displaced by the pipe. The total quantity of concrete shall be computed to the nearest hundredth of a cubic yard. The total quantity of reinforcing steel shall be computed to the nearest pound.
5. Inlets shown may be modified by the addition or omission of connecting pipes as shown on the layouts. Connecting pipes shall not enter the inlet through the corners.
6. Maximum R.C.P. diameter shall not exceed 36 inches (30 inches for R.C. Arch) on the 4-foot wide side of the Drop Inlet.
7. Reinforcing steel shall conform to ASTM A615 Grade 60. Cut and bend reinforcing steel as required to place pipe(s) through the inlet wall.
8. Use 1 inch clear cover on all reinforcing steel unless otherwise noted.
9. The dimension of H is in feet. Maximum H is 8 feet.

December 23, 2012

Published Date: 2nd Qtr. 2015

SDDOT

4' X 11' TYPE S DROP INLET BASE

PLATE NUMBER 670.32

Sheet 1 of 2

PIPE DISPLACEMENT REDUCTIONS

	Diameter (Inches)	Wall T (Inches)	Class M6 Concrete (Cu. Yd.)
R.C.P.	12	2	0.03
	15	2 ¼	0.04
	18	2 ½	0.05
	24	3	0.09
	30	3 ½	0.14
	36	4	0.20
	42	4 ½	0.26
	48	5	0.34
	54	5 ½	0.43
	60	6	0.52
R.C. ARCH	18	2 ½	0.05
	24	3 ½	0.09
	30	4	0.14
	36	4 ½	0.19
	42	4 ½	0.24
	48	5	0.32
	54	5 ½	0.39
	60	6	0.49
	72	7	0.70
	84	8	0.93

REINFORCING SCHEDULE

Mk.	No.	Size	Length	Type
a	24	5	9' - 6"	17
b	10	5	16' - 6"	17
c	2H	4	5' - 6"	17
d	2H	4	12' - 6'	17
e	64	4	H - 2"	Str.

Bending Details

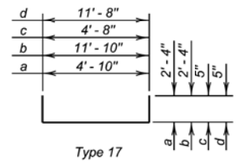

NOTE:
All dimensions are out to out of bars.

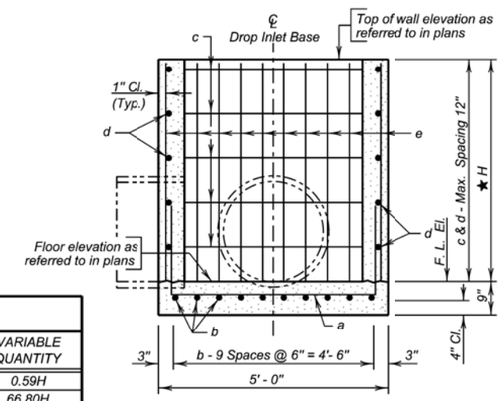

SEC. B - B

ESTIMATED QUANTITIES

ITEM	UNIT	CONSTANT QUANTITY	VARIABLE QUANTITY
✱ Class M6 Concrete	Cu. Yd.	1.67	0.59H
Reinforcing Steel	Lb.	402.77	66.80H

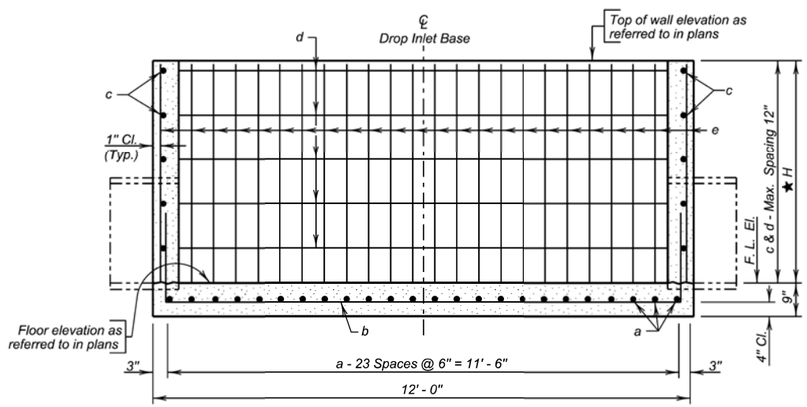

SEC. A - A

✱ Maximum H is 8' - 0"

December 23, 2012

Published Date: 2nd Qtr. 2015

SDDOT

4' X 11' TYPE S DROP INLET BASE

PLATE NUMBER 670.32

Sheet 2 of 2

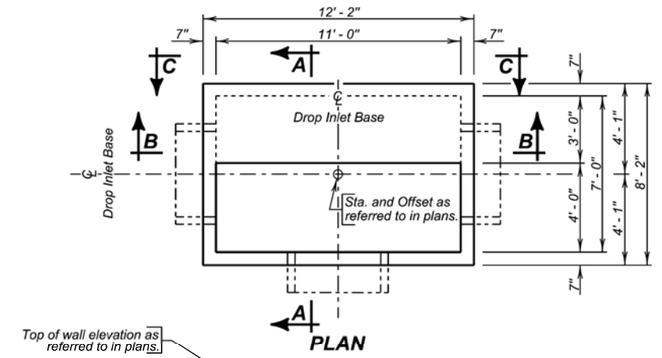

PLAN

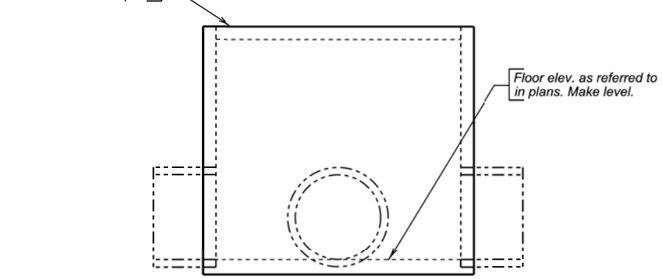

ELEVATION

SPECIFICATIONS:

1. Design Specifications: AASHTO LRFD Bridge Design Specifications, 2012 Edition.
2. Construction Specifications: South Dakota Standard Specifications for Roads and Bridges, 2004 Edition and required Provisions, Supplemental Specifications and/or Special Provisions.

GENERAL NOTES:

1. Design Live Load: HL-93 loading. No construction loading in excess of legal load was considered.
2. Base is intended for use with a Precast Concrete Type S Drop Inlet Lid, Standard Plate 670.40. Base may be precast. If precast base used, and details differ from that shown, the precast base must be on the current approved list. The current approved list is available through proper channels from the SDDOT Office of Bridge Design.
3. To qualify for addition to the approved list, submit a checked design, by South Dakota Registered Professional Engineers and shop plans to the Office of Bridge Design for approval. Design shall be in accordance with the current edition of the AASHTO LRFD Bridge Design Specifications.
4. ✱ Reduce total quantities of concrete by the amount of concrete displaced by the pipe. The total quantity of concrete shall be computed to the nearest hundredth of a cubic yard. The total quantity of reinforcing steel shall be computed to the nearest pound.
5. Inlets shown may be modified by the addition or omission of connecting pipes as shown on the layouts. Connecting pipes shall not enter the inlet through the corners.
6. Maximum R.C.P. diameter shall not exceed 66 inches (54 inches for R.C. Arch) on the 7-foot wide side of the Drop Inlet.
7. Reinforcing steel shall conform to ASTM A615 Grade 60. Cut and bend reinforcing steel as required to place pipe(s) through the inlet wall.
8. Use 1 inch clear cover on all reinforcing steel unless otherwise noted.
9. The dimension of H is in feet. Maximum H is 10 feet.

December 23, 2012

Published Date: 2nd Qtr. 2015

SDDOT

7' X 11' TYPE S DROP INLET BASE

PLATE NUMBER 670.34

Sheet 1 of 4

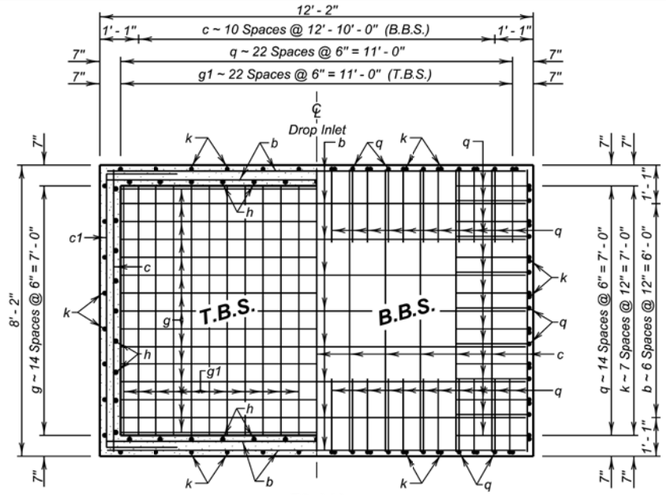

PLAN
(Bottom Slab)
(Pipe Not Shown)

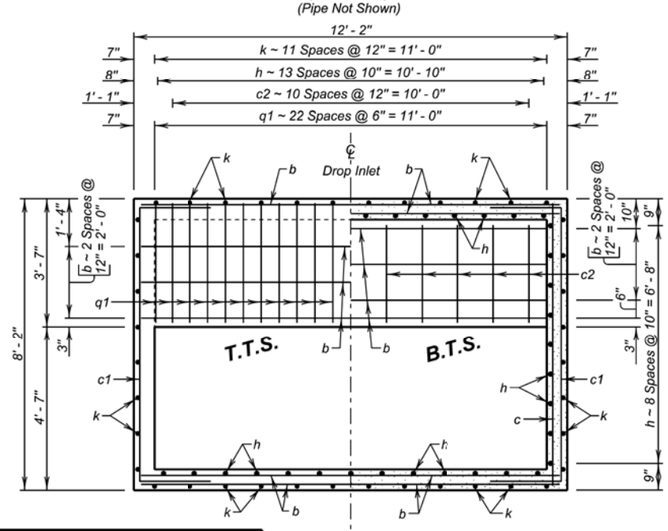

LEGEND FOR PLACING RE-STEEL
T.T.S. - Top of Top Slab
B.T.S. - Bottom of Top Slab
T.B.S. - Top of Bottom Slab
B.B.S. - Bottom of Bottom Slab

PLAN
(Top Slab)
(Pipe Not Shown)

December 23, 2012

Published Date: 2nd Qtr. 2015 | SDDOT | 7' X 11' TYPE S DROP INLET BASE | PLATE NUMBER 670.34 | Sheet 2 of 4

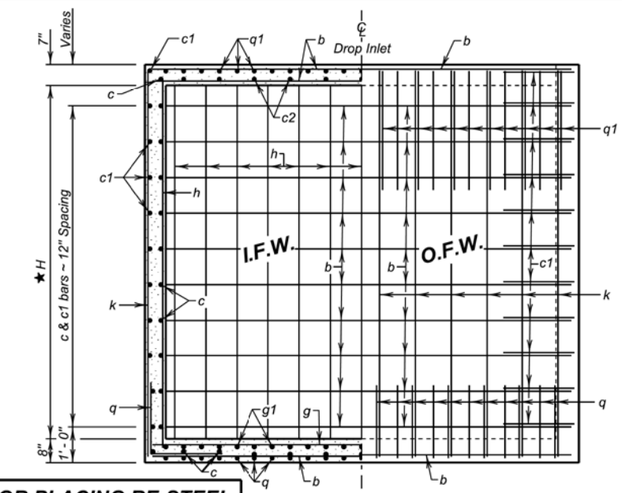

LEGEND FOR PLACING RE-STEEL
O.F.W. - Outside Face of Wall
I.F.W. - Inside Face of Wall

VIEW C - C
(Pipe Not Shown)

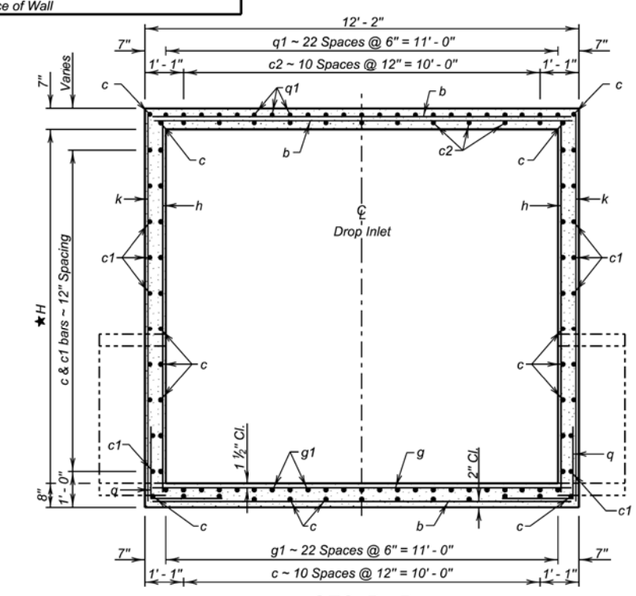

SEC. B - B

★ Maximum H is 10' - 0"

December 23, 2012

Published Date: 2nd Qtr. 2015 | SDDOT | 7' X 11' TYPE S DROP INLET BASE | PLATE NUMBER 670.34 | Sheet 3 of 4

REINFORCING SCHEDULE

Mk.	No.	Size	Length	Type
b	19 + 4H	4	11' - 9"	Str.
c	15 + 2H	4	7' - 9"	Str.
c1	2 + 2H	4	11' - 10"	17
c2	11	4	2' - 10"	Str.
g	15	5	11' - 9"	Str.
g1	23	5	7' - 9"	Str.
h	46	5	H + 5"	Str.
k	40	5	H + 5"	Str.
q	76	5	5' - 6"	17A
q1	23	5	6' - 8"	17A

Bending Details

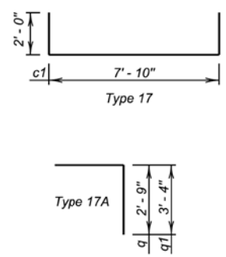

NOTE:
All dimensions are out to out of bars

ESTIMATED QUANTITIES

ITEM	UNIT	CONSTANT QUANTITY	VARIABLE QUANTITY
* Class M6 Concrete	Cu.Yd.	3.65	0.83H
Reinforcing Steel	Lb.	1266	147.26H

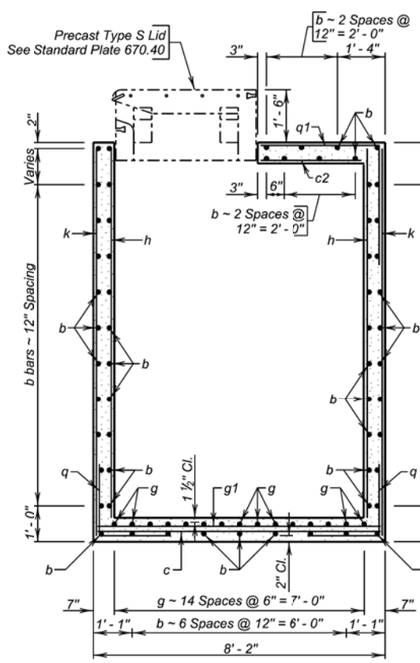

SEC. A - A
(Pipe Not Shown)

PIPE DISPLACEMENT REDUCTIONS

	Diameter (Inches)	Wall T (Inches)	Class M6 Concrete (Cu. Yd.)
R.C.P.	12	2	0.03
	15	2 ¼	0.04
	18	2 ½	0.06
	24	3	0.11
	30	3 ½	0.16
	36	4	0.23
	42	4 ½	0.31
	48	5	0.40
	54	5 ½	0.50
	60	6	0.61
R.C. ARCH	18	2 ½	0.06
	24	3 ½	0.11
	30	4	0.16
	36	4 ½	0.22
	42	4 ½	0.29
	48	5	0.37
	54	5 ½	0.46
	60	6	0.57
	72	7	0.82
	84	8	1.09

December 23, 2012

Published Date: 2nd Qtr. 2015	SDDOT	7' X 11' TYPE S DROP INLET BASE	PLATE NUMBER 670.34
			Sheet 4 of 4

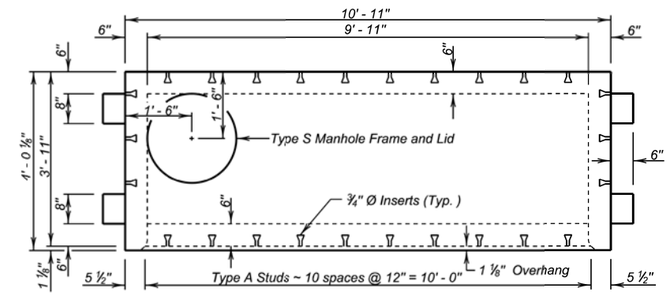

PLAN

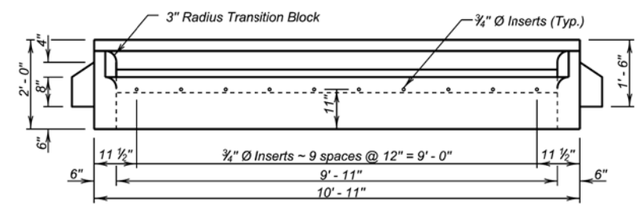

ELEVATION

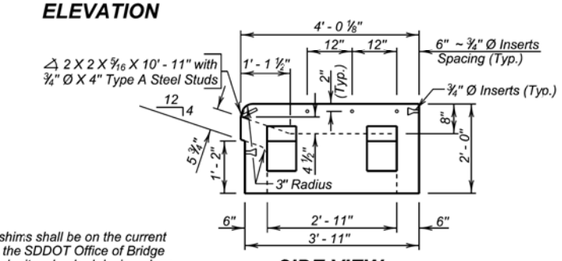

SIDE VIEW
(With Sidewalk Inserts)

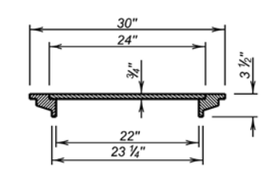

TYPICAL SECTION THROUGH TYPE S MANHOLE FRAME AND LID
(Weight 140 Lbs.)

GENERAL NOTES:

1. The Precast Concrete Type S Drop Inlet Lid and the shims shall be on the current approved list available through proper channels from the SDDOT Office of Bridge Design. To qualify for addition to the approved list, submit a checked design, done by South Dakota Registered Professional Engineers, and shop plans to the Office of Bridge Design for approval. Design shall be in accordance with the current edition of the AASHTO LRFD Bridge Design Specifications.
2. Design Live Load shall be HL - 93.
3. Concrete mix shall be as per fabricators design, however, minimum compressive strength shall not be less than 4500 psi. Type II Cement is required.
4. The Type S Manhole Frame and Lid shall conform to AASHTO M105, Class 30.
5. Structural Steel shall conform to ASTM A36. The ¾ inch diameter Headed Type A Steel Studs shall conform to Section 7 of the current edition of AWS D1. 1 Structural Steel Welding Code.
6. The ¾ inch diameter Concrete Inserts shall be galvanized or made of a corrosion resistant material. Provide ¾ inch diameter x 1' - 6" long dowels conforming to ASTM A615, Gr. 60 threaded to fit inserts with each lid.
7. All costs associated with furnishing and installing the Precast Concrete Type S Drop Inlet Lid including the type S manhole frame and lid, shims, inserts, and dowels shall be included in the contract unit price per each for " 4' x 11' Precast Concrete Type S Drop Inlet Lid ".

December 23, 2012

Published Date: 2nd Qtr. 2015	SDDOT	4' X 11' PRECAST CONCRETE TYPE S DROP INLET LID	PLATE NUMBER 670.40
			Sheet 1 of 1

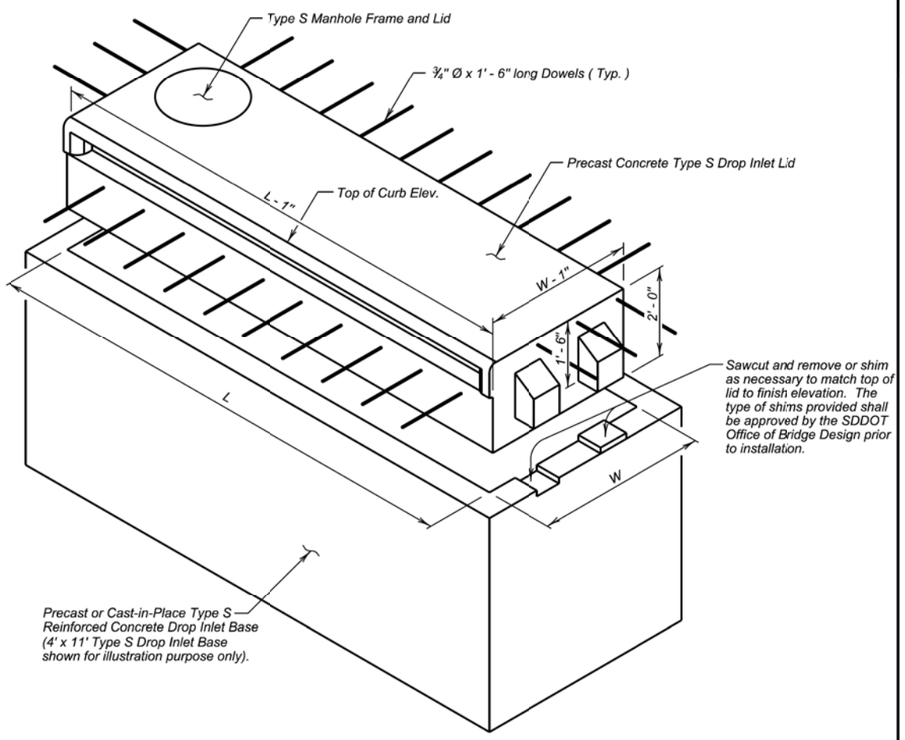

TYPE S DROP INLET

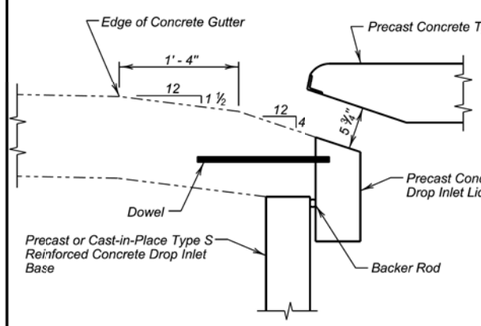

CONCRETE GUTTER DETAIL

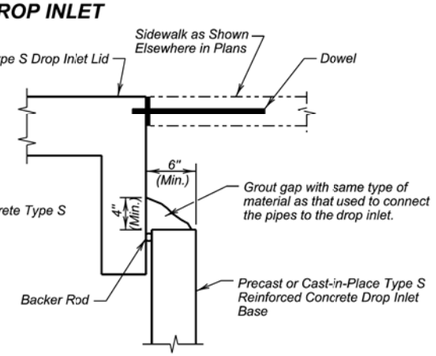

GROUTING DETAIL
(Sides and Back, Adjacent to Sidewalk)

December 23, 2012

Published Date: 2nd Qtr. 2015	SDDOT	INSTALLATION DETAILS FOR PRECAST CONCRETE TYPE S DROP INLET LID	PLATE NUMBER 670.45
			Sheet 1 of 2

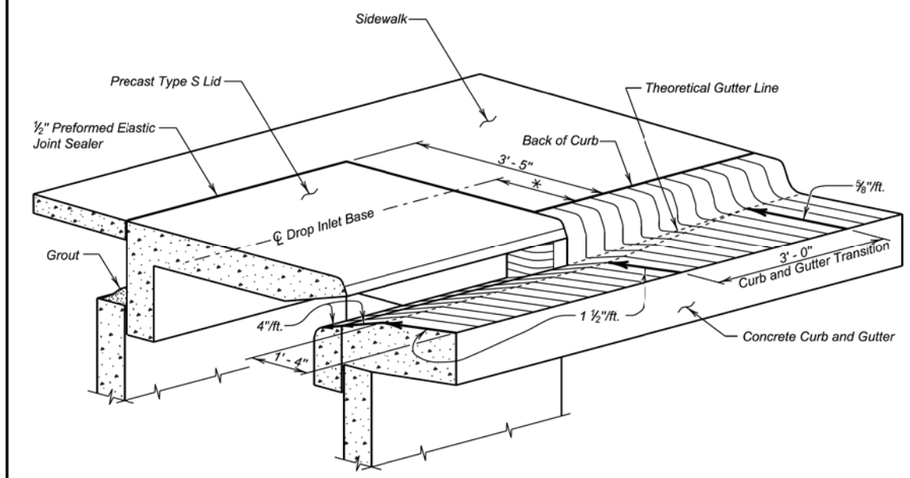

CURB AND GUTTER TRANSITION DETAILS

Drop Inlet Base Unit Size	* Distance
4' x 6'	1' - 5 ½"
4' x 11'	1' - 5 ½"
7' x 11'	2' - 11 ½"

GENERAL NOTES:

1. Dowels shall be used to anchor the precast concrete Type S drop inlet lid to the concrete gutter. See Standard Plate 670.38 or 670.40 as applicable. If there is sidewalk adjacent dowels shall be used to anchor the precast concrete Type S drop inlet lid to the sidewalk. If there is sidewalk adjacent to the drop inlet, the precast lid shall match the finish elevations and cross slopes of the sidewalk.
2. The sidewalk shall be steel reinforced when the sidewalk adjoins the precast lid. Refer to Standard Plate 651.70 for reinforced concrete sidewalk details.

December 23, 2012

Published Date: 2nd Qtr. 2015	SDDOT	INSTALLATION DETAILS FOR PRECAST CONCRETE TYPE S DROP INLET LID	PLATE NUMBER 670.45
			Sheet 2 of 2

GENERAL NOTE:

Top of grate elevation shall be 0.04' below theoretical elevation of gutter.

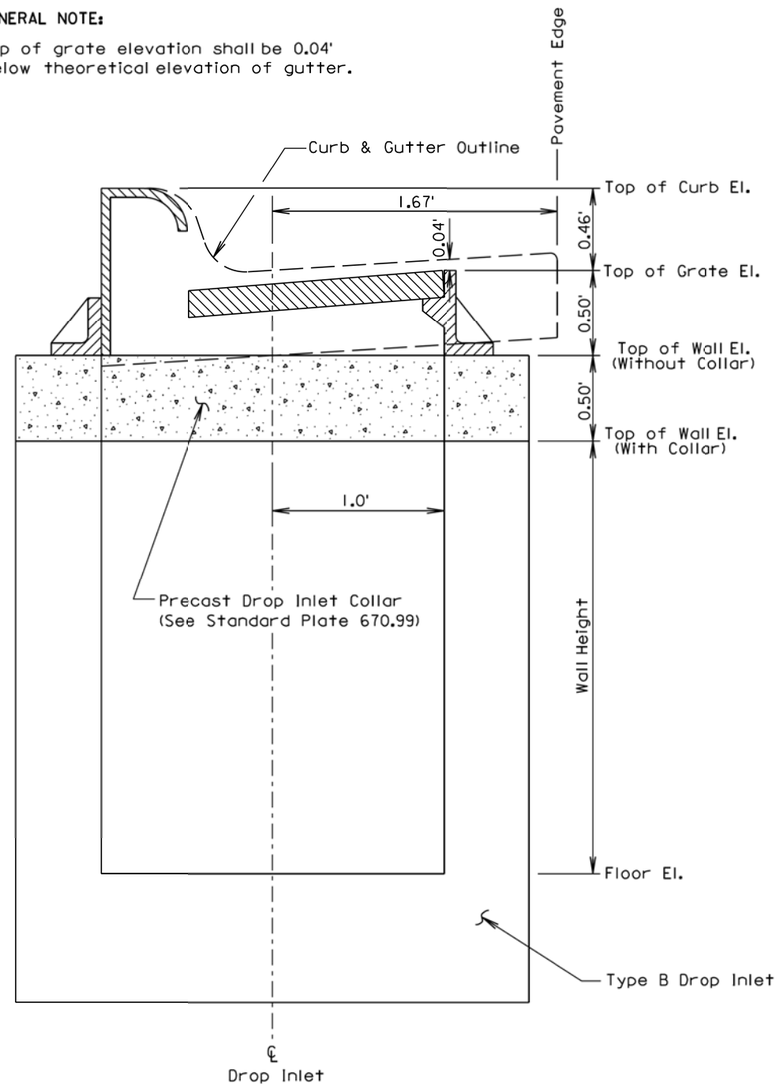

June 26, 2011

Published Date: 2nd Qtr. 2015	SDDOT	INSTALLATION OF TYPE B DROP INLET	PLATE NUMBER 670.75
			Sheet 1 of 1

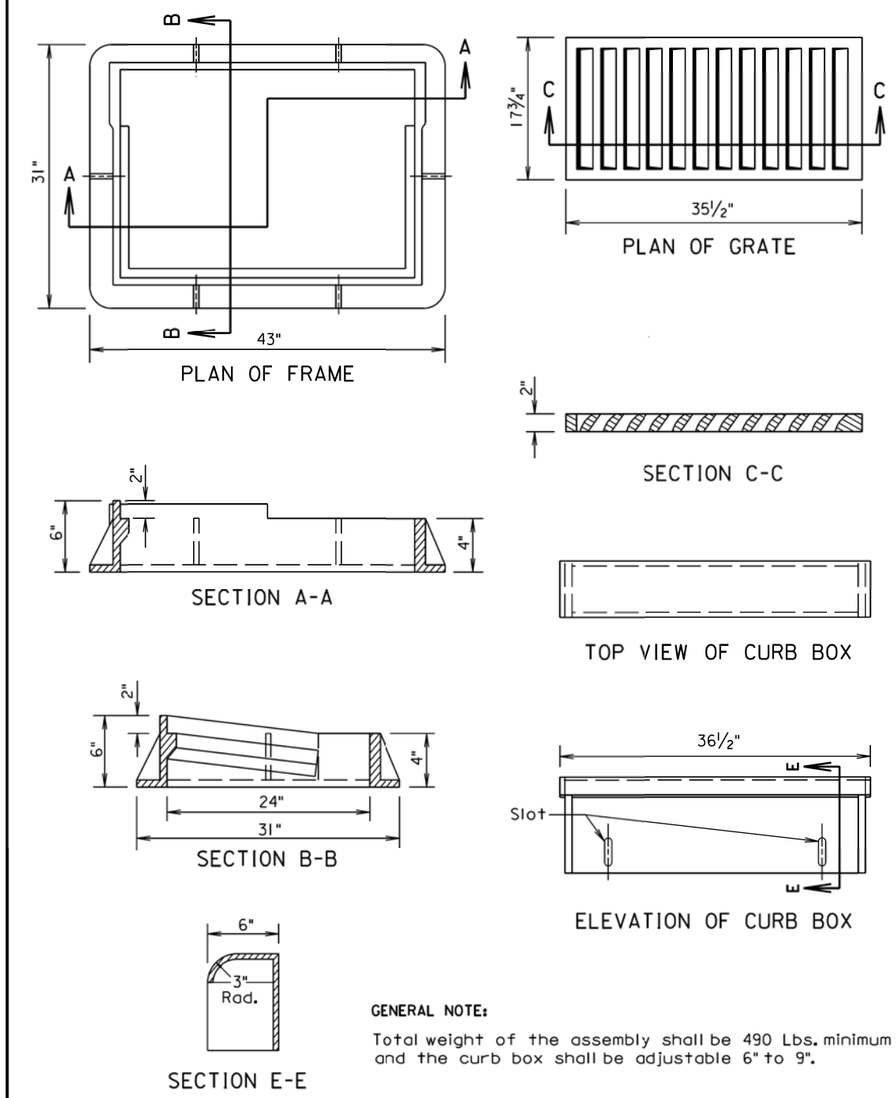

GENERAL NOTE:

Total weight of the assembly shall be 490 Lbs. minimum and the curb box shall be adjustable 6" to 9".

March 31, 2000

Published Date: 2nd Qtr. 2015	SDDOT	TYPE B FRAME AND GRATE ASSEMBLY	PLATE NUMBER 670.80
			Sheet 1 of 1

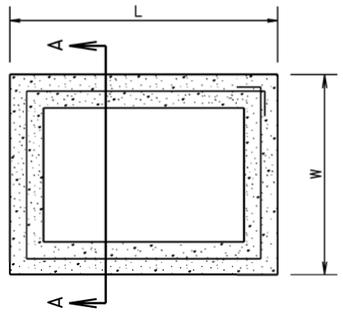

PLAN VIEW

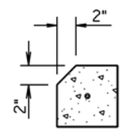

For Type D Drop Inlets only:
Use Precast Drop Inlet Collar with 2" chamfer on L sides only.

DETAIL B

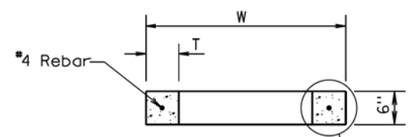

SECTION A-A

See Detail B (For Type D Drop Inlets Only)

INFORMATIONAL QUANTITIES					
FRAME AND GRATE TYPE	L Ft-In	W Ft-In	T In	CLASS M6 CONCRETE CuYd	REINFORCING STEEL Lb
TYPE B	4'-0"	3'-0"	6	0.11	9
TYPE C	5'-0"	4'-0"	6	0.15	11
TYPE D	4'-0"	2'-6"	6	0.10	8

GENERAL NOTES:

All reinforcing steel shall conform to ASTM A615, Grade 60.

The ½" diameter bar shall lap 6"± and shall be centered in the concrete.

The cost of furnishing and installing Precast Drop Inlet Collars, including labor, materials, and incidentals shall be incidental to the contract unit price per Each for "Precast Drop Inlet Collar".

March 31, 2000

Published Date: 2nd Qtr. 2015	SDDOT	PRECAST DROP INLET COLLAR	PLATE NUMBER 670.99
			Sheet 1 of 1

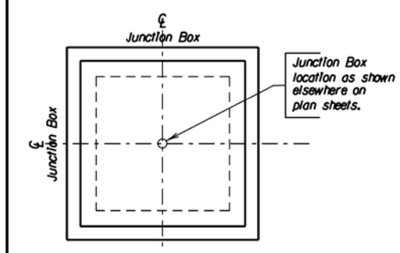

PLAN

SPECIFICATIONS

1. Design Specifications: AASHTO Specifications for Highway Bridges, 1996 Edition (Service Load).
2. Construction Specifications: South Dakota Standard Specifications for Roads and Bridges, Current Edition and required Provisions, Supplemental Specifications and/or Special Provisions as included in the Proposal.

DESIGN MIX OF CONCRETE

1. Mix shall be designed to produce a concrete having a minimum compressive strength of 4000 p.s.i. at 28 days.
2. Type II Cement is required.

GENERAL NOTES

1. Design Live Load: HS 20-44 and Alternate Loading. No construction loading in excess of legal Load was considered.
2. The design of the junction box is based on a maximum fill over the junction box of 5 feet.
3. Unit Stresses: Concrete fc = 1600 p.s.i.
   Reinforcing Steel fs = 24000 p.s.i.
4. All reinforcing steel shall conform to ASTM A615 Grade 60.
5. All exposed edges shall be chamfered ¾".
6. Use 1" clear cover on all reinforcing steel except as shown.
7. The cost of furnishing and installing the manhole steps shall be incidental to the contract unit price per Lb. for "Reinforcing steel".
8. Reinforcing steel shall be cut and bent in field as necessary to fit pipe and manhole openings. (Pipe openings are not shown in these details.) Number, size and location of pipes entering junction box are shown elsewhere on plan sheets.
9. All pipes entering the junction box must fit between the inside faces of the walls.

△ Location, quantities, and method of payment for precast eccentric manhole cone sections are shown elsewhere on plan sheets.

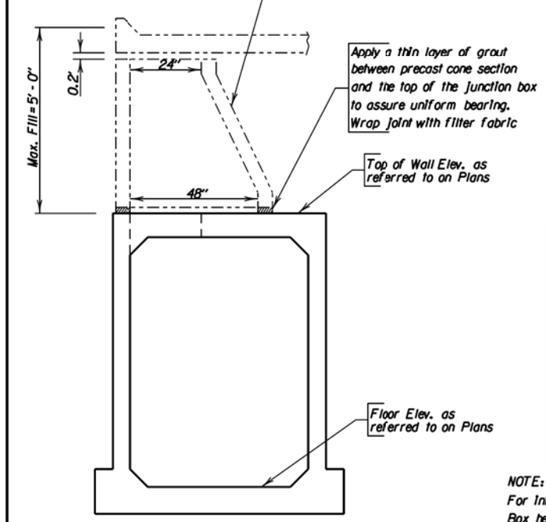

△ DETAIL OF CONNECTION BETWEEN PRECAST ECCENTRIC MANHOLE CONE SECTION AND JUNCTION BOX

ITEM	Class M6 Concrete	Reinforcing Steel
UNIT	Cu. Yd.	Lb.
H = 4'-0"	4.37	821
H = 4'-6"	4.61	846
H = 5'-0"	4.85	908
H = 5'-6"	5.10	933
H = 6'-0"	5.34	958
H = 6'-6"	5.58	1020
H = 7'-0"	5.82	1045
H = 7'-6"	6.06	1071
H = 8'-0"	6.30	1132

NOTE:
For informational purposes only, the estimated quantities for Junction Box height H are shown above. These quantities do not include quantity reduction for pipe openings, but do include the reduction for the 24" diameter manhole opening.

March 31, 2000

Published Date: 2nd Qtr. 2015	SDDOT	5'X 5' JUNCTION BOX	PLATE NUMBER 671.01
			Sheet 1 of 3

REINFORCING SCHEDULE

	Mk.	No.	Size	Length	Type
H = 4'-0"	⌀a1	1	6	9'-0"	T3
	⌀a2	4	-	——	-
	h3	28	4	5'-9"	17A
	k3	48	4	8'-6"	17
	ml	18	5	6'-9"	Str.
	nl	18	5	5'-9"	Str.
	pl	52	4	5'-0"	Str.
	ql	8	4	3'-6"	17A
H = 4'-6"	⌀a1	1	6	9'-0"	T3
	⌀a2	4	-	——	-
	h4	28	4	6'-3"	17A
	k4	48	4	9'-0"	17
	ml	18	5	6'-9"	Str.
	nl	18	5	5'-9"	Str.
	pl	52	4	5'-0"	Str.
	ql	8	4	3'-6"	17A
H = 5'-0"	⌀a1	1	6	9'-0"	T3
	⌀a2	5	-	——	-
	h5	28	4	6'-9"	17A
	k5	48	4	9'-6"	17
	ml	18	5	6'-9"	Str.
	nl	18	5	5'-9"	Str.
	pl	60	4	5'-0"	Str.
	ql	12	4	3'-6"	17A
H = 5'-6"	⌀a1	1	6	9'-0"	T3
	⌀a2	5	-	——	-
	h6	28	4	7'-3"	17A
	k6	48	4	10'-0"	17
	ml	18	5	6'-9"	Str.
	nl	18	5	5'-9"	Str.
	pl	60	4	5'-0"	Str.
	ql	12	4	3'-6"	17A
H = 6'-0"	⌀a1	1	6	9'-0"	T3
	⌀a2	6	-	——	-
	h7	28	4	7'-9"	17A
	k7	48	4	10'-6"	17
	ml	18	5	6'-9"	Str.
	nl	18	5	5'-9"	Str.
	pl	60	4	5'-0"	Str.
	ql	12	4	3'-6"	17A
H = 6'-6"	⌀a1	1	6	9'-0"	T3
	⌀a2	6	-	——	-
	h8	28	4	8'-3"	17A
	k8	48	4	11'-0"	17
	ml	18	5	6'-9"	Str.
	nl	18	5	5'-9"	Str.
	pl	68	4	5'-0"	Str.
	ql	16	4	3'-6"	17A
H = 7'-0"	⌀a1	1	6	9'-0"	T3
	⌀a2	7	-	——	-
	h9	28	4	8'-9"	17A
	k9	48	4	11'-6"	17
	ml	18	5	6'-9"	Str.
	nl	18	5	5'-9"	Str.
	pl	68	4	5'-0"	Str.
	ql	16	4	3'-6"	17A

Bending Details

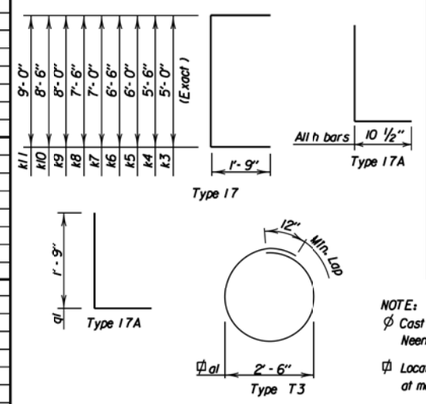

	Mk.	No.	Size	Length	Type
H = 7'-6"	⌀a1	1	6	9'-0"	T3
	⌀a2	7	-	——	-
	h10	28	4	9'-3"	17A
	k10	48	4	12'-0"	17
	ml	18	5	6'-9"	Str.
	nl	18	5	5'-9"	Str.
	pl	68	4	5'-0"	Str.
	ql	16	4	3'-6"	17A
H = 8'-0"	⌀a1	1	6	9'-0"	T3
	⌀a2	8	-	——	-
	h11	28	4	9'-9"	17A
	k11	48	4	12'-6"	17
	ml	18	5	6'-9"	Str.
	nl	18	5	5'-9"	Str.
	pl	76	4	5'-0"	Str.
	ql	20	4	3'-6"	17A

NOTE:

⌀ Cast Iron Manhole Steps (R - 1980 - C) from Neenah Foundry or equivalent.

⌀ Locate in center of top slab with 3" clearance at manhole opening.

All dimensions are out to out of bars.

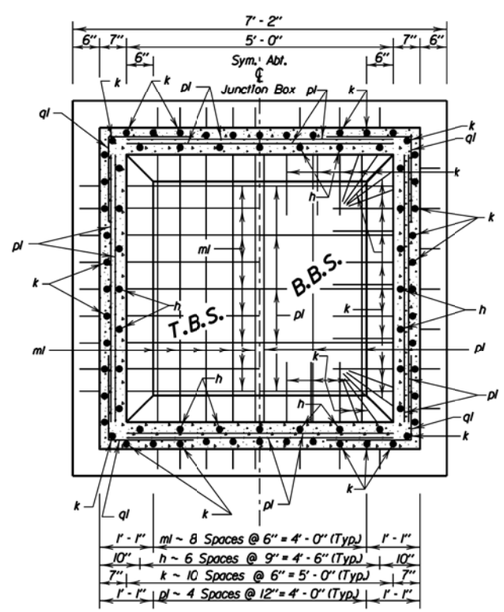

SEC. A-A

March 31, 2000

Published Date: 2nd Qtr. 2015

SDDOT

5' X 5' JUNCTION BOX

PLATE NUMBER 671.01

Sheet 2 of 3

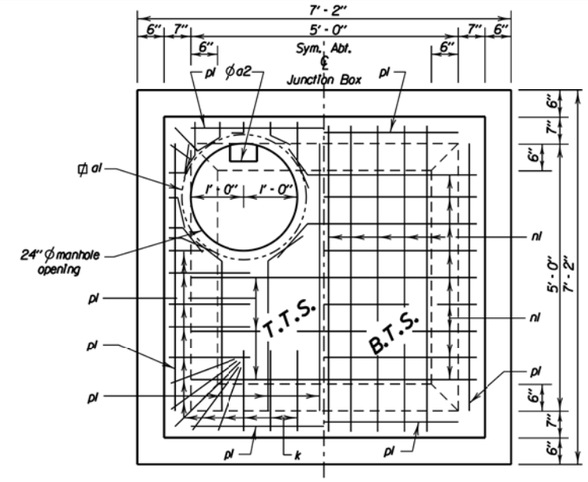

PLAN

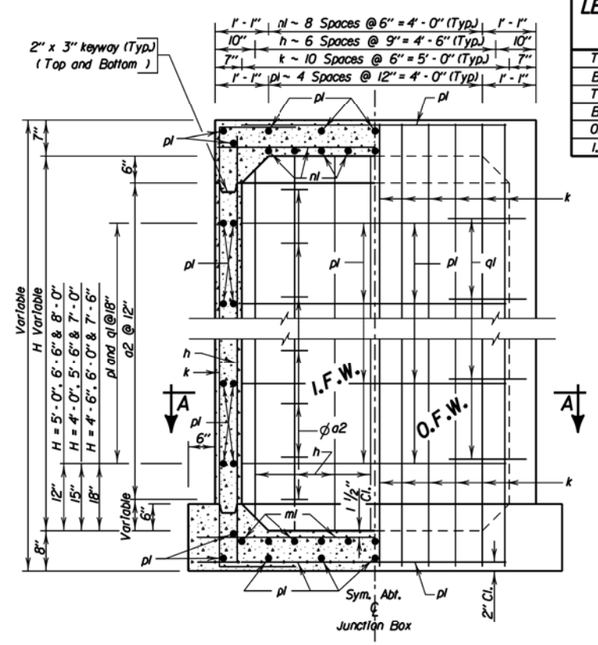

ELEVATION

LEGEND FOR PLACING RE-STEEL
T. T. S. - Top of Top Slab
B. T. S. - Bottom of Top Slab
T. B. S. - Top of Bottom Slab
B. B. S. - Bottom of Bottom Slab
O. F. W. - Outside Face of Wall
I. F. W. - Inside Face of Wall

March 31, 2000

Published Date: 2nd Qtr. 2015

SDDOT

5' X 5' JUNCTION BOX

PLATE NUMBER 671.01

Sheet 3 of 3

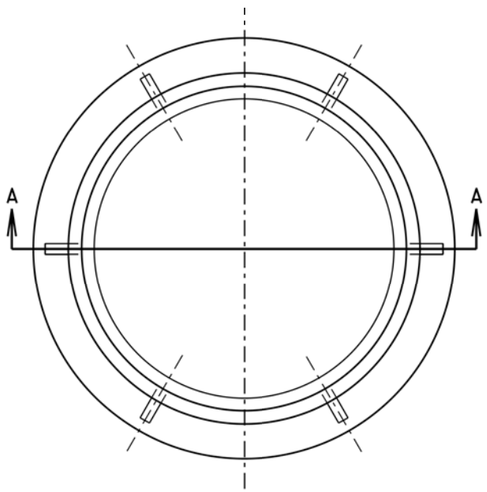

PLAN OF FRAME

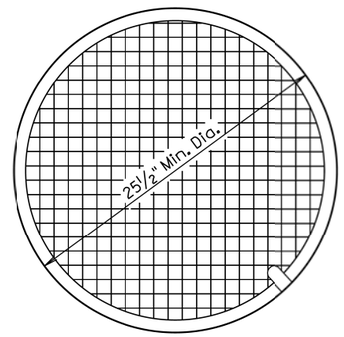

PLAN OF LID

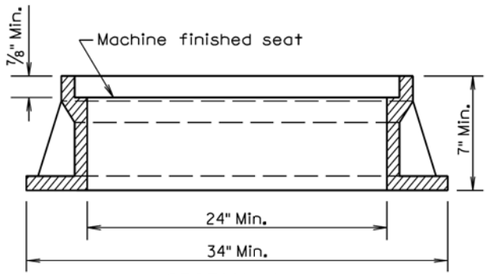

SECTION A-A

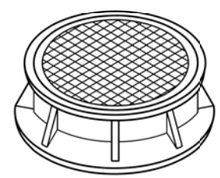

ASSEMBLED VIEW

TYPE	HEIGHT	MIN. WEIGHT
A7	7"	400Lbs.
A8	8"	440Lbs.
A9	9"	470Lbs.
A10	10"	480Lbs.

GENERAL NOTE:

Geometric pattern on top of lid other than that shown shall be approved by the Engineer.

March 31, 2000

Published Date: 2nd Qtr. 2015	SDDOT	TYPE A MANHOLE FRAME AND LID	PLATE NUMBER 671.10 Sheet 1 of 1

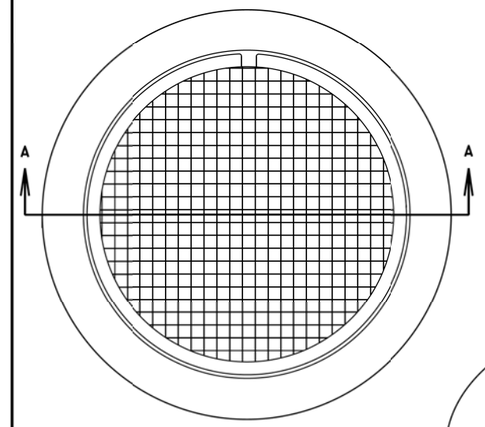

PLAN VIEW

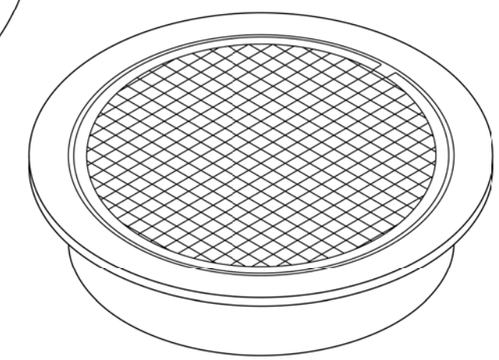

ASSEMBLED VIEW

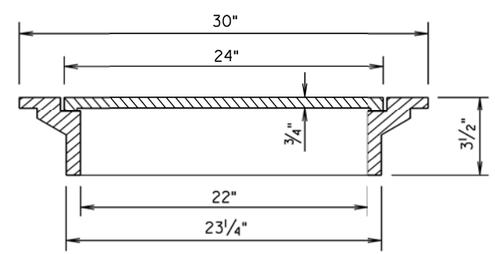

SECTION A-A

GENERAL NOTE:

Total weight of the frame and lid shall be 140 Lbs. minimum.

March 31, 2000

Published Date: 2nd Qtr. 2015	SDDOT	TYPE S MANHOLE FRAME AND LID	PLATE NUMBER 671.30 Sheet 1 of 1

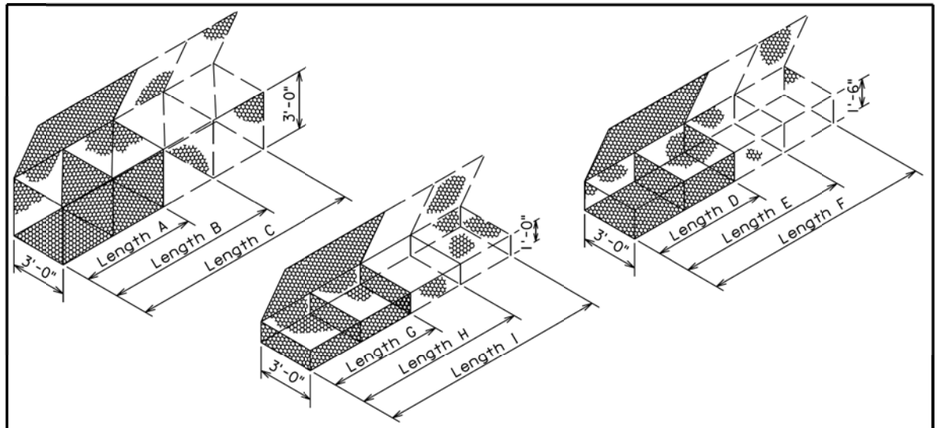

GABION DETAILS

STANDARD SIZES

SIZE	LENGTH	WIDTH	HEIGHT	NUMBER OF CELLS	CAPACITY, Cu. Yd.
A	6'-0"	3'-0"	3'-0"	2	2.0
B	9'-0"	3'-0"	3'-0"	3	3.0
C	12'-0"	3'-0"	3'-0"	4	4.0
D	6'-0"	3'-0"	1'-6"	2	1.0
E	9'-0"	3'-0"	1'-6"	3	1.5
F	12'-0"	3'-0"	1'-6"	4	2.0
G	6'-0"	3'-0"	1'-0"	2	0.7
H	9'-0"	3'-0"	1'-0"	3	1.0
I	12'-0"	3'-0"	1'-0"	4	1.3

Above Dimensions subject to mill tolerances.

GENERAL NOTES:

Lacing and internal connecting wire shall be 0.0866 inch diameter steel wire ASTM A641 Class 3 soft temper measured after galvanizing and for PVC coated gabions shall be 0.0866 inch diameter steel wire measured after galvanizing but before PVC coating.

The lacing procedure is as follows:

1. Cut a length of lacing wire approximately 1 ½ times the distance to be laced but not exceeding 5 feet.
2. Secure the wire terminal at the corner by looping and twisting.
3. Proceed lacing with alternating single and double loops at a spacing not to exceed 6 inches.
4. Securely fasten the other lacing wire terminal.

Wire lacing or interlocking type fasteners shall be used for gabion assembly and final construction of gabion structures. Interlocking fasteners for galvanized gabions shall be high tensile 0.120 inch diameter galvanized steel wire measured after galvanizing. The galvanizing shall conform to ASTM A641-92 Class 3 coating. Fasteners shall also be in accordance with ASTM A764, Class II, Type III.

Interlocking fasteners for PVC coated gabions shall be high tensile 0.120 inch diameter stainless steel wire conforming to ASTM A313, Type 302, Class I. The spacing of the interlocking fasteners during all phases of assembly and construction shall not exceed 6 inches.
All fasteners shall be placed where the mesh weaves around the selvage wire at the vertical and horizontal joints.

June 26, 2001

Published Date: 2nd Qtr. 2015	SDDOT	BANK AND CHANNEL PROTECTION GABIONS	PLATE NUMBER 720.01
			Sheet 1 of 1

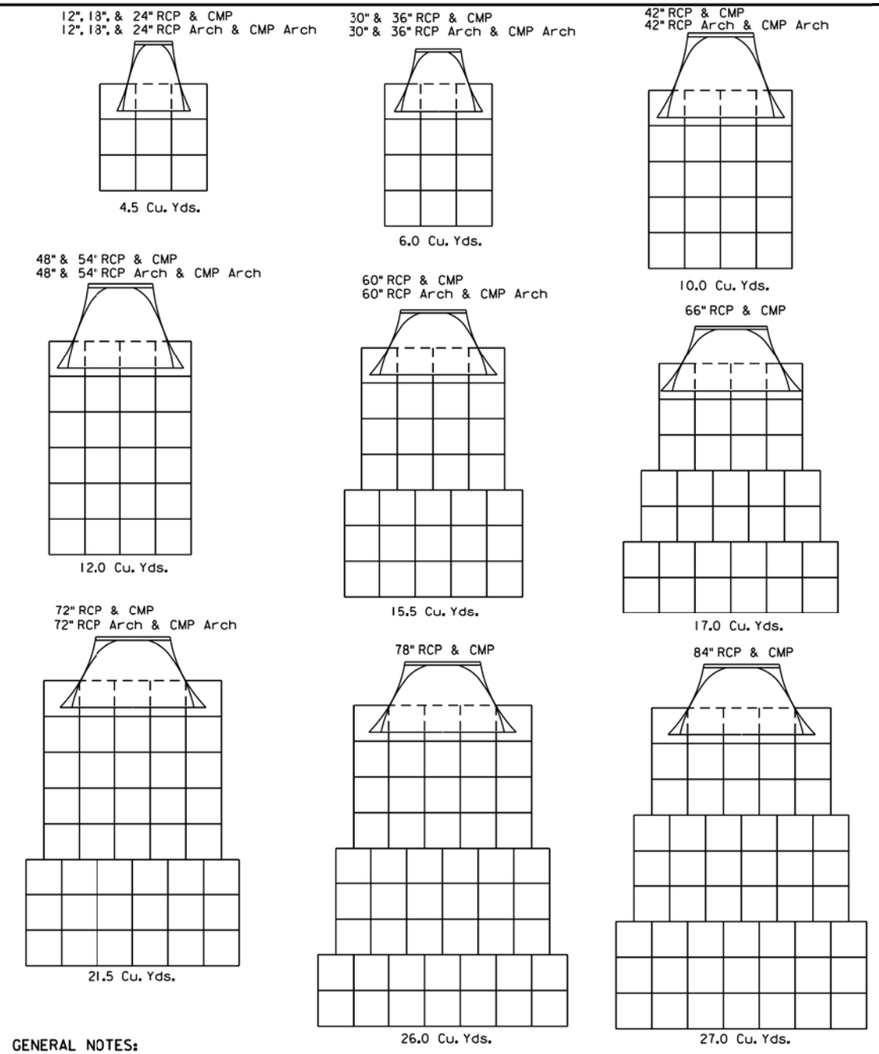

GENERAL NOTES:

Gabions at outlets of C. M. pipe and R. C. pipe shall be placed under the end section a distance of 2' from the outlet end of the section. For C. M. pipe end section installations, the upper fabric of the gabions shall be modified to accommodate the metal end section in a manner approved by the Engineer.

Quantities shown on this standard plate are based on standard gabion sizes D, E, and F (See Standard Plate 720.01).

June 26, 2001

Published Date: 2nd Qtr. 2015	SDDOT	BANK AND CHANNEL PROTECTION GABION PLACEMENT UNDER PIPE END SECTIONS	PLATE NUMBER 720.03
			Sheet 1 of 1