STATE OF	PROJECT	SHEET NO.	TOTAL SHEETS
S.D.	090 W-468	E1	E31

Section E: Structure Plans

INDEX OF SHEETS

E1	Layout Map and Index of Sheets
E2	Estimate of Structure Quantities
E3-E11	Str. 47-111-580
E12-E31	Str. 52-830-310

PROJECT 090 W - 468
STR. NO. 47-111-580
MRM 48.43

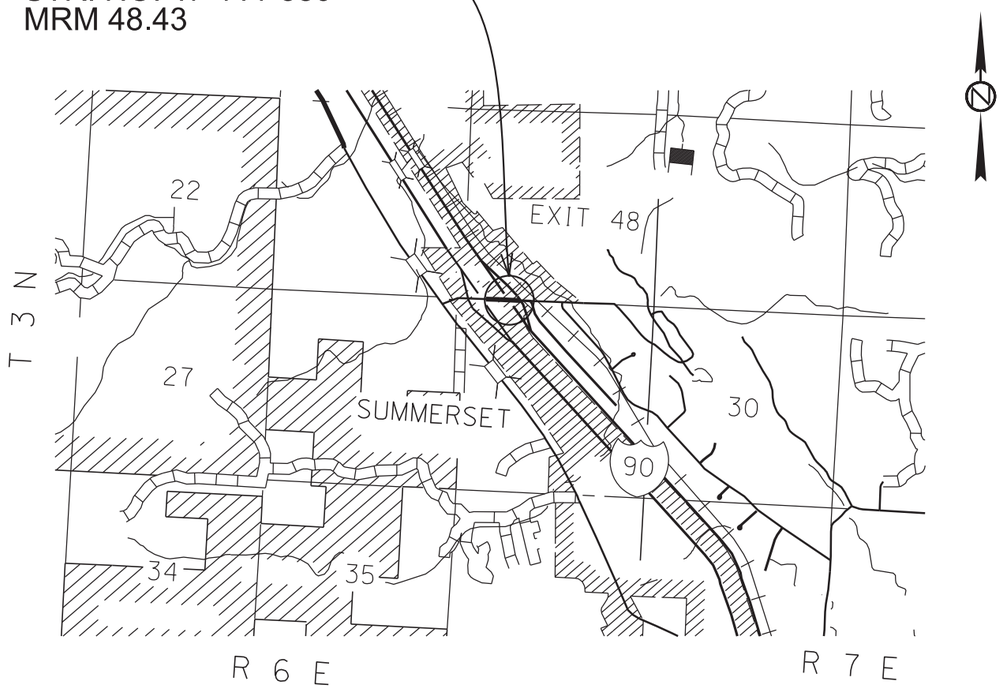

MEADE COUNTY

PROJECT 090 W - 468
STR. NO. 52-830-310
MRM 101.23

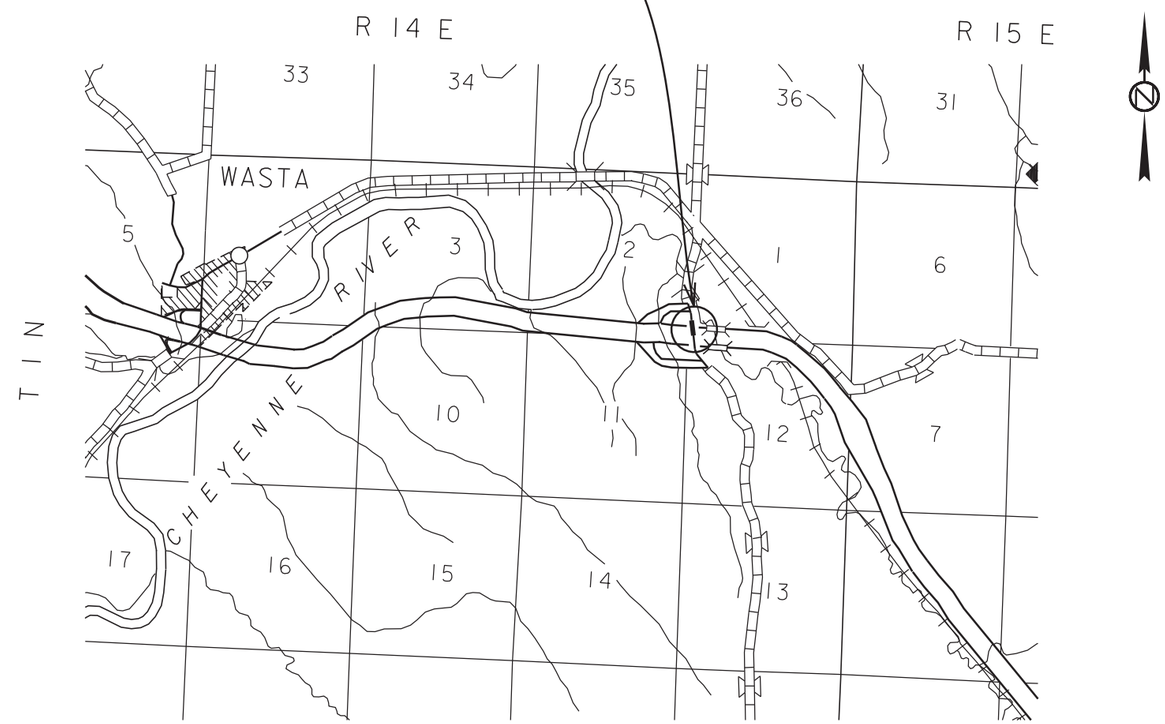

PENNINGTON COUNTY

ESTIMATE OF STRUCTURE QUANTITIES

PCN I39U

Bid Item Number	Item	Quantity	Unit
410E0365	Remove and Replace Transverse Stiffener	1	Each
410E0385	Repair Steel Diaphragm	1	Each
410E0520	Surface Grinding of Structural Steel	480	SqIn
410E3010	Magnetic Particle Weld Inspection	12	In
412E0100	Bridge Repainting, Class I	Lump Sum	LS
412E0500	Paint Residue Containment	Lump Sum	LS

PCN I39V

Bid Item Number	Item	Quantity	Unit
110E0040	Remove Concrete Bridge Slab	43.1	SqYd
460E0030	Class A45 Concrete, Bridge Deck	15.9	CuYd
460E0060	Class A45 Concrete, Self Consolidating	2.0	CuYd
460E0170	Concrete Patching Material	1.6	CuFt
460E0300	Breakout Structural Concrete	1.7	CuYd
460E0380	Install Dowel in Concrete	78	Each
480E0100	Reinforcing Steel	3,329	Lb
480E5000	Galvanic Anode	42	Each
560E8002	AASHTO Type 2 Prestressed Concrete Beam	67	Ft

Revised by TK, 4-21-2014

STATE OF	PROJECT	SHEET NO.	TOTAL SHEETS
S.D.	090 W-468	E3	E31

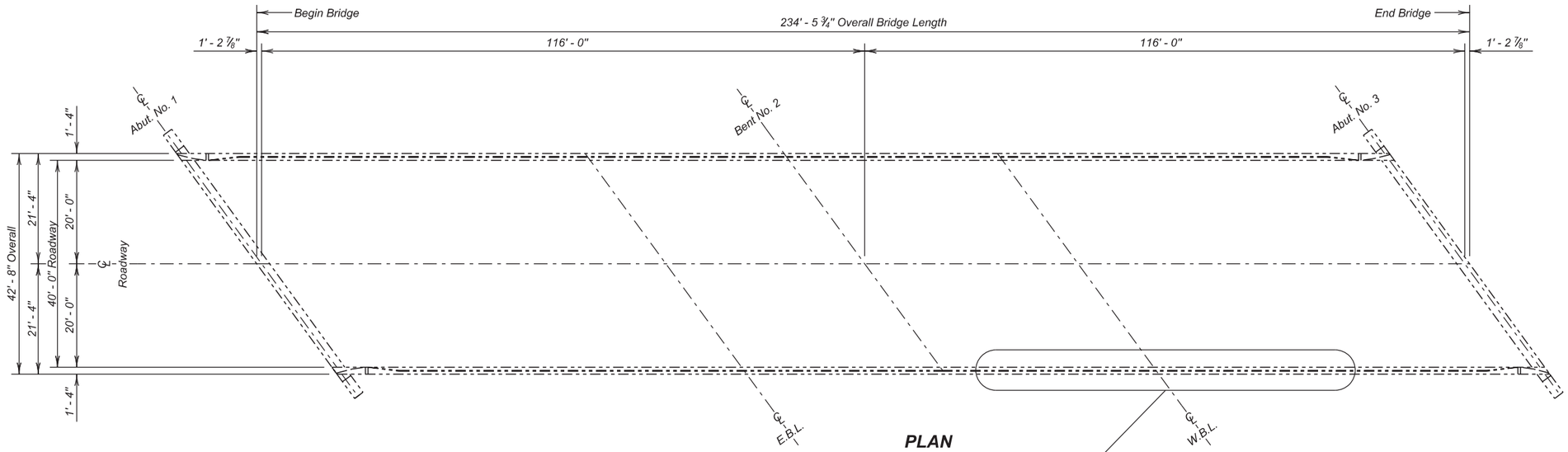

PLAN

Location of damaged Girder, Stiffener and Diaphragm

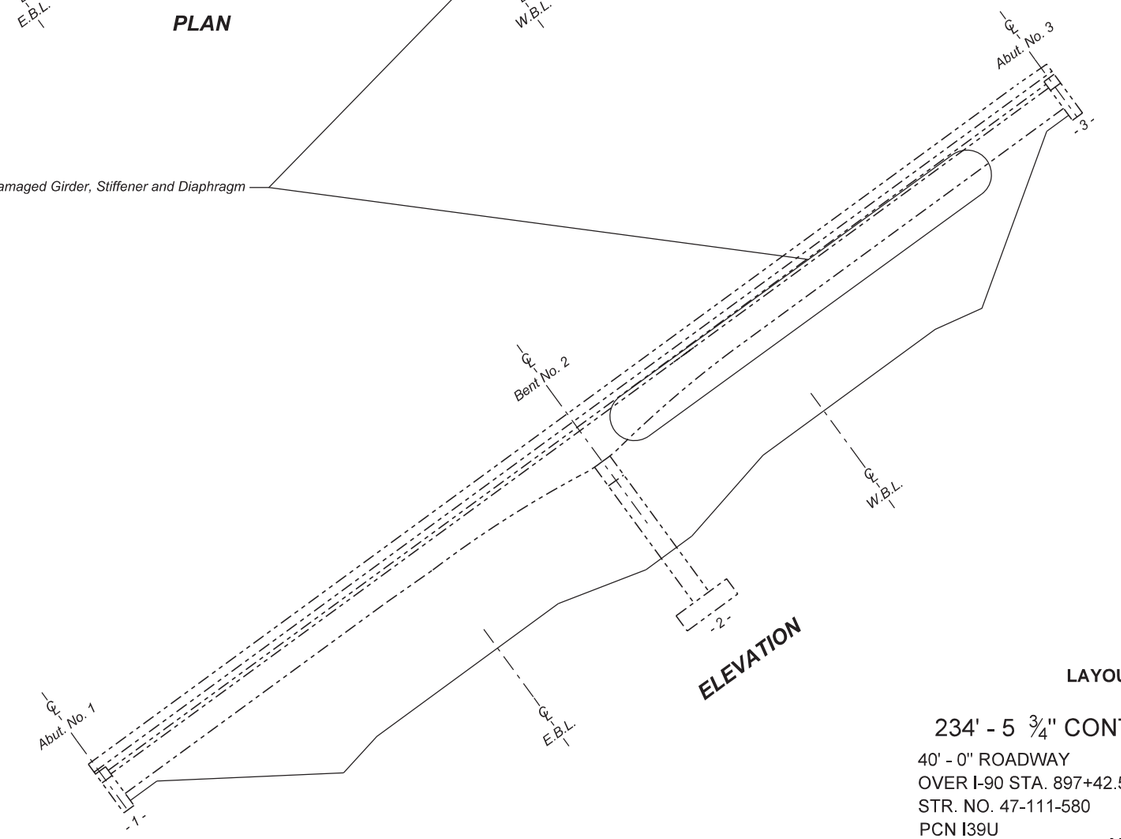

ELEVATION

N

INDEX OF BRIDGE SHEETS -

Sheet No. 1 - Layout for Upgrading
Sheet No. 2 - Estimate of Structure Quantities and Notes
Sheet No. 3 - Notes (Continued)
Sheet No. 4 - Details of Girder No.6 Repair
Sheet No. 5 - Details of Girder No.6 Repair (Continued)
Sheet Nos. 6 thru 9 - Original Construction Plans

LAYOUT FOR UPGRADING

FOR

234' - 5 ¾" CONT. COMP. GIRDER BRIDGE

40' - 0" ROADWAY
OVER I-90 STA. 897+42.52
STR. NO. 47-111-580
PCN I39U

36° 11' SKEW R.H.F.
SEC. 24 / 25 - T3N - R6E
090 W-468

MEADE COUNTY

S. D. DEPT. OF TRANSPORTATION

FEBRUARY 2014

1 OF 9

PLANS BY :
OFFICE OF BRIDGE DESIGN, SOUTH DAKOTA DEPARTMENT OF TRANSPORTATION

DESIGNED BY	CK. DES. BY	DRAFTED BY	
TK	NP	KR	Kevin N. Goeden
MEADI39U	I39URA01		BRIDGE ENGINEER

ESTIMATE OF STRUCTURE QUANTITIES

ITEM NO.	DESCRIPTION	QUANTITY	UNIT
410E0365	Remove and Replace Transverse Stiffener	1.0	Each
410E0385	Repair Steel Diaphragm	1.0	Each
410E0520	Surface Grinding of Structural Steel	480	Sqln
410E3010	Magnetic Particle Weld Inspection	12	In
412E0100	Bridge Repainting, Class I	Lump Sum	LS
412E0500	Paint Residue Containment	Lump Sum	LS

SPECIFICATIONS

1. Design Specifications: AASHTO Standard Specifications for Highway Bridges 2002 Edition with 2003 Interim Specifications using Working Stress Design.

2. Construction Specifications: South Dakota Standard Specifications for Roads and Bridges, 2004 Edition and Required Provisions, Supplemental Specifications and/or Special Provisions as included in the Proposal.

3. All Welding and Welding Inspection shall be in conformance with the AASHTO/AWS Bridge Welding Code D1.5M/D1.5:2010 unless otherwise noted in this plan set.

DETAILS AND DIMENSIONS OF EXISTING BRIDGE

All details and dimensions of the existing bridge, contained in these plans, are based on the original construction plans and shop plans and are provided as information only. It is the Contractor's responsibility to inspect and verify the actual field conditions and any necessary as-built dimensions affecting the satisfactory completion of the work required for this project.

SCOPE OF BRIDGE WORK & SEQUENCE OF OPERATIONS

All work on this structure shall be accomplished with the traffic control shown in the plans. Alternate sequence of operations may be submitted by the Contractor for approval by the Engineer at the pre-construction meeting.

1. Remove portions of the damaged diaphragm and transverse stiffener.

2. Replace damaged portions of the diaphragm and transverse stiffener.

3. Prepare areas to be painted to the appropriate surface preparation as stated in the notes.

4. Complete Mag Particle weld inspection for new fillet welds on the portion of the transverse stiffener to be replaced.

5. Complete Bridge Repainting, Class I.

GENERAL CONSTRUCTION NOTES

All new steel shall conform to ASTM A709 Gr.36.

SHOP PLANS

Shop Plans shall be submitted in accordance with Section 410.3.A and 560.3.A of the Construction Specifications.

AIR CARBON ARC/PLASMA CUTTING PROCESS

1. All air carbon arc cutting shall be accomplished by laying out all cut lines on the steel surfaces, using a marker visible during the cutting process, before any air carbon arc cutting begins.

2. All plasma cutting shall be accomplished with the use of a template. The template shall be used to locate, define, and guide the cutting process. The template shall be inspected by the Engineer before any plasma cutting begins. Plasma cutting without the use of a template will not be permitted.

3. When grinding to a specified shape is required after the cutting process, lay out the shape to grind to on the steel surface with a visible marker and grind to the lay out line. Radius all edges to accept paint.

FIELD WELDING PROCEDURES

1. Preparation of base metal, prior to welding, shall be in accordance with Section 3 of the Bridge Welding Code. Existing paint shall be removed to a distance of two inches each side of the weld.

2. SMAW electrode atmospheric exposure requirements shall comply with Section 4.5 of the Bridge Welding Code. Electrodes shall be purchased in hermetically sealed containers. If the container shows evidence of damage, the electrodes shall be dried in a drying oven for at least one hour between 700°F and 800°F before they are used. Immediately after opening a hermetically sealed container, or removal from a drying oven, electrodes shall be stored in storage ovens at a temperature of 250°F. Electrodes exposed to the atmosphere upon removal from drying, storage ovens or hermetically sealed containers shall be used within four hours maximum, or redried at 450°F to 550°F for two hours minimum. Electrodes exposed to the atmosphere for periods less than four hours may be returned to a storage oven and maintained at a minimum of 250°F for four hours before reissue. Electrodes shall be redried no more than one time. Electrodes which have been wet shall not be used.

3. Completed welds and adjacent areas shall be cleaned of all weld splatter, slag, smoke and heat affected paint. No intermittent or "stitch" welds will be allowed.

REPAIR STEEL DIAPHRAGM

1. The diaphragm that requires removal shall be removed by air carbon arc gouging, operated electrode positive, to remove the fillet welds. Care shall be taken not to damage the web or any of the diaphragms or stiffeners that will be reused. Grind the web plates, diaphragms and diaphragm stiffeners smooth. The damaged diaphragm stiffeners and diaphragms that will not be reused shall become Property of the Contractor.

2. The diaphragm and diaphragm stiffeners shall be replaced and welded as shown in the Plans, after the web repairs are complete.

3. All new steel plates, angles, and bars for the diaphragms only shall be ASTM A709 Gr. 36.

4. Bolts shall be galvanized 7/8" diameter conforming to ASTM A325. Each bolt shall be supplied with a heavy hex nut, 1 hardened washer and 1 direct tension indicator.

5. All labor, materials and equipment necessary to repair diaphragms as shown on the Plans will be incidental to the contract unit price per each for "Repair Steel Diaphragm."

REMOVE AND REPLACE TRANSVERSE STIFFENER

1. The damaged transverse stiffener shall be removed by air carbon arc gouging, operated electrode positive, to remove the fillet welds. Grind web smooth. The damaged stiffener shall become Property of the Contractor.

2. The stiffeners shall be replaced and welded as shown in the Plans, after the web repair is complete.

3. All new steel plates, angles, and bars shall be ASTM A709 Gr. 36 T2.

4. All labor, materials and equipment necessary to remove and replace the stiffeners as shown on the plans will be incidental to the contract unit price per each for "Remove and Replace Transverse Stiffener."

ESTIMATE OF STRUCTURE QUANTITIES AND NOTES

FOR

234' - 5 3/4" CONT. COMP. GIRDER BRIDGE

STR. NO. 47-111-580

FEBRUARY 2014

DESIGNED BY	CK. DES. BY	DRAFTED BY	
TK	NP	KR	Kevin N. Goeden
MEADI39U	I39URA01		BRIDGE ENGINEER

BRIDGE REPAINTING, CLASS I

1. The area described below shall be painted in accordance the requirement for Bridge Repainting, Class I in Section 412 of the Construction Specifications except as modified by these notes.

2. Steel areas that require painting are as follows:

   a. New portions of the diaphragm and transverse stiffeners.

   b. Any work affected areas due to the installation of the new portions of the diaphragm and transverse stiffener.

   c. Work affected areas due to the grinding of the bottom flange.

   d. Exterior face of girder web and bottom flange near repair areas as shown in this planset.

3. The entire surface area to be painted that is described below shall be cleaned to a condition equivalent to the SSPC-SP2 in lieu of the cleaning level specified in Section 412 of the Construction Specifications. For informational purposes, 170.0 square feet of structural steel will require this level of cleaning. The quantity shown includes the exterior face of the exterior girder within the limits shown in this planset with the exception of the work effected areas near the diaphragm stiffener.

4. After blast cleaning the surfaces to be painted, remove any trace of blast products, dust or dirt from all surfaces including pockets and corners as approved by the engineer.

5. For informational purposes, 196.9 square feet of structural steel will require painting. The quantity shown includes the areas defined in notes 2 and 3.

6. Paint color

   Top Coat - The paint color shall be an approved green color. Prior to ordering the paint, a paint chip of the green color shall be submitted to the Department for color approval.

   Primer Coat - Color shall sharply contrast with the top coat.

PAINT RESIDUE REMOVAL AND CONTAINMENT

Contain and collect all of the existing paint residue and/or abrasive blasting media according to Section 412.3.B. of the Standard Specifications.

REMOVAL OF SURFACE NICKS AND GOUGES

1. Grind the bottom flange of Girder No.6 as directed by the Engineer, to remove all sharp edges from surface nicks and gouges created by vehicle impact. The amount of material removed shall be kept at the absolute minimum necessary to remove the sharp edges and to minimize the section reduction of the existing structural members. Grinding shall be longitudinal. Transverse grinding will not be allowed.

2. All surface nicks and gouges shall be checked by non destructive MT testing after grinding--see Weld Inspection & Nondestructive Testing (NDT) note. Repair options for the defects found by the non destructive testing shall be determined by the Bridge Construction Engineer.

3. All costs associated with removing sharp edges from surface nicks and gouges including all materials, equipment and labor shall be incidental to the contract unit price per square inch for "Surface Grinding of Structural Steel". Estimated quantity is 480 square inches (20% of the limits shown on the plans). This quantity is included to establish bid prices. "Surface Grinding of Structural Steel" will be used and paid for only as determined by the Engineer. This item may not be encountered and could be removed from the plans.

NOTICE - LEAD BASED PAINT

Be advised that the paint on the steel surfaces of the existing structure is a paint containing lead. The Contractor should plan his/her operations accordingly, and inform his/her employees of the hazards of lead exposure.

MAGNETIC PARTICLE INSPECTION

1. The Contractor shall be responsible for retaining a qualified Testing Agency to perform magnetic particle inspection (MT) and visual inspection on the fillet welds produced in the field under the payment item "Remove and Replace Transverse Stiffener". All of the MT and visual inspections shall be performed by an AWS Certified Welding Inspector qualified and certified in conformance with the provisions of AWS QC1. Additionally, personnel performing the Non-destructive testing (NDT) shall be qualified in conformance with the American Society for Nondestructive Testing's (ASNT) Recommended Practice No. SNT-TC-1A, or equivalent, as a NDT Level II inspector. The Testing Agency and inspectors provided shall be subject to the approval of the Bridge Construction Engineer.

2. All of the weld locations will be tested using MT. A weld location is defined as 100% of the fillet weld length in one unit of "Remove and Replace Transverse Stiffener". The MT results shall be reported on Form III-6 in Annex III of the Bridge Welding Code. The MT Inspection shall be performed by the yoke method. The MT Inspection shall be in accordance with Section 6 of the Bridge Welding Code.

3. Based on the results of the Magnetic Particle Inspection and visual inspection, the Bridge Construction Engineer will determine the acceptability of the completed fillet welds and any recommended repairs. Any necessary repairs to the completed welds shall be accomplished in accordance with Chapter 12 of the Bridge Welding Code 2002 Edition. All weld repair procedures, should they be required, shall be approved prior to use by the Bridge Construction Engineer.

4. All costs incurred by the Magnetic Particle Inspection and visual inspection, including all labor, equipment, access provisions and any incidentals necessary to perform the inspection in accordance with these plans shall be incidental to the contract unit price per inch for Magnetic Particle Weld Inspection.

NOTES (CONTINUED)

FOR

234' - 5 3/4" CONT. COMP. GIRDER BRIDGE

STR. NO. 47-111-580

FEBRUARY 2014

DESIGNED BY	CK. DES. BY	DRAFTED BY	
TK	NP	KR	Kevin N. Goeden
MEADI39U	I39URA01		BRIDGE ENGINEER

STATE OF	PROJECT	SHEET NO.	TOTAL SHEETS
S.D.	090 W-468	E6	E31

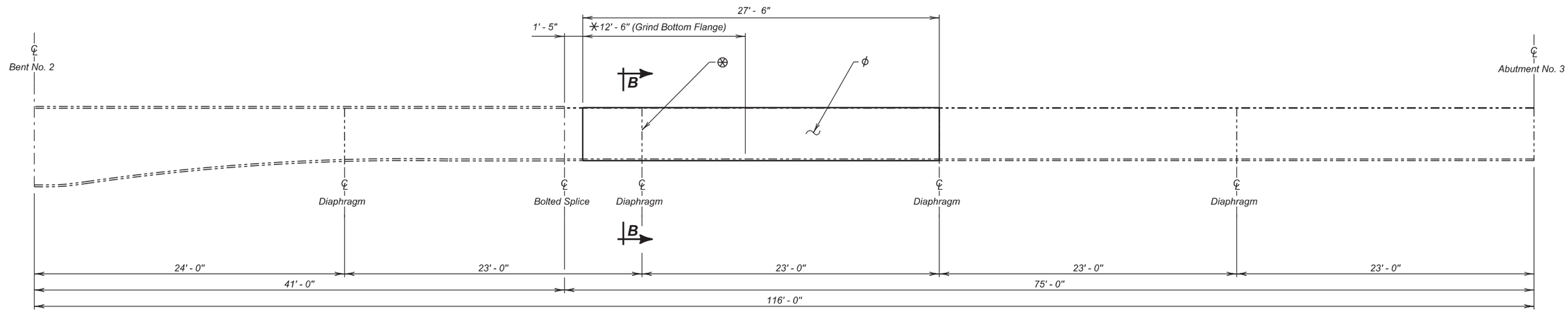

EXTERIOR FACE OF GIRDER NO.6

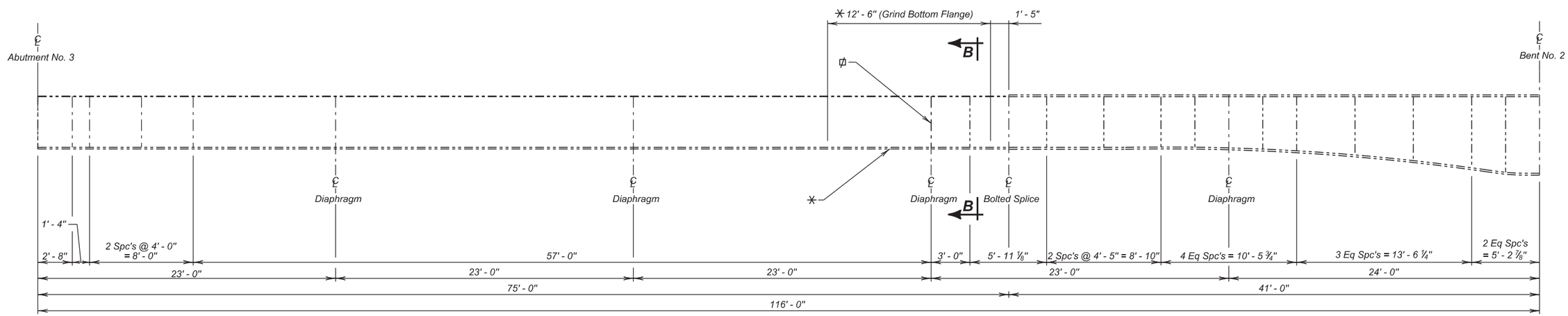

INTERIOR FACE OF GIRDER NO.6

⊗ *Partially Remove and Replace Transverse Stiffener*

⊄ *Partially Remove and Replace Steel Diaphragm and Stiffener*

✳ *Grind Bottom Flange*

ϕ *Paint Exterior Face of Girder and Bottom Flange Within These Limits*

(WEST BOUND LANES)
DETAILS OF GIRDER NO. 6 REPAIR
FOR
234' - 5 3/4" CONT. COMP. GIRDER BRIDGE

40' - 0" ROADWAY
OVER I-90
STR. NO. 47-111-580

36°11' SKEW R.H.F.
SEC. 24 / 25 - T3N - R6E
090 W-468

MEADE COUNTY
S. D. DEPT. OF TRANSPORTATION
FEBRUARY 2014

4 OF 9

DESIGNED BY	CK. DES. BY	DRAFTED BY	
TK	NP	KR	Kevin N. Goeden
MEADI39U	I39URA04		BRIDGE ENGINEER

Revised by TK, 4-21-2014

STATE OF	PROJECT	SHEET NO.	TOTAL SHEETS
S.D.	090 W-468	E7	E31

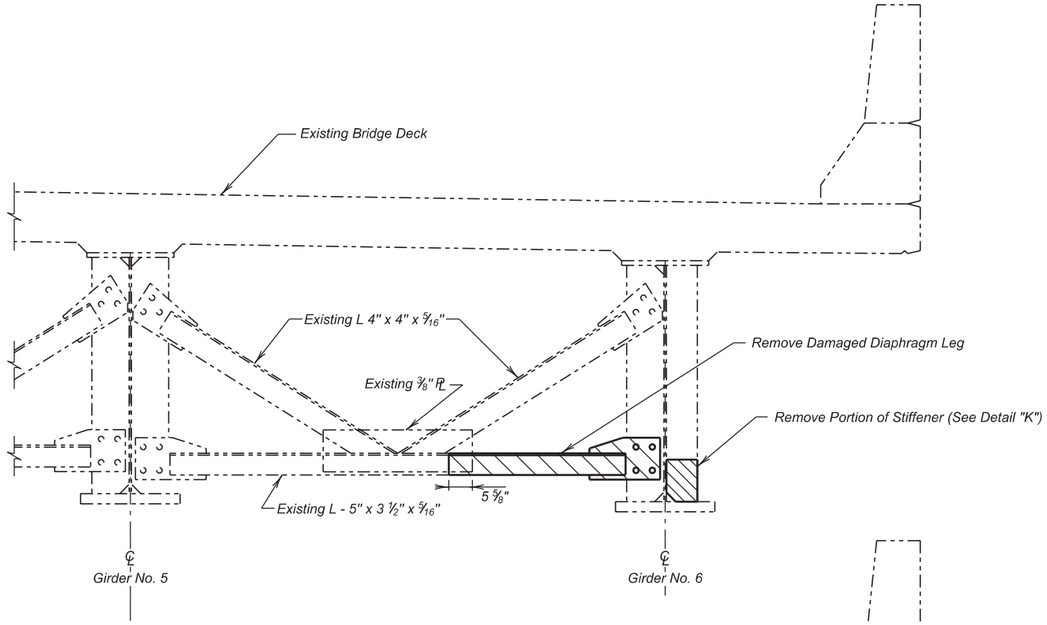

SECTION B - B

(Existing Diaphragm, Stiffeners and Deck)

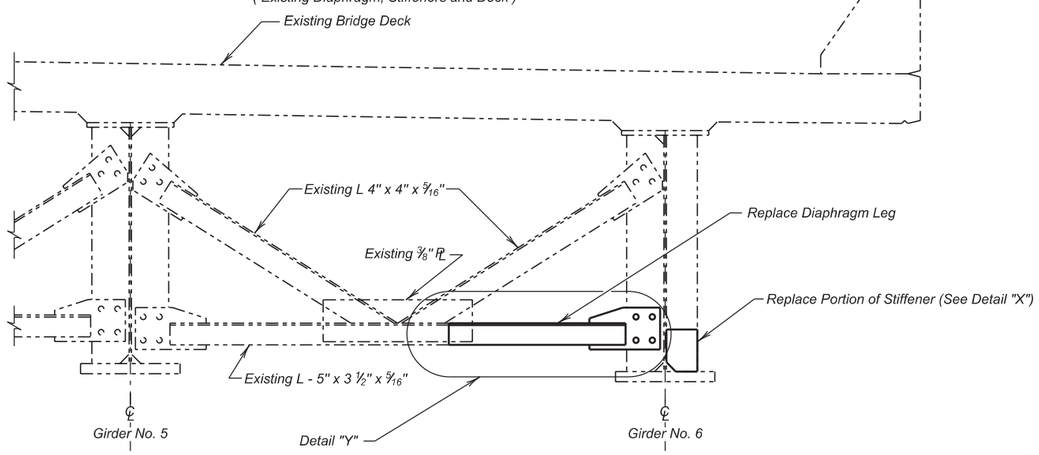

SECTION B - B

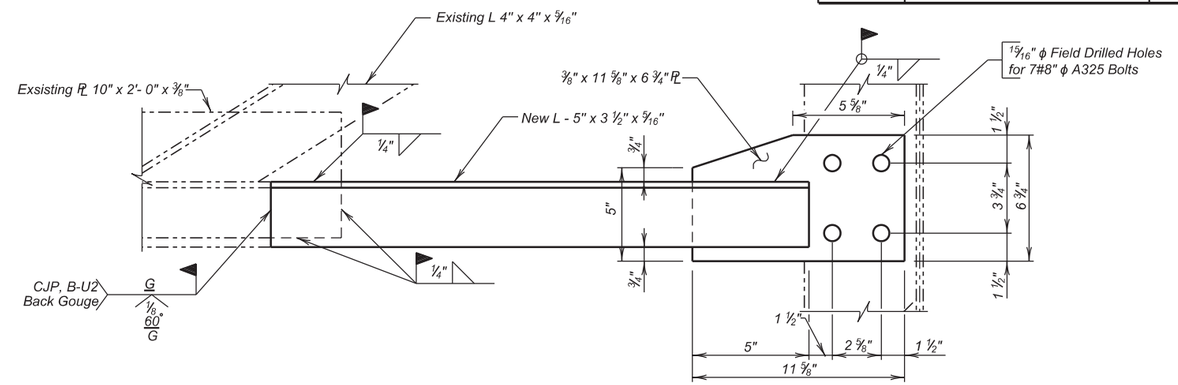

DETAIL "Y"

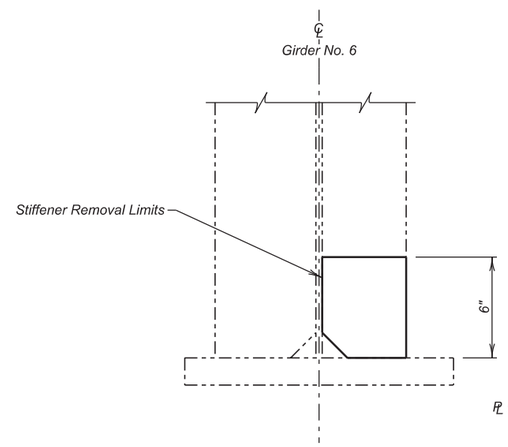

DETAIL "K"

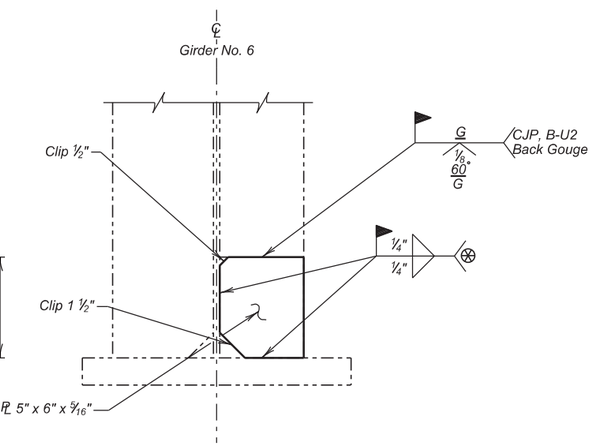

DETAIL "X"

NOTES:

⊗ Welds shall terminate 1/2" from corners of stiffener

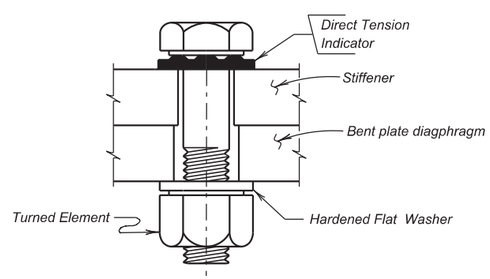

DIRECT TENSION INDICATOR DETAIL

ESTIMATED QUANTITIES

ITEM	UNIT	QUANTITY
Remove and Replace Transverse Stiffener	Each	1
Repair Steel Diaphragm	Each	1
Magnetic Particle Weld Inspection	In	12
Bridge Repainting, Class I	Lump Sum	LS
Paint Residue Containment	Lump Sum	LS

(WEST BOUND LANES)
DETAILS OF GIRDER NO. 6 REPAIR CONTINUED
FOR
234' - 5 3/4" CONT. COMP. GIRDER BRIDGE

40' - 0" ROADWAY
OVER i-90 STA. 897+42.52
STR. NO. 47-111-580

36^ 11' SKEW R.H.F.
SEC. 24 / 25 - T3N - R6E
090 W-468

MEADE COUNTY
S. D. DEPT. OF TRANSPORTATION
FEBRUARY 2014

DESIGNED BY	CK. DES. BY	DRAFTED BY	
TK	NP	KR	Kevin N. Goeden
MEADI39U	I39URA05		BRIDGE ENGINEER

STATE OF	PROJECT	SHEET NO.	TOTAL SHEETS
S.D.	090 W-468	E8	E31

Bench Mark: C&GS N-361 1962 El. 3586.23
12' South of the Bridge centerline, 1.0' above the decking of the Bridge, and set in the top of the South end of the east abutment of the Bridge. NOTE: This Bench Mark may have been reset by the time of construction.

NOTE:-
T.S. at ℄ El. = Top of Slab at centerline Roadway Elevation
T.S. at C. El. = Top of Slab at Curb Elevation

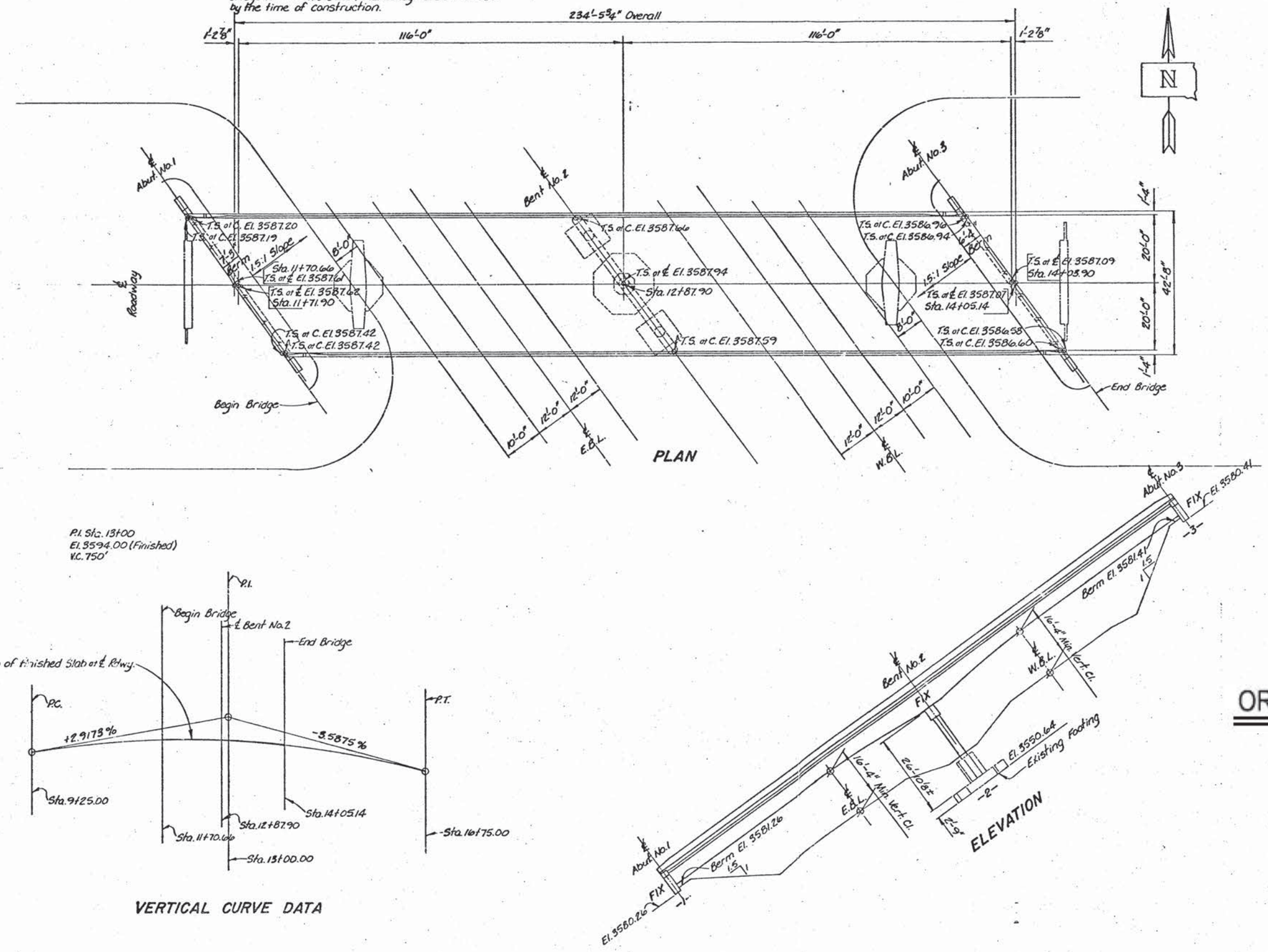

VERTICAL CURVE DATA

—X271—
INDEX OF BRIDGE SHEETS—

Sheet No. 1 – General Drawing
Sheet No. 2 – Estimate of Structure Quantities and Notes
Sheet No. 3 – Structural Notes
Sheet No. 4 – Subsurface Investigations and Piling Layout
Sheet No. 5 – Details of Abutment No. 1
Sheet No. 6 – Details of Abutment No. 3
Sheet No. 7 – Details of Bent No. 2
Sheet No. 8 – Slab Details
Sheet No. 9 – End Block and Barrier Curb Details
Sheet No. 10 – Barrier Railing Details
Sheet No. 11 – Diaphragm Details
Sheet No. 12 – Diaphragm Details
Sheet No. 13 – Diaphragm Details
Sheet No. 14 – Girder Layout and Details
Sheet No. 15 – Framing Diaphragm and Erection Data
Sheet No. 16 – Details of Field Splices and Bearings
Sheet No. 17 – Details of Bridge End Backfill
Sheet No. 18 – Standard Plate No. 302
Sheet No. 19 – Details of Approach Slab Adjacent to Bridge
Sheet No. 20 – Strip Seal Expansion Joint
Sheet No. 21 – Drop Inlet and Pipe Installation Sheet
Sheet No. 22 – Drop Inlet and Pipe Installation Sheet
Sheet No. 23 Standard Plate No. 308

ORIGINAL CONSTRUCTION PLANS

GENERAL DRAWING
FOR
234'-5¾" CONT. COMP. GIRDER BRIDGE

40'-0" ROADWAY — 36° 11' SKEW R.H.F.
OVER I-90 STA. 897+42.52 — SEC. 24/25-T 3 N-R 6 E
STA. 11+70.66 TO STA. 14+05.14 — I-90-1 (43)48
STR. NO. 47-111-580 — HS 20-44 (& ALT.)

MEADE COUNTY

S. D. DEPT. OF TRANSPORTATION
DIVISION OF HIGH
AUGUST 1979 (6 OF 9)

—X271—

DESIGNED BY	DRAWN BY	CHECKED BY	APPROVED
	R. LeBeau	I.o.k.	K.C. Wilson BRIDGE ENGINEER

PLANS BY:
BRIDGE SEC. S.DAK. DEPT. HWYS.

STATE OF	PROJECT	SHEET NO.	TOTAL SHEETS
S.D.	090 W-468	E9	E31

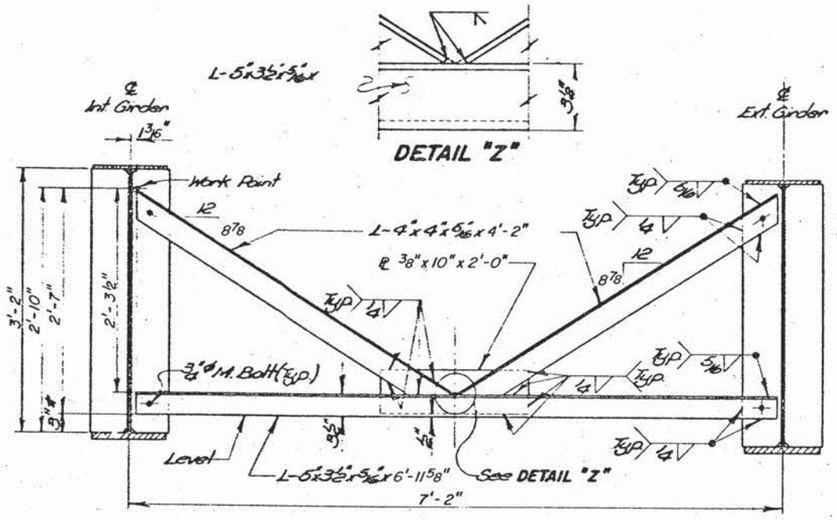

*3" above high girder in each bay.

DIAPHRAGM—WELDED FIELD CONNECTION
Weight of one unit = 157 Lbs.

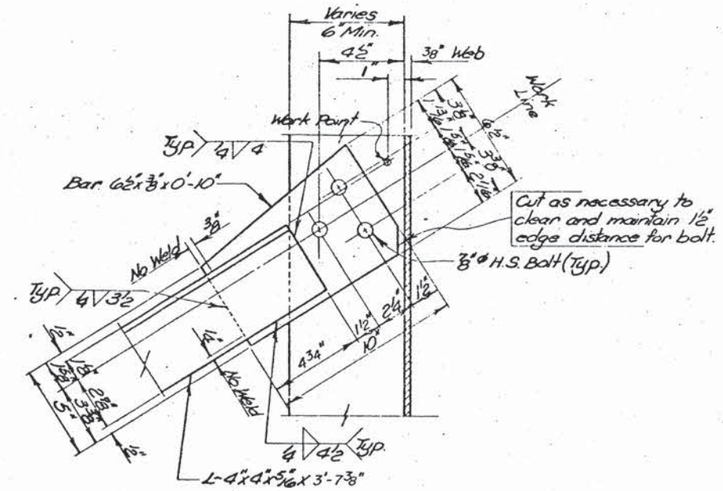

DETAIL "X"

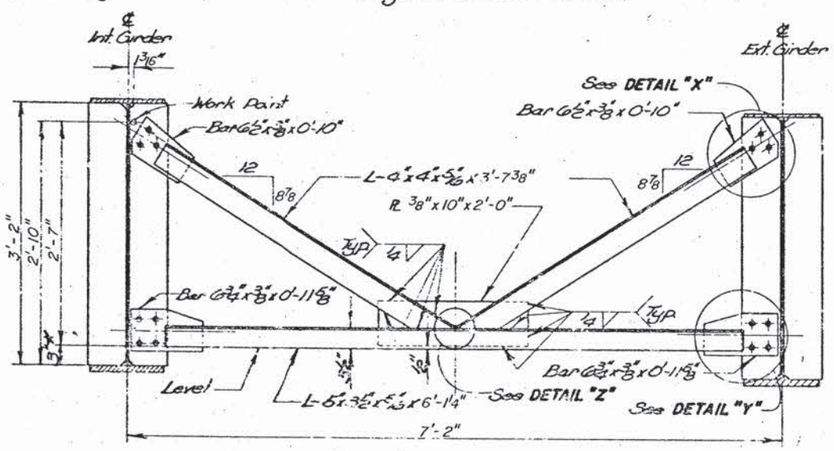

ALTERNATE DIAPHRAGM—BOLTED FIELD CONNECTION
Weight of one unit = 183 Lbs.

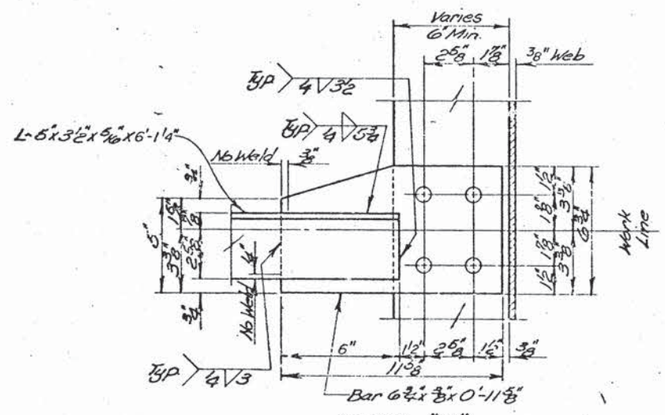

DETAIL "Y"

(DIAPHRAGM IN B SECTION)

GENERAL NOTES—

1. The estimated weight of the steel diaphragms is included in the quantity for structural steel shown for informational purposes on Sheet No. 8 of 23 and is based on diaphragms having welded field connections.
2. The 3/4"ϕ Machine Bolts and Nuts shall conform to A.S.T.M. Specifications A-307. Machine Bolts shall have regular semi-finished hexagon heads and nuts with one round plate washer.
3. The 7/8"ϕ High Strength Bolts, Nuts and Washers shall conform to A.S.T.M. Specifications A325. The bolts shall be the heavy hexagon head "Structural" type with heavy semi-finished hexagon nut and hardened round washer.
4. The 7/8"ϕ High Strength Bolts shall be tightened to a minimum tension of 39,250 pounds. Tightening shall be done with a properly calibrated wrench or by the turn of the nut method as provided in section 2.10.20 of the A.A.S.H.O. Specifications.
5. Holes for the 3/4"ϕ Machine Bolts shall be 13/16"ϕ in the stiffener plates and 15/16"ϕ in the angles.
6. Holes for the 7/8"ϕ High Strength Bolts shall be 15/16"ϕ in the stiffener plates and 1 1/16"ϕ in the 5/8" gusset plates.

ORIGINAL CONSTRUCTION PLANS

DIAPHRAGM DETAILS
FOR

234'-5¾" CONT. COMP. GIRDER BRIDGE

40'-0" ROADWAY — 36°11' SKEW R.H.F.
OVER I-90 STA. 897+42.52 — SEC. 24/25-T 3 N-R6E
STA. 11+70.66 TO STA. 14+05.14 — I-90-1(43)48
STR. NO. 47-111-580 — HS 20-44 (& ALT.)

MEADE COUNTY
SOUTH DAKOTA
DEPARTMENT OF HI(
AUGUST 1979 (7 OF 9)

DESIGNED BY	DRAWN BY	CHECKED BY	APPROVED
	G.W.W. C.N.S.	I.O.K.	K.C. Wilson BRIDGE ENGINEER

STATE OF	PROJECT	SHEET NO.	TOTAL SHEETS
S.D.	090 W-468	E10	E31

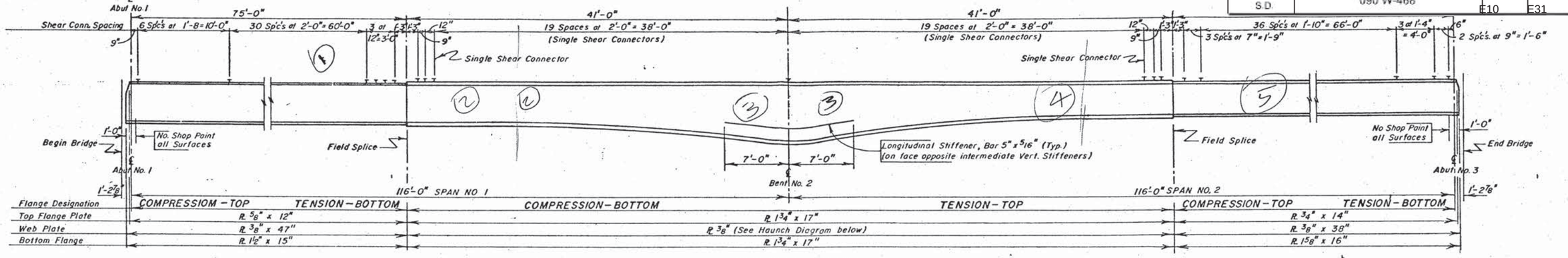

GIRDER LAYOUT

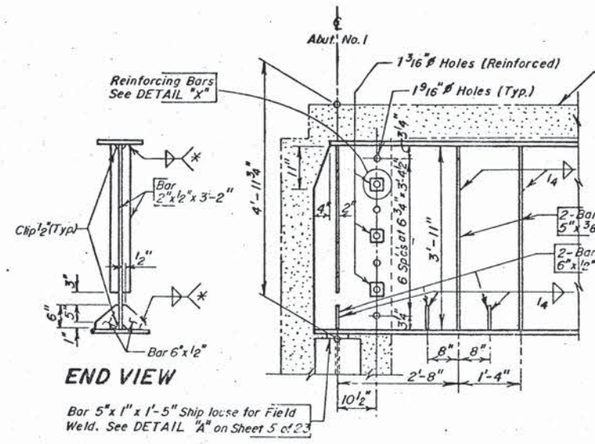

END VIEW

TYPICAL SECTION AT ABUT NO. 1

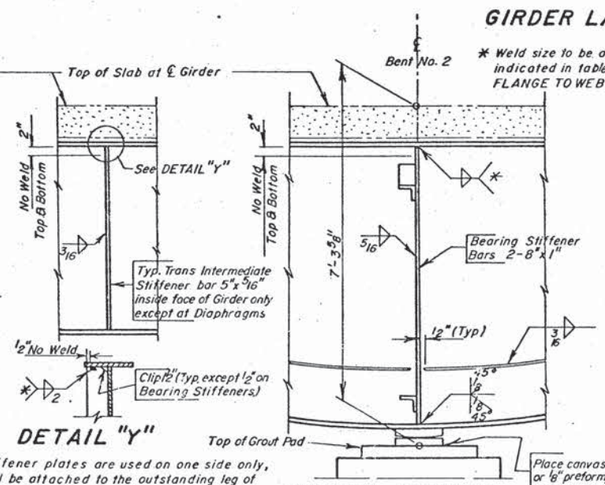

DETAIL "Y"

TYPICAL SECTION AT BENT

When Stiffener plates are used on one side only, they shall be attached to the outstanding leg of the compression flange as shown. See GIRDER LAYOUT for location of compression flange.

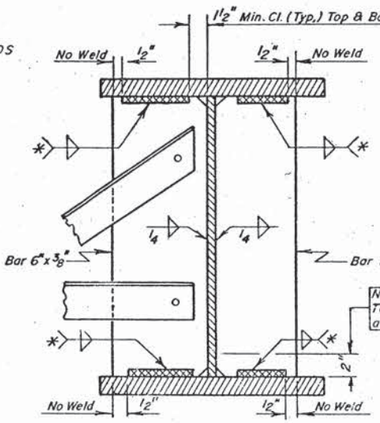

TYPICAL STIFFENER DETAILS AT DIAPHRAGM

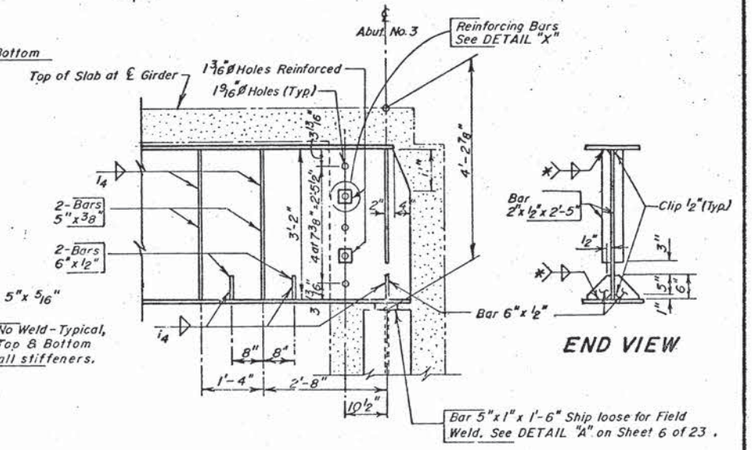

END VIEW

TYPICAL SECTION AT ABUT. NO. 3

NOTES –

1. See Sheet No. 11, 12 and 13 for Diaphragm Details.
2. See Sheet No. 15 of 23 for spacing of Diaphragms and Stiffener.
3. All dimensions shown are horizontal or Vertical.
4. All stiffener and girder ends shall be made normal to flanges.

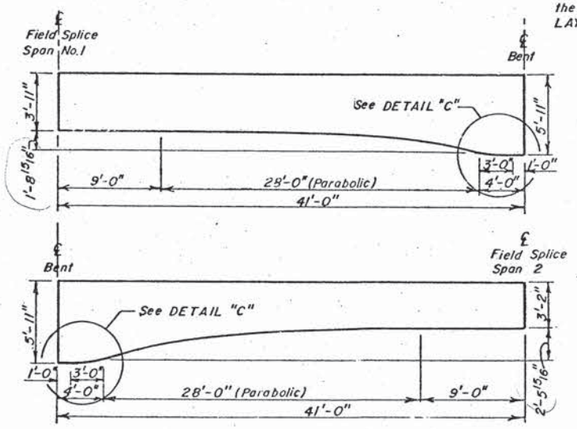

HAUNCH DIAGRAM

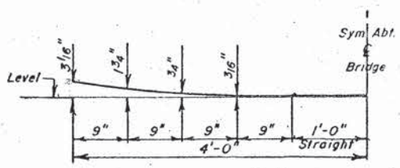

DETAIL "C"

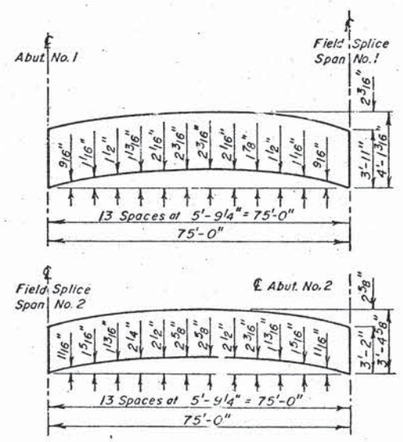

CAMBER CUTTING DIAGRAMS

(Cut Camber into Webs of All Girders as shown.)

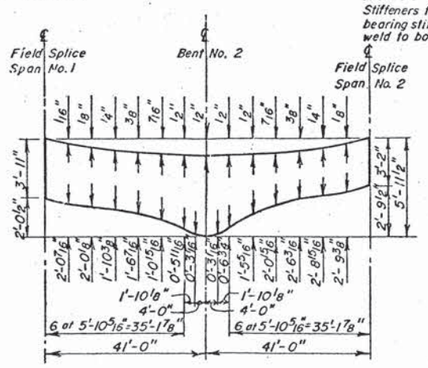

NOTE:
Stiffeners to have tight fit top and bottom except bearing stiffeners which will all have full penetration weld to bottom flange.

FLANGE TO WEB WELDS	
Flange Thickness	Fillet Welds
5/8"	1/4
3/4"	1/4
1 1/2"	3/8
1 3/4"	3/8
1 5/8	3/8

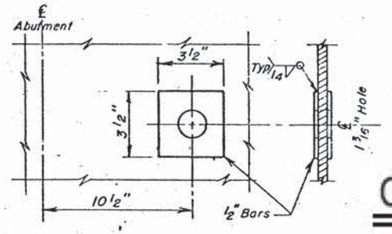

DETAIL "X"

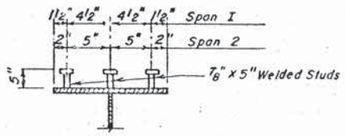

SHEAR CONNECTOR DETAILS

Welded Stud Shear Connectors are spaced as shown on GIRDER LAYOUT.

ORIGINAL CONSTRUCTION PLANS

234'-5 3/4" CONT. COMP. GIRDER BRIDGE

40'-0" ROADWAY — 36° 11' SKEW R.H.F.

OVER I-90 STA. 897+42.52 — SEC. 24/25-T3N-R6E

STA. 11+70.66 TO STA. 14+05.14 — I-90-1(43)48

STR. NO. 47-111-580 — HS 20-44 (& ALT.)

MEADE COUNTY

S. D. DEPT. OF TRANSPORTATION

DIVISION OF HIGH

AUGUST 1979 (8 OF 9)

DESIGNED BY	DRAWN BY	CHECKED BY	APPROVED
	L.M.	J.A.K.	R.C. Wilson, BRIDGE ENGINEER

STATE OF	PROJECT	SHEET NO.	TOTAL SHEETS
S.D.	090 W-468	E11	E31

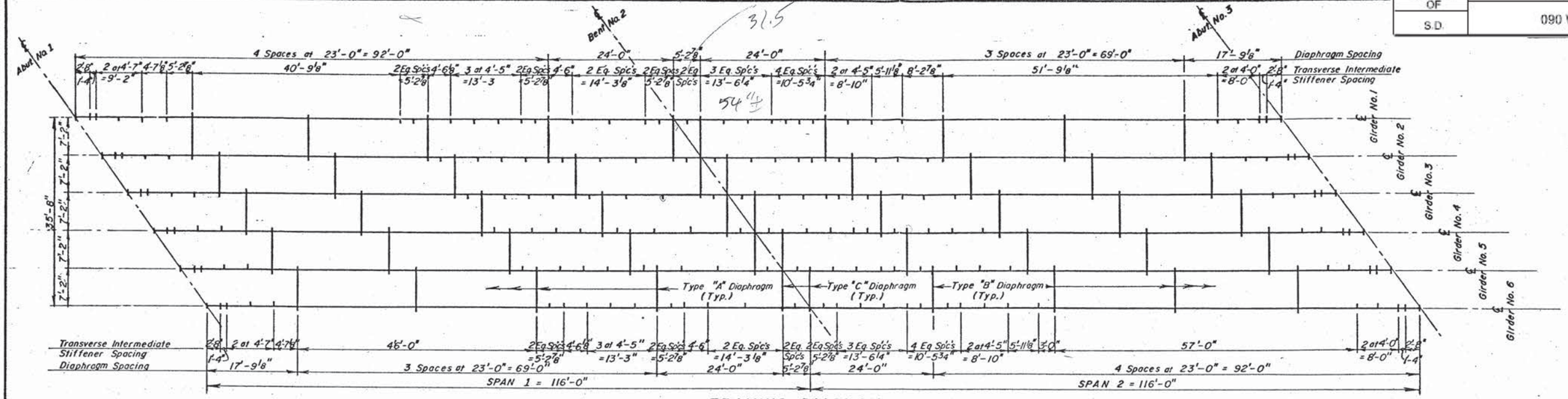

FRAMING DIAGRAM

TABLE OF SLAB FORM ELEVATION & COMPUTATIONS

		0	1	2	3	4	5	6	7	8	9	10	11	12	13	14	15	16	17	18	19	20
Girder No. 1	Elev. "P"	3587.242	3587.400	3587.536	3587.640	3587.710	3587.746	3587.754	3587.743	3587.724	3587.705	3587.690	3587.681	3587.678	3587.679	3587.674	3587.648	3587.590	3587.490	3587.351	3587.175	3586.971
	(-)Elev. "Q"																					
	(=) d																					
	(-)0.667																					
	(=) h																					
Girder No. 2	Elev. "P"	3587.394	3587.548	3587.678	3587.777	3587.842	3587.872	3587.875	3587.859	3587.834	3587.810	3587.790	3587.775	3587.767	3587.763	3587.754	3587.772	3587.656	3587.554	3587.409	3587.227	3587.019
	(-)Elev. "Q"																					
	(=) d																					
	(-)0.667																					
	(=) h																					
Girder No. 3	Elev. "P"	3587.545	3587.693	3587.818	3587.911	3587.971	3587.996	3587.994	3587.973	3587.943	3587.913	3587.888	3587.868	3587.854	3587.845	3587.830	3587.794	3587.725	3587.615	3587.465	3587.278	3587.064
	(-)Elev. "Q"																					
	(=) d																					
	(-)0.667																					
	(=) h																					
Girder No. 4	Elev. "P"	3587.586	3587.728	3587.848	3587.936	3587.991	3588.011	3588.003	3587.976	3587.941	3587.900	3587.876	3587.851	3587.832	3587.817	3587.797	3587.755	3587.681	3587.566	3587.411	3587.218	3586.999
	(-)Elev. "Q"																					
	(=) d																					
	(-)0.667																					
	(=) h																					
Girder No. 5	Elev. "P"	3587.516	3587.654	3587.768	3587.851	3587.901	3587.915	3587.902	3587.870	3587.830	3587.790	3587.754	3587.723	3587.699	3587.680	3587.654	3587.607	3587.527	3587.407	3587.247	3587.049	3586.824
	(-)Elev. "Q"																					
	(=) d																					
	(-)0.667																					
	(=) h																					
Girder No. 6	Elev. "P"	3587.445	3587.577	3587.686	3587.764	3587.808	3587.817	3587.799	3587.762	3587.716	3587.671	3587.630	3587.594	3587.564	3587.539	3587.509	3587.456	3587.371	3587.245	3587.080	3586.877	3586.647
	(-)Elev. "Q"																					
	(=) d																					
	(-)0.667																					
	(=) h																					

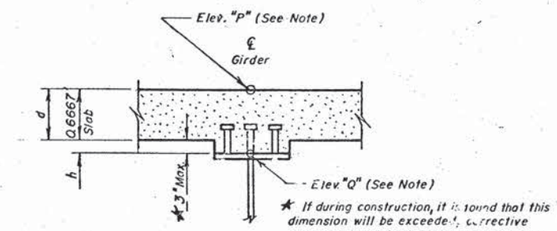

★ If during construction, it is found that this dimension will be exceeded, corrective measures must be taken as approved by the ENGINEER.

NOTE:
This Table contains the necessary information to determine the depth of concrete, in feet, over the girders at the points shown. All calculations can be carried out in the space provided. Elevation "P" is the elevation of the top of substrate slab from before any concrete has been poured. This elevation includes correction for vertical curve and deflection due to all D.L. above girders. Elevation "Q" is a field measured elevation taken on top of girders at points shown. This elevation must be taken after girder erection is completed, but prior to placing any of the substrate slab concrete. Girders shall not be supported by construction shoring while elevations are taken.

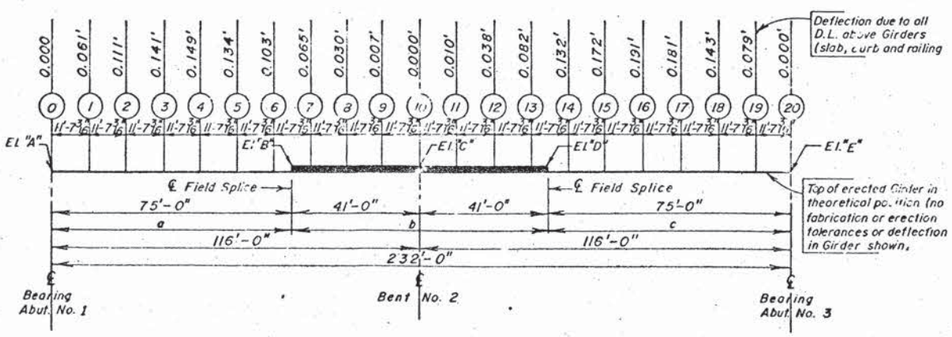

℄ GIRDER ERECTION ELEVATIONS AND SLOPES

Girder No.	Elevations (Top of Girder) "A"	"B"	"C"	"D"	"E"	Slopes % a	b	c
1	3586.439	3586.984	3586.982	3586.882	3586.180	0.56261	-0.11650	-0.79560
2	3586.592	3587.102	3587.082	3586.964	3586.227	0.51714	-0.16196	-0.84106
3	3586.743	3587.219	3587.180	3587.043	3586.272	0.47168	-0.20742	-0.88652
4	3586.784	3587.225	3587.168	3587.013	3585.207	0.42621	-0.25285	-0.93199
5	3586.714	3587.122	3587.046	3586.872	3586.033	0.38075	-0.29835	-0.97745
6	3586.643	3587.016	3586.921	3586.730	3585.856	0.33528	-0.34382	-1.02293

℄ Note: These elevations are for field erection purposes only and occur at a time after girder erection is completed but prior to any placement of concrete. Slopes shown are on an imaginary straight line between points at beam ends.

ORIGINAL CONSTRUCTION PLANS

FRAMING DIAGRAM AND ERECTION DATA
FOR
234'-5¾" CONT. COMP. GIRDER BRIDGE

40'-0" ROADWAY — 36° 11' SKEW R.H.F.
OVER I-90 STA.897+42.52 — SEC. 24/25-T3N-R6E
STA. 11+70.66 TO STA. 14+05.14 — I-90-1(43)48
STR. NO. 47-111-580 — HS 20-44 (& ALT.)

MEADE COUNTY

S. D. DEPT. OF TRANSPORTATION
DIVISION OF HIGH
AUGUST 1979 — 9 OF 9

DESIGNED BY	DRAWN BY	CHECKED BY	APPROVED
	L.M.	F.o.K.	K.C. Wilson BRIDGE ENGINEER

Revised by TK, 4-21-2014

STATE OF	PROJECT	SHEET NO.	TOTAL SHEETS
S.D.	090 W-468	E12	E31

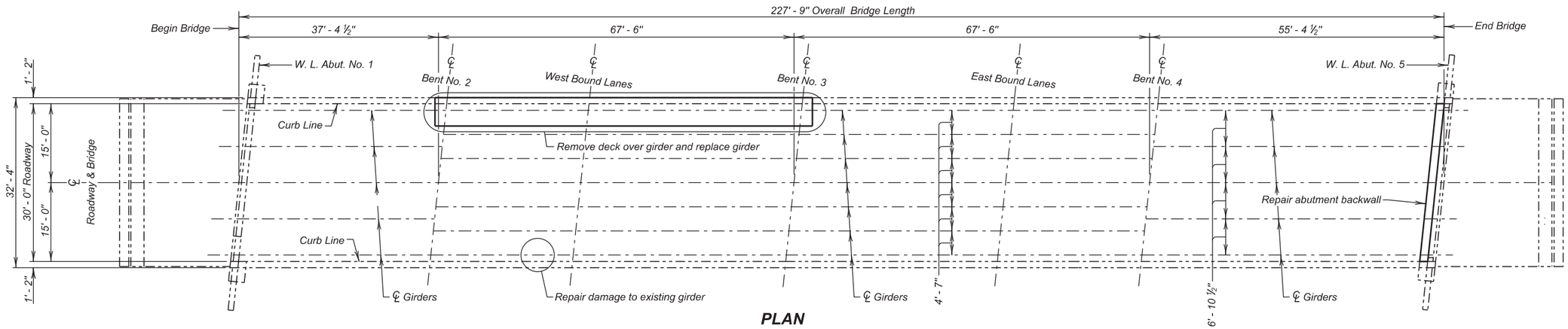

PLAN

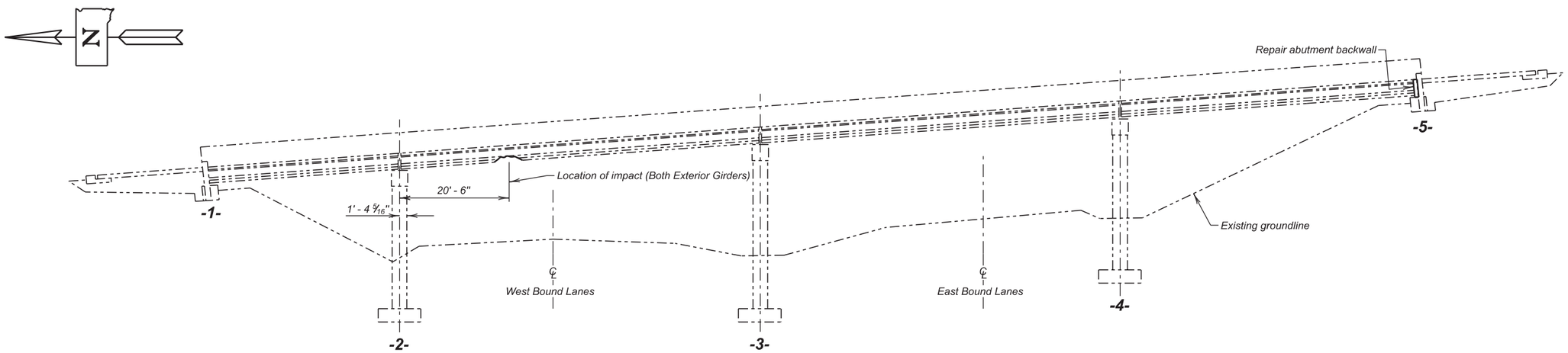

ELEVATION

INDEX OF BRIDGE SHEETS -

Sheet No. 1 - Layout for Repair
Sheet No. 2 - Estimate of Structure Quantities and Notes
Sheet No. 3 - Notes (Continued)
Sheet No. 4 - Notes (Continued)
Sheet No. 5 - Girder No.1 Breakout Details
Sheet No. 6 - Girder No. 1 Breakout Details (Continued)
Sheet No. 7 - Girder No. 1 Deck Replacement Details
Sheet No. 8 - Girder No. 1 Details
Sheet No. 9 - Girder No. 1 Erection Data
Sheet No. 10 - Girder No. 7 Repair Details
Sheet No. 11 - Abutment No. 5 Backwall Breakout Details
Sheet No. 12 - Abutment No. 5 Backwall Repair Details
Sheet No. 13 through 20 - Original Construction Plans

LAYOUT FOR REPAIR

FOR

227' - 9" PRESTRESSED GIRDER BRIDGE

30'-0" ROADWAY — 6° SKEW L. H. F.
OVER I 90 — SEC. 1-T1 N-R14W
STR. NO. 52-830-310 — 090 W-468
PCN I39V

PENNINGTON COUNTY

S. D. DEPT. OF TRANSPORTATION

FEBRUARY 2014

1 OF 20

PLANS BY :
OFFICE OF BRIDGE DESIGN, SOUTH DAKOTA DEPARTMENT OF TRANSPORTATION

DESIGNED BY	CK. DES. BY	DRAFTED BY	
TK	BWS	BT	Kevin N. Goeden
PENNI39V	I39VTA01		BRIDGE ENGINEER

ESTIMATE OF STRUCTURE QUANTITIES

ITEM NO.	DESCRIPTION	QUANTITY	UNIT
110E0040	Remove Concrete Bridge Slab	43.1	SqYd
460E0030	Class A45 Concrete, Bridge Deck	15.9	CuYd
460E0060	Class A45 Concrete, Self Consolidating	2.0	CuYd
460E0170	Concrete Patching Material	1.6	CuFt
460E0300	Breakout Structural Concrete	1.7	CuYd
460E0380	Install Dowel in Concrete	78	Each
480E0100	Reinforcing Steel	3329	Lb
480E5000	Galvanic Anode	42	Each
560E8002	AASHTO Type 2 Prestressed Concrete Beam	67	Ft

SPECIFICATIONS

1. Design Specifications: AASHTO Standard Specifications for Highway Bridges 2002 Edition with 2003 Interim Specifications using Working Stress Design.

2. Construction Specifications: South Dakota Standard Specifications for Roads and Bridges, 2004 Edition and Required Provisions, Supplemental Specifications and/or Special Provisions as included in the Proposal.

DETAILS AND DIMENSIONS OF EXISTING BRIDGE

All details and dimensions of the existing bridge, contained in these plans, are based on the original construction plans and shop plans and are provided as information only. It is the Contractor's responsibility to inspect and verify the actual field conditions and any necessary as-built dimensions affecting the satisfactory completion of the work required for this project.

SCOPE OF BRIDGE WORK & SEQUENCE OF OPERATIONS

All work on this structure shall be accomplished with the traffic control shown in the plans. Alternate sequence of operations may be submitted by the Contractor for approval by the Engineer at the pre-construction meeting.

1. Remove deck and barrier curb over girder number 1 in span 2 that is to be replaced as detailed in the plans.

2. Remove diaphragms at the bents and midspan as detailed in the plans.

3. Remove and replace the damaged girder.

4. Place intermediate diaphragms.

5. Place concrete deck, diaphragms, and barrier curbs.

6. Remove spalled concrete on girder number 7 in span 2 as detailed in plans.

7. Place concrete patches on girder number 7 in span 2.

GENERAL CONSTRUCTION NOTES

1. All mild reinforcing steel shall be deformed bars conforming to ASTM A615, Grade 60.

2. All exposed concrete corners and edges shall be chamfered 3/4" unless noted otherwise. Match existing chamfer if the existing chamfer differs.

3. Use 2" clear cover on all reinforcing steel except as shown.

4. Barrier Curbs shall be built normal to the grade.

5. Request for construction joints or resteel splices at points other than those shown, must be submitted to the Engineer for prior approval. If additional splices are approved, no payment will be allowed for the added quantity of resteel.

6. Surfaces of fresh concrete at construction joints shall be rough floated sufficiently to consolidate the surface. All construction joints shall be cleaned of surface laitance, curing compounds and other foreign materials prior to placing fresh concrete against the joint.

7. If a bridge deck finish machine is not used, a vibratory screed shall be used and the type of screed shall be approved by the Engineer.

SHOP PLANS

Shop Plans shall be submitted in accordance with Section 410.3.A and 560.3.A of the Construction Specifications.

CONCRETE BREAKOUT

1. The portions of Abutment 5 backwall shall be broken out to the limits shown on the plans. Breakout limits shall be defined with a 3/4" deep sawcut (unless specified otherwise in these plans), where practical, as approved by the Engineer. In areas where reinforcing steel, grout pads or girders are to be salvaged the contractor will be limited to a 15 lb. jackhammer or smaller removal equipment. Reinforcing steel that is exposed and is scheduled for use in the new construction shall be cleaned and straightened to the satisfaction of the Engineer. Care shall be taken not to damage the reinforcing steel that is to be reused during concrete breakout. Any reinforcing steel that is damaged during concrete breakout shall be replaced or repaired, as approved by the Engineer, by the Contractor at no cost to the Department. The existing reinforcing steel that is to be reused in the new construction and that is exposed during concrete breakout shall be cleaned and straightened in accordance with the construction specifications.

2. All broken out concrete, and discarded reinforcing bars shall be disposed of by the Contractor. Any disposal of discarded material shall be in accordance with the environmental commitments.

3. All costs associated with breaking out and removal of concrete, and any incidentals including labor, equipment and materials necessary to complete the construction outlined by these plans shall be incidental to the contract unit price per cubic yard for "Breakout Structural Concrete".

PRESTRESSED GIRDER (GIRDER #1 SPAN 2)

1. Minimum concrete compressive strength f'c = 5000 psi at 28 days, and fci = 4600 psi.

2. All mild reinforcing steel shall be deformed bars conforming to ASTM A615, Grade 60.

3. Individual tendons in all pretensioned sections shall consist of seven wire uncoated Type 270K Strands having a nominal diameter of 1/2" and a minimum ultimate strength of 41300 lbs. per cable. An initial tensile force of 29,000 lbs. shall be applied to all 1/2" cables in the girder. All prestressing steel shall conform to AASHTO M203. (low lax strands).

4. The girder shall be at least 6 weeks old before the deck slab is poured. The girder shall be poured in all steel forms.

5. Prestressed concrete girders shall always be lifted by the devices provided in the top flanges near the ends of the girders. Types of lifting devices other than those shown on the plans may be used provided they are approved by the Office of Bridge Design. The design of the lifting devices shall be the responsibility of the Fabricator.

ESTIMATE OF STRUCTURE QUANTITIES AND NOTES

FOR

227' - 9" PRESTRESSED GIRDER BRIDGE

STR. NO. 52-830-310

FEBRUARY 2014

DESIGNED BY	CK. DES. BY	DRAFTED BY	
TK	BWS	TK	Kevin N. Goeden
PENNI39V	I39VTA02		BRIDGE ENGINEER

PRESTRESSED GIRDER (GIRDER #1 SPAN 2)(CONT)

6. All exposed corners shall be chamfered 3/4" or rounded to 3/4" radius.

7. The physical properties of elastomeric bearing pads shall conform to Grade 70 (durometer) as specified in Division II Section 18 of the 2002 Edition of the AASHTO Standard Specifications for Highway Bridges. The cost of the pads shall be incidental to the contract unit price per foot for AASHTO Type 2 Prestressed Concrete Beam. Certification that pads are, 70 (durometer) and meet the requirements of AASHTO Division II Section 18 shall be furnished to the Engineer with the shop drawings. No laminated bearing pads will be allowed.

8. Dead Load of girder taken as effective at transfer. Cut strands, except those extended and bent, flush with end of girder and coat end of strands with mortar.

9. The Contractor shall be responsible for ensuring that transportation stresses, handling and erection do not cause damage to the girders.

10. Furnish and Install Inserts for F7 Rebar as shown in the plans. All costs involved shall be incidental to the contract unit price per foot for "AASHTO Type 2 Prestressed Concrete Beam."

REMOVAL OF CONCRETE BRIDGE SLAB

1. This work shall consist of breaking out and disposing of the specified areas of concrete bridge deck, specified AASHTO Type 2 girder, diaphragms, and curbs, including the bridge rail.

2. When breaking out the concrete deck and curbs, extreme care must be used in order that the concrete girders and shear connectors that are to remain are not damaged in any way. Before beginning breakout operations, mark continuous lines on the deck 6 inches outside and parallel to the girder flanges for the full length of the deck. Use only 15 pound jack hammers for concrete breakout over the top of the girders within these limits. The top flanges of the girders and the shear connectors shall be cleaned to the satisfaction of the Engineer. The Engineer will contact the Bridge Construction Engineer for repair procedures should any damage to the girder occur. Any girder flanges, shear connectors or other items damaged due to the Contractor's operation shall be repaired by the Contractor at no cost to the Department.

3. The Contractor shall submit a detailed Demolition Plan 30 days prior to any bridge deck removal. This Demolition Plan shall include all bridge deck breakout details, a sequence of traffic control and a sequence of bridge deck removal.

4. It shall be required that the bridge deck be cut into sections which can be lifted off the bridge. During the deck removal, asphalt and concrete shall not be allowed to fall onto I-90. All broken out concrete and other discarded material shall become the property of the Contractor and shall be disposed of on a site obtained by the Contractor and approved by the Engineer. See Waste Disposal Site notes. Include details of the deck section breakout and removal methods in the Demolition Plan.

5. The cost of breaking out the concrete bridge slab, bridge railing, curbs, girder, and diaphragms which includes reinforcing steel, disposal of all broken out material shall be included in the contract unit price per square yard for "Remove Concrete Bridge Slab". This item shall be paid for on the basis of plans quantity which is computed to the outside faces of the curbs and shall be full compensation for all labor, equipment, and any incidentals necessary to complete the work.

GALVANIC ANODE

1. The Contractor shall furnish and place Galvanic anodes along the limits of Removal of Concrete Bridge Slab specified in this plan set.

2. The galvanic anodes shall be supplied as one of the following:

   a. Galvashield XP+
      Vector Corrosion Technologies
      13312 N 56th St, Suite 102
      Tampa, FL 33617
      Phone: (813) 830-7566
      Website: www.vector-corrosion.com

   b. Sentinel GL
      Euclid Chemical Company
      19218 Redwood Road
      Cleveland, OH 44110
      Phone: (800) 321-7628
      Website: www.euclidchemical.com

   c. Sika Galvashield XP+
      Sika Corporation US
      201 Polito Avenue
      Lyndhurst, NJ 07071
      Phone: (800) 933-7452
      Website: http://usa.sika.com

3. The anodes shall be placed in accordance with manufacturer's recommendations and as approved by the Engineer. The anodes have not been shown on the drawings. The Contractor shall provide shop drawings of the galvanic anode installation including locations of the individual anodes to the Office of Bridge Design.

4. The anodes shall be placed with a minimum ¾" cover and shall be set in Embedding Mortar per the manufacturer's recommendations. The anodes shall be fully encased in the concrete repair material. Where adequate cover does not exist, a concrete pocket shall be chipped out behind the anode to provide sufficient cover. The Contractor may need to chip around the reinforcing bar locally at the anode installation to make the electrical connection. The reinforcing steel at the connection location shall be cleaned per the manufacturer's recommendations to provide sufficient electrical connection and mechanical bond.

5. The electrical continuity of the electrical connections and reinforcing steel shall be confirmed per the manufacturer's recommendations.

6. The Contractor shall provide manufacturer's product literature and installation instructions to the Engineer 10 days prior to installation.

7. All costs associated with placing anodes including labor, equipment, materials and incidentals shall be included in the contract unit price per each for "Galvanic Anode".

SUPERSTRUCTURE

1. Girder lifting hooks shall be cut off before placement of concrete deck slab.

2. The diaphragms at the bents shall be poured integrally with the deck slab.

3. The bridge deck concrete must be placed and finished continuously. The original deck grade, crown slope, and thickness shall be maintained. A vibrating screed may be used to finish the A45 Concrete, Bridge Deck.

NOTES (CONTINUED)

FOR

227' - 9" PRESTRESSED GIRDER BRIDGE

STR. NO. 52-830-310

FEBRUARY 2014

DESIGNED BY	CK. DES. BY	DRAFTED BY	
TK	BWS	TK	Kevin N. Goeden
PENNI39V	I39VTA03		BRIDGE ENGINEER

REPAIR OF PRESTRESSED GIRDER (GIRDER #7 SPAN 2)

1. Remove all loose and broken concrete and breakout to sound concrete in spalled and delaminated areas, as directed by the Engineer. Use 3/4" deep saw cuts, to be made in sound concrete, to define the limits of breakout surrounding the damaged area. The minimum depth of concrete patch shall be 3/4". Use extreme care not to damage any strand during concrete breakout. Use chipping hammers not heavier than 15 pound class for concrete removal around strands or rebar. Blast clean the existing strands, exposed rebar and surrounding concrete.

2. Inspect exposed strands for damage such as gouges, and flattening or sharp bends. If damaged strands are found, they shall be called to the attention of the Engineer, who will determine whether the strand will be repaired. If repair is required the Bridge Construction Engineer shall be contacted immediately for repair procedure.

3. Areas to be patched must be sand blasted and cleaned immediately prior to priming and patching. All loose materials must be removed by sweeping and blowing out with clean, dry, oil free compressed air at 90 psi. When the clean and dry areas have been approved by the Engineer they must be primed with an approved bonding agent as per the concrete patch material manufacturer's recommendations. Exposed strands must be coated with the bonding agent. The bottom of the flange shall be formed to permit packing the concrete patch material into the repair area. Forms may be required by the Engineer elsewhere depending on the amount of concrete to be placed. The Contractor shall provide the Engineer with technical data for the bonding agent.

5. The concrete patching material shall be an approved product and shall attain a minimum 28 day compressive strength of 5000 psi. The concrete patching material shall be extended with aggregate of the quality, size and gradation specified in the manufacturer's technical literature.

   Four types of approved patching material are.

   Vertical Patch
   Nox-Crete Products Group
   1444 S. 20th Street
   Omaha, NE 68108
   Phone: (402) 341-1976
   http://www.nox-crete.com

   Akona Pre-Mixed Concrete Patch
   Akona Manufacturing, LLC.
   2025 Centre Pointe Boulevard
   Suite 300
   Mendota Heights, MN 55120
   Phone: (651) 905-8137
   http://www.akonallc.com/about/helpline.html

   Thorite Rapid Vertical
   BASF Construction Chemicals – Building Systems
   889 Valley Park Drive
   Shakopee, MN 55379
   Phone: (952) 496-6000
   http://www.buildingsystems.basf.com/index.asp

   Speed Crete Red Line
   Euclid Chemical
   19218 Redwood
   Cleveland, OH 44110
   Phone: (800) 321-7628
   http://www.tamms.com/default.asp

   Use one of the above patching products, or an approved equal. Whichever concrete patching product is chosen the Contractor shall provide technical literature to the Engineer prior to its use.

6. All of the manufacturer's specifications will be followed for the final surface preparation, addition of aggregate, mixing, placement, curing, and temperature limits of the surrounding material and the concrete patch material. Curing shall be in accordance with note 7 unless the manufacturer's requirements are more stringent.

7. Concrete repairs shall be cured by the wet cure method for a minimum of 7 days or until 70% of the 28 day compressive strength has been reached, whichever is less. The 28 day compressive strength shall be that listed in the manufacturer's technical literature.

8. The cost of repairing damaged concrete with the concrete patching material and any incidentals and labor necessary to complete this item of work shall be incidental to the contract unit price per cubic foot for "Concrete Patching Material".

ABUTMENT NO. 5 BACKWALL REPAIR

1. Remove all concrete on the backwall to the limits shown on the plans. The depth shall be the amount to remove at least 2" of concrete behind the nearest reinforcing steel.

2. Class A45 Concrete, Self Consolidating shall be placed through the deck with a method approved by the Bridge Construction Engineer. Vertical Patching Material will not be allowed.

3. Class A45 Concrete, Self Consolidating shall be constructed in accordance with the Special Provision for Self Consolidating Concrete.

4. All costs associated with the breakout, and removal of concrete from the backwall and deck shall be incidental to the contract unit price per cubic yard of "Breakout Structural Concrete".

5. All costs associated with the placement of new concrete in deck and backwall including materials and labor shall be incidental to the contract unit price per cubic yard of "A45 Bridge, Self Consolidating".

NOTES (CONTINUED)

FOR

227' - 9" PRESTRESSED GIRDER BRIDGE

STR. NO. 52-830-310

FEBRUARY 2014

DESIGNED BY	CK. DES. BY	DRAFTED BY	
TK	BWS	TK	Kevin N. Goeden
PENNI39V	I39VTA04		BRIDGE ENGINEER

STATE OF	PROJECT	SHEET NO.	TOTAL SHEETS
S.D.	090 W-468	E16	E31

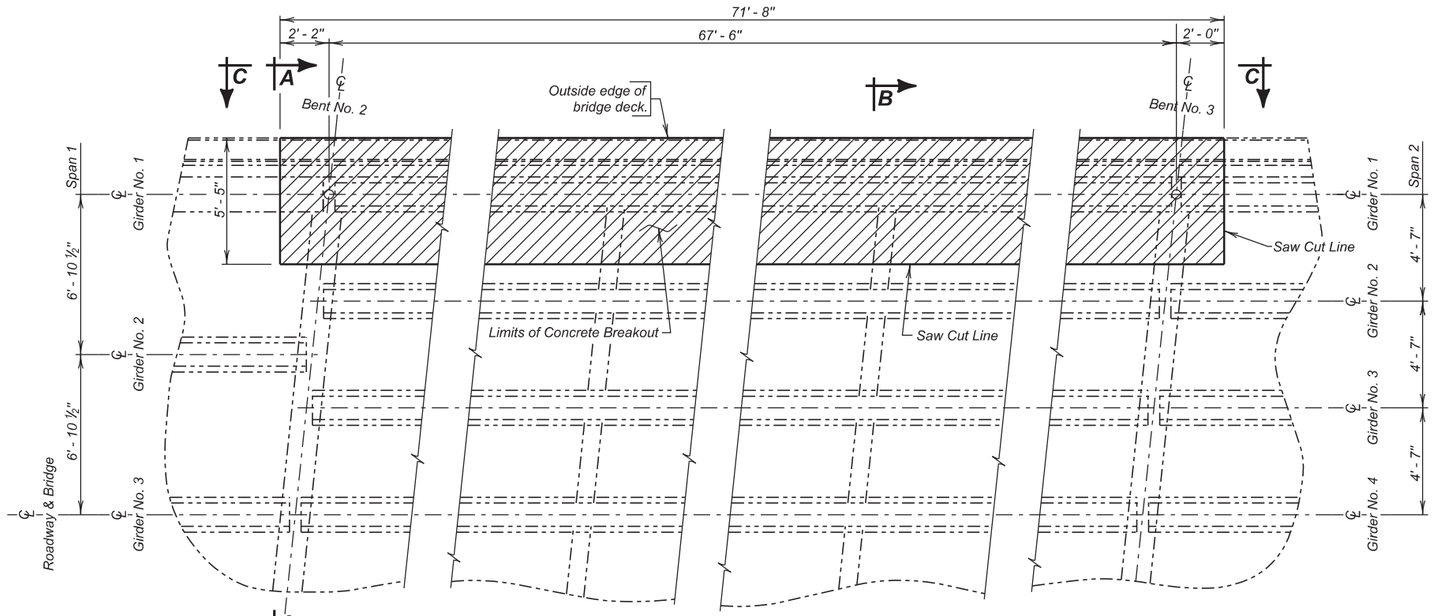

PLAN
(Deck Breakout)

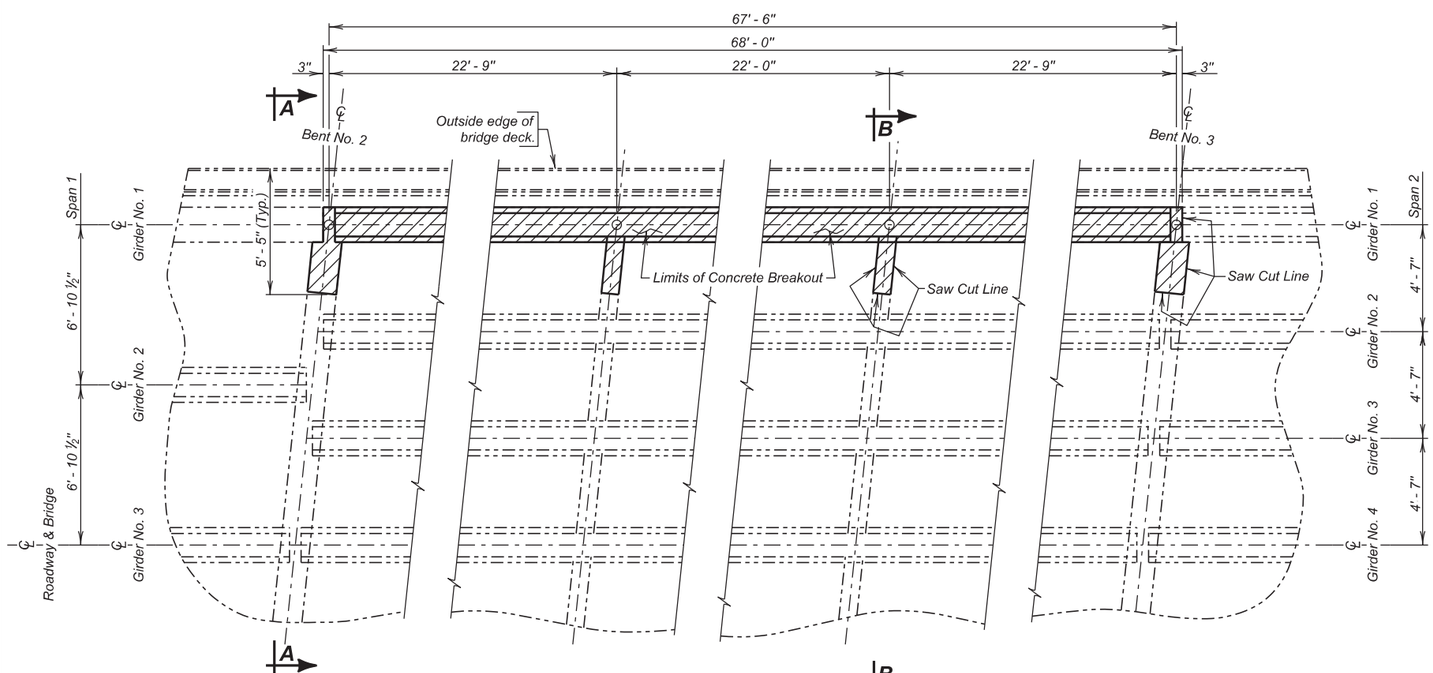

PLAN
(Girder No. 1 and Diaphragm Breakout)

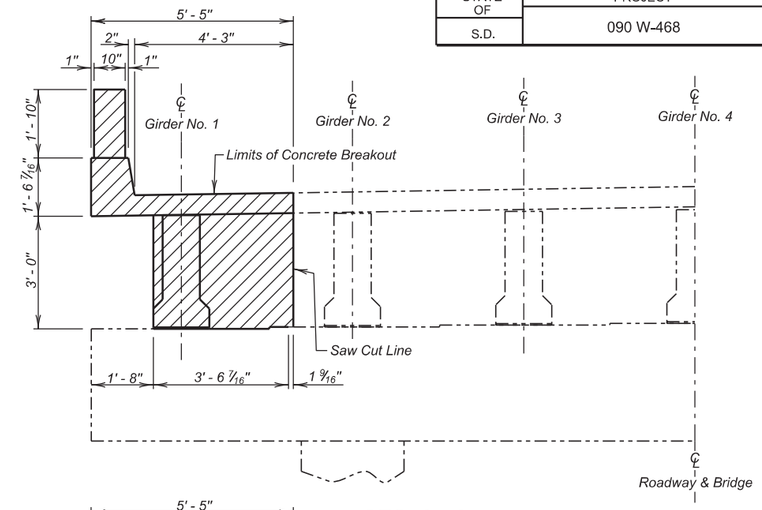

SEC. A - A

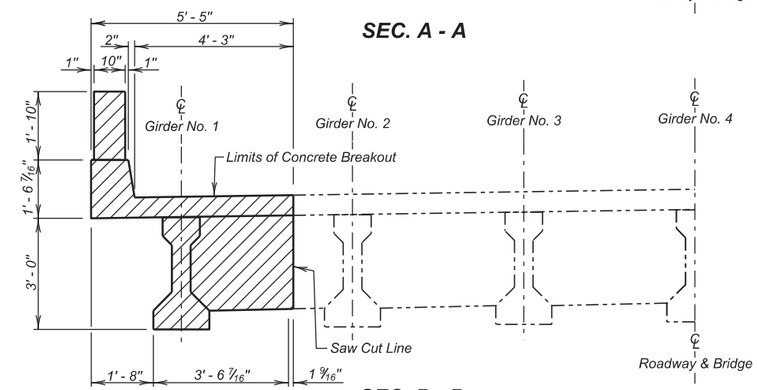

SEC. B - B

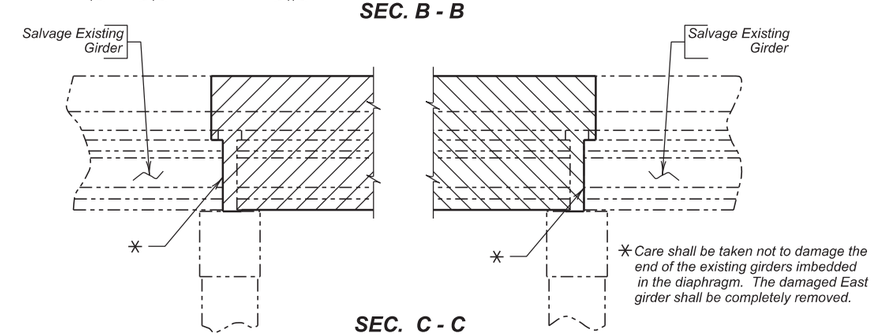

*Care shall be taken not to damage the end of the existing girders imbedded in the diaphragm. The damaged East girder shall be completely removed.

SEC. C - C

NOTE:
Shaded areas indicate limit of concrete breakout.

ESTIMATED QUANTITIES		
ITEM	UNIT	QUANTITY
Remove Concrete Bridge Slab	Sq. Yd.	43.1

DECK & GIRDER NO. 1 BREAKOUT DETAILS
FOR
227' - 9" PRESTRESSED GIRDER BRIDGE

30'-0" ROADWAY — 6° SKEW L. H. F.
OVER I 90 — SEC. 1-T1 N-R14W
STR. NO. 52-830-310 — 090 W-468

PENNINGTON COUNTY
S. D. DEPT. OF TRANSPORTATION
FEBRUARY 2014

DESIGNED BY	CK. DES. BY	DRAFTED BY	
TK	BWS	BT	Kevin N. Goeden
PENNI39V	I39VTA05		BRIDGE ENGINEER

Revised by TK, 4-21-2014

STATE OF	PROJECT	SHEET NO.	TOTAL SHEETS
S.D.	090 W-468	E17	E31

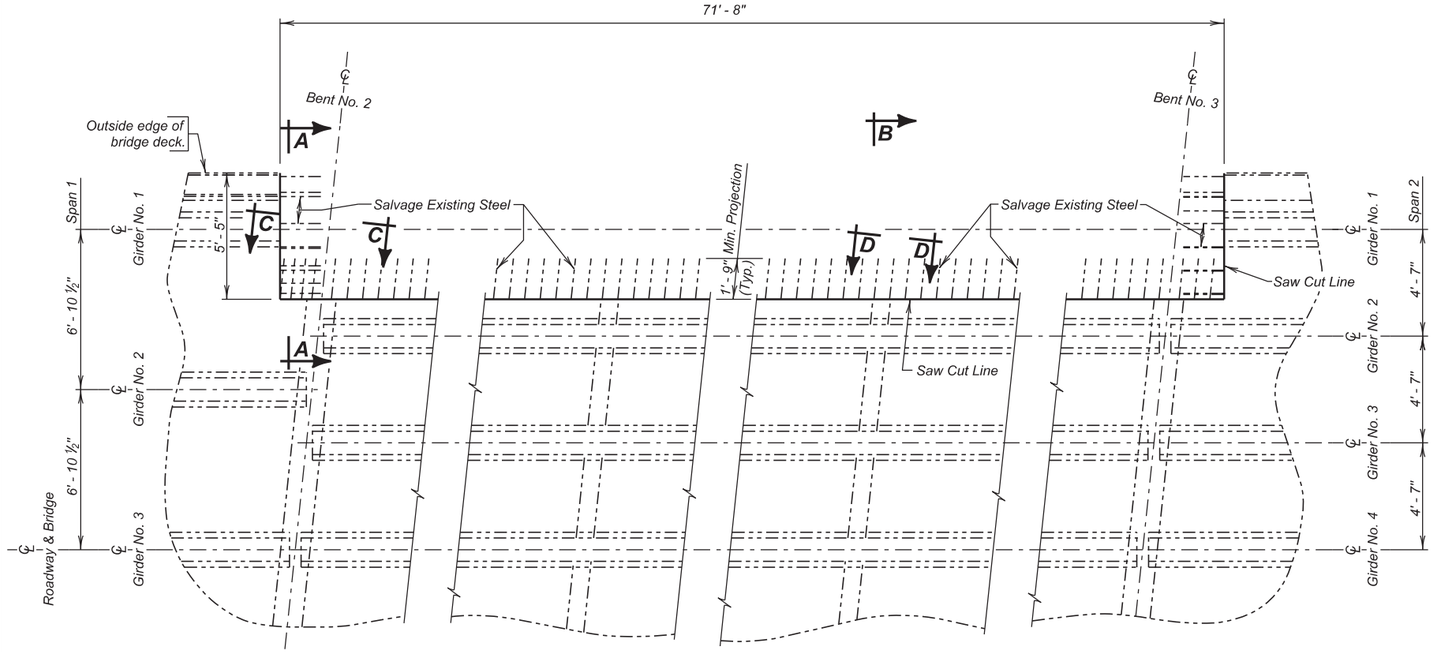

PLAN
(Top and Bottom Steel)

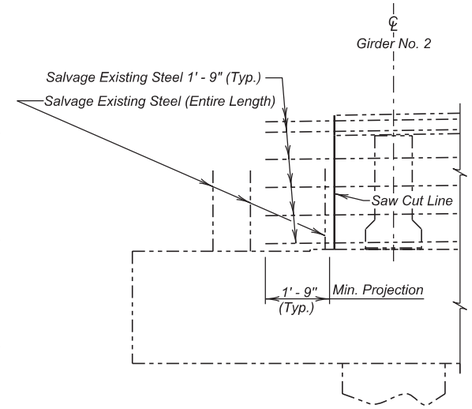

SEC. A - A

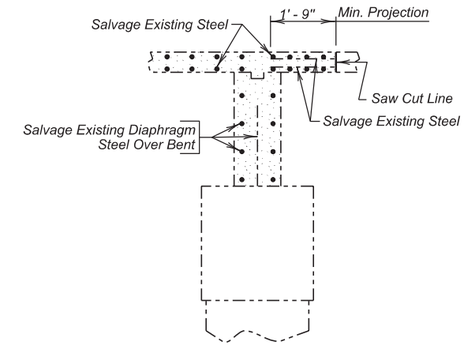

SEC. C - C

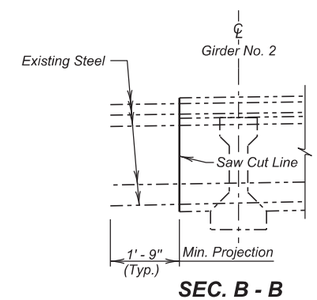

SEC. B - B

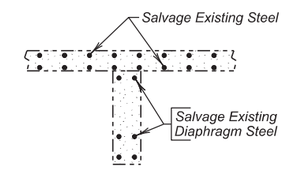

SEC. D - D

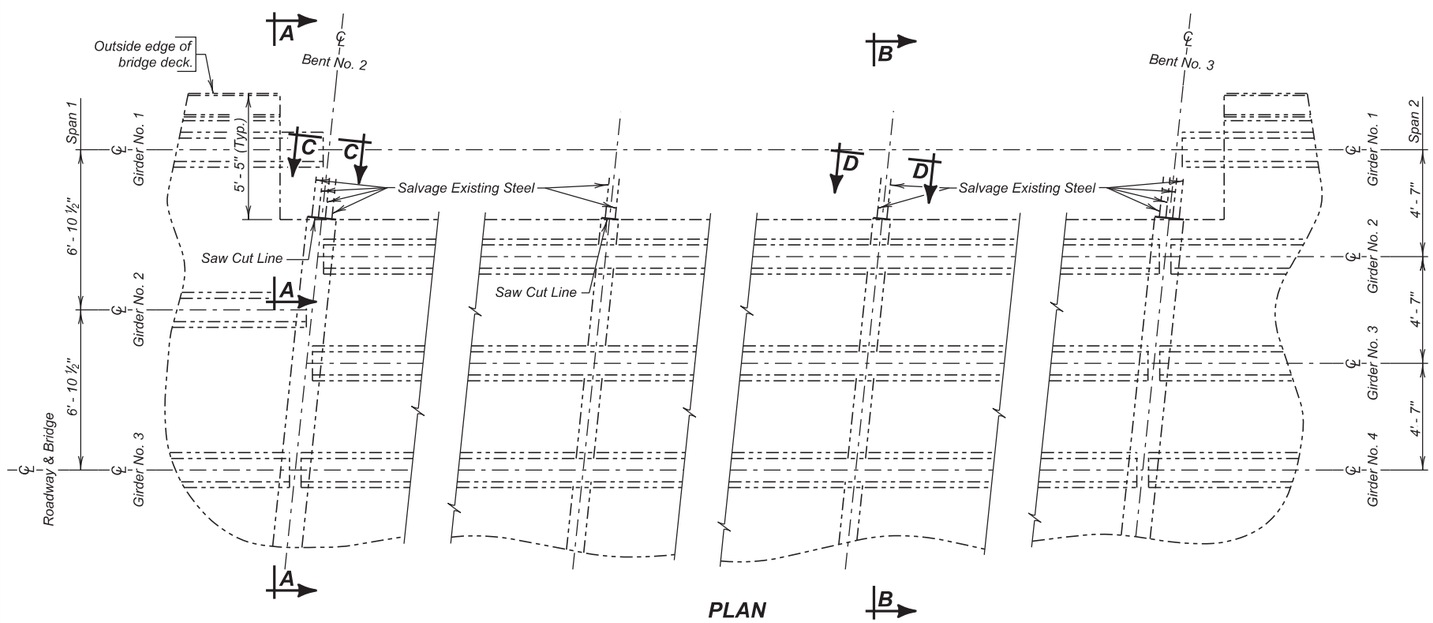

PLAN
(Bent and Diaphragm Steel)

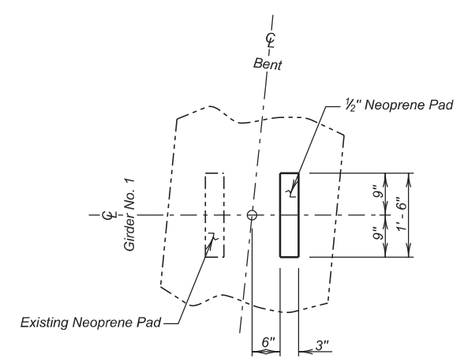

GROUT PAD DETAIL

GIRDER NO. 1 BREAKOUT DETAILS (CONTINUED)

FOR

227' - 9" PRESTRESSED GIRDER BRIDGE

30'-0" ROADWAY — 6° SKEW L. H. F.
OVER I 90 — SEC. 1-T1 N-R14W
STR. NO. 52-830-310 — 090 W-468

PENNINGTON COUNTY
S. D. DEPT. OF TRANSPORTATION
FEBRUARY 2014

DESIGNED BY	CK. DES. BY	DRAFTED BY	
TK	BWS	BT	Kevin N. Goeden
PENNI39V	I39VTA06		BRIDGE ENGINEER

Revised by TK, 4-21-2014

STATE OF	PROJECT	SHEET NO.	TOTAL SHEETS
S.D.	090 W-468	E18	E31

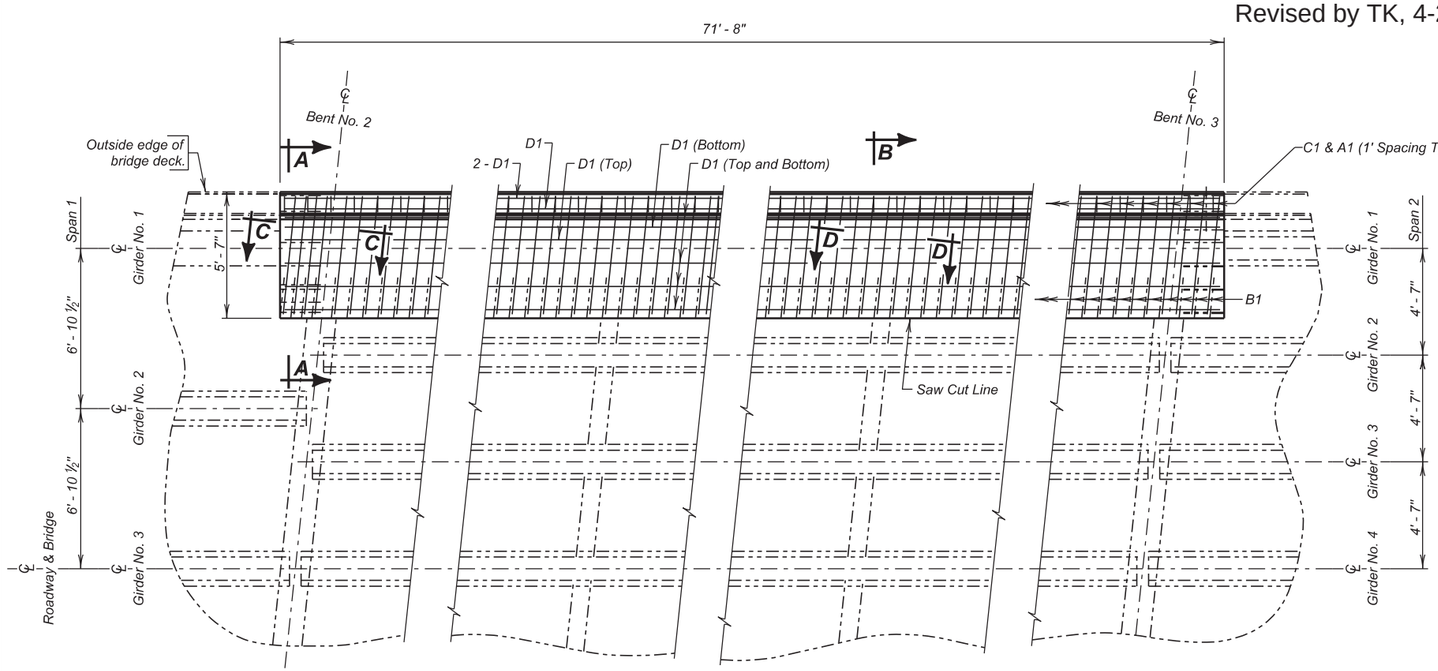

PLAN
(Top and Bottom Steel)

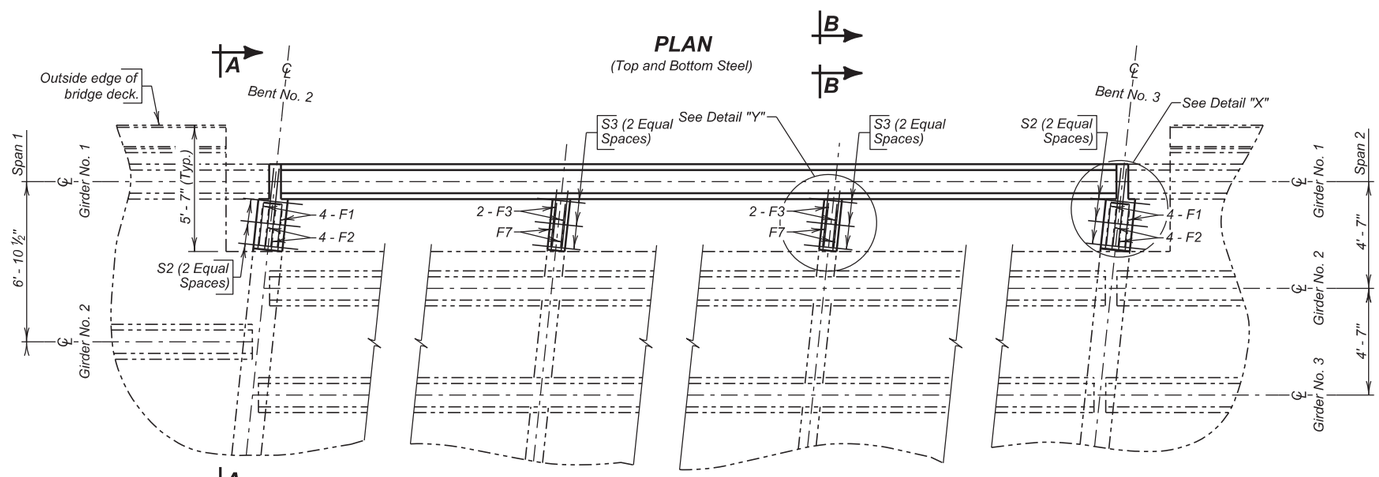

PLAN
(Bent and Diaphragm Steel)

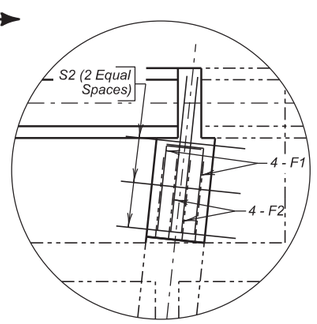

DETAIL "X"

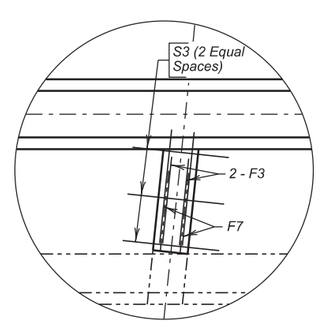

DETAIL "Y"

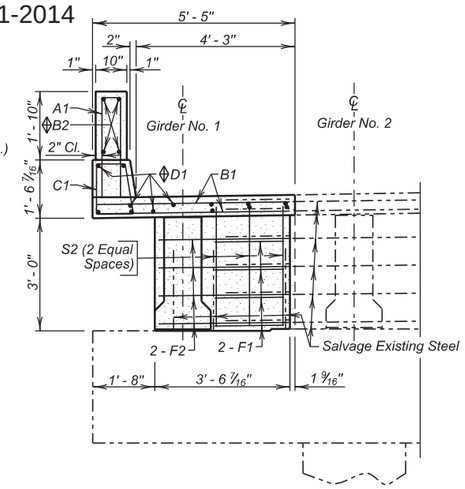

SEC. A - A

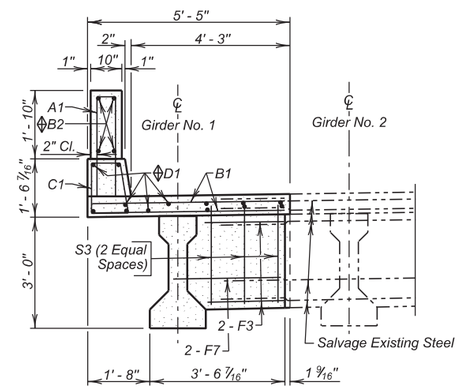

SEC. B - B

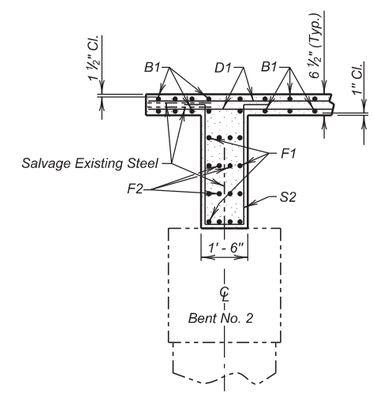

SEC. C - C

REINFORCING SCHEDULE

Mk.	No.	Size	Length	Type	Bending Details
A1	72	4	7' - 0"	17	
B1	216	5	5' - 2"	Str.	
◊ B2	8	4	36' - 9"	Str.	
C1	72	4	5' - 3"	T2A	
◊ D1	26	5	36' - 9"	Str.	
F1	16	5	2' - 7"	17A	
F2	16	5	3' - 4"	Str.	
F3	8	5	1' - 10"	Str.	
F7	4	7	4' - 0"	Str.	
S2	6	5	9' - 1"	S4	
S3	6	5	7' - 7"	S4	

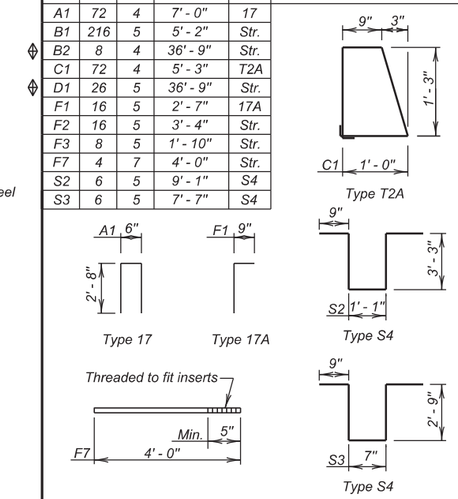

NOTES:
All dimensions are out to out of bars.
◊ Minimum Lap = 1' - 9"

ESTIMATED QUANTITIES

ITEM	UNIT	QUANTITY
Class A45 Concrete, Bridge Deck	Cu. Yd.	15.9
Reinforcing Steel	Lb.	3151
Galvanic Anode	Each	42

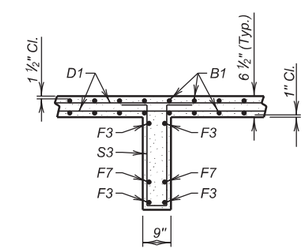

SEC. D - D

GIRDER NO. 1 DECK REPLACEMENT DETAILS

FOR

227' - 9" PRESTRESSED GIRDER BRIDGE

30'-0" ROADWAY — 6° SKEW L. H. F.
OVER I 90 — SEC. 1-T1 N-R14W
STR. NO. 52-830-310 — 090 W-468

PENNINGTON COUNTY
S. D. DEPT. OF TRANSPORTATION
FEBRUARY 2014

DESIGNED BY	CK. DES. BY	DRAFTED BY	
TK	BWS	BT	Kevin N. Goeden
PENNI39V	I39VTA07		BRIDGE ENGINEER

Revised by TK, 4-21-2014

STATE OF	PROJECT	SHEET NO.	TOTAL SHEETS
S.D.	090 W-468	E19	E31

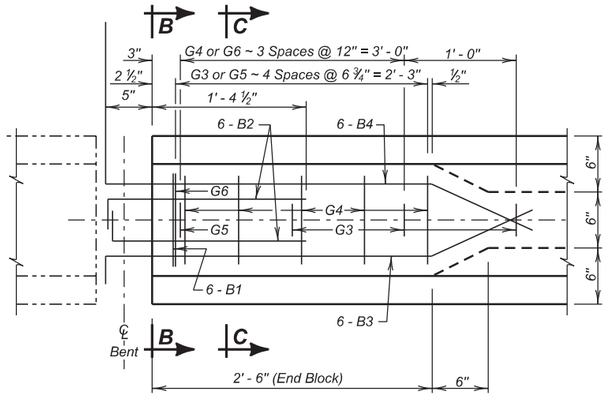

VIEW X - X

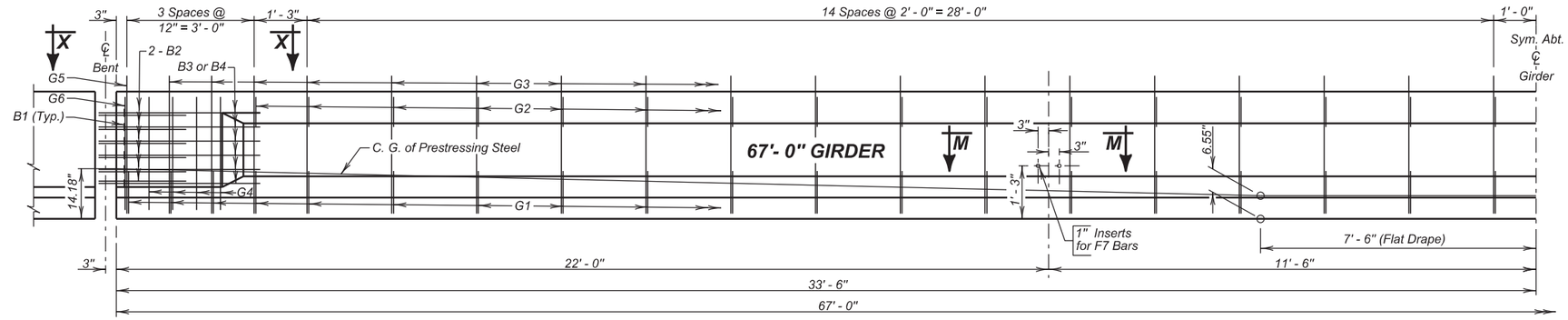

ELEVATION

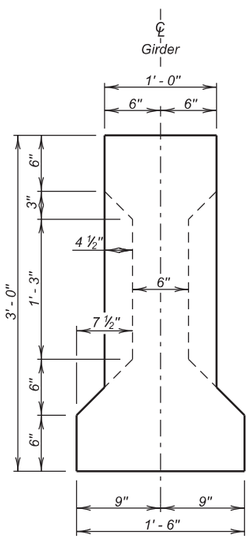

END VIEW

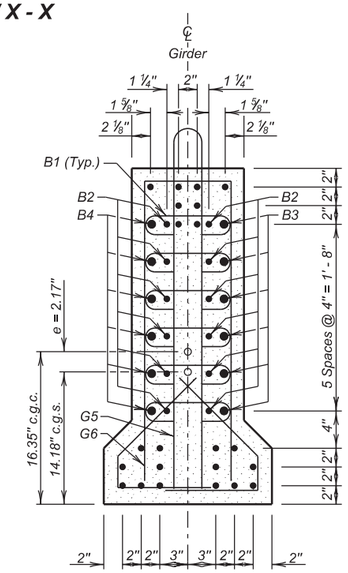

SEC. B - B

(22 - ½" Dia. Type 270K Low Lax Strands)

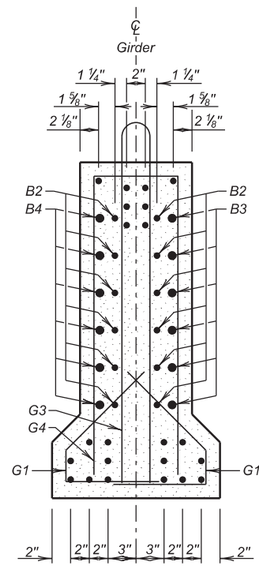

SEC. C - C

(22 - ½" Dia. Type 270K Low Lax Strands)

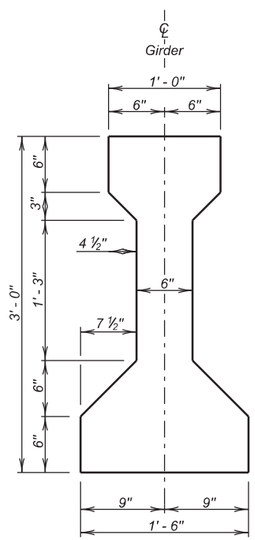

TYPE II GIRDER

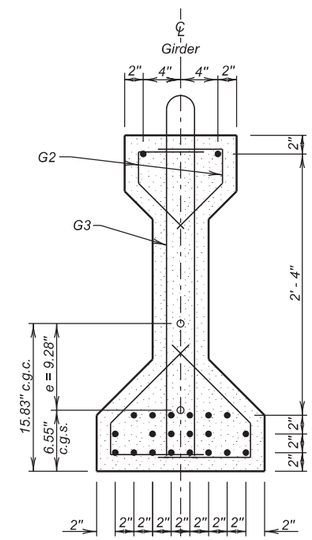

℄ SECTION

(22 - ½" Dia. Type 270K Low Lax Strands)

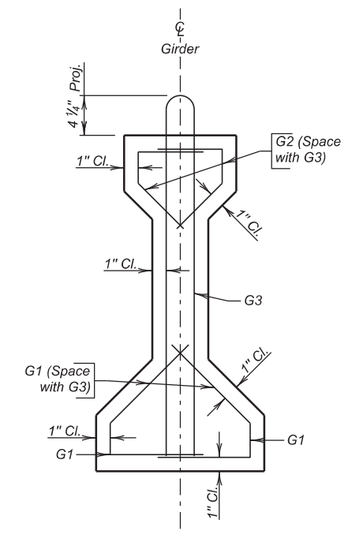

STIRRUP DETAILS

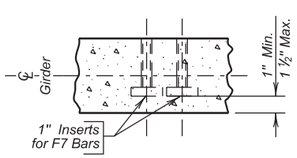

SEC. M - M

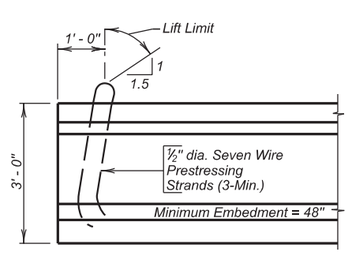

TYPICAL LIFTING DEVICE

REINFORCING SCHEDULE

Mk.	No.	Size	Length	Type
B1	12	4	2' - 1"	1
B2	24	4	2' - 0"	Str.
B3	12	6	4' - 2"	19B
B4	12	6	5' - 9"	19B
G1	74	4	2' - 4"	S3
G2	64	4	1' - 6"	S3
G3	36	4	6' - 7"	S11
G4	10	4	6' - 3"	17
G5	2	6	6' - 7"	S11
G6	2	6	6' - 3"	17

Bending Details

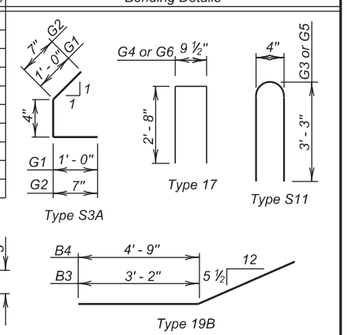

NOTES:
All dimensions are out to out of bars.
These bars shall be bent as seen in VIEW X - X

ESTIMATED QUANTITIES

ITEM	UNIT	QUANTITY
AASHTO Type 2 Prestressed Concrete Beam	Ft.	67.0

GIRDER NO. 1 DETAILS

FOR

227' - 9" PRESTRESSED GIRDER BRIDGE

30'-0" ROADWAY — 6° SKEW L. H. F.
OVER I 90 — SEC. 1-T1 N-R14W
STR. NO. 52-830-310 — 090 W-468

PENNINGTON COUNTY
S. D. DEPT. OF TRANSPORTATION
FEBRUARY 2014

DESIGNED BY	CK. DES. BY	DRAFTED BY	
TK	BWS	BT	Kevin N. Goeden
PENNI39V	I39VTA08		BRIDGE ENGINEER

STATE OF	PROJECT	SHEET NO.	TOTAL SHEETS
S.D.	090 W-468	E20	E31

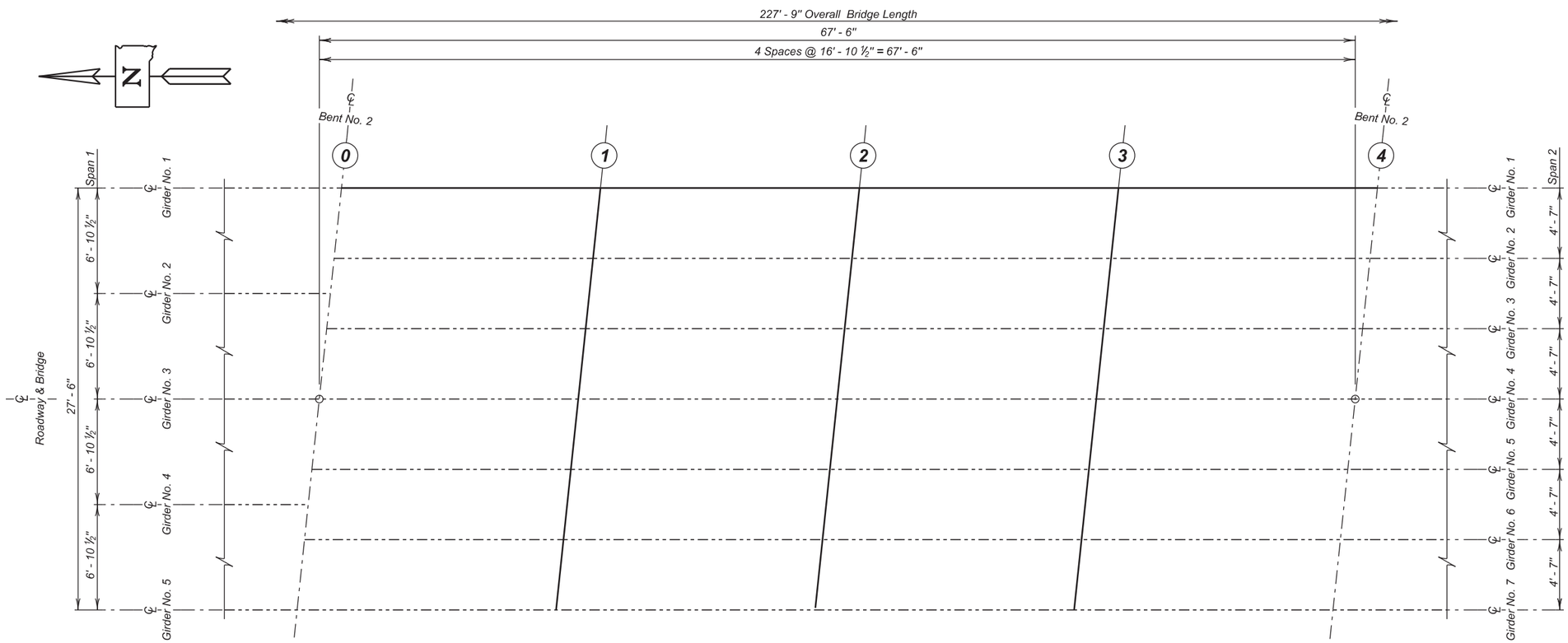

GIRDER LAYOUT

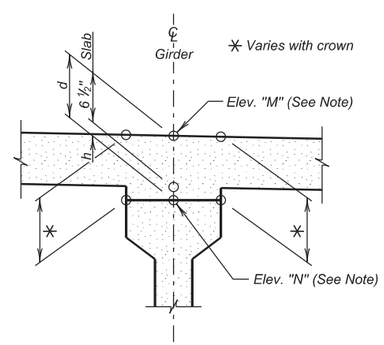

TABLE OF THEORETICAL HAUNCH

		0	1	2	3	4
Girder No. 1	Dim. h (in.)	-.50	-.91	-1.12	-.91	-.50

NOTE:

The camber of the new girder used to calculate the haunch is 1" at midspan. If the camber of the girder delivered to the project varies more than ¼" from the camber used to calculate the haunch the Office of Bridge Design shall be notified and new Theoretical Haunch values will be provided.

GIRDER NO. 1 ERECTION DATA

FOR

227' - 9" PRESTRESSED GIRDER BRIDGE

30'-0" ROADWAY — 6° SKEW L. H. F.
OVER I 90 — SEC. 1-T1 N-R14W
STR. NO. 52-830-310 — 090 W-468

PENNINGTON COUNTY
S. D. DEPT. OF TRANSPORTATION
FEBRUARY 2014

DESIGNED BY	CK. DES. BY	DRAFTED BY	
TK	BWS	BT	Kevin N. Goeden
PENNI39V	I39VTA09		BRIDGE ENGINEER

STATE OF	PROJECT	SHEET NO.	TOTAL SHEETS
S.D.	PROJECT	E21	E31

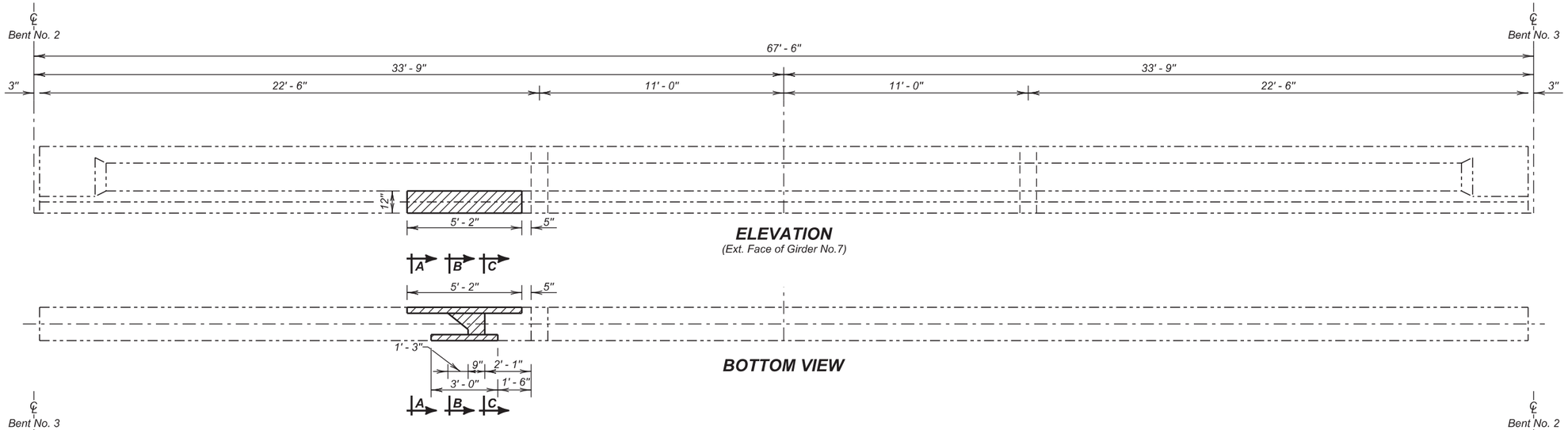

ELEVATION
(Ext. Face of Girder No.7)

BOTTOM VIEW

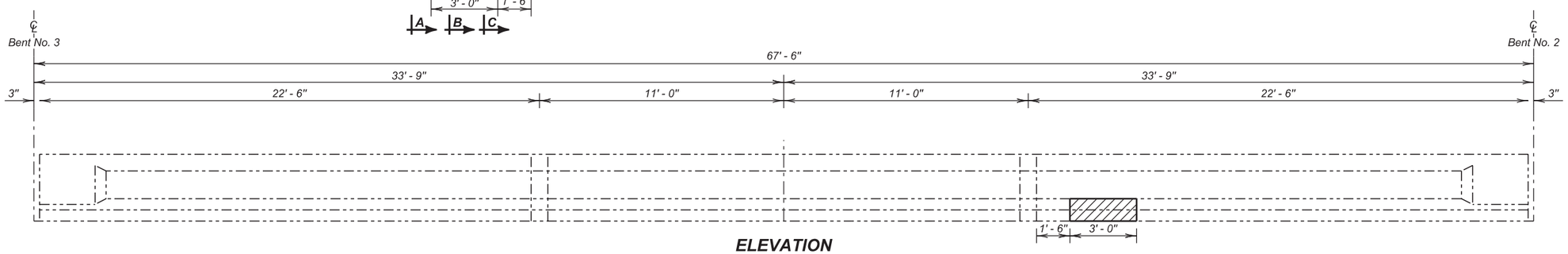

ELEVATION
(Int. Face of Girder No.7)

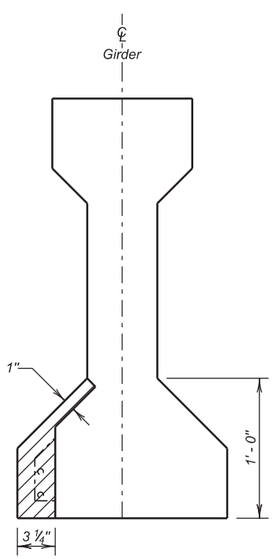

SECTION A - A

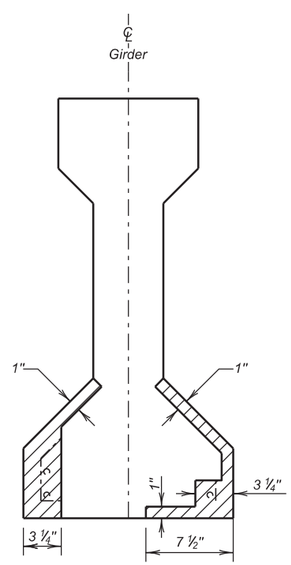

SECTION B - B

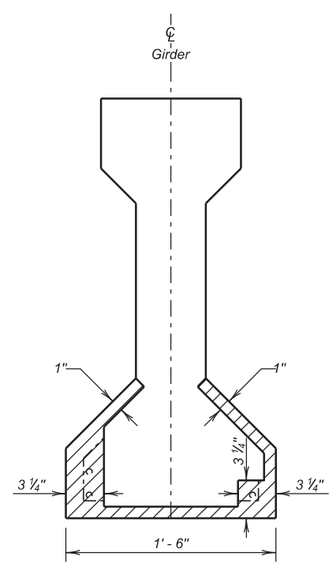

SECTION C - C

ESTIMATED QUANTITIES

ITEM	UNIT	QUANTITY
Breakout Structural Concrete	Cu. Yd.	0.1
Concrete Patching Material	Cu. Ft.	1.6

GIRDER NO. 7 REPAIR DETAILS

FOR

227' - 9" PRESTRESSED GIRDER BRIDGE

30'-0" ROADWAY — 6° SKEW L. H. F.
OVER I 90 — SEC. 1-T1 N-R14W
STR. NO. 52-830-310 — 090 W-468

PENNINGTON COUNTY
S. D. DEPT. OF TRANSPORTATION
FEBRUARY 2014

DESIGNED BY	CK. DES. BY	DRAFTED BY	
TK	BWS	KR	Kevin N. Goeden
PENNI36V	I39VRA10		BRIDGE ENGINEER

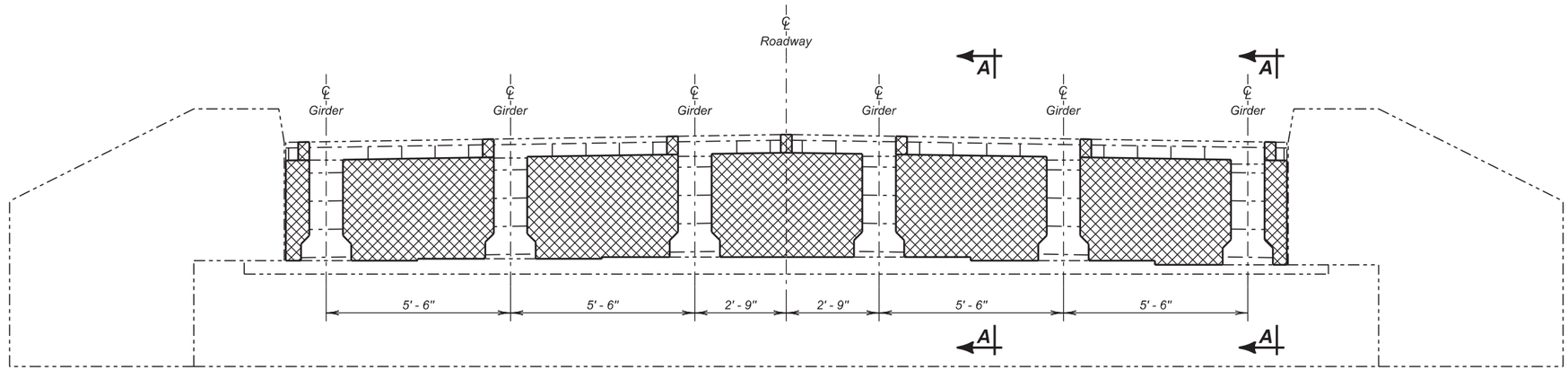

ELEVATION

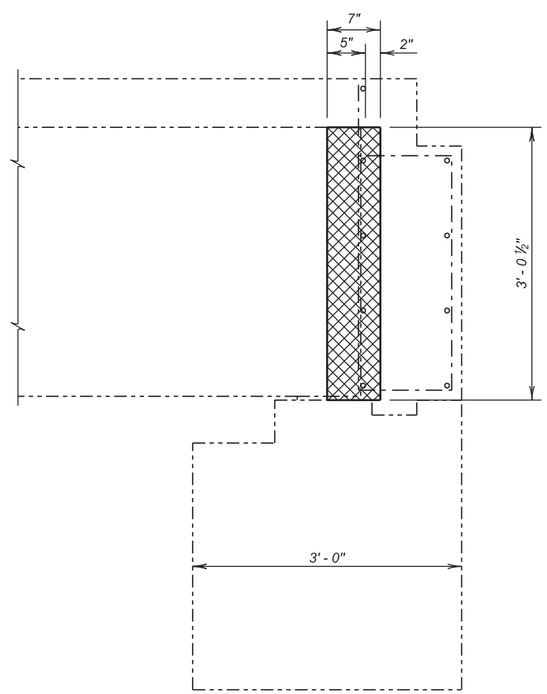

SECTION A - A

Area of Concrete to be removed.

ABUTMENT NO. 5 BACKWALL BREAKOUT DETAILS

FOR

227' - 9" PRESTRESSED GIRDER BRIDGE

30'-0" ROADWAY — 6° SKEW L. H. F.
OVER I 90 — SEC. 1-T1 N-R14W
STR. NO. 52-830-310 — 090 W-468

PENNINGTON COUNTY

S. D. DEPT. OF TRANSPORTATION

FEBRUARY 2014

11 OF 20

DESIGNED BY	CK. DES. BY	DRAFTED BY	
TK	BWS	KR	Kevin N. Boeden
PENNI36V	I39VRA11		BRIDGE ENGINEER

Revised by TK, 4-17-2014

STATE OF	PROJECT	SHEET NO.	TOTAL SHEETS
S.D.	PROJECT	E23	E31

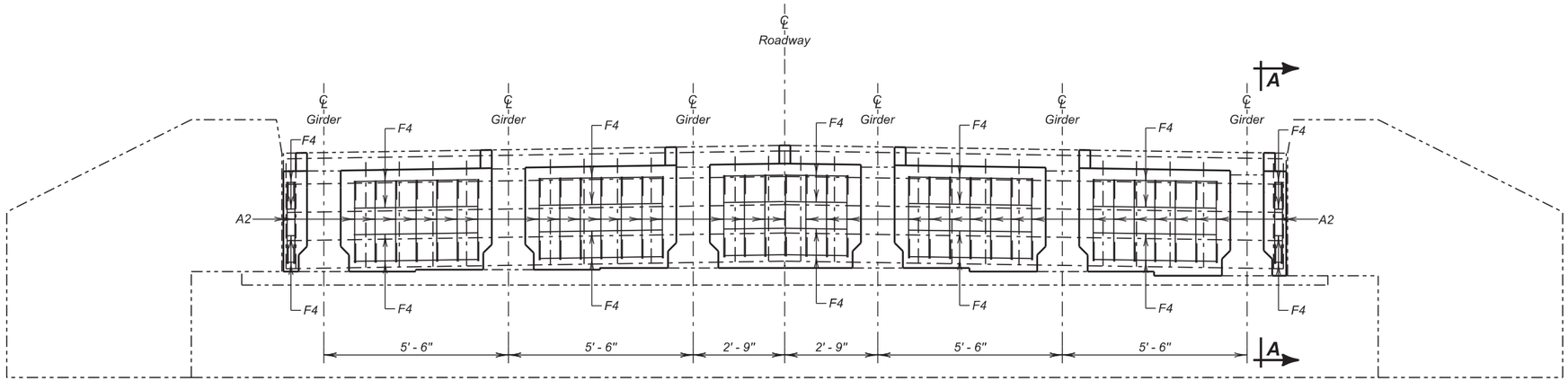

ELEVATION

REINFORCING SCHEDULE

Mk.	No.	Size	Length	Type	Bending Details
F4	20	5	3' - 8"	T2	
A2	39	5	2' - 6"	T2	
△D2	78	5	1' - 11"	Str.	

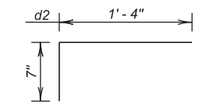

NOTES :
△ Dowels
All bars are epoxy coated.
All dimensions are out to out of bars.

NOTES:
If existing steel is struck while drilling holes for D2 dowels, the spacing can be shifted 2" longitudinally, 1" transversely, or as approved by the Engineer to miss existing steel.

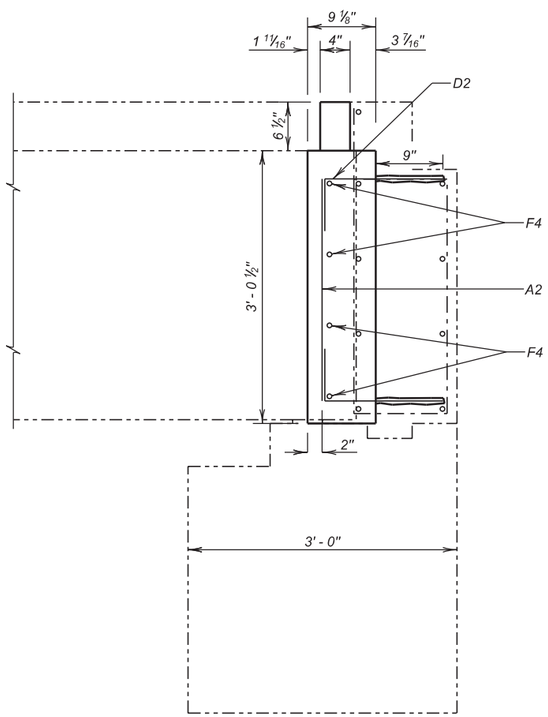

SECTION A - A

ESTIMATED QUANTITIES

ITEM	UNIT	QUANTITY
Breakout Structural Concrete	Cu. Yd.	1.6
Class A45 Concrete, Self Consolidating	Cu.Yd.	2.0
Install Dowel in Concrete	Each	78
★Reinforcing Steel	Cu.Yd.	178

★ Does not include the following quantities for D2 bars as these are paid for in the Bid Item "Install Dowel in Concrete". 156 Lb.

ABUTMENT NO.5 BACKWALL REPAIR DETAILS

FOR

227' - 9" PRESTRESSED GIRDER BRIDGE

30'-0" ROADWAY — 6° SKEW L. H. F.
OVER I 90 — SEC. 1-T1 N-R14W
STR. NO. 52-830-310 — 090 W-468

PENNINGTON COUNTY
S. D. DEPT. OF TRANSPORTATION
FEBRUARY 2014

DESIGNED BY	CK. DES. BY	DRAFTED BY	
TK	BWS	KR	Kevin N. Goeden
PENNI36V	I39VRA12		BRIDGE ENGINEER

STATE OF	PROJECT	SHEET NO.	TOTAL SHEETS
S.D.	090 W-468	E24	E31

TOTAL SHEETS 131

INDEX OF BRIDGE SHEETS

Sheet No. 1 General Drawing & Estimated Quantities
Sheet No. 2 Subsurface Investigation
Sheet No. 3 Details of Sill No. 1
Sheet No. 4 Details of Sill No. 5
Sheet No. 5 Details of Bent No. 2
Sheet No. 6 Details of Bent No. 3
Sheet No. 7 Details of Bent No. 4
Sheet No. 8 Details of Superstructure Sheet No. 1
Sheet No. 9 Details of Superstructure Sheet No. 2
Sheet No. 10 Details of Superstructure Sheet No. 3
Sheet No. 11 Details of Prestressed Beams Sheet No. 1
Sheet No. 12 Details of Prestressed Beams Sheet No. 2
Sheet No. 13 Type RA-1M Steel Railing Details

Note:
T.S. @ ℄ El. = Top of Slab at Center Line Rdwy. Elevation.

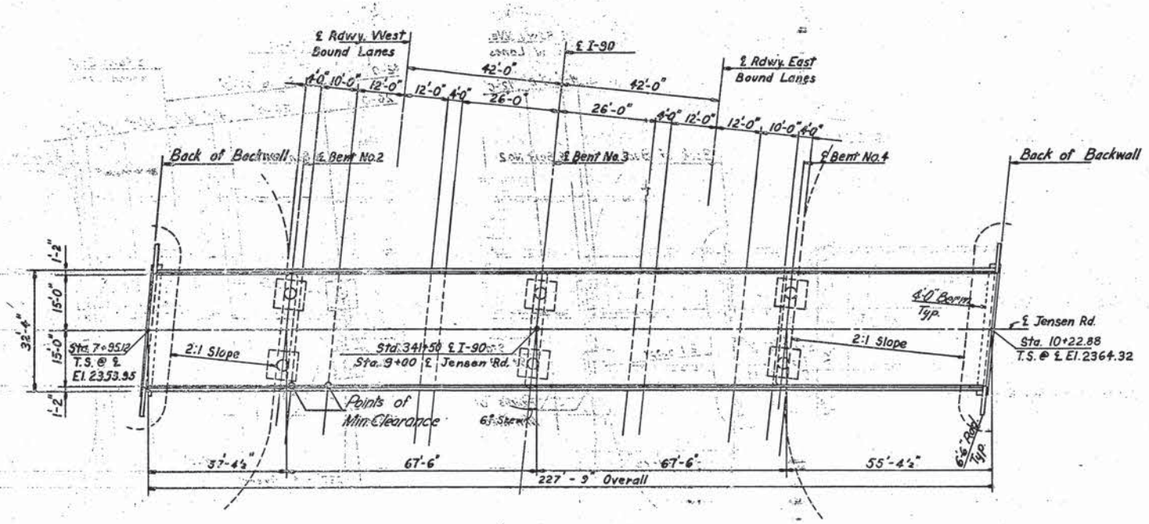

PLAN

B.M. #32 Elev. 2359.13
Iron Pin & Guards 150' Rt.
Sta. 340+68.50 in Fence Line

B.M. #33 Elev. 2314.16
Iron Pin & Guards 150' Lt
Sta. 350+36

EXCAVATION NOTES—

1. Footings for Bents No. 2, 3 & 4 shall be cast against solid undisturbed shale and carried into same approximately the depth of the footings. Limits of shale excavation for these footings shall be bounded as nearly as practicable by the neat lines as shown in the details of footings for Bents No. 2, 3 & 4 on Sheet No. 5, 6 & 7 respectively, of the plans.
2. Shale shall develop a minimum bearing value of 3.3 tons per sq. ft. If the bearing value is less than 3.3 tons per sq. ft. communicate with the BRIDGE SECTION.
3. Final footing elevations for Bents No. 2, 3 & 4 shall be established before ordering column reinforcing steel for the respective Bents.

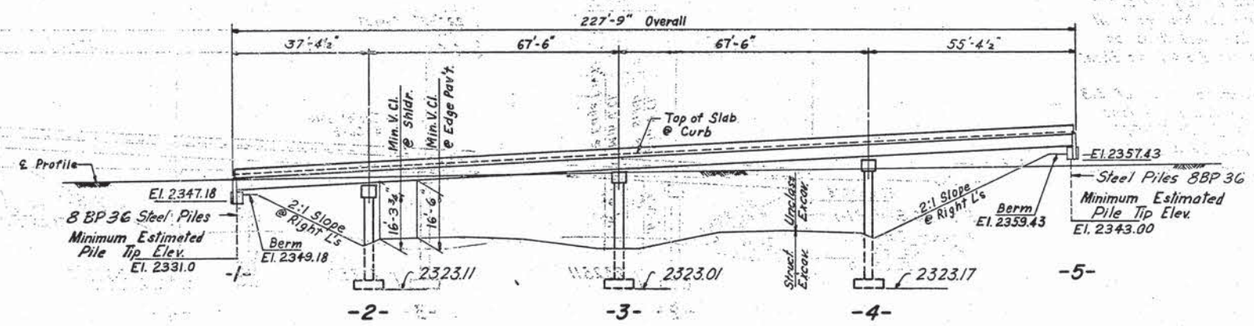

ELEVATION

Scale: 1" = 20'

SPECIFICATION NOTE—

Use Current South Dakota Standard Specifications for Roads and Bridges, and the Supplemental Specifications as Included in the Proposal.

GENERAL NOTES—

1. Longitudinal Elements of the Slab shall Conform to the Vertical Curve.
2. Rail Posts shall be built vertical.
3. Cost of all Premolded Expansion Joint Filler and Neoprene Pads shall be included in the unit price bid for Class "A" Concrete.

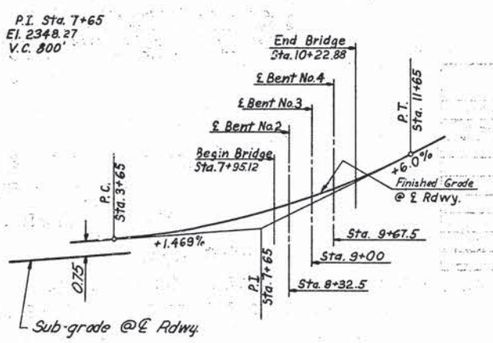

VERTICAL CURVE DATA

ESTIMATED QUANTITIES

ITEM	Cl. "A" Concrete Cu. Yds.	Reinf. Steel Lbs.	Prestressed Beams Each 67'-0"	56'-6"	36'-6"	Type "A" Steel Piling Lin. Ft.	Steel Piles — Lbs. Steel Piles 8BP36		Excavation Cu. Yds. Struct.	Unclass.
Superstr.	193.4	48,945.	14	6	5	457.8	394	16,184		
Sill No. 1	15.3	1,045.					5 @ 20 = 100 × 36 = 3,600		27.19.72	
Bent No. 2	33.2	6,100.							59.107.68	
Bent No. 3	34.6	6,847.							38.89.42	
Bent No. 4	35.9	6,810.					403.42	16,523	58.104.85	
Sill No. 5	15.3	1,045.					6 @ 20 = 120 × 36 = 4,320		27.20.51	
Totals	327.7	70,792. 71,722	14	6	5	457.8	~~8 @ 20 = 160~~	~~7,040~~ 29,707	~~19.83.34~~	~~.88~~

F.E. 2/10/65 RWS

△ All unclassified excavation to be done by others.
⊕ One 8BP36 Steel Bearing Test Pile shall be driven at Sills No. 1 and No. 5 before remaining piles are ordered.

ORIGINAL CONSTRUCTION PLANS

GENERAL DRAWING & ESTIMATED QUANTITIES
FOR
227'-9" PRESTRESSED BEAM BRIDGE

30'-0" ROADWAY — 6° SKEW L.H.F.
OVER I-90 STA. 341+50 — SEC. 12-T1N-R14E
STA. 7+95.12 TO STA. 10+22.88 JENSEN RD.
PENNINGTON COUNTY H20-S16-44
SOUTH DAKOTA I-90-2(22)96
DEPARTMENT OF HIGHWAYS
1963

-X-281-

NYROP, TIDWELL & ASSOC. INC. SIOUX FALLS, SOUTH DAKOTA	DESIGNED BY H.F.	DRAWN BY R.L.W.	CHECKED BY W.E.N.	APPROVED W.H. Schutt BRIDGE ENGINEER

52-830-310

STATE OF	PROJECT	SHEET NO.	TOTAL SHEETS
S.D.	090 W-468	E25	E31

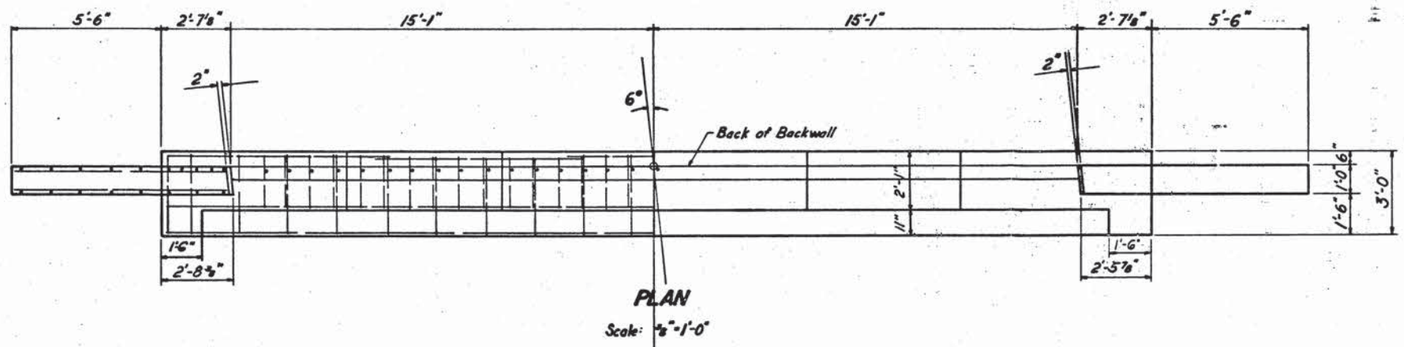

PLAN

Scale: ⅛"=1'-0"

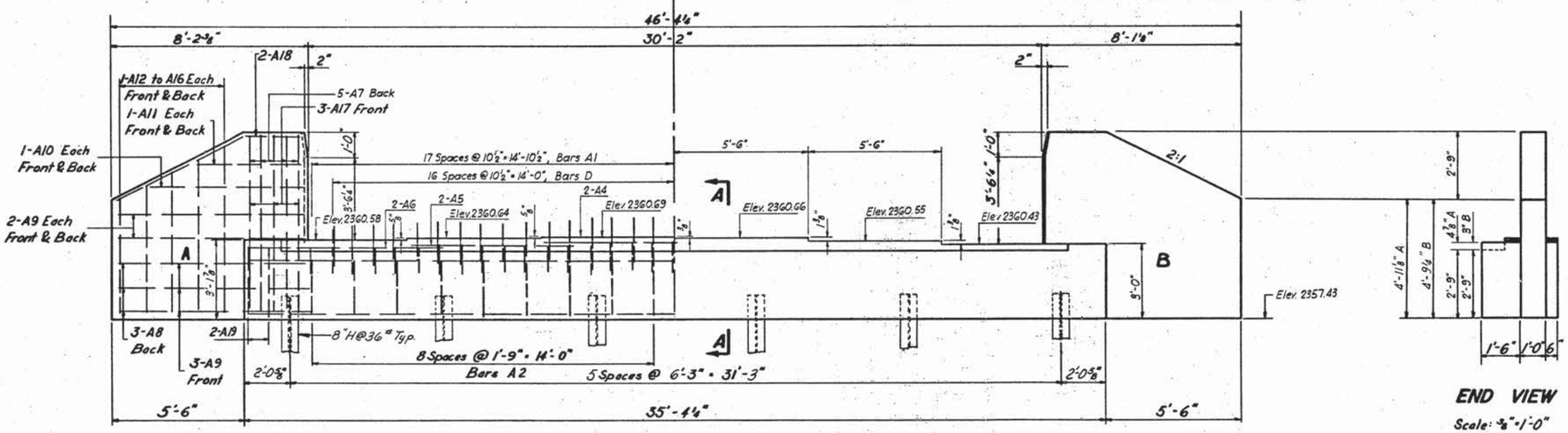

ELEVATION

Scale: ⅛"=1'-0"

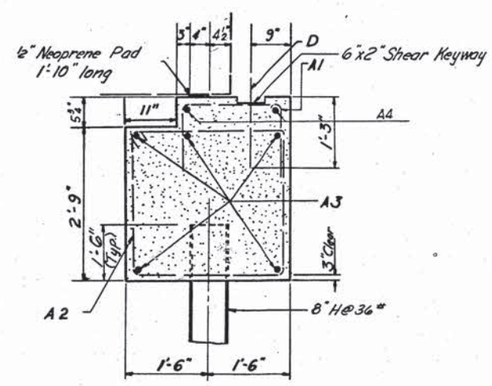

SECTION A-A

Scale: ¾"=1'-0"

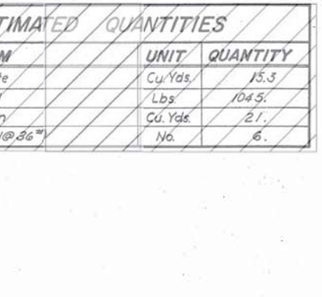

END VIEW

Scale: ⅛"=1'-0"

REINFORCING SCHEDULE (For one Sill only)

Mark	No.	Size	Length	Type
A1	35	4	3'-3"	S10
A2	18	4	11'-0"	T1
A3	5	5	35'-0"	Str.
A4	2	5	10'-9"	Str.
A5	4	5	6'-3"	Str.
A6	4	5	7'-6"	Str.
A7	10	6	7'-3"	Str.
A8	6	6	7'-9"	Str.
A9	14	4	7'-9"	Str.
A10	4	4	6'-9"	Str.
A11	4	4	4'-9"	Str.
A12	4	4	4'-6"	Str.
A13	4	4	5'-0"	Str.
A14	4	4	5'-6"	Str.
A15	4	4	6'-0"	Str.
A16	4	4	6'-6"	Str.
A17	6	4	7'-3"	Str.
A18	4	5	8'-3"	19A
A19	4	4	11'-6"	T1
D	33	6	2'-6"	Str.

Bending Details

All dimensions are out to out of bars

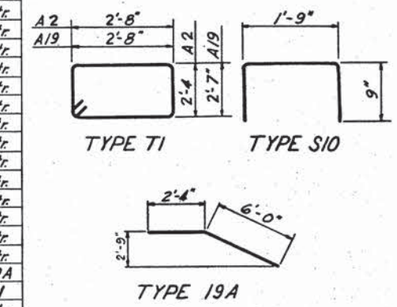

ESTIMATED QUANTITIES

ITEM	UNIT	QUANTITY
Class "A" Concrete	Cu. Yds.	15.3
Reinforcing Steel	Lbs.	1045.
Struct. Excavation	Cu. Yds.	21.
Steel Piles (8" H@36#)	No.	6.

GENERAL NOTES

1. All exposed edges shall be cambered 1" except as shown.
2. Use 2" clear cover on all reinforcing except as shown.
3. Piling shall develop a minimum bearing value of 32 Tons per pile.
4. See General Drawing for lengths of Steel Piles.
5. Design Loading: H20-S16-44 A.A.S.H.O.
6. Unit Stresses: Re-Steel - f_s = 20,000 p.s.i (Int. Grade)
   Concrete - f_c = 1600 p.s.i.
7. All reinforcing steel bars shall conform to A.S.T.M. Specifications A305 (T-Current) and A15 (T-Current) intermediate Grade.

ORIGINAL CONSTRUCTION PLANS

DETAILS OF SILL NO. 5
FOR
227'-9" PRESTRESSED BEAM BRIDGE

30'-0" ROADWAY — 6° SKEW L.H.F.
OVER I-90 STA. 341+50 — SEC. 12-T1N-R14E
STA. 7+95.12 TO STA. 10+22.88 — JENSEN RD.
PENNINGTON COUNTY — H20-S16-44
SOUTH DAKOTA — I-90-2(22)96
DEPARTMENT OF HIGHWAYS
1963

-X-281-

NYROP, TIDWELL & ASSOC. INC. SIOUX FALLS, SOUTH DAKOTA	DESIGNED BY H.F.	DRAWN BY R.L.W.	CHECKED BY W.E.N.	APPROVED BRIDGE ENGINEER

STATE OF	PROJECT	SHEET NO.	TOTAL SHEETS
S.D.	090 W-468	E26	E31

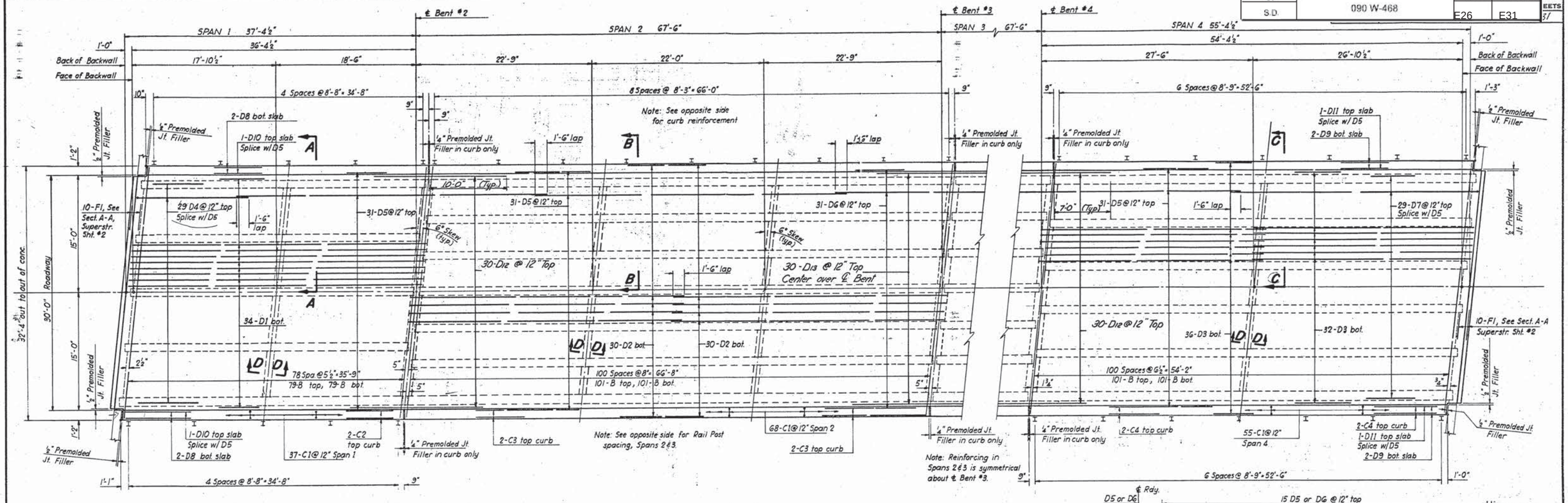

PLAN

Scale: 1/6" = 1'-0"

CONCRETE PLACING NOTES

The concrete slab shall preferably be placed in one continuous pour. However, if the contractor deems it advisable to use construction joints, a plan showing type of joint and pouring procedure shall be submitted to the BRIDGE SECTION for approval.

The curbs shall be poured after all the slab has been poured.

Diaphragms at sills and bents shall be poured and the concrete shall attain 75 percent of its required 28-day strength prior to placing of deck concrete.

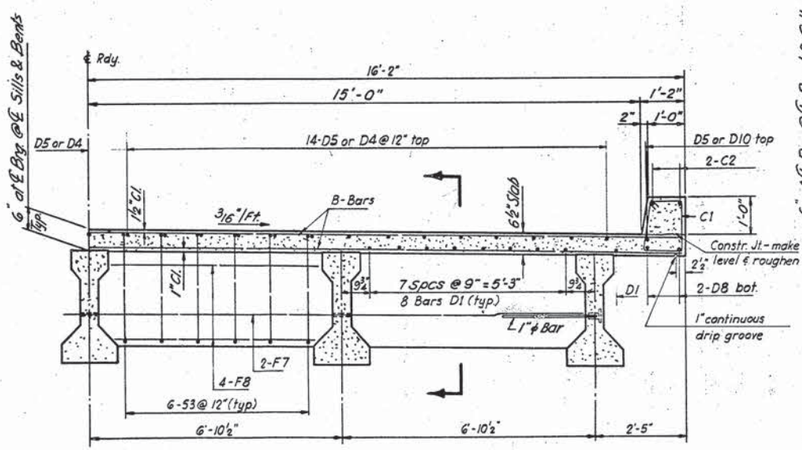

SECTION A-A

Scale: ½" = 1'-0"

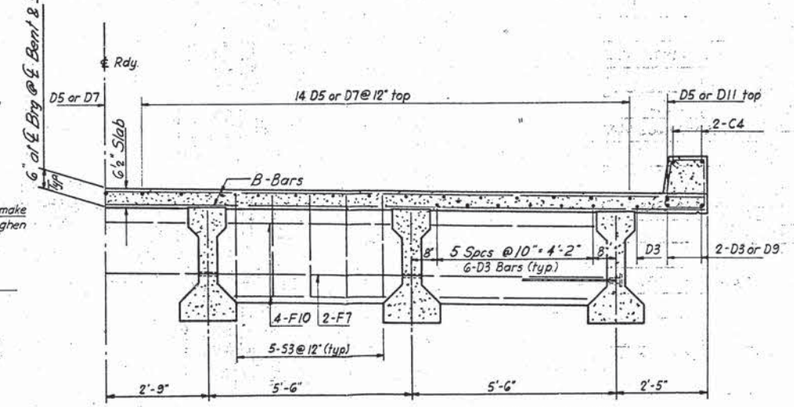

Note: See Sec. A-A for details not shown.

SECTION C-C

Scale: ½" = 1'-0"

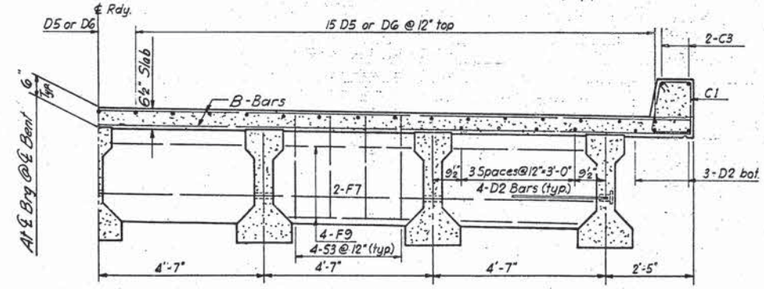

Note: See Sec. A-A for details not shown.

SECTION B-B

Scale ½" = 1'-0"

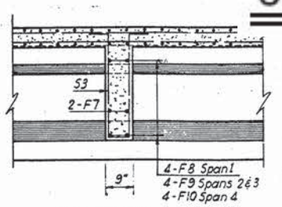

SECTION D-D

Scale ½" = 1'-0"

ORIGINAL CONSTRUCTION PLANS

DETAILS OF SUPERSTRUCTURE SHEET NO. 1
FOR
227'-9" PRESTRESSED BEAM BRIDGE

30'-0" ROADWAY — 6° SKEW L.H.F.
OVER I-90 STA. 341+50 — SEC. 12-T1N-14E
STA. 7+95.12 TO STA. 10+22.88 JENSEN ROAD
PENNINGTON COUNTY — H20-S16-44

SOUTH DAKOTA I-90-2(22)96
DEPARTMENT OF HIGHWAYS
1963

15 OF 20

-X-281-

NYROP, TIDWELL & ASSOC. INC. SIOUX FALLS, SOUTH DAKOTA	DESIGNED BY H.F.	DRAWN BY D.B.	CHECKED BY W.E.N.	APPROVED BRIDGE ENGINEER

STATE OF	PROJECT	SHEET NO.	TOTAL SHEETS
S.D.	090 W-468	E27	E31

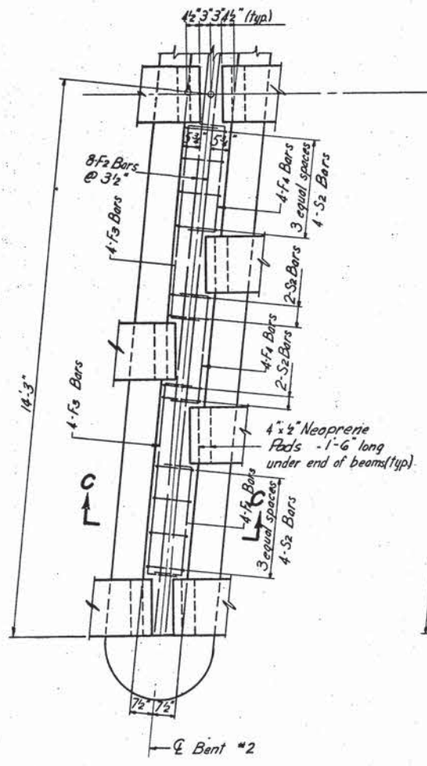

PLAN

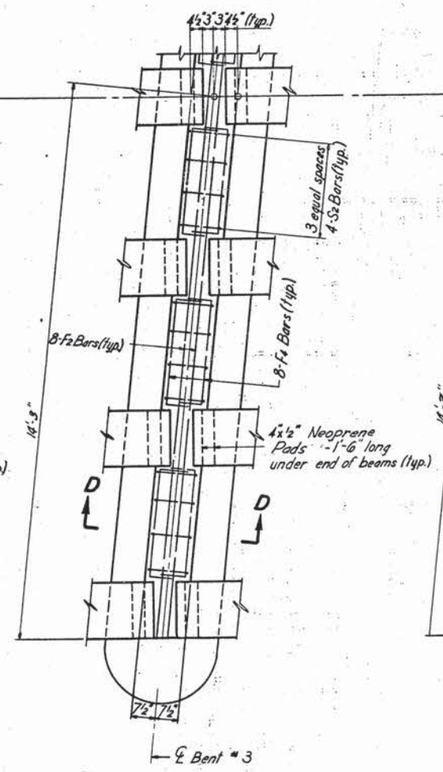

PLAN
Scale: ½" = 1'-0"

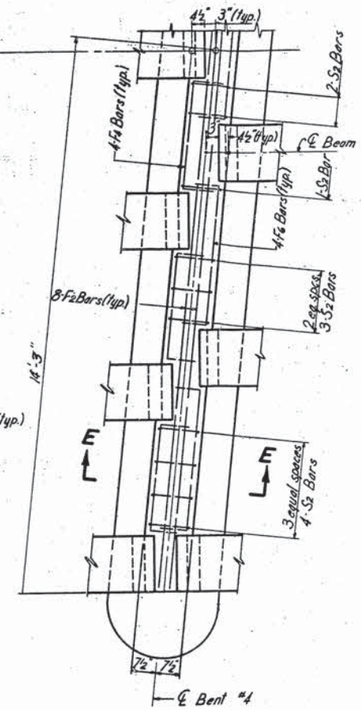

PLAN

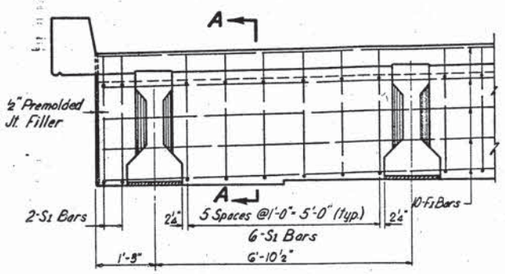

SILL NO. 1
Scale ½" = 1'-0"

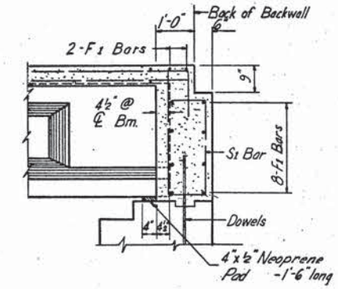

SECTION A-A
Scale: ½" = 1'-0"

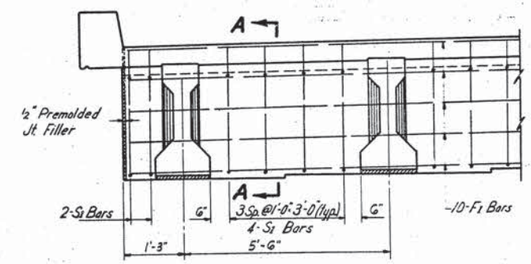

SILL NO. 5
Scale ½" = 1'-0"

DIAPHRAGM DETAILS AT SILLS

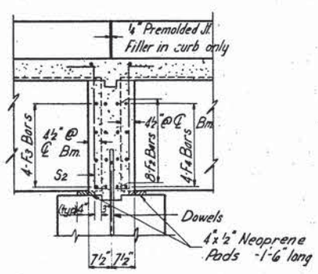

SECTION C-C
DIAPHRAGM DETAILS
BENT NO. 2

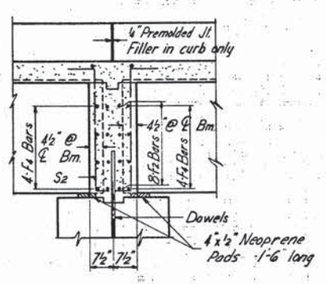

SECTION D-D
DIAPHRAGM DETAILS
BENT NO. 3
Scale: ½" = 1'-0"

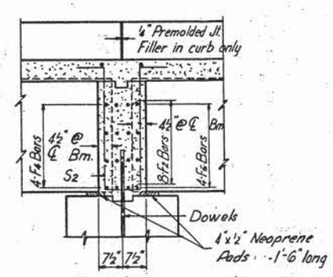

SECTION E-E
DIAPHRAGM DETAILS
BENT NO. 4

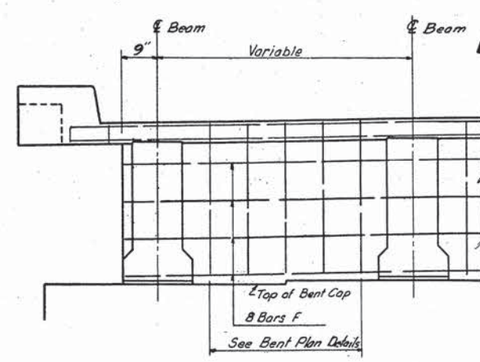

DIAPHRAGM AT BENTS

ORIGINAL CONSTRUCTION PLANS

DETAILS OF SUPERSTRUCTURE SHEET NO. 2
FOR
227'-9" PRESTRESSED BEAM BRIDGE

30'-0" ROADWAY — 6° SKEW L.H.F.
OVER I-90 STA. 341+50 — SEC. 12-T1N-14E
STA. 7+95.12 TO STA. 10+22.88 JENSEN ROAD
PENNINGTON COUNTY — H20-S16-44
SOUTH DAKOTA — I-90-2(22)96
DEPARTMENT OF HIGHWAYS
1963 — 16 OF 20

-X-281-

NYROP, TIDWELL & ASSOC. INC. SIOUX FALLS, SOUTH DAKOTA	DESIGNED BY	DRAWN BY	CHECKED BY	APPROVED
	H.F.	R.L.W.	W.E.N.	R. L. Schuett BRIDGE ENGINEER

STATE OF	PROJECT	SHEET NO.	TOTAL SHEETS
S.D.	090 W-468	E28	E31

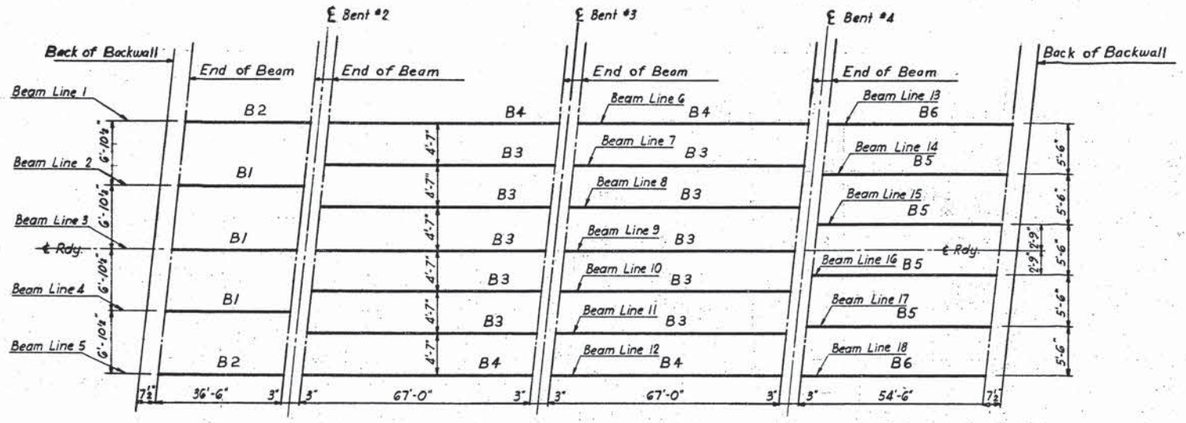

KEY PLAN OF GIRDER LAYOUT

Not to scale

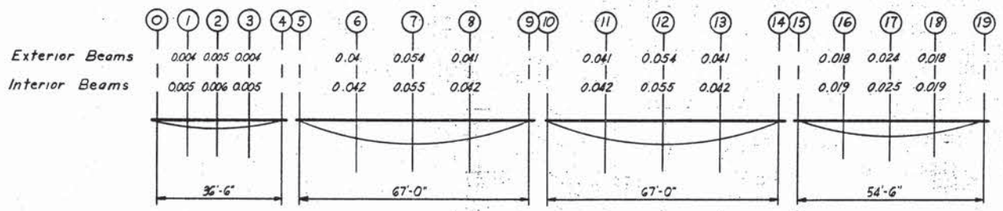

D. L. DEFLECTION DIAGRAM

Deflections due to total D.L. exclusive of beam wt.
(Deflections in Feet)

REINFORCING SCHEDULE

Mark	No.	Size	Length	Type
B	764	#5	32'-0"	Str.
C1	456	#4	5'-3"	12
C2	4	#5	36'-0"	Str.
C3	16	#5	34'-3"	Str.
C4	8	#5	27'-9"	Str.
D1	34	#5	38'-0"	Str.
D2	120	#5	35'-3"	Str.
D3	68	#5	28'-9"	Str.
D4	29	#5	15'-3"	17
D5	124	#5	40'-0"	Str.
D6	31	#5	30'-0"	Str.
D7	29	#5	33'-3"	17
D8	4	#5	37'-0"	Str.
D9	4	#5	27'-9"	Str.
D10	2	#5	13'-3"	Str.
D11	2	#5	31'-3"	Str.
D12	60	#4	17'-0"	Str.
D13	30	#4	20'-0"	Str.
F1	20	#5	29'-6"	Str.
F2	24	#5	28'-6"	Str.
F3	16	#5	6'-6"	18-A
F4	96	#5	4'-3"	18-A
F6	20	#5	5'-3"	18-A
F7	12	#7	26'-6"	Str.
F8	16	#5	5'-6"	Str.
F9	96	#5	3'-3"	Str.
F10	20	#5	4'-3"	Str.
S1	28	#5	6'-9"	16-A
S2	68	#5	9'-0"	16-B
S3	150	#5	7'-6"	16-B

Bending Details

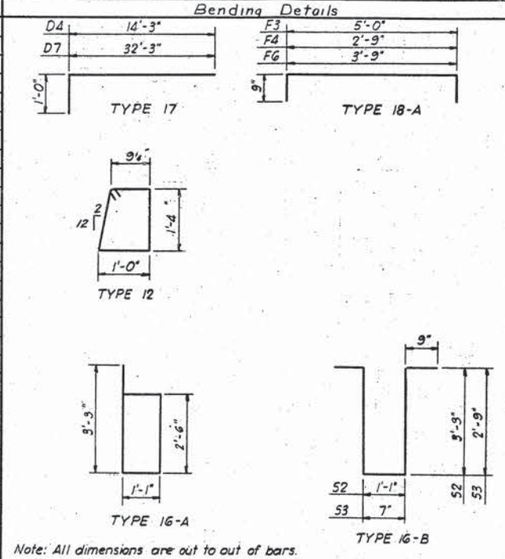

Note: All dimensions are out to out of bars.

ESTIMATED QUANTITIES

Item	Unit	Quantity
Class "A" Concrete	Cu. Yd.	193.4
Reinforcing Steel	Lb.	48,945
Railing (Type RA-1M Steel)	Lin. Ft.	457.8
67'-0" Prestressed Conc. Beam	Ea.	14
54'-6" Prestressed Conc. Beam	Ea.	6
36'-6" Prestressed Conc. Beam	Ea.	5

TABLE OF SLAB FORM ELEVATIONS AND COMPUTATIONS

		0	1	2	3	4	5	6	7	8	9	10	11	12	13	14	15	16	17	18	19
B.L. #1	ELEV. N																				
	ELEV. L	2352.290	2353.640	2354.004	2354.373	2354.728	2354.780	2355.503	2356.231	2356.949	2357.639	2357.695	2358.482	2359.274	2360.055	2360.808	2360.870	2361.541	2362.230	2362.916	2363.581
	=H																				
B.L. #2	ELEV. N																				
	ELEV. L	2353.369	2353.719	2354.085	2354.452	2354.805	2354.831	2355.557	2356.284	2357.002	2357.689	2357.745	2358.534	2359.325	2360.106	2360.856	2360.927	2361.599	2362.287	2362.973	2363.637
	=H																				
B.L. #3	ELEV. N																				
	ELEV. L	2353.448	2353.798	2354.162	2354.530	2354.883	2354.883	2355.607	2356.334	2357.051	2357.738	2357.795	2358.852	2359.373	2360.154	2360.903	2360.984	2361.656	2362.344	2363.029	2363.693
	=H																				
B.L. #4	ELEV. N																				
	ELEV. L	2353.313	2353.662	2354.026	2354.394	2354.746	2354.935	2355.659	2356.385	2357.102	2357.788	2357.845	2358.632	2359.423	2360.208	2360.952	2360.957	2361.627	2362.314	2362.999	2363.663
	=H																				
B.L. #5	ELEV. N																				
	ELEV. L	2353.178	2353.525	2353.889	2354.256	2354.609	2354.842	2355.566	2356.293	2357.009	2357.694	2357.752	2358.537	2359.328	2360.108	2360.856	2360.842	2361.513	2362.199	2362.884	2363.547
	=H																				
B.L. #6	ELEV. N																				
	ELEV. L						2354.780	2355.503	2356.231	2356.949	2357.639	2357.695	2358.482	2359.274	2360.055	2360.808	2360.870	2361.541	2362.230	2362.916	2363.581
	=H																				
B.L. #7	ELEV. N																				
	ELEV. L						2354.831	2355.557	2356.284	2357.002	2357.689	2357.745	2358.534	2359.325	2360.106	2360.856	2360.927	2361.599	2362.287	2362.973	2363.637
	=H																				
B.L. #8	ELEV. N																				
	ELEV. L						2354.883	2355.607	2356.334	2357.051	2357.738	2357.795	2358.852	2359.373	2360.154	2360.903	2360.984	2361.656	2362.344	2363.029	2363.693
	=H																				
B.L. #9	ELEV. N																				
	ELEV. L						2354.935	2355.659	2356.385	2357.102	2357.788	2357.845	2358.632	2359.423	2360.208	2360.952	2360.957	2361.627	2362.314	2362.999	2363.663
	=H																				
B.L. #10	ELEV. N																				
	ELEV. L						2354.842	2355.566	2356.293	2357.009	2357.694	2357.752	2358.537	2359.328	2360.108	2360.856	2360.842	2361.513	2362.199	2362.884	2363.547
	=H																				
B.L. #11	ELEV. N																				
	ELEV. L						2354.752	2355.475	2356.201	2356.917	2357.603	2357.659	2358.444	2359.234	2360.014	2360.763					
	=H																				
B.L. #12	ELEV. N																				
	ELEV. L						2354.660	2355.383	2356.108	2356.823	2357.509	2357.565	2358.350	2359.139	2359.919	2360.667					
	=H																				
B.L. #13	ELEV. N																				
	ELEV. L																2360.870	2361.541	2362.230	2362.916	2363.581
	=H																				
B.L. #14	ELEV. N																				
	ELEV. L																2360.927	2361.599	2362.287	2362.973	2363.637
	=H																				
B.L. #15	ELEV. N																				
	ELEV. L																2360.984	2361.656	2362.344	2363.029	2363.693
	=H																				
B.L. #16	ELEV. N																				
	ELEV. L																2360.957	2361.627	2362.314	2362.999	2363.663
	=H																				
B.L. #17	ELEV. N																				
	ELEV. L																2360.842	2361.513	2362.199	2362.884	2363.547
	=H																				
B.L. #18	ELEV. N																				
	ELEV. L																2360.728	2361.397	2362.083	2362.767	2363.431
	=H																				

Note

This table contains the information necessary to determine the depth of concrete over the beams at the points shown. Calculations may be carried in the spaces provided.

Elevation "L" is the final slab elevation minus the slab thickness and plus the anticipated deflection due to all D.L. above the beams. Elevation "N" is a field measured elevation and must be taken after all erection is completed, but prior to placing any of the concrete.

ORIGINAL CONSTRUCTION PLANS

DETAILS OF SUPERSTRUCTURE SHEET NO. 3
FOR
227'-9" PRESTRESSED BEAM BRIDGE

30'-0" ROADWAY — 6° SKEW L.H.F.
OVER I-90 STA. 341+50 — SEC. 12-T.1N-R14E
STA. 7+95.12 TO STA. 10+22.88 JENSEN RD.

PENNINGTON COUNTY H20-S16-44
SOUTH DAKOTA I-90-2(22)96

DEPARTMENT OF HIGHWAYS
1963

-X-281-

NYROP, TIDWELL & ASSOC. INC. SIOUX FALLS, SOUTH DAKOTA	DESIGNED BY H.F.	DRAWN BY D.B.	CHECKED BY W.E.N.	APPROVED BRIDGE ENGINEER

STATE OF	PROJECT	SHEET NO.	TOTAL SHEETS
S.D.	090 W-468	E29	E31

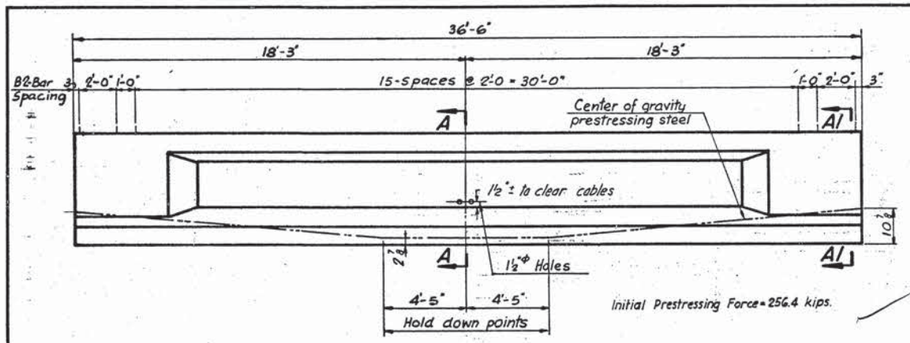

BEAM B1
Not to scale

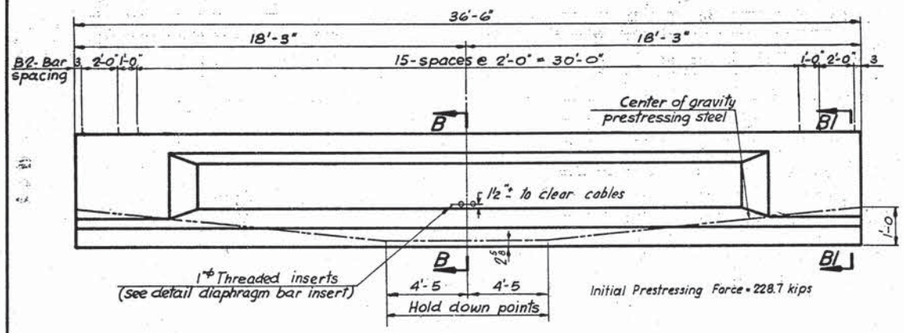

BEAM B2
Not to scale

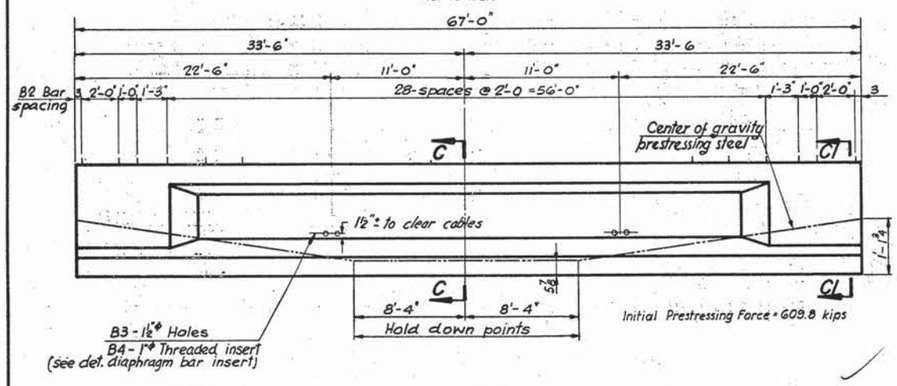

BEAM B3 & B4
Not to scale

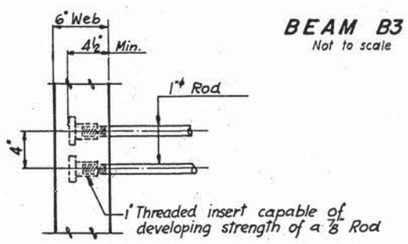

DIAPHRAGM BAR INSERT
Scale: 1½" = 1'-0"

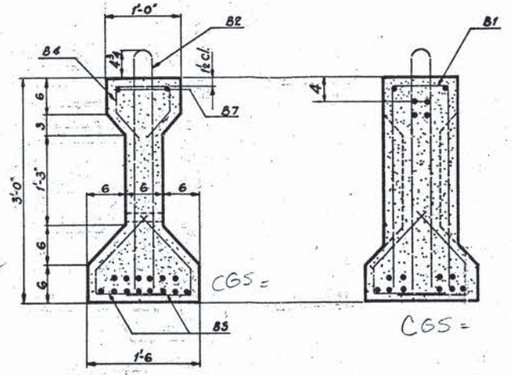

SECTION A-A
Scale: 1" = 1'-0"

SECTION A1-A1
Scale: 1" = 1'-0"

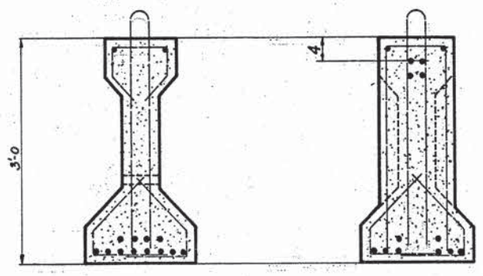

SECTION B-B

SECTION B1-B1

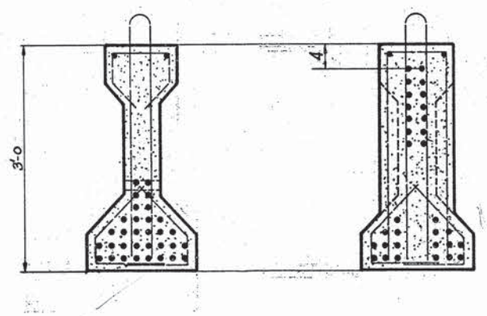

SECTION C-C

SECTION C1-C1

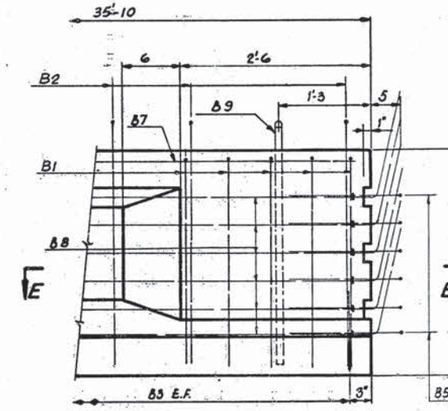

END BLOCK
Scale: 1" = 1'-0"

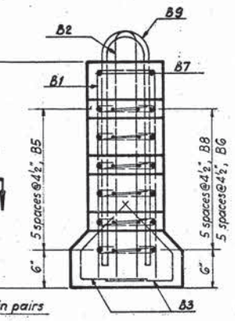

END VIEW
Scale: 1" = 1'-0"

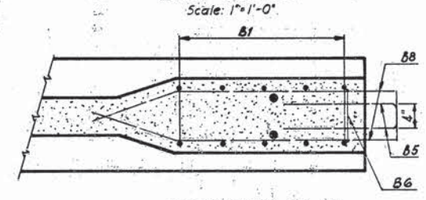

SECTION E-E
Scale: 1" = 1'-0"

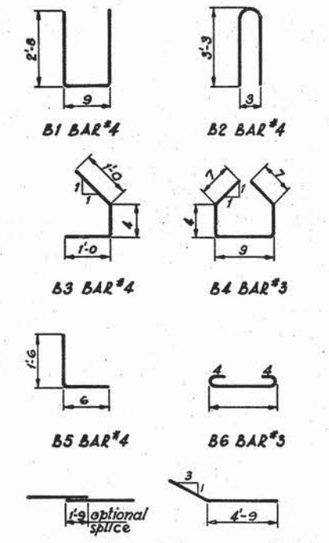

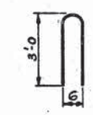

B9 BAR #10
(Lifting device)

Note:
All dimensions are out to out of bar. Bars B5 & B8 may be straight for fabrication and bent in field.

ORIGINAL CONSTRUCTION PLANS

DETAILS OF PRESTRESSED BEAMS SHEET NO.1
FOR
227'-9" PRESTRESSED BEAM BRIDGE

30'-0" ROADWAY — 6° SKEW L.H.F.
OVER I-90 STA. 341+50 — SEC. 12-T1N-R14E
STA. 7+95.12 TO STA. 10+22.88 JENSEN RD.
PENNINGTON COUNTY — H20-S16-44
SOUTH DAKOTA I-90-2(22)96
DEPARTMENT OF HIGHWAYS
1963 — 18 OF 20

-X-281-

NYROP, TIDWELL & ASSOC. INC. SIOUX FALLS, SOUTH DAKOTA	DESIGNED BY	DRAWN BY	CHECKED BY	APPROVED
	H.F.	R.L.W.	W.E.N.	BRIDGE ENGINEER

STATE OF	PROJECT	SHEET NO.	TOTAL SHEETS
S.D.	090 W-468	E30	E31

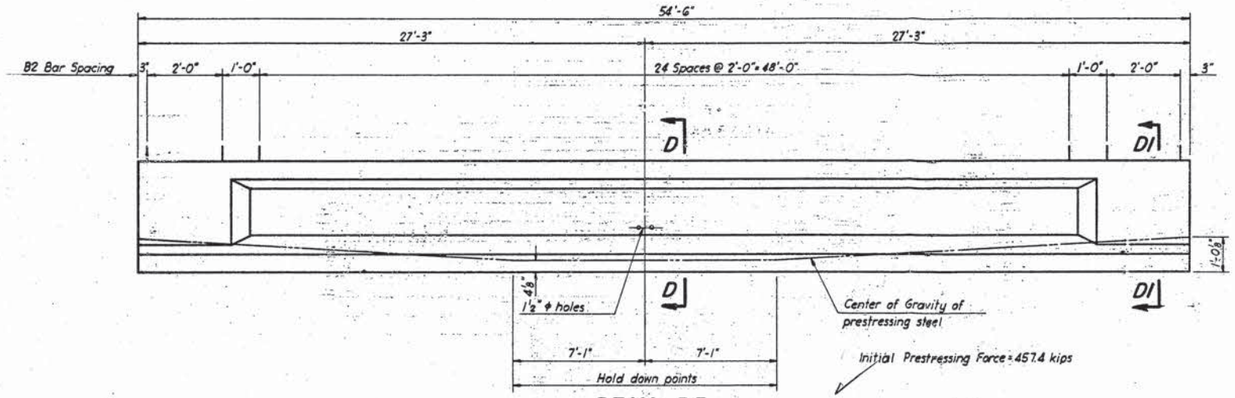

BEAM B5

Not to scale

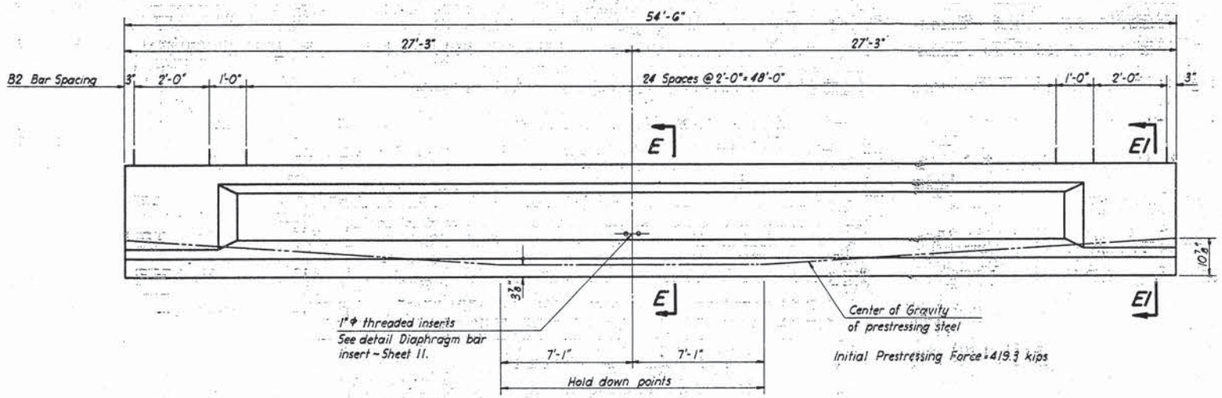

BEAM B6

Not to scale

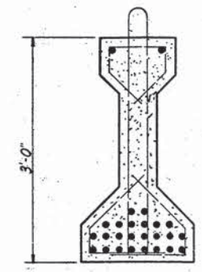

SECTION D-D

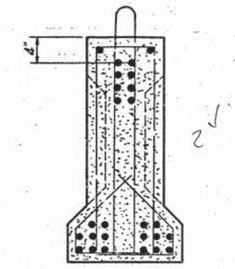

SECTION D1-D1

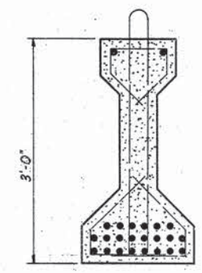

SECTION E-E

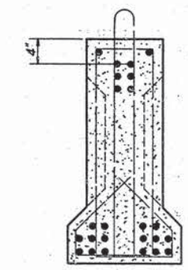

SECTION E1-E1

Scale: 1" = 1'-0"

Note: For Details not shown see Sheet 11.

GENERAL NOTES

Beam details shown are for pre-tensioning with high-tensile strength seven-wire strands of 7/16" nominal diameter. For magnitude of initial prestressing force, see beam details.

Alternate conventional methods of prestressing may be used provided that the design stresses on the different loading conditions are within the allowable stresses specified in A.A.S.H.O. Specifications, 1961.

Concrete for beams shall be Class "A" with a minimum compressive strength of 4500 psi at transfer of prestress and minimum ultimate compressive strength of 5000 psi.

Design Loading: H20-S16-44 A.A.S.H.O. and Alternate Loading as designated in P.P.M. 20-4 Section 4c.

The design of the lifting devices (Bar B9) is optional provided that they have adequate strength and do not impair the beam structurally.

All exposed corners and edges of beams shall be chamfered ¾".

All prestressed beam details shall be approved by the Bridge Division before casting is begun.

The unit price bid per beam shall include the cost of all materials and labor necessary to furnish the beam erected in accordance with the plans and specifications.

The cost of premolded joint filler shall be included in the unit price bid for Class "A" Concrete.

Use "A.A.S.H.O. Standard Specifications for Highway Bridges", 1961 and tentative recommendations for Prestressed Concrete by ACI-ASCE Joint Committee 323 and Bureau of Public Roads "Criteria for Prestressed Concrete Bridges".

All prestressed girders in any span shall preferably be cast within an 8 day period. If not, the newest girder shall be at least 6 weeks old before the deck slab is poured.

Finish of Tops: Tops of all beams shall be left rough. At approximately the time of the initial set, all laitance shall be removed with a coarse wire brush.

The girders shall be poured in all-steel forms.

All reinforcing steel shall conform to A.S.T.M. Specifications A305 and A15, Intermediate grade.

ORIGINAL CONSTRUCTION PLANS

DETAILS OF PRESTRESSED BEAMS SHEET NO. 2
FOR
227'-9" PRESTRESSED BEAM BRIDGE

30'-0" ROADWAY — 6° SKEW L.H.F.
OVER I-90 STA. 341+50 — SEC. 12-T1N-14E
STA. 7+95.12 TO STA. 10+22.88 JENSEN ROAD
PENNINGTON COUNTY — H20-S16-44
SOUTH DAKOTA — I-90-2(22)96
DEPARTMENT OF HIGHWAYS

1963

-X-281-

NYROP, TIDWELL & ASSOC. INC. SIOUX FALLS, SOUTH DAKOTA	DESIGNED BY H.F.	DRAWN BY D.B.	CHECKED BY W.N.	APPROVED BRIDGE ENGINEER

STATE OF	PROJECT	SHEET NO.	TOTAL SHEETS
S.D.	090 W-468	E31	E31

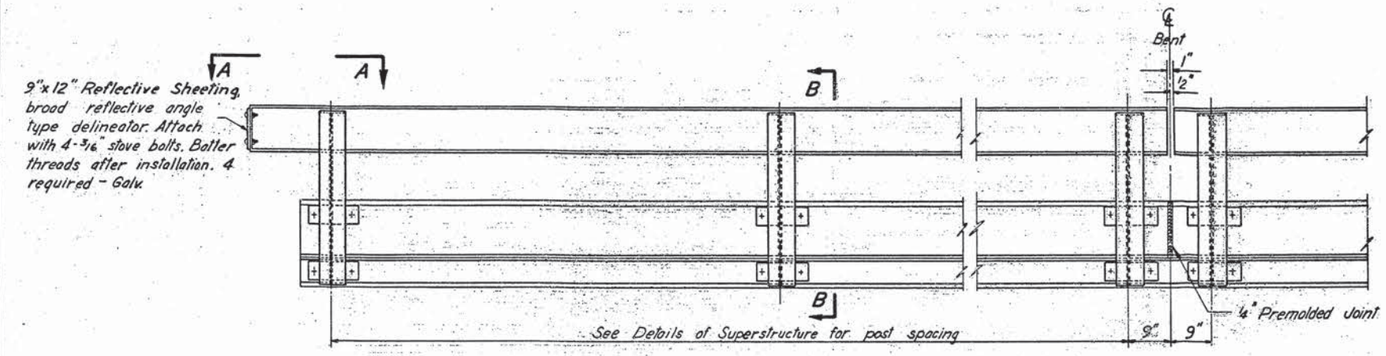

ELEVATION OF RAILING AT INTERMEDIATE POSTS

ELEVATION OF RAILING AT BENTS FOR CONTINUOUS UNIT

Scale: 3/4"=1'-0"

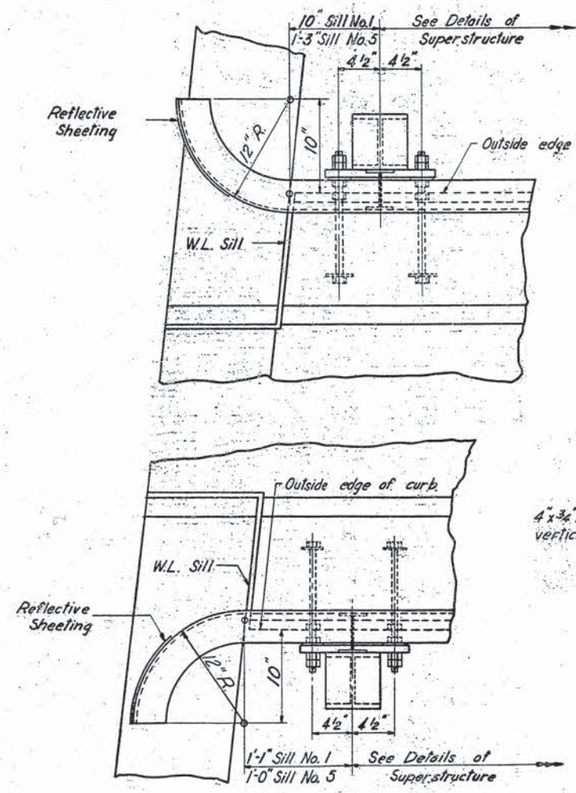

VIEW A-A

Scale: 1 1/2"=1'-0"

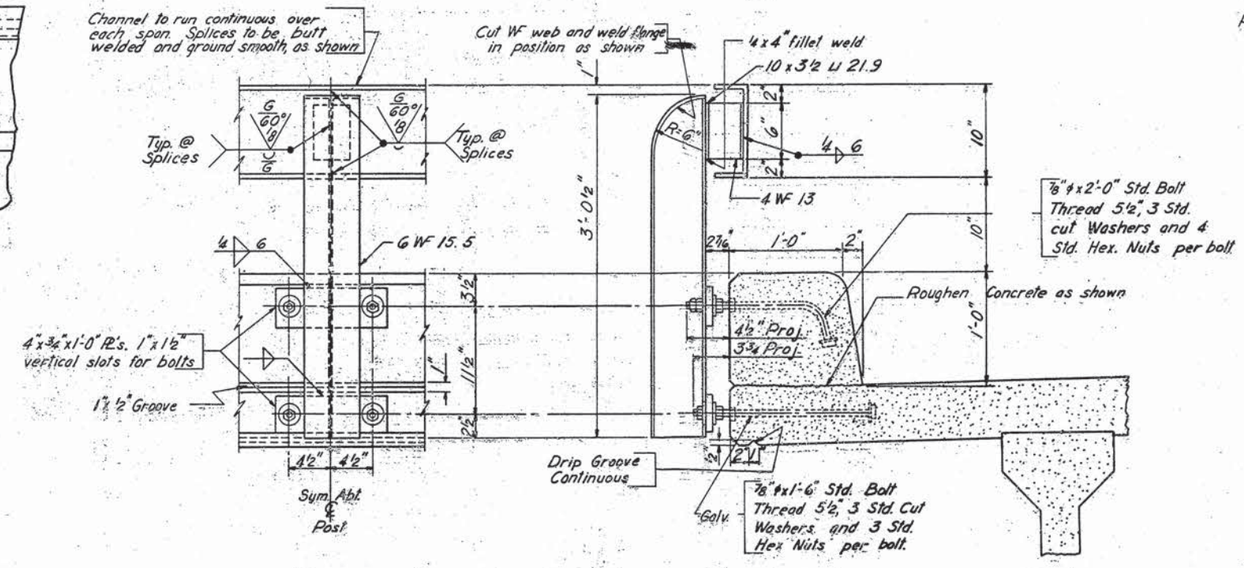

SECTION B-B

Scale: 1 1/2"=1'-0"

GENERAL NOTES

All Rail Posts shall be built vertical.

Cost of galvanized Bolts, Nuts, and Washers shall be included in the unit price bid for Railing.

Cost of Reflective Sheeting shall be included in the unit price bid for Railing.

Cost of welding shall be included in the unit price bid for Railing.

Railing shall be painted with one shop coat of Red Lead paint (A.A.S.H.O. Designation M72 Type I) or Red Lead Iron Oxide Paint (A.A.S.H.O. Designation M 72 Type III) with the requirement calling for cleaning by means of sand blasting being waived, and two field coats of Aluminum Paint (A.A.S.H.O. Designation M69). Cost of Painting of Railing shall be included in the unit price bid for Railing.

Cost of Premolded Expansion Joint Filler shall be included in the unit price bid for Class "A" Concrete.

ORIGINAL CONSTRUCTION PLANS

DETAILS OF TYPE RA-1M STEEL RAILING
FOR
227'-9" PRESTRESSED BEAM BRIDGE

30'-0" ROADWAY — 6° SKEW
OVER I-90 STA. 341+50 — SEC. 12-T1N-R14E
STA. 7+95.12 TO STA. 10+22.88 — JENSEN ROAD
PENNINGTON COUNTY H20-S16-44
SOUTH DAKOTA I-90-2(22)96
DEPARTMENT OF HIGHWAYS
1963

20 OF 20

-X-281-

NYROP, TIDWELL & ASSOC. INC. SIOUX FALLS, SOUTH DAKOTA	DESIGNED BY H.F.	DRAWN BY R.L.W.	CHECKED BY W.E.N.	APPROVED [signature] BRIDGE ENGINEER