FOR BIDDING PURPOSES ONLY

# SECTION G
# UTILITY PLANS

PROJECT LOCATION MAP

**INDEX OF SHEETS**


| SHEET NUMBER | DESCRIPTION |
|---|---|
| G1 | PROJECT LOCATION WITH INDEX |
| G2-G16 | ESTIMATE OF QUANTITIES AND GENERAL NOTES AND TABLES |
| G17 | PROJECT PHASING LAYOUT |
| G18-G21 | PROJECT LAYOUTS |
| G22-G27 | DEMOLITION AND REMOVAL PLANS |
| G28-G55 | UTILITY PLAN AND PROFILES |
| G56-G57 | SANITARY MANHOLE DETAILS |
| G58-G67 | PROJECT DETAILS |
| G68-G83 | CATHODIC PROTECTION DETAILS |


0' 175' 350'

REGISTERED PROFESSIONAL ENGINEER
REG. NO.
2780
GREGORY M. WIERENGA
SOUTH DAKOTA
3-19-16

ONE CALL
BEFORE DIGGING
1-800-781-7474

AE2S

Plans Prepared For
Public Works Department
RAPID CITY SOUTH DAKOTA
Engineering Services

August 17, 2016 12:50:32 pm
Drawing: T:\ESHEETLDNG (JOINS) (P:)\PROJECTS & PROPOSALS\11119.00 MT. RUSHMORE RD. UTILITIES RECONSTRUCTION\DRAWINGS\SHEETS\PHASE 2 - FLORMANN TO SAINT JAMES\)

| Prepared By: | Prepared For: | Scale: | Revisions: | | |
|---|---|---|---|---|---|
| AE2S | Public Works Department<br>Rapid City, South Dakota<br>Engineering Services | Designed By: GW<br>Drawn By:<br>Design Date: 02.2016 - 04.2016<br>Print Date: 09.02.2016<br>Internal Job No: 11119.04<br>Surveyed By: SDDOT<br>Survey Date: 2012<br>Project Number: 12-2051, CIP NO.50867, PCN X02P | Number: | Description: | FOR BIDDING PURPOSES ONLY |

MOUNT RUSHMORE ROAD
UTILITY RECONSTRUCTION

Sheet Title: SECTION G
ESTIMATE OF QUANTITIES AND GENERAL NOTES AND TABLES

Sheet No: G2 of G83

## SECTION G ESTIMATE OF QUANTITIES

| BID ITEM NUMBER | ITEM | QUANTITY | UNIT |
|---|---|---|---|
| 009E0010 | Mobilization | Lump Sum | LS |
| 009E3200 | Construction Staking | Lump Sum | LS |
| 110E0300 | Remove Concrete Curb and/or Gutter | 38 | Ft |
| 110E0370 | Remove Curb Stop | 24 | Each |
| 110E0460 | Remove Manhole | 6 | Each |
| 110E0520 | Remove Sewer Pipe | 908 | Ft |
| 110E1010 | Remove Asphalt Concrete Pavement | 640.9 | SqYd |
| 110E1100 | Remove Concrete Pavement | 42.6 | SqYd |
| 110E1950 | Remove Contaminated Water | 20 | MGal |
| 110E5740 | Salvage Fire Hydrant | 11 | Each |
| 110E5765 | Salvage Valve and Valve Box | 33 | Each |
| 120E0900 | Contaminated Material Excavation | 200 | CuYd |
| 250E0010 | Incidental Work | Lump Sum | LS |
| 260E1010 | Base Course | 199.4 | Ton |
| 260E6010 | Granular Material | 150.0 | Ton |
| 320E1200 | Asphalt Concrete Composite | 156.1 | Ton |
| 380E3020 | 6” PCC Driveway Pavement | 42.6 | SqYd |
| 451E0301 | Pipe Encasement | 7 | Each |
| 451E0654 | 4” PVC Restrained Joint Water Main | 59 | Ft |
| 451E0656 | 6" PVC Restrained Joint Water Main | 244 | Ft |
| 451E0658 | 8" PVC Restrained Joint Water Main | 1855 | Ft |
| 451E0662 | 12" PVC Restrained Joint Water Main | 2879 | Ft |
| 451E0666 | 16" PVC Restrained Joint Water Main | 348 | Ft |
| 451E0802 | 1" Copper Pipe | 608 | Ft |
| 451E0806 | 1.5" Copper Pipe | 74 | Ft |
| 451E0808 | 2" Copper Pipe | 43 | Ft |
| 451E1008 | 8" PVC Sewer Pipe | 3092 | Ft |
| 451E1204 | 4" Sewer Service | 683 | Ft |
| 451E1504 | 4" Sanitary Sewer Service Cleanout | 18 | Each |
| 451E2213 | 8"x 6" Pipe Tee | 5 | Each |
| 451E2214 | 8 x 8" Pipe Tee | 2 | Each |
| 451E2230 | 12” x 4” Pipe Tee | 1 | Each |
| 451E2231 | 12"x 6" Pipe Tee | 6 | Each |
| 451E2232 | 12"x 8" Pipe Tee | 3 | Each |
| 451E2251 | 16" x 6" Pipe Tee | 2 | Each |

## SECTION G ESTIMATE OF QUANTITIES CONT.

| BID ITEM NUMBER | ITEM | QUANTITY | UNIT |
|---|---|---|---|
| 451E2332 | 12" x 8" Pipe Cross | 3 | Each |
| 451E2334 | 12" x 12" Pipe Cross | 1 | Each |
| 451E2352 | 16" x 12" Pipe Cross | 3 | Each |
| 451E2413 | 8" x 6" Pipe Reducer | 4 | Each |
| 451E2432 | 12" x 8" Pipe Reducer | 1 | Each |
| 451E2802 | 1" Corporation Stop with Tapping Saddle | 18 | Each |
| 451E2806 | 1.5" Corporation Stop with Tapping Saddle | 2 | Each |
| 451E2808 | 2" Corporation Stop with Tapping Saddle | 2 | Each |
| 451E2902 | 1" Curb Stop with Box | 18 | Each |
| 451E2906 | 1.5" Curb Stop with Box | 2 | Each |
| 451E2908 | 2" Curb Stop with Box | 2 | Each |
| 451E3006 | 6" Pipe Bend | 12 | Each |
| 451E3008 | 8" Pipe Bend | 6 | Each |
| 451E3012 | 12" Pipe Bend | 6 | Each |
| 451E3104 | 4” Pipe Cap | 1 | Each |
| 451E3112 | 12” Pipe Cap | 1 | Each |
| 451E3206 | 6" Pipe Coupling | 2 | Each |
| 451E3208 | 8" Pipe Coupling | 7 | Each |
| 451E3212 | 12" Pipe Coupling | 4 | Each |
| 451E3306 | 6" Pipe Transition Coupling | 2 | Each |
| 451E3308 | 8" Pipe Transition Coupling | 3 | Each |
| 451E3412 | 6” Pipe Plug | 1 | Each |
| 451E3456 | 16" Pipe Plug | 2 | Each |
| 451E4204 | 4” Gate Valve with Box | 1 | Each |
| 451E4208 | 8" Gate Valve with Box | 11 | Each |
| 451E4212 | 12" Gate Valve with Box | 14 | Each |
| 451E4216 | 16" Gate Valve with Box | 3 | Each |
| 451E4380 | Tracer Wire Access Box | 13 | Each |
| 451E4584 | Flushing Hydrant | 1 | Each |
| 451E4585 | Fire Hydrant with Auxiliary Valve & Box | 13 | Each |
| 451E4903 | Type 2 Foundation Material | 400.0 | Ton |
| 451E4904 | Type 3 Foundation Material | 400.0 | Ton |
| 451E4918 | Imported Trench Backfill | 200 | CuYd |
| 451E5010 | Rock Excavation, Trench | 100 | CuYd |
| 451E5101 | Bore and Jack 1” Pipe | 18 | Ft |

## SECTION G ESTIMATE OF QUANTITIES CONT.

| BID ITEM NUMBER | ITEM | QUANTITY | UNIT |
|---|---|---|---|
| 451E6100 | Reconnect Water Service | 21 | Each |
| 451E6105 | Connect To Existing Water Main | 14 | Each |
| 451E7010 | Reconnect Sewer Service | 14 | Each |
| 451E7016 | Connect to Existing Sewer Main | 12 | Each |
| 451E7020 | Sewer Bypass Pumping | Lump Sum | LS |
| 451E7402 | Test Station | 13 | Each |
| 451E7520 | Exploratory Excavation | 10 | Hour |
| 464E0100 | Controlled Density Fill | 50.0 | CuYd |
| 650E0060 | Type B66 Concrete Curb and Gutter | 26 | Ft |
| 650E4660 | Type P6 Concrete Gutter | 12 | Ft |
| 671E1048 | 48" Manhole | 14 | Each |
| 671E1348 | 48" Drop Manhole | 3 | Each |
| 671E5510 | Extra Depth for 48" Manhole | 79.8 | Ft |
| 671E6035 | Special Manhole Frame & Lid | 10 | Each |
| 671E7022 | Reshape Manhole Invert | 1 | Each |
| 671E8000 | Reconstruct Manhole | 1 | Each |
| 831E0200 | Woven Separator Fabric | 200 | SqYd |
| 900E2090 | AASHTO T-180 Soil Test | 30 | Each |

REGISTERED PROFESSIONAL ENGINEER
REG. NO.
2780
GREGORY M. WIERENGA
SOUTH DAKOTA
07/12/16

## SPECIFICATION CLARIFICATION

Note that Section 8B indicates that payment for Cathodic Test Stations will be per each basis for "Flush Mounted Test Station" however the corresponding SDDOT bid item is 451E7402-Test Station. Tracer wire access boxes are listed in Section 8B as "Flush Mounted Tracer Wire Box" and the corresponding SDDOT bid item is 451E4380-Tracer Wire Access Box.

Cathodic protection anodes for new water main fittings and valves are incidental to the bid items for each respective fitting or valve. When installation of cathodic protection anodes is required by the plans for an existing in-place valve or fitting, the SDDOT bid item 451E7400 – Corrosion Protection shall apply and be the basis for payment.

## PROJECT SEQUENCE

A sequence of work is suggested in these plans as well as the proposed major project phasing. The Contractor shall develop a construction schedule and sequence to meet the general intent. Any changes from the proposed sequence shall be closely coordinated with the Engineer and the South Dakota Department of Transportation and shall be discussed at least two weeks prior to implementing any change.

## ADDITIONAL QUANTITIES

Due to the age of the corridor and the fact that there has been multiple redevelopments on the same lots, a nominal number of additional quantities have been added to the removal tables if unknown infrastructure is uncovered during trenching excavations. Additional quantities have also been added if additional infrastructure is likely to exist but has been buried or covered by asphalt overlays. Additional quantities will only be paid for if the item to be removed was approved by the Engineer for removal. Additional quantities not used on the project will be deleted from the contract via change order.

## REMOVE MANHOLE

Existing manholes on this project scheduled for removal shall be removed and lawfully disposed of by the Contractor. Manhole frame and lids shall be salvaged to the City Utility Maintenance shop. All costs associated with removing the manholes and salvaging the frames and lids shall be incidental to the contract unit price per each for Remove Manhole.

## TABLE OF MANHOLE REMOVAL

| Station | Description | Quantity (Each) |
|---|---|---|
| 46+41.10 | Mount Rushmore Road/Alley | 1 |
| 48+30.98 | Mount Rushmore Road/St. Andrew | 1 |
| 52+10.80 | Mount Rushmore Road/St. Charles | 1 |
| 55+91.69 | Mount Rushmore Road/Franklin | 1 |
| 59+70.83 | Mount Rushmore Road/St. Cloud | 1 |
| 62+53.74 | Mount Rushmore Road/St James | 1 |
| | Total: | 6 |

## TEMPORARY AC PAVEMENT AND INTERIM GRADE ADJUSTMENTS FOR SEWER MANHOLE REMOVAL

Existing manholes at the following locations are to be removed as part of Phase 3B construction, but are to be maintained in service during Phase 1, 2B and 3A, construction.

| Mainline Station | Intersecting Street |
|---|---|
| 48+31 @ CL | Saint Andrew Street |
| 52+10 @ CL | Saint Charles Street |
| 55+91 @ CL | Franklin Street |
| 59+71 @ CL | St. Cloud Street |

The listed manholes are to remain in place during Phase 1, 2A, 2B, and 3A construction and mainline paving. To facilitate intersection traffic during the these construction phases, the Contractor shall perform interim manhole frame and cover grade adjustments and place temporary AC pavement at PCC pavement blockouts as part of Phase 2B construction. Frame and cover adjustments are to be made by adding or removing adjusting rings and/or brick courses. No manhole barrel removal or replacement is required.

## TABLE OF INTERIM MANHOLE GRADE ADJUSTMENTS

| Station | Description | MH Rim Existing Elevation | Proposed Finished Grade | MH Adjustment (Theor.) |
|---|---|---|---|---|
| 48+31 | Saint Andrew Street | 3321.07 | 3321.10 | +0.03' |
| 52+10 | Saint Charles Street | 3312.67 | 3313.66 | +0.99' |
| 55+91 | Franklin Street | 3304.77 | 3306.06 | +1.29' |
| 59+71 | Saint Cloud Street | 3296.77 | 3297.74 | +0.97' |

When authorized by the Engineer, manhole grade adjustment heights may be varied to suit field conditions. Interim manhole grade adjustments will not be paid for directly but shall be included in contract lump sum price for "Incidental Work".

The temporary pavement section placed at blockouts for existing manholes shall be 4" Aggregate Base Course and 4" Asphalt Concrete Composite (2 lifts). The temporary AC surfacing section shall be removed at the time of manhole removal in Phase 3B, with quantities included in Asphalt Concrete Pavement Removal.

## TEMPORARY ASPHALT CONCRETE SURFACING AT PCC BLOCKOUTS FOR WATER AND SEWER TIE-INS

Temporary AC pavement shall be placed at selected locations where PCC pavement panels are not constructed in a particular construction phase due to excavation for utility connections in a subsequent phase. Locations of temporary AC pavement for blockouts for utilities is included in the following table.

## TABLE OF TEMPORARY AC PAVEMENT AT MANHOLES AND UTILITY TIE-INS

| Station | Description | Size |
|---|---|---|
| 37+30 | MRR & St. Anne | 15'x11' |
| 41+15 | MRR & St. Francis | 13'x11' |
| 44+90 | MRR & St. Patrick | 18'x11' |
| 5+50 | St Patrick Street | 12'x12' |
| 48+31 | MRR & St. Andrew | 28'x19' |
| 48+60 | MRR & St. Andrew | 30'x11' |
| 52+10 | MRR & St. Charles | 28'x19' |
| 52+40 | MRR & St. Charles | 30'x11' |
| 55+91 | MRR & Franklin | 28'x19' |
| 56+05 | MRR & Franklin | 15'x11' |
| 59+71 | MRR & St. Cloud | 28'x19' |
| 59+92 | MRR & St. Cloud | 15'x11' |

The quantities of Asphalt Concrete Pavement Removal, Base Course, and Asphalt Concrete Composite associated with temporary AC Pavement are included in the quantity tables.

## SAWING IN EXISTING SURFACING

Where new Portland Cement Concrete Pavement (PCCP) or new asphalt concrete is placed adjacent to existing asphalt concrete or PCCP, the existing pavement shall be sawed full depth to a true line with a vertical face. Pavement areas to be removed are shown on the drawings. The removal lines show the final pavement sawcut and removal limits. The initial sawcut shall be at least 1 foot inside the lines shown. No separate payment shall be made for sawing.

## REMOVE ASPHALT CONCRETE PAVEMENT

The Contractor shall remove and dispose of the asphalt pavement as noted on the plans. Refer to the note for sawing in existing surfaces for additional information. The Engineer may direct more or less pavement removal on construction due to existing cracks, joints or other conditions. The asphalt between the first and second saw cuts shall not be removed until just prior to patching. The Contractor shall dispose of asphalt removed after the final saw cut.

Payment for removing and disposing asphalt shall be incidental to the contract unit price per square yard for Remove Asphalt Concrete Pavement. The depth of the existing asphalt is estimated to vary from 3" to 6". Please refer to the geotechnical investigation.

REGISTERED PROFESSIONAL ENGINEER
REG. NO. 2780
GREGORY M. WIERENGA
SOUTH DAKOTA
8-19-16

| Prepared By: | Prepared For: | Scale: | Revisions: | | |
|---|---|---|---|---|---|
| AE2S | Public Works Department<br>Rapid City, South Dakota<br>Engineering Services | Designed By: GW<br>Drawn By:<br>Design Date: 02.2016 - 04.2016<br>Print Date: 08.19.2016<br>Internal Job No: 11119.04<br>Surveyed By: SDDOT<br>Survey Date: 2012<br>Project Number: 12-2051, CIP NO.50867, PCN X02P | Number: | Description: | FOR BIDDING PURPOSES ONLY |

MOUNT RUSHMORE ROAD
UTILITY RECONSTRUCTION

Sheet Title: SECTION G
ESTIMATE OF QUANTITIES AND GENERAL NOTES AND TABLES

Sheet No: G4 of G83

## TABLE OF ASPHALT CONCRETE PAVEMENT REMOVAL

| Station to | Station | Description | Quantity (SqYd) |
|---|---|---|---|
| 2+62.17 | 2+80.39 | Saint Francis Street | 13.5 |
| 2+62.17 | 2+70.64 | Saint Francis Street | 1.7 |
| 3+41.74 | 3+51.74 | Saint Andrew Street | 5.6 |
| 0+04.60 | 0+27.10 | Franklin/St. Cloud Alley | 36.4 |
| 1+00.29 | 1+09.63 | St. Charles/Franklin Alley | 8.5 |
| 6+40.06 | 6+50.06 | Saint Cloud Street | 10.6 |
| 0+52.15 | 1+18.05 | St. Cloud/St. James Alley | 146.0 |
| 37+30 | | Mt. Rushmore Rd/St. Anne | 18.3 |
| 41+15 | | Mt. Rushmore Rd/St. Francis | 15.9 |
| 44+90 | | Mt. Rushmore Rd/St. Patrick | 22.0 |
| 5+50 | | Saint Patrick Street | 16.0 |
| 48+31 | | Mt. Rushmore Rd/St. Andrew | 59.1 |
| 48+60 | | Mt. Rushmore Rd/St Andrew | 36.7 |
| 52+10 | | Mt. Rushmore Rd/St. Charles | 59.1 |
| 52+40 | | Mt. Rushmore Rd/St. Charles | 36.7 |
| 55+91 | | Mt. Rushmore Rd/Franklin St | 59.1 |
| 56+05 | | Mt. Rushmore Rd/Franklin St | 18.3 |
| 59+71 | | Mt. Rushmore Rd/St. Cloud | 59.1 |
| 59+92 | | Mt. Rushmore Rd/St. Cloud | 18.3 |
| | | Total: | 640.9 |

## TABLE OF CONCRETE CURB AND GUTTER REMOVAL

| Station | L/R | Description | Quantity (Ft) |
|---|---|---|---|
| 2+62.17 | L | Saint Francis Street | 12 |
| 2+74.44 | L | Saint Francis Street | 6 |
| 3+41.74 | L | Saint Andrew Street | 10 |
| 3+16.37 | L | Saint Cloud Street | 10 |
| | | Total: | 38 |

## TABLE OF CONCRETE PAVEMENT REMOVAL

| Station | L/R | Description | Quantity (SqYd) |
|---|---|---|---|
| 3+01.85 | R | Saint Cloud Street | 42.6 |
| | | Total: | 42.6 |

## TABLE OF SALVAGE FIRE HYDRANT

| Station | L/R | Description | Quantity (Each) |
|---|---|---|---|
| 4+81.14 | L | Mount Rushmore Road | 1 |
| 3+77.25 | L | Saint Francis Street | 1 |
| 4+67.29 | L | Saint Francis Street | 1 |
| 3+49.63 | L | Saint Patrick Street | 1 |
| 4+78.80 | R | Saint Patrick Street | 1 |
| 5+48.93 | L | Saint Andrew Street | 1 |
| 52+39.55 | R | Mount Rushmore Road | 1 |
| 5+73.05 | L | Franklin Street | 1 |
| 4+43.19 | R | Saint Cloud Street | 1 |
| 5+31.24 | R | Saint Cloud Street | 1 |
| 5+54.01 | L | Saint James Street | 1 |
| | | Total: | 11 |

## TABLE OF CURB STOP REMOVAL

| Station | L/R | Description | Quantity (Each) |
|---|---|---|---|
| 2+64.57 | L | Saint Anne Street | 1 |
| 2+90.56 | L | Saint Francis Street | 1 |
| 2+92.68 | L | Saint Francis Street | 1 |
| 43+34.25 | L | Mount Rushmore Road | 1 |
| 3+06.35 | L | Saint Patrick Street | 1 |
| 3+11.44 | R | Saint Patrick Street | 1 |
| 45+92.30 | R | Mount Rushmore Road | 1 |
| 3+46.64 | L | Saint Charles Street | 1 |
| 51+37.26 | R | Mount Rushmore Road | 1 |
| 53+49.57 | R | Mount Rushmore Road | 1 |
| 53+51.86 | R | Mount Rushmore Road | 1 |
| 54+29.65 | R | Mount Rushmore Road | 1 |
| 3+31.90 | L | Franklin Street | 1 |
| 3+74.90 | L | Franklin Street | 1 |
| 56+94.17 | R | Mount Rushmore Road | 1 |
| 57+58.10 | R | Mount Rushmore Road | 1 |
| 57+68.49 | L | Mount Rushmore Road | 1 |
| 58+83.34 | R | Mount Rushmore Road | 1 |
| 58+84.39 | R | Mount Rushmore Road | 1 |
| 57+68.49 | L | Mount Rushmore Road | 1 |
| 4+34.32 | L | Saint Cloud Street | 1 |
| 6+06.55 | L | Saint Cloud Street | 1 |
| 62+44.45 | L | Mount Rushmore Road | 1 |
| 62+56.79 | R | Mount Rushmore Road | 1 |
| | | Total: | 24 |

## TABLE OF SALVAGE VALVE AND VALVE BOX

| Station | L/R | Description | Quantity (Each) |
|---|---|---|---|
| 37+08.16 | R | Mount Rushmore Road | 1 |
| 37+77.40 | R | Mount Rushmore Road | 1 |
| 4+80.87 | L | Mount Rushmore Road | 1 |
| 3+76.43 | L | Saint Francis Street | 1 |
| 3+99.73 | L | Saint Francis Street | 1 |
| 4+66.31 | L | Saint Francis Street | 1 |
| 4+67.92 | L | Saint Francis Street | 1 |
| 3+51.83 | L | Saint Patrick Street | 1 |
| 3+65.53 | L | Saint Patrick Street | 1 |
| 4+58.46 | R | Saint Patrick Street | 1 |
| 4+50.06 | L | Saint Andrew Street | 1 |
| 5+49.41 | L | Saint Andrew Street | 1 |
| 48+70.45 | R | Mount Rushmore Road | 1 |
| 4+50.44 | L | Saint Charles Street | 1 |
| 5+49.02 | L | Saint Charles Street | 1 |
| 52+39.41 | R | Mount Rushmore Road | 1 |
| 55+40.59 | R | Mount Rushmore Road | 1 |
| 4+44.65 | L | Franklin Street | 1 |
| 5+53.24 | L | Franklin Street | 1 |
| 5+73.00 | L | Franklin Street | 1 |
| 59+30.89 | R | Mount Rushmore Road | 1 |
| 4+43.28 | R | Saint Cloud Street | 1 |
| 4+50.98 | L | Saint Cloud Street | 1 |
| 5+49.60 | L | Saint Cloud Street | 1 |
| 5+77.24 | R | Saint Cloud Street | 1 |
| 5+77.31 | R | Saint Cloud Street | 1 |
| 60+12.05 | R | Mount Rushmore Road | 1 |
| 63+09.08 | R | Mount Rushmore Road | 1 |
| 4+50.67 | L | Saint James Street | 1 |
| 5+49.74 | R | Saint James Street | 1 |
| 5+50.10 | L | Saint James Street | 1 |
| 5+52.57 | L | Saint James Street | 1 |
| 63+91.32 | R | Mount Rushmore Road | 1 |
| | | Total: | 33 |

REGISTERED PROFESSIONAL ENGINEER
REG. NO. 2780
GREGORY M. WIERENGA
SOUTH DAKOTA
8-19-16

**BASE COURSE**

Aggregate shall be ¾" crushed ledge rock and shall be furnished by the Contractor. The Contractor shall be responsible to take all weight delivery tickets as materials arrive at the job site and provide copies to the Engineer at the end of each work day.

**CONTAMINATED MATERIAL EXCAVATION**

The geotechnical investigation did not discover any soil and/or water contaminated with hydrocarbons or other materials however SDDENR has documented petroleum releases adjacent to the US Highway 16 Right-of-Way within the project limits of unknown volumes. Therefore trenching activities may encounter contaminated soil on the project. If contaminated soil is encountered, the Contractor shall notify the Engineer immediately. The Contractor shall excavate the material and haul it to the Rapid City Sanitary Landfill or other approved landfill for disposal. The shortage of backfill material created by the excavation and disposal of contaminated soil

shall be replaced by Imported Trench Backfill material meeting the requirements of the Standard Specifications. The Contractor shall provide the results of a modified proctor analysis (AASHTO T-99) for all furnished backfill material at no additional cost.

If dewatering is required and the water is contaminated, the contaminated water shall be pumped into calibrated storage containers or tanks and disposed of at a permitted facility or an approved landfill for disposal. Discharge of contaminated water to the ground surface will not be allowed.

Soil and water sampling to determine the contaminant concentrations of hydrocarbons and other elements is a Contractor obligation. City of Rapid City Landfill fees for disposal of the contaminated soil and/or water will NOT be waived. All landfill fees, including sampling and testing charges, are the responsibilities of the Contractor.

Contaminated soil quantities will be determined by the truck haul method and the Engineer and Contractor shall agree on the haul amount in each truck prior to hauling contaminated material. All costs for the excavation, hauling and disposal of contaminated material shall be incidental to the contract unit price per cubic yard for Contaminated Material Excavation. A quantity of 200 CY is included in the Estimate of Quantities for bidding purposes.

Contaminated water quantities will be measured by the MGal and pumped to a storage container or tank and hauled to and disposed of at a permitted facility. The Contractor and Engineer shall agree on the amount of the water pumped into the truck prior to hauling. Payment for removing, hauling, and disposing of the contaminated water shall be incidental to the contract unit price per MGal for Remove Contaminated Water. A quantity of 20 MGal is included in the Estimate of Quantities for bidding purposes.

**GRANULAR MATERIAL**

It will be necessary to dig under and expose the private utilities in order to install water and sanitary sewer services under this contract. It is anticipated that as backfill operations proceed and the level of the trench backfill nears the exposed utilities, compaction by conventional methods using material from the trench may become impractical. Granular Material shall then be used to backfill the trench to the spring line of the utility at the highest elevation. Existing trench material shall then be used to continue backfill operations.

Granular material shall conform to Section 105 of the City of Rapid City Specifications however payment shall be incidental to the contract unit price per Ton for Granular Material. The Contractor shall be responsible to take all weight delivery tickets as materials arrive at the job site and provide copies to the Engineer at the end of each work day. A quantity of 150 tons is included in the estimate of quantities for bidding purposes.

**CONTROLLED DENSITY FILL**

Under some circumstances, low strength backfill material may be required for support and other structural reasons, and not for encasement. Under these situations, the low strength backfill material shall be paid for at the contract unit price per cubic yard for Controlled Density Fill. A quantity of 50 cubic yards has been included in the Estimate of Quantities for bidding purposes. The use of low strength backfill material shall be authorized by the Engineer prior to placement and shall be comply with Section 200 of the specifications.

If Controlled Density Fill is used to backfill around existing MDU gas main infrastructure, the Contractor shall contact and coordinate with Kris James (605) 355-4021.

**ASPHALT CONCRETE COMPOSITE FOR PATCHING**

Asphalt Concrete shall be furnished by the Contractor and shall be used to patch areas listed in the plans. These areas include asphalt concrete pavement for utility replacement work on side streets which is outside of the SDDOT roadway work limits. Plans thickness shall match the existing roadway sections and have been estimated at 5" asphalt on 8" of base course for bidding purposes. The base course and asphalt concrete surfacing section at curb locations will be determined by the Engineer on constriction. Asphalt binder used in the mixture shall be PG 64-22 or 64-28 Asphalt Binder. The asphalt binder content may be adjusted by the Engineer. Binder shall be incidental to the Asphalt Concrete Composite. The Contractor shall provide a Job-Mix Formula to the Engineer with supporting mix design data prior to production. Mineral Aggregate for Asphalt Concrete Composite shall be Class E or G, Type 1. 15% Recycled Asphalt Pavement will be allowed.

**PROOFROLLING TRENCH**

In addition to backfill compaction testing by the Engineer, the Contractor shall perform proofrolling on the trench subgrade at the bottom of the DOT proposed undercut depth. Proofrolling shall be performed with a loaded wheel loader or other approved equipment which can travel within the trench line without damage to adjacent work. Areas of instability shall be stabilized with woven geotextile separator fabric, imported trench backfill material, or foundation material as directed by the Engineer. Proofrolling of the trench will not be paid for directly but will be considered to be incidental to the pipe installation.

**WOVEN SEPARATOR FABRIC**

A nominal amount (200 SY) of Woven Separator Fabric has been included in the estimate of quantities if needed to stabilize trench backfill areas upon construction. The woven separator fabric shall only be installed at the discretion of the Engineer and prior approval is required for payment. The woven separator fabric shall be Mirifi HP 370 or Engineer approved equivalent.

Construction requirements shall be per Section 202 of the Standard Specifications and the manufacturer's installation instructions. If a conflict between the specifications and the manufacturers installation instructions occurs the more stringent or conservative requirement shall apply. All costs for furnishing and installation of the separator fabric shall be incidental to the contract unit price per square yard for Woven Separator Fabric.

REGISTERED PROFESSIONAL ENGINEER
REG. NO. 2780
GREGORY M. WIERENGA
SOUTH DAKOTA
8-19-16

**TRENCH EXCAVATION AND BACKFILL**

Trench excavation, backfill, and granular materials shall conform to sections 11 and 112 of the City of Rapid City Standard Specifications except as modified herein. Compaction of trench backfill under the roadways shall conform to the South Dakota Department of Transportation Standard Specifications, 2015 Edition with current updates and revisions as specified in the proposal.

It is anticipated that in some areas special foundations may be required to provide adequate support for the pipe. Such foundation will consist of sub-excavation to a depth as required by the Engineer and placement of Type 2 foundation or Type 3 foundation material. The granular foundation material or trench stabilization material will be paid for at the contract unit price per ton if authorized by the Engineer. A quantity of 400 tons of type 2 and 400 tons of type 3 foundation material is included in the estimate of quantities for bidding purposes.

For trench backfill above the Type 1 Bedding, the Contractor shall be responsible for either drying the wet but otherwise suitable material or hauling in drier material at no additional cost to the City. Due to the compressed sequence of operations and short construction duration, it is assumed that the Contractor will be importing materials rather than drying. It is not recommended that the Contractor use imported backfill for the top section of the trench that will be removed by DOT during undercut operations. The undercut for Mount Rushmore Road is approximately 1 foot, verify with the roadway plans.

Payment for the use of imported backfill will only be authorized by the Engineer if, in the Engineer's opinion, there is insufficient quantity of suitable backfill material, including material that can be dried. Imported backfill material quantities will be determined by counting truck loads. The quantity of material each truck holds shall be agreed upon by the Engineer and the Contractor prior to any hauling operations. The Contractor shall not be paid for trench widths greater than four feet or the maximum trench width, whichever is greater. Imported backfill will not be paid for when the Contractor fails to perform proper dewatering techniques per the Engineer's request.

Imported Trench Backfill shall be furnished by the Contractor and shall be uniform in texture and free from organic material. The liquid limit shall not exceed 45 and the plastic index shall not exceed 25. The Contractor shall be responsible to provide AASHTO T-99 test results on the material to confirm its suitability for the project. A quantity of 200 CuYd of imported trench backfill is included in the estimate of quantities for bidding purposes.

**TYPE 1 BEDDING**

Type 1 bedding material shall conform with Section 112 of the City of Rapid City Standard Specifications. Type 1 bedding used for bedding of water and sewer pipe shall be incidental to the contract unit price for the pipe being installed.

**CHECK DAMS**

The Contractor shall place clay check dams in the trench at locations shown on the plans or as approved by the Engineer on construction. Check dam spacing shall be approximately 300 feet unless otherwise directed by the Engineer. Check dams shall be of clay soil material containing at least 25% of minus No. 200 sieve material with at least 70% passing a ¾" sieve. Excavated material from the project may be used for check dams if the character is in conformance with the gradation requirements. Imported material may be necessary if on-site material is not satisfactory. Check dams are considered to be incidental to the pipe installation, and there will be no separate or additional payment for check dams.

**CONTRACTOR PROVIDED WATER**

The Contractor shall be responsible for providing water for compaction of earthen and granular materials used for, but not limited to, grading, subgrade preparation, and trench backfill. Water needed for sod irrigation, street cleaning, and other miscellaneous items shall also be provided by the Contractor. The City will provide water for water main testing and de-chlorination. There will be no separate payment for water. The costs for purchasing, loading, transporting and applying/incorporating water shall be incidental to the various items where water is required.

The Contractor will be required to pay for meter fees and installation onto a fire hydrant if the water is purchased from the City of Rapid City. Contact the water office at (605) 394-4125 to arrange for meter hook-ups to be added to fire hydrants and to obtain the current rate that will be charged.

**PIPE SCHOOL FOR WATER MAIN INSTALLATION**

In accordance with the corrosion control requirements, the Contractor shall be aware that this project will require the completion of Attachment C (part 1 and part 2) material handling and installation certification of section 8B of the specifications. All costs associated with meeting the requirement of attachment C parts 1 and 2 shall be incidental to the contract lump sum price for Incidental Work.

**MUCK EXCAVATION**

Muck Excavation within this project shall be considered incidental to the item being installed and no additional payment will be made.

**TRENCH DEWATERING**

The Contactor has the option to treat sediment laden water trapped within the project limits with a dewatering and sediment collection system, or the Contractor may elect to transport sediment laden water off the project. The dewatering and sediment collection System shall be pre-approved by the Engineer prior to the start of trench dewatering. All costs for the dewatering and sediment collection system including but not limited to the system, labor, materials, and disposals shall be incidental to the utility being installed.

If the Contractor elects to transport sediment laden water off the project, no additional payment for loading, transporting, and labor costs will be made. Water transported off the project limits shall not be disposed of in an area where it can enter a waterway. The disposal site must be approved by the Engineer. All costs for loading, transporting, and disposal shall be incidental to the utility being installed.

Trench dewatering shall be necessary when the ground water level is higher than the bottom of the water or sewer trench and is needed to facilitate water and sewer main installation.

It is suggested that the Contractor review the geotechnical investigation report included with the contract documents. The report is for information only and is not a guarantee of subsurface conditions. It should be noted that groundwater was not present at the time of sampling but ground water levels can and do change over time.

**ROCK EXCAVATION, TRENCH**

A geotechnical investigation was completed for this project. Even though the investigation did not indicate that rock excavation is needed, a nominal amount (100 CY) of rock excavation has been included in the estimate of quantities for use in the event that rock or a rock lens is encountered during trenching operations.

Rock excavation shall include solid rock in ledges, bedded deposits, un-stratified masses and conglomerate deposits so firmly cemented as to present the characteristics of solid rock, which must be removed by drilling, blasting, jack hammering, hydraulic ripper, or similar methods. Shale, regardless of the nature of deposit, or loose boulders or large fieldstone will not be considered rock excavation unless so designated on the plans. The responsibility and cost of satisfactorily demonstrating to the Engineer that the material being considered for rock excavation cannot be removed by means other than drilling, blasting, jack hammering, hydraulic ripper, or similar methods shall be the obligation of the Contractor.

At a minimum, it shall be demonstrated that a normal excavating machine being skillfully operated cannot effectively remove said material. "Effectively removed" shall be defined as, the normal production rate being reduced to 25% of normal. A normal excavating machine will be considered to be a +230 HP hydraulic excavator, crawler weighing +78,000 pounds with a – 1 CY bucket equipped with rock or ripper teeth.

The Contractor shall dispose of all unsuitable excavated material. The Contractor shall provide a disposal site for unsuitable backfill materials. The disposal site shall be approved by the Engineer.

The Contractor shall furnish Imported Trench Material for backfill and the quantity shall be measured by the truck haul method and each the quantity of each truck will be agreed upon by the Engineer and the Contractor prior to hauling operations.

The Rock Excavation, Trench quantity shall be agreed upon between the Engineer and the Contractor prior to backfill operations and shall be paid for at the contract unit price per cubic yard.

REGISTERED PROFESSIONAL ENGINEER
REG. NO. 2780
GREGORY M. WIERENGA
SOUTH DAKOTA
8-19-16

**DISPOSAL OF CHLORINATED WATER**

The Contractor shall provide a plan to the Engineer on how he intends to neutralize chlorinated water from water main disinfection and flushing operations two weeks prior to flushing operations. The Contractor shall either neutralize the chlorinated water with specifically manufactured products such as ascorbic acid or discharge the water into a truck and haul the water to an Engineer approved location for disposal. No separate payment will be made for neutralization of the super chlorinated water and it shall be considered incidental to the respective water main bid item.

**TRENCH BOX**

Due to anticipated limited construction work area widths, the Contractor shall utilize moveable trench box or shoring for trenching. Benching or sloping trench sidewalls is prohibited. The maximum allowable trench width and pavement removal limits shall be as shown on the standard details and listed in the specifications. Use of trench box or shoring for trenching operations shall be incidental to the project.

**PIPE ENCASEMENT**

Concrete encasement for water mains or sewers shall be controlled low strength material confirming with Section 200 of the Standard Specifications and shall be paid for at the contract unit price per each for Pipe Encasement.

**BYPASS PUMPING AND TESTING OF SANITARY SEWER**

Bypass pumping and testing of the proposed sanitary sewer main and manholes shall be completed according to Section 9 of the City of Rapid City Standard Specifications. All sanitary sewer mains and manholes will be required to be tested and approved per specifications prior to being put in service.

Prior to performing the work, the contractor shall submit a plan to City detailing the contractor's proposal for maintaining sewer service during construction. The plans shall contain the contractor's proposed procedures for bypass pumping, flow diversion, and testing for each phase of the contractor's sanitary sewer construction schedule. The plan shall also include proposed fitting type(s) and shall indicate if the fitting will remain in the system or will be removed at the end of construction. 4" and 6" tees will be allowed to remain in the system if they are rotated to the vertical position and capped. All other fittings not shown on the plans or previously approved through the City's exception process shall be considered temporary and must be removed at the end of construction. The contractor shall not proceed with installation of sanitary sewer until this plan is approved by the City.

All equipment, labor and materials required to maintain sewer service to existing Rapid City sanitary sewer customers throughout the project shall be paid for at the contract lump sum price for "Sewer Bypass Pumping".

**SPECIAL MANHOLE FRAME AND LID**

This bid item (671E6035) refers to the cast iron sanitary sewer service cleanout cover that will cover only the proposed sewer clean outs in paved areas on the project. Screw type PVC caps shall be installed in grass areas per the City of Rapid City detail. Refer to the project details sheets for construction requirements. All costs for furnishing and installing the cleanout manhole frame and lid covers, including the concrete pad shall be incidental to the contract unit price per each for Special Manhole Frame and Lid.

**MANHOLE FRAME AND LID HEIGHT**

The Contractor shall review the DOT proposed pavement thicknesses where new manholes will be installed on the project prior to ordering the cast iron manhole frames and lids. Manhole frames and lids height shall be equal to pavement thickness.

**AS-BUILT PLANS**

The Contractor shall measure and record any horizontal or vertical deviations from the contract drawings. The changes shall be recorded in as accurate, neat fashion on the drawings and furnished to the Engineer upon completion of the project. Specifically, all service taps, connections, anodes and buried fittings shall be recorded for the work. The As-Built Drawings shall be on-site and available for review by the Engineer upon request.

**TEMPORARY APPURTANENCES FOR WATER MAINS**

The existing water mains must remain in-service until the new water main is complete, disinfected, and pressure tested. Temporary plugs, pipe caps, valving, connections, hydrants, etc, may be needed to maintain service to existing services and shall be considered incidental work.

REGISTERED PROFESSIONAL ENGINEER
REG. NO. 2780
GREGORY M. WIERENGA
SOUTH DAKOTA
8-19-16

**WATER AND SEWER PIPE**

All water and sewer pipe mains, services, appurtenances etc. shall conform to the City of Rapid City Standard Specifications with the exception of water mains in contaminated areas. Please refer to the note below regarding PVC Pipe in contaminated areas.

PVC Water Mains 6"-12" shall be restrained joint PVC pressure pipe conforming to the requirements of AWWA Specification C900, DR18. Restrained joint pipe shall be Certa-Lok C-900/RJ, Diamond Loc 21, Cobra Lock or Engineer approved equal. Restrained joint pipe manufactured by JM Eagle will not be considered an acceptable product for this project. Fire hydrant lead pipes shall be restrained joint pipe.

16" PVC water mains shall conform with the requirements of AWWA Specification C-905, DR25. Restrained joint pipe shall be Certa-Lok C-905 RJ, Diamond Loc 21, or Engineered approved equal.

Water Services 1" through 2" shall be Type K soft copper tubing per the specifications.

PVC Sewer Mains shall conform to the requirement of ASTM D-3034, SDR-35 per the specifications.

PVC Sewer services and fittings shall confirm to the requirement of ASTM D-3034, SDR-35

**PVC PIPE FOR CONTAMINATED AREAS**

40' of the 6" PVC, 60' of the 8" PVC, and 200' of 12" PVC listed in the Estimate of Quantities shall be supplied with nitrile gaskets and will be installed on the project in areas of contamination. If contamination is not encountered, the water mains with nitrile gaskets will be installed on the project last. Nitrile gaskets for fittings within the contamination areas shall be considered incidental to the fitting. The City of Rapid City will furnish 16" nitrile gaskets, if needed due to hydrocarbon contamination, at no cost to the Contractor.

**PVC SEWER PIPE**

Section 9.5.A of the Standard Specifications indicates that payment for sewer will be at the unit price bid for the appropriate size and depth of sewer pipe. Typical pay depths are estimated on the plan profile drawings and are for information only. All costs for furnishing and installing the PVC sewer pipe regardless of depth shall be incidental to the contract unit price per foot for the applicable sewer pipe specified.

The Contractor shall note that the pay length for sewer main is based on the distances from center of manhole to center of manhole and extended to sewer stubs etc. Sewer main lengths and slopes shown in the profiles are the lengths between the inside wall of the manhole to the inside wall of the manhole and are not the same as the estimated quantity.

**AASHTO T-180 SOIL TEST**

In order to match and correlate with the SDDOT specifications, the Contractor shall provide T-99 soil test results under the bid item AASHTO T-180 Soil Test. Payment will be made for only those Proctor tests required by the Engineer per section 11.5.F of the Standard Specifications.

**WATER MAIN & FITTINGS**

1. All high deflection pipe couplings shall be mechanical joint sleeves or repair couplings allowing a maximum of 5 degree deflections for services up to 12", and 3 degrees for 16" couplings.
2. Pipe deflection at fittings shall be within the tolerances recommended by the pipe and/or fitting manufacturer.
3. Pipe deflection for restrained joint PVC pipe for sizes 12" and smaller shall be less than the manufacture recommended allowable radius of curvature. Maximum allowable pipe deflection shall be clearly labeled on the pipe submittal.
4. Ductile iron fittings shall be epoxy coated per Section 8A.2.B of the Standard Specifications.
5. Fittings shall be mechanically restrained where restraint is required by the plans or the specifications. Cost of restraint shall be incidental to the associated fitting or pipe.
6. Bolts for mechanical joints shall be Series 300 Stainless Steel.
7. Testing and disinfection shall be per Standard Specifications. The Contractor is responsible for all testing, disinfection and water sampling.
8. Tracer wire is required on all water mains as per Section 8B.
9. Any valve box that is 8' or greater in depth shall include a nut extension in the valve box at an appropriate length such that a standard key can operate the valve. No separate payment will be made for nut extensions.

**WATER AND SEWER SERVICE RECONNECTION**

The bid item Reconnect Water Service is applicable to existing water services that are being reconnected on the project.

**WATER SERVICE FOR 1909 MT RUSHMORE ROAD (VACANT LOT)**

Due to traffic and project sequencing, it is anticipated that the Contractor will construct the 4" water service for 1909 Mt Rushmore Road by installing the water service in two steps. The service shall be tapped to the new 12" PVC main in Mt. Rushmore Road and extended west to the center of the street during Phase 1. During Phase 2A construction the service will be connected at the center of the street and extended west to the pipe cap at the west right of way line. No additional payment will be made for this sequenced water service installation.

**WATER SERVICE FOR 1511 MT RUSHMORE ROAD (DAKOTA TRAVEL)**

The existing water service for 1511 Mt. Rushmore Road shall remain in service during Phases 1, 2A, 2B and 3A. During Phase 2B the new service will be installed across the Phase 2B work limits. The new service will be completed during Phase 3B when traffic is switched to the west side of Mt. Rushmore Road. A splice coupling shall be used to connect the two service pipe segments near the center of Mt. Rushmore Road. The final connection to the existing service pipe near the west side work limits shall be made during Phase 3B. The Contractor shall defer final AC patching in the affected alley area near the west work area until the new water service installation is completed. No additional payment will be made for this sequenced water service installation.

**WATER SERVICE FOR 731 ST. CLOUD STREET**

The existing water service for 731 St. Cloud Street is tapped to the existing 8" AC water main in Mt. Rushmore Road. The existing water service is to be abandoned, and a new water service constructed which is tapped to the existing 8" PVC water main in St. Cloud Street. Refer to plan sheet G-50 for the location of the new water service (Sta. 6+45, R, St. Cloud Street)

The new 1" water service shall be constructed using a combination of open cut and trenchless methods per the following table.

| Station | From | To | Length | Method |
|---|---|---|---|---|
| 6+45 (St. Cloud) | 9' R | 13' R | 4' | Open Cut |
| 6+45 (St. Cloud) | 13' R | 20' R | 7' | Trenchless |
| 6+45 (St. Cloud) | 20' R | 32' R | 12' | Open Cut |
| 6+45 (St. Cloud) | 32' R | 43' R | 11' | Trenchless |
| | | Total | 34 Ft | |

The trenchless segment shall pass under the existing curb and gutter, stone retaining wall behind curb, sidewalk, and stone retaining wall behind sidewalk. The curb and gutter, stone retaining walls and sidewalk shall remain in place, undisturbed by construction.

Payment for the service line segments constructed using trenchless methods (18 ft) will be paid for at the contract unit price for "Bore and Jack 1" Pipe". Payment for the open cut construction (16 ft) shall be paid for at the contract unit price for "1" Copper Pipe". The Contractor shall connect the new service pipe to a proposed 1" copper service to be constructed by the property owner under separate contract in advance of the Mt. Rushmore Road utility reconstruction project. Payment for the connection will be paid at the contract unit price for "Reconnect Water Service".

The water service work shall be completed during roadway construction Phase 3B with roadway traffic controls in place and the St. Cloud Street barricades adjusted to include the service line construction area within the protected work limits. The Contractor shall coordinate the schedule for this work with the property owner. The work is to be completed prior to the abandonment of the existing service line in Mt. Rushmore Road.

**WILSON PARK FLUSHING HYDRANT**

A flushing hydrant shall be installed at Wilson Park (Saint Andrew Street, STA 3+29.21, 45.06'L) for use as a skating pond fill system. The hydrant shall be connected to an existing 4" PVC fill pipe in the location called for on the plans and in accordance with the plan detail. The hydrant shall be a frost-proof post type hydrant with a 4" MJ inlet and 2½" NST outlet with cap, 6' bury depth and 2' height above ground to the outlet nozzle, Kupferle Eclipse No. 8 or equivalent by Mueller. The hydrant installation shall be included in the contract unit price for Flushing Hydrant.

**CORROSION PROTECTION**

The Contractor shall provide corrosion protection of all water main fittings, restraints, appurtenances, and water services in accordance with the Specifications for Corrosion Control, Section 8B of the Standard Details. Generally, the work consists of:

1. Furnishing and installing zinc anodes and associated bonding, bonding wires etc. per specifications and details for all buried metallic components.
2. Installation of flush mounted corrosion test stations adjacent to proposed fire hydrants.

18 pound zinc galvanic anodes shall be used for this project. If the epoxy coating on the hydrants, valves and fittings do not meet the requirements called for in specification 8B (included in contract documents) a 30 pound anode or 2-18 pound anodes shall be installed on each item. All anodes are incidental to the fire hydrants, valves and fittings per the specifications.

Standard details have been included in the contract documents.

The corrosion protection system shall be tested by the Contractor and reports provided to the Engineer prior to placement of finished surfacing.

Anodes and attachment of lead wires to fittings, valves or other metallic components shall be incidental to each to each of the new metallic water system components installed. No separate measurement will be made.

All costs for furnishing and installing materials for flush mounted corrosion test stations shall be incidental to the contact unit price per each for Test Station.

Tracer wire and all accessory items necessary for the installation of an electrically-continuous tracing system shall be incidental to the pipe installed. No separate measurement will be made.

All costs for furnishing and installing materials for flush mounted tracer wire boxes shall be incidental to the contact unit price per each for Tracer Wire Access Box.

REGISTERED PROFESSIONAL ENGINEER
REG. NO. 2780
GREGORY M. WIERENGA
SOUTH DAKOTA
8-19-16

**TABLE OF CATHODIC PROTECTION TEST STATION AND TRACER WIRE ACCESS BOX LOCATIONS**

| Station | L/R | Description | Quantity (Each) |
|---|---|---|---|
| 3+83.09 | L | Saint Anne Street | 1 |
| 37+02.07 | R | Mount Rushmore Road | 1 |
| 3+79.93 | L | Saint Francis Street | 1 |
| 40+80.98 | R | Mount Rushmore Road | 1 |
| 3+48.75 | L | Saint Patrick Street | 1 |
| 4+50.00 | L | Saint Andrew Street | 1 |
| 4+76.97 | L | Saint Patrick Street | 1 |
| 48+05.70 | R | Mount Rushmore Road | 1 |
| 4+61.03 | L | Saint Charles Street | 1 |
| 51+78.61 | R | Mount Rushmore Road | 1 |
| 55+60.88 | R | Mount Rushmore Road | 1 |
| 4+49.79 | L | Saint Cloud Street | 1 |
| 59+43.19 | R | Mount Rushmore Road | 1 |
| | | Total: | 13 |

**FIRE HYDRANT COATINGS**

The City of Rapid City Public Works Director issued a waiver to the 2007 Edition Standard Specifications requiring the internal epoxy coating for fire hydrants. Any fire hydrant that doesn't have the internal epoxy coating per the specifications shall double the cathodic protection (anodes) required for the fire hydrant. The cost of the extra cathodic protection shall be absorbed into the unit price of the fire hydrant. Fire hydrants with the internal epoxy coating do not need to have double the cathodic protection.

Fire hydrants and any other buried ferrous or metallic objects that require epoxy coatings shall have coating thickness as detailed in Sections 8A & 8B of the Standard Specifications. Items that do not meet the external epoxy coating mil thickness requirement shall have double the cathodic protection (anodes) required. A 30 lb zinc anode will be considered equal to two 18 lb zinc anodes.

**FIRE HYDRANT BURY DEPTHS**

Prior to installing fire hydrants, the Contractor shall verify that the proposed finished grade matches the Bury Line Elevation proposed for the fire hydrants. The Engineer shall be notified immediately if the finished grade does not match the Bury Line Elevation so adjustments can be made prior to the fire hydrant installation.

**TESTS AND MEASUREMENTS**

Upon completion of the cathodic protection system installation work, the Contractor shall perform testing to ensure proper operation of the system.

All cathodic protection system tests shall be conducted by the Contractor's corrosion specialist, cathodic protection specialist or corrosion engineer. All testing shall be conducted in the presence of a representative of the Owner and a minimum of 5 days advance notice must be given to the Owner prior to the start of any testing.

The integrity and function of all test station and anode wires shall be verified by field testing after installation by obtaining pipe-to-soil (p/s) and anode-to-soil (a/s) potential measurements. P/s and a/s measurements shall be obtained for each wire prior to and after the connection of any wires to the test station terminal block. The Contractor shall submit a written procedure for such testing for approval by the owner's representative prior to the start of construction. The procedure must describe in detail the method and equipment to be used for the testing. Such procedure may be rejected and returned to the Contractor for revision. The procedure shall satisfactorily demonstrate the integrity and proper functioning of the test station and anode wires.

Prior to connection of each anode wire to its test station terminal block, all anode-to-soil "native" potential measurements shall be as follows:

Zinc anode: -1.05 volts dc or more negative when referenced to a copper sulfate electrode (cse)-anodes not satisfying this "native potential level" shall be replaced by the contractor at no additional cost to the owner.

All tests results shall be documented in the tabular format on 8 ½" x 11" paper and submitted in a written test report. The report shall include a description of any test procedures, all test results, and recommendations to correct any identified problems or deficiencies. The report shall include results at each cathodic protection test station location.

Functional testing of the cathodic protection and tracer wire systems shall be incidental to the water system components installed. No separate measurement and payment will be made.

**THRUST BLOCKS**

Thrust blocks shall only be provided at locations shown in the plans. All fire hydrants shall have thrust blocks. Water main bends or other fittings that are used to tie into existing water mains shall be thrust blocked. Thrust block dimension tables have been provided in the details section of these plans. All costs for thrust blocks shall be incidental to the associated item for which the thrust block is being installed. No separate payment will be made.

**SANITARY MANHOLE COATINGS**

The interior of all sanitary manholes shall be coated per section 9.2.c.15 of the standard specifications. Contractor may use Sauereisen Sewergard (tm) No. 210, Induron Ceramasafe 90 ceramic epoxy, or an approved equal installed per manufacturers requirements.

**RECONSTRUCT MANHOLE AT STA 57+77.89**

The existing sanitary sewer manhole at Sta. 57+77.89 (centerline) is to be reconstructed in place with alterations as described in this note.

Manhole Alterations

- Remove and salvage cast iron frame and cover and internal chimney seal and stockpile for reset.
- Remove upper 4' high cone section and stockpile for reset.
- Install new 48" diameter x 1.33' high manhole barrel section on the in-place barrel after cone section removal.
- Re-install salvaged cone section at the top of the new barrel section.
- Re-install salvaged frame and cover and chimney seal on the cone and adjust to finish grade per plans.
- Demolish concrete manhole invert and reconstruct the manhole invert with east-to-west flow channel per plan details.
- Plug the existing north and south pipe penetrations.
- Construct pipe connection on west side of manhole for new 8" sewer to Manhole #14. Conform with City Standard Detail 9-6.
- Clean manhole interior and apply corrosion protective coating per plan note "Sanitary Manhole Coating" using approved and manufacturer recommended field application method.
- Test the reconstructed manhole for leakage.

All reassembly methods and materials shall conform with City Standard Specifications, Section 9.

Payment for all work described in this note will be at the contract unit price per each for "Reconstruct Manhole". Sewer flow handling or by-pass pumping for the existing 8" incoming sewer from the east (Franklin Street/St. Cloud Street alley) as required for manhole reconstruction work will be paid for as part of the lump sum contract item "Sewer Bypass Pumping.

REGISTERED PROFESSIONAL ENGINEER
REG. NO. 2780
GREGORY M. WIERENGA
SOUTH DAKOTA
8-19-16

## EXPLORATORY EXCAVATION FOR SEWER UTILITIES

When so directed and authorized by the Owner, the Contractor shall conduct exploratory excavations at sanitary sewer main tie-in locations on side streets and alleys on the east side of Mount Rushmore Road. Exploratory excavations are to be used by the Owner to verify the size, depth, material and location of existing sewers at the reconnection location. Exploratory work shall be conducted during or prior to construction of the mainline sewer in Mount Rushmore Road during Construction Phase 2B. The Owner will utilize the information to make any necessary plans adjustment for sewer tie-ins during Construction Phase 3B.

The anticipated locations where exploratory excavations at sewer tie-ins may be authorized by the Owner are listed in the following table:

| Station | L/R | Alley / Street |
|---|---|---|
| 46+41 | R | Alley (Saint Patrick / Saint Andrew) |
| 54+00 | R | Alley (Saint Charles / Franklin) |

Exploratory excavation shall include machine excavation and hand digging in close proximity of the pipe. Exploratory excavation shall also include backfilling and compacting the excavation when the necessary information is obtained. Payment for exploratory work, including equipment, labor, and incidentals, will be at the contract unit price per hour for "Exploratory Excavation". When temporary surfacing is needed at the surface at completion of exploratory work, payment for surfacing will be at the contract unit price for Base Course and/or Asphalt Concrete Composite as authorized by the Owner.

A quantity of 10 hours of "Exploratory Excavation" has been included in the Estimate of Quantities.

## TABLE OF PIPE ENCASEMENT

| Station | L/R | Description | Quantity (Each) |
|---|---|---|---|
| 4+05 | L | St. Anne Street (Water Main) | 1 |
| 4+10 | L | St. Francis Street (Water Main) | 1 |
| 4+68 | L | St. Andrew Street (Water Main) | 1 |
| 4+66 | L | St Charles Street (Water Main) | 1 |
| 41+19 | R | Mount Rushmore Road (Water Main) | 1 |
| 52+10 | R | Saint Charles Street (Sewer) | 1 |
| 55+91 | R | Franklins Street (Sewer) | 1 |
| | | Total: | 7 |

## TABLE OF 1" COPPER PIPE

| Station | L/R | Description | Quantity (Ft) |
|---|---|---|---|
| 2+64.57 | L | Saint Anne Street | 19.0 |
| 2+90.72 | L | Saint Francis Street | 23.9 |
| 2+92.78 | L | Saint Francis Street | 23.9 |
| 43+34.26 | L | Mount Rushmore Road | 59.3 |
| 2+17.85 | L | Saint Patrick Street | 19.9 |
| 3+12.29 | L | Saint Patrick Street | 38.9 |
| 45+91.50 | L | Mount Rushmore Road | 22.8 |
| 3+97.67 | L | Saint Andrew Street | 64.4 |
| 4+45.53 | L | Saint Andrew Street | 71.6 |
| 51+37.29 | L | Mount Rushmore Road | 24.3 |
| 3+46.64 | L | Saint Charles Street | 8.4 |
| 54+31.19 | R | Mount Rushmore Road | 21.3 |
| 56+95.15 | R | Mount Rushmore Road | 21.3 |
| 57+59.45 | R | Mount Rushmore Road | 21.7 |
| 57+90.01 | L | Mount Rushmore Road | 69.2 |
| 57+90.92 | R | Mount Rushmore Road | 21.7 |
| 58+80.63 | R | Mount Rushmore Road | 23.0 |
| 62+45.87 | L | Mount Rushmore Road | 21.1 |
| 6+45.06 | R | Saint Cloud Street | 31.7 |
| | | Total: | 607.4 |

## TABLE OF 1 ½ " COPPER PIPE

| Station | L/R | Description | Quantity (Ft) |
|---|---|---|---|
| 2+83.73 | L | Saint Francis Street | 49.1 |
| 3+05.96 | L | Saint Patrick Street | 25.2 |
| | | Total: | 74.3 |

## TABLE OF 2" COPPER PIPE

| Station | L/R | Description | Quantity (Ft) |
|---|---|---|---|
| 53+49.62 | L | Mount Rushmore Road | 21.3 |
| 53+51.93 | L | Mount Rushmore Road | 21.3 |
| | | Total: | 42.6 |

## TABLE OF TAPPING SADDLE (1")

The Contractor shall note that per Section 8A of the standard specifications that the City of Rapid City Utility Maintenance shall provide the corporation stop when the water main is tapped for a 1" Service. Corporation stops for services larger than 1" shall be furnished by the Contractor.

| Station | L/R | Description | Quantity (Each) |
|---|---|---|---|
| 2+64.54 | L | Saint Anne Street | 1 |
| 2+90.72 | L | Saint Francis Street | 1 |
| 2+92.78 | L | Saint Francis Street | 1 |
| 2+17.85 | L | Saint Patrick Street | 1 |
| 3+11.82 | L | Saint Patrick Street | 1 |
| 45+91.79 | R | Mount Rushmore Road | 1 |
| 3+96.98 | L | Saint Andrew Street | 1 |
| 4+44.84 | L | Saint Andrew Street | 1 |
| 51+42.53 | R | Mount Rushmore Road | 1 |
| 3+46.64 | L | Saint Charles Street | 1 |
| 54+31.19 | R | Mount Rushmore Road | 1 |
| 56+95.15 | R | Mount Rushmore Road | 1 |
| 57+59.45 | R | Mount Rushmore Road | 1 |
| 57+90.92 | R | Mount Rushmore Road | 1 |
| 57+90.01 | L | Mount Rushmore Road | 1 |
| 58+80.63 | R | Mount Rushmore Road | 1 |
| 62+45.87 | L | Mount Rushmore Road | 1 |
| 6+45.06 | R | Saint Cloud Street | 1 |
| | | Total: | 18 |

## TABLE OF TAPPING SADDLE (1 ½ ")

| Station | L/R | Description | Quantity (Each) |
|---|---|---|---|
| 2+88.00 | L | Saint Francis Street | 1 |
| 3+06.26 | L | Saint Patrick Street | 1 |
| | | Total: | 2 |

## TABLE OF TAPPING SADDLE (2")

| Station | L/R | Description | Quantity (Each) |
|---|---|---|---|
| 53+49.62 | R | Mount Rushmore Road | 1 |
| 53+51.93 | R | Mount Rushmore Road | 1 |
| | | Total: | 2 |

REGISTERED PROFESSIONAL ENGINEER
REG. NO. 2780
GREGORY M. WIERENGA
SOUTH DAKOTA
9/12/16

**TABLE OF 1" CURB STOP WITH BOX**

| Station | L/R | Description | Quantity (Each) |
|---|---|---|---|
| 2+64.57 | L | Saint Anne Street | 1 |
| 2+90.72 | L | Saint Francis Street | 1 |
| 2+92.78 | L | Saint Francis Street | 1 |
| 2+17.85 | L | Saint Patrick Street | 1 |
| 3+12.29 | L | Saint Patrick Street | 1 |
| 45+91.50 | L | Mount Rushmore Road | 1 |
| 3+97.67 | L | Saint Andrew Street | 1 |
| 4+45.53 | L | Saint Andrew Street | 1 |
| 51+37.29 | R | Mount Rushmore Road | 1 |
| 3+46.64 | L | Saint Charles Street | 1 |
| 54+31.19 | L | Mount Rushmore Road | 1 |
| 56+95.15 | R | Mount Rushmore Road | 1 |
| 57+59.45 | L | Mount Rushmore Road | 1 |
| 57+90.92 | L | Mount Rushmore Road | 1 |
| 57+90.01 | R | Mount Rushmore Road | 1 |
| 58+80.63 | L | Mount Rushmore Road | 1 |
| 62+45.87 | L | Mount Rushmore Road | 1 |
| 6+45.06 | R | Saint Cloud Street | 1 |
| | | Total: | 18 |

**TABLE OF 1 ½ " CURB STOP WITH BOX**

| Station | L/R | Description | Quantity (Each) |
|---|---|---|---|
| 2+83.98 | L | Saint Francis Street | 1 |
| 3+05.96 | L | Saint Patrick Street | 1 |
| | | Total: | 2 |

**TABLE OF 2 " CURB STOP WITH BOX**

| Station | L/R | Description | Quantity (Each) |
|---|---|---|---|
| 53+49.62 | L | Mount Rushmore Road | 1 |
| 53+51.93 | L | Mount Rushmore Road | 1 |
| | | Total: | 2 |

**TABLE OF 8" X 8" X 6" TEE**

| Station | L/R | Description | Quantity (Each) |
|---|---|---|---|
| 3+93.21 | R | Saint Anne Street | 1 |
| 3+78.90 | L | Saint Francis Street | 1 |
| 4+50.00 | L | Saint Andrew Street | 1 |
| 4+61.03 | L | Saint Charles Street | 1 |
| 4+49.80 | L | Saint Cloud Street | 1 |
| | | Total: | 5 |

**TABLE OF 8" X 8" X 8" TEE**

| Station | L/R | Description | Quantity (Each) |
|---|---|---|---|
| 59+89.46 | L | Mount Rushmore Road | 1 |
| 59+89.46 | R | Mount Rushmore Road | 1 |
| | | Total: | 2 |

**TABLE OF 12" X 12" X 6" TEE**

| Station | L/R | Description | Quantity (Each) |
|---|---|---|---|
| 37+12.88 | R | Mount Rushmore Road | 1 |
| 40+88.61 | R | Mount Rushmore Road | 1 |
| 48+05.70 | R | Mount Rushmore Road | 1 |
| 15+78.63 | R | Mount Rushmore Road | 1 |
| 55+60.88 | R | Mount Rushmore Road | 1 |
| 59+43.19 | R | Mount Rushmore Road | 1 |
| | | Total: | 6 |

**TABLE OF 12" X 12" X 8" TEE**

| Station | L/R | Description | Quantity (Each) |
|---|---|---|---|
| 37+31.11 | R | Mount Rushmore Road | 1 |
| 37+46.69 | R | Mount Rushmore Road | 1 |
| 59+62.20 | R | Mount Rushmore Road | 1 |
| | | Total: | 3. |

**TABLE OF 16" X 16" X 6" TEE**

| Station | L/R | Description | Quantity (Each) |
|---|---|---|---|
| 3+48.75 | L | Saint Patrick Street | 1 |
| 4+76.97 | L | Saint Patrick Street | 1 |
| | | Total: | 2 |

**TABLE OF 12" X 12" X 4" TEE**

| Station | L/R | Description | Quantity (Each) |
|---|---|---|---|
| 43+34.26 | R | Mt Rushmore Road | 1 |
| | | Total: | 1 |

**TABLE OF 12" X 8" CROSS**

| Station | L/R | Description | Quantity (Each) |
|---|---|---|---|
| 41+15.42 | R | Mount Rushmore Road | 1 |
| 48+61.94 | R | Mount Rushmore Road | 1 |
| 52+41.20 | R | Mount Rushmore Road | 1 |
| | | Total: | 3 |

**TABLE OF 12" X 12" CROSS**

| Station | L/R | Description | Quantity (Each) |
|---|---|---|---|
| 56+02.17 | R | Franklin Street | 1 |
| | | | 1 |
| | | Total: | 1 |

**TABLE OF 16" X 12" CROSS**

| Station | L/R | Description | Quantity (Each) |
|---|---|---|---|
| 2+09.15 | L | Saint Patrick Street | 1 |
| 5+50.311 | L | Saint Patrick Street | 1 |
| 44+87.4 | R | Mount Rushmore Road | 1 |
| | | Total: | 3 |

**TABLE OF 8" X 6" REDUCER**

| Station | L/R | Description | Quantity (Each) |
|---|---|---|---|
| 2+53.75 | L | Saint Anne Street | 1 |
| 5+47.79 | L | Saint Anne Street | 1 |
| 5+41.48 | L | Saint Francis Street | 1 |
| 3+64.77 | L | Saint Andrew Street | 1 |
| | | Total: | 4 |

**TABLE OF 12" X 8" REDUCER**

| Station | L/R | Description | Quantity (Each) |
|---|---|---|---|
| 59+96.98 | R | Mount Rushmore Road | 1 |
| | | Total: | 1 |

REGISTERED PROFESSIONAL ENGINEER
REG. NO. 2780
GREGORY M. WIERENGA
SOUTH DAKOTA
9/2/16

| Prepared By: | Prepared For: | Scale: | Revisions: | | | Sheet Title: | Sheet No: |
|---|---|---|---|---|---|---|---|
| AE2S | Public Works Department<br>Rapid City South Dakota<br>Engineering Services | Designed By: GW<br>Drawn By:<br>Design Date: 02.2016 - 04.2016<br>Print Date: 09.02.2016<br>Internal Job No: 11119.04<br>Surveyed By: SDDOT<br>Survey Date: 2012<br>Project Number: 12-2051, CIP NO.50867, PCN X02P | Number: | Description: | FOR BIDDING PURPOSES ONLY<br>MOUNT RUSHMORE ROAD<br>UTILITY RECONSTRUCTION | SECTION G<br>ESTIMATE OF QUANTITIES AND GENERAL NOTES AND TABLES | G12 of G83 |

**TABLE OF 6" BEND**

| Station | L/R | Description | Quantity (Each) |
|---|---|---|---|
| 2+50.00 | L | Saint Anne Street | 1 |
| 2+50.00 | L | Saint Anne Street | 1 |
| 5+51.53 | L | Saint Anne Street | 1 |
| 5+70.87 | L | Saint Anne Street | 1 |
| 37+12.87 | R | Mount Rushmore Road | 1 |
| 3+94.37 | L | Saint Anne Street | 1 |
| 5+45.23 | L | Saint Francis Street | 1 |
| 5+52.91 | L | Saint Francis Street | 1 |
| 3+9+1.51 | L | Saint Francis Street | 1 |
| 3+50.32 | L | Saint Andrew Street | 1 |
| 6+61.01 | L | Saint Andrew Street | 1 |
| 51+78.63 | R | Mount Rushmore Road | 1 |
| | | Total: | 12 |

**TABLE OF 8" BEND**

| Station | L/R | Description | Quantity (Each) |
|---|---|---|---|
| 2+69.63 | L | Saint Francis Street | 1 |
| 2+73.69 | L | Saint Francis Street | 1 |
| 3+28.89 | L | Saint Charles Street | 1 |
| 3+43.89 | L | Saint Charles Street | 1 |
| 6+42.22 | L | Saint Charles Street | 1 |
| 6+59.91 | CL | Saint Charles Street | 1 |
| | | Total: | 6 |

**TABLE OF 12" BEND**

| Station | L/R | Description | Quantity (Each) |
|---|---|---|---|
| 2+09.15 | L | Saint Patrick Street | 1 |
| 2+09.15 | R | Saint Patrick Street | 1 |
| 5+50.37 | L | Saint Patrick Street | 1 |
| 5+50.14 | R | Saint Patrick Street | 1 |
| 5+63.92 | L | Franklin Street | 1 |
| 5+71.70 | L | Franklin Street | 1 |
| | | Total: | 6 |

**TABLE OF 6" PIPE COUPLING**

Quantity provided if connection to existing pipe is different material. If this fitting is not used it will be removed from the contract via change order.

| Station | L/R | Description | Quantity (Each) |
|---|---|---|---|
| 2+46.00 | L | Saint Anne Street | 1 |
| 5+73.65 | L | Saint Anne Street | 1 |
| | | Total: | 2 |

**TABLE OF 6" PIPE TRANSITION COUPLING**

Quantity provided if connection to existing pipe is different material. If this fitting is not used it will be removed from the contract via change order.

| Station | L/R | Description | Quantity (Each) |
|---|---|---|---|
| 5+56.08 | L | Saint Francis Street | 1 |
| 3+46.77 | L | Saint Andrew Street | 1 |
| | | Total: | 2 |

**TABLE OF 8" PIPE COUPLING**

| Station | L/R | Description | Quantity (Each) |
|---|---|---|---|
| 5+62.00 | L | Saint Andrew Street | 1 |
| 4+97.54 | L | Saint Charles Street | 1 |
| 5+87.99 | L | Saint Charles Street | 1 |
| 4+37.77 | L | Saint Cloud Street | 1 |
| 5+72.37 | L | Saint Cloud Street | 1 |
| 62+55.78 | L | Mount Rushmore Road | 1 |
| 62+55.78 | R | Mount Rushmore Road | 1 |
| | | Total: | 7 |

**TABLE OF 8" TRANSITION COUPLING**

Quantity provided if connection to existing pipe is different material. If this fitting is not used it will be removed from the contract via change order.

| Station | L/R | Description | Quantity (Each) |
|---|---|---|---|
| 2+63.43 | L | Saint Francis Street | 1 |
| 3+23.95 | L | Saint Charles Street | 1 |
| 6+65.96 | L | Saint Charles Street | 1 |
| | | Total: | 3 |

**TABLE OF 12" PIPE COUPLING**

| Station | L/R | Description | Quantity (Each) |
|---|---|---|---|
| 34+19.23 | R | Mount Rushmore Road | 1 |
| 4+30.88 | L | Franklin Street | 1 |
| 4+95.88 | L | Franklin Street | 1 |
| 5+75.30 | R | Franklin Street | 1 |
| | | Total: | 4. |

**TABLE OF INSTALL 4" GATE VALVE AND BOX**

| Station | L/R | Description | Quantity (Each) |
|---|---|---|---|
| 43+34.26 | R | Mt Rushmore Road | 1 |
| | | Total: | 1 |

**TABLE OF INSTALL 8" GATE VALVE AND BOX**

| Station | L/R | Description | Quantity (Each) |
|---|---|---|---|
| 3+88.59 | R | Saint Anne Street | 1 |
| 4+69.67 | L | Saint Anne Street | 1 |
| 3+74.63 | L | Saint Francis Street | 1 |
| 4+74.41 | L | Saint Francis Street | 1 |
| 4+46.25 | L | Saint Andrew Street | 1 |
| 4+50.17 | L | Saint Charles Street | 1 |
| 5+48.79 | L | Saint Charles Street | 1 |
| 4+46.05 | L | Saint Cloud Street | 1 |
| 5+50.69 | R | Saint Cloud Street | 1 |
| 60+10.65 | L | Mount Rushmore Road | 1 |
| 60+10.65 | R | Mount Rushmore Road | 1 |
| | | Total: | 11. |

**TABLE OF INSTALL 12" GATE VALVE AND BOX**

| Station | L/R | Description | Quantity (Each) |
|---|---|---|---|
| 37+08.07 | R | Mount Rushmore Road | 1 |
| 37+78.33 | R | Mount Rushmore Road | 1 |
| 40+77.96 | R | Mount Rushmore Road | 1 |
| 41+48.79 | R | Mount Rushmore Road | 1 |
| 44+47.79 | R | Mount Rushmore Road | 1 |
| 45+16.05 | R | Mount Rushmore Road | 1 |
| 47+89.15 | R | Mount Rushmore Road | 1 |
| 48+67.67 | R | Mount Rushmore Road | 1 |
| 51+70.09 | R | Mount Rushmore Road | 1 |
| 52+50.98 | R | Mount Rushmore Road | 1 |
| 5+57.56 | L | Franklin Street | 1 |
| 55+52.24 | R | Mount Rushmore Road | 1 |
| 56+31.32 | R | Mount Rushmore Road | 1 |
| 59+31.12 | R | Mount Rushmore Road | 1 |
| | | Total: | 14 |

**TABLE OF INSTALL 16" GATE VALVE AND BOX**

| Station | L/R | Description | Quantity (Each) |
|---|---|---|---|
| 3+42.45 | L | Saint Patrick Street | 1 |
| 4+16.97 | L | Saint Patrick Street | 1 |
| 4+82.31 | L | Saint Patrick Street | 1 |
| | | Total: | 3 |

REGISTERED PROFESSIONAL ENGINEER
REG. NO.
2780
GREGORY M. WIERENGA
SOUTH DAKOTA
9/2/16

**TABLE OF FLUSHING HYDRANT**

| Station | L/R | Description | Quantity (Each) |
|---|---|---|---|
| 3+29.21 | L | Saint Andrew Street | 1 |
| | | Total: | 1 |

**TABLE OF FIRE HYDRANT With AUX. VALVE & BOX**

| Station | L/R | Description | Quantity (Each) |
|---|---|---|---|
| 3+83.75 | L | Saint Anne Street | 1 |
| 37+03.41 | R | Mount Rushmore Road | 1 |
| 3+79.93 | L | Saint Francis Street | 1 |
| 40+80.98 | R | Mount Rushmore Road | 1 |
| 3+48.75 | L | Saint Patrick Street | 1 |
| 4+50.00 | L | Saint Andrew Street | 1 |
| 4+76.97 | L | Saint Patrick Street | 1 |
| 48+05.70 | R | Mount Rushmore Road | 1 |
| 4+61.03 | L | Saint Charles Street | 1 |
| 51+78.61 | R | Mount Rushmore Road | 1 |
| 55+60.88 | R | Mount Rushmore Road | 1 |
| 4+49.79 | L | Saint Cloud Street | 1 |
| 59+43.19 | R | Mount Rushmore Road | 1 |
| | | Total: | 13 |

**TABLE OF CONNECT TO EXISTING WATER MAIN**

| Station | L/R | Description | Quantity (Each) |
|---|---|---|---|
| 34+19.23 | R | Mount Rushmore Road | 1 |
| 2+46.00 | L | Saint Anne Street | 1 |
| 5+73.65 | L | Saint Anne Street | 1 |
| 2+62.11 | L | Saint Francis Street | 1 |
| 5+56.08 | L | Saint Francis Street | 1 |
| 3+29.21 | L | Saint Andrew Street | 1 |
| 3+46.77 | L | Saint Andrew Street | 1 |
| 5+62.00 | L | Saint Andrew Street | 1 |
| 3+23.95 | L | Saint Charles Street | 1 |
| 6+65.96 | L | Saint Charles Street | 1 |
| 4+30.88 | L | Franklin Street | 1 |
| 5+75.30 | L | Franklin Street | 1 |
| 4+37.77 | L | Saint Cloud Street | 1 |
| 5+72.37 | L | Saint Cloud Street | 1 |
| | | Total: | 14. |

**TABLE OF 8" PIPE CAP (Sewer)**

This item shall be incidental to the contract unit price per each for 48" Manhole.

| Station | L/R | Description | Quantity (Each) |
|---|---|---|---|
| 0+08.03 | CL | MH# 14 Alley | 1 |
| 2+95.84 | CL | Saint Cloud Street | 1 |
| | | Total: | 2 |

**TABLE OF 16" PIPE PLUG (Water)**

| Station | L/R | Description | Quantity (Each) |
|---|---|---|---|
| 2+05.09 | L | Saint Patrick Street | 1 |
| 5+54.30 | L | Saint Patrick Street | 1 |
| | | Total: | 2 |

**TABLE OF 4" PIPE CAP (Water)**

| Station | L/R | Description | Quantity (Each) |
|---|---|---|---|
| 43+34.76 | L | Mt Rushmore Road | 1 |
| | | Total: | 1 |

**TABLE OF 6" PIPE PLUG (Water)**

| Station | L/R | Description | Quantity (Each) |
|---|---|---|---|
| 4+80 | R | St. Patrick Street | 1 |
| | | Total: | 1 |

**TABLE OF 12" PIPE CAP (Water)**

| Station | L/R | Description | Quantity (Each) |
|---|---|---|---|
| 5+50 | L | St. Patrick Street | 1 |
| | | Total: | 1 |

REGISTERED PROFESSIONAL ENGINEER
REG. NO. 2780
GREGORY M. WIERENGA
SOUTH DAKOTA
09/2/16

**TABLE OF 48" MANHOLES**

| Station | L/R | Description | Quantity (Each) |
|---|---|---|---|
| 48+31.54 | L | Mount Rushmore Road | 1 |
| 3+52.73 | L | Saint Andrew Street | 1 |
| 0+11.04 | R | MH# 19 Alley | 1 |
| 1+45.00 | L | MH# 19 Alley | 1 |
| 54+00.05 | L | Mount Rushmore Road | 1 |
| 1+01.93 | L | MH# 16 Alley | 1 |
| 3+27.68 | L | Saint Charles Street | 1 |
| 57+75.42 | L | Mount Rushmore Road | 1 |
| 0+12.29 | CL | MH# 14 Alley | 1 |
| 59+71.44 | L | Mount Rushmore Road | 1 |
| 3+00.00 | CL | Saint Cloud Street | 1 |
| 5+94.96 | R | Saint Cloud Street | 1 |
| 0+50.00 | CL | MH#12C Alley | 1 |
| 61+60.79 | L | Mount Rushmore Road | 1 |
| | | Total: | 14 |

**TABLE OF 48" DROP MANHOLES**

| Station | L/R | Description | Quantity (Each) |
|---|---|---|---|
| 46+41.27 | L | Mount Rushmore Road | 1 |
| 52+10.45 | L | Mount Rushmore Road | 1 |
| 55+90.85 | L | Mount Rushmore Road | 1 |
| | | Total: | 3 |

**TABLE OF RECONSTRUCT MANHOLES**

| Station | L/R | Description | Quantity (Each) |
|---|---|---|---|
| 57+77.89 | R | Mount Rushmore Road | 1 |
| | | Total: | 1. |

**TABLE OF CONNECT TO EXISTING SANITARY SEWER MAIN**

| Station | L/R | Description | Quantity (Each) |
|---|---|---|---|
| 1+48.87 | L | MH# 19 Alley | 1 |
| 0+07.24 | R | MH# 19 Alley | 1 |
| 3+49.01 | L | Saint Andrew Street | 1 |
| 5+45.99 | R | Saint Andrew Street | 1 |
| 3+23.68 | L | Saint Charles Street | 1 |
| 5+44.75 | L | Saint Charles Street | 1 |
| 1+05.69 | L | MH# 16 Alley | 1 |
| 4+36.35 | L | Franklin Street | 1 |
| 5+40.83 | L | Franklin Street | 1 |
| 1+53.96 | R | MH# 14 Alley | 1 |
| 3+93.22 | L | Saint Cloud Street | 1 |
| 5+99.42 | R | Saint Cloud Street | 1 |
| | | Total: | 12 |

| Prepared By: | Prepared For: | Scale: | Revisions: | | | Sheet Title: | Sheet No: |
|---|---|---|---|---|---|---|---|
| AE2S | Public Works Department<br>Rapid City, South Dakota<br>Engineering Services | Designed By: GW<br>Drawn By:<br>Design Date: 02.2016 - 04.2016<br>Print Date: 09.02.2016<br>Internal Job No: 11119.04<br>Surveyed By: SDDOT<br>Survey Date: 2012<br>Project Number: 12-2051, CIP NO.50867, PCN X02P | Number: | Description: | FOR BIDDING PURPOSES ONLY<br>MOUNT RUSHMORE ROAD<br>UTILITY RECONSTRUCTION | SECTION G<br>ESTIMATE OF QUANTITIES AND GENERAL NOTES AND TABLES | G14 of G83 |

## TABLE OF 4" SANITARY SEWER CLEANOUT

| Station | L/R | Description | Quantity (Each) |
|---|---|---|---|
| 3+93.00 | L | Saint Andrew Street | 1 |
| 4+24.94 | L | Saint Andrew Street | 1 |
| 51+33.21 | L | Mount Rushmore Road | 1 |
| 53+09.86 | L | Mount Rushmore Road | 1 |
| 53+66.33 | L | Mount Rushmore Road | 1 |
| 54+48.61 | L | Mount Rushmore Road | 1 |
| 0+06.00 | R | MH# 14 Alley | 1 |
| 0+25.00 | L | MH# 14 Alley | 1 |
| 56+83.45 | L | Mount Rushmore Road | 1 |
| 58+70.63 | L | Mount Rushmore Road | 1 |
| 3+08.57 | R | Saint Cloud Street | 1 |
| 3+13.38 | R | Saint Cloud Street | 1 |
| 3+21.52 | L | Saint Cloud Street | 1 |
| 4+01.07 | R | Saint Cloud Street | 1 |
| 4+11.10 | L | Saint Cloud Street | 1 |
| 0+61.08 | R | MH# 12B Alley | 1 |
| 61+11.24 | L | Mount Rushmore Road | 1 |
| 62+43.46 | L | Mount Rushmore Road | 1 |
| | | Total: | 18. |

## TABLE OF 4" SEWER SERVICE

| Station | L/R | Description | Quantity (Ft) |
|---|---|---|---|
| 3+93.00 | L | Saint Andrew Street | 40.6 |
| 4+24.94 | L | Saint Andrew Street | 40.6 |
| 51+33.21 | L | Mount Rushmore Road | 63.1 |
| 3+46.17 | L | Saint Charles Street | 2.0 |
| 0+97.04 | R | MH#16 Alley | 33.9 |
| 0+97.04 | R | MH#16 Alley | 56.5 |
| 54+48.61 | L | Mount Rushmore Road | 63.1 |
| 0+06.00 | R | MH# 14 Alley | 2.0 |
| 0+25.00 | CL | MH# 14 Alley | 13.0 |
| 56+83.45 | L | Mount Rushmore Road | 63.2 |
| 58+70.63 | L | Mount Rushmore Road | 67.1 |
| 3+08.20 | CL | Saint Cloud Street | 33.9 |
| 3+17.20 | CL | Saint Cloud Street | 33.9 |
| 3+21.52 | CL | Saint Cloud Street | 31.6 |
| 4+01.07 | CL | Saint Cloud Street | 33.3 |
| 4+11.10 | L | Saint Cloud Street | 32.6 |
| 0+61.08 | R | MH# 12B Alley | 9.8 |
| 61+11.24 | L | Mount Rushmore Road | 27.9 |
| 62+35.06 | L | Mount Rushmore Road | 34.8 |
| | | Total: | 682.9 |

## TABLE OF ASPHALT CONCRETE COMPOSITE

| Station | to | Station | Description | Quantity (Ton) |
|---|---|---|---|---|
| 2+62.17 | | 2+80.39 | Saint Francis Street | 3.7 |
| 2+62.17 | | 2+70.64 | Saint Francis Street | 0.5 |
| 3+41.74 | | 3+51.74 | Saint Andrew Street | 1.6 |
| 0+04.60 | | 0+27.10 | Franklin Street | 10.3 |
| 1+00.29 | | 1+09.63 | St. Charles/Franklin Alley | 2.4 |
| 6+40.06 | | 6+50.06 | Saint Cloud Street | 3.0 |
| 0+03.96 | | 1+18.05 | St. Cloud/St. James Alley | 41.1 |
| 37+30 | | | Mt. Rushmore Rd/St. Anne | 4.1 |
| 41+15 | | | Mt. Rushmore Rd/St. Francis | 3.5 |
| 44+90 | | | Mt. Rushmore Rd/St. Patrick | 4.9 |
| 5+50 | | | Saint Patrick Street | 3.6 |
| 48+31 | | | Mt. Rushmore Rd/St. Andrew | 13.2 |
| 48+60 | | | Mt. Rushmore Rd/St Andrew | 8.2 |
| 52+10 | | | Mt. Rushmore Rd/St. Charles | 13.2 |
| 52+40 | | | Mt. Rushmore Rd/St. Charles | 8.2 |
| 55+91 | | | Mt. Rushmore Rd/Franklin St | 13.2 |
| 56+05 | | | Mt. Rushmore Rd/Franklin St | 4.1 |
| 59+71 | | | Mt. Rushmore Rd/St. Cloud | 13.2 |
| 59+92 | | | Mt. Rushmore Rd/St. Cloud | 4.1 |
| | | | Total: | 156.1 |

## TABLE OF SPECIAL MANHOLE FRAME AND LID

| Station | L/R | Description | Quantity (Each) |
|---|---|---|---|
| 51+33.21 | L | Mount Rushmore Road | 1 |
| 53+09.86 | L | Mount Rushmore Road | 1 |
| 53+66.33 | L | Mount Rushmore Road | 1 |
| 0+06.00 | R | MH# 14 Alley | 1 |
| 0+25.00 | L | MH# 14 Alley | 1 |
| 3+08.20 | R | Saint Cloud Street | 1 |
| 3+17.20 | R | Saint Cloud Street | 1 |
| 4+11.10 | L | Saint Cloud Street | 1 |
| 0+61.08 | R | MH# 12B Alley | 1 |
| 61+11.24 | L | Mount Rushmore Road | 1 |
| | | Total: | 10. |

## TABLE OF 8" X 4" ECCENTRIC REDUCER (SEWER)

This item shall be incidental to the contract unit price per each for "connect to existing sewer main".

| Station | L/R | Description | Quantity (Each) |
|---|---|---|---|
| 0+08.00 | R | MH# 14 Alley | 1 |
| 1+05.69 | L | MH# 16 Alley | 1 |
| | | Total: | 2 |

## TABLE OF B66 CONCRETE CURB AND GUTTER

| Station | L/R | Description | Quantity (Ft) |
|---|---|---|---|
| 2+62.17 | L | Saint Francis Street | 6 |
| 3+41.74 | L | Saint Andrew Street | 10 |
| 3+16.37 | L | Saint Cloud Street | 10 |
| | | Total: | 26 |

## TABLE OF CONCRETE P6 GUTTER

| Station | L/R | Description | Quantity (Ft) |
|---|---|---|---|
| 2+62.17 | L | Saint Francis Street | 12 |
| | | Total: | 12 |

## TABLE OF BASE COURSE

| Station | to | Station | Description | Quantity (Ton) |
|---|---|---|---|---|
| 2+62.17 | | 2+80.39 | Saint Francis Street | 9.4 |
| 2+62.17 | | 2+70.64 | Saint Francis Street | 0.8 |
| 3+41.74 | | 3+51.74 | Saint Andrew Street | 2.4 |
| 0+04.60 | | 0+27.10 | Franklin Street | 15.9 |
| 1+00.29 | | 1+09.63 | St. Charles/Franklin Alley | 3.7 |
| 3+01.85 | | 3+20.21 | Saint Cloud Street | 9.3 |
| 6+40.06 | | 6+50.06 | Saint Cloud Street | 4.6 |
| 0+03.96 | | 1+18.05 | St. Cloud/St. James Alley | 63.5 |
| 37+30 | | | Mt. Rushmore Rd/St. Anne | 3.9 |
| 41+15 | | | Mt. Rushmore Rd/St. Francis | 3.4 |
| 44+90 | | | Mt. Rushmore Rd/St. Patrick | 4.7 |
| 5+50 | | | Saint Patrick Street | 3.4 |
| 48+31 | | | Mt. Rushmore Rd/St. Andrew | 12.7 |
| 48+60 | | | Mt. Rushmore Rd/St Andrew | 7.9 |
| 52+10 | | | Mt. Rushmore Rd/St. Charles | 12.7 |
| 52+40 | | | Mt. Rushmore Rd/St. Charles | 7.9 |
| 55+91 | | | Mt. Rushmore Rd/Franklin St | 12.7 |
| 56+05 | | | Mt. Rushmore Rd/Franklin St | 3.9 |
| 59+71 | | | Mt. Rushmore Rd/St. Cloud | 12.7 |
| 59+92 | | | Mt. Rushmore Rd/St. Cloud | 3.9 |
| | | | Total: | 199.4 |

REGISTERED PROFESSIONAL ENGINEER
REG. NO.
2780
GREGORY M. WIERENGA
SOUTH DAKOTA
9/2/16

**TABLE OF 6" PCC DRIVEWAY PAVEMENT**

| Station | to | Station | Description | Quantity (SqYd) |
|---|---|---|---|---|
| 3+01.85 | | 3+20.21 | Saint Cloud Street | 42.6 |
| | | | Total: | 42.6 |

**TABLE OF BORE AND JACK 1" PIPE**

| Station | L/R | Description | Quantity (Ft) |
|---|---|---|---|
| 6+45.06 | R | Saint Cloud Street | 18 |
| | | Total: | 18 |

**PROJECT SEQUENCING**

All temporary items necessary for the proposed utility work, including joint restraints, that otherwise would not be needed shall be considered incidental to the respective items and no additional payment will be made to the Contractor. Temporary caps, plugs, valves, flushing hydrants, etc. needed to perform the anticipated work shall remain property of the Contractor upon completion of the work.

Mount Rushmore Road will be abbreviated as (MRR).

The sequencing below is based upon the proposed traffic control sequencing for the roadway project NH 0016(84)67 PCN 049F. Refer to the Project Phasing Plan for proposed project phasing locations.

Reconstruction sequence shall be the sanitary sewer followed by the water main followed by the storm sewer due to bury depths.

**Phase 1 (East Side MRR from St. Francis to St. Patrick Street)**

**Sewer – Phase 1**

1. No sanitary sewer in Phase 1.

**Water – Phase 1**

1. Refer to roadway plans for head to head traffic in southbound lanes from St. Francis to St. Patrick Street.
2. Construct proposed 12" PVC water main in MRR and 16" PVC water main in St. Patrick Street within Phase 1 work limits with no connection to existing 12" PVC and 12" CI water main in St. Patrick Street.
3. The 16" PVC main shall terminate near the center of MRR with a 16" gate valve and 16" plug at the west side of the work limits.
4. Connect the 16" PVC main to existing 12" PVC main in St. Patrick Street at the east work limits. The existing 12" CI main on the north side of St. Patrick Street shall remain in service with no connection to the 16" PVC main. Water service to 1818 MRR (Corner Pantry) shall remain active.
5. Construct new 4" water service to 1909 MRR (now a vacant lot) between 12" PVC main and the center of MRR. Cap the 4" service pipe at the center of MRR for subsequent connection in Phase 2A.
6. Test, disinfect and flush new 12" PVC and 16" PVC mains within Phase 1.
7. Construct new 1" water service to 1818 MRR (Corner Pantry) tapped to new 12" PVC main in MRR. Reconnect existing service pipe to new water service.
8. Close the 12" valve on the 12" CI main at the west side of the intersection. Shut down existing 12" CI main and connect to new 16" PVC main at the east work limits.
9. Abandon the 12" CI main between the closed valve and the east work limits. Cap the abandoned 12" CI main at the east work limits.
10. Existing 12" CI main is to remain active west of the closed valve to maintain service to 1819 MRR (Starbucks).
11. Remove and abandon existing hydrant at southeast quadrant of MRR and St. Patrick Street intersection. Plug the 12" x 6" hydrant tee to allow existing 12" PVC main in St. Patrick Street to remain active.

**Phase 2A (West Side MRR from Flormann Street to St. Patrick Street)**

**Sewer – Phase 2A**

1. No sanitary sewer in Phase 2A.

**Water – Phase 2A**

1. Refer to roadway plans for head to head traffic in northbound lanes from Flormann Street to St. Patrick Street.
2. Complete construction for 4" water service to 1909 MRR. Connect to 4" service pipe at the center of MRR (from Phase 1) and extend west to the proposed 4" pipe cap at the west right-of-way line. Plug the curb stop outlet. No reconnection to existing service pipe at this location.
3. Construct proposed 16" PVC water main in St. Patrick St. between closed 16" valve at center of MRR and the west work limits without connection to the existing 12" PVC and 12" CI mains in St. Patrick Street.
4. Test, disinfect and flush the 16" PVC main. Close the proposed 16" gate valve at Sta. 3+00 (St. Patrick Street).
5. Construct new 1" water service to 803 St. Patrick Street (Bursch Travel) and new 1 ½" water service to 1819 MRR (Starbucks) tapped to 16" PVC main. Make connections to existing water services from new service pipes.
6. Connect 16" PVC main to existing 12" CI and 12" PVC water mains at west work limits.
7. Abandon the existing 12" CI water main in St. Patrick Street.
8. Abandon the existing 12" PVC water main in St. Patrick Street. Excavate the 12"x12" tee used for the tie in to the existing 12" PVC at the east work limits in Phase 1. Plug the west leg of the 12"x12" tee. Contractor shall note that the work described in this note is to be performed at the completion of Phase 2A, and that a separate traffic control plan is required. Also note that a pavement block out in Phase 1 is planned for this location, and that the permanent PCC pavement for the block out location shall be constructed after completing this water main abandonment.
9. Construct water mains in intersecting side streets on west side of MRR (St. Francis Street and St. Anne Street). Stub out new mains to centerline of MRR and cap.
10. Test, disinfect and flush new main in St. Francis and St. Anne Street (west side).
11. Construct new services and reconnect to existing services in St. Francis Street.
12. Complete abandonments of existing water system components as work progresses.

**Phase 2B (West Side MRR from St. Patrick Street to St. James Street)**

**Sewer – Phase 2B**

1. Refer to roadway plans for head to head traffic in northbound lanes from St. Patrick Street to St. James Street.
2. Commence work at the north end of the work area (St. James) and complete utility work from north to south. Test and place new 8" PVC gravity sewer into service as work progresses.
3. Complete removals as work progresses from north to south and utility items are taken out of service.
4. Begin sewer at existing MH #12 at Sta. 62+60. Connect to existing 8" PVC stub-out on south side of manhole.
5. Existing sewer at centerline of MRR shall remain connected at MH #12 and shall remain in service continuously until abandonment/removal in Phase 3B.
6. Complete testing on new sewer at each pipe segment in laid and on each manhole as work progresses.
7. Construct new west side intersecting sewer mains and services and make reconnections to existing main and services.
8. Construct stub-outs of east side sewer mains and services to near centerline of MRR and cap for future extension to the east during Phase 3B.

REGISTERED PROFESSIONAL ENGINEER
REG. NO. 2780
GREGORY M. WIERENGA
SOUTH DAKOTA
09/2/16

**Water – Phase 2B**

1. The existing 8" AC water main on the east side of MRR shall remain in service during Phase 2B construction.
2. Construct 8" PVC water main between St. James Street and St. Cloud Street. Terminate 8" PVC main with cap in St. Cloud Street near center line of MRR for subsequent construction on east side MRR during Phase 3B.
3. Construct 8" PVC main for tie-in to existing 8" PVC water main in St. Cloud Street on west side of MRR.
4. Test, disinfect and flush 8" PVC water main.
5. Connect to existing 8" main at west side of intersection with St. Cloud Street.
6. Construct water mains at intersecting side streets on west side of MRR (franklin Street, St. Charles Street, and St. Andrew Street). Side street mains shall be stubbed out to the centerline of MRR and capped for subsequent connection to new mains in Phase 3B.
7. The existing 8" PVC water main crossing MRR at Franklin Street shall remain in service during Phase 2B and until completion of the new 12" PVC water main crossing in Franklin Street during Phase 3B.
8. Construct new water service to 1405 MRR and reconnect to existing service pipe. Close the existing curb stop, plug the outlet and remove the curb box.
9. Construct new water service pipe for 1511 MRR (Dakota Travel) within the Phase 2B work limits. Terminate the service pipe near centerline of MRR for subsequent extension and tap during Phase 3B. Extend new service pipe west to reconnect location to existing service, but do not reconnect during this phase. See Phase 3B for reconnecting this service. Existing water service is to remain active during Phase 2B.
10. No additional water main or water service construction for this phase.

**Phase 3A (East Side MRR from Flormann Street to St. Francis Street)**

**Sewer – Phase 3A**

1. No sanitary sewer on Phase 3A.

**Water – Phase 3A**

1. Refer to roadway plans for head to head traffic in southbound lanes from Flormann Street to St. Francis Street.
2. Construct proposed 12" PVC water main in MRR, east side.
3. Construct water mains in intersecting side streets (St. Anne Street, St. Francis Street).
4. Make connection to existing 12" PVC main at Flormann Street.
5. Test, disinfect and flush new 12" PVC main and 8" PVC mains in St. Anne Street and St. Francis Street.
6. Make connection to existing water mains in St. Anne Street and St. Francis Street, east side, and make connections to water main stub outs at centerline of MRR constructed in Phase 2A.
7. Make connection to 12" PVC main in MRR at St. Francis Street constructed in Phase 1.
8. Complete abandonments of existing water system components.

**Phase 3B (East Side MRR from St. Patrick Street to St. James Street)**

**Sewer – Phase 3B**

1. Refer to roadway plans for head to head traffic in southbound lanes from St. Patrick Street to St. James Street.
2. Commence work at the south end of the work area (St. Patrick Street) and complete utility work from south to north.
3. Complete removals as work progresses from south to north and utility items are taken out of service.
4. Construct sewer mains at intersecting side streets and alleys on the east side of MRR. (St. Patrick/St. Andrew Alley, St Andrew Street, St. Charles Street, Franklin/St. Cloud Alley, and St. Cloud Street and connect to sewer main stub outs at center line MRR constructed during Phase 2B.
5. Complete sewer service connections to service line stub outs at centerline of MRR constructed during Phase 2B.
6. Disconnect existing sewer main connection to MH #12. Remove the existing manhole near MH #12. Reshape MH #12 invert to provide straight through flow channel with no side branch. Coordinate work in MH #12 with Phase 4 traffic control.

**Water – Phase 3B**

1. Construct proposed 12" PVC water main in MRR between St. Patrick Street and St. Cloud Street, with work progressing south to north.
2. Construct water mains in intersecting side streets east of MRR and to water main stub-outs to centerline.
3. Existing 8" AC main on east side of MRR between St. Andrew Street and St. James Street is to remain active until new 12" PVC and 8" PVC mains are tested and disinfected.
4. Test, disinfect and flush mains as work progresses from block to block.
5. Construct east side water services and reconnect to existing service pipes after testing, disinfecting and flushing mains.
6. Construct water service for 731 St. Cloud Street prior to abandoning existing 8" AC water main in MRR between Franklin Street and St. Cloud Street.
7. Construct water service tap for 1511 MRR (Dakota Travel) and connect to service sub out at centerline of MRR constructed in Phase 2B. Make service reconnection to existing service pipe on west side of MRR and complete surfacing at connection location.
8. Construct 8" PVC main in MRR between St. Cloud Street and St. James Street.
9. Test, disinfect and flush 8" main, and make connection to existing 8" PVC main at St. James Street.

REGISTERED PROFESSIONAL ENGINEER
REG. NO. 2780
GREGORY M. WIERENGA
SOUTH DAKOTA
9/2/16

| Prepared By: | Prepared For: | Scale: AS NOTED | Revisions: | | | |
|---|---|---|---|---|---|---|
| AE2S | Public Works Department<br>Rapid City, South Dakota, Incorporated 1882<br>Engineering Services | Designed By: GW<br>Drawn By: MS<br>Design Date: 02.2016 - 04.2016<br>Print Date: 08.19.2016<br>Internal Job No: 11119.04<br>Surveyed By: SDDOT<br>Survey Date: 2012<br>Project Number: 12-2051, CIP NO.50867, PCN X02P | Number: | Description: | | |

FOR BIDDING PURPOSES ONLY

# MOUNT RUSHMORE ROAD UTILITY RECONSTRUCTION

| Sheet Title: | Sheet No: |
|---|---|
| PROJECT | G17 |
| PHASING | of |
| PLAN | G83 |

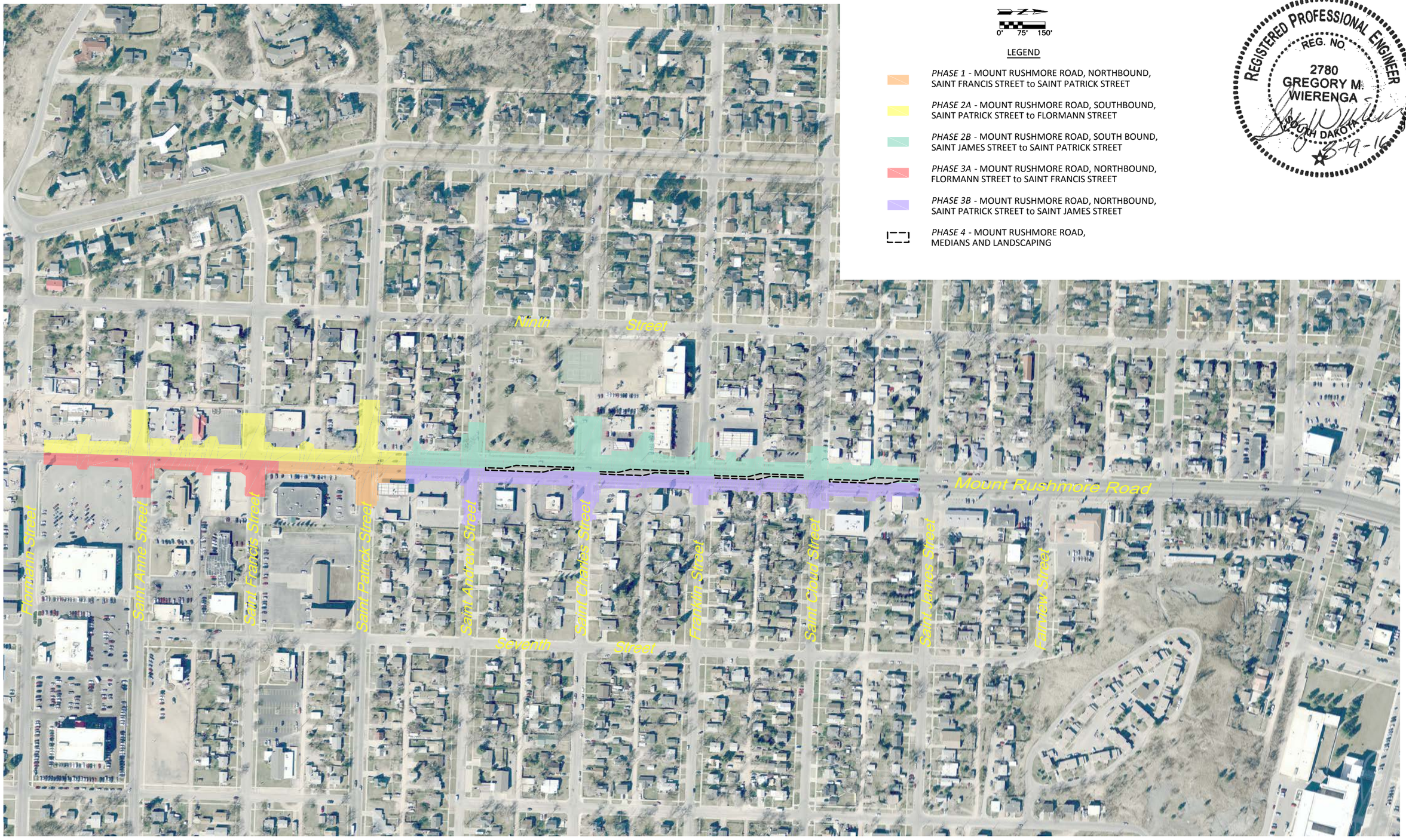


0' 75' 150'

LEGEND

- *PHASE 1* - MOUNT RUSHMORE ROAD, NORTHBOUND, SAINT FRANCIS STREET to SAINT PATRICK STREET
- *PHASE 2A* - MOUNT RUSHMORE ROAD, SOUTHBOUND, SAINT PATRICK STREET to FLORMANN STREET
- *PHASE 2B* - MOUNT RUSHMORE ROAD, SOUTH BOUND, SAINT JAMES STREET to SAINT PATRICK STREET
- *PHASE 3A* - MOUNT RUSHMORE ROAD, NORTHBOUND, FLORMANN STREET to SAINT FRANCIS STREET
- *PHASE 3B* - MOUNT RUSHMORE ROAD, NORTHBOUND, SAINT PATRICK STREET to SAINT JAMES STREET
- *PHASE 4* - MOUNT RUSHMORE ROAD, MEDIANS AND LANDSCAPING

REGISTERED PROFESSIONAL ENGINEER
REG. NO. 2780
GREGORY M. WIERENGA
SOUTH DAKOTA
8-19-16

August 17, 2016 10:32:20 a.m.
Drawing: PROJECT PHASING.DWG (JOENS) (P:\PROJECTS & PROPOSALS\11119.00 MT. RUSHMORE RD. UTILITIES RECONSTRUCTION\DRAWINGS\SHEETS\PHASE 2 - FLORMANN TO SAINT JAMES\)

| Prepared By: | Prepared For: | Scale: AS NOTED | Revisions: | | | Sheet Title: | Sheet No: |
|---|---|---|---|---|---|---|---|
| AE2S | Public Works Department<br>Rapid City, South Dakota<br>Engineering Services | Designed By: GW<br>Drawn By: MS<br>Design Date: 02.2016 - 04.2016<br>Print Date: 08.19.2016<br>Internal Job No: 11119.04<br>Surveyed By: SDDOT<br>Survey Date: 2012<br>Project Number: 12-2051, CIP NO.50867, PCN X02P | Number: | Description: | FOR BIDDING PURPOSES ONLY | WATER & SEWER LAYOUT SHEET | G18 of G83 |

# MOUNT RUSHMORE ROAD UTILITY RECONSTRUCTION

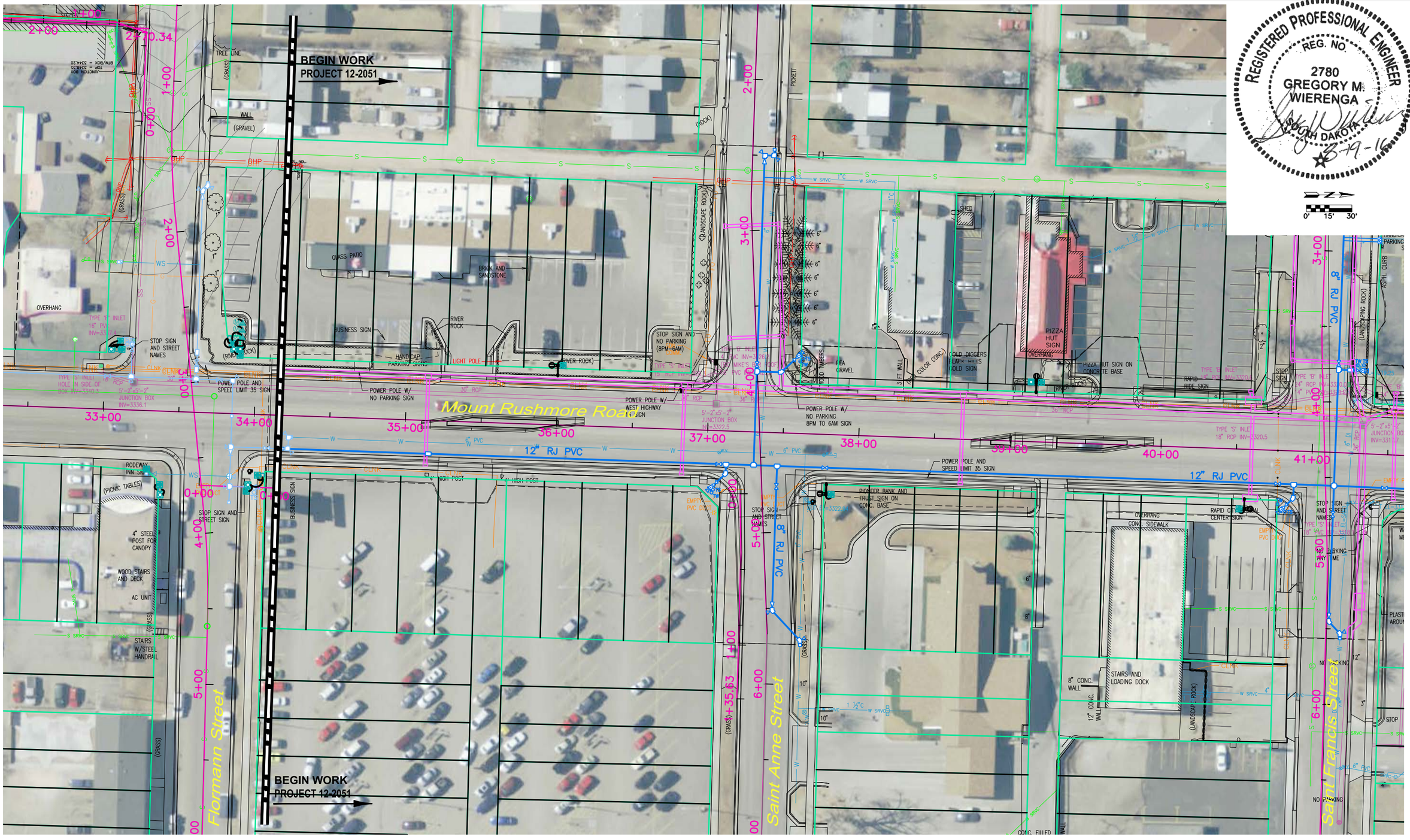


August 17, 2016 10:31:32 a.m.
Drawing: PROJECT LAYOUT.dwg (JOESIS) (P:\PROJECTS & PROPOSALS\11119.00 MT. RUSHMORE RD. UTILITIES RECONSTRUCTION\DRAWINGS\SHEETS\PHASE 2 - FLORMANN TO SAINT JAMES.)

| Prepared By: | Prepared For: | Scale: AS NOTED | Revisions: | | | Sheet Title: | Sheet No: |
|---|---|---|---|---|---|---|---|
| AE2S | Public Works Department<br>Rapid City, South Dakota<br>Engineering Services | Designed By: GW<br>Drawn By: MS<br>Design Date: 02.2016 - 04.2016<br>Print Date: 08.19.2016<br>Internal Job No: 11119.04<br>Surveyed By: SDDOT<br>Survey Date: 2012<br>Project Number: 12-2051, CIP NO.50867, PCN X02P | Number: | Description: | FOR BIDDING PURPOSES ONLY<br>MOUNT RUSHMORE ROAD<br>UTILITY RECONSTRUCTION | WATER & SEWER<br>LAYOUT<br>SHEET | G19<br>of<br>G83 |

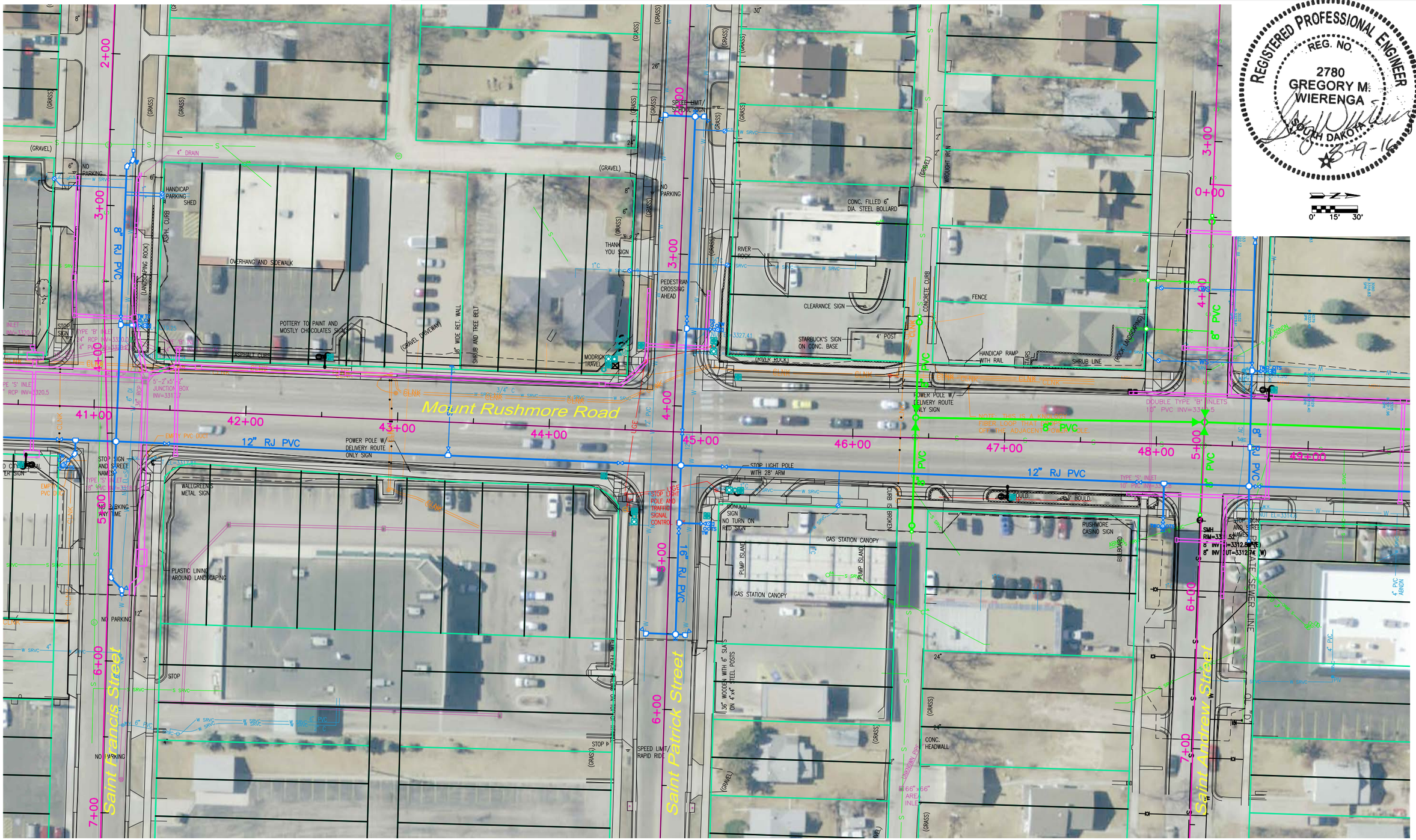


REGISTERED PROFESSIONAL ENGINEER
REG. NO. 2780
GREGORY M. WIERENGA
SOUTH DAKOTA
8-19-16

August 17, 2016 10:31:32 a.m.
Drawing: PROJECT LAYOUT.DWG (JOHNS) (P:\PROJECTS & PROPOSALS\11119.00 MT. RUSHMORE RD. UTILITIES RECONSTRUCTION\DRAWINGS\SHEETS\PHASE 2 - FLORMANN TO SAINT JAMES\)

Prepared By:

AE2S

Prepared For:

Public Works Department

Engineering Services

| Scale: AS NOTED | |
|---|---|
| Designed By: GW | Drawn By: MS |
| Design Date: 02.2016 - 04.2016 | Print Date: 08.19.2016 |
| Internal Job No: 11119.04 | |
| Surveyed By: SDDOT | Survey Date: 2012 |
| Project Number: 12-2051, CIP NO.50867, PCN X02P | |

Revisions:

| Number: | Description: |
|---|---|
| | |

FOR BIDDING PURPOSES ONLY

# MOUNT RUSHMORE ROAD UTILITY RECONSTRUCTION

Sheet Title: WATER & SEWER LAYOUT SHEET

Sheet No: G20 of G83

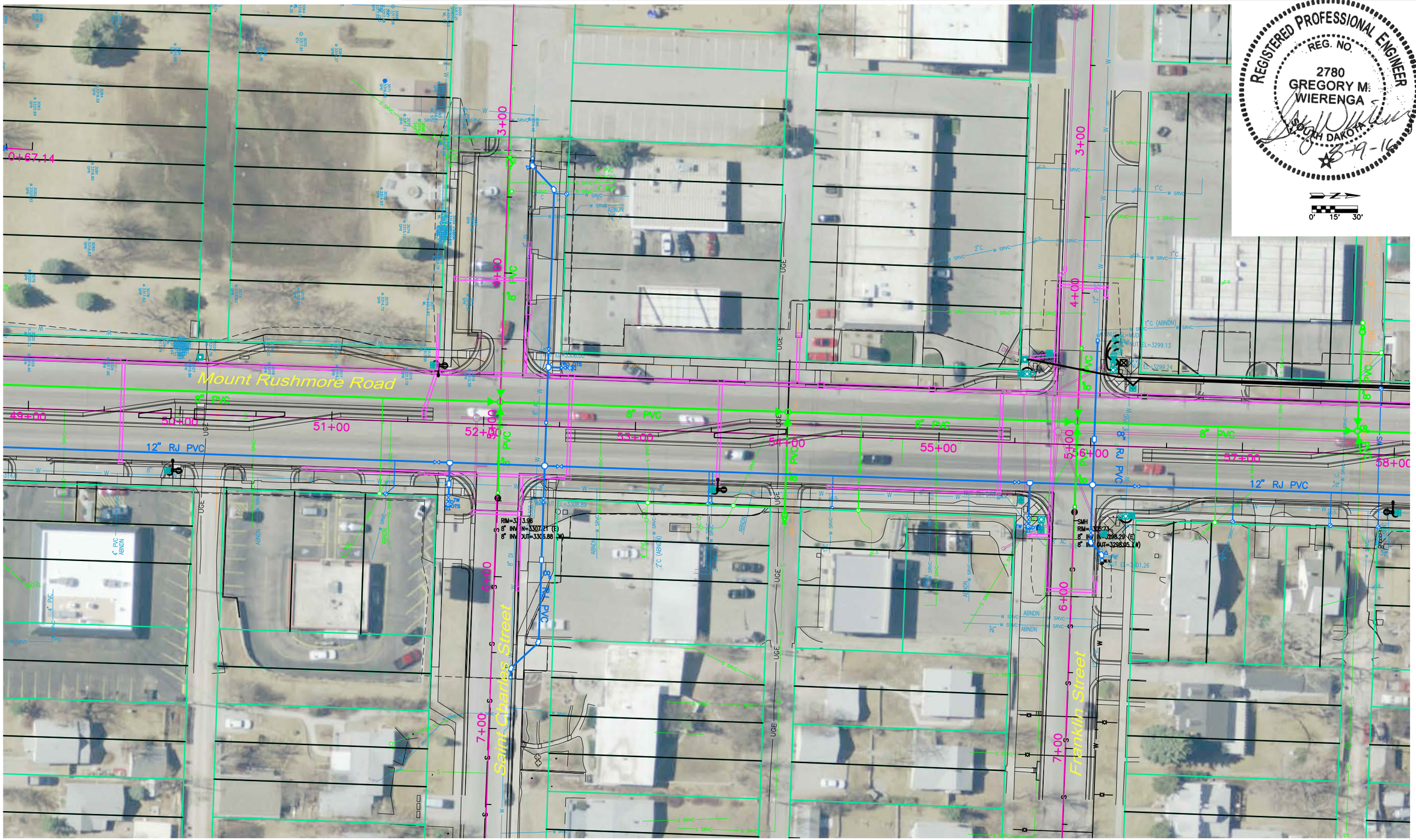


August 17, 2016 10:31:32 a.m.
Drawing: P:\PROJECT LAYOUT.DWG (AE2NS) (P:\PROJECTS & PROPOSALS\11119.00 MT. RUSHMORE RD. UTILITIES RECONSTRUCTION\DRAWINGS\SHEETS\PHASE 2 - FLORMAN TO SAINT JAMES.)

| Prepared By: | Prepared For: | Scale: AS NOTED | Revisions: Number: | Description: |
|---|---|---|---|---|
| AE2S | Public Works Department<br>Rapid City, South Dakota<br>Engineering Services | Designed By: GW<br>Drawn By: MS<br>Design Date: 02.2016 - 04.2016<br>Print Date: 08.19.2016<br>Internal Job No: 11119.04<br>Surveyed By: SDDOT<br>Survey Date: 2012<br>Project Number: 12-2051, CIP NO.50867, PCN X02P | | |

FOR BIDDING PURPOSES ONLY

# MOUNT RUSHMORE ROAD UTILITY RECONSTRUCTION

| Sheet Title: | Sheet No: |
|---|---|
| WATER & SEWER LAYOUT SHEET | G21 of G83 |

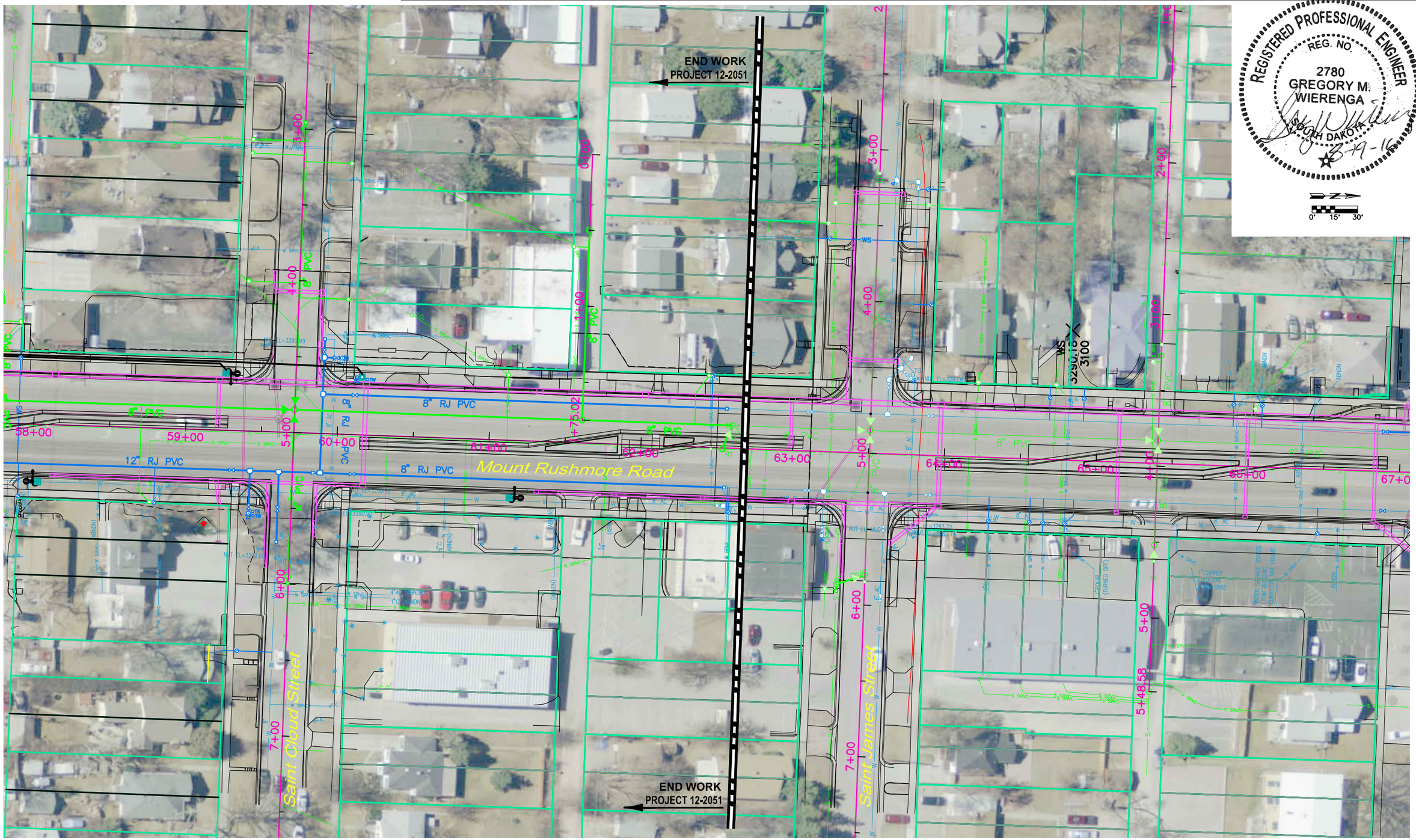


August, 17, 2016 10:31:32 a.m.
Drawing: PROJECT LAYOUT.DWG (JACKS) (P:\PROJECTS & PROPOSALS\11119.00 MT. RUSHMORE RD. UTILITIES RECONSTRUCTION\DRAWINGS\SHEETS\PHASE 2 - FLORMANN TO SAINT JAMES\)

| Prepared By: | Prepared For: | Scale: AS NOTED | Revisions: | | FOR BIDDING PURPOSES ONLY | Sheet Title: | Sheet No: |
|---|---|---|---|---|---|---|---|
| AE2S | Public Works Department<br>Engineering Services | Designed By: GW<br>Drawn By: MS<br>Design Date: 02.2016 - 04.2016<br>Print Date: 08.19.2016<br>Internal Job No: 11119.04<br>Surveyed By: SDDOT<br>Survey Date: 2012<br>Project Number: 12-2051, CIP NO.50867, PCN X02P | Number:<br>Description: | | MOUNT RUSHMORE ROAD<br>UTILITY RECONSTRUCTION | MOUNT RUSHMORE RD<br>DEMOLITION and REMOVAL PLAN<br>BEGIN to STA 39+00 | G22<br>of<br>G83 |

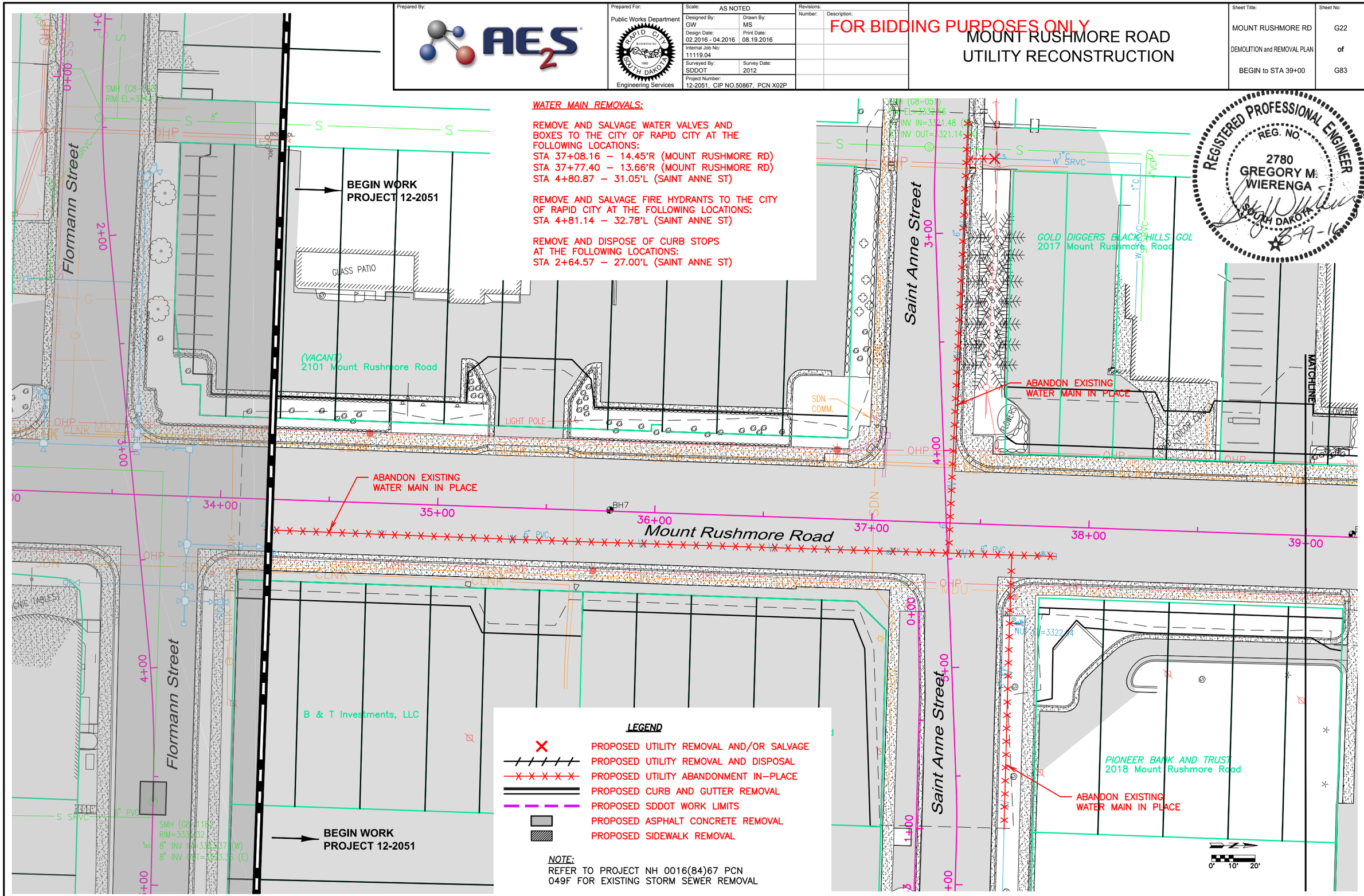


REGISTERED PROFESSIONAL ENGINEER
REG. NO.
2780
GREGORY M.
WIERENGA
SOUTH DAKOTA
8-19-16

***WATER MAIN REMOVALS:***

REMOVE AND SALVAGE WATER VALVES AND BOXES TO THE CITY OF RAPID CITY AT THE FOLLOWING LOCATIONS:
STA 37+08.16 – 14.45'R (MOUNT RUSHMORE RD)
STA 37+77.40 – 13.66'R (MOUNT RUSHMORE RD)
STA 4+80.87 – 31.05'L (SAINT ANNE ST)

REMOVE AND SALVAGE FIRE HYDRANTS TO THE CITY OF RAPID CITY AT THE FOLLOWING LOCATIONS:
STA 4+81.14 – 32.78'L (SAINT ANNE ST)

REMOVE AND DISPOSE OF CURB STOPS AT THE FOLLOWING LOCATIONS:
STA 2+64.57 – 27.00'L (SAINT ANNE ST)

***LEGEND***

- PROPOSED UTILITY REMOVAL AND/OR SALVAGE
- PROPOSED UTILITY REMOVAL AND DISPOSAL
- PROPOSED UTILITY ABANDONMENT IN-PLACE
- PROPOSED CURB AND GUTTER REMOVAL
- PROPOSED SDDOT WORK LIMITS
- PROPOSED ASPHALT CONCRETE REMOVAL
- PROPOSED SIDEWALK REMOVAL

***NOTE:***
REFER TO PROJECT NH 0016(84)67 PCN 049F FOR EXISTING STORM SEWER REMOVAL

August 17, 2016 10:48:14 a.m.
Drawing: DEMOLITION AND REMOVALS.DWG (J:\DENS) (P:\PROJECTS & PROPOSALS\11119.00 MT. RUSHMORE RD. UTILITIES RECONSTRUCTION\DRAWINGS\SHEETS\PHASE 2 - FLORMANN TO SAINT JAMES\)

| Prepared By: | Prepared For: | Scale: AS NOTED | Revisions: | | FOR BIDDING PURPOSES ONLY | Sheet Title: | Sheet No: |
|---|---|---|---|---|---|---|---|
| AE2S | Public Works Department<br>Engineering Services | Designed By: GW<br>Drawn By: MS<br>Design Date: 02.2016 - 04.2016<br>Print Date: 08.19.2016<br>Internal Job No: 11119.04<br>Surveyed By: SDDOT<br>Survey Date: 2012<br>Project Number: 12-2051, CIP NO.50867, PCN X02P | Number:<br>Description: | | MOUNT RUSHMORE ROAD<br>UTILITY RECONSTRUCTION | MOUNT RUSHMORE RD<br>DEMOLITION and REMOVAL PLAN<br>STA 39-00 to 44+00 | G23<br>of<br>G83 |

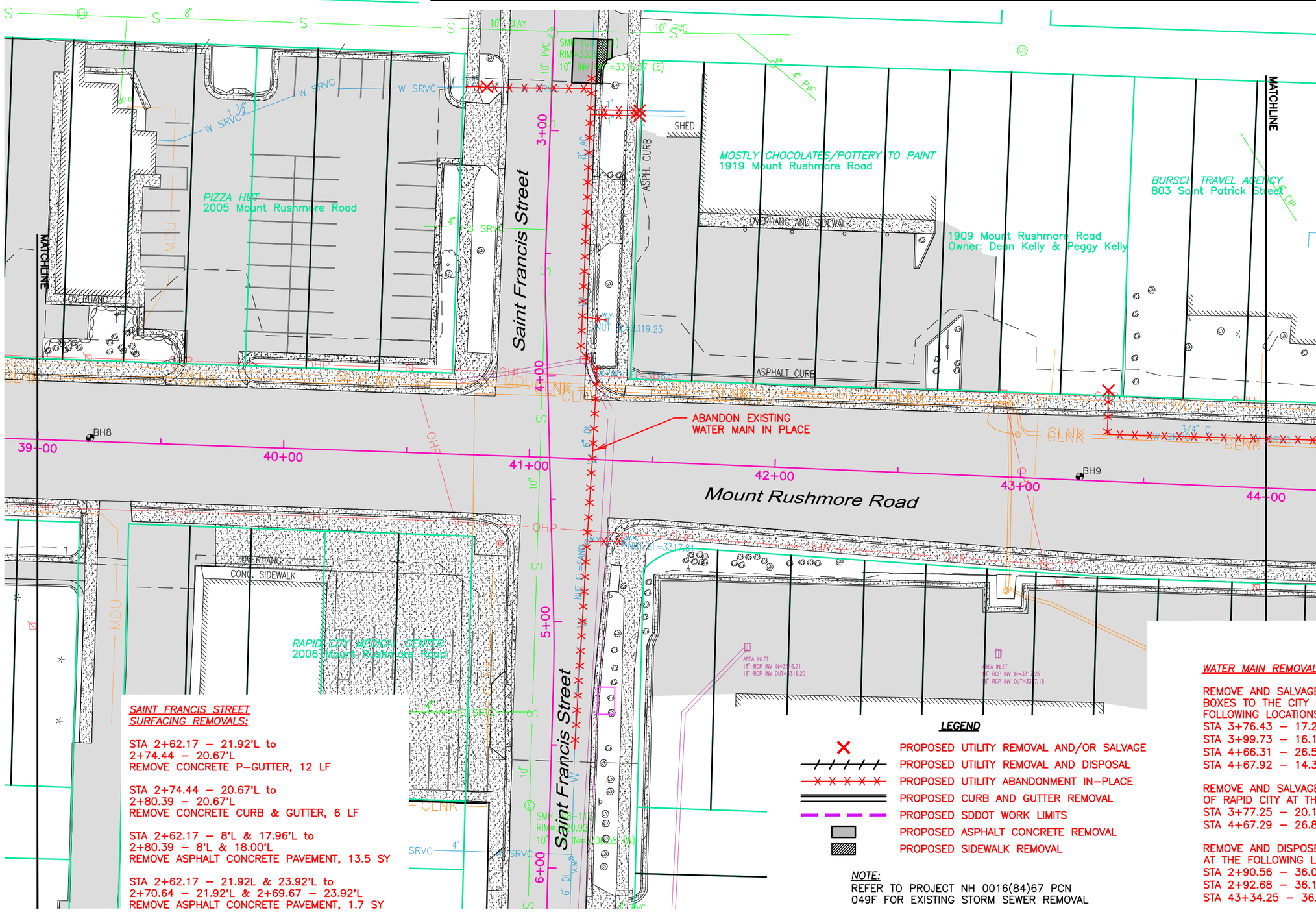


REGISTERED PROFESSIONAL ENGINEER
REG. NO. 2780
GREGORY M. WIERENGA
SOUTH DAKOTA
8-19-16

**SAINT FRANCIS STREET SURFACING REMOVALS:**

STA 2+62.17 – 21.92'L to
2+74.44 – 20.67'L
REMOVE CONCRETE P-GUTTER, 12 LF

STA 2+74.44 – 20.67'L to
2+80.39 – 20.67'L
REMOVE CONCRETE CURB & GUTTER, 6 LF

STA 2+62.17 – 8'L & 17.96'L to
2+80.39 – 8'L & 18.00'L
REMOVE ASPHALT CONCRETE PAVEMENT, 13.5 SY

STA 2+62.17 – 21.92L & 23.92'L to
2+70.64 – 21.92'L & 2+69.67 – 23.92'L
REMOVE ASPHALT CONCRETE PAVEMENT, 1.7 SY

**LEGEND**

- PROPOSED UTILITY REMOVAL AND/OR SALVAGE
- PROPOSED UTILITY REMOVAL AND DISPOSAL
- PROPOSED UTILITY ABANDONMENT IN-PLACE
- PROPOSED CURB AND GUTTER REMOVAL
- PROPOSED SDDOT WORK LIMITS
- PROPOSED ASPHALT CONCRETE REMOVAL
- PROPOSED SIDEWALK REMOVAL

**NOTE:**
REFER TO PROJECT NH 0016(84)67 PCN 049F FOR EXISTING STORM SEWER REMOVAL

**WATER MAIN REMOVALS:**

REMOVE AND SALVAGE WATER VALVES AND BOXES TO THE CITY OF RAPID CITY AT THE FOLLOWING LOCATIONS:
STA 3+76.43 – 17.29'L (SAINT FRANCIS ST)
STA 3+99.73 – 16.15'L (SAINT FRANCIS ST)
STA 4+66.31 – 26.55'L (SAINT FRANCIS ST)
STA 4+67.92 – 14.31'L (SAINT FRANCIS ST)

REMOVE AND SALVAGE FIRE HYDRANTS TO THE CITY OF RAPID CITY AT THE FOLLOWING LOCATIONS:
STA 3+77.25 – 20.18'L (SAINT FRANCIS ST)
STA 4+67.29 – 26.88'L (SAINT FRANCIS ST)

REMOVE AND DISPOSE OF CURB STOPS AT THE FOLLOWING LOCATIONS:
STA 2+90.56 – 36.09'L (SAINT FRANCIS ST)
STA 2+92.68 – 36.13'L (SAINT FRANCIS ST)
STA 43+34.25 – 36.96'L'R (MOUNT RUSHMORE RD)

August 17, 2016 10:48:14 a.m.
Drawing: DEMOLITION AND REMOVALS.DWG (JOCHS) (P:\PROJECTS & PROPOSALS\11119.00 MT. RUSHMORE RD. UTILITIES RECONSTRUCTION\DRAWINGS\SHEETS\PHASE 2 – FORMANN TO SAINT JAMES\)

| Prepared By: | Prepared For: | Scale: AS NOTED | Revisions: | | FOR BIDDING PURPOSES ONLY | Sheet Title: | Sheet No: |
|---|---|---|---|---|---|---|---|
| AE2S | Public Works Department<br>Engineering Services | Designed By: GW<br>Drawn By: MS<br>Design Date: 02.2016 - 04.2016<br>Print Date: 08.19.2016<br>Internal Job No: 11119.04<br>Surveyed By: SDDOT<br>Survey Date: 2012<br>Project Number: 12-2051, CIP NO.50867, PCN X02P | Number: | Description: | MOUNT RUSHMORE ROAD<br>UTILITY RECONSTRUCTION | MOUNT RUSHMORE RD<br>DEMOLITION and REMOVAL PLAN<br>STA 44+00 to 49+00 | G24<br>of<br>G83 |

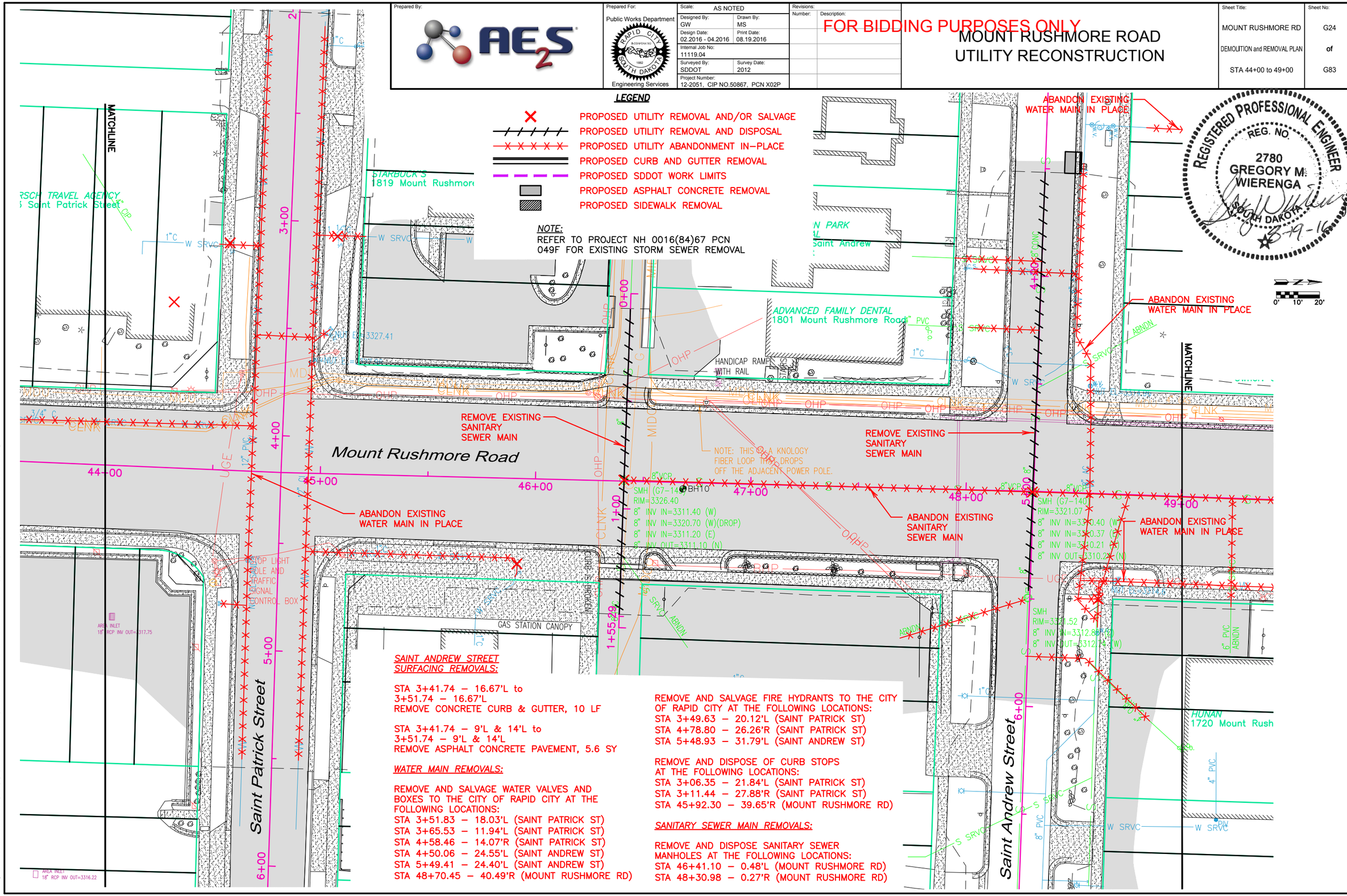


August 17, 2016 10:48:14 a.m.
Drawing: DEMOLITION AND REMOVALS.DWG (JOENS) (P:\PROJECTS & PROPOSALS\11119.00 MT. RUSHMORE RD. UTILITIES RECONSTRUCTION\DRAWINGS\SHEETS\PHASE 2 – FLORMANN TO SAINT JAMES\)

| Prepared By: | Prepared For: | Scale: AS NOTED | Revisions: | | FOR BIDDING PURPOSES ONLY | Sheet Title: | Sheet No: |
|---|---|---|---|---|---|---|---|
| AE2S | Public Works Department<br>Rapid City, South Dakota, Incorporated 1882<br>Engineering Services | Designed By: GW<br>Drawn By: MS<br>Design Date: 02.2016 - 04.2016<br>Print Date: 08.19.2016<br>Internal Job No: 11119.04<br>Surveyed By: SDDOT<br>Survey Date: 2012<br>Project Number: 12-2051, CIP NO.50867, PCN X02P | Number:<br>Description: | | MOUNT RUSHMORE ROAD<br>UTILITY RECONSTRUCTION | MOUNT RUSHMORE RD<br>DEMOLITION and REMOVAL PLAN<br>STA 49+00 to 54+00 | G25<br>of<br>G83 |

## WATER MAIN REMOVALS:

REMOVE AND SALVAGE WATER VALVES AND BOXES TO THE CITY OF RAPID CITY AT THE FOLLOWING LOCATIONS:
STA 4+50.44 – 25.92'L (SAINT CHARLES ST)
STA 5+49.02 – 25.53'L (SAINT CHARLES ST)
STA 52+39.41 – 48.69'R (MOUNT RUSHMORE RD)

REMOVE AND SALVAGE FIRE HYDRANTS TO THE CITY OF RAPID CITY AT THE FOLLOWING LOCATIONS:
STA 52+39.55 – 50.82'R (MOUNT RUSHMORE RD)

REMOVE AND DISPOSE OF CURB STOPS AT THE FOLLOWING LOCATIONS:
STA 3+46.64 – 33'L (SAINT CHARLES STREET)
STA 51+37.26 – 40.95'R (MOUNT RUSHMORE RD)
STA 53+49.57 – 39.24'R (MOUNT RUSHMORE RD)
STA 53+51.86 – 39.28'R (MOUNT RUSHMORE RD)

REMOVE AND DISPOSE OF WATER MANHOLES AT THE FOLLOWING LOCATIONS:
STA 5+50.88 – 26.51'L (SAINT CHARLES ST)

## SANITARY SEWER MAIN REMOVALS:

REMOVE AND DISPOSE SANITARY SEWER MANHOLES AT THE FOLLOWING LOCATIONS:
STA 52+10.80 – 0.21'R (MOUNT RUSHMORE RD)

## LEGEND

- PROPOSED UTILITY REMOVAL AND/OR SALVAGE
- PROPOSED UTILITY REMOVAL AND DISPOSAL
- PROPOSED UTILITY ABANDONMENT IN-PLACE
- PROPOSED CURB AND GUTTER REMOVAL
- PROPOSED SDDOT WORK LIMITS
- PROPOSED ASPHALT CONCRETE REMOVAL
- PROPOSED SIDEWALK REMOVAL

NOTE:
REFER TO PROJECT NH 0016(84)67 PCN 049F FOR EXISTING STORM SEWER REMOVAL

## MANHOLE 16 ALLEY SEWER SURFACING REMOVALS:

STA 1+00.29 – 3.76'R and 4.24'L to 1+09.63 – 3.91'R and 1+09.75 – 4.09'L
REMOVE ASPHALT CONCRETE PAVEMENT, 8.5 SY

REGISTERED PROFESSIONAL ENGINEER
REG. NO. 2780
GREGORY M. WIERENGA
SOUTH DAKOTA
8-19-16

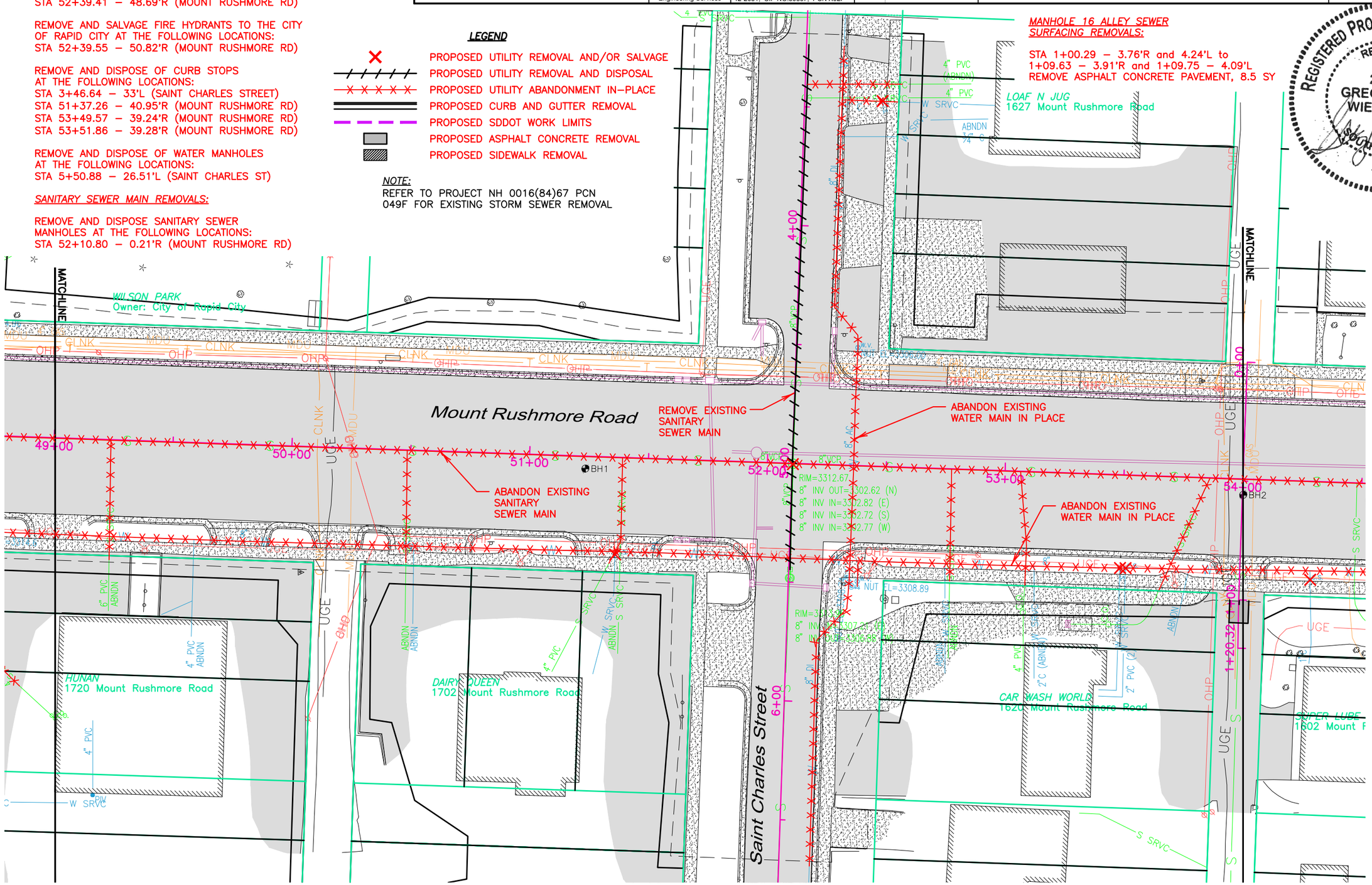


August 17, 2016 10:48:14 a.m.
Drawing: DEMOLITION AND REMOVALS.DWG (ADENS) (P:\PROJECTS & PROPOSALS\11119.00 MT. RUSHMORE RD. UTILITIES RECONSTRUCTION\DRAWINGS\SHEETS\PHASE 2 – FLORMANN TO SAINT JAMES\)

| Prepared By: | Prepared For: | Scale: AS NOTED | Revisions: | | FOR BIDDING PURPOSES ONLY | Sheet Title: | Sheet No: |
|---|---|---|---|---|---|---|---|
| AE2S | Public Works Department<br>Rapid City, South Dakota<br>Engineering Services | Designed By: GW<br>Drawn By: MS<br>Design Date: 02.2016 - 04.2016<br>Print Date: 08.19.2016<br>Internal Job No: 11119.04<br>Surveyed By: SDDOT<br>Survey Date: 2012<br>Project Number: 12-2051, CIP NO.50867, PCN X02P | Number:<br>Description: | | MOUNT RUSHMORE ROAD<br>UTILITY RECONSTRUCTION | MOUNT RUSHMORE RD<br>DEMOLITION and REMOVAL PLAN<br>STA 54+00 to 59+00 | G26<br>of<br>G83 |

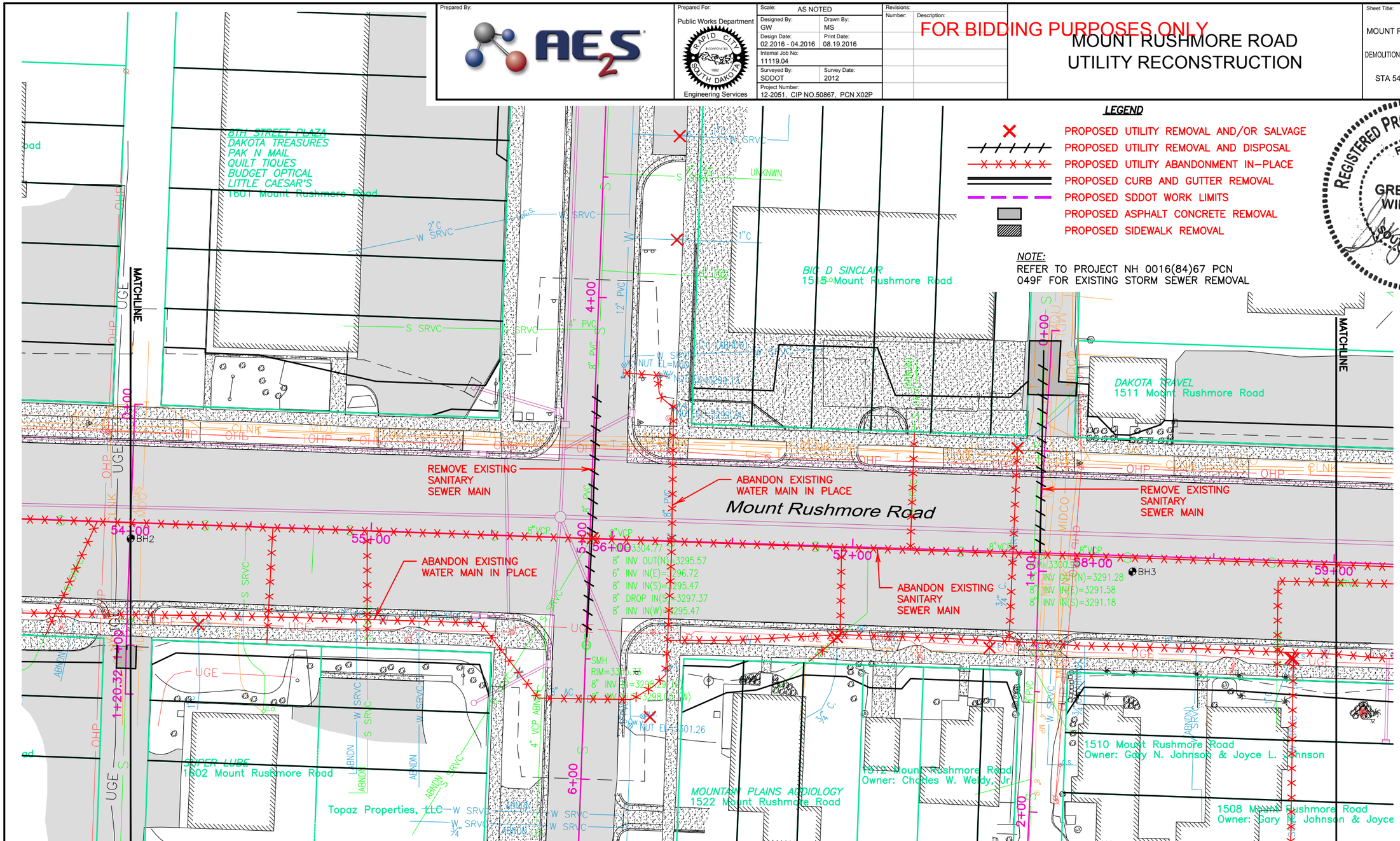


## LEGEND

- PROPOSED UTILITY REMOVAL AND/OR SALVAGE
- PROPOSED UTILITY REMOVAL AND DISPOSAL
- PROPOSED UTILITY ABANDONMENT IN-PLACE
- PROPOSED CURB AND GUTTER REMOVAL
- PROPOSED SDDOT WORK LIMITS
- PROPOSED ASPHALT CONCRETE REMOVAL
- PROPOSED SIDEWALK REMOVAL

REGISTERED PROFESSIONAL ENGINEER
REG. NO. 2780
GREGORY M. WIERENGA
SOUTH DAKOTA
8-19-16

**NOTE:**
REFER TO PROJECT NH 0016(84)67 PCN 049F FOR EXISTING STORM SEWER REMOVAL

**FRANKLIN STREET ALLEY NORTH SURFACING REMOVALS:**

STA 0+04.60 – 9.09'R & 0+04.16 – 3.93'L to 0+27.10 – 8.55'R & 0+26.41 – 11.53'L
REMOVE ASPHALT PAVEMENT, 36.4 SY

**WATER MAIN REMOVALS:**

REMOVE AND SALVAGE WATER VALVES AND BOXES TO THE CITY OF RAPID CITY AT THE FOLLOWING LOCATIONS:
STA 55+40.59 – 36.73'R (MOUNT RUSHMORE RD)
STA 4+44.65 – 32.69'L (FRANKLIN ST)
STA 5+53.24 – 33.56'L (FRANKLIN ST)
STA 5+73.00 – 24.66'L (FRANKLIN ST)

REMOVE AND SALVAGE FIRE HYDRANTS TO THE CITY OF RAPID CITY AT THE FOLLOWING LOCATIONS:
STA 5+73.05 – 27.77'L (FRANKLIN ST)

REMOVE AND DISPOSE OF CURB STOPS AT THE FOLLOWING LOCATIONS:
STA 54+29.65 – 41.45'R (MOUNT RUSHMORE RD)
STA 3+31.90 – 31.53'L (FRANKLIN ST)
STA 3+74.90 – 31.53'L (FRANKLIN ST)
STA 56+94.17 – 37.72'R (MOUNT RUSHMORE RD)
STA 57+58.10 – 39.99'R (MOUNT RUSHMORE RD)
STA 57+68.49 – 40.75'L (MOUNT RUSHMORE RD)
STA 58+83.34 – 40.29'R (MOUNT RUSHMORE RD)
STA 58+84.39 – 40.41'R (MOUNT RUSHMORE RD)
STA 57+68.49 – 40.75'L (MOUNT RUSHMORE RD)

**SANITARY SEWER MAIN REMOVALS:**

REMOVE AND DISPOSE SANITARY SEWER MANHOLES AT THE FOLLOWING LOCATIONS:
STA 55+91.69 – 0.21'R (MOUNT RUSHMORE RD)

August 17, 2016 10:48:14 a.m.
Drawing: DEMOLITION AND REMOVALS.DWG (JOENS) (P:\PROJECTS & PROPOSALS\11119.00 MT. RUSHMORE RD. UTILITIES RECONSTRUCTION\DRAWINGS\SHEETS\PHASE 2 - FLORMANN TO SAINT JAMES\)

Prepared By: AE2S

Prepared For: Public Works Department — Rapid City, South Dakota — Engineering Services

| | |
|---|---|
| Scale: | AS NOTED |
| Designed By: GW | Drawn By: MS |
| Design Date: 02.2016 - 04.2016 | Print Date: 08.19.2016 |
| Internal Job No: 11119.04 | |
| Surveyed By: SDDOT | Survey Date: 2012 |
| Project Number: 12-2051, CIP NO.50867, PCN X02P | |

Revisions: Number: | Description:

FOR BIDDING PURPOSES ONLY

# MOUNT RUSHMORE ROAD UTILITY RECONSTRUCTION

Sheet Title: MOUNT RUSHMORE RD UTILITY PLAN STA 59+00 to END

Sheet No: G27 of G83

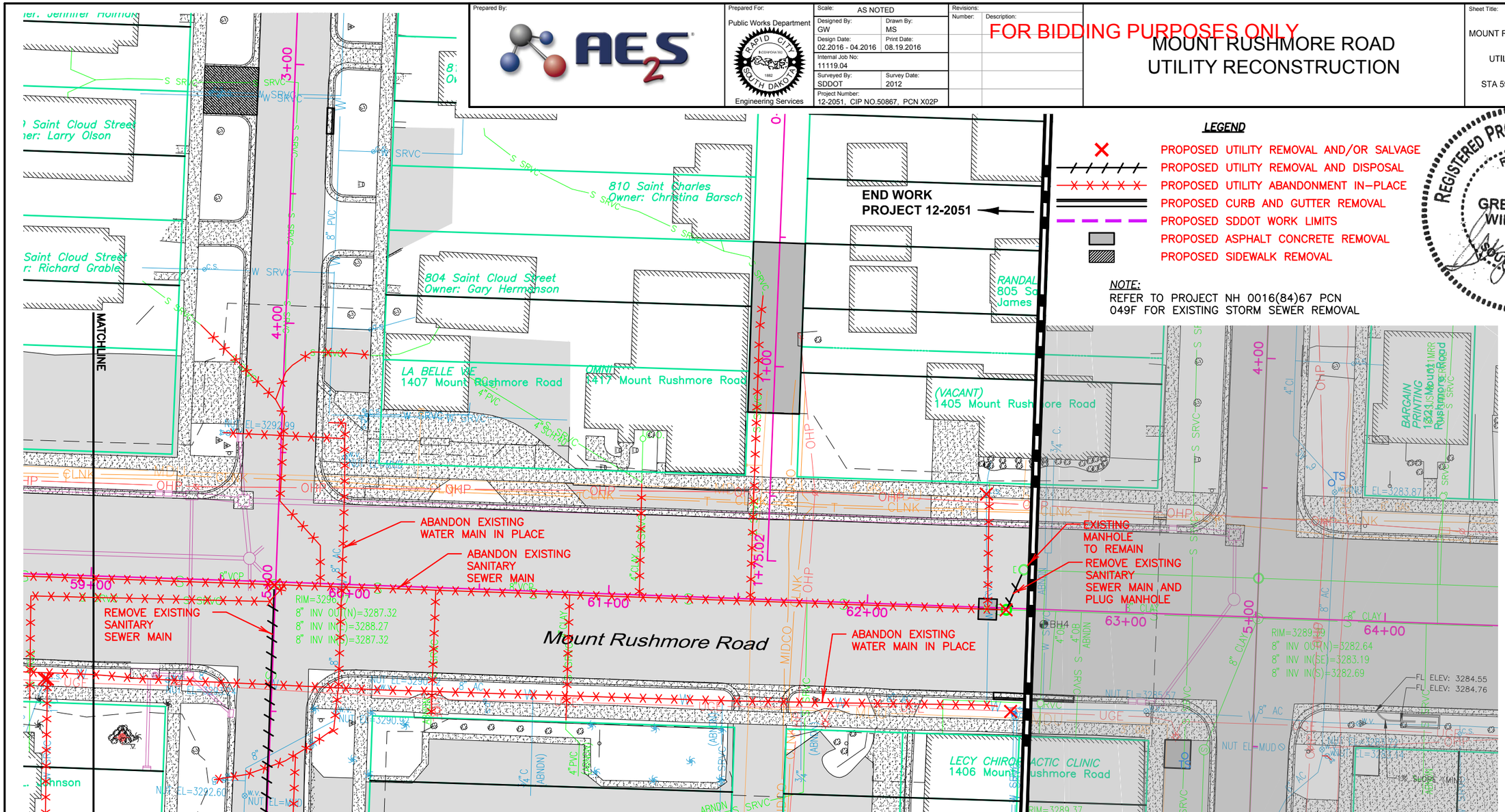


## LEGEND

- PROPOSED UTILITY REMOVAL AND/OR SALVAGE
- PROPOSED UTILITY REMOVAL AND DISPOSAL
- PROPOSED UTILITY ABANDONMENT IN-PLACE
- PROPOSED CURB AND GUTTER REMOVAL
- PROPOSED SDDOT WORK LIMITS
- PROPOSED ASPHALT CONCRETE REMOVAL
- PROPOSED SIDEWALK REMOVAL

NOTE:
REFER TO PROJECT NH 0016(84)67 PCN 049F FOR EXISTING STORM SEWER REMOVAL

REGISTERED PROFESSIONAL ENGINEER — REG. NO. 2780 — GREGORY M. WIERENGA — SOUTH DAKOTA — 8-19-16

0' 10' 20'

## WATER MAIN REMOVALS:

REMOVE AND SALVAGE WATER VALVES AND BOXES TO THE CITY OF RAPID CITY AT THE FOLLOWING LOCATIONS:
STA 59+30.89 – 39.29'R (MOUNT RUSHMORE RD)
STA 4+43.28 – 20.52'R (SAINT CLOUD ST)
STA 4+50.98 – 24.93'L (SAINT CLOUD ST)
STA 5+49.60 – 25.12'L (SAINT CLOUD ST)
STA 5+77.24 – 17.29'R (SAINT CLOUD ST)
STA 5+77.31 – 23.27'R (SAINT CLOUD ST)
STA 60+12.05 – 40.27'R (MOUNT RUSHMORE RD)
STA 63+09.08 – 37.78'R (MOUNT RUSHMORE RD)
STA 4+50.67 – 28.13'L (SAINT JAMES ST)
STA 5+49.74 – 11.33'R (SAINT JAMES ST)
STA 5+50.10 – 26.97'L (SAINT JAMES ST)
STA 5+52.57 – 29.07'L (SAINT JAMES ST)

REMOVE AND SALVAGE FIRE HYDRANTS TO THE CITY OF RAPID CITY AT THE FOLLOWING LOCATIONS:
STA 4+43.19 – 22.70'R (SAINT CLOUD ST)
STA 5+31.24 – 20.79'R (SAINT CLOUD ST)
STA 5+54.01 – 30.67'L (SAINT JAMES ST)

REMOVE AND DISPOSE OF CURB STOPS AT THE FOLLOWING LOCATIONS:
STA 4+34.32 – 32.91'L (SAINT CLOUD ST)
STA 6+06.55 – 30.47'L (SAINT CLOUD ST)
STA 62+44.45 – 43.78'L (MOUNT RUSHMORE RD)
STA 62+56.79 – 39.82'R (MOUNT RUSHMORE RD)

## SANITARY SEWER MAIN REMOVALS:

REMOVE AND DISPOSE SANITARY SEWER MANHOLES AT THE FOLLOWING LOCATIONS:
STA 59+70.83 – 1.12'R (MOUNT RUSHMORE RD)
STA 62+53.74 – 0.52'R (MOUNT RUSHMORE RD)

## SAINT CLOUD STREET SURFACING REMOVALS:

STA 3+01.85 – 13.99'R and 34.87'R to 3+20.21 – 14.01'R and 34.83'R
REMOVE CONCRETE PAVEMENT, 42.6 SY

STA 3+16.37 – 15.67'L to 3+26.37 – 15.67'L
REMOVE CONCRETE CURB & GUTTER, 10 LF

STA 6+40.06 – 3.92'R and 13.42'R to 6+50.06 – 3.92'R and 13.42'R
REMOVE ASPHALT CONCRETE PAVEMENT, 10.6 SY

## MANHOLE 12B ALLEY SEWER SURFACING REMOVALS:

STA 0+52.15 – 10.17'R and 9.83'L to 1+18.05 – 9.79'R and 10.11'L
REMOVE ASPHALT CONCRETE PAVEMENT, 146.0 SY

August 17, 2016 10:48:14 a.m.
Drawing: DEMOLITION AND REMOVALS.DWG (JOEWS) (P:\PROJECTS & PROPOSALS\11119.00 MT. RUSHMORE RD. UTILITIES RECONSTRUCTION\DRAWINGS\SHEETS\PHASE 2 - FLORMANN TO SAINT JAMES\)

| Prepared By: | Prepared For: | Scale: AS NOTED | Revisions: | | Sheet Title: | Sheet No: |
|---|---|---|---|---|---|---|
| AE2S | Public Works Department<br>Rapid City, South Dakota<br>Engineering Services | Designed By: GW / Drawn By: MS<br>Design Date: 02.2016 - 04.2016 / Print Date: 08.19.2016<br>Internal Job No: 11119.04<br>Surveyed By: SDDOT / Survey Date: 2012<br>Project Number: 12-2051, CIP NO.50867, PCN X02P | Number: | Description: | MOUNT RUSHMORE RD<br>UTILITY PLAN<br>BEGIN to STA 39+00 | G28<br>of<br>G83 |

FOR BIDDING PURPOSES ONLY

# MOUNT RUSHMORE ROAD UTILITY RECONSTRUCTION

F&I 6" COUPLING AND CONNECT TO EXISTING WATER MAIN AT THE FOLLOWING LOCATIONS:

STA 2+46 – 14.38L (SAINT ANNE STREET)

STA 5+73.65 – 21.93L (SAINT ANNE STREET)

F&I 6" 45° BEND AT THE FOLLOWING LOCATIONS:

STA 5+51.53 – 3.79L (SAINT ANNE STREET)

STA 5+70.87 – 21.78L (SAINT ANNE STREET)

F&I 12" GATE VALVE AND BOX AT THE FOLLOWING LOCATIONS:

STA 37+08.07 – 22.00R (MAINLINE)

STA 37+78.33 – 22.00R (MAINLINE)

F&I TAPPING SADDLES AT THE FOLLOWING LOCATIONS:
STA 2+64.54 – 7.94'L (SAINT ANNE STREET) (1")

F&I CURB STOP AND BOX AND RECONNECT NEW WATER SERVICE LINE AT THE FOLLOWING LOCATIONS:
STA 2+64.57 – 27.00'L – 19.0 LF (1" cop.)

F&I 12" COUPLING AND CONNECT TO EXISTING WATER MAIN AT THE FOLLOWING LOCATIONS:

STA 34+19.23 – 22.00R (MAINLINE)

F&I 12"x6" TEE AT THE FOLLOWING LOCATIONS:

STA 37+12.88 – 22.00R (MAINLINE)

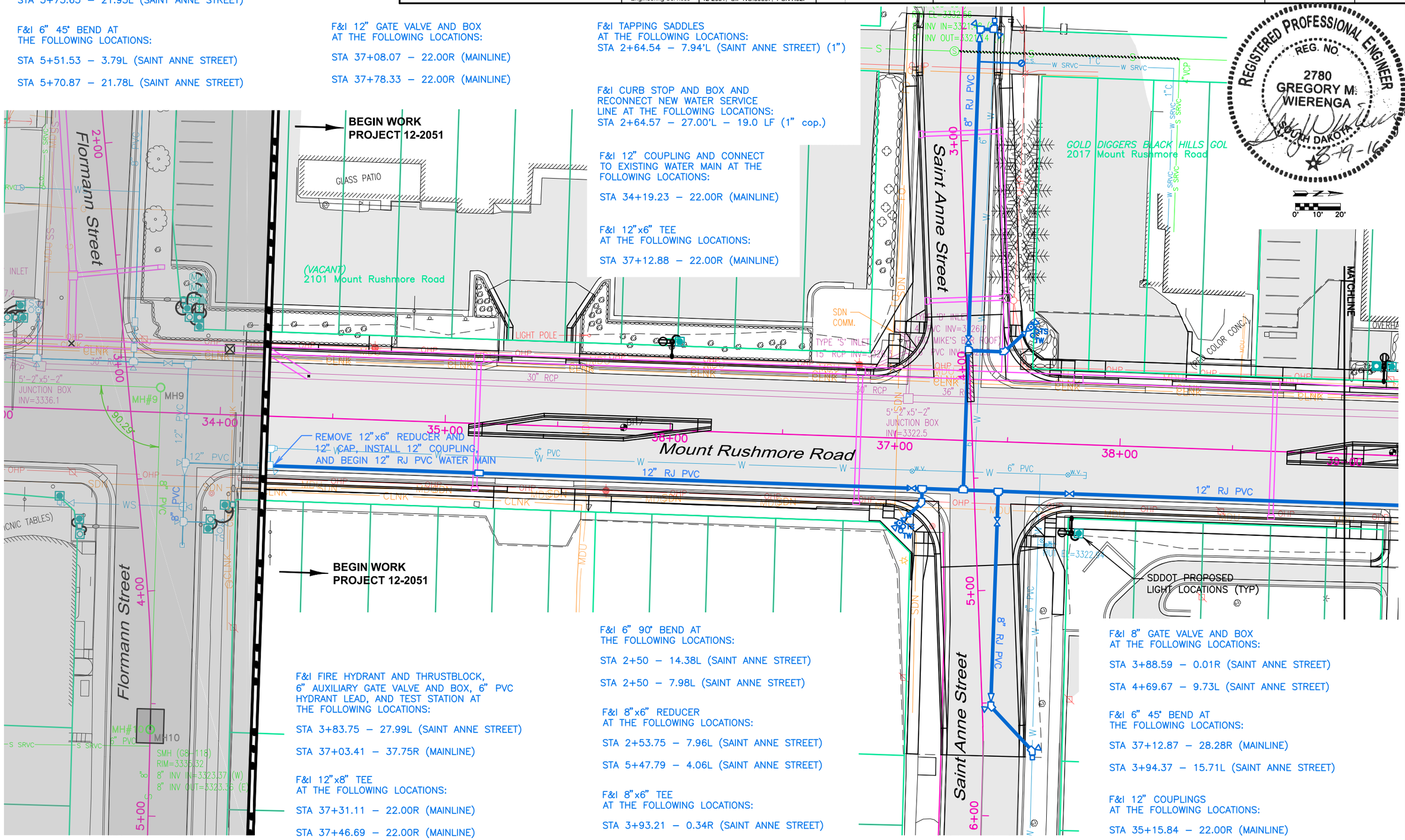


REGISTERED PROFESSIONAL ENGINEER
REG. NO. 2780
GREGORY M. WIERENGA
SOUTH DAKOTA
8-19-16

F&I FIRE HYDRANT AND THRUSTBLOCK, 6" AUXILIARY GATE VALVE AND BOX, 6" PVC HYDRANT LEAD, AND TEST STATION AT THE FOLLOWING LOCATIONS:

STA 3+83.75 – 27.99L (SAINT ANNE STREET)

STA 37+03.41 – 37.75R (MAINLINE)

F&I 12"x8" TEE AT THE FOLLOWING LOCATIONS:

STA 37+31.11 – 22.00R (MAINLINE)

STA 37+46.69 – 22.00R (MAINLINE)

F&I 6" 90° BEND AT THE FOLLOWING LOCATIONS:

STA 2+50 – 14.38L (SAINT ANNE STREET)

STA 2+50 – 7.98L (SAINT ANNE STREET)

F&I 8"x6" REDUCER AT THE FOLLOWING LOCATIONS:

STA 2+53.75 – 7.96L (SAINT ANNE STREET)

STA 5+47.79 – 4.06L (SAINT ANNE STREET)

F&I 8"x6" TEE AT THE FOLLOWING LOCATIONS:

STA 3+93.21 – 0.34R (SAINT ANNE STREET)

F&I 8" GATE VALVE AND BOX AT THE FOLLOWING LOCATIONS:

STA 3+88.59 – 0.01R (SAINT ANNE STREET)

STA 4+69.67 – 9.73L (SAINT ANNE STREET)

F&I 6" 45° BEND AT THE FOLLOWING LOCATIONS:

STA 37+12.87 – 28.28R (MAINLINE)

STA 3+94.37 – 15.71L (SAINT ANNE STREET)

F&I 12" COUPLINGS AT THE FOLLOWING LOCATIONS:

STA 35+15.84 – 22.00R (MAINLINE)

August 17, 2016 10:54:14 a.m.
Drawing: PLAN AND PROFILES.DWG (J:\DENS) (P:\PROJECTS & PROPOSALS\11119.00 MT. RUSHMORE RD. UTILITIES RECONSTRUCTION\DRAWINGS\SHEETS\PHASE 2 – FLORMANN TO SAINT JAMES\)

SCALE:
HORIZ. 1" = 40'
VERT. 1" = 10'

*NOTE:*
ALL SUBSURFACE UTILITIES ARE SHOWN BASED UPON GROUND LEVEL FIELD SURVEY AND APPROXIMATIONS. THE CONTRACTOR SHALL BE RESPONSIBLE TO FIELD LOCATE AND VERIFY UTILITY INFORMATION PERTAINING TO THE WORK. SDDOT PROPOSED STORM SEWER IS SHOWN FOR INFORMATION ONLY AND MAY BE SHOWN DIFFERENTLY IN THE ROADWAY PLANS. PLEASE REFER TO PROJECT NH0016(84)67 FOR ALL STORM SEWER PLAN AND GRADE INFORMATION.

Prepared By: AE2S

Prepared For: Public Works Department, Rapid City, South Dakota, Engineering Services

| | |
|---|---|
| Scale: | AS NOTED |
| Designed By: GW | Drawn By: MS |
| Design Date: 02.2016 - 04.2016 | Print Date: 08.19.2016 |
| Internal Job No: 11119.04 | |
| Surveyed By: SDDOT | Survey Date: 2012 |
| Project Number: 12-2051, CIP NO.50867, PCN X02P | |

Revisions: Number: Description:

FOR BIDDING PURPOSES ONLY

# MOUNT RUSHMORE ROAD UTILITY RECONSTRUCTION

Sheet Title: MOUNT RUSHMORE RD UTILITY PROFILE STA BEGIN to 39+00

Sheet No: G29 of G83

REGISTERED PROFESSIONAL ENGINEER REG. NO. 2780 GREGORY M. WIERENGA SOUTH DAKOTA 8-19-16

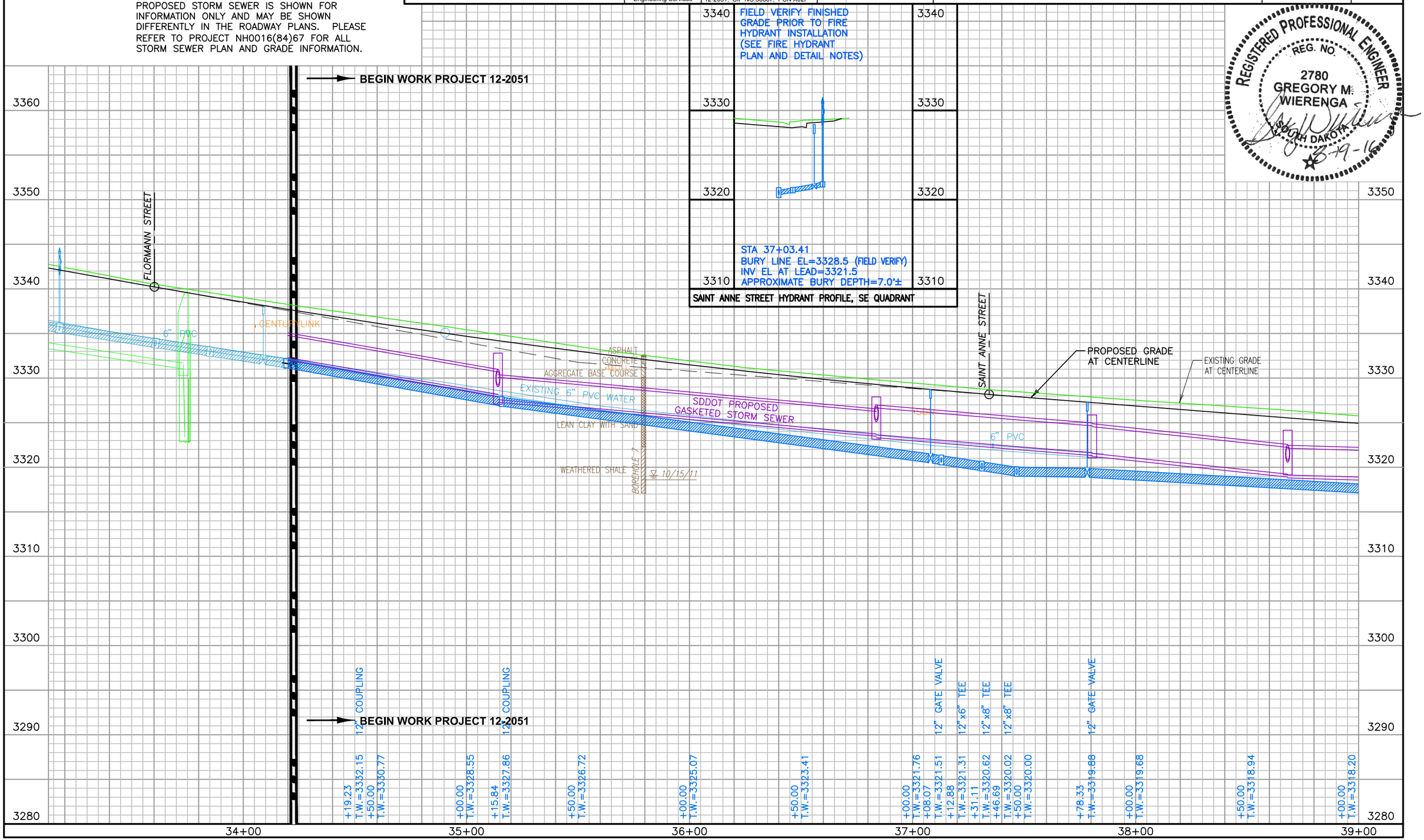


August 17, 2016 10:54:14 a.m.
Drawing: PLAN AND PROFILES.DWG (JOENS) (P:\PROJECTS & PROPOSALS\11119.00 MT. RUSHMORE RD. UTILITIES RECONSTRUCTION\DRAWINGS\SHEETS\PHASE 2 - FLORMANN TO SAINT JAMES\)

SCALE:
HORIZ. 1" = 40'
VERT. 1" = 10'

*NOTE:*
ALL SUBSURFACE UTILITIES ARE SHOWN BASED UPON GROUND LEVEL FIELD SURVEY AND APPROXIMATIONS. THE CONTRACTOR SHALL BE RESPONSIBLE TO FIELD LOCATE AND VERIFY UTILITY INFORMATION PERTAINING TO THE WORK. SDDOT PROPOSED STORM SEWER IS SHOWN FOR INFORMATION ONLY AND MAY BE SHOWN DIFFERENTLY IN THE ROADWAY PLANS. PLEASE REFER TO PROJECT NH0016(84)67 FOR ALL STORM SEWER PLAN AND GRADE INFORMATION.

Prepared By: AE2S

Prepared For: Public Works Department, Rapid City, South Dakota, Incorporated 1882 — Engineering Services

| | |
|---|---|
| Scale: AS NOTED | |
| Designed By: GW | Drawn By: MS |
| Design Date: 02.2016 - 04.2016 | Print Date: 08.19.2016 |
| Internal Job No: 11119.04 | |
| Surveyed By: SDDOT | Survey Date: 2012 |
| Project Number: 12-2051, CIP NO.50867, PCN X02P | |

Revisions: Number: Description:

FOR BIDDING PURPOSES ONLY

# MOUNT RUSHMORE ROAD UTILITY RECONSTRUCTION

Sheet Title: SAINT ANNE STREET UTILITY PROFILE STA 0+00 to END

Sheet No: G30 of G83

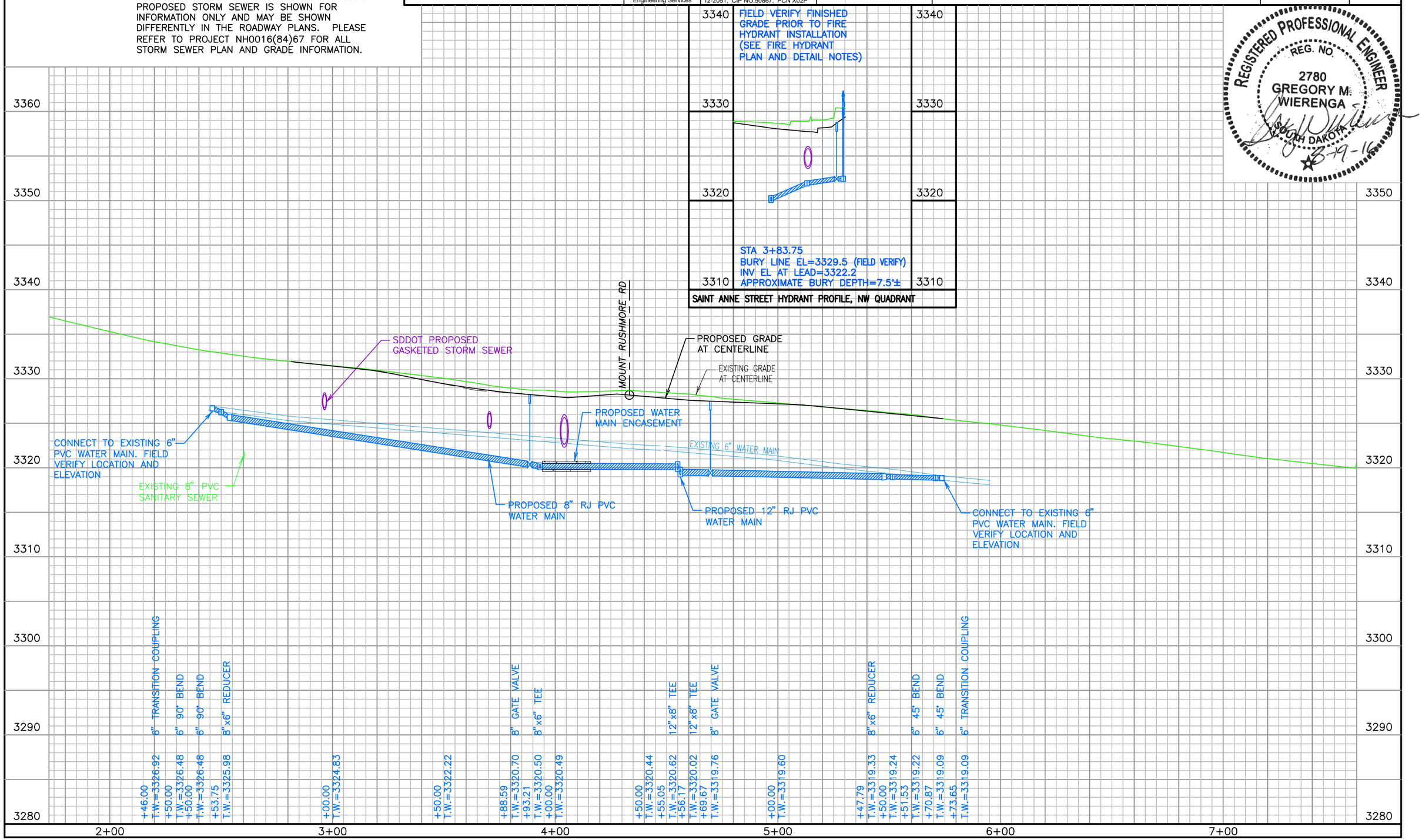


REGISTERED PROFESSIONAL ENGINEER
REG. NO. 2780
GREGORY M. WIERENGA
SOUTH DAKOTA
8-19-16

August 17, 2016 10:54:14 a.m.
Drawing: PLAN AND PROFILES.Dwg (JOENS) (P:\PROJECTS & PROPOSALS\11119.00 MT. RUSHMORE RD. UTILITIES RECONSTRUCTION\DRAWINGS\SHEETS\PHASE 2 - FLORMANN TO SAINT JAMES\)

| Prepared By: | Prepared For: | Scale: AS NOTED | Revisions: | | FOR BIDDING PURPOSES ONLY | Sheet Title: | Sheet No: |
|---|---|---|---|---|---|---|---|
| AE2S | Public Works Department<br>Engineering Services | Designed By: GW<br>Drawn By: MS<br>Design Date: 02.2016 - 04.2016<br>Print Date: 08.19.2016<br>Internal Job No: 11119.04<br>Surveyed By: SDDOT<br>Survey Date: 2012<br>Project Number: 12-2051, CIP NO.50867, PCN X02P | Number: | Description: | MOUNT RUSHMORE ROAD<br>UTILITY RECONSTRUCTION | MOUNT RUSHMORE RD<br>WATER MAIN PLAN<br>STA 39-00 to 44+00 | G31<br>of<br>G83 |

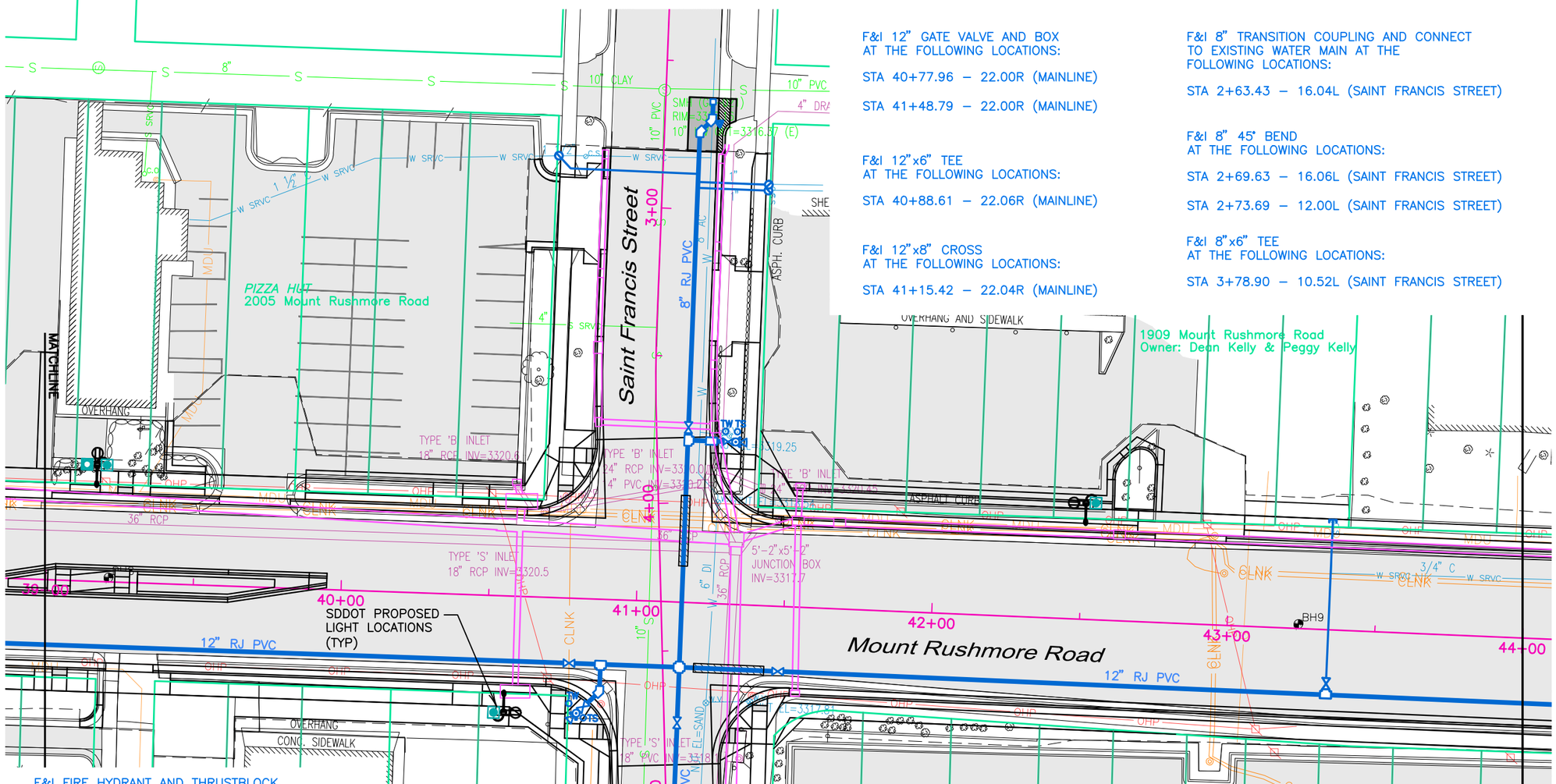


F&I 12" GATE VALVE AND BOX
AT THE FOLLOWING LOCATIONS:

STA 40+77.96 – 22.00R (MAINLINE)

STA 41+48.79 – 22.00R (MAINLINE)

F&I 12"x6" TEE
AT THE FOLLOWING LOCATIONS:

STA 40+88.61 – 22.06R (MAINLINE)

F&I 12"x8" CROSS
AT THE FOLLOWING LOCATIONS:

STA 41+15.42 – 22.04R (MAINLINE)

F&I 8" TRANSITION COUPLING AND CONNECT
TO EXISTING WATER MAIN AT THE
FOLLOWING LOCATIONS:

STA 2+63.43 – 16.04L (SAINT FRANCIS STREET)

F&I 8" 45° BEND
AT THE FOLLOWING LOCATIONS:

STA 2+69.63 – 16.06L (SAINT FRANCIS STREET)

STA 2+73.69 – 12.00L (SAINT FRANCIS STREET)

F&I 8"x6" TEE
AT THE FOLLOWING LOCATIONS:

STA 3+78.90 – 10.52L (SAINT FRANCIS STREET)

REGISTERED PROFESSIONAL ENGINEER
REG. NO. 2780
GREGORY M. WIERENGA
SOUTH DAKOTA
8-19-16

0' 10' 20'

*SAINT FRANCIS STREET SURFACING NOTES:*

STA 2+62.17 – 21.92'L to
2+74.44 – 20.67'L
CONCRETE P-GUTTER, 12 LF

STA 2+74.44 – 20.67'L to
2+80.39 – 20.67'L
CONCRETE CURB & GUTTER,
TYPE B66, 6 LF

STA 2+62.17 – 8'L & 17.96'L to
2+80.39 – 8'L & 18.00'L
BASE COURSE, 8", 9.4 TONS
ASPHALT CONCRETE
COMPOSITE, 5", 3.7 TONS

STA 2+62.17 – 21.92L & 23.92'L to
2+70.64 – 21.92'L & 2+69.67 – 23.92'L
BASE COURSE, 8", 0.80 TONS
ASPHALT CONCRETE
COMPOSITE, 5", 0.50 TONS

F&I FIRE HYDRANT AND THRUSTBLOCK,
6" AUXILIARY GATE VALVE AND BOX, 6" PVC
HYDRANT LEAD, AND TEST STATION AT
THE FOLLOWING LOCATIONS:

STA 3+79.93 – 26.66L (SAINT FRANCIS STREET)

STA 40+80.98 – 38.91R (MAINLINE)

F&I 8" GATE VALVE AND BOX
AT THE FOLLOWING LOCATIONS:

STA 3+74.63 – 10.80L (SAINT FRANCIS STREET)

STA 4+74.41 – 4.41L (SAINT FRANCIS STREET)

F&I 8"x6" REDUCER
AT THE FOLLOWING LOCATIONS:

STA 5+41.48 – 1.77L (SAINT FRANCIS STREET)

F&I 6" 45° BEND AT
THE FOLLOWING LOCATIONS:

STA 5+45.23 – 1.73L (SAINT FRANCIS STREET)

STA 5+52.91 – 9.41L (SAINT FRANCIS STREET)

F&I 6" TRANSITION COUPLING AND CONNECT
TO EXISTING WATER MAIN AT THE
FOLLOWING LOCATIONS:

STA 5+56.08 – 9.41L (SAINT FRANCIS STREET)

INSTALL 6" 11¼° VERTICAL BEND
AT THE FOLLOWING LOCATIONS:

STA 3+79.41 – 18.49L (SAINT FRANCIS STREET)

F&I TAPPING SADDLES
AT THE FOLLOWING LOCATIONS:
STA 2+88.00 – 12'L (SAINT FRANCIS) (1½")
STA 2+90.72 – 12'L (SAINT FRANCIS) (1")
STA 2+92.78 – 12'L (SAINT FRANCIS) (1")

F&I CURB STOP AND BOX AND
RECONNECT NEW WATER SERVICE
LINE AT THE FOLLOWING LOCATIONS:
STA 2+83.73 – 35.38'R – 49.1 LF (1½" cop.)
STA 2+90.72 – 35.95'L – 23.9 LF (1" cop.)
STA 2+92.78 – 35.95'L – 23.9 LF (1" cop.)

F&I 12"x4" TEE
AT THE FOLLOWING LOCATIONS:

STA 43+34.26 – 22'R

F&I 4" GATE VALVE AND BOX
AT THE FOLLOWING LOCATIONS:

STA 43+34.26 – 18.25'R

F&I 4" CAP
AT THE FOLLOWING LOCATIONS:

STA 43+34.26 – 37.26'L

August 17, 2016 10:54:14 a.m.
Drawing: P:\AM AND PROFILES.dwg (JOHNS) (P:\PROJECTS & PROPOSALS\11119.00 MT. RUSHMORE RD. UTILITIES RECONSTRUCTION\DRAWINGS\SHEETS\PHASE 2 - FLORMANN TO SAINT JAMES\)

SCALE:
HORIZ. 1" = 40'
VERT. 1" = 10'

*NOTE:*
ALL SUBSURFACE UTILITIES ARE SHOWN BASED UPON GROUND LEVEL FIELD SURVEY AND APPROXIMATIONS. THE CONTRACTOR SHALL BE RESPONSIBLE TO FIELD LOCATE AND VERIFY UTILITY INFORMATION PERTAINING TO THE WORK. SDDOT PROPOSED STORM SEWER IS SHOWN FOR INFORMATION ONLY AND MAY BE SHOWN DIFFERENTLY IN THE ROADWAY PLANS. PLEASE REFER TO PROJECT NH0016(84)67 FOR ALL STORM SEWER PLAN AND GRADE INFORMATION.

Prepared By: AE2S

Prepared For: Public Works Department — Rapid City, South Dakota — Engineering Services

| | |
|---|---|
| Scale: | AS NOTED |
| Designed By: GW | Drawn By: MS |
| Design Date: 02.2016 - 04.2016 | Print Date: 08.19.2016 |
| Internal Job No: 11119.04 | |
| Surveyed By: SDDOT | Survey Date: 2012 |
| Project Number: 12-2051, CIP NO.50867, PCN X02P | |

Revisions: Number: Description:

FOR BIDDING PURPOSES ONLY

# MOUNT RUSHMORE ROAD UTILITY RECONSTRUCTION

Sheet Title: MOUNT RUSHMORE RD UTILITY PROFILE STA 39+00 to 44+00

Sheet No: G32 of G83

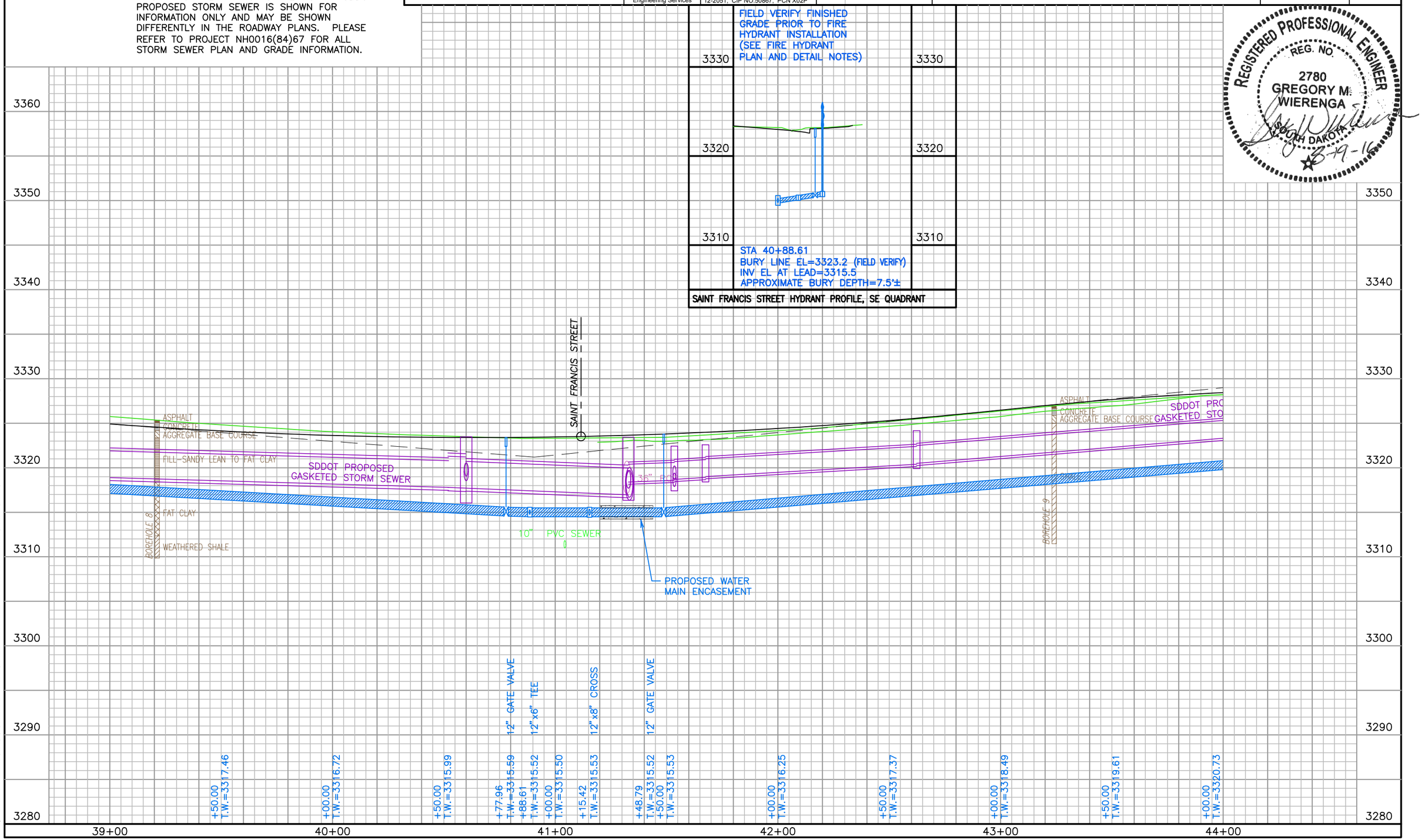


REGISTERED PROFESSIONAL ENGINEER
REG. NO. 2780
GREGORY M. WIERENGA
SOUTH DAKOTA
8-19-16

August 17, 2016 10:54:14 a.m.
Drawing: PLAN AND PROFILES.Dwg (JOBS) (P:\PROJECTS & PROPOSALS\11119.00 MT. RUSHMORE RD. UTILITIES RECONSTRUCTION\DRAWINGS\SHEETS\PHASE 2 - FLORMANN TO SAINT JAMES\)

SCALE:
HORIZ. 1" = 40'
VERT. 1" = 10'

*NOTE:*
ALL SUBSURFACE UTILITIES ARE SHOWN BASED UPON GROUND LEVEL FIELD SURVEY AND APPROXIMATIONS. THE CONTRACTOR SHALL BE RESPONSIBLE TO FIELD LOCATE AND VERIFY UTILITY INFORMATION PERTAINING TO THE WORK. SDDOT PROPOSED STORM SEWER IS SHOWN FOR INFORMATION ONLY AND MAY BE SHOWN DIFFERENTLY IN THE ROADWAY PLANS. PLEASE REFER TO PROJECT NH0016(84)67 FOR ALL STORM SEWER PLAN AND GRADE INFORMATION.

| Prepared By: | Prepared For: | Scale: AS NOTED | Revisions: | |
|---|---|---|---|---|
| AE2S | Public Works Department<br>Rapid City, South Dakota<br>Engineering Services | Designed By: GW<br>Drawn By: MS<br>Design Date: 02.2016 - 04.2016<br>Print Date: 08.19.2016<br>Internal Job No: 11119.04<br>Surveyed By: SDDOT<br>Survey Date: 2012<br>Project Number: 12-2051, CIP NO.50867, PCN X02P | Number: | Description: |

FOR BIDDING PURPOSES ONLY

# MOUNT RUSHMORE ROAD UTILITY RECONSTRUCTION

| Sheet Title: | Sheet No: |
|---|---|
| SAINT FRANCIS STREET UTILITY PROFILE STA 0+00 to END | G33 of G83 |

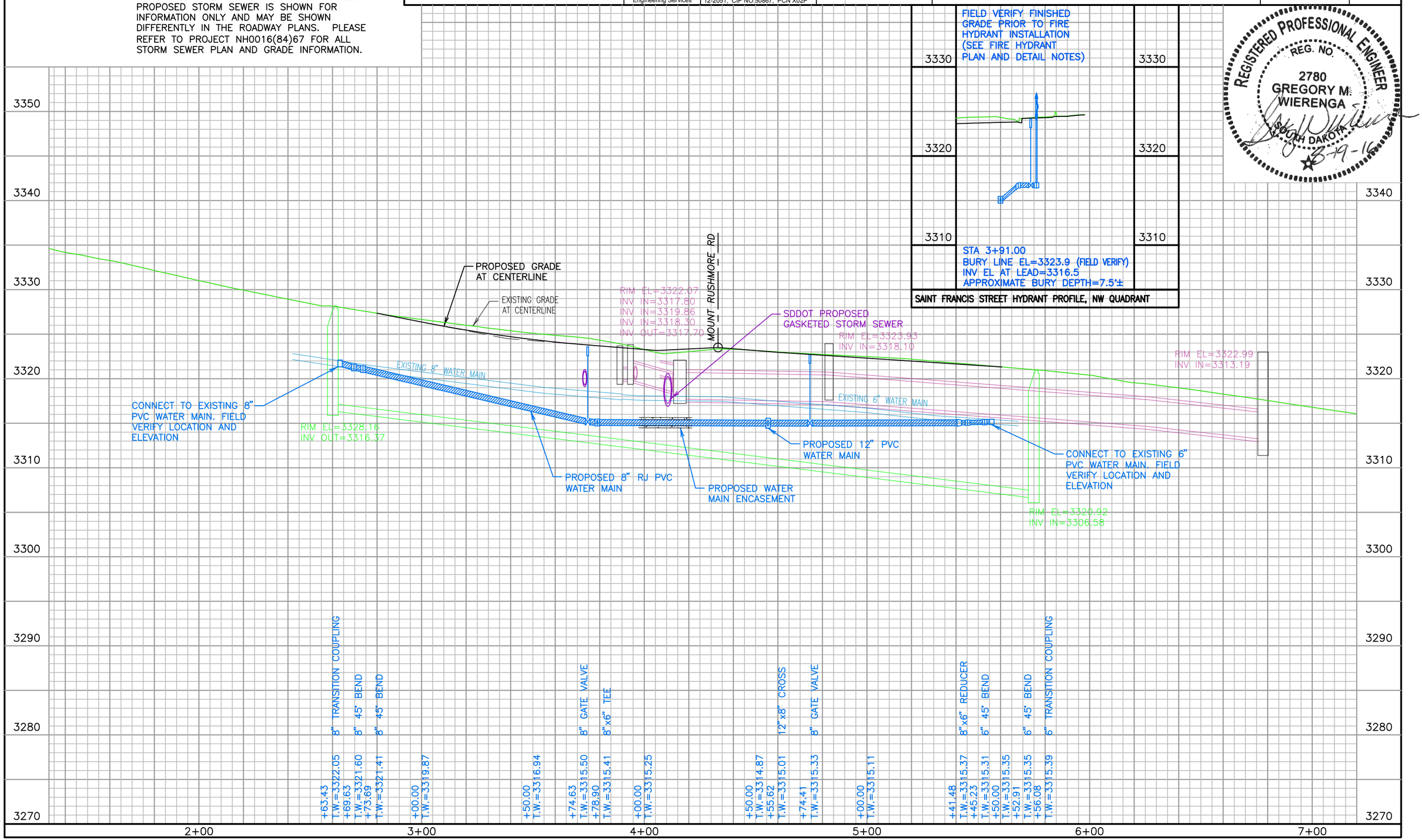


August 17, 2016 10:54:14 a.m.
Drawing: PLAN AND PROFILES.Dwg (JOBNS) (P:\PROJECTS & PROPOSALS\11119.00 MT. RUSHMORE RD. UTILITIES RECONSTRUCTION\DRAWINGS\SHEETS\PHASE 2 - FLORMANN TO SAINT JAMES\)

| Prepared By: | Prepared For: | Scale: AS NOTED | Revisions: | | FOR BIDDING PURPOSES ONLY | Sheet Title: | Sheet No: |
|---|---|---|---|---|---|---|---|
| AES2 | Public Works Department<br>Engineering Services | Designed By: GW<br>Drawn By: MS<br>Design Date: 02.2016 - 04.2016<br>Print Date: 08.19.2016<br>Internal Job No: 11119.04<br>Surveyed By: SDDOT<br>Survey Date: 2012<br>Project Number: 12-2051, CIP NO.50867, PCN X02P | Number:<br>Description: | | MOUNT RUSHMORE ROAD<br>UTILITY RECONSTRUCTION | MOUNT RUSHMORE RD<br>WATER MAIN PLAN<br>STA 44+00 to 49+00 | G34<br>of<br>G83 |

F&I 12" GATE VALVE AND BOX
AT THE FOLLOWING LOCATIONS:

STA 44+47.79 – 22.00R (MAINLINE)

STA 45+16.05 – 22.14R (MAINLINE)

STA 47+89.15 – 25.46R (MAINLINE)

STA 48+67.67 – 26.00R (MAINLINE)

F&I 16"x12" CROSS
AT THE FOLLOWING LOCATIONS:

STA 2+09.15 – 6.00L (SAINT PATRICK STREET)

STA 5+50.31 – 5.80L (SAINT PATRICK STREET)

STA 44+87.41 – 22.00R (MAINLINE)

F&I 16" MJ CAP
AT THE FOLLOWING LOCATIONS:

STA 2+05.09 – 6.00L (SAINT PATRICK STREET)

STA 5+54.30 – 5.80L (SAINT PATRICK STREET)

INSTALL 12" 90° BEND
AT THE FOLLOWING LOCATIONS:

STA 2+09.15 – 12.00L (SAINT PATRICK STREET)

STA 2+09.15 – 13.83R (SAINT PATRICK STREET)

STA 5+50.37 – 12.33L (SAINT PATRICK STREET)

STA 5+50.14 – 13.95R (SAINT PATRICK STREET)

F&I 16" GATE VALVE AND BOX
AT THE FOLLOWING LOCATIONS:

STA 3+42.45 – 6.00L (SAINT PATRICK STREET)

STA 4+16.97 – 6.00L (SAINT PATRICK STREET)

STA 4+82.31 – 5.80L (SAINT PATRICK STREET)

F&I 16"x6" TEE
AT THE FOLLOWING LOCATIONS:

STA 3+48.75 – 6.00L (SAINT PATRICK STREET)

STA 4+76.97 – 5.80L (SAINT PATRICK STREET)

F&I FIRE HYDRANT AND THRUSTBLOCK,
6" AUXILIARY GATE VALVE AND BOX, 6" PVC
HYDRANT LEAD, AND TEST STATION AT
THE FOLLOWING LOCATIONS:

STA 3+48.75 – 26.54L (SAINT PATRICK STREET)

STA 4+50 – 41.85L (ST ANDREW STREET)

STA 4+76.97 – 25.14L (SAINT PATRICK STREET)

STA 48+05.70 – 53.97R (MAINLINE)

F&I 6" TRANSITION COUPLING AND CONNECT
TO EXISTING WATER MAIN AT THE
FOLLOWING LOCATIONS:

STA 3+46.77 – 17.77L (ST ANDREW STREET)

F&I FLUSHING HYDRANT AND THRUST BLOCK
AT THE FOLLOWING LOCATIONS:

STA 3+29.21 – 45.06L (SAINT ANDREW STREET)

REGISTERED PROFESSIONAL ENGINEER
REG. NO.
2780
GREGORY M.
WIERENGA
SOUTH DAKOTA
8-19-16

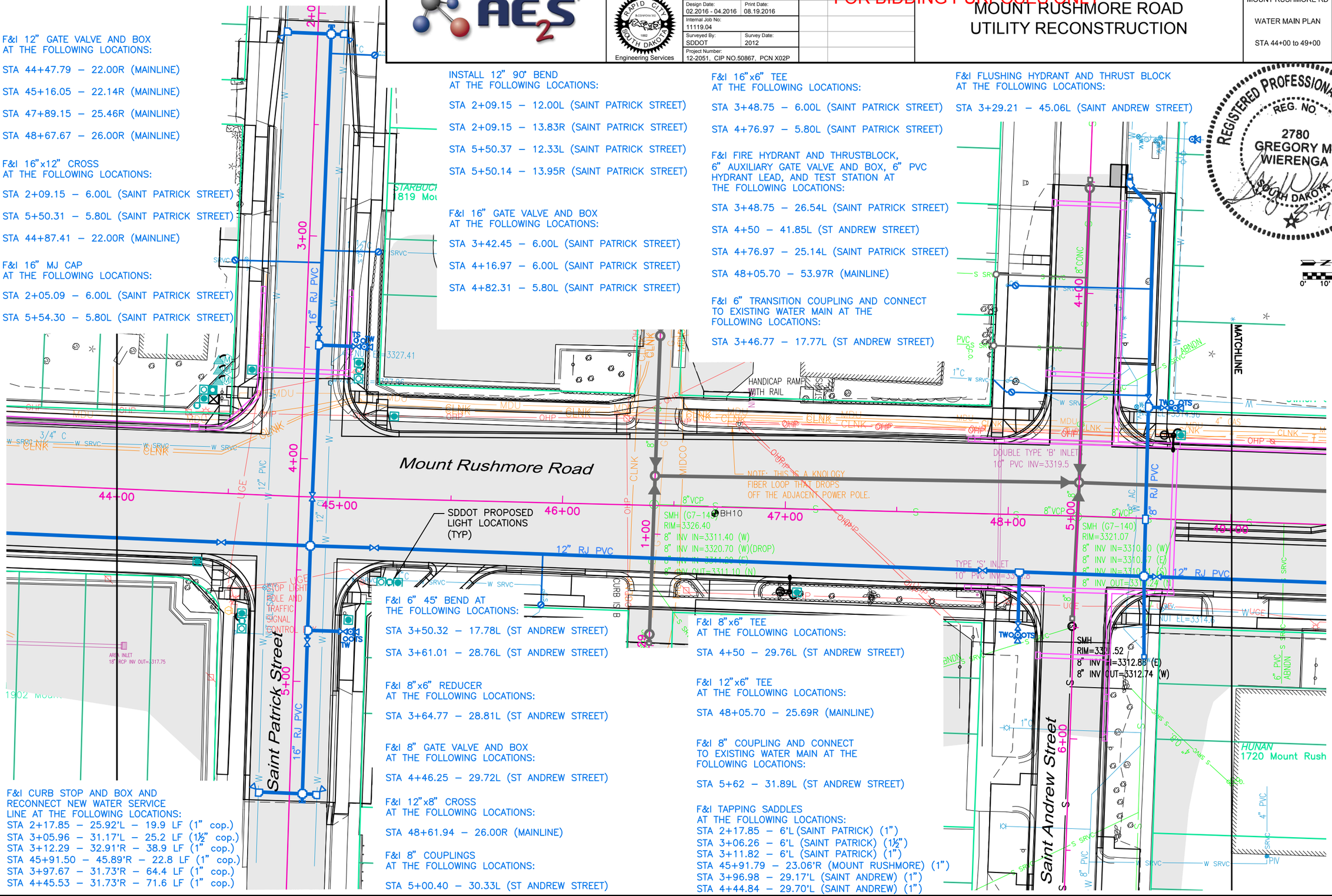


F&I 6" 45° BEND AT
THE FOLLOWING LOCATIONS:

STA 3+50.32 – 17.78L (ST ANDREW STREET)

STA 3+61.01 – 28.76L (ST ANDREW STREET)

F&I 8"x6" REDUCER
AT THE FOLLOWING LOCATIONS:

STA 3+64.77 – 28.81L (ST ANDREW STREET)

F&I 8" GATE VALVE AND BOX
AT THE FOLLOWING LOCATIONS:

STA 4+46.25 – 29.72L (ST ANDREW STREET)

F&I 12"x8" CROSS
AT THE FOLLOWING LOCATIONS:

STA 48+61.94 – 26.00R (MAINLINE)

F&I 8" COUPLINGS
AT THE FOLLOWING LOCATIONS:

STA 5+00.40 – 30.33L (ST ANDREW STREET)

F&I 8"x6" TEE
AT THE FOLLOWING LOCATIONS:

STA 4+50 – 29.76L (ST ANDREW STREET)

F&I 12"x6" TEE
AT THE FOLLOWING LOCATIONS:

STA 48+05.70 – 25.69R (MAINLINE)

F&I 8" COUPLING AND CONNECT
TO EXISTING WATER MAIN AT THE
FOLLOWING LOCATIONS:

STA 5+62 – 31.89L (ST ANDREW STREET)

F&I TAPPING SADDLES
AT THE FOLLOWING LOCATIONS:
STA 2+17.85 – 6'L (SAINT PATRICK) (1")
STA 3+06.26 – 6'L (SAINT PATRICK) (1½")
STA 3+11.82 – 6'L (SAINT PATRICK) (1")
STA 45+91.79 – 23.06'R (MOUNT RUSHMORE) (1")
STA 3+96.98 – 29.17'L (SAINT ANDREW) (1")
STA 4+44.84 – 29.70'L (SAINT ANDREW) (1")

F&I CURB STOP AND BOX AND
RECONNECT NEW WATER SERVICE
LINE AT THE FOLLOWING LOCATIONS:
STA 2+17.85 – 25.92'L – 19.9 LF (1" cop.)
STA 3+05.96 – 31.17'L – 25.2 LF (1½" cop.)
STA 3+12.29 – 32.91'R – 38.9 LF (1" cop.)
STA 45+91.50 – 45.89'R – 22.8 LF (1" cop.)
STA 3+97.67 – 31.73'R – 64.4 LF (1" cop.)
STA 4+45.53 – 31.73'R – 71.6 LF (1" cop.)

August 17, 2016 10:54:14 a.m.
Drawing: PLAN AND PROFILES.dwg (JOENS) (P:\PROJECTS & PROPOSALS\11119.00 MT. RUSHMORE RD. UTILITIES RECONSTRUCTION\DRAWINGS\SHEETS\PHASE 2 - FLORMAN TO SAINT JAMES\)

Prepared By: AE2S

Prepared For: Public Works Department — Rapid City, South Dakota — Engineering Services

| | |
|---|---|
| Scale: AS NOTED | |
| Designed By: GW | Drawn By: MS |
| Design Date: 02.2016 - 04.2016 | Print Date: 08.19.2016 |
| Internal Job No: 11119.04 | |
| Surveyed By: SDDOT | Survey Date: 2012 |
| Project Number: 12-2051, CIP NO.50867, PCN X02P | |

Revisions: Number: Description:

FOR BIDDING PURPOSES ONLY

# MOUNT RUSHMORE ROAD UTILITY RECONSTRUCTION

Sheet Title: MOUNT RUSHMORE RD SANITARY SEWER PLAN STA 44+00 to 49+00

Sheet No: G35 of G83

REGISTERED PROFESSIONAL ENGINEER — REG. NO. 2780 — GREGORY M. WIERENGA — SOUTH DAKOTA — 8-19-16

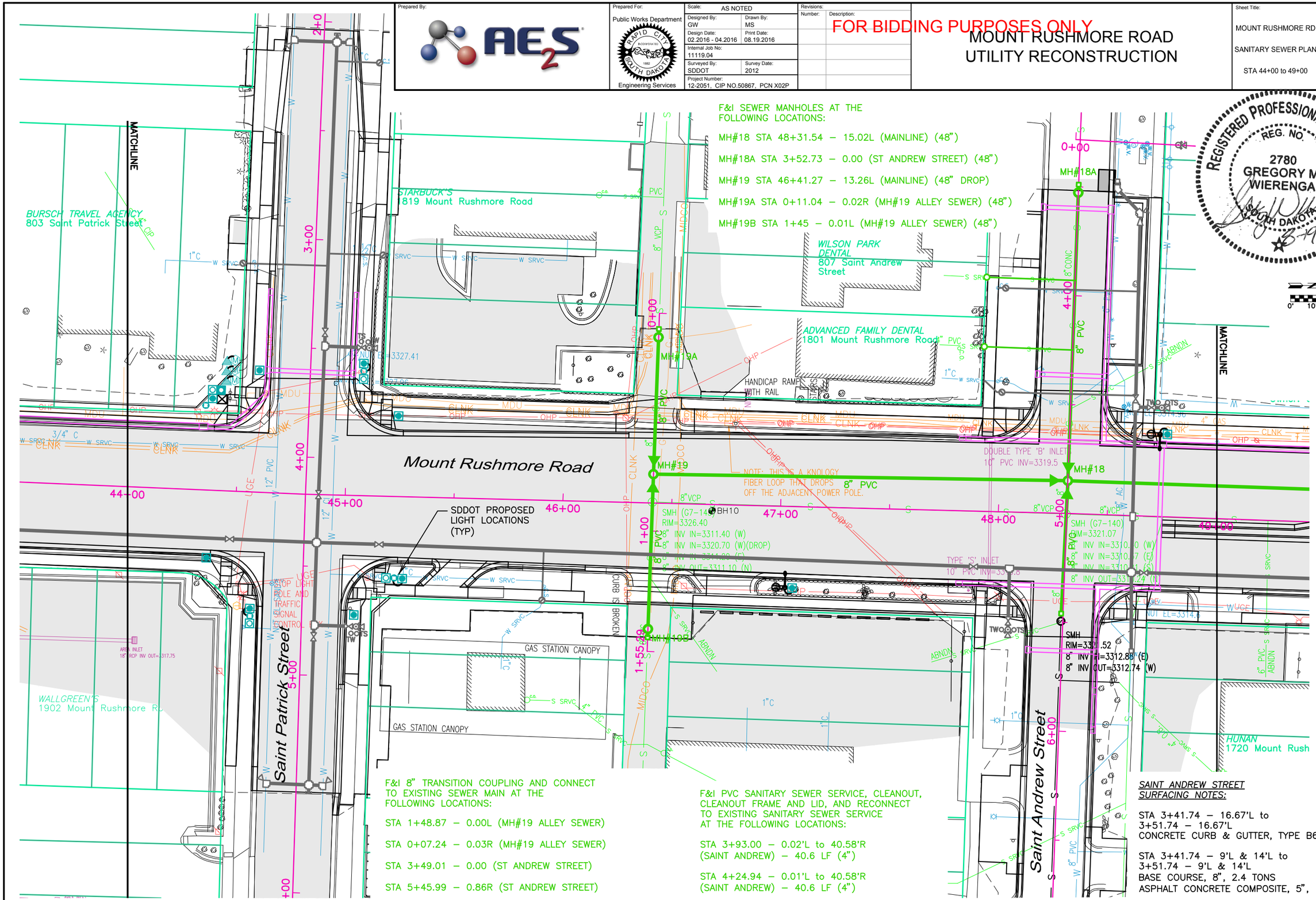


F&I SEWER MANHOLES AT THE FOLLOWING LOCATIONS:

MH#18 STA 48+31.54 – 15.02L (MAINLINE) (48")

MH#18A STA 3+52.73 – 0.00 (ST ANDREW STREET) (48")

MH#19 STA 46+41.27 – 13.26L (MAINLINE) (48" DROP)

MH#19A STA 0+11.04 – 0.02R (MH#19 ALLEY SEWER) (48")

MH#19B STA 1+45 – 0.01L (MH#19 ALLEY SEWER) (48")

F&I 8" TRANSITION COUPLING AND CONNECT TO EXISTING SEWER MAIN AT THE FOLLOWING LOCATIONS:

STA 1+48.87 – 0.00L (MH#19 ALLEY SEWER)

STA 0+07.24 – 0.03R (MH#19 ALLEY SEWER)

STA 3+49.01 – 0.00 (ST ANDREW STREET)

STA 5+45.99 – 0.86R (ST ANDREW STREET)

F&I PVC SANITARY SEWER SERVICE, CLEANOUT, CLEANOUT FRAME AND LID, AND RECONNECT TO EXISTING SANITARY SEWER SERVICE AT THE FOLLOWING LOCATIONS:

STA 3+93.00 – 0.02'L to 40.58'R (SAINT ANDREW) – 40.6 LF (4")

STA 4+24.94 – 0.01'L to 40.58'R (SAINT ANDREW) – 40.6 LF (4")

SAINT ANDREW STREET SURFACING NOTES:

STA 3+41.74 – 16.67'L to 3+51.74 – 16.67'L
CONCRETE CURB & GUTTER, TYPE B66, 10 LF

STA 3+41.74 – 9'L & 14'L to 3+51.74 – 9'L & 14'L
BASE COURSE, 8", 2.4 TONS
ASPHALT CONCRETE COMPOSITE, 5", 1.6 TONS

August 17, 2016 10:54:14 a.m.
Drawing: PLAN AND PROFILE.DWG (JOEHS) (P:\PROJECTS & PROPOSALS\11119.00 MT. RUSHMORE RD. UTILITIES RECONSTRUCTION\DRAWINGS\SHEETS\PHASE 2 - FLORMANN TO SAINT JAMES\)

SCALE:
HORIZ. 1" = 40'
VERT. 1" = 10'

*NOTE:*
ALL SUBSURFACE UTILITIES ARE SHOWN BASED UPON GROUND LEVEL FIELD SURVEY AND APPROXIMATIONS. THE CONTRACTOR SHALL BE RESPONSIBLE TO FIELD LOCATE AND VERIFY UTILITY INFORMATION PERTAINING TO THE WORK. SDDOT PROPOSED STORM SEWER IS SHOWN FOR INFORMATION ONLY AND MAY BE SHOWN DIFFERENTLY IN THE ROADWAY PLANS. PLEASE REFER TO PROJECT NH0016(84)67 FOR ALL STORM SEWER PLAN AND GRADE INFORMATION.

Prepared By: AE2S

Prepared For: Public Works Department, Rapid City, South Dakota, Engineering Services

| | |
|---|---|
| Scale: AS NOTED | |
| Designed By: GW | Drawn By: MS |
| Design Date: 02.2016 - 04.2016 | Print Date: 08.19.2016 |
| Internal Job No: 11119.04 | |
| Surveyed By: SDDOT | Survey Date: 2012 |
| Project Number: 12-2051, CIP NO.50867, PCN X02P | |

Revisions: Number: Description:

FOR BIDDING PURPOSES ONLY

# MOUNT RUSHMORE ROAD UTILITY RECONSTRUCTION

Sheet Title: MOUNT RUSHMORE RD UTILITY PROFILE STA 44+00 to 49+00

Sheet No: G36 of G83

REGISTERED PROFESSIONAL ENGINEER REG. NO. 2780 GREGORY M. WIERENGA SOUTH DAKOTA 8-19-16

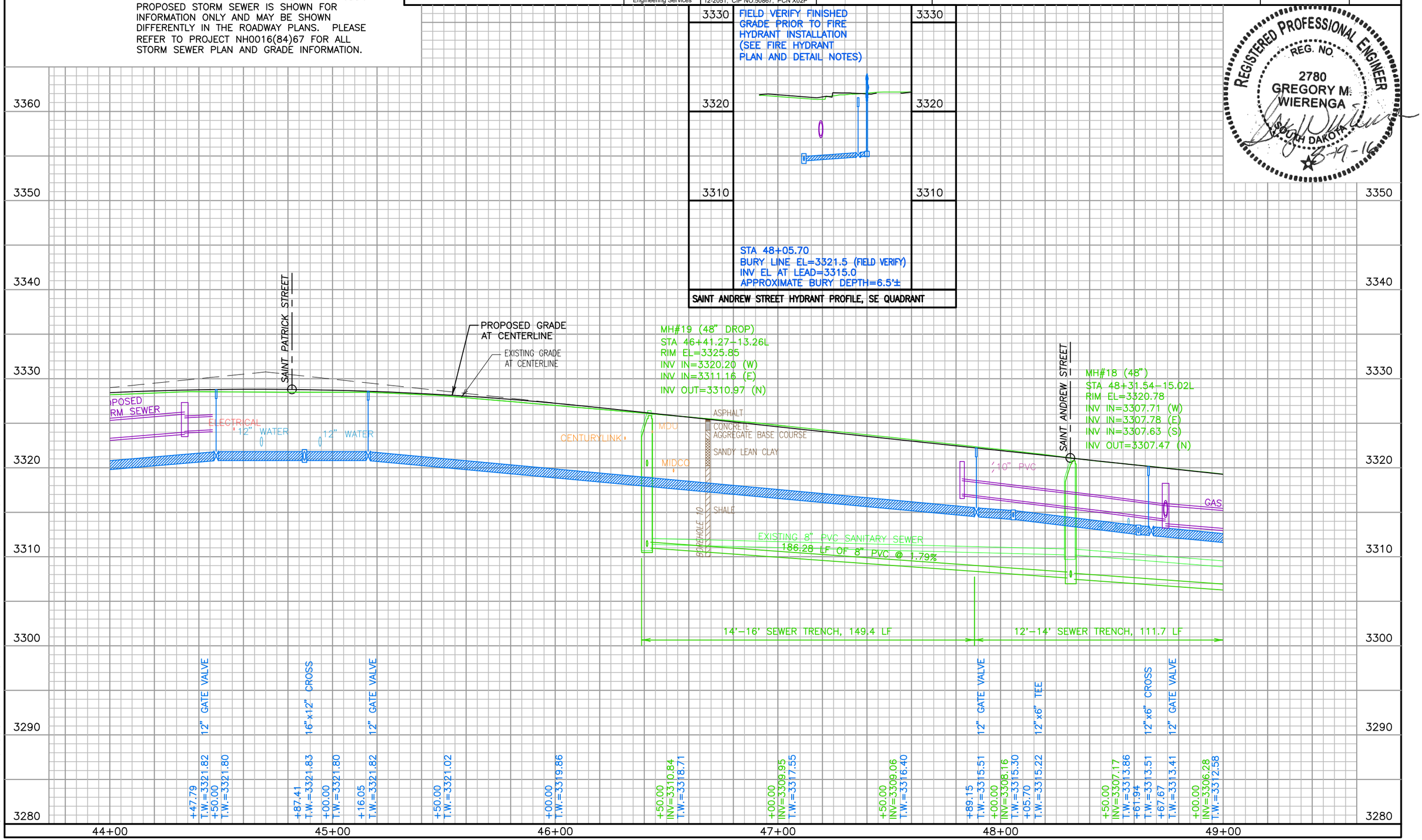


August 17, 2016 10:54:14 a.m.
Drawing: PLAN AND PROFILES.DWG (J:\DGNS) (P:\PROJECTS & PROPOSALS\11119.00 MT. RUSHMORE RD. UTILITIES RECONSTRUCTION\DRAWINGS\SHEETS\PHASE 2 - FLORMANN TO SAINT JAMES\)

SCALE:
HORIZ. 1" = 40'
VERT. 1" = 10'

*NOTE:*
ALL SUBSURFACE UTILITIES ARE SHOWN BASED UPON GROUND LEVEL FIELD SURVEY AND APPROXIMATIONS. THE CONTRACTOR SHALL BE RESPONSIBLE TO FIELD LOCATE AND VERIFY UTILITY INFORMATION PERTAINING TO THE WORK. SDDOT PROPOSED STORM SEWER IS SHOWN FOR INFORMATION ONLY AND MAY BE SHOWN DIFFERENTLY IN THE ROADWAY PLANS. PLEASE REFER TO PROJECT NH0016(84)67 FOR ALL STORM SEWER PLAN AND GRADE INFORMATION.

| Prepared By: | Prepared For: | Scale: AS NOTED | Revisions: Number: | Description: |
|---|---|---|---|---|
| AE2S | Public Works Department, Rapid City, South Dakota, Incorporated 1882, Engineering Services | Designed By: GW; Drawn By: MS; Design Date: 02.2016 - 04.2016; Print Date: 08.19.2016; Internal Job No: 11119.04; Surveyed By: SDDOT; Survey Date: 2012; Project Number: 12-2051, CIP NO.50867, PCN X02P | | |

FOR BIDDING PURPOSES ONLY

# MOUNT RUSHMORE ROAD UTILITY RECONSTRUCTION

| Sheet Title: | Sheet No: |
|---|---|
| SAINT PATRICK STREET | G37 |
| UTILITY PROFILE | of |
| STA 0+00 to END | G83 |

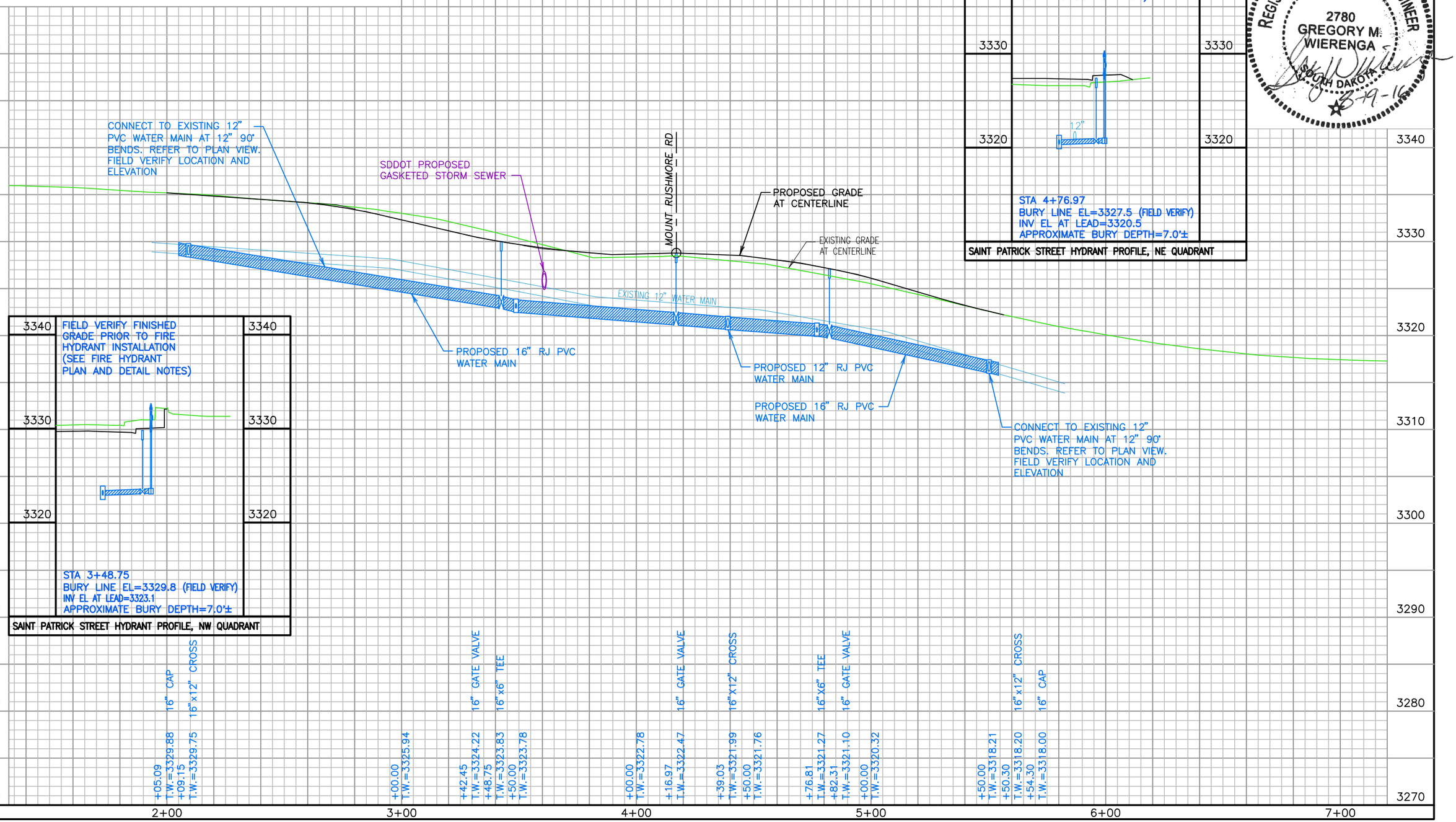





SAINT PATRICK STREET HYDRANT PROFILE, NW QUADRANT

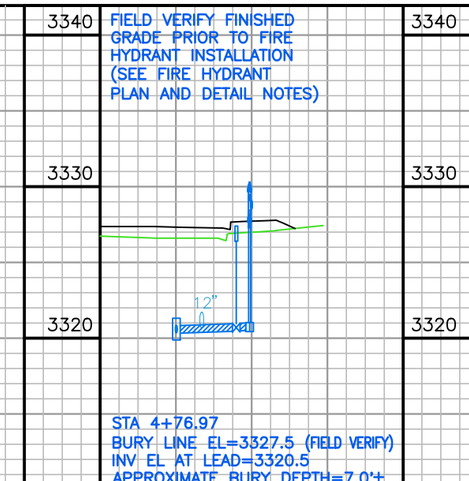


SAINT PATRICK STREET HYDRANT PROFILE, NE QUADRANT

REGISTERED PROFESSIONAL ENGINEER
REG. NO. 2780
GREGORY M. WIERENGA
SOUTH DAKOTA
8-19-16

August 17, 2016 10:54:14 a.m.
Drawing: PLAN AND PROFILES.DWG (JOCHS) (P:\PROJECTS & PROPOSALS\11119.00 MT. RUSHMORE RD. UTILITIES RECONSTRUCTION\DRAWINGS\SHEETS\PHASE 2 - FLORMANN TO SAINT JAMES\)

SCALE:
HORIZ. 1" = 40'
VERT. 1" = 10'

*NOTE:*
ALL SUBSURFACE UTILITIES ARE SHOWN BASED UPON GROUND LEVEL FIELD SURVEY AND APPROXIMATIONS. THE CONTRACTOR SHALL BE RESPONSIBLE TO FIELD LOCATE AND VERIFY UTILITY INFORMATION PERTAINING TO THE WORK. SDDOT PROPOSED STORM SEWER IS SHOWN FOR INFORMATION ONLY AND MAY BE SHOWN DIFFERENTLY IN THE ROADWAY PLANS. PLEASE REFER TO PROJECT NH0016(84)67 FOR ALL STORM SEWER PLAN AND GRADE INFORMATION.

Prepared By: AE2S

Prepared For: Public Works Department, Rapid City, South Dakota, Incorporated 1882 — Engineering Services

| | |
|---|---|
| Scale: | AS NOTED |
| Designed By: GW | Drawn By: MS |
| Design Date: 02.2016 - 04.2016 | Print Date: 08.19.2016 |
| Internal Job No: 11119.04 | |
| Surveyed By: SDDOT | Survey Date: 2012 |
| Project Number: 12-2051, CIP NO.50867, PCN X02P | |

Revisions: Number: Description:

FOR BIDDING PURPOSES ONLY

# MOUNT RUSHMORE ROAD UTILITY RECONSTRUCTION

Sheet Title: SAINT ANDREW STREET UTILITY PROFILE STA 0+00 to END

Sheet No: G38 of G83

REGISTERED PROFESSIONAL ENGINEER REG. NO. 2780 GREGORY M. WIERENGA SOUTH DAKOTA 8-19-16

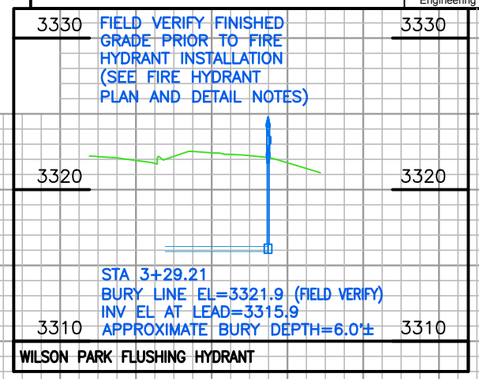


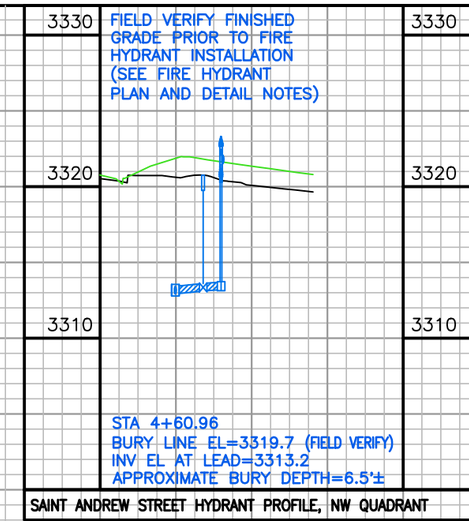


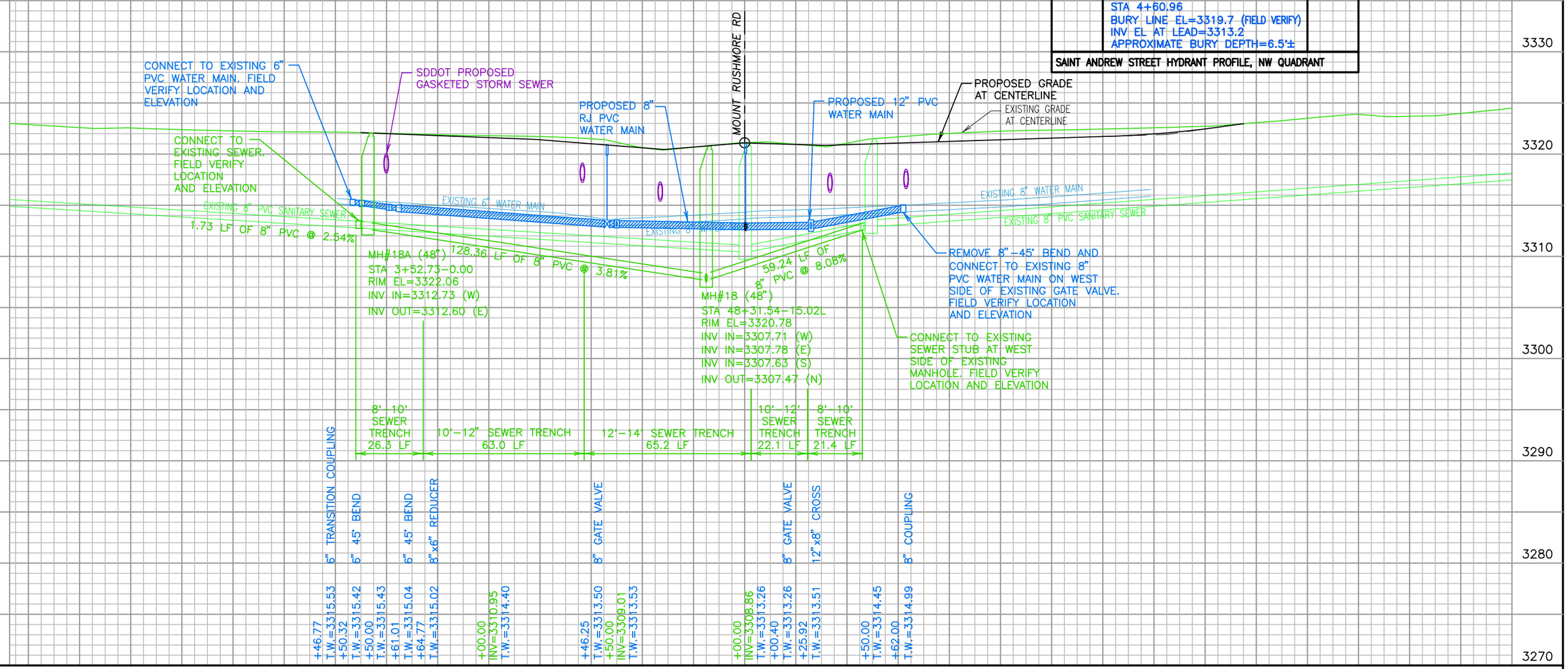


August, 17, 2016 10:54:14 a.m.
Drawing: PLAN AND PROFILES.DWG (JOCHS) (P:\-PROJECTS & PROPOSALS\11119.00 MT. RUSHMORE RD. UTILITIES RECONSTRUCTION\DRAWINGS\SHEETS\PHASE 2 - FLORMANN TO SAINT JAMES\)

SCALE:
HORIZ. 1" = 40'
VERT. 1" = 10'

*NOTE:*
ALL SUBSURFACE UTILITIES ARE SHOWN BASED UPON GROUND LEVEL FIELD SURVEY AND APPROXIMATIONS. THE CONTRACTOR SHALL BE RESPONSIBLE TO FIELD LOCATE AND VERIFY UTILITY INFORMATION PERTAINING TO THE WORK. SDDOT PROPOSED STORM SEWER IS SHOWN FOR INFORMATION ONLY AND MAY BE SHOWN DIFFERENTLY IN THE ROADWAY PLANS. PLEASE REFER TO PROJECT NH0016(84)67 FOR ALL STORM SEWER PLAN AND GRADE INFORMATION.

Prepared By: AE2S

Prepared For: Public Works Department, Rapid City, South Dakota, Incorporated 1882, Engineering Services

| | |
|---|---|
| Scale: | AS NOTED |
| Designed By: GW | Drawn By: MS |
| Design Date: 02.2016 - 04.2016 | Print Date: 08.19.2016 |
| Internal Job No: 11119.04 | |
| Surveyed By: SDDOT | Survey Date: 2012 |
| Project Number: 12-2051, CIP NO.50867, PCN X02P | |

Revisions:
Number:
Description:

FOR BIDDING PURPOSES ONLY

# MOUNT RUSHMORE ROAD UTILITY RECONSTRUCTION

Sheet Title: MANHOLE #19 ALLEY SEWER PROFILE

Sheet No: G39 of G83

REGISTERED PROFESSIONAL ENGINEER
REG. NO. 2780
GREGORY M. WIERENGA
SOUTH DAKOTA
8-19-16

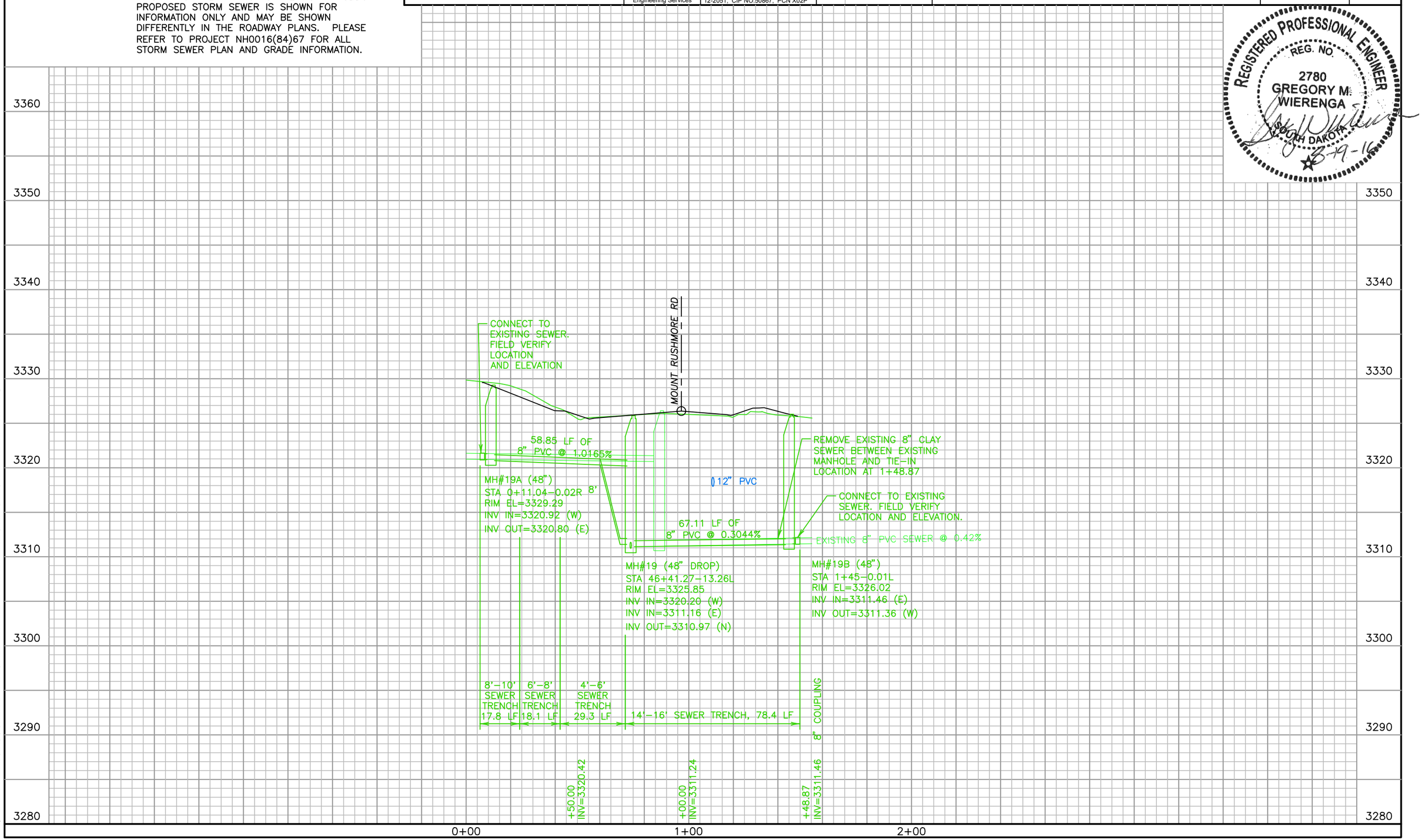


August 17, 2016 10:54:14 a.m.
Drawing: PLAN AND PROFILES.Dwg (JOBNS) (P:\PROJECTS & PROPOSALS\11119.00 MT. RUSHMORE RD. UTILITIES RECONSTRUCTION\DRAWINGS\SHEETS\PHASE 2 - FLORMANN TO SAINT JAMES\)

| Prepared By: | Prepared For: | Scale: AS NOTED | Revisions: | | |
|---|---|---|---|---|---|
| AE2S | Public Works Department<br>Rapid City, South Dakota, Incorporated 1882<br>Engineering Services | Designed By: GW<br>Drawn By: MS<br>Design Date: 02.2016 - 04.2016<br>Print Date: 08.19.2016<br>Internal Job No: 11119.04<br>Surveyed By: SDDOT<br>Survey Date: 2012<br>Project Number: 12-2051, CIP NO.50867, PCN X02P | Number: | Description: | |

FOR BIDDING PURPOSES ONLY

# MOUNT RUSHMORE ROAD UTILITY RECONSTRUCTION

| Sheet Title: | Sheet No: |
|---|---|
| MOUNT RUSHMORE RD | G40 |
| WATER MAIN PLAN | of |
| STA 49+00 to 54+00 | G83 |

F&I 12" GATE VALVE AND BOX
AT THE FOLLOWING LOCATIONS:

STA 51+70.09 – 26.00R (MAINLINE)

STA 52+50.98 – 26.00R (MAINLINE)

F&I 12"x6" TEE
AT THE FOLLOWING LOCATIONS:

STA 51+78.63 – 26.00R (MAINLINE)

F&I FIRE HYDRANT AND THRUSTBLOCK, 6" AUXILIARY GATE VALVE AND BOX, 6" PVC HYDRANT LEAD, AND TEST STATION AT THE FOLLOWING LOCATIONS:

STA 4+61.03 – 45.27L (ST CHARLES STREET)

STA 51+78.61 – 53.53R (MAINLINE)

F&I 12"x8" CROSS
AT THE FOLLOWING LOCATIONS:

STA 52+41.20 – 26.00R (MAINLINE)

F&I 8" TRANSITION COUPLING AND CONNECT TO EXISTING WATER MAIN AT THE FOLLOWING LOCATIONS:

STA 3+23.95 – 15.80L (ST CHARLES STREET)

STA 6+65.96 – 12.91L (ST CHARLES STREET)

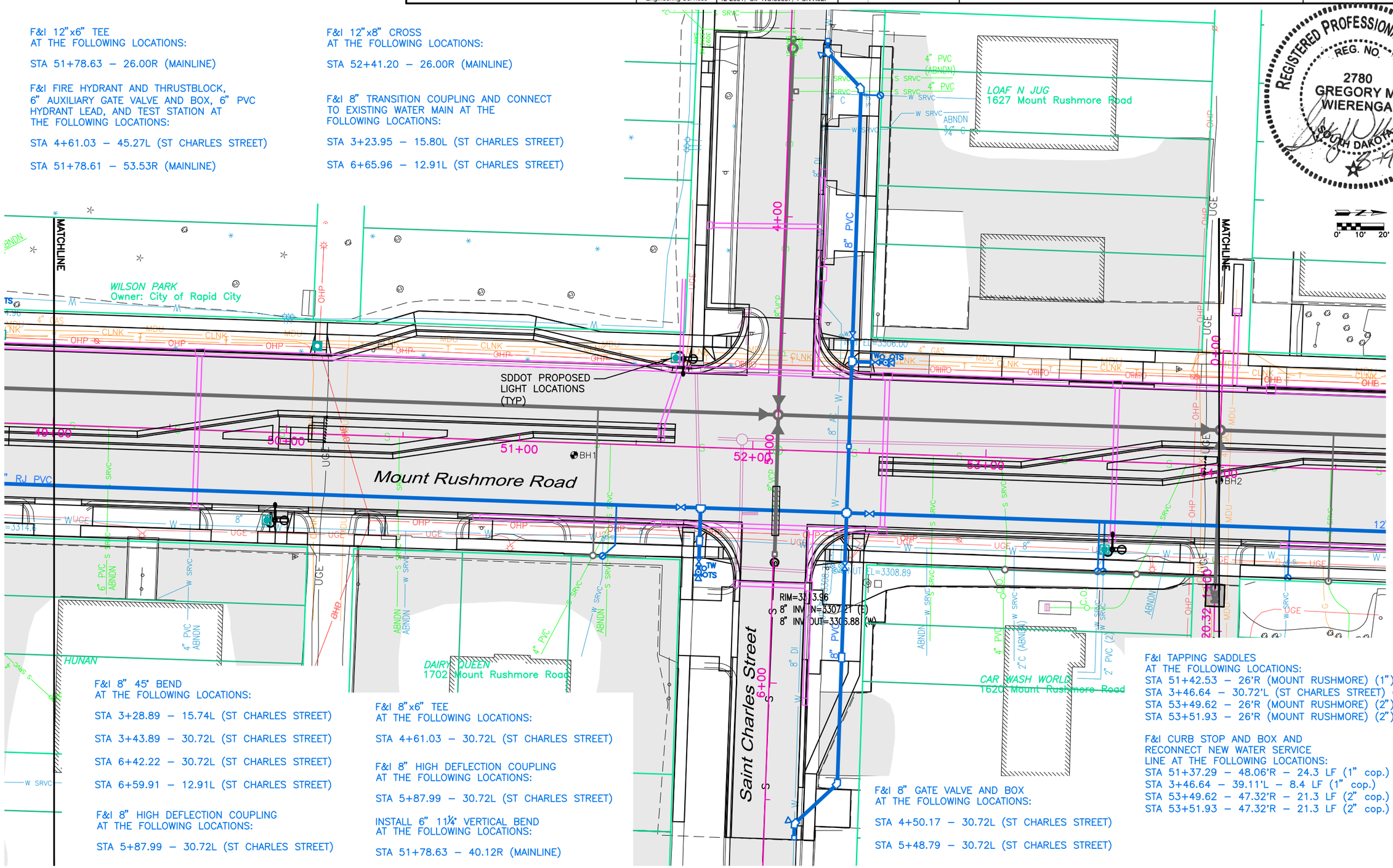


REGISTERED PROFESSIONAL ENGINEER
REG. NO. 2780
GREGORY M. WIERENGA
SOUTH DAKOTA
8-19-16

F&I 8" 45° BEND
AT THE FOLLOWING LOCATIONS:

STA 3+28.89 – 15.74L (ST CHARLES STREET)

STA 3+43.89 – 30.72L (ST CHARLES STREET)

STA 6+42.22 – 30.72L (ST CHARLES STREET)

STA 6+59.91 – 12.91L (ST CHARLES STREET)

F&I 8" HIGH DEFLECTION COUPLING
AT THE FOLLOWING LOCATIONS:

STA 5+87.99 – 30.72L (ST CHARLES STREET)

F&I 8"x6" TEE
AT THE FOLLOWING LOCATIONS:

STA 4+61.03 – 30.72L (ST CHARLES STREET)

F&I 8" HIGH DEFLECTION COUPLING
AT THE FOLLOWING LOCATIONS:

STA 5+87.99 – 30.72L (ST CHARLES STREET)

INSTALL 6" 11¼° VERTICAL BEND
AT THE FOLLOWING LOCATIONS:

STA 51+78.63 – 40.12R (MAINLINE)

F&I 8" GATE VALVE AND BOX
AT THE FOLLOWING LOCATIONS:

STA 4+50.17 – 30.72L (ST CHARLES STREET)

STA 5+48.79 – 30.72L (ST CHARLES STREET)

F&I TAPPING SADDLES
AT THE FOLLOWING LOCATIONS:
STA 51+42.53 – 26'R (MOUNT RUSHMORE) (1")
STA 3+46.64 – 30.72'L (ST CHARLES STREET) (1")
STA 53+49.62 – 26'R (MOUNT RUSHMORE) (2")
STA 53+51.93 – 26'R (MOUNT RUSHMORE) (2")

F&I CURB STOP AND BOX AND
RECONNECT NEW WATER SERVICE
LINE AT THE FOLLOWING LOCATIONS:
STA 51+37.29 – 48.06'R – 24.3 LF (1" cop.)
STA 3+46.64 – 39.11'L – 8.4 LF (1" cop.)
STA 53+49.62 – 47.32'R – 21.3 LF (2" cop.)
STA 53+51.93 – 47.32'R – 21.3 LF (2" cop.)

August 17, 2016 10:54:14 a.m.
Drawing: PLAN AND PROFILES.dwg (JAMES) (P:\PROJECTS & PROPOSALS\11119.00 MT. RUSHMORE RD. UTILITIES RECONSTRUCTION\DRAWINGS\SHEETS\PHASE 2 - FLORMANN TO SAINT JAMES\)

| Prepared By: | Prepared For: | Scale: AS NOTED | Revisions: | | | Sheet Title: | Sheet No: |
|---|---|---|---|---|---|---|---|
| AE2S | Public Works Department<br>Rapid City, South Dakota<br>Engineering Services | Designed By: GW<br>Drawn By: MS<br>Design Date: 02.2016 - 04.2016<br>Print Date: 08.19.2016<br>Internal Job No: 11119.04<br>Surveyed By: SDDOT<br>Survey Date: 2012<br>Project Number: 12-2051, CIP NO.50867, PCN X02P | Number: | Description: | FOR BIDDING PURPOSES ONLY | MOUNT RUSHMORE ROAD<br>UTILITY RECONSTRUCTION | MOUNT RUSHMORE RD<br>SANITARY SEWER PLAN<br>STA 49+00 to 54+00 | G41<br>of<br>G83 |

F&I SEWER MANHOLES AT THE FOLLOWING LOCATIONS:

MH#16 STA 54+00.05 – 15.00L (MAINLINE) (48")

MH#16B STA 1+01.93 – 0.21L (MH#16 ALLEY SEWER) (48")

MH#17 STA 52+10.45 – 15.00L (MAINLINE) (48" DROP)

MH#17A STA 3+27.68 – 0.97L (ST CHARLES STREET) (48")

F&I 8" TRANSITION COUPLING AND CONNECT TO EXISTING SEWER MAIN AT THE FOLLOWING LOCATIONS:

STA 3+23.68 – 0.99L (ST CHARLES STREET)

STA 5+44.75 – 0.54L (ST CHARLES STREET)

STA 1+05.69 – 0.17L (MH#16 ALLEY SEWER)

F&I PVC SANITARY SEWER SERVICE, CLEANOUT, CLEANOUT FRAME AND LID, AND RECONNECT TO EXISTING SANITARY SEWER SERVICE AT THE FOLLOWING LOCATIONS:

STA 51+33.21 – 15'L to 48.06'R (MOUNT RUSHMORE) – 63.1 LF (4")

STA 3+46.17 – 0.86'L to 2.9'L (SAINT CHARLES) – 2.1 LF (4")

STA 0+97.04 – 33.67'R (MH NO.16 ALLEY SEWER) – 33.9 LF (4")

STA 0+97.04 – 90.14'R (MH NO.16 ALLEY SEWER) – 56.5 LF (4")

*MANHOLE 16 ALLEY SEWER SURFACING NOTES:*

STA 1+00.29 – 3.76'R and 4.24'L to 1+09.63 – 3.91'R and 1+09.75 – 4.09'L
BASE COURSE, 8", 3.7 TONS
ASPHALT CONCRETE COMPOSITE, 5", 2.4 TONS

REGISTERED PROFESSIONAL ENGINEER
REG. NO. 2780
GREGORY M. WIERENGA
SOUTH DAKOTA
8-19-16

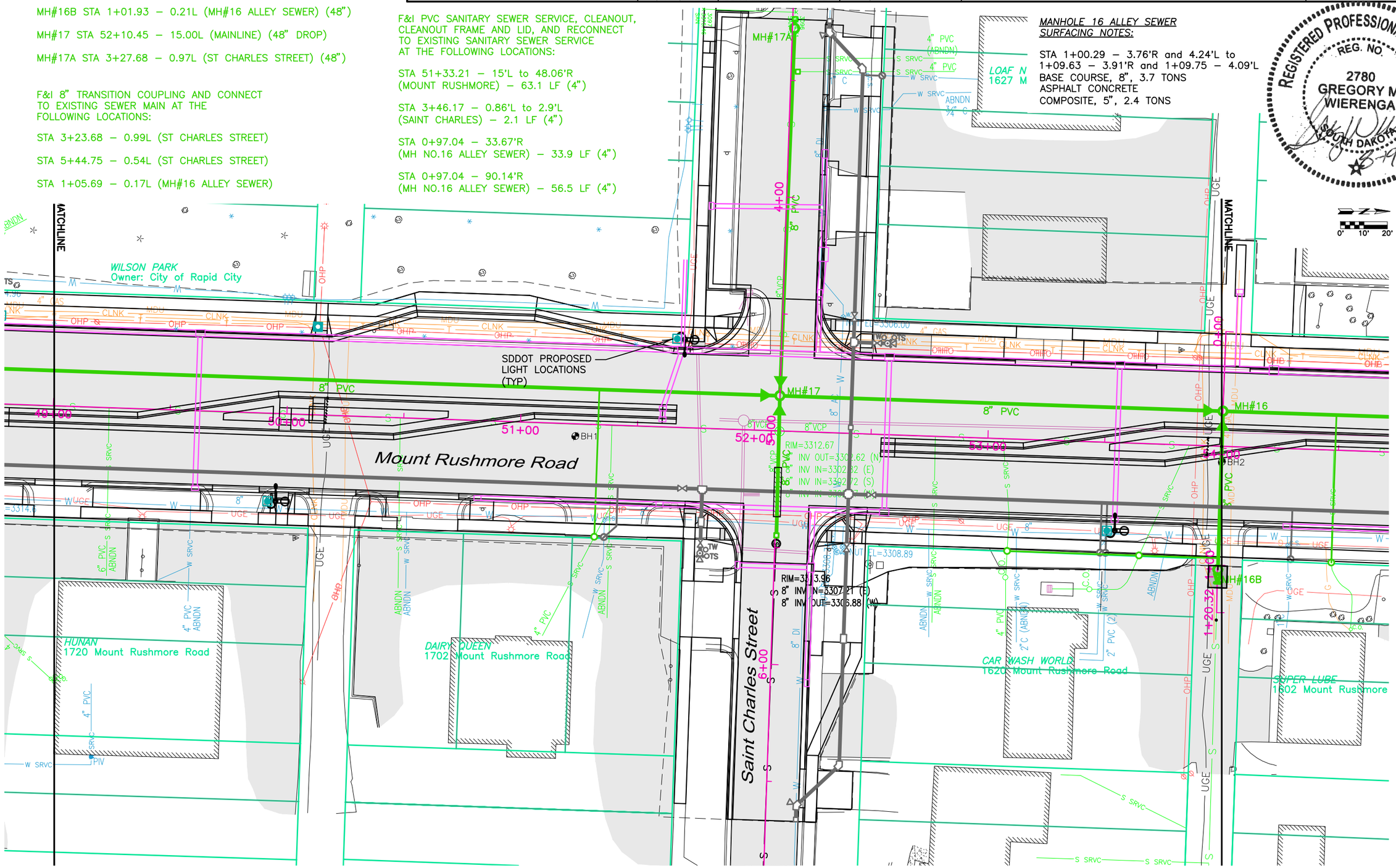


August 17, 2016 10:54:14 a.m.
Drawing: PLAN AND PROFILES.DWG (JOEMS) (P:\PROJECTS & PROPOSALS\11119.00 MT. RUSHMORE RD. UTILITIES RECONSTRUCTION\DRAWINGS\SHEETS\PHASE 2 - FLORMAN TO SAINT JAMES\)

SCALE:
HORIZ. 1" = 40'
VERT. 1" = 10'

*NOTE:*
ALL SUBSURFACE UTILITIES ARE SHOWN BASED UPON GROUND LEVEL FIELD SURVEY AND APPROXIMATIONS. THE CONTRACTOR SHALL BE RESPONSIBLE TO FIELD LOCATE AND VERIFY UTILITY INFORMATION PERTAINING TO THE WORK. SDDOT PROPOSED STORM SEWER IS SHOWN FOR INFORMATION ONLY AND MAY BE SHOWN DIFFERENTLY IN THE ROADWAY PLANS. PLEASE REFER TO PROJECT NH0016(84)67 FOR ALL STORM SEWER PLAN AND GRADE INFORMATION.

| Prepared By: | Prepared For: | Scale: AS NOTED | Revisions: | |
|---|---|---|---|---|
| AE2S | Public Works Department<br>Rapid City, South Dakota, Incorporated 1882<br>Engineering Services | Designed By: GW<br>Drawn By: MS<br>Design Date: 02.2016 - 04.2016<br>Print Date: 08.19.2016<br>Internal Job No: 11119.04<br>Surveyed By: SDDOT<br>Survey Date: 2012<br>Project Number: 12-2051, CIP NO.50867, PCN X02P | Number: | Description: |

FOR BIDDING PURPOSES ONLY

# MOUNT RUSHMORE ROAD UTILITY RECONSTRUCTION

| Sheet Title: | Sheet No: |
|---|---|
| MOUNT RUSHMORE RD | G42 |
| UTILITY PROFILE | of |
| STA 49+00 to 54+00 | G83 |

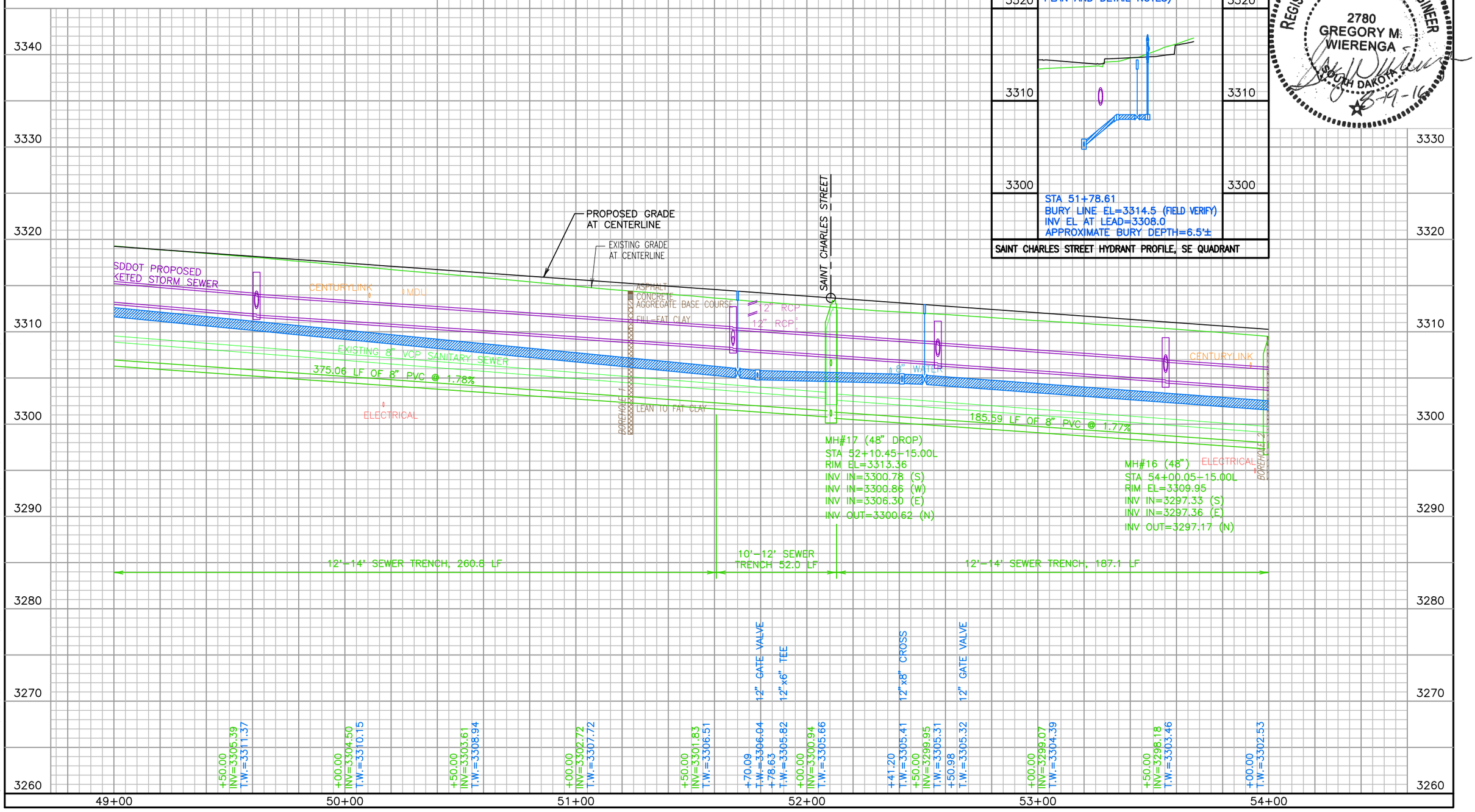


REGISTERED PROFESSIONAL ENGINEER
REG. NO. 2780
GREGORY M. WIERENGA
SOUTH DAKOTA
8-19-16

August 17, 2016 10:54:14 a.m.
Drawing: PLAN AND PROFILES.dwg (JOENS) (P:\PROJECTS & PROPOSALS\11119.00 MT. RUSHMORE RD. UTILITIES RECONSTRUCTION\DRAWINGS\SHEETS\PHASE 2 - FLORMANN TO SAINT JAMES\)

SCALE:
HORIZ. 1" = 40'
VERT. 1" = 10'

*NOTE:*
ALL SUBSURFACE UTILITIES ARE SHOWN BASED UPON GROUND LEVEL FIELD SURVEY AND APPROXIMATIONS. THE CONTRACTOR SHALL BE RESPONSIBLE TO FIELD LOCATE AND VERIFY UTILITY INFORMATION PERTAINING TO THE WORK. SDDOT PROPOSED STORM SEWER IS SHOWN FOR INFORMATION ONLY AND MAY BE SHOWN DIFFERENTLY IN THE ROADWAY PLANS. PLEASE REFER TO PROJECT NH0016(84)67 FOR ALL STORM SEWER PLAN AND GRADE INFORMATION.

Prepared By: AE2S

Prepared For: Public Works Department — Rapid City, South Dakota — Engineering Services

| | |
|---|---|
| Scale: | AS NOTED |
| Designed By: GW | Drawn By: MS |
| Design Date: 02.2016 - 04.2016 | Print Date: 08.19.2016 |
| Internal Job No: 11119.04 | |
| Surveyed By: SDDOT | Survey Date: 2012 |
| Project Number: 12-2051, CIP NO.50867, PCN X02P | |

Revisions: Number: Description:

FOR BIDDING PURPOSES ONLY

# MOUNT RUSHMORE ROAD UTILITY RECONSTRUCTION

Sheet Title: SAINT CHARLES STREET UTILITY PROFILE STA 0+00 to END

Sheet No: G43 of G83

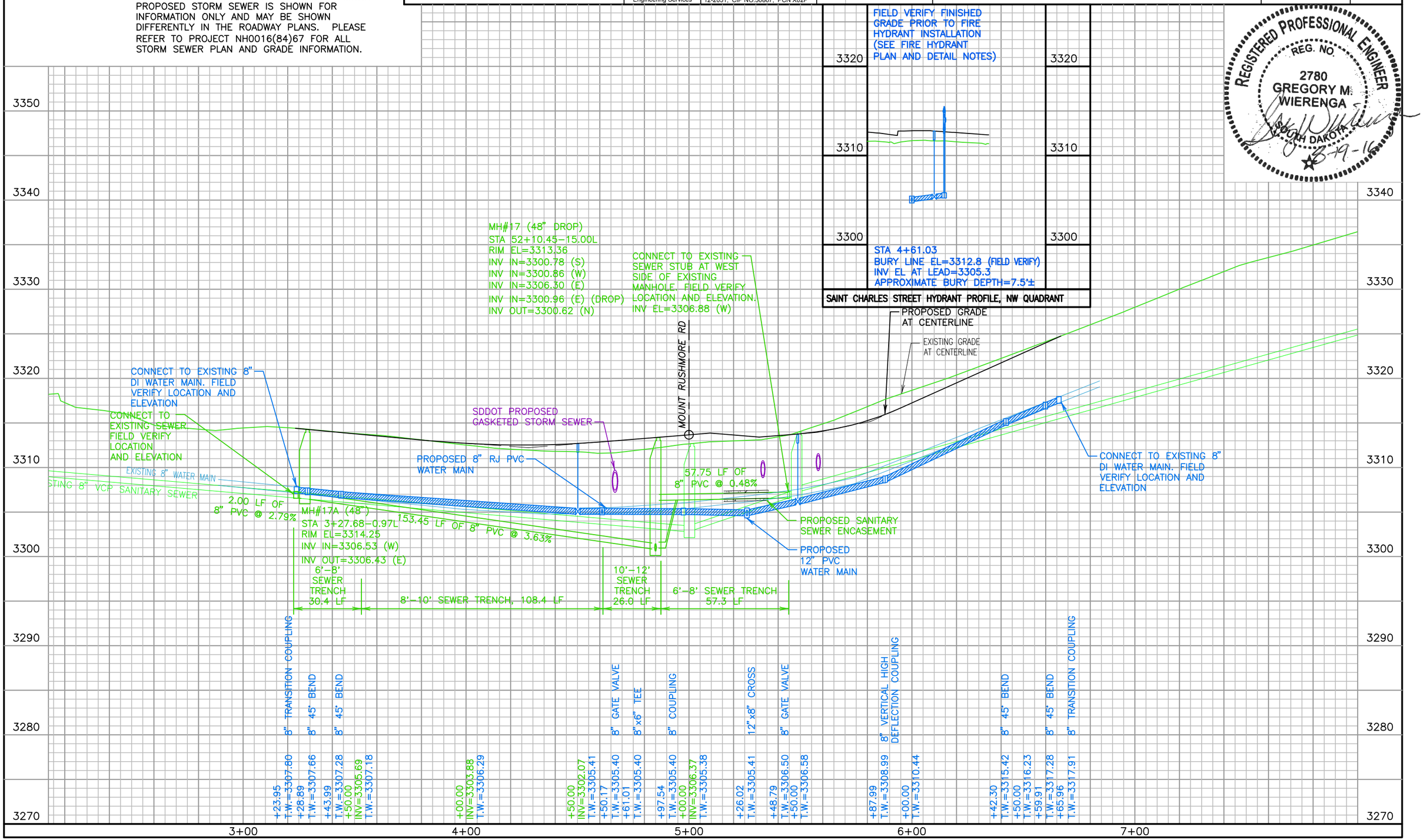


REGISTERED PROFESSIONAL ENGINEER
REG. NO. 2780
GREGORY M. WIERENGA
SOUTH DAKOTA
8-19-16

August 17, 2016 10:54:14 a.m.
Drawing: PLAN AND PROFILES.Dwg (JOENS) (P:\PROJECTS & PROPOSALS\11119.00 MT. RUSHMORE RD. UTILITIES RECONSTRUCTION\DRAWINGS\SHEETS\PHASE 2 - FLORMANN TO SAINT JAMES\)

SCALE:
HORIZ. 1" = 40'
VERT. 1" = 10'

*NOTE:*
ALL SUBSURFACE UTILITIES ARE SHOWN BASED UPON GROUND LEVEL FIELD SURVEY AND APPROXIMATIONS. THE CONTRACTOR SHALL BE RESPONSIBLE TO FIELD LOCATE AND VERIFY UTILITY INFORMATION PERTAINING TO THE WORK. SDDOT PROPOSED STORM SEWER IS SHOWN FOR INFORMATION ONLY AND MAY BE SHOWN DIFFERENTLY IN THE ROADWAY PLANS. PLEASE REFER TO PROJECT NH0016(84)67 FOR ALL STORM SEWER PLAN AND GRADE INFORMATION.

| Prepared By: | Prepared For: | Scale: AS NOTED | Revisions: | | | Sheet Title: | Sheet No: |
|---|---|---|---|---|---|---|---|
| AE2S | Public Works Department<br>Rapid City, South Dakota, Incorporated 1882<br>Engineering Services | Designed By: GW<br>Drawn By: MS<br>Design Date: 02.2016 - 04.2016<br>Print Date: 08.19.2016<br>Internal Job No: 11119.04<br>Surveyed By: SDDOT<br>Survey Date: 2012<br>Project Number: 12-2051, CIP NO.50867, PCN X02P | Number: | Description: | FOR BIDDING PURPOSES ONLY<br>MOUNT RUSHMORE ROAD<br>UTILITY RECONSTRUCTION | MANHOLE #16<br>ALLEY SEWER<br>PROFILE | G44<br>of<br>G83 |

REGISTERED PROFESSIONAL ENGINEER
REG. NO.
2780
GREGORY M. WIERENGA
SOUTH DAKOTA
8-19-16

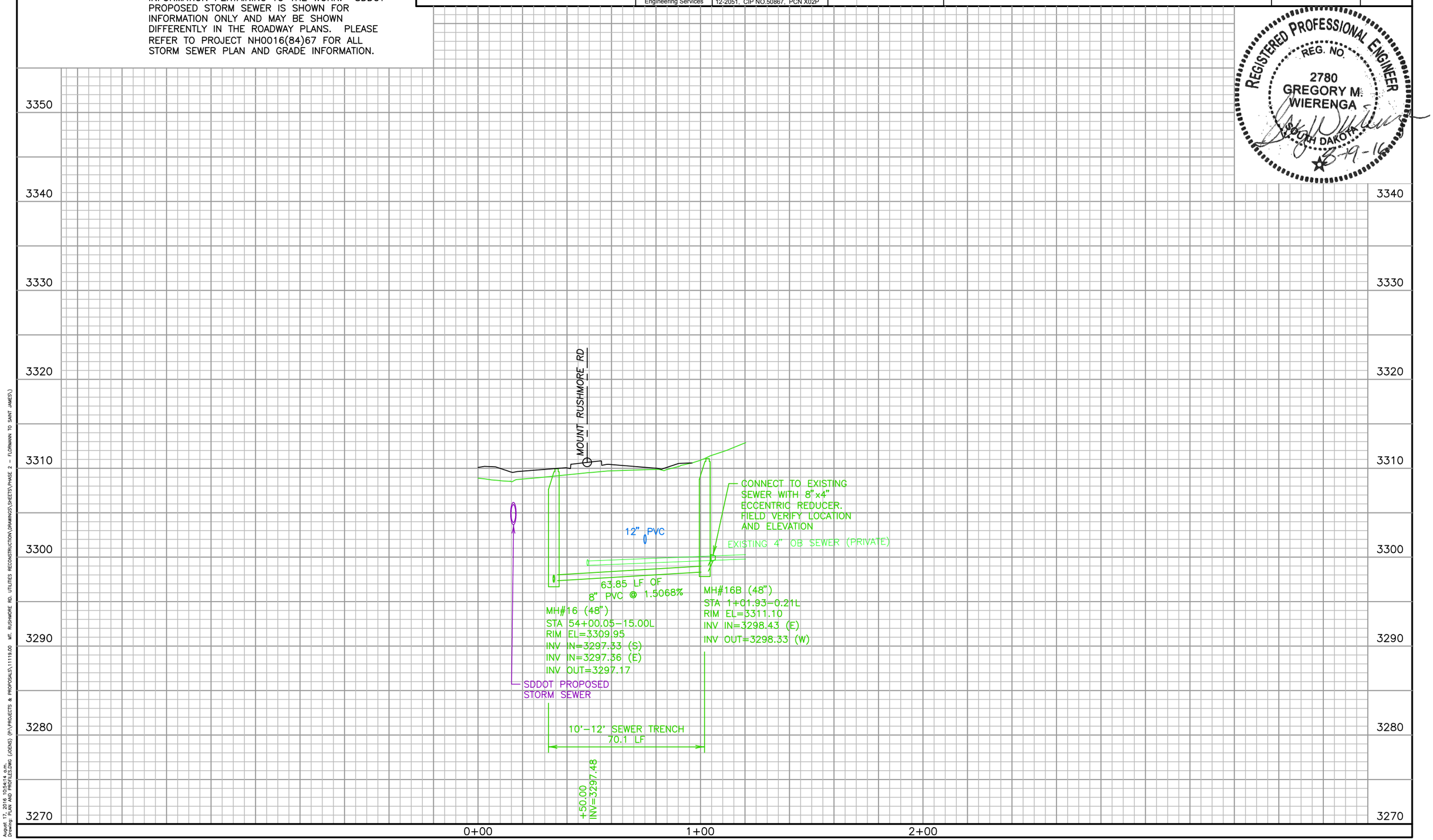


August 17, 2016 10:54:14 a.m.
Drawing: T:\AM AND PROF\ELS.DWG (JOCHS) (P:\PROJECTS & PROPOSALS\11119.00 MT. RUSHMORE RD. UTILITIES RECONSTRUCTION\DRAWINGS\SHEETS\PHASE 2 - FLORMANN TO SAINT JAMES\)

| Prepared By: | Prepared For: | Scale: AS NOTED | Revisions: | | FOR BIDDING PURPOSES ONLY | Sheet Title: | Sheet No: |
|---|---|---|---|---|---|---|---|
| AES2 | Public Works Department<br>RAPID CITY SOUTH DAKOTA<br>Engineering Services | Designed By: GW<br>Drawn By: MS<br>Design Date: 02.2016 - 04.2016<br>Print Date: 08.19.2016<br>Internal Job No: 11119.04<br>Surveyed By: SDDOT<br>Survey Date: 2012<br>Project Number: 12-2051, CIP NO.50867, PCN X02P | Number:<br>Description: | | MOUNT RUSHMORE ROAD<br>UTILITY RECONSTRUCTION | MOUNT RUSHMORE RD<br>WATER MAIN PLAN<br>STA 54+00 to 59+00 | G45<br>of<br>G83 |

F&I 12" GATE VALVE AND BOX
AT THE FOLLOWING LOCATIONS:

STA 5+57.56 – 11.48L (FRANKLIN STREET)

STA 55+52.24 – 26.00R (MAINLINE)

STA 56+31.32 – 26.00R (MAINLINE)

F&I 12"x6" TEE
AT THE FOLLOWING LOCATIONS:

STA 55+60.88 – 26.00R (MAINLINE)

F&I 12" COUPLINGS
AT THE FOLLOWING LOCATIONS:

STA 4+95.88 – 11.48L (FRANKLIN STREET)

F&I FIRE HYDRANT AND THRUSTBLOCK, 6" AUXILIARY GATE VALVE AND BOX, 6" PVC HYDRANT LEAD, AND TEST STATION AT THE FOLLOWING LOCATIONS:

STA 55+60.88 – 54.86R (MAINLINE)

F&I 12" COUPLING AND CONNECT TO EXISTING WATER MAIN AT THE FOLLOWING LOCATIONS:

STA 5+75.30 – 19.56L (FRANKLIN STREET)

INSTALL 12" 45° BEND
AT THE FOLLOWING LOCATIONS:

STA 5+63.92 – 11.48L (FRANKLIN STREET)

STA 5+71.70 – 19.27L (FRANKLIN STREET)

F&I 12"x12" CROSS
AT THE FOLLOWING LOCATIONS:

STA 56+02.17 – 25.98R (MAINLINE)

REGISTERED PROFESSIONAL ENGINEER
REG. NO. 2780
GREGORY M. WIERENGA
SOUTH DAKOTA
8-19-16

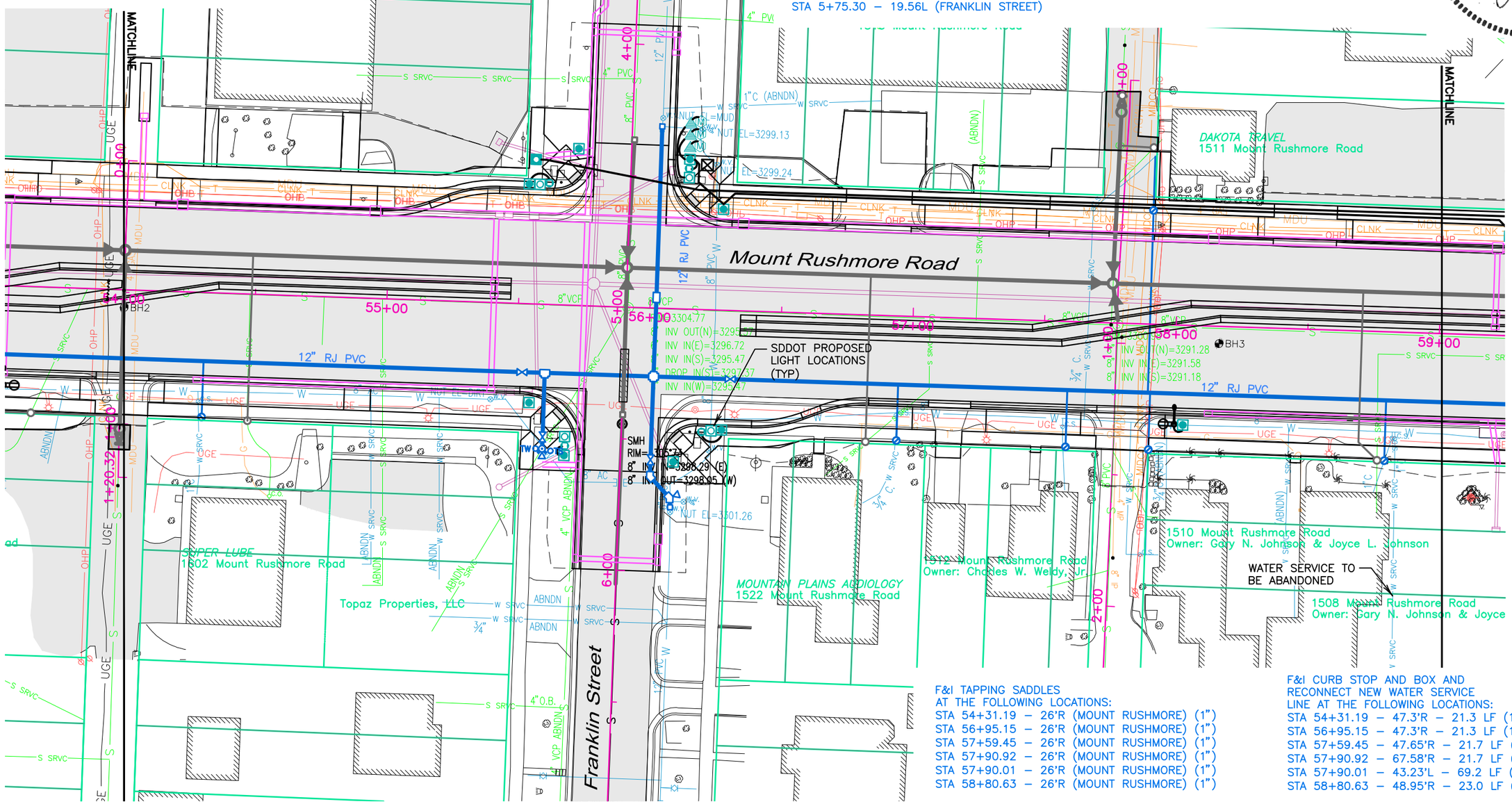


F&I TAPPING SADDLES
AT THE FOLLOWING LOCATIONS:
STA 54+31.19 – 26'R (MOUNT RUSHMORE) (1")
STA 56+95.15 – 26'R (MOUNT RUSHMORE) (1")
STA 57+59.45 – 26'R (MOUNT RUSHMORE) (1")
STA 57+90.92 – 26'R (MOUNT RUSHMORE) (1")
STA 57+90.01 – 26'R (MOUNT RUSHMORE) (1")
STA 58+80.63 – 26'R (MOUNT RUSHMORE) (1")

F&I CURB STOP AND BOX AND RECONNECT NEW WATER SERVICE LINE AT THE FOLLOWING LOCATIONS:
STA 54+31.19 – 47.3'R – 21.3 LF (1" cop.)
STA 56+95.15 – 47.3'R – 21.3 LF (1" cop.)
STA 57+59.45 – 47.65'R – 21.7 LF (1" cop.)
STA 57+90.92 – 67.58'R – 21.7 LF (1" cop.)
STA 57+90.01 – 43.23'L – 69.2 LF (1" cop.)
STA 58+80.63 – 48.95'R – 23.0 LF (1" cop.)

August 17, 2016 10:54:14 a.m.
Drawing: PLAN AND PROFILES.dwg (JOB(NS) (P:\PROJECTS & PROPOSALS\11119.00 MT. RUSHMORE RD. UTILITIES RECONSTRUCTION\DRAWINGS\SHEETS\PHASE 2 – FLORMANN TO SAINT JAMES\)

| Prepared By: | Prepared For: | Scale: AS NOTED | Revisions: | | FOR BIDDING PURPOSES ONLY | Sheet Title: | Sheet No: |
|---|---|---|---|---|---|---|---|
| AE2S | Public Works Department<br>Rapid City, South Dakota<br>Engineering Services | Designed By: GW<br>Drawn By: MS<br>Design Date: 02.2016 - 04.2016<br>Print Date: 08.19.2016<br>Internal Job No: 11119.04<br>Surveyed By: SDDOT<br>Survey Date: 2012<br>Project Number: 12-2051, CIP NO.50867, PCN X02P | Number:<br>Description: | | MOUNT RUSHMORE ROAD<br>UTILITY RECONSTRUCTION | MOUNT RUSHMORE RD<br>SANITARY SEWER PLAN<br>STA 54+00 to 59+00 | G46<br>of<br>G83 |

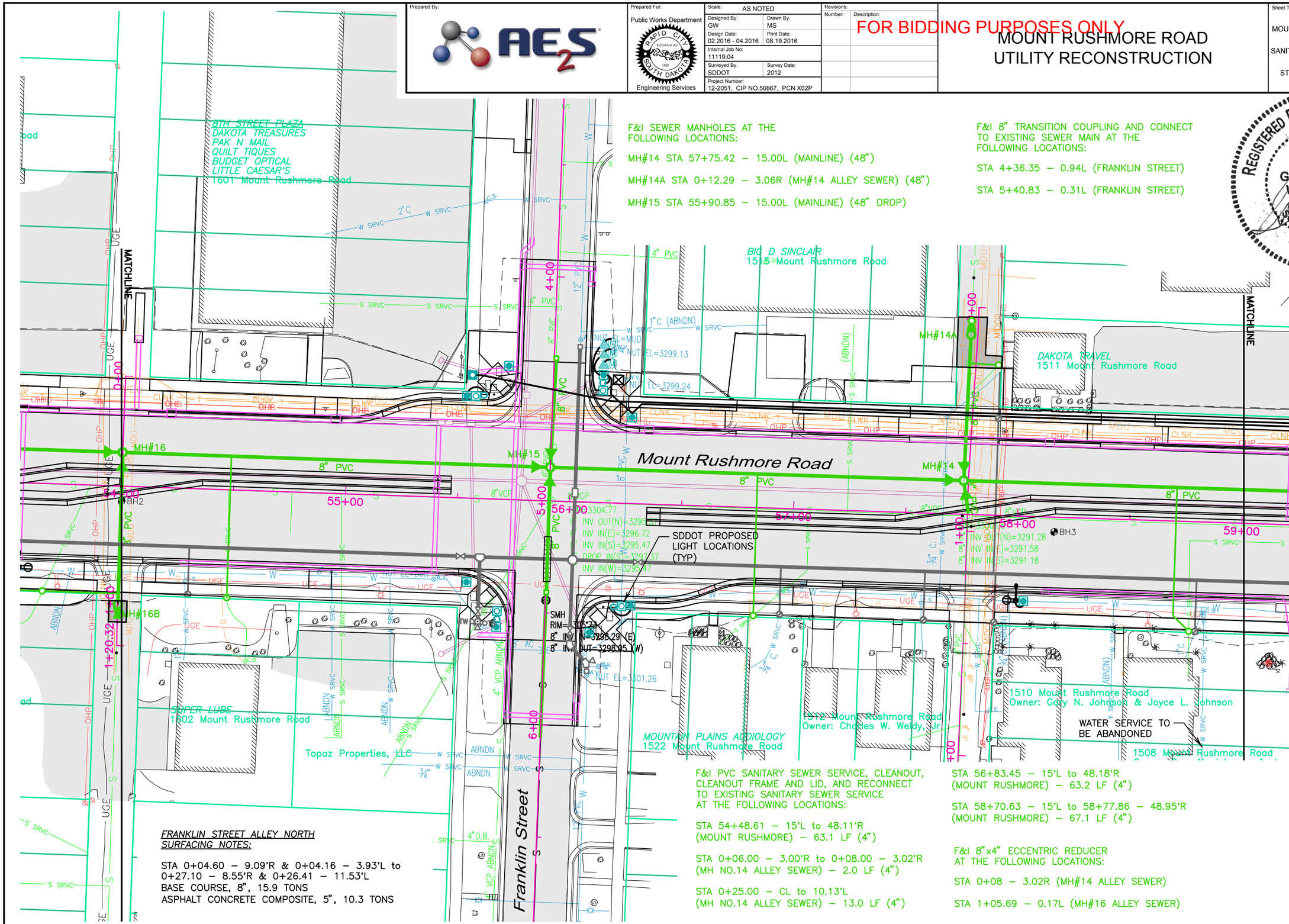


F&I SEWER MANHOLES AT THE FOLLOWING LOCATIONS:

MH#14 STA 57+75.42 – 15.00L (MAINLINE) (48")

MH#14A STA 0+12.29 – 3.06R (MH#14 ALLEY SEWER) (48")

MH#15 STA 55+90.85 – 15.00L (MAINLINE) (48" DROP)

F&I 8" TRANSITION COUPLING AND CONNECT TO EXISTING SEWER MAIN AT THE FOLLOWING LOCATIONS:

STA 4+36.35 – 0.94L (FRANKLIN STREET)

STA 5+40.83 – 0.31L (FRANKLIN STREET)

REGISTERED PROFESSIONAL ENGINEER
REG. NO. 2780
GREGORY M. WIERENGA
SOUTH DAKOTA
8-19-16

F&I PVC SANITARY SEWER SERVICE, CLEANOUT, CLEANOUT FRAME AND LID, AND RECONNECT TO EXISTING SANITARY SEWER SERVICE AT THE FOLLOWING LOCATIONS:

STA 54+48.61 – 15'L to 48.11'R
(MOUNT RUSHMORE) – 63.1 LF (4")

STA 0+06.00 – 3.00'R to 0+08.00 – 3.02'R
(MH NO.14 ALLEY SEWER) – 2.0 LF (4")

STA 0+25.00 – CL to 10.13'L
(MH NO.14 ALLEY SEWER) – 13.0 LF (4")

STA 56+83.45 – 15'L to 48.18'R
(MOUNT RUSHMORE) – 63.2 LF (4")

STA 58+70.63 – 15'L to 58+77.86 – 48.95'R
(MOUNT RUSHMORE) – 67.1 LF (4")

F&I 8"x4" ECCENTRIC REDUCER AT THE FOLLOWING LOCATIONS:

STA 0+08 – 3.02R (MH#14 ALLEY SEWER)

STA 1+05.69 – 0.17L (MH#16 ALLEY SEWER)

FRANKLIN STREET ALLEY NORTH SURFACING NOTES:

STA 0+04.60 – 9.09'R & 0+04.16 – 3.93'L to
0+27.10 – 8.55'R & 0+26.41 – 11.53'L
BASE COURSE, 8", 15.9 TONS
ASPHALT CONCRETE COMPOSITE, 5", 10.3 TONS

August 17, 2016 10:54:14 a.m.
Drawing: P:\AK AND PROFILES.DWG (JGENS) (P:\PROJECTS & PROPOSALS\11119.00 MT. RUSHMORE RD. UTILITIES RECONSTRUCTION\DRAWINGS\SHEETS\PHASE 2 - FLORMAN TO SAINT JAMES.)

HORIZ. 1" = 40'
VERT. 1" = 10'

*NOTE:*
ALL SUBSURFACE UTILITIES ARE SHOWN BASED UPON GROUND LEVEL FIELD SURVEY AND APPROXIMATIONS. THE CONTRACTOR SHALL BE RESPONSIBLE TO FIELD LOCATE AND VERIFY UTILITY INFORMATION PERTAINING TO THE WORK. SDDOT PROPOSED STORM SEWER IS SHOWN FOR INFORMATION ONLY AND MAY BE SHOWN DIFFERENTLY IN THE ROADWAY PLANS. PLEASE REFER TO PROJECT NH0016(84)67 FOR ALL STORM SEWER PLAN AND GRADE INFORMATION.

Prepared By: AE2S

Prepared For: Public Works Department — Rapid City, South Dakota, Incorporated 1882 — Engineering Services

| | |
|---|---|
| Scale: | AS NOTED |
| Designed By: GW | Drawn By: MS |
| Design Date: 02.2016 - 04.2016 | Print Date: 08.19.2016 |
| Internal Job No: 11119.04 | |
| Surveyed By: SDDOT | Survey Date: 2012 |
| Project Number: 12-2051, CIP NO.50867, PCN X02P | |

Revisions: Number: Description:

FOR BIDDING PURPOSES ONLY

# MOUNT RUSHMORE ROAD UTILITY RECONSTRUCTION

Sheet Title: MOUNT RUSHMORE RD UTILITY PROFILE (north bound) STA 54+00 to 59+00

Sheet No: G47 of G83

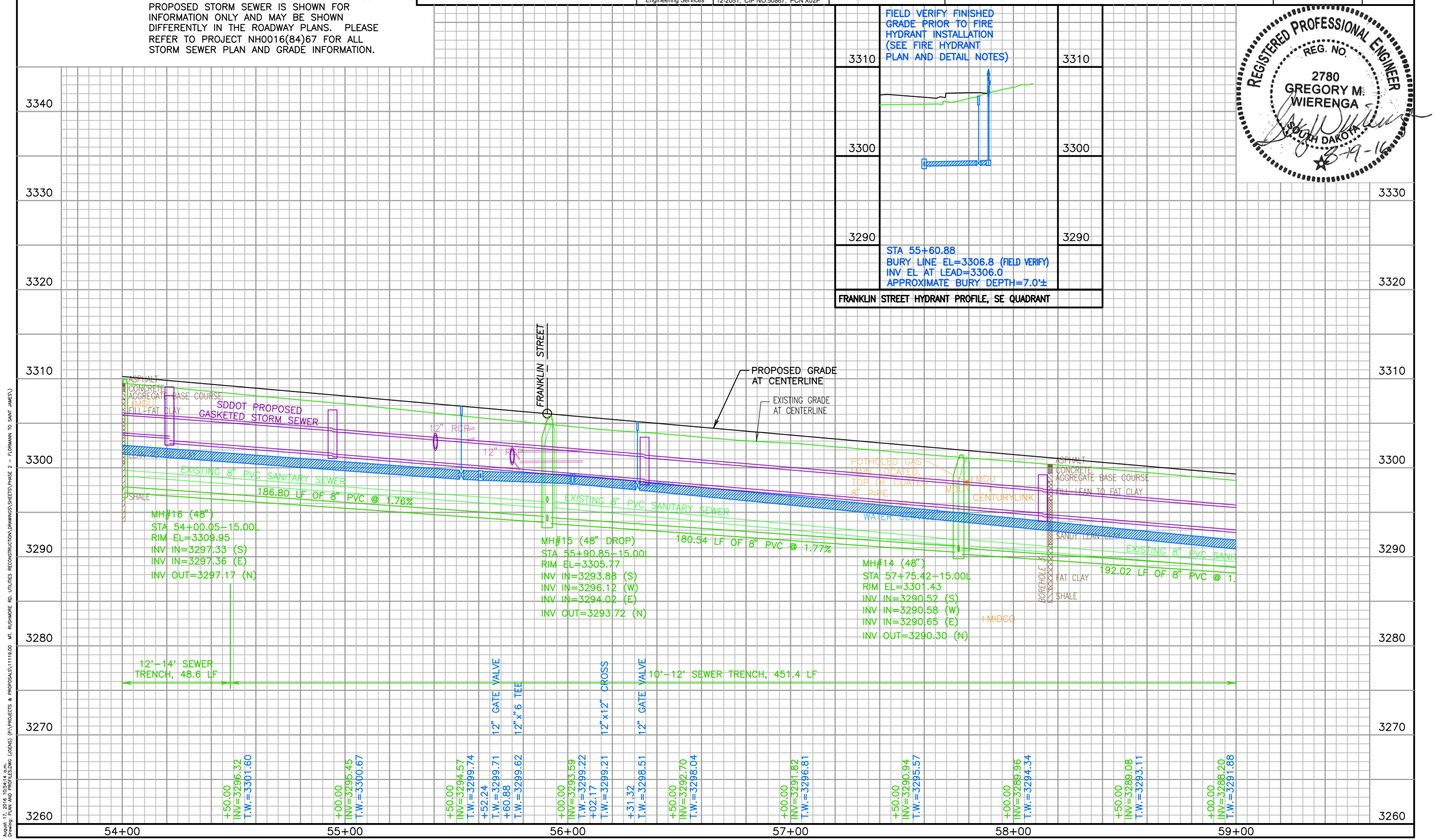


REGISTERED PROFESSIONAL ENGINEER
REG. NO. 2780
GREGORY M. WIERENGA
SOUTH DAKOTA
8-19-16

August 17, 2016 10:54:14 a.m.
Drawing: PLAN AND PROFILES.Dwg (JOBS) (P:\PROJECTS & PROPOSALS\11119.00 MT. RUSHMORE RD. UTILITIES RECONSTRUCTION\DRAWINGS\SHEETS\PHASE 2 - FLORMANN TO SAINT JAMES\)

HORIZ. 1" = 40'
VERT. 1" = 10'

*NOTE:*
ALL SUBSURFACE UTILITIES ARE SHOWN BASED UPON GROUND LEVEL FIELD SURVEY AND APPROXIMATIONS. THE CONTRACTOR SHALL BE RESPONSIBLE TO FIELD LOCATE AND VERIFY UTILITY INFORMATION PERTAINING TO THE WORK. SDDOT PROPOSED STORM SEWER IS SHOWN FOR INFORMATION ONLY AND MAY BE SHOWN DIFFERENTLY IN THE ROADWAY PLANS. PLEASE REFER TO PROJECT NH0016(84)67 FOR ALL STORM SEWER PLAN AND GRADE INFORMATION.

| Prepared By: | Prepared For: | Scale: AS NOTED | Revisions: | | |
|---|---|---|---|---|---|
| AE2S | Public Works Department<br>Rapid City, South Dakota, Incorporated 1882<br>Engineering Services | Designed By: GW<br>Drawn By: MS<br>Design Date: 02.2016 - 04.2016<br>Print Date: 08.19.2016<br>Internal Job No: 11119.04<br>Surveyed By: SDDOT<br>Survey Date: 2012<br>Project Number: 12-2051, CIP NO.50867, PCN X02P | Number: | Description: | |

FOR BIDDING PURPOSES ONLY

# MOUNT RUSHMORE ROAD UTILITY RECONSTRUCTION

| Sheet Title: | Sheet No: |
|---|---|
| FRANKLIN STREET PROFILE | G48 |
| UTILITY PROFILE | of |
| STA 0+00 to END | G83 |

REGISTERED PROFESSIONAL ENGINEER
REG. NO. 2780
GREGORY M. WIERENGA
SOUTH DAKOTA
8-19-16

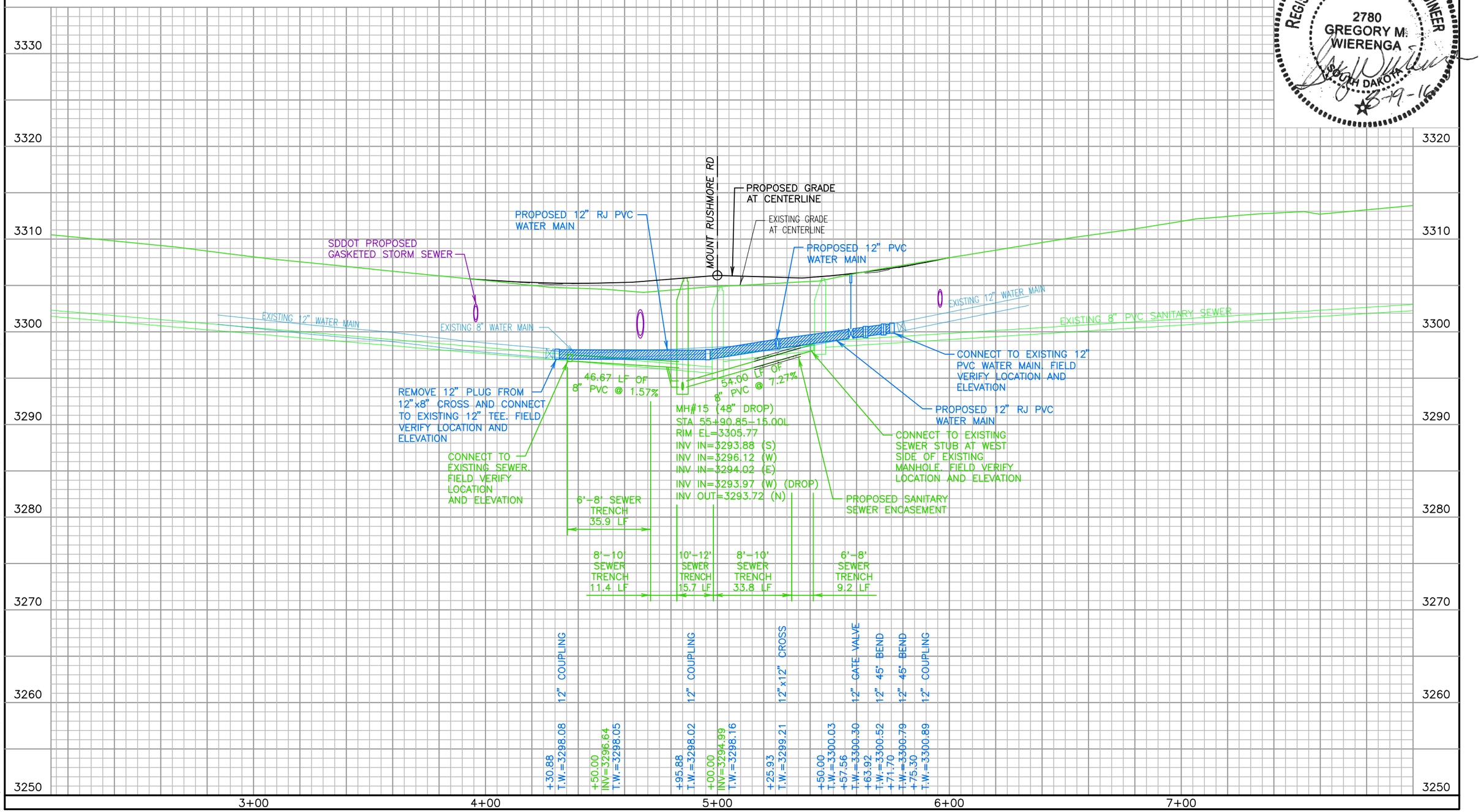


August 17, 2016 10:54:14 a.m.
Drawing: PLAN AND PROFILES.DWG (JOB(S) (P):\PROJECTS & PROPOSALS\11119.00 MT. RUSHMORE RD. UTILITIES RECONSTRUCTION\DRAWINGS\SHEETS\PHASE 2 - FLORMANN TO SAINT JAMES\)

SCALE:
HORIZ. 1" = 40'
VERT. 1" = 10'

*NOTE:*
ALL SUBSURFACE UTILITIES ARE SHOWN BASED UPON GROUND LEVEL FIELD SURVEY AND APPROXIMATIONS. THE CONTRACTOR SHALL BE RESPONSIBLE TO FIELD LOCATE AND VERIFY UTILITY INFORMATION PERTAINING TO THE WORK. SDDOT PROPOSED STORM SEWER IS SHOWN FOR INFORMATION ONLY AND MAY BE SHOWN DIFFERENTLY IN THE ROADWAY PLANS. PLEASE REFER TO PROJECT NH0016(84)67 FOR ALL STORM SEWER PLAN AND GRADE INFORMATION.

| Prepared By: | Prepared For: | Scale: AS NOTED | Revisions: | | |
|---|---|---|---|---|---|
| AE2S | Public Works Department<br>Rapid City, South Dakota, Incorporated 1882<br>Engineering Services | Designed By: GW<br>Drawn By: MS<br>Design Date: 02.2016 - 04.2016<br>Print Date: 08.19.2016<br>Internal Job No: 11119.04<br>Surveyed By: SDDOT<br>Survey Date: 2012<br>Project Number: 12-2051, CIP NO.50867, PCN X02P | Number: | Description: | FOR BIDDING PURPOSES ONLY |

# MOUNT RUSHMORE ROAD UTILITY RECONSTRUCTION

| Sheet Title: | Sheet No: |
|---|---|
| MANHOLE #14 | G49 |
| ALLEY SEWER | of |
| PROFILE | G83 |

REGISTERED PROFESSIONAL ENGINEER
REG. NO. 2780
GREGORY M. WIERENGA
SOUTH DAKOTA
8-19-16

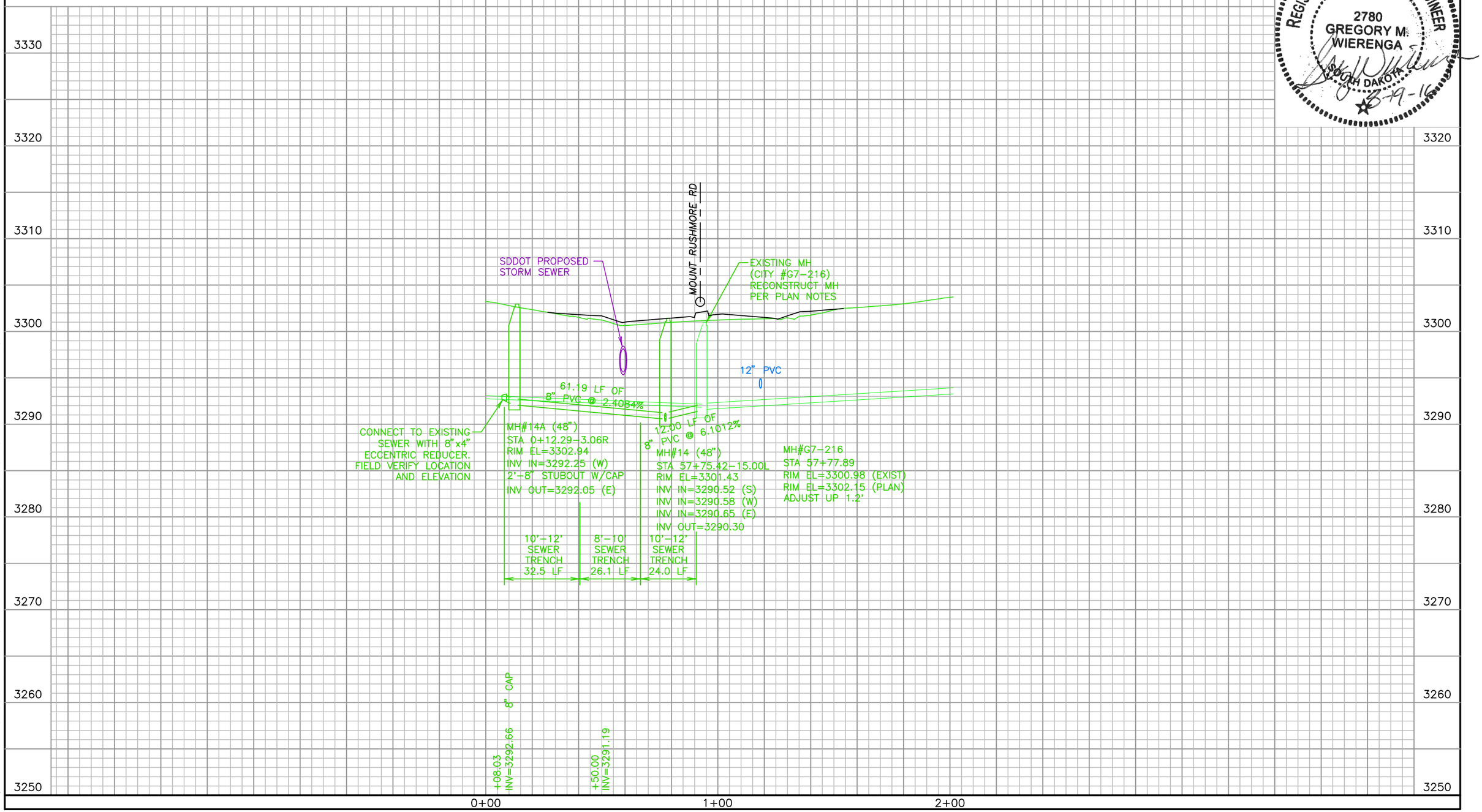


August 17, 2016 10:54:14 a.m.
Drawing: PLAN AND PROFILES.DWG (JOCHS) (P:\PROJECTS & PROPOSALS\11119.00 MT. RUSHMORE RD. UTILITIES RECONSTRUCTION\DRAWINGS\SHEETS\PHASE 2 - FLORMANN TO SAINT JAMES\)

| Prepared By: | Prepared For: | Scale: AS NOTED | Revisions: | | FOR BIDDING PURPOSES ONLY | Sheet Title: | Sheet No: |
|---|---|---|---|---|---|---|---|
| AES | Public Works Department<br>Engineering Services | Designed By: GW<br>Drawn By: MS<br>Design Date: 02.2016 - 04.2016<br>Print Date: 08.19.2016<br>Internal Job No: 11119.04<br>Surveyed By: SDDOT<br>Survey Date: 2012<br>Project Number: 12-2051, CIP NO.50867, PCN X02P | Number: | Description: | MOUNT RUSHMORE ROAD<br>UTILITY RECONSTRUCTION | MOUNT RUSHMORE RD<br>WATER MAIN PLAN<br>STA 59+00 to END | G50<br>of<br>G83 |

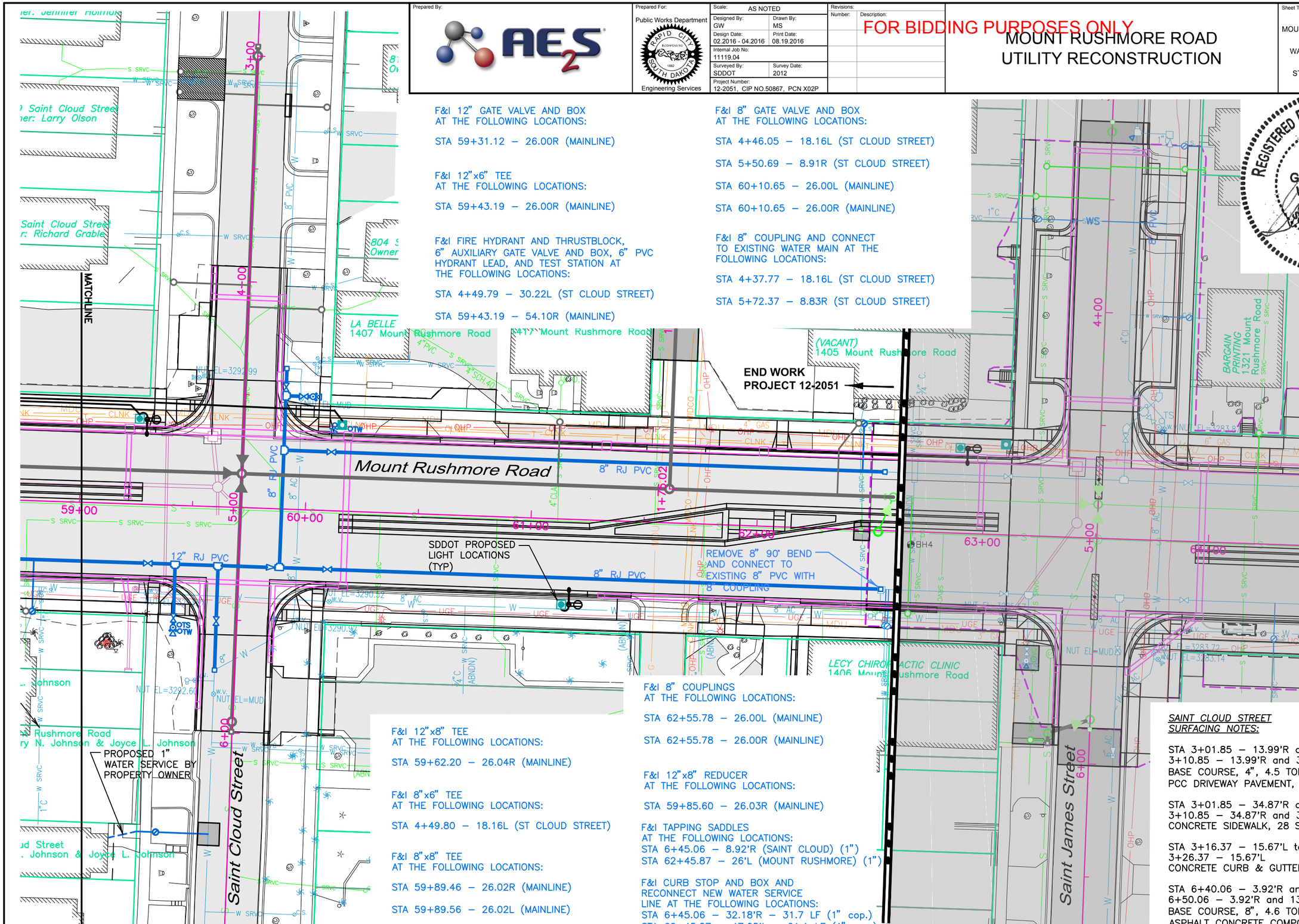


REGISTERED PROFESSIONAL ENGINEER
REG. NO.
2780
GREGORY M.
WIERENGA
SOUTH DAKOTA
8-19-16

F&I 12" GATE VALVE AND BOX
AT THE FOLLOWING LOCATIONS:

STA 59+31.12 – 26.00R (MAINLINE)

F&I 12"x6" TEE
AT THE FOLLOWING LOCATIONS:

STA 59+43.19 – 26.00R (MAINLINE)

F&I FIRE HYDRANT AND THRUSTBLOCK,
6" AUXILIARY GATE VALVE AND BOX, 6" PVC
HYDRANT LEAD, AND TEST STATION AT
THE FOLLOWING LOCATIONS:

STA 4+49.79 – 30.22L (ST CLOUD STREET)

STA 59+43.19 – 54.10R (MAINLINE)

F&I 8" GATE VALVE AND BOX
AT THE FOLLOWING LOCATIONS:

STA 4+46.05 – 18.16L (ST CLOUD STREET)

STA 5+50.69 – 8.91R (ST CLOUD STREET)

STA 60+10.65 – 26.00L (MAINLINE)

STA 60+10.65 – 26.00R (MAINLINE)

F&I 8" COUPLING AND CONNECT
TO EXISTING WATER MAIN AT THE
FOLLOWING LOCATIONS:

STA 4+37.77 – 18.16L (ST CLOUD STREET)

STA 5+72.37 – 8.83R (ST CLOUD STREET)

F&I 12"x8" TEE
AT THE FOLLOWING LOCATIONS:

STA 59+62.20 – 26.04R (MAINLINE)

F&I 8"x6" TEE
AT THE FOLLOWING LOCATIONS:

STA 4+49.80 – 18.16L (ST CLOUD STREET)

F&I 8"x8" TEE
AT THE FOLLOWING LOCATIONS:

STA 59+89.46 – 26.02R (MAINLINE)

STA 59+89.56 – 26.02L (MAINLINE)

F&I 8" COUPLINGS
AT THE FOLLOWING LOCATIONS:

STA 62+55.78 – 26.00L (MAINLINE)

STA 62+55.78 – 26.00R (MAINLINE)

F&I 12"x8" REDUCER
AT THE FOLLOWING LOCATIONS:

STA 59+85.60 – 26.03R (MAINLINE)

F&I TAPPING SADDLES
AT THE FOLLOWING LOCATIONS:
STA 6+45.06 – 8.92'R (SAINT CLOUD) (1")
STA 62+45.87 – 26'L (MOUNT RUSHMORE) (1")

F&I CURB STOP AND BOX AND
RECONNECT NEW WATER SERVICE
LINE AT THE FOLLOWING LOCATIONS:
STA 6+45.06 – 32.18'R – 31.7 LF (1" cop.)
STA 62+45.87 – 47.05'L – 21.1 LF (1" cop.)

*SAINT CLOUD STREET*
*SURFACING NOTES:*

STA 3+01.85 – 13.99'R and 34.87'R to
3+10.85 – 13.99'R and 34.87'R
BASE COURSE, 4", 4.5 TONS
PCC DRIVEWAY PAVEMENT, 6", 20.9 SY

STA 3+01.85 – 34.87'R and 39.84'R to
3+10.85 – 34.87'R and 39.84'R
CONCRETE SIDEWALK, 28 SqFt

STA 3+16.37 – 15.67'L to
3+26.37 – 15.67'L
CONCRETE CURB & GUTTER, TYPE B66, 10 LF

STA 6+40.06 – 3.92'R and 13.42'R to
6+50.06 – 3.92'R and 13.42'R
BASE COURSE, 8", 4.6 TONS
ASPHALT CONCRETE COMPOSITE, 5", 3.0 TONS

August 17, 2016 10:24:14 a.m.
Drawing: PLAN AND PROFILES.DWG (JOENS) (P:\PROJECTS & PROPOSALS\11119.00 MT. RUSHMORE RD. UTILITIES RECONSTRUCTION\DRAWINGS\SHEETS\PHASE 2 – FLORMAN TO SAINT JAMES\)

Prepared By: AE2S

Prepared For: Public Works Department — Rapid City, South Dakota — Engineering Services

| Scale: AS NOTED | |
|---|---|
| Designed By: GW | Drawn By: MS |
| Design Date: 02.2016 - 04.2016 | Print Date: 08.19.2016 |
| Internal Job No: 11119.04 | |
| Surveyed By: SDDOT | Survey Date: 2012 |
| Project Number: 12-2051, CIP NO.50867, PCN X02P | |

Revisions: Number: | Description:

FOR BIDDING PURPOSES ONLY

# MOUNT RUSHMORE ROAD UTILITY RECONSTRUCTION

Sheet Title: MOUNT RUSHMORE RD UTILITY PLAN STA 59+00 to END

Sheet No: G51 of G83

REGISTERED PROFESSIONAL ENGINEER — REG. NO. 2780 — GREGORY M. WIERENGA — SOUTH DAKOTA — 8-19-16

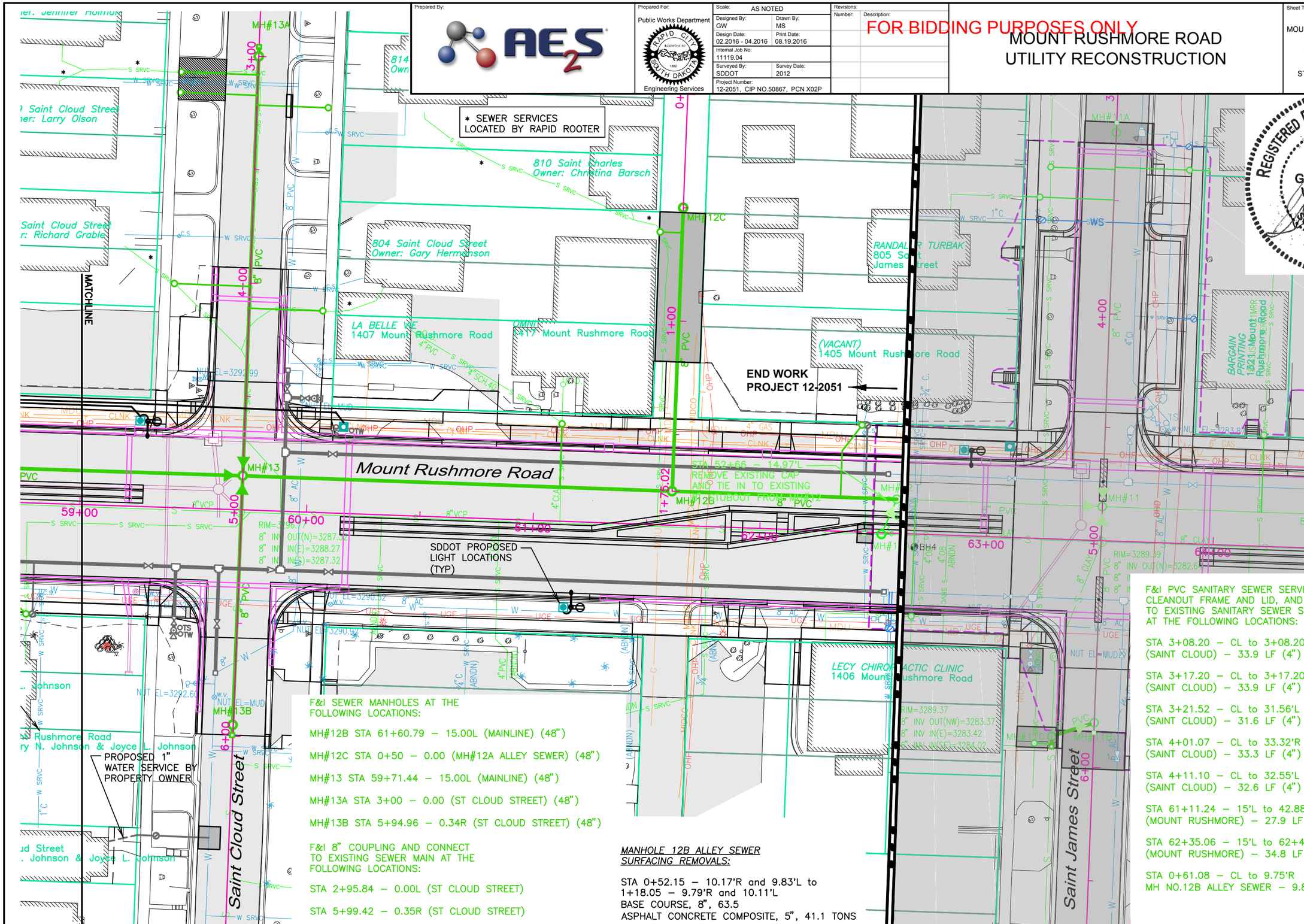


F&I SEWER MANHOLES AT THE FOLLOWING LOCATIONS:

MH#12B STA 61+60.79 – 15.00L (MAINLINE) (48")

MH#12C STA 0+50 – 0.00 (MH#12A ALLEY SEWER) (48")

MH#13 STA 59+71.44 – 15.00L (MAINLINE) (48")

MH#13A STA 3+00 – 0.00 (ST CLOUD STREET) (48")

MH#13B STA 5+94.96 – 0.34R (ST CLOUD STREET) (48")

F&I 8" COUPLING AND CONNECT TO EXISTING SEWER MAIN AT THE FOLLOWING LOCATIONS:

STA 2+95.84 – 0.00L (ST CLOUD STREET)

STA 5+99.42 – 0.35R (ST CLOUD STREET)

*MANHOLE 12B ALLEY SEWER SURFACING REMOVALS:*

STA 0+52.15 – 10.17'R and 9.83'L to 1+18.05 – 9.79'R and 10.11'L
BASE COURSE, 8", 63.5
ASPHALT CONCRETE COMPOSITE, 5", 41.1 TONS

F&I PVC SANITARY SEWER SERVICE, CLEANOUT, CLEANOUT FRAME AND LID, AND RECONNECT TO EXISTING SANITARY SEWER SERVICE AT THE FOLLOWING LOCATIONS:

STA 3+08.20 – CL to 3+08.20 – 33.85'R (SAINT CLOUD) – 33.9 LF (4")

STA 3+17.20 – CL to 3+17.20 – 33.85'R (SAINT CLOUD) – 33.9 LF (4")

STA 3+21.52 – CL to 31.56'L (SAINT CLOUD) – 31.6 LF (4")

STA 4+01.07 – CL to 33.32'R (SAINT CLOUD) – 33.3 LF (4")

STA 4+11.10 – CL to 32.55'L (SAINT CLOUD) – 32.6 LF (4")

STA 61+11.24 – 15'L to 42.88'L (MOUNT RUSHMORE) – 27.9 LF (4")

STA 62+35.06 – 15'L to 62+43.46 – 47.12'L (MOUNT RUSHMORE) – 34.8 LF (4")

STA 0+61.08 – CL to 9.75'R MH NO.12B ALLEY SEWER – 9.8 LF (4")

August 17, 2016 10:54:14 a.m.
Drawing: PLAN AND PROFILES.dwg (JGENS) (P:\PROJECTS & PROPOSALS\11119.00 MT. RUSHMORE RD. UTILITIES RECONSTRUCTION\DRAWINGS\SHEETS\PHASE 2 – FLORMAN TO SAINT JAMES\)

SCALE:
HORIZ. 1" = 40'
VERT. 1" = 10'

*NOTE:*
ALL SUBSURFACE UTILITIES ARE SHOWN BASED UPON GROUND LEVEL FIELD SURVEY AND APPROXIMATIONS. THE CONTRACTOR SHALL BE RESPONSIBLE TO FIELD LOCATE AND VERIFY UTILITY INFORMATION PERTAINING TO THE WORK. SDDOT PROPOSED STORM SEWER IS SHOWN FOR INFORMATION ONLY AND MAY BE SHOWN DIFFERENTLY IN THE ROADWAY PLANS. PLEASE REFER TO PROJECT NH0016(84)67 FOR ALL STORM SEWER PLAN AND GRADE INFORMATION.

Prepared By: AE2S

Prepared For: Public Works Department — Rapid City, South Dakota — Engineering Services

| | |
|---|---|
| Scale: | AS NOTED |
| Designed By: GW | Drawn By: MS |
| Design Date: 02.2016 - 04.2016 | Print Date: 08.19.2016 |
| Internal Job No: 11119.04 | |
| Surveyed By: SDDOT | Survey Date: 2012 |
| Project Number: 12-2051, CIP NO.50867, PCN X02P | |

Revisions: Number: Description:

FOR BIDDING PURPOSES ONLY

# MOUNT RUSHMORE ROAD UTILITY RECONSTRUCTION

Sheet Title: MOUNT RUSHMORE RD UTILITY PROFILE (south bound) STA 59+00 to END

Sheet No: G52 of G83

REGISTERED PROFESSIONAL ENGINEER REG. NO. 2780 GREGORY M. WIERENGA SOUTH DAKOTA 8-19-16

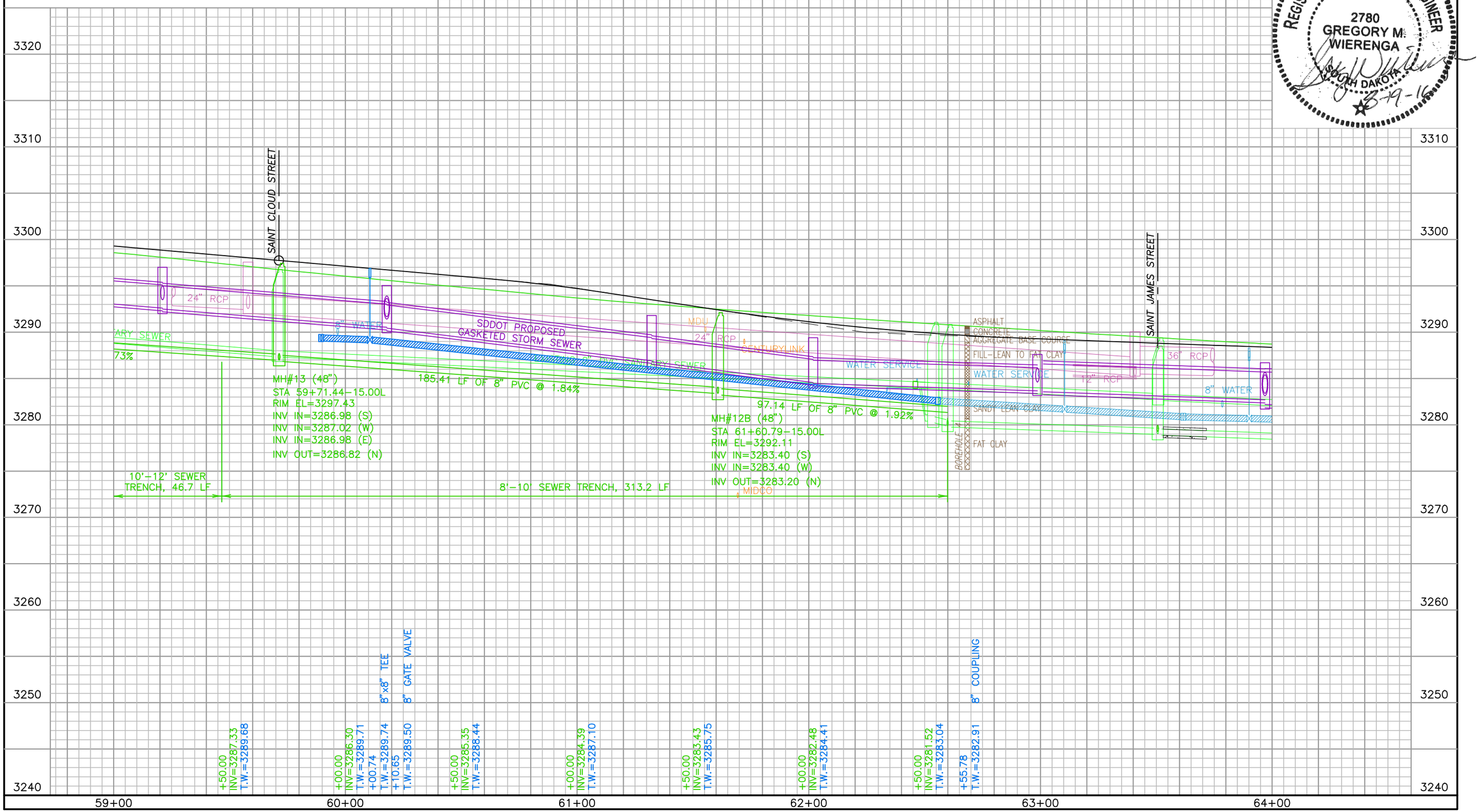


August 17, 2016 10:54:14 a.m.
Drawing: PLAN AND PROFILES.DWG (JOB#5) (P:\PROJECTS & PROPOSALS\11119.00 MT. RUSHMORE RD. UTILITIES RECONSTRUCTION\DRAWINGS\SHEETS\PHASE 2 - FLORMANN TO SAINT JAMES\)

SCALE:
HORIZ. 1" = 40'
VERT. 1" = 10'

*NOTE:*
ALL SUBSURFACE UTILITIES ARE SHOWN BASED UPON GROUND LEVEL FIELD SURVEY AND APPROXIMATIONS. THE CONTRACTOR SHALL BE RESPONSIBLE TO FIELD LOCATE AND VERIFY UTILITY INFORMATION PERTAINING TO THE WORK. SDDOT PROPOSED STORM SEWER IS SHOWN FOR INFORMATION ONLY AND MAY BE SHOWN DIFFERENTLY IN THE ROADWAY PLANS. PLEASE REFER TO PROJECT NH0016(84)67 FOR ALL STORM SEWER PLAN AND GRADE INFORMATION.

| Prepared By: | Prepared For: | Scale: AS NOTED | Revisions: | |
|---|---|---|---|---|
| AE2S | Public Works Department<br>Rapid City, South Dakota, Incorporated 1882<br>Engineering Services | Designed By: GW<br>Drawn By: MS<br>Design Date: 02.2016 - 04.2016<br>Print Date: 08.19.2016<br>Internal Job No: 11119.04<br>Surveyed By: SDDOT<br>Survey Date: 2012<br>Project Number: 12-2051, CIP NO.50867, PCN X02P | Number: | Description: |

FOR BIDDING PURPOSES ONLY

# MOUNT RUSHMORE ROAD UTILITY RECONSTRUCTION

| Sheet Title: | Sheet No: |
|---|---|
| MOUNT RUSHMORE RD | G53 |
| UTILITY PROFILE (north bound) | of |
| STA 59+00 to END | G83 |

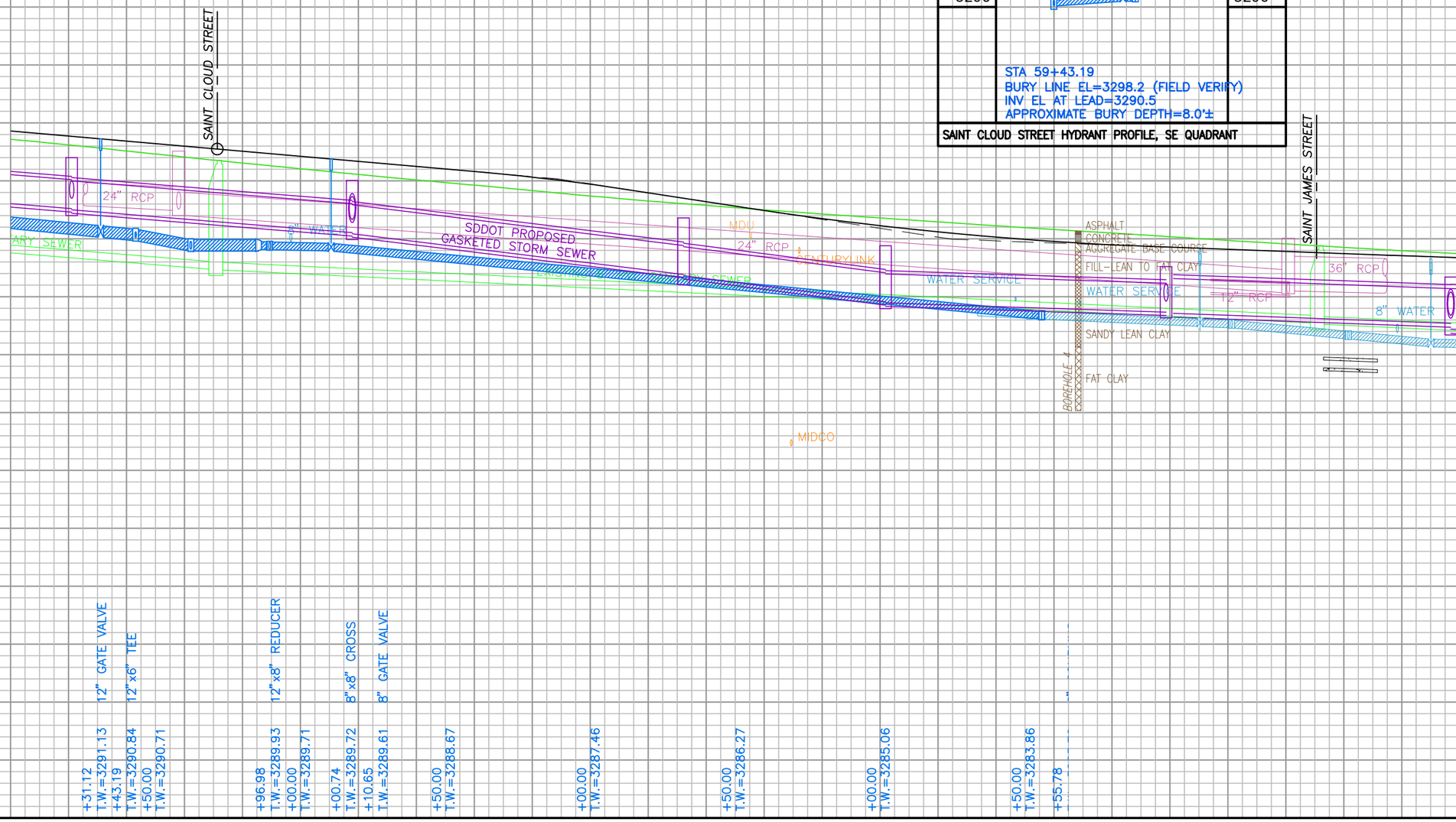


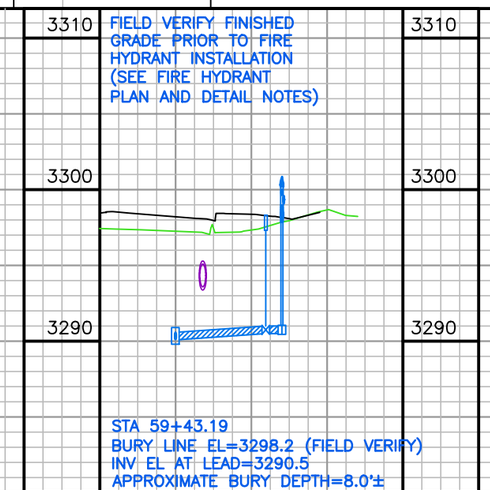


SAINT CLOUD STREET HYDRANT PROFILE, SE QUADRANT

REGISTERED PROFESSIONAL ENGINEER
REG. NO. 2780
GREGORY M. WIERENGA
SOUTH DAKOTA
8-19-16

August 17, 2016 10:54:14 a.m.
Drawing: PLAN AND PROFILES.DWG (JOENS) (P:\PROJECTS & PROPOSALS\11119.00 MT. RUSHMORE RD. UTILITIES RECONSTRUCTION\DRAWINGS\SHEETS\PHASE 2 - FLORMANN TO SAINT JAMES\)

SCALE:
HORIZ. 1" = 40'
VERT. 1" = 10'

*NOTE:*
ALL SUBSURFACE UTILITIES ARE SHOWN BASED UPON GROUND LEVEL FIELD SURVEY AND APPROXIMATIONS. THE CONTRACTOR SHALL BE RESPONSIBLE TO FIELD LOCATE AND VERIFY UTILITY INFORMATION PERTAINING TO THE WORK. SDDOT PROPOSED STORM SEWER IS SHOWN FOR INFORMATION ONLY AND MAY BE SHOWN DIFFERENTLY IN THE ROADWAY PLANS. PLEASE REFER TO PROJECT NH0016(84)67 FOR ALL STORM SEWER PLAN AND GRADE INFORMATION.

| Prepared By: | Prepared For: | Scale: AS NOTED | Revisions: Number: | Description: |
|---|---|---|---|---|
| AE2S | Public Works Department, Rapid City, South Dakota, Incorporated 1882 — Engineering Services | Designed By: GW; Drawn By: MS; Design Date: 02.2016 - 04.2016; Print Date: 08.19.2016; Internal Job No: 11119.04; Surveyed By: SDDOT; Survey Date: 2012; Project Number: 12-2051, CIP NO.50867, PCN X02P | | |

FOR BIDDING PURPOSES ONLY

# MOUNT RUSHMORE ROAD UTILITY RECONSTRUCTION

| Sheet Title: | Sheet No: |
|---|---|
| SAINT CLOUD STREET | G54 |
| UTILITY PROFILE | of |
| STA 0+00 to END | G83 |

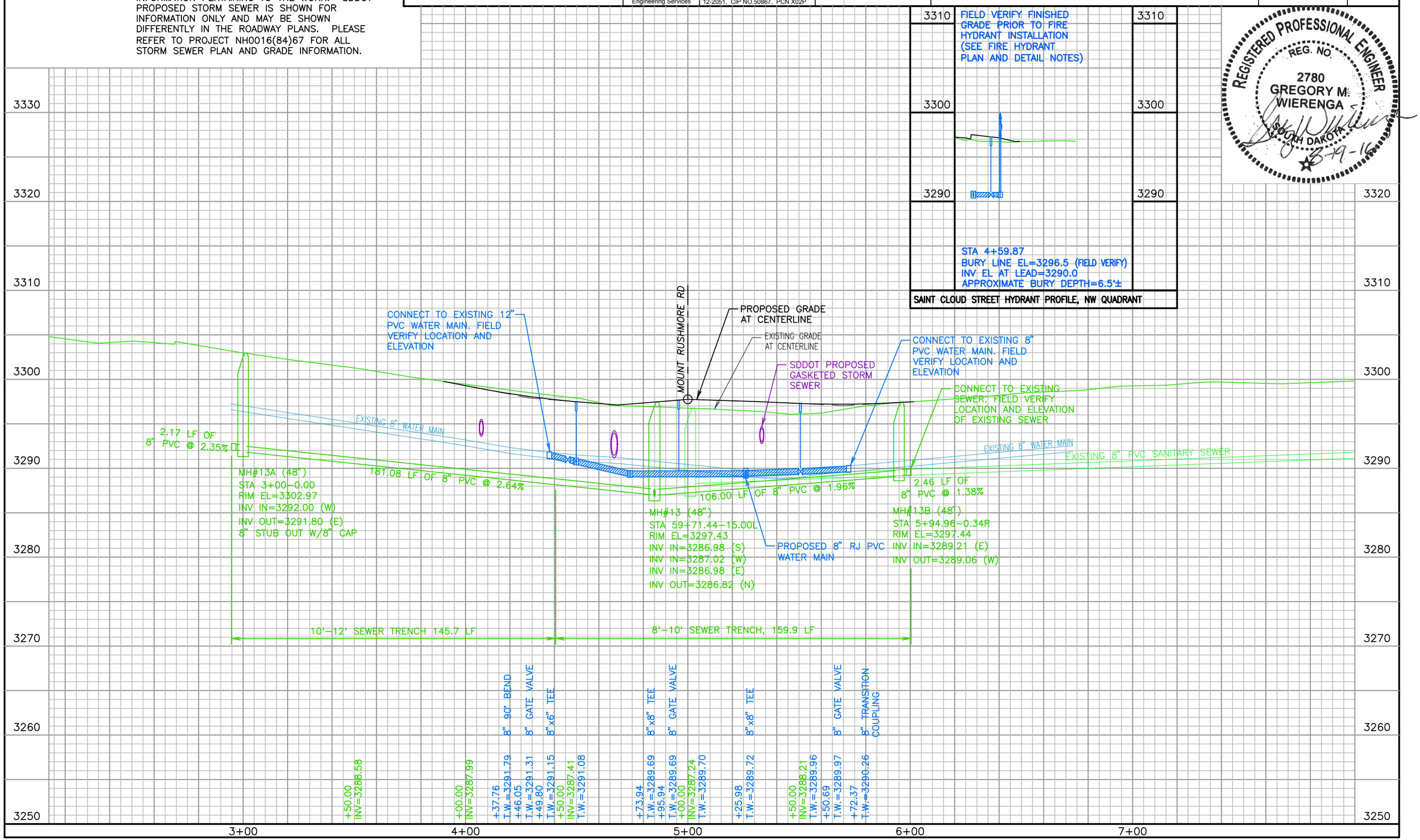


August 17, 2016 10:54:14 a.m.
Drawing: PLAN AND PROFILES.DWG (JOCHS) (P:\PROJECTS & PROPOSALS\11119.00 MT. RUSHMORE RD. UTILITIES RECONSTRUCTION\DRAWINGS\SHEETS\PHASE 2 - FLORMANN TO SAINT JAMES\)

SCALE:
HORIZ. 1" = 40'
VERT. 1" = 10'

*NOTE:*
ALL SUBSURFACE UTILITIES ARE SHOWN BASED UPON GROUND LEVEL FIELD SURVEY AND APPROXIMATIONS. THE CONTRACTOR SHALL BE RESPONSIBLE TO FIELD LOCATE AND VERIFY UTILITY INFORMATION PERTAINING TO THE WORK. SDDOT PROPOSED STORM SEWER IS SHOWN FOR INFORMATION ONLY AND MAY BE SHOWN DIFFERENTLY IN THE ROADWAY PLANS. PLEASE REFER TO PROJECT NH0016(84)67 FOR ALL STORM SEWER PLAN AND GRADE INFORMATION.

Prepared By: AE2S

Prepared For: Public Works Department — Rapid City, South Dakota, Incorporated 1882 — Engineering Services

| | |
|---|---|
| Scale: | AS NOTED |
| Designed By: GW | Drawn By: MS |
| Design Date: 02.2016 - 04.2016 | Print Date: 08.19.2016 |
| Internal Job No: 11119.04 | |
| Surveyed By: SDDOT | Survey Date: 2012 |
| Project Number: 12-2051, CIP NO.50867, PCN X02P | |

Revisions:
Number: Description:

FOR BIDDING PURPOSES ONLY

# MOUNT RUSHMORE ROAD UTILITY RECONSTRUCTION

Sheet Title: SAINT CLOUD STREET — UTILITY PROFILE — STA 0+00 to END

Sheet No: G55 of G83

REGISTERED PROFESSIONAL ENGINEER — REG. NO. 2780 — GREGORY M. WIERENGA — SOUTH DAKOTA — 8-19-16

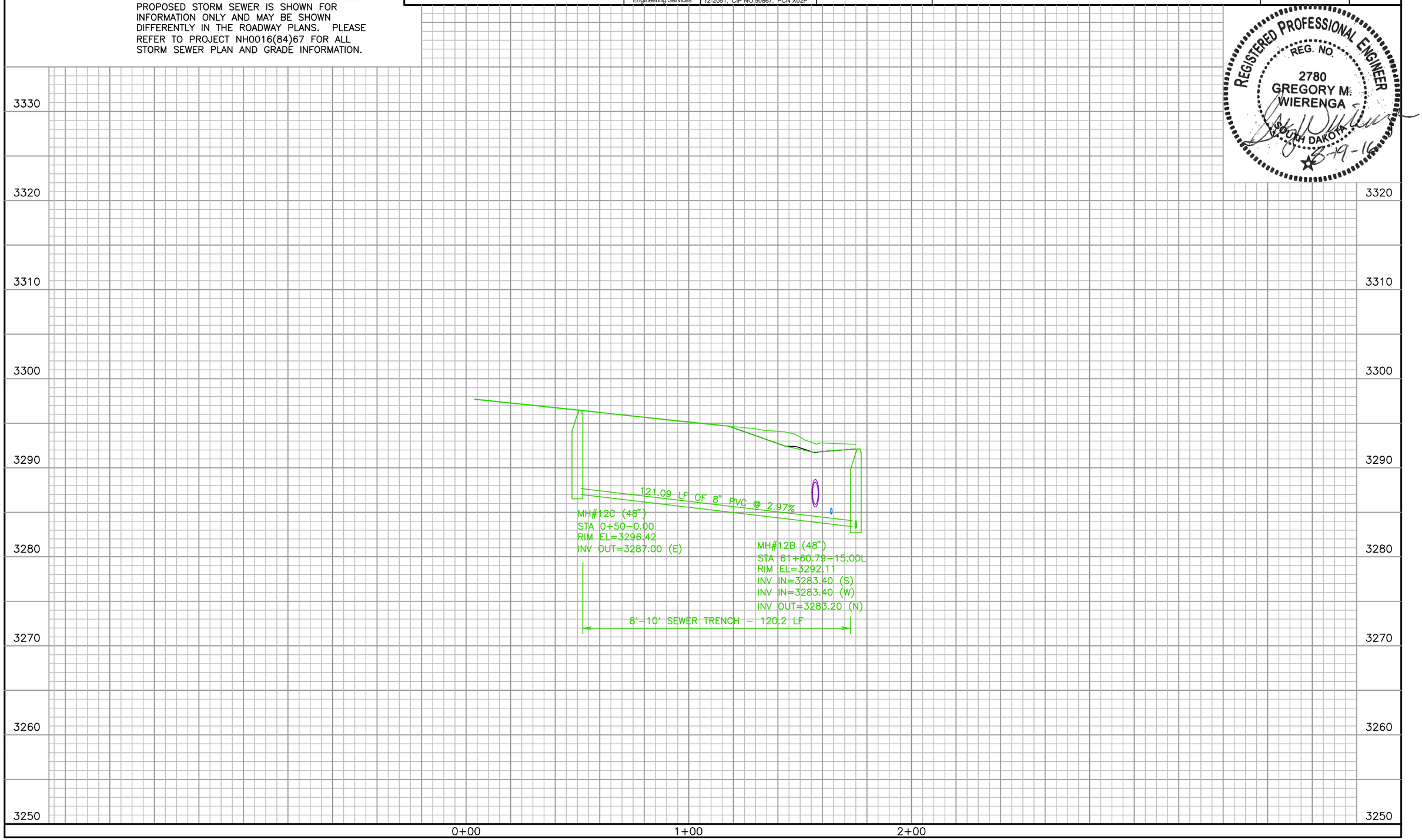


August 17, 2016 10:54:14 a.m.
Drawing: PLAN AND PROFILES.DWG (JOB(NS) (P:\PROJECTS & PROPOSALS\11119.00 MT. RUSHMORE RD. UTILITIES RECONSTRUCTION\DRAWINGS\SHEETS\PHASE 2 - FLORMANN TO SAINT JAMES\)

| Prepared By: | Prepared For: | Scale: AS NOTED | Revisions: | | | Sheet Title: | Sheet No: |
|---|---|---|---|---|---|---|---|
| AE2S | Public Works Department<br>Rapid City, South Dakota<br>Engineering Services | Designed By: GW<br>Drawn By: MS<br>Design Date: 02.2016 - 04.2016<br>Print Date: 08.19.2016<br>Internal Job No: 11119.04<br>Surveyed By: SDDOT<br>Survey Date: 2012<br>Project Number: 12-2051, CIP NO.50867, PCN X02P | Number: | Description: | FOR BIDDING PURPOSES ONLY<br>MOUNT RUSHMORE ROAD<br>UTILITY RECONSTRUCTION | MOUNT RUSHMORE ROAD<br>SANITARY SEWER PLAN<br>MANHOLE DETAILS | G56<br>of<br>G83 |

REGISTERED PROFESSIONAL ENGINEER
REG. NO.
2780
GREGORY M. WIERENGA
SOUTH DAKOTA
8-19-16

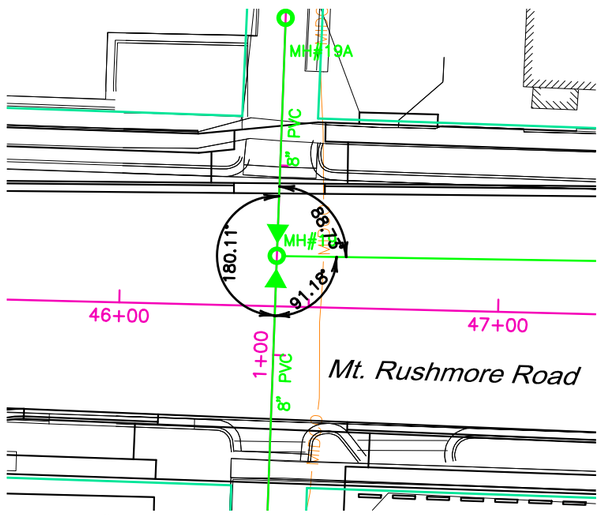


MANHOLE #19, BETWEEN SAINT PATRICK and SAINT ANDREW
SCALE: 1"=40'

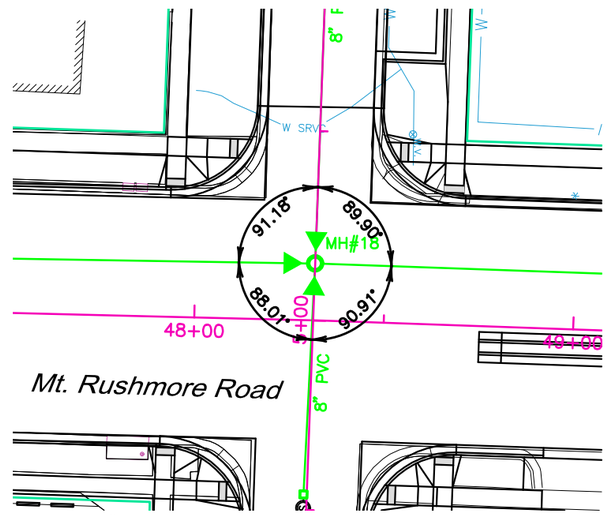


MANHOLE #18, MOUNT RUSHMORE ROAD and SAINT ANDREW
SCALE: 1"=40'

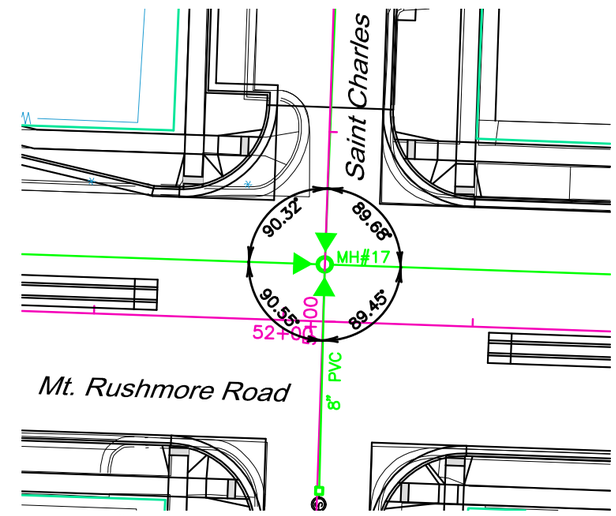


MANHOLE #18, MOUNT RUSHMORE ROAD and SAINT CHARLES
SCALE: 1"=40'

August 17, 2016 10:54:14 a.m.
Drawing: PLAN AND PROFILES.DWG (JOEN5) (P:\PROJECTS & PROPOSALS\11119.00 MT. RUSHMORE RD. UTILITIES RECONSTRUCTION\DRAWINGS\SHEETS\PHASE 2 - FLORMANN TO SAINT JAMES\)

| Prepared By: | Prepared For: | Scale: AS NOTED | Revisions: | | | Sheet Title: | Sheet No: |
|---|---|---|---|---|---|---|---|
| AE2S | Public Works Department<br>Engineering Services | Designed By: GW<br>Drawn By: MS<br>Design Date: 02.2016 - 04.2016<br>Print Date: 08.19.2016<br>Internal Job No: 11119.04<br>Surveyed By: SDDOT<br>Survey Date: 2012<br>Project Number: 12-2051, CIP NO.50867, PCN X02P | Number: | Description: | FOR BIDDING PURPOSES ONLY<br>MOUNT RUSHMORE ROAD<br>UTILITY RECONSTRUCTION | MOUNT RUSHMORE ROAD<br>SANITARY SEWER PLAN<br>MANHOLE DETAILS | G57<br>of<br>G83 |

REGISTERED PROFESSIONAL ENGINEER
REG. NO.
2780
GREGORY M. WIERENGA
SOUTH DAKOTA
8-19-16

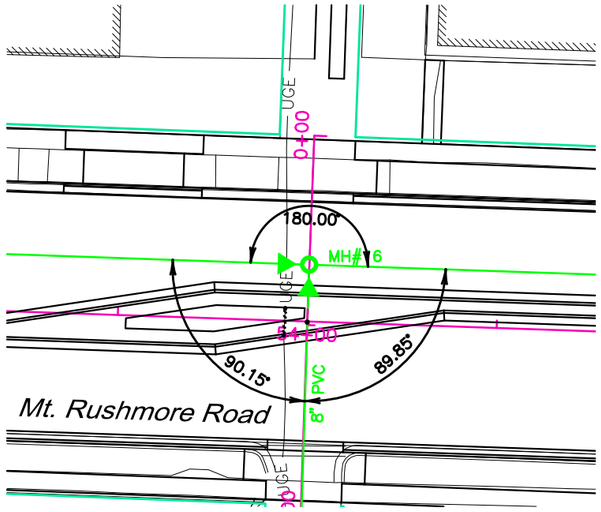


MANHOLE #16, BETWEEN SAINT CHARLES and FRANKLIN
SCALE: 1"=40'

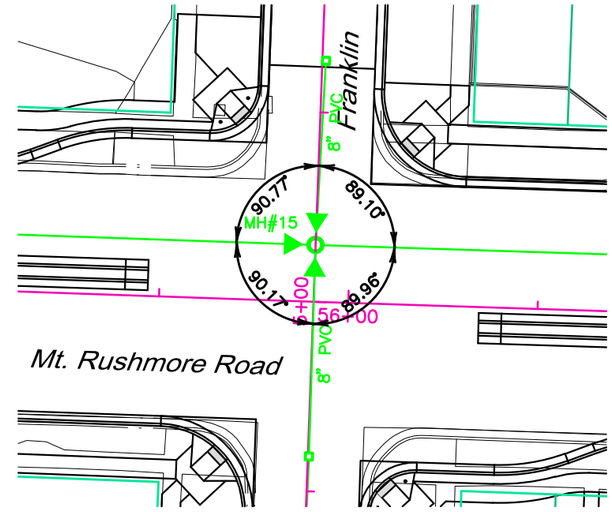


MANHOLE #15, MOUNT RUSHMORE ROAD and FRANKLIN
SCALE: 1"=40'

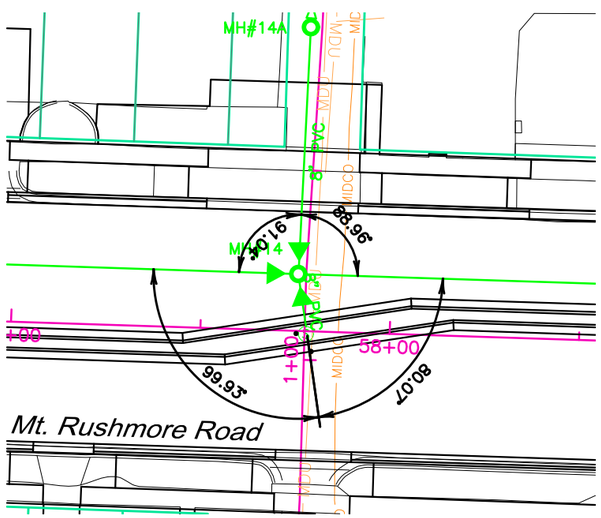


MANHOLE #14, BETWEEN FRANKLIN and SAINT CLOUD
SCALE: 1"=40'

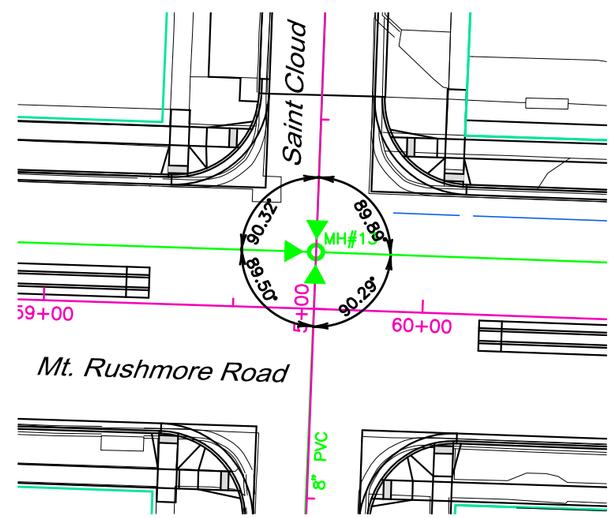


MANHOLE #13, MOUNT RUSHMORE ROAD and SAINT CLOUD
SCALE: 1"=40'

August 17, 2016 10:54:14 a.m.
Drawing: PLAN AND PROFILES.DWG (JOBNS) (P:\PROJECTS & PROPOSALS\11119.00 MT. RUSHMORE RD. UTILITIES RECONSTRUCTION\DRAWINGS\SHEETS\PHASE 2 - FLORMANN TO SAINT JAMES\)

| Prepared By: | Prepared For: | Scale: AS NOTED | Revisions: | | | Sheet Title: | Sheet No: |
|---|---|---|---|---|---|---|---|
| AES2 | Public Works Department<br>Engineering Services | Designed By: GW<br>Drawn By: MS<br>Design Date: 02.2016 - 04.2016<br>Print Date: 08.19.2016<br>Internal Job No: 11119.04<br>Surveyed By: SDDOT<br>Survey Date: 2012<br>Project Number: 12-2051, CIP NO.50867, PCN X02P | Number: | Description: | FOR BIDDING PURPOSES ONLY<br>MOUNT RUSHMORE ROAD<br>UTILITY RECONSTRUCTION | STANDARD DETAILS | G58 of G83 |

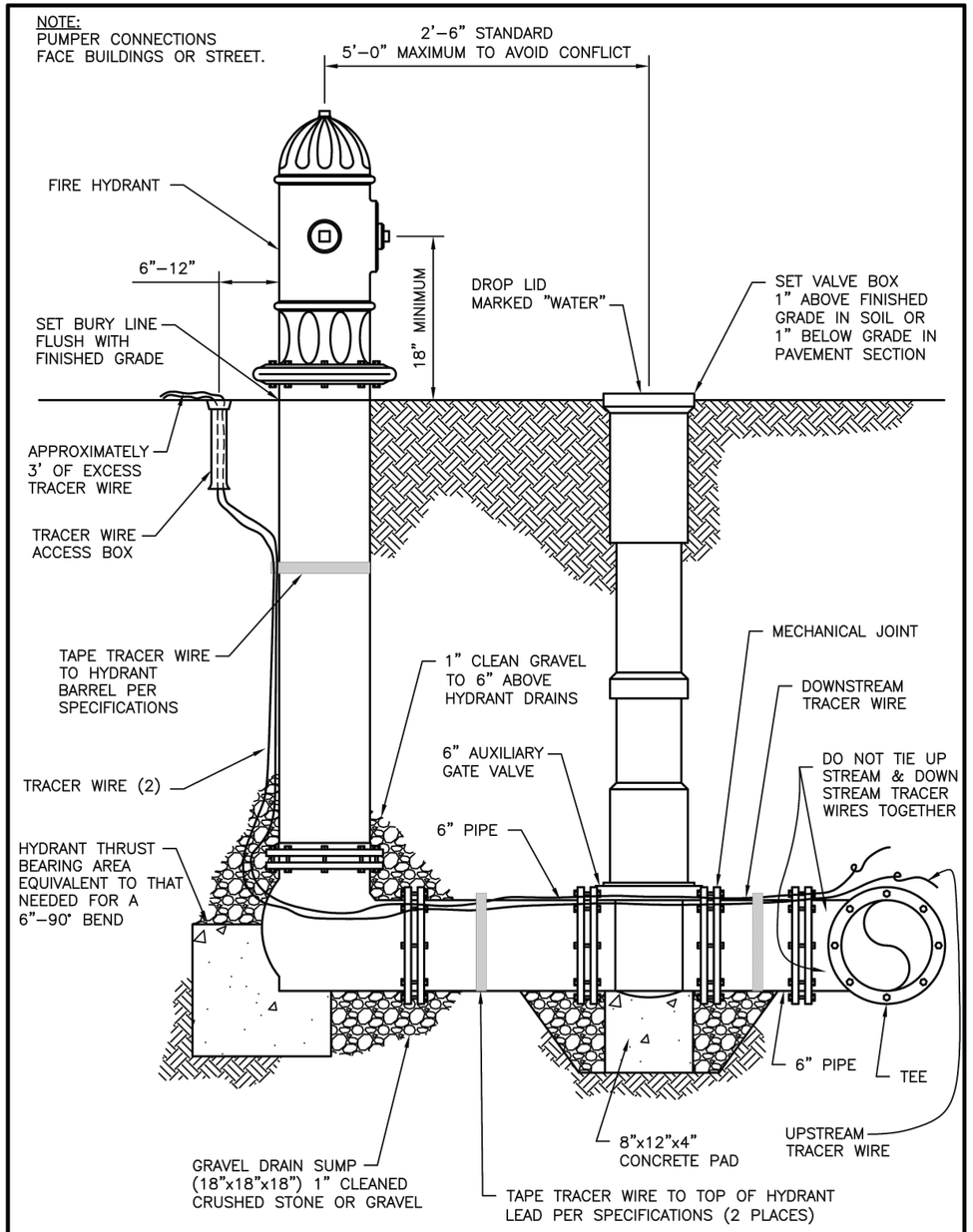


CITY OF RAPID CITY — PUBLIC WORKS DEPARTMENT

# HYDRANT SETTING DETAIL

DATE: 5–1–07

SEC. 8 — SHT. 1

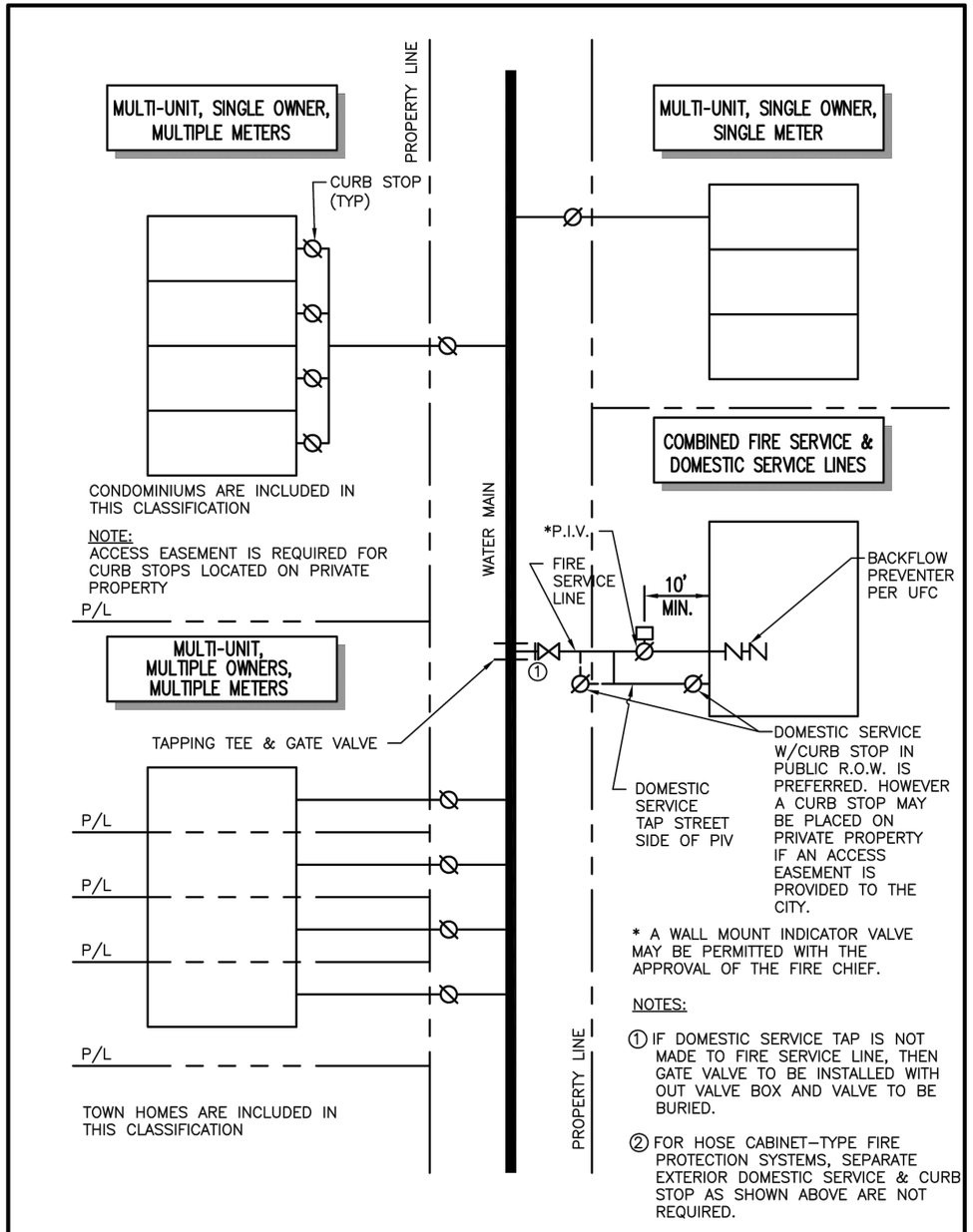


CITY OF RAPID CITY — PUBLIC WORKS DEPARTMENT

# TYPICAL WATER SERVICE LINE LAYOUT

DATE: 5–1–07

SEC. 8 — SHT. 5

May 19, 2016 4:30:20 p.m.
Drawing: DETAILS.DWG (SCHILLE) (P:\PROJECTS & PROPOSALS\11119.00 MT. RUSHMORE RD. UTILITIES RECONSTRUCTION\DRAWINGS\SHEETS\PHASE 2 – FLORMANN TO SAINT JAMES\)

| Prepared By: | Prepared For: | Scale: AS NOTED | Revisions: | | | Sheet Title: | Sheet No: |
|---|---|---|---|---|---|---|---|
| AE2S | Public Works Department<br>Engineering Services | Designed By: GW<br>Drawn By: MS<br>Design Date: 02.2016 - 04.2016<br>Print Date: 08.19.2016<br>Internal Job No: 11119.04<br>Surveyed By: SDDOT<br>Survey Date: 2012<br>Project Number: 12-2051, CIP NO.50867, PCN X02P | Number: | Description: | FOR BIDDING PURPOSES ONLY<br>MOUNT RUSHMORE ROAD<br>UTILITY RECONSTRUCTION | STANDARD DETAILS | G59<br>of<br>G83 |

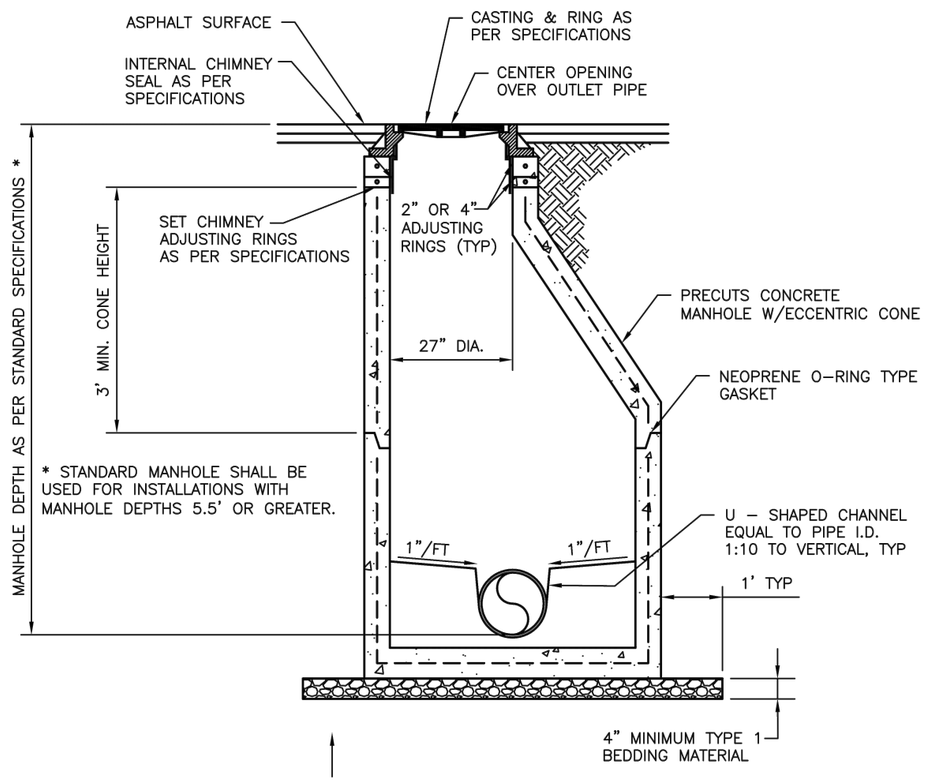


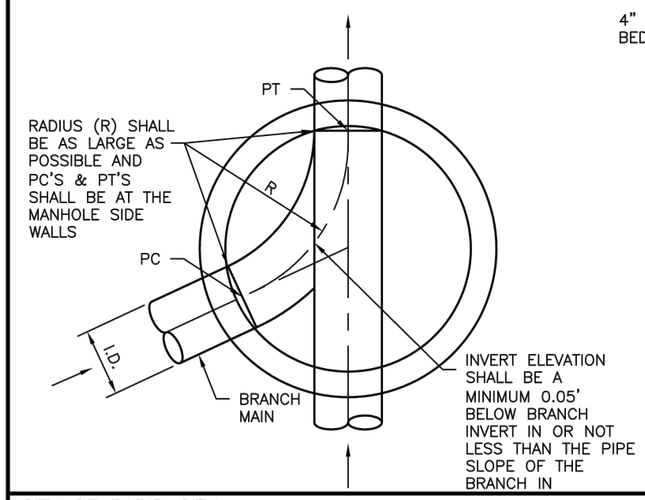


NOTES:

1. PC'S & PT'S ARE TO BE WITHIN THE MANHOLE.
2. ALL INVERTS TO BE U-SHAPED CHANNEL EQUAL TO PIPE I.D. AND SHALL BE CONSTRUCTED WITH SWEEPS.
3. A MINIMUM RADIUS (R) OF 2.5 TIMES THE I.D. OF THE BRANCH MAIN IS REQUIRED FOR ALL SWEEPS. IF THE 2.5 TIMES THE I.D. OF THE BRANCH CAN'T BE MET, A LARGER DIAMETER MANHOLE SHALL BE REQUIRED. SEE DETAIL SHEET 9-3.
4. MANHOLE PIPE CONNECTOR SHALL BE A RESILIENT WATER TIGHT SEAL.

CITY OF RAPID CITY — PUBLIC WORKS DEPARTMENT

## STANDARD MANHOLE DETAIL WITH MONOLITHIC BASE (48" & 60")

DATE: 5-1-07

SEC. 9 — SHT. 1

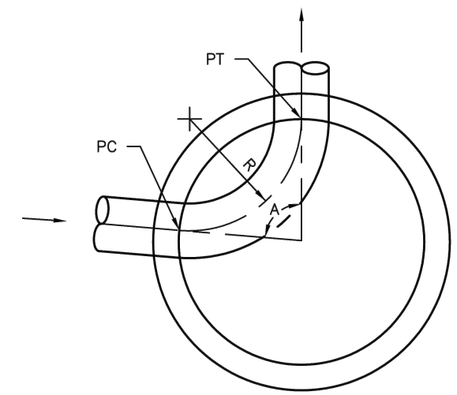


| OUTLET PIPE DIA. | INLET PIPE DIA. | MIN. ANGLE "A" IN DEGREES | | | | |
|---|---|---|---|---|---|---|
| INCHES | INCHES | 48" DIA. | 60" DIA. | 72" DIA. | 84" DIA. | 96" DIA. |
| 8 | 8 | 80 | 75 | 75 | 75 | 75 |
| 10 | 8 | 81 | 75 | 75 | 75 | 75 |
| 10 | 10 | 94 | 80 | 75 | 75 | 75 |
| 12 | 8 | 81 | 75 | 75 | 75 | 75 |
| 12 | 10 | 94 | 81 | 75 | 75 | 75 |
| 12 | 12 | 104 | 91 | 80 | 75 | 75 |
| 15 | 8 | 83 | 75 | 75 | 75 | 75 |
| 15 | 10 | 95 | 81 | 75 | 75 | 75 |
| 15 | 12 | 106 | 92 | 81 | 75 | 75 |
| 15 | 15 | 117 | 104 | 94 | 84 | 77 |

ANGLES LESS THAN 90°

NOTE:

"A" ANGLES LESS THAN 90° REQUIRE THE DESIGN ENGINEER TO SUBMIT A WRITTEN REQUEST AND JUSTIFICATION FOR A DESIGN EXCEPTION, AND OBTAIN CITY APPROVAL. IN NO CASE SHALL THE "A" ANGLE BE LESS THAN 75°.

CITY OF RAPID CITY — PUBLIC WORKS DEPARTMENT

## MINIMUM INVERT ANGLES FOR SANITARY MANHOLES

DATE: 5-1-07

SEC. 9 — SHT. 3

May 19, 2016 4:30:20 p.m.
Drawing: DETAILS.DWG (SCHILLE) (P:\PROJECTS & PROPOSALS\11119.00 MT. RUSHMORE RD. UTILITIES RECONSTRUCTION\DRAWINGS\SHEETS\PHASE 2 - FLORMANN TO SAINT JAMES\)

| Prepared By: | Prepared For: | Scale: AS NOTED | Revisions: | | | Sheet Title: | Sheet No: |
|---|---|---|---|---|---|---|---|
| AE2S | Public Works Department<br>Engineering Services | Designed By: GW<br>Drawn By: MS<br>Design Date: 02.2016 - 04.2016<br>Print Date: 08.19.2016<br>Internal Job No: 11119.04<br>Surveyed By: SDDOT<br>Survey Date: 2012<br>Project Number: 12-2051, CIP NO.50867, PCN X02P | Number: | Description: | FOR BIDDING PURPOSES ONLY<br>MOUNT RUSHMORE ROAD<br>UTILITY RECONSTRUCTION | STANDARD DETAILS | G60<br>of<br>G83 |

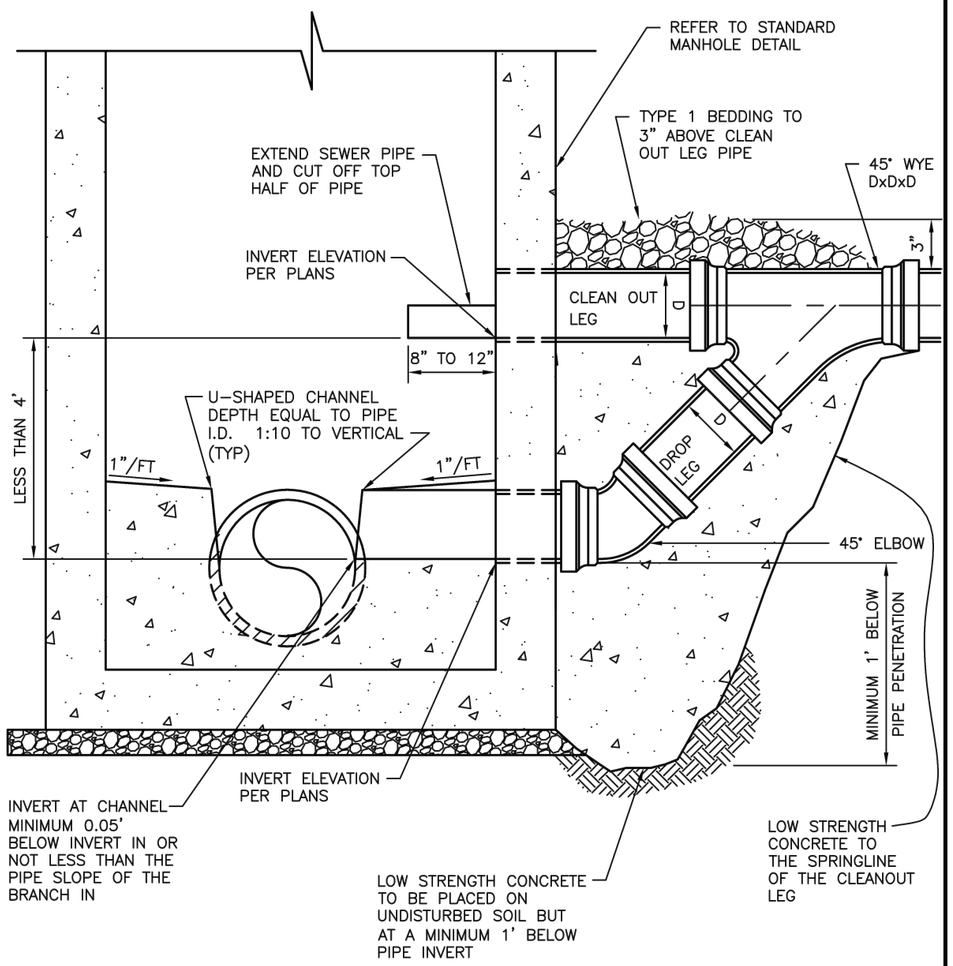


CITY OF RAPID CITY — PUBLIC WORKS DEPARTMENT

## STANDARD DROP MANHOLE DETAIL FOR INVERT CHANGES LESS THAN 4'

DATE: 5-1-07

SEC. 9 — SHT. 4

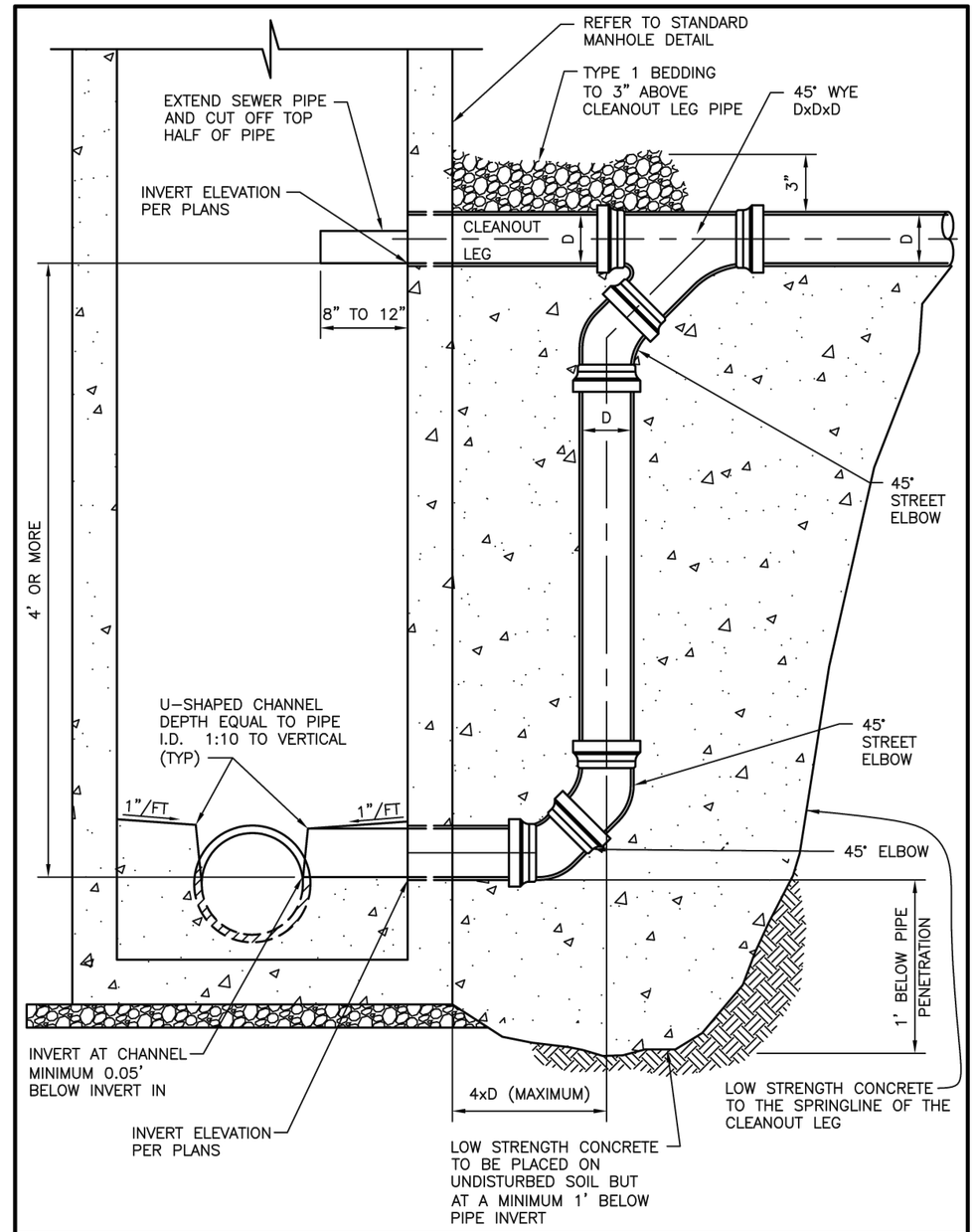


CITY OF RAPID CITY — PUBLIC WORKS DEPARTMENT

## STANDARD DROP MANHOLE DETAILS FOR INVERT CHANGES MORE THAN 4'

DATE: 5-1-07

SEC. 9 — SHT. 5

May 19, 2016 4:30:20 p.m.
Drawing: DETAILS.DWG (SCHILLE) (P:\PROJECTS & PROPOSALS\11119.00 MT. RUSHMORE RD. UTILITIES RECONSTRUCTION\DRAWINGS\SHEETS\PHASE 2 - FLORMANN TO SAINT JAMES\)

| Prepared By: | Prepared For: | Scale: AS NOTED | Revisions: | | | Sheet Title: | Sheet No: |
|---|---|---|---|---|---|---|---|
| AE2S | Public Works Department<br>Engineering Services | Designed By: GW<br>Drawn By: MS<br>Design Date: 02.2016 - 04.2016<br>Print Date: 08.19.2016<br>Internal Job No: 11119.04<br>Surveyed By: SDDOT<br>Survey Date: 2012<br>Project Number: 12-2051, CIP NO.50867, PCN X02P | Number: | Description: | FOR BIDDING PURPOSES ONLY<br>MOUNT RUSHMORE ROAD<br>UTILITY RECONSTRUCTION | STANDARD DETAILS | G61<br>of<br>G83 |

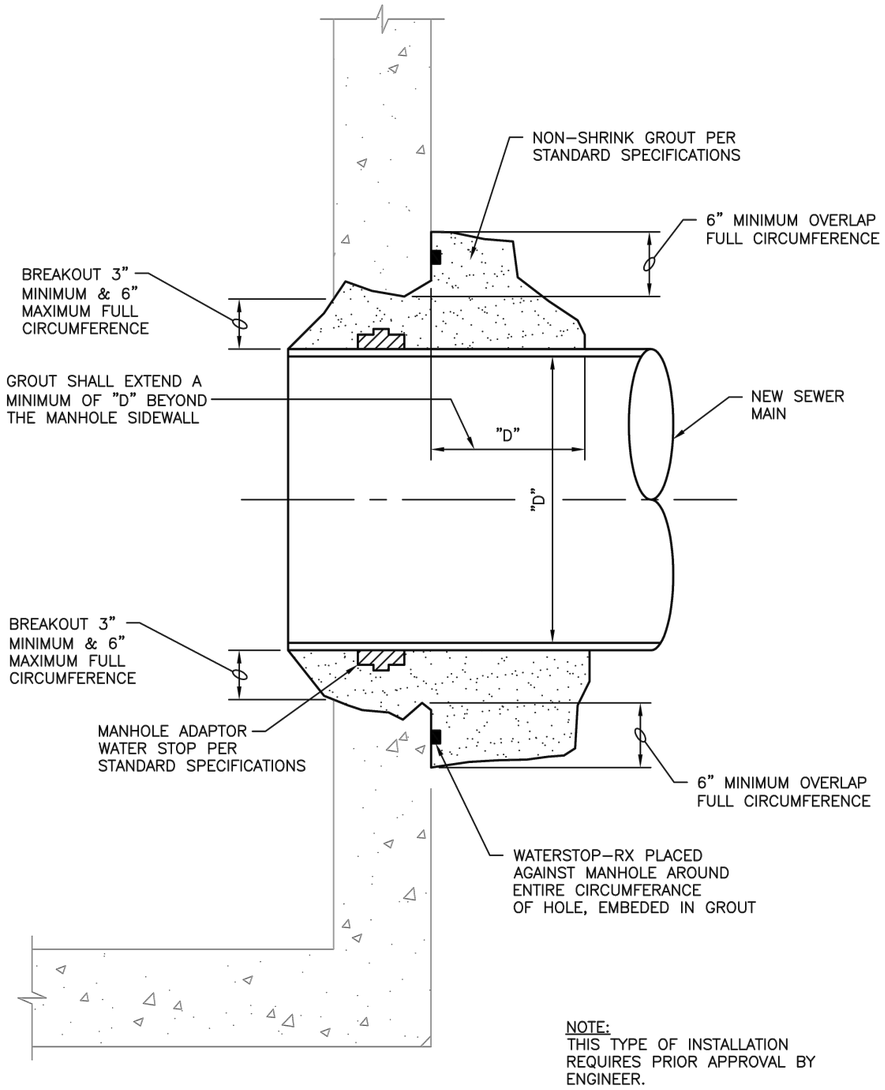


NOTE:
THIS TYPE OF INSTALLATION REQUIRES PRIOR APPROVAL BY ENGINEER.

| CITY OF RAPID CITY | PUBLIC WORKS DEPARTMENT | |
|---|---|---|
| PIPE CONNECTION TO EXISTING MANHOLE (GROUTED CONNECTION) | DATE: 5–1–07 | SEC. 9 SHT. 6 |

NOTES:

1. DEPENDING ON LOCATION, CROSS–SLOPE OF STREET, HEIGHT ADJUSTMENT REQUIREMENTS, ETC.. THE INSPECTOR/ENGINEER RESERVES THE RIGHT TO REQUIRE A LARGER CUT TO ASSURE THAT ALL TRANSITIONS AND TOLERANCES AS CALLED FOR IN CITY SPECIFICATIONS WILL STILL BE MET.

2. BLOCKS FOR SHIMMING PER SPECIFICATIONS.

3. 0.25 INCH MAX.. SURFACE DEVIATION IN 10 FEET.

4. PATCH MATERIAL – PATCH MATERIAL SHALL MATCH THE EXISTING PAVEMENT MATERIAL. (i.e. PCC PAVEMENT SHALL BE PATCHED WITH PCC AND EXISTING ASPHALT PAVEMENT WITH ASPHALT).

MINIMUM PATCH DEPTHS SHALL BE:
*PCC–6" PCC PAVEMENT OR MATCH MINIMUM EXISTING PAVEMENT DEPTH WHICHEVER IS GREATER.
*ASPHALT–5" MINIMUM. (2 LIFTS COMPACTED OR MATCH EXISTING PAVEMENT DEPTH WHICHEVER IS GREATER.

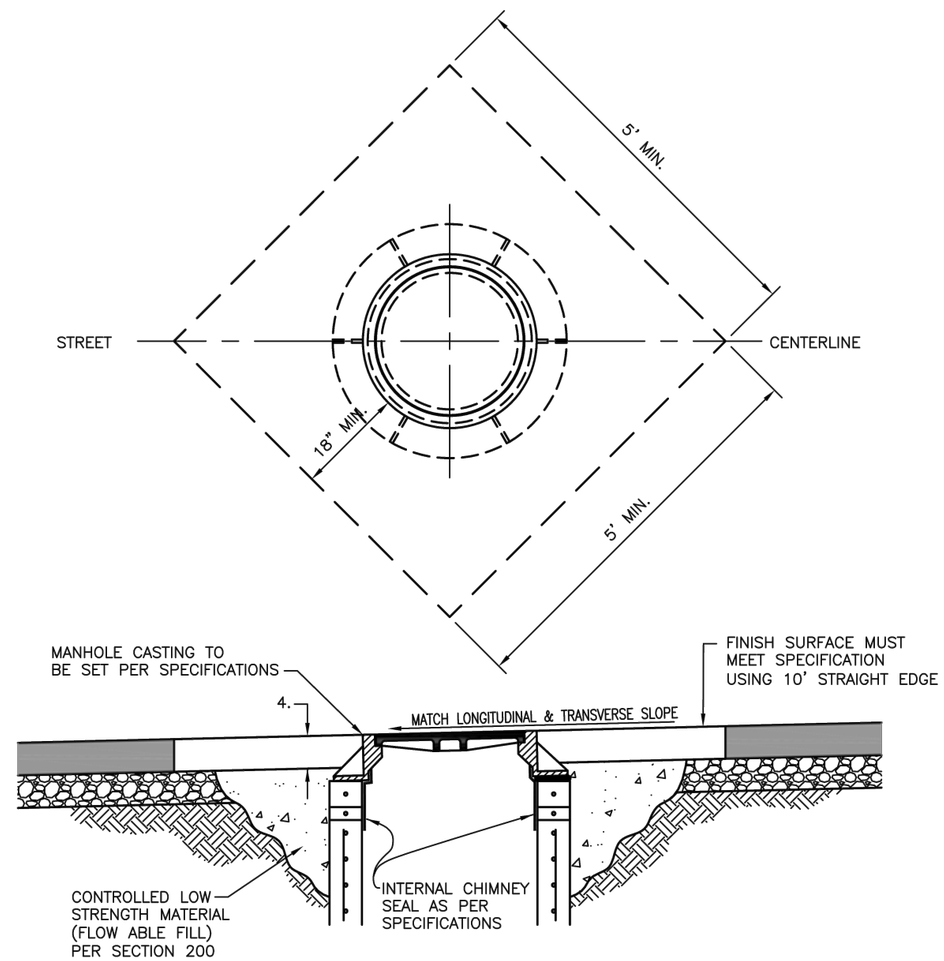


| CITY OF RAPID CITY | PUBLIC WORKS DEPARTMENT | |
|---|---|---|
| MANHOLE ADJUSTMENT AND PATCH DETAIL | DATE: 5–1–07 | SEC. 9 SHT. 7 |

May 19, 2016 4:30:20 p.m.
Drawing: DETAILS.DWG (SCHILLE) (P:\PROJECTS & PROPOSALS\11119.00 MT. RUSHMORE RD. UTILITIES RECONSTRUCTION\DRAWINGS\SHEETS\PHASE 2 - FLORMANN TO SAINT JAMES\)

| Prepared By: | Prepared For: | Scale: AS NOTED | Revisions: | | | Sheet Title: | Sheet No: |
|---|---|---|---|---|---|---|---|
| AE2S | Public Works Department<br>Engineering Services | Designed By: GW<br>Drawn By: MS<br>Design Date: 02.2016 - 04.2016<br>Print Date: 08.19.2016<br>Internal Job No: 11119.04<br>Surveyed By: SDDOT<br>Survey Date: 2012<br>Project Number: 12-2051, CIP NO.50867, PCN X02P | Number: | Description: | FOR BIDDING PURPOSES ONLY<br>MOUNT RUSHMORE ROAD<br>UTILITY RECONSTRUCTION | STANDARD DETAILS | G62 of G83 |

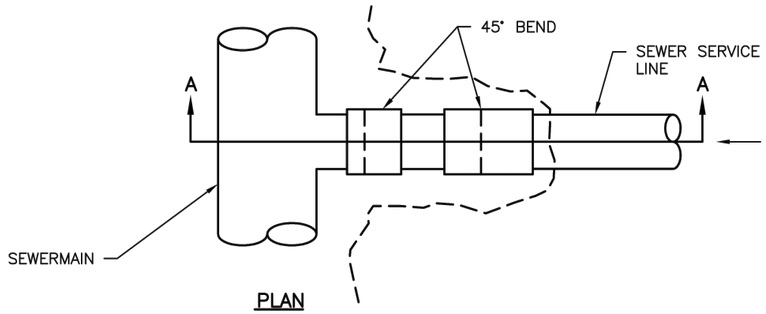


PLAN

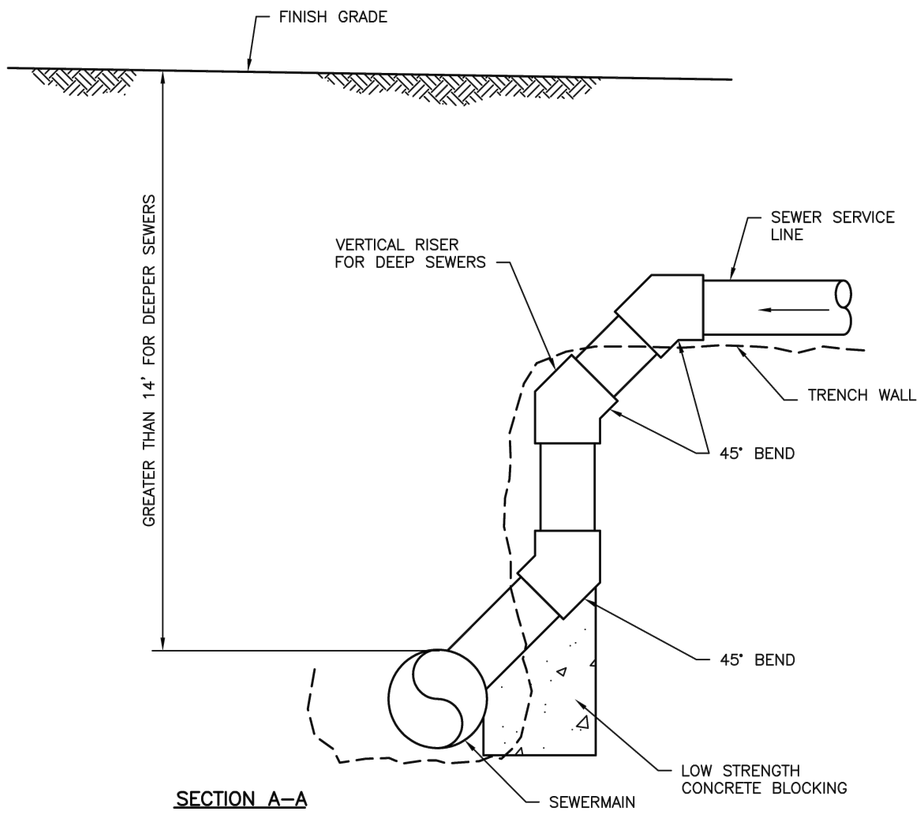


SECTION A–A

| CITY OF RAPID CITY | PUBLIC WORKS DEPARTMENT | |
|---|---|---|
| DEEP SANITARY SERVICE CONNECTION | DATE: 5–1–07 | SEC. 9 SHT. 9 |

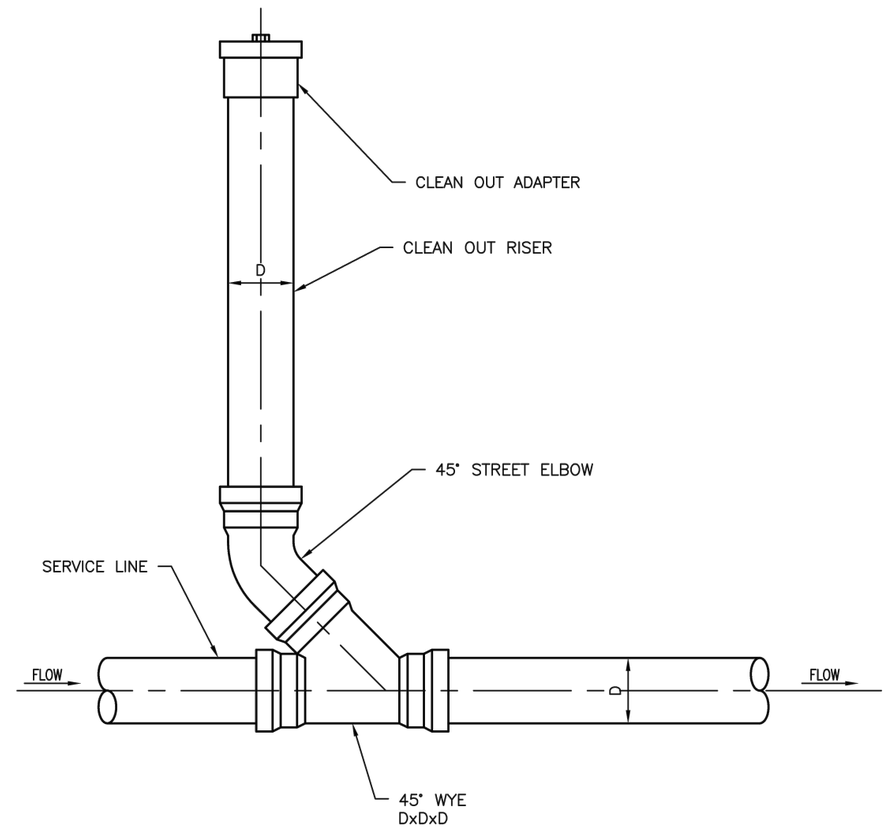


ELEVATION

NOTES:

1. ALL FITTINGS SHALL BE GASKETED.
2. CLEAN OUTS TO BE SAME DIAMETER (D) AS SERVICE LINE.

| CITY OF RAPID CITY | PUBLIC WORKS DEPARTMENT | |
|---|---|---|
| SANITARY SEWER SERVICE CLEAN OUT DETAIL | DATE: 5–1–07 | SEC. 9 SHT. 10 |

May 19, 2016 4:30:20 p.m.
Drawing: DETAILS.DWG (SCHILLE) (P:\PROJECTS & PROPOSALS\11119.00 MT. RUSHMORE RD. UTILITIES RECONSTRUCTION\DRAWINGS\SHEETS\PHASE 2 - FLORMANN TO SAINT JAMES\)

| Prepared By: | Prepared For: | Scale: AS NOTED | Revisions: | | | Sheet Title: | Sheet No: |
|---|---|---|---|---|---|---|---|
| AE2S | Public Works Department<br>Engineering Services | Designed By: GW<br>Drawn By: MS<br>Design Date: 02.2016 - 04.2016<br>Print Date: 08.19.2016<br>Internal Job No: 11119.04<br>Surveyed By: SDDOT<br>Survey Date: 2012<br>Project Number: 12-2051, CIP NO.50867, PCN X02P | Number: | Description: | FOR BIDDING PURPOSES ONLY<br>MOUNT RUSHMORE ROAD<br>UTILITY RECONSTRUCTION | STANDARD DETAILS | G63<br>of<br>G83 |

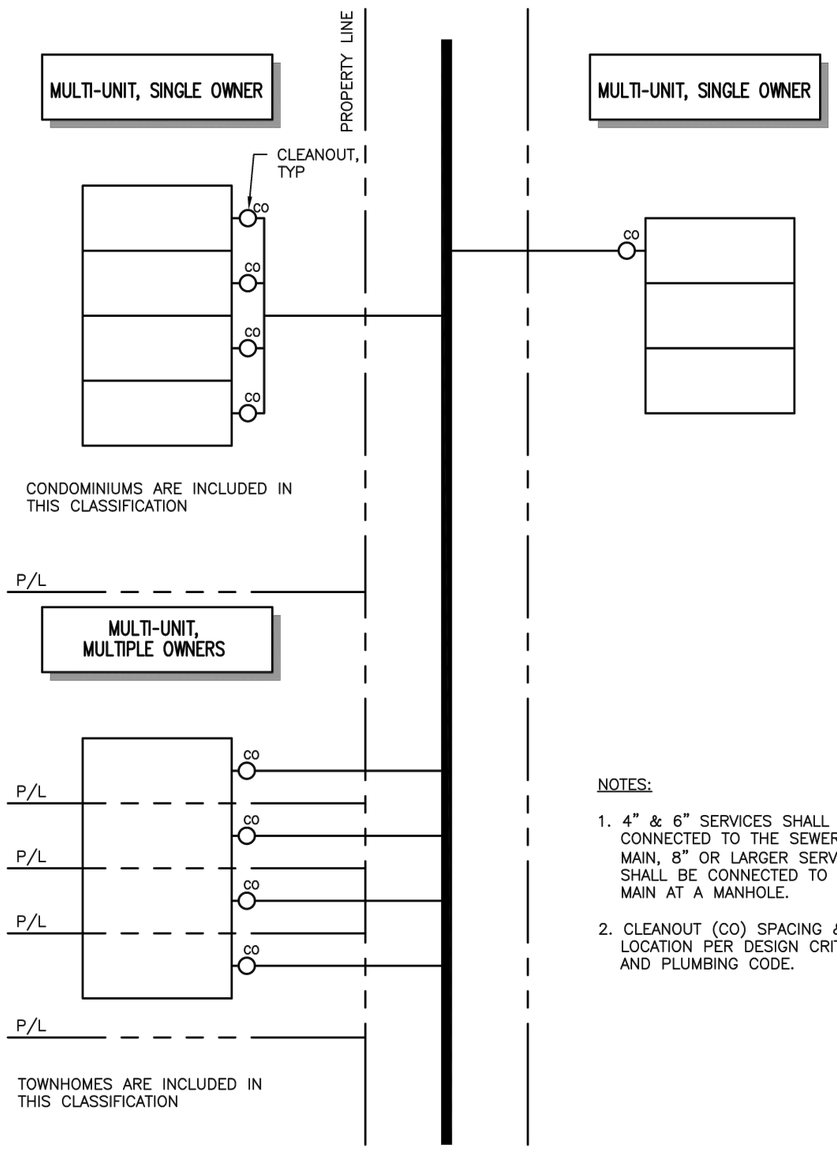


NOTES:

1. 4" & 6" SERVICES SHALL BE CONNECTED TO THE SEWER MAIN, 8" OR LARGER SERVICES SHALL BE CONNECTED TO THE MAIN AT A MANHOLE.
2. CLEANOUT (CO) SPACING & LOCATION PER DESIGN CRITERIA AND PLUMBING CODE.

CITY OF RAPID CITY — PUBLIC WORKS DEPARTMENT

# TYPICAL SEWER SERVICE LINE LAYOUT

DATE: 5-7-07

SEC. 9 — SHT. 12

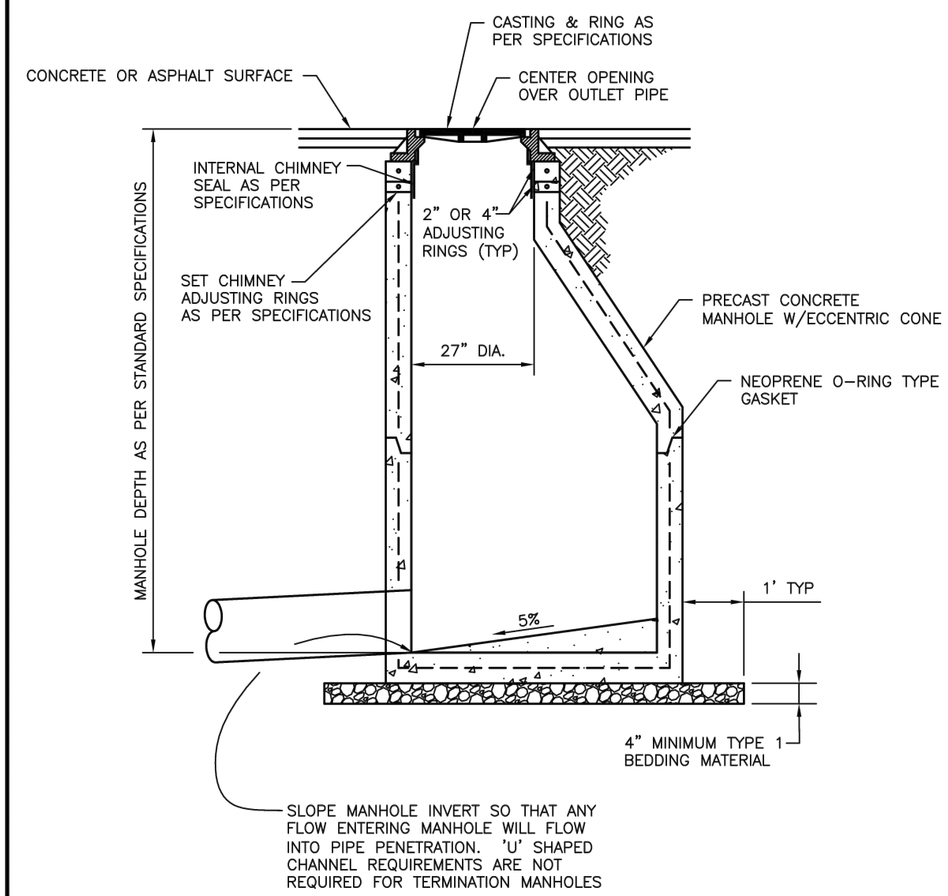


NOTE:

MANHOLE PIPE CONNECTOR SHALL BE A RESILIENT WATER TIGHT SEAL.

CITY OF RAPID CITY — PUBLIC WORKS DEPARTMENT

# TERMINATION MANHOLE

DATE: 5-1-07

SEC. 9 — SHT. 13

May 19, 2016 4:30:20 p.m.
Drawing: DETAILS.DWG (SCHILLE) (P:\PROJECTS & PROPOSALS\11119.00 MT. RUSHMORE RD. UTILITIES RECONSTRUCTION\DRAWINGS\SHEETS\PHASE 2 - FLORMANN TO SAINT JAMES\)

| Prepared By: | Prepared For: | Scale: AS NOTED | Revisions: | | | Sheet Title: | Sheet No: |
|---|---|---|---|---|---|---|---|
| AE2S | Public Works Department<br>Engineering Services | Designed By: GW<br>Drawn By: MS<br>Design Date: 02.2016 - 04.2016<br>Print Date: 08.19.2016<br>Internal Job No: 11119.04<br>Surveyed By: SDDOT<br>Survey Date: 2012<br>Project Number: 12-2051, CIP NO.50867, PCN X02P | Number: | Description: | FOR BIDDING PURPOSES ONLY<br>MOUNT RUSHMORE ROAD<br>UTILITY RECONSTRUCTION | STANDARD DETAILS | G64 of G83 |

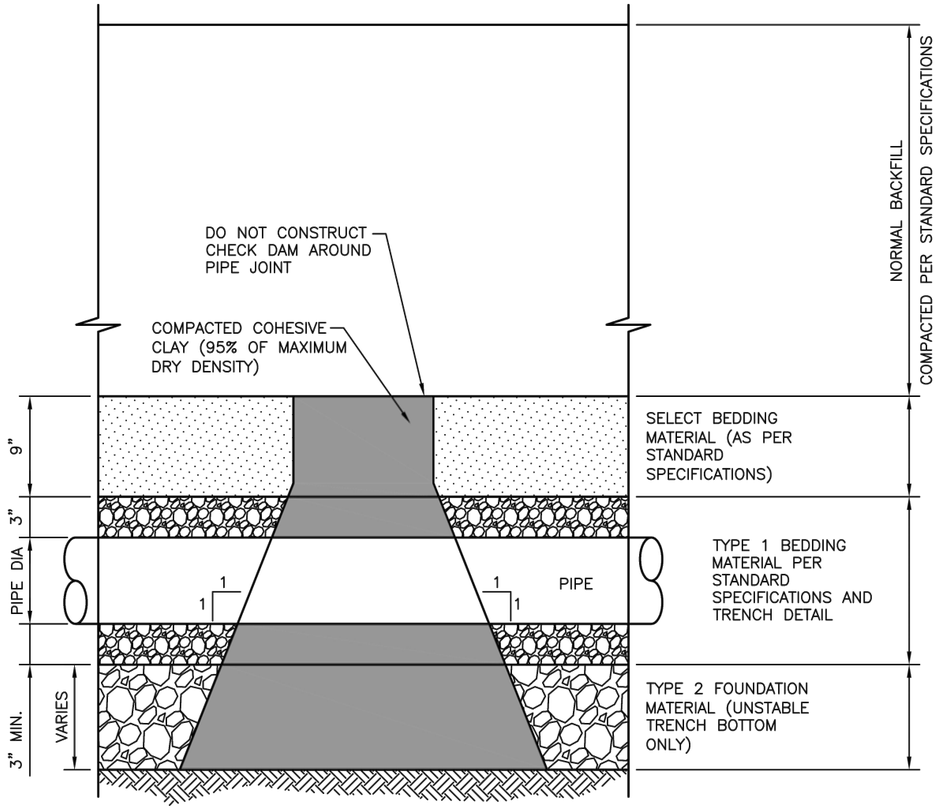


**ELEVATION**

NOTE:

CHECK DAM INSTALLATION LOCATIONS SHALL BE AS INDICATED ON THE PLANS. HOWEVER DURING CONSTRUCTION, CHECK DAM INSTALLATION LOCATIONS MAY BE MOVED DUE TO FIELD CONDITIONS.

THE CHECK DAM SHALL EXTEND FROM THE BOTTOM OF THE EXCAVATION THROUGH THE BEDDING MATERIAL TO THE "NORMAL BACKFILL" AND SHALL EXTEND COMPLETELY TO EACH TRENCH SIDEWALL. CHECK DAM MATERIAL SHALL BE COMPACTED COHESIVE CLAY THAT CONTAINS A MINIMUM OF 25% MINUS NO. 200 SIEVE MATERIAL, WITH 70% PASSING A 3/4 INCH SIEVE. IF THE NORMAL EXCAVATED MATERIAL IS NOT SUITABLE FOR CONSTRUCTION OF THE CHECK DAM, THEN THE CONTRACTOR SHALL OBTAIN MATERIAL FROM OUTSIDE SOURCES. CHECK DAM INSTALLATION AND MATERIAL SHALL BE CONSIDERED AS INCIDENTAL TO THE PIPE INSTALLATION.

CITY OF RAPID CITY — PUBLIC WORKS DEPARTMENT

# TYPICAL TRENCH CHECK DAM DETAIL FOR WATER & SEWER MAINS

DATE: 5-1-07

SEC. 11 — SHT. 2

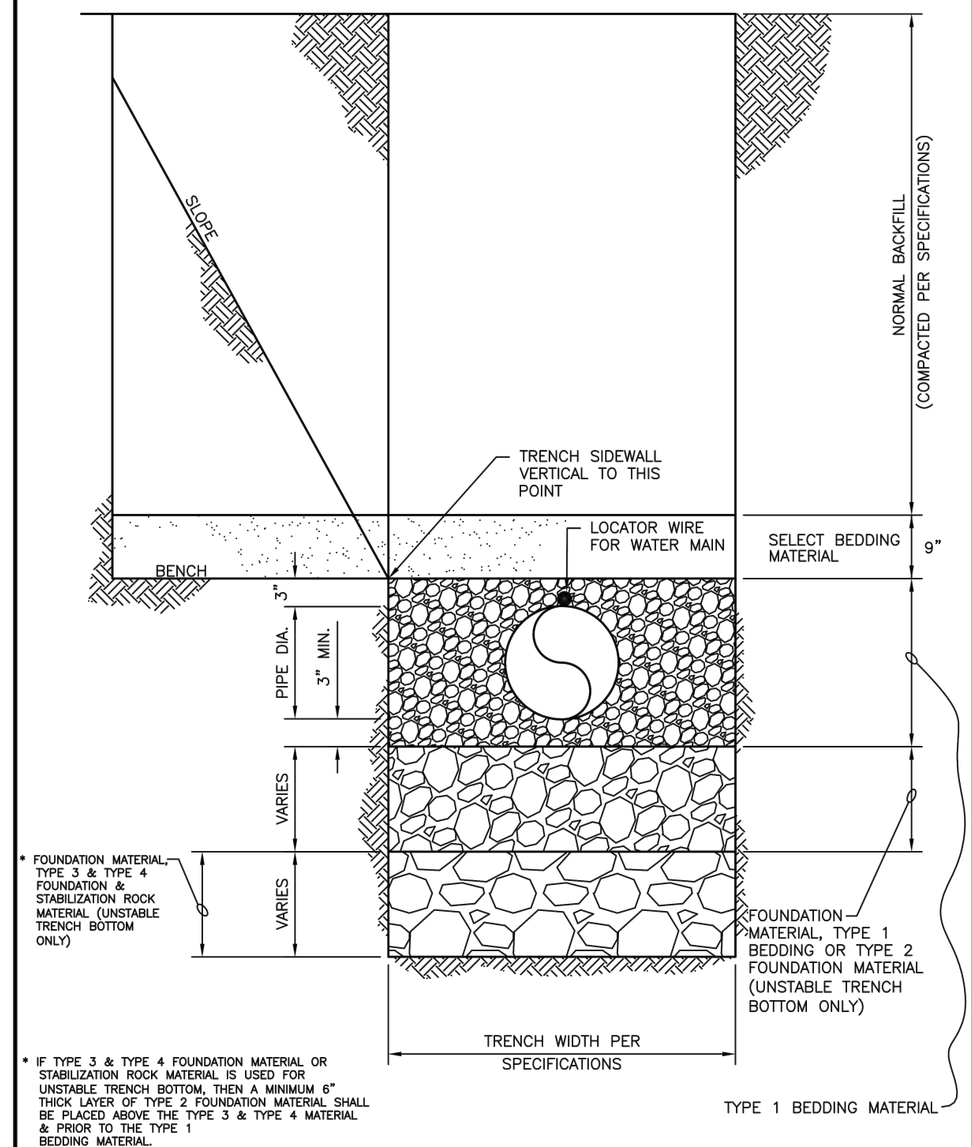


* IF TYPE 3 & TYPE 4 FOUNDATION MATERIAL OR STABILIZATION ROCK MATERIAL IS USED FOR UNSTABLE TRENCH BOTTOM, THEN A MINIMUM 6" THICK LAYER OF TYPE 2 FOUNDATION MATERIAL SHALL BE PLACED ABOVE THE TYPE 3 & TYPE 4 MATERIAL & PRIOR TO THE TYPE 1 BEDDING MATERIAL.

CITY OF RAPID CITY — PUBLIC WORKS DEPARTMENT

# TRENCH DETAIL FOR WATER & SEWER MAIN

DATE: 5-1-07

SEC. 11 — SHT. 3

May 19, 2016 4:30:20 p.m.
Drawing: DETAILS.DWG (P:\PROJECTS & PROPOSALS\11119.00 MT. RUSHMORE RD. UTILITIES RECONSTRUCTION\DRAWINGS\SHEETS\PHASE 2 - FLORMANN TO SAINT JAMES\)

| Prepared By: | Prepared For: | Scale: AS NOTED | Revisions: | | | Sheet Title: | Sheet No: |
|---|---|---|---|---|---|---|---|
| AE2S | Public Works Department<br>Rapid City, South Dakota<br>Engineering Services | Designed By: GW<br>Drawn By: MS<br>Design Date: 02.2016 - 04.2016<br>Print Date: 08.19.2016<br>Internal Job No: 11119.04<br>Surveyed By: SDDOT<br>Survey Date: 2012<br>Project Number: 12-2051, CIP NO.50867, PCN X02P | Number: | Description: | FOR BIDDING PURPOSES ONLY<br>MOUNT RUSHMORE ROAD<br>UTILITY RECONSTRUCTION | STANDARD DETAILS | G65 of G83 |

REGISTERED PROFESSIONAL ENGINEER
REG. NO. 2780
GREGORY M. WIERENGA
SOUTH DAKOTA
8-19-16

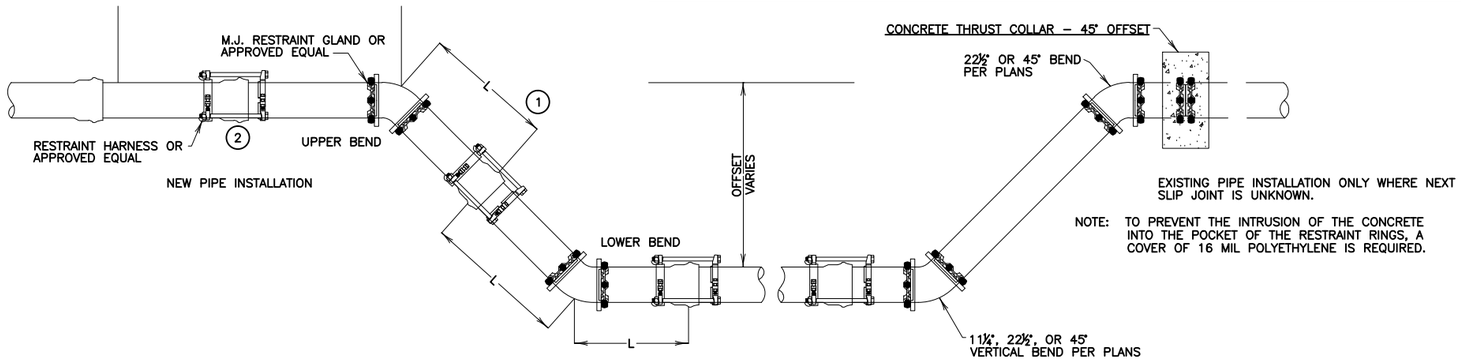


## WATER MAIN LOWERING DETAIL

N.T.S.

NOTES:

1. VERTICAL OFFSETS REQUIRE RESTRAINT OF ALL JOINTS WITHIN THE CALCULATED LENGTHS (L) ON BOTH SIDES OF THE UPPER AND LOWER FITTINGS. WHEN RESTRAINED LENGTHS OVERLAP ON THE DIAGONAL PIPE, ALL JOINTS BETWEEN THE FITTINGS SHOULD BE RESTRAINED.
2. ADDITIONAL BELL RESTRAINTS, IF NEEDED, TO OBTAIN THE RESTRAINED LENGTH (L) FOR THE UPPER BEND.
3. MATERIALS WILL BE PAID FOR UNDER THE APPROPRIATE UNIT PRICE AND AS DESCRIBED IN THE DETAILED SPECIFICATIONS. LOWERINGS NOT IDENTIFIED ON THE PLANS AND REQUIRED DURING CONSTRUCTION WILL BE PAID FOR AT THE UNIT PRICES FOR EACH ITEM.
4. REFER TO SPECIFICATIONS FOR MATERIALS.

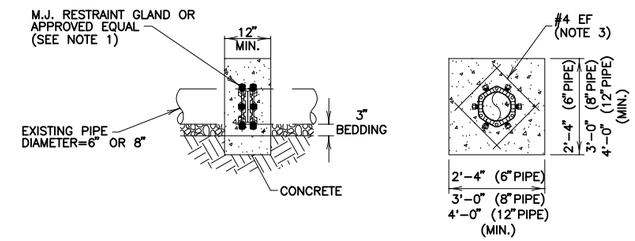


NOTES:

1) INSTALL TWO MECHANICAL RESTRAINING GLANDS FOR SIZE AND TYPE OF PIPE.
2) BEARING AREA FOR COLLAR CALCULATED ASSUMING 1000 PSF ALLOWABLE BEARING AREA. SIZED FOR THRUST RESTRAINT OF 45° OFFSET ONLY.
3) PROVIDE #4 REBAR AT EA. FACE OF THRUST COLLAR.
4) SIZES SHOWN ARE MINIMUM. CONTRACTOR MAY VARY WIDTH TO UTILIZE TRENCH SIDES IF HEIGHT IS MAINTAINED.
5) PAYMENT FOR THRUST COLLAR TO BE INCIDENTAL TO FITTINGS AND WATER MAIN TO WHICH IT RELATES.

BEARING AREA REQUIRED (NOTE2)

PVC PIPE
6" – 4.7 SF = 0.17 CY± CONC.
8" – 8.0 SF = 0.30 CY± CONC.
10" – 12.9 SF = 0.48 CY± CONC.
12" – 18.3 SF = 0.68 CY± CONC.
14" – 24.8 SF = 0.92 CY± CONC.

DI PIPE
12" – 18.3 SF = 0.68 CY± CONC.
20" – 49.4 SF = 1.83 CY± CONC.
24" – 70.8 SF = 2.62 CY± CONC.
30" – 111.0 SF = 4.11 CY± CONC.

## CONCRETE THRUST COLLAR – 45° OFFSET (EXISTING ONLY)

NOT TO SCALE

## JOINT RESTRAINT TABLE FOR PVC PIPE

### 11¼° VERTICAL BEND TABLE

| LOWSIDE DEPTH (FT) | 4" PVC PIPE | | 6" PVC PIPE | | 8" PVC PIPE | | 10" PVC PIPE | | 12" PVC PIPE | | 14" PVC PIPE | | 16" PVC PIPE | |
|---|---|---|---|---|---|---|---|---|---|---|---|---|---|---|
| | UPPER BEND L (FT) | LOWER BEND L (FT) | UPPER BEND L (FT) | LOWER BEND L (FT) | UPPER BEND L (FT) | LOWER BEND L (FT) | UPPER BEND L (FT) | LOWER BEND L (FT) | UPPER BEND L (FT) | LOWER BEND L (FT) | UPPER BEND L (FT) | LOWER BEND L (FT) | UPPER BEND L (FT) | LOWER BEND L (FT) |
| 7 | 5 | 1 | 6 | 2 | 8 | 2 | 10 | 3 | 11 | 3 | 13 | 3 | 15 | 4 |
| 8 | 5 | 1 | 6 | 2 | 8 | 2 | 10 | 2 | 11 | 3 | 13 | 3 | 15 | 3 |
| 9 | 5 | 1 | 6 | 2 | 8 | 2 | 10 | 2 | 11 | 3 | 13 | 3 | 15 | 3 |
| 10 | 5 | 1 | 6 | 2 | 8 | 2 | 10 | 2 | 11 | 2 | 13 | 3 | 15 | 3 |
| 11 | 5 | 1 | 6 | 1 | 8 | 2 | 10 | 2 | 11 | 2 | 13 | 3 | 15 | 3 |

### 22½° VERTICAL BEND TABLE

| LOWSIDE DEPTH (FT) | 4" PVC PIPE | | 6" PVC PIPE | | 8" PVC PIPE | | 10" PVC PIPE | | 12" PVC PIPE | | 14" PVC PIPE | | 16" PVC PIPE | |
|---|---|---|---|---|---|---|---|---|---|---|---|---|---|---|
| | UPPER BEND L (FT) | LOWER BEND L (FT) | UPPER BEND L (FT) | LOWER BEND L (FT) | UPPER BEND L (FT) | LOWER BEND L (FT) | UPPER BEND L (FT) | LOWER BEND L (FT) | UPPER BEND L (FT) | LOWER BEND L (FT) | UPPER BEND L (FT) | LOWER BEND L (FT) | UPPER BEND L (FT) | LOWER BEND L (FT) |
| 7 | 9 | 2 | 12 | 3 | 16 | 4 | 19 | 5 | 22 | 5 | 26 | 6 | 29 | 7 |
| 8 | 9 | 2 | 12 | 3 | 16 | 4 | 19 | 4 | 22 | 5 | 26 | 6 | 29 | 6 |
| 9 | 9 | 2 | 12 | 3 | 16 | 3 | 19 | 4 | 22 | 5 | 26 | 5 | 29 | 6 |
| 10 | 9 | 2 | 12 | 3 | 16 | 3 | 19 | 4 | 22 | 4 | 26 | 5 | 29 | 6 |
| 11 | 9 | 2 | 12 | 3 | 16 | 3 | 19 | 4 | 22 | 4 | 26 | 5 | 29 | 5 |

### 45° VERTICAL BEND TABLE

| LOWSIDE DEPTH (FT) | 4" PVC PIPE | | 6" PVC PIPE | | 8" PVC PIPE | | 10" PVC PIPE | | 12" PVC PIPE | | 14" PVC PIPE | | 16" PVC PIPE | |
|---|---|---|---|---|---|---|---|---|---|---|---|---|---|---|
| | UPPER BEND L (FT) | LOWER BEND L (FT) | UPPER BEND L (FT) | LOWER BEND L (FT) | UPPER BEND L (FT) | LOWER BEND L (FT) | UPPER BEND L (FT) | LOWER BEND L (FT) | UPPER BEND L (FT) | LOWER BEND L (FT) | UPPER BEND L (FT) | LOWER BEND L (FT) | UPPER BEND L (FT) | LOWER BEND L (FT) |
| 7 | 17 | 4 | 24 | 6 | 32 | 8 | 39 | 9 | 46 | 11 | 53 | 12 | 60 | 14 |
| 8 | 17 | 4 | 24 | 5 | 32 | 7 | 39 | 8 | 46 | 10 | 53 | 11 | 60 | 13 |
| 9 | 17 | 4 | 24 | 5 | 32 | 7 | 39 | 8 | 46 | 9 | 53 | 10 | 60 | 12 |
| 10 | 17 | 4 | 24 | 5 | 32 | 6 | 39 | 7 | 46 | 9 | 53 | 10 | 60 | 11 |
| 11 | 17 | 3 | 24 | 4 | 32 | 6 | 39 | 7 | 46 | 8 | 53 | 9 | 60 | 10 |

DESIGN NOTE:

RESTRAINT CALCULATIONS ARE BASED UPON EBAA RESTRAINT DESIGN CALCULATION SOFTWARE VERSION 6.0 WITH THE FOLLOWING FACTORS:

| | |
|---|---|
| SOIL TYPE | CL |
| SAFETY FACTOR | 2.0 |
| TRENCH TYPE | 5 |
| BURY DEPTH | 6' |
| TEST PRESSURE | 150 PSI |

May 19, 2016 4:30:20 p.m.
Drawing: DETAILS.DWG (SCHILLE) (P:\PROJECTS & PROPOSALS\11119.00 MT. RUSHMORE RD. UTILITIES RECONSTRUCTION\DRAWINGS\SHEETS\PHASE 2 - FLORMANN TO SAINT JAMES\)

| Prepared By: | Prepared For: | Scale: AS NOTED | Revisions: | | | Sheet Title: | Sheet No: |
|---|---|---|---|---|---|---|---|
| AE2S | Public Works Department<br>Rapid City, South Dakota, Incorporated 1882<br>Engineering Services | Designed By: GW<br>Drawn By: MS<br>Design Date: 02.2016 - 04.2016<br>Print Date: 08.19.2016<br>Internal Job No: 11119.04<br>Surveyed By: SDDOT<br>Survey Date: 2012<br>Project Number: 12-2051, CIP NO.50867, PCN X02P | Number:<br>Description: | FOR BIDDING PURPOSES ONLY | MOUNT RUSHMORE ROAD<br>UTILITY RECONSTRUCTION | STANDARD DETAILS | G66<br>of<br>G83 |

**THRUST BLOCK TABLES (RECOMMENDED DIMENSIONS INCLUDED)**

| NOTES: | | | |
|---|---|---|---|
| | SOIL BEARING CAPACITY | 2000 | psf |
| | WATER MAIN PRESSURE | 150 | psi |
| | FACTOR OF SAFETY | 2 | per Rapid City Design Criteria |

**TEES/VALVES AND DEAD END TABLE (d = 6",8",10",12",14",18",20")**

| Fitting Size | Min. Area (SF) | Min Conc Volume (CY) | w (ft) | h (ft) | T (ft) |
|---|---|---|---|---|---|
| d x 4" | 2.7 | 0.2 | 2.40 | 1.20 | 1.50 |
| d x 6" | 5.6 | 0.3 | 3.40 | 1.70 | 1.50 |
| d x 8" | 9.6 | 0.5 | 4.40 | 2.20 | 1.50 |
| d x 10" | 14.5 | 0.8 | 5.40 | 2.70 | 1.50 |
| d x 12" | 20.5 | 1.1 | 6.50 | 3.30 | 1.50 |
| d x 14" | 27.6 | 1.5 | 7.50 | 3.80 | 1.50 |
| d x 16" | 35.6 | 2.6 | 8.00 | 4.00 | 2.30 |
| d x 18" | 44.8 | 3.3 | 8.00 | 4.00 | 2.80 |
| d x 20" | 54.9 | 4.1 | 8.00 | 4.00 | 3.50 |

**REDUCER/INCREASER TABLE**

| Fitting Size | Min. Area (SF) | Min Conc Volume (CY) | w (ft) | h (ft) | T (ft) |
|---|---|---|---|---|---|
| 8"x6" | 4.0 | 0.2 | 3.00 | 1.50 | 1.50 |
| 10"x8" | 4.9 | 0.3 | 3.20 | 1.60 | 1.50 |
| 12"x6" | 14.9 | 0.8 | 5.60 | 2.80 | 1.50 |
| 12"x8" | 10.9 | 0.6 | 4.80 | 2.40 | 1.50 |
| 12"x10" | 6.0 | 0.3 | 3.50 | 1.80 | 1.50 |
| 14"x6" | 22.4 | 1.2 | 6.80 | 3.40 | 2.00 |
| 14"x8" | 17.9 | 1.3 | 6.00 | 3.00 | 2.00 |
| 14"x10" | 13.1 | 1.0 | 5.20 | 2.60 | 2.00 |
| 14"x12" | 7.0 | 0.5 | 3.80 | 1.90 | 2.00 |
| 16"x6" | 30.0 | 2.2 | 7.80 | 3.90 | 2.00 |
| 16"x8" | 26.0 | 1.9 | 7.40 | 3.70 | 2.00 |
| 16"x10" | 21.1 | 1.6 | 6.60 | 3.30 | 2.00 |
| 16"x12" | 15.1 | 1.1 | 5.60 | 2.80 | 2.00 |
| 16"x14" | 8.1 | 0.6 | 4.20 | 2.10 | 2.00 |
| 20"x6" | 49.3 | 3.7 | 8.00 | 4.00 | 3.10 |
| 20"x8" | 45.3 | 3.4 | 8.00 | 4.00 | 2.90 |
| 20"x10" | 40.4 | 3.0 | 8.00 | 4.00 | 2.60 |
| 20"x12" | 34.4 | 2.5 | 8.00 | 4.00 | 2.20 |
| 20"x14" | 27.4 | 2.0 | 7.40 | 3.70 | 2.00 |
| 20"x16" | 19.3 | 1.4 | 6.40 | 3.20 | 2.00 |

**CROSS TABLE (d = 6",8",12",14",16",20")**

| Fitting Size | Min. Area (SF) | Min Conc Volume (CY) | w (ft) | h (ft) | T (ft) |
|---|---|---|---|---|---|
| d x 4" | 3.8 | 0.2 | 2.80 | 1.40 | 1.50 |
| d x 6" | 7.9 | 0.4 | 4.00 | 2.00 | 1.50 |
| d x 8" | 13.6 | 0.8 | 5.40 | 2.70 | 1.50 |
| d x 10" | 20.5 | 1.1 | 6.60 | 3.30 | 1.50 |
| d x 12" | 29.0 | 1.6 | 7.80 | 3.90 | 1.50 |
| d x 14" | 39.0 | 2.2 | 8.00 | 4.00 | 1.90 |
| d x 16" | 50.4 | 3.7 | 8.00 | 4.00 | 3.20 |
| d x 18" | 63.3 | 4.7 | 8.00 | 4.00 | 4.00 |
| d x 20" | 77.7 | 5.8 | 8.00 | 4.00 | 4.90 |
| d x 24" | 110.8 | 8.2 | 8.00 | 4.00 | 7.00 |

**90 degree HORIZONTAL BEND TABLE**

| Fitting Size | Min. Area (SF) | Min Conc Volume (CY) | w (ft) | h (ft) | T (ft) |
|---|---|---|---|---|---|
| 4" Pipe | 3.8 | 0.2 | 2.80 | 1.40 | 1.50 |
| 6" Pipe | 7.9 | 0.4 | 4.00 | 2.00 | 1.50 |
| 8" Pipe | 13.6 | 0.8 | 5.40 | 2.70 | 1.50 |
| 10" Pipe | 20.5 | 1.1 | 6.50 | 3.30 | 1.50 |
| 12" Pipe | 29.0 | 1.6 | 7.80 | 3.90 | 1.50 |
| 14" Pipe | 39.0 | 2.2 | 8.00 | 4.00 | 1.90 |
| 16" Pipe | 50.4 | 3.7 | 8.00 | 4.00 | 3.20 |
| 18" Pipe | 63.3 | 4.7 | 8.00 | 4.00 | 4.00 |
| 20" Pipe | 77.7 | 5.8 | 8.00 | 4.00 | 4.90 |
| 24" Pipe | 110.8 | 8.2 | 8.00 | 4.00 | 7.00 |

**45 degree HORIZONTAL BEND TABLE**

| Fitting Size | Min. Area (SF) | Min Conc Volume (CY) | w (ft) | h (ft) | T (ft) |
|---|---|---|---|---|---|
| 4" Pipe | 2.1 | 0.1 | 2.20 | 1.10 | 1.50 |
| 6" Pipe | 4.3 | 0.2 | 3.00 | 1.50 | 1.50 |
| 8" Pipe | 7.4 | 0.4 | 4.00 | 2.00 | 1.50 |
| 10" Pipe | 11.1 | 0.6 | 4.80 | 2.40 | 1.50 |
| 12" Pipe | 15.7 | 0.9 | 5.80 | 2.90 | 1.50 |
| 14" Pipe | 21.1 | 1.2 | 6.50 | 3.30 | 1.50 |
| 16" Pipe | 27.3 | 2.0 | 7.40 | 3.70 | 2.00 |
| 18" Pipe | 34.3 | 2.5 | 8.00 | 4.00 | 2.20 |
| 20" Pipe | 42.0 | 3.1 | 8.00 | 4.00 | 2.70 |
| 24" Pipe | 60.0 | 4.4 | 8.00 | 4.00 | 3.80 |

**22.5 degree HORIZONTAL BEND TABLE**

| Fitting Size | Min. Area (SF) | Min Conc Volume (CY) | w (ft) | h (ft) | T (ft) |
|---|---|---|---|---|---|
| 4" Pipe | 1.1 | 0.1 | 1.50 | 0.80 | 1.50 |
| 6" Pipe | 2.2 | 0.1 | 2.20 | 1.10 | 1.50 |
| 8" Pipe | 3.8 | 0.2 | 2.80 | 1.40 | 1.50 |
| 10" Pipe | 5.7 | 0.3 | 3.40 | 1.70 | 1.50 |
| 12" Pipe | 8.0 | 0.4 | 4.00 | 2.00 | 1.50 |
| 14" Pipe | 10.7 | 0.6 | 4.80 | 2.40 | 1.50 |
| 16" Pipe | 13.9 | 1.0 | 5.40 | 2.70 | 2.00 |
| 18" Pipe | 17.5 | 1.3 | 6.00 | 3.00 | 2.00 |
| 20" Pipe | 21.4 | 1.6 | 6.60 | 3.30 | 2.00 |
| 24" Pipe | 30.6 | 2.3 | 8.00 | 4.00 | 2.00 |

**11.25 degree HORIZONTAL BEND TABLE**

| Fitting Size | Min. Area (SF) | Min Conc Volume (CY) | w (ft) | h (ft) | T (ft) |
|---|---|---|---|---|---|
| 4" Pipe | 0.5 | 0.0 | 1.20 | 0.60 | 1.50 |
| 6" Pipe | 1.1 | 0.1 | 1.60 | 0.80 | 1.50 |
| 8" Pipe | 1.9 | 0.1 | 2.00 | 1.00 | 1.50 |
| 10" Pipe | 2.8 | 0.2 | 2.40 | 1.20 | 1.50 |
| 12" Pipe | 4.0 | 0.2 | 3.00 | 1.50 | 1.50 |
| 14" Pipe | 5.4 | 0.3 | 3.40 | 1.70 | 1.50 |
| 16" Pipe | 7.0 | 0.5 | 3.80 | 1.90 | 2.00 |
| 18" Pipe | 8.8 | 0.6 | 4.20 | 2.10 | 2.00 |
| 20" Pipe | 10.8 | 0.8 | 4.80 | 2.40 | 2.00 |
| 24" Pipe | 15.4 | 1.1 | 5.60 | 2.80 | 2.00 |

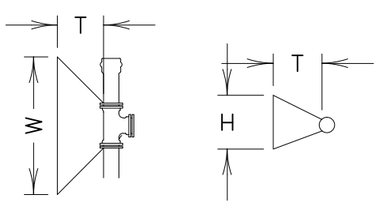


PLAN ELEVATION

## TABLE OF THRUST BLOCK RESTRAINTS ON WATER MAINS

NOT TO SCALE

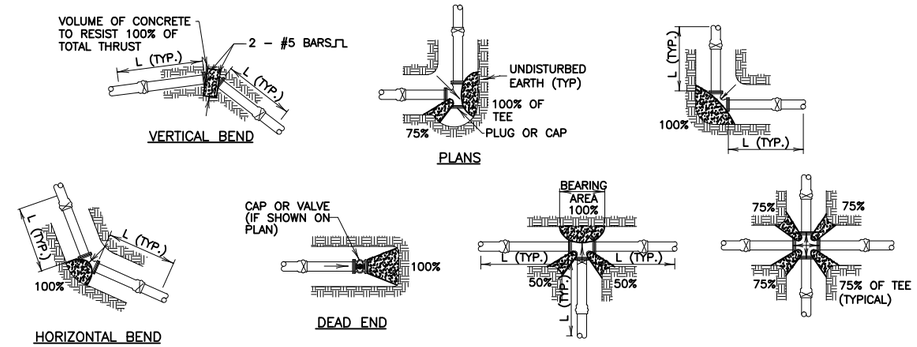


NOTE: MECHANICAL JOINT RESTRAINTS REQUIRED ON ALL DEAD END VALVES.

## CONCRETE THRUST BLOCKS AND JOINT RESTRAINTS FOR PVC PIPE

NOT TO SCALE

REGISTERED PROFESSIONAL ENGINEER
REG. NO. 2780
GREGORY M. WIERENGA
SOUTH DAKOTA
8-19-16

## TABLE OF JOINT RESTRAINTS ON WATER MAINS

**TEE TABLE**

| Fitting Size | Restrained Length 9' Each Side of Tee |
|---|---|
| 16"x16" | 25 |
| 16"x12" | 1 |
| 16"x10" | 1 |
| 16"x8" | 1 |
| 16"x6" | 1 |
| 14"x14" | 13 |
| 14"x12" | 1 |
| 14"x10" | 1 |
| 14"x8" | 1 |
| 14"x6" | 1 |
| 12"x12" | 1 |
| 12"x10" | 1 |
| 12"x8" | 1 |
| 12"x6" | 1 |
| 10"x10" | 1 |
| 10"x8" | 1 |
| 10"x6" | 1 |
| 8"x8" | 1 |
| 8"x6" | 1 |

**VALVE AND CAP/PLUG TABLE**

| Fitting Size | Restraining Length (ft) |
|---|---|
| 4" Pipe | 31 |
| 6" Pipe | 43 |
| 8" Pipe | 57 |
| 10" Pipe | 69 |
| 12" Pipe | 82 |
| 14" Pipe | 94 |
| 16" Pipe | 107 |

**45° HORIZONTAL BEND TABLE**

| Fitting Size | Restraining Length (ft) |
|---|---|
| 4" Pipe | 5 |
| 6" Pipe | 7 |
| 8" Pipe | 8 |
| 10" Pipe | 10 |
| 12" Pipe | 12 |
| 14" Pipe | 13 |
| 16" Pipe | 15 |

**90° HORIZONTAL BEND TABLE**

| Fitting Size | Restraining Length (ft) |
|---|---|
| 4" Pipe | 11 |
| 6" Pipe | 15 |
| 8" Pipe | 20 |
| 10" Pipe | 24 |
| 12" Pipe | 28 |
| 14" Pipe | 32 |
| 16" Pipe | 36 |

**22.5° HORIZONTAL BEND TABLE**

| Fitting Size | Restraining Length (ft) |
|---|---|
| 4" Pipe | 3 |
| 6" Pipe | 3 |
| 8" Pipe | 4 |
| 10" Pipe | 5 |
| 12" Pipe | 6 |
| 14" Pipe | 7 |
| 16" Pipe | 8 |

**11.25° HORIZONTAL BEND TABLE**

| Fitting Size | Restraining Length (ft) |
|---|---|
| 4" Pipe | 2 |
| 6" Pipe | 2 |
| 8" Pipe | 2 |
| 10" Pipe | 3 |
| 12" Pipe | 3 |
| 14" Pipe | 4 |
| 16" Pipe | 4 |

**REDUCER TABLE**

| Fitting Size | Restraining Length (ft) |
|---|---|
| 8"x6" | 24 |
| 12"x6" | 60 |
| 12"x8" | 44 |
| 16"x12" | 46 |

**DESIGN NOTE:**

RESTRAINT CALCULATIONS ARE BASED UPON EBAA RESTRAINT DESIGN CALCULATION SOFTWARE VERSION 6.0 WITH THE FOLLOWING FACTORS:

| | |
|---|---|
| SOIL TYPE | CL |
| SAFETY FACTOR | 2.0 |
| TRENCH TYPE | 5 |
| BURY DEPTH | 6' |
| TEST PRESSURE | 150 PSI |

May 19, 2016 4:30:20 p.m.
Drawing: DETAILS.DWG (SCHILLE) (P:\PROJECTS & PROPOSALS\11119.00 MT. RUSHMORE RD. UTILITIES RECONSTRUCTION\DRAWINGS\SHEETS\PHASE 2 - FLORMANN TO SAINT JAMES\)

| Prepared By: | Prepared For: | Scale: AS NOTED | Revisions: | | | Sheet Title: | Sheet No: |
|---|---|---|---|---|---|---|---|
| AE2S | Public Works Department<br>Engineering Services | Designed By: GW<br>Drawn By: MS<br>Design Date: 02.2016 - 04.2016<br>Print Date: 08.19.2016<br>Internal Job No: 11119.04<br>Surveyed By: SDDOT<br>Survey Date: 2012<br>Project Number: 12-2051, CIP NO.50867, PCN X02P | Number: | Description: | FOR BIDDING PURPOSES ONLY<br>MOUNT RUSHMORE ROAD<br>UTILITY RECONSTRUCTION | PROJECT DETAILS | G67 of G83 |

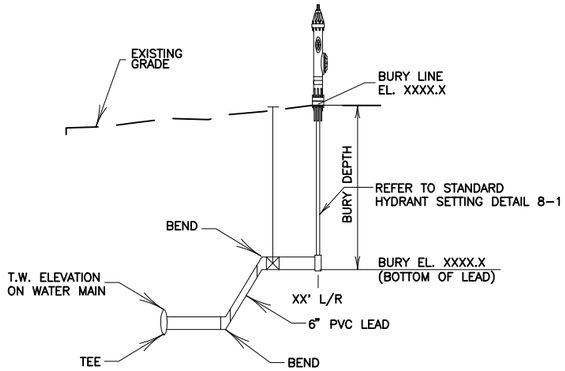


## FIRE HYDRANT BURY DEPTH ADJUSTMENT

NOT TO SCALE

THE PROPOSED BURY DEPTHS SHOWN ARE APPROXIMATE AND ARE DEPENDENT UPON SEVERAL FACTORS SUCH AS: EXISTING WATER MAIN DEPTH, OTHER UTILITIES, FIELD CHANGES, ETC. THE CONTRACTOR SHALL VERIFY ALL REQUIRED FIRE HYDRANT DEPTHS IN THE FIELD. VERTICAL BENDS ARE INCLUDED ON SELECT HYDRANT LEADS AS NOTED ON THE PLANS AND PROFILES. NO VERTICAL EXTENSIONS ARE ALLOWED. 6" PVC HYDRANT LEAD PIPE IS NOT INCLUDED IN THE FIRE HYDRANT BID ITEM AND WILL BE PAID SEPARATELY. VERTICAL BENDS ARE NOT INCLUDED AND WILL BE PAID FOR SEPARATELY. THE AUXILIARY GATE VALVE IS INCIDENTAL TO THE FIRE HYDRANT BID ITEM. REFER TO THE STANDARD SPECIFICATIONS FOR ADDITIONAL INFORMATION.

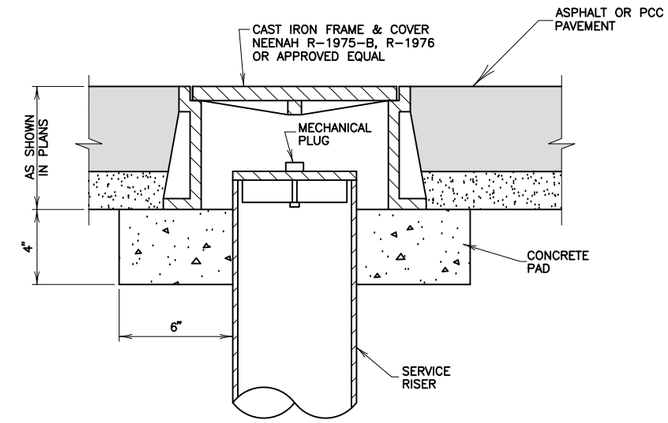


## CLEANOUT COVER (SPECIAL MANHOLE FRAME AND LID)

NOT TO SCALE

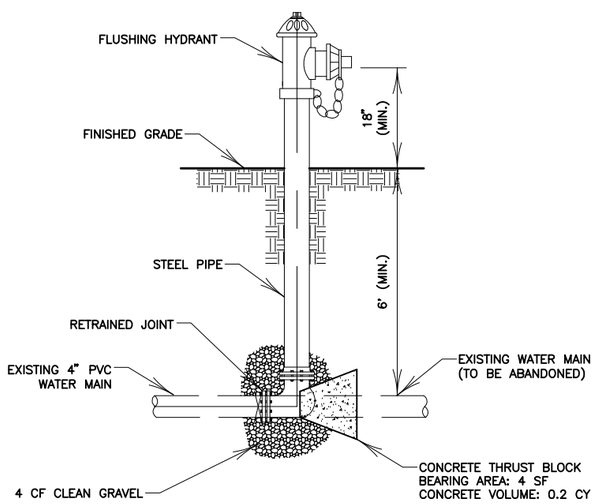


## FLUSHING HYDRANT

NOT TO SCALE

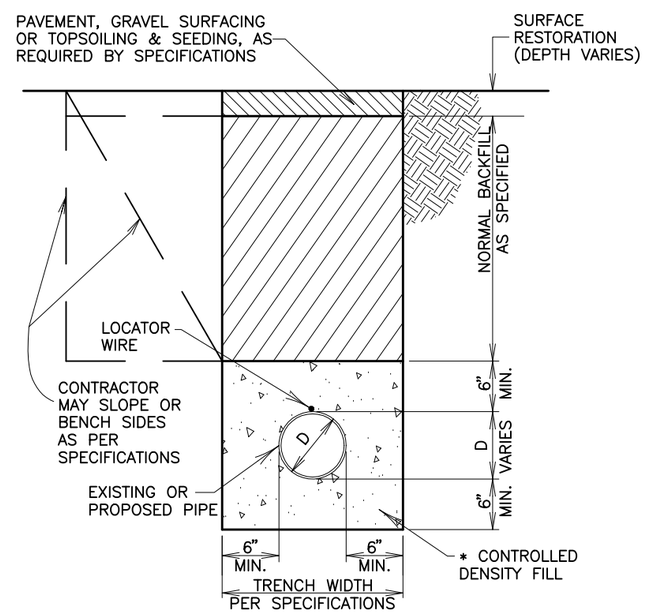


* CONTROLLED DENSITY FILL IS REFERRED TO AS CONTROLLED LOW STRENGTH BACKFILL MATERIAL IN THE STANDARD CITY SPECIFICATIONS.

## PIPE ENCASEMENT

NOT TO SCALE

REGISTERED PROFESSIONAL ENGINEER
REG. NO. 2780
GREGORY M. WIERENGA
SOUTH DAKOTA
5-19-16

May 19, 2016 4:30:20 p.m.
Drawing: DETAILS.DWG (SCHILLE) (P:\PROJECTS & PROPOSALS\11119.00 MT. RUSHMORE RD. UTILITIES RECONSTRUCTION\DRAWINGS\SHEETS\PHASE 2 - FLORMANN TO SAINT JAMES\)

| Prepared By: | Prepared For: | Scale: AS NOTED | Revisions: | | | Sheet Title: | Sheet No: |
|---|---|---|---|---|---|---|---|
| AE2S | Public Works Department<br>Engineering Services | Designed By: GW<br>Drawn By: MS<br>Design Date: 02.2016 - 04.2016<br>Print Date: 08.19.2016<br>Internal Job No: 11119.04<br>Surveyed By: SDDOT<br>Survey Date: 2012<br>Project Number: 12-2051, CIP NO.50867, PCN X02P | Number: | Description: | FOR BIDDING PURPOSES ONLY<br>MOUNT RUSHMORE ROAD<br>UTILITY RECONSTRUCTION | CATHODIC<br>PROTECTION<br>DETAILS | G68<br>of<br>G83 |

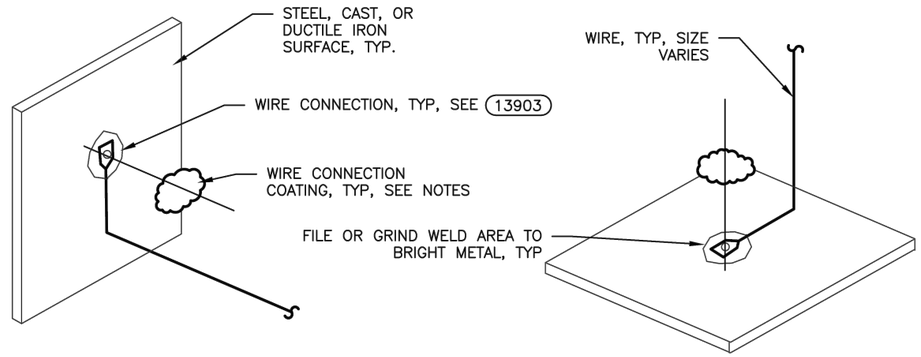


NOTES:

1. COPPER SLEEVE REQUIRED FOR THERMITE WELDING OF No. 10 AWG AND SMALLER WIRE AND No. 4 AND No. 2 AWG SIZE WIRES.

2. WELDER AND CARTRIDGE SIZE VARIES ACCORDING TO SURFACE SHAPE, MATERIAL, AND HORIZONTAL OR VERTICAL SURFACE. CONSULT WELDER MANUFACTURER FOR RECOMMENDED WELDER AND CARTRIDGE.

3. FOR MULTIPLE WIRE CONNECTIONS TO PIPE SEPARATE THERMITE WELD CONNECTIONS BY ONE PIPE DIAMETER MINIMUM, 2'–0" MAXIMUM.

4. WIRE CONNECTIONS TO FOREIGN PIPELINES SHALL BE MADE BY FOREIGN PIPELINE REPRESENTATIVE.

5. USE 15 GRAM MAXIMUM SIZE WELD CARTRIDGES FOR CONNECTIONS TO PETROLEUM AND NATURAL GAS PIPELINES OR STRUCTURES. THERMITE CONNECTIONS ONLY AS SPECIFIED & APPROVED BY OWNER. CROW'S FOOT LARGER WIRE CONNECTIONS IF SPECIFIED & APPROVED BY OWNER.

6. COAT COMPLETED THERMITE WELD CONNECTIONS WITH EPOXY REPAIR COATING, OR AS OWNER SPECIFIED.

7. UTILIZE INSULATED STRANDED COPPER WIRE ONLY, SIZE AS SPECIFIED. COLOR CODE WIRES ACCORDING TO WIRE COLOR CODE, SEE 13902PRC

8. CONNECT BOND AND TEST WIRES TO METALLIC FITTINGS PRIOR TO ASSEMBLY, AS REQUIRED TO ALLOW CONNECTIONS TO BE MADE TO LEVEL FLAT (HORIZONTAL TYPE) SURFACES ON TOP OF FITTINGS.

9. ATTACH THERMITE WELD TO STUD OR WELD BASE PLATE IF PROVIDED OR TO DRY SIDE OF JOINT IF APPROVED BY PIPE MANUFACTURER.

NTS

CITY OF RAPID CITY — PUBLIC WORKS DEPARTMENT

# VERTICAL AND HORIZONTAL WIRE THERMITE WELD CONNECTIONS

DATE: 2–19–13

13901A

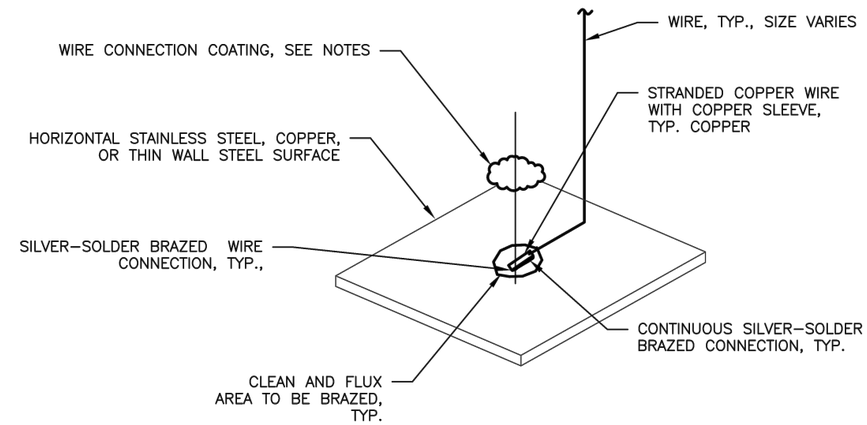


NOTES:

1. BRAZE (SILVER–SOLDER) COPPER WIRE ELECTRICAL CONNECTION TO COPPER, STAINLESS STEEL, AND THIN WALL STEEL (0.035" OR LESS) PIPING OR TUBING.

2. SELECT A LOCATION TO BRAZE ON FITTING EDGE OR LIP, SO AS TO NOT DAMAGE INTERNAL COATINGS, RUBBER LINING, OR GASKETS.

3. CLEAN AND PREPARE SURFACE FOR BRAZING. FLUX SURFACE WITH A SUITABLE TYPE FLUX FOR MATERIAL TYPES BEING SOLDERED IN ACCORDANCE WITH THE SILVER SOLDER MANUFACTURER'S INSTRUCTIONS..

4. BRAZE THE SLEEVED COPPER WIRE WITH A SUITABLE TYPE SILVER BRAZING ALLOY FOR THE MATERIALS BEING CONNECTED IN ACCORDANCE WITH BRAZE MATERIAL MANUFACTURER'S DIRECTIONS.

5. SILVER–SOLDER WIRE TO PROPERLY PREPARED AND FLUXED AREA IN A MANNER SO AS TO NOT LEAVE CRACKS OR CREVICES IN THE COMPLETED BRAZED CONNECTION. VISUALLY INSPECT AND TAP WITH HAMMER TO TEST ADHESION.

6. ALLOW TO COOL AND REMOVE REMAINING FLUX WITH (STAINLESS STEEL) WIRE BRUSH AND SOLVENT CLEAN (SSPC SP–1).

7. ONLY COAT WIRE CONNECTIONS TO COPPER AND THIN WALL STEEL PIPING OR TUBING IN SPECIFIED THERMITE WELD COATING METHOD. STAINLESS STEEL WIRE CONNECTIONS DO NOT NEED TO BE COATED.

8. UTILIZE INSULATED STRANDED COPPER WIRE ONLY, SIZE AS SPECIFIED.

NTS

CITY OF RAPID CITY — PUBLIC WORKS DEPARTMENT

# BRAZED WIRE CONNECTIONS

DATE: 2–19–13

13901B

August 17, 2016 9:26:10 a.m.
Drawing: CATHODIC DETAILS.DWG (JOENS) (P:\PROJECTS & PROPOSALS\11119.00 MT. RUSHMORE RD. UTILITIES RECONSTRUCTION\DRAWINGS\SHEETS\PHASE 2 - FLORMANN TO SAINT JAMES\)

| Prepared By: | Prepared For: | Scale: AS NOTED | Revisions: | | | Sheet Title: | Sheet No: |
|---|---|---|---|---|---|---|---|
| AES | Public Works Department<br>Engineering Services | Designed By: GW<br>Drawn By: MS<br>Design Date: 02.2016 - 04.2016<br>Print Date: 08.19.2016<br>Internal Job No: 11119.04<br>Surveyed By: SDDOT<br>Survey Date: 2012<br>Project Number: 12-2051, CIP NO.50867, PCN X02P | Number: | Description: | FOR BIDDING PURPOSES ONLY<br>MOUNT RUSHMORE ROAD<br>UTILITY RECONSTRUCTION | CATHODIC<br>PROTECTION<br>DETAILS | G69<br>of<br>G83 |

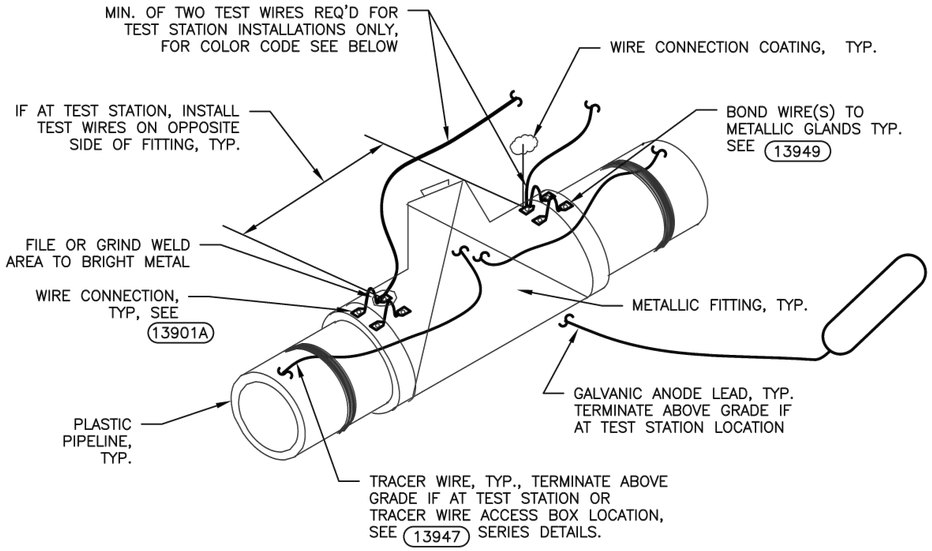


NOTES:

1. THERMITE OR PIN BRAZE WELD TO METALLIC PIPE, FITTINGS, & STRUCTURES ONLY.

2. STANDARD LOCATION FOR ANODE PLACEMENT IS ON EAST SIDE OF NORTH–SOUTH MAIN AND NORTH SIDE OF EAST–WEST MAIN. ACTUAL PLACEMENT LOCATION WILL VARY BASED UPON OTHER UTILITY CONFLICTS.

3. UTILIZE INSULATED STRANDED COPPER WIRE ONLY, SIZE AS SPECIFIED.

4. UTILIZE PURPLE TAPE TO IDENTIFY NORTH (1 STRIP) OR WEST (2 STRIPS) WIRE DIRECTION & GRAY TAPE TO IDENTIFY SOUTH (1 STRIP) OR EAST (2 STRIPS) WIRE DIRECTION, AS REQ'D.

WIRE COLOR CODE

1. PIPELINE TEST WIRES:

WATER – BLUE
HIGH LEVEL – DARK BLUE WITH 1 STRIP OF BLUE TAPE
LOW LEVEL – LIGHT BLUE WITH 1 STRIP OF WHITE TAPE

2. UNPROTECTED PIPELINE (NOT CATHODICALLY PROTECTED–e.g. PUMP STATION SIDE OF METALLIC PIPE) – BLACK

3. ANODE LEADS – BLACK

4. REFERENCE ELECTRODE WIRES – YELLOW

5. TRACER WIRES NON–METALLIC PIPE – GREEN W/ 2 STRIPS BLACK TAPE AND STRIPS OF PURPLE OR GRAY TAPE PER WIRE DIRECTION, SEE NOTE ABOVE

NTS

CITY OF RAPID CITY — PUBLIC WORKS DEPARTMENT

# PLASTIC PIPELINE METALLIC FITTING WIRE CONNECTION AND COLOR CODE

DATE: 2–19–13

13902PRC

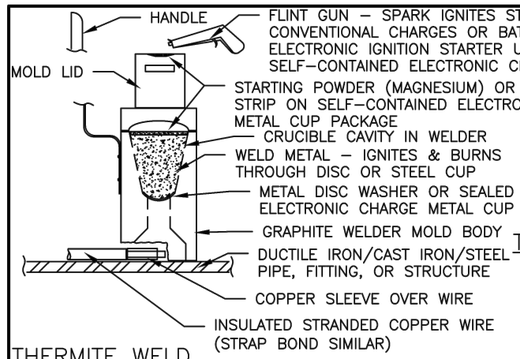


THERMITE WELD

USE CAST IRON CHARGES FOR DUCTILE IRON AND CAST IRON STRUCTURES. USE STEEL CHARGES FOR STEEL STRUCTURES.

(SIMILAR SIZE AND TYPE OF CONVENTIONAL OR ELECTRONIC IGNITION TYPE CHARGES ACCEPTABLE)

COMPLETE WELDS IN ACCORDANCE WITH MANUFACTURER'S INSTRUCTIONS

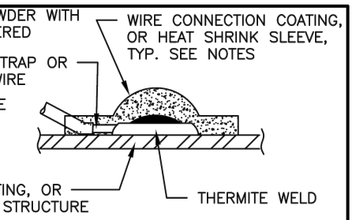


THERMITE WELD CONNECTION COATING

(WIRE BRAZED TO STRUCTURE, TYP.)

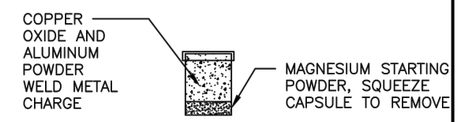


CONVENTIONAL WELD METAL CAPSULE

TYPE & SIZE VARIES (MAXIMUM 25 GRAM FOR STEEL, 32 GRAM FOR CAST & DUCTILE IRON, & 15 GRAM SIZE FOR OIL & GAS TYPE PIPELINES)

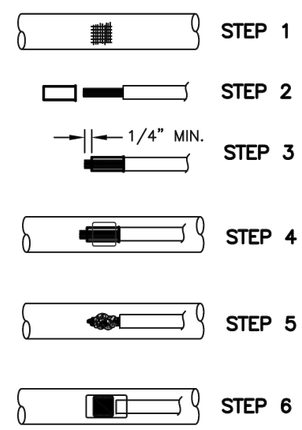


**STEP 1** — FILE STRUCTURE CONNECTION AREA (2"x2") TO BARE BRIGHT SHINY METAL & CLEAN. ALL WIRE WELDS SHALL BE A MINIMUM OF ONE PIPE DIAMETER APART UP TO A MAXIMUM OF 2 FEET SEPARATION DISTANCE.

**STEP 2** — STRIP INSULATION FROM WIRE. ATTACH COPPER SLEEVE (REQUIRED ON No. 10 AWG WIRE & SMALLER & No. 2 & No. 4 AWG JOINT BOND WIRES AS SPECIFIED)

**STEP 3** — ATTACH COPPER SLEEVE TO WIRE WITH CORRECT HAMMER DIE OR CRIMP TOOL. FACTORY SLEEVES SHALL BE ANGLED AND FIELD MADE BONDS SHALL HAVE WIRE EXTEND 1/4" PAST SLEEVE SO WIRE IS EXPOSED TO THERMITE WELD.

**STEP 4** — PLACE WASHER IN BOTTOM OF MOLD AND FILL CRUCIBLE W/POWDER OR INSERT PREPACKED ELECTRONIC CANISTER CHARGE, CLOSE LID, HOLD FIRMLY W/OPENING AWAY FROM OPERATOR, & IGNITE W/FLINT GUN OR ELECTRONIC IGNITION STARTER.

**STEP 5** — REMOVE SLAG FROM CONNECTION, VISUALLY INSPECT & TAP WELD TO TEST FOR SOUNDNESS & ADHESION W/ HAMMER. MEASURE JOINT BOND RESISTANCE AS SPECIFIED. REPLACE ALL POORLY FORMED, UNSIGHTLY, POROUS, HIGH RESISTANT, OR DEFECTIVE WELDS. INSTALL ADDITIONAL BOND WIRE OR STRAP IF REQUIRED.

**STEP 6** — CLEAN AND COAT CONNECTION AND EXPOSED STRUCTURE SURFACE WITH HEAT SHRINK SLEEVE, PRIMERLESS HANDYCAP, OR EPOXY REPAIR COATING MATERIALS PER BELOW, APPLY IN ACCORDANCE WITH COATING MANUFACTURER'S RECOMMENDATIONS.

6–A. IF THERMITE WELD CONNECTION LOCATED AT PIPE JOINT TO BE COATED WITH HEAT SHRINK SLEEVE, APPLY MASTIC FILLER & HEAT SHRINK SLEEVE OVER CONNECTION. NO WELD CAP REQUIRED. IF NOT HEAT SHRINKED, THEN EITHER:
6–B. UTILIZE REGULAR SIZE PRIMERLESS THERMITE WELD CAP FOR No. 8 AWG AND SMALLER WIRE.
6–C. UTILIZE PRIMERLESS HANDYCAP XL–IP (EXTRA LARGE) OR EQUAL FOR No. 6 AND LARGER WIRE AND PIN WELD TYPE CONNECTIONS.
6–D. OR UTILIZE 100 PERCENT MOISTURE TOLERANT EPOXY REPAIR COATING FOR HARD TO COAT CONNECTIONS AND SPOT EXTERNAL COATING REPAIRS.
6–E. REPAIR PIPE OR STRUCTURE COATING DAMAGE WITH SPECIFIED AND APPROVED COATING REPAIR MATERIALS FOR ORIGINAL COATING TYPE.

GENERAL EXOTHERMIC WELD AND COATING PROCEDURES

NTS

CITY OF RAPID CITY — PUBLIC WORKS DEPARTMENT

# THERMITE WELD WIRE CONNECTIONS

DATE: 2–19–13

13903

August 17, 2016 9:26:10 a.m.
Drawing: CATHODIC DETAILS.DWG (JOENS) (P:\PROJECTS & PROPOSALS\11119.00 MT. RUSHMORE RD. UTILITIES RECONSTRUCTION\DRAWINGS\SHEETS\PHASE 2 – FLORMANN TO SAINT JAMES\)

| Prepared By: | Prepared For: | Scale: AS NOTED | Revisions: | | | Sheet Title: | Sheet No: |
|---|---|---|---|---|---|---|---|
| AE2S | Public Works Department<br>Engineering Services | Designed By: GW<br>Drawn By: MS<br>Design Date: 02.2016 - 04.2016<br>Print Date: 08.19.2016<br>Internal Job No: 11119.04<br>Surveyed By: SDDOT<br>Survey Date: 2012<br>Project Number: 12-2051, CIP NO.50867, PCN X02P | Number: | Description: | FOR BIDDING PURPOSES ONLY<br>MOUNT RUSHMORE ROAD<br>UTILITY RECONSTRUCTION | CATHODIC<br>PROTECTION<br>DETAILS | G70<br>of<br>G83 |

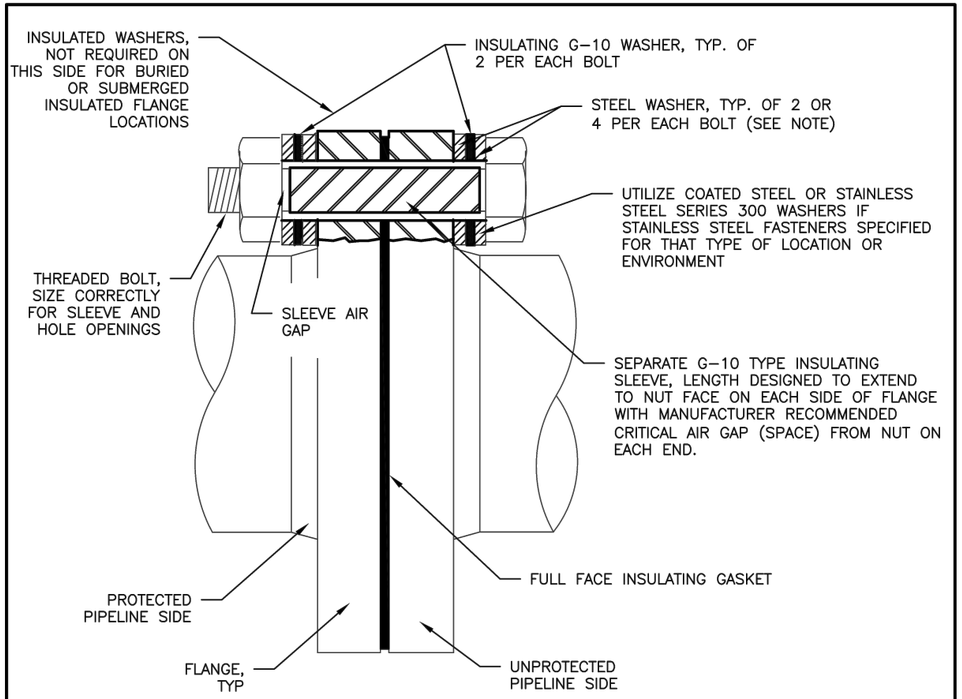


NOTES:

1. ABOVE GRADE INSULATED FLANGE INSTALLATION SHOWN. FOR BURIED OR SUBMERGED INSULATING FLANGE INSTALLATIONS, DO NOT INSTALL INSULATING WASHER ON PROTECTED SIDE OF INSULATING FLANGE.

2. COAT BURIED OR SUBMERGED FLANGE AFTER ASSEMBLY PER SPECIFICATIONS.

3. INSULATED FLANGES IN BURIED APPLICATIONS ALLOWED ONLY FOR PIPE UP TO 36" DIAMETER.

4. TEST INSULATED FLANGES FOR ELECTRICAL ISOLATION. TEST BURIED INSULATORS BOTH PRIOR TO AND AFTER BURIAL.

NTS

RUST

CITY OF RAPID CITY — PUBLIC WORKS DEPARTMENT

## INSULATING FLANGE

DATE: 2–19–13

13911

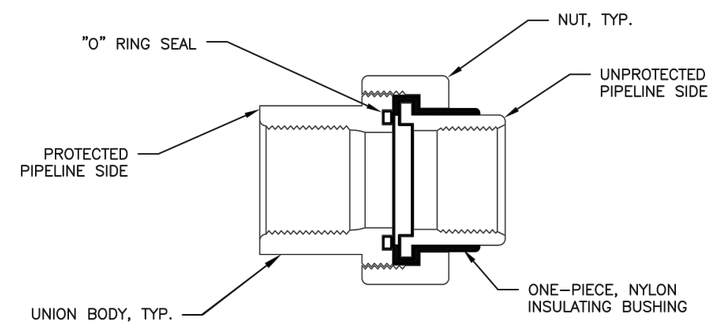


NOTES:

1. "O" RING TYPE INSULATING UNION SHOWN. OTHER TYPES (BRASS INSULATED CURB BALL VALVES, STRAIGHT COUPLINGS, CORPORATION BALL VALVES, METER COUPLINGS, ETC.) SIMILAR.

2. INSULATING O–RING AND NYLON INSULATOR BUSHING SHALL BE MOLDED & BONDED TO THE UNION BODY BY MANUFACTURER.

3. ABOVEGRADE IRON PIPE SHALL HAVE GALV. OR COATED STEEL BODIES, UNIONS IN BURIED OR CORROSIVE AREAS SHALL BE COATED.

4. COPPER SERVICE LINE INSULATORS SHALL HAVE BRASS UNION BODY WITH INSULATORS FORMED AND MOLDED INTO BRASS BODY, MUELLER OR APPROVED EQUAL.

5. STAINLESS STEEL LINE INSULATORS SHALL HAVE STAINLESS STEEL BODY WITH INSULATORS FORMED AND MOLDED INTO STAINLESS STEEL FITTING BODY.

NTS

RUST

CITY OF RAPID CITY — PUBLIC WORKS DEPARTMENT

## INSULATING UNIONS AND/OR COPPER SERVICE INSULATORS

DATE: 2–19–13

13913

August 17, 2016 9:26:10 a.m.
Drawing: CATHODIC DETAILS.DWG (JKEHS) (P:\PROJECTS & PROPOSALS\11119.00 MT. RUSHMORE RD. UTILITIES RECONSTRUCTION\DRAWINGS\SHEETS\PHASE 2 - FLORMANN TO SAINT JAMES\)

| Prepared By: | Prepared For: | Scale: AS NOTED | Revisions: | | | Sheet Title: | Sheet No: |
|---|---|---|---|---|---|---|---|
| AE2S | Public Works Department<br>Engineering Services | Designed By: GW<br>Drawn By: MS<br>Design Date: 02.2016 - 04.2016<br>Print Date: 08.19.2016<br>Internal Job No: 11119.04<br>Surveyed By: SDDOT<br>Survey Date: 2012<br>Project Number: 12-2051, CIP NO.50867, PCN X02P | Number: | Description: | FOR BIDDING PURPOSES ONLY<br>MOUNT RUSHMORE ROAD UTILITY RECONSTRUCTION | CATHODIC PROTECTION DETAILS | G71 of G83 |

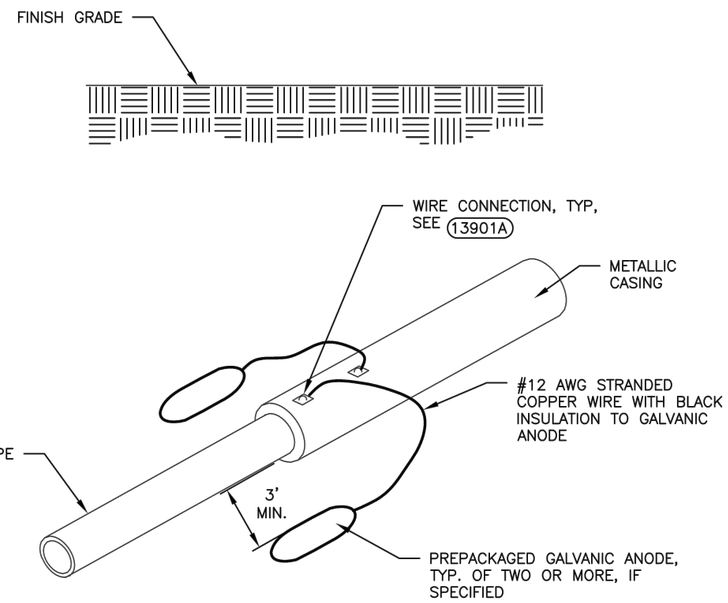


NOTES:

1. INSTALL NUMBER AND SIZE OF PREPACKAGED GALVANIC ANODES DIRECTLY TO EACH END OF METALLIC CASING.

2. INSTALL GALVANIC ANODE IN NATIVE SOIL, A MINIMUM OF 1-FOOT BELOW AND 3-FOOT FROM END OF METALLIC CASING END.

NTS

CITY OF RAPID CITY — PUBLIC WORKS DEPARTMENT

# GALVANIC ANODES AT CASINGS

DATE: 2-19-13

13916A

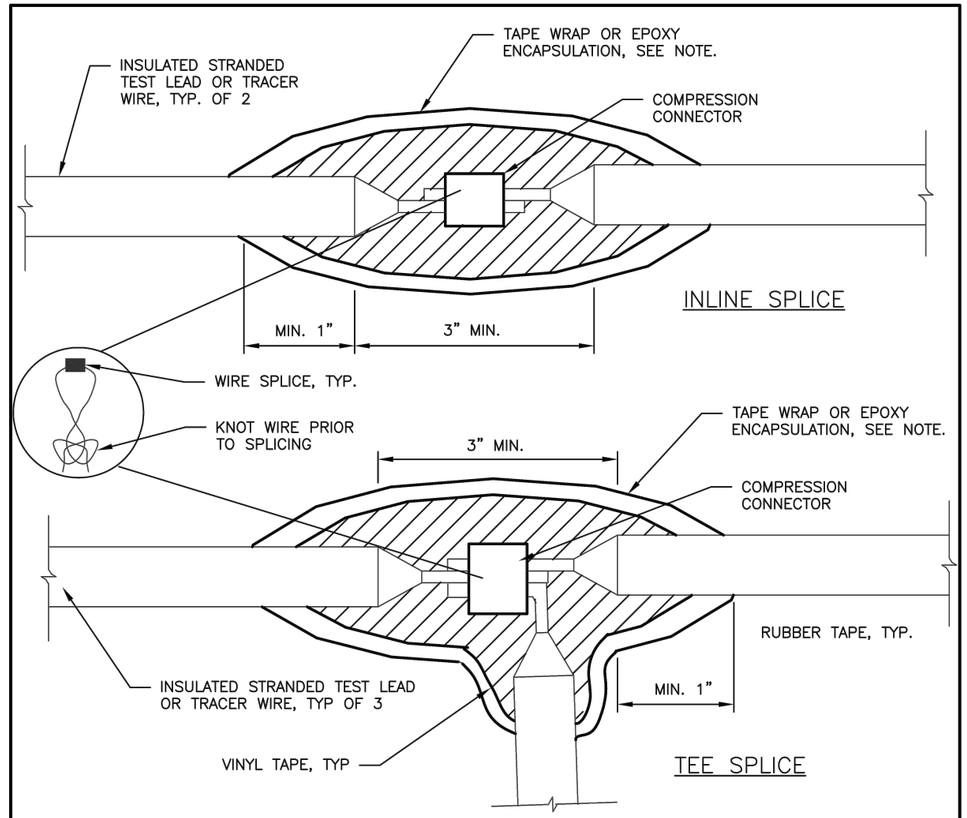


NOTES:

1. KNOT WIRES PRIOR TO MAKING SPLICE TO MINIMIZE STRESS ON SPLICE.

2. MAKE WIRE SPLICE CONNECTION WITH COMPRESSION TYPE CONNECTOR IN ACCORDANCE WITH COMPRESSION CONNECTOR MANUFACTURER RECOMMENDATIONS OR SECURE WITH SPLIT BOLT AND SILVER SOLDER FOR TEST WIRES DO NOT USE BUTT SPLICES OR WIRE NUTS. COMPLETE ALL SPLICES ONLY IN THE PRESENCE OF THE ENGINEER.

3. WRAP ENTIRE CONNECTION WITH TWO (2) LAYERS OF HIGH VOLTAGE RUBBER TAPE AND THEN WRAP WITH TWO (2) LAYERS OF VINYL ELECTRICAL TAPE AND COAT WITH SEALER OR ENCAPSULATE IN EPOXY SPLICE KIT. EXTEND A MINIMUM OF 1-INCH ONTO INTACT WIRE INSULATION.

4. TEST LEADS SHALL BE COMPLETED PER DETAIL.

NTS

CITY OF RAPID CITY — PUBLIC WORKS DEPARTMENT

# TEST LEAD SPLICES

DATE: 2-19-13

13929S

August 17, 2016 9:26:10 a.m.
Drawing: CATHODIC DETAILS.DWG (JOENS) (P:\PROJECTS & PROPOSALS\11119.00 MT. RUSHMORE RD. UTILITIES RECONSTRUCTION\DRAWINGS\SHEETS\PHASE 2 - FLORMANN TO SAINT JAMES\)

| Prepared By: | Prepared For: | Scale: AS NOTED | Revisions: | | | Sheet Title: | Sheet No: |
|---|---|---|---|---|---|---|---|
| AE2S | Public Works Department<br>Rapid City, South Dakota, Incorporated 1882<br>Engineering Services | Designed By: GW<br>Drawn By: MS<br>Design Date: 02.2016 - 04.2016<br>Print Date: 08.19.2016<br>Internal Job No: 11119.04<br>Surveyed By: SDDOT<br>Survey Date: 2012<br>Project Number: 12-2051, CIP NO.50867, PCN X02P | Number: | Description: | FOR BIDDING PURPOSES ONLY<br>MOUNT RUSHMORE ROAD<br>UTILITY RECONSTRUCTION | CATHODIC<br>PROTECTION<br>DETAILS | G72<br>of<br>G83 |

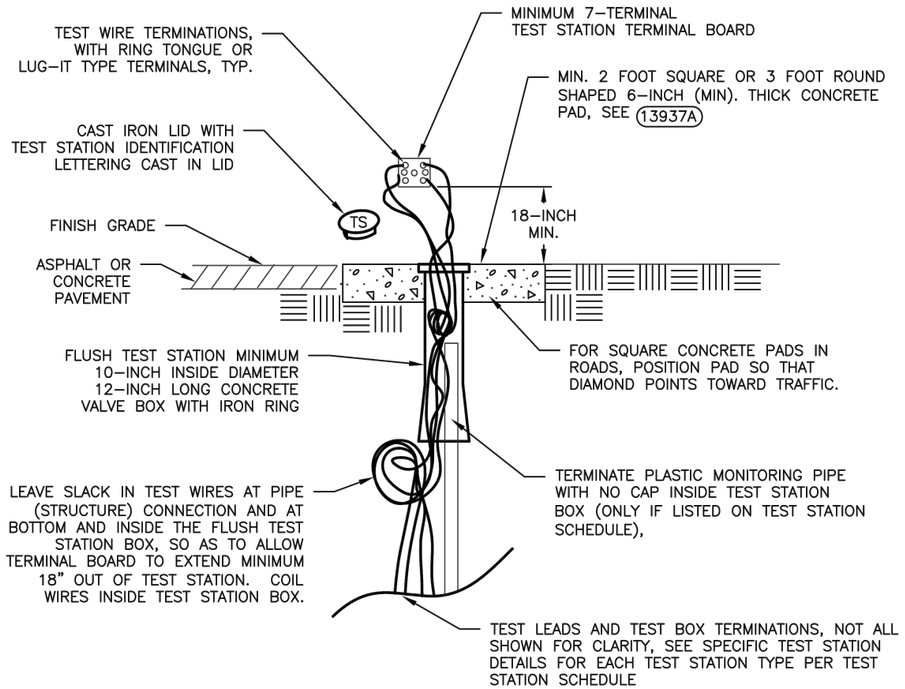


NOTES:

1. INSTALL PLASTIC MONITORING PIPE OR REFERENCE ELECTRODE ONLY AT TEST STATION LOCATIONS INDICATED ON TEST STATION LOCATION SCHEDULE OR DRAWINGS. INSTALL PIPE MARKING SIGNS NEXT TO TEST STATIONS IF SPECIFIED.
2. UTILIZE INSULATED STRANDED COPPER WIRE ONLY, SIZE AS SPECIFIED. COLOR CODE WIRES ACCORDING TO WIRE COLOR CODE, SEE 13902PRC
3. LOCATE TEST STATION IN PROTECTED LOCATION DIRECTLY OVER PIPE UNLESS OFFSET REQUIRED BY SPECS. OR FIELD CONDITIONS (IN ROAD, FIELD, ETC.). OFFSET TO APPURTENANCES, R.O.W. FENCELINE OR EDGE OF ROADWAY, IF NO PROTECTED LOCATION AVAILABLE OVER PIPELINE. COORDINATE LOCATIONS WITH ENGINEER.
4. IF TEST STATION AND TRACER WIRE ACCESS BOXES AT SAME LOCATION, SEE INSET ON 13942FH

NTS

RUST

CITY OF RAPID CITY — PUBLIC WORKS DEPARTMENT

## FLUSH-MOUNTED TEST STATION STANDARD FLUSH TYPES

DATE: 2–19–13

13937

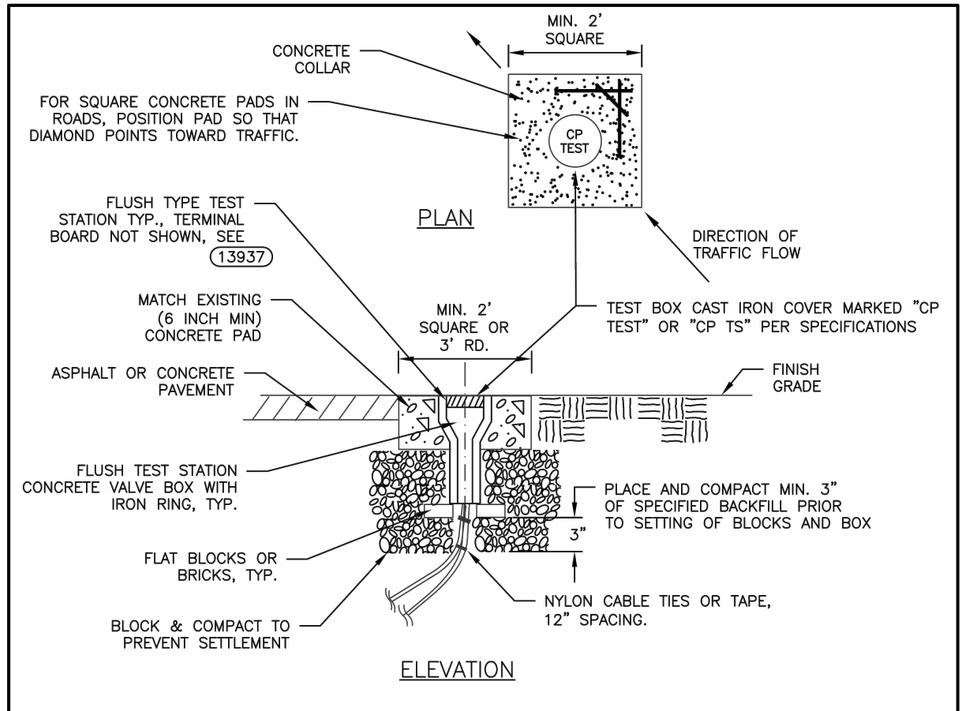


NOTES:

1. TEST STATION TYPE AND NUMBER OF TEST LEADS SHALL BE AS INDICATED ON TEST STATION SCHEDULE OR DRAWINGS. UTILIZE INSULATED STRANDED COPPER WIRE ONLY, SIZE AS SPECIFIED. COLOR CODE WIRES ACCORDING TO WIRE COLOR CODE SPECIFIED, SEE 13902PRC
2. ALL WIRES SHALL BE RUN WITHOUT SPLICES FROM THE CONNECTION TO THE TEST STATION BOX. TERMINATE WITH RING TONGUE OR LUG–IT TYPE TERMINALS AND BUNDLE WIRES TOGETHER AT 12–INCH INTERVALS WITH ELECTRICAL TAPE OR NYLON CABLE TIES.
3. PROVIDE ALL WIRES WITH SUFFICIENT SLACK SO THAT THE TERMINAL BOARD MAY BE EXTENDED A MINIMUM 18–INCHES ABOVE THE TOP OF THE TEST BOX. COIL WIRES IN TEST STATION. LOOP WIRES BOTH AT BOTTOM OF TEST STATION AND AT PIPE OR STRUCTURE TO MINIMIZE DAMAGE DURING BACKFILLING AND FUTURE SETTLEMENT.

NTS

RUST

CITY OF RAPID CITY — PUBLIC WORKS DEPARTMENT

## TYPICAL FLUSH MOUNTED TEST STATION BOX SUPPORT

DATE: 2–19–13

13937A

August 17, 2016 9:26:10 a.m.
Drawing: CATHODIC DETAILS.DWG (JOENS) (P:\PROJECTS & PROPOSALS\11119.00 MT. RUSHMORE RD. UTILITIES RECONSTRUCTION\DRAWINGS\SHEETS\PHASE 2 – FLORMANN TO SAINT JAMES\)

| Prepared By: | Prepared For: | Scale: AS NOTED | Revisions: | | | Sheet Title: | Sheet No: |
|---|---|---|---|---|---|---|---|
| AE2S | Public Works Department<br>Engineering Services | Designed By: GW<br>Drawn By: MS<br>Design Date: 02.2016 - 04.2016<br>Print Date: 08.19.2016<br>Internal Job No: 11119.04<br>Surveyed By: SDDOT<br>Survey Date: 2012<br>Project Number: 12-2051, CIP NO.50867, PCN X02P | Number: | Description: | FOR BIDDING PURPOSES ONLY<br>MOUNT RUSHMORE ROAD<br>UTILITY RECONSTRUCTION | CATHODIC<br>PROTECTION<br>DETAILS | G73<br>of<br>G83 |

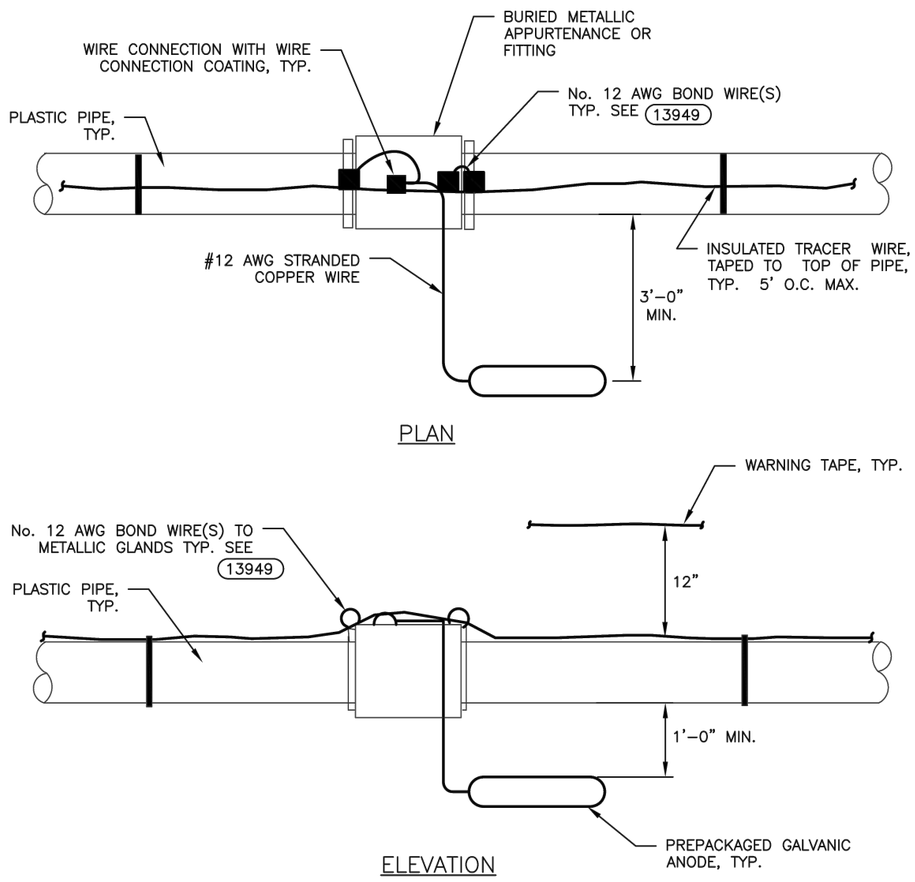


NOTES

1. MINIMUM OF TWO No. 12 AWG BOND WIRES EACH FOR 12" AND LARGER PIPE, ONE BOND WIRE FOR SMALLER PIPE.

2. PROVIDE TYPE, NUMBER & SIZE OF ANODES AS SPECIFIED, MINIMUM SHALL BE ONE ANODE PER FITTING

NTS

CITY OF RAPID CITY — PUBLIC WORKS DEPARTMENT

# GALVANIC ANODE INSTALLATION AT BURIED METALLIC FITTINGS

DATE: 2-19-13

13940

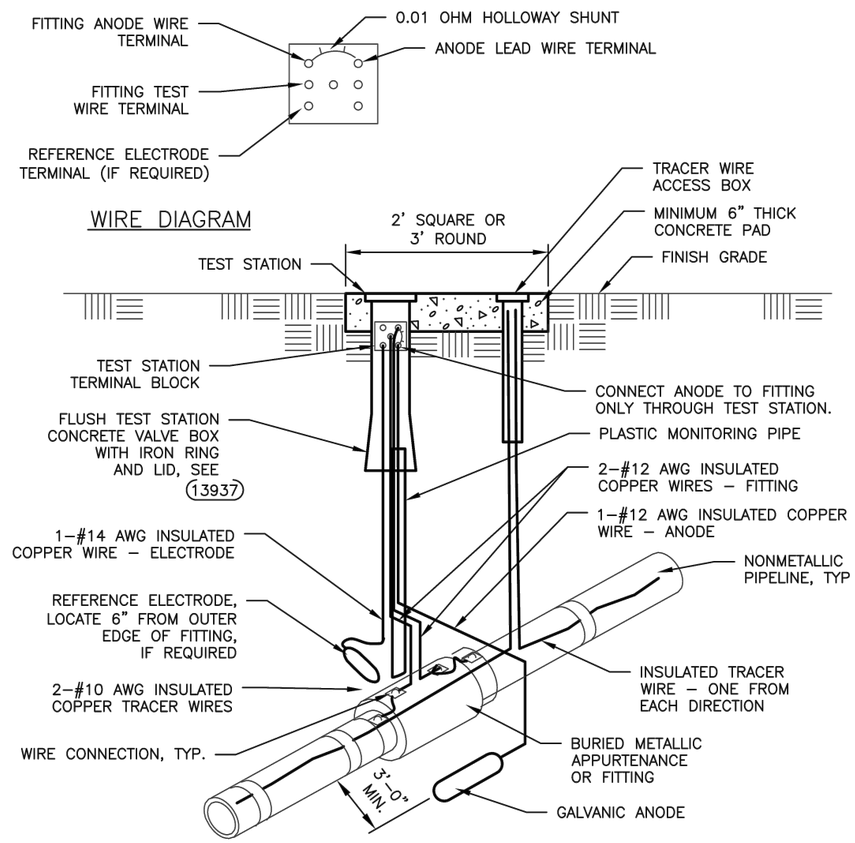


NOTES:

1. PROVIDE SUFFICIENT SLACK IN TEST WIRES TO ALLOW TERMINAL BLOCK TO EXTEND 18" OUT OF TEST STATION. COIL WIRES IN TEST STATION.

2. INSTALL GALVANIC ANODE MINIMUM 1'-0" BELOW PIPE INVERT ELEVATION.

3. INSTALL REFERENCE ELECTRODE OR PLASTIC MONITORING PIPE ONLY AT TEST STATIONS INDICATED ON TEST STATION LOCATION SCHEDULE.

4. COLOR CODE WIRES ACCORDING TO WIRE COLOR CODE, SEE 13902PRC

5. IF TEST STATION AND TRACER WIRE ACCESS BOXES AT SAME LOCATION, SEE INSET ON 13942FH

NTS

CITY OF RAPID CITY — PUBLIC WORKS DEPARTMENT

# FLUSH-MOUNTED TEST STATION WITH GALVANIC ANODE ( GALVANIC ANODE TO FITTING)

DATE: 2-19-13

13942

August 17, 2016 9:26:10 a.m.
Drawing: CATHODIC DETAILS.DWG (JOENS) (P:\PROJECTS & PROPOSALS\11119.00 MT. RUSHMORE RD. UTILITIES RECONSTRUCTION\DRAWINGS\SHEETS\PHASE 2 - FLORMANN TO SAINT JAMES\)

| Prepared By: | Prepared For: | Scale: AS NOTED | Revisions: | | | Sheet Title: | Sheet No: |
|---|---|---|---|---|---|---|---|
| AE2S | Public Works Department<br>Rapid City, South Dakota, Incorporated 1882<br>Engineering Services | Designed By: GW<br>Drawn By: MS<br>Design Date: 02.2016 - 04.2016<br>Print Date: 08.19.2016<br>Internal Job No: 11119.04<br>Surveyed By: SDDOT<br>Survey Date: 2012<br>Project Number: 12-2051, CIP NO.50867, PCN X02P | Number: | Description: | FOR BIDDING PURPOSES ONLY<br>MOUNT RUSHMORE ROAD<br>UTILITY RECONSTRUCTION | CATHODIC<br>PROTECTION<br>DETAILS | G74<br>of<br>G83 |

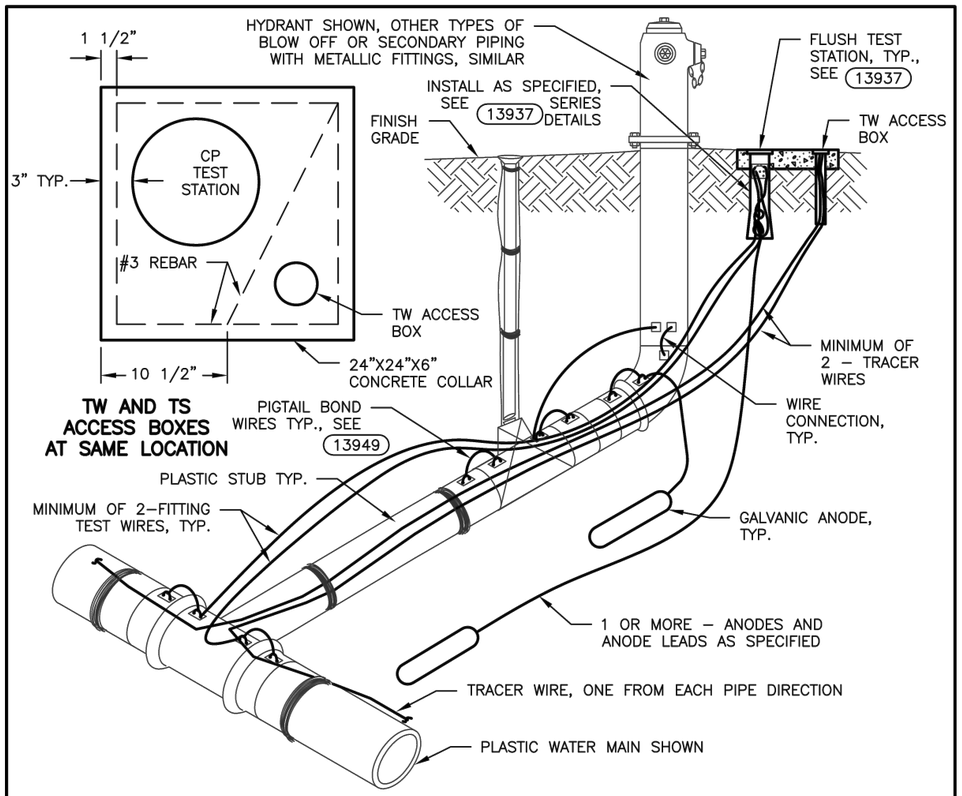


NOTES:

1. PLACE TEST STATION IN A PROTECTED LOCATION SO AS TO NOT INTERFERE WITH OPERATION OF VALVES OR FIRE HYDRANT. TERMINATE FITTING TEST WIRES, ANODE LEAD AND TRACER WIRES IN TEST STATION WITH MIN. 18" SLACK.

2. INSTALL GALVANIC ANODE MINIMUM 3'–0" FROM AND 1'–0" BELOW PIPELINE, FITTING, OR VALVE INVERT ELEVATION. INSTALL MINIMUM NUMBER, TYPE, & SIZE OF GALVANIC ANODES SPECIFIED,

NTS

CITY OF RAPID CITY — PUBLIC WORKS DEPARTMENT

## FLUSH TYPE TEST STATIONS AT HYDRANT ASSEMBLIES W/ PLASTIC STUB

DATE: 2–19–13

13942FH

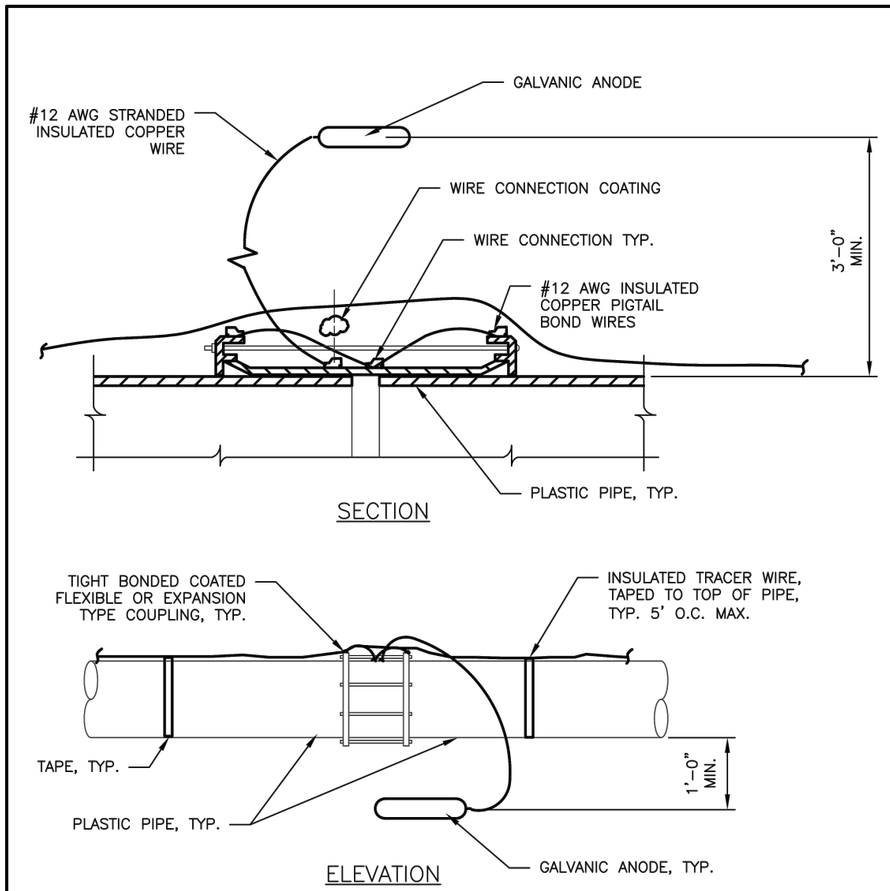


NOTES:

1. MIN. TWO EACH No. 12 AWG BONDS EACH FOR 12" AND LARGER PIPE, ONE BOND ALLOWED FOR SMALLER PIPE.

2. PROVIDE TYPE, NUMBER & SIZE OF ANODES AS SPECIFIED, MINIMUM SHALL BE ONE ANODE PER FITTING

NTS

CITY OF RAPID CITY — PUBLIC WORKS DEPARTMENT

## CORROSION PROTECTION FOR FLEXIBLE METALLIC COUPLINGS ON PLASTIC PIPE

DATE: 2–19–13

13943

August 17, 2016 9:26:10 a.m.
Drawing: CATHODIC DETAILS.DWG (JOENS) (P:\PROJECTS & PROPOSALS\11119.00 MT. RUSHMORE RD. UTILITIES RECONSTRUCTION\DRAWINGS\SHEETS\PHASE 2 - FLORMANN TO SAINT JAMES\)

| Prepared By: | Prepared For: | Scale: AS NOTED | Revisions: | | | Sheet Title: | Sheet No: |
|---|---|---|---|---|---|---|---|
| AE2S | Public Works Department<br>Rapid City, South Dakota, Incorporated 1882<br>Engineering Services | Designed By: GW<br>Drawn By: MS<br>Design Date: 02.2016 - 04.2016<br>Print Date: 08.19.2016<br>Internal Job No: 11119.04<br>Surveyed By: SDDOT<br>Survey Date: 2012<br>Project Number: 12-2051, CIP NO.50867, PCN X02P | Number: | Description: | FOR BIDDING PURPOSES ONLY<br>MOUNT RUSHMORE ROAD<br>UTILITY RECONSTRUCTION | CATHODIC<br>PROTECTION<br>DETAILS | G75<br>of<br>G83 |

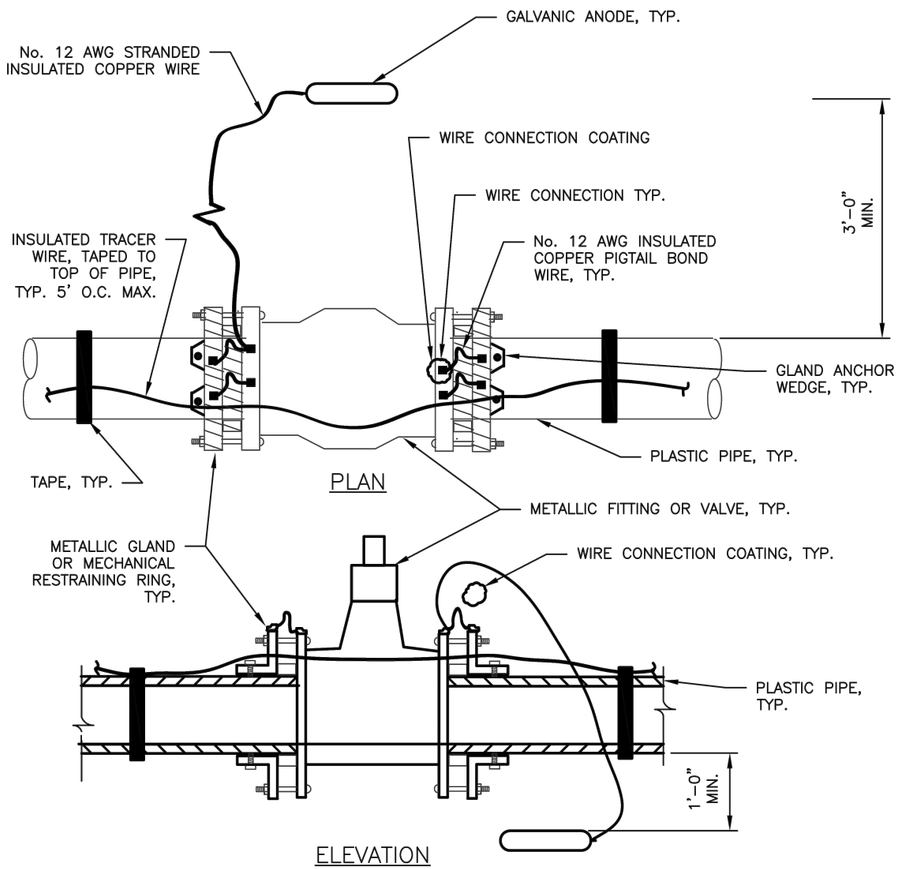


NOTES:

1. BOND PLASTIC PIPE METALLIC GLANDS OR MECHANICAL RESTRAINING RINGS TO METALLIC VALVE OR FITTING BODY, SEE 13940 AND 13949

2. PROVIDE TYPE, NUMBER & SIZE OF ANODES AS SPECIFIED, MINIMUM SHALL BE ONE ANODE PER FITTING

NTS

CITY OF RAPID CITY — PUBLIC WORKS DEPARTMENT

## CORROSION PROTECTION FOR METALLIC VALVES OR FITTINGS ON PLASTIC PIPE

DATE: 2-19-13

13943DIP

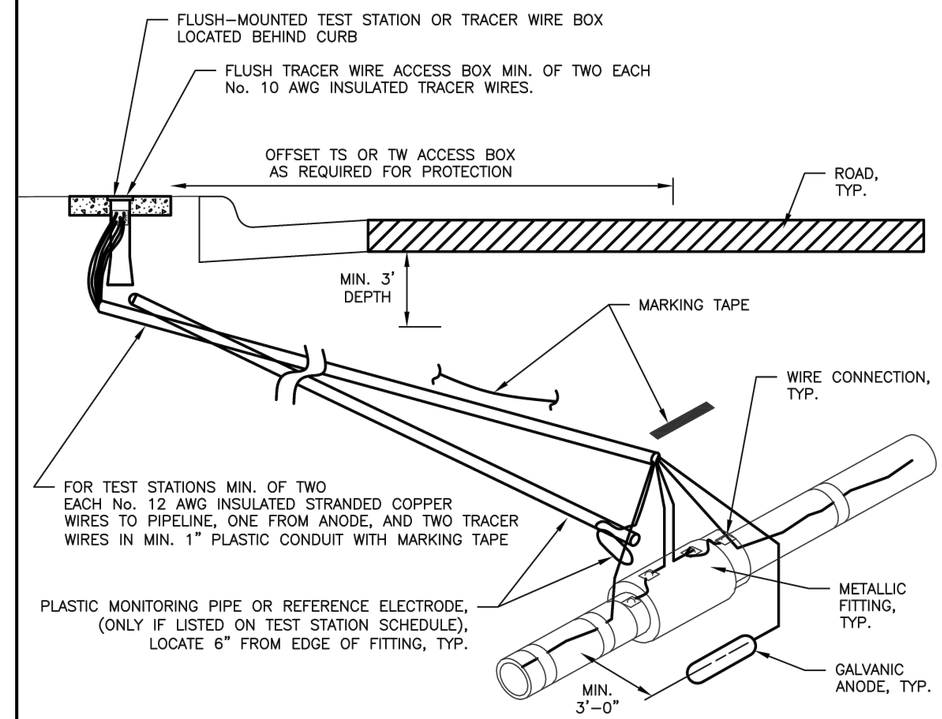


NOTES:

1. OFFSET BEHIND CURB AND GUTTER FOR TEST STATION OR TRACER WIRE ACCESS BOX OFFSET LOCATIONS INDICATED ON TEST STATION SCHEDULE OR PLAN DRAWINGS. INSTALL 1-INCH CONDUIT WITH TEST AND TRACER WIRES TO OFFSET TEST STATION OR TRACER ACCESS BOX LOCATIONS AS SHOWN.

2. COLOR CODE WIRES ACCORDING TO WIRE COLOR CODE, SEE 13902PRC

3. UTILIZE INSULATED STRANDED COPPER WIRE ONLY, SIZE AS SPECIFIED.

4. IF TEST STATION AND TRACER WIRE ACCESS BOX ARE CALLED OUT AT SAME LOCATION, REFER TO INSET ON 13942FH

NTS

CITY OF RAPID CITY — PUBLIC WORKS DEPARTMENT

## FLUSH TEST STATION OR TRACER WIRE ACCESS BOX OFFSET LOCATIONS

DATE: 2-19-13

13944FO

August 17, 2016 9:26:10 a.m.
Drawing: CATHODIC DETAILS.DWG (J:\DENS) (P:\PROJECTS & PROPOSALS\11119.00 MT. RUSHMORE RD. UTILITIES RECONSTRUCTION\DRAWINGS\SHEETS\PHASE 2 - FLORMANN TO SAINT JAMES\)

| Prepared By: | Prepared For: | Scale: AS NOTED | Revisions: | | | Sheet Title: | Sheet No: |
|---|---|---|---|---|---|---|---|
| AE2S | Public Works Department<br>Engineering Services | Designed By: GW<br>Drawn By: MS<br>Design Date: 02.2016 - 04.2016<br>Print Date: 08.19.2016<br>Internal Job No: 11119.04<br>Surveyed By: SDDOT<br>Survey Date: 2012<br>Project Number: 12-2051, CIP NO.50867, PCN X02P | Number: | Description: | FOR BIDDING PURPOSES ONLY<br>MOUNT RUSHMORE ROAD UTILITY RECONSTRUCTION | CATHODIC PROTECTION DETAILS | G76 of G83 |

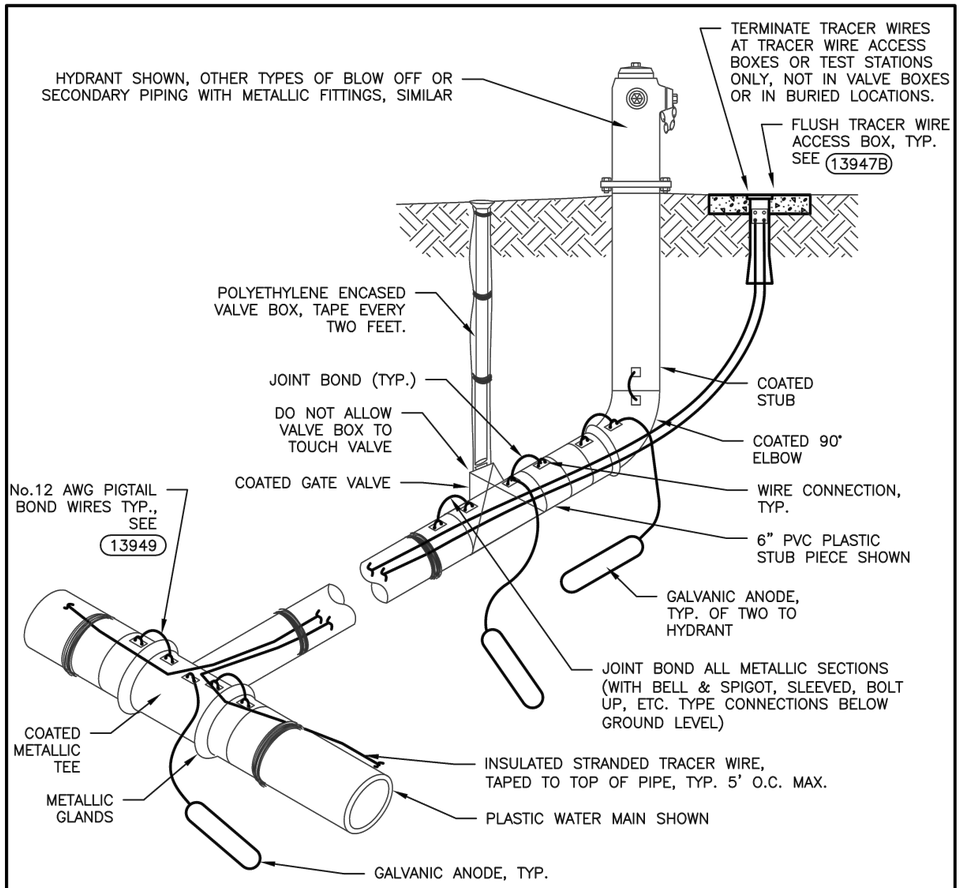


NOTES:

1. INSTALL GALVANIC ANODE MINIMUM 3'–0" FROM AND 1'–0" BELOW PIPELINE, FITTING, OR VALVE INVERT ELEVATION.
2. INSTALL MINIMUM NUMBER, TYPE, & SIZE OF GALVANIC ANODES SPECIFIED, MINIMUM OF TWO ANODES TO FIRE HYDRANT ASSEMBLY AND ONE OR MORE ANODE(S) PER EACH METALLIC FITTING. NUMBER AND SIZE OF ANODES ON METALLIC TEE WILL DEPEND ON MAINLINE DIAMETER.

NTS

CITY OF RAPID CITY — PUBLIC WORKS DEPARTMENT

## GALVANIC ANODE INSTALLATION AT HYDRANT ASSEMBLIES W/ PLASTIC STUB

DATE: 2–19–13

13944T

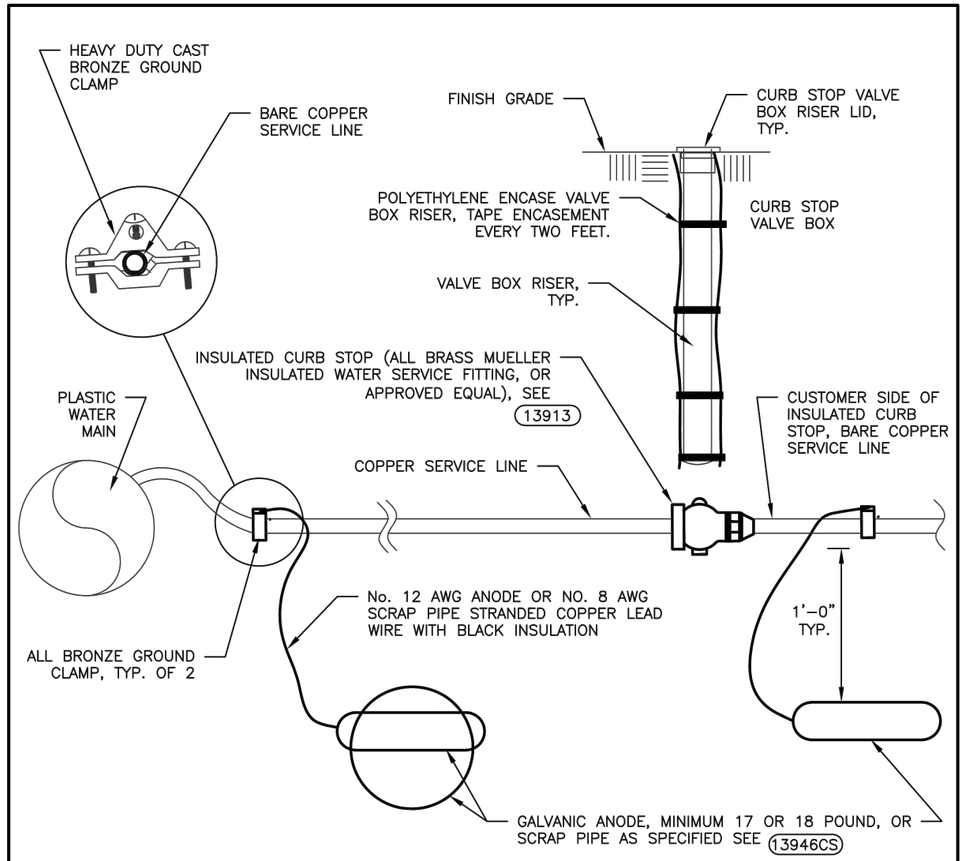


NOTES:

1. INSTALL GALVANIC ANODES OR SCRAP PIPE ANODES TO COPPER SERVICE LINE ON BOTH SIDES OF INSULATED CURB STOP WITH A MINIMUM OF ONE ON WATER MAIN SIDE AND ONE ON CUSTOMER SIDE.
2. INSTALL INSULATED CURB STOP TO EXISTING COPPER SERVICE LINE AT CUSTOMER SERVICE CONNECTION AS SHOWN ON THE DRAWINGS AND SPECIFIED IN SECTION 8B.

NTS

CITY OF RAPID CITY — PUBLIC WORKS DEPARTMENT

## INSULATOR AND WIRE CONNECTIONS TO CUSTOMER COPPER SERVICE LINES

DATE: 2–19–13

13945CS

August 17, 2016 9:26:10 a.m.
Drawing: CATHODIC DETAILS.DWG (JOENS) (P:\PROJECTS & PROPOSALS\11119.00 MT. RUSHMORE RD. UTILITIES RECONSTRUCTION\DRAWINGS\SHEETS\PHASE 2 - FLORMANN TO SAINT JAMES\)

| Prepared By: | Prepared For: | Scale: AS NOTED | Revisions: | | | Sheet Title: | Sheet No: |
|---|---|---|---|---|---|---|---|
| AE2S | Public Works Department<br>Engineering Services | Designed By: GW<br>Drawn By: MS<br>Design Date: 02.2016 - 04.2016<br>Print Date: 08.19.2016<br>Internal Job No: 11119.04<br>Surveyed By: SDDOT<br>Survey Date: 2012<br>Project Number: 12-2051, CIP NO.50867, PCN X02P | Number: | Description: | FOR BIDDING PURPOSES ONLY<br>MOUNT RUSHMORE ROAD UTILITY RECONSTRUCTION | CATHODIC PROTECTION DETAILS | G77 of G83 |

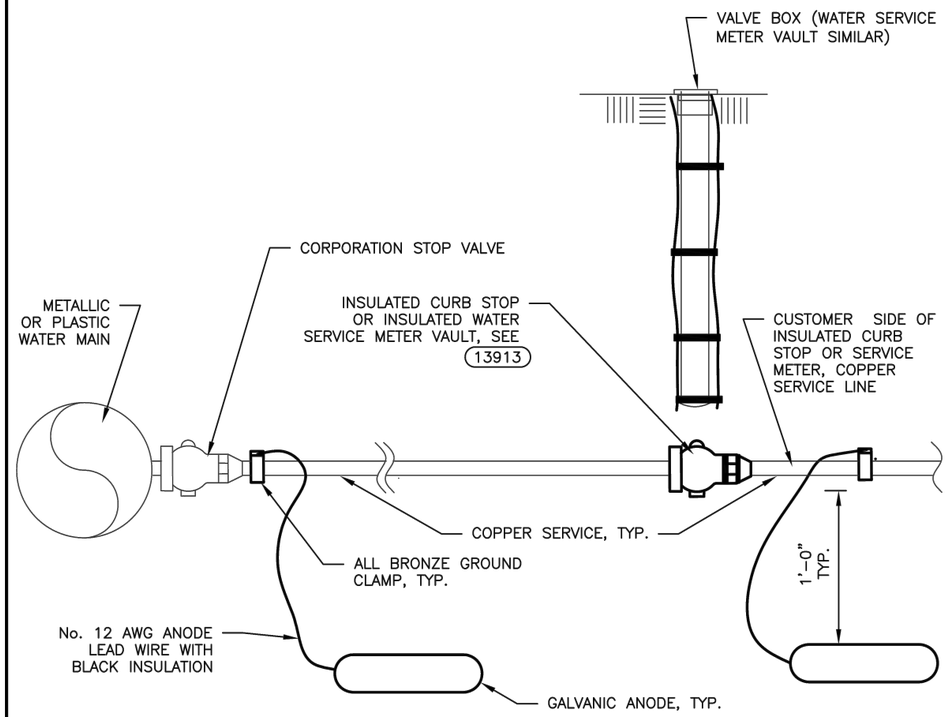


NOTES:

1. INSTALL ELECTRICAL INSULATORS AT CONNECTION TO METALLIC WATER MAIN AND AT CUSTOMER SERVICE CURB STOP OR WATER METER VAULT LOCATION, IF COPPER TYPE SERVICE ON CUSTOMER SIDE.

2. INSTALL GALVANIC ANODES TO COPPER SERVICE LINE ON BOTH SIDES OF INSULATED CORPORATION STOP OR SERVICE METER. MINIMUM ONE ANODE ON WATER MAIN SIDE AND ONE ANODE ON CUSTOMER SIDE COPPER SERVICE. MAINTAIN ELECTRICAL ISOLATION BETWEEN WATER MAIN AND CUSTOMER COPPER SERVICE LINES.

NTS

CITY OF RAPID CITY — PUBLIC WORKS DEPARTMENT

# PLASTIC MAIN WITH CUSTOMER COPPER SERVICE LINE INSULATORS AND ANODES

DATE: 2-19-13

13946P

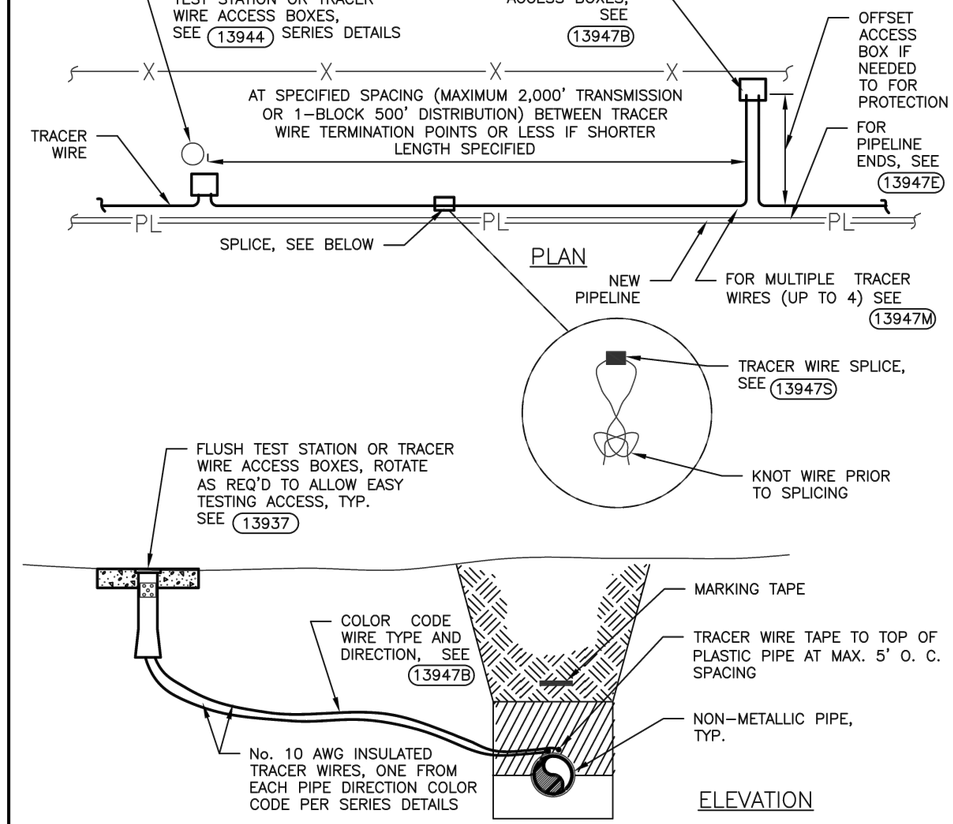


NOTES:

1. TERMINATE TRACER WIRE AT TEST STATIONS OR TRACER WIRE ACCESS BOXES LOCATED AT SPECIFIED DISTANCES, STRUCTURES AND END OF EACH PIPE RUN. TEST TRACER WIRE ELECTRICAL CONTINUITY AS SPECIFIED PRIOR TO PLACEMENT OF CURB AND GUTTER OR PAVING. DO NOT CONNECT TRACER WIRE DIRECTLY TO EXSITING OR NEW METALLIC PIPE OR FITTING. USE TRACER BOX OR TEST STATIONS.

2. LOCATE TRACER WIRE ACCESS BOXES OR TEST STATIONS IN PROTECTED LOCATIONS DIRECTLY OVER PIPE UNLESS OFFSET REQUIRED BY SPECS. OR FIELD CONDITIONS (IN ROAD, FIELD, ETC.). OFFSET TO BACK OF CURB AND GUTTER OR HYDRANT, IF NO PROTECTED LOCATION AVAILABLE OVER PIPELINE. COORDINATE LOCATIONS WITH ENGINEER.

NTS

CITY OF RAPID CITY — PUBLIC WORKS DEPARTMENT

# TRACER WIRE DETAIL

DATE: 2-19-13

13947

August 17, 2016 9:26:10 a.m.
Drawing: CATHODIC DETAILS.DWG (JDENS) (P:\PROJECTS & PROPOSALS\11119.00 MT. RUSHMORE RD. UTILITIES RECONSTRUCTION\DRAWINGS\SHEETS\PHASE 2 - FLORMANN TO SAINT JAMES\)

| Prepared By: | Prepared For: | Scale: AS NOTED | Revisions: | | | Sheet Title: | Sheet No: |
|---|---|---|---|---|---|---|---|
| AE2S | Public Works Department<br>Engineering Services | Designed By: GW<br>Drawn By: MS<br>Design Date: 02.2016 - 04.2016<br>Print Date: 08.19.2016<br>Internal Job No: 11119.04<br>Surveyed By: SDDOT<br>Survey Date: 2012<br>Project Number: 12-2051, CIP NO.50867, PCN X02P | Number: | Description: | FOR BIDDING PURPOSES ONLY<br>MOUNT RUSHMORE ROAD UTILITY RECONSTRUCTION | CATHODIC PROTECTION DETAILS | G78 of G83 |

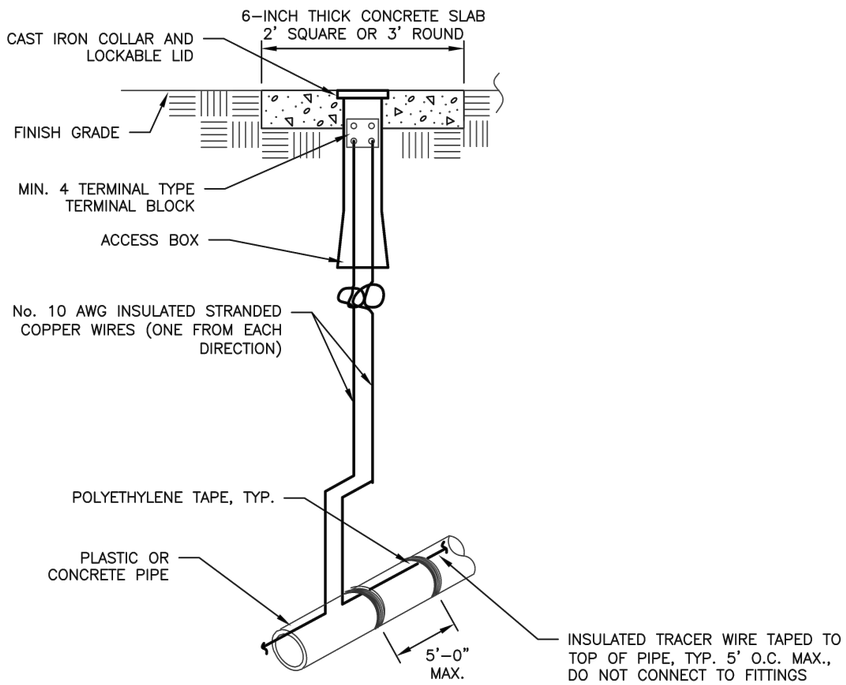


NOTES:

1. IF USING FLUSH TYPE BOXES PROVIDE SUFFICIENT SLACK IN WIRES TO ALLOW TERMINAL BLOCK TO EXTEND MIN. 18" OUT OF BOX. COIL WIRES IN ACCESS BOX.
2. INSTALL MIN. 4 TERMINAL TRACER WIRE ACCESS BOX WHERE THERE ARE NO TEST STATIONS AVAILABLE FOR TERMINATION, SO AS TO ALLOW NO TRACER WIRE SPAN LENGTHS LONGER THAN SPECIFIED. INSTALL PIPE MARKING SIGNS NEXT TO BOXES AS SPECIFIED.

NTS

RUST

CITY OF RAPID CITY — PUBLIC WORKS DEPARTMENT

## TRACER WIRE ACCESS BOXES IN UNPROTECTED LOCATION

DATE: 2–19–13

13947B

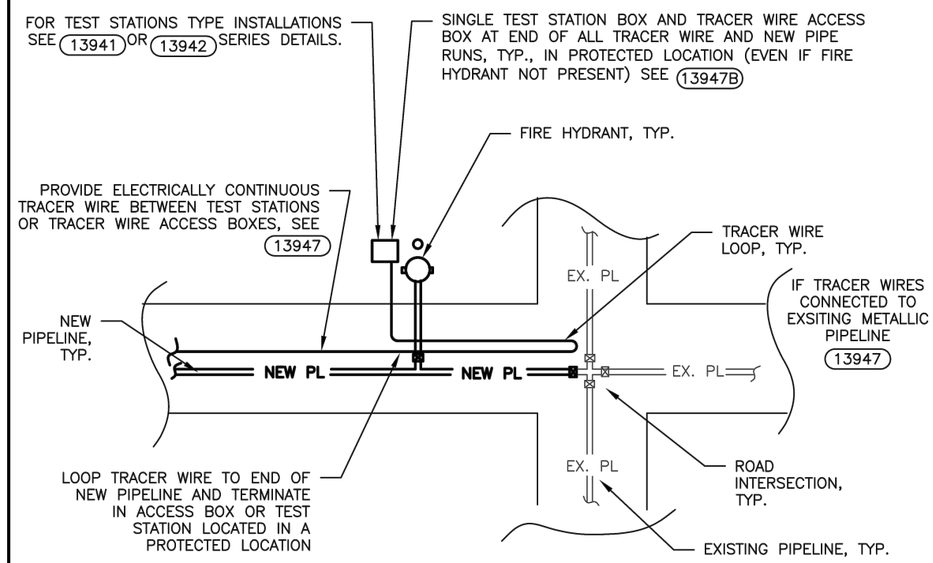


TRACER WIRE LOOP AT END OF NEW PIPELINE CONNECTION IN INTERSECTION OR UNPROTECTED LOCATION

NOTES

1. TERMINATE TRACER WIRES ABOVEGRADE AT POST TYPE TEST STATIONS OR TRACER WIRE ACCESS BOXES LOCATED IN A PROTECTED LOCATION AT ABOVEGRADE STRUCTURES OR IN A FLUSH TYPE TEST STATION OR ACCESS BOX LOCATED TO SIDE OF ROAD. COORDINATE LOCATION AND TYPE WITH ENGINEER. DO NOT TERMINATE WIRE ENDS BELOW GRADE OR IN VALVE BOXES.
2. LOOP TRACER WIRE PAST TEST STATION OR ACCESS BOX TO END OF NEW PIPELINE RUN AND TERMINATE IN BOX.
3. SINGLE PIPE SHOWN, SIMILAR FOR MULTIPLE NEW PIPELINES.
4. DO NOT TERMINATE TRACER WIRE ENDS BELOW GRADE OR IN VALVE BOXES.
5. TEST TRACER WIRE ELECTRICAL CONTINUITY PRIOR TO PLACEMENT OF CURB AND GUTTER AND BEFORE PAVING.

NTS

RUST

CITY OF RAPID CITY — PUBLIC WORKS DEPARTMENT

## TRACER WIRE AT NEW PIPELINE ENDS

DATE: 2–19–13

13947E

August 17, 2016 9:26:10 a.m.
Drawing: CATHODIC DETAILS.DWG (JOENS) (P:\PROJECTS & PROPOSALS\11119.00 MT. RUSHMORE RD. UTILITIES RECONSTRUCTION\DRAWINGS\SHEETS\PHASE 2 - FLORMANN TO SAINT JAMES\)

| Prepared By: | Prepared For: | Scale: AS NOTED | Revisions: | | | Sheet Title: | Sheet No: |
|---|---|---|---|---|---|---|---|
| AE2S | Public Works Department<br>Engineering Services | Designed By: GW<br>Drawn By: MS<br>Design Date: 02.2016 - 04.2016<br>Print Date: 08.19.2016<br>Internal Job No: 11119.04<br>Surveyed By: SDDOT<br>Survey Date: 2012<br>Project Number: 12-2051, CIP NO.50867, PCN X02P | Number: | Description: | FOR BIDDING PURPOSES ONLY<br>MOUNT RUSHMORE ROAD UTILITY RECONSTRUCTION | CATHODIC PROTECTION DETAILS | G79 of G83 |

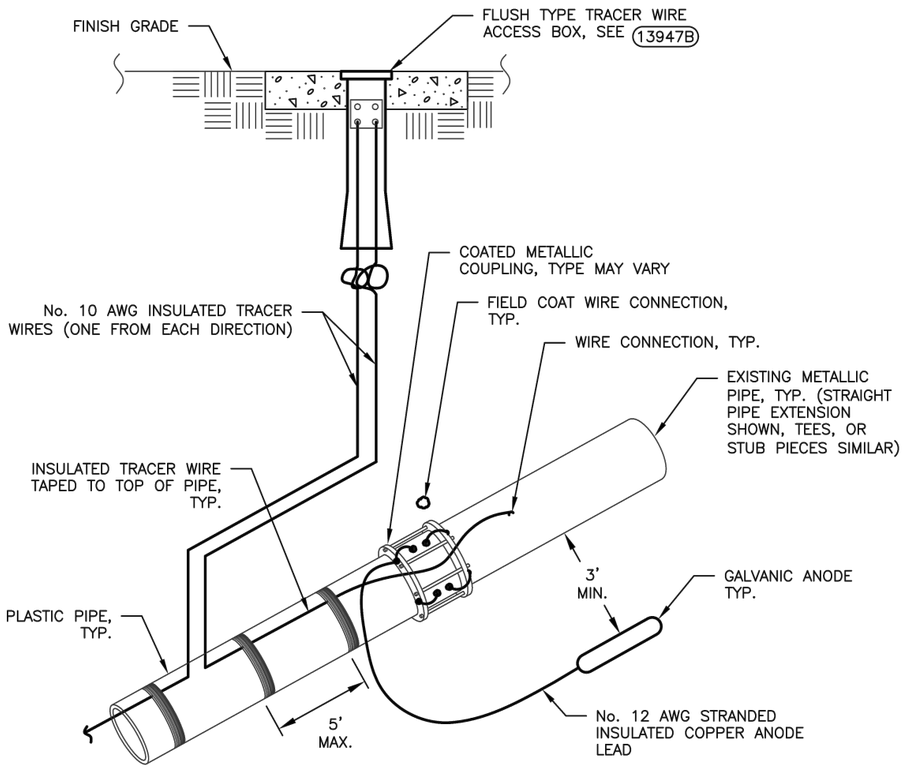


NOTES:

1. INSTALL GALVANIC ANODE TO METALLIC FITTING AT CONNECTION TO EXISTING METALLIC PIPELINE (IF METALLIC PIPE NOT ALREADY CATHODIC PROTECTED WITH AN IMPRESSED CURRENT TYPE CATHODIC PROTECTION SYSTEM).
2. IF TRACER WIRE CONNECTED TO EXISTING METALLIC PIPELINE, LOOP TRACER WIRES ABOVEGRADE AND TERMINATE IN TRACER WIRE OR TEST STATION BOX. SEE 13947 SERIES DETAILS.

NTS

CITY OF RAPID CITY — PUBLIC WORKS DEPARTMENT

## TRACER WIRE ACCESS BOXES AT CONNECTION TO EXISTING

DATE: 2–19–13

13947F

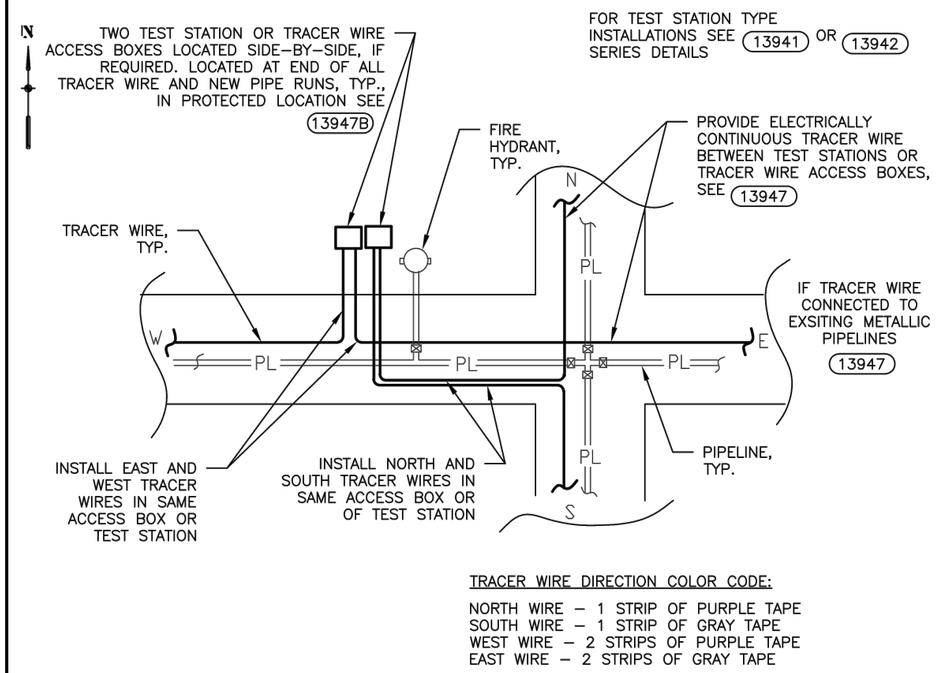


TRACER WIRE DIRECTION COLOR CODE:

NORTH WIRE – 1 STRIP OF PURPLE TAPE
SOUTH WIRE – 1 STRIP OF GRAY TAPE
WEST WIRE – 2 STRIPS OF PURPLE TAPE
EAST WIRE – 2 STRIPS OF GRAY TAPE

TRACER WIRE AT THREE OR FOUR–WAY INTERSECTION

NOTES

1. TERMINATE TRACER WIRES ABOVEGRADE AT TEST STATIONS OR TRACER WIRE ACCESS BOXES LOCATED AT ABOVEGRADE STRUCTURES WITH TRACER WIRE FROM EACH PIPE DIRECTION (UP TO 4 TRACER WIRES POSSIBLE). DO NOT TERMINATE WIRE ENDS BELOW GRADE OR IN VALVE BOXES.
2. IF 3 OR 4 TRACER WIRES, TERMINATE TRACER WIRES IN IN TWO TEST STATION, OR TWO TRACER WIRE ACCESS BOXES LOCATED NEXT TO EACH OTHER. TERMINATE NORTH AND SOUTH TRACER WIRES IN SAME BOX AND EAST AND WEST TRACER WIRES IN SAME BOX.
3. TEST TRACER WIRE ELECTRICAL CONTINUITY PRIOR TO PLACEMENT OF CURB AND GUTTER AND BEFORE PAVING.

NTS

CITY OF RAPID CITY — PUBLIC WORKS DEPARTMENT

## MULTIPLE TRACER WIRES

DATE: 2–19–13

13947M

August 17, 2016 9:26:10 a.m.
Drawing: CATHODIC DETAILS.DWG (JOENS) (P:\PROJECTS & PROPOSALS\11119.00 MT. RUSHMORE RD. UTILITIES RECONSTRUCTION\DRAWINGS\SHEETS\PHASE 2 - FLORMANN TO SAINT JAMES\)

| Prepared By: | Prepared For: | Scale: AS NOTED | Revisions: | | | Sheet Title: | Sheet No: |
|---|---|---|---|---|---|---|---|
| AE2S | Public Works Department<br>Rapid City, South Dakota<br>Engineering Services | Designed By: GW<br>Drawn By: MS<br>Design Date: 02.2016 - 04.2016<br>Print Date: 08.19.2016<br>Internal Job No: 11119.04<br>Surveyed By: SDDOT<br>Survey Date: 2012<br>Project Number: 12-2051, CIP NO.50867, PCN X02P | Number: | Description: | FOR BIDDING PURPOSES ONLY<br>MOUNT RUSHMORE ROAD<br>UTILITY RECONSTRUCTION | CATHODIC<br>PROTECTION<br>DETAILS | G80<br>of<br>G83 |

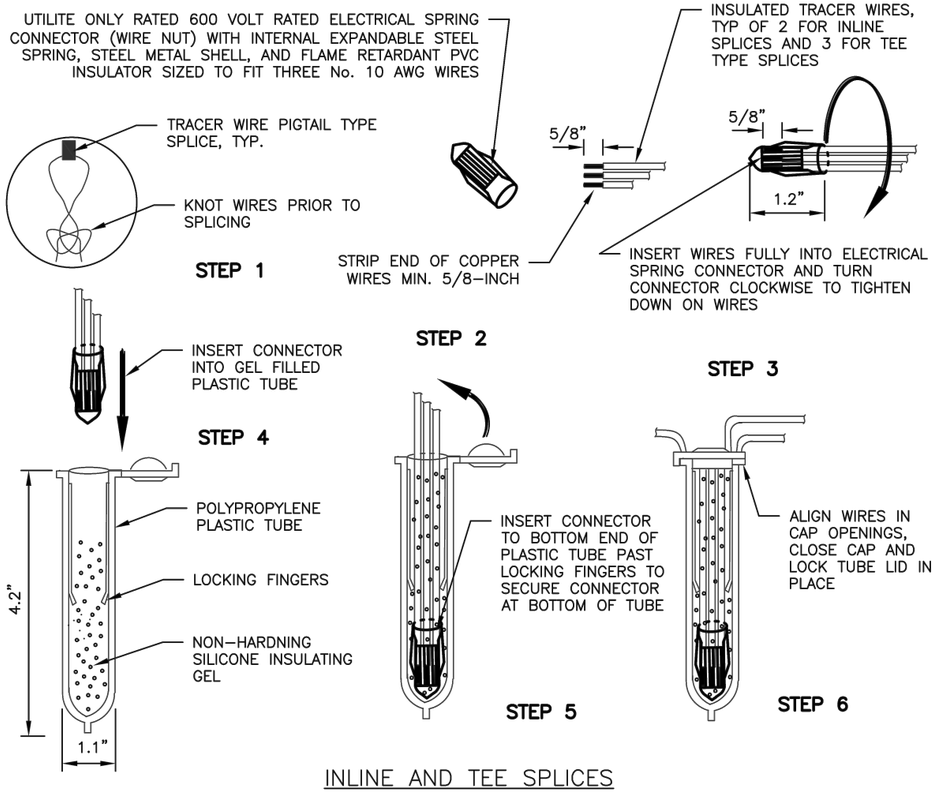


INLINE AND TEE SPLICES

NOTES:

1. ALLOWED FOR TRACER WIRE TYPE SPLICES ONLY. TRACER WIRE ONLY REQUIRED FOR NON-METALLIC PIPE TYPE INSTALLATIONS. KNOT WIRES PRIOR TO MAKING SPLICE TO MINIMIZE STRESS ON SPLICE.
2. FOR COPPER WIRE SPLICES ONLY. STRIP WIRES AND MAKE WIRE SPLICE CONNECTION WITH ELECTRICAL SPRING (WIRE NUT) TYPE CONNECTORS. INSERT THE CONNECTOR INTO THE GEL FILLED TUBE TO THE END PAST THE LOCKING FINGERS TO HOLD THE CONNECTOR SECURELY IN PLACE, ALIGN WIRES AND THEN SHUT AND LOCK THE INSULATOR TUBE TOP LID COVER INTO PLACE. COMPLETE SPLICES AND INSULATE IN ACCORDANCE WITH CONNECTOR MANUFACTURER'S RECOMMENDATIONS.
3. COMPLETE ALL SPLICES ONLY IN THE PRESENCE OF THE ENGINEER.

NTS

CITY OF RAPID CITY — PUBLIC WORKS DEPARTMENT

TRACER WIRE SPLICES

DATE: 2-19-13

13947S

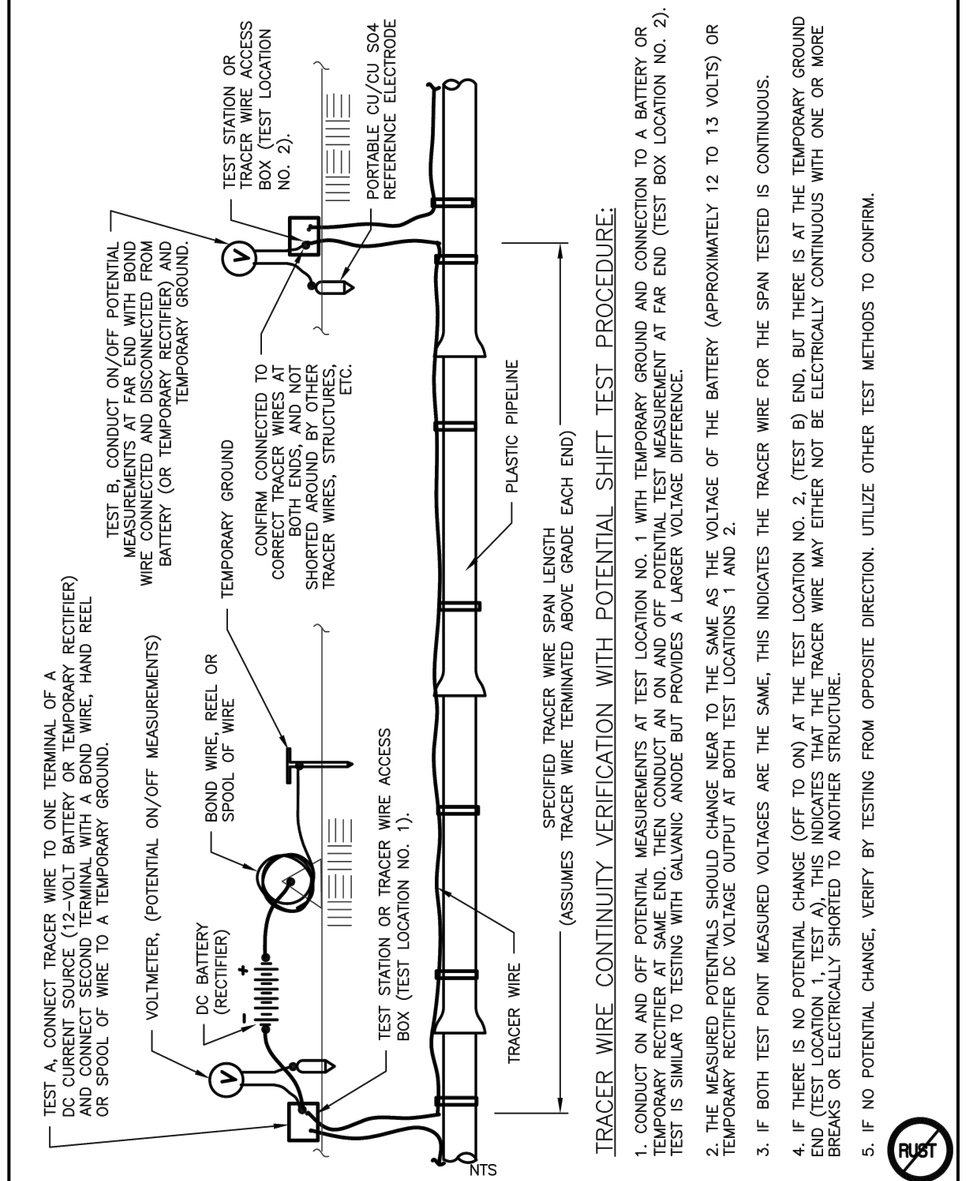


TRACER WIRE CONTINUITY VERIFICATION WITH POTENTIAL SHIFT TEST PROCEDURE:

1. CONDUCT ON AND OFF POTENTIAL MEASUREMENTS AT TEST LOCATION NO. 1 WITH TEMPORARY GROUND AND CONNECTION TO A BATTERY OR TEMPORARY RECTIFIER AT SAME END. THEN CONDUCT AN ON AND OFF POTENTIAL TEST MEASUREMENT AT FAR END (TEST BOX LOCATION NO. 2). TEST IS SIMILAR TO TESTING WITH GALVANIC ANODE BUT PROVIDES A LARGER VOLTAGE DIFFERENCE.
2. THE MEASURED POTENTIALS SHOULD CHANGE NEAR TO THE SAME AS THE VOLTAGE OF THE BATTERY (APPROXIMATELY 12 TO 13 VOLTS) OR TEMPORARY RECTIFIER DC VOLTAGE OUTPUT AT BOTH TEST LOCATIONS 1 AND 2.
3. IF BOTH TEST POINT MEASURED VOLTAGES ARE THE SAME, THIS INDICATES THE TRACER WIRE FOR THE SPAN TESTED IS CONTINUOUS.
4. IF THERE IS NO POTENTIAL CHANGE (OFF TO ON) AT THE TEST LOCATION NO. 2, (TEST B) END, BUT THERE IS AT THE TEMPORARY GROUND END (TEST LOCATION 1, TEST A), THIS INDICATES THAT THE TRACER WIRE MAY EITHER NOT BE ELECTRICALLY CONTINUOUS WITH ONE OR MORE BREAKS OR ELECTRICALLY SHORTED TO ANOTHER STRUCTURE.
5. IF NO POTENTIAL CHANGE, VERIFY BY TESTING FROM OPPOSITE DIRECTION. UTILIZE OTHER TEST METHODS TO CONFIRM.

CITY OF RAPID CITY — PUBLIC WORKS DEPARTMENT

TRACER WIRE CONTINUITY TEST PROCEDURES
BATTERY OR RECTIFIER POTENTIAL SHIFT METHOD

DATE: 2-19-13

13947T1

August 17, 2016 9:26:10 a.m.
Drawing: CATHODIC DETAILS.DWG (JOENS) (P:\PROJECTS & PROPOSALS\11119.00 MT. RUSHMORE RD. UTILITIES RECONSTRUCTION\DRAWINGS\SHEETS\PHASE 2 - FLORMANN TO SAINT JAMES\)

| Prepared By: | Prepared For: | Scale: AS NOTED | Revisions: | | | Sheet Title: | Sheet No: |
|---|---|---|---|---|---|---|---|
| AE2S | Public Works Department<br>RAPID CITY SOUTH DAKOTA<br>Engineering Services | Designed By: GW<br>Drawn By: MS<br>Design Date: 02.2016 - 04.2016<br>Print Date: 08.19.2016<br>Internal Job No: 11119.04<br>Surveyed By: SDDOT<br>Survey Date: 2012<br>Project Number: 12-2051, CIP NO.50867, PCN X02P | Number: | Description: | FOR BIDDING PURPOSES ONLY<br>MOUNT RUSHMORE ROAD<br>UTILITY RECONSTRUCTION | CATHODIC PROTECTION DETAILS | G81 of G83 |

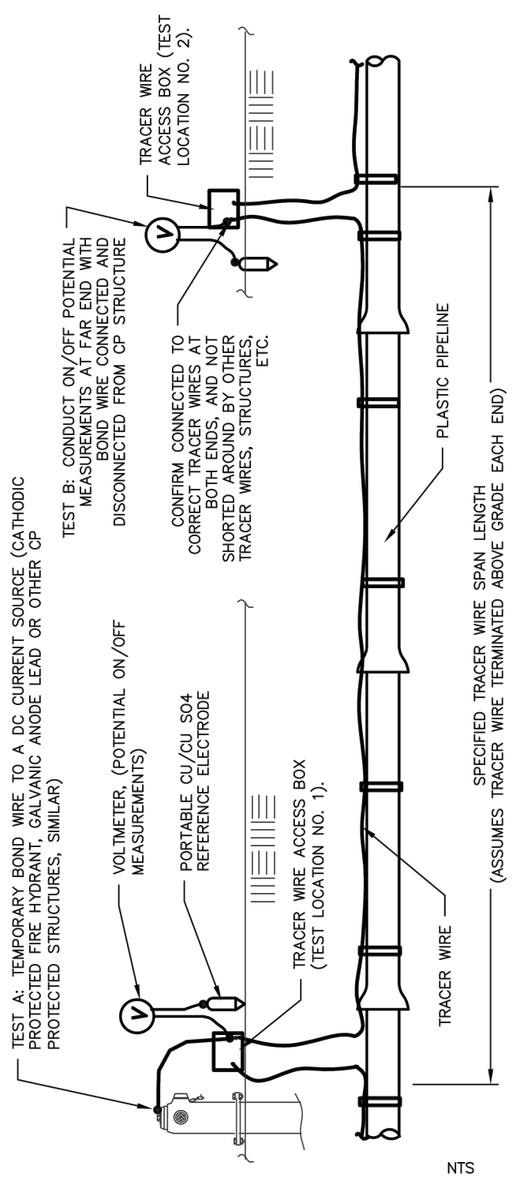


NTS

## TRACER WIRE CONTINUITY VERIFICATION WITH GALVANIC ANODE POTENTIAL SHIFT TEST PROCEDURE:

1. CONDUCT ON AND OFF POTENTIAL MEASUREMENTS AT TRACER WIRE ACCESS BOX NO. 1 WITH BOND WIRE TO CATHODIC PROTECTION SOURCE AT SAME END. THEN CONDUCT ON AND OFF POTENTIAL TESTS AT FAR END (TRACER BOX LOCATION NO. 2). POTENTIAL SHOULD SHIFT THE SAME AMOUNT AT FAR END (LOCATION NO. 2), WHEN TEMPORARILY CONNECTED AND DISCONNECTED FROM CATHODIC PROTECTION SOURCE AT TRACER WIRE BOX LOCATION NO. 1, IF TRACER WIRE IS CONTINUOUS AND NOT SHORTED TO OTHER STRUCTURES.

2. FOR EXAMPLE: IF THE OFF POTENTIAL OF THE TRACER WIRE IS −0.24 VOLTS AND THE ANODE OR CATHODICALLY PROTECTED FIRE HYDRANT POTENTIAL IS −1.1 VOLT, THEN WHEN THE TRACER WERE IS TEMPORARILY CONNECTED TO THE CATHODICALLY PROTECTED STRUCTURE, THE TRACER WIRE POTENTIAL CHANGES TO −1.0 VOLTS AT TRACER WIRE ACCESS BOX LOCATION NO. 1 AND −0.95 AT TRACER WIRE ACCESS BOX LOCATION NO. 2, THAT INDICATES THAT THE TRACER WIRE BETWEEN LOCATIONS NO. 1 AND NO. 2 IS CONTINUOUS. IF THE ON POTENTIAL AT TEST LOCATION NO. 2 DOES NOT CHANGE IT INDICATES THE TRACER WIRE MAY NOT BE ELECTRICALLY CONTINUOUS WITH ONE OR MORE BREAKS. IF THERE IS ONLY A SLIGHT CHANGE, SAY FROM −0.200 TO −0.233 VOLTS, THAT INDICATES THAT EITHER THE TRACER WIRE MAY BE BROKE OR ELECTRICALLY SHORTED TO ANOTHER STRUCTURE. IF INSIGNIFICANT POTENTIAL CHANGE, VERIFY BY TESTING FROM OPPOSITE DIRECTION. UTILIZE OTHER TEST METHODS TO CONFIRM.

RUST

CITY OF RAPID CITY — PUBLIC WORKS DEPARTMENT

TRACER WIRE CONTINUITY TEST PROCEDURES
GALVANIC ANODE POTENTIAL SHIFT METHOD

DATE: 2–19–13

13947T2

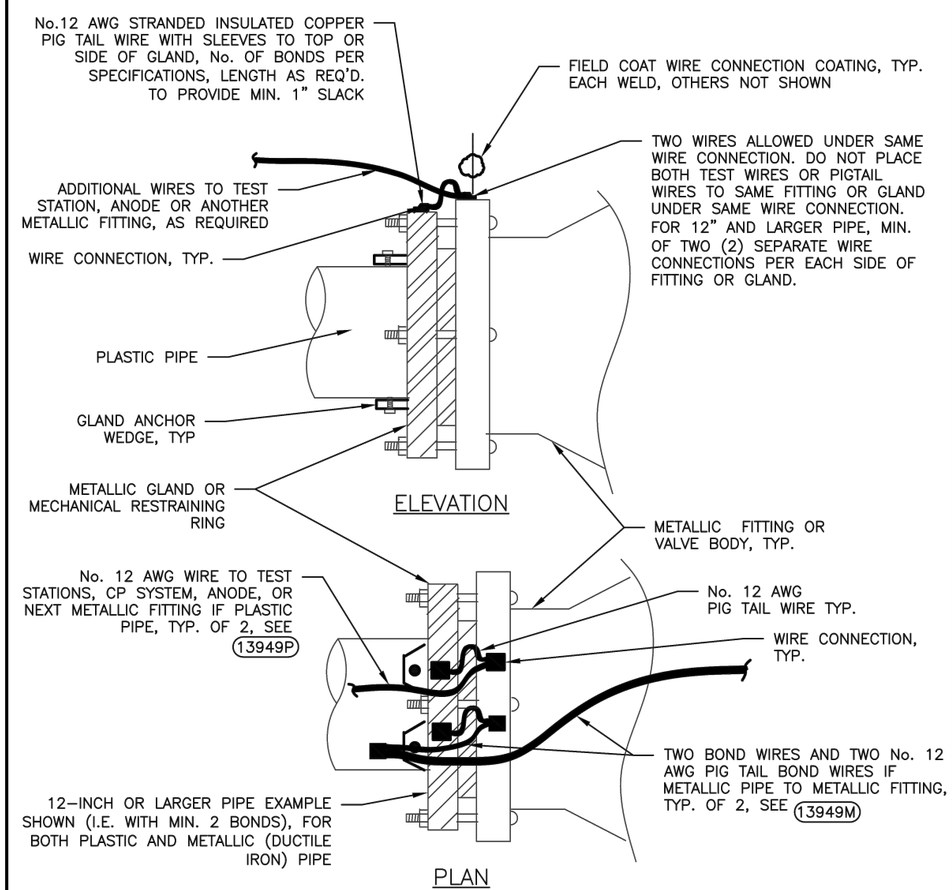


NOTES:

1. BOND METALLIC OR PLASTIC PIPE METALLIC GLANDS TO METALLIC FITTING BODY. COMPLETE PIGTAIL WIRE CONNECTIONS TO GLANDS BEFORE ASSEMBLY.

2. BOND METALLIC MECHANICAL RESTRAINT RINGS TO METALLIC FITTING BODY

3. MIN. TWO (2) BONDS EACH FOR 12" AND LARGER PIPE, MIN. ONE (1) FOR SMALLER PIPE. MINIMUM 2 NO. 12 AWG PIGTAIL WIRES EACH SIDE OF FITTING.

NTS

RUST

CITY OF RAPID CITY — PUBLIC WORKS DEPARTMENT

METALLIC FITTING GLANDS AND
MECHANICAL RESTRAINT RINGS BONDING

DATE: 2–19–13

13949

August 17, 2016 9:26:10 a.m.
Drawing: CATHODIC DETAILS.DWG (JOENS) (P:\PROJECTS & PROPOSALS\11119.00 MT. RUSHMORE RD. UTILITIES RECONSTRUCTION\DRAWINGS\SHEETS\PHASE 2 - FORMAIN TO SAINT JAMES\)

| Prepared By: | Prepared For: | Scale: AS NOTED | Revisions: | | | Sheet Title: | Sheet No: |
|---|---|---|---|---|---|---|---|
| AE2S | Public Works Department<br>Engineering Services | Designed By: GW<br>Drawn By: MS<br>Design Date: 02.2016 - 04.2016<br>Print Date: 08.19.2016<br>Internal Job No: 11119.04<br>Surveyed By: SDDOT<br>Survey Date: 2012<br>Project Number: 12-2051, CIP NO.50867, PCN X02P | Number: | Description: | FOR BIDDING PURPOSES ONLY<br>MOUNT RUSHMORE ROAD UTILITY RECONSTRUCTION | CATHODIC PROTECTION DETAILS | G82 of G83 |

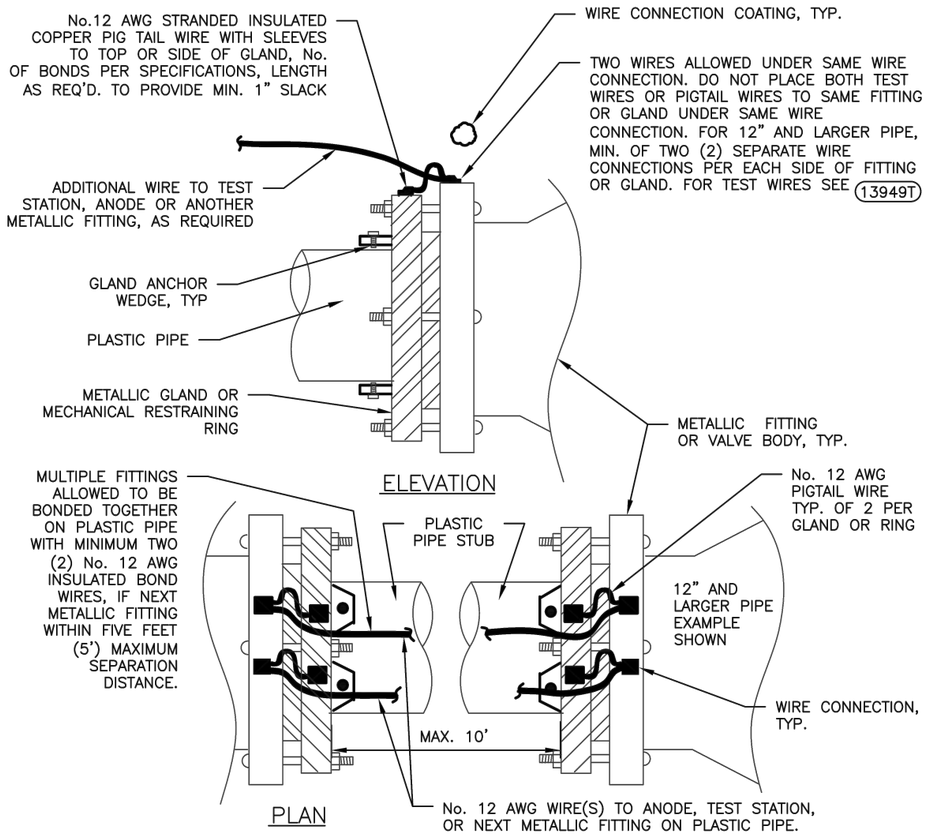


NOTES:

1. BOND PLASTIC PIPE METALLIC GLANDS TO METALLIC FITTING BODY. COMPLETE PIGTAIL WIRE CONNECTIONS TO GLANDS BEFORE ASSEMBLY.

2. MINIMUM NO. 12 AWG PIGTAIL WIRES EACH SIDE OF FITTING, MIN. 2 PIGTAIL BONDS EACH FOR 12" & LARGER PIPE, MIN. 1 FOR SMALLER PIPE.

3. NUMBER, SIZE AND TYPE OF GALVANIC ANODES REQUIRED FOR SINGLE OR MULTIPLE FITTINGS PER SPECIFICATIONS.

NTS

CITY OF RAPID CITY — PUBLIC WORKS DEPARTMENT

## PLASTIC PIPE METALLIC FITTING GLANDS AND MECHANICAL RESTRAINT RINGS BONDING

DATE: 2–19–13

13949P

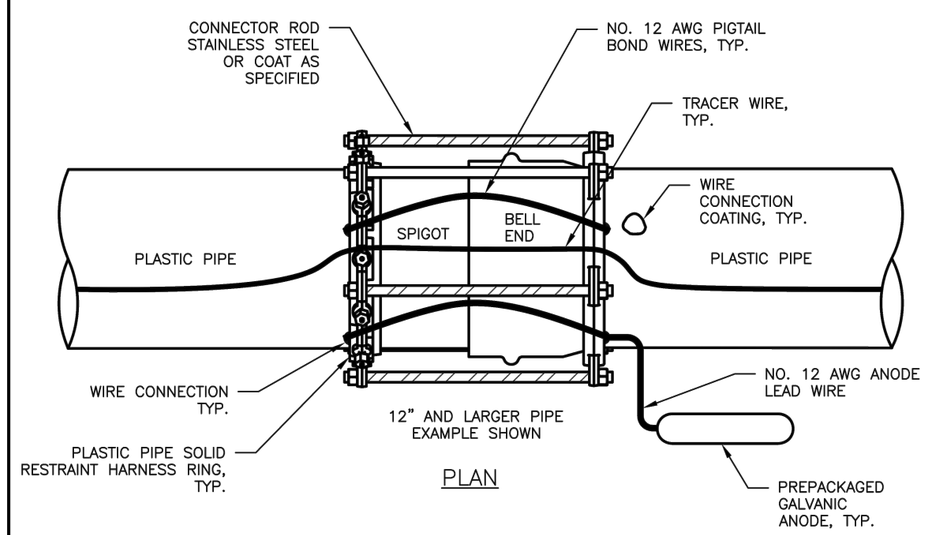


NOTES:

1. SOLID RING TYPE RESTRAINTS SHOWN WITH MINIMUM OF 2 PIGTAIL BOND WIRES FOR 12 INCH AND LARGER PIPE. SINGLE PIGTAIL BOND WIRE ALLOWED FOR PIPE 10 INCH AND SMALLER. SPLIT RING RESTRAINTS MAY ONLY BE USED IF APPROVED BY ENGINEER AND WILL REQUIRE ADDITIONAL PIGTAIL BOND WIRES, SEE 13949S

2. NUMBER, SIZE AND TYPE OF GALVANIC ANODES REQUIRED FOR SINGLE FITTING PER SPECIFICATIONS. MINIMUM OF ONE 17 POUND GALVANIC ANODE PER FITTING.

3. PRIOR TO ASSEMBLY, LOCATE WIRE CONNECTION FOR NO. 12 AWG BOND WIRES TO FLAT AREA ON SIDE OF COUPLING BOLT PATTERN RESTRAINT HARNESS RING.

NTS

CITY OF RAPID CITY — PUBLIC WORKS DEPARTMENT

## PLASTIC PIPE BELL SOLID RING RESTRAINT HARNESS JOINT BONDING

DATE: 2–19–13

13949R

August 17, 2016 9:26:10 a.m.
Drawing: CATHODIC DETAILS.DWG (JOENS) (P:\PROJECTS & PROPOSALS\11119.00 MT. RUSHMORE RD. UTILITIES RECONSTRUCTION\DRAWINGS\SHEETS\PHASE 2 - FLORMANN TO SAINT JAMES\)

| Prepared By: | Prepared For: | Scale: AS NOTED | Revisions: | | | Sheet Title: | Sheet No: |
|---|---|---|---|---|---|---|---|
| AE2S | Public Works Department<br>Engineering Services | Designed By: GW<br>Drawn By: MS<br>Design Date: 02.2016 - 04.2016<br>Print Date: 08.19.2016<br>Internal Job No: 11119.04<br>Surveyed By: SDDOT<br>Survey Date: 2012<br>Project Number: 12-2051, CIP NO.50867, PCN X02P | Number: | Description: | FOR BIDDING PURPOSES ONLY<br>MOUNT RUSHMORE ROAD UTILITY RECONSTRUCTION | CATHODIC PROTECTION DETAILS | G83 of G83 |

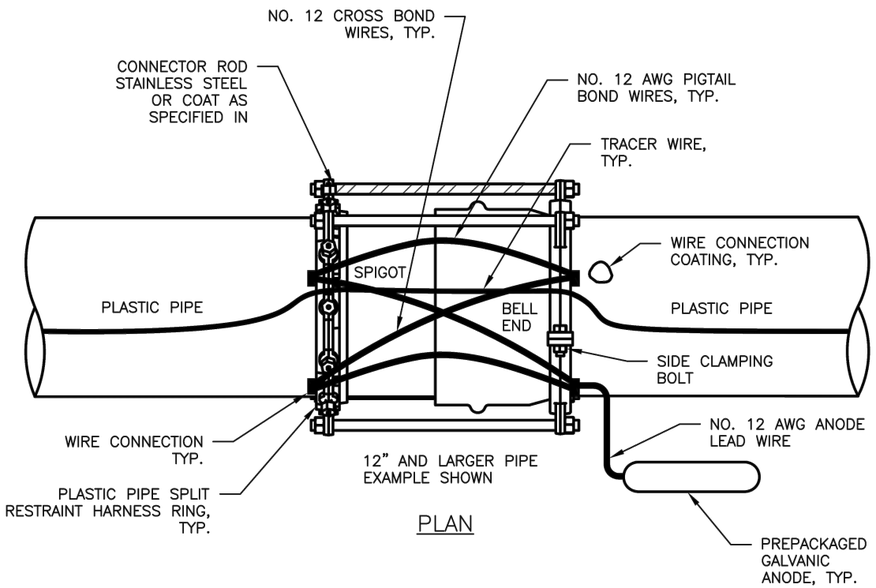


PLAN

NOTES:

1. SPLIT RING TYPE RESTRAINTS SHOWN WITH MINIMUM OF FOUR (TWO PIGTAIL AND TWO CROSS BOND WIRES FOR 12–INCH AND LARGER PIPE. TWO PIGTAIL CROSS BOND PIGTAIL WIRES ALLOWED FOR 10–INCH AND SMALLER PIPE). SPLIT RING RESTRAINTS MAY ONLY BE USED IF APPROVED BY ENGINEER. FOR SOLID RING PIGTAIL BOND WIRES, SEE 13949R
2. NUMBER, SIZE AND TYPE OF GALVANIC ANODES REQUIRED FOR SINGLE FITTING PER SPECIFICATIONS. MINIMUM OF ONE 17 POUND GALVANIC ANODE PER FITTING.
3. PRIOR TO ASSEMBLY, LOCATE THERMITE WELD OR PIN BRAZED TYPE WIRE CONNECTION FOR NO. 12 AWG BOND WIRES TO FLAT AREA ON SIDE OF COUPLING BOLT PATTERN RESTRAINT HARNESS RING.

NTS

CITY OF RAPID CITY — PUBLIC WORKS DEPARTMENT

## PLASTIC PIPE BELL SPLIT RING RESTRAINT HARNESS JOINT BONDING

DATE: 2–19–13

13949S

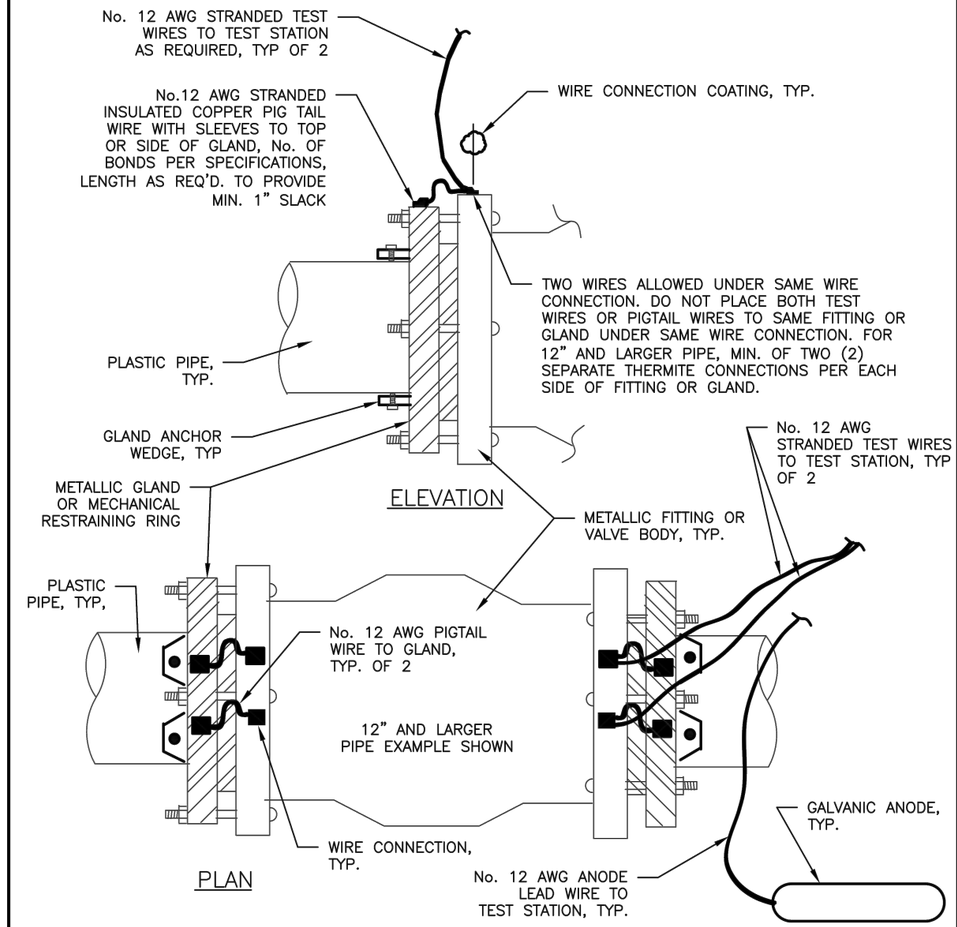


PLAN

NOTES:

1. BOND METALLIC MECHANICAL RESTRAINT RINGS TO METALLIC FITTING BODY. COMPLETE PIGTAIL WIRE CONNECTIONS TO GLANDS BEFORE ASSEMBLY.
2. MINIMUM NO. 12 AWG SIZED PIGTAIL BOND WIRES EACH SIDE OF FITTING, MIN. 2 PIGTAIL BONDS EACH FOR 12" & LARGER PIPE, MIN. 1 EACH SIDE FOR SMALLER PIPE.

NTS

CITY OF RAPID CITY — PUBLIC WORKS DEPARTMENT

## PLASTIC PIPE METALLIC GLANDS/RESTRAINT RINGS BONDING, ANODE AND TEST LEADS

DATE: 2–19–13

13949T

August 17, 2016 9:26:10 a.m.
Drawing: CATHODIC DETAILS.DWG (JOENS) (P:\PROJECTS & PROPOSALS\11119.00 MT. RUSHMORE RD. UTILITIES RECONSTRUCTION\DRAWINGS\SHEETS\PHASE 2 - FLORMANN TO SAINT JAMES\)