STATE OF SOUTH DAKOTA	PROJECT	SHEET No.	TOTAL SHEETS
	21670.00.01 PCN X02T	1	31

FOR BIDDING PURPOSES ONLY

STATE OF SOUTH DAKOTA
DEPARTMENT OF TRANSPORTATION

PLANS FOR PROPOSED PROJECT

CITY OF BERESFORD
SD HIGHWAY 46 UTILITY IMPROVEMENTS

LINCOLN & UNION COUNTIES

WATER DISTRIBUTION AND SANITARY SEWER COLLECTION SYSTEM IMPROVEMENTS
PCN X02T
BAI NO. 21670.00.01

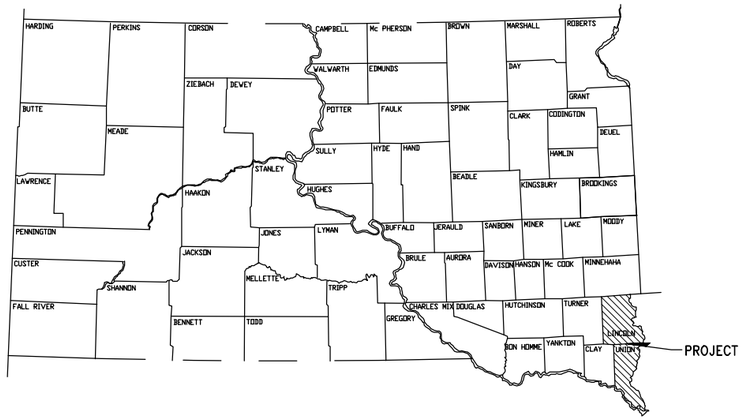

INDEX OF SHEETS	
1.	TITLE & INDEX OF SHEETS
2.	ESTIMATE OF QUANTITIES
3.	GENERAL NOTES
4.	GENERAL NOTES
5.	GENERAL NOTES
6.	QUANTITY TABLES
7.	QUANTITY TABLES
8.	SANITARY SEWER DETAILS
9.	WATER DETAILS
10.	TRACER WIRE DETAIL
11.	SDDOT STANDARD PLATE
12-31.	PLAN SHEETS & PROFILE SHEETS

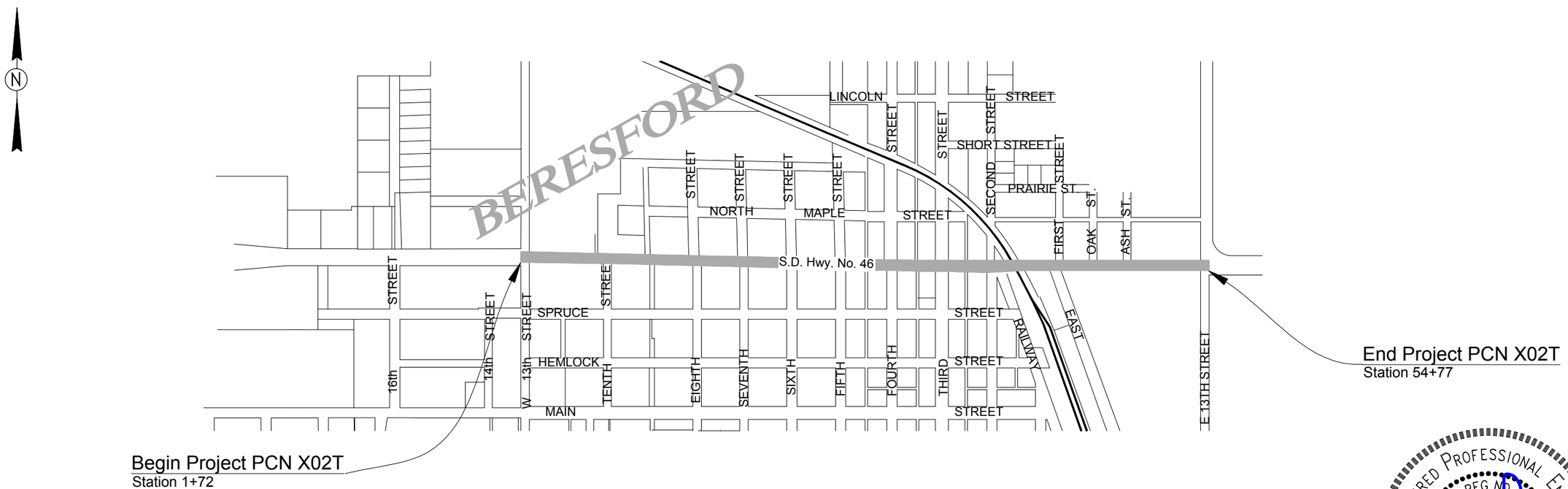

REGISTERED PROFESSIONAL ENGINEER
REG NO. 3772
HAROLD N. HOLOCH
SOUTH DAKOTA
Harold N. Holoch
10-3-14

Plans Prepared By:
BANNER
Engineering | Architecture | Surveying

SCALES

LAYOUT	1 INCH = 1.40 MILE
PLAN	1 INCH = 40 FEET
PROFILE	HORIZONTAL 1 INCH = 40 FT. VERTICAL = 1 INCH = 10 FT.
CROSS SECTIONS	HORIZONTAL - 1 INCH = 10 FT. VERTICAL - 1 INCH = 10 FT.

BID IN CONJUNCTION
WITH P 0046 (48) 365
SD HIGHWAY 46
LINCOLN & UNION COUNTIES, BERESFORD SD

STATE OF SOUTH DAKOTA	PROJECT	SHEET No.	TOTAL SHEETS
	21670.00.01 PCN X02T	2	31

FOR BIDDING PURPOSES ONLY

WATERMAIN ESTIMATE OF QUANTITIES

	ITEM	QUANTITY	UNIT
110E0300	REMOVE CONCRETE CURB & GUTTER	18	FT
110E1010	REMOVE ASPHALT CONCRETE PAVEMENT	38.0	SQ YD
110E1100	REMOVE CONCRETE PAVEMENT	7.0	SQ YD
110E1910	REMOVE FIRE HYDRANT	11	EACH
110E1960	REMOVE VALVE BOX	2	EACH
110E1965	REMOVE GATE VALVE	7	EACH
260E1010	BASE COURSE	19.3	TON
320E1200	ASPHALT CONCRETE COMPOSITE	8.4	TON
380E1120	MISCELLANEOUS PCC PAVEMENT	7.0	SQ YD
451E0012	12" PVC ENCASEMENT PIPE	60	FT
451E0124	24" STEEL ENCASEMENT PIPE	120	FT
451E0604	4” PVC WATER MAIN	30	FT
451E0606	6” PVC WATER MAIN	1,114	FT
451E0608	8" PVC WATER MAIN	5,588	FT
451E1275	1” WATER SERVICE	63	EACH
451E1278	2” WATER SERVICE	2	EACH
451E2206	6”x4” PIPE TEE	1	EACH
451E2207	6”x6” PIPE TEE	10	EACH
451E2213	8”x6” PIPE TEE	14	EACH
451E2214	8”x8” PIPE TEE	3	EACH
451E2313	8"x6" PIPE CROSS	2	EACH
451E2314	8"x8" PIPE CROSS	4	EACH
451E2406	6”x4” PIPE REDUCER	7	EACH
451E2412	8”x4” PIPE REDUCER	2	EACH
451E2413	8"x6" PIPE REDUCER	4	EACH
451E2802	1” CORPORATION STOP WITH TAPPING SADDLE	63	EACH
451E2808	2” CORPORATION STOP WITH TAPPING SADDLE	2	EACH
451E2902	1” CURB STOP WITH BOX	63	EACH
451E2908	2” CURB STOP WITH BOX	2	EACH
451E3004	4" PIPE BEND	2	EACH
451E3006	6" PIPE BEND	5	EACH
451E3008	8" PIPE BEND	4	EACH
451E3106	6" PIPE CAP	10	EACH
451E3108	8" PIPE CAP	2	EACH
451E3412	6" PIPE PLUG	9	EACH
451E3414	8" PIPE PLUG	3	EACH
451E3604	4” PIPE SLEEVE	6	EACH
451E3606	6” PIPE SLEEVE	9	EACH
451E3608	8” PIPE SLEEVE	4	EACH
451E4204	4” GATE VALVE WITH BOX	2	EACH
451E4206	6” GATE VALVE WITH BOX	31	EACH
451E4208	8” GATE VALVE WITH BOX	12	EACH
451E4580	STANDARD FIRE HYDRANT	20	EACH
451E4620	CONCRETE FOR CASING, BLOCKS, AND CRADLES	30.0	CU YD
451E4905	TRENCH STABILIZATION MATERIAL	200.0	TON
451E4926	WATER MAIN BEDDING MATERIAL	6,732	FT
451E5108	BORE AND JACK 8" PIPE	91	FT
451E6050	TEMPORARY WATER SERVICE	31	EACH
650E0060	TYPE B66 CONCRETE CURB & GUTTER	18	FT

SANITARY SEWER ESTIMATE OF QUANTITIES

	ITEM	QUANTITY	UNIT
110E0460	REMOVE MANHOLE	11	EACH
260E1010	BASE COURSE	66.6	TON
451E0124	24" STEEL ENCASEMENT PIPE	120	FT
451E1006	6" PVC SEWER PIPE	1820	FT
451E1008	8" PVC SEWER PIPE	2,410	FT
451E1010	10" PVC SEWER PIPE	1,854	FT
451E1012	12" PVC SEWER PIPE	338	FT
451E1015	15" PVC SEWER PIPE	66	FT
451E1506	6" SANITARY SEWER SERVICE CLEANOUT	9	EACH
451E2013	8"x6" PIPE WYE	33	EACH
451E2021	10"x6" PIPE WYE	17	EACH
451E2041	15"x6" PIPE WYE	2	EACH
451E2413	8”x6" PIPE REDUCER	1	EACH
451E3006	6" PIPE BEND	2	EACH
451E4905	TRENCH STABILIZATION MATERIAL	450.0	TON
451E4944	6" SEWER PIPE BEDDING MATERIAL	1820	FT
451E4945	8" SEWER PIPE BEDDING MATERIAL	2,410	FT
451E4946	10" SEWER PIPE BEDDING MATERIAL	1,854	FT
451E4947	12" SEWER PIPE BEDDING MATERIAL	338	FT
451E4948	15" SEWER PIPE BEDDING MATERIAL	66	FT
451E7020	SEWER BYPASS PUMPING	LUMP SUM	LS
451E7520	EXPLORATORY EXCAVATION	4	HOUR
671E1048	48" MANHOLE	13	EACH
671E1348	48" DROP MANHOLE	4	EACH
671E5510	EXTRA DEPTH FOR 48" MANHOLE	52.2	FT
671E9005	ABANDON MANHOLE	6	EACH

MISCELLANEOUS ESTIMATE OF QUANTITIES

	ITEM	QUANTITY	UNIT
009E0010	MOBILIZATION	LUMP SUM	LS
634E0010	FLAGGING	48	HOUR
634E0100	TRAFFIC CONTROL	238	UNIT
634E0120	TRAFFIC CONTROL, MISCELLANEOUS	LUMP SUM	LS
734E0845	SEDIMENT CONTROL AT INLET WITH FRAME AND GRATE	1	EACH
734E5005	DEWATERING	LUMP SUM	LS
900E1052	2" EXTRUDED POLYSTYRENE INSULATION BOARD	32.4	SQ YD
998E0100	RAILROAD PROTECTIVE INSURANCE	LUMP SUM	LS

REGISTERED PROFESSIONAL ENGINEER
REG NO. 3173
HAROLD N. HOLOCH
SOUTH DAKOTA
10-3-14

ENVIRONMENTAL COMMITMENTS

AN ENVIRONMENTAL COMMITMENT IS A MEASURE THAT SDDOT COMMITS TO IMPLEMENT IN ORDER TO AVOID, MINIMIZE, AND/OR MITIGATE A REAL OR POTENTIAL ENVIRONMENTAL IMPACT. ENVIRONMENTAL COMMITMENTS TO VARIOUS AGENCIES AND THE PUBLIC HAVE BEEN MADE TO SECURE APPROVAL OF THIS PROJECT. AN AGENCY MENTIONED BELOW WITH PERMITTING AUTHORITY CAN INFLUENCE A PROJECT IF PERCEIVED ENVIRONMENTAL IMPACTS HAVE NOT BEEN ADEQUATELY ADDRESSED. UNLESS OTHERWISE DESIGNATED, THE CONTRACTOR'S PRIMARY CONTACT REGARDING MATTERS ASSOCIATED WITH THESE COMMITMENTS WILL BE THE PROJECT ENGINEER. THESE ENVIRONMENTAL COMMITMENTS ARE NOT SUBJECT TO CHANGE WITHOUT PRIOR WRITTEN APPROVAL FROM THE SDDOT ENVIRONMENTAL OFFICE. THE ENVIRONMENTAL COMMITMENTS ASSOCIATED WITH THIS PROJECT ARE AS FOLLOWS:

COMMITMENT D: WATER QUALITY STANDARDS

COMMITMENT D2: SURFACE WATER DISCHARGE

ASH CREEK IS CLASSIFIED AS WARM WATER, MARGINAL FISHERY WITH A SURFACE WATER DISCHARGE STANDARD OF 150 MILLIGRAMS/LITER TOTAL SUSPENDED SOLIDS.

BLINK CREEK IS CLASSIFIED AS WARM WATER, MARGINAL FISHERY WITH A SURFACE WATER DISCHARGE STANDARD OF 150 MILLIGRAMS/LITER TOTAL SUSPENDED SOLIDS.

ACTION TAKEN/REQUIRED:

IF CONSTRUCTION DEWATERING IS REQUIRED, THE CONTRACTOR SHALL OBTAIN A TEMPORARY DISCHARGE PERMIT FROM THE DENR AND PROVIDE A COPY TO THE PROJECT ENGINEER. CONTACT THE DENR SURFACE WATER PROGRAM AT 605-773-3351 TO APPLY FOR A PERMIT.

COMMITMENT E: STORM WATER

CONSTRUCTION ACTIVITIES CONSTITUTE 1 ACRE OR MORE OF EARTH DISTURBANCE.

ACTION TAKEN/REQUIRED:

THE DENR AND THE US ENVIRONMENTAL PROTECTION AGENCY (EPA) HAVE ISSUED SEPARATE GENERAL PERMITS FOR THE DISCHARGE OF STORM WATER RUNOFF. THE DENR PERMIT APPLIES TO DISCHARGES ON STATE LAND AND THE EPA PERMIT APPLIES TO DISCHARGES ON FEDERAL OR RESERVATION LAND. THE CONTRACTOR IS ADVISED THIS PROJECT IS REGULATED UNDER THE PHASE II STORM WATER REGULATIONS AND MUST RECEIVE COVERAGE UNDER THE GENERAL PERMIT FOR CONSTRUCTION ACTIVITIES. A

NOTICE OF INTENT (NOI) WILL BE SUBMITTED TO DENR A MINIMUM OF 15 DAYS PRIOR TO PROJECT START BY THE DOT ENVIRONMENTAL OFFICE. A LETTER MUST BE RECEIVED FROM DENR THAT ACKNOWLEDGES PROJECT COVERAGE UNDER THIS GENERAL PERMIT BEFORE PROJECT START. THE CONTRACTOR IS ADVISED THAT PERMIT COVERAGE MAY ALSO BE REQUIRED BY OFF-SITE ACTIVITIES, SUCH AS BORROW AND STAGING AREAS, WHICH ARE THE RESPONSIBILITY OF THE CONTRACTOR.

THE CONTRACTOR SHALL ADHERE TO THE “SPECIAL PROVISION REGARDING STORM WATER DISCHARGES TO WATERS OF THE STATE”.

A MAJOR COMPONENT OF THE STORM WATER CONSTRUCTION PERMITS IS DEVELOPMENT AND IMPLEMENTATION OF A STORM WATER POLLUTION PREVENTION PLAN (SWPPP), WHICH IS A JOINT EFFORT AND RESPONSIBILITY OF THE SDDOT AND THE CONTRACTOR. EROSION CONTROL MEASURES AND BEST MANAGEMENT PRACTICES WILL BE IMPLEMENTED IN ACCORDANCE WITH THE SWPPP. THE SWPPP IS A DYNAMIC DOCUMENT AND IS TO BE AVAILABLE ON-SITE AT ALL TIMES.

INFORMATION ON STORM WATER PERMITS AND SWPPPS ARE AVAILABLE ON THE FOLLOWING WEBSITES:

SDDOT:
HTTP://SDDOT.COM/TRANSPORTATION/HIGHWAYS/ENVIRONMENTAL/STORMWATER/DEFAULT.ASPX

DENR: HTTP://WWW.DENR.SD.GOV/DES/SW/STORMWATER.ASPX

EPA: HTTP://CFPUB.EPA.GOV/NPDES/HOME.CFM?PROGRAM_ID=6

CONTRACTOR CERTIFICATION FORM:

THE “DEPARTMENT OF ENVIRONMENTAL AND NATURAL RESOURCES - CONTRACTOR CERTIFICATION FORM” (SD EFORM - 2110LDV1-CONTRACTORCERTIFICATION.PDF) SHALL BE COMPLETED BY THE CONTRACTOR OR THEIR CERTIFIED EROSION CONTROL SUPERVISOR AFTER THE AWARD OF THE CONTRACT. WORK MAY NOT BEGIN ON THE PROJECT UNTIL THIS FORM IS SIGNED.

THE FORM CERTIFIES UNDER PENALTY OF LAW THAT THE CONTRACTOR UNDERSTANDS AND WILL COMPLY WITH THE TERMS AND CONDITIONS OF THE SURFACE WATER DISCHARGE GENERAL PERMIT FOR STORM WATER DISCHARGES ASSOCIATED WITH CONSTRUCTION ACTIVITIES FOR THE PROJECT.

THE ONLINE FORM CAN BE FOUND AT:
HTTP://DENR.SD.GOV/DES/SW/EFORMS/E2110LDV1-CONTRACTORCERTIFICATION.PDF

COMMITMENT H: WASTE DISPOSAL SITE

THE CONTRACTOR SHALL FURNISH A SITE(S) FOR THE DISPOSAL OF CONSTRUCTION AND/OR DEMOLITION DEBRIS GENERATED BY THIS PROJECT.

ACTION TAKEN/REQUIRED:

CONSTRUCTION AND/OR DEMOLITION DEBRIS MAY NOT BE DISPOSED OF WITHIN THE STATE ROW.

THE WASTE DISPOSAL SITE(S) SHALL BE MANAGED AND RECLAIMED IN ACCORDANCE WITH THE FOLLOWING FROM THE GENERAL PERMIT FOR HIGHWAY, ROAD, AND RAILWAY CONSTRUCTION/DEMOLITION DEBRIS DISPOSAL UNDER THE SOUTH DAKOTA WASTE MANAGEMENT PROGRAM ISSUED BY THE DEPARTMENT OF ENVIRONMENT AND NATURAL RESOURCES.

THE WASTE DISPOSAL SITE(S) SHALL NOT BE LOCATED IN A WETLAND, WITHIN 200 FEET OF SURFACE WATER, OR IN AN AREA THAT ADVERSELY AFFECTS WILDLIFE, RECREATION, AESTHETIC VALUE OF AN AREA, OR ANY THREATENED OR ENDANGERED SPECIES, AS APPROVED BY THE PROJECT ENGINEER.

IF THE WASTE DISPOSAL SITE(S) IS LOCATED SUCH THAT IT IS WITHIN VIEW OF ANY ROW, THE FOLLOWING ADDITIONAL REQUIREMENTS SHALL APPLY:

1. CONSTRUCTION AND/OR DEMOLITION DEBRIS CONSISTING OF CONCRETE, ASPHALT CONCRETE, OR OTHER SIMILAR MATERIALS SHALL BE BURIED IN A TRENCH COMPLETELY SEPARATE FROM WOOD DEBRIS. THE FINAL COVER OVER THE CONSTRUCTION AND/OR DEMOLITION DEBRIS SHALL CONSIST OF A MINIMUM OF 1 FOOT OF SOIL CAPABLE OF SUPPORTING VEGETATION. WASTE DISPOSAL SITES PROVIDED OUTSIDE OF THE STATE ROW SHALL BE SEEDED IN ACCORDANCE WITH NATURAL RESOURCES CONSERVATION SERVICE RECOMMENDATIONS. THE SEEDING RECOMMENDATIONS MAY BE OBTAINED THROUGH THE APPROPRIATE COUNTY NRCS OFFICE. THE CONTRACTOR SHALL CONTROL THE ACCESS TO WASTE DISPOSAL SITES NOT WITHIN THE STATE ROW THROUGH THE USE OF FENCES, GATES, AND PLACEMENT OF A SIGN OR SIGNS AT THE ENTRANCE TO THE SITE STATING “NO DUMPING ALLOWED”.

2. CONCRETE AND ASPHALT CONCRETE DEBRIS MAY BE STOCKPILED WITHIN VIEW OF THE ROW FOR A PERIOD OF TIME NOT TO EXCEED THE DURATION OF THE PROJECT. PRIOR TO PROJECT COMPLETION, THE WASTE SHALL BE REMOVED FROM VIEW OF THE ROW OR BURIED AND THE WASTE DISPOSAL SITE RECLAIMED AS NOTED ABOVE.

THE ABOVE REQUIREMENTS WILL NOT APPLY TO WASTE DISPOSAL SITES THAT ARE COVERED BY AN INDIVIDUAL SOLID WASTE PERMIT AS SPECIFIED IN SDCL 34A-6-58, SDCL 34A-6-1.13, AND ARSD 74:27:10:06.

FAILURE TO COMPLY WITH THE REQUIREMENTS STATED ABOVE MAY RESULT IN CIVIL PENALTIES IN ACCORDANCE WITH SOUTH DAKOTA SOLID WASTE LAW, SDCL 34A-6-1.31.

ALL COSTS ASSOCIATED WITH FURNISHING WASTE DISPOSAL SITE(S), DISPOSING OF WASTE, MAINTAINING CONTROL OF ACCESS (FENCE, GATES, AND SIGNS), AND RECLAMATION OF THE WASTE DISPOSAL SITE(S) SHALL BE INCIDENTAL TO THE VARIOUS CONTRACT ITEMS.

COMMITMENT I: HISTORICAL PRESERVATION OFFICE CLEARANCES

THE SDDOT HAS OBTAINED CONCURRENCE WITH THE STATE HISTORICAL PRESERVATION OFFICE (SHPO OR THPO) FOR ALL WORK INCLUDED WITHIN THE PROJECT LIMITS AND ALL DESIGNATED OPTION BORROW SITES PROVIDED WITHIN THE PLANS.

ACTION TAKEN/REQUIRED:

ALL EARTH DISTURBING ACTIVITIES NOT DESIGNATED WITHIN THE PLANS REQUIRE REVIEW OF CULTURAL RESOURCES IMPACTS. THIS WORK INCLUDES, BUT IS NOT LIMITED TO: STAGING AREAS, BORROW SITES, WASTE DISPOSAL SITES, AND ALL MATERIAL PROCESSING SITES.

THE CONTRACTOR SHALL ARRANGE AND PAY FOR A CULTURAL RESOURCE SURVEY AND/OR RECORDS SEARCH. THE CONTRACTOR HAS THE OPTION TO CONTACT THE STATE ARCHAEOLOGICAL RESEARCH CENTER (ARC) AT 605-394-1936 OR ANOTHER QUALIFIED ARCHAEOLOGIST, TO OBTAIN EITHER A RECORDS SEARCH OR A CULTURAL RESOURCES SURVEY. A RECORD SEARCH MIGHT BE SUFFICIENT FOR REVIEW; HOWEVER, A CULTURAL RESOURCES SURVEY MAY NEED TO BE CONDUCTED BY A QUALIFIED ARCHAEOLOGIST.

THE CONTRACTOR SHALL PROVIDE ARC WITH THE FOLLOWING: A TOPOGRAPHICAL MAP OR AERIAL VIEW ON WHICH THE SITE IS CLEARLY OUTLINED, SITE DIMENSIONS, PROJECT NUMBER, AND PCN. IF APPLICABLE, PROVIDE EVIDENCE THAT THE SITE HAS BEEN PREVIOUSLY DISTURBED BY FARMING, MINING, OR CONSTRUCTION ACTIVITIES WITH A LANDOWNER STATEMENT THAT ARTIFACTS HAVE NOT BEEN FOUND ON THE SITE.

THE CONTRACTOR SHALL SUBMIT THE RECORDS SEARCH OR CULTURAL RESOURCES SURVEY REPORT AND IF THE LOCATION OF THE SITE IS WITHIN THE CURRENT GEOGRAPHICAL OR HISTORIC BOUNDARIES OF ANY SOUTH DAKOTA RESERVATION TO SDDOT ENVIRONMENTAL ENGINEER, 700 EAST BROADWAY AVENUE, PIERRE, SD 57501-2586 (605-773-3180). SDDOT WILL SUBMIT THE INFORMATION TO THE APPROPRIATE SHPO/THPO. ALLOW 30 DAYS FROM THE DATE THIS INFORMATION IS SUBMITTED TO THE ENVIRONMENTAL ENGINEER FOR SHPO/THPO REVIEW.

IF EVIDENCE FOR CULTURAL RESOURCES IS UNCOVERED DURING PROJECT CONSTRUCTION ACTIVITIES, THEN SUCH ACTIVITIES SHALL CEASE AND THE PROJECT ENGINEER SHALL BE IMMEDIATELY NOTIFIED. THE PROJECT ENGINEER WILL CONTACT THE SDDOT ENVIRONMENTAL ENGINEER IN ORDER TO DETERMINE AN APPROPRIATE COURSE OF ACTION.

SHPO/THPO REVIEW DOES NOT RELIEVE THE CONTRACTOR OF THE RESPONSIBILITY FOR OBTAINING ANY ADDITIONAL PERMITS AND CLEARANCES FOR STAGING AREAS, BORROW SITES, WASTE DISPOSAL SITES, OR MATERIAL PROCESSING SITES THAT AFFECT WETLANDS, THREATENED AND ENDANGERED SPECIES, OR WATERWAYS. THE CONTRACTOR SHALL PROVIDE THE REQUIRED PERMITS AND CLEARANCES TO THE PROJECT ENGINEER AT THE PRECONSTRUCTION MEETING.

FOR BIDDING PURPOSES ONLY

SCOPE OF PROJECT:

THIS PROJECT PROVIDES FOR, BUT NOT LIMITED TO, THE FOLLOWING IMPROVEMENTS:

- WATERMAIN REPLACEMENT
- SANITARY SEWER REPLACEMENT

THIS IS A NON-QUALIFYING UTILITY PROJECT.

THIS PROJECT WILL BE COMPLETED IN CONJUNCTION WITH SDDOT PROJECT P 0046 (48) 365.

BIDDERS ARE EXPECTED TO EXAMINE THE SITE AND ARRIVE AT THEIR OWN CONCLUSIONS REGARDING THE CHARACTER AND LOCATIONS OF MATERIALS TO BE ENCOUNTERED. ALL CONTRACTORS DESIRING TO TAKE SOIL BORINGS ON THIS PROJECT MUST OBTAIN PERMISSION FROM THE CITY OF BERESFORD AND FROM PROPERTY OWNERS IN THE EVENT THE PROPOSED INVESTIGATION IS ON PRIVATE PROPERTY.

SPECIFICATIONS TO BE USED:

1. CITY OF BERESFORD SPECIFICATIONS PREPARED BY BANNER ASSOCIATES, INC.
2. SOUTH DAKOTA DEPARTMENT OF TRANSPORTATION STANDARD SPECIFICATIONS FOR ROADS AND BRIDGES, 2004 EDITION AND REQUIRED PROVISIONS, SUPPLEMENTAL SPECIFICATIONS, AND SPECIAL PROVISIONS.
3. FEDERAL MANUAL ON UNIFORM TRAFFIC CONTROL DEVICES (MUTCD), CURRENT EDITION.

CONTROL OF EROSION AND SEDIMENT:

CONTROL OF EROSION AND SEDIMENT SHALL BE IN CONFORMANCE WITH SDDENR GUIDE FOR BEST MANAGEMENT PRACTICES (BMP) FOR SEDIMENT AND EROSION CONTROL ON CONSTRUCTION SITES IN SOUTH DAKOTA.

THE CONTRACTOR SHALL BE RESPONSIBLE FOR FURNISHING, CONSTRUCTING, AND MAINTAINING EROSION AND SEDIMENT CONTROL. SEDIMENT CONTROL AT INLETS SHALL BE PAID FOR AT THE CONTRACT UNIT PRICE PER EACH FOR "SEDIMENT CONTROL AT INLET WITH FRAME AND GRATE".

PRE-CONSTRUCTION MEETING:

THE UTILITY IMPROVEMENTS PRE-CONSTRUCTION MEETING SHALL BE IN CONJUNCTION WITH THE SDDOT P 0046 (48) 365 RECONSTRUCTION PROJECT PRE-CONSTRUCTION MEETING.

UTILITY LOCATES:

LOCATION OF EXISTING UTILITIES SHOWN ON THESE PLANS WAS TAKEN FROM THE BEST AVAILABLE RECORDS. PRIOR TO EXCAVATION, THE CONTRACTOR SHALL FIELD VERIFY EXACT LOCATION OF ALL UTILITIES WHETHER OR NOT SHOWN ON THESE PLANS.

CONTRACTOR SHALL PROTECT ALL UTILITIES DURING CONSTRUCTION. ANY DISTURBANCE OR REPLACEMENT OF EXISTING UTILITIES SHALL BE INCIDENTAL TO THE PROJECT. ANY DAMAGE TO THE UTILITIES BECAUSE OF THE CONTRACTOR'S CARELESSNESS SHALL BE REPAIRED AT THE CONTRACTOR'S EXPENSE.

THE CONTRACTOR SHALL BE RESPONSIBLE FOR HAVING ALL UTILITIES LOCATED. THE CONTRACTOR SHALL NOTIFY THE SD 1-CALL NOTIFICATION CENTER AT 1-800-781-7474 FOR SCHEDULING LOCATES.

IT IS UNDERSTOOD AND AGREED THAT THE CONTRACTOR HAS CONSIDERED IN THE BID THE PERMANENT AND TEMPORARY UTILITY APPURTENANCES IN THEIR PRESENT OR RELOCATED POSITIONS AS SHOWN ON THE PLANS. ADDITIONAL COMPENSATION WILL NOT BE ALLOWED FOR DELAYS, INCONVENIENCES OR DAMAGE SUSTAINED DUE TO INTERFERENCE FROM THE UTILITY APPURTENANCES OR THE OPERATION OF MOVING THEM.

IT IS ANTICIPATED THAT EXCAVATION IN AREAS ADJACENT TO AND/OR PARALLEL TO OTHER UNDERGROUND UTILITIES WILL NECESSITATE THE USE OF A TRENCH BOX OR SHORING IN ORDER TO PROTECT SAID UTILITIES.

NOTIFICATION:

CONTRACTOR SHALL NOTIFY THE POLICE DEPARTMENT (605-763-2100), FIRE DEPARTMENT (605-763-2100), AND CITY HALL (605-763-2008), AT LEAST TEN WORKING DAYS PRIOR TO ANY BARRICADING, MOBILIZATION OR CONSTRUCTION MAY BEGIN ON ANY CITY STREETS.

CONTRACTOR SHALL NOTIFY ANY BUSINESSES OR HOMEOWNERS IF INCONVENIENCE OF ACCESSIBILITY IS CREATED BY THE PROJECT.

CONTRACTOR SHALL RENOTIFY THE POLICE DEPARTMENT PRIOR TO AND AFTER CONSTRUCTION ACTIVITIES FOR EMERGENCY ROUTE COORDINATION.

CONFINED WORK AREA:

THE CONTRACTOR SHALL CONFINE THE WORK AREA TO THE PLATTED ROAD RIGHT-OF-WAY AND CONSTRUCTION EASEMENTS SECURED BY SDDOT. ANY DAMAGES INCURRED TO THE PROPERTY OUTSIDE OF THE PLATTED ROAD RIGHT-OF-WAY SHALL BE REPAIRED TO THE ENGINEER'S AND PRIVATE OWNER'S SATISFACTION AT THE CONTRACTOR'S EXPENSE.

JOB SITE AND WORK AREA:

THE CONTRACTOR SHALL PERFORM THE WORK IN A GOOD WORKMANLIKE MANNER OR TO THE SATISFACTION OF THE OWNER. THE CONTRACTOR SHALL CLEAN UP THE JOB SITE OR WORK AREA EACH DAY PRIOR TO LEAVING THE SITE.

THE CONTRACTOR SHALL NOT PLACE ANY HEAVY EQUIPMENT ON THE EXISTING CURB AND GUTTER, INCLUDING DRIVEWAY ENTRANCES. IF IT IS NECESSARY TO TURN VEHICLES AROUND, THE CONTRACTOR SHALL USE THOSE CURB AND GUTTER AREAS DESIGNATED AS REPLACEMENT FOR TURNING VEHICLES. ANY AREAS NOT DESIGNATED TO BE REMOVED THAT ARE DAMAGED BY THE CONTRACTOR SHALL BE REPLACED BY THE CONTRACTOR AT NO COST TO THE OWNER.

CONTRACTOR SHALL BE SOLELY RESPONSIBLE FOR ALL SAFETY REQUIREMENTS.

ALL OPEN EXCAVATIONS SHALL BE PROTECTED FROM THE GENERAL PUBLIC.

CONTRACTOR SHALL PROVIDE REASONABLE ACCESS FOR LOCAL RESIDENTS AND BUSINESSES THROUGHOUT THE CONSTRUCTION. IF THESE AREAS NEED TO BE CLOSED FOR BRIEF PERIODS OF TIME, THE CONTRACTOR SHALL COORDINATE THAT CLOSURE TO ENSURE MINIMAL INCONVENIENCE.

CONTRACTOR SHALL PROVIDE ACCESS FOR THE FIRE DEPARTMENT AT ALL TIMES AND COORDINATE ANY INTERRUPTIONS TO ACCESS WITH THE FIRE CHIEF.

CONTRACTOR SHALL MAINTAIN CONSTRUCTION WORK WITHIN THE ROAD RIGHT-OF-WAY AS SHOWN ON THE PLANS. ANY DAMAGE OUTSIDE THESE CONSTRUCTION LIMITS WILL BE THE CONTRACTOR'S RESPONSIBILITY.

THE CONTRACTOR SHALL DISCUSS AND OBTAIN PERMISSION FOR USE OF ANY ADDITIONAL PROPERTY OUTSIDE OF THE CONSTRUCTION AREA WHICH THE CONTRACTOR DEEMS NECESSARY FOR LOCATION OF PIPE STORAGE, EXCAVATED MATERIAL, AND OTHER MATERIALS OR EQUIPMENT. AN AGREEMENT, SIGNED BY THE PROPERTY OWNER, AGREEING TO THE USE OF THE PROPERTY SHALL BE PROVIDED TO THE CITY AND THE ENGINEER PRIOR TO OCCUPYING PROPERTY OUTSIDE OF THE CONSTRUCTION AREA. THE CONTRACTOR MAY BE REQUIRED TO GET SIGN-OFF APPROVAL FROM THE PROPERTY OWNER PRIOR TO FINAL PAYMENT.

ABANDONED OPEN PIPES TO BE CONCRETE CAPPED:

THE CONTRACTOR SHALL CAP OR PLUG WITH CONCRETE ALL ABANDONED PIPE ENDS WHICH HAVE BEEN OPENED FROM CONSTRUCTION. THE CONTRACTOR SHALL ENSURE THE WORK HAS BEEN INSPECTED BY THE ENGINEER OR ENGINEER'S REPRESENTATIVE PRIOR TO BACKFILLING. COST FOR THIS WORK SHALL BE CONSIDERED INCIDENTAL TO PROJECT COSTS.

WATER/SEWER CONSTRUCTION SEQUENCE:

THE CONSTRUCTION OF WATER AND SEWER UTILITIES WILL REQUIRE A CAREFULLY PLANNED CONSTRUCTION SEQUENCE IN ORDER TO MINIMIZE SERVICE INTERRUPTIONS. THE CONTRACTOR SHALL COORDINATE HIS WORK WITH THE UTILITY SUPERINTENDENT, PROJECT ENGINEER, SDDOT, AND THE P 0046 (48) 365 PRIME CONTRACTOR IN ORDER TO PROVIDE ACCESS FOR EMERGENCY VEHICLES.

DEWATERING:

THE CONTRACTOR SHALL DISCHARGE AND DISPOSE OF THE WATER IN AN APPROVED MANNER. IF GROUNDWATER IS ENCOUNTERED AND DEWATERING IS NECESSARY, ALL COSTS ASSOCIATED WITH THE LABOR, EQUIPMENT AND MATERIALS FOR DEWATERING THE PROJECT SHALL BE ABSORBED IN THE LUMP SUM PRICE BID FOR "DEWATERING".

WATER/SEWER SEPARATION:

SANITARY SEWER SHALL BE LAID AT LEAST 10 FEET HORIZONTAL FROM ANY EXISTING OR PROPOSED WATERMAIN. THE DISTANCE SHALL BE MEASURED EDGE TO EDGE. IN CASES WHERE IT IS NOT PRACTICAL TO MAINTAIN A TEN FOOT SEPARATION, THE REVIEWING AUTHORITY MAY ALLOW DEVIATION ON A CASE-BY-CASE BASIS, IF SUPPORTED BY DATA FROM THE DESIGN ENGINEER. SUCH DEVIATION MAY ALLOW INSTALLATION OF THE SEWER CLOSER TO A WATERMAIN, PROVIDED THAT THE SEWER IS LAID IN A SEPARATE TRENCH OR ON AN UNDISTURBED EARTH SHELF LOCATED ON ONE SIDE OF THE WATERMAIN AT SUCH AN ELEVATION THAT THE BOTTOM OF THE WATERMAIN IS AT LEAST 18 INCHES ABOVE THE TOP OF THE SEWER.

WATERMAINS CROSSING SEWERS SHALL PROVIDE A MINIMUM VERTICAL DISTANCE OF 18 INCHES BETWEEN THE BOTTOM OF THE WATERMAIN AND THE TOP OF THE SEWER. IF THE SEWER LINE IS LESS THAN 18 INCHES BELOW THE WATERMAIN, OR IS ABOVE THE WATERMAIN, EITHER THE SEWER PIPE OR WATERMAIN SHALL BE FULLY ENCASED FOR A DISTANCE OF 10 FEET EACH SIDE OF THE CROSSING. THE ENCASEMENT PIPE SHALL CONSIST OF PVC ENCASEMENT PIPE CLOSED AT THE ENDS WITH A FLEXIBLE REDUCING COUPLING. SPECIAL STRUCTURAL SUPPORT FOR THE WATER AND SEWER PIPES MAY BE REQUIRED.

TRENCH REPLACEMENT:

ALL WATER OR SEWER TRENCH REPLACEMENT SHALL BE BACKFILLED AND COMPACTED WITH THE PREVIOUSLY REMOVED TRENCH MATERIAL UNLESS OTHERWISE DIRECTED BY THE ENGINEER.

ALL UTILITY TRENCHES CROSSING ROADS AND DRIVEWAYS SHALL BE BACKFILLED, RESTORED, AND REOPENED TO TRAFFIC ON THE SAME DAY THEY ARE EXCAVATED.

THE SDDOT WILL PROVIDE UTILITY TRENCH COMPACTION TESTING IN ACCORDANCE WITH SDDOT MATERIALS MANUAL.

EXCESS TRENCH MATERIAL:

ANY EXCESS TRENCH MATERIAL SHALL BE THE PROPERTY OF THE CONTRACTOR AND SHALL BE REMOVED AND DISPOSED OF AT THE CONTRACTOR'S EXPENSE.

WATERMAIN CONSTRUCTION:

ALL WATERMAINS SHALL HAVE A MINIMUM OF 6.5 FEET OF COVER BASED ON THE FINAL DIRT OR PAVEMENT GRADE ABOVE THE WATERMAIN UNLESS SHOWN OTHERWISE ON THE PLANS. THE FINAL GRADE ABOVE THE WATERMAIN SHALL BE BASED ON THE PROFILE SHEETS SHOWN IN THE PLANS.

CONTRACTOR SHALL BE RESPONSIBLE FOR COMPLETING ALL CONNECTIONS ON THE NEW WATER MAIN TO THE EXISTING WATER MAIN. COST OF THE WORK SHALL BE INCIDENTAL TO THE CONTRACT UNIT PRICE PER EACH FITTING USED FOR THE CONNECTION.

CONTRACTOR SHALL BE CAREFUL NOT TO DAMAGE WATER VALVE BOXES. ANY DAMAGE TO VALVE BOXES, INCLUDING MISALIGNMENT OF BOXES, DUE TO CARELESSNESS OF THE CONTRACTOR SHALL BE REPAIRED BY THE CONTRACTOR AT NO COST TO THE OWNER.

ALL SALVAGED WATERMAIN APPURTENANCES SHALL REMAIN THE PROPERTY OF THE CITY .

WATERMAIN BEDDING MATERIAL SHALL BE USED AT LOCATIONS WHERE THE PROPOSED WATERMAIN IS PLACED BENEATH STREET PAVEMENT AND AS DIRECTED BY THE ENGINEER.

COST FOR WATER MAIN BEDDING SHALL BE PAID FOR BY THE CONTRACT UNIT PRICE PER FOOT FOR "WATER MAIN BEDDING MATERIAL".

THE CONTRACTOR MAY BE REQUIRED TO HAVE THE PROPER TRANSITION COUPLINGS ON HAND TO MAKE THE CONNECTIONS TO THE DIFFERENT TYPE OF PIPE MATERIALS IF NEEDED.

ALL DUCTILE IRON VALVES, VALVE BOXES, FITTINGS, AND FIRE HYDRANTS SHALL BE WRAPPED WITH 8-MIL POLYETHYLENE ENCASEMENT MATERIAL. ALL BOLTS SHALL BE COR-BLUE.

DISPOSING OF HEAVILY CHLORINATED WATER:

THE ENVIRONMENT TO WHICH THE CHLORINATED WATER FROM DISINFECTION IS TO BE DISCHARGED (INCLUDING POINT OF STORM SEWER DISCHARGE) SHALL BE INSPECTED. IF THERE IS ANY QUESTION THAT THE CHLORINATED DISCHARGE WILL CAUSE DAMAGE TO THE ENVIRONMENT, INCLUDING CREEKS, STREAMS, RIVERS, PONDS OR LAKES THAT SUPPORT AQUATIC LIFE, THEN A REDUCING AGENT SHALL BE APPLIED TO THE WATER TO BE WASTED TO NEUTRALIZE THOROUGHLY THE CHLORINE RESIDUAL REMAINING IN THE WATER. CONTACT SD DENR SURFACE WATER QUALITY PROGRAM AT 1-800-773-3351 FOR MORE INFORMATION.

REGISTERED PROFESSIONAL ENGINEER
REG NO. 3873
HAROLD N. HOLOCH
SOUTH DAKOTA

Harold Holoch
10-3-14

FOR BIDDING PURPOSES ONLY

WATER SERVICES:

THE LOCATION OF WATER SERVICES ARE INDICATED ON THE PLANS ACCORDING TO FIELD LOCATIONS AND/OR INFORMATION FURNISHED BY THE CITY OF BERESFORD. ACTUAL SERVICE LOCATIONS SHALL BE VERIFIED BY THE CONTRACTOR DURING CONSTRUCTION.

ANY ADDITIONAL SERVICES NOT INDICATED ON THE PLANS SHALL BE VERIFIED AS "ACTIVE" OR "DEAD" AND CONNECTED AS REQUIRED.

EXISTING WATER SERVICES SHALL NOT BE INTERRUPTED DURING THE WATERMAIN INSTALLATION. THE CONTRACTOR SHALL COORDINATE ALL WATERMAIN INSTALLATION AND SERVICE CONNECTIONS WITH THE CITY OF BERESFORD WATER DEPARTMENT.

WATER SERVICE SHALL BE MAINTAINED UNTIL THE NEW WATERMAIN HAS BEEN PRESSURE TESTED, DISINFECTED, FLUSHED AND NEW SERVICES PUT IN SERVICE IN THE CONSTRUCTION AREA. FIRE HYDRANTS ON EXISTING WATERMAIN SHALL BE ACTIVE AT ALL TIMES. THE CONTRACTOR SHALL NOTIFY THE WATER SUPERINTENDENT AND THE FIRE CHIEF IF A FIRE HYDRANT HAS TO BE TAKEN OUT OF SERVICE. THE COST FOR PROVIDING TEMPORARY WATER SERVICE SHALL BE INCIDENTAL TO THE "TEMPORARY WATER SERVICE" BID ITEM.

WATER OUTAGES, INCLUDING INDIVIDUAL SERVICES, SHALL BE HELD TO A MINIMUM. CONNECTIONS TO THE EXISTING WATERMAINS AND TO THE HIGHER USAGE SERVICES SHALL BE COMPLETED DURING OFF-PEAK WATER USAGE AND MUST BE COORDINATED WITH THE WATER SUPERINTENDENT AND THE CONSUMER. ALL OPERATION (OPENING AND CLOSING) OF VALVES SHALL BE BY THE WATER DEPARTMENT. THE CONTRACTOR SHALL PROVIDE ONE PERSON TO ASSIST WITH VALVE OPERATIONS.

THE LOCATION OF WATER SERVICE CONNECTIONS SHOWN ON THE DRAWINGS ARE ASSUMED. THE SIZE AND MATERIAL OF EXISTING WATER SERVICES WAS TAKEN FROM THE BEST AVAILABLE INFORMATION. THE CONTRACTOR SHALL LOCATE ALL EXISTING WATER SERVICES AND INSTALL A NEW SERVICE SADDLE, CORPORATION STOP, CURB STOP, CURB BOX AND MAKE CONNECTION TO EXISTING SERVICE LINE, WHETHER SHOWN ON THE DRAWINGS OR NOT SHOWN. MINIMUM SIZE SERVICE SHALL BE 1" DIAMETER. THE COST OF THIS WORK INCLUDING TRENCH EXCAVATION, BACKFILL, AND/OR DIRECTIONAL BORING SHALL BE INCIDENTAL TO THE PRICE OF THE WATER SERVICE, CORPORATION STOP, AND CURB STOP INSTALLED EACH.

WATER/SEWER SERVICE CLEARANCES FOR THE STORM SEWER

THE TOP OF ALL WATER/SANITARY SERVICES AT STORM SEWER CROSSINGS SHALL BE 1 FOOT MINIMUM BELOW PROPOSED STORM SEWER INVERTS. CONTRACTOR SHALL DETERMINE LOCATION AND DEPTH OF FUTURE STORM SEWER AT ALL LOCATIONS WHERE WATER SERVICES WILL BE INSTALLED SO THAT THE SERVICES ARE INSTALLED AT LEAST 1 FOOT BELOW THE FUTURE STORM SEWER.

WHEN THE MINIMUM CLEARANCE CANNOT BE OBTAINED, THE CONTRACTOR SHALL PLACE 2-INCH RIGID INSULATION BETWEEN THE NEW STORM SEWER AND WATER/SANITARY SERVICE LINES TO PREVENT FREEZING.

COST FOR THIS WORK SHALL BE INCIDENTAL TO THE PRICE OF THE INSULATION BOARD INSTALLED.

SANITARY SEWER CONSTRUCTION:

ALL GRAVITY SEWER PIPE SHALL BE INSTALLED SUCH THAT THE BELLS ARE ON THE UPSTREAM END. A PLASTIC PLUG SHALL BE INSERTED IN THE END OF EACH BELL AFTER LAYING THE PIPE TO PREVENT FOREIGN MATERIAL FROM ENTERING THE PIPE. SANITARY SEWER SERVICE SHALL BE MAINTAINED THROUGHOUT CONSTRUCTION. THE COSTS ASSOCIATED WITH MAINTAINING SANITARY SEWER SERVICE SHALL BE INCIDENTAL TO THE PROJECT.

ALL NEW AND EXISTING MANHOLES DESIGNATED TO REMAIN SHALL BE ADJUSTED TO MATCH GRADE OF NEW SURFACING. ADJUSTMENT OF MANHOLES SHALL BE CONSIDERED INCIDENTAL TO PROJECT COSTS.

BY-PASS PUMPING:

IT WILL BE NECESSARY FOR THE CONTRACTOR TO BY-PASS PUMP EXISTING FLOWS BETWEEN SEGMENTS OF THE SYSTEM THAT ARE BEING CONSTRUCTED. ANY PLAN PROPOSED FOR BY-PASS PUMPING SHALL BE APPROVED BY THE ENGINEER. PAYMENT FOR BY-PASS PUMPING SHALL BE INCLUDED IN THE CONTRACT LUMP SUM PRICE FOR SEWER BY-PASS PUMPING AND SHALL INCLUDE ALL PUMPS, HOSE, PIPE, AND INCIDENTALS NEEDED FOR THE SATISFACTORY PUMPING OF EXISTING FLOWS AROUND THE VARIOUS CONSTRUCTION AREAS.

THE CONTRACT LUMP SUM PRICE FOR "SEWER BY-PASS PUMPING" SHALL BE FULL COMPENSATION FOR ALL BY-PASS PUMPING REQUIRED. NO SEPARATE PAYMENT WILL BE MADE FOR MOVING THE PUMPING OPERATION.

SANITARY SEWER MANHOLES:

THE CONTRACT UNIT PRICE PER EACH "48" MANHOLE" SHALL BE ALL INCLUSIVE AND INCLUDE EVERYTHING FOR A COMPLETE MANHOLE AND SHALL INCLUDE THE FLEXIBLE RUBBER BOOTS WITH STAINLESS STEEL CLAMPS, CONCRETE ADJUSTING RINGS, FRAME AND LID.

RIM ELEVATIONS OF MANHOLES AS SHOWN ON THE PLANS ARE APPROXIMATE. THE CONTRACTOR SHALL FIELD VERIFY THE REQUIRED RIM ELEVATIONS PRIOR TO ORDERING FABRICATION OF THE MANHOLE BARREL SECTIONS. ANY ADJUSTMENT TO THE BARREL LENGTH REQUIRED IN THE FIELD SHALL BE MADE AT THE CONTRACTOR'S EXPENSE.

CONTRACTOR SHALL BE CAREFUL NOT TO DAMAGE MANHOLE CASTINGS. ANY DAMAGE TO MANHOLES AND/OR CASTINGS DUE TO CARELESSNESS OF THE CONTRACTOR SHALL BE REPAIRED BY THE CONTRACTOR AT NO EXPENSE TO THE OWNER. ALL CASTINGS SHALL BE SALVAGED AND REMAIN PROPERTY OF THE OWNER.

SANITARY SEWER SERVICES:

THE SIZE AND LOCATION OF EXISTING SANITARY SEWER SERVICES ARE INDICATED ON THE PLANS FROM FIELD LOCATIONS AND/OR INFORMATION FURNISHED BY THE CITY OF BERESFORD.

THE CONTRACTOR SHALL CAREFULLY LOCATE ALL SEWER SERVICES, WHETHER SHOWN ON THE DRAWINGS OR NOT SHOWN. ANY ADDITIONAL SERVICES NOT INDICATED ON THE PLANS SHALL BE VERIFIED AS "ACTIVE" OR "DEAD" AND CONNECTED IF REQUIRED.

ALL SERVICES SHALL BE REPLACED FROM THE MAIN COLLECTION LINE TO A DISTANCE SHOWN ON THE PLANS. ANY EXISTING CONNECTIONS THAT APPEAR TO BE FROM STORM SEWER DRAINS OR SUMPS SHALL BE BROUGHT TO THE ATTENTION OF THE ENGINEER OR THE OWNER.

TESTING SANITARY SEWER MAIN:

IF DEFECTIVE WORKMANSHIP, MATERIALS OR INSUFFICIENT TESTING RESULTS ARE FOUND IN THE SEWER MAIN OR MANHOLES, ALL SHALL BE CORRECTED BY THE CONTRACTOR AT NO ADDITIONAL EXPENSE TO THE OWNER. THE CONTRACTOR SHALL BE RESPONSIBLE FOR ALL RELATED COSTS FOR CORRECTIVE METHODS, INCLUDING ALL STREET, ALLEY, BOULEVARD, OR ETC., RESTORATION.

FILL ABANDONMENT OF EXISTING SANITARY SEWER MANHOLE:

THE CONTRACTOR SHALL FILL THE ABANDONED SANITARY SEWER MANHOLES NOTED ON THE PLANS WITH A LOW DENSITY CELLULAR CONCRETE TO APPROXIMATELY 3 FEET BELOW FINISH GRADE AND REMOVE THE REMAINING PORTION OF THE MANHOLE. THE CONTRACTOR SHALL BE REQUIRED TO INSTALL NEW PIPE THROUGH THE INVERT OF THE EXISTING MANHOLE PRIOR TO POURING THE CONCRETE. THE CONTRACTOR SHALL SUBMIT THE MIX DESIGN FOR THE LOW DENSITY CELLULAR CONCRETE TO THE ENGINEER FOR APPROVAL PRIOR TO CONSTRUCTION. THE MINIMUM 28 DAY COMPRESSIVE STRENGTH FOR THIS MIX SHALL BE 250 PSI.

THE NEW PIPE AND FILLING OF THE SANITARY SEWER MANHOLES SHALL BE INCIDENTAL TO THE CONTRACT UNIT PRICE PER EACH FOR "ABANDON MANHOLE".

REMOVAL OF EXISTING WATER/SANITARY PIPE:

THE PLANS INDICATE THE REMOVAL OF WATER/SANITARY PIPE IN CONJUNCTION WITH INSTALLATION OF WATER/SANITARY PIPE. ALL REMOVAL OF WATER/SANITARY PIPE WHILE EXCAVATING FOR NEW WATER/SANITARY PIPE SHALL BE CONSIDERED INCIDENTAL TO THE INSTALLATION OF SAID PIPE. THERE WILL BE NO SEPARATE MEASUREMENT AND PAYMENT FOR WATER/SANITARY PIPE REMOVED DURING EXCAVATION FOR NEW PIPE.

TRACER WIRE:

TRACER WIRE SHALL BE INSTALLED ON ALL UNDERGROUND UTILITY LINES, INCLUDING THE WATER AND SANITARY MAINS AND ALL WATER AND SANITARY SERVICE LINES, AS SHOWN ON THE PLANS. THE TRACER WIRE SYSTEM SHALL BE CONSIDERED INCIDENTAL TO THE COST OF THE PIPE AND NO SEPARATE MEASUREMENT AND PAYMENT WILL BE MADE FOR TRACER WIRE OR ACCESS POINTS. TRACER WIRE ACCESS POINTS FOR THE WATER DISTRIBUTION SYSTEM SHALL BE INSTALLED AS SHOWN IN THE PLANS. TRACER WIRE ACCESS POINTS FOR THE SANITARY SEWER COLLECTION SYSTEM SHALL BE LOCATED BEHIND THE CURB IN A 6" FIBERGLASS HANDHOLE AS APPROVED BY THE OWNER/ENGINEER.

EXPLORATORY EXCAVATION:

THE CONTRACTOR SHALL USE EXPLORATORY EXCAVATION TO EXPOSE EXISTING 6" SANITARY SEWER AT STA. 54+72 - 84' RT +/- TO DETERMINE EXACT LOCATION AND DEPTH PRIOR TO ORDERING MANHOLE #16. PAYMENT SHALL BE AT THE CONTRACT UNIT PRICE PER HOUR FOR "EXPLORATORY EXCAVATION".

ASPHALT CONCRETE COMPOSITE:

THE CONTRACTOR SHALL FURNISH AND INSTALL 4" OF ASPHALT CONCRETE COMPOSITE ON 8" OF BASE COURSE AS PER PROJECT SPECIFICATIONS AT STA. 38+10 TO 38+43 - 87' RT DUE TO WATER MAIN INSTALLATION. THE QUANTITIES INCLUDE 38 S.Y. OF ASPHALT CONCRETE PAVEMENT REMOVAL, 8.4 TON ASPHALT CONCRETE COMPOSITE, AND 16.9 TON BASE COURSE.

TRAFFIC CONTROL & GENERAL MAINTENANCE OF TRAFFIC:

TRAFFIC CONTROL SHALL BE PROVIDED, ERECTED AND MAINTAINED IN ACCORDANCE WITH THE ABOVE REFERENCED STANDARDS AND AS SHOWN ON THE DRAWINGS FOR THE ROADWAY RECONSTRUCTION PORTION OF THE PROJECT. TRAFFIC CONTROL THAT IS PERIODICALLY REQUIRED TO BE MOVED, DUE TO CONSTRUCTION OPERATIONS, SHALL BE PLACED AT LOCATIONS WHERE THEY GIVE SUFFICIENT WARNING TO MOTORISTS AND PEDESTRIANS OF THE CONDITIONS AHEAD AND SHALL BE RELOCATED AS NEEDED TO KEEP SIGNING CURRENT AT REQUIRED LOCATIONS. RELOCATION OF TRAFFIC CONTROL WILL BE PAID FOR AT THE CONTRACT LUMP SUM PRICE FOR "TRAFFIC CONTROL, MISCELLANEOUS".

ALL TRAFFIC CONTROL SHALL BE COORDINATED WITH THE ROADWAY RECONSTRUCTION PROJECT PHASING.

TRAFFIC CONTROL UNITS, AS SHOWN IN THE ESTIMATE OF QUANTITIES AND TABLE, ARE ESTIMATES. CONTRACTOR'S OPERATION MAY REQUIRE ADJUSTMENTS IN QUANTITIES. PAYMENT WILL BE FOR THOSE SIGNS ACTUALLY ORDERED BY THE ENGINEER AND USED. LANE CLOSURE WITH FLAGGER PROVIDED SHALL BE USED AT EIGHTH STREET-STA 15+29 LT, FOURTH STREET-STA 30+51 LT, THIRD STREET-STA 34+41 LT, SECOND STREET-STA 38+81 LT, ASH STREET-STA 48+79 LT, AND EAST THIRTEENTH STREET-STA 54+72 LT, DUE TO DEPTH OF SEWER TO THE NORTH. ANY CHANNELIZING DEVICES NEEDED FOR LANE SEPARATION SHALL BE INCIDENTAL TO THE CONTRACT LUMP SUM PRICE FOR "TRAFFIC CONTROL, MISCELLANEOUS" AND NO ADDITIONAL PAYMENT WILL BE MADE. CHANNELIZING DEVICES SHALL BE INSTALLED AS SHOWN IN THE STANDARD PLATES. ANY FLAGGING REQUIRED SHALL BE PAID FOR AT THE CONTRACT UNIT PRICE PER HOUR FOR "FLAGGING". TEMPORARY SURFACING FOR LANE CLOSURES SHALL BE PAID FOR AT THE CONTRACT UNIT PRICE PER TON FOR "BASE COURSE", ESTIMATED AT 11.1 TON PER LOCATION.

THE CONTRACTOR SHALL PROTECT ALL WORK AREAS WITH CONES/DRUMS WITH A SPACING OF NO MORE THAN 10' BETWEEN THE CONES/DRUMS. WHERE CHANNELIZING DEVICES ARE USED TO DIVERT TRAFFIC AS SHOWN IN THE STANDARD PLATES, THE SPACING OF THE CHANNELIZING DEVICES SHALL MEET THE REQUIREMENTS SET FORTH IN THE STANDARD PLATES. REMOVING, RELOCATING, COVERING, SALVAGING AND RESETTING OF EXISTING TRAFFIC CONTROL DEVICES, INCLUDING DELINEATION, SHALL BE THE RESPONSIBILITY OF THE CONTRACTOR. COST FOR THIS WORK SHALL BE INCIDENTAL TO THE CONTRACT UNIT PRICES FOR THE VARIOUS ITEMS UNLESS OTHERWISE SPECIFIED IN THE PLANS. ANY DELINEATORS AND SIGNS DAMAGED OR LOST SHALL BE REPLACED BY THE CONTRACTOR AT NO COST TO THE CITY.

GENERAL EROSION CONTROL NOTES:

EROSION AND SEDIMENT CONTROL SHALL BE IN STRICT ACCORDANCE WITH SD DENR RULES AND REGULATIONS.

TO CONTROL AND PREVENT SOIL EROSION AND SEDIMENTATION INTO WATERWAYS, THE CONTRACTOR SHALL FURNISH, INSTALL, AND MAINTAIN A TEMPORARY EROSION CONTROL SYSTEM IN APPROPRIATE AREAS OF CONSTRUCTION AS SHOWN ON THE DRAWINGS OR DETERMINED IN THE FIELD BY THE OWNER, ENGINEER, AND CONTRACTOR. THE TEMPORARY EROSION CONTROL SYSTEM SHALL REMAIN IN PLACE AND SHALL BE MAINTAINED UNTIL ALL LAND DISTURBING ACTIVITY IS COMPLETED AND SUFFICIENT LANDSCAPING OR VEGETATION EXISTS TO PREVENT ANY RUN-OFF SITUATION FROM THE CONSTRUCTION SITE.

PRIOR TO AWARD OF THE PROJECT, THE LOW RESPONSIVE, RESPONSIBLE BIDDER SHALL NAME A RESPONSIBLE PERSON WHO WILL BE RESPONSIBLE FOR MAINTAINING THE EROSION CONTROL SYSTEM AS STIPULATED IN THE PROJECT MANUAL AND ON THE DRAWINGS. THE CONTRACTOR SHALL PROVIDE CONTACT INFORMATION FOR THIS PERSON AND THE RESPONSIBLE PERSON SHALL BE ON SITE AT ALL TIMES DURING CONSTRUCTION ACTIVITIES.

IMPLEMENTATION OF THE EROSION CONTROL SYSTEM PLAN AND THE CONSTRUCTION, MAINTENANCE, REPLACEMENT, AND UPGRADING OF THE SYSTEM IS THE RESPONSIBILITY OF THE OWNER/ENGINEER AND CONTRACTOR UNTIL ALL CONSTRUCTION IS COMPLETED AND VEGETATION/LANDSCAPING IS ESTABLISHED.

EROSION CONTROL SYSTEM SHALL BE INSPECTED DAILY AND AFTER EACH SIGNIFICANT STORM EVENT BY THE RESIDENT PROJECT REPRESENTATIVE FOR THE OWNER AND THE CONTRACTOR AND MAINTAINED AS NECESSARY TO ENSURE THE EROSION CONTROL SYSTEM'S CONTINUED FUNCTIONING.

DURING CONSTRUCTION, THE CONTRACTOR SHALL MAINTAIN SURFACE DRAINAGE IN A MANNER TO MATCH THE EXISTING DRAINAGE CONDITIONS.

COORDINATION OF UTILITY WORK ON RAILROAD RIGHT-OF-WAY:

THE CONTRACTOR SHALL COORDINATE WORK WITH THE D&I RAILROAD CO. SEE "SPECIAL PROVISION REGARDING WORKING ON RAILROAD PROPERTY" AND "SPECIAL PROVISION REGARDING RAILROAD INSURANCE REQUIREMENTS".

REGISTERED PROFESSIONAL ENGINEER
REG NO. 7779
HAROLD N. HOLOCH
SOUTH DAKOTA
10-3-14

STATE OF SOUTH DAKOTA	PROJECT	SHEET No.	TOTAL SHEETS
	21670.00.01 PCN X02T	6	31

FOR BIDDING PURPOSES ONLY

TABLE OF FIRE HYDRANT REMOVALS

Station	Distance	Quantity
	(Lt. or Rt.)	(Each)
5+01	34' Rt.	1
8+01	38' Rt.	1
11+54	35' Rt.	1
15+52	35' Rt.	1
22+37	32' Rt.	1
26+10	32' Rt.	1
30+12	33' Rt.	1
33+90	33' Rt.	1
38+01	36' Rt.	1
45+93	33' Lt.	1
54+46	40' Lt.	1
	TOTAL:	11

TABLE OF FIRE HYDRANTS

Station	Distance	Quantity
	(Lt. or Rt.)	(Each)
4+99	32' Rt.	1
8+01	45' Rt.	1
11+62	32' Rt.	1
14+99	46' Lt.	1
15+56	49' Rt.	1
18+64	43' Rt.	1
22+37	47' Lt.	1
22+37	43' Rt.	1
26+18	43' Rt.	1
30+17	35' Rt.	1
30+24	45' Lt.	1
33+94	47' Lt.	1
33+94	47' Rt.	1
38+00	47' Lt.	1
38+01	38' Rt.	1
43+22	45' Lt.	1
46+39	47' Lt.	1
49+04	47' Lt.	1
54+53	45' Lt.	1
54+53	45' Rt.	1
	TOTAL:	20

TABLE OF 1" WATER SERVICES

(SERVICE LOCATIONS & LENGTHS ARE APPROXIMATE)

Station	Length	Curb Stop w/Box & Riser	Corporation Stop w/Saddle	1" Water Service
	(Ft +/-)	(Each)	(Each)	(Each)
3+01 RT	30	1	1	1
6+65 RT	33	1	1	1
9+15 RT	28	1	1	1
9+21 LT	38	1	1	1
16+42 LT	38	1	1	1
16+76 RT	28	1	1	1
17+84 LT	38	1	1	1
17+89 LT	38	1	1	1
17+91 RT	28	1	1	1
18+00 RT	28	1	1	1
18+70 RT	28	1	1	1
19+90 LT	38	1	1	1
19+95 RT	28	1	1	1
20+05 RT	28	1	1	1
20+11 LT	38	1	1	1
21+48 LT	38	1	1	1
21+49 RT	28	1	1	1
21+58 LT	38	1	1	1
21+59 RT	28	1	1	1
23+74 LT	38	1	1	1
23+83 RT	28	1	1	1
23+87 LT	38	1	1	1
24+03 RT	28	1	1	1
24+89 LT	38	1	1	1
24+92 RT	28	1	1	1
25+38 RT	28	1	1	1
25+43 LT	38	1	1	1
27+02 RT	28	1	1	1
27+31 LT	38	1	1	1
28+25 LT	38	1	1	1
28+26 RT	28	1	1	1
28+99 RT	28	1	1	1
29+62 RT	28	1	1	1
29+77 LT	38	1	1	1
31+72 LT	38	1	1	1
31+99 LT	38	1	1	1
34+16 LT	24	1	1	1
34+16 LT	75	1	1	1
34+16 RT	75	1	1	1
34+16 RT	24	1	1	1
38+10 LT	42	1	1	1
38+10 LT	17	1	1	1
38+10 RT	9	1	1	1
41+75 LT	38	1	1	1
41+81 LT	38	1	1	1
44+07 LT	38	1	1	1
45+43 LT	38	1	1	1
46+59 RT	28	1	1	1
46+94 LT	38	1	1	1
47+70 RT	28	1	1	1
48+20 LT	38	1	1	1
48+47 LT	38	1	1	1
48+51 LT	38	1	1	1
48+64 RT	28	1	1	1
49+53 LT	38	1	1	1
50+25 RT	28	1	1	1
50+33 LT	38	1	1	1
51+03 RT	28	1	1	1
51+79 LT	38	1	1	1
51+85 RT	28	1	1	1
52+80 LT	38	1	1	1
53+05 RT	28	1	1	1
TOTALS:	2178	63	63	63

TABLE OF 2" WATER SERVICES

(SERVICE LOCATIONS & LENGTHS ARE APPROXIMATE)

Station	Length	Curb Stop w/Box & Riser	Corporation Stop w/Saddle	2" Water Service
	(Ft +/-)	(Each)	(Each)	(Each)
5+65 RT	32	1	1	1
10+16 RT	28	1	1	1
TOTALS:	60	2	2	2

REGISTERED PROFESSIONAL ENGINEER
REG NO. 3773
HAROLD N. HOLOCH
SOUTH DAKOTA
10-3-14

ITEMIZED LIST FOR TRAFFIC CONTROL

SIGN CODE	SIGN SIZE	DESCRIPTION	NUMBER REQUIRED	UNITS PER SIGN	UNITS
G20-2	36" x 18"	END ROAD WORK	2	17	34
W20-1	48" x 48"	ROAD WORK AHEAD	2	34	68
W20-4	48" x 48"	ONE LANE ROAD AHEAD	2	34	68
W20-7	48" x 48"	FLAGGER	2	34	68
				TOTAL UNITS	**238**

If a sign is required on a project and not listed in the above inventory, the units per sign will be determined as follows:

Signs 36" x 36" will be measured at 27 units each and signs 48" x 48" will be measured at 34 units each, otherwise:

If a sign measures less than 25" high and 25" wide the units per sign will be computed as sign size (sq ft) x 3.

If a sign measures between 23H" and 37H" the units per sign will be computed as sign size (sq ft) x 1.2 +15.

STATE OF SOUTH DAKOTA	PROJECT	SHEET No.	TOTAL SHEETS
	21670.00.01 PCN X02T	7	31

FOR BIDDING PURPOSES ONLY

TABLE OF GATE VALVE REMOVALS

Station	Distance	Quantity
	(Lt. or Rt.)	(Each)
8+15	48' Rt.	1
11+56	31' Rt.	1
34+02	33' Rt.	1
34+12	35' Lt.	1
43+39	20' Lt.	1
43+39	20' Rt.	1
54+48	38' Lt.	1
	TOTAL:	7

TABLE OF VALVE BOX REMOVALS

Station	Distance	Quantity
	(Lt. or Rt.)	(Each)
33+78	14' Rt.	1
53+53	17' Lt.	1
	TOTAL:	2

TABLE OF ENCASEMENT PIPE

Begin	End	Distance	Size	Type	Length
Station	Station	(Lt. or Rt.)	(Dia.)		(Ft)
39+90	41+10	5' Rt.	24"	Steel	120
39+98	41+18	15.5' Rt.	24"	Steel	120
4+99	4+99	7' Rt. to 27' Rt.	12"	PVC	20
26+18	26+18	7' Rt. to 27' Rt.	12"	PVC	20
43+44	43+64	5' Rt.	12"	PVC	20

REGISTERED PROFESSIONAL ENGINEER
REG NO. 3773
HAROLD N. HOLOCH
SOUTH DAKOTA
10-3-14

TABLE OF GATE VALVES

Station	Distance	Size	Quantity
	(Lt. or Rt.)	(Dia.)	(Each)
1+78	40' Rt.	8"	1
4+99	7' Rt.	6"	1
8+13	45' Rt.	6"	1
8+15	7' Rt.	6"	1
11+58	7' Rt.	6"	1
11+58	34' Rt.	4"	1
11+60	5' Rt.	8"	1
11+60	32' Rt.	6"	1
15+15	46' Lt.	6"	1
15+17	3 Rt.	6"	1
15+38	7' Rt.	6"	1
15+40	49' Rt.	6"	1
18+64	7' Rt.	6"	1
22+37	3 Rt.	6"	1
22+37	7' Rt.	6"	1
22+39	5' Rt.	8"	1
26+18	7' Rt.	6"	1
30+17	7' Rt.	6"	1
30+37	45' Lt.	6"	1
30+39	3 Rt.	6"	1
33+92	84' Lt.	4"	1
34+14	47' Lt.	6"	1
34+14	47' Rt.	6"	1
34+16	1' Rt.	6"	1
34+16	7' Rt.	8"	1
34+18	5' Rt.	8"	1
38+02	47' Lt.	6"	1
38+07	38' Rt.	6"	1
38+10	1' Rt.	6"	1
38+10	7' Rt.	8"	1
38+41	87' Rt.	8"	1
38+43	89' Rt.	8"	1
43+37	45' Lt.	6"	1
43+39	1' Rt.	6"	1
43+41	5' Rt.	8"	1
46+25	3 Rt.	6"	1
46+27	47' Lt.	6"	1
48+89	3 Rt.	6"	1
48+91	47' Lt.	6"	1
54+60	45' Lt.	6"	1
54+60	45' Rt.	6"	1
54+62	3 Rt.	8"	1
54+62	7' Rt.	8"	1
54+64	45' Lt.	6"	1
54+64	5' Rt.	8"	1
		TOTAL:	45

TABLE OF MANHOLE REMOVALS

Station	Distance	Utility Type	Quantity
	(Lt. or Rt.)		(Each)
5+04	16' Rt.	Sanitary	1
8+30	16' Rt.	Sanitary	1
11+16	16' Rt.	Sanitary	1
11+77	CL	Sanitary	1
21+80	CL	Sanitary	1
23+52	CL	Sanitary	1
26+61	16' Rt.	Raw Water	1
31+67	16' Rt.	Raw Water	1
31+69	31' Rt.	Raw Water	1
34+41	8' Lt	Sanitary	1
54+31	8' Lt	Sanitary	1
	TOTAL:		11

TABLE OF MANHOLES TO ABANDON

Station	Distance	Quantity
	(Lt. or Rt.)	(Each)
15+29	CL	1
30+51	CL	1
38+31	2' Rt.	1
41+28	4' Lt.	1
43+54	4' Lt.	1
48+29	5' Lt.	1
	TOTAL:	6

TABLE OF SANITARY SEWER MANHOLES

Station	Size/Type	MH Rim	Low Invert	MH Height	Extra Depth	Quantity
	(Dia.)	Elevation +/-	Elevation	(Ft)	(Ft)	(Each)
5+04	48"	1469.94	1461.45	8.49	0.49	1
8+30	48"	1484.19	1473.40	10.79	2.79	1
11+16	48"	1488.21	1478.60	9.61	1.61	1
15+29	48" Drop	1492.21	1479.82	12.39	4.39	1
18+92	48"	1496.57	1485.41	11.16	3.16	1
21+80	48"	1498.65	1487.50	11.15	3.15	1
23+52	48"	1498.17	1491.71	6.46	0.00	1
26+47	48"	1498.36	1490.77	7.59	0.00	1
30+51	48"	1499.82	1489.51	10.31	2.31	1
31+67	48"	1500.11	1496.29	3.82	0.00	1
34+41	48"	1498.65	1485.10	13.55	5.55	1
38+31	48" Drop	1498.22	1478.47	19.75	11.75	1
41+28	48" Drop	1495.73	1485.04	10.69	2.69	1
43+54	48" Drop	1495.62	1486.25	9.37	1.37	1
46+15	48"	1498.60	1487.65	10.95	2.95	1
48+79	48"	1504.00	1489.07	14.93	6.93	1
54+72	48"	1501.45	1490.42	11.03	3.03	1
				TOTAL:	52.17	17

STATE OF SOUTH DAKOTA	PROJECT	SHEET No.	TOTAL SHEETS
	21670.00.01 PCN X02T	8	31

FOR BIDDING PURPOSES ONLY

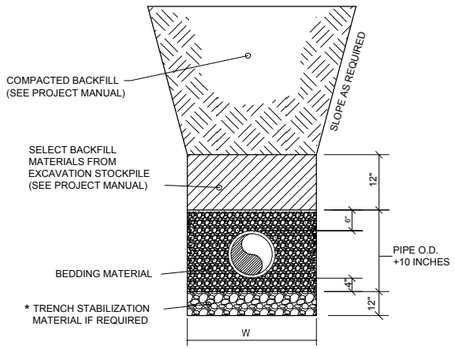

PIPE SIZE	W - TRENCH WIDTH	
	MIN WIDTH	MAX. WIDTH
4" - 15"	PIPE O.D. + 12"	PIPE O.D. + 16"

NOTE:
* TRENCH STABILIZAITON MATERIAL WILL BE REQUIRED IF SOFT, SPONGY, UNSTABLE OR OTHER SIMILAR MATERIAL IS ENCOUNTERED WHERE THE PIPE IS TO BE PLACED. ENGINEER SHALL DETERMINE IN THE FIELD IF NECESSARY.

SANITARY SEWER BEDDING DETAIL

SCALE: NONE

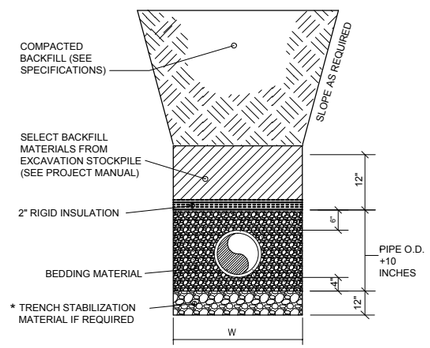

PIPE SIZE	W - TRENCH WIDTH	
	MIN WIDTH	MAX. WIDTH
4" - 15"	PIPE O.D. + 12"	PIPE O.D. + 16"

NOTE:
* TRENCH STABILIZAITON MATERIAL WILL BE REQUIRED IF SOFT, SPONGY, UNSTABLE OR OTHER SIMILAR MATERIAL IS ENCOUNTERED WHERE THE PIPE IS TO BE PLACED. ENGINEER SHALL DETERMINE IN THE FIELD IF NECESSARY.

SANITARY SEWER BEDDING DETAIL (SHALLOW)

SCALE: NONE

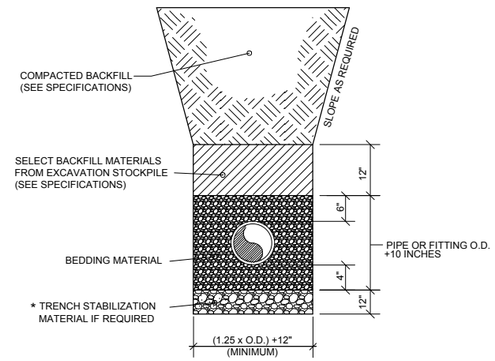

NOTE:
* TRENCH STABILIZAITON MATERIAL WILL BE REQUIRED IF SOFT, SPONGY, UNSTABLE OR OTHER SIMILAR MATERIAL IS ENCOUNTERED WHERE THE PIPE IS TO BE PLACED. ENGINEER SHALL DETERMINE IN THE FIELD IF NECESSARY.

WATERMAIN BEDDING DETAIL

SCALE: NONE

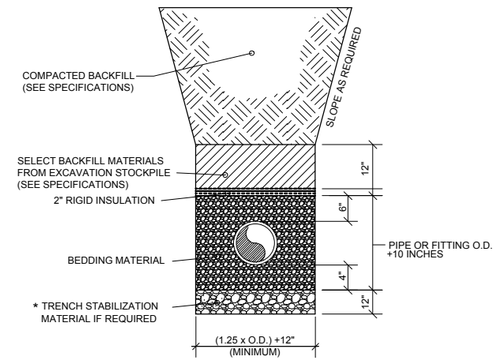

NOTE:
* TRENCH STABILIZAITON MATERIAL WILL BE REQUIRED IF SOFT, SPONGY, UNSTABLE OR OTHER SIMILAR MATERIAL IS ENCOUNTERED WHERE THE PIPE IS TO BE PLACED. ENGINEER SHALL DETERMINE IN THE FIELD IF NECESSARY.

WATERMAIN BEDDING DETAIL W/ INSULATION

SCALE: NONE

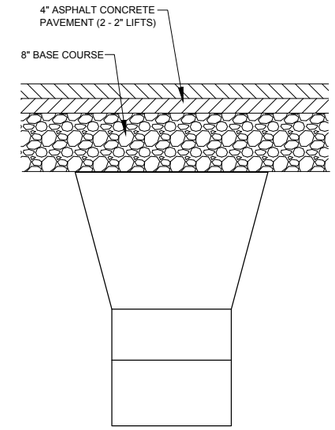

ASPHALT SURFACING TRENCH RESTORATION

SCALE: NONE

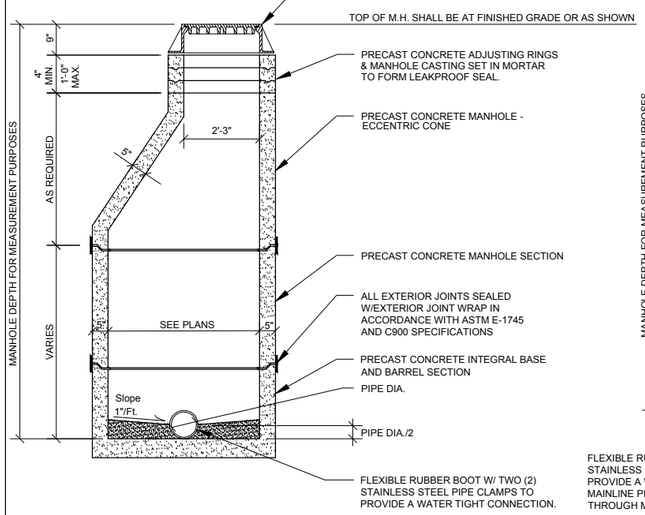

SANITARY SEWER MANHOLE DETAIL

SCALE: NONE

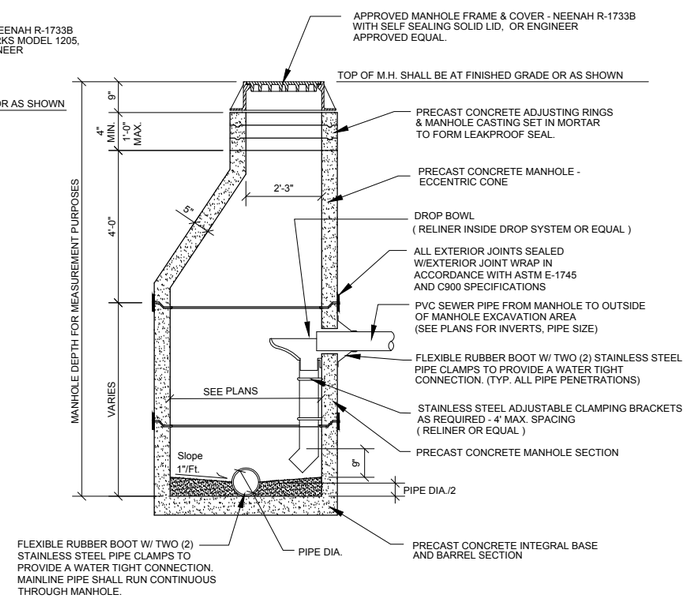

SANITARY SEWER DROP MANHOLE DETAIL

SCALE: NONE

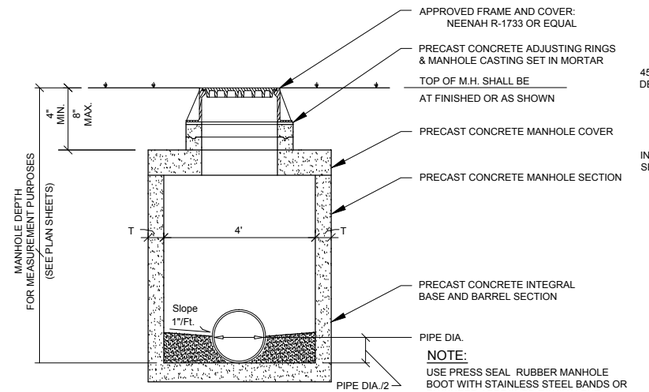

NOTE:
USE PRESS SEAL RUBBER MANHOLE BOOT WITH STAINLESS STEEL BANDS OR ENGINEER APPROVED EQUIVALENT. AROUND ALL PIPE PENETRATIONS.

USE NON-SHRINK GROUT ON TOP OF FLOOR SLAB. SLOPE TOWARDS FLOW LINE.

RAW WATER MANHOLE DETAIL

Scale : NONE

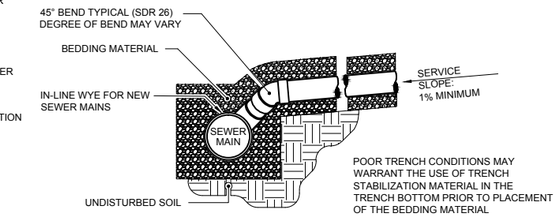

SANITARY SEWER SERVICE DETAIL

SCALE: NONE

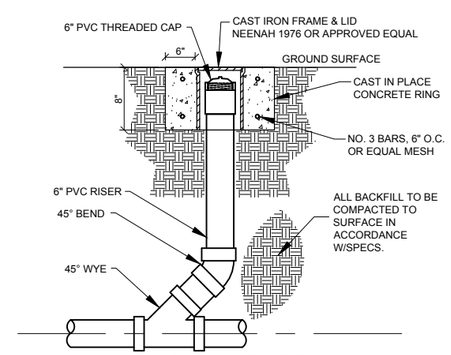

CLEANOUT DETAIL

SCALE: NONE

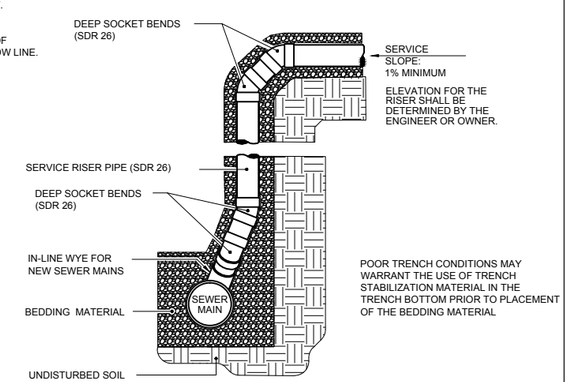

SANITARY SEWER RISER SERVICE DETAIL

SCALE: NONE

REGISTERED PROFESSIONAL ENGINEER
REG NO. 3173
HAROLD N. HOLOCH
SOUTH DAKOTA
Harold N. Holoch
10-3-14

STATE OF SOUTH DAKOTA	PROJECT	SHEET No.	TOTAL SHEETS
	21670.00.01 PCN X02T	9	31

FOR BIDDING PURPOSES ONLY

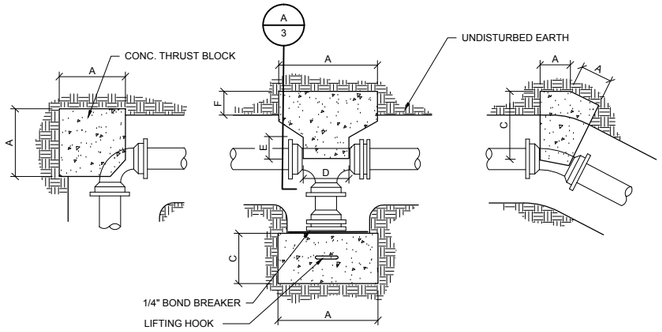

PLAN

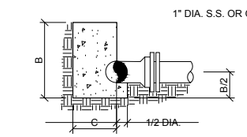

A 3 SECTION
SCALE : None

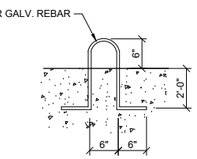

LIFTING HOOK DETAIL

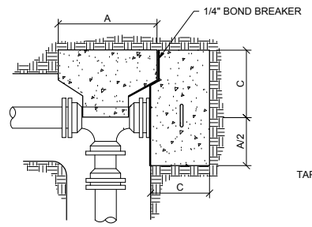

BLOCKING DIMENSIONS																					
PIPE DIA.	TEES						PLUGS			90° BENDS			45° BENDS			22 1/2° BENDS			11 1/4° BENDS		
	A	B	C	D	E	F	A	B	C	A	B	C	A	B	C	A	B	C	A	B	C
6"	26	26	21	14	6	14	26	26	21	30	30	24	22	22	18	16	16	13	12	12	10
8"	34	34	28	16	7	19	34	34	28	40	40	32	30	30	24	22	22	18	16	16	13
12"	50	50	20	22	11	14	50	50	20	60	60	24	44	44	36	32	32	26	22	22	18

THRUST BLOCKING NOTES :

1. PLACE DOUBLE LAYER OF PAPER BETWEEN CONCRETE BLOCKING AND PLUG.
2. MINIMUM THICKNESS OF CAST IN PLACE CONCRETE BETWEEN FITTING AND UNDISTURBED SOIL SHALL BE 8".
3. ALL THRUST BLOCKS SHALL BE CAST-IN-PLACE OR PRECAST BLOCKS MEETING REQUIREMENTS OF THE ABOVE TABLE.
4. ALL VALVES AND FITTINGS SHALL BE POLY WRAPPED.
5. COMPRESSIVE STRENGTH FOR THRUST BLOCKS SHALL NOT BE LESS THAN 3000 PSI.

NOTE:
ALL DIMENSIONS ARE IN INCHES.
BLOCKING DESIGN FOR 150 PSI AND 1500 PSI SOIL BEARING. BLOCKING FOR REDUCED BRANCH TEE SHALL BE AS LISTED UNDER TEES AND BRANCH DIAMETER. MAINTAIN MINIMUM "F" DIMENSION.

CONCRETE BLOCKING DETAILS
SCALE : NONE

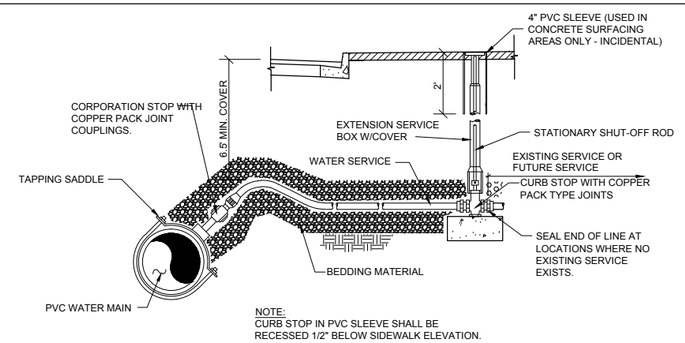

NOTE:
CURB STOP IN PVC SLEEVE SHALL BE RECESSED 1/2" BELOW SIDEWALK ELEVATION.

WATER SERVICE CONNECTION DETAIL
1-INCH AND SMALLER
SCALE : NONE

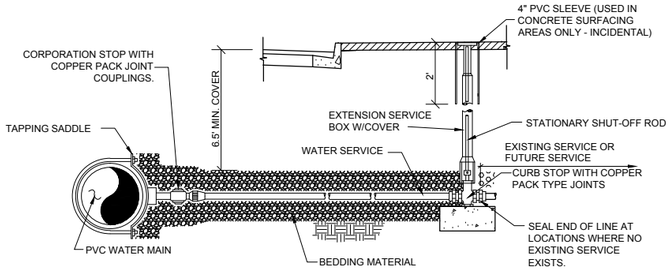

NOTE:
CURB STOP IN PVC SLEEVE SHALL BE RECESSED 1/2" BELOW SIDEWALK ELEVATION.

WATER SERVICE CONNECTION DETAIL
LARGER THAN 1-INCH
SCALE : NONE

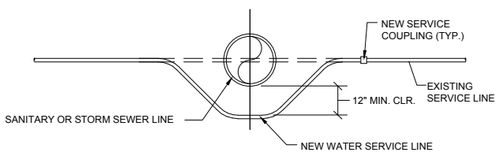

DETAIL - ADJUSTMENT OF SERVICE LINE
SCALE: NONE

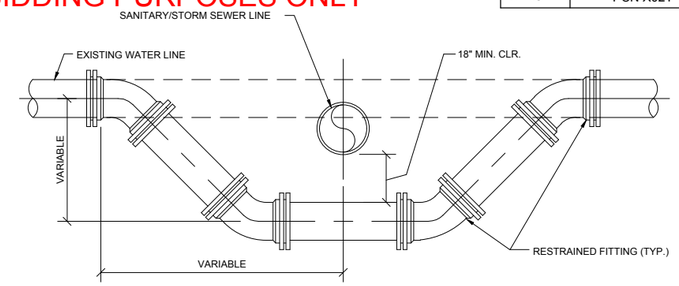

DETAIL - ADJUSTMENT OF WATER LINE
SCALE: NONE

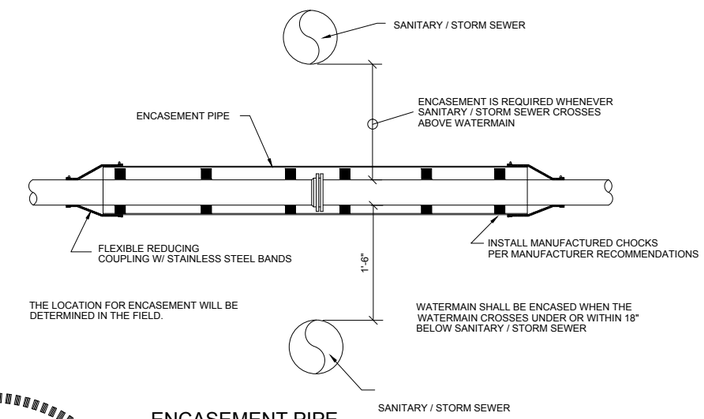

ENCASEMENT PIPE
SCALE: NONE

REGISTERED PROFESSIONAL ENGINEER
REG NO. 3773
HAROLD N. HOLOCH
SOUTH DAKOTA
Harold N. Holoch
10-3-14

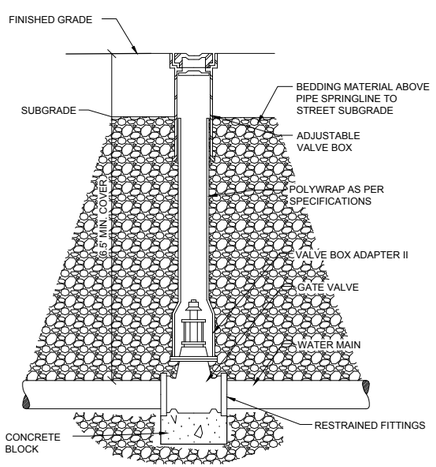

VALVE BOX DETAIL
Scale : NONE

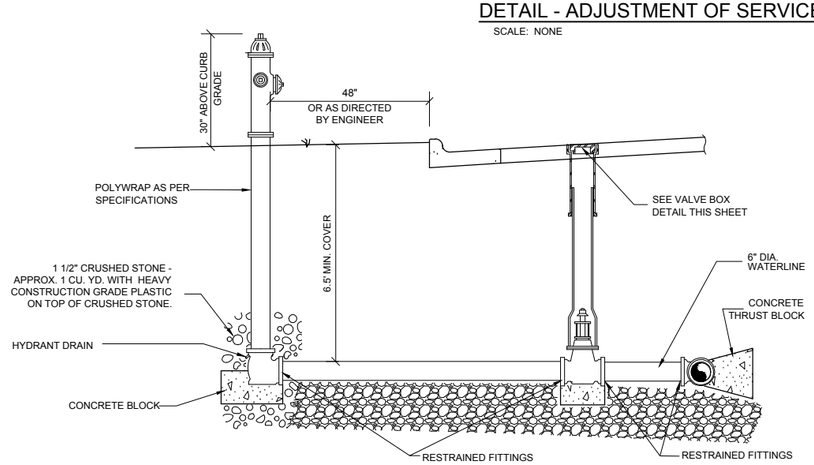

FIRE HYDRANT SETTING DETAIL
Scale : NONE

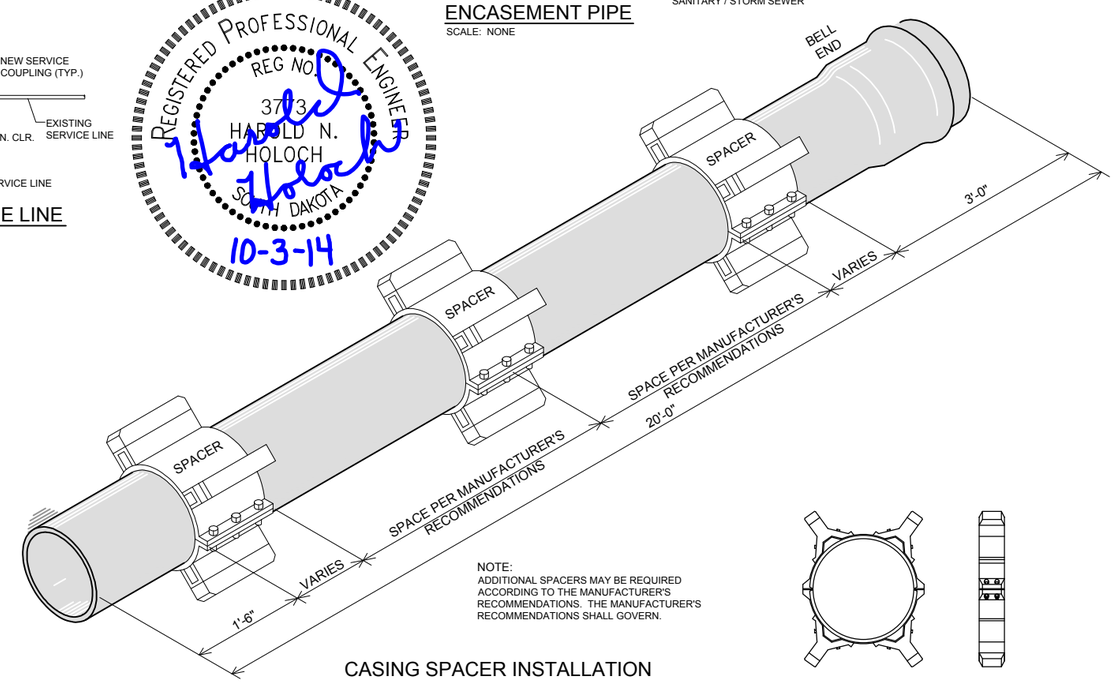

NOTE:
ADDITIONAL SPACERS MAY BE REQUIRED ACCORDING TO THE MANUFACTURER'S RECOMMENDATIONS. THE MANUFACTURER'S RECOMMENDATIONS SHALL GOVERN.

CASING SPACER INSTALLATION
ON C900 WATER MAIN
SCALE: NONE

MANUFACTURED CHOCK DETAIL
SCALE : NONE

STATE OF SOUTH DAKOTA	PROJECT	SHEET No.	TOTAL SHEETS
	21670.00.01 PCN X02T	10	31

FOR BIDDING PURPOSES ONLY

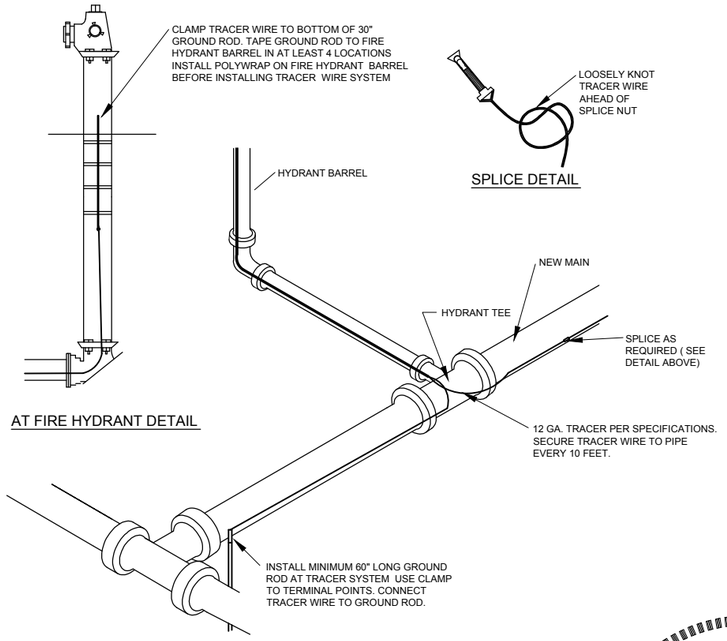

AT FIRE HYDRANT DETAIL

SPLICE DETAIL

TRACER WIRE TERMINATION DETAIL

SCALE: NONE

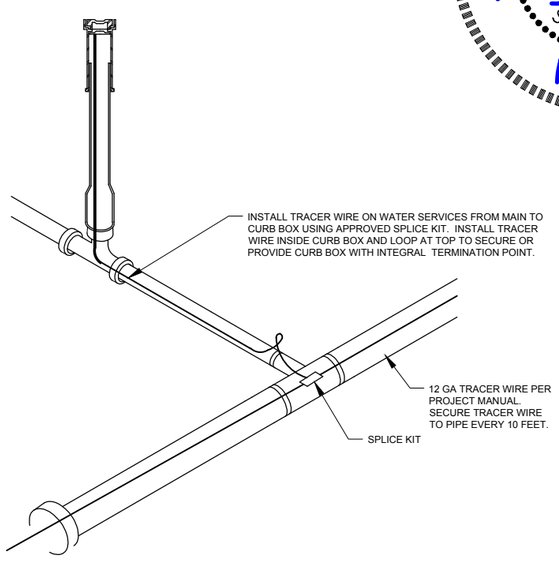

Posted Speed Prior to Work (M.P.H.)	Spacing of Advance Warning Signs (Feet) (A)	Spacing of Channelizing Devices (Feet) (G)
0 - 30	200	25
35 - 40	350	25
45 - 50	500	50
55	750	50
60 - 65	1000	50

Flagger

Channelizing Device

For low-volume traffic situations with short work zones on straight roadways where the flagger is visible to road users approaching from both directions, a single flagger may be used.

The ROAD WORK AHEAD and the END ROAD WORK signs may be omitted for short duration operations (1 hour or less).

For tack and/or flush seal operations, when flaggers are not being used, the FRESH OIL sign (W21-2) shall be displayed in advance of the liquid asphalt areas.

Flashing warning lights and/or flags may be used to call attention to the advance warning signs.

The channelizing devices shall be drums or 42" cones.

Channelizing devices are not required along the centerline adjacent to work area when pilot cars are utilized for escorting traffic through the work area.

END ROAD WORK G20-2

Channelizing devices and flaggers shall be used at intersecting roads to control intersecting road traffic as required.

The buffer space should be extended so that the two-way traffic taper is placed before a horizontal or vertical curve to provide adequate sight distance for the flagger and queue of stopped vehicles.

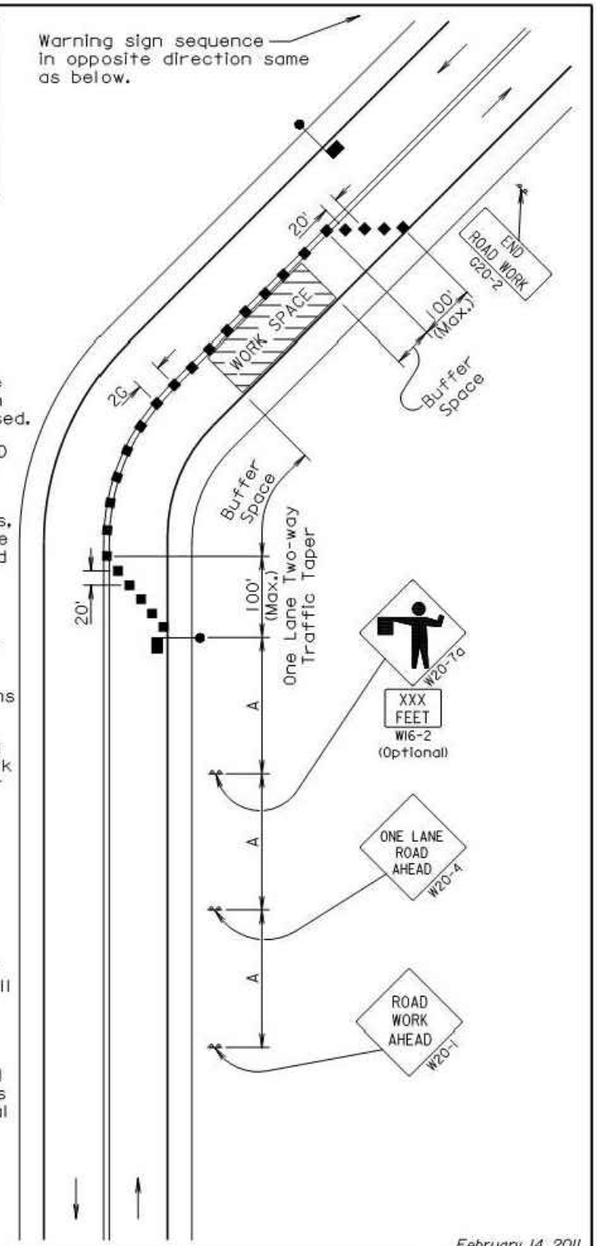

February 14, 2011

Published Date: 2nd Qtr. 2014

SDDOT

GUIDES FOR TRAFFIC CONTROL DEVICES LANE CLOSURE WITH FLAGGER PROVIDED

PLATE NUMBER 634.23

Sheet 1 of 1

L = Length of Grate

W = Width of Grate

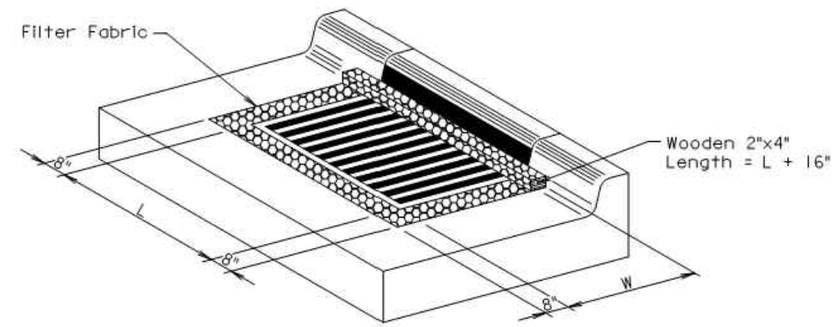

ISOMETRIC VIEW

GENERAL NOTES:

The grate and curb and gutter shown are for illustrative purposes only.

The sediment control at inlet with frame and grate shall be placed at locations stated in the plans or at locations determined by the Engineer.

The filter fabric shall be the type specified in the plans.

The filter fabric shall be placed in the inlet opening prior to placing the grate. Approximately 18 inches of excess filter fabric shall be wrapped around the 2"x4" and stapled securely to the 2"x4" after the grate has been placed.

The Contractor shall inspect and maintain the sediment control device once every week and within 24 hours after every rainfall event. The Contractor shall maintain the sediment control device by removing accumulated sediment and replacing torn filter fabric with new filter fabric.

The removed sediment shall be placed at a location away from the drop inlet where the sediment will not be washed back into the drop inlet or other storm sewer system.

All costs for furnishing, installing, inspecting, maintaining, removing, and replacing the sediment control device at the inlet including labor, equipment, and materials shall be incidental to the contract unit price per each for "Sediment Control at Inlet with Frame and Grate".

September 14, 2005

Published Date: 1st Qtr. 2014

SDDOT

SEDIMENT CONTROL AT INLETS WITH FRAMES AND GRATES

PLATE NUMBER 734.10

Sheet 1 of 1

STATE OF SOUTH DAKOTA	PROJECT	SHEET No.	TOTAL SHEETS
	21670.00.01 PCN X02T	12	31

FOR BIDDING PURPOSES ONLY

WATER:
STA. 1+72 - 44' RT.
REMOVE:
1 - 90° BEND (INCIDENTAL)
8 L.F. - CONCRETE CURB & GUTTER
7 S.Y. - CONCRETE PAVEMENT

WATER:
STA. 5+01 - 31' LT TO 34' LT
REMOVE:
1 - FIRE HYDRANT
1 - TEE (INCIDENTAL)
3 L.F. - WATERMAIN PIPE (INCIDENTAL)

WATER:
STA. 2+33 - TO 6+00 - 31' RT.
ABANDON:
367 L.F. - WATERMAIN PIPE (INCIDENTAL)

WATER:
STA. 1+72 - 44' RT. TO 62' RT.
FURNISH AND INSTALL:
8 L.F. - 8" DIA. PVC WATERMAIN
1 - 8"X8" M.J. D.I. TEE W/ JOINT RESTRAINTS
1 - 8" DIA. M.J. D.I. 45° BEND W/JOINT RESTRAINTS
1 - 8" DIA. M.J. D.I. 22.5° BEND W/JOINT RESTRAINTS
1 - 8" DIA. M.J. D.I. GATE VALVE & BOX W/JOINT RESTRAINTS
1 - 8" DIA. M.J. D.I. LONG BODY SLEEVE W/JOINT RESTRAINTS
8 L.F. - CONCRETE CURB & GUTTER
7 S.Y. - CONCRETE PAVEMENT (MATCH EXISTING THICKNESS - ESTIMATED 8")
2.4 TON - BASE COURSE (6" THICKNESS)
CONCRETE THRUST BLOCKS
(CONNECT TO EXISTING SOUTH & WEST)
1 - SEDIMENT CONTROL AT INLET WITH FRAME AND GRATE

WATER:
STA. 1+78 - 40' RT. TO 2+64 - 5' RT.
FURNISH AND INSTALL:
91 L.F. - BORE & JACK 8" DIA. PVC WATERMAIN

WATER:
STA. 2+33 - 31' RT.
FURNISH & INSTALL:
1 - 6" DIA. M.J. D.I. CAP W/JOINT RESTRAINTS
CONCRETE THRUST BLOCKS

WATER:
STA. 2+64 - 5' RT.
FURNISH & INSTALL:
1 - 8" DIA. M.J. D.I. 22.5° BEND W/JOINT RESTRAINTS
CONCRETE THRUST BLOCKS

WATER:
STA. 4+98 - 1' RT. TO 32' RT.
FURNISH & INSTALL:
1 - 8"X6" M.J. D.I. TEE W/JOINT RESTRAINTS
27 L.F. - 6" DIA. PVC WATERMAIN PIPE
20 L.F. - 12" DIA. PVC ENCASEMENT PIPE (CENTER ON SANITARY SEWER CROSSING)
1 - 6" GATE VALVE & BOX W/JOINT RESTRAINTS
1 - FIRE HYDRANT W/JOINT RESTRAINTS
CONCRETE THRUST BLOCKS

WATER:
STA. 2+64 TO 6+00 - 5' RT.
FURNISH & INSTALL:
336 L.F. - 8" DIA. PVC WATERMAIN

WATER CONNECT EXISTING WATER SERVICES AT THE FOLLOWING LOCATIONS:
STA. 3+01± RT. - 30± L.F. 1" PIPE, SADDLE & CORP., CURB STOP & BOX
STA. 5+65± RT. - 32± L.F. 2" PIPE, SADDLE & CORP., CURB STOP & BOX

* OTHER SERVICES MAY BE LOCATED THAT ARE NOT SHOWN ON THESE PLANS

WATER SERVICES:
CONTRACTOR SHALL BE RESPONSIBLE FOR REMOVE/ABANDON EXISTING CURB BOXES ON SERVICE LINES THAT HAVE BEEN ELIMINATED FROM CONSTRUCTION OF NEW WATERMAIN INSTALLATION.

WATERMAIN:
CONTRACTOR SHALL ABANDON EXISTING WATERMAIN BY INSTALLATION OF CAP OR CONCRETE PLUG.

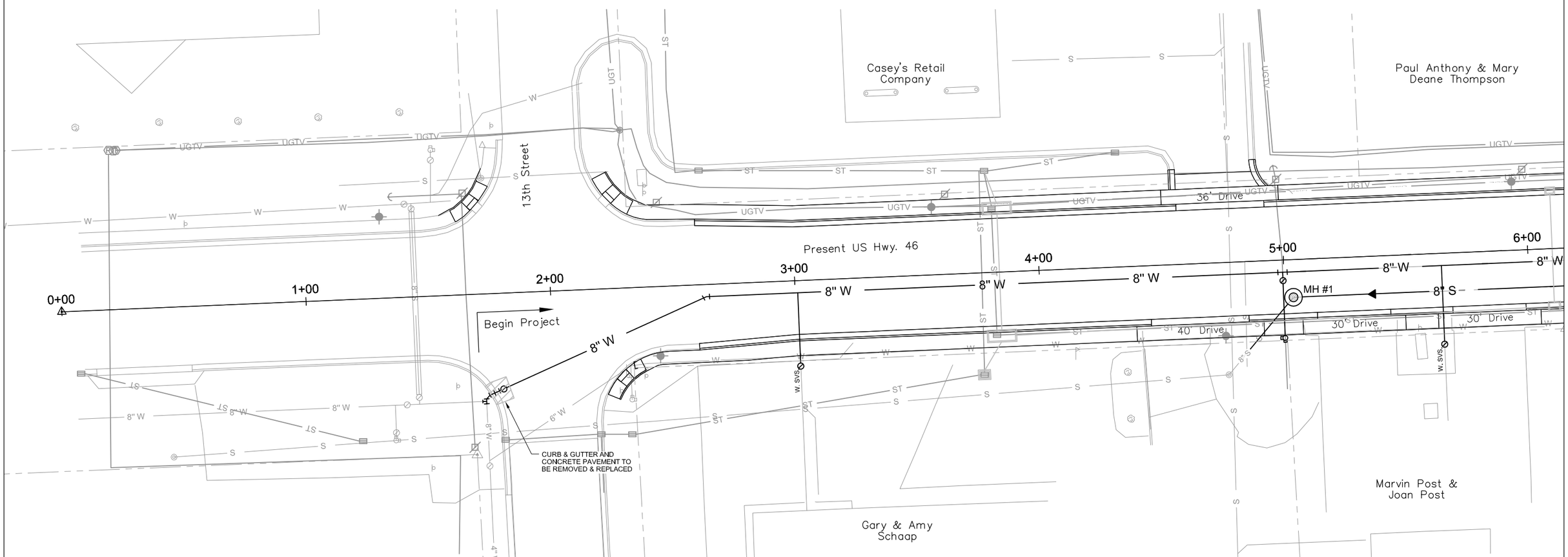

SANITARY SEWER:
CONTRACTOR SHALL ABANDON EXISTING SANITARY SEWER BY INSTALLATION OF CAP OR CONCRETE PLUG.

SANITARY SEWER:
STA. 4+83 - 37' RT. TO 5+04 - 15.5' RT
FURNISH & INSTALL:
30 L.F. - 8" DIA. PVC GRAVITY SEWER PIPE
CONNECT TO EXISTING 8" SEWER (TRANSITION COUPLING INCIDENTAL)

SANITARY SEWER:
STA. 5+04 - 15.5' RT.
FURNISH & INSTALL:
1 EA. - 48" DIA. SANITARY SEWER MANHOLE (MH #1)

SANITARY SEWER:
STA. 5+04 TO 6+00 - 15.5' RT.
FURNISH & INSTALL:
96 L.F. - 8" DIA. PVC GRAVITY SEWER PIPE

SANITARY SEWER:
STA. 5+04 TO 6+00 - 15.5' RT
REMOVE:
96 L.F. - SANITARY SEWER PIPE (INCIDENTAL)
1 - MANHOLE

SANITARY SEWER:
STA. 4+83 - 37' RT. TO 5+04 - 15.5' RT.
REMOVE:
30 L.F. - SANITARY SEWER PIPE (INCIDENTAL)

* OTHER SERVICES MAY BE LOCATED THAT ARE NOT SHOWN ON THESE PLANS. CONTRACTOR SHALL LOCATE AND CONNECT ALL SERVICES TO NEW SEWER LINE.

REGISTERED PROFESSIONAL ENGINEER
REG NO. 3773
HAROLD N. HOLOCH
SOUTH DAKOTA

Harold Holoch
10-3-14

STATE OF SOUTH DAKOTA	PROJECT	SHEET No.	TOTAL SHEETS
	21670.00.01 PCN X02T	13	31

FOR BIDDING PURPOSES ONLY

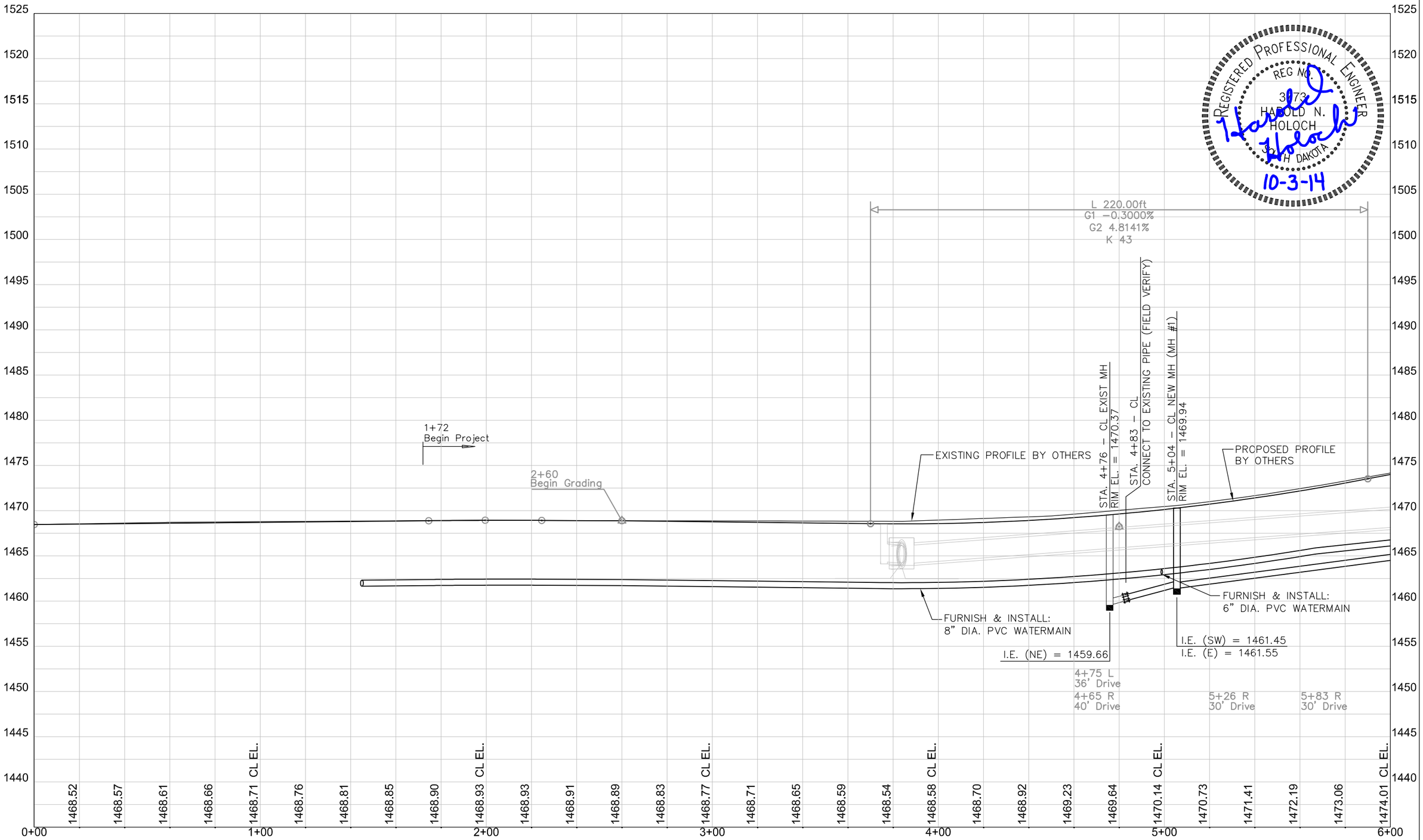

FOR BIDDING PURPOSES ONLY

STATE OF SOUTH DAKOTA	PROJECT	SHEET No.	TOTAL SHEETS
	21670.00.01 PCN X02T	14	31

WATER:
STA. 6+00 - TO 11+54 - 31' RT
ABANDON:
554 L.F. - WATERMAIN PIPE (INCIDENTAL)

WATER:
STA. 8+15 - 31' RT TO 105' RT
REMOVE:
74 L.F. - WATERMAIN PIPE (INCIDENTAL)
1 - TEE (INCIDENTAL)
1 - GATE VALVE

WATER:
STA. 8+01 - 31' RT TO 38' RT
REMOVE:
7 L.F. - WATERMAIN PIPE (INCIDENTAL)
1 - FIRE HYDRANT
1 - TEE (INCIDENTAL)

WATER:
STA. 11+54 - 14' RT TO 35' RT
REMOVE:
21 L.F. - WATERMAIN PIPE (INCIDENTAL)
1 - TEE (INCIDENTAL)
2 - 90° BEND (INCIDENTAL)
1 - FIRE HYDRANT
1 - GATE VALVE

WATER:
STA. 11+54 TO 12+00 - 18' RT
ABANDON:
46 L.F. - WATERMAIN PIPE (INCIDENTAL)

WATER:
STA. 8+15 - 5' RT TO 95' RT
FURNISH & INSTALL:
90 L.F. - 6" DIA. PVC WATERMAIN PIPE
1 - 8"x6" M.J. D.I. TEE W/JOINT RESTRAINTS
1 - 6" GATE VALVE & BOX W/JOINT RESTRAINTS
1 - 6"x4" M.J. D.I. REDUCER W/JOINT RESTRAINTS
1 - 4" M.J. D.I. LONG BODY SLEEVE W/JOINT RESTRAINTS
CONCRETE THRUST BLOCKS
3.6 SQ. YD. - 2" POLYSTYRENE INSULATION
BOARD (CENTERED ON STORM SEWER CROSSING)

WATER:
STA. 8+01 TO 8+15 - 45' RT
FURNISH & INSTALL:
1 - 6"x6" M.J. D.I. TEE W/JOINT RESTRAINTS
14 L.F. - 6" DIA. PVC WATERMAIN PIPE
1 - 6" GATE VALVE & BOX W/JOINT RESTRAINTS
1 - FIRE HYDRANT W/JOINT RESTRAINTS
CONCRETE THRUST BLOCKS

WATER:
STA. 11+58 - 5' RT TO 34' RT
FURNISH & INSTALL:
1 - 8"x6" M.J. D.I. TEE W/JOINT RESTRAINTS
29 L.F. - 6" DIA. PVC WATERMAIN PIPE
1 - 6" GATE VALVE & BOX W/JOINT RESTRAINTS
1 - 8" GATE VALVE & BOX W/JOINT RESTRAINTS
1 - 6" M.J. D.I. CAP W/JOINT RESTRAINTS (INSTALLED ON EXISTING WATER MAIN FOR PHASING)
3.6 SQ. YD. - 2" POLYSTYRENE INSULATION
BOARD (CENTERED ON STORM SEWER CROSSING)
1 - 4" M.J. D.I. LONG BODY SLEEVE W/JOINT RESTRAINTS
1 - 6"x4" M.J. D.I. REDUCER W/JOINT RESTRAINTS
1 - 4" GATE VALVE & BOX W/JOINT RESTRAINTS
CONCRETE THRUST BLOCKS

WATER:
STA. 6+00 TO 12+00 - 5' RT
FURNISH & INSTALL:
600 L.F. - 8" DIA. PVC WATERMAIN

WATER:
STA. 11+58 TO 11+62 - 33' RT
FURNISH & INSTALL:
1 - 6"x6" M.J. D.I. TEE W/JOINT RESTRAINTS
4 L.F. - 6" DIA. PVC WATERMAIN PIPE
1 - 6" GATE VALVE & BOX W/JOINT RESTRAINTS
1 - FIRE HYDRANT W/JOINT RESTRAINTS
CONCRETE THRUST BLOCKS

WATER: CONNECT EXISTING WATER SERVICES AT THE FOLLOWING LOCATIONS:
STA. 6+65± RT. - 33± L.F. 1" PIPE, SADDLE & CORP., CURB STOP & BOX
STA. 9+15± RT. - 28± L.F. 1" PIPE, SADDLE & CORP., CURB STOP & BOX
STA. 9+21± LT. - 38± L.F. 1" PIPE, SADDLE & CORP., CURB STOP & BOX
STA. 10+16± RT. - 28± L.F. 2" PIPE, SADDLE & CORP., CURB STOP & BOX

* OTHER SERVICES MAY BE LOCATED THAT ARE NOT SHOWN ON THESE PLANS

WATER SERVICES:
CONTRACTOR SHALL BE RESPONSIBLE FOR REMOVE/ABANDON EXISTING CURB BOXES ON SERVICE LINES THAT HAVE BEEN ELIMINATED FROM CONSTRUCTION OF NEW WATERMAIN INSTALLATION.

WATERMAIN:
CONTRACTOR SHALL ABANDON EXISTING WATERMAIN BY INSTALLATION OF CAP OR CONCRETE PLUG.

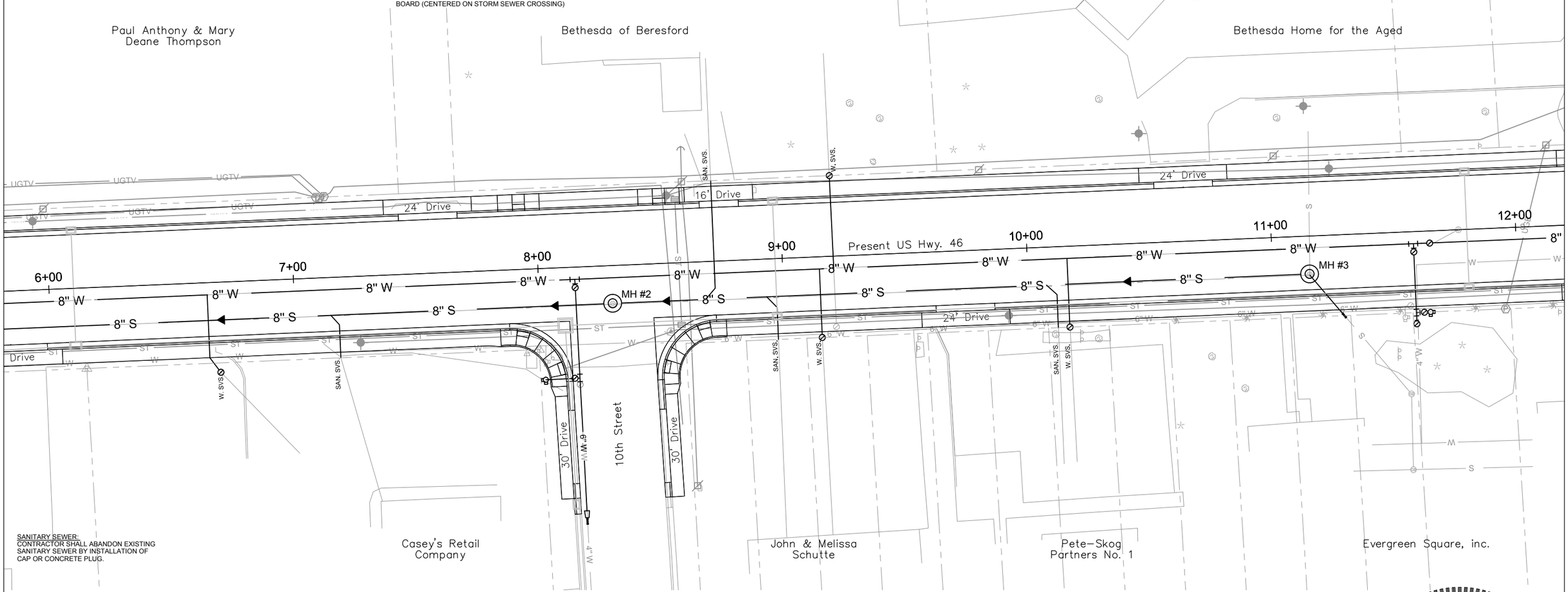

SANITARY SEWER:
CONTRACTOR SHALL ABANDON EXISTING SANITARY SEWER BY INSTALLATION OF CAP OR CONCRETE PLUG.

SANITARY SEWER:
STA. 6+00 - TO 11+16 - 15.5' RT
FURNISH & INSTALL:
516 L.F. - 8" DIA. PVC GRAVITY SEWER PIPE

SANITARY SEWER:
STA. 8+30 - 15.5' RT
FURNISH & INSTALL:
1 EA. - 48" DIA. SANITARY SEWER MANHOLE
(MH #2)

SANITARY SEWER:
STA. 11+16 - 15.5' RT
FURNISH & INSTALL:
1 EA. - 48" DIA. SANITARY SEWER MANHOLE
(MH #3)

SANITARY SEWER:
STA. 11+16 - 15.5' RT TO 11+29 - 33' RT
FURNISH & INSTALL:
21 L.F. - 8" DIA. PVC GRAVITY SEWER PIPE
CONNECT TO EXISTING 8" SEWER (TRANSITION COUPLING INCIDENTAL)

SANITARY SEWER:
STA. 6+00 TO 11+16 - 16' RT
REMOVE:
516 L.F. - SANITARY SEWER PIPE (INCIDENTAL)

SANITARY SEWER:
STA. 8+30 - 16' RT
REMOVE:
1 - MANHOLE

SANITARY SEWER:
STA. 11+16 - 16' RT
REMOVE:
1 - MANHOLE

SANITARY SEWER:
STA. 11+16 - 16' RT TO 11+29 - 33' RT
REMOVE:
21 L.F. - SANITARY SEWER PIPE (INCIDENTAL)

SANITARY SEWER:
STA. 11+16 - 33' LT TO 16' RT
ABANDON:
49 L.F. - SANITARY SEWER PIPE (INCIDENTAL)

SANITARY SEWER:
STA. 11+77 - CL
REMOVE:
1 - MANHOLE

SANITARY SEWER:
STA. 11+77 TO 12+00 - CL
ABANDON:
23 L.F. - SANITARY SEWER PIPE (INCIDENTAL)

SANITARY SERVICES: CONNECT EXISTING SEWER SERVICES AT THE FOLLOWING LOCATIONS:
STA. 7+18± RT. - 18 L.F. 6" DIA. PVC, 8"x6" WYE
STA. 8+72± LT. - 49 L.F. 6" DIA. PVC, 8"x6" WYE
STA. 8+97± RT. - 18 L.F. 6" DIA. PVC, 8"x6" WYE
STA. 10+11± RT. - 18 L.F. 6" DIA. PVC, 8"x6" WYE

* OTHER SERVICES MAY BE LOCATED THAT ARE NOT SHOWN ON THESE PLANS. CONTRACTOR SHALL LOCATE AND CONNECT ALL SERVICES TO NEW SEWER LINE.

REGISTERED PROFESSIONAL ENGINEER
REG NO. 3072
HAROLD N. HOLOCH
SOUTH DAKOTA
Harold N. Holoch
10-3-14

FOR BIDDING PURPOSES ONLY

STATE OF SOUTH DAKOTA	PROJECT	SHEET No.	TOTAL SHEETS
	21670.00.01 PCN X02T	15	31

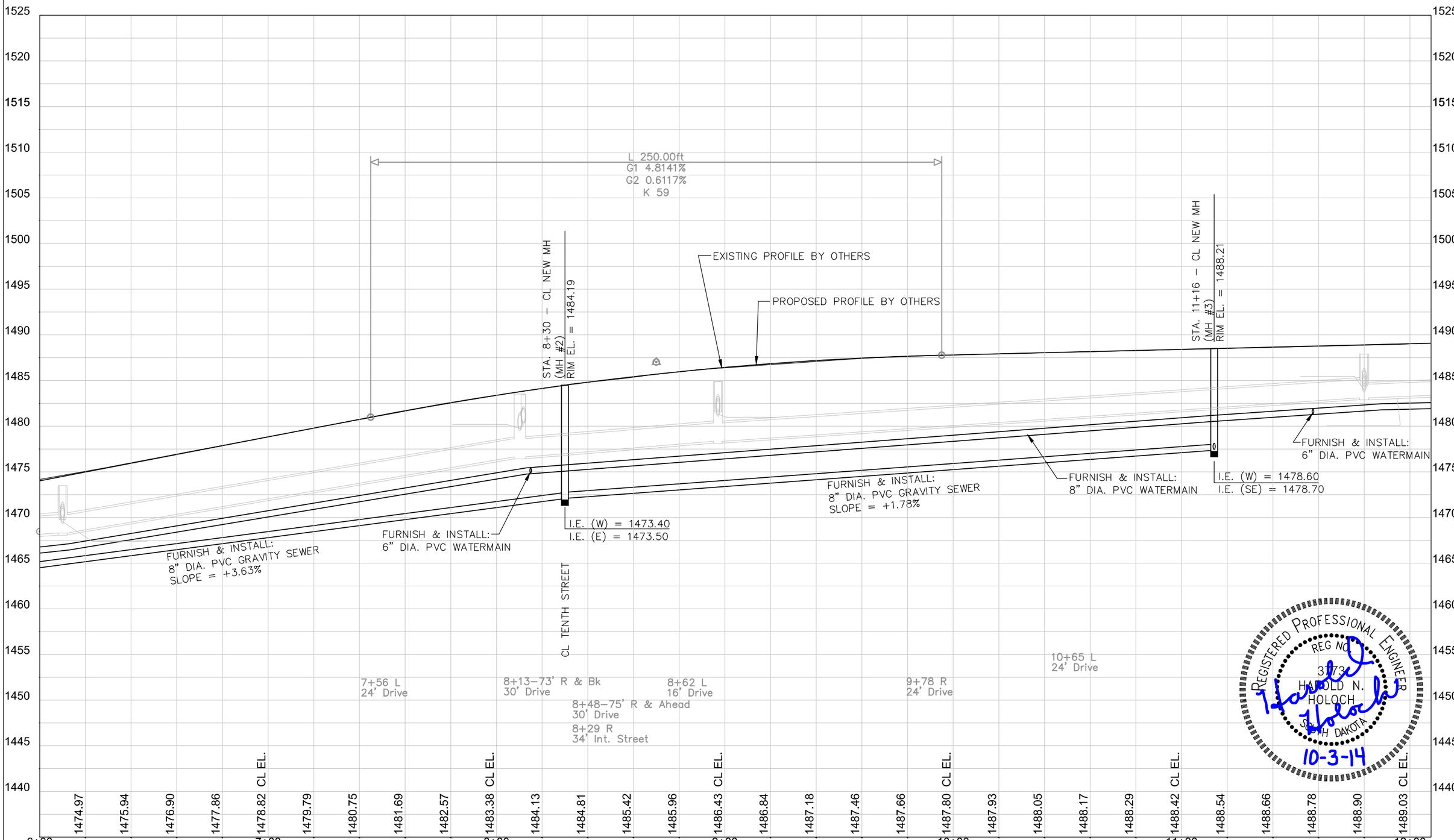

REGISTERED PROFESSIONAL ENGINEER
REG NO. 3173
HAROLD N. HOLOCH
SOUTH DAKOTA

Harold Holoch
10-3-14

STATE OF SOUTH DAKOTA	PROJECT	SHEET No.	TOTAL SHEETS
	21670.00.01 PCN X02T	16	31

FOR BIDDING PURPOSES ONLY

WATER:
STA. 12+00 TO 15+29 - 14' RT
ABANDON:
329 L.F. - WATERMAIN PIPE (INCIDENTAL)

WATER:
STA. 15+29 TO 18+00 - 14' RT
REMOVE:
271 L.F. - WATERMAIN PIPE (INCIDENTAL)

WATER:
STA. 15+17 - 14' RT. TO 55' LT
REMOVE:
69 L.F. - WATERMAIN PIPE (INCIDENTAL)
1 - TEE (INCIDENTAL)

WATER:
STA. 15+38 - 14' RT TO 66' RT
REMOVE:
52 L.F. - WATERMAIN PIPE (INCIDENTAL)
1 - TEE (INCIDENTAL)

WATER:
STA. 15+38 TO 15+52- 35' RT
REMOVE:
14 L.F. - WATERMAIN PIPE (INCIDENTAL)
1 - TEE (INCIDENTAL)
1 - FIRE HYDRANT

WATER:
STA. 15+17 - 5' RT TO 100' LT
FURNISH & INSTALL:
105 L.F. - 6" DIA. PVC WATERMAIN PIPE
1 - 8"x6" M.J. D.I. TEE W/JOINT RESTRAINTS
1 - 6" GATE VALVE & BOX W/JOINT RESTRAINTS
1 - 6"x4" M.J. D.I. REDUCER W/JOINT RESTRAINTS
1 - 6" M.J. D.I. LONG BODY SLEEVE W/JOINT RESTRAINTS
1 - 6" M.J. D.I. PLUG (INSTALLED ON FIRE HYDRANT TEE FOR PHASING)
1 - 6" M.J. D.I. CAP (INSTALLED FOR PHASING)
CONCRETE THRUST BLOCKS

WATER:
STA. 14+99 TO 15+17 - 46' LT
FURNISH & INSTALL:
1 - 6"x6" M.J. D.I. TEE W/JOINT RESTRAINTS
18 L.F. - 6" DIA. PVC WATERMAIN PIPE
1 - 6" GATE VALVE & BOX W/JOINT RESTRAINTS
1 - FIRE HYDRANT W/JOINT RESTRAINTS
CONCRETE THRUST BLOCKS

WATER:
STA. 15+38 - 5' RT TO 55' RT
FURNISH & INSTALL:
50 L.F. - 6" DIA. PVC WATERMAIN PIPE
1 - 8"x6" M.J. D.I. TEE W/JOINT RESTRAINTS
1 - 6" GATE VALVE & BOX W/JOINT RESTRAINTS
1 - 6"x4" M.J. D.I. REDUCER W/JOINT RESTRAINTS
1 - 6" M.J. D.I. LONG BODY SLEEVE W/JOINT RESTRAINTS
1 - 6" M.J. D.I. PLUG (INSTALLED ON FIRE HYDRANT TEE FOR PHASING)
CONCRETE THRUST BLOCKS
3.6 SQ. YD. - 2" POLYSTYRENE INSULATION BOARD (CENTERED ON STORM SEWER CROSSING)

WATER:
STA. 15+38 TO 15+56 - 49' RT
FURNISH & INSTALL:
1 - 6"x6" M.J. D.I. TEE W/JOINT RESTRAINTS
18 L.F. - 6" DIA. PVC WATERMAIN PIPE
1 - 6" GATE VALVE & BOX W/JOINT RESTRAINTS
1 - FIRE HYDRANT W/JOINT RESTRAINTS
CONCRETE THRUST BLOCKS
3.6 SQ. YD. - 2" POLYSTYRENE INSULATION BOARD (CENTERED ON STORM SEWER CROSSING)

WATER:
STA. 12+00 TO 18+00 - 5' RT
FURNISH & INSTALL:
600 L.F. - 8" DIA. PVC WATERMAIN

WATER: CONNECT EXISTING WATER SERVICES AT THE FOLLOWING LOCATIONS:
STA. 16+42± LT. - 38± L.F. 1" PIPE, SADDLE & CORP., CURB STOP & BOX
STA. 16+76± RT. - 28± L.F. 1" PIPE, SADDLE & CORP., CURB STOP & BOX
STA. 17+84± LT. - 38± L.F. 1" PIPE, SADDLE & CORP., CURB STOP & BOX
STA. 17+89± LT. - 38± L.F. 1" PIPE, SADDLE & CORP., CURB STOP & BOX
STA. 17+91± RT. - 28± L.F. 1" PIPE, SADDLE & CORP., CURB STOP & BOX
STA. 18+00± RT. - 28± L.F. 1" PIPE, SADDLE & CORP., CURB STOP & BOX

* OTHER SERVICES MAY BE LOCATED THAT ARE NOT SHOWN ON THESE PLANS

WATER SERVICES:
CONTRACTOR SHALL BE RESPONSIBLE FOR REMOVE/ABANDON EXISTING CURB BOXES ON SERVICE LINES THAT HAVE BEEN ELIMINATED FROM CONSTRUCTION OF NEW WATERMAIN INSTALLATION.

WATERMAIN:
CONTRACTOR SHALL ABANDON EXISTING WATERMAIN BY INSTALLATION OF CAP OR CONCRETE PLUG.

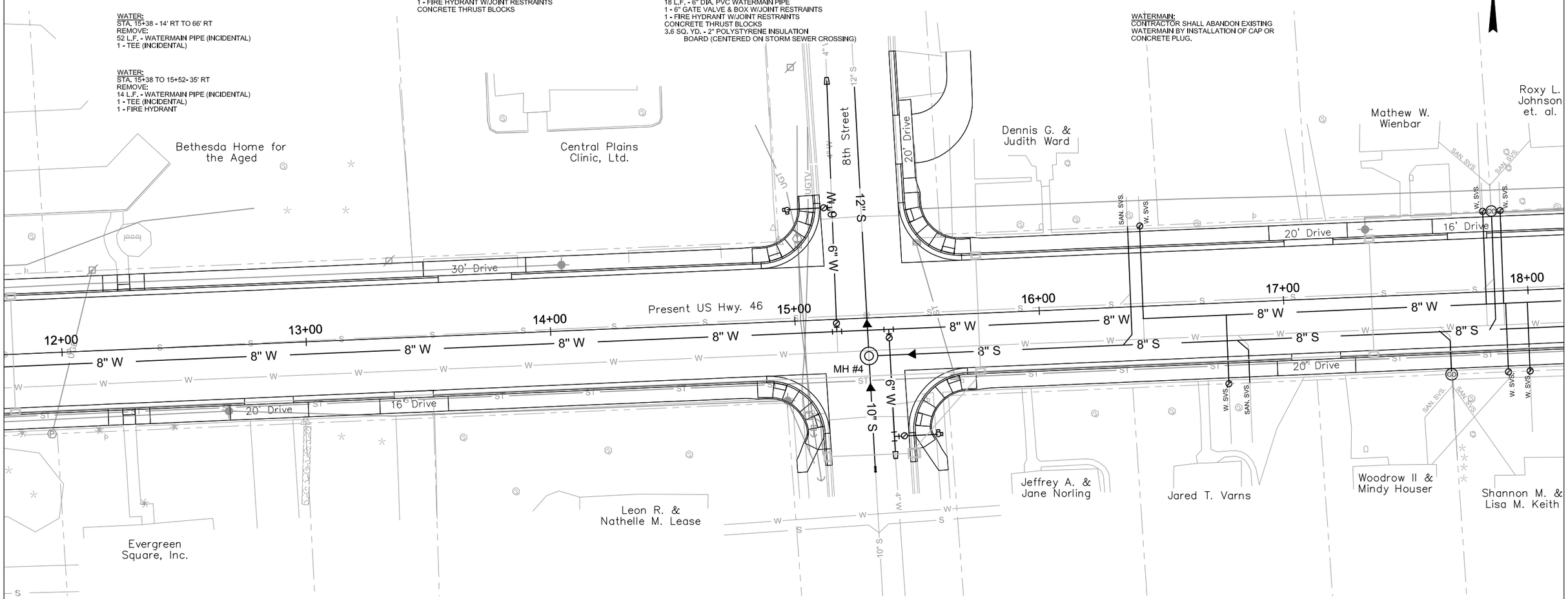

SANITARY SEWER:
CONTRACTOR SHALL ABANDON EXISTING SANITARY SEWER BY INSTALLATION OF CAP OR CONCRETE PLUG.

SANITARY SEWER:
STA. 15+29 - TO 18+00 - 15.5' RT
FURNISH & INSTALL:
271 L.F. - 8" DIA. PVC GRAVITY SEWER PIPE

SANITARY SEWER:
STA. 15+29 - 15.5' RT
FURNISH & INSTALL:
1 EA. - 48" DIA. SANITARY SEWER DROP MANHOLE (MH #4)

SANITARY SEWER:
STA. 15+29 - 15.5' RT TO 100' LT
FURNISH & INSTALL:
116 L.F. - 12" DIA. PVC GRAVITY SEWER PIPE
CONNECT TO EXISTING SEWER PIPE (TRANSITION COUPLING INCIDENTAL)

SANITARY SEWER:
STA. 15+29 - 15.5' RT TO 55' RT
FURNISH & INSTALL:
40 L.F. - 10" DIA. PVC GRAVITY SEWER PIPE
CONNECT TO EXISTING SEWER PIPE (TRANSITION COUPLING INCIDENTAL)

SANITARY SEWER:
STA. 12+00 TO 18+00 - CL
ABANDON:
600 L.F. - SANITARY SEWER PIPE (INCIDENTAL)

SANITARY SEWER:
STA. 15+29 - CL
ABANDON:
1 - MANHOLE

SANITARY SEWER:
STA. 15+29 - 60' RT TO 52' LT
REMOVE:
112 L.F. - SANITARY SEWER PIPE (INCIDENTAL)

SANITARY SERVICES: CONNECT EXISTING SEWER SERVICES AT THE FOLLOWING LOCATIONS:
STA. 16+37± LT. - 49 L.F. 6" DIA. PVC, 8"x6" WYE
STA. 16+83± RT. - 18 L.F. 6" DIA. PVC, 8"x6" WYE
STA. 17+69± RT. - 18 L.F. 6" DIA. PVC, 8"x6" WYE, 6" CLEANOUT
STA. 17+87± LT. - 49 L.F. 6" DIA. PVC, 8"x6" WYE, 6" CLEANOUT

* OTHER SERVICES MAY BE LOCATED THAT ARE NOT SHOWN ON THESE PLANS. CONTRACTOR SHALL LOCATE AND CONNECT ALL SERVICES TO NEW SEWER LINE.

REGISTERED PROFESSIONAL ENGINEER
REG NO. 3872
HAROLD N. HOLOCH
SOUTH DAKOTA
10-3-14

FOR BIDDING PURPOSES ONLY

STATE OF SOUTH DAKOTA	PROJECT	SHEET No.	TOTAL SHEETS
	21670.00.01 PCN X02T	17	31

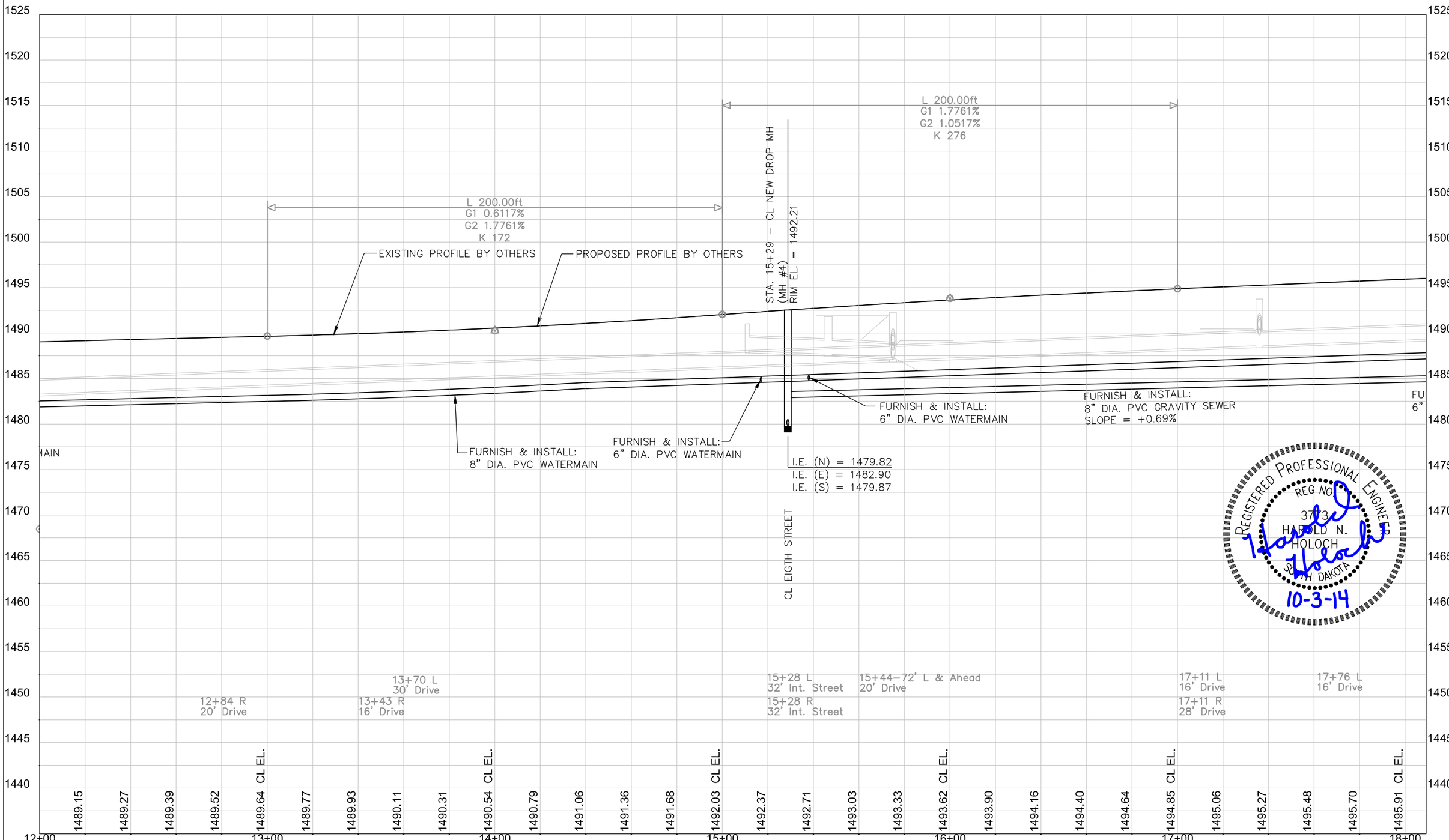

REGISTERED PROFESSIONAL ENGINEER
REG NO. 3773
HAROLD N. HOLOCH
SOUTH DAKOTA

Harold Holoch
10-3-14

FOR BIDDING PURPOSES ONLY

STATE OF SOUTH DAKOTA	PROJECT	SHEET No.	TOTAL SHEETS
	21670.00.01 PCN X02T	18	31

WATER:
STA. 18+00 TO 21+80 - 14' RT
REMOVE:
380 L.F. - WATERMAIN PIPE (INCIDENTAL)

WATER:
STA. 22+37 - 14' RT TO 32' RT
REMOVE:
18 L.F. - WATERMAIN PIPE (INCIDENTAL)
1 - TEE (INCIDENTAL)
1 - FIRE HYDRANT

WATER:
STA. 21+80 TO 23+52 - 14' RT
ABANDON:
170 L.F. - WATERMAIN PIPE (INCIDENTAL)

WATER:
STA. 23+52 TO 24+00 - 14' RT
REMOVE:
48 L.F. - WATERMAIN PIPE (INCIDENTAL)

WATER:
STA. 18+64 - 5' RT TO 43' RT
FURNISH & INSTALL:
38 L.F. - 6" DIA. PVC WATERMAIN PIPE
1 - 8"x6" M.J. D.I. TEE W/JOINT RESTRAINTS
1 - 6" GATE VALVE & BOX W/JOINT RESTRAINTS
1 - FIRE HYDRANT W/JOINT RESTRAINTS
CONCRETE THRUST BLOCKS
3.6 SQ. YD. - 2" POLYSTYRENE INSULATION
BOARD (CENTERED ON STORM SEWER CROSSING)

WATER:
STA. 22+37 - 47' LT TO 43' RT
FURNISH & INSTALL:
90 L.F. - 6" DIA. PVC WATERMAIN PIPE
1 - 8"x6" M.J. D.I. CROSS W/JOINT RESTRAINTS
2 - 6" GATE VALVE & BOX W/JOINT RESTRAINTS
1 - 8" GATE VALVE & BOX W/JOINT RESTRAINTS
1 - 6" M.J. D.I. CAP (INSTALLED FOR PHASING)
2 - FIRE HYDRANTS W/JOINT RESTRAINTS
CONCRETE THRUST BLOCKS
3.6 SQ. YD. - 2" POLYSTYRENE INSULATION
BOARD (CENTERED ON STORM SEWER CROSSING)

WATER:
STA. 18+00 TO 24+00 - 5' RT
FURNISH & INSTALL:
600 L.F. - 8" DIA. PVC WATERMAIN

WATER: CONNECT EXISTING WATER SERVICES AT THE FOLLOWING LOCATIONS:
STA. 18+70± RT. - 28± L.F. 1" PIPE, SADDLE & CORP., CURB STOP & BOX
STA. 19+90± LT. - 38± L.F. 1" PIPE, SADDLE & CORP., CURB STOP & BOX
STA. 19+95± RT. - 28± L.F. 1" PIPE, SADDLE & CORP., CURB STOP & BOX
STA. 20+05± RT. - 28± L.F. 1" PIPE, SADDLE & CORP., CURB STOP & BOX
STA. 20+11± LT. - 38± L.F. 1" PIPE, SADDLE & CORP., CURB STOP & BOX
STA. 21+48± LT. - 38± L.F. 1" PIPE, SADDLE & CORP., CURB STOP & BOX
STA. 21+49± RT. - 28± L.F. 1" PIPE, SADDLE & CORP., CURB STOP & BOX
STA. 21+58± LT. - 38± L.F. 1" PIPE, SADDLE & CORP., CURB STOP & BOX
STA. 21+59± RT. - 28± L.F. 1" PIPE, SADDLE & CORP., CURB STOP & BOX
STA. 23+74± LT. - 38± L.F. 1" PIPE, SADDLE & CORP., CURB STOP & BOX
STA. 23+83± RT. - 28± L.F. 1" PIPE, SADDLE & CORP., CURB STOP & BOX
STA. 23+87± LT. - 38± L.F. 1" PIPE, SADDLE & CORP., CURB STOP & BOX

* OTHER SERVICES MAY BE LOCATED THAT ARE NOT SHOWN ON THESE PLANS

WATER SERVICES:
CONTRACTOR SHALL BE RESPONSIBLE FOR REMOVE/ABANDON EXISTING CURB BOXES ON SERVICE LINES THAT HAVE BEEN ELIMINATED FROM CONSTRUCTION OF NEW WATERMAIN INSTALLATION.

WATERMAIN:
CONTRACTOR SHALL ABANDON EXISTING WATERMAIN BY INSTALLATION OF CAP OR CONCRETE PLUG.

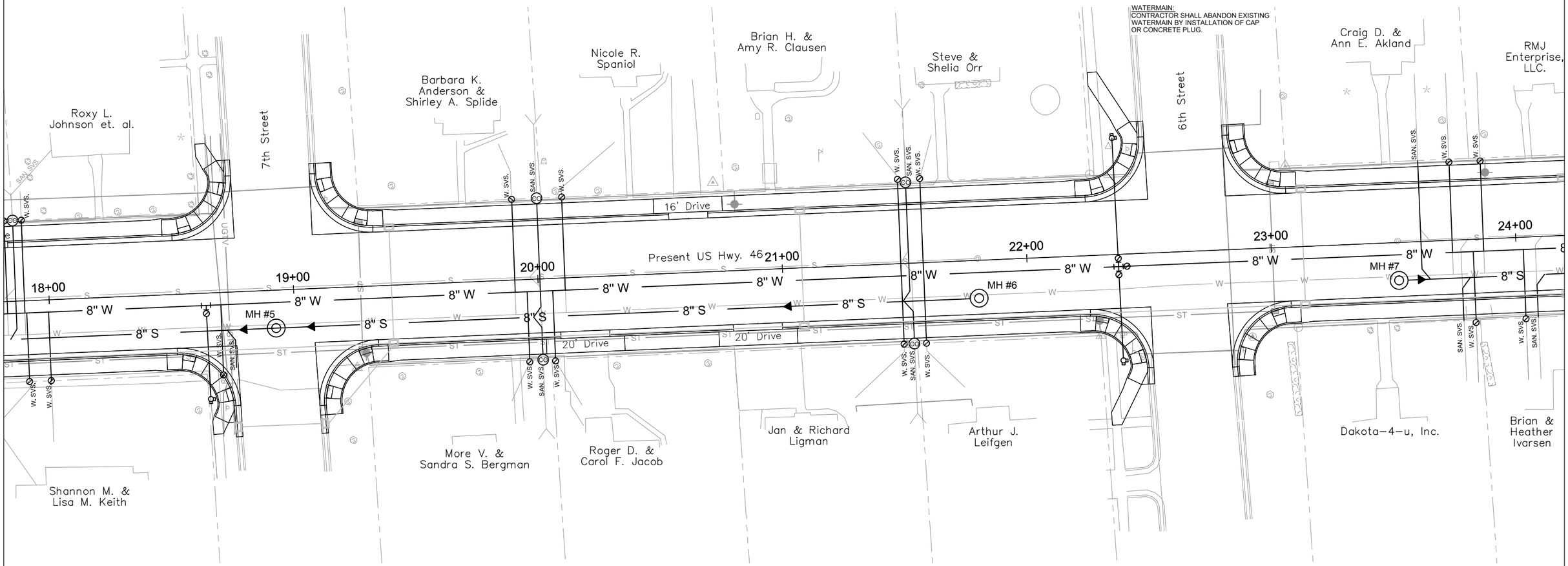

SANITARY SEWER:
CONTRACTOR SHALL ABANDON EXISTING SANITARY SEWER BY INSTALLATION OF CAP OR CONCRETE PLUG.

SANITARY SEWER:
STA. 18+00 - TO 21+80 - 15.5' RT
FURNISH & INSTALL:
380 L.F. - 8" DIA. PVC GRAVITY SEWER PIPE

SANITARY SEWER:
STA. 18+92 - 15.5' RT
FURNISH & INSTALL:
1 EA. - 48" DIA. SANITARY SEWER MANHOLE
(MH #5)

SANITARY SEWER:
STA. 21+80 - 15.5' RT
FURNISH & INSTALL:
1 EA. - 48" DIA. SANITARY SEWER MANHOLE
(MH #6)

SANITARY SEWER:
STA. 23+52 - 15.5' RT
FURNISH & INSTALL:
1 EA. - 48" DIA. SANITARY SEWER MANHOLE
(MH #7)

SANITARY SEWER:
STA. 23+52 TO 24+00- 15.5' RT
FURNISH & INSTALL:
48 L.F. - 8" DIA. PVC GRAVITY SEWER PIPE

SANITARY SEWER:
STA. 18+00 TO 21+80 - CL
ABANDON:
380 L.F. - SANITARY SEWER PIPE (INCIDENTAL)

SANITARY SEWER:
STA. 21+80 - CL
REMOVE:
1 - MANHOLE

SANITARY SEWER:
STA. 23+52 - CL
REMOVE:
1 - MANHOLE

SANITARY SEWER:
STA. 23+52 TO 24+00 - CL
ABANDON:
48 L.F. - SANITARY SEWER PIPE (INCIDENTAL)

SANITARY SERVICES: CONNECT EXISTING SEWER SERVICES AT THE FOLLOWING LOCATIONS:
STA. 18+73± RT. - 18 L.F. 6" DIA. PVC, 8"x6" WYE
STA. 19+99± LT. - 49 L.F. 6" DIA. PVC, 8"x6" WYE, 6" CLEANOUT
STA. 20+01± RT. - 18 L.F. 6" DIA. PVC, 8"x6" WYE, 6" CLEANOUT
STA. 21+52± LT. - 49 L.F. 6" DIA. PVC, 8"x6" WYE, 6" CLEANOUT
STA. 21+54± RT. - 18 L.F. 6" DIA. PVC, 8"x6" WYE, 6" CLEANOUT
STA. 23+61± LT. - 49 L.F. 6" DIA. PVC, 8"x6" WYE
STA. 23+78± RT. - 18 L.F. 6" DIA. PVC, 8"x6" WYE

* OTHER SERVICES MAY BE LOCATED THAT ARE NOT SHOWN ON THESE PLANS. CONTRACTOR SHALL LOCATE AND CONNECT ALL SERVICES TO NEW SEWER LINE.

REGISTERED PROFESSIONAL ENGINEER
REG NO. 3773
HAROLD N. HOLOCH
SOUTH DAKOTA
10-3-14

FOR BIDDING PURPOSES ONLY

STATE OF SOUTH DAKOTA	PROJECT	SHEET No.	TOTAL SHEETS
	21670.00.01 PCN X02T	19	31

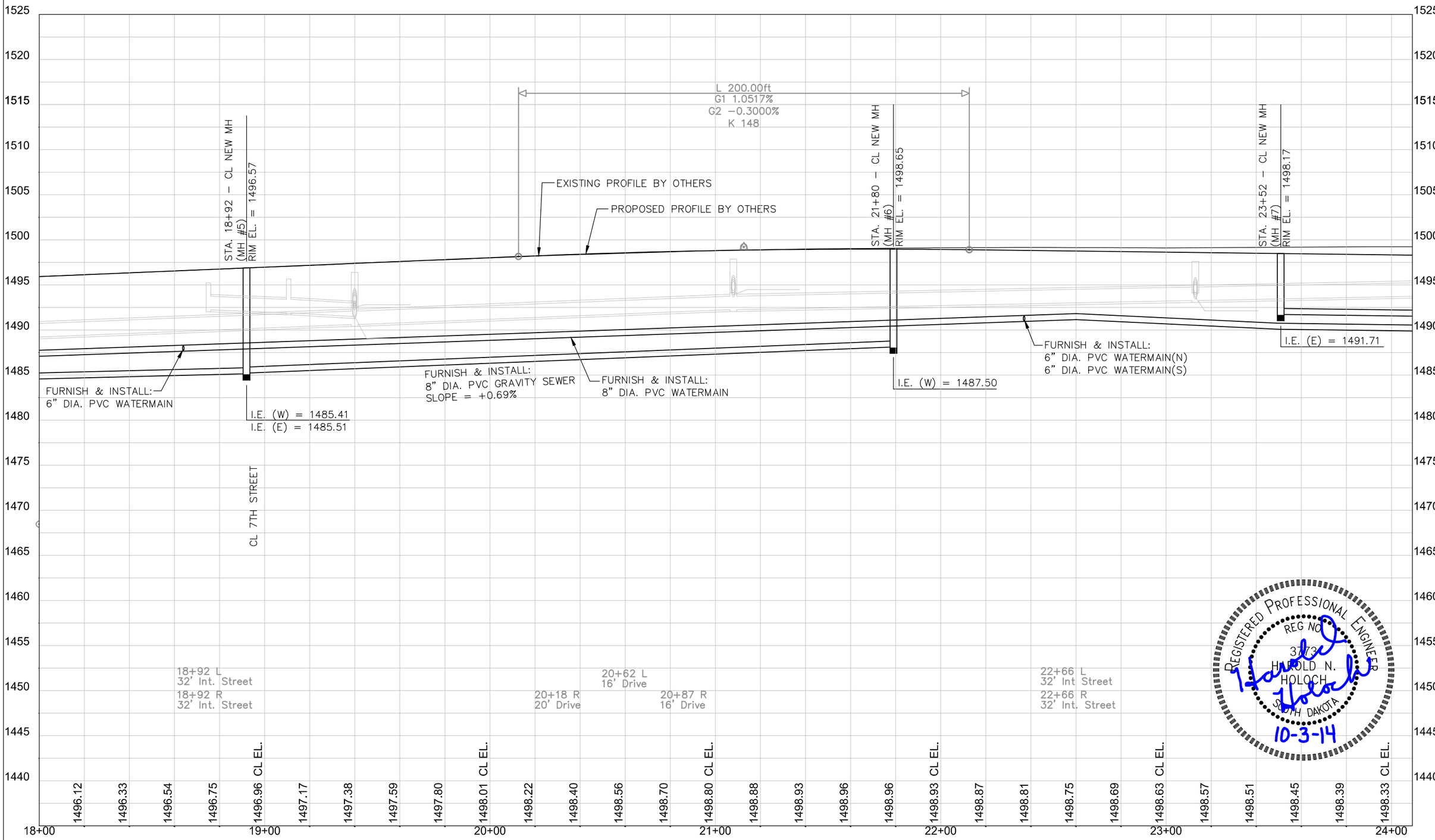

STATE OF SOUTH DAKOTA	PROJECT 21670.00.01 PCN X02T	SHEET No. 20	TOTAL SHEETS 31

FOR BIDDING PURPOSES ONLY

WATER:
STA. 24+00 TO 30+00 - 14' RT
REMOVE:
600 L.F. - WATERMAIN PIPE (INCIDENTAL)

WATER:
STA. 26+10 - 14' RT TO 32' RT
REMOVE:
18 L.F. - WATERMAIN PIPE (INCIDENTAL)
1 - TEE (INCIDENTAL)
1 - FIRE HYDRANT

WATER:
STA. 26+18 - 5' RT TO 43' RT
FURNISH & INSTALL:
38 L.F. - 6" DIA. PVC WATERMAIN PIPE
20 L.F. - 12" DIA. PVC ENCASEMENT PIPE (CENTER ON SANITARY SEWER CROSSING)
1 - 8"x6" M.J. D.I. TEE W/JOINT RESTRAINTS
1 - 6" GATE VALVE & BOX W/JOINT RESTRAINTS
1 - FIRE HYDRANT W/JOINT RESTRAINTS
CONCRETE THRUST BLOCKS

WATER:
STA. 24+00 TO 30+00 - 5' RT
FURNISH & INSTALL:
600 L.F. - 8" DIA. PVC WATERMAIN

RAW WATER:
STA. 26+61 TO 30+00 - 16' RT
REMOVE:
339 L.F. - RAW WATER FLUSHING PIPE (INCIDENTAL)
1 - MANHOLE

WATER: CONNECT EXISTING WATER SERVICES AT THE FOLLOWING LOCATIONS:
STA. 24+03± RT. - 28± L.F. 1" PIPE, SADDLE & CORP., CURB STOP & BOX
STA. 24+89± LT. - 38± L.F. 1" PIPE, SADDLE & CORP., CURB STOP & BOX
STA. 24+92± RT. - 28± L.F. 1" PIPE, SADDLE & CORP., CURB STOP & BOX
STA. 25+38± RT. - 28± L.F. 1" PIPE, SADDLE & CORP., CURB STOP & BOX
STA. 25+43± LT. - 38± L.F. 1" PIPE, SADDLE & CORP., CURB STOP & BOX
STA. 27+02± RT. - 28± L.F. 1" PIPE, SADDLE & CORP., CURB STOP & BOX
STA. 27+31± LT. - 38± L.F. 1" PIPE, SADDLE & CORP., CURB STOP & BOX
STA. 28+25± LT. - 38± L.F. 1" PIPE, SADDLE & CORP., CURB STOP & BOX
STA. 28+26± RT. - 28± L.F. 1" PIPE, SADDLE & CORP., CURB STOP & BOX
STA. 28+99± RT. - 28± L.F. 1" PIPE, SADDLE & CORP., CURB STOP & BOX
STA. 29+62± RT. - 28± L.F. 1" PIPE, SADDLE & CORP., CURB STOP & BOX
STA. 29+77± LT. - 38± L.F. 1" PIPE, SADDLE & CORP., CURB STOP & BOX

* OTHER SERVICES MAY BE LOCATED THAT ARE NOT SHOWN ON THESE PLANS

WATERMAIN:
CONTRACTOR SHALL ABANDON EXISTING WATERMAIN BY INSTALLATION OF CAP OR CONCRETE PLUG.

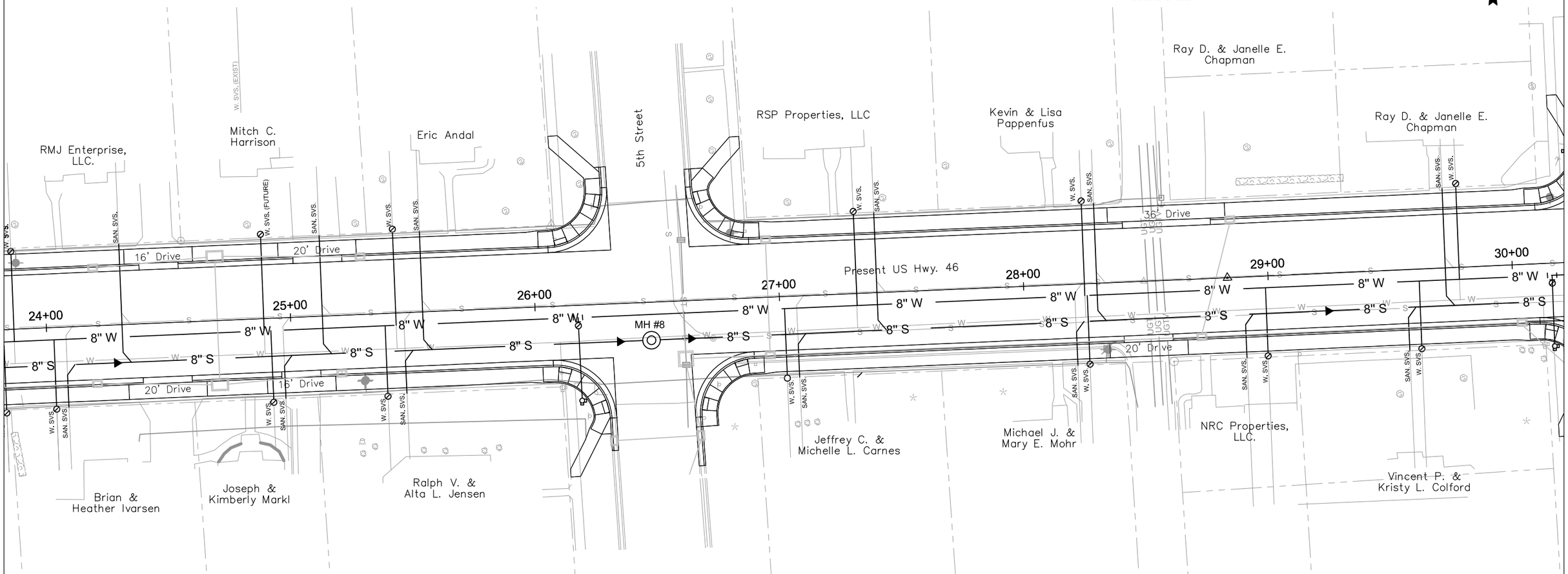

SANITARY SEWER:
CONTRACTOR SHALL ABANDON EXISTING SANITARY SEWER BY INSTALLATION OF CAP OR CONCRETE PLUG.

SANITARY SEWER:
STA. 24+00 - TO 30+00 - 15.5' RT
FURNISH & INSTALL:
600 L.F. - 8" DIA. PVC GRAVITY SEWER PIPE

SANITARY SEWER:
STA. 26+47 - 15.5' RT
FURNISH & INSTALL:
1 EA. - 48" DIA. SANITARY SEWER MANHOLE (MH #8)

SANITARY SEWER:
STA. 24+00 TO 30+00 - CL
ABANDON:
600 L.F. - SANITARY SEWER PIPE (INCIDENTAL)

SANITARY SERVICES: CONNECT EXISTING SEWER SERVICES AT THE FOLLOWING LOCATIONS:
STA. 24+08± RT. - 18 L.F. 6" DIA. PVC, 8"x6" WYE
STA. 24+31± LT. - 49 L.F. 6" DIA. PVC, 8"x6" WYE
STA. 24+97± RT. - 18 L.F. 6" DIA. PVC, 8"x6" WYE
STA. 25+13± LT. - 49 L.F. 6" DIA. PVC, 8"x6" WYE
STA. 25+49± RT. - 18 L.F. 6" DIA. PVC, 8"x6" WYE
STA. 25+54± LT. - 49 L.F. 6" DIA. PVC, 8"x6" WYE
STA. 27+05± RT. - 18 L.F. 6" DIA. PVC, 8"x6" WYE
STA. 27+40± LT. - 49 L.F. 6" DIA. PVC, 8"x6" WYE
STA. 28+21± RT. - 18 L.F. 6" DIA. PVC, 8"x6" WYE
STA. 28+29± LT. - 49 L.F. 6" DIA. PVC, 8"x6" WYE
STA. 28+90± RT. - 18 L.F. 6" DIA. PVC, 8"x6" WYE
STA. 29+57± RT. - 18 L.F. 6" DIA. PVC, 8"x6" WYE
STA. 29+74± LT. - 49 L.F. 6" DIA. PVC, 8"x6" WYE

* OTHER SERVICES MAY BE LOCATED THAT ARE NOT SHOWN ON THESE PLANS. CONTRACTOR SHALL LOCATE AND CONNECT ALL SERVICES TO NEW SEWER LINE.

REGISTERED PROFESSIONAL ENGINEER
REG NO. 3873
HAROLD N. HOLOCH
SOUTH DAKOTA
Harold N. Holoch
10-3-14

FOR BIDDING PURPOSES ONLY

STATE OF SOUTH DAKOTA	PROJECT	SHEET No.	TOTAL SHEETS
	21670.00.01 PCN X02T	21	31

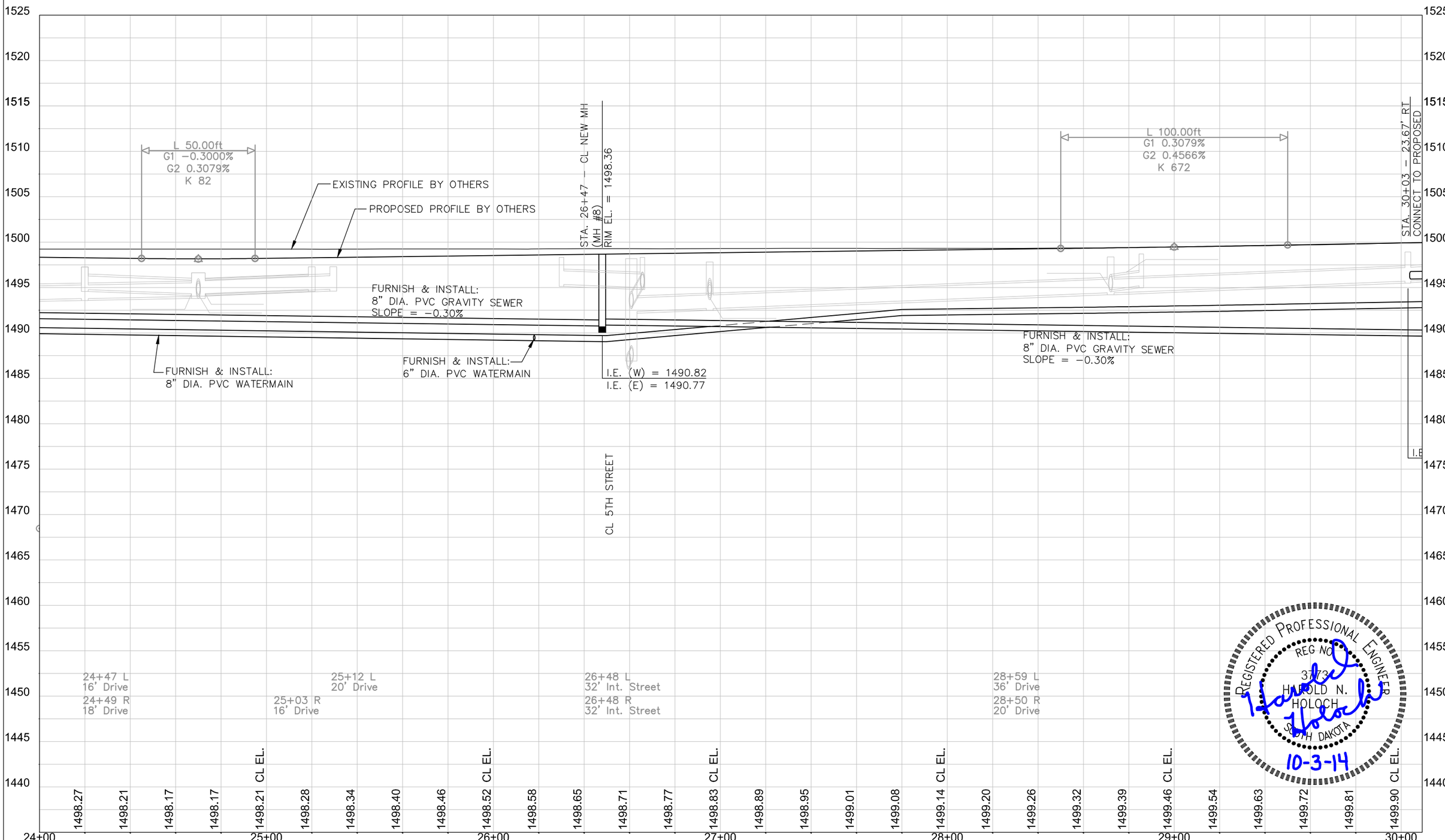

STATE OF SOUTH DAKOTA	PROJECT	SHEET No.	TOTAL SHEETS
	21670.00.01 PCN X02T	22	31

FOR BIDDING PURPOSES ONLY

WATER:
STA. 30+00 TO 34+12 - 14' RT
REMOVE:
51 L.F. - WATERMAIN PIPE (INCIDENTAL)
1 - VALVE BOX
ABANDON:
361 L.F. - WATERMAIN PIPE (INCIDENTAL)

WATER:
STA. 30+12 - 14' RT TO 33' RT
REMOVE:
19 L.F. - WATERMAIN PIPE (INCIDENTAL)
1 - TEE (INCIDENTAL)
1 - FIRE HYDRANT

WATER:
STA. 30+39 - 60' LT TO 14' RT
REMOVE
74 L.F. - WATERMAIN PIPE (INCIDENTAL)
1 - TEE (INCIDENTAL)

WATER:
STA. 33+90 TO 34+12 - 33' RT
REMOVE:
22 L.F. - WATERMAIN PIPE (INCIDENTAL)
1 - TEE (INCIDENTAL)
1 - GATE VALVE
1 - FIRE HYDRANT

WATER:
STA. 34+12 - 105' LT. TO 128' RT
REMOVE:
233 L.F. - WATERMAIN PIPE (INCIDENTAL)
1 - TEE (INCIDENTAL)
1 - GATE VALVE

WATER:
STA. 30+39 - 5' RT TO 50' LT
FURNISH & INSTALL:
55 L.F. - 6" DIA. PVC WATERMAIN PIPE
1 - 8"x6" M.J. D.I. TEE W/JOINT RESTRAINTS
1 - 6" GATE VALVE & BOX W/JOINT RESTRAINTS
1 - 6"x4" M.J. D.I. REDUCER W/JOINT RESTRAINTS
1 - 6" M.J. D.I. LONG BODY SLEEVE W/JOINT RESTRAINTS
1 - 6" M.J. D.I. PLUG (INSTALLED ON FIRE HYDRANT TEE FOR PHASING)
1 - 6" M.J. D.I. CAP (INSTALLED FOR PHASING)
CONCRETE THRUST BLOCKS

WATER:
STA. 30+24 TO 30+39- 45' LT
FURNISH & INSTALL:
1 - 6"x6" M.J. D.I. TEE W/JOINT RESTRAINTS
15 L.F. - 6" DIA. PVC WATERMAIN PIPE
1 - 6" GATE VALVE & BOX W/JOINT RESTRAINTS
1 - FIRE HYDRANT W/JOINT RESTRAINTS
CONCRETE THRUST BLOCKS

WATER:
STA. 34+16 - 105' LT TO 128' RT
FURNISH & INSTALL:
117 L.F. - 8" DIA. PVC WATERMAIN PIPE
120 L.F. - 6" DIA. PVC WATERMAIN PIPE
1 - 8"x8" M.J. D.I. CROSS W/JOINT RESTRAINTS
2 - 8" GATE VALVE & BOX W/JOINT RESTRAINTS
1 - 6" GATE VALVE & BOX W/JOINT RESTRAINTS
2 - 8"x6" M.J. D.I. REDUCER W/JOINT RESTRAINTS
4 - 6" DIA. M.J. D.I. 45° BEND W/JOINT RESTRAINTS
1 - 6" M.J. D.I. LONG BODY SLEEVE W/JOINT RESTRAINTS
1 - 8" M.J. D.I. LONG BODY SLEEVE W/JOINT RESTRAINTS
1 - 6" M.J. D.I. PLUG (INSTALLED ON FIRE HYDRANT TEE & FOR PHASING)
1 - 8" M.J. D.I. PLUG (INSTALLED ON FIRE HYDRANT TEE & FOR PHASING)
1 - 6" M.J. D.I. CAP (INSTALLED FOR PHASING)
CONCRETE THRUST BLOCKS
3.6 SQ. YD. - 2" POLYSTYRENE INSULATION
BOARD (CENTERED ON STORM SEWER CROSSING)

WATER:
STA. 30+17 - 5' RT TO 35' RT
FURNISH & INSTALL:
30 L.F. - 6" DIA. PVC WATERMAIN PIPE
1 - 8"x6" M.J. D.I. TEE W/JOINT RESTRAINTS
1 - 6" GATE VALVE & BOX W/JOINT RESTRAINTS
1 - FIRE HYDRANT W/JOINT RESTRAINTS
CONCRETE THRUST BLOCKS

WATER:
STA. 33+94 TO 34+16 - 47' LT
FURNISH & INSTALL:
1 - 6"x6" M.J. D.I. TEE W/JOINT RESTRAINTS
22 L.F. - 6" DIA. PVC WATERMAIN PIPE
1 - 6" GATE VALVE & BOX W/JOINT RESTRAINTS
1 - FIRE HYDRANT W/JOINT RESTRAINTS
CONCRETE THRUST BLOCKS

WATER:
STA. 33+94 TO 34+16 - 47' RT
FURNISH & INSTALL:
1 - 8"x6" M.J. D.I. TEE W/JOINT RESTRAINTS
22 L.F. - 6" DIA. PVC WATERMAIN PIPE
1 - 6" GATE VALVE & BOX W/JOINT RESTRAINTS
1 - FIRE HYDRANT W/JOINT RESTRAINTS
CONCRETE THRUST BLOCKS

WATER:
STA. 30+00 TO 36+00 - 5' RT.
FURNISH & INSTALL:
600 L.F. - 8" DIA. PVC
WATERMAIN

WATER:
STA. 33+92 TO 34+16 - 84' LT
FURNISH & INSTALL:
1 - 6"x4" M.J. D.I. TEE W/JOINT RESTRAINTS
24 L.F. - 4" DIA. PVC WATERMAIN PIPE
1 - 4" GATE VALVE & BOX W/JOINT RESTRAINTS
1 - 4" M.J. D.I. LONG BODY SLEEVE W/JOINT RESTRAINTS
CONCRETE THRUST BLOCKS

RAW WATER:
STA. 30+00 15' RT TO 31+67 - 31' RT
REMOVE:
67 L.F. - RAW WATER FLUSHING PIPE (INCIDENTAL)
2 - MANHOLE
ABANDON:
116 L.F. - RAW WATER FLUSHING PIPE (INCIDENTAL)

RAW WATER:
STA. 30+03 TO 31+67 - 23.67' RT TO 27' RT
FURNISH & INSTALL:
164 L.F. - 10" DIA. PVC GRAVITY SEWER
PIPE (RAW WATER FLUSHING LINE)
CONNECT TO PROPOSED TYPE B DROP INLET

RAW WATER:
STA. 31+67 - 27' RT
FURNISH & INSTALL:
1 EA. - 48" DIA. SANITARY SEWER MANHOLE (RAW
WATER FLUSHING MANHOLE) (RW MH #1)

RAW WATER:
STA. 31+67 - 27' RT TO 31' RT
FURNISH & INSTALL:
4 L.F. - 10" DIA. PVC GRAVITY SEWER PIPE (RAW
WATER FLUSHING LINE)
4 L.F. - 6" DIA. PVC GRAVITY SEWER PIPE (CENTER
COLUMN RAW WATER DRAIN LINE)
CONNECT TO EXISTING RAW WATER LINES (TRANSITION
COUPLINGS INCIDENTAL)

WATER: CONNECT EXISTING WATER SERVICES
AT THE FOLLOWING LOCATIONS:
STA. 31+72± LT. - 38± L.F. 1" PIPE, SADDLE & CORP., CURB STOP & BOX
STA. 31+99± LT. - 38± L.F. 1" PIPE, SADDLE & CORP., CURB STOP & BOX
STA. 34+16± 81' LT. (W) - 24± L.F. 1" PIPE, SADDLE & CORP., CURB STOP & BOX
STA. 34+16± 86' LT. (E) - 75± L.F. 1" PIPE, SADDLE & CORP., CURB STOP & BOX
STA. 34+16± 64' RT. (W) - 24± L.F. 1" PIPE, SADDLE & CORP., CURB STOP & BOX
STA. 34+16± 65' RT. (E) - 75± L.F. 1" PIPE, SADDLE & CORP., CURB STOP & BOX
STA. 34+16± 62' RT. (E) - 75± L.F. 1" PIPE, SADDLE & CORP., CURB STOP & BOX

* OTHER SERVICES MAY BE LOCATED THAT ARE NOT
SHOWN ON THESE PLANS

WATER SERVICES:
CONTRACTOR SHALL BE RESPONSIBLE FOR
REMOVE/ABANDON EXISTING CURB BOXES ON
SERVICE LINES THAT HAVE BEEN ELIMINATED FROM
CONSTRUCTION OF NEW WATERMAIN INSTALLATION.

WATERMAIN:
CONTRACTOR SHALL ABANDON EXISTING
WATERMAIN BY INSTALLATION OF CAP OR
CONCRETE PLUG.

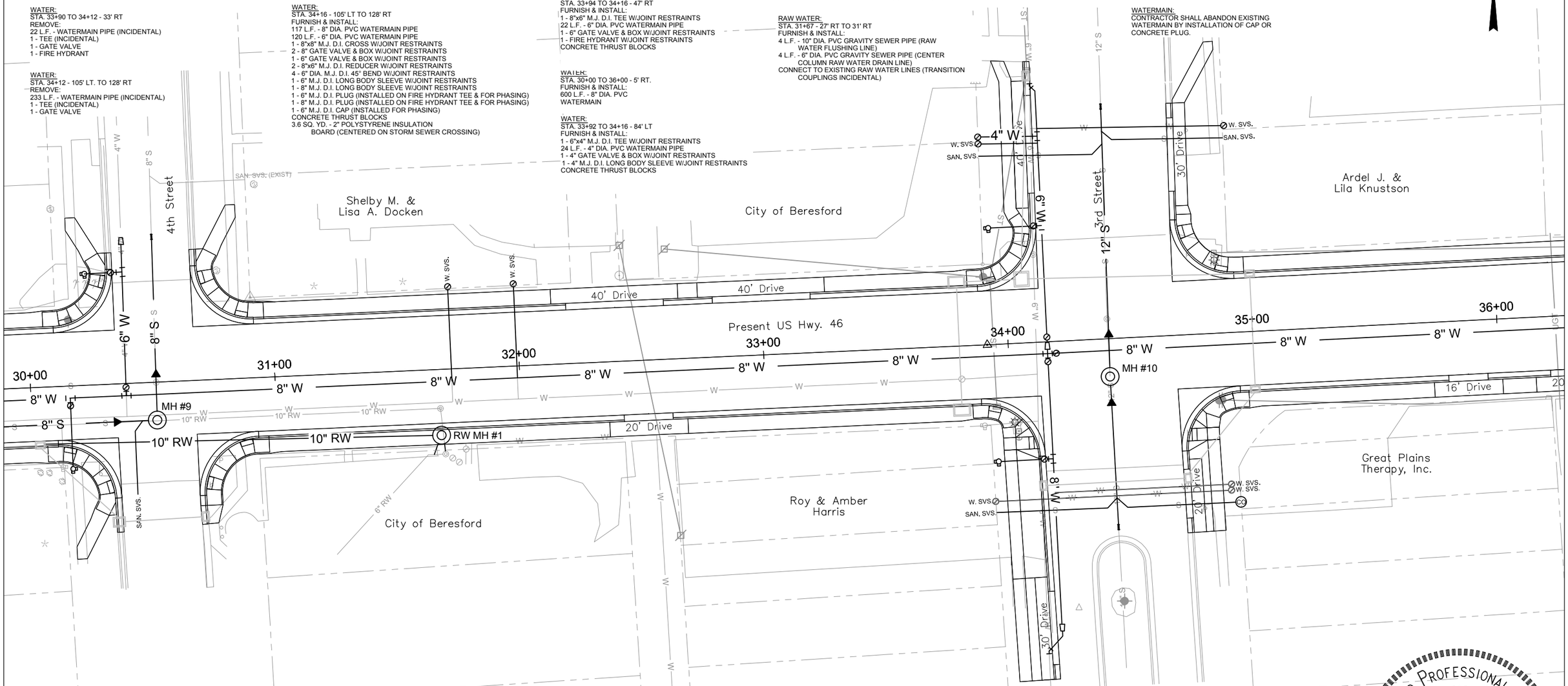

SANITARY SEWER:
CONTRACTOR SHALL ABANDON EXISTING
SANITARY SEWER BY INSTALLATION OF
CAP OR CONCRETE PLUG.

SANITARY SEWER:
STA. 30+00 - TO 30+51 - 15.5' RT
FURNISH & INSTALL:
51 L.F. - 8" DIA. PVC GRAVITY SEWER PIPE

SANITARY SEWER:
STA. 30+51 - 15.5' RT
FURNISH & INSTALL:
1 EA. - 48" DIA. SANITARY SEWER MANHOLE
(MH #9)

SANITARY SEWER:
STA. 30+51 - 50' LT TO 15.5' RT
FURNISH & INSTALL:
66 L.F. - 8" DIA. PVC GRAVITY SEWER PIPE
CONNECT TO EXISTING SEWER PIPE (TRANSITION COUPLING INCIDENTAL)

SANITARY SEWER:
STA. 34+41 - 105' LT TO 75' RT
FURNISH & INSTALL:
180 L.F. - 12" DIA. PVC GRAVITY SEWER PIPE
CONNECT TO EXISTING SEWER PIPE LT & RT (TRANSITION COUPLINGS INCIDENTAL)

SANITARY SEWER:
STA. 34+41 - 15.5' RT
FURNISH & INSTALL:
1 - 48" DIA. SANITARY SEWER MANHOLE (MH #10)

SANITARY SEWER:
STA. 30+00 TO 30+51 - CL
ABANDON:
51 L.F. - SANITARY SEWER PIPE (INCIDENTAL)

SANITARY SEWER:
STA. 30+51 - CL
ABANDON:
1 - MANHOLE

SANITARY SEWER:
STA. 30+51 - CL TO 60 ' LT
REMOVE:
60 L.F. - SANITARY SEWER PIPE (INCIDENTAL)

SANITARY SEWER:
STA. 34+41 - 95' LT TO 75' RT
REMOVE:
170 L.F. - SANITARY SEWER PIPE (INCIDENTAL)
1 - MANHOLE

SANITARY SERVICES: CONNECT EXISTING SEWER SERVICES
THE FOLLOWING LOCATIONS:
STA. 30+42± RT. - 40 L.F. 6" DIA. PVC, 8"x6" WYE
STA. 34+41± 76' LT. (W) - 50 L.F. 6" DIA. PVC, 8"x6" WYE
STA. 34+41± 81' LT. (E) - 50 L.F. 6" DIA. PVC, 8"x6" WYE
STA. 34+41± 69' RT. (W) - 50 L.F. 6" DIA. PVC, 8"x6" WYE
STA. 34+41± 71' RT. (E) - 50 L.F. 6" DIA. PVC, 8"x6" WYE, 6" CLEANOUT

* OTHER SERVICES MAY BE LOCATED THAT ARE NOT SHOWN ON
THESE PLANS. CONTRACTOR SHALL LOCATE AND CONNECT
ALL SERVICES TO NEW SEWER LINE.

REGISTERED PROFESSIONAL ENGINEER
REG NO. 3773
HAROLD N. HOLOCH
SOUTH DAKOTA
10-3-14

FOR BIDDING PURPOSES ONLY

STATE OF SOUTH DAKOTA	PROJECT	SHEET No.	TOTAL SHEETS
	21670.00.01 PCN X02T	23	31

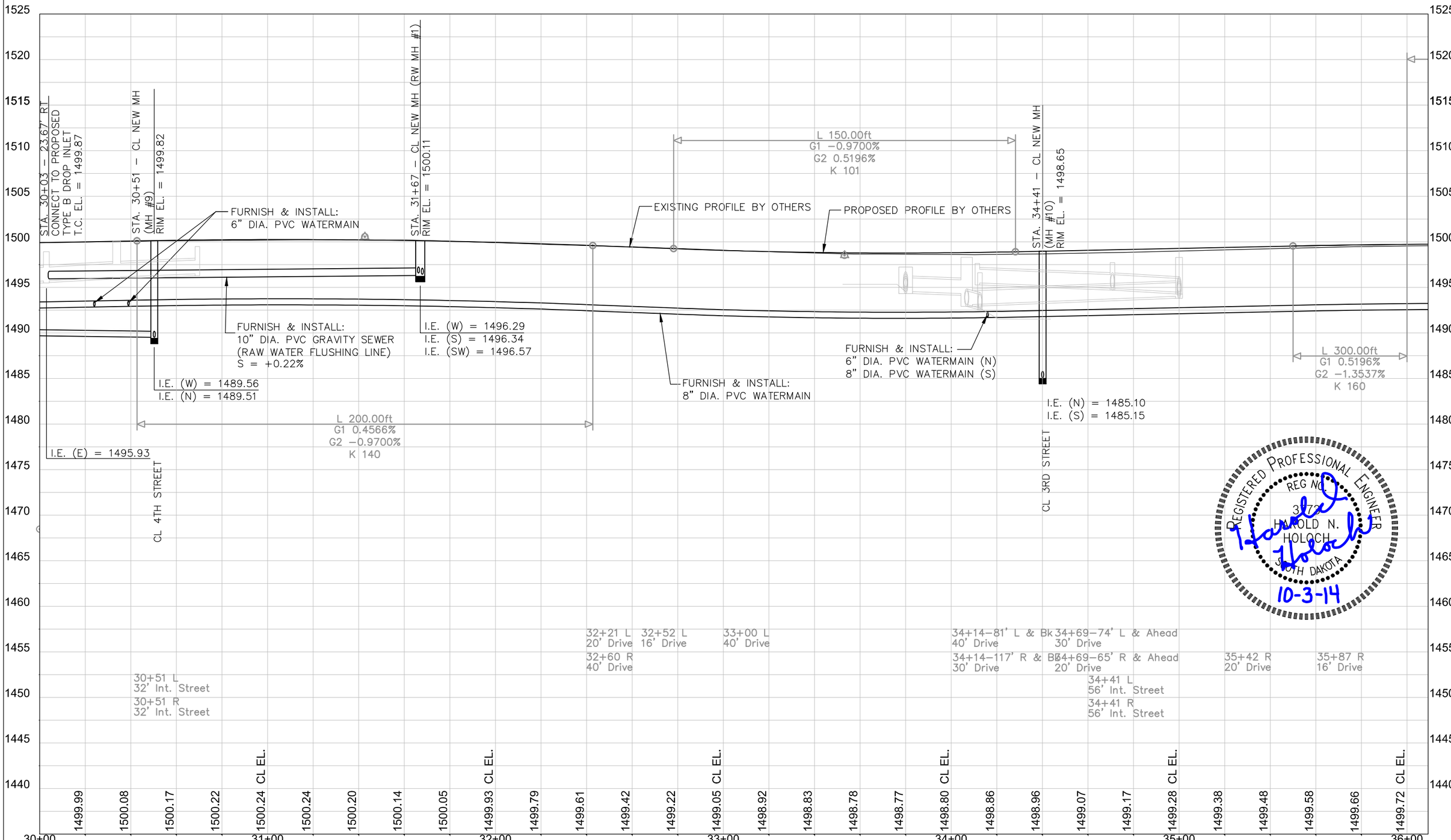

REGISTERED PROFESSIONAL ENGINEER
REG NO. 3772
HAROLD N. HOLOCH
SOUTH DAKOTA
10-3-14

STATE OF SOUTH DAKOTA	PROJECT 21670.00.01 PCN X02T	SHEET No. 24	TOTAL SHEETS 31

FOR BIDDING PURPOSES ONLY

WATER:
STA. 38+10 TO 42+00 - 15' LT
ABANDON:
390 L.F. - WATERMAIN PIPE (INCIDENTAL)

WATER:
STA. 38+10 - 55' LT TO 95' RT
REMOVE:
150 L.F. - WATERMAIN PIPE (INCIDENTAL)
1 - TEE (INCIDENTAL)

WATER:
STA. 38+01 TO 38+10 - 36' RT
REMOVE:
9 L.F. - WATERMAIN PIPE (INCIDENTAL)
1 - TEE (INCIDENTAL)
1 - FIRE HYDRANT

WATER:
STA. 38+10 TO 38+43 - 87' RT
REMOVE:
1 - 90° BEND (INCIDENTAL)
38 S.Y. - ASPHALT CONCRETE PAVEMENT
10 L.F. - CONCRETE CURB & GUTTER

WATER:
STA. 38+10 - 50' LT TO 95' RT
FURNISH & INSTALL:
90 L.F. - 8" DIA. PVC WATERMAIN PIPE
55 L.F. - 6" DIA. PVC WATERMAIN PIPE
1 - 8"x8" M.J. D.I. CROSS W/JOINT RESTRAINTS
1 - 8"x6" M.J. D.I. REDUCER W/JOINT RESTRAINTS
1 - 8" GATE VALVE & BOX W/JOINT RESTRAINTS
1 - 6" GATE VALVE & BOX W/JOINT RESTRAINTS
1 - 6"x4" M.J. D.I. REDUCER W/JOINT RESTRAINTS
1 - 8"x4" M.J. D.I. REDUCER W/JOINT RESTRAINTS
2 - 4" M.J. D.I. LONG BODY SLEEVE W/JOINT RESTRAINTS
1 - 6" M.J. D.I. PLUG (INSTALLED ON FIRE HYDRANT TEE FOR PHASING)
1 - 6" M.J. D.I. CAP (INSTALLED FOR PHASING)
CONCRETE THRUST BLOCKS
7.2 SQ. YD. - 2" POLYSTYRENE INSULATION BOARD (CENTERED ON STORM SEWER CROSSING)

WATER:
STA. 37+97 TO 38+10 - 47' LT
FURNISH & INSTALL:
1 - 6"x6" M.J. D.I. TEE W/JOINT RESTRAINTS
13 L.F. - 6" DIA. PVC WATERMAIN PIPE
1 - 6" GATE VALVE & BOX W/JOINT RESTRAINTS
1 - FIRE HYDRANT W/JOINT RESTRAINTS
CONCRETE THRUST BLOCKS

WATER:
STA. 38+01 TO 38+10 - 38' RT
FURNISH & INSTALL:
1 - 8"x6" M.J. D.I. TEE W/JOINT RESTRAINTS
9 L.F. - 6" DIA. PVC WATERMAIN PIPE
1 - 6" GATE VALVE & BOX W/JOINT RESTRAINTS
1 - FIRE HYDRANT W/JOINT RESTRAINTS
CONCRETE THRUST BLOCKS

WATER:
STA. 38+10 TO 38+43 - 87' RT
FURNISH & INSTALL:
38 L.F. - 8" DIA. PVC WATERMAIN PIPE
2 - 8"x8" M.J. D.I. TEE W/JOINT RESTRAINTS
2 - 8" GATE VALVE & BOX W/JOINT RESTRAINTS
1 - 8" M.J. D.I. LONG BODY SLEEVE W/JOINT RESTRAINTS
8.4 TON ASPHALT CONCRETE COMPOSITE (4" THICKNESS)
10 L.F. - CONCRETE CURB & GUTTER
16.9 TON - BASE COURSE (8" THICKNESS)
CONCRETE THRUST BLOCK
WATERMAIN CONNECTION SHALL BE DONE IN A SHORT TIME FRAME AT LOW WATER USAGE TIME DUE TO WATER TOWER BEING OUT OF SERVICE.

WATER:
STA. 36+00 TO 42+00 - 9' RT
FURNISH & INSTALL:
600 L.F. - 8" DIA. PVC WATERMAIN
120 L.F. - 24" DIA. STEEL ENCASEMENT PIPE (CENTERED ON RAILROAD CROSSING)

WATER SERVICES: CONNECT EXISTING WATER SERVICES AT THE FOLLOWING LOCATIONS:
STA. 38+10± - 38' LT. (E) - 42± L.F. 1" PIPE, SADDLE & CORP., CURB STOP & BOX
STA. 38+10± - 44' LT. (W) - 17± L.F. 1" PIPE, SADDLE & CORP., CURB STOP & BOX
STA. 38+10± - 60' RT. (W) - 9± L.F. 1" PIPE, SADDLE & CORP., CURB STOP & BOX
STA. 41+75± LT. - 38± L.F. 1" PIPE, SADDLE & CORP., CURB STOP & BOX
STA. 41+81± LT. - 38± L.F. 1" PIPE, SADDLE & CORP., CURB STOP & BOX

* OTHER SERVICES MAY BE LOCATED THAT ARE NOT SHOWN ON THESE PLANS

WATER SERVICES:
CONTRACTOR SHALL BE RESPONSIBLE FOR REMOVE/ABANDON EXISTING CURB BOXES ON SERVICE LINES THAT HAVE BEEN ELIMINATED FROM CONSTRUCTION OF NEW WATERMAIN INSTALLATION.

WATERMAIN:
CONTRACTOR SHALL ABANDON EXISTING WATERMAIN BY INSTALLATION OF CAP OR CONCRETE PLUG.

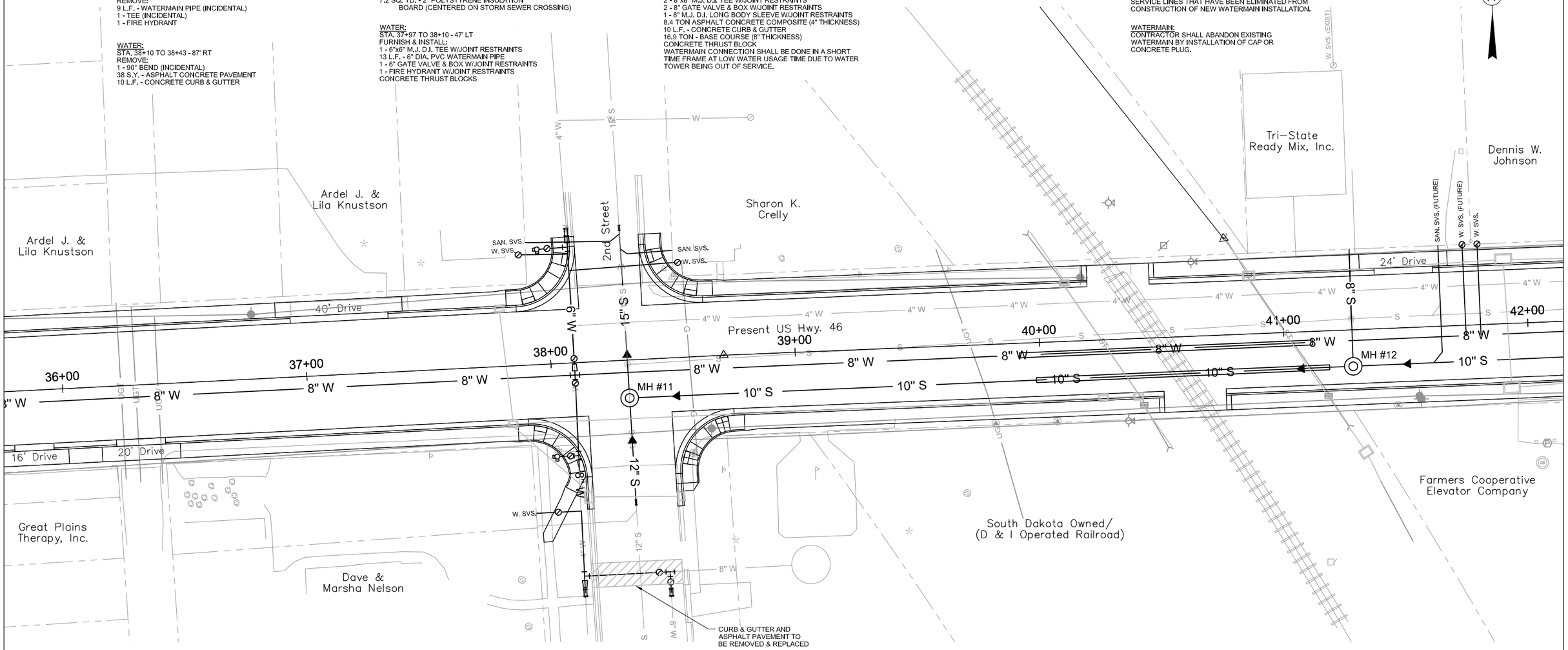

SANITARY SEWER:
CONTRACTOR SHALL ABANDON EXISTING SANITARY SEWER BY INSTALLATION OF CAP OR CONCRETE PLUG.

SANITARY SEWER:
STA. 38+31 - TO 42+00 - 15.5' RT
FURNISH & INSTALL:
369 L.F. - 10" DIA. PVC GRAVITY SEWER PIPE
120 L.F. - 24" DIA. STEEL ENCASEMENT PIPE (CENTERED ON RAILROAD CROSSING)

SANITARY SEWER:
STA. 38+31 - 15.5' RT
FURNISH & INSTALL:
1 EA. - 48" DIA. SANITARY SEWER DROP MANHOLE (MH #11)

SANITARY SEWER:
STA. 38+31 - 50' LT TO 58' RT
FURNISH & INSTALL:
66 L.F. - 15" DIA. PVC GRAVITY SEWER PIPE (LT)
42 L.F. - 12" DIA. PVC GRAVITY SEWER PIPE (RT)
CONNECT TO EXISTING SEWER PIPE LT & RT (TRANSITION COUPLINGS INCIDENTAL)

SANITARY SEWER:
STA. 41+28 - 15.5' RT
FURNISH & INSTALL:
1 EA. - 48" DIA. SANITARY SEWER DROP MANHOLE (MH #12)

SANITARY SEWER:
STA. 41+28 - 33' LT TO 15.5' RT
FURNISH & INSTALL:
49 L.F. - 8" DIA. PVC GRAVITY SEWER PIPE
CONNECT TO EXISTING SEWER PIPE (TRANSITION COUPLING INCIDENTAL)

SANITARY SEWER:
REMOVE:
STA. 38+31 - 55' LT TO 58' RT
113 L.F. - SANITARY SEWER PIPE (INCIDENTAL)

SANITARY SEWER:
STA. 38+31 TO 42+00 - 2' RT TO 4' LT
ABANDON:
369 L.F. - SANITARY SEWER PIPE (INCIDENTAL)

SANITARY SEWER:
STA. 38+31 - 2' RT
ABANDON:
1 - MANHOLE

SANITARY SEWER:
STA. 41+28 - 4' LT
ABANDON:
1 - MANHOLE

SANITARY SERVICES: CONNECT EXISTING SEWER SERVICES AT THE FOLLOWING LOCATIONS:
STA. 38+31± LT. - 43' LT (E) - 21L.F. 6" DIA. PVC, 15"x6" WYE
STA. 38+31± LT. - 51' LT (W) - 39 L.F. 6" DIA. PVC, 15"x6" WYE
STA. 41+65± LT. - 49 L.F. 6" DIA. PVC, 10"x6" WYE

* OTHER SERVICES MAY BE LOCATED THAT ARE NOT SHOWN ON THESE PLANS. CONTRACTOR SHALL LOCATE AND CONNECT ALL SERVICES TO NEW SEWER LINE.

REGISTERED PROFESSIONAL ENGINEER
REG NO. 3175
HAROLD N. HOLOCH
SOUTH DAKOTA
Harold N. Holoch
10-3-14

FOR BIDDING PURPOSES ONLY

STATE OF SOUTH DAKOTA	PROJECT	SHEET No.	TOTAL SHEETS
	21670.00.01 PCN X02T	25	31

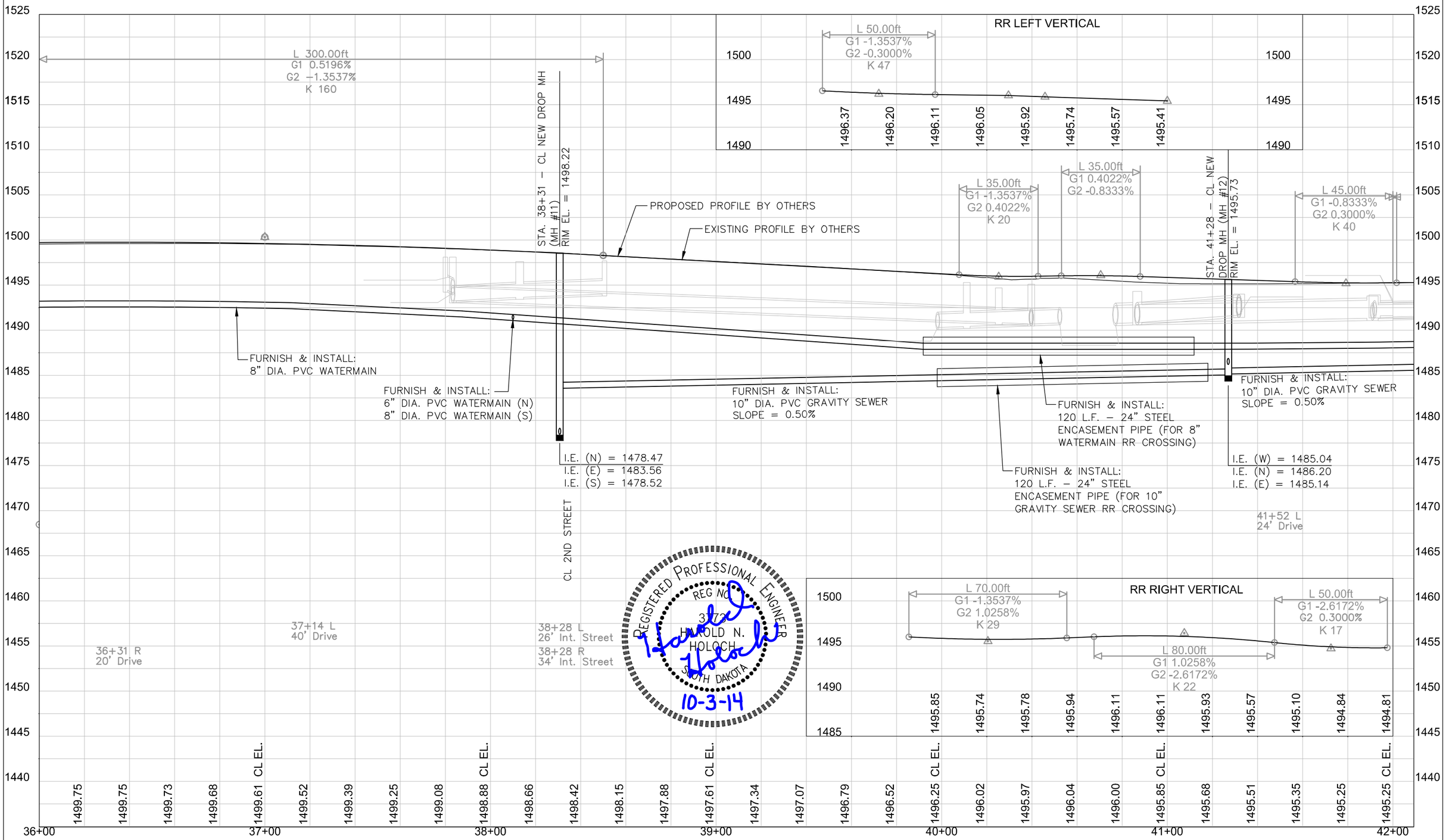

STATE OF SOUTH DAKOTA	PROJECT	SHEET No.	TOTAL SHEETS
	21670.00.01 PCN X02T	26	31

FOR BIDDING PURPOSES ONLY

WATER:
STA. 42+00 TO 48+00 - 14' LT
ABANDON:
600 L.F. - WATERMAIN PIPE (INCIDENTAL)

WATER:
STA. 43+39 - 60' LT TO 37' RT
REMOVE:
97 L.F. - WATERMAIN PIPE (INCIDENTAL)
1 - CROSS (INCIDENTAL)
2 - GATE VALVES

WATER:
STA. 45+93 - 14' LT TO 33' LT
REMOVE:
19 L.F. - WATERMAIN PIPE (INCIDENTAL)
1 - TEE (INCIDENTAL)
1 - FIRE HYDRANT

WATER:
STA. 43+39 - 60' LT TO 37' RT
FURNISH & INSTALL:
65 L.F. - 6" DIA. PVC WATERMAIN PIPE
32 L.F. - 8" DIA. PVC WATERMAIN PIPE
1 - 8"x8" M.J. D.I. CROSS W/JOINT RESTRAINTS
1 - 6" GATE VALVE & BOX W/JOINT RESTRAINTS
1 - 8" GATE VALVE & BOX W/JOINT RESTRAINTS
1 - 8"x6" M.J. D.I. REDUCER W/JOINT RESTRAINTS
1 - 6"x4" M.J. D.I. REDUCER W/JOINT RESTRAINTS
1 - 6" M.J. D.I. LONG BODY SLEEVE W/JOINT RESTRAINTS
1 - 8" M.J. D.I. LONG BODY SLEEVE W/JOINT RESTRAINTS
1 - 8" DIA.11.25° BEND W/JOINT RESTRAINTS
1 - 8" M.J. PLUG W/THREADED TAP (INSTALLED FOR FLUSHING PURPOSES DURING PHASING)
1 - 6" M.J. D.I. PLUG (INSTALLED ON FIRE HYDRANT TEE FOR PHASING)
1 - 6" M.J. D.I. CAP (INSTALLED FOR PHASING)
CONCRETE THRUST BLOCKS

WATER:
STA. 43+22 TO 43+39 - 45' LT
FURNISH & INSTALL:
1 - 6"x6" M.J. D.I. TEE W/JOINT RESTRAINTS
17 L.F. - 6" DIA. PVC WATERMAIN PIPE
1 - 6" GATE VALVE & BOX W/JOINT RESTRAINTS
1 - FIRE HYDRANT W/JOINT RESTRAINTS
CONCRETE THRUST BLOCKS

WATER:
STA. 43+44 TO 43+64 - 5' RT
FURNISH & INSTALL:
20 L.F. - 12" DIA. PVC ENCASEMENT PIPE (CENTER ON SANITARY SEWER CROSSING)

WATER:
STA. 46+25 - 55' LT. TO 5' RT
FURNISH & INSTALL:
60 L.F. - 6" DIA. PVC WATERMAIN PIPE
1 - 8"x6" M.J. D.I. TEE W/JOINT RESTRAINTS
1 - 6" GATE VALVE & BOX W/JOINT RESTRAINTS
1 - 6" M.J. D.I. LONG BODY SLEEVE W/JOINT RESTRAINTS
1 - 6" M.J. D.I. CAP (INSTALLED FOR PHASING)
CONCRETE THRUST BLOCKS

WATER:
STA. 46+25 TO 46+39 - 47' LT
FURNISH & INSTALL:
1 - 6"x6" M.J. D.I. TEE W/JOINT RESTRAINTS
14 L.F. - 6" DIA. PVC WATERMAIN PIPE
1 - 6" GATE VALVE & BOX W/JOINT RESTRAINTS
1 - FIRE HYDRANT W/JOINT RESTRAINTS
1 - 6" M.J. D.I. PLUG
CONCRETE THRUST BLOCKS

WATER:
STA. 47+00 TO 48+00 - 5' RT
FURNISH & INSTALL:
600 L.F. - 8" DIA. PVC WATERMAIN

WATER: CONNECT EXISTING WATER SERVICES AT THE FOLLOWING LOCATIONS:
STA. 44+07± LT. - 38± L.F. 1" PIPE, SADDLE & CORP., CURB STOP & BOX
STA. 45+43± LT. - 38± L.F. 1" PIPE, SADDLE & CORP., CURB STOP & BOX
STA. 46+59± RT. - 28± L.F. 1" PIPE, SADDLE & CORP., CURB STOP & BOX
STA. 46+94± LT. - 38± L.F. 1" PIPE, SADDLE & CORP., CURB STOP & BOX
STA. 47+70± RT. - 28± L.F. 1" PIPE, SADDLE & CORP., CURB STOP & BOX

* OTHER SERVICES MAY BE LOCATED THAT ARE NOT SHOWN ON THESE PLANS

WATER SERVICES:
CONTRACTOR SHALL BE RESPONSIBLE FOR REMOVE/ABANDON EXISTING CURB BOXES ON SERVICE LINES THAT HAVE BEEN ELIMINATED FROM CONSTRUCTION OF NEW WATERMAIN INSTALLATION.

WATERMAIN:
CONTRACTOR SHALL ABANDON EXISTING WATERMAIN BY INSTALLATION OF CAP OR CONCRETE PLUG.

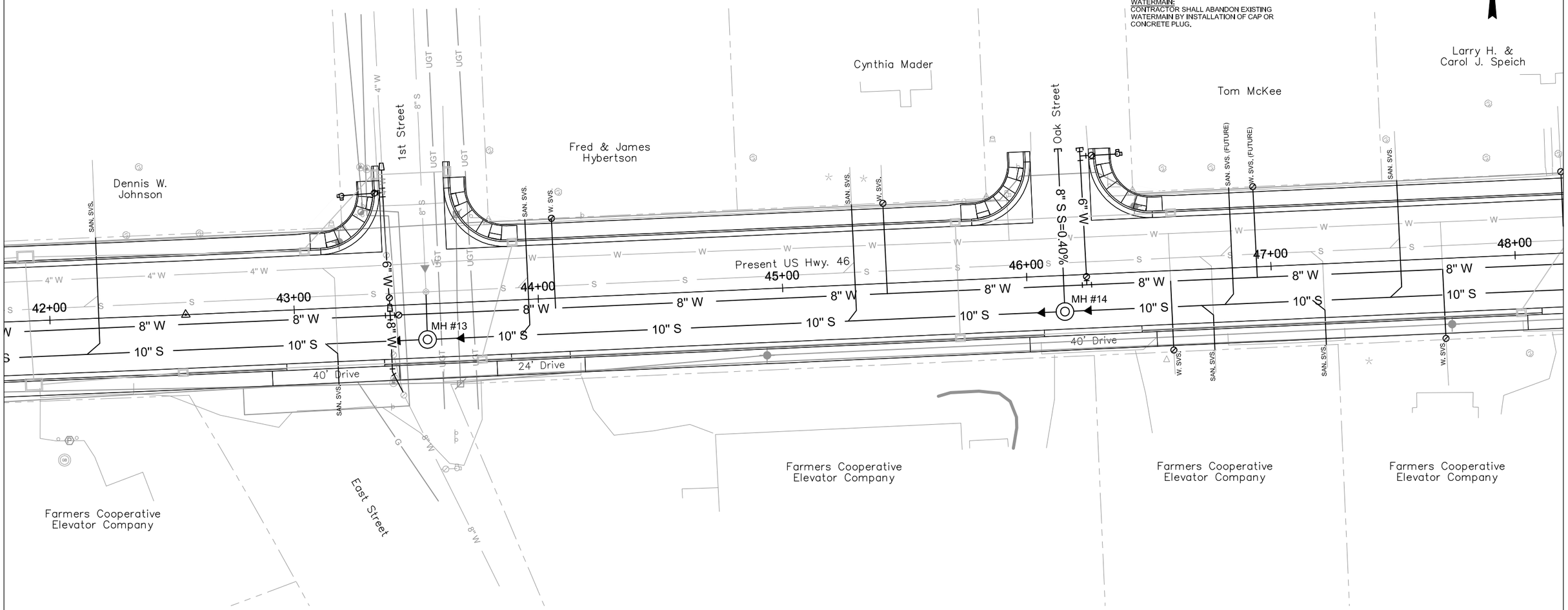

SANITARY SEWER:
CONTRACTOR SHALL ABANDON EXISTING SANITARY SEWER BY INSTALLATION OF CAP OR CONCRETE PLUG.

SANITARY SEWER:
STA. 42+00 - TO 48+00 - 15.5' RT
FURNISH & INSTALL:
600 L.F. - 10" DIA. PVC GRAVITY SEWER PIPE

SANITARY SEWER:
STA. 43+54 - 15.5' RT
FURNISH & INSTALL:
1 EA. - 48" DIA. SANITARY SEWER DROP MANHOLE (MH #13)

SANITARY SEWER:
STA. 43+54 - 4' LT TO 15.5' RT
FURNISH & INSTALL:
20 L.F. - 8" DIA. PVC GRAVITY SEWER PIPE
CONNECT TO EXISTING SEWER PIPE (TRANSITION COUPLING (INCIDENTAL)

SANITARY SEWER:
STA. 46+15 - 15.5' RT
FURNISH & INSTALL:
1 EA. - 48" DIA. SANITARY SEWER MANHOLE (MH #14)

SANITARY SEWER:
STA. 46+15 - 55' LT TO 15.5' RT
FURNISH & INSTALL:
71 L.F. - 8" DIA. PVC GRAVITY SEWER PIPE
1 EA. - 8" PVC CAP (INCIDENTAL)

SANITARY SEWER:
STA. 42+00 TO 48+00 - 4' LT
ABANDON:
600 L.F. - SANITARY SEWER PIPE (INCIDENTAL)

SANITARY SEWER:
STA. 43+54 - 4' LT
ABANDON:
1 - MANHOLE

SANITARY SERVICES: CONNECT EXISTING SEWER SERVICES AT THE FOLLOWING LOCATIONS:
STA. 42+20± LT. - 49 L.F. 6" DIA. PVC, 10"x6" WYE
STA. 43+17± RT. - 18 L.F. 6" DIA. PVC, 10"x6" WYE
STA. 43+96± LT. - 49 L.F. 6" DIA. PVC, 10"x6" WYE
STA. 45+30± LT. - 49 L.F. 6" DIA. PVC, 10"x6" WYE
STA. 46+76± RT. - 18 L.F. 6" DIA. PVC, 10"x6" WYE
STA. 46+84± LT. - 49 L.F. 6" DIA. PVC, 10"x6" WYE
STA. 47+20± RT. - 18 L.F. 6" DIA. PVC, 10"x6" WYE
STA. 47+53± LT. - 49 L.F. 6" DIA. PVC, 10"x6" WYE

* OTHER SERVICES MAY BE LOCATED THAT ARE NOT SHOWN ON THESE PLANS. CONTRACTOR SHALL LOCATE AND CONNECT ALL SERVICES TO NEW SEWER LINE.

REGISTERED PROFESSIONAL ENGINEER
REG NO. 3873
HAROLD N. HOLOCH
SOUTH DAKOTA

Harold N. Holoch
10-3-14

FOR BIDDING PURPOSES ONLY

STATE OF SOUTH DAKOTA	PROJECT	SHEET No.	TOTAL SHEETS
	21670.00.01 PCN X02T	27	31

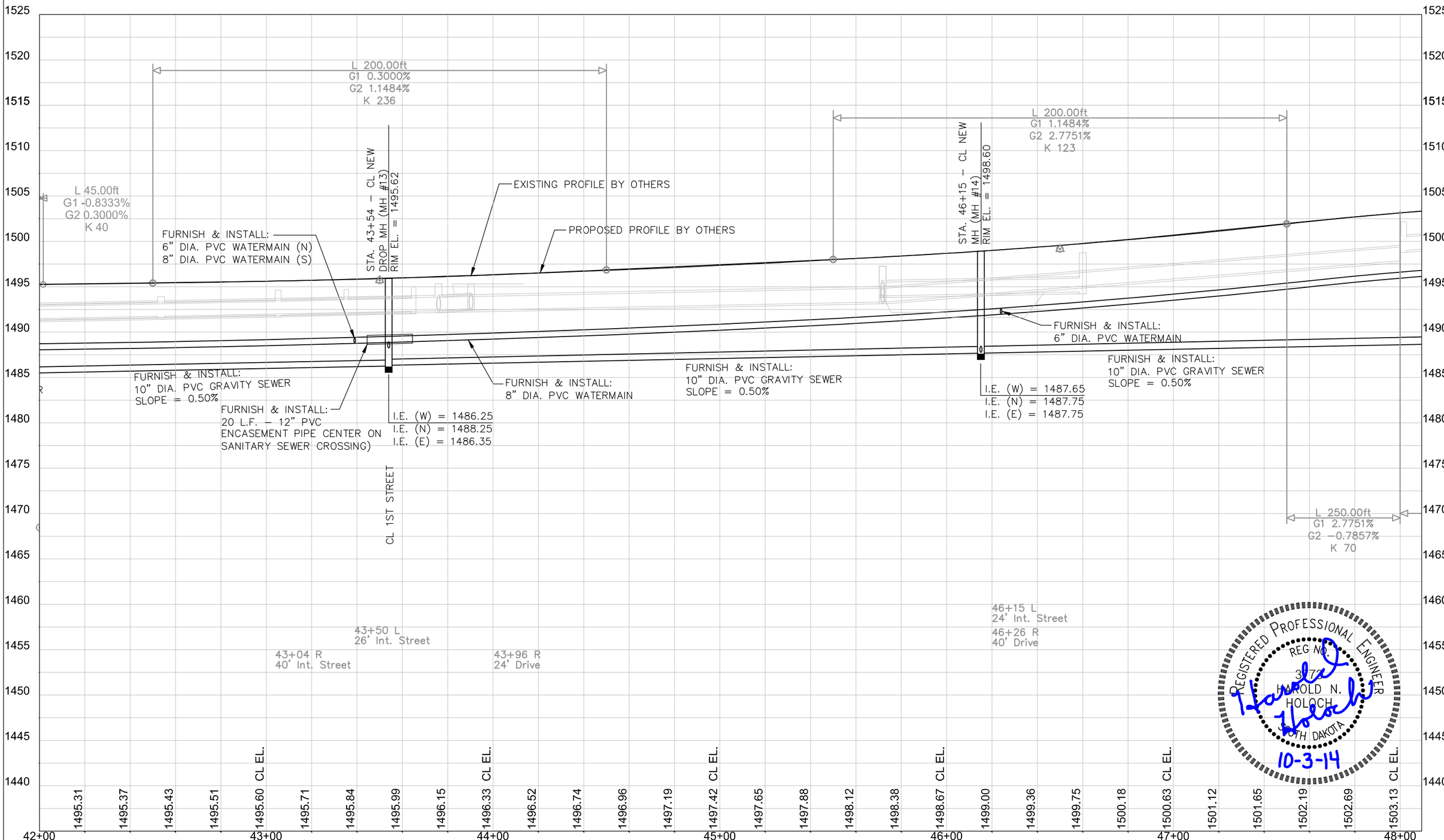

REGISTERED PROFESSIONAL ENGINEER
REG NO. 3173
HAROLD N. HOLOCH
SOUTH DAKOTA
10-3-14

STATE OF SOUTH DAKOTA	PROJECT	SHEET No.	TOTAL SHEETS
	21670.00.01 PCN X02T	28	31

FOR BIDDING PURPOSES ONLY

WATER:
STA. 48+00 TO 54+00 - 14' LT TO 19' LT
ABANDON:
600 L.F. - WATERMAIN PIPE (INCIDENTAL)
REMOVE:
1 - VALVE BOX

WATER:
STA. 51+20 - 33' LT TO 15' LT
ABANDON:
18 L.F. - WATERMAIN PIPE (INCIDENTAL)

WATER:
STA. 48+89 - 55' LT TO 5' RT
FURNISH & INSTALL:
60 L.F. - 6" DIA. PVC WATERMAIN PIPE
1 - 8"x6" M.J. D.I. TEE W/JOINT RESTRAINTS
1 - 6" GATE VALVE & BOX W/JOINT RESTRAINTS
1 - 6" M.J. D.I. LONG BODY SLEEVE W/JOINT RESTRAINTS
1 - 6" M.J. D.I. CAP (INSTALLED FOR PHASING)
CONCRETE THRUST BLOCKS

WATER:
STA. 48+89 TO 49+04 - 47' LT
FURNISH & INSTALL:
1 - 6"x6" M.J. D.I. TEE W/JOINT RESTRAINTS
15 L.F. - 6" DIA. PVC WATERMAIN PIPE
1 - 6" GATE VALVE & BOX W/JOINT RESTRAINTS
1 - FIRE HYDRANT W/JOINT RESTRAINTS
1 - 6" M.J. D.I. PLUG
CONCRETE THRUST BLOCKS

WATER:
STA. 48+00 TO 54+00 - 15' RT
FURNISH & INSTALL:
600 L.F. - 8" DIA. PVC WATERMAIN

WATER: CONNECT EXISTING WATER SERVICES
AT THE FOLLOWING LOCATIONS:
STA. 48+20± LT. - 38± L.F. 1" PIPE, SADDLE & CORP., CURB STOP & BOX
STA. 48+47± LT. - 38± L.F. 1" PIPE, SADDLE & CORP., CURB STOP & BOX
STA. 48+51± LT. - 38± L.F. 1" PIPE, SADDLE & CORP., CURB STOP & BOX
STA. 48+64± RT. - 28± L.F. 1" PIPE, SADDLE & CORP., CURB STOP & BOX
STA. 49+53± LT. - 38± L.F. 1" PIPE, SADDLE & CORP., CURB STOP & BOX
STA. 50+25± RT. - 28± L.F. 1" PIPE, SADDLE & CORP., CURB STOP & BOX
STA. 50+33± LT. - 38± L.F. 1" PIPE, SADDLE & CORP., CURB STOP & BOX
STA. 51+03± RT. - 28± L.F. 1" PIPE, SADDLE & CORP., CURB STOP & BOX
STA. 51+79± LT. - 38± L.F. 1" PIPE, SADDLE & CORP., CURB STOP & BOX
STA. 51+85± RT. - 28± L.F. 1" PIPE, SADDLE & CORP., CURB STOP & BOX
STA. 52+80± LT. - 38± L.F. 1" PIPE, SADDLE & CORP., CURB STOP & BOX
STA. 53+05± RT. - 28± L.F. 1" PIPE, SADDLE & CORP., CURB STOP & BOX

* OTHER SERVICES MAY BE LOCATED THAT ARE NOT SHOWN ON THESE PLANS

WATER SERVICES:
CONTRACTOR SHALL BE RESPONSIBLE FOR REMOVE/ABANDON EXISTING CURB BOXES ON SERVICE LINES THAT HAVE BEEN ELIMINATED FROM CONSTRUCTION OF NEW WATERMAIN INSTALLATION.

WATERMAIN:
CONTRACTOR SHALL ABANDON EXISTING WATERMAIN BY INSTALLATION OF CAP OR CONCRETE PLUG.

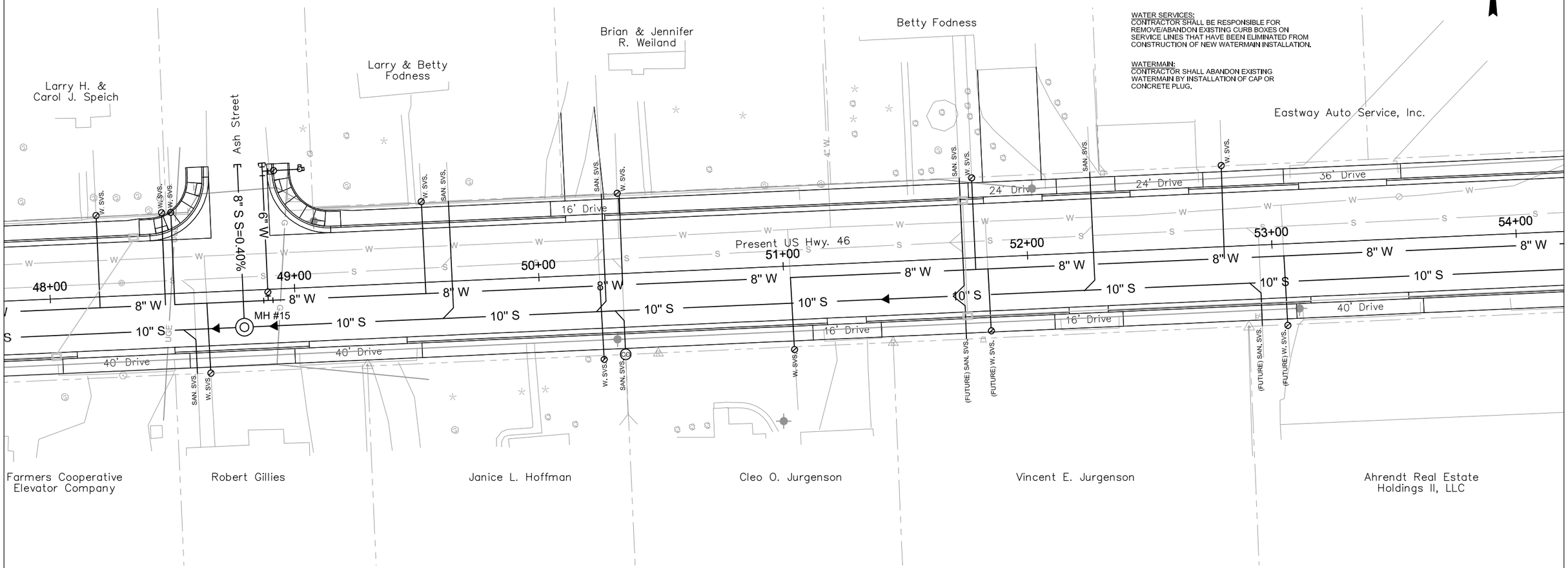

SANITARY SEWER:
CONTRACTOR SHALL ABANDON EXISTING SANITARY SEWER BY INSTALLATION OF CAP OR CONCRETE PLUG.

SANITARY SEWER:
STA. 48+00 - TO 54+00 - 15.5' RT
FURNISH & INSTALL:
600 L.F. - 10" DIA. PVC GRAVITY SEWER PIPE

SANITARY SEWER:
STA. 48+79 - 15.5' RT
FURNISH & INSTALL:
1 EA. - 48" DIA. SANITARY SEWER MANHOLE
(MH #15)

SANITARY SEWER:
STA. 48+79 - 55' LT TO 15.5' RT
FURNISH & INSTALL:
71 L.F. - 8" DIA. PVC GRAVITY SEWER PIPE
1 EA. - 8" PVC CAP (INCIDENTAL)

SANITARY SEWER:
STA. 48+00 TO 54+00 - 5' LT TO 7' LT
ABANDON:
600 L.F. - SANITARY SEWER PIPE (INCIDENTAL)

SANITARY SEWER:
STA. 48+29 - 5' LT
ABANDON:
1 - MANHOLE

SANITARY SERVICES: CONNECT EXISTING SEWER SERVICES
AT THE FOLLOWING LOCATIONS:
STA. 48+59± RT. - 18 L.F. 6" DIA. PVC, 10"x6" WYE
STA. 49+64± LT. - 49 L.F. 6" DIA. PVC, 10"x6" WYE
STA. 50+27± LT. - 49 L.F. 6" DIA. PVC, 10"x6" WYE
STA. 50+34± RT. - 18 L.F. 6" DIA. PVC, 10"x6" WYE, 6" CLEANOUT
STA. 51+73± LT. - 49 L.F. 6" DIA. PVC, 10"x6" WYE
STA. 51+75± RT. - 18 L.F. 6" DIA. PVC, 10"x6" WYE
STA. 52+29± LT. - 49 L.F. 6" DIA. PVC, 10"x6" WYE
STA. 52+95± RT. - 18 L.F. 6" DIA. PVC, 10"x6" WYE

* OTHER SERVICES MAY BE LOCATED THAT ARE NOT SHOWN ON THESE PLANS. CONTRACTOR SHALL LOCATE AND CONNECT ALL SERVICES TO NEW SEWER LINE.

REGISTERED PROFESSIONAL ENGINEER
REG NO. 3173
HAROLD N. HOLOCH
SOUTH DAKOTA
Harold N. Holoch
10-3-14

FOR BIDDING PURPOSES ONLY

STATE OF SOUTH DAKOTA	PROJECT	SHEET No.	TOTAL SHEETS
	21670.00.01 PCN X02T	29	31

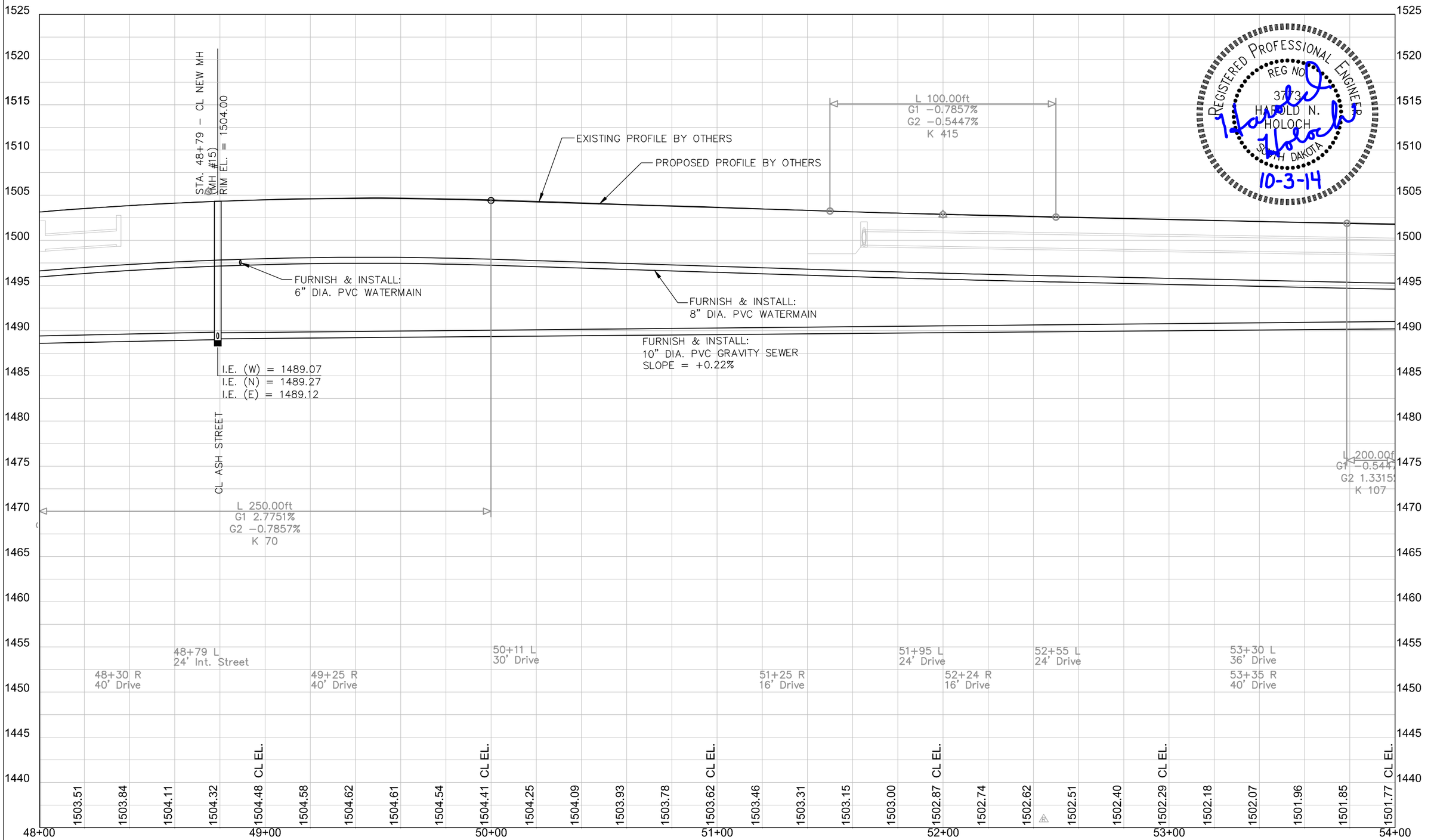

REGISTERED PROFESSIONAL ENGINEER
REG NO. 3773
HAROLD N. HOLOCH
SOUTH DAKOTA
10-3-14

FOR BIDDING PURPOSES ONLY

STATE OF SOUTH DAKOTA	PROJECT	SHEET No.	TOTAL SHEETS
	21670.00.01 PCN X02T	30	31

WATER:
STA. 54+00 TO 54+65 - 19' LT TO 45' LT
ABANDON:
50 L.F. - WATERMAIN PIPE (INCIDENTAL)
REMOVE:
20 L.F. - WATERMAIN PIPE (INCIDENTAL)

WATER:
STA. 54+46TO 54+65 - 40' LT TO 51' RT
ABANDON:
70 L.F. - WATERMAIN PIPE (INCIDENTAL)
REMOVE:
25 L.F. - WATERMAIN PIPE (INCIDENTAL)
1 - FIRE HYDRANT
1 - GATE VALVE

WATER:
STA. 54+62 - 45' LT TO 51' RT
FURNISH & INSTALL:
6 L.F. - 4" DIA. PVC WATERMAIN PIPE
90 L.F. - 8" DIA. PVC WATERMAIN PIPE
1 - 8"x8" M.J. D.I. CROSS W/JOINT RESTRAINTS
3 - 8" GATE VALVE & BOX W/JOINT RESTRAINTS
1 - 4" M.J. D.I. LONG BODY SLEEVE W/JOINT RESTRAINTS
1 - 8"x4" M.J. D.I. REDUCER W/JOINT RESTRAINTS
1 - 4" M.J. D.I. 45° BEND W/JOINT RESTRAINTS
1 - 4" M.J. D.I. 22.5° BEND W/JOINT RESTRAINTS
1 - 8" M.J. D.I. CAP (INSTALLED FOR PHASING)
1 - 6" M.J. D.I. PLUG (INSTALLED ON FIRE HYDRANT TEE FOR PHASING)
1 - 8" M.J. D.I. LONG BODY SLEEVE W/JOINT RESTRAINTS
CONCRETE THRUST BLOCKS

WATER:
STA. 54+53 TO 54+65 - 45' LT
FURNISH & INSTALL:
1 - 8"x6" M.J. D.I. CROSS W/JOINT RESTRAINTS
12 L.F. - 6" DIA. PVC WATERMAIN PIPE
2 - 6" GATE VALVE & BOX W/JOINT RESTRAINTS
1 - FIRE HYDRANT W/JOINT RESTRAINTS
1 - 6" M.J. D.I. 22.5° BEND W/JOINT RESTRAINTS
1 - 6" M.J. D.I. LONG BODY SLEEVE W/JOINT RESTRAINTS
1 - 8" M.J. D.I. PLUG
CONCRETE THRUST BLOCKS

WATER:
STA. 54+53 TO 54+62 - 45' RT
FURNISH & INSTALL:
1 - 8"x6" M.J. D.I. TEE W/JOINT RESTRAINTS
9 L.F. - 6" DIA. PVC WATERMAIN PIPE
1 - 6" GATE VALVE & BOX W/JOINT RESTRAINTS
1 - FIRE HYDRANT W/JOINT RESTRAINTS
CONCRETE THRUST BLOCKS

WATER:
STA. 54+00 TO 54+77 - 5' RT
FURNISH & INSTALL:
77 L.F. - 8" DIA. PVC WATERMAIN
1 - 8" M.J. D.I. CAP W/JOINT RESTRAINTS
CONCRETE THRUST BLOCKS

WATERMAIN:
CONTRACTOR SHALL ABANDON EXISTING WATERMAIN BY INSTALLATION OF CAP OR CONCRETE PLUG.

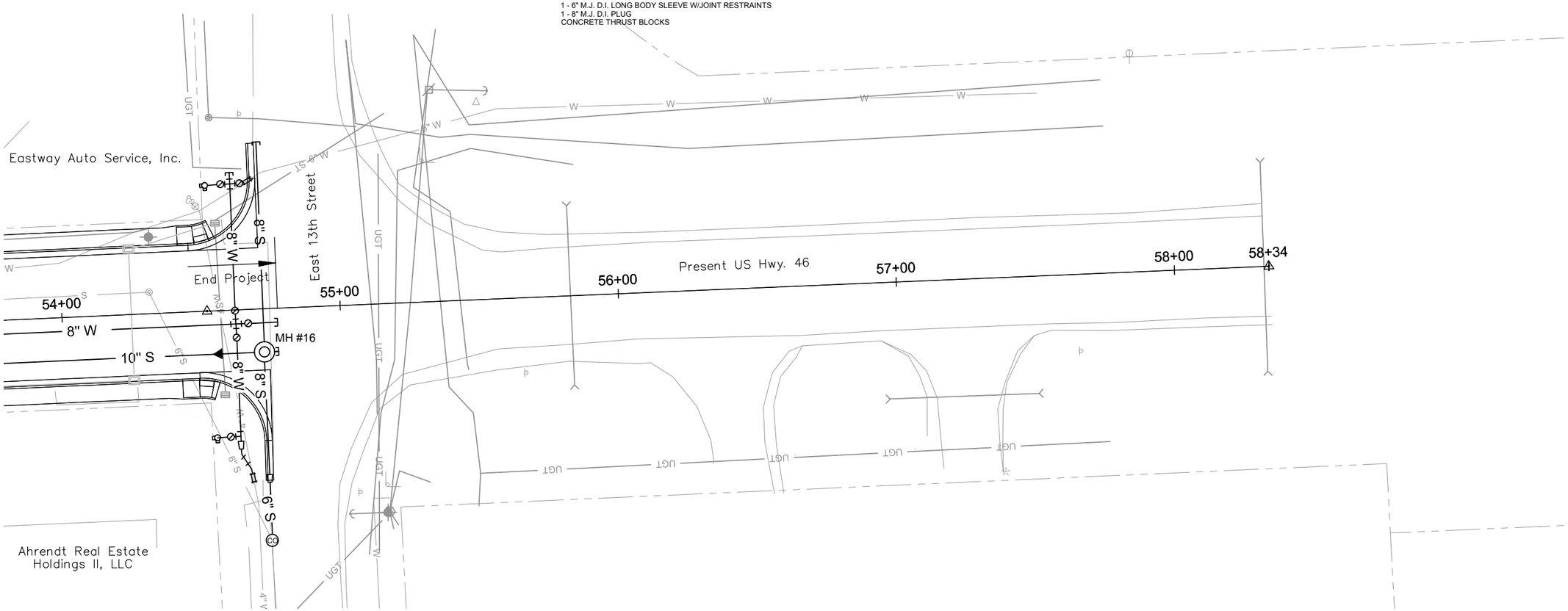

SANITARY SEWER:
CONTRACTOR SHALL ABANDON EXISTING SANITARY SEWER BY INSTALLATION OF CAP OR CONCRETE PLUG.

SANITARY SEWER:
STA. 54+00 - TO 54+77 - 15.5' RT
FURNISH & INSTALL:
77 L.F. - 10" DIA. PVC GRAVITY SEWER PIPE

SANITARY SEWER:
STA. 54+72 - 15.5' RT
FURNISH & INSTALL:
1 EA. - 48" DIA. SANITARY SEWER MANHOLE
(MH #16)

SANITARY SEWER:
STA. 54+72 - 60' LT TO 84' RT
FURNISH & INSTALL:
120 L.F. - 8" DIA. PVC GRAVITY SEWER PIPE
24 L.F. - 6" DIA. PVC GRAVITY SEWER PIPE
1 - 8"x6" PVC REDUCER
2 - 6" PVC 22.5° BEND
1 - 6" PVC CLEANOUT
CONNECT 6" TO EXISTING 6" SEWER PIPE (TRANSITION COUPLING INCIDENTAL - FIELD VERIFY LOCATION & ELEVATION BEFORE ORDERING MANHOLE)

SANITARY SEWER:
STA. 54+72 - 84' RT±
LOCATE EXISTING SEWER:
4 HR. - EXPLORATORY EXCAVATION
(FIELD VERIFY LOCATION & ELEVATION OF EXISTING 6" SEWER PIPE)

SANITARY SEWER:
STA. 54+00 - 8' LT TO 54+72 - 84' RT
ABANDON:
135 L.F. - SANITARY SEWER PIPE (INCIDENTAL)

SANITARY SEWER:
STA. 54+31 - 8' LT
REMOVE:
1 - MANHOLE

REGISTERED PROFESSIONAL ENGINEER
REG NO. 3770
HAROLD N. HOLOCH
SOUTH DAKOTA
10-3-14

FOR BIDDING PURPOSES ONLY

STATE OF SOUTH DAKOTA	PROJECT	SHEET No.	TOTAL SHEETS
	21670.00.01 PCN X02T	31	31

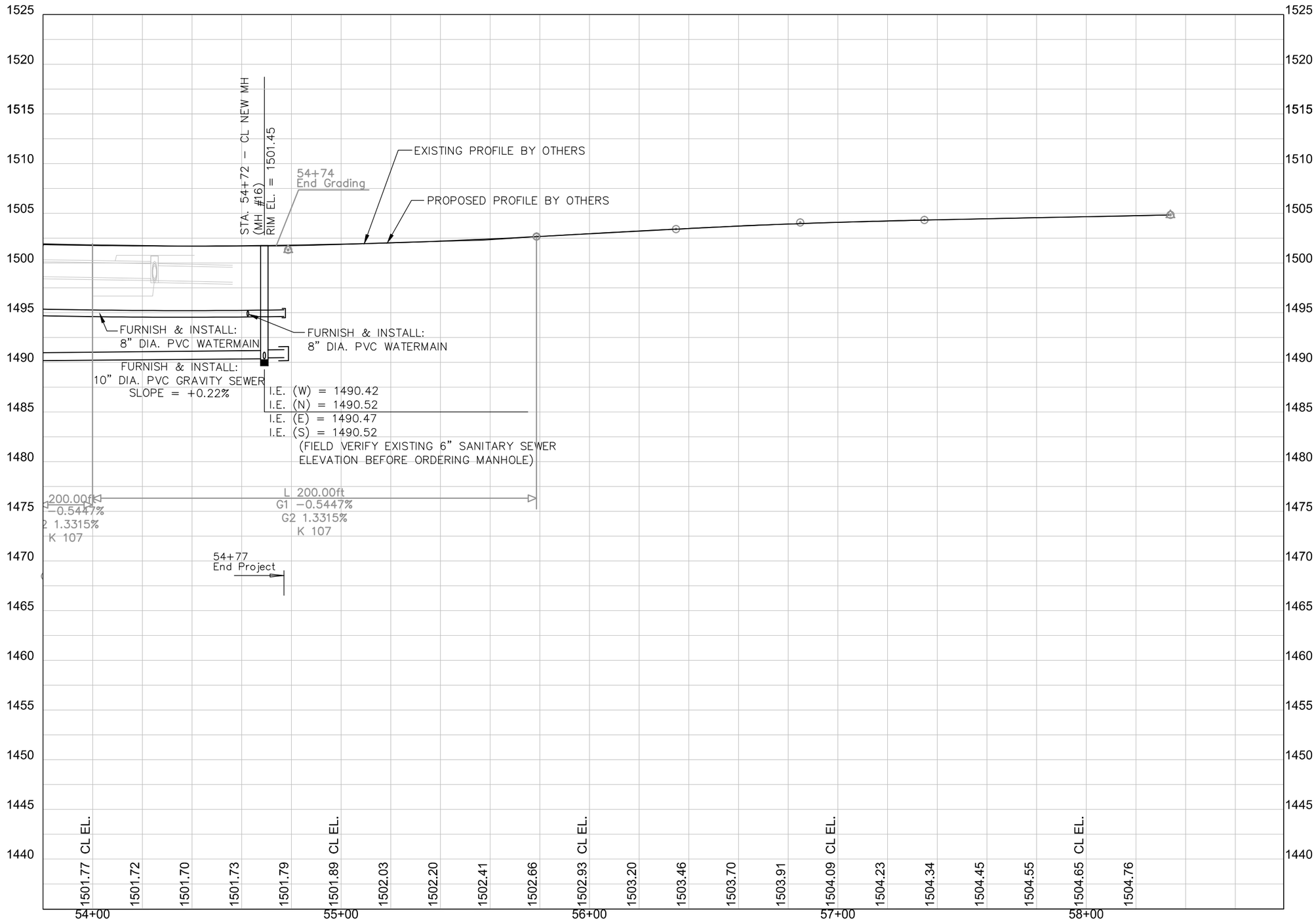

REGISTERED PROFESSIONAL ENGINEER
REG NO. 3773
HAROLD N. HOLOCH
SOUTH DAKOTA
10-3-14