FOR BIDDING PURPOSES ONLY

F M G, Inc.
Consulting Civil Engineers
3700 Sturgis Road
Rapid City, SD 57702-0317
(605) 342-4105 FAX (605) 342-4222
www.fmgengineering.com

SECTION B
STORM WATER AND GRADING PLANS

REGISTERED PROFESSIONAL ENGINEER
REG. NO. 8744
RICHARD A. SUDMEIER
SOUTH DAKOTA
Richard Sudmeier 2/28/14

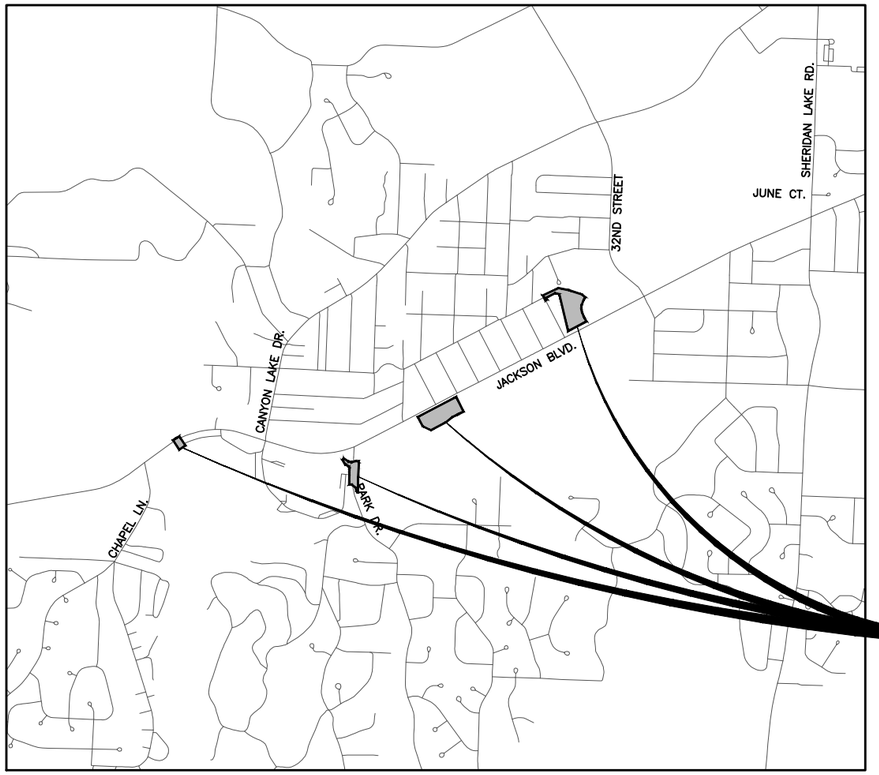

PROJECT LOCATIONS

PROJECT LOCATION MAP NOT TO SCALE

INDEX OF SHEETS

B1	COVER SHEET
B2-B8	ESTIMATE OF QUANTITIES AND GENERAL NOTES
B9	TABLE OF PIPE QUANTITIES
B10-B11	TYPICAL SECTIONS
B12	CONTROL DATA
B13-B16	HORIZONTAL ALIGNMENT DATA
B17-B20	DEMOLITION PLAN
B21	CANYON LAKE PARK GRADING PLAN
B22-B24	PARK DRIVE PLAN
B25-B26	GOLF COURSE PLAN AND PROFILE
B27-B31	COTTONWOOD PLAN AND PROFILE
B32	COTTONWOOD CURB AND GUTTER PLAN
B33	SPECIAL MANHOLE DETAILS
B34-B51	DETAILS

Revised By: RS 4/18/2014

PLOTTING DATE: 4/18/2014

CITY of RAPID CITY
PUBLIC WORKS DEPARTMENT
ENGINEERING DIVISION

Plan Set Number :

JACKSON BOULEVARD UTILITIES
CHAPEL LANE TO RAPID CREEK
CITY OF RAPID CITY PROJECT NO. SSW10-1837

I:\Civil 3D Working Folder\110155 Jackson Blvd. PH 2\Production Drawings\1837TITLE.dwg, Sec B-Storm, 4/16/2014 10:13:31 AM

FOR BIDDING PURPOSES ONLY

SECTION B ESTIMATE OF QUANTITIES

BID ITEM NUMBER	ITEM	QUANTITY	UNIT
100E0100	Clearing	Lump Sum	LS
110E0300	Remove Concrete Curb and Gutter	990	Ft
110E0460	Remove Manhole	1	Each
110E0600	Remove Fence	536	Ft
110E1010	Remove Asphalt Concrete Pavement	1351.8	SqYd
110E1100	Remove Concrete Pavement	144.0	SqYd
110E1300	Remove Concrete Retaining Wall	24	Ft
110E1140	Remove Concrete Sidewalk	1068.4	SqYd
110E1400	Remove Pavement Marking, 4" or Equivalent	790	Ft
110E5800	Salvage Fence	129	Ft
120E0010	Unclassified Excavation	4311	CuYd
120E2000	Undercutting	488	CuYd
230E0010	Placing Topsoil	1835	CuYd
230E0020	Placing Contractor Furnished Topsoil	196	CuYd
250E0020	Incidental Work, Grading	Lump Sum	LS
260E1010	Base Course	876.0	Ton
260E6010	Granular Material	39.0	Ton
320E1200	Asphalt Concrete Composite	347.0	Ton
380E3020	6” PCC Driveway Pavement	46.4	SqYd
380E3520	6” PCC Approach Pavement	53.9	SqYd
450E0113	15” RCP Class 3, Furnish	134	Ft
450E0120	15” RCP, Install	134	Ft
450E0123	18" RCP Class 3, Furnish	30	Ft
450E0130	18” RCP, Install	30	Ft
450E3032	36” RCP Arch Class 2, Furnish	174	Ft
450E3040	36” RCP Arch, Install	174	Ft
450E3042	42” RCP Arch Class 2, Furnish	334	Ft
450E3050	42” RCP Arch, Install	334	Ft
450E3324	36” RCP Arch Bend, Furnish	1	Each
450E3325	36” RCP Arch Bend, Install	1	Each
450E3328	42” RCP Arch Bend, Furnish	2	Each
450E3329	42” RCP Arch Bend, Install	2	Each
450E4512	36” RCP Arch Flared End, Furnish	1	Each
450E4513	36” RCP Arch Flared End, Install	1	Each
450E4516	42” RCP Arch Flared End, Furnish	1	Each
450E4517	42” RCP Arch Flared End, Install	1	Each
462E0200	Controlled Density Fill	20.0	CuYd
621E0080	8’ Chain Link Fence with Top Rail	376	Ft
632E1320	2.0"x2.0" Perforated Tube Post	12	Ft
632E3203	Flat Aluminum Sign, Nonremovable Copy High Intensity	11.5	SqFt
632E3520	Remove, Salvage, Relocate, and Reset Traffic Sign	15	Each
633E0110	Cold Applied Plastic Pavement Marking, 4"	785	Ft
633E0025	Cold Applied Plastic Pavement Marking, 12"	126	Ft
633E0030	Cold Applied Plastic Pavement Marking, 24"	110	Ft
633E5000	Grooving for Cold Applied Plastic Pavement Marking, 4”	785	Ft
633E5010	Grooving for Cold Applied Plastic Pavement Marking, 12"	126	Ft
633E5015	Grooving for Cold Applied Plastic Pavement Marking, 24"	110	Ft
650E0060	Type B66 Concrete Curb and Gutter	921	Ft
650E4660	Type P6 Gutter	79	Ft
651E0040	4” Concrete Sidewalk	985	SqFt
651E0050	5” Concrete Sidewalk	13073	SqFt
651E7000	Type 1 Detectable Warning Panel	100	SqFt
670E1010	2’x3’ Type B Inlet	2	Each
670E1200	Type B Frame and Grate Assembly	2	Each
670E2015	3’x4’ Type C Drop Inlet	1	Each
670E2200	Type C Frame and Grate	1	Each
670E4440	4’x11’ Type S Drop Inlet Base	1	Each
670E5308	4’x11’ Type S Drop Inlet Cover	1	Each
671E0060	6’x6’ Junction Box	1	Each
671E0550	Special Manhole	1	Each
671E6009	A9 Manhole Fame and Lid	1	Each
700E0210	Class B Riprap	390.0	Ton
700E0310	Class C Riprap	113.0	Ton
720E1015	Bank and Channel Protection Gabion	4.5	CuYd
831E0110	Type B Drainage Fabric	481.3	SqYd
831E1010	Geogrid Reinforcement	830.0	SqYd

GENERAL NOTES

See Section A for GENERAL NOTES common to all sections.

BIKE PATH DETOUR

A 10 foot wide gravel path shall be constructed around the box culvert work at station 14+50 on the Cottonwood Alignment. Granular Material meeting the requirements below shall be used for the 4” thick surfacing. All cost for constructing and maintaining bike path detour including necessary grading, labor, granular material, and maintenance of the bike path detour shall be incidental to the contract unit price per ton for “Granular Material” Sidewalk closed and detour signs shall be incorporated as shown in Section C.

GRANULAR MATERIAL SPECIFICATIONS

Granular Material shall be crushed limestone the meeting the following sieve criteria:

Sieve No.	% Passing By Weight
3/8”	100
#4	90-100
#8	75-80
#16	55-65
#30	40-50
#100	15-20
#200	0-15

WORK LIMITS / DO NOT DISTURB

Within the golf course the contractor shall place a temporary perimeter fence around work area as shown in Section H. The Contractor will not be allowed outside the limits of this fence.

TREE TRIMMING

See Section H.

All costs for tree trimming shall be included in “Incidental Work, Grading.”

TREE REMOVAL AND REPLACEMENT

Trees and shrubs scheduled to be removed as shown in these plans.

Tree removals will be paid for under the contract lump sum bid item for “Clearing”. With the exception for topsoil; topsoil shall be paid for under the contract bid item for “Placing Contractor Furnished Topsoil”. Quantities for this are included in the estimate of quantities.

See detail on stump and root removal.

REGISTERED PROFESSIONAL ENGINEER
8784
RICHARD A. SHEPHERD
SOUTH DAKOTA
3/28/14

Revised By: RS 4/29/2014

Prepared By:
F M G, Inc.
3700 Sturgis Road
Rapid City, SD 57702-0317
(605) 342-4105 FAX (605) 342-4222
www.fmgengineering.com

Prepared For:
Public Works Department
Engineering Services

Scale:	
Design By: RAS	Drawn By: RS/KS/JK
Design Date: OCT 2013	Print Date: FEB 2014
Internal Job No. 110155	
Surveyed By: DOT / FMG	Survey Date: 8-04 / 10-10
SDDOT Job No. P 0044(149)40	

JACKSON BOULEVARD UTILITIES
CHAPEL LANE TO RAPID CREEK

SSW10-1837 / CIP 50177 PCN X02U

Sheet Title: SECTION B ESTIMATED QUANTITES AND GENERAL NOTES

FOR BIDDING PURPOSES ONLY

WATER POLLUTION CONTROL

Permanent stabilization measures are shown in Section D and H. The Contractor shall provide temporary erosion and sediment control measures in accordance with Section D. The Contractor shall coordinate Erosion and Sediment Control practices with the SD DOT Combination Project.

SHRINKAGE FACTOR: Earthwork quantities assume a 30% shrinkage factor.

TABLE OF EXCAVATION QUANTITIES BY BALANCES

Station	to Station	Alignment	Excavation (CuYd)	*Topsoil	**Undercut (CuYd)	Total Excavation (CuYd)	Embankment (CuYd)	**Undercut (CuYd)	30% Shrinkage (CuYd)	*Place Topsoil (CuYd)	Total Embankment (CuYd)	Waste Excavation (CuYd)	Out of Balance Excavation (CuYd)
0+33	1+16	Canyon Lake Park	178	59	NA	237	0	NA	0	59	59	178	
-1+87	1+30	Park Dr.			224	224		224	67		291		67
0+20	2+50	Golf Course Berm	389	459	NA	848	879	NA	0	459	1338		490
6+57	8+67	Cottonwood Str.	191	0	264	455	0	264	79	0	343	112	
8+67	15+05	Cottonwood Str.	1230	1317	NA	2547	1006	NA	NA	1317	2323	224	
	Totals:		1988	1835	488	4311	1885	488	79	1835	4354	514	557

* Quantities of topsoil are based on salvaging 6" of topsoil.
** The quantities for these items are in the Estimate of Quantities under their respective bid items.

TABLE OF UNCLASSIFIED EXCAVATION

Excavation	1988
Undercut	488
Topsoil	1835
Total	4311

Revised By: RS 4/18/2014

Prepared By:
F M G, Inc.
3700 Sturgis Road
Rapid City, SD 57702-0317
(605) 342-4105 FAX (605) 342-4222
www.fmgengineering.com

Prepared For: Public Works Department
Engineering Services

Scale:	
Design By: RAS	Drawn By: RS/KS/JK
Design Date: OCT 2013	Print Date: FEB 2014
Internal Job No. 110155	
Surveyed By: DOT / FMG	Survey Date: 8-04 / 10-10
SDDOT Job No. P 0044(149)40	

JACKSON BOULEVARD UTILITIES
CHAPEL LANE TO RAPID CREEK

SSW10-1837 / CIP 50177 PCN X02U

Sheet Title: SECTION B ESTIMATED QUANTITES AND GENERAL NOTES

Sheet: B3 of B51

FOR BIDDING PURPOSES ONLY

GRADING

Contours shown in the plan drawings are meant to be used as a guide for the Contractor. Station, Offset, and Elevation data for grading work are shown in Section X – Cross Sections.

Grades shown in the Cross Sections are Finished Grade.

UNCLASSIFIED EXCAVATION

Plan quantities shall be the basis for payment unless a change is ordered by the Engineer.

Out-of-Balance Excavation is waste excavation generated from other excavation balances. The quantity of Out-of-Balance Excavation is included in the Excavation quantity in the balance where it is excavated and is paid for once as Unclassified Excavation. No extra payment will be given for hauling materials between balances.

The Topsoil quantity in the Table of Unclassified Excavation is an estimate. The Contractor shall verify quantity needed. The quantity of Topsoil salvaged will be paid for under Unclassified Excavation, placement of salvaged topsoil will be paid for under Placing Topsoil. Plans quantity will be the basis of payment for Placing Topsoil.

The Excavation quantities from individual balances and the Table of Unclassified Excavation have been reduced by the volume of in place surfacing that will be removed.

GEOGRID REINFORCEMENT

A quantity of "Geogrid Reinforcement" is included in the "Estimate of Quantities" for subgrade stabilization at possible unstable areas. This work item requires preauthorization of the Engineer to be eligible for payment.

Geogrid will conform to specification for Engineering Fabric in the Standard Specifications (Section 202.) The geogrid will be certified by the supplier to meet this specification prior to installation.

Installation shall be as directed by the Engineer and shall be in general compliance with the manufacturer's recommendations for the type of usage required.

The bed for the placement of geogrid shall be prepared by smoothing the surface of the subgrade to minimize ruts, ridges, and depressions. The Engineer may elect to waive subgrade compaction specifications, dependent upon the condition of the subgrade at the time of placement.

The geogrid shall be placed upon the prepared bed as directed by the Engineer. The geogrid roll shall be unrolled oriented along the long axis. Additional rolls necessary to make the required width shall overlap preceding rolls by 2 feet. The Engineer may require additional overlap up to 3 feet dependent upon the condition of the subgrade prior to installation.

The geogrid shall be placed so that subsequent cover material does not shove, wrinkle or distort the in place geogrid. Overlapping sections of the geogrid shall be oriented accordingly. Geogrid may be held in place with small, hand placed piles of cover material or by staples or stakes to keep the geogrid in place. Care shall be taken to prevent damage to the unprotected geogrid before, during and after installation. No vehicle traffic is allowed on the unprotected geogrid.

Cover material shall be Limestone Ledge Rock Base Course as defined in Section 117 of the Specifications. Cover material shall be placed by back dumping onto the geogrid from the truck, and dozing or pushing the cover material from covered area to uncovered areas, or by loader dumping from covered areas to uncovered areas. Minimum depth of cover placement shall be 6 inches or as directed by the Engineer, dependent upon subgrade stability at time of placement. When cover material has reached sufficient depth to prevent excessive kneading of the underlying geogrid by the gravel processing equipment, the aggregate base course shall be smoothed and, at the direction of the Engineer, watered, processed and compacted.

Measurement of the geogrid shall be to the nearest square yard of material placed, not including overlap of successive courses of material.

Geogrid will be paid for at the contract unit price per square yard for "Geogrid Reinforcement". This price shall be full compensation for preparations of the geogrid bed, placing, and for labor, tools, equipment, geogrid material, and incidentals necessary to complete the work.

Measurement of and payment for cover material shall be based on actual quantities of cover material placed. Payment will be at the contract unit price per ton for "Base Course".

PLACING CONTRACTOR FURNISHED TOPSOIL

The ability to salvage topsoil in the Cottonwood Street area is limited. The Contractor shall furnish and place topsoil to a depth of 6" in all disturbed areas within Cottonwood Street.

Payment for furnishing and placing contractor furnished topsoil within Cottonwood Street will be at the contract unit price per cubic yard for "Placing Contractor Furnished Topsoil" and will be measured and paid for at the Contract Unit price for "Placing Contractor Furnished Topsoil."

The Contractor shall dispose of excess topsoil at no extra cost to the owner.

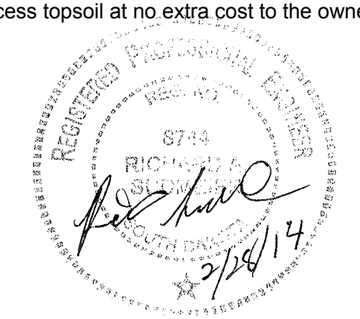

TOPSOIL STOCKPILES

Topsoil striped at Canyon Lake Park, Park Drive, and Cottonwood Channel areas can either be stockpiled on-site at a location designated by the Engineer or off-site at a location of the Contractor's choosing and approved by the Engineer.

Topsoil striped within the golf course shall be stockpiled off-site at a location of the Contractor's choosing and approved by the Engineer.

Stockpiles shall be placed in an area where soil amendments can easily be accomplished as required in Section H.

No Extra payment will be allowed for hauling salvaged topsoil to and from work areas.

INCIDENTAL WORK, GRADING

Station	L/R	Remarks
Canyon Lake Park		
1+26		Connect 18" RCP to Existing Inlet
1+26 to 1+33		Remove and Reset Rock Edging around Inlet as Necessary
0+00-1+26		Remove and repair existing irrigation system as necessary for new construction, extent of existing system is unknown.
15" RCP Alignment		
1+37		Remove and Reset modular blocks as necessary. Grout between voids between modular blocks and 15" RCP
Jackson Blvd. Alignment		
49+60-50+08	R	Take Out 86' of 36" RCP
48+86-49+60	R	Abandon 36" RCP – Fill with Flowable Fill per the Standard Specifications
50+97	R	Take Out Manhole
50+99-51+34	R	Take Out 56' or 24" CMP
51+34	R	Remove and Reset Modular Blocks as necessary for Removal of 24" CMP
52+24	R	Rebuild Spillway as Necessary
Cottonwood Alignment		
7+65	L	Remove and Salvage Light pole
8+69	R	Remove Drop Inlet
8+70 to 9+31	R-L	Remove 79' of 18" RCP and Flared End

Revised By: RS 4/29/2014

Prepared By:
F M G, Inc.
3700 Sturgis Road
Rapid City, SD 57702-0317
(605) 342-4105 FAX (605) 342-4222
www.fmgengineering.com

Prepared For:
Public Works Department
Engineering Services

Scale:	
Design By: RAS	Drawn By: RS/KS/JK
Design Date: OCT 2013	Print Date: FEB 2014
Internal Job No. 110155	
Surveyed By: DOT / FMG	Survey Date: 8-04 / 7-13
SDDOT Job No. P 0044(149)40	

JACKSON BOULEVARD UTILITIES
RAPID CREEK TO MOUNTAIN VIEW

SSW10-1837 / CIP 50177 PCN X02U

Sheet Title: SECTION B ESTIMATED QUANTITES AND GENERAL NOTES

FOR BIDDING PURPOSES ONLY

TABLE OF ASPHALT CONCRETE PAVEMENT REMOVAL

Station	to	Station	L/R	Alignment	Quantity (SqYd)
6+58		8+62		Cottonwood	595
-2+90		-2+72	R	Park Dr.	20.4
-2+81		-2+81	L	Park Dr.	38.4
-1+27		1+33	L	Park Dr.	291
-1+87		1+34	R	Park Dr.	341
-0+28		0+00	L	Park Dr.	66
			Total:		1351.8

TABLE OF CONCRETE CURB AND GUTTER REMOVAL

Station	to	Station	L/R	Alignment	Quantity (Ft)
-2+90		-2+73	R	Park Dr.	17
-2+86		-2+77	L	Park Dr.	9
-1+27		-0+45	L	Park Dr.	85
-0+28		-0+28	L	Park Dr.	10
0+00		0+00	L	Park Dr.	8
-1+87		1+34	R	Park Dr.	321
0+16		1+33	L	Park Dr.	117
6+58		8+60	L	Cottonwood	210
6+75		8+68	R	Cottonwood	213
			Total:		990.

TABLE OF SIDEWALK REMOVAL

Station	to	Station	L/R	Alignment	Quantity (SqYd)
0+02		1+75	L	Park Dr.	298.0
-2+59		1+44	R	Park Dr.	430.8
-2+91		-2+73	R	Park Dr.	30.6
-2+86		-2+77	L	Park Dr.	4.7
-0+30		-0+79	L	Park Dr.	52.1
-0+30		-1+44	L	Park Dr.	127.3
14+47		14+83	R-L	Cottonwood	124.9
			Total:		1068.4

TABLE OF REMOVE CONCRETE RETAINING WALL

Station	to	Station	L/R	Alignment	Quantity (Ft.)
8+61		8+66	L	Cottonwood	24.0
			Total:		24.0

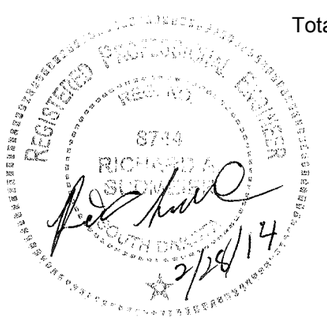

Revised By: RS 4/18/2014

REMOVE CONCRETE PAVEMENT AND DRIVEWAY PAVEMENT

The location of concrete pavement and concrete driveway to be removed is shown on the drawings. Removal shall be in accordance with the Standard Specifications. Additional quantity of concrete driveway pavement removal has been added to the table of quantities to be used at the Engineers discretion.

TABLE OF CONCRETE PAVEMENT REMOVAL

Station	to	Station	L/R	Alignment	Quantity (SqYd)
0+16		-0+45	L	Park Dr.	47.3
7+32		7+59	L	Cottonwood	24.9
7+44		7+65	R	Cottonwood	17.2
7+44		7+51	R	Cottonwood	6.1
7+84		8+04	L	Cottonwood	20.3
8+58		8+64	L-R	Cottonwood	9.1
9+31		9+42	L-R	Cottonwood	9.1
Additional Quantity					10.0
			Total:		144.

TABLE OF FENCE REMOVAL

Station	to	Station	L/R	Alignment	Type	Quantity (Ft)
1+10		-2+70	R	Park Dr.	Chain Link	375.0
8+01		9+89	R	Cottonwood		161.0
					Total:	536.0

TABLE OF SALVAGE FENCE

Station	to	Station	L/R	Alignment	Type	Quantity (Ft)
6+51		6+85	L	Cottonwood	Wood	34.0
7+61		7+81	L	Cottonwood	Wood	20.0
8+06		8+64	L	Cottonwood	Wood	75.0
			Total:			129.0

DROP INLETS

Where drop inlets are constructed within areas of curb and gutter, the Contractor shall construct weep holes of at least 3 inches in diameter in the drop inlet walls. The weep holes shall be constructed at the same elevation as the adjacent top of the earthen subgrade and shall be maintained clean and open at all times until the permanent surfacing is placed. The drop inlets shall be covered throughout construction operations as necessary with an Engineer approved cover to provide safe travel for motorists and to prevent materials from entering the storm sewer system. After the permanent surfacing has been placed, the Contractor shall seal the weep holes with grout and remove all debris from the drop inlet. All costs involved with the coverings, weep holes, and removing debris from the drop inlets shall be incidental to the contract unit prices for the components of the drop inlets.

Precast Drop Inlets are allowed.

TABLE OF DROP INLETS AND QUANTITIES

Station	L / R	Drop Inlet Size	Drop Inlet Type	Frame and Grate/Lid Type
Canyon Lake Park				
1+13		3'x4'	C	C
Cottonwood Street				
7+15	L	2'x3'	B	B
8+46	R	2'x3'	B	B
8+65	L	4'x11'	S	S

Totals:	
Total Type B Frame and Grate Assembly	2
Total Type C Frame and Grade Assembly	1
Total Type S Manhole Frame and Lid	1
2'x3' Type B Inlet	2
3'x4' Type C Inlet	1
4'x11' Type S Drop Inlet Base	1
4' x 11' Precast Concrete Type S Drop Inlet Lid	1

SPECIAL MANHOLE

A special manhole intended for draining a storm water pond located near station 48+00-L on Jackson Blvd. shall be precast and installed in accordance with the plans. Design of the steel pipe trash guard located on top of the special manhole shall be designed for a 10,000 lb. wheel load. Design of precast structure shall also account for live load surcharge. Concrete shall be SD DOT Class M6. Reinforcing Steel shall be epoxy coated deformed bars, grade 60.

Payment for Special Manhole shall include precast concrete, steel pipe trash guard, 3-1.5"x3' Aluminum Grate Klemp KRP Series or equal, with 3/16" width bars, rock filter, and all other incidentals necessary to furnish and install special manhole.

CONCRETE PIPE CONNECTIONS

Pipe connections to existing pipes, manholes, junction boxes, and drop inlets shall be done by sawing a hole into the existing structure on a true horizontal or vertical lines and inserting the pipe. A concrete collar shall then be poured around the pipe in the area of the connection.

When it is not possible to use a normal pipe joint (male-female ends), connections to existing pipe shall be made by placing a 2' wide by 6" thick M6 concrete collar around the outside of the connection. The concrete collar shall be reinforced with 6x6 W2.9 x W2.9 wire mesh.

All costs for constructing the concrete collars including materials and labor shall be incidental to the contract unit price per foot for the corresponding pipe bid item.

FOR BIDDING PURPOSES ONLY

STORM SEWER

Reinforced concrete pipe may be either bell and spigot or tongue and groove. The pipe sections shall be adjoined such that the ends are fully entered and the inner surfaces are reasonably flush and even.

Lift holes in the reinforced concrete pipe shall be plugged with grout.

Watertight joints are required for reinforced concrete pipe, drop inlets, manholes, and junction boxes where storm sewers run parallel to and within 10 feet horizontally from existing or proposed water mains. Locations for these are shown on the plans.

Watertight joints are required where reinforced concrete pipes, drop inlets, manholes, or junction boxes cross water mains and are separated a distance of 18 inches or less, above or below, the water main.

If watertight joints are required then the watertight joints shall extend for a distance of 10 feet beyond the water main. This measurement shall be from the sealed concrete joint to the outer most surface of the water main.

Watertight joint seals shall conform to the following requirements:

1. Reinforced Concrete Pipe (Circular): Gasketed pipe shall conform to the requirements of ASTM C443. Non-gasketed concrete pipe shall be sealed with a mastic joint seal conforming to the requirements of ASTM C990 and encased with a minimum 2' wide by 6" thick M6 concrete collar reinforced with 6x6 W2.9 x W2.9 wire mesh.

2. Reinforced Concrete Pipe (Arch): Joints shall be sealed with a waterstop seal meeting the requirements of ASTM C990. Waterstop seals shall consist of hydrophilic compounds such as Waterstop-RX or ConSeal CS-231.

3. Drop Inlets, Manholes, and Junction Boxes: Joints shall be sealed with a waterstop seal or seal wrap meeting the requirements of ASTM C990 or encased with a minimum 2' wide by 6" thick M6 concrete collar reinforced with 6x6 W2.9 x W2.9 wire mesh. Waterstop seal shall contain hydrophilic compounds such as Waterstop-RX or ConSeal CS-231. Seal wrap shall be a self adhesive external joint wrap such as ConWrap CS-217 or Mar Mac Seal Wrap.

Gaskets and seals (mastic, waterstop, and seal wraps) shall be installed in accordance with the manufacturer's recommendations.

The cost for furnishing and installing all gaskets, mastic joint seal, waterstop seal, seal wrap, concrete collars, and for plugging the lift holes shall be incidental to the contract unit price per foot for the corresponding pipe bid item.

REGISTERED PROFESSIONAL ENGINEER
REG. NO. 8714
RICHARD A. SWANSON
SOUTH DAKOTA
3/28/14

Revised By: RS 4/18/2014

TABLE OF JUNCTION BOXES AND QUANTITIES

Station	L/R	Size L'xW'xH'	Frame and Lid (Type)	Number (Each)
42" RC Arch Alignment				
0+07.50		Special Manhole		1
36" RC Arch Alignment				
0+49.08		6'x6'x3.3'	A9	1

CONTROLED DENSITY FILL

Engineer's permission is needed before Contractor is allowed to use Controlled Density Fill

Station	Quantity (CuYd)
As needed	20.0
Total:	20.0

TABLE OF BANK AND CHANNEL PROTECTION GABIONS

Station	L/R	Quantity (CuYd)
Canyon Lake Park Alignment		
0+24		4.5
	Total:	4.5

TABLE OF RIPRAP AND DRAINAGE FABRIC

Station	L/R	Class B Riprap (Ton)	Class C Riprap (Ton)	Type B Drainage Fabric (SqYd)
42" RC Arch Alignment				
3+60 to 3+89	R-L		113	117.3
Cottonwood Alignment				
12+10 to 13+60	R	390		364
Totals:		390	113	481.3

BASE COURSE

Aggregate for base course shall be crushed limestone. Estimated quantities in place are based on a weight of 148 pounds per cubic foot. Payment will be based on actual quantities placed.

Before placement of the Aggregate Base Course the subgrade shall be proofed to verify compaction requirements.

TABLE OF BASE COURSE

Station	to	Station	L/R	Alignment	Quantity (Ton)
-2+90		-2+72	R	Park Dr.	7.0
-2+81		-2+81	L	Park Dr.	7.0
-1+87		1+30	L	Park Dr.	224.0
-1+27		1+30	R	Park Dr.	266.0
6+58		8+92		Cottonwood	372.0
			Total:		876.0

ASPHALT CONCRETE COMPOSITE

Mineral aggregate for Asphalt Concrete Composite shall conform to the requirements of SD DOT Class E, Type 1.

Estimated quantities Asphalt Concrete Composite Pavement are based on a weight of 152 pounds per cubic foot. Payment will be based on actual quantities placed.

The Contractor shall provide a Job Mix Formula to the Engineer with supporting mix design data prior to production. The submittals shall include lay down temperatures. Asphalt Binder shall be PG 64-22.

The Asphalt Concrete may contain a maximum of 15% reclaimed asphalt pavement (RAP) in the mixture. RAP stockpiles shall be free of reclaimed concrete pavement, sod, roots, vegetation, wood, paper, metal, glass, and other foreign objectionable material. An exception to the Standard Specifications has been obtained to allow a maximum of 15% RAP.

TABLE OF ASPHALT CONCRETE COMPOSITE

Station	to	Station	L/R	Alignment	Quantity (Ton)
6+58		8+92		Cottonwood	190
-1+87		1+30	R	Park Dr.	71
-1+27		1+30	L	Park Dr.	59
-0+28		0+00	L	Park Dr.	27
			Total:		347

FOR BIDDING PURPOSES ONLY

CONCRETE

Unless noted elsewhere concrete shall be supplied and placed as detailed by standard City details and specs. An exception to the Standard Specifications has been obtained to allow a maximum of 20% fly ash in any concrete mix design.

CONCRETE CURB & GUTTER

The location and type of concrete curb & gutter to be removed and replaced is shown on the drawings. If no type is called for on the plans, the new gutter type shall match existing and be paid as "Type B66 Concrete Curb & Gutter". The curb & gutter for June Court reconstruction shall be Type B66 or P6 as noted. The aggregate base course below the curb & gutter will be paid by the contract item for "Aggregate Base Course". Removal and replacement shall be in accordance with the Standard Specifications.

TABLE OF B66 CONCRETE CURB AND GUTTER

Station	to	Station	L/R	Alignment	Quantity (Ft)
-2+90.51		-2+72.98	R	Park Dr.	17
-2+86.11		-2+77.38	L	Park Dr.	9
-1+86.97		1+30.00	R	Park Dr.	313
-1+27.12		-0+45.64	L	Park Dr.	84
0+17.17		1+30.00	L	Park Dr.	115
-0+28.06		-0+28.06	L	Park Dr.	15
-0+00.63		-0+00.50	L	Park Dr.	14
6+72.55		7+34.63	L	Cottonwood	62
6+75.13		7+43.81	R	Cottonwood	90
7+54.63		7+83.73	L	Cottonwood	29
7+63.81		7+69.81	R	Cottonwood	6
7+88.81		8+64.77	R	Cottonwood	95
8+03.73		8+62.79	L	Cottonwood	72
			Total:		921

TABLE OF P6 CONCRETE CURB AND GUTTER

Station	to	Station	L/R	Alignment	Quantity (Ft)
7+34.63		7+54.63	L	Cottonwood	20
7+43.81		7+63.81	R	Cottonwood	20
7+69.81		7+88.81	R	Cottonwood	19
7+83.73		8+03.73	L	Cottonwood	20
			Total:		79

CONCRETE APPROACH AND DRIVEWAY PAVEMENT

The location of concrete approach pavement and concrete driveway to be removed and replaced is shown on the drawings. If no replacement area is called for on the plans, the new pavement shall match the existing area. Concrete approach and driveway pavement shall be 6" thick and non-reinforced. A 4" thick layer of gravel cushion shall be placed beneath the concrete approach and driveway pavements. The gravel cushion below the approach and driveway pavement is incidental to the respective bid item and no separate payment will be made. Removal and replacement shall be in accordance with the Standard Specifications. Additional quantity of concrete driveway pavement removal has been added to the table of quantities to be used at the Engineers discretion.

TABLE OF 6" PCC APPROACH PAVEMENT

Station	to	Station	L/R	Alignment	Quantity (SqYd)
7+34.63		7+54.63	L	Cottonwood	13.9
7+43.81		7+63.81	R	Cottonwood	13.3
7+69.81		7+88.81	R	Cottonwood	12.8
7+83.73		8+03.73	L	Cottonwood	13.9
			Total:		53.9

TABLE OF 6" PCC DRIVEWAY PAVEMENT

Station	to	Station	L/R	Alignment	Quantity (SqYd)
7+32		7+60	L	Cottonwood	17.0
7+44		7+65	R	Cottonwood	8.6
7+84		8+04	L	Cottonwood	10.8
Additional Quantity as Needed					10.0
			Total:		46.4

CONCRETE SIDEWALK

The concrete sidewalk shall be constructed in accordance with Section 61 of the Standard Specifications. A 2" thick layer of gravel cushion shall be placed beneath the concrete sidewalk. Cost of furnishing and placing gravel cushion will be incidental to the contract unit price for various thicknesses of Concrete Sidewalk.

TABLE OF 4" CONCRETE SIDEWALK

Station	to	Station	L/R	Alignment	Quantity (SqFt)
0+00		1+96		Bike Path	985
			Total:		985

TABLE OF 5" CONCRETE SIDEWALK

Station	to	Station	L/R	Alignment	Quantity (SqFt)
-2+90.51		-2+72.98	R	Park Dr.	144
-2+59		2+08	R	Park Dr.	4797
-1+43		-0+31	L	Park Dr.	1206
0+02		1+75	L	Park Dr.	2817
0+25		3+17		Cottonwood Bike Path	2944
14+44		14+80	L-R	Cottonwood	1165
			Total:		13073

DETECTABLE WARNINGS

Detectable warnings shall be in compliance with the Americans with Disability Act regulations and the City of Rapid City Standard Specifications.

The detectable warnings shall be installed according to the manufacturer's installation instructions.

The detectable warnings shall be a yellow color for application in concrete curb ramps.

TABLE OF DETECTABLE WARNINGS

Station	L/R	Detectable Warnings (Type)	Quantity (SqFt)
Park Drive Alignment			
0+23.00	20.67'L	1	20
0+23.00	20.67'R	1	20
0+02.13	42.63'L	1	20
-0+30.53	43.01'L	1	20
Cottonwood Street Alignment			
8+68	2'L	1	20
Total Type 1 Detectable Warnings:			100

TABLE OF CHAIN LINK FENCE

Station	to	Station	L/R	Alignment	Height	Quantity (Ft)
1+10		-2+70	R	Park Dr.	8'	366.0
Additional Quantity					8'	10.0
			Total:		8' High	376.0

REGISTERED PROFESSIONAL ENGINEER
8734
RICHARD A. SCHMIDT
SOUTH DAKOTA
3/28/14

Revised By: RS 4/18/2014

Prepared By:
F M G, Inc.
3700 Sturgis Road
Rapid City, SD 57702-0317
(605) 342-4105 FAX (605) 342-4222
www.fmgengineering.com

Prepared For: Public Works Department
Engineering Services

Scale:	
Design By: RAS	Drawn By: RS/KS/JK
Design Date: OCT 2013	Print Date: FEB 2014
Internal Job No. 110155	
Surveyed By: DOT / FMG	Survey Date: 8-04 / 7-13
SDDOT Job No. P 0044(149)40	

JACKSON BOULEVARD UTILITIES
RAPID CREEK TO MOUNTAIN VIEW

SSW10-1837 / CIP 50177 PCN X02U

Sheet Title: SECTION B ESTIMATED QUANTITES AND GENERAL NOTES

FOR BIDDING PURPOSES ONLY

REMOVE, SALVAGE, RELOCATE & RESET TRAFFIC SIGN

The Contractor shall remove signs, posts, and bases for reset as shown in the table of Permanent Signing.

All bolts, nuts, and washers shall be placed in individual 5-gallon pails. Backing materials shall be separated from the signs and may be reused at the contractor's discretion. Non-threaded connections (rivets) shall be cut when necessary to reduce sign section to a 4'x6' maximum size. Wooden posts shall be carefully removed to avoid damage and cleaned of excess dirt and neatly stockpiled separate from the steel posts. The resultant holes in the ground from removal of posts shall be backfilled to the satisfaction of the Engineer.

Any post assembly including sign, post, or bases that call for being removed, relocated or reset in the remarks column in the Table of Permanent Signing shall be included in the contract unit price for "Remove, Salvage, Relocate & Reset Traffic Sign". Payment shall include all cost of labor and equipment necessary to remove, dismantle, backfill holes (wooden posts only) and reset signs at new locations indicated in the Table of Permanent Signing.

TABLE OF REMOVE, SALVAGE, RELOCATE & RESET TRAFFIC SIGN

Existing Station	New Station	L/R	Number	Description
Park Drive Alignment				
1+49	0+03	R	R1-6b	In Street Ped. Crossing
1+39	0+38	L	W11-15	Combination Ped./Bike
			W16-7p	Crossing and Diagonal Arrow
1+36	0+32	L	R5-3	No Motor Vehicles
			D11-1	Bike Route
1+19	0+32	R	R5-3	No Motor Vehicles
			D11-1	Bike Route
1+16	0+08	R	W11-15	Combination Ped./Bike
			W16-7P	Crossing and Diagonal Arrow
1+09	0+43	L	R1-6b	In Street Ped. Crossing
0+05	0+04	L		City Tour and Historical Sign w/Left Arrow
-0+32	-0+33	L	R1-1	Stop
-1+49	-2+42	R	W11-15	Combination Ped./Bike
			W16-9p	Crossing and Ahead
Cottonwood Street Alignment				
6+86	6+86	R		Dead End
8+65	8+66	L		End of Road Diamond

PERMANENT SIGNING

This work consists of furnishing and installing highway signs as shown on the plans or as required by the Engineer.

All sign posts shall be galvanized, square perforated tube posts. Post anchors for bases shall be the next larger size. Payment for sign post will be at the Contract unit price per foot for Perforated Tube Post 2.0" x 2.0". No extra payment will be made for furnishing and installing the post anchors and sleeves said costs being incidental to the contract unit price per foot for Perforated Tube Post 2.0" x 2.0".

Signs shall be manufactured using sheet aluminum, Type III, high intensity sheeting, and non-removable copy.

The Contractor shall stake the signs and the Engineer will verify the location prior to installation. The lateral distance from the roadway and the height of the sign shall be established by the Contractor according to the Standard Plates in the plans and the MUTCD.

Payment for Permanent Signs will be at the contract unit price for "Flat Aluminum Sign, Nonremovable Copy High Intensity."

The Contractor shall coordinate the removed of signs with Section C of these plans. Existing signing shall be replaced, left in place, or temporarily covered as needed to safely direct traffic through the project or as directed by the Engineer.

PERFORATED TUBE POST

Payment for 2.0"x2.0" perforated tube post shall include all cost for labor, equipment, and materials necessary to complete the following work:

1. Furnish all posts, stiffeners, breakaway bases, soil stabilizers, and hardware.
2. Assembly and installation of breakaway base sign supports as per details shown in these plans.
3. Assembly of sign(s) to sign posts.
4. Installation of signpost and sign(s).

TABLE OF NEW PERMANENT SIGNING

Station	L/R	Number	Size	Description
Park Dr. Alignment				
0+32	R	R1-1	18"x18"	Stop Sign on Reset Post Facing Bike Path Traffic
0+32	L	R1-1	18"x18"	Stop sign on Reset Post Facing Bike Path Traffic
Cottonwood Street Alignment				
8+65	L	R5-3	24"x24"	No Motor Vehicles
8+65	L	D11-1	24"x18"	Bike Route

GROOVE PAVEMENT FOR PAVEMENT MARKING

The Contractor shall establish a positive means for the removal of the grinding and/or grooving residue. Solid residue shall be removed from the pavement surfaces before being blown by traffic action or wind. Residue shall not be permitted to flow across lanes being used by public traffic or into gutter or drainage facilities. Residue, whether in solid or slurry form, shall be disposed of in a manner that will prevent it from reaching any waterway in a concentrated state.

Revised By: RS 4/18/2014

FOR BIDDING PURPOSES ONLY

TABLE OF PIPE QUANTITIES

Station	Alignment	Reinforced Concrete Circular 15" Cl. 3 Ft	Circular 18" Cl. 3 Ft		Arch 36" Cl. 2 Ft	Arch 42" Cl. 2 Ft	Arch Bend 36" 30° Each	Arch Bend 42" 30° Each	Arch Flared End 36" Each	Arch Flared End 42" Each
1+15.00 to 1+26.30	Canyon Lake Pk.		14							
0+11.17 to 3+66.00	42" RC Arch					334		2		1
0+53.17 to 2+34.00	36" RC Arch				174		1		1	
0+06.00 to 1+37.22	15" RCP	134								
7+15.58	Cottonwood		6							
8+45.49 to 8+45.71 - R	Cottonwood		4							
8+66.02 to 8+67.06 - L	Cottonwood		6							
Subtotal:		134	30	0	174	334	1	2	1	1

Revised By: RS 4/18/2014

Prepared By:	Prepared For:				Sheet Title:	Sheet:
F M G, Inc. 3700 Sturgis Road Rapid City, SD 57702-0317 (605) 342-4105 FAX (605) 342-4222 www.fmgengineering.com	Public Works Department Engineering Services	Scale: Design By: AF/JF/RS/JP Design Date: OCT 2013 Internal Job No. 110155 Surveyed By: DOT / FMG SDDOT Job No. P 0044(149)40	Drawn By: RS/KS/JK Print Date: FEB 2014 Survey Date: 8-04 / 7-13	JACKSON BOULEVARD UTILITIES CHAPEL LANE TO RAPID CREEK SSW10-1837 / CIP 50177 / PCN X02U	TABLE OF PIPE QUANTITIES	B9 of B51

FOR BIDDING PURPOSES ONLY

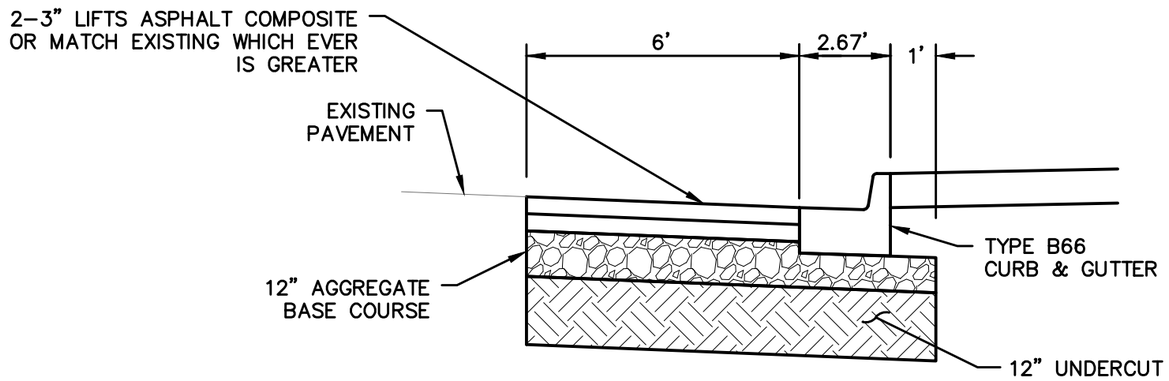

TYPICAL SECTION FOR ASPHALT PATCH AND CURB & GUTTER ON PARK DRIVE

STA. -1+86.98 to 1+30.00

NOT TO SCALE

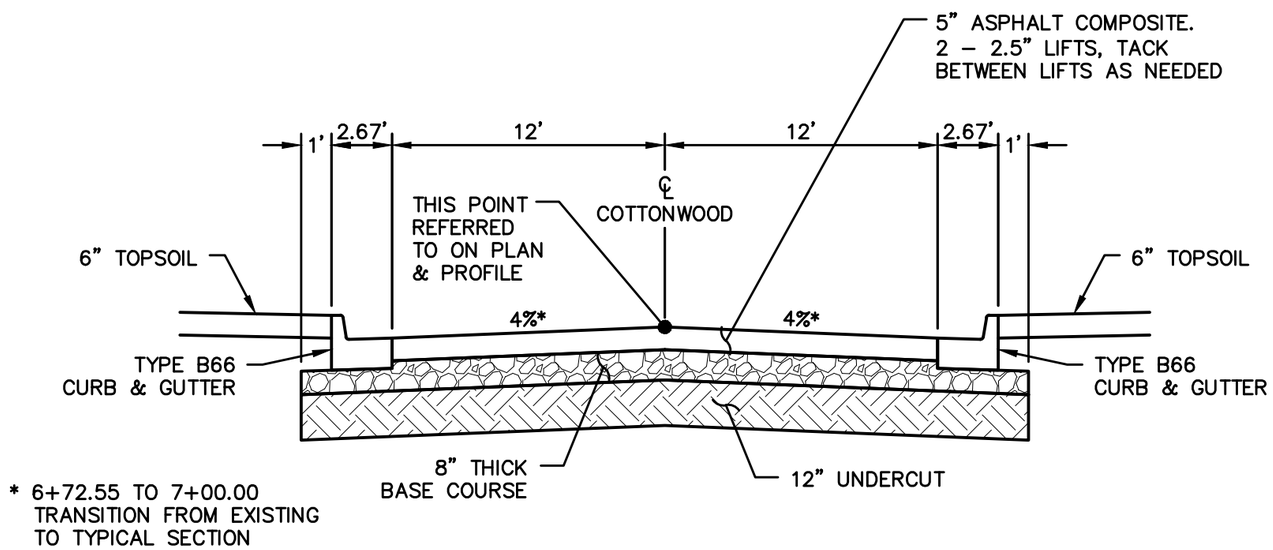

* 6+72.55 TO 7+00.00
TRANSITION FROM EXISTING
TO TYPICAL SECTION

COTTONWOOD STREET TYPICAL SECTION

NOT TO SCALE

Prepared By: F M G, Inc. 3700 Sturgis Road Rapid City, SD 57702-0317 (605) 342-4105 FAX (605) 342-4222 www.fmgengineering.com	Prepared For: Public Works Department Engineering Services	Scale: NOT TO SCALE	JACKSON BOULEVARD UTILITIES CHAPEL LANE TO RAPID CREEK
		Designed By: JAP/JF/RS; Drawn By: JRK	
		Design Date: SEPT 2013; Print Date: FEB 2014	
		Internal Job No: 110155	
		Surveyed By: DOT / FMG; Survey Date: 8/04-7/13	
		SDDOT Project No. P 0044(149)40	SSW10-1837 / CIP 50177 / PCN X02U

Sheet Title: TYPICAL SECTIONS

Sheet: B10 of B51

I:\Civil 3D Working Folder\110155 Jackson Blvd. PH 2\Production Drawings\18377typ Sections.dwg, B10, 4/16/2014 10:16:09 AM

FOR BIDDING PURPOSES ONLY

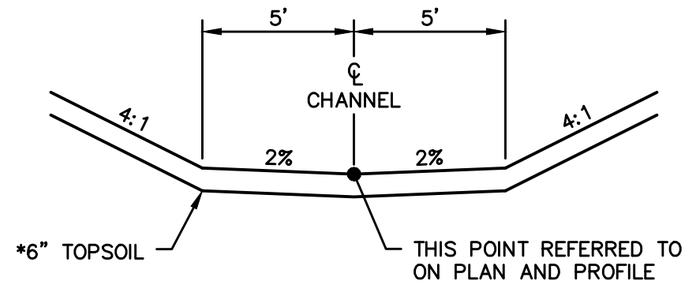

70+96 OUTLET CHANNEL

NOT TO SCALE

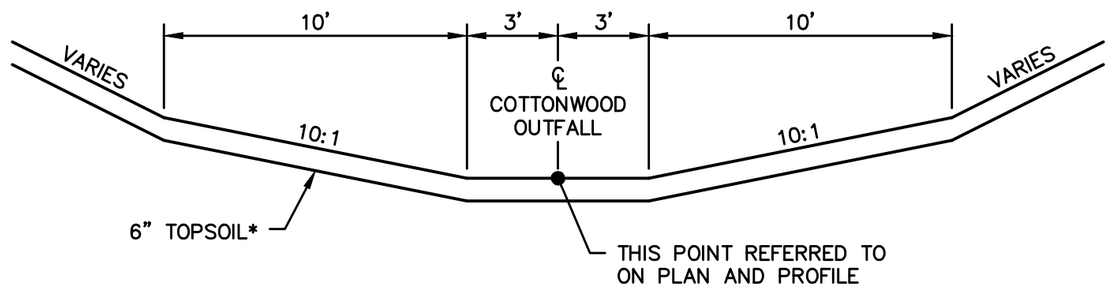

* TOPSOIL SHALL BE MIXED AMENDMENTS AS CALLED FOR IN SECTION H.

COTTONWOOD OUTFALL CHANNEL

COTTONWOOD STREET ALIGNMENT STATION 9+63.40 TO 14+11.94
NOT TO SCALE

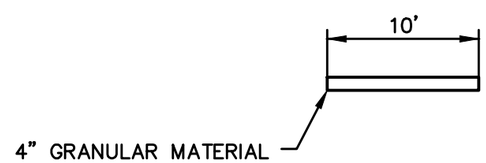

BIKE PATH DETOUR

NOT TO SCALE

Revised By: RS 4/18/2014

Prepared By: F M G, Inc. 3700 Sturgis Road Rapid City, SD 57702-0317 (605) 342-4105 FAX (605) 342-4222 www.fmgengineering.com	Prepared For: Public Works Department Engineering Services	Scale: NOT TO SCALE	JACKSON BOULEVARD UTILITIES CHAPEL LANE TO RAPID CREEK
		Designed By: JAP/JF/RS; Drawn By: JRK	
		Design Date: SEPT 2013; Print Date: FEB 2014	
		Internal Job No: 110155	
		Surveyed By: DOT / FMG; Survey Date: 8/04-7/13	
		SDDOT Project No. P 0044(149)40	SSW10-1837 / CIP 50177 / PCN X02U

Sheet Title: TYPICAL SECTIONS

Sheet: B11 of B51

I:\Civil 3D Working Folder\110155 Jackson Blvd. PH 2\Production Drawings\1837Typ Sections.dwg, B11, 4/16/2014 10:16:31 AM

COTTONWOOD STREET CONTROL POINT DATA

FOR BIDDING PURPOSES ONLY

COTTONWOOD CONTROL POINT TABLE

Point	Northing	Easting	Elevation	Description
51	645474.2300	1196023.9100	3306.7100	5/8" Rebar
52	645236.5955	1196032.6044	3309.4900	5/8" Rebar
56	645630.5806	1195982.1717	3307.0400	5/8" Rebar
57	645589.5313	1195708.5318	3311.4800	5/8" Rebar
58	645198.6736	1195867.5877	3310.9100	5/8" Rebar

REGISTERED PROFESSIONAL ENGINEER
REC NO.
8714
RICHARD A. SCHMIDT
SOUTH DAKOTA
3/28/14

The coordinates shown on this sheet are based on the South Dakota State Plane Coordinate System.
South Zone (NAD 83/96) SF = 0.99978357
The elevations shown on this sheet are based on NAVD 88.

Revised By: RS 4/18/2014

Prepared By:
F M G, Inc.
3700 Sturgis Road
Rapid City, SD 57702-0317
(605) 342-4105 FAX (605) 342-4222
www.fmgengineering.com

Prepared For:
Public Works Department
Engineering Services

Scale:	
Design By: RAS	Drawn By: JRK
Design Date: SEPT. 2013	Print Date: FEB 2014
Internal Job No. 110155	
Surveyed By: DOT / FMG	Survey Date: 8-04 / 7-13

JACKSON BOULEVARD UTILITIES
CHAPEL LANE TO RAPID CREEK

SSW10-1837 / CIP 50177 PCN X02U

Sheet Title: CONTROL DATA

FOR BIDDING PURPOSES ONLY

COTTONWOOD STREET ALIGNMENT

Tangent Data

Description	PT Station	Northing	Easting
Start:	0+00.000	645209.252	1194810.612
End:	8+23.747	645589.185	1195541.508

Length: 823.747 Course: N 62° 32' 01.5141" E

Curve Point Data

Description	Station	Northing	Easting
PC:	8+23.747	645589.185	1195541.508
RP:		645513.695	1195580.75
PT:	9+84.433	645527.379	1195664.722

Circular Curve Data

Delta: 108° 12' 38.6912"	Type: RIGHT
Radius: 85.081	DOC: 67° 20' 34.8799"
Length: 160.686	Tangent: 117.557
Mid-Ord: 35.198	External: 60.035
Chord: 137.847	Course: S 63° 21' 39.1403" E

Tangent Data

Description	PT Station	Northing	Easting
Start:	9+84.433	645527.379	1195664.722
End:	11+56.281	645357.768	1195692.362

Length: 171.848 Course: S 09° 15' 19.7947" E

Curve Point Data

Description	Station	Northing	Easting
PC:	11+56.281	645357.768	1195692.362
RP:		645371.44	1195776.255
PT:	11+63.572	645350.631	1195693.842

Circular Curve Data

Delta: 04° 54' 53.7347"	Type: LEFT
Radius: 85	DOC: 67° 24' 24.4798"
Length: 7.291	Tangent: 3.648
Mid-Ord: 0.078	External: 0.078
Chord: 7.289	Course: S 11° 42' 46.6620" E

Tangent Data

Description	PT Station	Northing	Easting
Start:	11+63.572	645350.631	1195693.842
End:	12+50.516	645266.333	1195715.126

Length: 86.944 Course: S 14° 10' 13.5294" E

COTTONWOOD STREET ALIGNMENT (CONTINUED)

Curve Point Data

Description	Station	Northing	Easting
PC:	12+50.516	645266.333	1195715.126
RP:		645276.125	1195753.909
PT:	13+60.199	645270.06	1195793.447

Circular Curve Data

Delta: 157° 06' 33.3950"	Type: LEFT
Radius: 40	DOC: 143° 14' 22.0200"
Length: 109.683	Tangent: 197.571
Mid-Ord: 32.063	External: 161.579
Chord: 78.409	Course: N 87° 16' 29.7731" E

Tangent Data

Description	PT Station	Northing	Easting
Start:	13+60.199	645270.06	1195793.447
End:	13+72.981	645282.695	1195795.385

Length: 12.782 Course: N 08° 43' 13.0756" E"

Curve Point Data

Description	Station	Northing	Easting
PC:	13+72.981	645282.695	1195795.385
RP:		645275.115	1195844.807
PT:	14+21.931	645320.361	1195823.528

Circular Curve Data

Delta: 56° 05' 32.1292"	Type: RIGHT
Radius: 50	DOC: "114° 35' 29.6160"
Length: 48.95	Tangent: 26.637
Mid-Ord: 5.872	External: 6.653
Chord: 47.018	Course: N 36° 45' 59.1402" E

Tangent Data

Description	PT Station	Northing	Easting
Start:	14+21.931	645320.361	1195823.528
End:	15+11.860	645358.633	1195904.907

Length: 89.93 Course: N 64° 48' 45.2048" E

70+96 ALIGNMENT

Tangent Data

Description	PT Station	Northing	Easting
Start:	1+00.000	645229.779	1195787.772
End:	1+20.808	645212.948	1195800.005

Length: 20.808 Course: S 36° 00' 36.9363" E

Curve Point Data

Description	Station	Northing	Easting
PC:	1+20.808	645212.948	1195800.005
RP:		645242.344	1195840.451
PT:	1+28.587	645207.035	1195805.049

Circular Curve Data

Delta: 08° 54' 51.0676"	Type: LEFT
Radius: 50	DOC: 114° 35' 29.6164"
Length: 7.779	Tangent: 3.897
Mid-Ord: 0.151	External: 0.152
Chord: 7.771	Course: S 40° 28' 02.4701" E

Tangent Data

Description	PT Station	Northing	Easting
Start:	1+28.587	645207.035	1195805.049
End:	2+38.763	645129.026	1195882.853

Length: 110.177 Course: S 44° 55' 28.0038" E

REGISTERED PROFESSIONAL ENGINEER
REGISTERED
8734
RICHARD A. SCHMIDT
SOUTH DAKOTA
3/28/14

Revised By: RS 4/18/2014

Prepared By:
F M G, Inc.
3700 Sturgis Road
Rapid City, SD 57702-0317
(605) 342-4105 FAX (605) 342-4222
www.fmgengineering.com

Prepared For:
Public Works Department
Engineering Services

Scale:	
Design By: RAS	Drawn By: JRK
Design Date: SEPT. 2013	Print Date: FEB 2014
Internal Job No. 110155	
Surveyed By: DOT / FMG	Survey Date: 8-04 / 7-13

JACKSON BOULEVARD UTILITIES
CHAPEL LANE TO RAPID CREEK

SSW10-1837 / CIP 50177 PCN X02U

Sheet Title: HORIZONTAL ALIGNMENT DATA

Sheet: B13 of B51

FOR BIDDING PURPOSES ONLY

COTTONWOOD OUTFALL BIKE PATH #1 ALIGNMENT

Tangent Data

Description	PT Station	Northing	Easting
Start:	0+00.000	645596.958	1195557.981
End:	0+38.584	645605.647	1195595.574

Length: 38.584 Course: N 76° 59' 12.9162" E

Curve Point Data

Description	Station	Northing	Easting
PC:	0+38.584	645605.647	1195595.574
RP:		645581.289	1195601.203
PT:	0+53.949	645604.435	1195610.649

Circular Curve Data

Delta:	35° 12' 45.5249"	Type:	RIGHT
Radius:	25	DOC:	229° 10' 59.2320"
Length:	15.364	Tangent:	7.934
Mid-Ord:	1.171	External:	1.229
Chord:	15.124	Course:	S 85° 24' 24.3214" E

Tangent Data

Description	PT Station	Northing	Easting
Start:	0+53.949	645604.435	1195610.649
End:	1+53.949	645566.652	1195703.237

Length: 100 Course: S 67° 48' 01.5589" E

Curve Point Data

Description	Station	Northing	Easting
PC:	1+53.949	645566.652	1195703.237
RP:		645637.833	1195732.265
PCC:	1+66.705	645562.835	1195715.393

Circular Curve Data

Delta:	09° 30' 28.7722"	Type:	LEFT
Radius:	76.872	DOC:	74° 32' 01.1422"
Length:	12.757	Tangent:	6.393
Mid-Ord:	0.264	External:	0.265
Chord:	12.742	Course:	S 72° 34' 03.3584" E

Curve Point Data

Description	Station	Northing	Easting
PCC:	1+66.705	645562.835	1195715.393
RP:		645637.833	1195732.265
PCC:	1+68.760	645562.411	1195717.403

Circular Curve Data

Delta:	01° 31' 52.5550"	Type:	LEFT
Radius:	76.872	DOC:	74° 32' 01.1415"
Length:	2.054	Tangent:	1.027
Mid-Ord:	0.007	External:	0.007
Chord:	2.054	Course:	S 78° 05' 14.0220" E

REGISTERED PROFESSIONAL ENGINEER
5714
RICHARD A. SWANSON
SOUTH DAKOTA
3/28/14

COTTONWOOD OUTFALL BIKE PATH #1 ALIGNMENT (CONTINUED)

Curve Point Data

Description	Station	Northing	Easting
PCC:	1+68.760	645562.411	1195717.403
RP:		645477.848	1195700.669
PT:	1+86.706	645557.126	1195734.52

Circular Curve Data

Delta:	11° 55' 40.6649"	Type:	RIGHT
Radius:	86.203	DOC:	66° 27' 58.6050"
Length:	17.946	Tangent:	9.005
Mid-Ord:	0.467	External:	0.469
Chord:	17.913	Course:	S 72° 50' 30.9299" E

Tangent Data

Description	PT Station	Northing	Easting
Start:	1+86.706	645557.126	1195734.52
End:	3+49.556	645495.596	1195885.299

Length: 162.85 Course: S 67° 48' 01.5591" E

COTTONWOOD OUTFALL BIKE PATH #2 ALIGNMENT

Tangent Data

Description	PT Station	Northing	Easting
Start:	0+00.000	645292.759	1195860.251
End:	0+07.806	645286.272	1195855.908

Length: 7.806 Course: S 33° 47' 50.3749" W

Curve Point Data

Description	Station	Northing	Easting
PC:	0+07.806	645286.272	1195855.908
RP:		645325.403	1195797.449
PT:	0+17.995	645278.244	1195849.648

Circular Curve Data

Delta:	08° 17' 55.1216"	Type:	RIGHT
Radius:	70.348	DOC:	81° 26' 47.7297"
Length:	10.189	Tangent:	5.103
Mid-Ord:	0.184	External:	0.185
Chord:	10.18	Course:	S 37° 56' 47.9356" W

Tangent Data

Description	PT Station	Northing	Easting
Start:	0+17.995	645278.244	1195849.648
End:	0+25.651	645272.564	1195844.516

Length: 7.655 Course: S 42° 05' 45.4964" W

COTTONWOOD OUTFALL BIKE PATH #1 ALIGNMENT (CONTINUED)

Curve Point Data

Description	Station	Northing	Easting
PC:	0+25.651	645272.564	1195844.516
RP:		645226.74	1195901.842
PCC:	0+86.245	645215.678	1195829.291

Circular Curve Data

Delta:	47° 18' 23.7692"	Type:	LEFT
Radius:	73.389	DOC:	78° 04' 15.7902"
Length:	60.594	Tangent:	32.144
Mid-Ord:	6.165	External:	6.731
Chord:	58.888	Course:	S 14° 59' 01.3054" W

Curve Point Data

Description	Station	Northing	Easting
PCC:	0+86.245	645215.678	1195829.291
RP:		645221.346	1195867.492
PCC:	1+25.605	645185.84	1195852.3

Circular Curve Data

Delta:	58° 23' 45.3162"	Type:	LEFT
Radius:	38.619	DOC:	148° 21' 41.5829"
Length:	39.361	Tangent:	21.582
Mid-Ord:	4.907	External:	5.621
Chord:	37.679	Course:	S 37° 38' 13.9620" E

Curve Point Data

Description	Station	Northing	Easting
PCC:	1+25.605	645185.84	1195852.3
RP:		645157.502	1195841.65
PCC:	1+80.324	645140.504	1195866.702

Circular Curve Data

Delta:	103° 33' 35.1945"	Type:	RIGHT
Radius:	30.274	DOC:	189° 15' 36.0467"
Length:	54.718	Tangent:	38.443
Mid-Ord:	11.544	External:	18.659
Chord:	47.568	Course:	S 17° 37' 21.7393" E

Curve Point Data

Description	Station	Northing	Easting
PCC:	1+80.324	645140.504	1195866.702
RP:		645131.272	1195878.719
PT:	1+96.606	645125.101	1195864.878

Circular Curve Data

Delta:	61° 33' 39.8109"	Type:	LEFT
Radius:	15.155	DOC:	378° 04' 38.5126"
Length:	16.283	Tangent:	9.027
Mid-Ord:	2.135	External:	2.485
Chord:	15.511	Course:	S 06° 45' 10.3709" W

Revised By: RS 4/18/2014

Prepared By:
F M G, Inc.
3700 Sturgis Road
Rapid City, SD 57702-0317
(605) 342-4105 FAX (605) 342-4222
www.fmgengineering.com

Prepared For: Public Works Department
RAPID CITY SOUTH DAKOTA
Engineering Services

Scale:	
Design By: RAS	Drawn By: JRK
Design Date: SEPT. 2013	Print Date: FEB 2014
Internal Job No. 110155	
Surveyed By: DOT / FMG	Survey Date: 8-04 / 7-13

JACKSON BOULEVARD UTILITIES
CHAPEL LANE TO RAPID CREEK

SSW10-1837 / CIP 50177 PCN X02U

Sheet Title: HORIZONTAL ALIGNMENT DATA

FOR BIDDING PURPOSES ONLY

GOLF COURSE 42" RC ARCH PIPE ALIGNMENT

Tangent Data

Description	PT Station	Northing	Easting
Start:	0+00.000	643944.58	1193908.924
End:	1+57.212	644017.176	1194048.371

Length: 157.212 Course: N 62° 29' 54.4037" E

Tangent Data

Description	PT Station	Northing	Easting
Start:	1+57.212	644017.176	1194048.371
End:	3+26.927	643996.558	1194216.829

Length: 169.715 Course: S 83° 01' 19.0490" E

Tangent Data

Description	PT Station	Northing	Easting
Start:	3+26.927	643996.558	1194216.829
End:	3+99.637	643953.454	1194275.385

Length: 72.71 Course: S 53° 38' 33.2479" E

GOLF COURSE 36" RC ARCH PIPE ALIGNMENT

Tangent Data

Description	PT Station	Northing	Easting
Start:	0+00.000	644139.148	1194102.163
End:	0+72.140	644075.122	1194135.404

Length: 72.14 Course: S 27° 26' 13.1100" E

Tangent Data

Description	PT Station	Northing	Easting
Start:	0+72.140	644075.122	1194135.404
End:	2+50.000	643969.683	1194278.64

Length: 177.86 Course: S 53° 38' 33.2479" E

GOLF COURSE 15" RCP ALIGNMENT

Tangent Data

Description	PT Station	Northing	Easting
Start:	0+00.000	644099.415	1194122.792
End:	1+50.000	644050.242	1194264.503

Length: 150 Course: S 70° 51' 49.1128" E

GOLF COURSE BERM ALIGNMENT

Tangent Data

Description	PT Station	Northing	Easting
Start:	0+00.000	644029.711	1193942.646
End:	0+32.740	644000.653	1193957.732

Length: 32.74 Course: S 27° 26' 13.1100" E

Curve Point Data

Description	Station	Northing	Easting
PC:	0+32.740	644000.653	1193957.732
RP:		643964.713	1193888.506
PCC:	1+22.752	643915.963	1193949.394

Circular Curve Data

Delta:	66° 07' 10.1144"	Type:	RIGHT
Radius:	78	DOC:	73° 27' 22.0615"
Length:	90.012	Tangent:	50.769
Mid-Ord:	12.628	External:	15.067
Chord:	85.1	Course:	S 05° 37' 21.9472" W

Curve Point Data

Description	Station	Northing	Easting
PCC:	1+22.752	643915.963	1193949.394
RP:		643870.815	1194005.783
PCC:	1+73.522	643868.815	1193933.575

Circular Curve Data

Delta:	40° 16' 09.5800"	Type:	LEFT
Radius:	72.236	DOC:	79° 19' 02.8799"
Length:	50.77	Tangent:	26.484
Mid-Ord:	4.415	External:	4.702
Chord:	49.731	Course:	S 18° 32' 52.2136" W

Curve Point Data

Description	Station	Northing	Easting
PCC:	1+73.522	643868.815	1193933.575
RP:		643867.021	1193868.846
PT:	2+28.274	643819.773	1193913.124

Circular Curve Data

Delta:	48° 26' 44.9353"	Type:	RIGHT
Radius:	64.754	DOC:	88° 28' 58.2349"
Length:	54.752	Tangent:	29.133
Mid-Ord:	5.701	External:	6.252
Chord:	53.135	Course:	S 22° 38' 09.8921" W

Tangent Data

Description	PT Station	Northing	Easting
Start:	2+28.274	643819.773	1193913.124
End:	2+75.000	643787.821	1193879.029

Length: 46.726 Course: S 46° 51' 32.3598" W

CANYON LAKE PARK CHANNEL

Tangent Data

Description	PT Station	Northing	Easting
Start:	0+00.000	643579.22	1190553.298
End:	1+35.000	643467.512	1190629.103

Length: 135 Course: S 34° 09' 39.4112" E

REGISTERED PROFESSIONAL ENGINEER REG. NO. 8714 RICHARD A. SLUNGER SOUTH DAKOTA 2/28/14

Revised By: RS 4/18/2014

Prepared By:
F M G, Inc.
3700 Sturgis Road
Rapid City, SD 57702-0317
(605) 342-4105 FAX (605) 342-4222
www.fmgengineering.com

Prepared For: Public Works Department
Engineering Services

Scale:	
Design By: RAS	Drawn By: JRK
Design Date: SEPT. 2013	Print Date: FEB 2014
Internal Job No. 110155	
Surveyed By: DOT / FMG	Survey Date: 8-04 / 7-13

JACKSON BOULEVARD UTILITIES
CHAPEL LANE TO RAPID CREEK

SSW10-1837 / CIP 50177 PCN X02U

Sheet Title: HORIZONTAL ALIGNMENT DATA

Sheet: B15 of B51

FOR BIDDING PURPOSES ONLY

PARK DRIVE ALIGNMENT

Description: Positive Stationing Taken from DOT Alignment for Park Drive. Negative Stationing has been Extended in these Drawings

Tangent Data

Description	PT Station	Northing	Easting
Start:	-4+70.000	642732.721	1192960.682
End:	-3+28.754	642865.574	1192912.718

Length: 141.246 Course: N 19° 51' 04.1870" W

Curve Point Data

Description	Station	Northing	Easting
PC:	-3+28.754	642865.574	1192912.718
RP:		643109.051	1193587.112
PT:	-0+42.124	643147.245	1192871.13

Circular Curve Data

Delta: 22° 54' 16.9554"	Type: RIGHT
Radius: 717	DOC: 07° 59' 27.7556"
Length: 286.63	Tangent: 145.254
Mid-Ord: 14.275	External: 14.565
Chord: 284.725	Course: N 08° 23' 55.7093" W

Tangent Data

Description	PT Station	Northing	Easting
Start:	-0+42.124	643147.245	1192871.13
End:	2+01.825	643390.848	1192884.125

Length: 243.949 Course: N 03° 03' 12.7685" E

Curve Point Data

Description	Station	Northing	Easting
PC:	2+01.825	643390.848	1192884.125
RP:		643409.474	1192534.376
PT:	2+90.433	643478.983	1192877.654

Circular Curve Data

Delta: 14° 29' 42.8802"	Type: LEFT
Radius: 350.245	DOC: 16° 21' 31.5803"
Length: 88.608	Tangent: 44.542
Mid-Ord: 2.798	External: 2.821
Chord: 88.372	Course: N 04° 11' 56.7841" W

Tangent Data

Description	PT Station	Northing	Easting
Start:	2+90.433	643478.983	1192877.654
End:	3+37.914	643525.518	1192868.227

Length: 47.481 Course: N 11° 27' 06.5854" W

REGISTERED PROFESSIONAL ENGINEER
REG. NO. 8734
RICHARD A. SCHMIDT
SOUTH DAKOTA
3/28/14

Revised By: RS 4/18/2014

Prepared By:
F M G, Inc.
3700 Sturgis Road
Rapid City, SD 57702-0317
(605) 342-4105 FAX (605) 342-4222
www.fmgengineering.com

Prepared For:
Public Works Department
Engineering Services

Scale:	
Design By: RAS	Drawn By: JRK
Design Date: SEPT. 2013	Print Date: FEB 2014
Internal Job No. 110155	
Surveyed By: DOT / FMG	Survey Date: 8-04 / 7-13

JACKSON BOULEVARD UTILITIES
CHAPEL LANE TO RAPID CREEK

SSW10-1837 / CIP 50177 PCN X02U

Sheet Title: HORIZONTAL ALIGNMENT DATA

Sheet: B16 of B51

FOR BIDDING PURPOSES ONLY

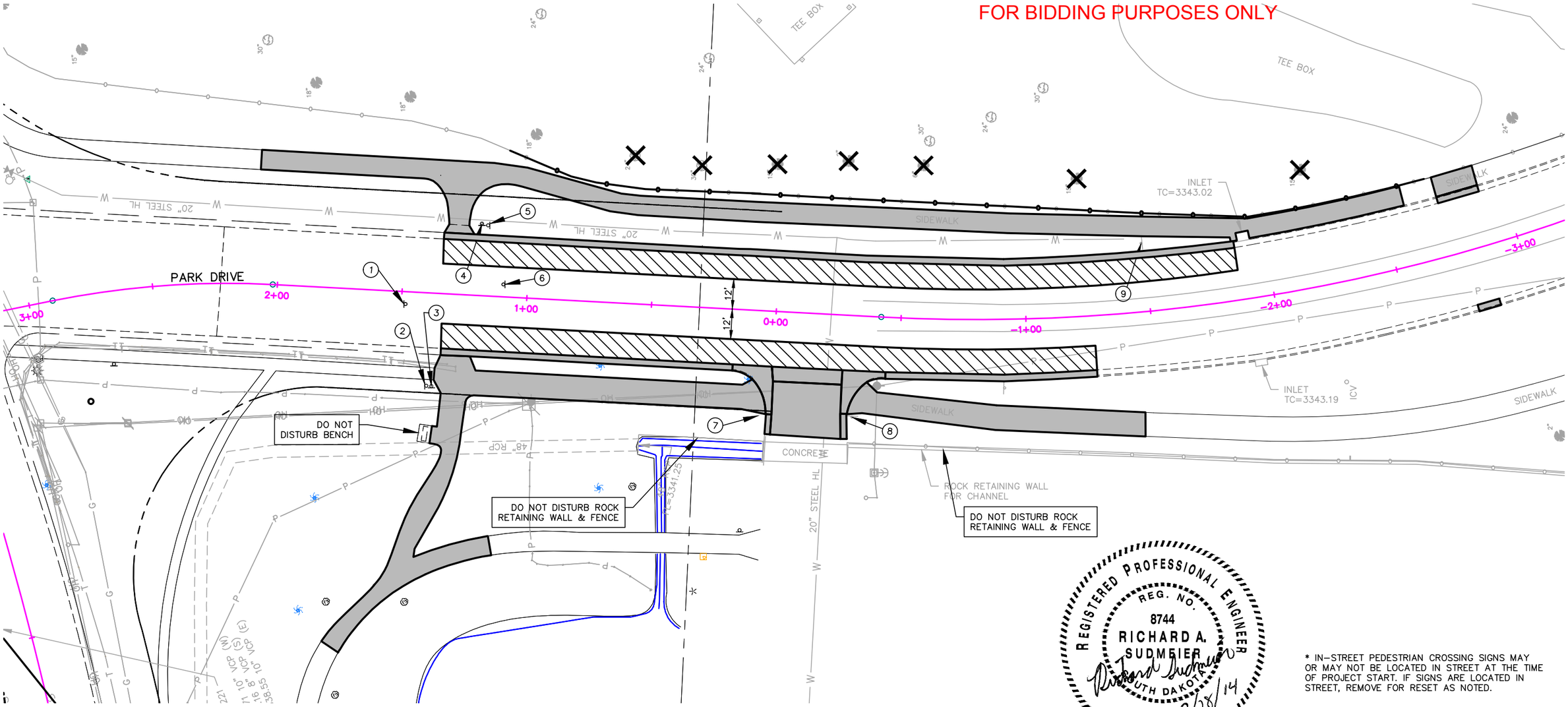

REGISTERED PROFESSIONAL ENGINEER
REG. NO.
8744
RICHARD A.
SUDMEIER
SOUTH DAKOTA
2/28/14

* IN–STREET PEDESTRIAN CROSSING SIGNS MAY OR MAY NOT BE LOCATED IN STREET AT THE TIME OF PROJECT START. IF SIGNS ARE LOCATED IN STREET, REMOVE FOR RESET AS NOTED.

CONCRETE REMOVALS

REMOVE CONCRETE CURB & GUTTER
1+33L to 0+16L (117 Ft)
1+34R to –1+87R (321 Ft)
0+00L to 0+00L (8 Ft)
–0+28L to –0+28L (10 Ft)
–0+45L to –1+27L (85 Ft)
–2+73R to –2+91R (17 Ft)
–2+77L to –2+86L (9 Ft)

REMOVE CONCRETE SIDEWALK
1+75L to 0+02L (298.0 SqYd)
2+08R to –2+59R (430.8 SqYd)
–0+30L to –0+79L (52.1 SqYd)
–0+30L to –1+44L (127.3 SqYd)

REMOVE CONCRETE PAVEMENT
0+16–24'L to –0+45–22'L
INCLUDES FILLETS AND PAN (47.3 SqYd)

ASPHALT REMOVALS
1+33–12'L to –1+27–12'L (291 SY)
1+34–12'R to –1+87–12'R (341 SY)
–0+28–49'L to 0+00–49'L (66 SqYd)
–2+71–21'R to –2+90–21'R (20.4 SqYd)
–2+81–25'L to –2+81–58'L (38.4 SqYd)

FENCE REMOVALS
REMOVE CHAIN LINK FENCE
1+10R to –2+70R (375 Ft)

CLEAR AND GRUB TREES
0+59 – 59'R (24")
0+33 – 57'R (30")
0+03 – 59'R (15")
–0+26 – 62'R (2")
–0+57 – 61'R (6")
–1+26 – 55'R (15")
–2+20 – 47'R (15")

REMOVE SIGN FOR RESET

1	1+49 – 5'R	IN–STREET PEDESTRIAN CROSSING (R1–6b)*
2	1+39 – 37'L	COMBINATION BIKE/PED CROSSING (W11–15, W16–7p) W/ LEFT DIAGONAL ARROW
3	1+36 – 38'L	NO MOTOR VEHICLES (R5–3, D11–1) W/ BIKE ROUTE
4	1+19 – 37'R	NO MOTOR VEHICLES (R5–3, D11–1) W/ BIKE ROUTE
5	1+16 – 28'R	COMBINATION BIKE/PED CROSSING (W11–15, W16–7p) W/ LEFT DIAGONAL ARROW
6	1+09 – 5'L	IN–STREET PEDESTRIAN CROSSING (R1–6b)*
7	0+05 – 42'L	CITY TOUR & HISTORICAL DISTRICT W/ LEFT ARROW
8	–0+32 – 40'L	STOP (R1–1)
9	–1+49 – 28'R	COMBINATION BIKE/PED CROSSING (W11–15, W16–9p) W/ AHEAD

0 10' 20' 40'
SCALE: 1"=40'

Prepared By:
F M G, Inc.
3700 Sturgis Road
Rapid City, SD 57702-0317
(605) 342-4105 FAX (605) 342-4222
www.fmgengineering.com

Prepared For:
Public Works Department
Engineering Services

Scale: 1" = 40'	
Designed By: JAP/JF/RS	Drawn By: JRK
Design Date: SEPT 2013	Print Date: FEB 2014
Internal Job No: 110155	
Surveyed By: DOT / FMG	Survey Date: 8/04-7/13
SDDOT Project No. P 0044(149)40	

JACKSON BOULEVARD UTILITIES
CHAPEL LANE TO RAPID CREEK
SSW10-1837 / CIP 50177 / PCN X02U

Sheet Title: PARK DRIVE DEMOLITION PLAN

Sheet: B17 of B51

I:\Civil 3D Working Folder\110155 Jackson Blvd. PH 2\Source Drawings\1837DEMO.dwg, B17, 4/16/2014 10:00:47 AM

FOR BIDDING PURPOSES ONLY

JACKSON BLVD.

47+00 48+00 49+00 50+00 51+00 52+00

12" VCP
14" AC HL
24" RCP
18" RCP
6" CI HL
36" RCP
28" HL
BH#11
BH#26
BH#27

TYPE B INLET
TC=3329.57
FL=3324.72

TYPE B INLET
TC=3329.00
FL=3325.50

TYPE B INLET
TC=3329.44
FL=3326.84

CITY MH #E8-020
RIM: 3330.47
INV IN: 3323.45 12" VCP (W)
INV IN: 3323.65 8" VCP (N)
INV OUT: 3323.34 12" VCP (E)

CP 26
5/8" REBAR
EL=3331.16

CP 36
5/8" REBAR
EL=3334.98

GRAVEL
CONCRETE PAN
RIPRAP
SAND
BUSHES
TREES

GREENWAY TRACT 4
MEADOWBROOK GOLF COURSE

RAPID CREEK

36" RCP
FL=3323.80

TOP WALL
EL=3325.23

SPRINKLER BOX

24" CMP
FL=3322.11

WATER
EL=3323.60
(JULY 2, 2012)

TOP WALL
EL=3325.05

24" CMP

6' DIA. LID

OUTLET
FL=3324.03

TOP WALL
EL=3324.67

WOOD

RIPRAP

CREEK ELEVATION
1/30/12 = 3322.00

SPILLWAY
FL=3324.27
(JULY 2, 2012)

REGISTERED PROFESSIONAL ENGINEER
REG. NO. 8744
RICHARD A. SUDMEIER
SOUTH DAKOTA
2/28/14

49+60 – 129'R to 50+08 – 28'R
TAKE OUT 86' – 36" RCP
(INCIDENTAL WORK, GRADING)

48+86 – 312'R to 49+60 – 129'R
ABANDON 36" RCP
(INCIDENTAL WORK, GRADING)

50+97 – 232'R
TAKE OUT MANHOLE
(INCIDENTAL WORK, GRADING)

50+99 – 229'R to 51+34 – 186'R
TAKE OUT 56' – 24" CMP
(INCIDENTAL WORK, GRADING)

51+34 – 186'R
REMOVE AND RESET MODULAR BLOCKS AS NECESSARY FOR REMOVAL OF 24" CMP
(INCIDENTAL WORK, GRADING)

CLEAR AND GRUB TREES
46+60 – 88'R (10")
46+67 – 142'R (6")
47+34 – 173'R (3")
47+83 – 170'R (3")
47+92 – 140'R (3")

0 10' 20' 40'
SCALE: 1"=40'

Prepared By:
F M G, Inc.
3700 Sturgis Road
Rapid City, SD 57702-0317
(605) 342-4105 FAX (605) 342-4222
www.fmgengineering.com

Prepared For:
Public Works Department
Engineering Services

Scale: 1" = 40'	
Designed By: JAP/JF/RS	Drawn By: JRK
Design Date: SEPT 2013	Print Date: FEB 2014
Internal Job No: 110155	
Surveyed By: DOT / FMG	Survey Date: 8/04-7/13
SDDOT Project No. P 0044(149)40	

JACKSON BOULEVARD UTILITIES
CHAPEL LANE TO RAPID CREEK

SSW10-1837 / CIP 50177 / PCN X02U

Sheet Title: GOLF COURSE UTILITY DEMOLITION PLAN

Sheet: B18 of B51

I:\Civil 3D Working Folder\110155 Jackson Blvd. PH 2\Source Drawings\1837DEMO.dwg, B18, 4/16/2014 10:03:02 AM

FOR BIDDING PURPOSES ONLY

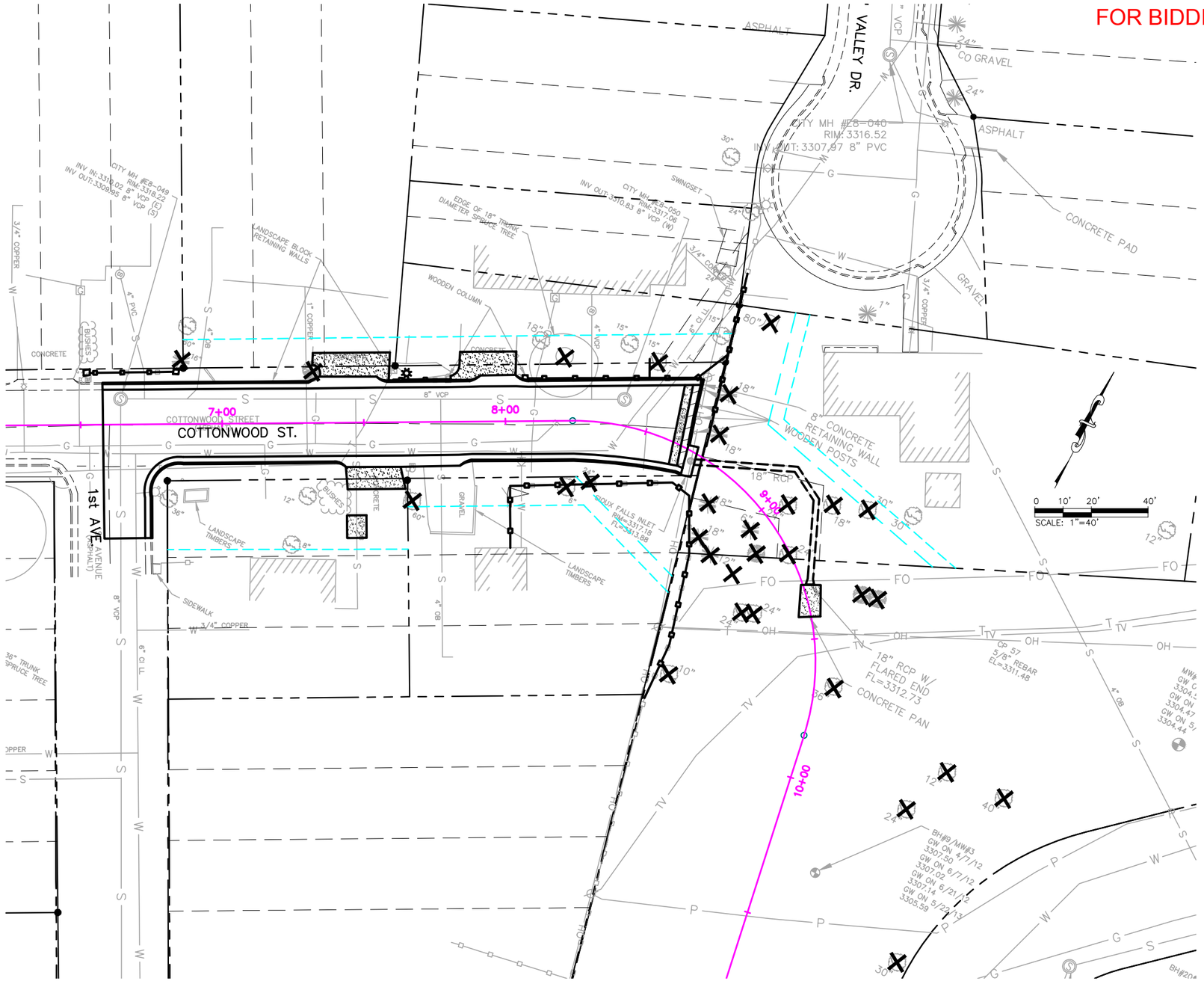

ASPHALT SURFACING

REMOVE ASPHALT CONCRETE PAVEMENT
6+58 to 8+62
(595 SQ YD)

CONCRETE REMOVALS

REMOVE CONCRETE CURB & GUTTER
6+58 – 15'L to 8+60 – 25'L (210 FT)
6+75 – 40'R to 8+68 – 9'R (213 FT)

REMOVE CONCRETE PAVEMENT
7+32 – 25'L to 7+59 – 25'L (24.9 SQ YD)
7+44 – 24'R to 7+65 – 24'R (17.2 SQ YD)
7+44 – 41'R to 7+51 – 41'R (6.1 SQ YD)
7+84 – 25'L to 8+04 – 25'R (20.3 SQ YD)
8+58 – 21'L to 8+64 – 8'R (9.1 SQ YD)
9+31 – 2'L to 9+42 – 1'R (9.1 SQ YD)

REMOVE CONCRETE RETAINING WALL
8+61 – 25'L to 8+66 – 2'L (24 FT)

MISCELLANEOUS REMOVALS

REMOVE AND SALVAGE LIGHTPOLE
7+65 – 17'L (1 EACH) (COORDINATE WITH BLACK HILLS POWER AND LIGHT)
(INCIDENTAL WORK, GRADING)

REMOVE DROP INLET
8+69 – 4'R
(INCIDENTAL WORK, GRADING)

REMOVE 79' – 18" RCP PLUS FLARED END
8+70 – 3'R to 9+31 – 2.5'L (77 LF)
(INCIDENTAL WORK, GRADING)

SALVAGE FENCE FOR OWNER
6+51 – 18'L to 6+85 – 18'L (34 FT)
7+61 – 15'L to 7+81 – 15'L (20 FT)
8+06 – 15'L to 8+64 – 36'L (75 FT)

REMOVE FENCE
8+01 – 45'R to 9+89 – 58'R (161 FT)

REMOVE SIGN FOR RESET
6+86 – 19'R (DEAD END)
8+65 – 6'L (END OF ROAD DIAMOND)

CLEAR AND GRUB TREES
6+86 – 23'L (16")
7+32 – 19'L (6")
7+66 – 28'R (60")
8+21 – 22'L (18")
8+21 – 23'R (6")
8+48 – 25'L (15")
8+73 – 10'L (18")
8+69 – 24'L (18")
8+84 – 12'R (18")
8+91 – 23'R (18")
9+01 – 24'R (12")
9+03 – 8'R (6")
9+04 – 8'L (24")
9+12 – 22'L (18")
9+17 – 31'L (30")
9+19 (24")
9+33 – 24'R (24")
9+36 – 20'R (24")
9+67 – 7'L (36")
9+69 – 52'R (10")
9+83 – 52'L (12")
9+84 – 74'L (40")
9+98 – 42'L (24")

CLEAR AND GRUB STUMPS
8+32 – 21'R (24")
8+69 – 53'L (80")

REGISTERED PROFESSIONAL ENGINEER
REG. NO. 8744
RICHARD A. SUDMEIER
SOUTH DAKOTA
2/28/14

Prepared By:

F M G, Inc.
3700 Sturgis Road
Rapid City, SD 57702-0317
(605) 342-4105 FAX (605) 342-4222
www.fmgengineering.com

Prepared For:
Public Works Department
Engineering Services

Scale: 1" = 40'	
Designed By: JAP/JF/RS	Drawn By: JRK
Design Date: SEPT 2013	Print Date: FEB 2014
Internal Job No: 110155	
Surveyed By: DOT / FMG	Survey Date: 8/04-7/13
SDDOT Project No. P 0044(149)40	

JACKSON BOULEVARD UTILITIES
CHAPEL LANE TO RAPID CREEK

SSW10-1837 / CIP 50177 / PCN X02U

Sheet Title: COTTONWOOD ST. DEMOLITION PLAN

Sheet: B19 of B51

I:\Civil 3D Working Folder\110155 Jackson Blvd. PH 2\Source Drawings\1837DEMO.dwg, B19, 4/16/2014 10:04:56 AM

FOR BIDDING PURPOSES ONLY

CONCRETE REMOVALS

REMOVE CONCRETE SIDEWALK
14+47 – 41'R to 14+83 – 98'L (124.9 SqYd)

CLEAR AND GRUB TREES
10+51 – 56'L (30")
11+24 – 62'L (40")
11+37 – 54'L (40")
11+81 – 63'L (30")
11+95 – 13'R (12")
12+28 – 27'R (36")
12+40 – 29'R (24")

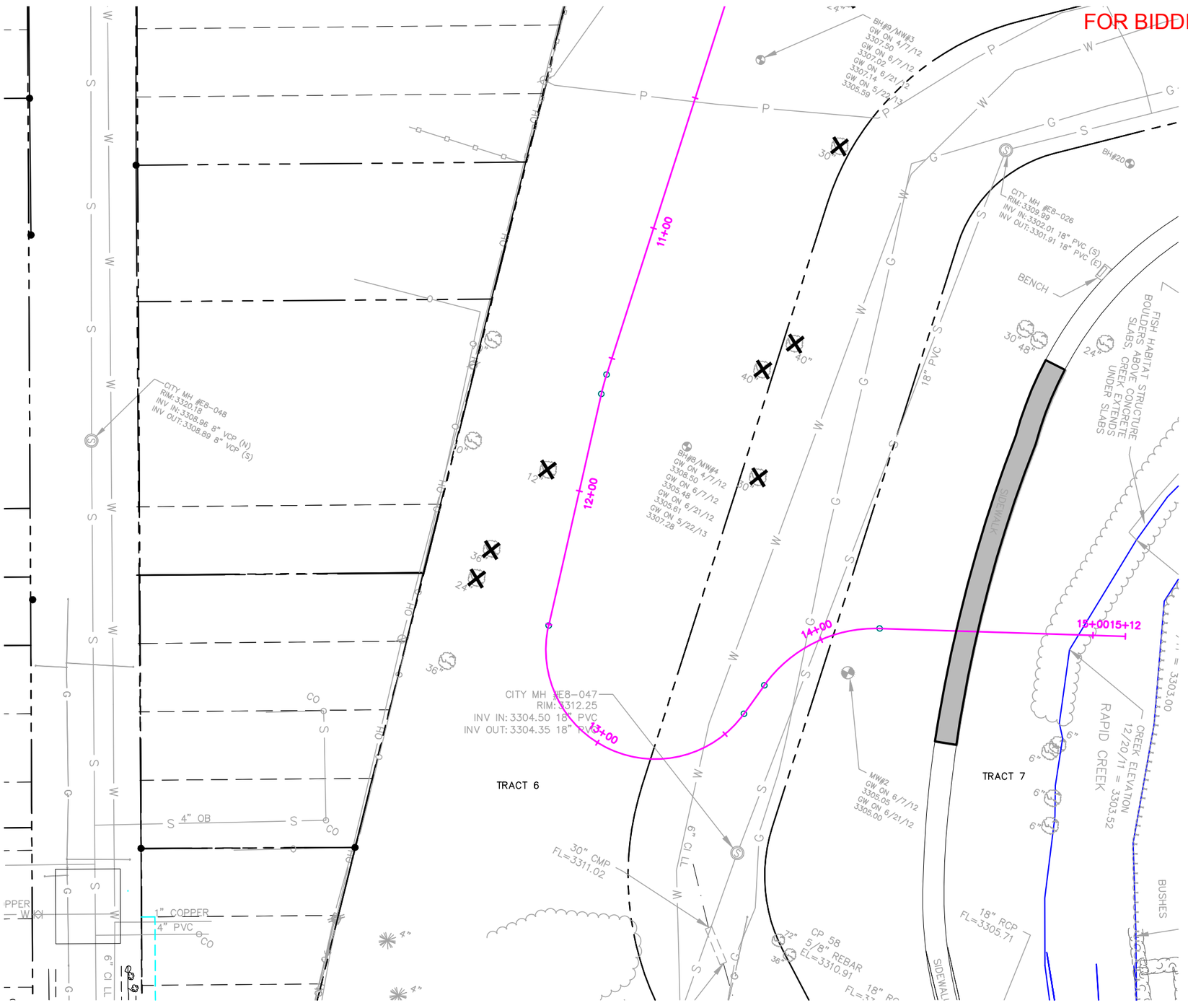

REGISTERED PROFESSIONAL ENGINEER
REG. NO.
8744
RICHARD A.
SUDMEIER
SOUTH DAKOTA
2/28/14

Prepared By:

F M G, Inc.
3700 Sturgis Road
Rapid City, SD 57702-0317
(605) 342-4105 FAX (605) 342-4222
www.fmgengineering.com

Prepared For:
Public Works Department
Rapid City, South Dakota, Incorporated 1883
Engineering Services

Scale: 1" = 40'	
Designed By: JAP/JF/RS	Drawn By: JRK
Design Date: SEPT 2013	Print Date: FEB 2014
Internal Job No: 110155	
Surveyed By: DOT / FMG	Survey Date: 8/04-7/13
SDDOT Project No. P 0044(149)40	

JACKSON BOULEVARD UTILITIES
CHAPEL LANE TO RAPID CREEK

SSW10-1837 / CIP 50177 / PCN X02U

Sheet Title: COTTONWOOD ST. DEMOLITION PLAN

Sheet: B20 of B51

I:\Civil 3D Working Folder\110155 Jackson Blvd. PH 2\Source Drawings\1837DEMO.dwg, B20, 4/16/2014 10:06:18 AM

FOR BIDDING PURPOSES ONLY

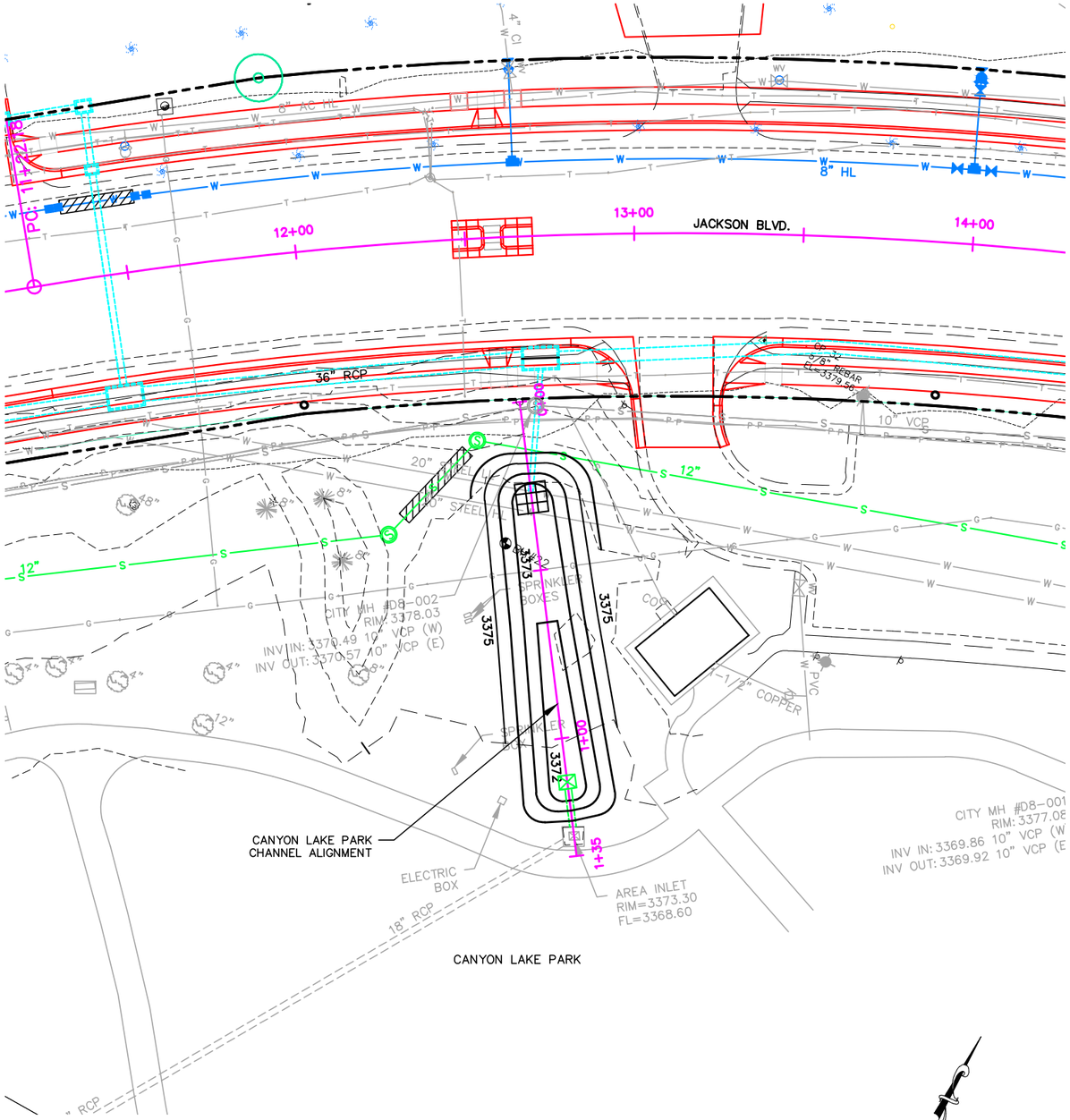

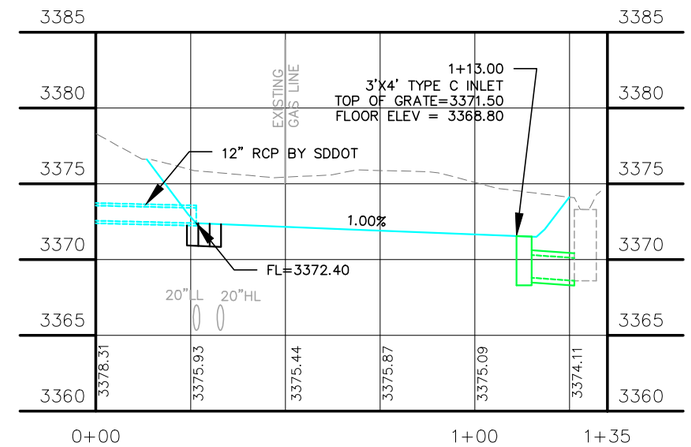

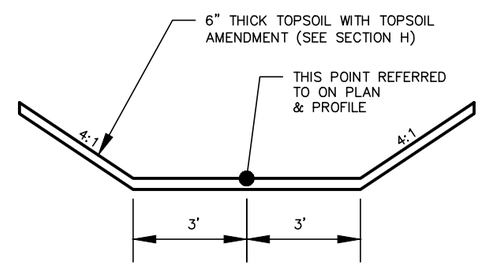

CHANNEL TYPICAL SECTION

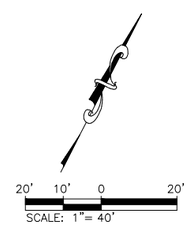

0+24.00 to 0+33.00
INSTALL BANK AND CHANNEL PROTECTION GABIONS (4.5 CY)

0+33.00 to 1+16.00
GRADE CHANNEL, SEE DETAIL

1+13.00
INSTALL 3'x4' TYPE C INLET AND GRATE

1+15.00 to 1+26.30
INSTALL 14' – 18" RCP (BETWEEN INLETS)

1+26.00
CONNECT NEW 18" RCP TO EXISTING INLET

1+26.00 to 1+33.00
REMOVE & RESET ROCK EDGING AROUND INLET AS NECESSARY (INCIDENTAL WORK, GRADING)

0+00± to 1+26±
REMOVE & REPAIR EXISTING IRRIGATION SYSTEM AS NECESSARY FOR NEW CONSTRUCTION, EXTENT OF EXISTING SYSTEM UNKNOWN (INCIDENTAL WORK, GRADING)

Prepared By:	Prepared For:	Scale: 1" = 40'			Sheet Title:	Sheet:
F M G, Inc. 3700 Sturgis Road Rapid City, SD 57702-0317 (605) 342-4105 FAX (605) 342-4222 www.fmgengineering.com	Public Works Department Engineering Services	Designed By: JAP/JF/RS	Drawn By: JRK	JACKSON BOULEVARD UTILITIES CHAPEL LANE TO RAPID CREEK	CANYON LAKE PARK GRADING PLAN	B21 of B51
		Design Date: SEPT 2013	Print Date: FEB 2014			
		Internal Job No: 110155				
		Surveyed By: DOT / FMG	Survey Date: 8/04-7/13			
		SDDOT Project No. P 0044(149)40		SSW10-1837 / CIP 50177 / PCN X02U		

I:\Civil 3D Working Folder\110155 Jackson Blvd. PH 2\Source Drawings\1837STRM_PLAN.dwg, B21, 4/16/2014 9:28:01 AM

FOR BIDDING PURPOSES ONLY

1. 1+30.00–18.00'R
BEGIN STR B66 C&G
TC = MATCH EXISTING
(3347.06±)

2. 1+30.00–12.00'R
EDGE OF ASPHALT PATCH
TP = MATCH EXISTING
(3346.56±)

3. 1+30.00–12.00'L
EDGE OF ASPHALT PATCH
TP = MATCH EXISTING
(3346.67±)

4. 1+30.00–18.00'L
BEGIN STR B66 C&G
TC = MATCH EXISTING
(3347.06±)

5. 0+17.17 – 18.00'L
END STR. B66 C&G
BEGIN 17.67' RAD. FILLET
TC = 3345.59

6. 0+00.34 – 18.00'L
FILLET CORNER
TP = 3344.99

7. –0+00.50–35.57'L
END 17.67' RAD. FILLET
BEGIN STR. B66 C&G
TC = 3345.45

8. –0+00.63–49.56'L
END STR B66 C&G
TC = MATCH EXISTING
(3345.52±)

9. –0+28.06–50.16'L
BEGIN STR B66 C&G
TC = MATCH EXISTING
(3345.49±)

10. –0+28.06–35.67'L
END STR B66 C&G
BEGIN 17.67' RAD. FILLET
TC = 3345.28

11. –0+28.06–18.00'L
FILLET CORNER
TP = 3344.70

12. –0+45.64–18.00'L
END 17.67' RAD. FILLET
BEGIN STR B66 C&G
TC = 3344.94

13. –1+03.68–20.72'L
END STR B66 C&G
BEGIN 200' RAD. B66 C&G
TC = 3344.29

14. –1+27.12–21.73'L
END 200' RAD B66 C&G
TC = MATCH EXISTING
(3344.04±)

15. –1+27.12–12.00'L
EDGE OF ASPHALT PATCH
TP = MATCH EXISTING
(3343.63±)

16. –0+27.05–18.00'R
END STR B77 C&G
BEGIN 702.67' RAD B66 C&G
TC = 3345.24

17. –1+86.97–21.09'R
END 702.67' RAD B66 C&G
TC = MATCH EXISTING
(3343.42±)

18. –1+86.98–12.00'R
EDGE OF ASPHALT PATCH
TP = MATCH EXISTING
(3343.19±)

19. –2+72.98–21.56'R
BEGIN TYPE B66 C&G
TC = MATCH EXISTING

20. –2+90.51–21.58'R
END TYPE B66 C&G
TC = MATCH EXISTING

21. –2+77.38–21.85'L
BEGIN TYPE B66 C&G
TC = MATCH EXISTING

22. –2+86.11–21.84'L
END TYPE B66 C&G
TC = MATCH EXISTING

NEW SIGNS
0+32 – 31'R STOP SIGN ON RESET
POST FACING BIKE PATH
(R1–1, 18"x18")

0+32 – 31'L STOP SIGN ON RESET
POST FACING BIKE PATH
(R1–1, 18"x18")

TEMPORARY PEDESTRIAN CROSSING
–2+90.57R TO –2+72.97R
CONSTRUCT TEMPORARY ASPHALT ADA RAMP
(2" ASPHALT COMPOSITE AND 4" BASE COURSE)

–2+81.74–58.21'L TO –2+81.74–24..50'L
CONSTRUCT TEMPORARY ASPHALT ADA RAMP AND
10' WIDE PATH CONNECTING TO EXISTING PATH
(2" ASPHALT COMPOSITE AND 4" BASE COURSE)

RESET SIGN
0+43 – 5'L IN–STREET PEDESTRIAN CROSSING*
0+38 – 26'L COMBINATION BIKE/PED CROSSING W/ LEFT DIAGONAL ARROW
0+32 – 31'L NO MOTOR VEHICLES W/ BIKE ROUTE
0+32 – 31'R NO MOTOR VEHICLES W/ BIKE ROUTE
0+08 – 31'R COMBINATION BIKE/PED CROSSING W/ LEFT DIAGONAL ARROW
0+04 – 50'L CITY TOUR & HISTORICAL DISTRICT W/ LEFT ARROW
0+03 – 5'R IN–STREET PEDESTRIAN CROSSING*
–0+33 – 50'L STOP
–2+42 – 25'R COMBINATION BIKE/PED CROSSING W/ AHEAD

*NOTE:
IN–STREET PEDESTRIAN CROSSING SIGNS MAY OR MAY NOT BE SET UP AT THE TIME OF PROJECT. IF THEY ARE SET UP REMOVE AND RESET AS DESCRIBED

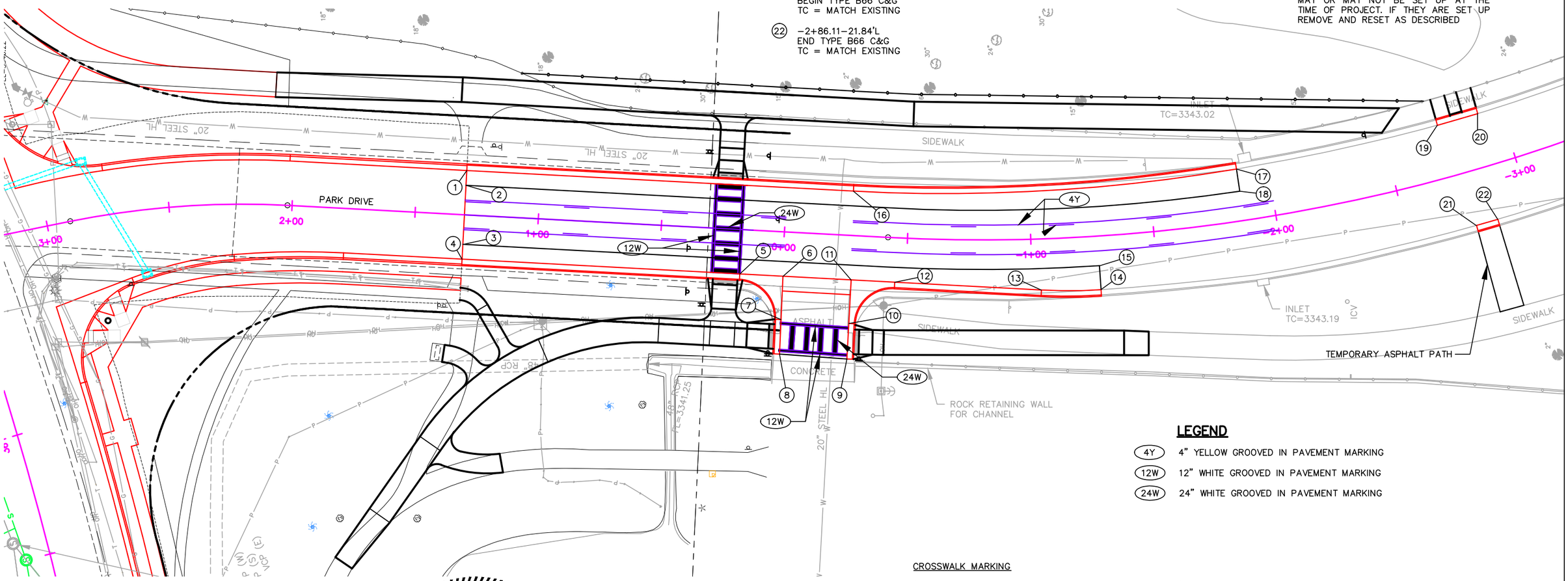

LEGEND

4Y	4" YELLOW GROOVED IN PAVEMENT MARKING
12W	12" WHITE GROOVED IN PAVEMENT MARKING
24W	24" WHITE GROOVED IN PAVEMENT MARKING

8' CHAIN LINK FENCE
1+09.78 – 58.60'R to –2+70.03 – 32.45'R (366 Ft)

CROSSWALK MARKING

THE CONTRACTOR SHALL PLACE A CROSSWALK BAR CENTERED ON EACH LANE LINE AND A CROSSWALK BAR IN THE MIDDLE OF EACH LANE. THE CROSSWALK BAR IS 2 FT WIDE. THE SPACING BETWEEN CROSSWALK BARS SHALL NOT EXCEED 5 FT AND SPACING SHALL BE CONSISTENT ACROSS THE CROSSING. THE CONTRACTOR SHALL DIRECT ANY QUESTIONS REGARDING THE PLACEMENT OF THE CROSSWALK BARS TO THE REGION TRAFFIC ENGINEER.

REGISTERED PROFESSIONAL ENGINEER
REG. NO. 8744
RICHARD A. SUDMEIER
SOUTH DAKOTA
7/28/14

0 10' 20' 40'
SCALE: 1"=40'

Prepared By:
F M G, Inc.
3700 Sturgis Road
Rapid City, SD 57702-0317
(605) 342-4105 FAX (605) 342-4222
www.fmgengineering.com

Prepared For:
Public Works Department
RAPID CITY SOUTH DAKOTA
Engineering Services

Scale: 1" = 40'	
Designed By: JAP/JF/RS	Drawn By: JRK
Design Date: SEPT 2013	Print Date: FEB 2014
Internal Job No: 110155	
Surveyed By: DOT / FMG	Survey Date: 8/04-7/13
SDDOT Project No. P 0044(149)40	

JACKSON BOULEVARD UTILITIES
CHAPEL LANE TO RAPID CREEK

SSW10-1837 / CIP 50177 / PCN X02U

Sheet Title: PARK DRIVE PLAN

Sheet: B22 of B51

I:\Civil 3D Working Folder\110155 Jackson Blvd. PH 2\Source Drawings\1837STRM_PLAN.dwg, B22, 4/16/2014 9:29:52 AM

FOR BIDDING PURPOSES ONLY

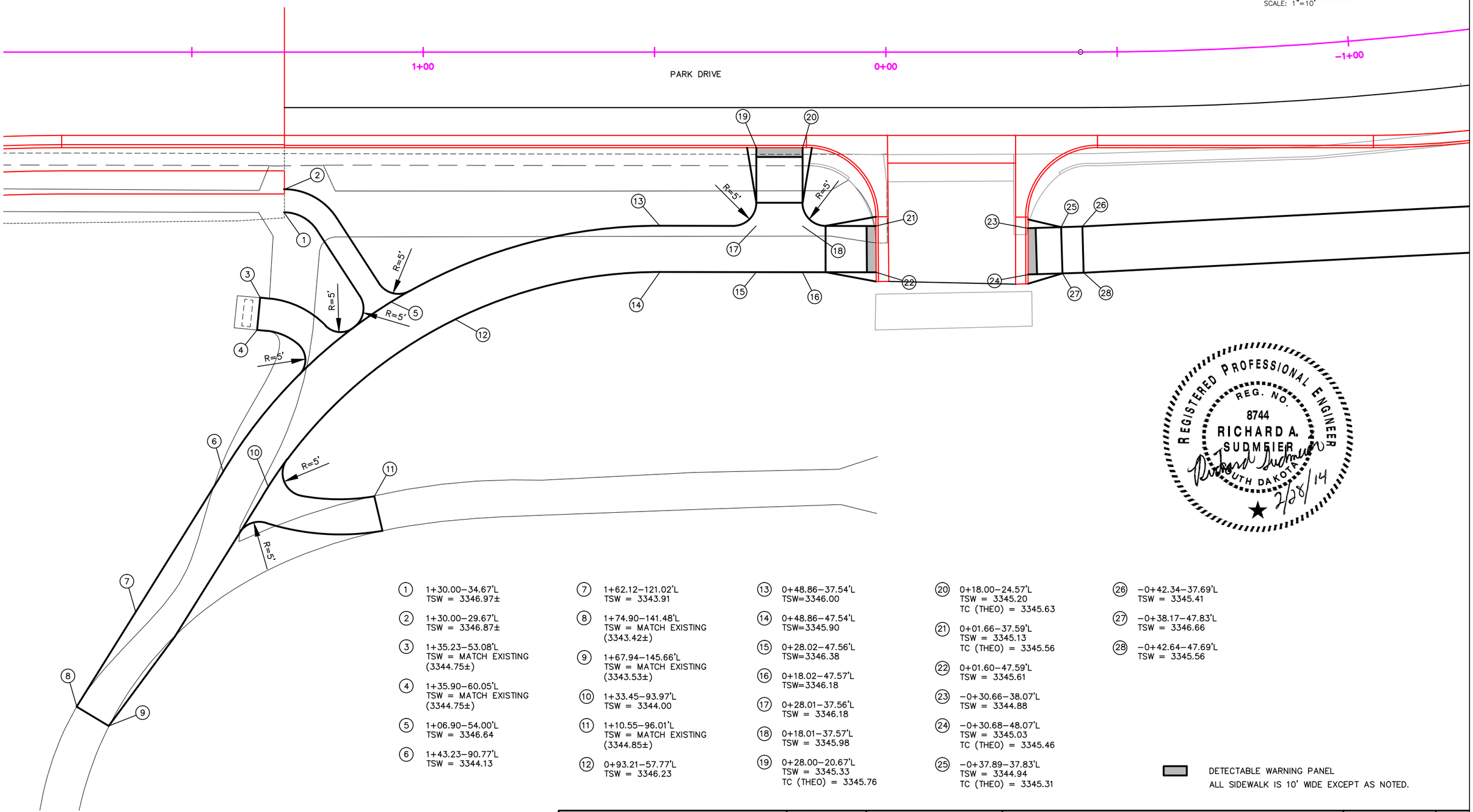

REGISTERED PROFESSIONAL ENGINEER
REG. NO. 8744
RICHARD A. SUDMEIER
SOUTH DAKOTA
2/28/14

1. 1+30.00–34.67'L TSW = 3346.97±
2. 1+30.00–29.67'L TSW = 3346.87±
3. 1+35.23–53.08'L TSW = MATCH EXISTING (3344.75±)
4. 1+35.90–60.05'L TSW = MATCH EXISTING (3344.75±)
5. 1+06.90–54.00'L TSW = 3346.64
6. 1+43.23–90.77'L TSW = 3344.13
7. 1+62.12–121.02'L TSW = 3343.91
8. 1+74.90–141.48'L TSW = MATCH EXISTING (3343.42±)
9. 1+67.94–145.66'L TSW = MATCH EXISTING (3343.53±)
10. 1+33.45–93.97'L TSW = 3344.00
11. 1+10.55–96.01'L TSW = MATCH EXISTING (3344.85±)
12. 0+93.21–57.77'L TSW = 3346.23
13. 0+48.86–37.54'L TSW=3346.00
14. 0+48.86–47.54'L TSW=3345.90
15. 0+28.02–47.56'L TSW=3346.38
16. 0+18.02–47.57'L TSW=3346.18
17. 0+28.01–37.56'L TSW = 3346.18
18. 0+18.01–37.57'L TSW = 3345.98
19. 0+28.00–20.67'L TSW = 3345.33 TC (THEO) = 3345.76
20. 0+18.00–24.57'L TSW = 3345.20 TC (THEO) = 3345.63
21. 0+01.66–37.59'L TSW = 3345.13 TC (THEO) = 3345.56
22. 0+01.60–47.59'L TSW = 3345.61
23. –0+30.66–38.07'L TSW = 3344.88
24. –0+30.68–48.07'L TSW = 3345.03 TC (THEO) = 3345.46
25. –0+37.89–37.83'L TSW = 3344.94 TC (THEO) = 3345.31
26. –0+42.34–37.69'L TSW = 3345.41
27. –0+38.17–47.83'L TSW = 3346.66
28. –0+42.64–47.69'L TSW = 3345.56

DETECTABLE WARNING PANEL
ALL SIDEWALK IS 10' WIDE EXCEPT AS NOTED.

Prepared By:

F M G, Inc.
3700 Sturgis Road
Rapid City, SD 57702-0317
(605) 342-4105 FAX (605) 342-4222
www.fmgengineering.com

Prepared For:
Public Works Department
Engineering Services

Scale: 1" = 40'	
Designed By: JAP/JF/RS	Drawn By: JRK
Design Date: SEPT 2013	Print Date: FEB 2014
Internal Job No: 110155	
Surveyed By: DOT / FMG	Survey Date: 8/04-7/13
SDDOT Project No. P 0044(149)40	

JACKSON BOULEVARD UTILITIES
CHAPEL LANE TO RAPID CREEK

SSW10-1837 / CIP 50177 / PCN X02U

Sheet Title: PARK DRIVE PLAN

Sheet: B23 of B51

I:\Civil 3D Working Folder\110155 Jackson Blvd. PH 2\Source Drawings\1837STRM_PLAN.dwg, B23, 4/16/2014 9:33:31 AM

FOR BIDDING PURPOSES ONLY

REGISTERED PROFESSIONAL ENGINEER
REG. NO. 8744
RICHARD A. SUDMEIER
SOUTH DAKOTA
Richard Sudmeier 2/28/14

1. 0+28.00–20.67'R
   TSW = 3345.45
   TC (THEO) = 3345.88
2. 0+28.00–27.75'R
   TSW = 3346.04
3. 0+28.00–32.75'R
   TSW = 3345.20
4. 0+28.00–45.57'R
   TSW = 3344.76
5. 0+18.00–45.57'R
   TSW = 3344.76
6. 0+18.00–32.75'R
   TSW = 3345.82
7. 0+18.00–27.75'R
   TSW = 3345.92
8. 0+18.00–20.67'R
   TSW = 3345.33
   TC (THEO) = 3345.76
9. 0+28.00–55.57'R
   TSW = 3344.56
10. 0+18.00–55.57'R
    TSW = 3344.56

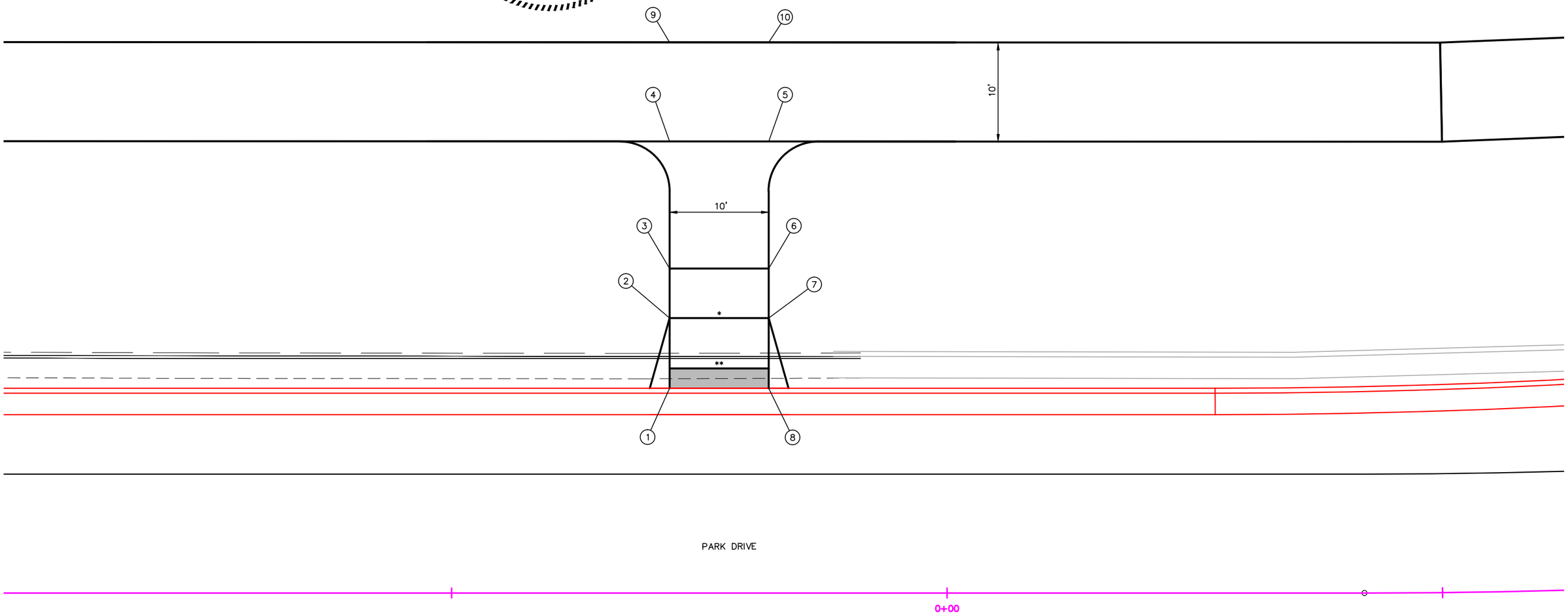

0 2.5' 5' 10'
SCALE: 1"=10'

* LANDING
** RAMP SLOPES WITH 8.3% MAX SLOPE
*** SIDEWALK WITH 5% MAX LONG. SLOPE
DETECTABLE WARNING PANEL
ALL SIDEWALK IS 10' WIDE EXCEPT AS NOTED.

Prepared By:
F M G, Inc.
3700 Sturgis Road
Rapid City, SD 57702-0317
(605) 342-4105 FAX (605) 342-4222
www.fmgengineering.com

Prepared For:
Public Works Department
Rapid City, South Dakota, Incorporated 1882
Engineering Services

Scale: 1" = 40'	
Designed By: JAP/JF/RS	Drawn By: JRK
Design Date: SEPT 2013	Print Date: FEB 2014
Internal Job No: 110155	
Surveyed By: DOT / FMG	Survey Date: 8/04-7/13
SDDOT Project No. P 0044(149)40	

JACKSON BOULEVARD UTILITIES
CHAPEL LANE TO RAPID CREEK

SSW10-1837 / CIP 50177 / PCN X02U

Sheet Title: PARK DRIVE PLAN

Sheet: B24 of B51

I:\Civil 3D Working Folder\110155 Jackson Blvd. PH 2\Source Drawings\1837STRM_PLAN.dwg, B24, 4/16/2014 9:36:08 AM

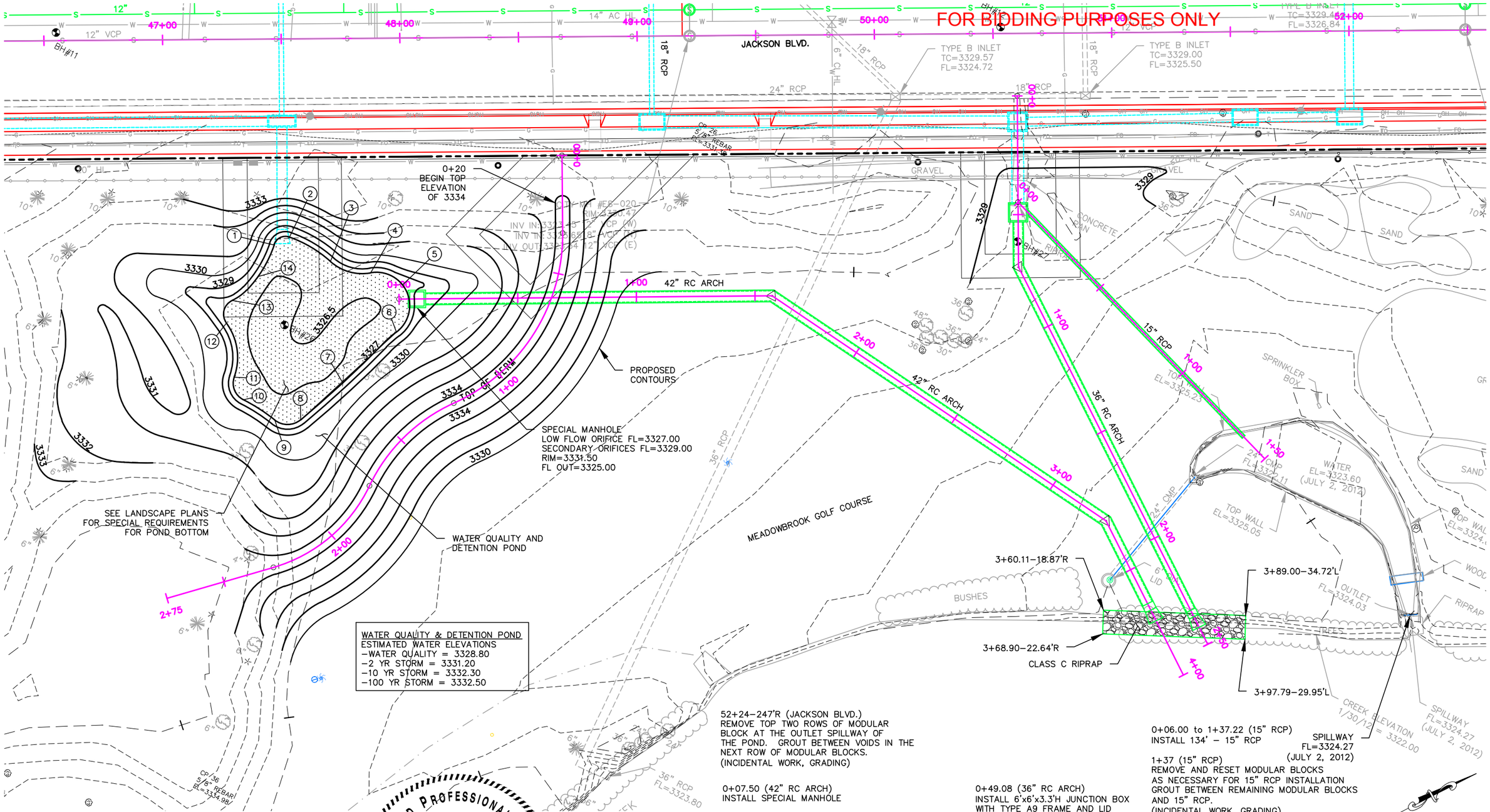

WATER QUALITY & DETENTION POND
ESTIMATED WATER ELEVATIONS
–WATER QUALITY = 3328.80
–2 YR STORM = 3331.20
–10 YR STORM = 3332.30
–100 YR STORM = 3332.50

1 N 643941.01 E 1193851.69	6 N 643931.67 E 1193914.26	11 N 643883.73 E 1193861.99
2 N 643946.86 E 1193855.93	7 N 643902.34 E 1193903.83	12 N 643902.58 E 1193848.71
3 N 643945.60 E 1193875.97	8 N 643880.41 E 1193895.09	13 N 643912.14 E 1193846.58
4 N 643948.98 E 1193893.23	9 N 643875.36 E 1193885.39	14 N 643926.11 E 1193851.68
5 N 643950.56 E 1193907.50	10 N 643876.95 E 1193869.71	

REGISTERED PROFESSIONAL ENGINEER
REG. NO. 8744
RICHARD A. SUDMIER
SOUTH DAKOTA
2/28/14

52+24–247'R (JACKSON BLVD.)
REMOVE TOP TWO ROWS OF MODULAR BLOCK AT THE OUTLET SPILLWAY OF THE POND. GROUT BETWEEN VOIDS IN THE NEXT ROW OF MODULAR BLOCKS.
(INCIDENTAL WORK, GRADING)

0+07.50 (42" RC ARCH)
INSTALL SPECIAL MANHOLE

0+11.17 to 3+66.00 (42" RC ARCH)
INSTALL 334' – 42" RC ARCH PIPE
INCLUDING 30° BEND AT 1+57.21 (8' LAY LENGTH)
AND 30° BEND AT 3+26.93 (8' LAY LENGTH)
AND 42" RC ARCH FLARED END

0+49.08 (36" RC ARCH)
INSTALL 6'x6'x3.3'H JUNCTION BOX
WITH TYPE A9 FRAME AND LID

0+53.17 to 2+34.00 (36" RC ARCH)
INSTALL 174' – 36" RC ARCH PIPE
INCLUDING 30° BEND AT 0+72.14
AND 36" RC ARCH FLARED END

0+06.00 to 1+37.22 (15" RCP)
INSTALL 134' – 15" RCP

1+37 (15" RCP)
REMOVE AND RESET MODULAR BLOCKS
AS NECESSARY FOR 15" RCP INSTALLATION
GROUT BETWEEN REMAINING MODULAR BLOCKS
AND 15" RCP.
(INCIDENTAL WORK, GRADING)

3+60.11 – 17.87'R to
3+89.00 – 34.72'L
INSTALL 113 TONS OF
CLASS C RIPRAP (3' THICK)
AND 117.3 SQYD TYPE B DRAINAGE FABRIC

Prepared By:
F M G, Inc.
3700 Sturgis Road
Rapid City, SD 57702-0317
(605) 342-4105 FAX (605) 342-4222
www.fmgengineering.com

Prepared For:
Public Works Department
Engineering Services

Scale: 1" = 40'	
Designed By: JAP/JF/RS	Drawn By: JRK
Design Date: SEPT 2013	Print Date: FEB 2014
Internal Job No: 110155	
Surveyed By: DOT / FMG	Survey Date: 8/04-7/13
SDDOT Project No. P 0044(149)40	

JACKSON BOULEVARD UTILITIES
CHAPEL LANE TO RAPID CREEK

SSW10-1837 / CIP 50177 / PCN X02U

Sheet Title: GOLF COURSE GRADING PLAN

Sheet: B25 of B51

I:\Civil 3D Working Folder\110155 Jackson Blvd. PH 2\Source Drawings\1837STRM_PLAN.dwg, B25, 4/16/2014 9:37:58 AM

FOR BIDDING PURPOSES ONLY

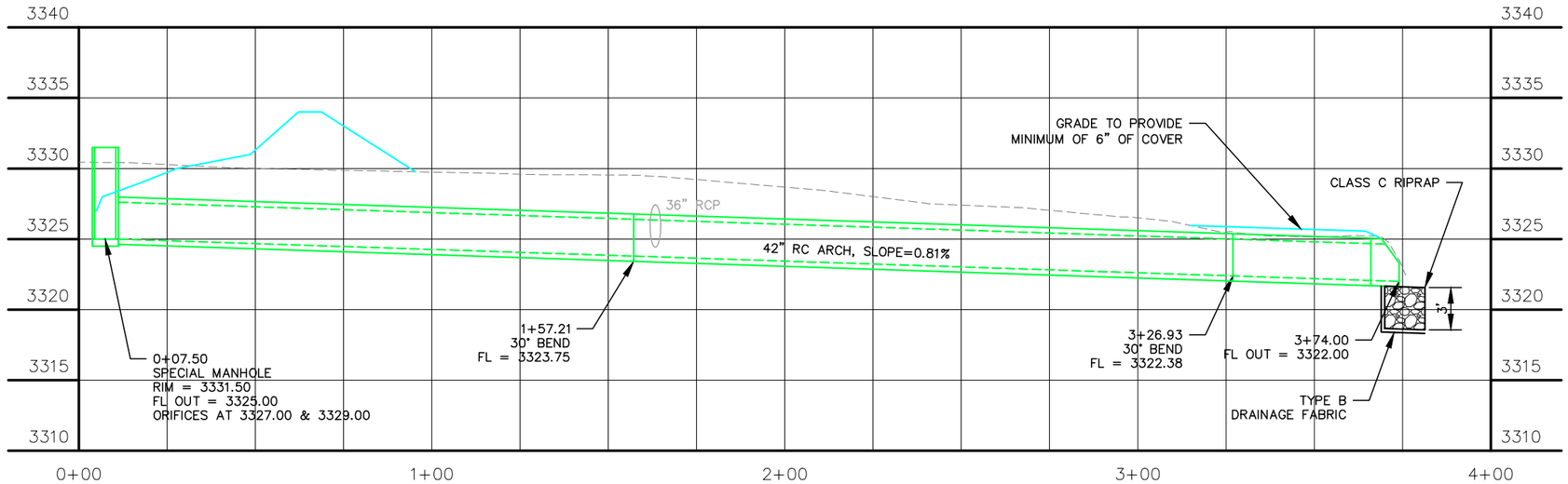

42" RC ARCH PROFILE

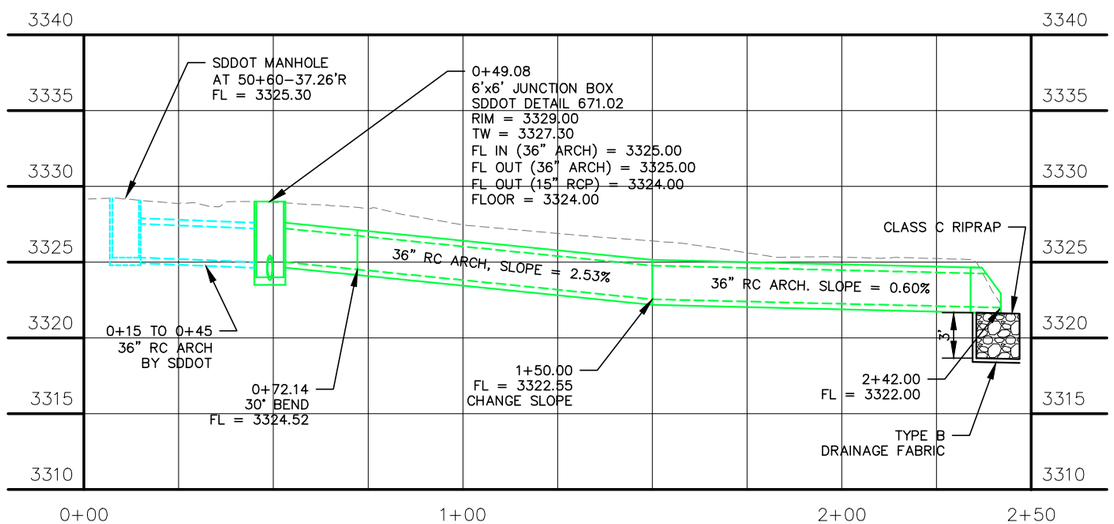

36" RC ARCH PROFILE

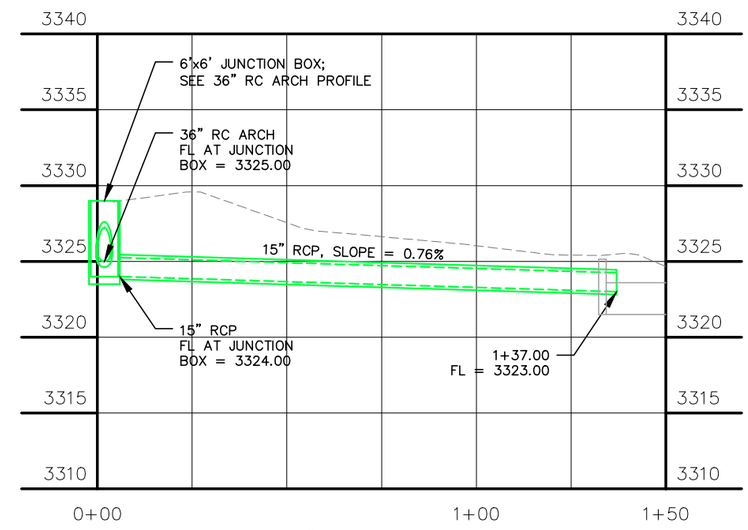

15" RCP PROFILE

Prepared By: F M G, Inc. 3700 Sturgis Road Rapid City, SD 57702-0317 (605) 342-4105 FAX (605) 342-4222 www.fmgengineering.com	Prepared For: Public Works Department Engineering Services	Scale: 1" = 40'	JACKSON BOULEVARD UTILITIES CHAPEL LANE TO RAPID CREEK
		Designed By: JAP/JF/RS; Drawn By: JRK	
		Design Date: SEPT 2013; Print Date: FEB 2014	
		Internal Job No: 110155	
		Surveyed By: DOT / FMG; Survey Date: 8/04-7/13	
		SDDOT Project No. P 0044(149)40	SSW10-1837 / CIP 50177 / PCN X02U

Sheet Title: GOLF COURSE CHANNEL PROFILE

Sheet: B26 of B51

I:\Civil 3D Working Folder\110155 Jackson Blvd. PH 2\Source Drawings\1837STRM_PLAN.dwg, B26, 4/16/2014 9:40:01 AM

FOR BIDDING PURPOSES ONLY

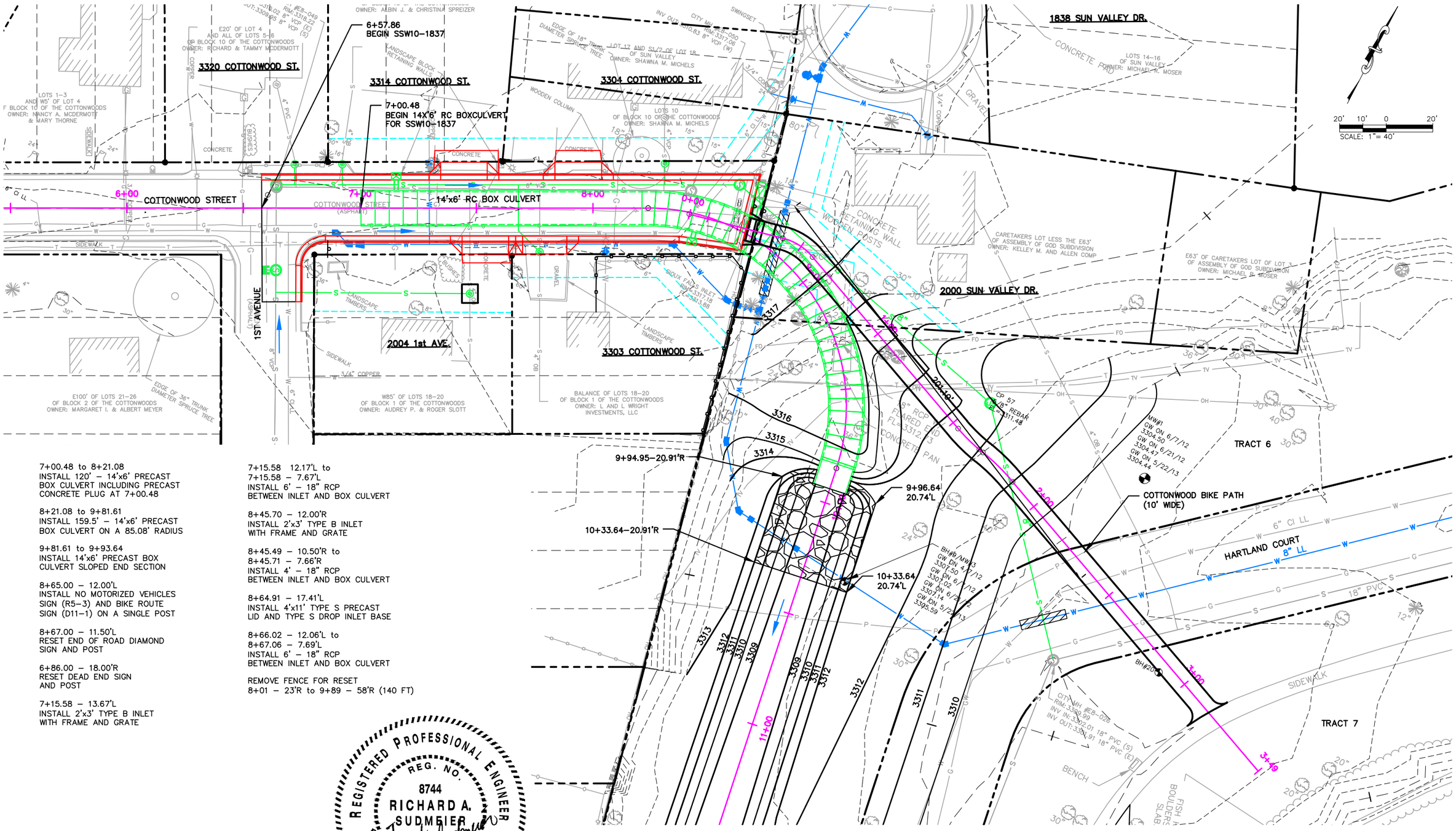

7+00.48 to 8+21.08
INSTALL 120' – 14'x6' PRECAST BOX CULVERT INCLUDING PRECAST CONCRETE PLUG AT 7+00.48

8+21.08 to 9+81.61
INSTALL 159.5' – 14'x6' PRECAST BOX CULVERT ON A 85.08' RADIUS

9+81.61 to 9+93.64
INSTALL 14'x6' PRECAST BOX CULVERT SLOPED END SECTION

8+65.00 – 12.00'L
INSTALL NO MOTORIZED VEHICLES SIGN (R5–3) AND BIKE ROUTE SIGN (D11–1) ON A SINGLE POST

8+67.00 – 11.50'L
RESET END OF ROAD DIAMOND SIGN AND POST

6+86.00 – 18.00'R
RESET DEAD END SIGN AND POST

7+15.58 – 13.67'L
INSTALL 2'x3' TYPE B INLET WITH FRAME AND GRATE

7+15.58 12.17'L to
7+15.58 – 7.67'L
INSTALL 6' – 18" RCP BETWEEN INLET AND BOX CULVERT

8+45.70 – 12.00'R
INSTALL 2'x3' TYPE B INLET WITH FRAME AND GRATE

8+45.49 – 10.50'R to
8+45.71 – 7.66'R
INSTALL 4' – 18" RCP BETWEEN INLET AND BOX CULVERT

8+64.91 – 17.41'L
INSTALL 4'x11' TYPE S PRECAST LID AND TYPE S DROP INLET BASE

8+66.02 – 12.06'L to
8+67.06 – 7.69'L
INSTALL 6' – 18" RCP BETWEEN INLET AND BOX CULVERT

REMOVE FENCE FOR RESET
8+01 – 23'R to 9+89 – 58'R (140 FT)

REGISTERED PROFESSIONAL ENGINEER
REG. NO. 8744
RICHARD A. SUDMEIER
SOUTH DAKOTA
2/28/14

REVISED: 4/18/2014 (RAS)

Prepared By:
F M G, Inc.
3700 Sturgis Road
Rapid City, SD 57702-0317
(605) 342-4105 FAX (605) 342-4222
www.fmgengineering.com

Prepared For:
Public Works Department
Rapid City, South Dakota, Incorporated 1882
Engineering Services

Scale: 1" = 40'	
Designed By: JAP/JF/RS	Drawn By: JRK
Design Date: SEPT 2013	Print Date: FEB 2014
Internal Job No: 110155	
Surveyed By: DOT / FMG	Survey Date: 8/04-7/13
SDDOT Project No. P 0044(149)40	

JACKSON BOULEVARD UTILITIES
CHAPEL LANE TO RAPID CREEK

SSW10-1837 / CIP 50177 / PCN X02U

Sheet Title: COTTONWOOD STREET PLAN

Sheet: B27 of B51

I:\Civil 3D Working Folder\110155 Jackson Blvd. PH 2\Source Drawings\1837STRM_PLAN.dwg, B27, 4/16/2014 9:09:29 AM

FOR BIDDING PURPOSES ONLY

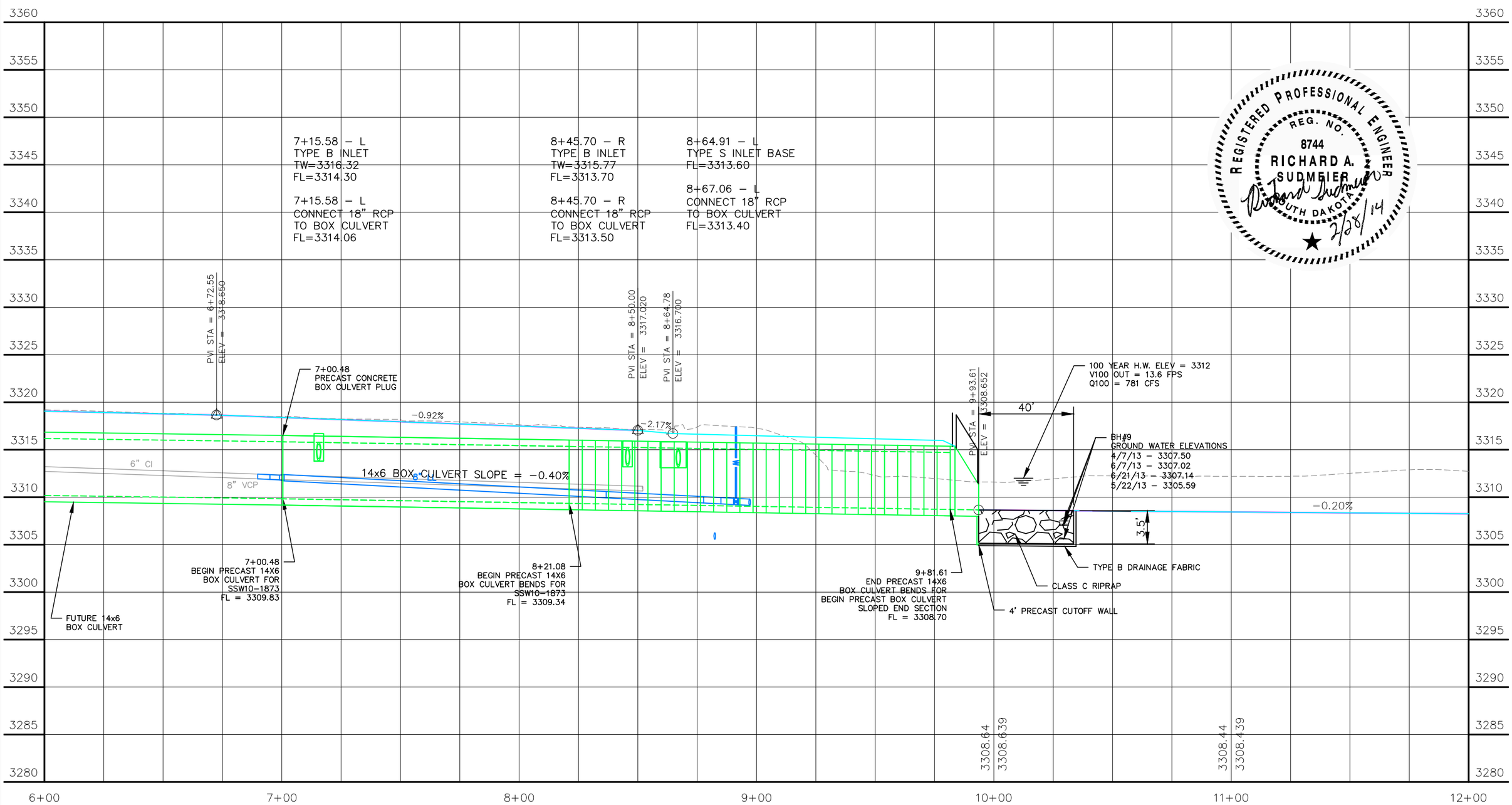

REGISTERED PROFESSIONAL ENGINEER
REG. NO. 8744
RICHARD A. SUDMEIER
SOUTH DAKOTA
2/28/14

I:\Civil 3D Working Folder\110155 Jackson Blvd. PH 2\Source Drawings\1837STRM_PLAN.dwg, B28, 4/16/2014 9:49:27 AM

Prepared By:

F M G, Inc.
3700 Sturgis Road
Rapid City, SD 57702-0317
(605) 342-4105 FAX (605) 342-4222
www.fmgengineering.com

Prepared For:
Public Works Department
Engineering Services

Scale: 1" = 40'	
Designed By: JAP/JF/RS	Drawn By: JRK
Design Date: SEPT 2013	Print Date: FEB 2014
Internal Job No: 110155	
Surveyed By: DOT / FMG	Survey Date: 8/04-7/13
SDDOT Project No. P 0044(149)40	

JACKSON BOULEVARD UTILITIES
CHAPEL LANE TO RAPID CREEK

SSW10-1837 / CIP 50177 / PCN X02U

Sheet Title: COTTONWOOD STREET PROFILE

Sheet: B28 of B51

FOR BIDDING PURPOSES ONLY

REGISTERED PROFESSIONAL ENGINEER
REG. NO. 8744
RICHARD A. SUDMEIER
SOUTH DAKOTA
Richard Sudmeier 7/28/14

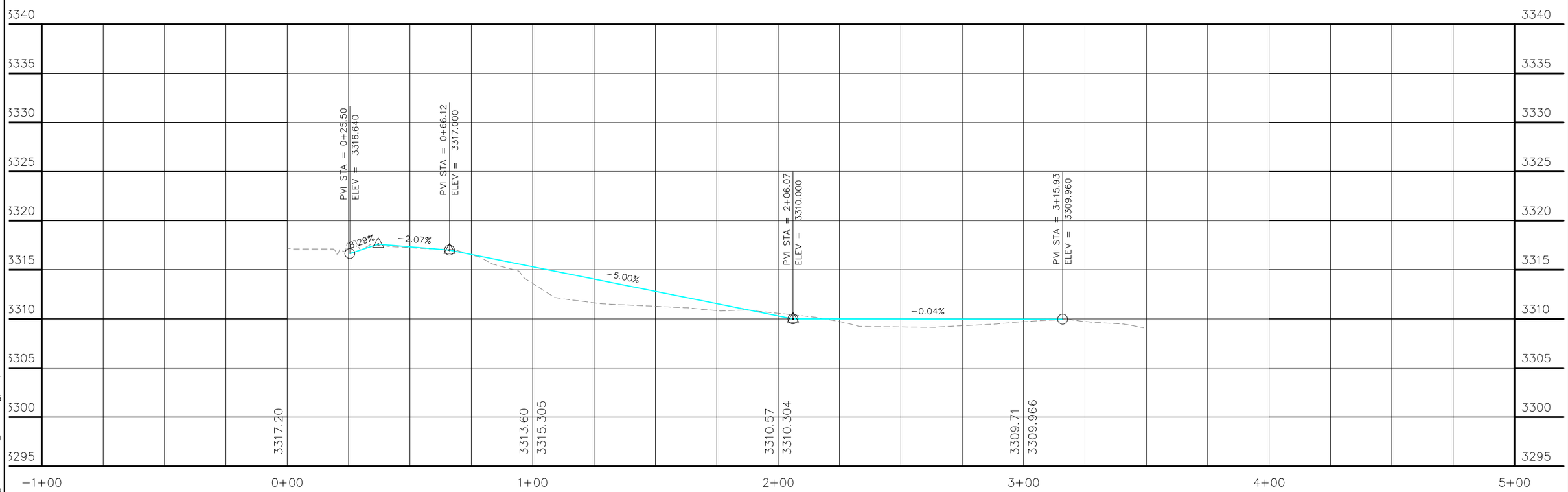

Prepared By:	Prepared For:	Scale: 1" = 40'			Sheet Title:	Sheet:
F M G, Inc. 3700 Sturgis Road Rapid City, SD 57702-0317 (605) 342-4105 FAX (605) 342-4222 www.fmgengineering.com	Public Works Department Engineering Services	Designed By: JAP/JF/RS	Drawn By: JRK	JACKSON BOULEVARD UTILITIES CHAPEL LANE TO RAPID CREEK	COTTONWOOD BIKE PATH PROFILE	B29 of B51
		Design Date: SEPT 2013	Print Date: FEB 2014			
		Internal Job No: 110155				
		Surveyed By: DOT / FMG	Survey Date: 8/04-7/13			
		SDDOT Project No. P 0044(149)40		SSW10-1837 / CIP 50177 / PCN X02U		

I:\Civil 3D Working Folder\110155 Jackson Blvd. PH 2\Source Drawings\1837STRM_PLAN.dwg, B29, 4/16/2014 9:51:04 AM

FOR BIDDING PURPOSES ONLY

12+10.00 – 13.00'R to 12+72.18 – 13.00'R
INSTALL GRAVITY LARGE CONCRETE
BLOCK WALL (SEE SECTION E)

12+10.00 – 10.00'R to 13+60.20 – 10.00'R
INSTALL 390 TONS OF CLASS B RIPRAP
AND 364 SQ YD OF TYPE B DRAINAGE
FABRIC

14+35.00 to 14+71.00
INSTALL 4 – 7'x3' REINFORCED
BOX CULVERT WITH END SECTIONS

(1) 14+79.52–100.12'L
BEGIN STR. 8' WIDE SIDEWALK
TSW=MATCH EXISTING

(2) 14+60.19–58.97'L
END STR. 8' WIDE SIDEWALK
BEGIN 100' RAD. 8' WIDE SIDEWALK
TSW=3310.00

(3) 14+51.36–27.97'L
END 100' RAD. 8' WIDE SIDEWALK
BEGIN STR. 8' WIDE SIDEWALK
TSW=3310.80

(4) 14+46.21–16.50'R
TSW=3310.50

(5) 14+43.62–40.61'R
END STR. 8' WIDE SIDEWALK
TSW=MATCH EXISTING
(3309.10±)

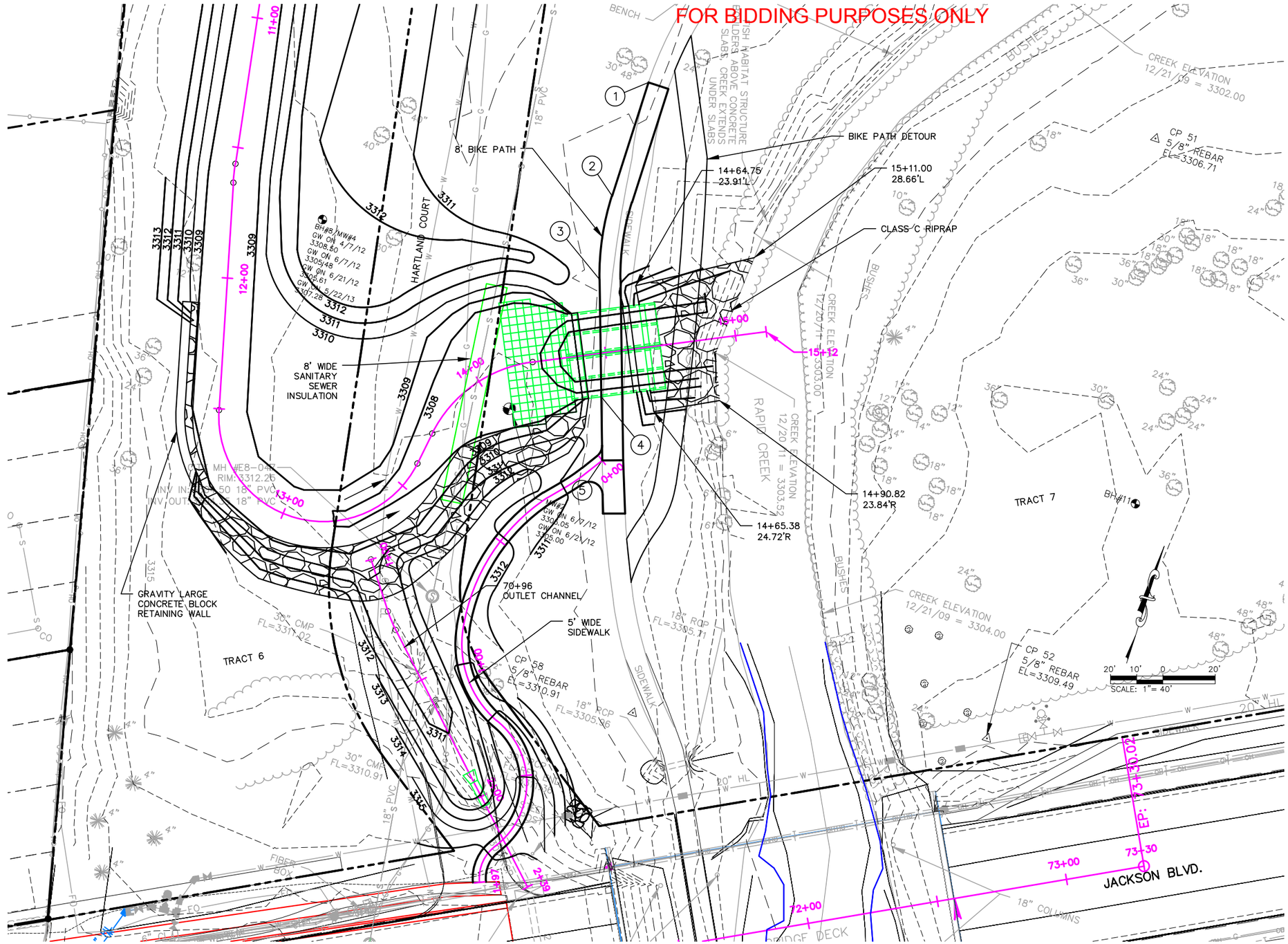

REGISTERED PROFESSIONAL ENGINEER
REG. NO. 8744
RICHARD A. SUDMEIER
SOUTH DAKOTA
2/28/14

Prepared By:
F M G, Inc.
3700 Sturgis Road
Rapid City, SD 57702-0317
(605) 342-4105 FAX (605) 342-4222
www.fmgengineering.com

Prepared For:
Public Works Department
Engineering Services

Scale: 1" = 40'	
Designed By: JAP/JF/RS	Drawn By: JRK
Design Date: SEPT 2013	Print Date: FEB 2014
Internal Job No: 110155	
Surveyed By: DOT / FMG	Survey Date: 8/04-7/13
SDDOT Project No. P 0044(149)40	

JACKSON BOULEVARD UTILITIES
CHAPEL LANE TO RAPID CREEK

SSW10-1837 / CIP 50177 / PCN X02U

Sheet Title: COTTONWOOD STREET PLAN

Sheet: B30 of B51

I:\Civil 3D Working Folder\110155 Jackson Blvd. PH 2\Source Drawings\1837STRM_PLAN.dwg, B30, 4/16/2014 9:52:51 AM

FOR BIDDING PURPOSES ONLY

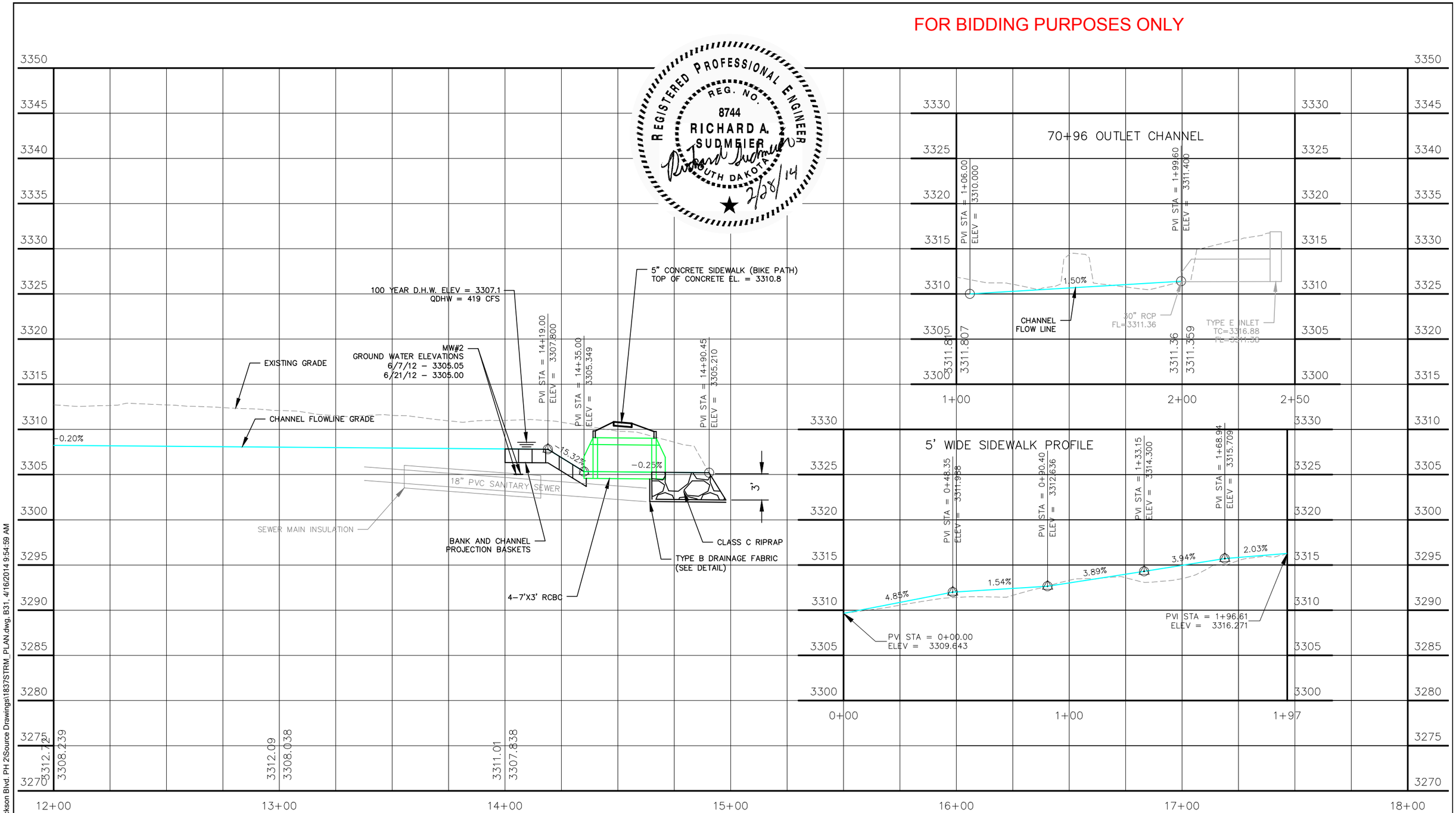

I:\Civil 3D Working Folder\110155 Jackson Blvd. PH 2\Source Drawings\1837STRM_PLAN.dwg, B31, 4/16/2014 9:54:59 AM

Prepared By:

F M G, Inc.
3700 Sturgis Road
Rapid City, SD 57702-0317
(605) 342-4105 FAX (605) 342-4222
www.fmgengineering.com

Prepared For:
Public Works Department
Engineering Services

Scale: 1" = 40'	
Designed By: JAP/JF/RS	Drawn By: JRK
Design Date: SEPT 2013	Print Date: FEB 2014
Internal Job No: 110155	
Surveyed By: DOT / FMG	Survey Date: 8/04-7/13
SDDOT Project No. P 0044(149)40	

JACKSON BOULEVARD UTILITIES
CHAPEL LANE TO RAPID CREEK

SSW10-1837 / CIP 50177 / PCN X02U

Sheet Title: COTTONWOOD STREET PROFILE

Sheet: B31 of B51

COTTONWOOD STREET CURB & GUTTER

FOR BIDDING PURPOSES ONLY

(1) 6+72.55–14.67'L
BEGIN B66 C&G
TC=MATCH EXISTING
(3318.29±)

(2) 7+34.63–14.67'L
END B66 C&G
BEGIN TYPE P6 GUTTER
TC (THEO)=3317.98

(3) 7+54.63–14.67'L
END TYPE P6 GUTTER
BEGIN B66 C&G
TC (THEO)=3317.83

(4) 7+83.73–14.67'L
END B66 C&G
BEGIN TYPE P6 GUTTER
TC (THEO)=3317.55

(5) 8+03.73–14.67'L
END TYPE P6 GUTTER
BEGIN B66 C&G
TC (THEO)=3317.37

(6) 8+62.25–25.83'L
TC=3317.04

(7) 8+62.79–22.46'L
END B66 C&G
BEGIN TYPE S INLET
TC=3317.00

(8) 8+64.77–11.72'L
END TYPE S INLET
BEGIN B66 C&G
TC=3317.00

(9) 8+69.69–7.32'R
TC=3317.13

(10) 8+39.50–13.45'R
TC=3317.26

(11) 7+88.81–14.67'R
END B66 C&G
BEGIN TYPE P6 GUTTER
TC (THEO)=3317.50

(12) 7+69.81–14.67'R
END TYPE P6 GUTTER
BEGIN B66 C&G
TC (THEO)=3317.68

(13) 7+66.81–14.67'R
TC=3317.70

(14) 7+63.81–14.67'R
END B66 C&G
BEGIN TYPE P6 GUTTER
TC (THEO)=3317.73

(15) 7+43.81–14.67'R
END TYPE P6 GUTTER
BEGIN B66 C&G
TC (THEO)=3317.92

(16) 6+85.18–14.67'R
END STR. B66 C&G
BEGIN 10' RAD. B66 C&G
TC=3318.45

(17) 6+75.18–24.64'R
END 10' RAD. B66 C&G
BEGIN STR. B66 C&G
TC=3318.61

(18) 6+75.13–40.17'R
END B66 C&G
TC=MATCH EXISTING
(3318.70±)

(19) 0+25.50–0.00'L
BEGIN TYPE 1 RAMP
TSW=3316.64

(20) 0+37.08–0.00'L
END TYPE 1 RAMP
BEGIN STR. SIDEWALK
TSW=3317.60

(21) 0+41.42–5.00'L
END STR. SIDEWALK
BEGIN 29' RAD. SIDEWALK
TSW=3316.80

(22) 0+56.78–5.00'L
END 29' RAD. SIDEWALK
BEGIN STR. SIDEWALK
TSW=3316.91

(23) 1+53.31–5.00'L
END STR. SIDEWALK
BEGIN 72.9' RAD. SIDEWALK
TSW=3312.64

(24) 1+68.13–5.00'L
END 72.9' RAD. SIDEWALK
BEGIN 88.9' RAD. SIDEWALK
TSW=3311.90

(25) 1+84.53–5.00'L
END 88.9' RAD. SIDEWALK
BEGIN STR. SIDEWALK
TSW=3311.08

(26) 2+06.10–5.00'L
TSW=3310.00

(27) 3+15.93–0.00'L
END STR. SIDEWALK
TSW=MATCH EXISTING
(3309.57±)

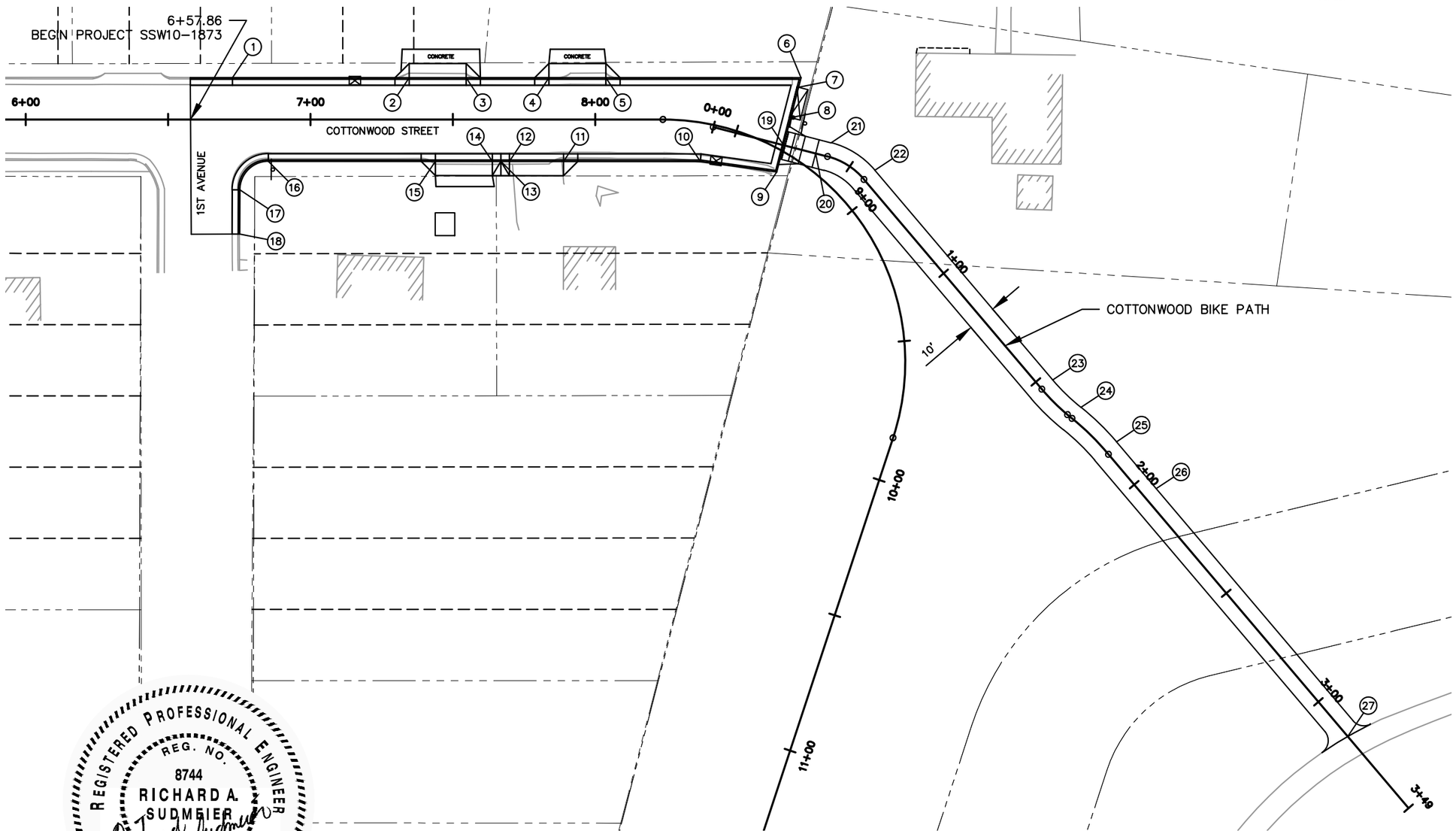

REGISTERED PROFESSIONAL ENGINEER
REG. NO. 8744
RICHARD A. SUDMEIER
SOUTH DAKOTA
2/28/14

Prepared By:

F M G, Inc.
3700 Sturgis Road
Rapid City, SD 57702-0317
(605) 342-4105 FAX (605) 342-4222
www.fmgengineering.com

Prepared For:
Public Works Department
Engineering Services

Scale: 1" = 40'	
Designed By: JAP/JF/RS	Drawn By: JRK
Design Date: SEPT 2013	Print Date: FEB 2014
Internal Job No: 110155	
Surveyed By: DOT / FMG	Survey Date: 8/04-7/13
SDDOT Project No. P 0044(149)40	

JACKSON BOULEVARD UTILITIES
CHAPEL LANE TO RAPID CREEK

SSW10-1837 / CIP 50177 / PCN X02U

Sheet Title: COTTONWOOD STREET CURB & GUTTER

Sheet: B32 of B51

I:\Civil 3D Working Folder\110155 Jackson Blvd. PH 2\Source Drawings\1837STRM_PLAN.dwg, B32, 4/16/2014 9:56:48 AM

FOR BIDDING PURPOSES ONLY

REGISTERED PROFESSIONAL ENGINEER
REG. NO. 8744
RICHARD A. SUDMEIER
SOUTH DAKOTA
2/28/14

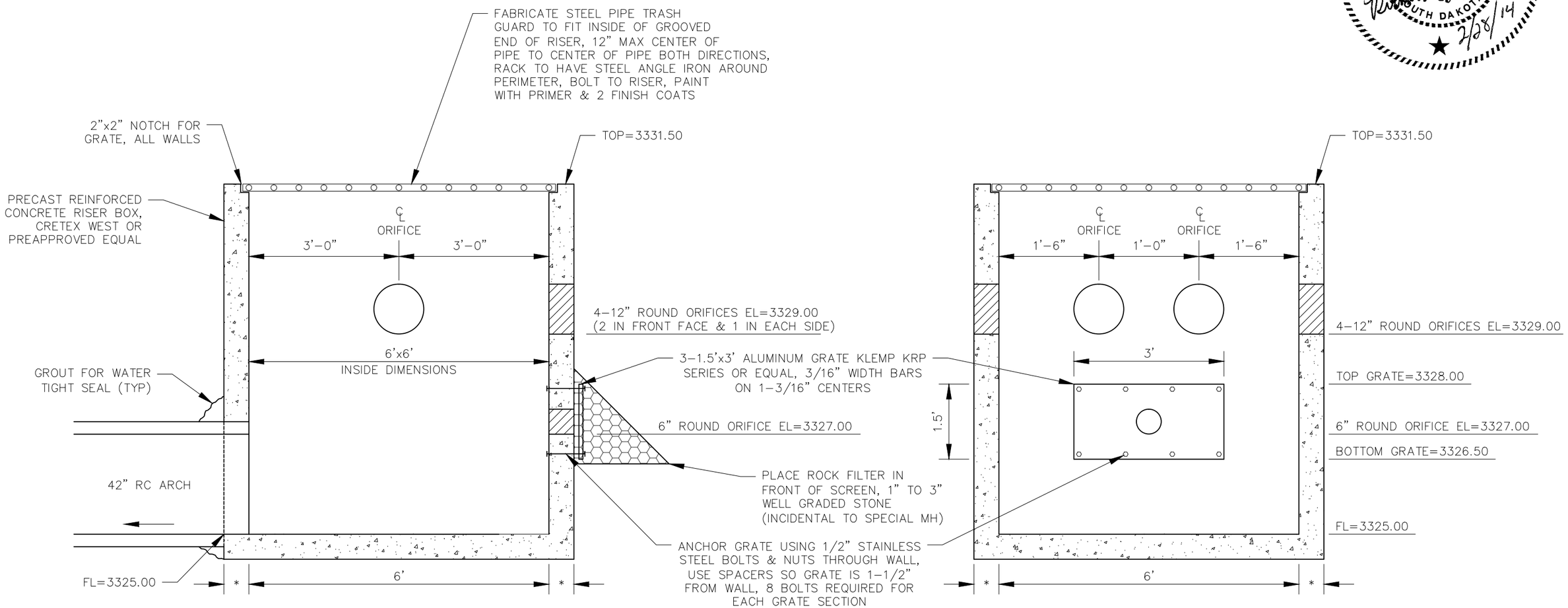

SPECIAL MANHOLE

NOT TO SCALE

I:\Civil 3D Working Folder\110155 Jackson Blvd. PH 2\Production Drawings\1837STRM-DETAILS.dwg, B33, 4/16/2014 9:58:32 AM

Prepared By: F M G, Inc. 3700 Sturgis Road Rapid City, SD 57702-0317 (605) 342-4105 FAX (605) 342-4222 www.fmgengineering.com	Prepared For: Public Works Department Rapid City Incorporated 1882 South Dakota Engineering Services	Scale: 1" = 40'	JACKSON BOULEVARD UTILITIES CHAPEL LANE TO RAPID CREEK	Sheet Title: SPECIAL MANHOLE DETAIL	Sheet: B33 of B51
		Designed By: JAP/JF/RS; Drawn By: JRK			
		Design Date: SEPT 2013; Print Date: FEB 2014			
		Internal Job No: 110155			
		Surveyed By: DOT / FMG; Survey Date: 8/04-7/13			
		SDDOT Project No. P 0044(149)40	SSW10-1837 / CIP 50177 / PCN X02U		

FOR BIDDING PURPOSES ONLY

TOLERANCES IN DIMENSIONS

Diameter: ±1.5% for 24" Dia. or less and ±1% or 3/8" whichever is more for 27" Dia. or greater.
Diameters at Joints: ±3/16" for 30" Dia. or less and ±1/4" for 36" or greater.
Length of Joint (J): ±1/4".
Wall thickness (T): not less than design T by more than 5% or 3/16", whichever is greater.
Laying length: shall not underrun by more than 1/2".

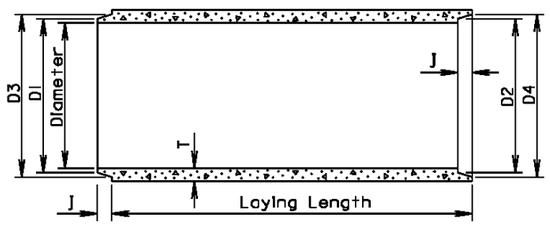

LONGITUDINAL SECTION

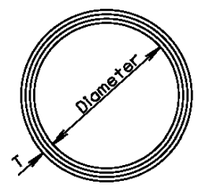

END VIEW

GENERAL NOTES:

Construction of R. C. P. shall conform to the requirements of Section 990 of the Standard Specifications for Roads and Bridges.

Not more than 2 four foot sections shall be permitted near the ends of any culvert. Four foot lengths shall be used only to secure the required length of culvert.

Diam. (In.)	Approx. Wt. /Ft. (lb.)	T (In.)	J (In.)	D1 (In.)	D2 (In.)	D3 (In.)	D4 (In.)
12	92	2	1 3/4	13 1/4	13 5/8	13 7/8	14 1/4
15	127	2 1/4	2	16 1/2	16 7/8	17 1/4	17 5/8
18	168	2 1/2	2 1/4	19 5/8	20	20 3/8	20 3/4
21	214	2 3/4	2 1/2	22 7/8	23 1/4	23 3/4	24 1/8
24	265	3	2 3/4	26	26 3/8	27	27 3/8
27	322	3 1/4	3	29 1/4	29 5/8	30 1/4	30 5/8
30	384	3 1/2	3 1/4	32 3/8	32 3/4	33 1/2	33 7/8
36	524	4	3 3/4	38 3/4	39 1/4	40	40 1/2
42	685	4 1/2	4	45 1/8	45 5/8	46 1/2	47
48	867	5	4 1/2	51 1/2	52	53	53 1/2
54	1070	5 1/2	4 1/2	57 7/8	58 3/8	59 3/8	59 7/8
60	1296	6	5	64 1/4	64 3/4	66	66 1/2
66	1542	6 1/2	5 1/2	70 5/8	71 1/8	72 1/2	73
72	1810	7	6	77	77 1/2	79	79 1/2
78	2098	7 1/2	6 1/2	83 3/8	83 7/8	85 5/8	86 1/8
84	2410	8	7	89 3/4	90 1/4	92 1/8	92 5/8
90	2740	8 1/2	7	95 3/4	96 1/4	98 1/8	98 5/8
96	2950	9	7	102 1/8	102 5/8	104 1/2	105
102	3075	9 1/2	7 1/2	109	109 1/2	111 1/2	112
108	3870	10	7 1/2	115 1/2	116	118	118 1/2

March 31, 2000

Published Date: 1st Qtr. 2014

SDDOT

REINFORCED CONCRETE PIPE

PLATE NUMBER 450.01

Sheet 1 of 1

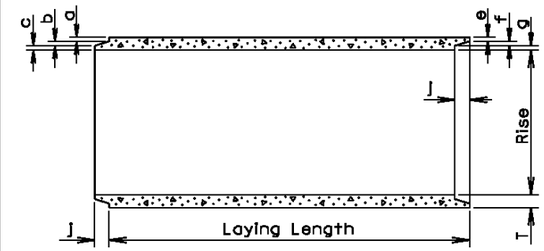

LONGITUDINAL SECTION

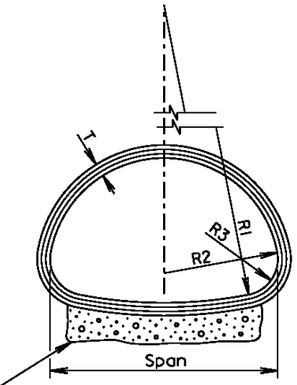

END VIEW

TOLERANCES IN DIMENSIONS

Radial dimensions at joints: ±1/8 " for 65" span or less and ±1/4 " for longer spans.
Rise and Span: ±2% of tabular values.
Length of Joint (J): ±1/4 ".
Wall thickness (T): not less than design T by more than 5% or 3/16", whichever is greater.
Laying length: shall not underrun by more than 1/2".

Gravel Bedding Material shall be supplied for 102" to 169" spans. It shall be placed to a thickness of 6" (min.) x 85% of the Span x Length of culvert and shall conform to the gradation requirements for gravel surfacing except material may be screened or may be plan provided material.

* Size (In.)	Approx. Wt./Ft. (lb.)	Rise (In.)	Span (In.)	T (In.)	a (In.)	b (In.)	c (In.)	J (In.)	e (In.)	f (In.)	g (In.)	R1 (In.)	R2 (In.)	R3 (In.)
18	170	13 1/2	22	2 1/2	1 3/8	3/8	3/4	2	1 1/8	3/8	1	27 1/2	13 3/4	5 1/4
24	320	18	28 1/2	3 1/2	1 5/8	1/2	1 3/8	3	1 3/8	1/2	1 5/8	40 11/16	14 3/4	4 5/8
30	450	22 1/2	36 1/4	4	1 13/16	5/8	1 9/16	3 1/2	1 9/16	5/8	1 13/16	51	18 3/4	6 1/8
36	600	26 5/8	43 3/4	4 1/2	2	3/4	1 3/4	4	1 3/4	3/4	2	62	22 1/2	6 1/2
42	740	31 5/16	51 1/8	4 1/2	2	3/4	1 3/4	4	1 3/4	3/4	2	73	26 1/4	7 3/4
48	890	36	58 1/2	5	2 1/4	3/4	2	5	2	3/4	2 1/4	84	30	8 7/8
54	1100	40	65	5 1/2	2 1/2	3/4	2 1/4	5	2 1/4	3/4	2 1/2	92 1/2	33 3/8	10
60	1400	45	73 1/2	6	3 5/16	3/4	1 15/16	5	2 3/4	3/4	2 1/2	105	37 1/2	11
72	1900	54	88	7	3 13/16	1	2 3/16	6	3 1/4	1	2 3/4	126	45	13 5/16
84	2500	62	102	8	4 1/8	1	2 7/8	6	3 1/2	1	3 1/2	162 1/2	52	14 1/2
96	3300	78	122 3/8	9	4 1/2	1	3 1/2	7	4	1	4	218	62	20
108	4200	88	138 1/2	10	5	1	4	7	4 1/2	1	4 1/2	269	70	22
120	5100	96 7/8	154	11	5 1/2	1	4 1/2	7	5	1	5	301 3/8	78	24
132	5100	106 1/2	168 3/4	10		1	4	7	4 1/2	1	4 1/2	329	85 5/8	26 7/8

* Equivalent Diameter of Circular R. C. P.

GENERAL NOTES:

Construction of R.C.P. Arch shall conform to the requirements of Section 990 of the Standard Specifications for Roads and Bridges. Not more than 2 four foot sections shall be permitted near the ends of any culvert. Four foot lengths shall be used only to secure the required length of culvert.

March 31, 2000

Published Date: 3rd Qtr. 2012

SDDOT

REINFORCED CONCRETE PIPE ARCH

PLATE NUMBER 450.02

Sheet 1 of 1

REVISED: 4/18/2014 (RAS)

Prepared By:

F M G, Inc.
3700 Sturgis Road
Rapid City, SD 57702-0317
(605) 342-4105 FAX (605) 342-4222
www.fmgengineering.com

Prepared For:
Public Works Department
Rapid City, Incorporated 1882, South Dakota
Engineering Services

Scale: NOT TO SCALE	
Designed By: JAP/JF/RS	Drawn By: JRK
Design Date: SEPT 2013	Print Date: FEB 2014
Internal Job No: 110155	
Surveyed By: DOT / FMG	Survey Date: 8/04-7/13
SDDOT Project No. P 0044(149)40	

JACKSON BOULEVARD UTILITIES
CHAPEL LANE TO RAPID CREEK

SSW10-1837 / CIP 50177 / PCN X02U

Sheet Title: DETAILS

Sheet: B34 of B51

I:\Civil 3D Working Folder\110155 Jackson Blvd. PH 2\Production Drawings\1837DETAILS.dwg, B34, 4/16/2014 8:14:18 AM

FOR BIDDING PURPOSES ONLY

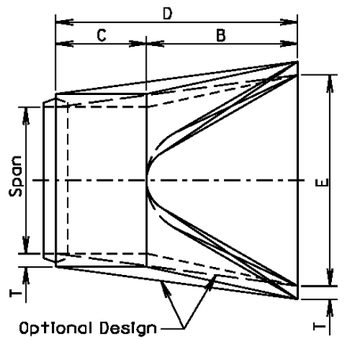

TOP VIEW

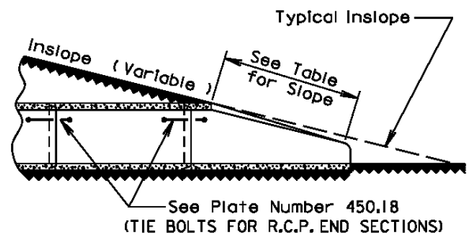

SLOPE DETAIL

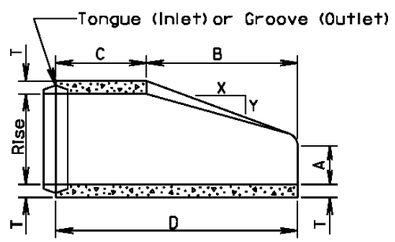

LONGITUDINAL SECTION

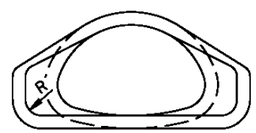

END VIEW

GENERAL NOTES:

Lengths of concrete pipe shown on Plan Sheets are between Flared Ends only.

Construction of R. C. P. Arch Flared End shall conform to the requirements of Section 990 of the Standard Specifications for Roads and Bridges.

* Size (in.)	Approximate Weight of Section (lbs.)	Rise (in.)	Span (in.)	Slope (X:Y)	T (in.)	A (in.)	B (in.)	C (in.)	D (in.)	E (in.)	R (in.)
18	1100	13 1/2	22	3:1	2 1/2	7	27	45	72	36	2
24	1750	18	28 1/2	3:1	3 1/2	8 1/2	39	33	72	48	3
30	3300	22 1/2	36 1/4	3:1	4	9 1/2	50	46	96	60	3
36	4350	26 5/8	43 3/4	3:1	4 1/2	11 1/8	60	36	96	72	6
42	5250	31 5/16	51 1/8	3:1	4 1/2	15 13/16	60	36	96	78	6
48	6400	36	58 1/2	3:1	5	21	60	36	96	84	6
54	7850	40	65	3:1	5 1/2	25 1/2	60	36	96	90	6
60	9500	45	73 1/2	3:1	6	31	60	36	96	96	6
72	13550	54	88	2:1	7	31	60	39	99	120	6
84	17950	62	102	2:1	8	28 1/2	83	19	102	144	6

*Equivalent Diameter of Circular R. C. P.

March 31, 2000

Published Date: 3rd Qtr. 2012

SDDOT

R. C. P. ARCH FLARED ENDS

PLATE NUMBER 450.11

Sheet 1 of 1

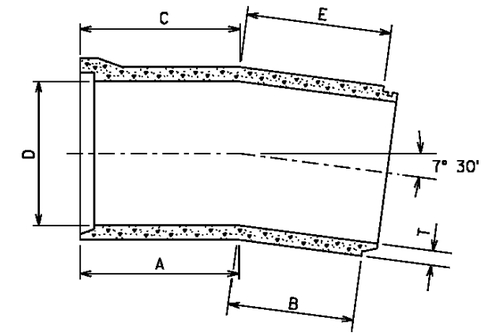

GENERAL NOTE:

Centerline laying length: 4'-0
Radius of Curve: 30.5'

D (in.)	T (in.)	A (in.)	B (in.)	C (in.)	E (in.)	Weight of Section (lbs.)
12	2	36 15/32	10 15/32	37 11/32	11 17/32	368
15	2 1/4	36 1/2	10 1/4	37 3/4	11 1/2	508
18	2 1/2	24 1/2	22	26	23 1/2	672
21	2 3/4	24 1/2	21 3/4	26 1/4	23 1/2	856
24	3	25 1/32	21 1/32	26 3/32	22 3/32	1060
27	3 1/4	25 1/32	20 25/32	27 7/32	22 3/32	1288
30	3 1/2	25 1/32	20 17/32	27 15/32	22 3/32	1536
33	3 3/4	24 15/16	20 7/16	27 9/16	23 1/16	1808
36	4	24 13/16	20 5/16	27 11/16	23 3/16	2096
42	4 1/2	24 27/32	19 27/32	28 5/32	23 5/32	2740
48	5	24 19/32	19 19/32	28 13/32	23 13/32	3468
54	5 1/2	24 5/8	19 1/8	29 11/32	23 3/8	4280
60	6	24 21/32	18 21/32	29 11/32	23 11/32	5184
66	6 1/2	24 11/16	18 3/16	29 13/16	23 5/16	6168
72	7	24 1/8	18 1/8	29 7/8	23 7/8	7240
84	8	24 1/4	17 1/4	30 3/4	23 3/4	9640
96	9	23 5/16	17 5/16	30 11/16	24 11/16	12400

March 31, 2000

Published Date: 1st Qtr. 2014

SDDOT

REINFORCED CONCRETE PIPE LONG RADIUS BEND

PLATE NUMBER 450.04

Sheet 1 of 1

REVISED: 4/29/2014 (RAS)

Prepared By:

F M G, Inc.
3700 Sturgis Road
Rapid City, SD 57702-0317
(605) 342-4105 FAX (605) 342-4222
www.fmgengineering.com

Prepared For:
Public Works Department
Engineering Services

Scale: NOT TO SCALE	
Designed By: JAP/JF/RS	Drawn By: JRK
Design Date: SEPT 2013	Print Date: FEB 2014
Internal Job No: 110155	
Surveyed By: DOT / FMG	Survey Date: 8/04-7/13
SDDOT Project No. P 0044(149)40	

JACKSON BOULEVARD UTILITIES
CHAPEL LANE TO RAPID CREEK

SSW10-1837 / CIP 50177 / PCN X02U

Sheet Title: DETAILS

Sheet: B35 of B51

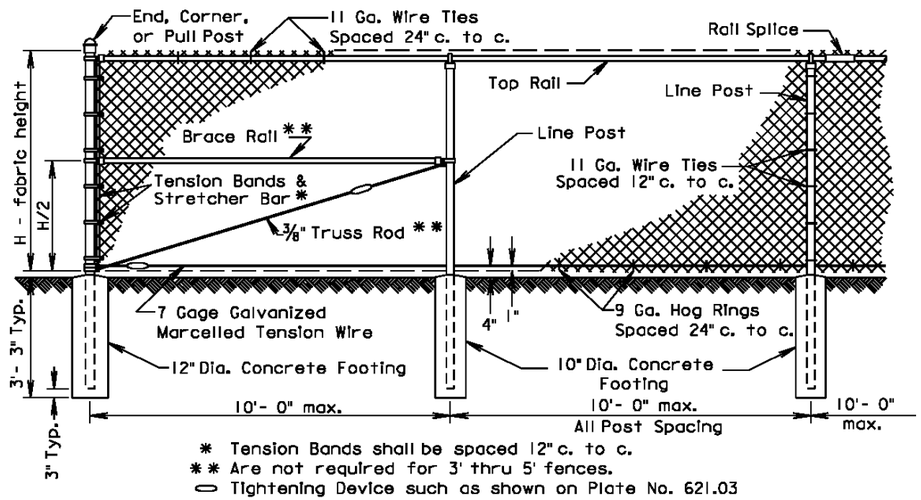

* Tension Bands shall be spaced 12" c. to c.
** Are not required for 3' thru 5' fences.
⬭ Tightening Device such as shown on Plate No. 621.03

Component	End, Corner & Pull Post		Line Post			Top & Brace Rail	
Type of Fabrication	Round Pipe Nominal	Roll Formed Steel	Round Pipe Nominal	"C" Section	H-Beam Steel	Round Pipe Nominal	Roll Formed Steel
Size	3.00" O. D.	3.5" x 3.5"	2.50" O. D.	1.875"x1.625"	2.25"x1.70"	1.625" O. D.	1.625"x1.25"
Weight (lb. / ft.)	5.79 or 4.64	5.14	3.65 or 3.12	2.34	3.43	2.27 or 1.84	1.35

GENERAL NOTES:

Specific details of manufacture of component parts of the complete fence construction shall be subject to the approval of the Engineer. Commercially available items produced specifically for the use intended shall be used wherever possible in the construction of the fence.

"H" (Height of Fabric) shall be as shown on the Plans. Fabric is available in the the following heights; 36", 42", 48", 60", 72", 84", 96", 108", 120", & 144". Fabric heights 60 inches and under shall be knuckled at both selvages. Fabric heights 72 inches and over shall be knuckled at one selvage and twisted at the other selvage.

Chain Link Fabric shall be 2" mesh, No. 9 gage galvanized wire securely fastened to Tension Wire, Line Post, Rails, Braces and Stretcher Bars spaced as shown hereon.

Fence may be constructed with either Round Pipe, "C" Section, "H" Beam, or roll Formed Steel components as shown in the table above. Line post may be Round Pipe, "C" Section, or "H" Beam. The Corner Post and Rails shall be either Round Pipe or Roll Formed Steel. The type of components used shall have prior approval by the Engineer before construction.

Where fence must cross small bodies of water (such as drainage areas or ponds) that could freeze during the winter, use 11 gage Hog Rings. Provide only two ties per Tension Wire and Top Rail between line posts.

A suitable method of rail splicing shall be used to allow for expansion and contraction while maintaining proper position of the Top Rail.

March 31, 2000

Published Date: 1st Qtr. 2014 | SDDOT | CHAIN LINK FENCE WITH TOP RAIL | PLATE NUMBER 621.01 | Sheet 1 of 1

FOR BIDDING PURPOSES ONLY

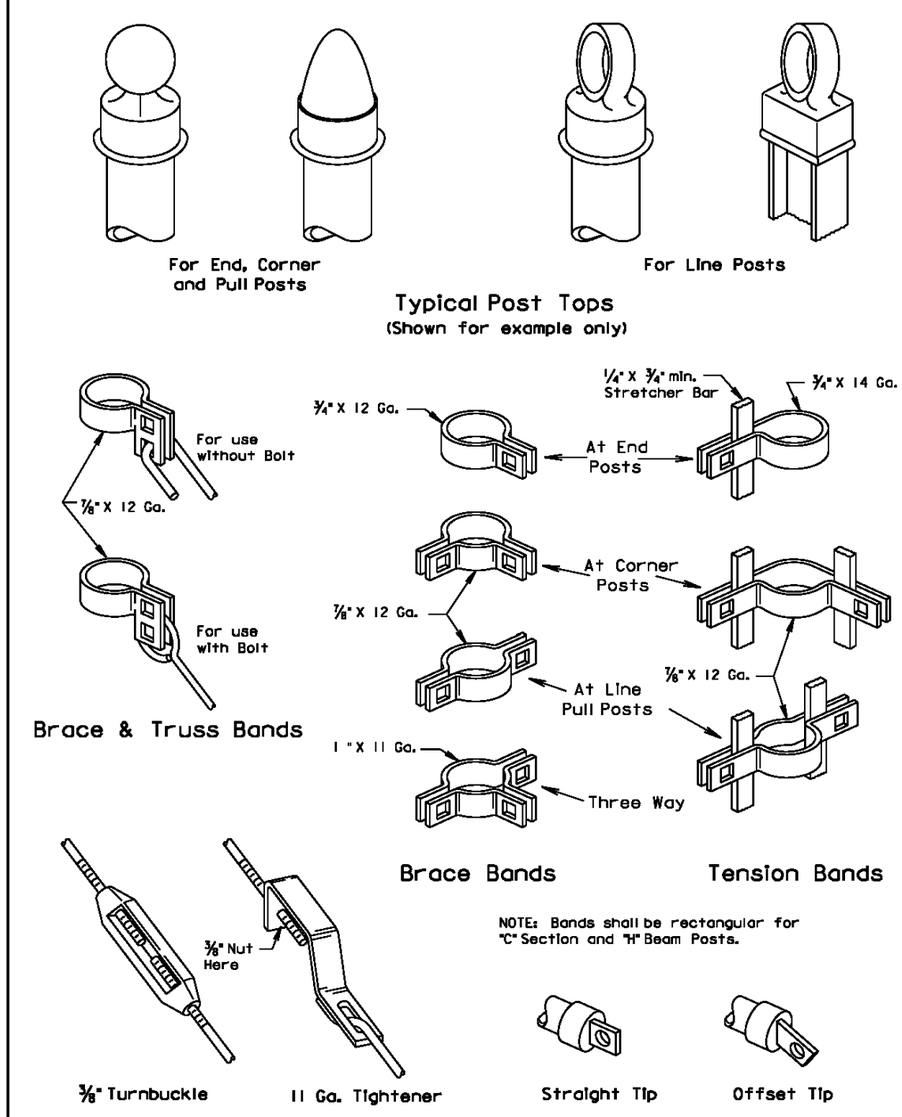

March 31, 2000

Published Date: 1st Qtr. 2014 | SDDOT | HARDWARE FOR CHAIN LINK FENCE | PLATE NUMBER 621.03 | Sheet 1 of 1

Prepared By: F M G, Inc.
3700 Sturgis Road
Rapid City, SD 57702-0317
(605) 342-4105 FAX (605) 342-4222
www.fmgengineering.com

Prepared For: Public Works Department
Rapid City, South Dakota, Incorporated 1883
Engineering Services

Scale: NOT TO SCALE	
Designed By: JAP/JF/RS	Drawn By: JRK
Design Date: SEPT 2013	Print Date: FEB 2014
Internal Job No: 110155	
Surveyed By: DOT / FMG	Survey Date: 8/04-7/13
SDDOT Project No. P 0044(149)40	

JACKSON BOULEVARD UTILITIES
CHAPEL LANE TO RAPID CREEK

SSW10-1837 / CIP 50177 / PCN X02U

Sheet Title: DETAILS

Sheet: B36 of B51

I:\Civil 3D Working Folder\110155 Jackson Blvd. PH 2\Production Drawings\1837DETAILS.dwg, B36, 4/16/2014 8:15:07 AM

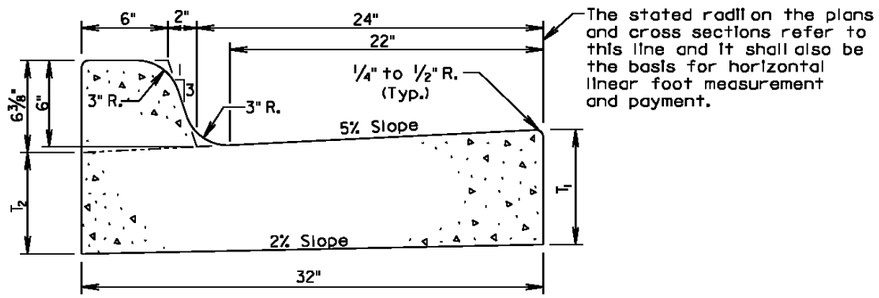

Type	T_1 (Inches)	T_2 (Inches)	Cu. Yd. Per Lin. Ft.	Lin. Ft. Per Cu. Yd.
B66	6	5 1/16	0.057	17.7
B67	7	6 1/16	0.065	15.4
B68	8	7 1/16	0.073	13.7
B68.5	8.5	7 9/16	0.077	13.0
B69	9	8 1/16	0.081	12.3
B69.5	9.5	8 9/16	0.085	11.7
B610	10	9 1/16	0.090	11.2
B610.5	10.5	9 9/16	0.094	10.7
B611	11	10 1/16	0.098	10.2
B611.5	11.5	10 9/16	0.102	9.8
B612	12	11 1/16	0.106	9.4

GENERAL NOTES:

When concrete curb and gutter longitudinally adjoins new concrete pavement, the method of attachment shall be by one of the methods shown on Standard Plate 380.11.

See Standard Plate 650.90 for expansion and contraction joints in the curb and gutter.

September 6, 2008

Published Date: 1st Qtr. 2014	SDDOT	**TYPE B CONCRETE CURB AND GUTTER**	PLATE NUMBER 650.01
			Sheet 1 of 1

FOR BIDDING PURPOSES ONLY

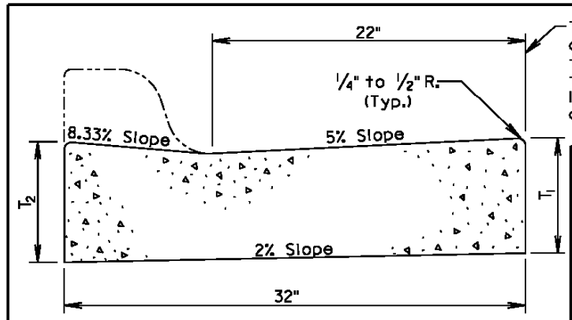

TRANSVERSE SECTION

Type	T_1 (Inches)	T_2 (Inches)	Cu. Yd. Per Lin. Ft.	Lin. Ft. Per Cu. Yd.
P6	6	6 3/8	0.047	21.2
P7	7	7 3/8	0.055	18.1
P8	8	8 3/8	0.064	15.7
P8.5	8.5	8 7/8	0.068	14.8
P9	9	9 3/8	0.072	13.9
P9.5	9.5	9 7/8	0.076	13.2
P10	10	10 3/8	0.080	12.5
P10.5	10.5	10 7/8	0.084	11.9
P11	11	11 3/8	0.088	11.3
P11.5	11.5	11 7/8	0.092	10.8
P12	12	12 3/8	0.096	10.4

Type P Concrete Gutter Limits

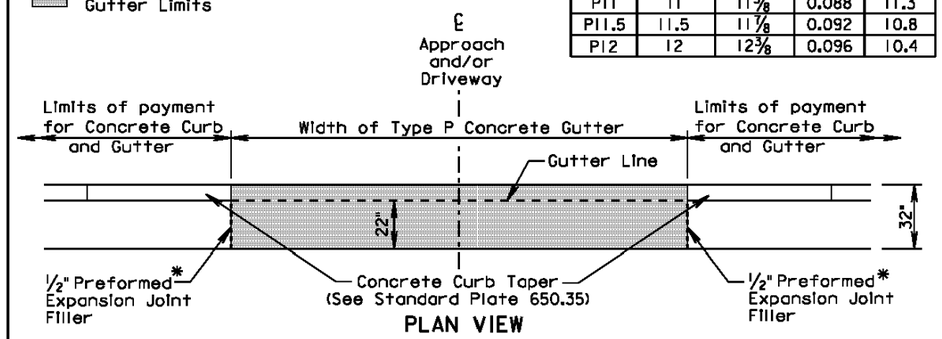

PLAN VIEW

* Joint will not be needed if concrete curb and gutter and type P concrete gutter is placed at the same time. If the 1/2" Preformed Expansion Joint Filler is provided, then the joint shall be sealed in accordance with standard plate 650.90.

GENERAL NOTES:

The concrete for the Type P Concrete Gutter shall comply with the requirements of the Standard Specifications for Class M6 Concrete.

When concrete gutter longitudinally adjoins new concrete pavement, the method of attachment shall be by one of the methods shown on Standard Plate 380.11.

Transverse contraction joints shall be constructed at 10' intervals in the concrete gutter except when concrete gutter is constructed adjacent to mainline PCC pavement. When concrete gutter is constructed adjacent to mainline PCC pavement, a transverse contraction joint shall be constructed in the concrete gutter at each mainline PCC pavement transverse contraction joint location.

When concrete gutter is placed monolithically with mainline PCC pavement, the transverse contraction joints in the concrete gutter shall be sawed and sealed the same as the transverse contraction joints in the mainline PCC pavement.

When concrete gutter is not placed monolithically with the mainline PCC pavement and when the adjacent mainline surfacing is not PCC concrete, the transverse contraction joints in the concrete gutter shall be 1 1/2 inches deep if formed in the fresh concrete using a suitable grooving tool. If a saw is used to cut the contraction joints, then the depth of the joint shall be at least 1/4 the thickness of the concrete.

September 6, 2013

Published Date: 1st Qtr. 2014	SDDOT	**TYPE P CONCRETE GUTTER**	PLATE NUMBER 650.30
			Sheet 1 of 1

Prepared By:
F M G, Inc.
3700 Sturgis Road
Rapid City, SD 57702-0317
(605) 342-4105 FAX (605) 342-4222
www.fmgengineering.com

Prepared For:
Public Works Department
Engineering Services

Scale: NOT TO SCALE	
Designed By: JAP/JF/RS	Drawn By: JRK
Design Date: SEPT 2013	Print Date: FEB 2014
Internal Job No: 110155	
Surveyed By: DOT / FMG	Survey Date: 8/04-7/13
SDDOT Project No. P 0044(149)40	

JACKSON BOULEVARD UTILITIES
CHAPEL LANE TO RAPID CREEK

SSW10-1837 / CIP 50177 / PCN X02U

Sheet Title: DETAILS

Sheet: B37 of B51

I:\Civil 3D Working Folder\110155 Jackson Blvd. PH 2\Production Drawings\1837DETAILS.dwg, B37, 4/16/2014 8:15:18 AM

FOR BIDDING PURPOSES ONLY

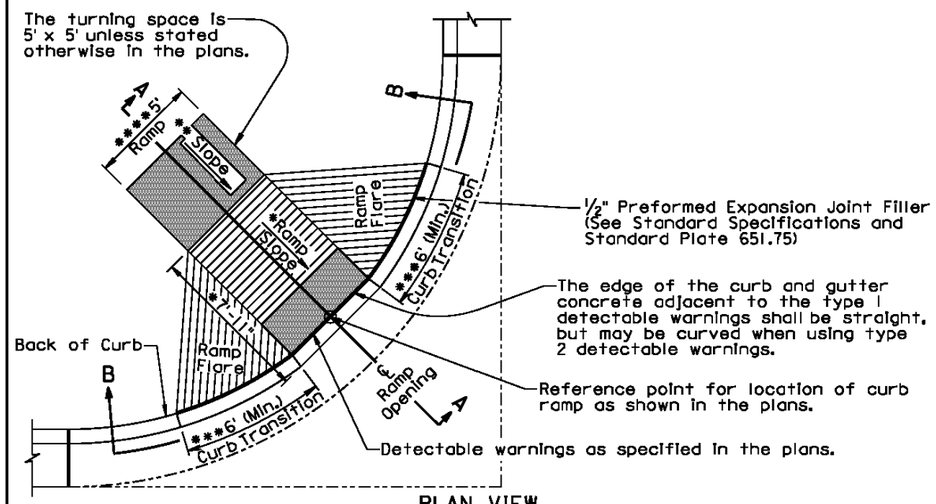

PLAN VIEW
(With 6'+ Curb Transition)

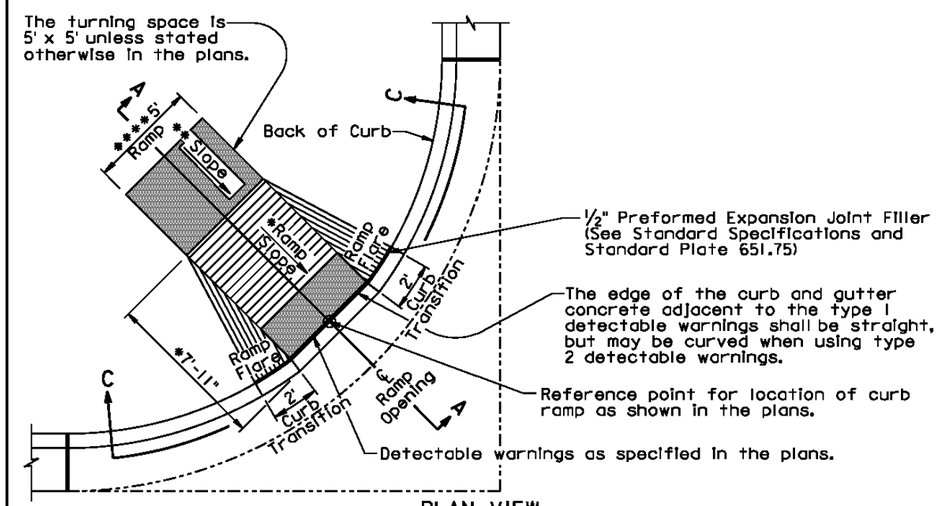

PLAN VIEW
(With 2' Curb Transition)

September 6, 2013

Published Date: 1st Qtr. 2014	SDDOT	TYPE 1 CURB RAMP (PERPENDICULAR CURB RAMP)	PLATE NUMBER 651.01
			Sheet 1 of 3

The ramp slope shall be 12:1 (8.3%) maximum. The ramp length shall not exceed 15' unless stated otherwise in the plans. Ramp slopes are designed at 12:1 (8.3%) unless stated otherwise in the plans.

* The cross slope of the ramp shall not be steeper than 50:1 (2%).

The 7'-11" dimension was computed based on a flat roadway profile, a continuous 2% theoretical slope from top of theoretical curb to the top of ramp, and a 6" high curb. The dimension shall be adjusted based on the curb type shown in the plans, the roadway geometrics, and the sidewalk geometrics.

** The slope in the turning space shall not be steeper than 50:1 (2%) in any direction of pedestrian travel.

*** The curb transition shall be a minimum of 6' long, a maximum of 10' long, and the curb transition slope shall not be steeper than 10:1 (10%) unless stated otherwise in the plans.

**** The ramp width is 5' unless stated otherwise in the plans.

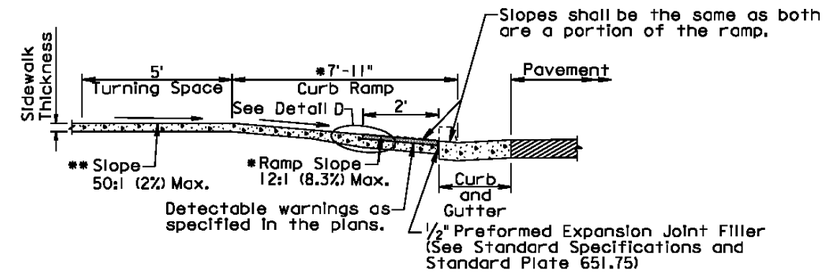

SECTION A-A

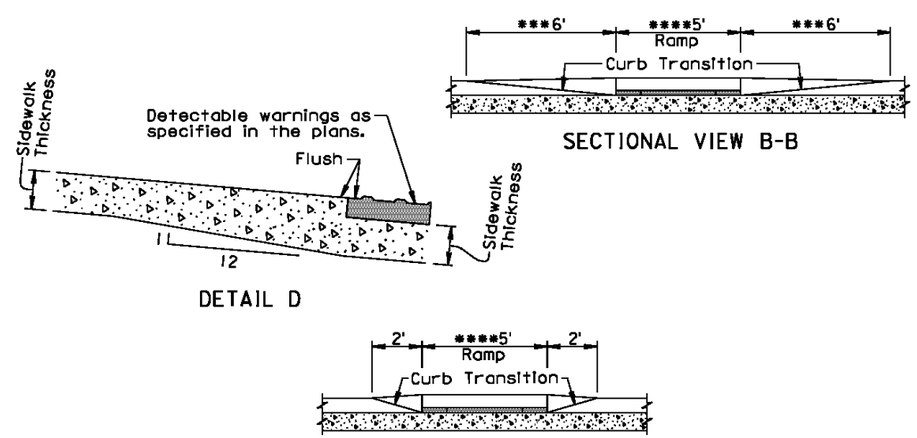

September 6, 2013

Published Date: 1st Qtr. 2014	SDDOT	TYPE 1 CURB RAMP (PERPENDICULAR CURB RAMP)	PLATE NUMBER 651.01
			Sheet 2 of 3

I:\Civil 3D Working Folder\110155 Jackson Blvd. PH 2\Production Drawings\1837\DETAILS.dwg, B38, 4/16/2014 8:15:53 AM

Prepared By:

F M G, Inc.
3700 Sturgis Road
Rapid City, SD 57702-0317
(605) 342-4105 FAX (605) 342-4222
www.fmgengineering.com

Prepared For:
Public Works Department
Engineering Services

Scale: NOT TO SCALE	
Designed By: JAP/JF/RS	Drawn By: JRK
Design Date: SEPT 2013	Print Date: FEB 2014
Internal Job No: 110155	
Surveyed By: DOT / FMG	Survey Date: 8/04-7/13
SDDOT Project No. P 0044(149)40	

JACKSON BOULEVARD UTILITIES
CHAPEL LANE TO RAPID CREEK

SSW10-1837 / CIP 50177 / PCN X02U

Sheet Title: DETAILS

Sheet: B38 of B51

FOR BIDDING PURPOSES ONLY

GENERAL NOTES:

For illustrative purpose only, type I detectable warnings are shown in the drawings.

For illustrative purpose only, PCC fillet sections are shown in the drawings. The curb ramp depicted on this standard plate may be used with a PCC fillet section, with curved curb and gutter, or with straight curb and gutter.

For illustrative purpose only, the curb ramp location is shown at the center of a PCC fillet section. The curb ramp shall be placed at the location stated in the plans.

Sidewalk shall not be placed adjacent to the ramp flares when a 2' curb transition is used unless shown otherwise in the plans.

* Care shall be taken to ensure a uniform grade on the ramp, free of sags and short grade changes.

Surface texture of the ramp shall be obtained by coarse brooming transverse to the slope of the ramp.

The normal gutter line profile shall be maintained through the area of the ramp.

Joints shall be sawed or tooled into the concrete adjacent to the detectable warnings to alleviate possible corner cracking.

Care shall be taken to ensure that the surface of the detectable warnings are clean and maintains a uniform color.

The detectectable warnings shall be cut as necessary to fit the plan specified limits of the detectable warnings. Cost for cutting the detectable warnings shall be incidental to the corresponding detectable warning bid item.

There will be no separate payment for curb ramps. The curb ramp shall be measured and paid for at the contract unit price per square foot for the corresponding concrete sidewalk bid item. The square foot area of the detectable warnings shall be included in the measured and paid for quantity of sidewalk.

The curb transitions and ramp opening shall be measured and paid for at the contract unit price per foot for the corresponding curb and gutter bid item when curb and gutter is used. The curb transitions and ramp opening shall be measured and paid for at the contract unit price per square yard for the corresponding PCC fillet section bid item when a PCC fillet section is used.

The type I detectable warnings shall be measured to the nearest square foot. All costs for furnishing and installing the type I detectable warnings including labor, equipment, materials, and incidentals shall be paid for at the contract unit price per square foot for "Type I Detectable Warnings".

The type 2 detectable warnings shall be measured to the nearest square foot. All costs for furnishing and installing the type 2 detectable warnings including labor, equipment, and materials, including adhesive, necessary sealant or grout, and necessary grinding shall be paid for at the contract unit price per square foot for "Type 2 Detectable Warnings".

September 6, 2013

Published Date: 1st Qtr. 2014	SDDOT	TYPE 1 CURB RAMP (PERPENDICULAR CURB RAMP)	PLATE NUMBER 651.01
			Sheet 3 of 3

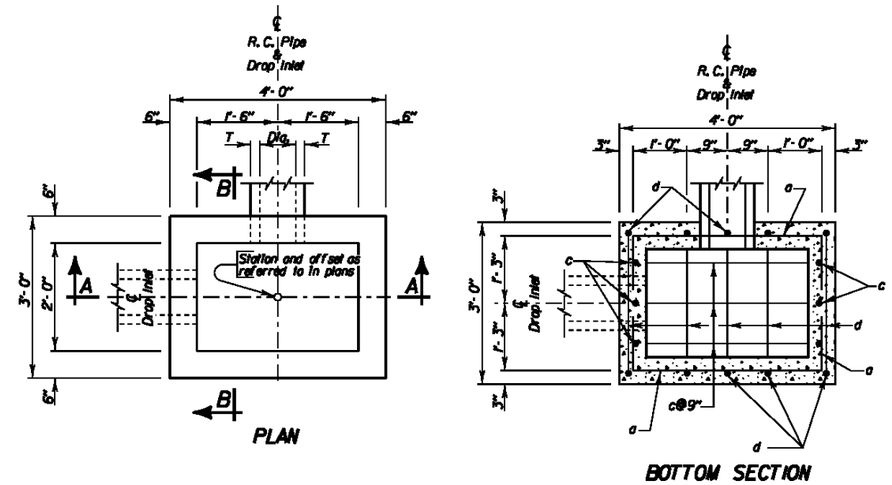

ESTIMATED QUANTITIES			
ITEM	UNIT	CONSTANT QUANTITY	VARIABLE QUANTITY
✳ Class M6 Concrete	Cu'd	0.26	0.22H
Reinforcing Steel	Lb	37	20.04H
Frame and Grate Assembly	Each	1	———

PIPE DISPLACEMENT REDUCTIONS		
R.C. Pipe Diameter Inches	T Inches	Class M6 Concrete Cu'd
12	2	0.03
15	2 1/4	0.04
18	2 1/2	0.05
24	3	0.09
27	3 1/4	0.11

DROP INLETS FOR 12" TO 27" DIAMETER PIPE

GENERAL NOTES:

✳ Reduce total quantities of concrete by the amount of concrete displaced by the pipe. The total quantity of concrete shall be computed to the nearest hundredth of a cubic yard. The total quantity of reinforcing steel shall be computed to the nearest pound.

Drop inlets shown may be modified by the addition or omission of connecting pipes as shown on the layouts.

Reinforcing steel shall conform to ASTM A615 Grade 60. The b bars shall be lapped 12 inches. Cut and bend reinforcing steel as required to place pipe(s) through the drop inlet wall.

Pipe shall not enter through a corner of the drop inlet.

Use 2" clear cover on all reinforcing steel unless otherwise noted.

Precasting of reinforced drop inlets will be permissible. Prior to precasting, the Contractor shall submit details to the Engineer for approval.

Maximum pipe diameter shall not exceed 18 inches on the 3 foot wide side and shall not exceed 27 inches on the 4 foot wide side of the drop inlet.

The dimension of H is in feet.

December 23, 2009

Published Date: 1st Qtr. 2014	SDDOT	2'X 3' TYPE B REINFORCED CONCRETE DROP INLET	PLATE NUMBER 670.01
			Sheet 1 of 2

Prepared By:
F M G, Inc.
3700 Sturgis Road
Rapid City, SD 57702-0317
(605) 342-4105 FAX (605) 342-4222
www.fmgengineering.com

Prepared For:
Public Works Department
Rapid City, South Dakota
Engineering Services

Scale: NOT TO SCALE	
Designed By: JAP/JF/RS	Drawn By: JRK
Design Date: SEPT 2013	Print Date: FEB 2014
Internal Job No: 110155	
Surveyed By: DOT / FMG	Survey Date: 8/04-7/13
SDDOT Project No. P 0044(149)40	

JACKSON BOULEVARD UTILITIES
CHAPEL LANE TO RAPID CREEK

SSW10-1837 / CIP 50177 / PCN X02U

Sheet Title: DETAILS

Sheet: B39 of B51

I:\Civil 3D Working Folder\110155 Jackson Blvd. PH 2\Production Drawings\1837DETAILS.dwg, B39, 4/16/2014 8:16:06 AM

FOR BIDDING PURPOSES ONLY

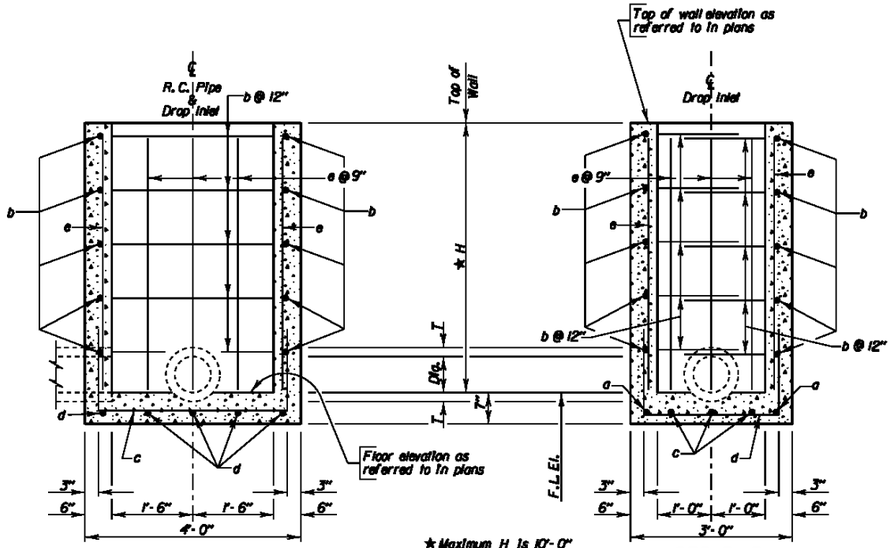

SEC. A-A

★ Maximum H is 10'-0"

SEC. B-B

DROP INLETS FOR 12" TO 27" DIAMETER PIPE

REINFORCING SCHEDULE

MK.	No.	Size	Length	Type
a	2	4	5'-6"	17
b	2H	4	7'-0"	17
c	3	4	6'-6"	17
d	5	4	5'-6"	17
e	16	4	H - 2"	Str.

Bending Details

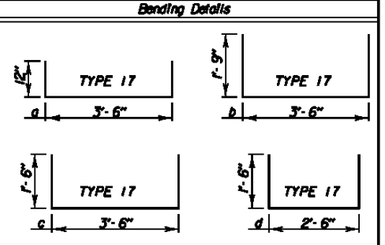

NOTE:
All dimensions are out to out of bars.

December 23, 2009

Published Date: 1st Qtr. 2014

SDDOT

2'X 3' TYPE B REINFORCED CONCRETE DROP INLET

PLATE NUMBER 670.01

Sheet 2 of 2

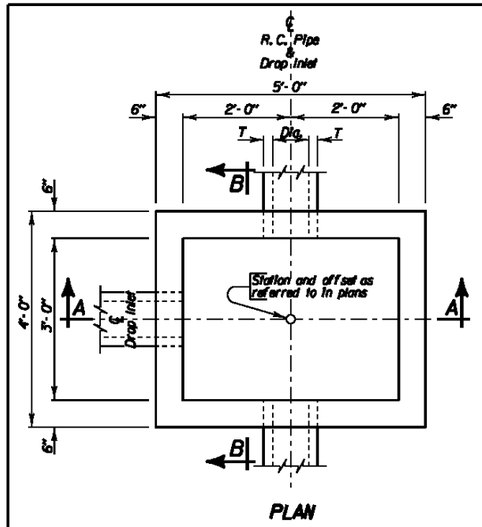

PLAN

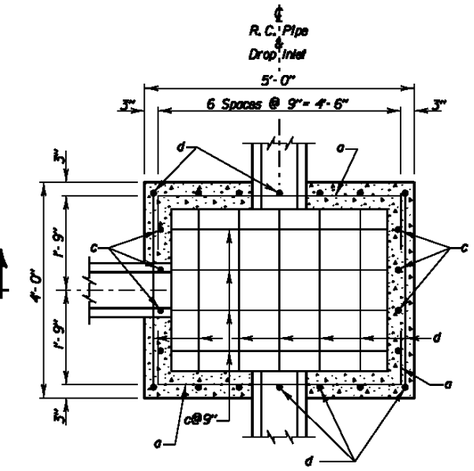

BOTTOM SECTION

PIPE DISPLACEMENT REDUCTIONS

R.C. Pipe Diameter Inches	T Inches	Class M6 Concrete Cu'd
12	2	0.03
15	2 1/4	0.04
18	2 1/2	0.05
24	3	0.09
30	3 1/2	0.14
36	4	0.20

ESTIMATED QUANTITIES

ITEM	UNIT	CONSTANT QUANTITY	VARIABLE QUANTITY
✳ Class M6 Concrete	Cu'd	0.43	0.29H
Reinforcing Steel	Lb	57	26.72H
Frame and Grate	Each	1	———

DROP INLETS FOR 12" TO 36" DIAMETER PIPE

GENERAL NOTES:

✳ Reduce total quantities of concrete by the amount of concrete displaced by the pipe. The total quantity of concrete shall be computed to the nearest hundredth of a cubic yard. The total quantity of reinforcing steel shall be computed to the nearest pound.

Drop inlets shown may be modified by the addition or omission of connecting pipes as shown on the layouts.

Reinforcing steel shall conform to ASTM A615 Grade 60. The b bars shall be lapped 12 inches. Cut and bend reinforcing steel as required to place pipe(s) through the drop inlet wall.

Pipe shall not enter through a corner of the drop inlet.

Use 2" clear cover on all reinforcing steel unless otherwise noted.

Precasting of reinforced drop inlets will be permissible. Prior to precasting, the Contractor shall submit details to the Engineer for approval.

Maximum pipe diameter shall not exceed 27 inches on the 4 foot wide side and shall not exceed 36 inches on the 5 foot wide side of the drop inlet.

The dimension of H is in feet.

December 23, 2009

Published Date: 1st Qtr. 2014

SDDOT

3'X 4' TYPE C REINFORCED CONCRETE DROP INLET

PLATE NUMBER 670.10

Sheet 1 of 2

Prepared By:
F M G, Inc.
3700 Sturgis Road
Rapid City, SD 57702-0317
(605) 342-4105 FAX (605) 342-4222
www.fmgengineering.com

Prepared For:
Public Works Department
Rapid City, Incorporated 1883, South Dakota
Engineering Services

Scale: NOT TO SCALE	
Designed By: JAP/JF/RS	Drawn By: JRK
Design Date: SEPT 2013	Print Date: FEB 2014
Internal Job No: 110155	
Surveyed By: DOT / FMG	Survey Date: 8/04-7/13
SDDOT Project No. P 0044(149)40	

JACKSON BOULEVARD UTILITIES
CHAPEL LANE TO RAPID CREEK

SSW10-1837 / CIP 50177 / PCN X02U

Sheet Title: DETAILS

Sheet: B40 of B51

I:\Civil 3D Working Folder\110155 Jackson Blvd. PH 2\Production Drawings\1837DETAILS.dwg, B40, 4/16/2014 8:16:20 AM

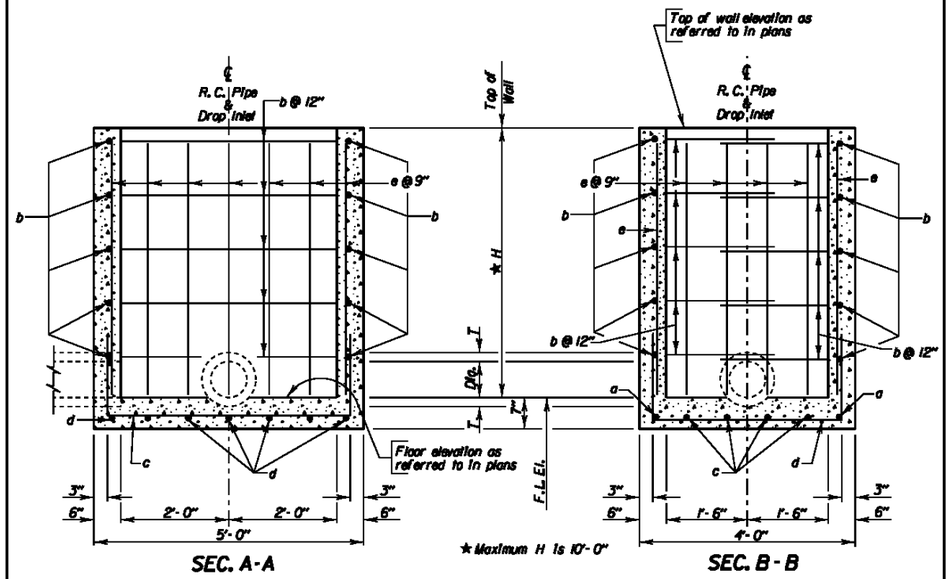

DROP INLETS FOR 12" TO 36" DIAMETER PIPE

REINFORCING SCHEDULE

Mk.	No.	Size	Length	Type	Bending Details
a	2	4	6'-6"	17	
b	2H	4	9'-0"	17	
c	4	4	7'-6"	17	
d	7	4	6'-6"	17	
e	22	4	H - 2"	Str.	

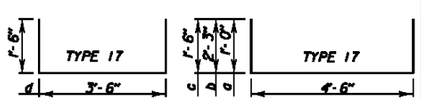

NOTE: All dimensions are out to out of bars.

December 23, 2009

Published Date: 1st Qtr. 2014

SDDOT

3'X 4' TYPE C
REINFORCED CONCRETE DROP INLET

PLATE NUMBER
670.10

Sheet 2 of 2

FOR BIDDING PURPOSES ONLY

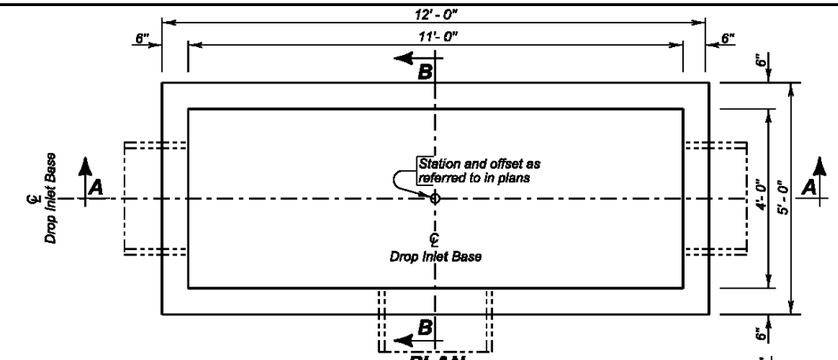

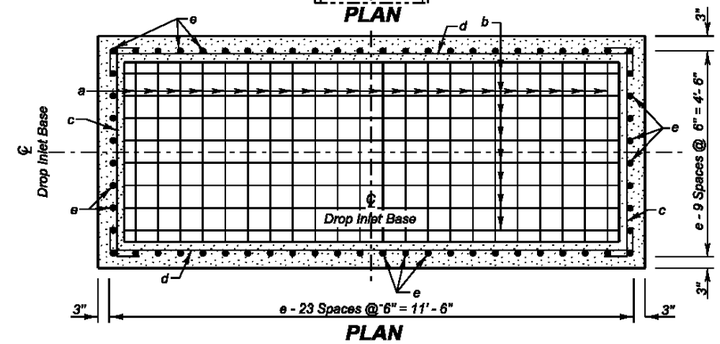

SPECIFICATIONS:

1. Design Specifications: AASHTO LRFD Bridge Design Specifications 2012 Edition.
2. Construction Specifications: South Dakota Standard Specifications for Roads and Bridges, 2004 Edition and required Provisions, Supplemental Specifications and/or Special Provisions.

GENERAL NOTES:

1. Design Live Load: HL-93 loading. No construction loading in excess of legal load was considered.
2. Base is intended for use with a Precast Concrete Type S Drop Inlet Lid, Standard Plate 670.40. Base may be precast. If precast base used, and details differ from that shown, the precast base must be on the current approved list. The current approved list is available through proper channels from the SDDOT Office of Bridge Design.
3. To qualify for addition to the approved list, submit a checked design, by South Dakota Registered Professional Engineers and shop plans to the Office of Bridge Design for approval. Design shall be in accordance with the current edition of the AASHTO LRFD Bridge Design Specifications.
4. ✳ Reduce total quantities of concrete by the amount of concrete displaced by the pipe. The total quantity of concrete shall be computed to the nearest hundredth of a cubic yard. The total quantity of reinforcing steel shall be computed to the nearest pound.
5. Inlets shown may be modified by the addition or omission of connecting pipes as shown on the layouts. Connecting pipes shall not enter the inlet through the corners.
6. Maximum R.C.P. diameter shall not exceed 36 inches (30 inches for R.C. Arch) on the 4-foot wide side of the Drop Inlet.
7. Reinforcing steel shall conform to ASTM A615 Grade 60. Cut and bend reinforcing steel as required to place pipe(s) through the inlet wall.
8. Use 1 inch clear cover on all reinforcing steel unless otherwise noted.
9. The dimension of H is in feet. Maximum H is 8 feet.

December 23, 2012

Published Date: 1st Qtr. 2014

SDDOT

4'X 11' TYPE S DROP INLET BASE

PLATE NUMBER
670.32

Sheet 1 of 2

Prepared By:
F M G, Inc.
3700 Sturgis Road
Rapid City, SD 57702-0317
(605) 342-4105 FAX (605) 342-4222
www.fmgengineering.com

Prepared For:
Public Works Department
Rapid City, South Dakota
Engineering Services

Scale: NOT TO SCALE	
Designed By: JAP/JF/RS	Drawn By: JRK
Design Date: SEPT 2013	Print Date: FEB 2014
Internal Job No: 110155	
Surveyed By: DOT / FMG	Survey Date: 8/04-7/13
SDDOT Project No. P 0044(149)40	

JACKSON BOULEVARD UTILITIES
CHAPEL LANE TO RAPID CREEK

SSW10-1837 / CIP 50177 / PCN X02U

Sheet Title: DETAILS

Sheet: B41 of B51

I:\Civil 3D Working Folder\110155 Jackson Blvd. PH 2\Production Drawings\1837DETAILS.dwg, B41, 4/16/2014 8:16:35 AM

FOR BIDDING PURPOSES ONLY

PIPE DISPLACEMENT REDUCTIONS

	Diameter (Inches)	Wall T (Inches)	Class M6 Concrete (Cu. Yd.)
R.C.P.	12	2	0.03
	15	2 ¼	0.04
	18	2 ½	0.05
	24	3	0.09
	30	3 ½	0.14
	36	4	0.20
	42	4 ½	0.26
	48	5	0.34
	54	5 ½	0.43
	60	6	0.52
R.C. ARCH	18	2 ½	0.05
	24	3 ½	0.09
	30	4	0.14
	36	4 ½	0.19
	42	4 ½	0.24
	48	5	0.32
	54	5 ½	0.39
	60	6	0.49
	72	7	0.70
	84	8	0.93

REINFORCING SCHEDULE

Mk.	No.	Size	Length	Type	Bending Details
a	24	5	9' - 6"	17	
b	10	5	16' - 6"	17	
c	2H	4	5' - 6"	17	
d	2H	4	12' - 6"	17	
e	64	4	H - 2"	Str.	

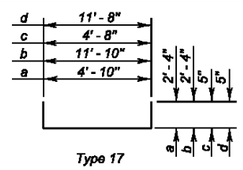

NOTE:
All dimensions are out to out of bars.

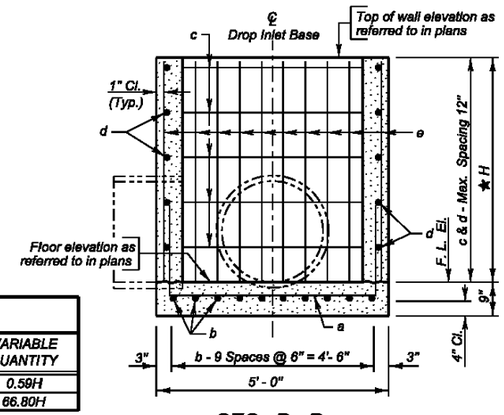

SEC. B - B

ESTIMATED QUANTITIES

ITEM	UNIT	CONSTANT QUANTITY	VARIABLE QUANTITY
✳ Class M6 Concrete	Cu. Yd.	1.67	0.59H
Reinforcing Steel	Lb.	402.77	66.80H

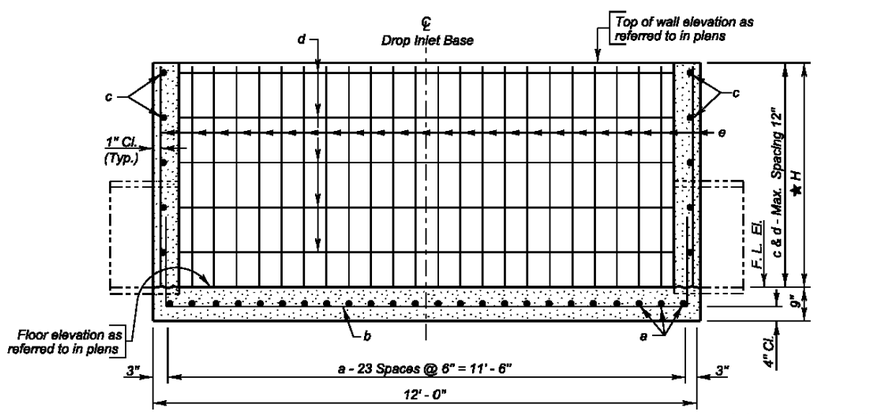

SEC. A - A

✱ Maximum H is 8' - 0"

December 23, 2012

Published Date: 1st Qtr. 2014

SDDOT

4' X 11' TYPE S DROP INLET BASE

PLATE NUMBER 670.32

Sheet 2 of 2

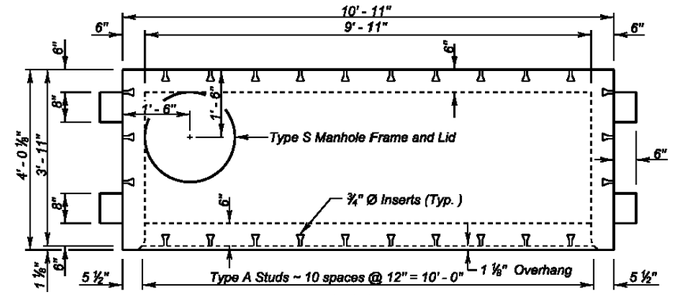

PLAN

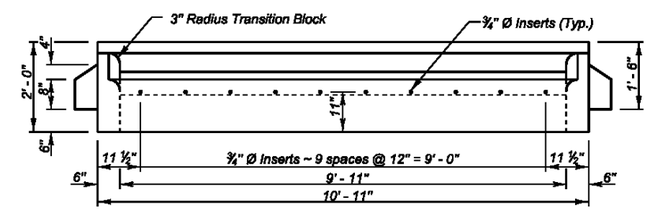

ELEVATION

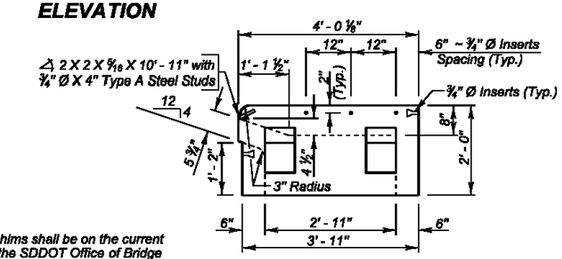

SIDE VIEW
(With Sidewalk Inserts)

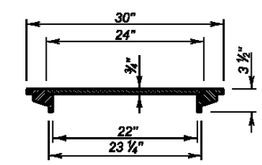

TYPICAL SECTION THROUGH TYPE S MANHOLE FRAME AND LID
(Weight 140 Lbs.)

GENERAL NOTES:

1. The Precast Concrete Type S Drop Inlet Lid and the shims shall be on the current approved list available through proper channels from the SDDOT Office of Bridge Design. To qualify for addition to the approved list, submit a checked design, done by South Dakota Registered Professional Engineers, and shop plans to the Office of Bridge Design for approval. Design shall be in accordance with the current edition of the AASHTO LRFD Bridge Design Specifications.
2. Design Live Load shall be HL - 93.
3. Concrete mix shall be as per fabricators design, however, minimum compressive strength shall not be less than 4500 psi. Type II Cement is required.
4. The Type S Manhole Frame and Lid shall conform to AASHTO M105, Class 30.
5. Structural Steel shall conform to ASTM A36. The ¾ inch diameter Headed Type A Steel Studs shall conform to Section 7 of the current edition of AWS D1. 1 Structural Steel Welding Code.
6. The ¾ inch diameter Concrete Inserts shall be galvanized or made of a corrosion resistant material. Provide ¾ inch diameter x 1' - 6" long dowels conforming to ASTM A615, Gr. 60 threaded to fit inserts with each lid.
7. All costs associated with furnishing and installing the Precast Concrete Type S Drop Inlet Lid including the type S manhole frame and lid, shims, inserts, and dowels shall be included in the contract unit price per each for " 4' x 11' Precast Concrete Type S Drop Inlet Lid ".

December 23, 2012

Published Date: 1st Qtr. 2014

SDDOT

4' X 11' PRECAST CONCRETE TYPE S DROP INLET LID

PLATE NUMBER 670.40

Sheet 1 of 1

Prepared By:
F M G, Inc.
3700 Sturgis Road
Rapid City, SD 57702-0317
(605) 342-4105 FAX (605) 342-4222
www.fmgengineering.com

Prepared For:
Public Works Department
Rapid City, South Dakota
Engineering Services

Scale: NOT TO SCALE	
Designed By: JAP/JF/RS	Drawn By: JRK
Design Date: SEPT 2013	Print Date: FEB 2014
Internal Job No: 110155	
Surveyed By: DOT / FMG	Survey Date: 8/04-7/13
SDDOT Project No. P 0044(149)40	

JACKSON BOULEVARD UTILITIES
CHAPEL LANE TO RAPID CREEK

SSW10-1837 / CIP 50177 / PCN X02U

Sheet Title: DETAILS

Sheet: B42 of B51

I:\Civil 3D Working Folder\110155 Jackson Blvd. PH 2\Production Drawings\1837DETAILS.dwg, B42, 4/16/2014 8:16:46 AM

FOR BIDDING PURPOSES ONLY

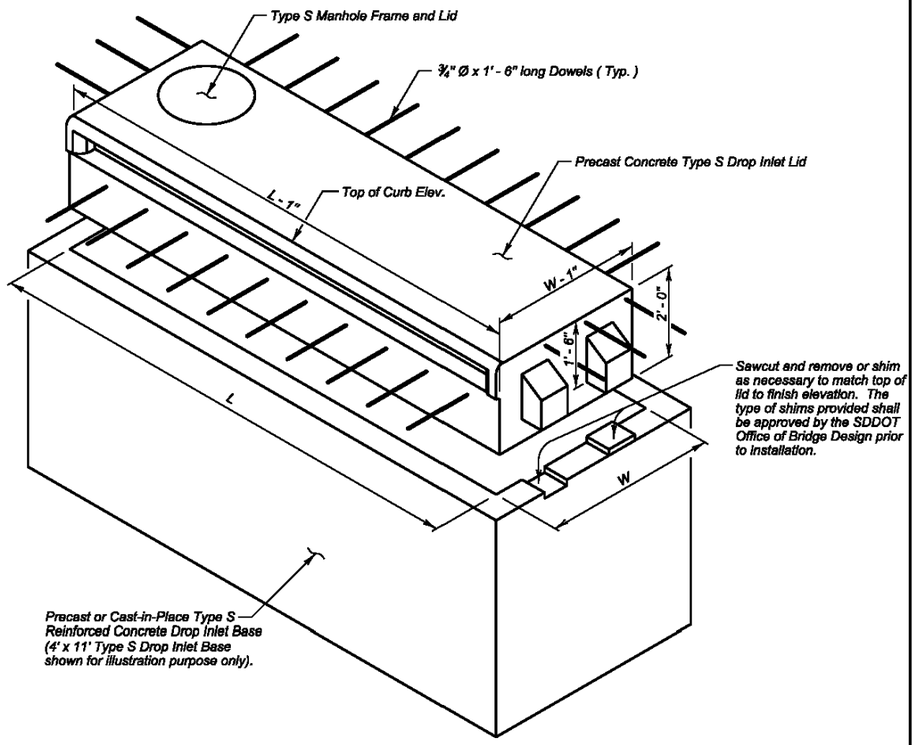

TYPE S DROP INLET

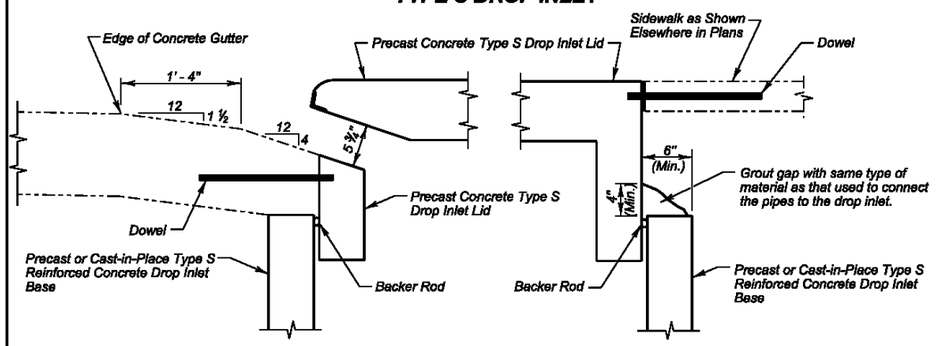

CONCRETE GUTTER DETAIL

GROUTING DETAIL
(Sides and Back, Adjacent to Sidewalk)

December 23, 2012

Published Date: 1st Qtr. 2014

SDDOT

INSTALLATION DETAILS FOR PRECAST CONCRETE TYPE S DROP INLET LID

PLATE NUMBER 670.45

Sheet 1 of 2

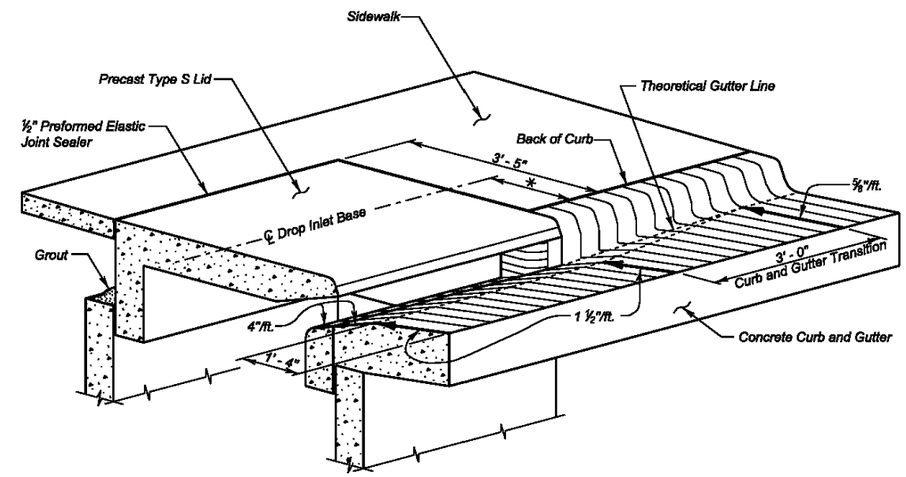

CURB AND GUTTER TRANSITION DETAILS

Drop Inlet Base Unit Size	✳ Distance
4' x 6'	1' - 5 ½"
4' x 11'	1' - 5 ½"
7' x 11'	2' - 11 ½"

GENERAL NOTES:

1. Dowels shall be used to anchor the precast concrete Type S drop inlet lid to the concrete gutter. See Standard Plate 670.38 or 670.40 as applicable. If there is sidewalk adjacent dowels shall be used to anchor the precast concrete Type S drop inlet lid to the sidewalk. If there is sidewalk adjacent to the drop inlet, the precast lid shall match the finish elevations and cross slopes of the sidewalk.
2. The sidewalk shall be steel reinforced when the sidewalk adjoins the precast lid. Refer to Standard Plate 651.70 for reinforced concrete sidewalk details.

December 23, 2012

Published Date: 1st Qtr. 2014

SDDOT

INSTALLATION DETAILS FOR PRECAST CONCRETE TYPE S DROP INLET LID

PLATE NUMBER 670.45

Sheet 2 of 2

Prepared By:

F M G, Inc.
3700 Sturgis Road
Rapid City, SD 57702-0317
(605) 342-4105 FAX (605) 342-4222
www.fmgengineering.com

Prepared For:
Public Works Department
Rapid City, South Dakota
Engineering Services

Scale: NOT TO SCALE	
Designed By: JAP/JF/RS	Drawn By: JRK
Design Date: SEPT 2013	Print Date: FEB 2014
Internal Job No: 110155	
Surveyed By: DOT / FMG	Survey Date: 8/04-7/13
SDDOT Project No. P 0044(149)40	

JACKSON BOULEVARD UTILITIES
CHAPEL LANE TO RAPID CREEK

SSW10-1837 / CIP 50177 / PCN X02U

Sheet Title: DETAILS

Sheet: B43 of B51

I:\Civil 3D Working Folder\110155 Jackson Blvd. PH 2\Production Drawings\1837DETAILS.dwg, B43, 4/16/2014 8:16:58 AM

FOR BIDDING PURPOSES ONLY

GENERAL NOTE:

Top of grate elevation shall be 0.04' below theoretical elevation of gutter.

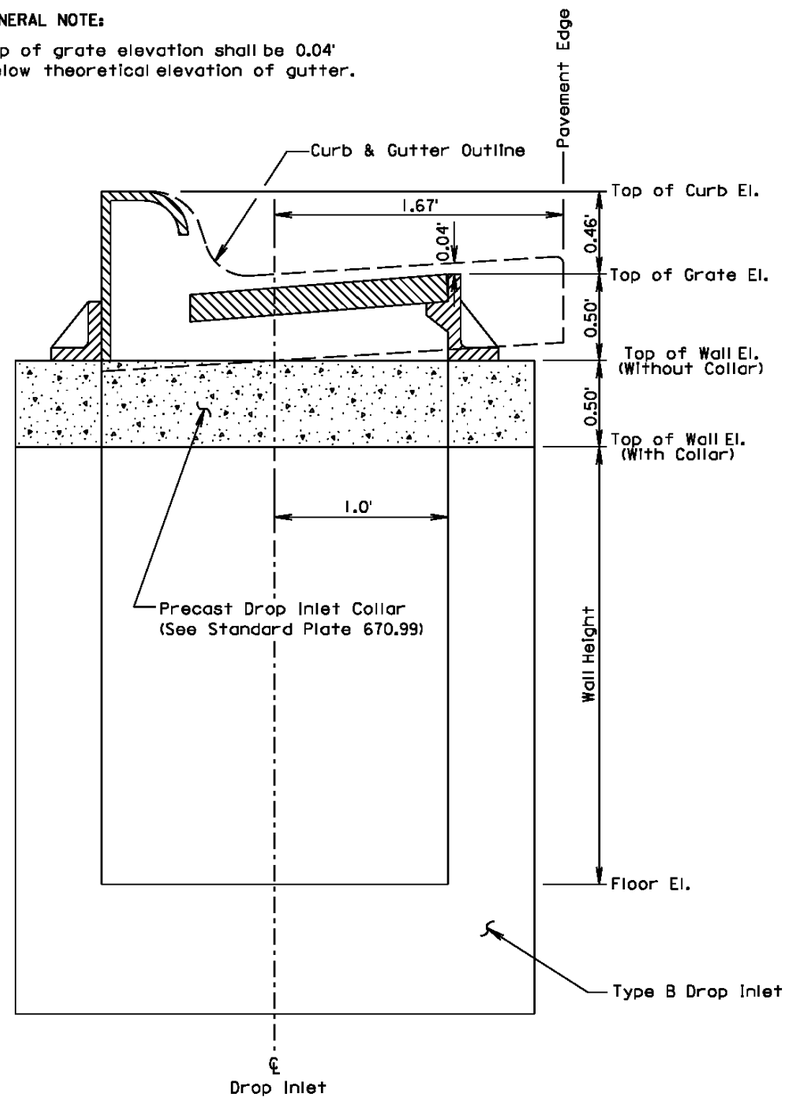

June 26, 2011

Published Date: 1st Qtr. 2014 | SDDOT | **INSTALLATION OF TYPE B DROP INLET** | PLATE NUMBER 670.75 | Sheet 1 of 1

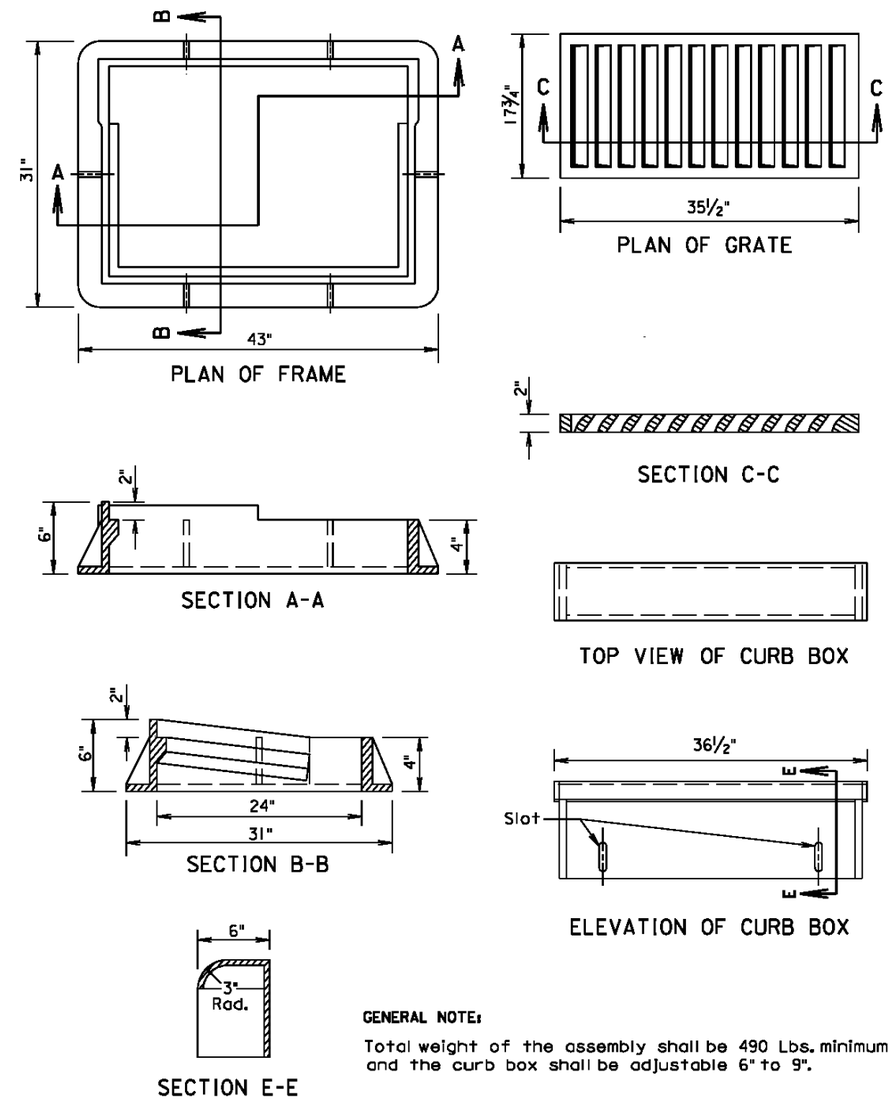

GENERAL NOTE:

Total weight of the assembly shall be 490 Lbs. minimum and the curb box shall be adjustable 6" to 9".

March 31, 2000

Published Date: 1st Qtr. 2014 | SDDOT | **TYPE B FRAME AND GRATE ASSEMBLY** | PLATE NUMBER 670.80 | Sheet 1 of 1

Prepared By: F M G, Inc.
3700 Sturgis Road
Rapid City, SD 57702-0317
(605) 342-4105 FAX (605) 342-4222
www.fmgengineering.com

Prepared For: Public Works Department, Rapid City, South Dakota, Engineering Services

Scale: NOT TO SCALE	
Designed By: JAP/JF/RS	Drawn By: JRK
Design Date: SEPT 2013	Print Date: FEB 2014
Internal Job No: 110155	
Surveyed By: DOT / FMG	Survey Date: 8/04-7/13
SDDOT Project No. P 0044(149)40	

JACKSON BOULEVARD UTILITIES
CHAPEL LANE TO RAPID CREEK

SSW10-1837 / CIP 50177 / PCN X02U

Sheet Title: DETAILS

Sheet: B44 of B51

I:\Civil 3D Working Folder\110155 Jackson Blvd. PH 2\Production Drawings\1837DETAILS.dwg, B44, 4/16/2014 8:17:10 AM

FOR BIDDING PURPOSES ONLY

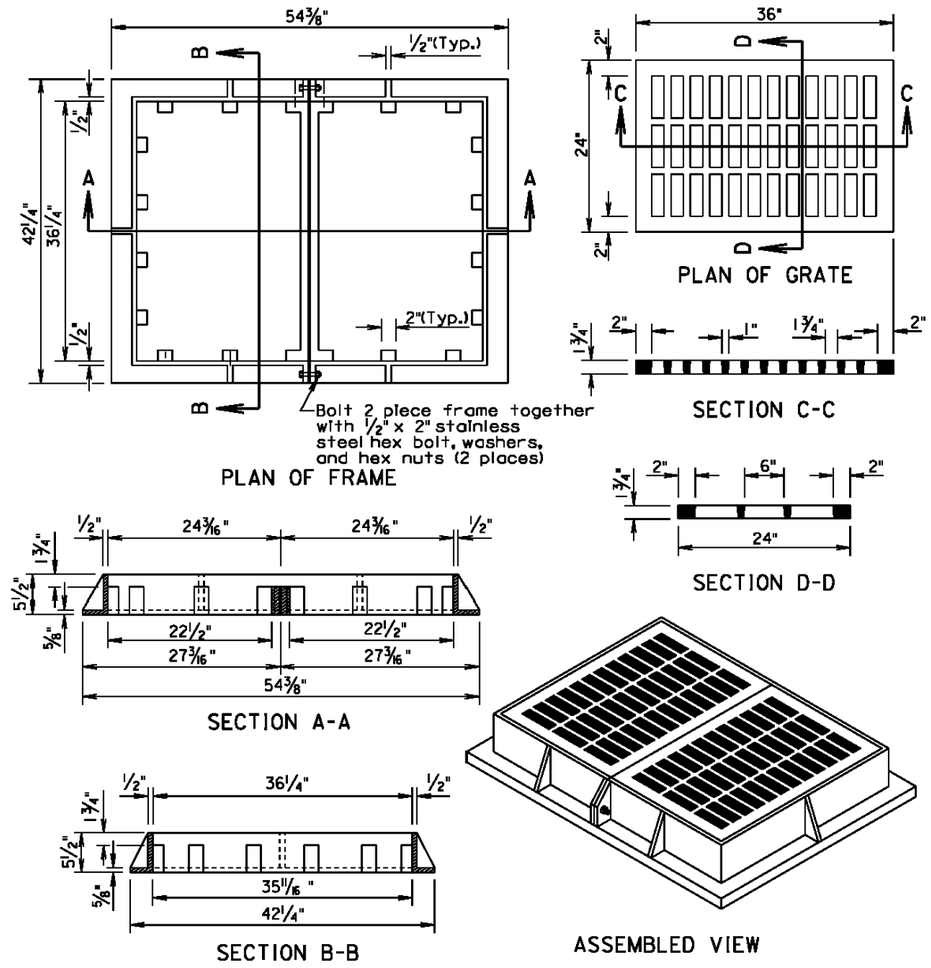

GENERAL NOTE:

The total weight of the frame and grate shall be 850 pounds minimum.

March 31, 2000

Published Date: 1st Qtr. 2014	SDDOT	TYPE C FRAME AND GRATE	PLATE NUMBER 670.82
			Sheet 1 of 1

SPECIFICATIONS

1. Design Specifications: AASHTO Specifications for Highway Bridges, 1996 Edition (Service Load).
2. Construction Specifications: South Dakota Standard Specifications for Roads and Bridges, Current Edition and required Provisions, Supplemental Specifications and/or Special Provisions as included in the Proposal.

DESIGN MIX OF CONCRETE

1. Mix shall be designed to produce a concrete having a minimum compressive strength of 4000 p.s.i. at 28 days.
2. Type II Cement is required.

GENERAL NOTES

1. Design Live Load: HS 20-44 and Alternate Loading. No construction loading in excess of legal Load was considered.
2. The design of the junction box is based on a maximum fill over the junction box of 5 feet.
3. Unit Stresses: Concrete fc = 1600 p.s.i.
   Reinforcing Steel fs = 24000 p.s.i.
4. All reinforcing steel shall conform to ASTM A615 Grade 60.
5. All exposed edges shall be chamfered 3/4".
6. Use 1" clear cover on all reinforcing steel except as shown.
7. The cost of furnishing and installing the manhole steps shall be incidental to the contract unit price per Lb. for "Reinforcing steel".
8. Reinforcing steel shall be cut and bent in field as necessary to fit pipe and manhole openings. (Pipe openings are not shown in these details.) Number, size and location of pipes entering junction box are shown elsewhere on plan sheets.
9. All pipes entering the junction box must fit between the inside faces of the walls.

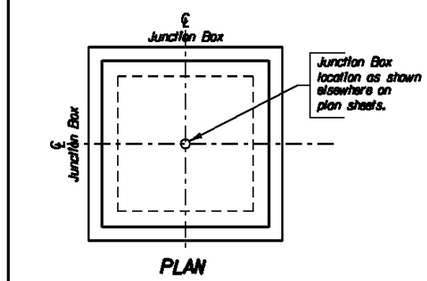

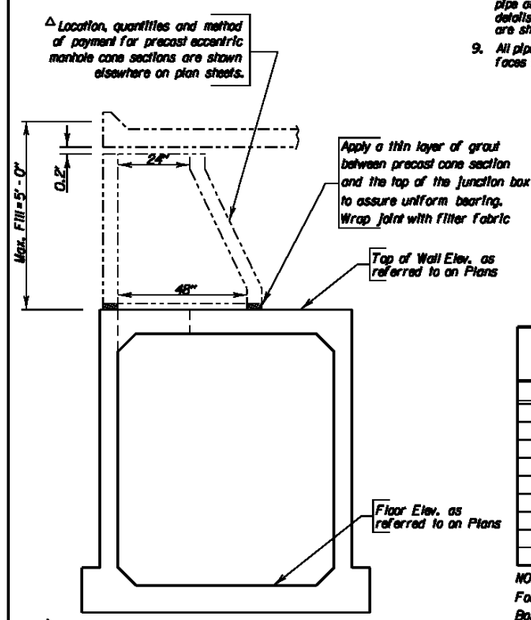

△ DETAIL OF CONNECTION BETWEEN PRECAST ECCENTRIC MANHOLE CONE SECTION AND JUNCTION BOX

ITEM	Class M6 Concrete	Reinforcing Steel
UNIT	Cu. Yd.	Lb.
H = 4' - 0"	5.53	1186
H = 4' - 6"	5.82	1215
H = 5' - 0"	6.10	1286
H = 5' - 6"	6.39	1316
H = 6' - 0"	6.67	1345
H = 6' - 6"	6.96	1416
H = 7' - 0"	7.24	1445
H = 7' - 6"	7.52	1475
H = 8' - 0"	7.81	1545

NOTE:
For informational purposes only, the estimated quantities for Junction Box height H are shown above. These quantities do not include quantity reduction for pipe openings, but do include the reduction for the 24" diameter manhole opening.

March 31, 2000

Published Date: 1st Qtr. 2014	SDDOT	6' X 6' JUNCTION BOX	PLATE NUMBER 671.02
			Sheet 1 of 3

Prepared By:

F M G, Inc.
3700 Sturgis Road
Rapid City, SD 57702-0317
(605) 342-4105 FAX (605) 342-4222
www.fmgengineering.com

Prepared For:
Public Works Department
Engineering Services

Scale: NOT TO SCALE	
Designed By: JAP/JF/RS	Drawn By: JRK
Design Date: SEPT 2013	Print Date: FEB 2014
Internal Job No: 110155	
Surveyed By: DOT / FMG	Survey Date: 8/04-7/13
SDDOT Project No. P 0044(149)40	

JACKSON BOULEVARD UTILITIES
CHAPEL LANE TO RAPID CREEK

SSW10-1837 / CIP 50177 / PCN X02U

Sheet Title: DETAILS

Sheet: B45 of B51

I:\Civil 3D Working Folder\110155 Jackson Blvd. PH 2\Production Drawings\1837DETAILS.dwg, B45, 4/16/2014 8:17:21 AM

FOR BIDDING PURPOSES ONLY

REINFORCING SCHEDULE

	Mk.	No.	Size	Length	Type
H = 4'-0"	Φ a1	1	6	9'-0"	T3
	Φ a2	4	-	——	-
	h14	32	4	5'-9"	17A
	k14	56	4	8'-9"	17
	m2	22	6	7'-9"	Str.
	n2	22	6	6'-9"	Str.
	p2	56	4	6'-0"	Str.
	a1	8	4	3'-6"	17A
H = 4'-6"	Φ a1	1	6	9'-0"	T3
	Φ a2	4	-	——	-
	h15	32	4	6'-3"	17A
	k15	56	4	9'-3"	17
	m2	22	6	7'-9"	Str.
	n2	22	6	6'-9"	Str.
	p2	56	4	6'-0"	Str.
	a1	8	4	3'-6"	17A
H = 5'-0"	Φ a1	1	6	9'-0"	T3
	Φ a2	5	-	——	-
	h16	32	4	6'-9"	17A
	k16	56	4	9'-9"	17
	m2	22	6	7'-9"	Str.
	n2	22	6	6'-9"	Str.
	p2	64	4	6'-0"	Str.
	a1	12	4	3'-6"	17A
H = 5'-6"	Φ a1	1	6	9'-0"	T3
	Φ a2	5	-	——	-
	h17	32	4	7'-3"	17A
	k17	56	4	10'-3"	17
	m2	22	6	7'-9"	Str.
	n2	22	6	6'-9"	Str.
	p2	64	4	6'-0"	Str.
	a1	12	4	3'-6"	17A
H = 6'-0"	Φ a1	1	6	9'-0"	T3
	Φ a2	6	-	——	-
	h18	32	4	7'-9"	17A
	k18	56	4	10'-9"	17
	m2	22	6	7'-9"	Str.
	n2	22	6	6'-9"	Str.
	p2	64	4	6'-0"	Str.
	a1	12	4	3'-6"	17A
H = 6'-6"	Φ a1	1	6	9'-0"	T3
	Φ a2	6	-	——	-
	h19	32	4	8'-3"	17A
	k19	56	4	11'-3"	17
	m2	22	6	7'-9"	Str.
	n2	22	6	6'-9"	Str.
	p2	72	4	6'-0"	Str.
	a1	16	4	3'-6"	17A
H = 7'-0"	Φ a1	1	6	9'-0"	T3
	Φ a2	7	-	——	-
	h20	32	4	8'-9"	17A
	k20	56	4	11'-9"	17
	m2	22	6	7'-9"	Str.
	n2	22	6	6'-9"	Str.
	p2	72	4	6'-0"	Str.
	a1	16	4	3'-6"	17A

Bending Details

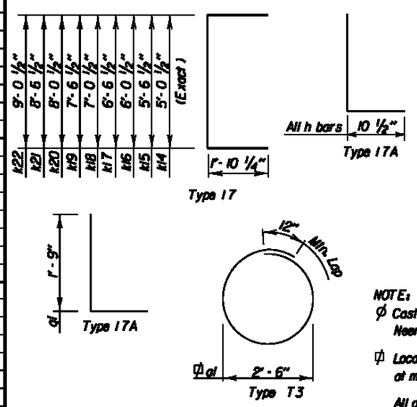

	Mk.	No.	Size	Length	Type
H = 7'-6"	Φ a1	1	6	9'-0"	T3
	Φ a2	7	-	——	-
	h21	32	4	9'-3"	17A
	k21	56	4	12'-3"	17
	m2	22	6	7'-9"	Str.
	n2	22	6	6'-9"	Str.
	p2	72	4	6'-0"	Str.
	a1	16	4	3'-6"	17A
H = 8'-0"	Φ a1	1	6	9'-0"	T3
	Φ a2	8	-	——	-
	h22	32	4	9'-9"	17A
	k22	56	4	12'-9"	17
	m2	22	6	7'-9"	Str.
	n2	22	6	6'-9"	Str.
	p2	80	4	6'-0"	Str.
	a1	20	4	3'-6"	17A

NOTE:

Φ Cast Iron Manhole Steps (R - 1980 - C) from Neenah Foundry or equivalent.

Φ Locate in center of top slab with 3" clearance at manhole opening.

All dimensions are out to out of bars.

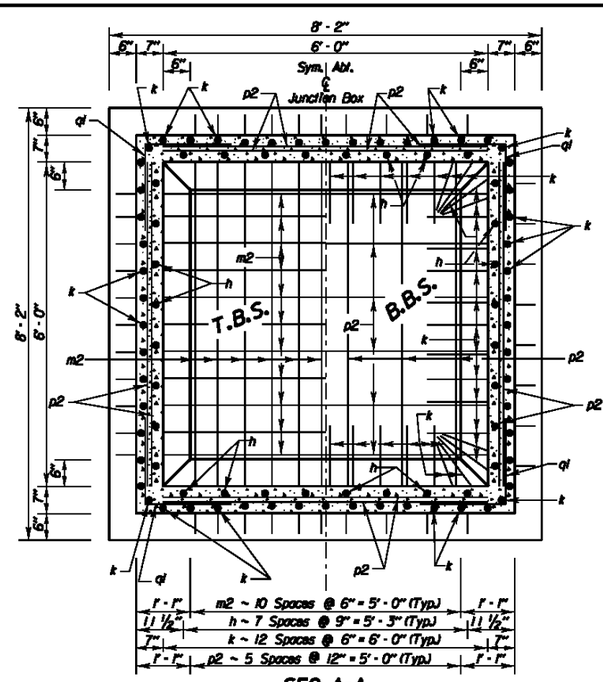

SEC. A-A

March 31, 2000

Published Date: 1st Qtr. 2014

SDDOT

6'X 6' JUNCTION BOX

PLATE NUMBER 671.02

Sheet 2 of 3

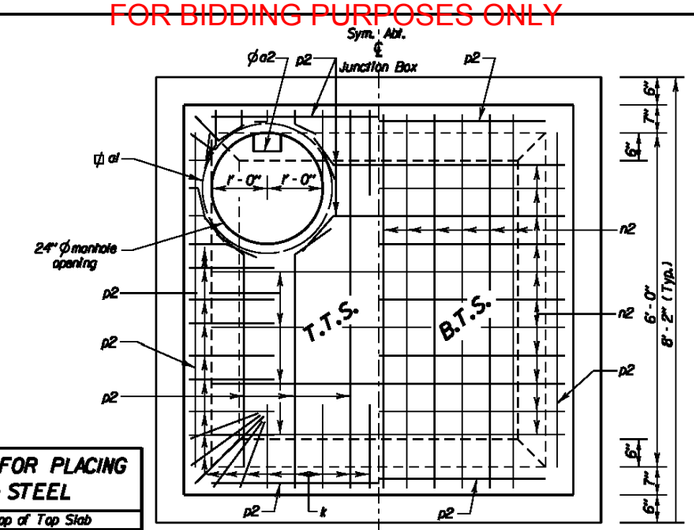

PLAN

LEGEND FOR PLACING RE-STEEL
T. T. S. - Top of Top Slab
B. T. S. - Bottom of Top Slab
T. B. S. - Top of Bottom Slab
B. B. S. - Bottom of Bottom Slab
O. F. W. - Outside Face of Wall
I. F. W. - Inside Face of Wall

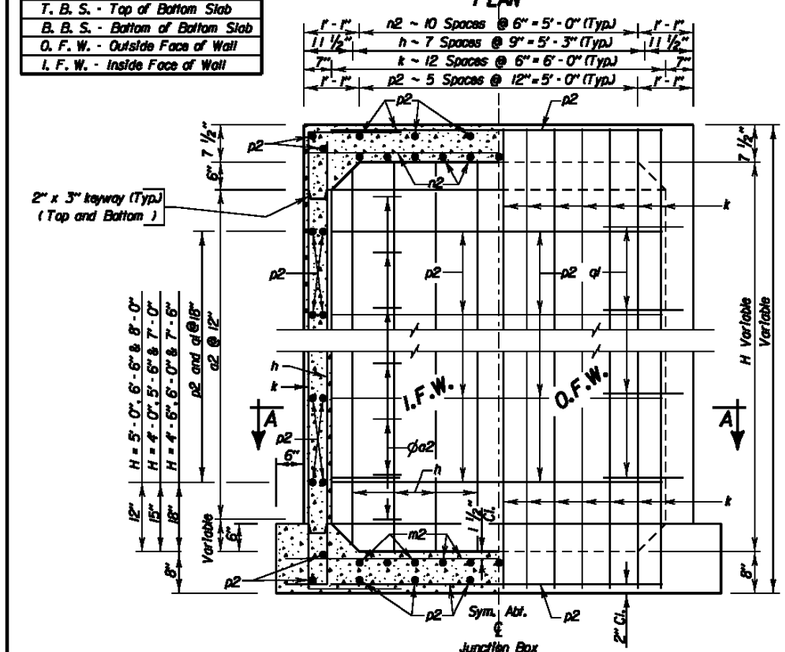

ELEVATION

March 31, 2000

Published Date: 1st Qtr. 2014

SDDOT

6'X 6' JUNCTION BOX

PLATE NUMBER 671.02

Sheet 3 of 3

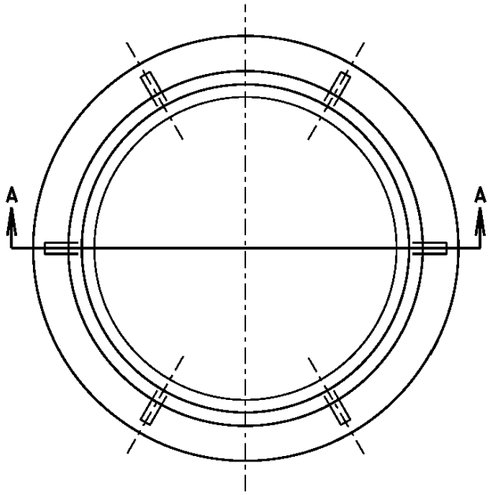

PLAN OF FRAME

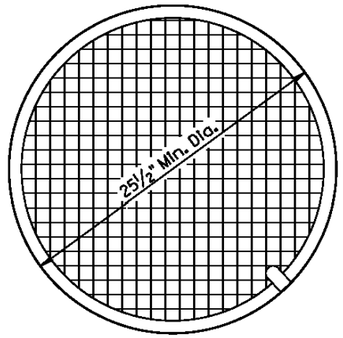

PLAN OF LID

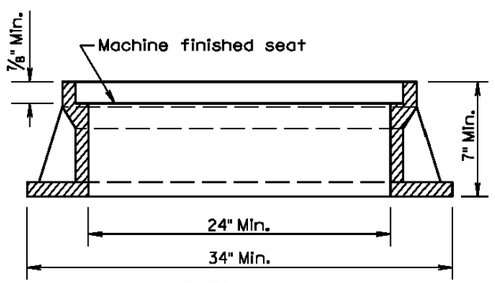

SECTION A-A

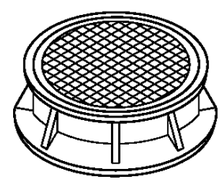

ASSEMBLED VIEW

TYPE	HEIGHT	MIN. WEIGHT
A7	7"	400Lbs.
A8	8"	440Lbs.
A9	9"	470Lbs.
A10	10"	480Lbs.

GENERAL NOTE:

Geometric pattern on top of lid other than that shown shall be approved by the Engineer.

March 31, 2000

Published Date: 1st Qtr. 2014

SDDOT

TYPE A MANHOLE FRAME AND LID

PLATE NUMBER 671J0

Sheet 1 of 1

FOR BIDDING PURPOSES ONLY

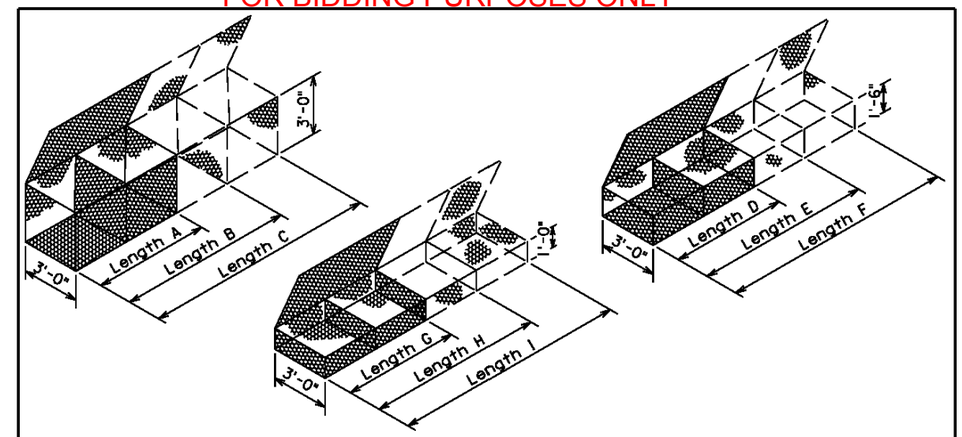

GABION DETAILS

STANDARD SIZES

SIZE	LENGTH	WIDTH	HEIGHT	NUMBER OF CELLS	CAPACITY, Cu. Yd.
A	6'-0"	3'-0"	3'-0"	2	2.0
B	9'-0"	3'-0"	3'-0"	3	3.0
C	12'-0"	3'-0"	3'-0"	4	4.0
D	6'-0"	3'-0"	1'-6"	2	1.0
E	9'-0"	3'-0"	1'-6"	3	1.5
F	12'-0"	3'-0"	1'-6"	4	2.0
G	6'-0"	3'-0"	1'-0"	2	0.7
H	9'-0"	3'-0"	1'-0"	3	1.0
I	12'-0"	3'-0"	1'-0"	4	1.3

Above Dimensions subject to mill tolerances.

GENERAL NOTES:

Lacing and internal connecting wire shall be 0.0866 inch diameter steel wire ASTM A641 Class 3 soft temper measured after galvanizing and for PVC coated gabions shall be 0.0866 inch diameter steel wire measured after galvanizing but before PVC coating.

The lacing procedure is as follows:

1. Cut a length of lacing wire approximately 1 ½ times the distance to be laced but not exceeding 5 feet.
2. Secure the wire terminal at the corner by looping and twisting.
3. Proceed lacing with alternating single and double loops at a spacing not to exceed 6 inches.
4. Securely fasten the other lacing wire terminal.

Wire lacing or interlocking type fasteners shall be used for gabion assembly and final construction of gabion structures. Interlocking fasteners for galvanized gabions shall be high tensile 0.120 inch diameter galvanized steel wire measured after galvanizing. The galvanizing shall conform to ASTM A641-92 Class 3 coating. Fasteners shall also be in accordance with ASTM A764, Class II, Type III.

Interlocking fasteners for PVC coated gabions shall be high tensile 0.120 inch diameter stainless steel wire conforming to ASTM A313, Type 302, Class I. The spacing of the interlocking fasteners during all phases of assembly and construction shall not exceed 6 inches.
All fasteners shall be placed where the mesh weaves around the selvage wire at the vertical and horizontal joints.

June 26, 2001

Published Date: 1st Qtr. 2014

SDDOT

BANK AND CHANNEL PROTECTION GABIONS

PLATE NUMBER 720.01

Sheet 1 of 1

Prepared By:

F M G, Inc.
3700 Sturgis Road
Rapid City, SD 57702-0317
(605) 342-4105 FAX (605) 342-4222
www.fmgengineering.com

Prepared For:
Public Works Department
Rapid City, South Dakota, Incorporated 1882
Engineering Services

Scale: NOT TO SCALE	
Designed By: JAP/JF/RS	Drawn By: JRK
Design Date: SEPT 2013	Print Date: FEB 2014
Internal Job No: 110155	
Surveyed By: DOT / FMG	Survey Date: 8/04-7/13
SDDOT Project No. P 0044(149)40	

JACKSON BOULEVARD UTILITIES
CHAPEL LANE TO RAPID CREEK

SSW10-1837 / CIP 50177 / PCN X02U

Sheet Title: DETAILS

Sheet: B47 of B51

I:\Civil 3D Working Folder\110155 Jackson Blvd. PH 2\Production Drawings\1837DETAILS.dwg, B47, 4/16/2014 8:17:44 AM

FOR BIDDING PURPOSES ONLY

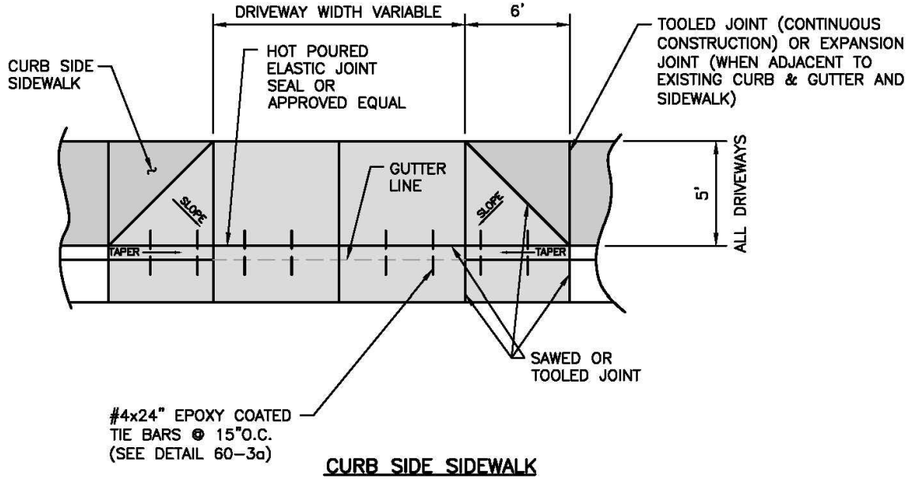

CURB SIDE SIDEWALK

NOTE:
MINIMUM DEPTH OF GRANULAR MATERIAL PLACED UNDER DRIVEWAY APPROACH SHALL BE 4".

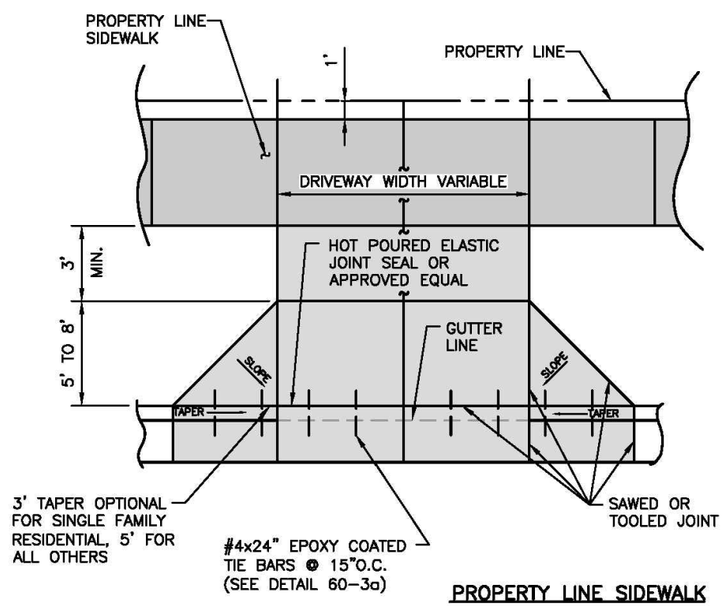

PROPERTY LINE SIDEWALK

CITY OF RAPID CITY	PUBLIC WORKS DEPARTMENT	
STANDARD DRIVEWAY APPROACH PAVEMENT	DATE: 5-1-07	
	SEC. 60	SHT. 3

MAXIMUM GRADE CHANGE (D)

	DESIRABLE	MIN.	MAX.
HIGH VOLUME DRIVEWAY	0%	-3%	+3%
LOW-VOLUME DRIVEWAY ON MAJOR OR COLLECTOR STREETS	+3%	-6%	+6%
LOW-VOLUME DRIVEWAY ON LOCAL STREETS	+6%	-6%	+10%

IN LIEU OF KEYWAY, USE SAWED OR TOOLED JOINT AND INSTALL #4 x 24" EPOXY COATED TIE BARS 15" O.C. BETWEEN P GUTTER AND DRIVEWAY. BEND BAR TO MATCH SLOPE OF DRIVEWAY

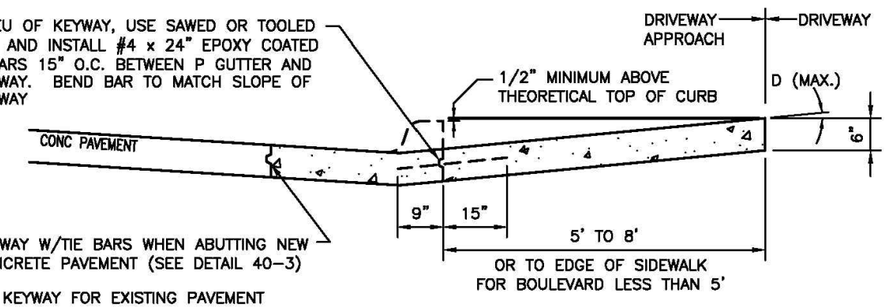

KEYWAY W/TIE BARS WHEN ABUTTING NEW CONCRETE PAVEMENT (SEE DETAIL 40-3)

NO KEYWAY FOR EXISTING PAVEMENT

NO KEYWAY OR TIE BARS FOR ASPHALT PAVEMENT

3/8" x 5/8" SAWED OR TOOLED JOINT W/ HOT POURED ELASTIC JOINT SEALER OR APPROVED EQUAL (OMIT KEYWAY JOINT WHEN PLACED MONOLITHICALLY)

NOTE:
TOOLED JOINT (CONTINUOUS CONSTRUCTION) OR EXPANSION JOINT (WHEN ADJACENT TO EXISTING CURB & GUTTER) (SEE CURB & GUTTER DETAILS 60-2 AND EXPANSION JOINT DETAIL 60-7)

NOTE:
WHEN REMOVING EXISTING CURB & GUTTER FOR NEW APPROACH CONSTRUCTION, AN EXPANSION JOINT SHALL BE CONSTRUCTED. (SEE JOINT DETAILS 60-7)

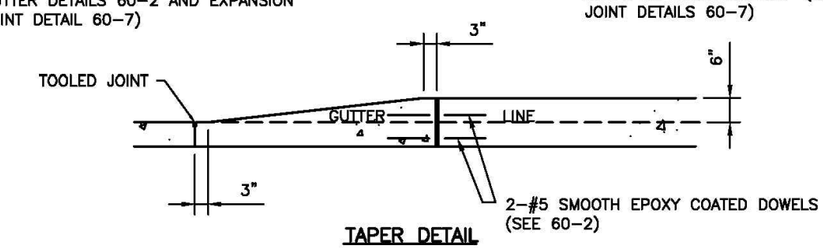

TAPER DETAIL

CITY OF RAPID CITY	PUBLIC WORKS DEPARTMENT	
STANDARD DIRVEWAY	DATE: 5-1-07	
	SEC. 60	SHT. 3a

Prepared By: F M G, Inc.
3700 Sturgis Road
Rapid City, SD 57702-0317
(605) 342-4105 FAX (605) 342-4222
www.fmgengineering.com

Prepared For: Public Works Department, Rapid City, South Dakota, Engineering Services

Scale: NOT TO SCALE	
Designed By: JAP/JF/RS	Drawn By: JRK
Design Date: SEPT 2013	Print Date: FEB 2014
Internal Job No: 110155	
Surveyed By: DOT / FMG	Survey Date: 8/04-7/13
SDDOT Project No. P 0044(149)40	

JACKSON BOULEVARD UTILITIES
CHAPEL LANE TO RAPID CREEK
SSW10-1837 / CIP 50177 / PCN X02U

Sheet Title: DETAILS

Sheet: B48 of B51

I:\Civil 3D Working Folder\110155 Jackson Blvd. PH 2\Production Drawings\1837DETAILS.dwg, B48, 4/16/2014 8:17:57 AM

FOR BIDDING PURPOSES ONLY

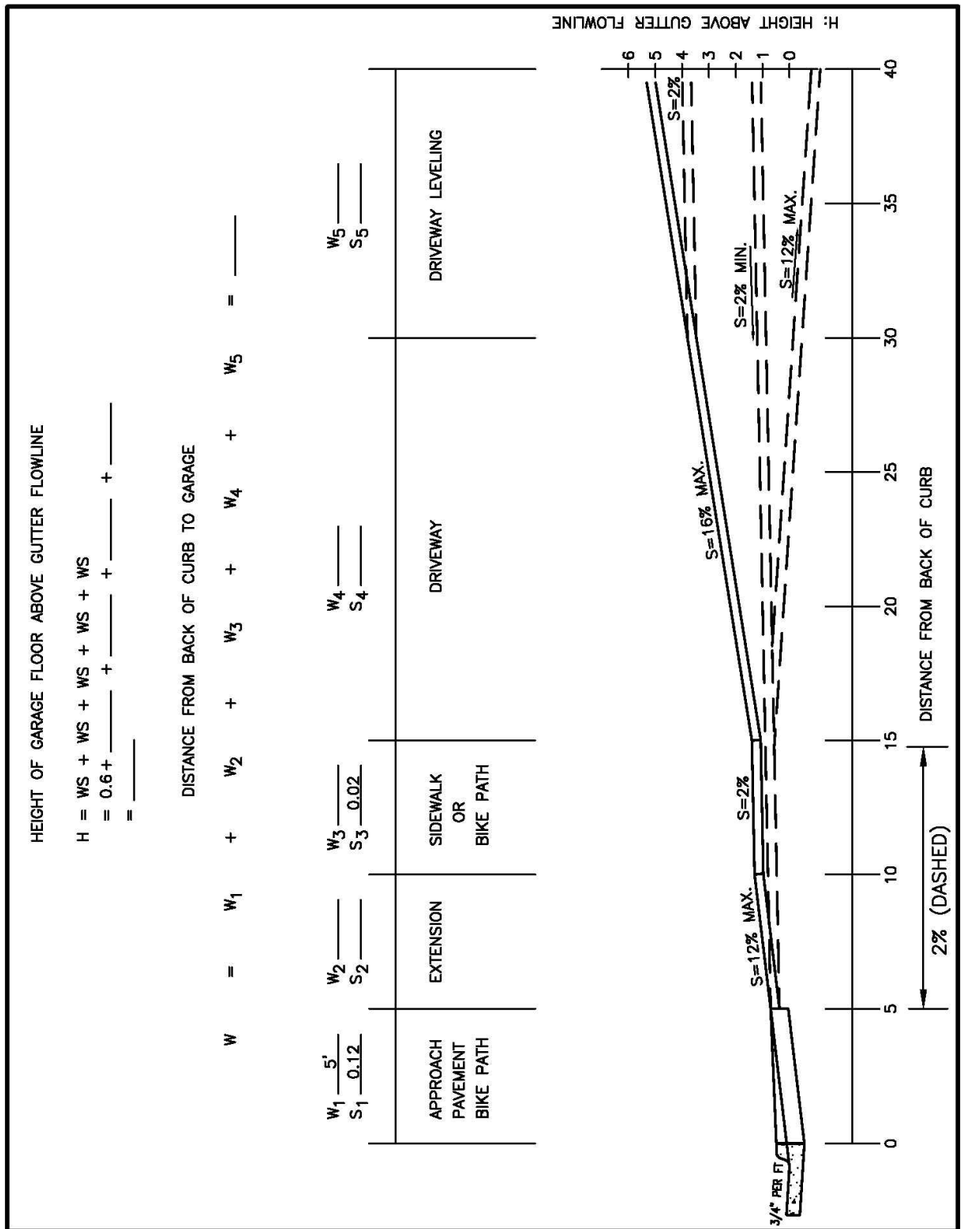

CITY OF RAPID CITY — PUBLIC WORKS DEPARTMENT

DRIVEWAY PROFILE GRADE

DATE: 5-1-07

SEC. 60 — SHT. 5

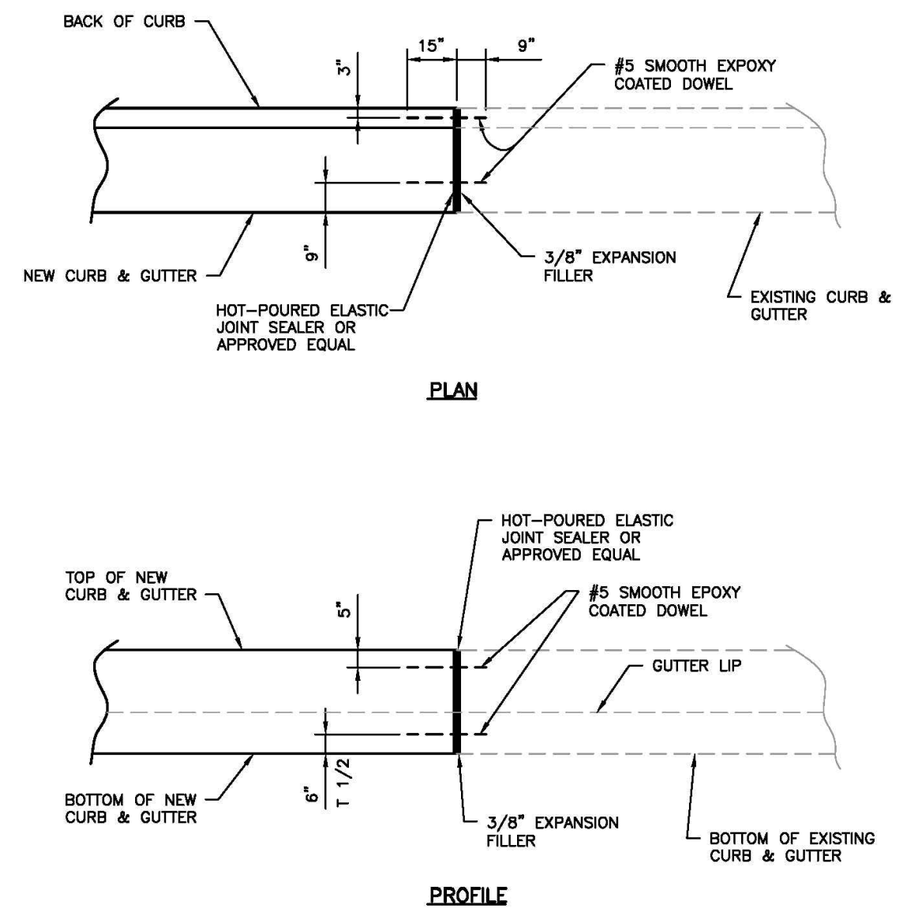

CITY OF RAPID CITY — PUBLIC WORKS DEPARTMENT

CURB & GUTTER EXPANSION JOINT

DATE: 5-1-07

SEC. 60 — SHT. 7

Prepared By:

F M G, Inc.
3700 Sturgis Road
Rapid City, SD 57702-0317
(605) 342-4105 FAX (605) 342-4222
www.fmgengineering.com

Prepared For:
Public Works Department
Engineering Services

Scale: NOT TO SCALE	
Designed By: JAP/JF/RS	Drawn By: JRK
Design Date: SEPT 2013	Print Date: FEB 2014
Internal Job No: 110155	
Surveyed By: DOT / FMG	Survey Date: 8/04-7/13
SDDOT Project No. P 0044(149)40	

JACKSON BOULEVARD UTILITIES
CHAPEL LANE TO RAPID CREEK

SSW10-1837 / CIP 50177 / PCN X02U

Sheet Title: DETAILS

Sheet: B49 of B51

I:\Civil 3D Working Folder\110155 Jackson Blvd. PH 2\Production Drawings\1837DETAILS.dwg, B49, 4/16/2014 8:18:11 AM

FOR BIDDING PURPOSES ONLY

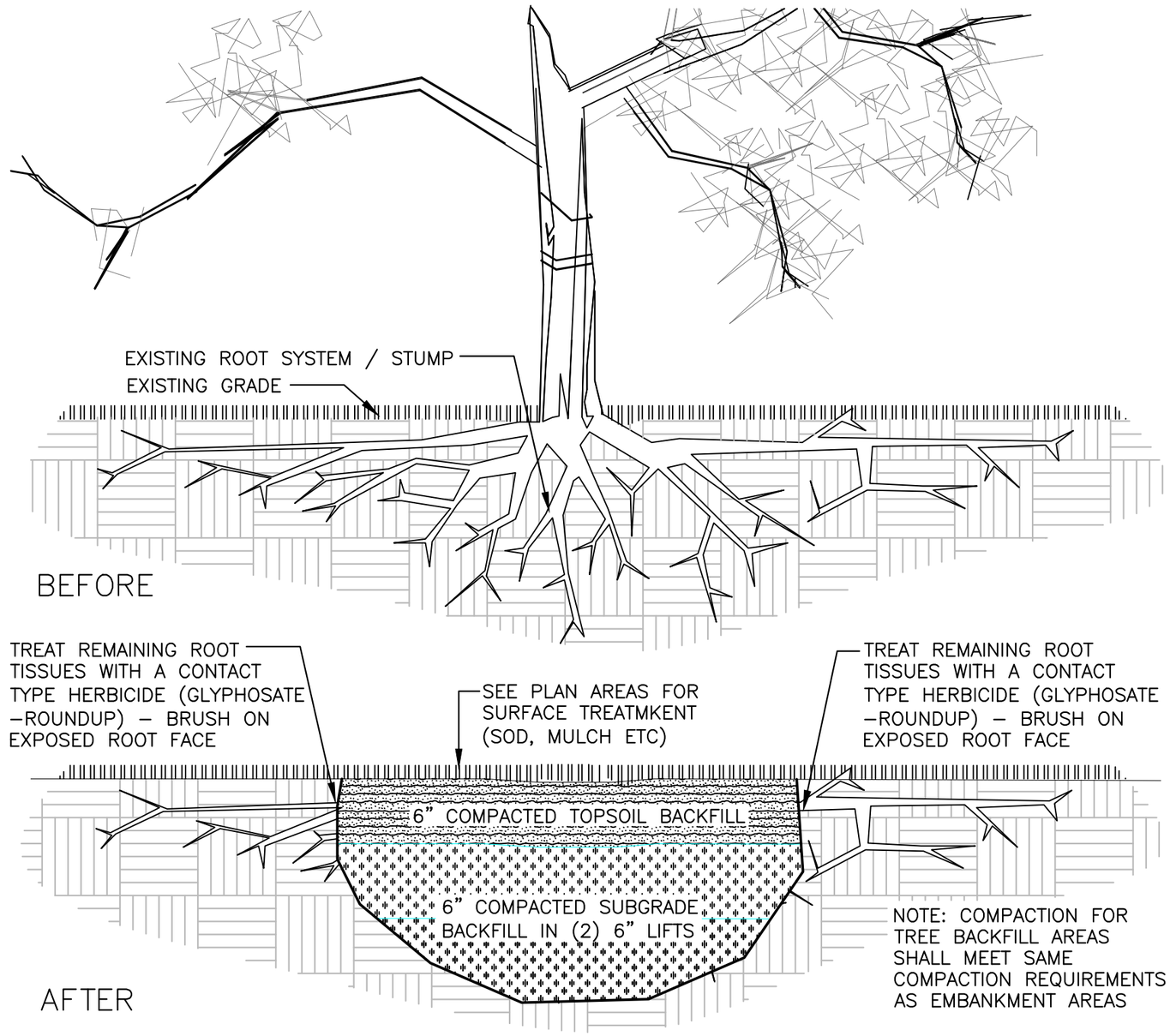

CLEAR AND GRUB TREE TYPICAL DETAIL

NOT TO SCALE

Prepared By: F M G, Inc. 3700 Sturgis Road Rapid City, SD 57702-0317 (605) 342-4105 FAX (605) 342-4222 www.fmgengineering.com	Prepared For: Public Works Department Rapid City Engineering Services	Scale: NOT TO SCALE	JACKSON BOULEVARD UTILITIES CHAPEL LANE TO RAPID CREEK	Sheet Title: DETAILS	Sheet: B50 of B51
		Designed By: JAP/JF/RS; Drawn By: JRK			
		Design Date: SEPT 2013; Print Date: FEB 2014			
		Internal Job No: 110155			
		Surveyed By: DOT / FMG; Survey Date: 8/04-7/13			
		SDDOT Project No. P 0044(149)40	SSW10-1837 / CIP 50177 / PCN X02U		

I:\Civil 3D Working Folder\110155 Jackson Blvd. PH 2\Production Drawings\1837DETAILS.dwg, B50, 4/16/2014 8:18:28 AM

FOR BIDDING PURPOSES ONLY

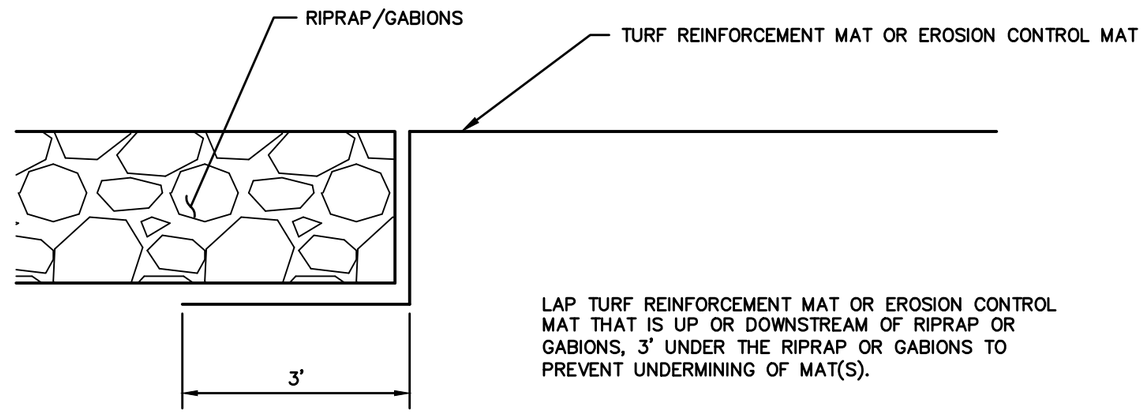

LAP TURF REINFORCEMENT MAT OR EROSION CONTROL MAT THAT IS UP OR DOWNSTREAM OF RIPRAP OR GABIONS, 3' UNDER THE RIPRAP OR GABIONS TO PREVENT UNDERMINING OF MAT(S).

SEE SECTION D FOR EXTENTS OF EROSION CONTROL BLANKET OR TURF REINFORCEMENT MAT.

TYPICAL TURF REINFORCEMENT MAT OR EROSION CONTROL MAT LAP UNDER RIPRAP OR GABIONS

NOT TO SCALE

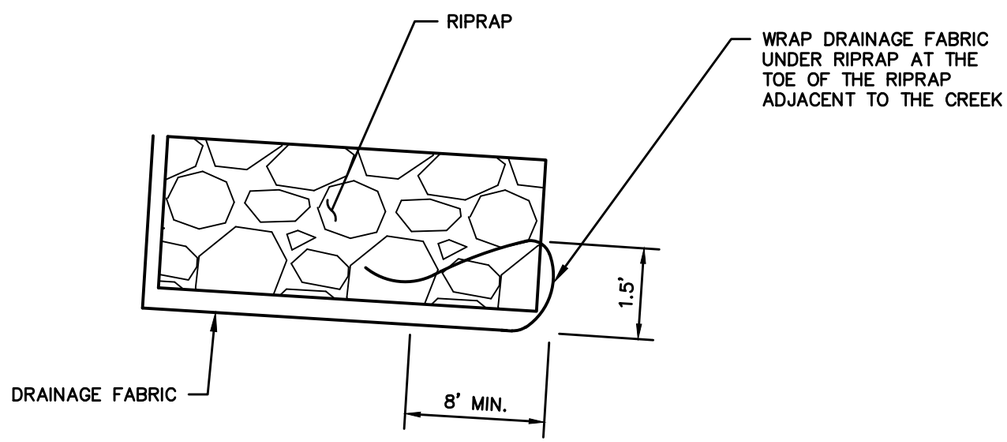

SHORE LINE RIPRAP DETAIL

NOT TO SCALE

Prepared By:

F M G, Inc.
3700 Sturgis Road
Rapid City, SD 57702-0317
(605) 342-4105 FAX (605) 342-4222
www.fmgengineering.com

Prepared For:
Public Works Department
Engineering Services

Scale: NOT TO SCALE	
Designed By: JAP/JF/RS	Drawn By: JRK
Design Date: SEPT 2013	Print Date: FEB 2014
Internal Job No: 110155	
Surveyed By: DOT / FMG	Survey Date: 8/04-7/13
SDDOT Project No. P 0044(149)40	

JACKSON BOULEVARD UTILITIES
CHAPEL LANE TO RAPID CREEK

SSW10-1837 / CIP 50177 / PCN X02U

Sheet Title: DETAILS

Sheet: B51 of B51

I:\Civil 3D Working Folder\110155 Jackson Blvd. PH 2\Production Drawings\1837DETAILS.dwg, B51, 4/16/2014 8:18:42 AM