CITY OF MADISON	PROJECT	SHEET	TOTAL SHEETS
	2016-1	1	45

FOR BIDDING PURPOSES ONLY

Plotting Date: 12/3/2015
Revised: 12/9/2015 KAM

CITY OF MADISON

Lake County

Plans for Proposed Water Main and Sanitary Sewer

SD Highway 34 / 2nd Street

Highland Avenue to Washington Avenue

2016-1
PCN X03J

INDEX OF SHEETS

1	Title Sheet
2 - 11	Estimate of Quantities & General Notes w/Tables
12 - 14	Storm Water Pollution Prevention Plan (SWPPP)
15 - 33	Plan and Profile (Sanitary & Water)
34 - 39	Cross Sections
40 - 45	Standard Details

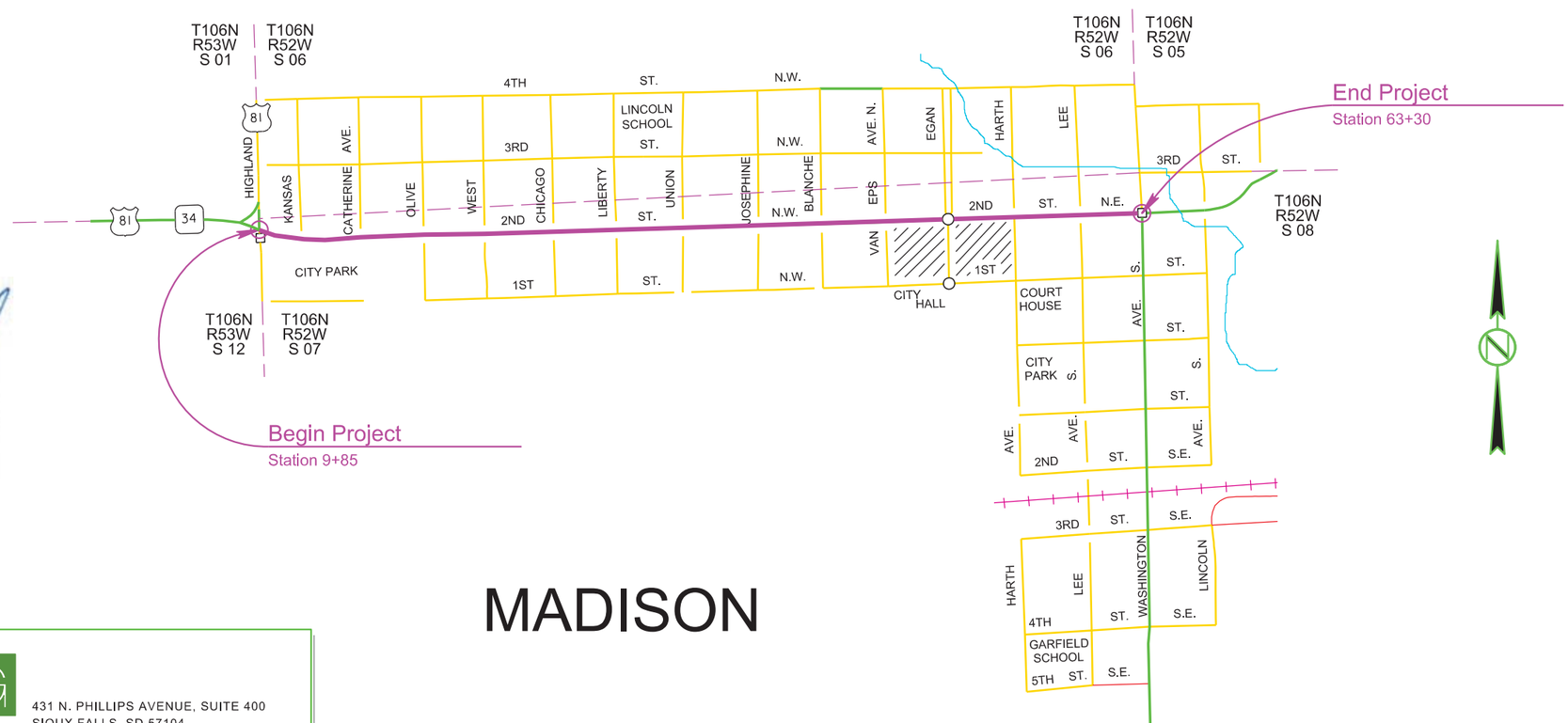

REGISTERED PROFESSIONAL ENGINEER
REG. NO. 9737
DAVID F. MAXWELL
SOUTH DAKOTA
12/9/15

MADISON

HRGreen
431 N. PHILLIPS AVENUE, SUITE 400
SIOUX FALLS, SD 57104
(605) 334-4499 FAX (605) 338-6124

THE CITY OF MADISON

2

Plot Scale - 1:200
Plotted From - kmay
File - ...\LAKE02R6\Design\TitleCity.dgn

X03J – City Utilities – Non-Section

BID ITEM NUMBER	ITEM	QUANTITY	UNIT
009E0010	Mobilization	1	LS
009E3250	Miscellaneous Staking	2.402	Mile
110E0460	Remove Manhole	18	Each
110E0520	Remove Sewer Pipe	5,798	Ft
110E1910	Remove Fire Hydrant	16	Each
110E1960	Remove Valve Box	47	Each
110E1965	Remove Gate Valve	47	Each
110E1970	Remove Water Main	6,552	Ft
451E0301	Pipe Encasement	3	Each
451E0606	6" PVC Water Main	955	Ft
451E0608	8" PVC Water Main	2,783	Ft
451E0610	10" PVC Water Main	3,100	Ft
451E0691	4" Water Main Restraining Device	21	Each
451E0692	6" Water Main Restraining Device	190	Each
451E0693	8" Water Main Restraining Device	86	Each
451E0694	10" Water Main Restraining Device	88	Each
451E1006	6" PVC Sewer Pipe	289	Ft
451E1008	8" PVC Sewer Pipe	5,318	Ft
451E1010	10" PVC Sewer Pipe	75	Ft
451E1012	12" PVC Sewer Pipe	162	Ft
451E1204	4" Sewer Service	1,946	Ft
451E1275	1" Water Service	58	Each
451E1277	1.5" Water Service	5	Each
451E1550	Sanitary Sewer Video Inspection	5,844	Ft
451E2012	8"x4" Pipe Wye	53	Each
451E2030	12"x4" Pipe Wye	2	Each
451E2207	6"x6" Pipe Tee	7	Each
451E2213	8"x6" Pipe Tee	7	Each
451E2214	8"x8" Pipe Tee	1	Each
451E2221	10"x6" Pipe Tee	9	Each
451E2223	10"x10" Pipe Tee	1	Each
451E2313	8"x6" Pipe Cross	1	Each
451E2314	8"x8" Pipe Cross	1	Each
451E2321	10"x6" Pipe Cross	1	Each
451E2322	10"x8" Pipe Cross	1	Each
451E2323	10"x10" Pipe Cross	1	Each
451E2406	6"x4" Pipe Reducer	6	Each
451E2412	8"x4" Pipe Reducer	1	Each
451E2413	8"x6" Pipe Reducer	1	Each
451E2421	10"x6" Pipe Reducer	2	Each
451E2422	10"x8" Pipe Reducer	1	Each
451E3006	6" Pipe Bend	28	Each
451E3008	8" Pipe Bend	13	Each
451E3010	10" Pipe Bend	16	Each
451E3604	4" Pipe Sleeve	7	Each
451E3606	6" Pipe Sleeve	7	Each
451E3608	8" Pipe Sleeve	4	Each
451E3610	10" Pipe Sleeve	2	Each
451E4206	6" Gate Valve with Box	27	Each
451E4208	8" Gate Valve with Box	12	Each
451E4210	10" Gate Valve with Box	13	Each
451E4400	Pipe Insulation	244	SqFt
451E4580	Standard Fire Hydrant	15	Each
451E4581	Temporary Fire Hydrant	3	Each
451E4926	Water Main Bedding Material	6,803	Ft
451E4944	6" Sewer Pipe Bedding Material	289	Ft
451E4945	8" Sewer Pipe Bedding Material	5,318	Ft
451E4946	10" Sewer Pipe Bedding Material	75	Ft
451E4947	12" Sewer Pipe Bedding Material	162	Ft
451E6105	Connect To Existing Water Main	22	Each
451E6107	Temporary Water Main Bypass	1	Each
451E7016	Connect to Existing Sewer Main	24	Each
451E7020	Sewer Bypass Pumping	1	LS
451E7500	Locate Utilities	2	Each
451E7510	Verify Utilities	2	Each
451E8000	PVC Pipe Deflection Test	5,844.0	Ft
451E8010	Pipe Exfiltration Test	5,844.0	Ft
671E1132	48" Manhole 8' to 10' Deep	16	Each
671E1133	48" Manhole 10' to 12' Deep	4	Each
671E1135	48" Manhole 14' to 16' Deep	1	Each
671E2000	External Manhole Seal	21	Each
671E2006	6" Manhole Boot	7	Each
671E2008	8" Manhole Boot	45	Each
671E2010	10" Manhole Boot	1	Each
671E2012	12" Manhole Boot	3	Each
671E6000	Temporary Manhole Cover	21	Each
671E6009	Type A9 Manhole Frame and Lid	21	Each

ENVIRONMENTAL COMMITMENTS

An Environmental Commitment is a measure that SDDOT commits to implement in order to avoid, minimize, and/or mitigate a real or potential environmental impact. Environmental commitments to various agencies and the public have been made to secure approval of this project. An agency mentioned below with permitting authority can influence a project if perceived environmental impacts have not been adequately addressed. Unless otherwise designated, the Contractor's primary contact regarding matters associated with these commitments will be the Project Engineer. These environmental commitments are not subject to change without prior written approval from the SDDOT Environmental Office. The environmental commitments associated with this project are as follows:

COMMITMENT E: STORM WATER

Construction activities constitute 1 acre or more of earth disturbance.

Action Taken/Required:

The DENR and the US Environmental Protection Agency (EPA) have issued separate general permits for the discharge of storm water runoff. The DENR permit applies to discharges on state land and the EPA permit applies to discharges on federal or reservation land. The Contractor is advised this project is regulated under the Phase II Storm Water Regulations and must receive coverage under the General Permit for Construction Activities. A Notice of Intent (NOI) will be submitted to DENR a minimum of 15 days prior to project start by the DOT Environmental Office. A letter must be received from DENR that acknowledges project coverage under this general permit before project start. The Contractor is advised that permit coverage may also be required by off-site activities, such as borrow and staging areas, which are the responsibility of the Contractor.

The Contractor shall adhere to the "Special Provision Regarding Storm Water Discharges to Waters of the State".

A major component of the storm water construction permits is development and implementation of a Storm Water Pollution Prevention Plan (SWPPP), which is a joint effort and responsibility of the SDDOT and the Contractor. Erosion control measures and best management practices will be implemented in accordance with the SWPPP. The SWPPP is a dynamic document and is to be available on-site at all times.

Information on storm water permits and SWPPPs are available on the following websites:

SDDOT:
http://www.sddot.com/business/environmental/stormwater/Default.aspx

DENR: http://www.denr.sd.gov/des/sw/stormwater.aspx

EPA: http://cfpub.epa.gov/npdes/home.cfm?program_id=6

Contractor Certification Form:

The "Department of Environmental and Natural Resources – Contractor Certification Form" (SD EForm – 2110LDV1-ContractorCertification.pdf) shall be completed by the Contractor or their certified Erosion Control Supervisor after the award of the contract. Work may not begin on the project until this form is signed.

The form certifies under penalty of law that the Contractor understands and will comply with the terms and conditions of the Surface Water Discharge General Permit for Storm Water Discharges Associated with Construction Activities for the Project.

The online form can be found at:
http://denr.sd.gov/des/sw/eforms/E2110LDV1-ContractorCertification.pdf

COMMITMENT H: WASTE DISPOSAL SITE

The Contractor shall furnish a site(s) for the disposal of construction and/or demolition debris generated by this project.

Action Taken/Required:

Construction and/or demolition debris may not be disposed of within the State ROW.

The waste disposal site(s) shall be managed and reclaimed in accordance with the following from the General Permit for Highway, Road, and Railway Construction/Demolition Debris Disposal Under the South Dakota Waste Management Program issued by the Department of Environment and Natural Resources.

The waste disposal site(s) shall not be located in a wetland, within 200 feet of surface water, or in an area that adversely affects wildlife, recreation, aesthetic value of an area, or any threatened or endangered species, as approved by the Project Engineer.

If the waste disposal site(s) is located such that it is within view of any ROW, the following additional requirements shall apply:

1. Construction and/or demolition debris consisting of concrete, asphalt concrete, or other similar materials shall be buried in a trench completely separate from wood debris. The final cover over the construction and/or demolition debris shall consist of a minimum of 1 foot of soil capable of supporting vegetation. Waste disposal sites provided outside of the State ROW shall be seeded in accordance with Natural Resources Conservation Service recommendations. The seeding recommendations may be obtained through the appropriate County NRCS Office. The Contractor shall control the access to waste disposal sites not within the State ROW through the use of fences, gates, and placement of a sign or signs at the entrance to the site stating "No Dumping Allowed".

2. Concrete and asphalt concrete debris may be stockpiled within view of the ROW for a period of time not to exceed the duration of the project. Prior to project completion, the waste shall be removed from view of the ROW or buried and the waste disposal site reclaimed as noted above.

The above requirements will not apply to waste disposal sites that are covered by an individual solid waste permit as specified in SDCL 34A-6-58, SDCL 34A-6-1.13, and ARSD 74:27:10:06.

Failure to comply with the requirements stated above may result in civil penalties in accordance with South Dakota Solid Waste Law, SDCL 34A-6-1.31.

All costs associated with furnishing waste disposal site(s), disposing of waste, maintaining control of access (fence, gates, and signs), and reclamation of the waste disposal site(s) shall be incidental to the various contract items.

REGISTERED PROFESSIONAL ENGINEER
REG. NO. 9737
DAVID P. MAXWELL
SOUTH DAKOTA
12/28/15

COMMITMENT I: HISTORICAL PRESERVATION OFFICE CLEARANCES

The SDDOT has obtained concurrence with the State Historical Preservation Office (SHPO or THPO) for all work included within the project limits and all designated option borrow sites provided within the plans.

Action Taken/Required:

All earth disturbing activities not designated within the plans require review of cultural resources impacts. This work includes, but is not limited to: staging areas, borrow sites, waste disposal sites, and all material processing sites.

The Contractor shall arrange and pay for a cultural resource survey and/or records search. The Contractor has the option to contact the state Archaeological Research Center (ARC) at 605-394-1936 or another qualified archaeologist, to obtain either a records search or a cultural resources survey. A record search might be sufficient for review; however, a cultural resources survey may need to be conducted by a qualified archaeologist.

The Contractor shall provide ARC with the following: a topographical map or aerial view on which the site is clearly outlined, site dimensions, project number, and PCN. If applicable, provide evidence that the site has been previously disturbed by farming, mining, or construction activities with a landowner statement that artifacts have not been found on the site.

The Contractor shall submit the records search or cultural resources survey report and if the location of the site is within the current geographical or historic boundaries of any South Dakota reservation to SDDOT Environmental Engineer, 700 East Broadway Avenue, Pierre, SD 57501-2586 (605-773-3180). SDDOT will submit the information to the appropriate SHPO/THPO. Allow **30 Days** from the date this information is submitted to the Environmental Engineer for SHPO/THPO review.

If evidence for cultural resources is uncovered during project construction activities, then such activities shall cease and the Project Engineer shall be immediately notified. The Project Engineer will contact the SDDOT Environmental Engineer in order to determine an appropriate course of action.

SHPO/THPO review does not relieve the Contractor of the responsibility for obtaining any additional permits and clearances for staging areas, borrow sites, waste disposal sites, or material processing sites that affect wetlands, threatened and endangered species, or waterways. The Contractor shall provide the required permits and clearances to the Project Engineer at the preconstruction meeting.

GENERAL NOTES

PROJECT SCOPE

This project, along with SDDOT project PCN 02R6, consists of complete reconstruction of SD 34 from the US 81 Junction to Washington Avenue in Madison, SD. Work included in the City portion involves installation of new water main and new sanitary sewer.

SPECIFICATIONS TO BE USED

The most current edition of the City of Madison Standard Specifications, together with the most current edition of the South Dakota Department of Transportation Standard Specifications for Roads and Bridges with Supplemental Specifications and Errata and required provisions, supplemental specifications, and/or special provisions as included in the Proposal are hereby made a part of these specifications in its entirety unless otherwise revised, deleted, or supplemented herein.

The City of Madison Standard Specifications can also be downloaded from the City of Madison website at http://www.cityofmadisonsd.com under Engineering. The South Dakota Department of Transportation Standard Specifications for Roads and Bridges with Supplemental Specifications and Errata can be downloaded from the SDDOT's website at http://www.sddot.com/.

ORDER OF PRECEDENCE

If conflicts arise, the order of precedence of the contract documents shall be as follows: Plans over Special Provisions over City of Madison Standard Specifications over South Dakota Department of Transportation Supplemental Specifications and Errata over South Dakota Department of Transportation Standard Specifications for Roads and Bridges.

CONSTRUCTION LIMITS

The construction limits shall be within the right-of-way and easement areas. Material storage and vehicle and equipment traffic shall be limited to the construction limits. All paved streets adjacent to the project are to be cleaned at the end of each working day.

It shall be the responsibility of the contractor to coordinate with the property owners relating to access to their property and any subsequent damages.

GRADE STAKES, BENCHMARKS AND MONUMENTS

All stakes, stones, and monuments now in place and marking lines and corners of boundaries which are likely to be affected by the work herein provided for shall be carefully preserved by the Contractor. In no case shall any excavation be made within five feet (5') of any such stake, stone or monument until they have been properly reset, witnessed, or otherwise cared for by the Engineer and permission is given to proceed with the work.

All lines, grade stakes, and benchmarks set by the Engineer in connection with the work herein provided for shall be carefully preserved by the Contractor and shall not be disturbed nor moved from the exact position and elevation as set by the Engineer. No excavated material shall be thrown over or against said stakes and, except where necessary to remove the stakes as the work progresses, all stakes shall be carefully preserved in the original position and elevation until the work has passed final inspection and been accepted. Stakes, which must be removed as the work progresses shall be so removed only upon the order of the Engineer.

All stakes, stones, monuments, and benchmarks disturbed or removed through carelessness or without proper authority will be reset at the expense of the Contractor.

MISCELLANEOUS STAKING

All staking that is required for installation of water main and sanitary sewer piping and appurtenances shall be paid for at the contract unit price for "Miscellaneous Staking".

SUBMITTALS

The following documents shall be submitted by the Contractor:

Submittals	Date Submitted
Shop drawings	
Construction schedule	
South Dakota State sewer and water plumbing contractor's license	
Discharge chlorinated water plan	
Dewatering plan for groundwater	
DENR Contractor Certification Form (SD Form – 2110LD)	
Sanitary sewer temporary bypass plan	
Temporary water main layout	

CONSTRUCTION SCHEDULE

At least two weeks prior to the start of work, the Contractor shall furnish to the Engineer two copies of a bar chart method progress schedule. The schedule shall consist of a construction schedule and a brief written narrative. The schedule shall contain the following information:

1. A time scale to graphically show the percentage of work schedule for completion within the Contract completion requirements.
2. Definition and relation of work activities to contract pay items.
3. Work activities (prime contractor and all subcontractor activities) in the order work will be performed including submittals, approvals, deliveries, temporary traffic control, and permanent signing/striping.
4. All major work activities that are controlling factor in completion of the work.
5. The time required for each activity and its relationship in time to other activities.
6. The total expected time to complete all work.
7. The expected shifts in days per week, hours per day, and the days when work is not expected to be performed.

DRAINAGE

Drainage is the Contractor's responsibility. Contractor shall be aware of existing drainage conditions and facilities, and shall provide for drainage during all phases of construction. Damage caused by improper temporary drainage facilities shall be repaired at the Contractor's expense and to the satisfaction of the Engineer.

UTILITIES

All utilities shall be verified by the Contractor prior to starting work. Any time existing utilities impede the progress of work, the Contractor shall immediately notify the Engineer.

All utilities, whether privately or publicly owned, shall be moved, relocated, and/or replaced as necessary, by the respective utility company or companies except as noted in the plans. These modifications shall take place in advance of construction when applicable or when advised by the Engineer. No payment shall be made to the Contractor unless specified in the contract documents.

The Contractor shall safeguard all utilities and coordinate his efforts to coincide with utility work by others in order to minimize inconvenience to the public and utility companies. When pipe utility installation crosses existing utilities, the Contractor shall be responsible for supporting the utilities in a manner that is acceptable to the owner of the utility. Any damage caused to the utilities due to Contractor carelessness shall be repaired at the Contractor's expense to the satisfaction of the utility owner.

Abandoned utilities (gas lines, telephone lines, etc.) encountered during construction shall be removed and disposed of by the Contractor. Costs associated with this work shall be incidental to the various bid items associated with work adjacent to the abandoned utility.

The Contractor shall be responsible for the coordination of all work associated with the disturbance, removal, or replacement of unidentified metallic natural gas mains or services when encountered. The Contractor shall, in advance and prior to proceeding with the work, coordinate with the City of Madison, Northwestern Energy, and all other companies related to the associated work.

Existing utility locations shown on drawings are approximate. There is no guarantee that the utilities shown include all such utilities or that the locations indicated are exact. The Contractor shall contact South Dakota One Call system, utility companies, and the City of Madison to verify locations of all existing utilities prior to excavation.

The Contractor shall be responsible for notifying South Dakota One Call 1-800-781-7474 to have utilities field located.

The Contractor shall cooperate with and coordinate his efforts to work with the utility companies and their contractors. Each bidder shall be responsible prior to bid letting, for determining the effects of utility work on the project work scope and schedule, and shall account for all such effects in his bid. No consideration will be given to the Contractor after the bid letting on account of utility work done by others.

The following utility companies are known to have facilities on the project:

NorthWestern Energy
Monte White
PO Box 307
Madison, SD 57042
(605) 228-0920

Midcontinent Communications
Preston Ragle
3507 S. Duluth Ave
Sioux Falls, SD 57105
(605) 755-8330

Vast Broadband
Shawn Anderson
29705 453rd Ave
Irene, SD 57037
(605) 263-7206

Century Link
Doug Wudel
125 S. Dakota Ave
Sioux Falls, SD 57104
(605) 339-5307 (office)
(605)254-3609 (cell)

SDN Communications
Chris Haiar
2900 W 10th Street
Sioux Falls, SD 57107
(605) 999-3969

City of Madison Power
412 S Union Ave
Madison, SD 57042
(605) 480-5155

City of Madison Water and Sewer
Kim Verhey
401 S Highland Ave
PO Box 308
Madison, SD 57042
(605) 480-3374

REGISTERED PROFESSIONAL ENGINEER
REG. NO. 9737
DAVID J. MAXWELL
SOUTH DAKOTA
12/4/15

UTILITIES (CONT)

A description of existing utilities and anticipated work by others is as follows but not limited to:

- NORTHWESTERN ENERGY
  - Hwy 34 crossing on east side of Highland / US 81 (Sta 10+40); 8" steel.
  - Hwy 34 crossing at alley between Union and Josephine (Sta 37+30); 2" steel.
  - Hwy 34 crossing at alley between Josephine and Blanche (Sta 41+05); 2" steel.
  - Hwy 34 crossing at alley between Blanche and Van Eps (Sta 44+85); 2" steel.
  - Hwy 34 crossing at alley between Van Eps and Egan (Sta 48+55); 4" steel.
  - Hwy 34 crossing at alley between Egan and Harth (Sta 52+35); 4" steel.
  - Parallel line on north side of Hwy 34 between alley at Sta 52+35 and west side of Washington (Sta 61+40) where it turns north; 4" steel; 32" depth.
  - Hwy 34 crossing at alley between Harth and Lee (Sta 56+25); 2" steel.
  - Miscellaneous:
    1. Steel crossings to be adjusted during construction at conflict locations.
    2. A representative from NorthWestern Energy needs to be onsite when completing any work around the 4" gas lines.
    3. Gas services can be adjusted at conflict locations.
- SDN COMMUNICATIONS
  - Vault on the southeast corner of Harth (Sta 54+60 RT).
  - Hwy 34 crossing on east side of Harth (Sta 54+60); 3 orange 1-1/4" innerduct.
  - Hwy 34 crossing on east side of Blanche (Sta 43+40); 3 orange 1-1/4" innerduct.
  - Parallel line on north side of Hwy 34 from east side of Blanche (Sta 43+40) to alley at Sta 48+60 where it turns north and ties into Great Western Bank. The line is approximately 42" deep and will be in conflict with the proposed water main.
  - Vault on the northeast corner of Blanche (Sta 43+40).
  - Vault on the northeast corner of alley at Sta 48+60.
- CENTURY LINK
  - Century Link does not have any facilities running longitudinally along Highway 34
  - Crossing on east side of West Avenue (Sta 23+75)
    1. 300 pair copper
  - Crossing at alley between Union Ave and Josephine Ave (Sta 37+30)
    1. 300 pair copper
  - Crossing at alley between Josephine Ave and Blanche Ave (Sta 41+00)
    1. 200 pair copper
  - Crossing at alley between Van Eps Ave and Egan Ave (Sta 48+50)
    1. One cable
    2. Joint trench with City Power and Midco
  - Crossing at alley between Egan Ave and Harth Ave (Sta 52+50)
    1. Significant crossing; includes 6-4" conduits, 3-1.5" innerducts, copper, and fiber optic lines
    2. Unknown if it is encased in concrete
    3. Joint trench with City Power and Midco
- MIDCONTINENT COMMUNICATIONS
  - Crossing on east side of Highland Ave (Sta 10+80)
    1. Includes fiber and coax
  - Crossing in alley between Van Eps Ave and Egan Ave (Sta 48+50)
    1. Includes fiber and coax
    2. Joint trench with City Power and Century Link
  - Crossing in alley between Egan Ave and Harth Ave (Sta 52+50)
    1. Includes fiber and coax
    2. Joint trench with City Power and Century Link
- VAST BROADBAND
  - Hwy 34 crossings on west side of alley Sta 37+25. The line is 5'-6' deep and can be abandoned.
  - Hwy 34 crossings on east side of alley Sta 37+35. The line is 36" deep.
  - Hwy 34 crossing on west side of alley at Sta 52+40. The line is 100 pair cu with coaxial at 36" depth.
- CITY OF MADISON ELECTRIC
  - Crossing at Sta 10+60. The line is 36"-40" deep. Will remain in place.
  - Parallel line Sta 13+90 to Sta 50+00 behind curb for street lighting and flashing beacons. Will be terminated.
  - Crossing at Sta 41+09. Lower in place during construction.
  - Crossing at Sta 48+54. Adjust during construction as necessary.
  - Parallel line Sta 48+54 to Sta 52+39. The line is 36"-40" deep. Will remain in place.
  - Crossing at Sta 52+39. Adjust during construction.
  - Crossing at Sta 52+51. Adjust during construction as necessary.
  - Parallel line Sta 55+80 to Sta 58+60. Will be terminated.
  - Parallel line and crossing Sta 61+20 to Sta 62+20. Will be terminated.
  - Crossing 146' south of 2nd St centerline. Will be relocated further south.

PROTECTION OF EXISTING SANITARY SEWER, WATER MAIN AND STORM SEWER SYSTEMS

Existing sanitary sewer lines and manholes within the construction limits shall be protected at all times during construction. The upstream ends of existing sanitary sewer lines downstream from new sanitary sewer construction shall be plugged at locations to be approved by the Engineer. Water, stone, dirt, gravel, asphalt, concrete or any other debris shall not be allowed to enter the City's sanitary sewer system at any time. Construction taking place in the vicinity of any existing City sanitary sewer lines or manholes shall not cause any inflow of surface water, ground water, water from damaged water lines, or debris to enter the City's sanitary sewer system. The Contractor shall be responsible for any damages incurred to the City's sanitary sewer system and/or private property and any actions imposed by SDDENR due to spills or overflows.

Existing storm sewer inlets and pipes within the construction limits shall be protected from the entrance of stone, dirt, gravel, asphalt, concrete or any other debris during construction.

LOCATING UTILITY

This work consists of excavating material to locate a utility line, (Private or Public), when the utility owner cannot find said line, or utility line is not within four (4) feet either side of markings established by the utility owner. Payment for this item will be at the contract unit price per each. Two locates are estimated for this project.

DEWATERING

It is anticipated that groundwater may be encountered during excavation. Dewatering may be needed to perform the contract work. There is no separate bid item for dewatering and all costs associated shall be incidental to the various related bid items. Contractor is responsible for obtaining a Temporary Water Use Permit from the SD DENR if necessary. Prior to excavating, the Contractor shall submit for review a dewatering plan to be approved by the Engineer. The Storm Water Pollution Prevention Plan is located in Section D of the SDDOT plans.

SANITARY SEWER

SANITARY SEWER - GENERAL

1. Sanitary sewer work includes installing new sanitary sewer main and new sanitary sewer manholes from US 81 to Washington Avenue.

2. Contractor's License. The Contractor shall obtain a "South Dakota State Sewer and Water Plumbing Contractor's License" prior to commencing construction.

3. The Contractor shall notify the City Engineer's office upon completion of the sanitary sewer. Video inspection of the sanitary sewer will be made by the Contractor and invite the City Engineer to observe. The City Engineer shall have sufficient time to review video inspection. Final payment will not be made until all discrepancies have been corrected and the sanitary sewer work has been given final acceptance.

PIPE ENCASEMENT

In locations where 18 inches of clearance cannot be maintained between storm sewer lines and the new sanitary sewer main, the sanitary sewer shall be encased in Class M6 concrete. The concrete encasement shall extend longitudinally 4 feet beyond each edge of the storm sewer pipe or storm sewer structure. The pipe being encased shall have a minimum 6 inches of concrete on all sides when possible. Actual encasement shall be coordinated with the proposed storm sewer elevations. Pipe encasement shall be paid for at the contract unit price per each of "Pipe Encasement". Payment shall include concrete, excavation, backfill, materials, labor, equipment, and all incidentals necessary to complete the pipe encasement. Three pipe encasements are estimated for this project – one each at Blanche Avenue, Harth Avenue, and Lee Avenue.

SANITARY SEWER TEMPORARY BYPASS

Where existing flow cannot be maintained, interruption of service shall be minimized such that no discharge of sanitary sewage to any natural waterway, storm sewer, open trench, ground surface, streets or gutters occurs nor shall such interruption create a public health hazard from sewage backups or overflows. Bypass operations must be approved by the City before starting. Contractor shall provide a detailed written plan, including a drawing, of how the bypass operation will be performed, for approval, before or at the preconstruction meeting and at least two weeks prior to the operation.

The bypass system shall be of sufficient capacity to handle peak flow of the pipe. Contractor shall provide the necessary labor and supervision to set up and operate the bypassing system. Pumping equipment shall be manned continuously. During bypass pumping operations, the Contractor shall provide the necessary labor to continually monitor the operation and ensure uninterrupted and sufficient pumping at all times.

Bypass pumping equipment shall include pumps, conduits, engines, and related equipment necessary to divert the flow of sewage around the section in which the work is to be performed. In addition, the Contractor shall maintain at the same location and in operable condition, duplicate equipment to be used in case there is equipment failure. In this event, the Contractor shall promptly repair or replace the failed equipment to the satisfaction of the Engineer.

The new sewer line may be used by the Contractor to carry the sanitary flows after the new pipe has passed inspection and testing. Any "temporary" connections to the new sewer are subject to City approval. All costs associated with this work shall be included in the contract lump sum price for "Sewer Bypass Pumping".

TEMPORARY MANHOLE COVER

Temporary manhole covers shall be installed on existing manholes immediately after surfacing removals have been completed and on new manholes immediately after installation. The Contractor shall ensure that all manholes are secured, protected, and watertight at the end of each workday. Under no circumstances shall an uncompleted or completed manhole be left uncovered, unprotected, or not watertight overnight.

Temporary manhole covers shall be measured per each unit furnished and installed. Payment for "Temporary Manhole Cover" will be full compensation for furnishing, installing, and removing each temporary manhole cover.

4" SEWER SERVICE

The Contractor will furnish and install wyes on the new sanitary sewer main. Temporary connections may be necessary between phases and will be considered incidental to the unit price per linear foot for "4" Sewer Service".

All labor, equipment, and materials necessary for excavating, removing the existing service lines, installation of the new service line from the wye to the property line, installation of tracer wire and terminal box, and backfilling shall be included in the unit price per lineal foot for "4" Sewer Service".

WATER

WATER MAIN

All valve operation will be done by the City Water Department. All water main piping, fitting, and materials shall conform to City of Madison Standard Specifications. All water main piping shall be PVC AWWA C900 DR 14.

All ductile iron fittings shall be wrapped with polyethylene tube material to protect the pipe from any future corrosion. The poly material shall be installed as detailed in the ductile iron handbook from DIPRA and ANSI A21.5 (AWWA C105).

WATER MAIN PARALLELING OR CROSSING SEWERS

Installation of water mains parallel to sanitary or storm sewer lines shall be completed in a manner such that the water mains shall be laid at least 10 feet horizontal distance from any existing or proposed sanitary sewer, storm sewer, or sewer manhole. Where water mains cross above storm sewers or sanitary sewers, there shall be at least 18 inches vertical clearance between the bottom of the water main and the top of the sewer pipe and one full length of water pipe must be located so both joints will be as far from the sewer as possible.

A water main may cross below a non-perforated sewer main if minimum vertical separation of 18 inches is provided and the sewer main is of acceptable water main pipe material and is a continuous piece of at least 20 feet in length with the length of the water pipe located so both joints are as far as possible from the sewer main. A water main may cross either above or below a non-perforated sewer line with a vertical separation of less than 18 inches if either the water or sewer line is encased in concrete for at least 10 feet each side of the crossing. The thickness of the concrete including that at the pipe joints shall not be less than 6 inches. This work is considered incidental to the sewer main construction, the cost of which shall be included in the price bid for lineal foot of sewer pipe.

REGISTERED PROFESSIONAL ENGINEER
REG. NO. 9737
DAVID F. MAXWELL
SOUTH DAKOTA
12/9/15

WATER MAIN DISINFECTION

All water mains installed shall be chlorinated as set forth by the AWWA Standard C651 or as directed by the Engineer. Sufficient chlorine tablets or chlorine powder shall be placed in each pipe to furnish a resultant solution of 50 to 100 ppm of available chlorine. The chlorinated water shall remain in the pipe line at least 24 hours and after this time have a residual chlorine content of at least 5 ppm. Any additional cost for placing the chlorine tablets or powder shall be included in the unit price for pipe.

Adequate disinfection shall be demonstrated through bacteriological monitoring. Two samples collected and analyzed by an approved laboratory at the expense of the Contractor for two periods of time 24 hours apart shall show negative for coliform bacteria.

DISCHARGE OF CHLORINATED WATER

The highly chlorinated water used for disinfection shall not be discharged to a lake, stream or other waterway where danger to fish or other aquatic life may occur. Discharge into the City's sanitary sewer system will be allowed.

TEMPORARY WATER MAIN BYPASS

This work shall be paid under the bid item “Temporary Water Main Bypass”. Payment will include layout, pipe, appurtenances, and any additional items and labor necessary to complete the work.

The Contractor, with the approval of the inspector on site, shall coordinate with all property owners when a disruption in water service is expected. Contractor will be expected to complete water service reconnections to the temporary water main either during the day (9 AM until 4 PM during the work week) or at other suitable times that meet the needs and requirements of the property owners.

The Contractor must provide a 24-hour contact person with adequate parts and equipment to make necessary repairs to temporary water service in a timely manner.

Products used shall be manufactured only from water distribution pipe and couplings and shall be NSF approved for potable water use.
Temporary water main shall be a minimum of 2 inch diameter unless otherwise specified. No additional payment will be made for temporary water main larger than 2” diameter. Temporary water main and its appurtenances shall meet all the requirements of the Engineer. Recorded pressure tests in this area indicate static pressures of approximately 50-70 psi. Temporary water main is required to be tested for pressure and coliform bacteria prior to any service connections. The temporary water main shall be tested at static main pressure. The temporary water main shall be filled, disinfected, flushed and sampled. A single passing test will be required prior to the temporary water main being put into service.

Chlorination, testing, pipe, necessary isolation valves, bends, fittings, hydrants, all necessary appurtenances, gravel ramp construction, maintenance and removal, and all other materials and labor necessary to construct the temporary water main and flush each individual service before connection to the City water system shall be considered incidental to bid item for temporary water main.

Submittals:
Contractor is to submit temporary water main layout, sequence of operations, schedule, material and fitting specifications to the project engineer seven days prior to the water shutdown or utilizationfor Engineer to review and approve. Any changes to the proposed temporary water service layout shall be approved by the project engineer prior to the preconstruction submittal.

Approved Products: North American Specialty Products or prebid Engineer approved equal.

WATER SERVICES

The Contractor will furnish and install corporation stops, water service lines, reducing or enlarging couplers and all service materials and labor required for the connection of the existing service line to the new water main within the existing street section. Water service pipe material may be either 1” or 1.5” Type K copper or 1” or 1.5” polyethylene per City of Madison Specifications for Water Main Construction to match the material of the existing service. Services shall be installed with 6’ minimum cover to proposed grades. An 18” separation shall be maintained between all water services and storm sewer pipe. Insulation shall be installed where 18” separation cannot be achieved. The Contractor shall coordinate work with the City Water Department. All labor, equipment, and materials necessary for excavating, removing the existing service lines, installation of the new service line from the main through the curb stop, installation of tracer wire and terminal box, insulation, and backfilling shall be included in the unit price per linear foot for “1” Water Service” or “1.5” Water Service”.

REGISTERED PROFESSIONAL ENGINEER
REG. NO.
9737
DAVID P.
MAXWELL
SOUTH DAKOTA
12/4/15

Revised 12/28/15 KAM

FOR BIDDING PURPOSES ONLY

STATE OF SOUTH DAKOTA	PROJECT	SHEET	TOTAL SHEETS
	2016-1	6	45

REMOVE MANHOLE			
STA/OFF		QUANTITY	UNIT
10+69.87-36.09'RT		1	EACH
12+42.92-7.22'LT		1	EACH
16+02.40-7.74'LT		1	EACH
19+61.77-8.16'LT		1	EACH
23+33.54-8.54'LT		1	EACH
27+14.20-7.81'LT		1	EACH
28+28.59-8.24'LT		1	EACH
30+93.38-7.27'LT		1	EACH
34+82.51-2.79'LT		1	EACH
39+19.23-6.02'LT		1	EACH
42+92.39-4.83'LT		1	EACH
44+00.47-5.76'LT		1	EACH
46+60.85-6.39'LT		1	EACH
48+70.85-7.49'LT		1	EACH
50+37.17-7.96'LT		1	EACH
54+26.24-6.65'LT		1	EACH
58+00.07-7.49'LT		1	EACH
61+66.84-8.46'LT		1	EACH
	TOTAL	**18**	**EACH**

REMOVE SEWER PIPE			
FROM STA/OFF	TO STA/OFF	QUANTITY	UNIT
10+69.87-36.09'RT	12+00.00-2.81'LT	139.6	LF
12+00.00-2.81'LT	12+42.92-7.22'LT	40.7	LF
12+42.92-7.22'LT	12+40.12-60.36'LT	51.2	LF
12+42.91-7.22'LT	16+02.40-7.74'LT	360.0	LF
16+02.40-7.74'LT	16+03.87-57.06'LT	47.3	LF
16+02.40-7.74'LT	18+00.00-7.97'LT	195.6	LF
18+00.00-7.97'LT	19+61.77-8.16'LT	160.6	LF
19+61.77-8.16'LT	23+33.54-8.54'LT	369.4	LF
23+33.54-8.54'LT	23+34.11-60.09	50.4	LF
23+33.54-8.54'LT	23+33.57-64.22'RT	71.6	LF
23+33.54-8.54'LT	24+00.00-8.41'LT	65.2	LF
24+00.00-8.41'LT	27+14.20-7.81'LT	313.0	LF
27+14.36-57.90'RT	27+14.20-7.81'LT	64.5	LF
27+14.20-7.81'LT	27+14.55-63.29'LT	54.3	LF
28+28.59-8.24'LT	30+00.00-7.61'LT	170.2	LF
30+00.00-7.61'LT	30+93.33-7.27'LT	93.4	LF
30+93.33-7.27'LT	30+95.28-65.13'LT	56.7	LF
30+94.81-58.68'RT	30+93.33-7.27'LT	64.8	LF
30+93.33-7.27'LT	34+82.51-2.79'LT	386.8	LF
34+82.51-2.79'LT	34+85.25-67.10'LT	63.2	LF
34+81.06-58.01'RT	34+82.51-2.79'LT	59.6	LF
34+82.51-2.79'LT	36+00.00-3.89'LT	116.3	LF
36+00.00-3.89'LT	39+19.23-6.02'LT	318.0	LF
39+19.23-6.02'LT	39+21.75-63.00'LT	56.5	LF
39+16.85-59.14'RT	39+19.23-6.02'LT	64.0	LF
39+19.23-6.02'LT	42+00.00-5.12'LT	279.6	LF
42+00.00-5.12'LT	42+92.39-4.83'LT	91.2	LF
42+92.39-4.83'LT	42+94.36-63.64'LT	57.6	LF
42+91.88-57.17'RT	42+92.39-4.83'LT	60.8	LF
44+00.47-5.76'LT	46+60.85-6.39'LT	258.0	LF
46+60.85-6.39'LT	46+62.28-63.08'LT	55.5	LF
46+59.18-57.28'RT	46+60.85-6.39'LT	62.5	LF
46+60.85-6.39'LT	48+00.00-7.23'LT	138.0	LF
48+00.00-7.23'LT	48+70.81-7.49'LT	69.7	LF
50+37.17-7.96'LT	50+38.35-58.09'LT	48.9	LF
50+36.67-55.13'RT	50+37.17-7.96'LT	61.9	LF
54+26.24-6.65'LT	58+00.07-7.49'LT	373.9	LF
54+25.16-62.59'RT	54+26.24-6.65'LT	68.0	LF
54+26.24-6.65'LT	54+26.86-58.01'LT	50.2	LF
57+99.63-64.80'RT	58+00.07-7.49'LT	71.1	LF
58+00.07-7.49'LT	57+99.90-54.48'LT	45.8	LF
58+00.07-7.49'LT	60+00.00-8.22'LT	198.7	LF
60+00.00-8.22'LT	61+66.84-8.46'LT	165.7	LF
61+66.84-8.46'LT	61+68.21-59.59'LT	50.0	LF
61+64.69-150.06'RT	61+66.84-8.46'LT	157.3	LF
TOTAL		**5797.3**	**EACH**

4" SEWER SERVICE			
FROM STA/OFF	TO STA/OFF	QUANTITY	UNIT
13+33.44-10.75'LT	13+33.44-36.00'LT	25.3	LF
14+01.84-10.75'LT	14+01.84-36.00'LT	25.3	LF
15+12.99-10.75'LT	15+12.99-36.00'LT	25.3	LF
16+86.93-10.75'LT	16+86.93-36.00'LT	25.3	LF
17+60.93-10.75'LT	17+60.93-36.00'LT	25.3	LF
18+49.31-10.75'LT	18+49.31-36.00'LT	25.3	LF
18+97.24-10.75'LT	18+97.24-36.00'RT	46.8	LF
19+12.94-10.75'LT	19+12.94-36.00'LT	25.3	LF
19+49.00-10.75'LT	19+49.00-69.64'RT	80.4	LF
20+31.76-10.75'LT	20+31.76-36.00'RT	46.8	LF
20+59.24-10.75'LT	20+59.24-36.00'LT	25.3	LF
21+04.96-10.75'LT	21+04.96-35.96'RT	46.7	LF
21+19.63-10.75'LT	21+19.63-36.00'LT	25.3	LF
22+57.05-10.75'LT	22+57.12-36.00'LT	25.3	LF
24+74.88-10.70'LT	24+74.89-36.00'RT	46.7	LF
24+76.08-10.70'LT	24+76.07-36.00'LT	25.3	LF
24+99.70-10.71'LT	24+99.72-36.00'RT	46.7	LF
25+82.17-10.73'LT	25+82.17-36.00'LT	25.3	LF
28+39.10-10.75'LT	28+39.10-36.00'RT	46.8	LF
28+97.05-10.75'LT	28+97.06-36.00'RT	46.8	LF
29+07.44-10.75'LT	29+07.44-36.00'LT	25.3	LF
29+43.64-10.75'LT	29+43.64-36.00'RT	46.8	LF
29+61.07-10.75'LT	29+61.07-10.75'LT	25.3	LF
30+03.86-10.75'LT	30+03.86-36.00'LT	25.3	LF
30+04.98-10.75'LT	30+04.98-36.00'RT	46.8	LF
31+59.56-10.75'LT	31+59.56-36.00'RT	46.8	LF
32+36.96-10.75'LT	32+36.96-36.00'LT	25.3	LF
32+74.27-10.75'LT	32+74.27-36.00'RT	46.8	LF
32+97.39-10.75'LT	32+97.39-36.00'LT	25.3	LF
33+03.46-10.75'LT	33+03.46-36.00'RT	46.8	LF
35+74.37-10.75'LT	35+74.39-36.13'LT	25.4	LF
36+10.25-10.75'LT	36+10.27-36.35'LT	25.6	LF
36+12.61-10.75'LT	36+12.57-36.40'RT	47.1	LF
36+44.72-10.75'LT	36+44.69-36.56'RT	47.3	LF
36+54.64-10.75'LT	36+54.66-36.57'LT	25.8	LF
37+04.66-10.75'LT	37+04.68-36.82'LT	26.1	LF
37+78.23-10.75'LT	37+78.25-37.19'LT	26.4	LF
38+10.04-10.75'LT	38+10.06-37.35'LT	26.6	LF
38+24.02-10.75'LT	38+23.98-37.46'RT	48.2	LF
40+02.22-10.75'LT	40+02.22-38.35'RT	49.1	LF
40+35.16-10.75'LT	40+35.16-38.47'LT	27.7	LF
41+84.01-10.75'LT	41+84.01-39.26'RT	50.0	LF
42+02.41-10.75'LT	42+02.41-39.31'LT	25.8	LF
43+99.95-13.01'LT	43+99.95-40.00'LT	27.0	LF
44+73.11-11.00'LT	44+73.11-40.00'LT	29.0	LF
45+76.82-11.00'LT	45+76.82-40.00'LT	29.0	LF
47+40.90-11.00'LT	47+40.90-40.00'LT	29.0	LF
47+83.22-11.00'LT	47+83.22-40.00'LT	29.0	LF
55+74.21-11.00'LT	55+74.21-40.00'LT	29.0	LF
56+66.88-11.00'LT	56+66.88-40.00'LT	29.0	LF
59+42.32-11.00'LT	59+42.32-40.00'RT	51.0	LF
59+80.19-11.00'LT	59+80.19-40.00'LT	29.0	LF
60+11.55-11.00'LT	60+11.55-40.00'LT	29.0	LF
60+84.86-11.00'LT	60+76.86-40.00'LT	32.3	LF
61+33.32-124.08'RT	61+65.05-124.48'RT	32.0	LF
61+64.93-133.09'RT	62+12.64-135.14'RT	48.0	LF
	TOTAL	**1945.2**	**LF**

6" PVC SEWER PIPE			
FROM STA/OFF	TO STA/OFF	QUANTITY	UNIT
12+43.54-9.90'LT	12+40.12-60.36'LT	50.6	LF
16+03.75-10.74'LT	16+03.87-57.06'LT	46.3	LF
23+33.81-10.66'LT	23+34.11-60.09'LT	49.4	LF
39+19.96-10.77'LT	39+21.75-63.00'LT	52.3	LF
54+26.04-11.03'LT	54+26.86-58.01'LT	47.0	LF
57+99.80-11.00'LT	57+99.90-54.48'LT	43.5	LF
	TOTAL	**289.1**	**LF**

8" PVC SEWER PIPE			
FROM STA/OFF	TO STA/OFF	QUANTITY	UNIT
10+69.87-36.09'RT	12+00.00-4.69'LT	139.9	LF
12+00.00-4.69'LT	12+43.54-9.90'LT	43.2	LF
12+43.54-9.90'LT	16+03.75-10.74'LT	359.6	LF
16+03.75-10.74'LT	18+00.00-10.75'LT	196.2	LF
18+00.00-10.75'LT	19+64.79-10.74'LT	164.8	LF
19+64.79-10.74'LT	23+33.81-10.66'LT	369.1	LF
23+33.81-10.66'LT	24+00.00-10.68'LT	66.2	LF
24+00.00-10.68'LT	27+14.23-10.75'LT	314.2	LF
27+14.23-10.75'LT	27+14.55-63.29'LT	52.5	LF
27+14.23-10.75'LT	27+14.36-57.90'RT	68.7	LF
28+28.16-10.75'LT	30+00.00-10.75'LT	171.8	LF
30+00.00-10.75'LT	30+95.11-10.75'LT	95.1	LF
30+95.11-10.75'LT	30+95.28-65.13'LT	54.4	LF
30+95.11-10.75'LT	30+94.81-58.68'RT	69.4	LF
30+95.11-10.75'LT	34+83.19-10.75'LT	388.1	LF
34+83.19-10.75'LT	34+85.25-67.10'LT	56.4	LF
34+83.19-10.75'LT	34+81.06-58.01'RT	68.8	LF
34+83.19-10.75'LT	36+00.00-10.75'LT	116.8	LF
36+00.00-10.75'LT	39+19.96-10.77'LT	320.0	LF
39+19.96-10.77'LT	39+16.85-59.14'RT	70.0	LF
39+19.96-10.77'LT	42+00.00-10.75'LT	280.0	LF
42+00.00-10.75'LT	42+93.28-10.73'LT	93.9	LF
42+93.28-10.73'LT	42+94.36-63.64'LT	52.9	LF
42+93.28-10.73'LT	42+91.88-57.17'RT	67.9	LF
43+99.95-11.00'LT	46+60.94-11.03'LT	261.0	LF
46+60.94-11.03'LT	46+62.28-63.08'LT	52.1	LF
46+60.94-11.03'LT	46+59.18-57.28'RT	68.3	LF
46+60.94-11.03'LT	48+00.00-11.00'LT	139.1	LF
48+00.00-11.00'LT	48+69.14-10.97'LT	69.1	LF
50+37.65-11.00'LT	50+38.35-58.09'LT	47.1	LF
50+37.65-11.00'LT	50+36.67-55.13'RT	66.1	LF
54+26.04-11.03'LT	54+25.19-60.58'RT	71.6	LF
54+26.04-11.03'LT	57+99.80-11.00'LT	373.8	LF
57+99.80-11.00'LT	57+99.66-62.79'RT	73.8	LF
57+99.80-11.00'LT	60+00.00-11.00'LT	200.2	LF
60+00.00-11.00'LT	61+66.96-11.00'LT	167.0	LF
61+66.96-11.00'LT	61+68.21-59.59'LT	48.6	LF
	TOTAL	**5317.7**	**LF**

10" PVC SEWER PIPE			
FROM STA/OFF	TO STA/OFF	QUANTITY	UNIT
23+33.81-10.66'LT	23+33.57-64.22'RT	74.9	LF
	TOTAL	**74.9**	**LF**

12" PVC SEWER PIPE			
FROM STA/OFF	TO STA/OFF	QUANTITY	UNIT
61+66.96-11.00'LT	61+64.63-150.08'RT	161.1	LF
	TOTAL	**161.1**	**LF**

REGISTERED PROFESSIONAL ENGINEER
REG. NO. 9737
DAVID P. MAXWELL
SOUTH DAKOTA
12/28/15

48" MANHOLE 8'-10' DEEP			
STA/OFF		QUANTITY	UNIT
10+69.88-36.09'RT		1	EACH
12+43.54-9.90'LT		1	EACH
16+03.75-10.74'LT		1	EACH
19+64.79-10.74'LT		1	EACH
23+33.81-10.66'LT		1	EACH
27+14.23-10.75'LT		1	EACH
28+28.16-10.75'LT		1	EACH
30+95.11-10.75'LT		1	EACH
34+83.19-10.75'LT		1	EACH
39+19.96-10.77'LT		1	EACH
42+93.28-10.73'LT		1	EACH
48+69.14-10.97'LT		1	EACH
54+26.04-11.03'LT		1	EACH
54+25.19-60.58'RT		1	EACH
57+99.80-11.00'LT		1	EACH
57+99.66-62.79'RT		1	EACH
	TOTAL	**16**	**EACH**

48" MANHOLE 10'-12' DEEP			
STA/OFF		QUANTITY	UNIT
43+99.95-11.00'LT		1	EACH
46+60.94-11.03'LT		1	EACH
50+37.65-11.00'LT		1	EACH
61+66.96-11.00'LT		1	EACH
	TOTAL	**4**	**EACH**

48" MANHOLE 14'-16' DEEP			
STA/OFF		QUANTITY	UNIT
61+64.69-150.06'RT		1	EACH
	TOTAL	**1**	**EACH**

4" MANHOLE BOOT			
STA/OFF		QUANTITY	UNIT
10+69.88-36.09'RT		1	EACH
43+99.95-11.00'LT		1	EACH
	TOTAL	**2**	**EACH**

6" MANHOLE BOOT			
STA/OFF		QUANTITY	UNIT
12+43.54-9.90'LT		1	EACH
16+03.75-10.74'LT		1	EACH
23+33.81-10.66'LT		1	EACH
39+19.96-10.77'LT		1	EACH
54+26.04-11.03'LT		1	EACH
57+99.80-11.00'LT		1	EACH
57+99.66-62.79'RT		1	EACH
	TOTAL	**7**	**EACH**

8" MANHOLE BOOT			
STA/OFF		QUANTITY	UNIT
10+69.88-36.09'RT		1	EACH
12+43.54-9.90'LT		2	EACH
16+03.75-10.74'LT		2	EACH
19+64.79-10.74'LT		2	EACH
23+33.81-10.66'LT		2	EACH
27+14.23-10.75'LT		3	EACH
28+28.16-10.75'LT		1	EACH
30+95.11-10.75'LT		4	EACH
34+83.19-10.75'LT		4	EACH
39+19.96-10.77'LT		3	EACH
42+93.28-10.73'LT		3	EACH
43+99.95-11.00'LT		1	EACH
46+60.94-11.03'LT		4	EACH
48+69.14-10.97'LT		1	EACH
50+37.65-11.00'LT		2	EACH
54+26.04-11.03'LT		2	EACH
54+25.19-60.58'RT		2	EACH
57+99.80-11.00'LT		3	EACH
57+99.66-62.79'RT		1	EACH
61+66.96-11.00'LT		2	EACH
	TOTAL	**45**	**EACH**

10" MANHOLE BOOT			
STA/OFF		QUANTITY	UNIT
23+33.81-10.66'LT		1	EACH
	TOTAL	**1**	**EACH**

12" MANHOLE BOOT			
STA/OFF		QUANTITY	UNIT
61+66.96-11.00'LT		1	EACH
61+64.69-150.06'RT		2	EACH
	TOTAL	**3**	**EACH**

REMOVE WATER MAIN			
FROM STA/OFF	TO STA/OFF	QUANTITY	UNIT
10+33.41-28.76'RT	12+00.00-24.01'LT	174.8	LF
10+68.48-96.60'RT	10+77.87-92.30'RT	12.0	LF
10+73.88-111.43'RT	10+40.79-23.19'RT	95.2	LF
12+00.00-24.01'LT	18+00.00-28.37'LT	600.0	LF
12+56.23-28.21'LT	12+56.84-62.25'LT	34.0	LF
12+76.19-28.75'LT	12+75.18-36.34'LT	7.7	LF
16+21.01-28.13'LT	16+20.43-58.37'LT	30.2	LF
16+32.06-27.84'LT	16+32.28-37.80'LT	10.0	LF
18+00.00-28.37'LT	24+00.00-28.91'LT	600.0	LF
19+78.11-28.59'LT	19+78.91-58.52'LT	28.9	LF
19+93.08-28.49'LT	19+93.22-38.91'LT	10.7	LF
23+62.97-28.70'LT	23+62.44-63.09'LT	30.2	LF
23+62.33-60.76'RT	23+62.94-28.70'LT	93.7	LF
23+70.11-28.69'LT	23+70.37-36.77'LT	8.1	LF
24+00.00-28.91'LT	30+00.00-28.69'LT	600.0	LF
27+41.35-55.87'RT	27+41.93-30.25'LT	86.1	LF
27+41.93-30.25'LT	27+40.95-66.27'LT	36.0	LF
27+51.46-30.46'LT	27+51.04-43.06'LT	12.6	LF
30+00.00-28.69'LT	36+00.00-29.70'LT	600.0	LF
31+23.44-28.92'LT	31+23.32-66.71'LT	37.8	LF
31+30.76-29.07'LT	31+30.63-37.10'LT	8.0	LF
34+61.09-29.87'LT	34+61.87-58.66'LT	28.8	LF
34+62.93-56.80'RT	34+61.09-29.87'LT	87.7	LF
35+15.49-29.20'LT	35+15.50-36.11'LT	6.9	LF
36+00.00-29.70'LT	42+00.00-26.04'LT	600.0	LF
39+10.14-28.34'LT	39+11.11-63.24'LT	34.9	LF
39+47.67-27.31'LT	39+47.93-42.48'LT	15.2	LF
42+00.00-26.04'LT	48+00.00-28.43'LT	600.0	LF
43+23.27-28.21'LT	43+22.98-42.70'LT	14.5	LF
46+43.70-26.65'LT	46+43.75-64.46'LT	37.8	LF
46+43.49-41.04'LT	46+46.03-41.03'LT	2.5	LF
46+44.19-57.57'RT	46+43.70-26.65'LT	84.2	LF
48+00.00-28.43'LT	54+00.00-29.50'LT	600.0	LF
50+18.73-60.14'RT	50+19.44-27.39'LT	87.5	LF
50+09.17-39.84'RT	50+19.21-40.00'RT	10.0	LF
50+20.44-27.40'LT	50+21.55-60.64'LT	33.3	LF
50+85.84-27.79'LT	50+86.27-47.89'LT	20.3	LF
54+00.00-29.57'LT	60+00.00-31.55'LT	600.0	LF
54+13.71-62.85'RT	54+12.48-29.79'LT	92.7	LF
54+39.25-29.11'LT	54+38.77-59.52'LT	30.4	LF
54+46.34-28.90'LT	54+46.28-43.59'LT	14.7	LF
58+14.73-29.14'LT	58+14.04-58.43'LT	29.3	LF
58+19.03-29.24'LT	58+19.58-43.88'LT	14.6	LF
60+00.00-31.55'LT	61+53.74-32.14'LT	153.9	LF
61+45.04-32.13'LT	61+45.08-42.27'LT	10.1	LF
61+53.74-32.14'LT	61+54.60-59.81'LT	27.7	LF
61+51.28-166.60'RT	61+53.74-32.14'LT	198.8	LF
	Total	**6551.8**	**EACH**

REMOVE FIRE HYDRANT			
STA/OFF		QUANTITY	UNIT
10+77.87-92.30'RT		1	EACH
12+75.18-36.34'LT		1	EACH
16+32.28-37.80'LT		1	EACH
19+93.22-38.78'LT		1	EACH
23+70.37-36.77'LT		1	EACH
27+51.04-43.06'LT		1	EACH
31+30.63-37.10'LT		1	EACH
35+15.50-36.11'LT		1	EACH
39+47.93-42.48'LT		1	EACH
43+22.98-42.69'LT		1	EACH
46+46.03-41.03'LT		1	EACH
50+09.17-39.84'LT		1	EACH
50+86.27-47.89'LT		1	EACH
54+46.28-43.59'LT		1	EACH
58+19.31-43.94'LT		1	EACH
61+45.07-42.33'LT		1	EACH
	Total	**16**	**EACH**

FOR BIDDING PURPOSES ONLY

STATE OF SOUTH DAKOTA	PROJECT	SHEET	TOTAL SHEETS
	2016-1	8	45

REMOVE GATE VALVE			
FROM STA/OFF		QUANTITY	UNIT
10+40.13-28.13'RT		1	EACH
10+44.58-21.36'RT		1	EACH
10+67.33-93.00'RT		1	EACH
12+56.19-30.10'LT		1	EACH
12+75.85-31.31'LT		1	EACH
12+78.77-28.85'LT		1	EACH
16+20.88-30.16'LT		1	EACH
16+32.05-30.44'LT		1	EACH
16+35.49-27.80'LT		1	EACH
19+77.59-31.07'LT		1	EACH
19+93.03-30.97'LT		1	EACH
19+95.13-28.53'LT		1	EACH
23+63.19-33.16'LT		1	EACH
23+62.94-26.02'LT		1	EACH
23+70.18-30.90'LT		1	EACH
23+74.20-28.65'LT		1	EACH
27+41.82-31.98'LT		1	EACH
27+42.07-27.01'LT		1	EACH
27+51.42-32.90'LT		1	EACH
27+55.64-30.45'LT		1	EACH
31+23.40-31.83'LT		1	EACH
31+30.90-31.73'LT		1	EACH
31+36.38-28.34'LT		1	EACH
34+34.70-29.28'LT		1	EACH
34+61.21-32.87'LT		1	EACH
35+15.94-31.27'LT		1	EACH
35+28.82-29.19'LT		1	EACH
39+10.25-31.27'LT		1	EACH
39+47.62-30.20'LT		1	EACH
39+57.26-27.04'LT		1	EACH
46+43.20-28.02'LT		1	EACH
46+43.63-21.62'LT		1	EACH
46+45.87-26.58'LT		1	EACH
50+12.38-26.75'LT		1	EACH
50+20.75-33.13'LT		1	EACH
50+85.79-30.87'LT		1	EACH
50+98.21-27.93'LT		1	EACH
50+19.24-46.17'RT		1	EACH
54+12.32-20.56'LT		1	EACH
54+39.31-31.94'LT		1	EACH
58+14.90-31.81'LT		1	EACH
58+19.42-31.83'LT		1	EACH
58+26.90-28.98'LT		1	EACH
61+45.25-34.91'LT		1	EACH
61+48.62-32.18'LT		1	EACH
61+53.59-20.55'RT		1	EACH
61+53.88-35.52'LT		1	EACH
	TOTAL	47	EACH

1" WATER SERVICE (LENGTH FOR INFORMATION ONLY)			
FROM STA/OFF	TO STA/OFF	QUANTITY	UNIT
13+29.44-20.75'LT	13+29.44-36.00'LT	15.3	LF
13+97.84-20.75'LT	13+97.84-36.00'LT	15.3	LF
15+08.99-20.75'LT	15+08.99-36.00'LT	15.3	LF
15+81.47-20.75'LT	15+81.47-46.92'LT	26.2	LF
16+82.93-20.75'LT	16+82.93-36.00'LT	15.3	LF
17+56.93-20.75'LT	17+56.93-36.00'LT	15.3	LF
18+45.31-20.75'LT	18+45.31-36.00'LT	15.3	LF
19+01.24-20.75'LT	19+01.24-36.00'RT	56.8	LF
19+09.05-20.75'LT	19+09.05-36.00'LT	15.3	LF
19+43.37-20.75'LT	19+43.37-46.92'LT	26.2	LF
19+45.00-20.75'LT	19+45.00-69.64'RT	90.4	LF
20+35.76-20.75'LT	20+35.76-36.00'RT	56.8	LF
20+55.24-20.75'LT	20+55.24-36.00'LT	15.3	LF
21+08.96-20.75'LT	21+08.96-35.96'RT	56.7	LF
21+15.63-20.75'LT	21+15.63-36.00'LT	15.3	LF
22+53.08-20.75'LT	22+53.08-36.00'LT	15.3	LF
24+72.08-20.69'LT	24+72.08-36.00'LT	15.3	LF
24+78.88-20.69'LT	24+78.88-36.00'RT	56.7	LF
25+03.70-20.69'LT	25+03.71-36.00'RT	56.7	LF
25+78.17-20.70'LT	25+78.17-36.00'LT	15.3	LF
28+02.40-20.72'LT	28+02.40-38.00'LT	17.3	LF
28+43.10-20.73'LT	28+43.10-36.00'RT	56.7	LF
29+01.05-20.73'LT	29+01.06-36.00'RT	56.7	LF
29+03.44-20.73'LT	29+03.44-38.00'LT	17.3	LF
29+47.64-20.74'LT	29+74.64-36.00'RT	56.7	LF
29+57.07-20.74'LT	29+57.07-38.00'LT	17.3	LF
29+99.86-20.74'LT	29+99.86-38.00'LT	17.3	LF
30+08.98-20.74'LT	30+08.98-36.00'RT	56.7	LF
31+63.56-20.75'LT	31+63.56-36.00'RT	56.8	LF
32+32.96-20.75'LT	32+32.06-36.00'LT	15.3	LF
32+78.27-20.75'LT	32+78.27-36.00'RT	56.8	LF
32+93.39-20.75'LT	32+93.39-36.00'LT	15.3	LF
33+07.46-20.75'LT	33+07.46-36.00'RT	56.8	LF
35+70.38-20.75'LT	35+70.39-38.15'LT	17.4	LF
36+06.25-20.75'LT	36+06.26-38.33'LT	17.6	LF
36+16.62-20.75'LT	36+16.59-36.39'RT	57.1	LF
36+48.73-20.75'LT	36+48.70-36.55'RT	57.3	LF
36+50.65-20.75'LT	36+50.66-38.55'LT	17.8	LF
37+00.67-20.75'LT	37+00.68-38.80'LT	18.1	LF
37+74.24-20.75'LT	37+74.25-39.17'LT	18.4	LF
38+06.05-20.75'LT	38+06.06+39.33'LT	18.6	LF
40+06.22-21.03'LT	40+06.19-38.33'RT	59.4	LF
41+88.01-21.41'LT	41+87.98-39.24'RT	60.6	LF
42+71.72+21.59'LT	42+71.58-54.65'LT	33.1	LF
44+69.11-21.36'LT	44+69.12-40.00'LT	18.6	LF
45+72.82-21.06'LT	45+82.83-40.00'LT	18.9	LF
47+36.00-21.00'LT	47+36.00-40.00'LT	19.0	LF
47+79.22-21.00'LT	47+79.22-40.00'LT	19.0	LF
49+25.14-21.00'LT	49+25.14-40.00'LT	19.0	LF
51+57.39-21.00'LT	51+57.38-40.00'LT	19.0	LF
55+70.21-21.00'LT	55+70.21-40.00'LT	19.0	LF
56+62.89-21.00'LT	26+62.88-40.00'LT	19.0	LF
57+81.84-21.00'LT	57+81.84-48.97'RT	70.0	LF
59+46.32-21.00'LT	59+46.32-41.50'RT	62.3	LF
59+76.20-21.00'LT	59+76.20-40.00'LT	19.0	LF
60+07.56-21.00'LT	60+07.56-40.00'LT	19.0	LF
60+72.37-21.00'LT	60+72.37-40.00'LT	19.0	LF
62+10.04-130.57'RT	61+32.97-128.08'RT	77.3	LF
	TOTAL	1900.6	LF

1.5" WATER SERVICE (LENGTHS FOR INFORMATION ONLY)			
FROM STA/OFF	TO STA/OFF	QUANTITY	UNIT
38+28.02-20.75'LT	38+27.99-37.44'RT	58.2	LF
40+31.17-21.08'LT	40+31.17-38.45'LT	17.4	LF
41+98.41-21.43'LT	41+98.41-39.29'LT	17.9	LF
43+92.63-21.59'LT	43+92.64-40.00'LT	18.4	LF
62+10.00-133.50'RT	62+13.00-133.51'RT	3.0	LF
	TOTAL	114.9	LF

6" PVC AWWA C900 DR 14 WATER MAIN			
FROM STA/OFF	TO STA/OFF	QUANTITY	UNIT
10+71.23-103.89'RT	10+85.10-96.97'RT	18.0	LF
12+63.48-20.66'LT	12+56.84-62.25'LT	44.0	LF
12+62.95-45.83'LT	12+79.73-45.92'LT	15.9	LF
16+15.43-20.75'LT	16+20.55-60.33'LT	42.5	LF
16+15.43-45.92'LT	16+38.69-45.92'LT	23.3	LF
19+83.91-20.75'LT	19+78.73-62.99'LT	44.6	LF
19+99.15-20.75'LT	19+99.15-47.15'LT	26.4	LF
23+52.51-20.68'LT	23+62.44-63.09'LT	46.8	LF
23+52.51-20.68'LT	23+62.33-60.76'RT	85.3	LF
23+62.45-59.57'LT	23+70.45-59.60'LT	8.0	LF
27+40.98-58.92'LT	27+48.18-58.64'LT	7.2	LF
31+16.32-20.75'LT	31+23.32-66.71'LT	49.0	LF
31+23.32-58.62'LT	31+31.32-58.62'LT	8.0	LF
35+15.71-20.80'LT	35+15.68-49.83'LT	29.0	LF
39+04.11-20.81'LT	39+11.15-63.21'LT	45.5	LF
39+50.92-20.75'LT	39+50.92-51.16'LT	30.4	LF
43+25.48-21.70'LT	43+25.63-52.42'LT	30.7	LF
46+92.49-21.00'LT	46+92.49-55.15'LT	34.2	LF
50+13.63-21.00'LT	50+21.55-60.64'LT	42.8	LF
50+13.63-21.00'LT	50+18.73-60.14'RT	83.8	LF
50+18.83-55.89'RT	50+06.15-55.59'RT	12.7	LF
50+89.24-21.00'LT	50+89.24-56.49'LT	35.5	LF
54+08.42-21.00'LT	54+13.71-62.85'RT	85.8	LF
54+43.79-21.00'LT	54+38.77-61.93'LT	42.5	LF
54+42.79-50.04'LT	54+50.77-50.04'LT	8.0	LF
58+14.04-21.00'LT	58+14.04-58.43'LT	37.4	LF
58+14.04-50.47'LT	58+24.26-50.40'LT	10.2	LF
61+54.40-52.06'LT	61+47.07-52.27'LT	7.3	LF
	TOTAL	954.8	LF

8" PVC AWWA C900 DR 14 WATER MAIN			
FROM STA/OFF	TO STA/OFF	QUANTITY	UNIT
10+43.67-37.71'RT	12+00.00-14.84'LT	166.6	LF
10+33.41-28.76'RT	10+73.88-111.43'RT	97.2	LF
12+00.00-14.84'LT	18+00.00-20.75'LT	600.0	LF
18+00.00-20.75'LT	24+00.00-20.68'LT	600.0	LF
24+00.00-20.68'LT	30+00.00-20.74'LT	600.0	LF
27+34.10-20.72'LT	27+41.00-66.27'LT	48.6	LF
27+34.10-20.72'LT	27+41.35-55.87'RT	79.3	LF
30+00.00-20.74'LT	34+63.41-20.75'LT	463.4	LF
46+50.05-21.00'LT	46+43.75-64.46'LT	46.5	LF
46+50.05-21.00'LT	46+44.19-57.57'RT	80.6	LF
	TOTAL	2782.2	LF

REGISTERED PROFESSIONAL ENGINEER
REG. NO.
9737
MAXWELL
SOUTH DAKOTA
12/4/15

10" PVC AWWA C900 DR 14 WATER MAIN			
FROM STA/OFF	TO STA/OFF	QUANTITY	UNIT
34+63.41-20.75'LT	36+00.00-20.75'LT	136.6	LF
34+71.93-20.76'LT	34+61.87-58.66'LT	42.2	LF
34+71.93-20.76'LT	34+62.94-57.82'RT	82	LF
36+00.00-20.75'LT	42+00.00-21.44'LT	600	LF
42+00.00-21.44'LT	48+00.00-21.00'LT	600	LF
48+00.00-21.00'LT	54+00.00-21.00'LT	600	LF
54+00.00-21.00'LT	60+00.00-21.00'LT	600	LF
60+00.00-21.00'LT	61+48.57-21.01'LT	148.7	LF
61+48.57-21.01'LT	61+54.60-59.81'LT	41.1	LF
62+12.12-19.52'LT	62+09.50-169.11'RT	188.7	LF
61+51.28-166.60'RT	62+09.50-169.11'RT	60.5	LF
	TOTAL	**3099.8**	**LF**

6" X 6" PIPE TEE			
STA/OFF		QUANTITY	UNIT
12+63.48-20.66'LT		1	EACH
16+15.43-20.75'LT		1	EACH
23+62.45-59.57'LT		1	EACH
31+23.34-58.48'LT		1	EACH
50+18.83-55.89'RT		1	EACH
54+42.73-50.04'LT		1	EACH
58+14.04-50.47'LT		1	EACH
	Total	**7.0**	**EACH**

8" X 6" PIPE TEE			
STA/OFF		QUANTITY	UNIT
10+71.23-103.89'RT		1	EACH
12+62.95-45.83'LT		1	EACH
16+15.43-45.92'LT		1	EACH
19+83.91-20.75'LT		1	EACH
19+99.15-20.75'LT		1	EACH
27+40.98-58.62'LT		1	EACH
31+16.32-20.75'LT		1	EACH
	Total	**7.0**	**EACH**

8" X 8" PIPE TEE			
STA/OFF		QUANTITY	UNIT
10+43.67-37.71'RT		1	EACH
	TOTAL	**1**	**EACH**

10" X 6" PIPE TEE			
STA/OFF		QUANTITY	UNIT
35+15.71-20.80'LT		1	EACH
39+04.11-20.81'LT		1	EACH
39+50.92-20.91'LT		1	EACH
43+25.85-21.56'LT		1	EACH
46+92.49-21.00'LT		1	EACH
54+08.42-21.00'LT		1	EACH
54+42.79-21.00'LT		1	EACH
58+14.04-21.00'LT		1	EACH
61+54.40-51.93'LT		1	EACH
	TOTAL	**9**	**EACH**

10" X 10" PIPE TEE			
STA/OFF		QUANTITY	UNIT
61+48.57-21.01'LT		1	EACH
	Total	**1.0**	**EACH**

8" X 6" PIPE CROSS			
STA/OFF		QUANTITY	UNIT
23+52.51-20.68'LT		1	EACH
	Total	**1.0**	**EACH**

8" X 8" PIPE CROSS			
STA/OFF		QUANTITY	UNIT
27+34.10-20.72'LT		1	EACH
	Total	**1.0**	**EACH**

10" X 6" PIPE CROSS			
STA/OFF		QUANTITY	UNIT
50+13.62-20.86'LT		1	EACH
	Total	**1.0**	**EACH**

10" X 8" PIPE CROSS			
STA/OFF		QUANTITY	UNIT
46+50.05-21.00'LT		1	EACH
	Total	**1.0**	**EACH**

10" X 10" PIPE CROSS			
STA/OFF		QUANTITY	UNIT
34+71.93-20.76'LT		1	EACH
	Total	**1.0**	**EACH**

6" X 4" PIPE REDUCER			
STA/OFF		QUANTITY	UNIT
12+56.90-58.24'LT		1	EACH
16+20.59-56.34'LT		1	EACH
19+78.63-59.14'LT		1	EACH
31+23.25-62.73'LT		1	EACH
39+11.00-59.23'LT		1	EACH
58+14.13-54.53'LT		1	EACH
	Total	**6.0**	**EACH**

8" X 4" PIPE REDUCER			
STA/OFF		QUANTITY	UNIT
27+40.97-62.48'LT		1	EACH
	Total	**1.0**	**EACH**

8" X 6" PIPE REDUCER			
STA/OFF		QUANTITY	UNIT
10+73.78-111.14'RT		1	EACH
	Total	**1.0**	**EACH**

10" X 6" PIPE REDUCER			
STA/OFF		QUANTITY	UNIT
61+54.49-55.87'LT		1	EACH
61+51.29-170.60'RT		1	EACH
	Total	**2.0**	**EACH**

10" X 8" PIPE REDUCER			
STA/OFF		QUANTITY	UNIT
34+64.13-20.75'LT		1	EACH
	Total	**1.0**	**EACH**

6" PIPE BEND			
STA/OFF		QUANTITY	UNIT
12+62.78-49.83'LT		1	EACH
12+57.14-54.20'LT		1	EACH
16+15.43-49.53'LT		1	EACH
16+20.41-52.33'LT		1	EACH
19+83.91-50.77'LT		1	EACH
19+78.77-55.19'LT		1	EACH
23+52.41-22.07'RT		1	EACH
23+52.41-25.07'RT		1	EACH
23+52.36-45.93'RT		1	EACH
23+62.34-56.78'RT		1	EACH
23+52.42-45.76'LT		1	EACH
23+62.47-54.97'LT		1	EACH
31+16.25-47.92'LT		1	EACH
31+23.25-54.36'LT		1	EACH
39+04.04-48.52'LT		1	EACH
39+11.04-54.88'LT		1	EACH
50+14.27-48.53'LT		1	EACH
50+21.42-54.95'LT		1	EACH
50+13.14-0.10'LT		1	EACH
50+13.04-4.31'RT		1	EACH
50+12.18-40.84'RT		1	EACH
50+19.01-48.44'RT		1	EACH
54+06.92-2.11'LT		1	EACH
54+08.43-2.54'RT		1	EACH
54+08.64-42.47'RT		1	EACH
54+13.58-48.10'RT		1	EACH
54+38.73-58.49'LT		1	EACH
54+42.79-53.97'LT		1	EACH
	Total	**28.0**	**EACH**

8" PIPE BEND			
STA/OFF		QUANTITY	UNIT
10+39.35-28.27'RT		1	EACH
27+34.01-48.13'LT		1	EACH
27+40.99-54.55'LT		1	EACH
27+34.23-19.22'RT		1	EACH
27+34.24-23.65'RT		1	EACH
27+34.31-44.73'RT		1	EACH
27+41.34-52.37'RT		1	EACH
46+44.11-38.59'RT		1	EACH
46+48.52-5.00'RT		1	EACH
46+49.35-8.23'RT		1	EACH
46+48.93-33.76'RT		1	EACH
46+43.27-54.44'LT		1	EACH
46+50.52-47.19'LT		1	EACH
	Total	**13.0**	**EACH**

FOR BIDDING PURPOSES ONLY

STATE OF SOUTH DAKOTA	PROJECT	SHEET	TOTAL SHEETS
	2016-1	10	45

10" PIPE BEND			
STA/OFF		QUANTITY	UNIT
34+61.91-54.18'LT		1	EACH
34+71.93-20.76'LT		1	EACH
34+62.62-34.15'RT		1	EACH
34+70.90-26.37'RT		1	EACH
34+71.73-3.10'RT		1	EACH
34+71.60-6.17'RT		1	EACH
61+10.43-30.64'RT		1	EACH
61+36.74-59.81'RT		1	EACH
61+51.24-166.50'RT		1	EACH
61+48.57-21.01'LT		1	EACH
61+49.18-43.74'LT		1	EACH
61+54.29-48.28'LT		1	EACH
62+09.50-169.11'RT		1	EACH
62+11.73-3.30'RT		1	EACH
62+11.75-7.42'RT		1	EACH
62+12.12-19.52'RT		1	EACH
	Total	**16.0**	**EACH**

4" PIPE SLEEVE			
STA/OFF		QUANTITY	UNIT
12+56.80-62.28'LT		1	EACH
16+20.55-60.33'LT		1	EACH
19+78.73-62.99'LT		1	EACH
27+41.00-66.27'LT		1	EACH
31+23.28-66.75'LT		1	EACH
39+11.15-63.21'LT		1	EACH
58+14.00-58.47'LT		1	EACH
	Total	**7**	**EACH**

6" PIPE SLEEVE			
STA/OFF		QUANTITY	UNIT
23+62.33-60.76'RT		1	EACH
23+62.44-63.09'LT		1	EACH
50+18.73-60.14'RT		1	EACH
50+21.52-60.68'LT		1	EACH
54+13.71-62.85'RT		1	EACH
54+38.73-61.96'LT		1	EACH
61+54.60-59.81'LT		1	EACH
	Total	**7**	**EACH**

8" PIPE SLEEVE			
STA/OFF		QUANTITY	UNIT
10+33.36-28.75'RT		1	EACH
27+41.35-55.87'RT		1	EACH
46+43.75-64.46'LT		1	EACH
46+44.19-57.57'LT		1	EACH
	Total	**4**	**EACH**

10" PIPE SLEEVE			
STA/OFF		QUANTITY	UNIT
34+61.87-58.66'LT		1	EACH
34+62.94-57.82'RT		1	EACH
	Total	**2.0**	**EACH**

6" GATE VALVE WITH BOX			
STA/OFF		QUANTITY	UNIT
10+74.29-102.46'RT		1	EACH
12+63.40-24.71'LT		1	EACH
12+67.28-45.89'LT		1	EACH
16+15.43-24.69'LT		1	EACH
16+19.36-45.92'LT		1	EACH
19+83.91-24.73'LT		1	EACH
19+99.15-24.73'LT		1	EACH
23+52.51-16.62'LT		1	EACH
23+52.51-24.77'LT		1	EACH
23+66.26-59.58'LT		1	EACH
27+44.55-58.63'LT		1	EACH
31+27.32-58.62'LT		1	EACH
31+16.32-24.62'LT		1	EACH
35+15.67-24.39'LT		1	EACH
39+04.13-24.70'LT		1	EACH
39+50.92-24.85'LT		1	EACH
43+25.82-25.17'LT		1	EACH
46+92.48-24.81'LT		1	EACH
50+13.63-25.06'LT		1	EACH
50+13.63-16.98'LT		1	EACH
50+14.85-55.70'RT		1	EACH
54+08.41-16.72'LT		1	EACH
54+42.79-24.95'LT		1	EACH
54+46.68-50.04'LT		1	EACH
58+13.99-24.95'LT		1	EACH
58+17.98-50.33'LT		1	EACH
61+50.71-52.17'LT		1	EACH
	Total	**27.0**	**EACH**

8" GATE VALVE WITH BOX			
STA/OFF		QUANTITY	UNIT
10+36.16-28.51'RT		1	EACH
10+72.51-107.50'RT		1	EACH
12+59.39-20.57'LT		1	EACH
16+11.51-20.75'LT		1	EACH
19+79.97-20.75'LT		1	EACH
23+48.56-20.68'LT		1	EACH
27+30.14-20.72'LT		1	EACH
27+34.10-24.69'LT		1	EACH
27+34.10-16.69'LT		1	EACH
31+12.38-20.74'LT		1	EACH
46+50.05-24.94'LT		1	EACH
46+49.77-17.26'LT		1	EACH
	Total	**12.0**	**EACH**

10" GATE VALVE WITH BOX			
STA/OFF		QUANTITY	UNIT
34+68.02-20.75'LT		1	EACH
34+71.85-16.92'LT		1	EACH
34+71.93-24.63'LT		1	EACH
39+00.15-20.68'LT		1	EACH
43+21.90-21.54'LT		1	EACH
46+46.38-21.00'LT		1	EACH
50+09.68-21.00'LT		1	EACH
54+04.46-21.00'LT		1	EACH
54+38.81-21.00'LT		1	EACH
58+10.09-21.00'LT		1	EACH
61+44.62-21.04'LT		1	EACH
61+48.71-24.97'LT		1	EACH
61+53.29-21.01'LT		1	EACH
	Total	**13.0**	**EACH**

STANDARD FIRE HYDRANT			
STA/OFF		QUANTITY	UNIT
10+58.10-96.97'RT		1	EACH
12+79.73-45.92'LT		1	EACH
16+38.69-45.92'LT		1	EACH
19+99.15-47.15'LT		1	EACH
23+70.45-59.56'LT		1	EACH
27+48.18-58.64'LT		1	EACH
31+31.32-58.62'LT		1	EACH
35+15.68-49.79'LT		1	EACH
39+50.92-51.12'LT		1	EACH
43+25.63-52.38'LT		1	EACH
46+92.49-55.11'LT		1	EACH
50+06.15-55.59'RT		1	EACH
54+50.77-50.04'LT		1	EACH
58+24.26-50.36'LT		1	EACH
61+47.07-52.27'LT		1	EACH
	Total	**15.0**	**EACH**

4" WATER MAIN RESTRAINING DEVICE			
STA/OFF		QUANTITY	UNIT
12+63.48-20.66'LT	12+56.84-62.25'LT	3	EACH
16+15.43-20.75'LT	16+20.55-60.33'LT	3	EACH
19+83.91-20.75'LT	19+78.73-62.99'LT	3	EACH
27+34.10-20.72'LT	27+41.00-66.27'LT	3	EACH
31+16.32-20.75'LT	31+23.32-66.71'LT	3	EACH
39+04.11-20.81'LT	39+11.15-63.21'LT	3	EACH
58+14.04-21.00'LT	58+14.04-58.43'LT	3	EACH
	TOTAL	**21.0**	**EACH**

6" WATER MAIN RESTRAINING DEVICE			
STA/OFF		QUANTITY	UNIT
10+33.41-28.76'RT	10+73.88-111.43'RT	1	EACH
10+71.23-103.89'RT	10+85.10-96.97'RT	4	EACH
12+63.48-20.66'LT	12+56.84-62.25'LT	10	EACH
12+62.95-45.83'LT	12+79.73-45.92'LT	4	EACH
16+15.43-20.75'LT	16+20.55-60.33'LT	11	EACH
16+15.43-45.92'LT	16+38.69-45.92'LT	4	EACH
19+83.91-20.75'LT	19+78.73-62.99'LT	8	EACH
19+99.15-20.75'LT	19+99.15-47.15'LT	4	EACH
23+52.51-20.68'LT	23+62.44-63.09'LT	11	EACH
23+52.51-20.68'LT	23+62.33-60.76'RT	13	EACH
23+62.45-59.57'LT	23+70.45-59.60'LT	4	EACH
27+40.98-58.92'LT	27+48.18-58.64'LT	4	EACH
31+16.32-20.75'LT	31+23.32-66.71'LT	10	EACH
31+23.32-58.62'LT	31+31.32-58.62'LT	4	EACH
35+15.71-20.80'LT	35+15.68-49.83'LT	4	EACH
39+04.11-20.81'LT	39+11.15-63.21'LT	8	EACH
39+50.92-20.75'LT	39+50.92-51.16'LT	4	EACH
43+25.48-21.70'LT	43+25.63-52.42'LT	4	EACH
46+92.49-21.00'LT	46+92.49-55.15'LT	4	EACH
50+13.63-21.00'LT	50+21.55-60.64'LT	9	EACH
50+13.63-21.00'LT	50+18.73-60.14'RT	15	EACH
50+18.83-55.89'RT	50+06.15-55.59'RT	4	EACH
54+08.42-21.00'LT	54+13.71-62.85'RT	13	EACH
54+43.79-21.00'LT	54+38.77-61.93'LT	11	EACH
54+42.79-50.04'LT	54+50.77-50.04'LT	4	EACH
58+14.04-21.00'LT	58+14.04-58.43'LT	6	EACH
58+14.04-50.47'LT	58+24.26-50.40'LT	4	EACH
61+54.40-52.06'LT	61+47.07-52.27'LT	4	EACH
61+48.57-21.01'LT	61+54.60-59.81'LT	3	EACH
61+51.28-166.60'RT	62+09.50-169.11'RT	1	EACH
	TOTAL	**190.0**	**EACH**

8" WATER MAIN RESTRAINING DEVICE			
STA/OFF		QUANTITY	UNIT
10+43.67-37.71'RT	12+00.00-14.84'LT	3	EACH
10+33.41-28.76'RT	10+73.88-111.43'RT	11	EACH
12+63.48-20.66'LT	12+56.84-62.25'LT	4	EACH
16+15.43-20.75'LT	16+20.55-60.33'LT	4	EACH
19+83.91-20.75'LT	19+78.73-62.99'LT	4	EACH
19+99.15-20.75'LT	19+99.15-47.15'LT	2	EACH
23+52.51-20.68'LT	23+62.44-63.09'LT	4	EACH
27+34.10-20.72'LT	27+41.00-66.27'LT	15	EACH
27+34.10-20.72'LT	27+41.35-55.87'RT	12	EACH
31+16.32-20.75'LT	31+23.32-66.71'LT	4	EACH
34+63.41-20.75'LT	36+00.00-20.75'LT	1	EACH
46+50.05-21.00'LT	46+43.75-64.46'LT	9	EACH
46+50.05-21.00'LT	46+44.19-57.57'RT	13	EACH
	TOTAL	**86.0**	**EACH**

10" WATER MAIN RESTRAINING DEVICE			
STA/OFF		QUANTITY	UNIT
34+63.41-20.75'LT	36+00.00-20.75'LT	1	EACH
34+71.93-20.76'LT	34+61.87-58.66'LT	14	EACH
34+71.93-20.76'LT	34+62.94-57.82'RT	12	EACH
35+15.71-20.80'LT	35+15.68-49.83'LT	2	EACH
39+04.11-20.81'LT	39+11.15-63.21'LT	4	EACH
39+50.92-20.75'LT	39+50.92-51.16'LT	2	EACH
43+25.48-21.70'LT	43+25.63-52.42'LT	4	EACH
46+50.05-21.00'LT	46+43.75-64.46'LT	4	EACH
46+92.49-21.00'LT	46+92.49-55.15'LT	2	EACH
50+13.63-21.00'LT	50+21.55-60.64'LT	4	EACH
54+08.42-21.00'LT	54+13.71-62.85'RT	4	EACH
54+43.79-21.00'LT	54+38.77-61.93'LT	4	EACH
58+14.04-21.00'LT	58+14.04-58.43'LT	4	EACH
61+48.57-21.01'LT	61+54.60-59.81'LT	16	EACH
62+12.12-19.52'LT	62+09.50-169.11'RT	8	EACH
61+51.28-166.60'RT	62+09.50-169.11'RT	3	EACH
	TOTAL	**88.0**	**EACH**

REGISTERED PROFESSIONAL ENGINEER
REG. NO.
9737
DAVID F.
MAXWELL
SOUTH DAKOTA
12/4/15

STORM WATER POLLUTION PREVENTION PLAN CHECKLIST

*(The numbers right of the title headings are **reference numbers** to the GENERAL PERMIT FOR STORM WATER DISCHARGES ASSOCIATED WITH CONSTRUCTION ACTIVITIES*

SITE DESCRIPTION (4.2 1)

- **Project Limits: See Title Sheet (4.2 1.b)**
- **Project Description: See Title Sheet (4.2 1.a.)**
- **Site Map(s): See Title Sheet and Plans (4.2 1.f. (1)-(6))**
- **Major Soil Disturbing Activities** (check all that apply)
  - ☐ Clearing and grubbing
  - ☐ Excavation/borrow
  - ☐ Grading and shaping
  - ☐ Filling
  - ☐ Cutting and filling
  - ☒ Other (describe): water main and sanitary sewer installation
- **Total Project Area** 12.21 acres **(4.2 1.b.)**
- **Total Area To Be Disturbed** 9.77 acres **(4.2 1.b.)**
- **Existing Vegetative Cover (%)** 20
- **Soil Properties:** silty clay, clay, silt, sandy clay, sandy gravel, gravelly sand, gravelly silty sand **(4.2 1. d.)**
- **Name of Receiving Water Body/Bodies** Silver Creek then Lake Madison **(4.2 1.e.)**

ORDER OF CONSTRUCTION ACTIVITIES (4.2 1.c.)

(Stabilization measures shall be initiated as soon as possible, but in no case later than 14 days after the construction activity in that portion of the site has temporarily or permanently ceased. Initiation of final or temporary stabilization may exceed the 14-day limit if earth disturbing activities will be resumed within 21 days.)

- **Special sequencing requirements (PCN 02R6)**
- **Install stabilized construction entrance(s). (PCN 02R6)**
- **Install perimeter protection where runoff sheets from the site. (PCN 02R6)**
- **Install water main and sanitary sewer utilities.**
- **Install storm sewers, curb and gutter. (PCN 02R6)**
- **Install inlet and culvert protection after completing storm drainage and other utility installations. (PCN 02R6)**
- **Complete final grading. (PCN 02R6)**
- **Complete final paving and sealing of concrete. (PCN 02R6)**
- **Complete traffic control installation and protection devices. (PCN 02R6)**
- **Fertilize, reseed, and apply fiber reinforced matrix to vegetated areas disturbed by removal activities**. **(PCN 02R6)**

EROSION AND SEDIMENT CONTROLS (4.2 2.a.(1)(a)-(f))

(Check all that apply)

- **Stabilization Practices (See Detail Plan Sheets in PCN 02R6)**
  - ☐ Temporary Seeding (Cover Crop Seeding)
  - ☒ Permanent Seeding
  - ☐ Sodding
  - ☐ Planting (Woody Vegetation for Soil Stabilization)
  - ☐ Mulching (Grass Hay or Straw)
  - ☐ Hydraulic Mulch (Wood Fiber Mulch)
  - ☒ Soil Stabilizer
  - ☒ Fiber Reinforced Matrix
  - ☐ Erosion Control Blankets or Mats
  - ☐ Vegetation Buffer Strips
  - ☐ Roughened Surface (e.g. tracking)
  - ☐ Dust Control
  - ☐ Other:
- **Structural Temporary Erosion and Sediment Controls**
  - ☒ Silt Fence
  - ☐ Floating Silt Curtain
  - ☐ Straw Bale Check
  - ☐ Temporary Berm
  - ☐ Temporary Slope Drain
  - ☐ Straw Wattles or Rolls
  - ☐ Turf Reinforcement Mat
  - ☐ Rip Rap
  - ☐ Gabions
  - ☐ Rock Check Dams
  - ☐ Sediment Traps/Basins
  - ☐ Inlet Protection
  - ☐ Outlet Protection
  - ☐ Surface Inlet Protection (Area Drain)
  - ☒ Curb Inlet Protection
  - ☒ Stabilized Construction Entrances
  - ☐ Entrance/Exit Equipment Tire Wash
  - ☐ Interceptor Ditch
  - ☐ Concrete Washout Area
  - ☐ Temporary Diversion Channel
  - ☐ Work Platform
  - ☐ Temporary Water Barrier
  - ☐ Temporary Water Crossing
  - ☐ Other:
- **Wetland Avoidance**
  Will construction and/or erosion and sediment controls impinge on regulated wetlands? Yes ☐ No ☒ If yes, the structural and erosion and sediment controls have been included in the total project wetland impacts and have been included in the 404 permit process with the USACE.
- **Storm Water Management (4.2 2.b., (1) and (2))**
  Storm water management will be handled by temporary controls outlined in "EROSION AND SEDIMENT CONTROLS" above, and any permanent controls needed to meet permanent storm water management needs in the post construction period. Permanent controls will be shown on the plans and noted as permanent.
- **Other Storm Water Controls (4.2 2.c., (1) and (2))**
  - **Waste Disposal**
    All liquid waste materials will be collected and stored in sealed metal containers approved by the project engineer. All trash and construction debris from the site will be deposited in the approved containers. Containers will be serviced as necessary, and the trash will be hauled to an approved disposal site or licensed landfill. All onsite personnel will be instructed in the proper procedures for waste disposal, and notices stating proper practices will be posted in the field office. The general contractor's representative responsible for the conduct of work on the site will be responsible for seeing waste disposal procedures are followed.
  - **Hazardous Waste**
    All hazardous waste materials will be disposed of in a manner specified by local or state regulations or by the manufacturer. Site personnel will be instructed in these practices, and the individual designated as the contractor's on-site representative will be responsible for seeing that these practices are followed.
  - **Sanitary Waste**
    Portable sanitary facilities will be provided on all construction sites. Sanitary waste will be collected from the portable units in a timely manner by a licensed waste management contractor or as required by any local regulations.

MAINTENANCE AND INSPECTION (4.2 3. and 4.2 4.)

- **Maintenance and Inspection Practices**
  - Inspections will be conducted at least one time per week and after a storm event of 0.50 inches or greater.
  - All controls will be maintained in good working order. Necessary repairs will be initiated within 24 hours of the site inspection report.
  - Silt fence will be inspected for depth of sediment and for tears in order to ensure the fabric is securely attached to the posts and that the posts are well anchored. Sediment buildup will be removed from the silt fence when it reaches $^{1}/_{3}$ of the height of the silt fence.
  - Sediment basins and traps will be checked. Sediment will be removed when depth reaches approximately 50 percent of the structure's capacity, and at the conclusion of the construction.
  - Check dams will be inspected for stability. Sediment will be removed when depth reaches ½ the height of the dam.
  - All seeded areas will be checked for bare spots, washouts, and vigorous growth free of significant weed infestations.
  - Inspection and maintenance reports will be prepared on form DOT 298 for each site inspection, this form will also be used to document changes to the SWPPP. A copy of the completed inspection form will be filed with the SWPPP documents.
  - The SDDOT Project Engineer and contractor's site superintendent are responsible for inspections. Maintenance, repair activities are the responsibility of the contractor. The SDDOT Project Engineer will complete the inspection and maintenance reports and distribute copies per the distribution instructions on DOT 298.

NON-STORM WATER DISCHARGES (3.0)

The following non-storm water discharges are anticipated during the course of this project (check all that apply).

- ☐ Discharges from water line flushing.
- ☐ Pavement wash-water, where no spills or leaks of toxic or hazardous materials have occurred.
- ☒ Uncontaminated ground water associated with dewatering activities.

MATERIALS INVENTORY (4.2. 2.c.(2))

The following materials or substances are expected to be present on the site during the construction period. These materials will be handled as noted under the headings "EROSION AND SEDIMENT CONTROLS" and "SPILL PREVENTION" (check all that apply).

- ☒ Concrete and Portland Cement
- ☐ Detergents
- ☐ Paints
- ☐ Metals
- ☐ Bituminous Materials
- ☒ Petroleum Based Products
- ☐ Cleaning Solvents
- ☐ Wood
- ☐ Cure
- ☐ Texture
- ☐ Chemical Fertilizers
- ☐ Other:

REGISTERED PROFESSIONAL ENGINEER
REG. NO. 9737
DAVID A. MAXWELL
SOUTH DAKOTA
12/4/15

SPILL PREVENTION (4.2 2.c.(2))

- **Material Management**
  - Housekeeping
    - Only needed products will be stored on-site by the contractor.
    - Except for bulk materials the contractor will store all materials under cover and in appropriate containers.
    - Products must be stored in original containers and labeled.
    - Material mixing will be conducted in accordance with the manufacturer's recommendations.
    - When possible, all products will be completely used before properly disposing of the container off site.
    - The manufacturer's directions for disposal of materials and containers will be followed.
    - The contractor's site superintendent will inspect materials storage areas regularly to ensure proper use and disposal.
    - Dust generated will be controlled in an environmentally safe manner.
    - Vegetation areas not essential to the construction project will be preserved and maintained as noted on the plans.

  - Hazardous Materials
    - Products will be kept in original containers unless the container is not resealable.
    - Original labels and material safety data sheets will be retained in a safe place to relay important product information.
    - If surplus product must be disposed of, manufacturer's label directions for disposal will be followed.
    - Maintenance and repair of all equipment and vehicles involving oil changes, hydraulic system drain down, de-greasing operations, fuel tank drain down and removal, and other activities which may result in the accidental release of contaminants will be conducted on an impervious surface and under cover during wet weather to prevent the release of contaminants onto the ground.
    - Wheel wash water will be collected and allowed to settle out suspended solids prior to discharge. Wheel wash water will not be discharged directly into any storm water system or storm water treatment system.
    - Potential pH-modifying materials such as: bulk cement, cement kiln dust, fly ash, new concrete washings, concrete pumping, residuals from concrete saw cutting (either wet or dry), and mixer washout waters will be collected on site and managed to prevent contamination of storm water runoff.

- **Product Specific Practices (6.8)**
  - Petroleum Products
    All on-site vehicles will be monitored for leaks and receive regular preventive maintenance to reduce the chance of leakage. Petroleum products will be stored in tightly sealed containers which are clearly labeled.
  - Fertilizers
    Fertilizers will be applied only in the amounts specified by the SDDOT. Once applied, fertilizers will be worked into the soil to limit the exposure to storm water. Fertilizers will be stored in an enclosed area. The contents of partially used fertilizer bags will be transferred to sealable containers to avoid spills.
  - Paints
    All containers will be tightly sealed and stored when not required for use. The excess will be disposed of according to the manufacturer's instructions and any applicable state and local regulations.
  - Concrete Trucks
    Contractors will provide designated truck washout areas on the site. These areas must be self contained and not connected to any storm water outlet of the site. Upon completion of construction washout areas will be properly stabilized.

- **Spill Control Practices (4.2 2 c.(2))**

In addition to the previous housekeeping and management practices, the following practices will be followed for spill prevention and cleanup if needed.

  - For all hazardous materials stored on site, the manufacturer's recommended methods for spill clean up will be clearly posted. Site personnel will be made aware of the procedures and the locations of the information and cleanup supplies.
  - Appropriate cleanup materials and equipment will be maintained by the contractor in the materials storage area on-site. As appropriate, equipment and materials may include items such as brooms, dust pans, mops, rags, gloves, goggles, kitty litter, sand, sawdust, and plastic and metal trash containers specifically for clean up purposes.
  - All spills will be cleaned immediately after discovery and the materials disposed of properly.
  - The spill area will be kept well ventilated and personnel will wear appropriate protective clothing to prevent injury from contact with a hazardous substance.
  - After a spill a report will be prepared describing the spill, what caused it, and the cleanup measures taken. The spill prevention plan will be adjusted to include measures to prevent this type of spill from reoccurring, as well as clean up instructions in the event of reoccurrences.
  - The contractor's site superintendent, responsible for day-to-day operations, will be the spill prevention and cleanup coordinator. The contractor is responsible for ensuring that the site superintendent has had appropriate training for hazardous materials handling, spill management, and cleanup.

- **Spill Response (4.2 2 c.(2))**

The primary objective in responding to a spill is to quickly contain the material(s) and prevent or minimize migration into storm water runoff and conveyance systems. If the release has impacted on-site storm water, it is critical to contain the released materials on-site and prevent their release into receiving waters. If a spill of pollutants threatens storm water or surface water at the site, the spill response procedures outlined below must be implemented in a timely manner to prevent the release of pollutants.

  - The contractor's site superintendent will be notified immediately when a spill or the threat of a spill is observed. The superintendent will assess the situation and determine the appropriate response.
  - If spills represent an imminent threat of escaping erosion and sediment controls and entering receiving waters, personnel will be directed to respond immediately to contain the release and notify the superintendent after the situation has been stabilized. Spill kits containing appropriate materials and equipment for spill response and cleanup will be maintained by the contractor at the site.
  - If oil sheen is observed on surface water (e.g. settling ponds, detention ponds, swales), action will be taken immediately to remove the material causing the sheen. The contractor will use appropriate materials to contain and absorb the spill. The source of the oil sheen will also be identified and removed or repaired as necessary to prevent further releases.
  - If a spill occurs the superintendent or the superintendent's designee will be responsible for completing the spill reporting form and for reporting the spill to SD DENR.
  - Personnel with primary responsibility for spill response and clean up will receive training by the contractor's site superintendent or designee. The training must include identifying the location of the spill kits and other spill response equipment and the use of spill response materials.
  - Spill response equipment will be inspected and maintained as necessary to replace any materials used in spill response activities.

SPILL NOTIFICATION

In the event of a spill, the contractor's site superintendent will make the appropriate notification(s), consistent with the following procedures:

- A release or spill of a regulated substance (includes petroleum and petroleum products) must be reported to DENR immediately **if any one of the following** conditions exists:
  - The discharge threatens or is in a position to threaten the waters of the state (surface water or ground water).
  - The discharge causes an immediate danger to human health or safety.
  - The discharge exceeds 25 gallons.
  - The discharge causes a sheen on surface water.
  - The discharge of any substance that exceeds the ground water quality standards of ARSD (Administrative Rules of South Dakota) chapter 74:51:01.
  - The discharge of any substance that exceeds the surface water quality standards of ARSD chapter 74:51:01.
  - The discharge of any substance that harms or threatens to harm wildlife or aquatic life.
  - The discharge of crude oil in field activities under SDCL (South Dakota Codified Laws) chapter 45-9 is greater than 1 barrel (42 gallons).

To report a release or spill, call DENR at 605-773-3296 during regular office hours (8 a.m. to 5 p.m. Central time). To report the release after hours, on weekends or holidays, call State Radio Communications at 605-773-3231. Reporting the release to DENR does not meet any obligation for reporting to other state, local, or federal agencies. Therefore, the responsible person must also contact local authorities to determine the local reporting requirements for releases. DENR recommends that spills also be reported to the National Response Center at (800) 424-8802.

CONSTRUCTION CHANGES (4.4)

When changes are made to the construction project that will require alterations in the temporary erosion controls of the site, the Storm Water Pollution Prevention Plan (SWPPP) will be amended to provide appropriate protection to disturbed areas, all storm water structures, and adjacent waters. The SDDOT Project Engineer will modify the SWPPP plan (DOT 298) and drawings to reflect the needed changes. Copies of changes will be routed per DOT 298. Copies of forms and the SWPPP will be retained in a designated place for review over the course of the project.

REGISTERED PROFESSIONAL ENGINEER
REG. NO. 9737
D. R. MAXWELL
SOUTH DAKOTA
12/4/15

CERTIFICATIONS

- **Certification of Compliance with Federal, State, and Local Regulations**

The Storm Water Pollution Prevention Plan (SWPPP) for this project reflects the requirements of all local municipal jurisdictions for storm water management and sediment and erosion control as established by ordinance, as well as other state and federal requirements for sediment and erosion control plans, permits, notices or documentation as appropriate.

- **South Dakota Department of Transportation**

I certify under penalty of law that this document and all attachments were prepared under my direction or supervision in accordance with a system designed to assure that qualified personnel properly gather and evaluate the information submitted. Based on my inquiry of the person or persons who manage the system, or those persons directly responsible for gathering the information, the information submitted is, to the best of my knowledge and belief, true, accurate, and complete. I am aware that there are significant penalties for submitting false information, including the possibility of fine and imprisonment for knowing violations.

Authorized Signature (See the General Permit, Section 6.7.1.C.)

- **Prime Contractor**

This section is to be executed by the General Contractor after the award of the contract. This section may be executed any time there is a change in the Prime Contractor of the project.

I certify under penalty of law that this document and all attachments will be revised or maintained under my direction or supervision in accordance with a system designed to assure that qualified personnel properly gather and evaluate the information submitted. Based on my inquiry of the person or persons who manage the system, or those persons directly responsible for gathering the information, the information submitted is, to the best of my knowledge and belief, true, accurate, and complete. I am aware that there are significant penalties for submitting false information, including the possibility of fine and imprisonment for knowing violations.

Authorized Signature

CONTACT INFORMATION

- **Contractor Information**:
  - Prime Contractor Name: _____
  - Contractor Contact Name: _____
  - Address: _____
  - _____
  - City: _____State: _____Zip: _____
  - Office Phone: _____Field: _____
  - Cell Phone: _____Fax: _____
- **Erosion Control Supervisor**
  - Name: _____
  - Address: _____
  - _____
  - City: _____State: _____Zip: _____
  - Office Phone: _____Field: _____
  - Cell Phone: _____Fax: _____
- **SDDOT Project Engineer**
  - Name: _____
  - Business Address: _____
  - Job Office Location: _____
  - City: _____State: _____Zip: _____
  - Office Phone: _____Field: _____
  - Cell Phone: _____Fax: _____
- **SD DENR Contact Spill Reporting**
  - Business Hours Monday-Friday (605) 773-3296
  - Nights and Weekends (605) 773-3231
- **SD DENR Contact for Hazardous Materials.**
  - (605) 773-3153
- **National Response Center Hotline**
  - (800) 424-8802.

REGISTERED PROFESSIONAL ENGINEER
REG. NO. 9737
DAVID P. MAXWELL
SOUTH DAKOTA
12/4/15

CITY OF MADISON	PROJECT	SHEET	TOTAL SHEETS
	2016-1	15	45

FOR BIDDING PURPOSES ONLY

Plotting Date: 12/3/2015

WATER REMOVALS

STA 10+33.41-28.76'R to STA 12+00.00-24.01'L
174.8 LF – REMOVE WATER MAIN
2 EA -- REMOVE GATE VALVE

STA 10+68.48-96.60'R to STA 10+77.87-92.30'R
12.0 LF – REMOVE WATER MAIN
1 EA -- REMOVE FIRE HDYRANT

STA 10+73.88-111.43'R to STA 10+40.79-23.19'R
95.2 LF – REMOVE WATER MAIN
1 EA - REMOVE GATE VALVE

NOTES:
- NO UNRESTRAINED PIPE JOINTS WITHIN 5 FEET OF 8" FITTINGS, UNLESS OTHERWISE SPECIFIED.
- NO UNRESTRAINED PIPE JOINTS WITHIN 10 FEET OF FITTINGS LARGER THAN 8", UNLESS OTHERWISE SPECIFIED.
- ALL PIPE JOINTS SHALL BE RESTRAINED WHEN DOUBLE BLUE LINES ARE SHOWN:

12"W

- SEE SDDOT PLANS FOR STORM SEWER
- NEW WATER SERVICES MUST BE TIED OVER PRIOR TO CUTTING THROUGH THE EXISTING WATER MAIN FOR HYDRANTS, ETC.

WATER NOTES

STA 10+43.67-28.76'R to 12+00.00-14.84'L
166.6 LF -- 8" PVC WATER MAIN
1 EA – 8" x 8" PIPE TEE
3 EA – 8" WATER MAIN RESTRAINING DEVICE

STA 10+33.41-28.76'R to STA 10+73.88-111.43'R
97.2 LF -- 8" PVC WATER MAIN
1 EA – 8" PIPE BEND
1 EA – 8" x 6" PIPE TEE
2 EA – 8" GATE VALVE WITH BOX
1 EA – 8" x 6" PIPE REDUCER
1 EA – 8" PIPE SLEEVE
11 EA – 8" WATER MAIN RESTRAINING DEVICE
1 EA – 6" WATER MAIN RESTRAINING DEVICE
1 EA – CONNECT TO EXISTING WATER MAIN

STA 10+71.23-103.89'R to STA 10+85.10-96.97'R
18.0 LF -- 6" PVC WATER MAIN
1 EA – 6" GATE VALVE WITH BOX
4 EA – 6" WATER MAIN RESTRAINING DEVICE
1 EA – STANDARD FIRE HYDRANT

1 EA – TEMPORARY FIRE HYDRANT

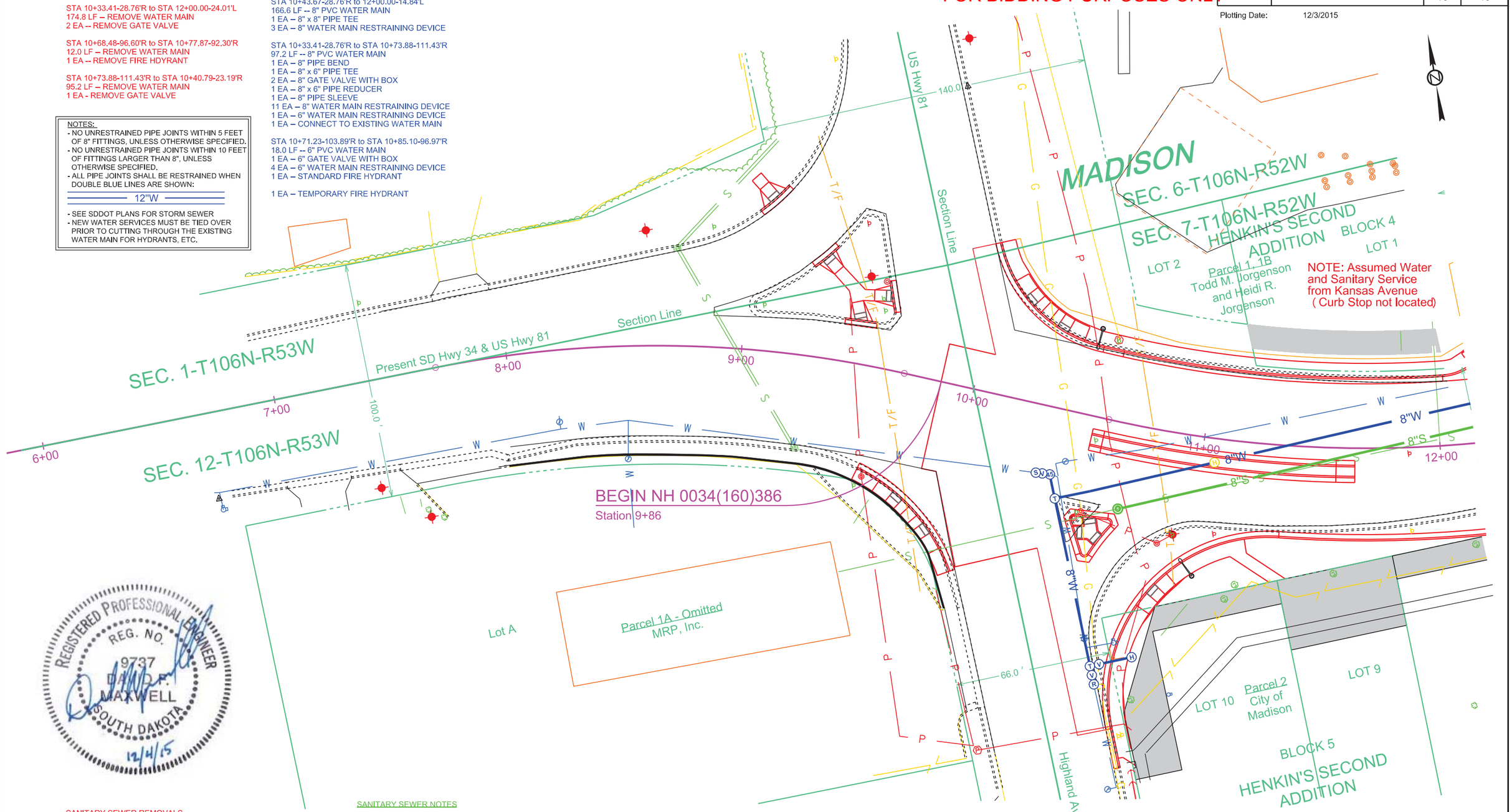

REGISTERED PROFESSIONAL ENGINEER
REG. NO. 9737
DAVID R. MAXWELL
SOUTH DAKOTA
12/4/15

SANITARY SEWER REMOVALS

STA 10+69.87-36.09'R to STA 12+00.00-2.81'L
139.6 LF -- REMOVE SEWER PIPE
1 EA -- REMOVE MANHOLE

SANITARY SEWER NOTES

STA 10+69.87-36.09'R
NEW SSMH 298
1 EA – 48" MANHOLE
1 EA – TYPE A10 MANHOLE FRAME AND LID
1 EA – EXTERNAL MANHOLE SEAL
1 EA – CONNECT TO EXISTING SEWER MAIN
1 EA – 8" MANHOLE BOOT
1 EA – 4" MANHOLE BOOT

STA 10+69.87-36.09'R to STA 12+00.00-4.69'L
139.9 LF – 8" PVC SEWER PIPE

CITY OF MADISON	PROJECT	SHEET	TOTAL SHEETS
	2016-1	16	45

FOR BIDDING PURPOSES ONLY

Plotting Date: 12/3/2015

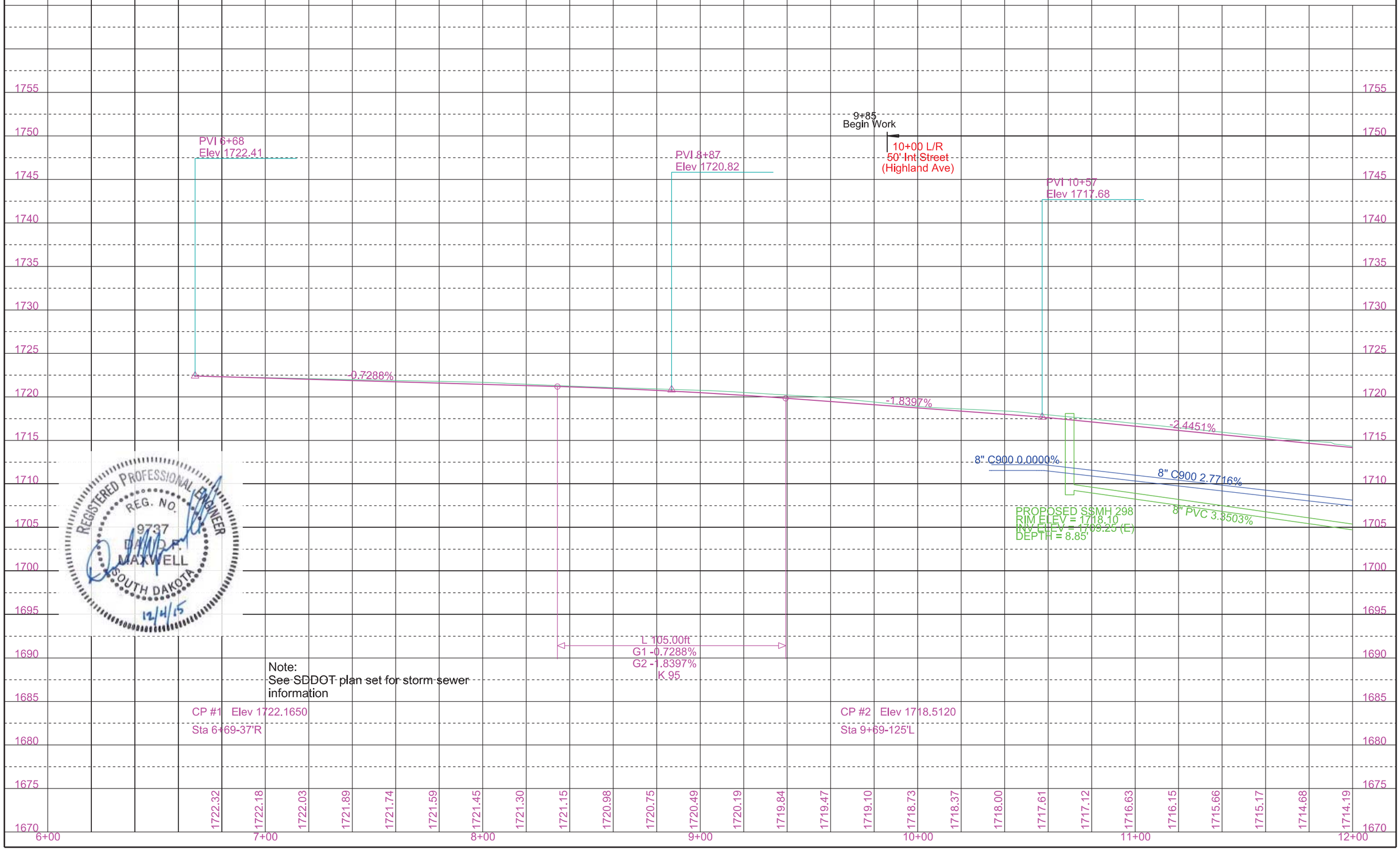

REGISTERED PROFESSIONAL ENGINEER
REG. NO. 9737
DAVID P. MAXWELL
SOUTH DAKOTA
12/4/15

CITY OF MADISON	PROJECT	SHEET	TOTAL SHEETS
	2016-1	17	45

FOR BIDDING PURPOSES ONLY

Plotting Date: 12/3/2015

NOTES:
- NO UNRESTRAINED PIPE JOINTS WITHIN 5 FEET OF 8" FITTINGS, UNLESS OTHERWISE SPECIFIED.
- NO UNRESTRAINED PIPE JOINTS WITHIN 10 FEET OF FITTINGS LARGER THAN 8", UNLESS OTHERWISE SPECIFIED.
- ALL PIPE JOINTS SHALL BE RESTRAINED WHEN DOUBLE BLUE LINES ARE SHOWN:

12"W

- SEE SDDOT PLANS FOR STORM SEWER
- NEW WATER SERVICES MUST BE TIED OVER PRIOR TO CUTTING THROUGH THE EXISTING WATER MAIN FOR HYDRANTS, ETC.

WATER REMOVALS

STA 12+00.00-24.01'L to STA 18+00.00-28.37'L
600.0 LF -- REMOVE WATER MAIN
2 EA -- REMOVE GATE VALVE

STA 12+56.23-28.21'L to STA 12+56.84-62.25'L
34.0 LF -- REMOVE WATER MAIN
1 EA -- REMOVE GATE VALVE

STA 12+76.19-28.74'L to STA 12+75.18-36.34'L
7.7 LF -- REMOVE WATER MAIN
1 EA -- REMOVE FIRE HYDRANT

STA 16+21.01-28.13'L to STA 16+20.43-58.37'L
30.2 LF -- REMOVE WATER MAIN
1 EA -- REMOVE GATE VALVE

STA 16+32.06-27.84'L to STA 16+32.28-37.80'L
10.0 LF -- REMOVE WATER MAIN
2 EA -- REMOVE GATE VALVE
1 EA -- REMOVE FIRE HYDRANT

WATER NOTES

STA 12+00.00-14.84'L to STA 18+00.00-20.75'L
600.0 LF -- 8" PVC WATER MAIN

STA 12+63.48-20.66'L to STA 12+56.84-62.25'L
44.0 LF -- 6" PVC WATER MAIN
1 EA -- 8" GATE VALVE WITH BOX
1 EA -- 8" x 6" PIPE TEE
1 EA -- 6" GATE VALVE WITH BOX
1 EA -- 6" x 6" PIPE TEE
2 EA -- 6" PIPE BEND
1 EA -- 6" x 4" PIPE REDUCER
1 EA -- 4" PIPE SLEEVE
4 EA -- 8" WATER MAIN RESTRAINING DEVICE
10 EA -- 6" WATER MAIN RESTRAINING DEVICE
3 EA -- 4" WATER MAIN RESTRAINING DEVICE
1 EA -- CONNECT TO EXISTING WATER MAIN

STA 12+62.95-45.83'L to STA 12+79.73-45.92'L
15.9 LF -- 6" PVC WATER MAIN
1 EA -- 6" GATE VALVE WITH BOX
4 EA -- 6" WATER MAIN RESTRAINING DEVICE
1 EA -- STANDARD FIRE HYDRANT

STA 13+29.44-20.75'L to STA 13+29.44-36.00'L
15.3 LF -- 1" WATER SERVICE

STA 13+97.84-20.75'L to STA 13+97.84-36.00'L
15.3 LF -- 1" WATER SERVICE

STA 15+08.99-20.75'L to STA 15+08.99-36.00'L
15.3 LF -- 1" WATER SERVICE

STA 15+81.47-20.75'L to STA 15+81.47-46.92'L
26.2 LF -- 1" WATER SERVICE

STA 16+15.43-20.75'L to STA 16+20.55-60.33'L
42.5 LF -- 6" PVC WATER MAIN
1 EA -- 8" GATE VALVE WITH BOX
1 EA -- 8" x 6" PIPE TEE
1 EA -- 6" GATE VALVE WITH BOX
1 EA -- 6" x 6" PIPE TEE
2 EA -- 6" PIPE BEND
1 EA -- 6" x 4" PIPE REDUCER
1 EA -- 4" PIPE SLEEVE
4 EA -- 8" WATER MAIN RESTRAINING DEVICE
11 EA -- 6" WATER MAIN RESTRAINING DEVICE
3 EA -- 4" WATER MAIN RESTRAINING DEVICE
1 EA -- CONNECT TO EXISTING WATER MAIN

STA 16+15.43-45.92'L to STA 16+38.69-45.92'L
23.3 LF -- 6" PVC WATER MAIN
1 EA -- 6" GATE VALVE WITH BOX
4 EA -- 6" WATER MAIN RESTRAINING DEVICE
1 EA -- STANDARD FIRE HYDRANT

STA 16+82.93-20.75'L to STA 16+82.93-36.00'L
15.3 LF -- 1" WATER SERVICE

STA 17+56.93-20.75'L to STA 17+56.93-36.00'L
15.3 LF -- 1" WATER SERVICE

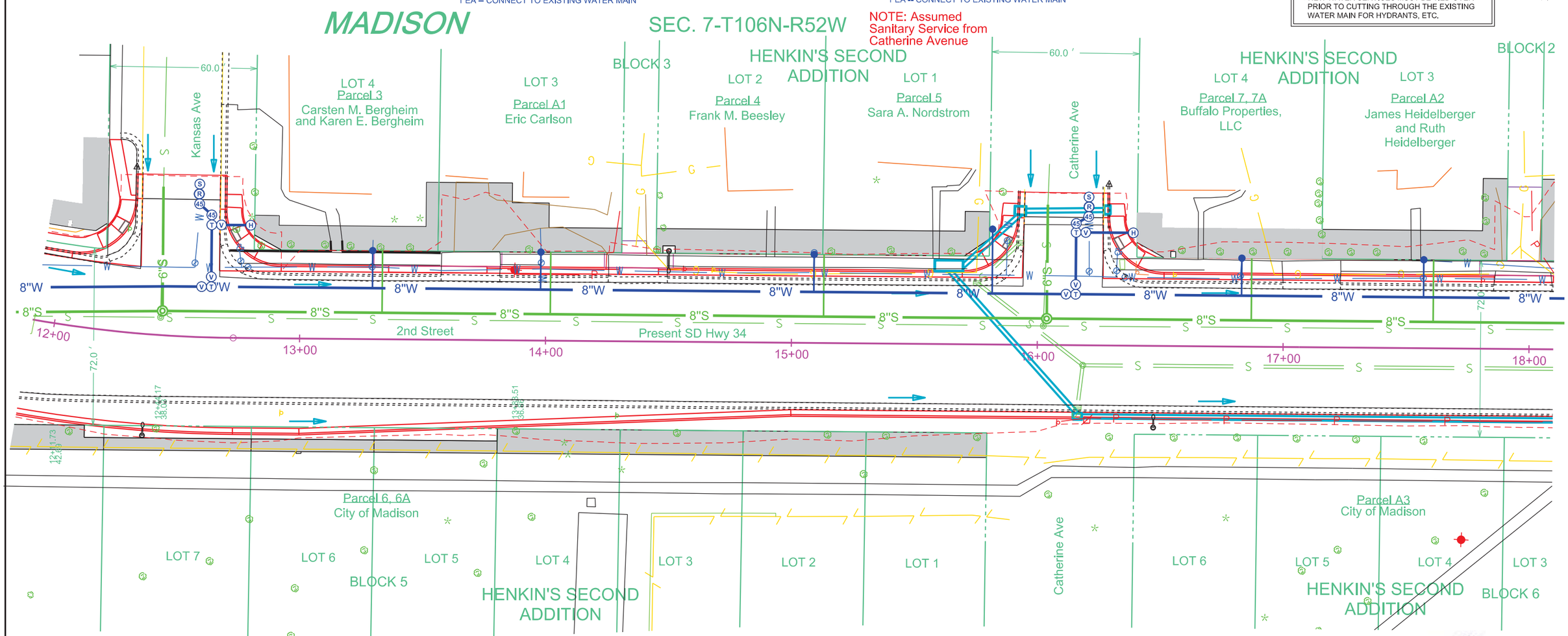

SANITARY SEWER REMOVALS

STA 12+00.00-2.81'L to STA 12+42.92-7.22'L
40.7 LF -- REMOVE SEWER PIPE
1 EA -- REMOVE MANHOLE

STA 12+42.92-7.22'L to STA 12+40.12-60.36'L
51.2 LF -- REMOVE SEWER PIPE

STA 12+42.91-7.22'L to STA 16+02.40-7.74'L
360.0 LF -- REMOVE SEWER PIPE
1 EA -- REMOVE MANHOLE

STA 16+02.40-7.74'L to STA 16+03.87-57.06'L
47.3 LF -- REMOVE SEWER PIPE

STA 16+02.40-7.74'L to STA 18+00.00-7.97'L
195.6 LF -- REMOVE SEWER PIPE

SANITARY SEWER NOTES

STA 12+00.00-4.69'L to STA 12+43.54-9.90'L
43.2 LF -- 8" PVC SEWER PIPE

STA 12+43.54-9.90'L
NEW SSMH 300
1 EA -- 48" MANHOLE
1 EA -- TYPE A10 MANHOLE FRAME AND LID
1 EA -- EXTERNAL MANHOLE SEAL
1 EA -- 6" MANHOLE BOOT
2 EA -- 8" MANHOLE BOOT

STA 12+43.54-9.90'L to STA 12+40.12-60.36'L
50.6 LF -- 6" PVC SEWER PIPE
1 EA -- CONNECT TO EXISTING SEWER MAIN

STA 12+43.54-9.90'L to STA 16+03.75-10.74'L
359.6 LF -- 8" PVC SEWER PIPE

STA 13+33.44-10.75'L to STA 13+33.44-36.00'L
25.3 LF -- 4" SEWER SERVICE
1 EA -- 8" x 4" PIPE WYE

STA 14+01.84-10.75'L to STA 14+01.84-36.00'L
25.3 LF -- 4" SEWER SERVICE
1 EA -- 8" x 4" PIPE WYE

STA 15+12.99-10.75'L to STA 15+12.99-36.00'L
25.3 LF -- 4" SEWER SERVICE
1 EA -- 8" x 4" PIPE WYE

STA 16+03.75-10.74'L
NEW SSMH 296
1 EA -- 48" MANHOLE
1 EA -- TYPE A10 MANHOLE FRAME AND LID
1 EA -- EXTERNAL MANHOLE SEAL
1 EA -- 6" MANHOLE BOOT
2 EA -- 8" MANHOLE BOOT

STA 16+03.75-10.74'L to STA 16+03.87-57.06'L
46.3 LF -- 6" PVC SEWER PIPE
1 EA -- CONNECT TO EXISTING SEWER MAIN

STA 16+03.75-10.74'L to STA 18+00.00-10.75'L
196.2 LF -- 8" PVC SEWER PIPE

STA 16+86.93-10.75'L to STA 16+86.93-36.00'L
25.3 LF -- 4" SEWER SERVICE
1 EA -- 8" x 4" PIPE WYE

STA 17+60.93-10.75'L to STA 17+60.93-36.00'L
25.3 LF -- 4" SEWER SERVICE
1 EA -- 8" x 4" PIPE WYE

REGISTERED PROFESSIONAL ENGINEER
REG. NO. 9737
DAVID F. MAXWELL
SOUTH DAKOTA
12/4/15

CITY OF MADISON	PROJECT	SHEET	TOTAL SHEETS
	2016-1	18	45

FOR BIDDING PURPOSES ONLY

Plotting Date: 12/3/2015

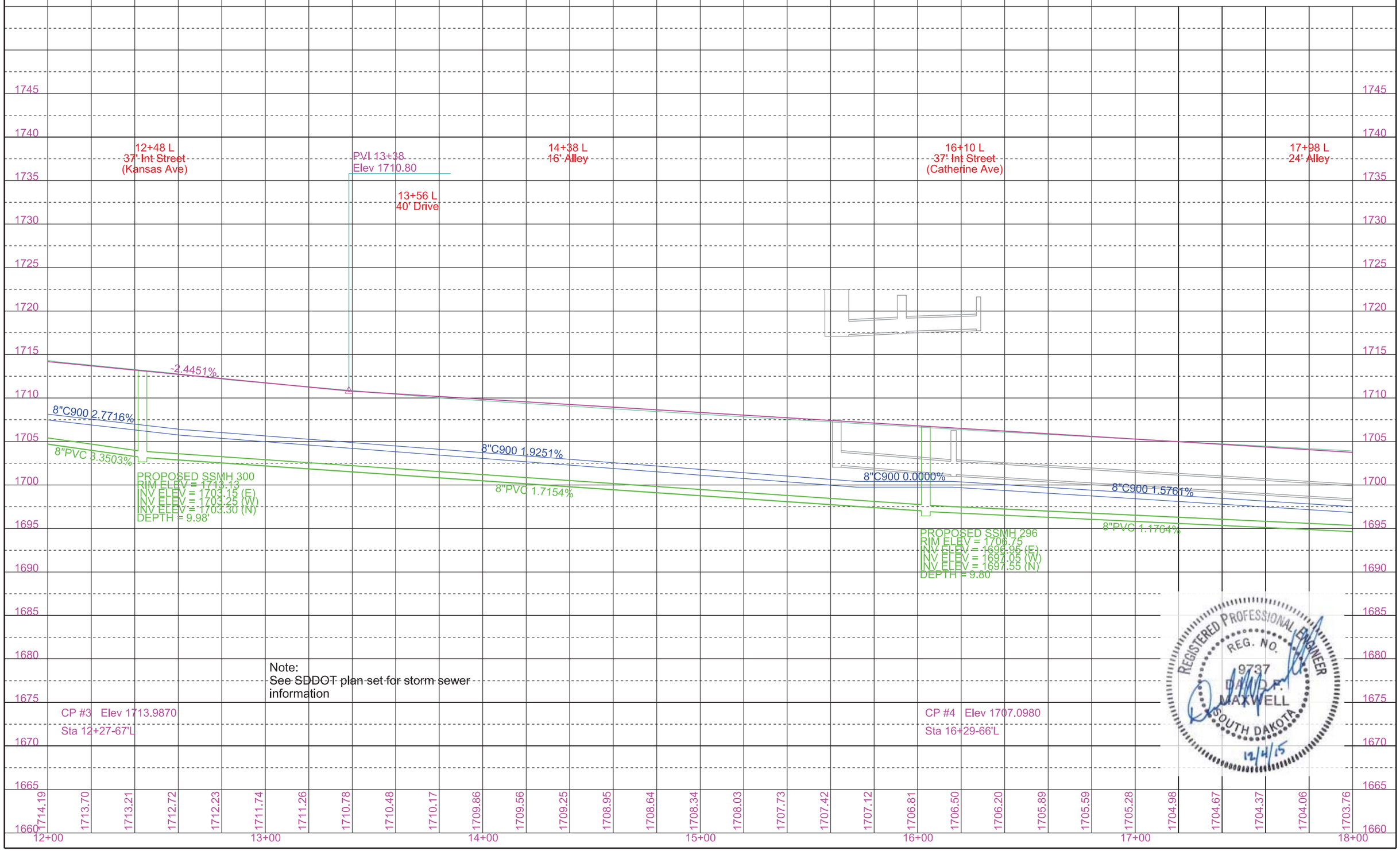

Note:
See SDDOT plan set for storm sewer information

REGISTERED PROFESSIONAL ENGINEER
REG. NO. 9737
DAVID P. MAXWELL
SOUTH DAKOTA
12/4/15

CITY OF MADISON	PROJECT	SHEET	TOTAL SHEETS
	2016-1	19	45

FOR BIDDING PURPOSES ONLY

Plotting Date: 12/3/2015

WATER REMOVALS

STA 18+00.00-28.37'L to STA 24+00.00-28.91'L
600 LF – REMOVE WATER MAIN
2 EA – REMOVE GATE VALVE

STA 19+78.11-28.59'L to STA 19+78.91-58.52'L
28.9 LF -- REMOVE WATER MAIN
1 EA – REMOVE GATE VALVE

STA 19+93.08-28.49'L to STA 19+93.22-38.91'L
10.7 LF -- REMOVE WATER MAIN
1 EA – REMOVE GATE VALVE
1 EA – REMOVE FIRE HYDRANT

STA 23+62.97-28.70'L to STA 23+62.44-63.09'L
30.2 LF – REMOVE WATER MAIN
1 EA – REMOVE GATE VALVE

STA 23+62.33-60.76'R to STA 23+62.94-28.70'L
93.7 LF – REMOVE WATER MAIN
1 EA – REMOVE GATE VALVE

STA 23+70.11-28.69'L to STA 23+70.37-36.77'L
8.1 LF - REMOVE WATER MAIN
1 EA – REMOVE GATE VALVE
1 EA – REMOVE FIRE HYDRANT

WATER NOTES

STA 18+00.00-20.75'L to STA 24+00.00-20.68'L
600 LF – 8" PVC WATER MAIN

STA 18+45.31-20.75'L to STA 18+45.31-36.00'L
15.3 LF -- 1" WATER SERVICE

STA 19+01.24-20.75'L to STA 19+01.24-36.00'R
56.8 LF -- 1" WATER SERVICE

STA 19+09.05-20.75'L to STA 19+09.05-36.00'L
15.3 LF -- 1" WATER SERVICE

STA 19+43.37-20.75'L to STA 19+43.37-46.92'L
26.2 LF -- 1" WATER SERVICE

STA 19+45.00-20.75'L to STA 19+45.00-69.64'R
90.4 LF -- 1" WATER SERVICE

STA 19+83.91-20.75'L to STA 19+78.73-62.99'L
44.6 LF – 6" PVC WATER MAIN
1 EA -- 8" GATE VALVE WITH BOX
1 EA -- 8" x 6" PIPE TEE
1 EA -- 6" GATE VALVE WITH BOX
2 EA -- 6" PIPE BEND
1 EA -- 6" x 4" PIPE REDUCER
1 EA -- 4" PIPE SLEEVE
4 EA -- 8" WATER MAIN RESTRAINING DEVICE
8 EA -- 6" WATER MAIN RESTRAINING DEVICE
3 EA -- 4" WATER MAIN RESTRAINING DEVICE
1 EA -- CONNECT TO EXISTING WATER MAIN

STA 19+99.15-20.75'L to STA 19+99.15-47.15'L
26.4 LF – 6" PVC WATER MAIN
1 EA -- 8" x 6" PIPE TEE
1 EA -- 6" GATE VALVE WITH BOX
2 EA -- 8" RESTRAINING DEVICE
4 EA -- 6" RESTRAINING DEVICE
1 EA -- STANDARD FIRE HYDRANT

STA 20+35.76-20.75'L to STA 20+35.76-36.00'R
56.8 LF – 1" WATER SERVICE

STA 20+55.24-20.75'L to STA 20+55.24-36.00'L
15.3 LF -- 1" WATER SERVICE

STA 21+08.96-20.75'L to STA 21+08.96-35.96'R
56.7 LF – 1" WATER SERVICE

STA 21+15.63-20.75'L to STA 21+15.63-36.00'L
15.3 LF – 1" WATER SERVICE

STA 22+53.08-20.75'L to STA 22+53.08-36.00'L
15.3 LF – 1" WATER SERVICE

STA 23+33.81-10.66'L to STA 23+34.44-63.09'L
46.8 LF -- 6" PVC WATER MAIN
1 EA – 8" GATE VALVE WITH BOX
1 EA – 8" x 6" PIPE CROSS
1 EA – 6" GATE VALVE WITH BOX
2 EA – 6" PIPE BEND
1 EA – 6" x 6" PIPE TEE
1 EA – 6" PIPE SLEEVE
4 EA – 8" WATER MAIN RESTRAINING DEVICE
11 EA – 6" WATER MAIN RESTRAINING DEVICE
1 EA – CONNECT TO EXISTING WATER MAIN

STA 23+52.51-20.68'L to STA 23+62.33-60.76'R
85.3 LF -- 6" PVC WATER MAIN
1 EA – 6" GATE VALVE WITH BOX
4 EA – 6" PIPE BEND
1 EA – 6" PIPE SLEEVE
13 EA – 6" WATER MAIN RESTRAINING DEVICE
1 EA – CONNECT TO EXISTING WATER MAIN

STA 23+62.45-59.57'L to STA 23+70.45-59.60'L
8.0 LF – 6" PVC WATER MAIN
1 EA – 6" GATE VALVE WITH BOX
4 EA – 6" WATER MAIN RESTRAINING DEVICE
1 EA – STANDARD FIRE HYDRANT

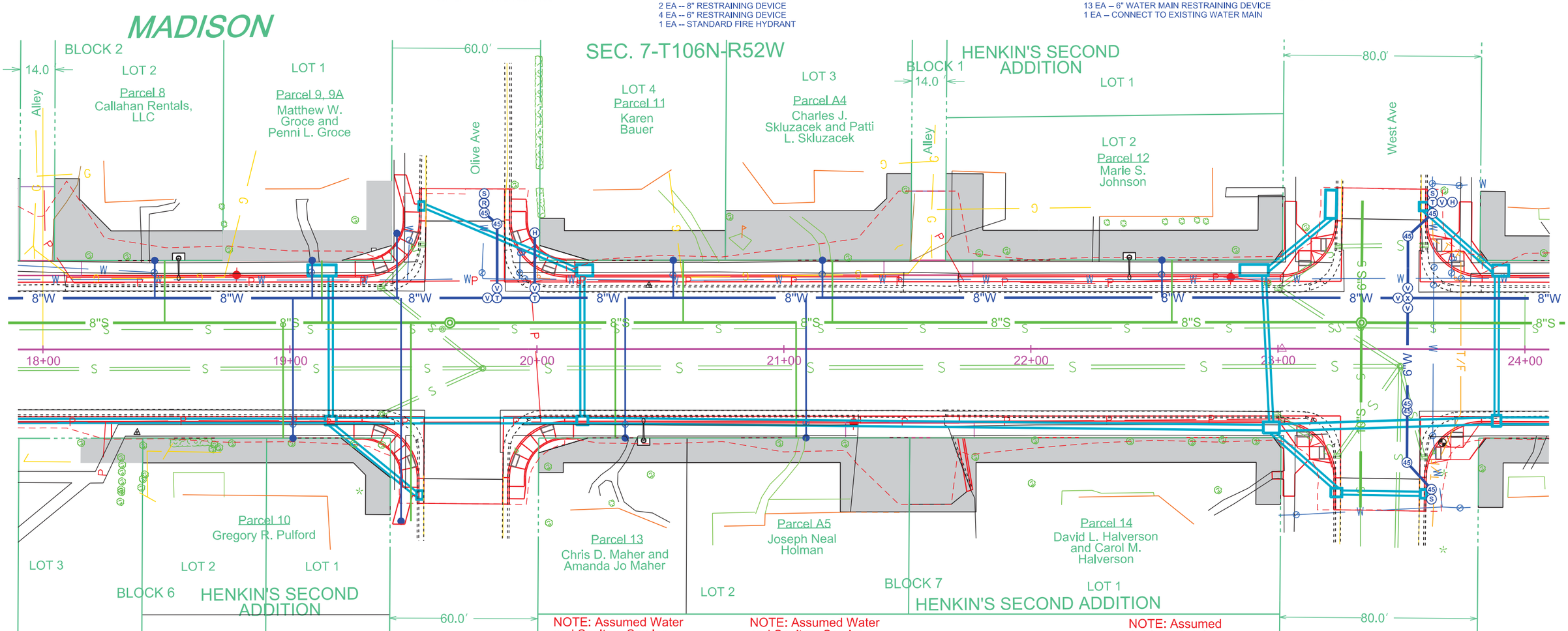

SANITARY SEWER REMOVALS

STA 18+00.00-7.97'L to STA 19+61.77-8.16'L
160.6 LF – REMOVE SEWER PIPE
1 EA – REMOVE MANHOLE

STA 19+61.77-8.16'L to STA 23+33.54-8.54'L
369.4 LF – REMOVE SEWER PIPE
1 EA – REMOVE MANHOLE

STA 23+33.54-8.54'L to STA 23+34.11-60.09'L
50.4 LF -- REMOVE SEWER PIPE

STA 23+33.56-8.54'L to STA 23+33.57-64.22'R
71.6 LF -- REMOVE SEWER PIPE

STA 23+33.54-8.54'L to STA 24+00.00-8.41'L
65.2 LF -- REMOVE SEWER PIPE

SANITARY SEWER NOTES

STA 18+00.00-10.75'L to STA 19+64.79-10.74'L
164.8 LF -- 8" PVC SEWER PIPE

STA 18+49.31-10.75'L to STA 18+49.31-36.00'L
25.3 LF – 4" SEWER SERVICE
1 EA – 8" x 4" PIPE WYE

STA 18+97.24-10.75'L to STA 18+97.24-36.00'R
46.8 LF – 4" SEWER SERVICE
1 EA – 8" x 4" PIPE WYE

STA 19+12.94-10.75'L to STA 19+12.94-36.00'L
25.3 LF – 4" SEWER SERVICE
1 EA – 8" x 4" PIPE WYE

STA19+49.00-10.75'L to STA 19+49.00-69.64'R
80.4 LF – 4" SEWER SERVICE
1 EA – 8" x 4" PIPE WYE

STA 19+64.79-10.74'L
NEW SSMH 302
1 EA – 48" MANHOLE
1 EA – TYPE A10 MANHOLE FRAME AND LID
1 EA – EXTERNAL MANHOLE SEAL
2 EA – 8" MANHOLE BOOT

STA 19+64.79-10.74'L to STA 23+33.81-10.66'L
369.1 LF -- 8" PVC SEWER PIPE

STA 20+31.76-10.75'L to STA 20+31.76-36.00'R
46.8 LF -- 4" SEWER SERVICE
1 EA – 8" x 4" PIPE WYE

STA 20+59.24-10.75'L to STA 20+59.24-36.00'L
25.3 LF -- 4" SEWER SERVICE
1 EA – 8" x 4" PIPE WYE

STA 21+04.96-10.75'L to STA 21+04.96-35.96'R
46.7 LF -- 4" SEWER SERVICE
1 EA -- 8" x 4" PIPE WYE

STA 21+19.63-10.75'L to STA 21+19.63-36.00'L
25.3 LF -- 4" SEWER SERVICE
1 EA -- 8" x 4" PIPE WYE

STA 22+57.05-10.75'L to STA 22+57.12-36.00'L
25.3 LF -- 4" SEWER SERVICE
1 EA -- 8" x 4" PIPE WYE

STA 23+33.81-10.66'L
NEW SSMH 305
1 EA -- 48" MANHOLE
1 EA -- TYPE A10 MANHOLE FRAME AND LID
1 EA -- EXTERNAL MANHOLE SEAL
1 EA -- 6" MANHOLE BOOT
2 EA -- 8" MANHOLE BOOT
1 EA -- 10" MANHOLE BOOT

STA 23+33.81-10.66'L to STA 23+34.11-60.09'L
49.4 LF – 6" PVC SEWER PIPE
1 EA -- CONNECT TO EXISTING SEWER MAIN

STA 23+33.81-10.66'L to STA 23+33.57-64.22'R
74.9 LF – 10" PVC SEWER PIPE
1 EA -- CONNECT TO EXISTING SEWER MAIN

STA 23+33.81-10.66'L to STA 24+00.00-10.68'L
66.2 LF – 8" PVC SEWER PIPE

NOTES:
- NO UNRESTRAINED PIPE JOINTS WITHIN 5 FEET OF 8" FITTINGS, UNLESS OTHERWISE SPECIFIED.
- NO UNRESTRAINED PIPE JOINTS WITHIN 10 FEET OF FITTINGS LARGER THAN 8", UNLESS OTHERWISE SPECIFIED.
- ALL PIPE JOINTS SHALL BE RESTRAINED WHEN DOUBLE BLUE LINES ARE SHOWN:

12"W

- SEE SDDOT PLANS FOR STORM SEWER
- NEW WATER SERVICES MUST BE TIED OVER PRIOR TO CUTTING THROUGH THE EXISTING WATER MAIN FOR HYDRANTS, ETC.

REGISTERED PROFESSIONAL ENGINEER
REG. NO. 9737
DAVID R. MAXWELL
SOUTH DAKOTA
12/4/15

CITY OF MADISON	PROJECT	SHEET	TOTAL SHEETS
	2016-1	20	45

FOR BIDDING PURPOSES ONLY

Plotting Date: 12/3/2015

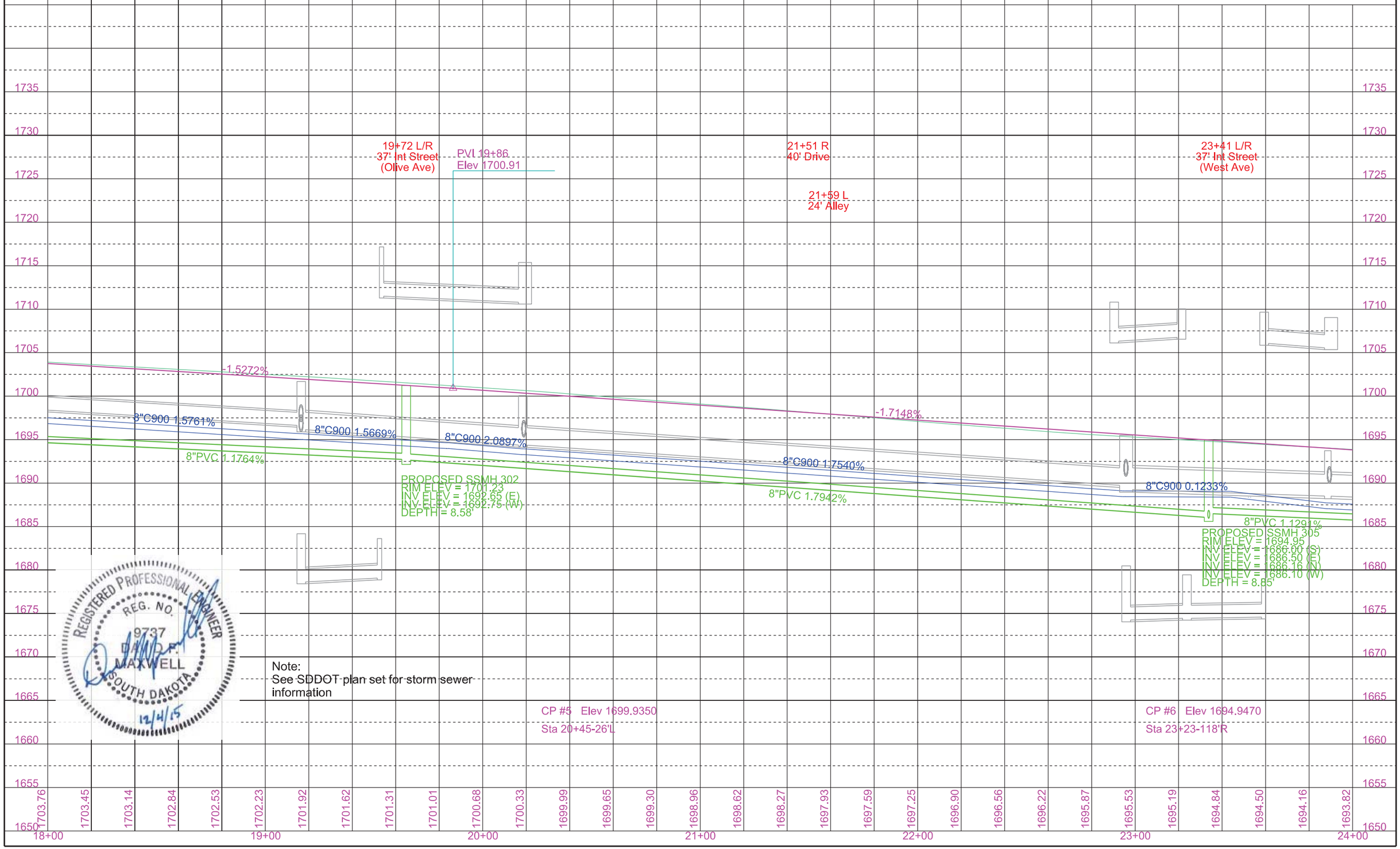

REGISTERED PROFESSIONAL ENGINEER
REG. NO. 9737
DAVID P. MAXWELL
SOUTH DAKOTA
12/4/15

Note:
See SDDOT plan set for storm sewer information

CITY OF MADISON	PROJECT	SHEET	TOTAL SHEETS
	2016-1	21	45

FOR BIDDING PURPOSES ONLY

Plotting Date: 12/3/2015

NOTES:
- NO UNRESTRAINED PIPE JOINTS WITHIN 5 FEET OF 8" FITTINGS, UNLESS OTHERWISE SPECIFIED.
- NO UNRESTRAINED PIPE JOINTS WITHIN 10 FEET OF FITTINGS LARGER THAN 8", UNLESS OTHERWISE SPECIFIED.
- ALL PIPE JOINTS SHALL BE RESTRAINED WHEN DOUBLE BLUE LINES ARE SHOWN:

12"W

- SEE SDDOT PLANS FOR STORM SEWER
- NEW WATER SERVICES MUST BE TIED OVER PRIOR TO CUTTING THROUGH THE EXISTING WATER MAIN FOR HYDRANTS, ETC.

WATER REMOVALS

STA 24+00.00-28.91'L to STA 30+00.00-28.69'L
600 LF – REMOVE WATER MAIN
1 EA -- REMOVE GATE VALVE

STA 27+41.35-55.87'R to STA 27+41.93-30.25'L
86.1 LF -- REMOVE WATER MAIN
1 EA -- REMOVE GATE VALVE

STA 27+41.93-30.25'L to STA 27+40.95-66.27'L
36.0 LF -- REMOVE WATER MAIN
1 EA -- REMOVE GATE VALVE

STA 27+51.46-30.46'L to STA 27+51.04-43.06'L
12.6 LF -- REMOVE WATER MAIN
1 EA -- REMOVE GATE VALVE
1 EA -- REMOVE FIRE HYDRANT

WATER NOTES

STA 24+00.00-20.68'L to STA 30+00.00-20.74'L
600 LF -- 8" PVC WATER MAIN

STA 24+72.08-20.69'L to STA 24+72.08-36.00'L
15.3 LF – 1" WATER SERVICE

STA 24+78.88-20.69'L to STA 24+78.88-36.00'R
56.7 LF – 1" WATER SERVICE

STA 25+03.70-20.69'L to STA 25+03.71-36.00'R
56.7 LF – 1" WATER SERVICE

STA 25+78.17-20.70'L to STA 25+78.17-36.00'L
15.3 LF – 1" WATER SERVICE

STA 27+34.10-20.72'L to STA 27+41.00-66.27'L
48.6 LF – 8" PVC WATER MAIN
2 EA – 8" GATE VALVE WITH BOX
1 EA – 8" x 8 PIPE CROSS
2 EA – 8" PIPE BEND
1 EA – 8" x 6" PIPE TEE
1 EA – 8" x 4" PIPE REDUCER
1 EA – 4" PIPE SLEEVE
15 EA – 8" WATER MAIN RESTRAINING DEVICE
3 EA – 4" WATER MAIN RESTRAINING DEVICE
1 EA – CONNECT TO EXISTING WATER MAIN

STA 27+40.98-58.92'L to STA 27+48.18-58.64'L
7.2 LF -- 6" PVC WATER MAIN
1 EA -- 6" GATE VALVE WITH BOX
4 EA -- 6" WATER MAIN RESTRAINING DEVICE
1 EA -- STANDARD FIRE HYDRANT

STA 27+34.10-20.72'L to STA 27+41.35-55.87'R
79.3 LF – 8" PVC WATER MAIN
1 EA -- 8" GATE VALVE WITH BOX
4 EA -- 8" PIPE BEND
1 EA -- 8" PIPE SLEEVE
12 EA -- 8" WATER MAIN RESTRAINING DEVICE
1 EA -- CONNECT TO EXISTING WATER MAIN

STA 28+02.40-20.72'L to STA 28+02.40-38.00'L
17.3 LF – 1" WATER SERVICE

STA 28+43.10-20.73'L to STA 28+43.10-36.00'R
56.7 LF – 1" WATER SERVICE

STA 29+01.05-20.73'L to STA 29+01.06-36.00'R
56.7 LF – 1" WATER SERVICE

STA 29+03.44-20.73'L to STA 29+03.44-38.00'L
17.3 LF – 1" WATER SERVICE

STA 29+47.64-20.74'L to STA 29+74.64-36.00'R
56.7 LF – 1" WATER SERVICE

STA 29+57.07-20.74'L to STA 29+57.07-38.00'L
17.3 LF – 1" WATER SERVICE

STA 29+99.86-20.74'L TO 29+99.86-38.00'L
17.3 LF – 1" WATER SERVICE

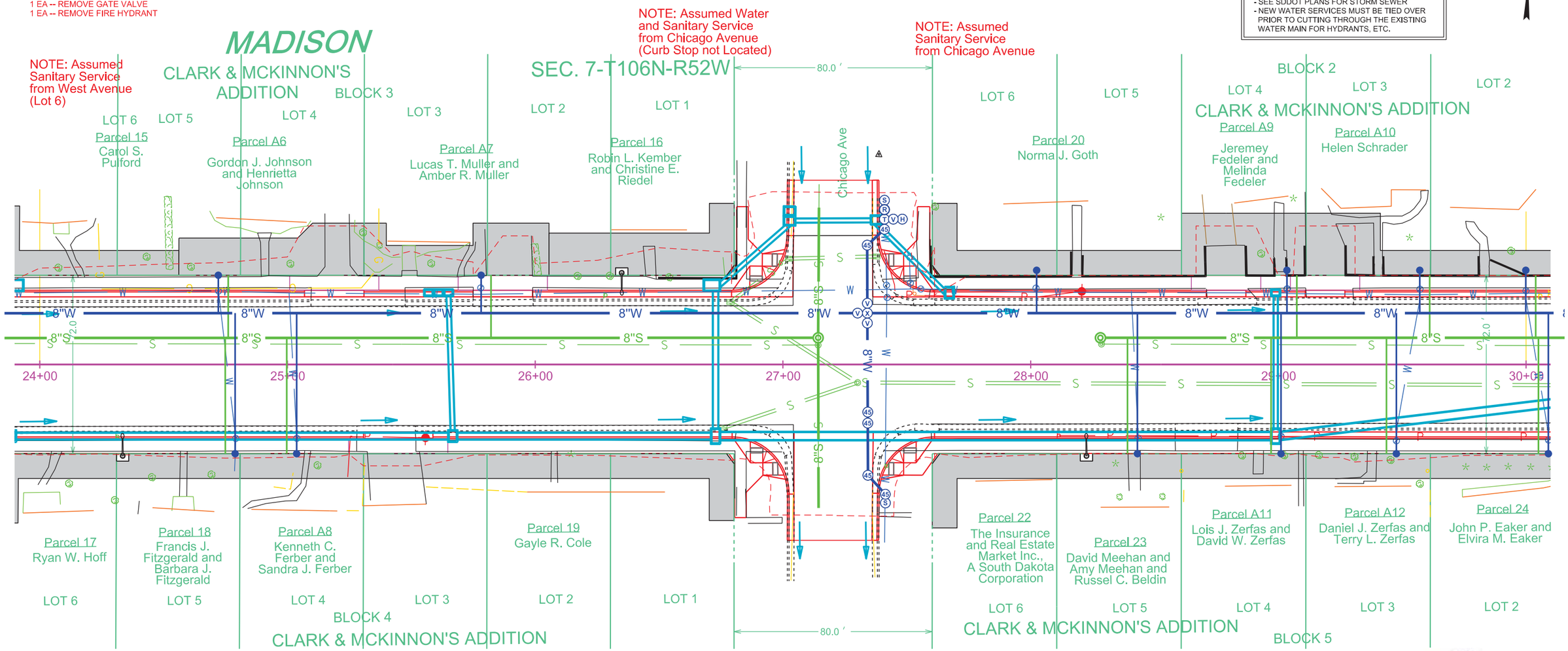

SANITARY SEWER REMOVALS

24+00.00-8.41'L to STA 27+14.20-7.81'L
313.0 LF – REMOVE SEWER PIPE
1 EA -- REMOVE MANHOLE

27+14.36-57.90'R to STA 27+14.20-7.81'L
64.5 LF -- REMOVE SEWER PIPE

STA 27+14.20-7.81'L to STA 27+14.55-63.29'L
54.3 LF -- REMOVE SEWER PIPE

STA 28+28.59-8.24'L to STA 30+00.00-7.61'L
170.2 LF – REMOVE SEWER PIPE
1 EA -- REMOVE MANHOLE

SANITARY SEWER NOTES

STA 24+00.00-10.68'L to STA 27+14.23-10.75'L
314.2 LF – 8" PVC SEWER PIPE

STA 24+74.88-10.70'L to STA 24+74.89-36.00'R
46.7 LF – 4" SEWER SERVICE
1 EA – 8" x 4" PIPE WYE

STA 24+76.08-10.70'L to STA 24+76.07-36.00'L
25.3 LF – 4" SEWER SERVICE
1 EA – 8" x 4" PIPE WYE

STA 24+99.70-10.71'L to STA 24+99.72-36.00'R
46.7 LF – 4" SEWER SERVICE
1 EA -- 8" x 4" PIPE WYE

STA 25+82.17-10.73'L to STA 25+82.17-36.00'L
25.3 LF – 4" SEWER SERVICE
1 EA -- 8" x 4" PIPE WYE

STA 27+14.23-10.75'L
NEW SSMH 297
1 EA -- 48" MANHOLE
1 EA -- TYPE A10 MANHOLE FRAME AND LID
1 EA -- EXTERNAL MANHOLE SEAL
3 EA -- 8" MANHOLE BOOT

STA 27+14.23-10.75'L to STA 27+14.55-63.29'L
52.5 LF – 8" PVC SEWER PIPE
1 EA -- CONNECT TO EXISTING SEWER MAIN

STA 27+14.23-10.75'L to STA 27+14.36-57.90'R
68.7 LF – 8" PVC SEWER PIPE
1 EA -- CONNECT TO EXISTING SEWER MAIN

STA 28+28.16-10.75'L
NEW SSMH 321
1 EA – 48" MANHOLE
1 EA – TYPE A10 MANHOLE FRAME AND LID
1 EA – EXTERNAL MANHOLE SEAL
1 EA – 8" MANHOLE BOOT

STA 28+28.16-10.75'L to STA 30+00.00-10.75'L
171.8 LF – 8" PVC SEWER PIPE

STA 28+39.10-10.75'L to 28+39.10-36.00'R
46.8 LF – 4" SEWER SERVICE
1 EA – 8" x 4" PIPE WYE

STA 28+97.05-10.75'L to STA 28+97.06-36.00'R
46.8 LF – 4" SEWER SERVICE
1 EA – 8" x 4" PIPE WYE

STA 29+07.44-10.75'L to STA 29+07.44-36.00'L
25.3 LF – 4" SEWER SERVICE
1 EA – 8" x4" PIPE WYE

STA 29+43.64-10.75'L to STA 29+43.64-36.00'R
46.8 LF – 4" SEWER SERVICE
1 EA – 8" x 4" PIPE WYE

STA 29+61.07-10.75'L to STA 29+61.07-36.00'L
25.3 LF – 4" SEWER SERVICE
1 EA – 8" x 4" PIPE WYE

REGISTERED PROFESSIONAL ENGINEER
REG. NO. 9737
DAVID P. MAXWELL
SOUTH DAKOTA
12/4/15

FOR BIDDING PURPOSES ONLY

CITY OF MADISON	PROJECT	SHEET	TOTAL SHEETS
	2016-1	22	45

Plotting Date: 12/3/2015

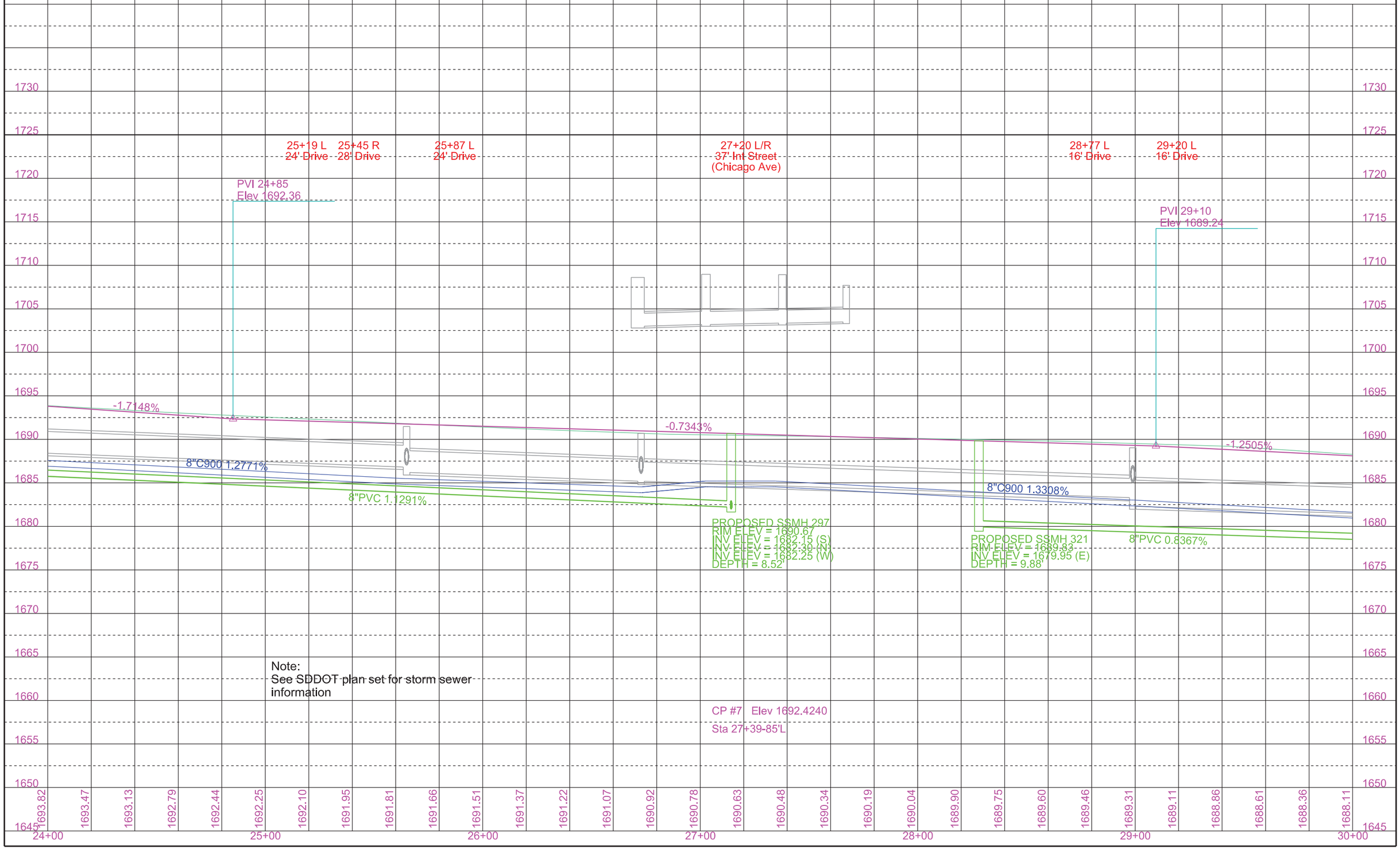

Note:
See SDDOT plan set for storm sewer information

CITY OF MADISON	PROJECT	SHEET	TOTAL SHEETS
	2016-1	23	45

FOR BIDDING PURPOSES ONLY

Plotting Date: 12/3/2015

NOTES:-
- NO UNRESTRAINED PIPE JOINTS WITHIN 5 FEET OF 8" FITTINGS, UNLESS OTHERWISE SPECIFIED.
- NO UNRESTRAINED PIPE JOINTS WITHIN 10 FEET OF FITTINGS LARGER THAN 8", UNLESS OTHERWISE SPECIFIED.
- ALL PIPE JOINTS SHALL BE RESTRAINED WHEN DOUBLE BLUE LINES ARE SHOWN:

12"W

- SEE SDDOT PLANS FOR STORM SEWER
- NEW WATER SERVICES MUST BE TIED OVER PRIOR TO CUTTING THROUGH THE EXISTING WATER MAIN FOR HYDRANTS, ETC.

WATER REMOVALS

STA 30+00.00-28.69'L to STA 36+00.00-29.70'L
600 LF – REMOVE WATER MAIN
3 EA – REMOVE GATE VALVE

STA 31+23.44-28.92'L to STA 31+23.32-66.71'L
37.8 LF – REMOVE WATER MAIN
1 EA – REMOVE GATE VALVE

STA 31+30.76-29.07'L to STA 31+30.63-37.10'L
8.0 LF – REMOVE WATER MAIN
1 EA – REMOVE GATE VALVE
1 EA – REMOVE FIRE HYDRANT

STA 34+61.09-29.87'L to STA 34+61.87-58.66'L
28.8 LF -- REMOVE WATER MAIN
1 EA – REMOVE GATE VALVE

STA 34+62.93-56.80'R to STA 34+61.09-29.87'L
87.7 LF -- REMOVE WATER MAIN

STA 35+15.49-29.20'L to STA 35+15.50-36.11'L
6.9 LF – REMOVE WATER MAIN
1 EA – REMOVE GATE VALVE
1 EA – REMOVE FIRE HYDRANT

WATER NOTES

STA 30+00.00-20.74'L to STA 34+63.41-20.75'L
463.4 LF -- 8" PVC WATER MAIN

STA 30+08.98-20.74'L to STA 30+08.98-36.00'R
56.7 LF -- 1" WATER SERVICE

STA 31+16.32-20.75'L to 31+23.32-66.71'L
49.0 LF -- 6" PVC WATER MAIN
1 EA – 8" GATE VALVE WITH BOX
1 EA – 8" x 6" PIPE TEE
1 EA – 6" GATE VALVE WITH BOX
2 EA – 6" PIPE BEND
1 EA – 6" x 6" PIPE TEE
1 EA – 6" x 4" PIPE REDUCER
1 EA – 4" PIPE SLEEVE
1 EA – 8" WATER MAIN RESTRAINING DEVICES
10 EA – 6" WATER MAIN RESTRAINING DEVICES
3 EA – 4" WATER MAIN RESTRAINING DEVICES
1 EA – CONNECT TO EXISTING WATER MAIN

STA 31+23.32-58.62'L to STA 31+31.32-58.62'L
8.0 LF – 6" PVC WATER MAIN
1 EA -- 6" GATE VALVE WITH BOX
1 EA -- STANDARD FIRE HYDRANT
4 EA -- 6" WATER MAIN RESTRAINING DEVICES

STA 31+63.56-20.75'L to STA 31+63.56-36.00'R
56.8 LF – 1" WATER SERVICE

STA 32+32.96-20.75'L to STA 32+32.06-36.00'L
15.3 LF – 1" WATER SERVICE

STA 32+78.27-20.75'L to STA 32+78.27-36.00'R
56.8 LF – 1" WATER SERVICE

STA 32+93.39-20.75'L to STA 32+93.39-36.00'L
15.3 LF – 1" WATER SERVICE

STA 33+07.46-20.75'L to STA 33+07.46-36.00'R
56.8 LF – 1" WATER SERVICE

STA 34+63.41-20.75'L to STA 36+00.00-20.75'L
136.6 LF – 10" PVC WATER MAIN
1 EA – 10" x 8" PIPE REDUCER
1 EA – 8" WATER MAIN RESTRAINING DEVICE
1 EA – 10" WATER MAIN RESTRAINING DEVICE

STA 34+71.93-20.76'L to STA 34+61.87-58.66'L
42.2 LF -- 10" PVC WATER MAIN
2 EA – 10" GATE VALVE WITH BOX
1 EA – 10" x 10" PIPE CROSS
2 EA – 10" PIPE BEND
1 EA – 10" PIPE SLEEVE
14 EA – 10" WATER MAIN RESTRAINING DEVICE
1 EA – CONNECT TO EXISTING WATER MAIN

STA 34+71.93-20.76'L to STA 34+62.94-57.82'R
82.0 LF -- 10" PVC WATER MAIN
1 EA – 10" GATE VALVE WITH BOX
4 EA – 10" PIPE BEND
1 EA – 10" PIPE SLEEVE
12 EA – 10" WATER MAIN RESTRAINING DEVICE
1 EA – CONNECT TO EXISTING WATER MAIN

STA 35+15.71-20.80'L to STA 35+15.68-49.83'L
29.0 LF -- 6" PVC WATER MAIN
1 EA – 10" x 6" PIPE TEE
1 EA – 6" GATE VALVE WITH BOX
2 EA – 10" WATER MAIN RESTRAINING DEVICES
4 EA – 6" WATER MAIN RESTRAINING DEVICES
1 EA – STANDARD FIRE HYDRANT

STA 35+70.38-20.75'L to STA 35+70.39-38.15'L
17.4 LF – 1" WATER SERVICE

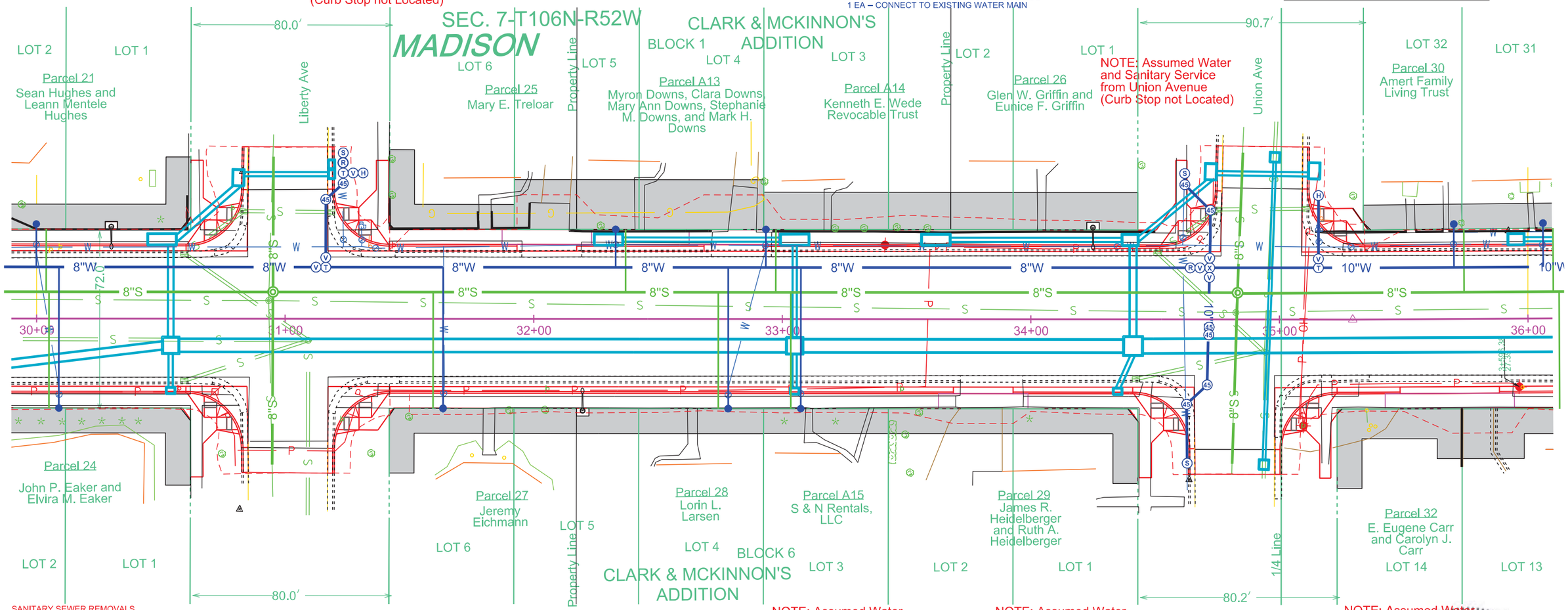

SANITARY SEWER REMOVALS

STA 30+00.00-7.61'L to STA 30+93.33-7.27'L
93.4 LF – REMOVE SEWER PIPE
1 EA-- REMOVE MANHOLE

STA 30+93.33-7.27'L to STA 30+95.28-65.13'L
56.7 LF – REMOVE SEWER PIPE

STA 30+94.81-58.68'R to STA 30+93.33-7.27'L
64.8 LF – REMOVE SEWER PIPE

STA 30+93.33-7.27'L to STA 34+82.51-2.79'L
386.8 LF -- REMOVE SEWER PIPE
1 EA – REMOVE MANHOLE

STA 34+82.51-2.79'L to STA 34+85.25-67.10'L
63.2 LF -- REMOVE SEWER PIPE

STA 34+81.06-58.01'R to STA 34+82.51-2.79'L
59.6 LF -- REMOVE SEWER PIPE

STA 34+82.51-2.79'L to STA 36+00.00-3.89'L
116.3 LF -- REMOVE SEWER PIPE

SANITARY SEWER NOTES

STA 30+00.00-10.75'L to STA 30+95.11-10.75'L
95.1 LF -- 8" PVC SEWER PIPE

STA 30+03.86-10.75'L to STA 30+03.86-36.00'L
25.3 LF -- 4" SEWER SERVICE
1 EA – 8" x 4" PIPE WYE

STA 30+04.98-10.75'L to STA 30+04.98-36.00'R
46.8 LF -- 4" SEWER SERVICE
1 EA – 8" x 4" PIPE WYE

STA 30+95.11-10.75'L
NEW SSMH 301
1 EA – 48" MANHOLE
1 EA – TYPE A10 MANHOLE FRAME AND LID
1 EA – EXTERNAL MANHOLE SEAL
4 EA – 8" MANHOLE BOOT

STA 30+95.11-10.75'L to STA 30+95.28-65.13'L
54.4 LF -- 8" PVC SEWER PIPE
1 EA – CONNECT TO EXISTING SEWER MAIN

STA 30+95.11-10.75'L to STA 30+94.81-58.68'R
69.4 LF -- 8" PVC SEWER PIPE
1 EA – CONNECT TO EXISTING SEWER MAIN

STA 30+95.11-10.75'L to STA 34+83.19-10.75'L
388.1 LF -- 8" PVC SEWER PIPE

STA 31+59.56-10.75'L to STA 31+59.56-36.00'R
46.8 LF -- 4" SEWER SERVICES
1 EA – 8" x 4" PIPE WYE

STA 32+36.96-10.75'L to STA 32+36.96-36.00'L
25.3 LF -- 4" SEWER SERVICE
1 EA – 8" x 4" PIPE WYE

STA 32+74.27-10.75'L to STA 32+74.27-36.00'R
46.8 LF – 4" SEWER SERVICE
1 EA – 8" x 4" PIPE WYE

STA 32+97.39-10.75'L to STA 32+97.39-36.00'L
25.3 LF – 4" SEWER SERVICE
1 EA – 8" x 4" PIPE WYE

STA 33+03.46-10.75'L to STA 33+03.46-36.00'R
46.8 LF – 4" SEWER SERVICE
1 EA – 8" x 4" PIPE WYE

STA 34+83.19-10.75'L
NEW SSMH 303
1 EA -- 48" MANHOLE
1 EA -- TYPE A10 MANHOLE FRAME AND LID
1 EA -- EXTERNAL MANHOLE SEAL
4 EA -- 8" MANHOLE BOOT

STA 34+83.19-10.75'L to STA 34+85.25-67.10'L
56.4 LF – 8" PVC SEWER PIPE
1 EA -- CONNECT TO EXISTING SEWER MAIN

STA 34+83.19-10.75'L to STA 34+81.06-58.01'R
68.8 LF – 8" PVC SEWER PIPE
1 EA -- CONNECT TO EXISTING SEWER MAIN

STA 34+83.19-10.75'L to STA 36+00.00-10.75'L
116.8 LF – 8" PVC SEWER PIPE

STA 35+74.37-10.75'L to STA 35+74.39-36.13'L
25.4 LF – 4" SEWER SERVICE
1 EA -- 8" x 4" PIPE WYE

REGISTERED PROFESSIONAL ENGINEER
REG. NO. 9737
DAVID P. MAXWELL
SOUTH DAKOTA
12/4/15

CITY OF MADISON	PROJECT	SHEET	TOTAL SHEETS
	2016-1	24	45

FOR BIDDING PURPOSES ONLY

Plotting Date: 12/3/2015

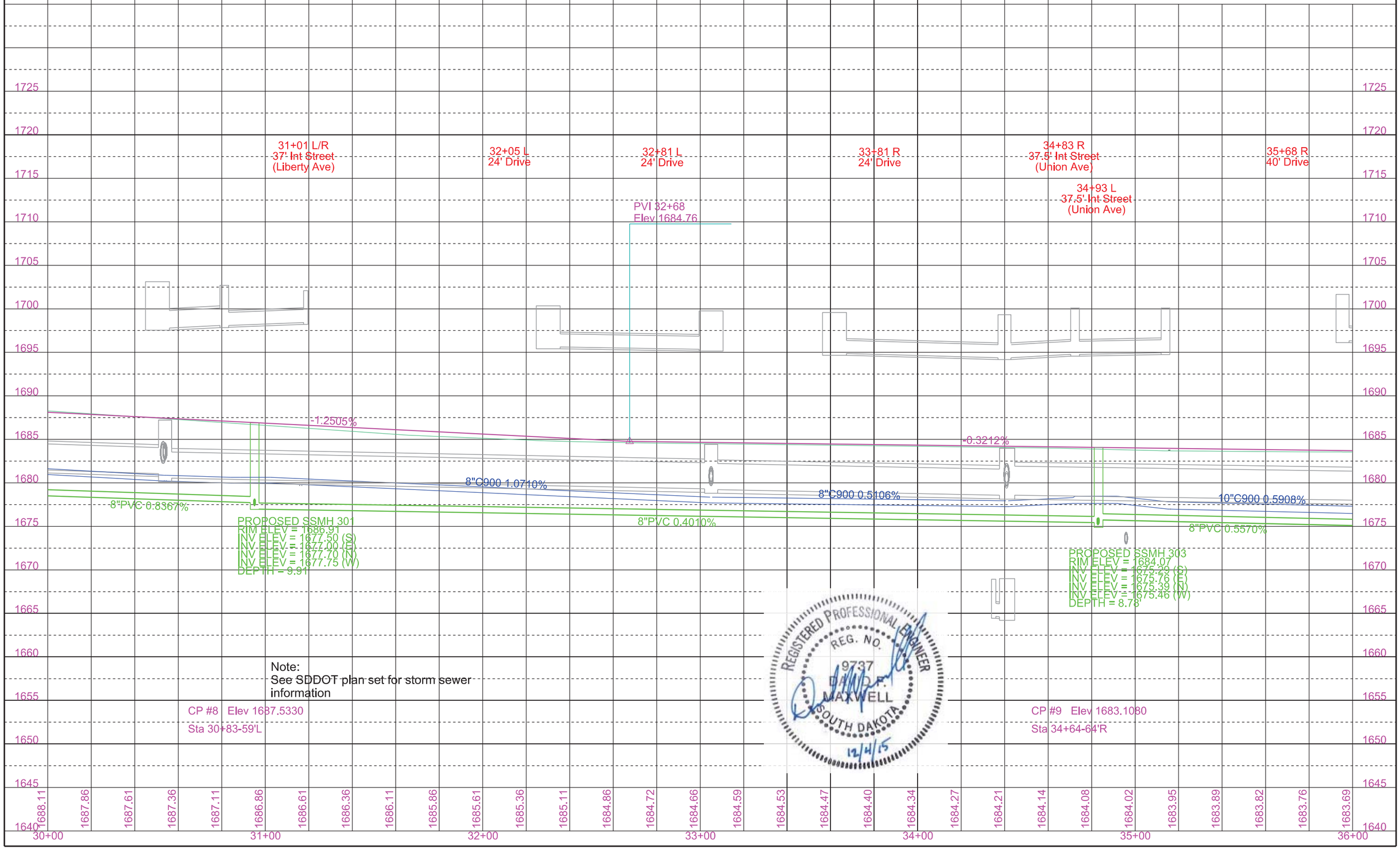

Note:
See SDDOT plan set for storm sewer information

REGISTERED PROFESSIONAL ENGINEER
REG. NO. 9737
DAVID P. MAXWELL
SOUTH DAKOTA
12/4/15

FOR BIDDING PURPOSES ONLY

CITY OF MADISON	PROJECT	SHEET	TOTAL SHEETS
	2016-1	25	45

Plotting Date: 12/3/2015

NOTES:
- NO UNRESTRAINED PIPE JOINTS WITHIN 5 FEET OF 8" FITTINGS, UNLESS OTHERWISE SPECIFIED.
- NO UNRESTRAINED PIPE JOINTS WITHIN 10 FEET OF FITTINGS LARGER THAN 8", UNLESS OTHERWISE SPECIFIED.
- ALL PIPE JOINTS SHALL BE RESTRAINED WHEN DOUBLE BLUE LINES ARE SHOWN:

12"W

- SEE SDDOT PLANS FOR STORM SEWER
- NEW WATER SERVICES MUST BE TIED OVER PRIOR TO CUTTING THROUGH THE EXISTING WATER MAIN FOR HYDRANTS, ETC.

WATER REMOVALS

STA 36+00.00-29.70'L to STA 42+00.00-26.04'L
600 LF – REMOVE WATER MAIN
1 EA – REMOVE GATE VALVE

STA 39+10.14-28.34'L to STA 39+11.11-63.24'L
34.9 LF – REMOVE WATER MAIN
1 EA – REMOVE GATE VALVE

STA 39+47.67-27.31'L to STA 39+47.93-42.48'L
15.2 LF – REMOVE WATER MAIN
1 EA – REMOVE GATE VALVE
1 EA – REMOVE FIRE HYDRANT

WATER NOTES

STA 36+00.00-20.75'L to STA 42+00.00-21.44'L
600 LF -- 10" PVC WATER MAIN

STA 36+06.25-20.75'L to STA 36+06.26-38.33'L
17.6 LF – 1" WATER SERVICE

STA 36+16.62-20.75'L to STA 36+16.59-36.39'R
57.1 LF – 1" WATER SERVICE

STA 36+48.73-20.75'L to STA 36+48.70-36.55'R
57.3 LF – 1" WATER SERVICE

STA 36+50.65-20.75'L to STA 36+50.66-38.55'L
17.8 LF – 1" WATER SERVICE

STA 37+00.67-20.75'L to STA 37+00.68-38.80'L
18.1 LF -- 1" WATER SERVICE

STA 37+74.24-20.75'L to STA 37+74.25-39.17'L
18.4 LF -- 1" WATER SERVICE

STA 38+06.05-20.75'L to STA 38+06.06-39.33'L
18.6 LF -- 1" WATER SERVICE

STA 38+28.02-20.75'L to STA 38+27.99-37.44'R
58.2 LF -- 1.5" WATER SERVICE

STA 39+04.11-20.81'L to STA 39+11.15-63.21'L
45.5 LF – 6" PVC WATER MAIN
1 EA -- 10" GATE VALVE WITH BOX
1 EA -- 10" x 6" PIPE TEE
1 EA -- 6" GATE VALVE WITH BOX
2 EA -- 6" PIPE BEND
1 EA -- 6" x 4" PIPE REDUCER
1 EA -- 4" PIPE SLEEVE
4 EA -- 10" WATER MAIN RESTRAINING DEVICE
8 EA -- 6" WATER MAIN RESTRAINING DEVICE
3 EA -- 4" WATER MAIN RESTRAINING DEVICE
1 EA -- CONNECT TO EXISTING WATER MAIN

STA 39+50.92-20.75'L to STA 39+50.92-51.16'L
30.4 LF – 6" PVC WATER MAIN
1 EA -- 10" x 6" PIPE TEE
1 EA -- 6" GATE VALVE WITH BOX
2 EA -- 10" WATER MAIN RESTRAINING DEVICE
4 EA -- 6" WATER MAIN RESTRAINING DEVICE
1 EA -- STANDARD FIRE HYDRANT

STA 40+06.22-21.03'L to STA 40+06.19-38.33'R
59.4 LF – 1" WATER SERVICE

STA 40+31.17-21.08'L to STA 40+31.17-38.45'L
17.4 LF – 1.5" WATER SERVICE

STA 41+88.01-21.41'L to STA 41+87.97-39.24'R
60.6 LF – 1" WATER SERVICE

STA 41+98.41-21.43'L to STA 41+98.41-39.29'L
17.9 LF – 1.5" WATER SERVICE

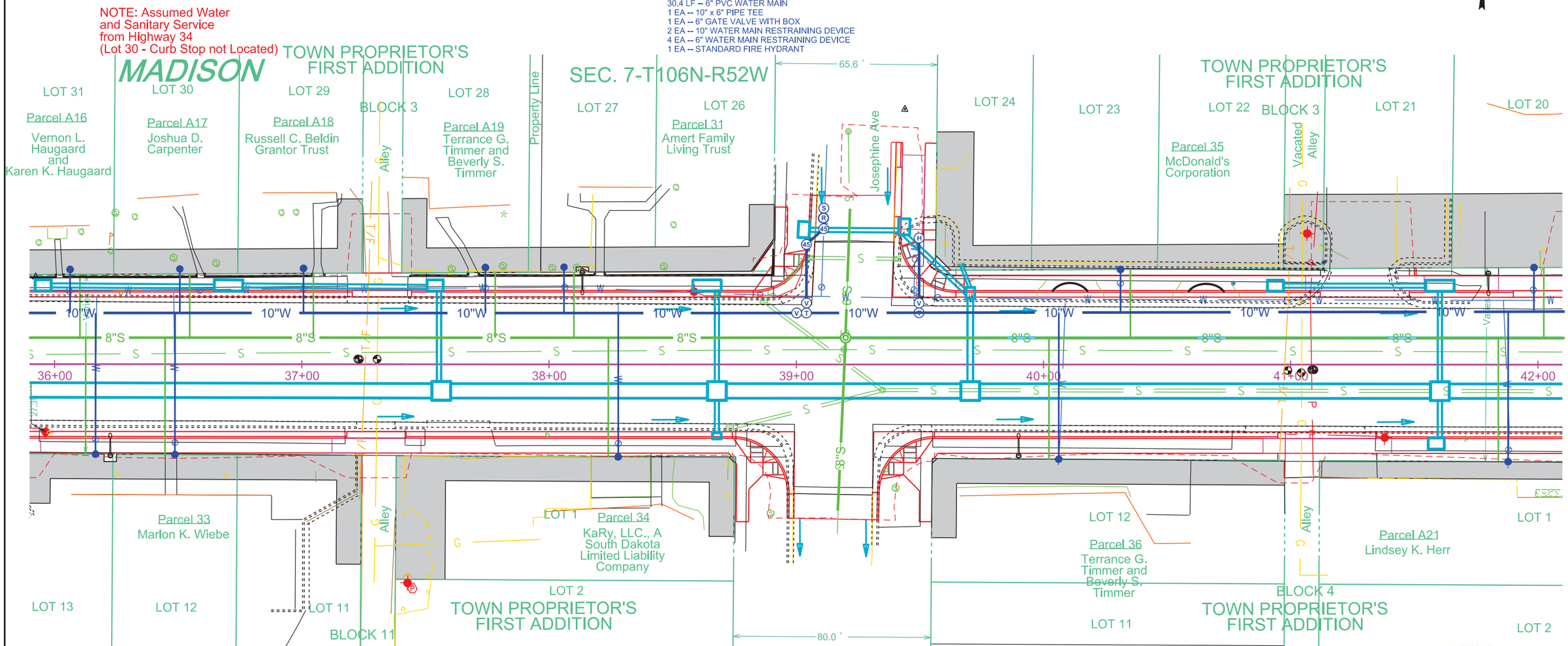

SANITARY SEWER REMOVALS

STA 36+00.00-3.89'L to STA 39+19.23-6.02'L
318.0 LF – REMOVE SEWER PIPE
1 EA – REMOVE MANHOLE

STA 39+19.23-6.02'L to STA 39+21.75-63.00'L
56.5 LF – REMOVE SEWER PIPE

STA 39+16.85-59.14'R to STA 39+19.23-6.02'L
64.0 LF – REMOVE SEWER PIPE

STA 39+19.23-6.02'L to STA 42+00.00-5.12'L
279.6 LF – REMOVE SEWER PIPE

SANITARY SEWER NOTES

STA 36+00.00-10.75'L to STA 39+19.96-10.77'L
320.0 LF – 8" PVC SEWER PIPE

STA 36+10.25-10.75'L to STA 36+10.27-36.35'L
25.6 LF – 4" SEWER SERVICE
1 EA – 8" x 4" PIPE WYE

STA 36+12.61-10.75'L to STA 36+12.57-36.40'R
47.1 LF – 4" SEWER SERVICE
1 EA – 8" x 4" PIPE WYE

STA 36+44.72-10.75'L to STA 36+44.69-36.56'R
47.3 LF – 4" SEWER SERVICE
1 EA – 8" x 4" PIPE WYE

STA 36+54.64-10.75'L to STA 36+54.66-36.57'L
25.8 LF – 4" SEWER SERVICE
1 EA – 8" x 4" PIPE WYE

STA 37+04.66-10.75'L to STA 37+04.68-36.82'L
26.1 LF – 4" SEWER SERVICE
1 EA – 8" x 4" PIPE WYE

STA 37+78.23-10.75'L to STA 37+78.25-37.19'L
26.4 LF – 4" SEWER SERVICE
1 EA – 8" x 4" PIPE WYE

STA 38+10.04-10.75'L to STA 38+10.06-37.35'L
26.6 LF – 4" SEWER SERVICE
1 EA – 8" x 4" PIPE WYE

STA 38+24.02-10.75'L to STA 38+23.98-37.46'R
48.2 LF -- 4" SEWER SERVICE
1 EA – 8" x 4" PIPE WYE

STA 39+19.96-10.77'L
NEW SSMH 299
1 EA – 48" MANHOLE
1 EA – TYPE A10 MANHOLE FRAME AND LID
1 EA – EXTERNAL MANHOLE SEAL
1 EA – 6" MANHOLE BOOT
3 EA – 8" MANHOLE BOOT

STA 39+19.96-10.77'L to STA 39+21.75-63.00'L
52.3 LF -- 6" PVC SEWER PIPE
1 EA – CONNECT TO EXISTING SEWER MAIN

STA 39+19.96-10.77'L to STA 39+16.85-59.14'R
70.0 LF -- 8" PVC SEWER PIPE
1 EA – CONNECT TO EXISTING SEWER MAIN

STA 39+19.96-10.77'L to STA 42+00.00-10.75'L
280.0 LF -- 8" PVC SEWER MAIN

STA 40+02.22-10.75'L to STA 40+02.22-38.35'R
49.1 LF -- 4" SEWER SERVICE
1 EA – 8" x 4" PIPE WYE

STA 40+35.16-10.75'L to STA 40+35.16-38.47'L
27.7 LF -- 4" SEWER SERVICE
1 EA – 8" x 4" PIPE WYE

STA 41+84.01-10.75'L to STA 41+84.01-39.26'R
50.0 LF -- 4" SEWER SERVICE
1 EA – 8" x 4" PIPE WYE

REGISTERED PROFESSIONAL ENGINEER
REG. NO. 9737
DAVID A. MAXWELL
SOUTH DAKOTA
12/4/15

CITY OF MADISON	PROJECT	SHEET	TOTAL SHEETS
	2016-1	26	45

FOR BIDDING PURPOSES ONLY

Plotting Date: 12/3/2015

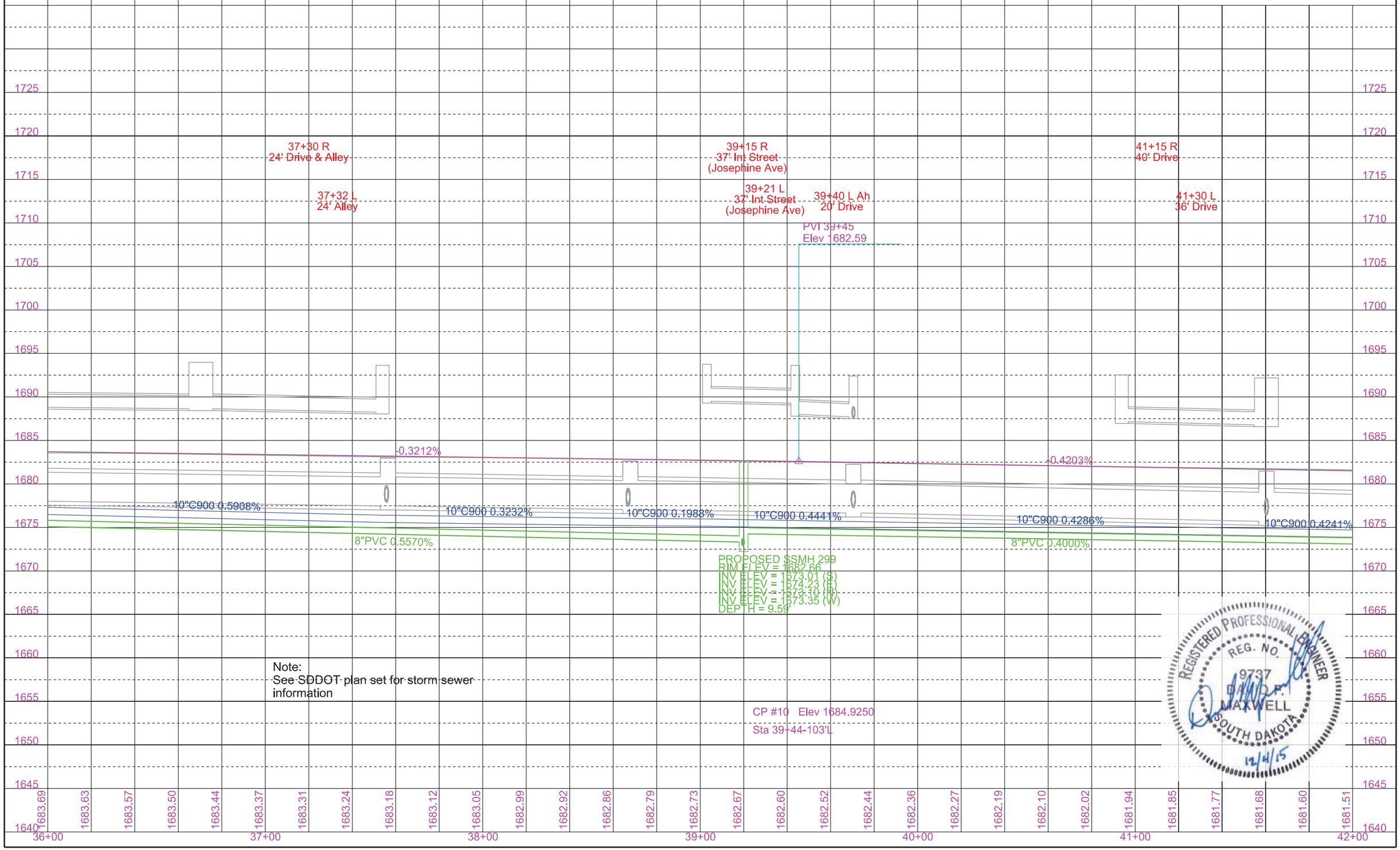

Note:
See SDDOT plan set for storm sewer information

REGISTERED PROFESSIONAL ENGINEER
REG. NO. 9737
D. M. MAXWELL
SOUTH DAKOTA
12/4/15

CITY OF MADISON	PROJECT	SHEET	TOTAL SHEETS
	2016-1	27	45

FOR BIDDING PURPOSES ONLY

Plotting Date: 12/3/2015

NOTES:
- NO UNRESTRAINED PIPE JOINTS WITHIN 5 FEET OF 8" FITTINGS, UNLESS OTHERWISE SPECIFIED.
- NO UNRESTRAINED PIPE JOINTS WITHIN 10 FEET OF FITTINGS LARGER THAN 8", UNLESS OTHERWISE SPECIFIED.
- ALL PIPE JOINTS SHALL BE RESTRAINED WHEN DOUBLE BLUE LINES ARE SHOWN:

12"W

- SEE SDDOT PLANS FOR STORM SEWER
- NEW WATER SERVICES MUST BE TIED OVER PRIOR TO CUTTING THROUGH THE EXISTING WATER MAIN FOR HYDRANTS, ETC.

WATER REMOVALS

STA 42+00.00-26.04'L to STA 48+00.00-28.43'L
600.0 LF – REMOVE WATER MAIN
1 EA -- REMOVE GATE VALVE

STA 43+23.27-28.21'L to STA 43+22.98-42.70'L
14.5 LF – REMOVE WATER MAIN
1 EA -- REMOVE FIRE HYDRANT

STA 46+43.70-26.65'L to STA 46+43.75-64.46'L
37.8 LF – REMOVE WATER MAIN
1 EA -- REMOVE GATE VALVE

STA 46+43.49-41.04'L to STA 46+46.03-41.03'L
2.5 LF – REMOVE WATER MAIN
1 EA -- REMOVE FIRE HYDRANT

STA 46+44.19-57.57'R to STA 46+43.70-26.65'L
84.2 LF – REMOVE WATER MAIN
1 EA -- REMOVE GATE VALVE

WATER NOTES

STA 42+00.00-21.44'L to STA 48+00.00-21.00'L
600.0 LF – 10" PVC WATER MAIN

STA 42+71.72-21.59'L to STA 42+71.58-54.65'L
33.1 LF – 1" WATER SERVICE

STA 43+25.84-21.70'L to STA 43+25.63-52.42'L
30.7 LF – 6" PVC WATER MAIN
1 EA -- 10" GATE VALVE WITH BOX
1 EA -- 10" x 6" PIPE TEE
1 EA -- 6" GATE VALVE WITH BOX
4 EA -- 10" WATER MAIN RESTRAINING DEVICE
4 EA -- 6" WATER MAIN RESTRAINING DEVICE
1 EA -- STANDARD FIRE HYDRANT

STA 43+92.63-21.59'L to STA 43+92.64-40.00'L
18.4 LF – 1.5" WATER SERVICE

STA 44+69.11-21.36'L to STA 44+69.12-40.00'L
18.6 LF – 1" WATER SERVICE

STA 45+72.82-21.06'L to STA 45+72.83-40.00'L
18.9 LF – 1" WATER SERVICE

STA 46+50.05-21.00'L to STA 46+43.75-64.46'L
46.5 LF – 8" PVC WATER MAIN
1 EA -- 10" GATE VALVE WITH BOX
1 EA -- 10" x 8" PIPE CROSS
1 EA -- 8" GATE VALVE WITH BOX
2 EA -- 8" PIPE BEND
1 EA -- 8" PIPE SLEEVE
4 EA -- 10" WATER MAIN RESTRAINING DEVICE
9 EA -- 8" WATER MAIN RESTRAINING DEVICE
1 EA -- CONNECT TO EXISTING WATER MAIN

STA 46+50.05-21.00'L to 46+44.19-57.57'R
80.6 LF – 8" PVC WATER MAIN
1 EA – 8" GATE VALVE WITH BOX
4 EA – 8" PIPE BEND
1 EA – 8" PIPE SLEEVE
13 EA – 8" WATER MAIN RESTRAINING DEVICE
1 EA – CONNECT TO EXISTING WATER MAIN

STA 46+92.49-21.00'L to STA 46+92.49-55.15'L
34.2 LF – 6" PVC WATER MAIN
1 EA – 10" x 6" PIPE TEE
1 EA – 6" GATE VALVE WITH BOX
2 EA – 10" WATER MAIN RESTRAINING DEVICE
4 EA – 6" WATER MAIN RESTRAINING DEVICE
1 EA – STANDARD FIRE HYDRANT

STA 47+36.00-21.00'L to STA 47+36.00-40.00'L
19.0 LF -- 1" WATER SERVICE

STA 47+79.22-21.00'L to STA 47+79.22-40.00'L
19.0 LF -- 1" WATER SERVICE

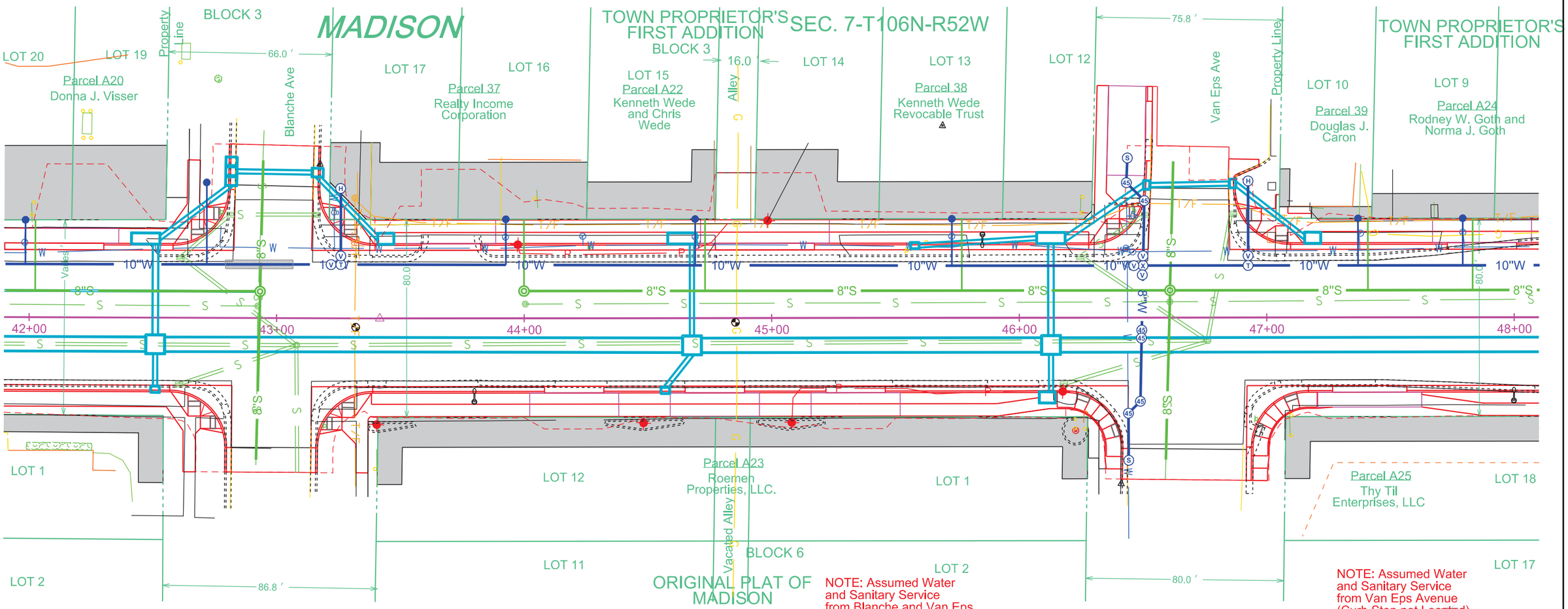

NOTE: Assumed Water and Sanitary Service from Blanche and Van Eps (Curb Stop not Located)

NOTE: Assumed Water and Sanitary Service from Van Eps Avenue (Curb Stop not Located)

SANITARY SEWER REMOVALS

STA 42+00.00-5.12'L to STA 42+92.39-4.83'L
91.2 LF – REMOVE SEWER PIPE
1 EA – REMOVE MANHOLE

STA 42+92.39-4.83'L to STA 42+94.36-63.64'L
57.6 LF – REMOVE SEWER PIPE

STA 42+91.88-57.17'R to STA 42+92.39-4.83'L
60.8 LF – REMOVE SEWER PIPE

STA 44+00.47-5.76'L to STA 46+60.85-6.39'L
258.0 LF – REMOVE SEWER PIPE
2 EA – REMOVE MANHOLE

STA 46+60.85-6.39'L to STA 46+62.28-63.08'L
55.5 LF – REMOVE SEWER PIPE

STA 46+59.18-57.28'R to STA 46+60.85-6.39'L
62.5 LF – REMOVE SEWER PIPE

STA 46+60.85-6.39'L to STA 48+00.00-7.23'L
138.0 LF – REMOVE SEWER PIPE

SANITARY SEWER NOTES

STA 42+00.00-10.75'L to STA 42+93.28-10.73'L
93.9 LF – 8" PVC SEWER PIPE

STA 42+02.41-10.75'L to STA 42+02.41-39.31'L
25.8 LF – 4" SEWER SERVICE
1 EA – 8" x 4" PIPE WYE

STA 42+93.28-10.73'L
NEW SSMH 295
1 EA – 48" MANHOLE
1 EA – TYPE A10 FRAME AND LID
1 EA – EXTERNAL MANHOLE SEAL
3 EA – 8" MANHOLE BOOT

STA 42+93.28-10.73'L to STA 42+94.36-63.64'L
52.9 LF – 8" PVC SEWER PIPE
1 EA – CONNECT TO EXISTING SEWER MAIN

STA 42+93.28-10.73'L to STA 42+91.88-57.17'R
67.9 LF -- 8" PVC SEWER PIPE
1 EA – CONNECT TO EXISTING SEWER MAIN

STA 43+99.95-11.00'L
NEW SSMH 320
1 EA – 48" MANHOLE
1 EA – TYPE A10 MANHOLE FRAME AND LID
1 EA – EXTERNAL MANHOLE SEAL
1 EA – 8" MANHOLE BOOT
1 EA – 4" MANHOLE BOOT

STA 43+99.95-13.01'L to STA 43+99.95-40.00'L
27.0 LF -- 4" SEWER SERVICE

STA 43+99.95-11.00'L to STA 46+60.94-11.03'L
261.0 LF -- 8" PVC SEWER PIPE

STA 44+73.11-11.00'L to STA 44+73.11-40.00'L
29.0 LF -- 4" SEWER SERVICE
1 EA – 8" x 4" PIPE WYE

STA 45+76.82-11.00'L to STA 45+76.82-40.00'L
29.0 LF -- 4" SEWER SERVICE
1 EA – 8" x 4" PIPE WYE

STA 46+60.94-11.03'L
NEW SSMH
1 EA – 48" MANHOLE
1 EA – TYPE A10 MANHOLE FRAME AND LID
1 EA – EXTERNAL MANHOLE SEAL
4 EA – 8" MANHOLE BOOT

STA 46+60.94-11.03'L to STA 46+62.28-63.08'L
52.1 LF -- 8" PVC SEWER PIPE
1 EA – CONNECT TO EXISTING SEWER MAIN

STA 46+60.94-11.03'L to STA 46+59.18-57.28'R
68.3 LF – 8" PVC SEWER PIPE
1 EA -- CONNECT TO EXISTING SEWER MAIN

STA 46+60.94-11.03'L to STA 48+00.00-11.00'L
139.1 LF – 8" PVC SEWER PIPE

STA 47+40.90-11.00'L to STA 47+40.90-40.00'L
29.0 LF – 4" SEWER SERVICE
1 EA -- 8" x 4" PIPE WYE

STA 47+83.22-11.00'L to STA 47+83.22-40.00'L
29.0 LF – 4" SEWER SERVICE
1 EA -- 8" x 4" PIPE WYE

REGISTERED PROFESSIONAL ENGINEER
REG. NO. 9737
DAVID P. MAXWELL
SOUTH DAKOTA
12/4/15

FOR BIDDING PURPOSES ONLY

CITY OF MADISON	PROJECT	SHEET	TOTAL SHEETS
	2016-1	28	45

Plotting Date: 12/3/2015

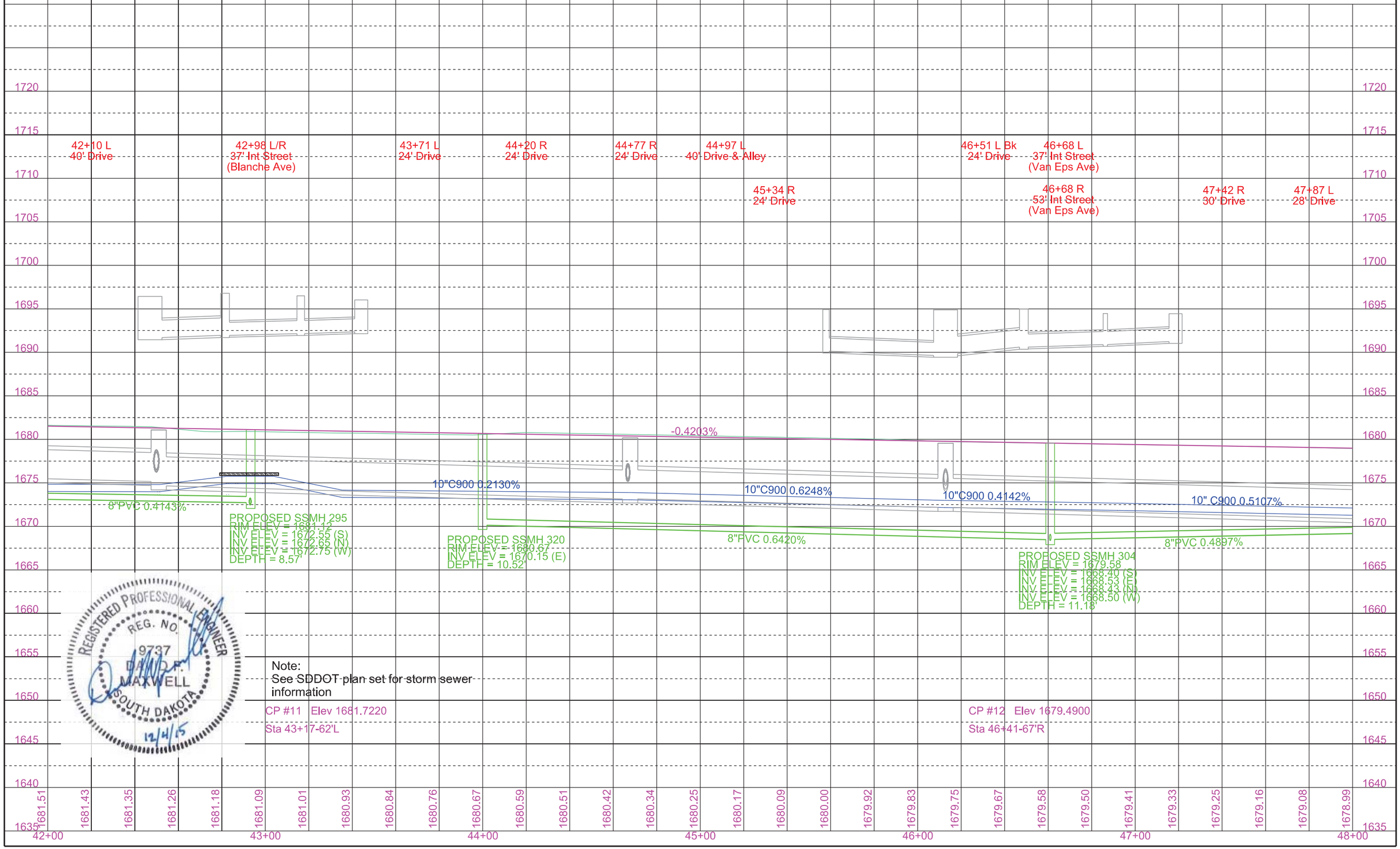

REGISTERED PROFESSIONAL ENGINEER
REG. NO. 9737
DAVID R. MAXWELL
SOUTH DAKOTA
12/4/15

Note:
See SDDOT plan set for storm sewer information

CP #11 Elev 1681.7220
Sta 43+17-62'L

CP #12 Elev 1679.4900
Sta 46+41-67'R

CITY OF MADISON	PROJECT	SHEET	TOTAL SHEETS
	2016-1	29	45

FOR BIDDING PURPOSES ONLY

Plotting Date: 12/3/2015

WATER REMOVALS

STA 48+00.00-28.43'L to STA 54+00.00-29.5'L
600 LF – REMOVE WATER MAIN
2 EA – REMOVE GATE VALVE

STA 50+18.73-60.14'R to STA 50+19.44-27.39'L
87.5 LF – REMOVE WATER MAIN
1 EA – REMOVE GATE VALVE

STA 50+09.17-39.84'R to STA 50+19.21-40.00'R
10.0 LF – REMOVE WATER MAIN
1 EA – REMOVE FIRE HYDRANT

STA 50+20.44-27.40'L to STA 50+21.55-60.64'L
33.3 LF – REMOVE WATER MAIN
1 EA – REMOVE GATE VALVE

STA 50+85.84-27.79'L to STA 50+86.27-47.89'L
20.3 LF – REMOVE WATER MAIN
1 EA – REMOVE GATE VALVE
1 EA – REMOVE FIRE HYDRANT

WATER NOTES

STA 48+00.00-21.00'L to STA 54+00.00-21.00'L
600 LF -- 10" PVC WATER MAIN

STA 49+25.14-21.100'L to STA 49+25.14-40.00'L
19.0 LF – 1" WATER SERVICE

STA 50+13.63-21.00'L to STA 50+21.55-60.64'L
42.8 LF -- 6" PVC WATER MAIN
1 EA – 10" GATE VALVE WITH BOX
1 EA – 10" x 6" PIPE CROSS
1 EA – 6" GATE VALVE WITH BOX
2 EA – 6" PIPE BEND
1 EA – 6" PIPE SLEEVE
4 EA – 10" WATER MAIN RESTRAINING DEVICE
9 EA – 6" WATER MAIN RESTRAINING DEVICE
1 EA – CONNECT TO EXISTING WATER MAIN

STA 50+13.63-21.00'L to STA 50+18.73-60.14'R
83.8 LF – 6" PVC WATER MAIN
1 EA – 6" GATE VALVE WITH BOX
4 EA – 6" PIPE BEND
1 EA – 6" x 6" PIPE TEE
1 EA – 6" PIPE SLEEVE
15 EA – 6" WATER MAIN RESTRAINING DEVICE
1 EA – CONNECT TO EXISTING WATER MAIN

STA 50+18.83-55.89'R to STA 50+06.15-55.59'R
12.7 LF – 6" PVC WATER MAIN
1 EA – 6" GATE VALVE WITH BOX
4 EA – 6" WATER MAIN RESTRAINING DEVICE
1 EA – STANDARD FIRE HYDRANT

STA 51+57.38-21.00'L to STA 51+57.38-40.00'L
19.0 LF – 1 " WATER SERVICE

1 EA – TEMPORARY FIRE HYDRANT

NOTES:
- NO UNRESTRAINED PIPE JOINTS WITHIN 5 FEET OF 8" FITTINGS, UNLESS OTHERWISE SPECIFIED.
- NO UNRESTRAINED PIPE JOINTS WITHIN 10 FEET OF FITTINGS LARGER THAN 8", UNLESS OTHERWISE SPECIFIED.
- ALL PIPE JOINTS SHALL BE RESTRAINED WHEN DOUBLE BLUE LINES ARE SHOWN:

12"W

- SEE SDDOT PLANS FOR STORM SEWER
- NEW WATER SERVICES MUST BE TIED OVER PRIOR TO CUTTING THROUGH THE EXISTING WATER MAIN FOR HYDRANTS, ETC.

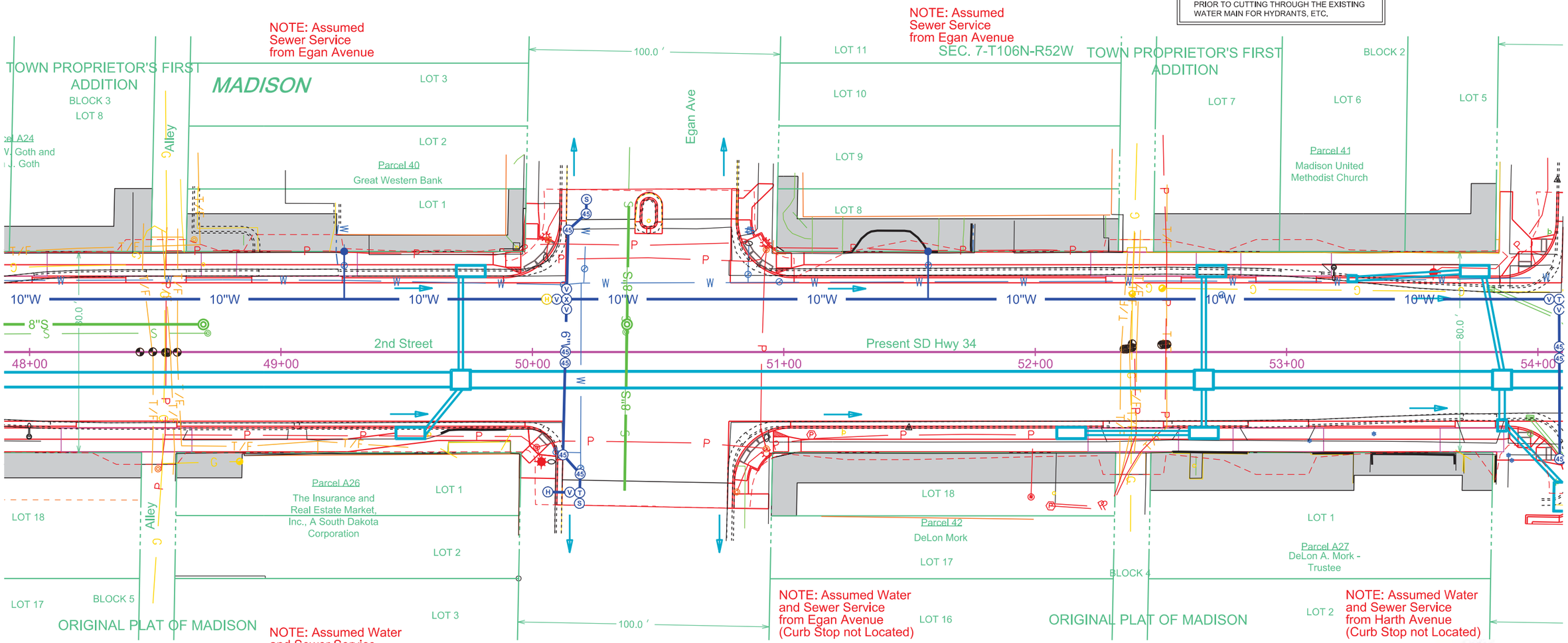

SANITARY SEWER REMOVALS

STA 48+00.00-7.23'L to STA 48+70.81-7.49'L
69.7 LF – REMOVE SEWER PIPE
1 EA – REMOVE MANHOLE

STA 50+37.17-7.96'L to STA 50+38.35-58.09'L
48.9 LF – REMOVE SEWER PIPE
1 EA – REMOVE MANHOLE

STA 50+36.67-55.13'R to STA 50+37.17-.96'L
61.9 LF – REMOVE SEWER PIPE

SANITARY SEWER NOTES

STA 48+00.00-11.00'L to STA 48+69.14-10.97'L
69.1 LF -- 8" PVC SEWER PIPE

STA 48+69.14-10.97'L
NEW SSMH 322
1 EA – 48" MANHOLE
1 EA – TYPE A10 MANHOLE FRAME AND LID
1 EA – EXTERNAL MANHOLE SEAL
1 EA – 8" MANHOLE BOOT

STA 50+37.65-11.00'L
NEW SSMH 64
1 EA – 48" MANHOLE
1 EA – TYPE A10 MANHOLE FRAME AND LID
1 EA – EXTERNAL MANHOLE SEAL
2 EA – 8" MANHOLE BOOT

STA 50+37.65-11.00'L to STA 50+38.35-58.09'L
47.1 LF – 8" PVC SEWER PIPE
1 EA -- CONNECT TO EXISTING SEWER MAIN

STA 50+37.65-11.00'L to STA 50+36.67-55.13'R
66.1 LF – 8" PVC SEWER PIPE
1 EA -- CONNECT TO EXISTING SEWER MAIN

REGISTERED PROFESSIONAL ENGINEER
REG. NO. 9737
DAVID P. MAXWELL
SOUTH DAKOTA
12/4/15

FOR BIDDING PURPOSES ONLY

CITY OF MADISON	PROJECT	SHEET	TOTAL SHEETS
	2016-1	30	45

Plotting Date: 12/3/2015

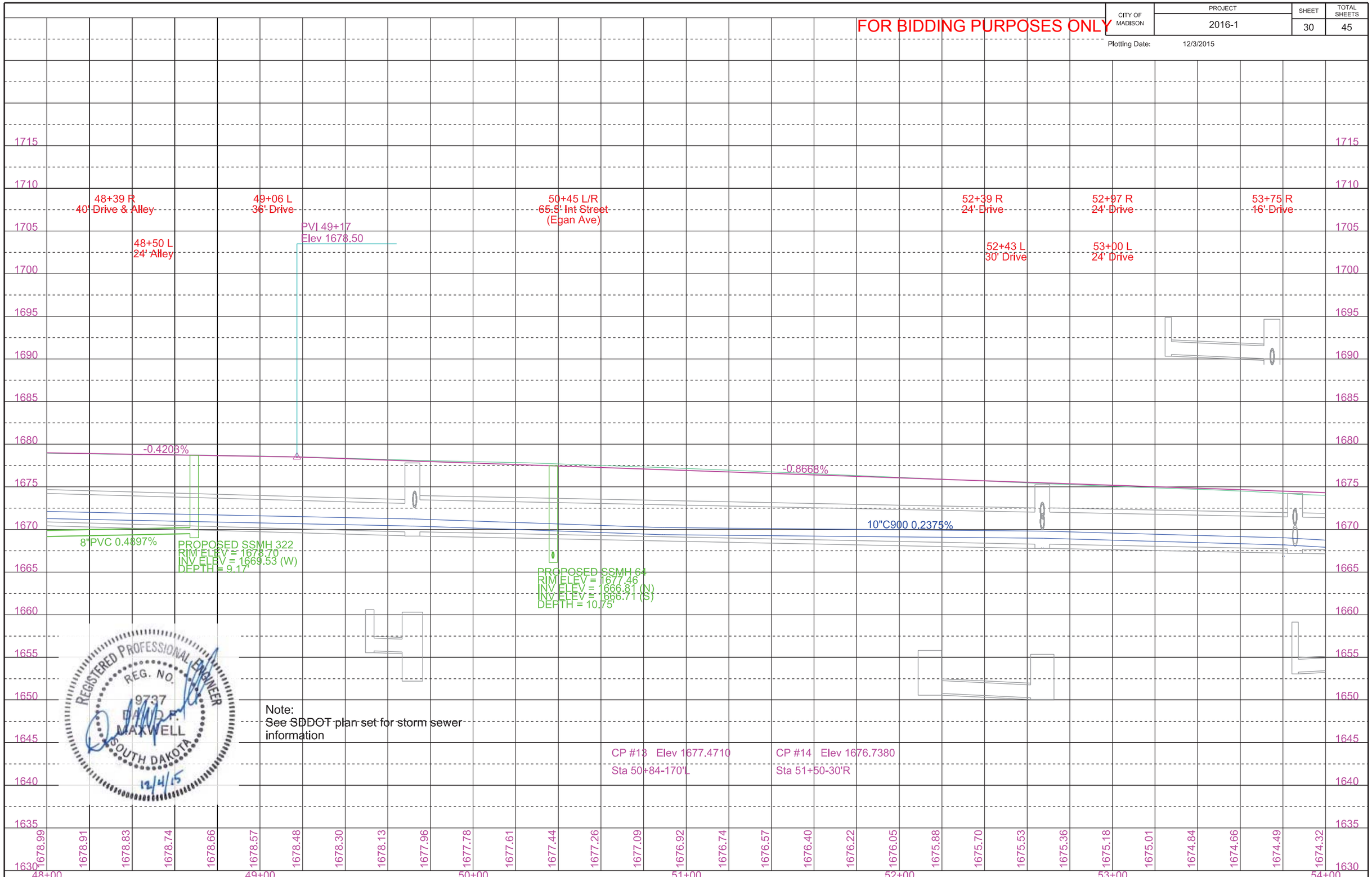

REGISTERED PROFESSIONAL ENGINEER
REG. NO. 9737
DAVID F. MAXWELL
SOUTH DAKOTA
12/4/15

Note:
See SDDOT plan set for storm sewer information

CITY OF MADISON	PROJECT	SHEET	TOTAL SHEETS
	2016-1	31	45

FOR BIDDING PURPOSES ONLY

Plotting Date: 12/03/2015
Revised 12/28/15 KAM

WATER REMOVALS

STA 54+00.00-29.57'L to STA 60+00.00-31.55'L
600 LF – REMOVE WATER MAIN
1 EA -- REMOVE GATE VALVE

STA 54+13.71-62.85'R to 54+12.48-29.79'L
92.7 LF – REMOVE WATER MAIN
1 EA -- REMOVE GATE VALVE

STA 54+39.25-29.11'L to STA 54+38.77-59.52'L
30.4 LF – REMOVE WATER MAIN
1 EA -- REMOVE GATE VALVE

STA 54+46.34-28.90'L to STA 54+46.28-43.59'L
14.7 LF – REMOVE WATER MAIN
1 EA -- REMOVE FIRE HYDRANT

STA 58+14.73-29.14'L to STA 58+14.04-58.43'L
29.3 LF – REMOVE WATER MAIN
1 EA -- REMOVE GATE VALVE

STA 58+19.03-29.24'L to STA 58+19.58-43.88'L
14.6 LF – REMOVE WATER MAIN
1 EA -- REMOVE GATE VALVE
1 EA -- REMOVE FIRE HYDRANT

WATER NOTES

STA 54+00.00-21.00'L to STA 60+00.00-21.00'L
600 LF – 10" PVC WATER MAIN

STA 54+08.42-21.00'L to STA 54+13.71-62.85'R
85.8 LF -- 6" PVC WATER MAIN
1 EA – 10" GATE VALVE WITH BOX
1 EA – 10" x 6" PIPE TEE
1 EA – 6" GATE VALVE WITH BOX
4 EA – 6" PIPE BEND
1 EA – 6" PIPE SLEEVE
4 EA – 10" WATER MAIN RESTRAINING DEVICE
13 EA – 6" WATER MAIN RESTRAINING DEVICE
1 EA – CONNECT TO EXISTING WATER MAIN

STA 54+42.79-21.00'L to STA 54+38.77-61.93'L
42.5 LF – 6" PVC WATER MAIN
1 EA – 10" GATE VALVE WITH BOX
1 EA – 10" x 6" PIPE TEE
1 EA – 6" GATE VALVE WITH BOX
1 EA – 6" x 6" PIPE TEE
2 EA – 6" PIPE BEND
1 EA – 6" PIPE SLEEVE
4 EA – 10" WATER MAIN RESTRAINING DEVICE
11 EA – 6" WATER MAIN RESTRAINING DEVICE
1 EA – CONNECT TO EXISTING WATER MAIN

STA 54+42.79-50.04'L to STA 54+50.77-50.04'L
8.0 LF – 6" PVC WATER MAIN
1 EA – 6" GATE VALVE WITH BOX
4 EA – 6" WATER MAIN RESTRAINING DEVICE
1 EA – STANDARD FIRE HYDRANT

STA 55+70.21-21.00'L to STA 55+70.21-40.00'L
19.0 LF – 1" WATER SERVICE

STA 56+62.89-21.00'L to STA 56+62.88-40.00'L
19.0 LF – 1" WATER SERVICE

STA 57+81.84-21.00'L to STA 57+81.84-48.97'R
70.0 LF – 1" WATER SERVICE

STA 58+14.04-21.00'L to STA 58+14.04-58.43'L
37.4 LF -- 6" PVC WATER MAIN
1 EA – 10" GATE VALVE WITH BOX
1 EA – 10" x 6" PIPE TEE
1 EA – 6" GATE VALVE WITH BOX
1 EA – 6" x 6" PIPE TEE
1 EA – 6" x 4" PIPE REDUCER
1 EA – 4" PIPE SLEEVE
4 EA – 10" WATER MAIN RESTRAINING DEVICE
6 EA – 6" WATER MAIN RESTRAINING DEVICE
3 EA – 4" WATER MAIN RESTRAINING DEVICE
1 EA – CONNECT TO EXISTING WATER MAIN

STA 58+14.04-50.47'L to STA 58+24.26-50.40'L
10.2 LF -- 6" PVC WATER MAIN
1 EA – 6" GATE VALVE WITH BOX
4 EA – 6" WATER MAIN RESTRAINING DEVICE
1 EA – STANDARD FIRE HYDRANT

STA 59+46.32-21.00'L to STA 59+46.32-40.00'R
60.8 LF – 1" WATER SERVICE

STA 59+76.20-21.00'L to STA 59+76.20-41.50'L
20.5 LF – 1" WATER SERVICE

NOTE: Assumed Water and Sanitary Service from Lee Avenue (Curb Stop not Located)

NOTE: Assumed Water and Sanitary Service from Lee Avenue (Curb Stop not Located)

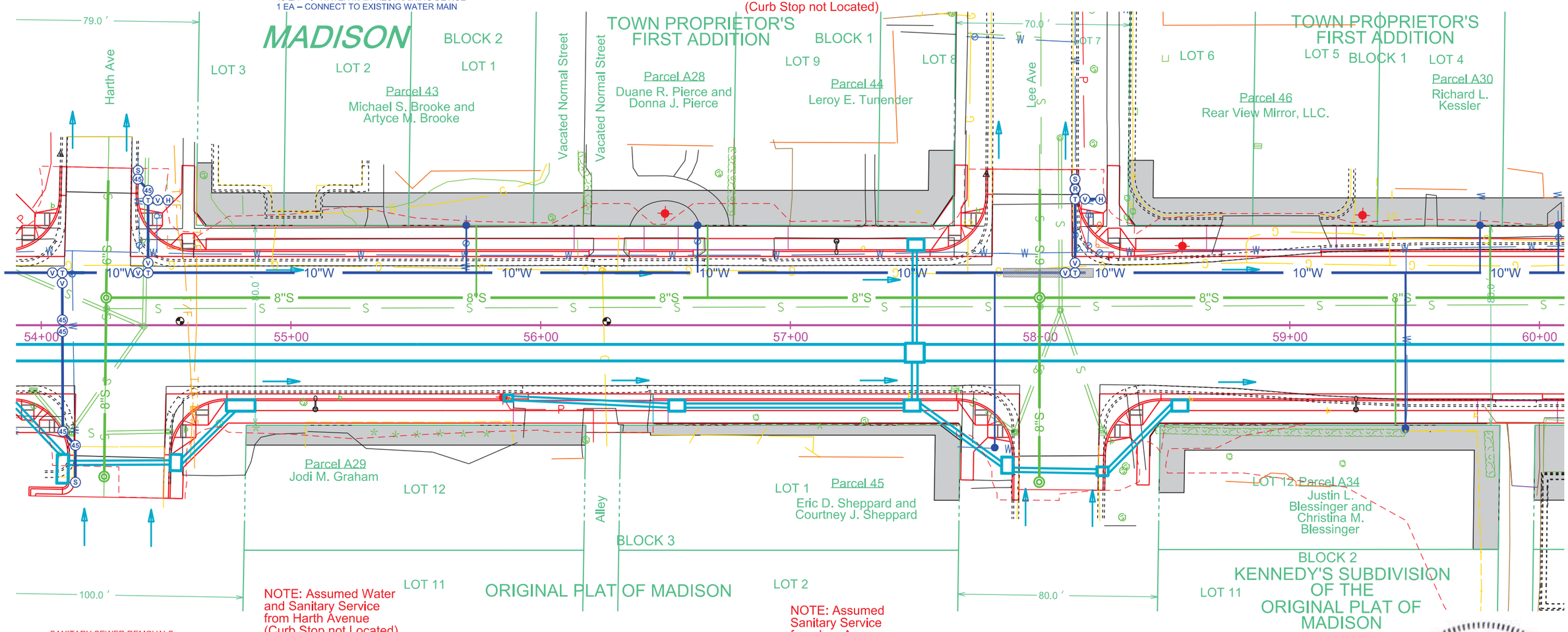

NOTE: Assumed Water and Sanitary Service from Harth Avenue (Curb Stop not Located)

NOTE: Assumed Sanitary Service from Lee Avenue

SANITARY SEWER REMOVALS

STA 54+26.24-6.65'L to STA 58+00.07-7.49'L
373.9 LF – REMOVE SEWER PIPE
2 EA -- REMOVE MANHOLE

STA 54+25.16-62.59'R to STA 54+26.24-6.65'L
68.0 LF – REMOVE SEWER PIPE

STA 54+26.24-6.65'L to STA 54+26.86-58.01'L
50.2 LF – REMOVE SEWER PIPE

STA 57+99.63-64.80'R to STA 58+00.07-7.49'L
71.1 LF – REMOVE SEWER PIPE

STA 58+00.07-7.49'L to STA 57+99.90-54.48'L
45.8 LF – REMOVE SEWER PIPE

STA 58+00.07-7.49'L to STA 60+00.00-8.22'L
198.7 LF -- REMOVE SEWER PIPE

SANITARY SEWER NOTES

STA 54+26.04-11.03'L
NEW SSMH 161
1 EA – 48" MANHOLE
1 EA – TYPE A10 MANHOLE FRAME AND LID
1 EA – EXTERNAL MANHOLE SEAL
1 EA – 6" MANHOLE BOOT
2 EA – 8" MANHOLE BOOT

STA 54+26.04-11.03'L to STA 54+26.86-58.01'L
47.0 LF – 6" PVC SEWER PIPE
1 EA – CONNECT TO EXISTING SEWER MAIN

STA 54+26.04-11.03'L to STA 54+25.19-60.58'R
71.6 LF – 8" PVC SEWER PIPE

STA 54+25.19-60.58'R
NEW SSMH
1 EA – 48" MANHOLE
1 EA – TYPE A10 MANHOLE FRAME AND LID
1 EA – EXTERNAL MANHOLE SEAL
2 EA – 8" MANHOLE BOOT
1 EA – CONNECT TO EXISTING SEWER MAIN

STA 54+26.04-11.03'L to STA 57+99.80-11.00'L
373.8 LF -- 8" PVC SEWER PIPE

STA 55+74.21-11.00'L to STA 55+74.21-40.00'L
29.0 LF – 4" SEWER SERVICE
1 EA – 8" x 4" PIPE WYE

STA 56+66.88-11.00'L to STA 56+66.88-40.00'L
29.0 LF – 4" SEWER SERVICE
1 EA – 8" x 4" PIPE WYE

STA 57+99.80-11.00'L
NEW SSMH 162
1 EA – 48" MANHOLE
1 EA – TYPE A10 MANHOLE FRAME AND LID
1 EA – EXTERNAL MANHOLE SEAL
1 EA – 6" MANHOLE BOOT
3 EA – 8" MANHOLE BOOT

STA 57+99.80-11.00'L to STA 57+99.90-54.48'L
43.5 LF -- 6" PVC SEWER PIPE
1 EA – CONNECT TO EXISTING SEWER MAIN

STA 57+99.80-11.00'L to STA 57+99.66-62.79'R
73.8 LF -- 8" PVC SEWER PIPE

STA 57+99.66-62.79'R
NEW SSMH
1 EA -- 48" MANHOLE
1 EA -- TYPE A10 FRAME AND LID
1 EA -- EXTERNAL MANHOLE SEAL
1 EA -- 6" MANHOLE BOOT
1 EA -- 8" MANHOLE BOOT
1 EA -- CONNECT TO EXISTING SEWER MAIN

STA 57+99.80-11.00'L to STA 60+00.00-11.00'L
200.2 LF -- 8" PVC SEWER PIPE

STA 59+42.32-11.00'L to STA 59+42.32-40.00'R
51.0 LF -- 4" SEWER SERVICE
1 EA -- 8" x 4" PIPE WYE

STA 59+80.19-11.00'L to STA 59+80.19-40.00'L
29.0 LF -- 4" SEWER SERVICE
1 EA -- 8" x 4" PIPE WYE

NOTES:
- NO UNRESTRAINED PIPE JOINTS WITHIN 5 FEET OF 8" FITTINGS, UNLESS OTHERWISE SPECIFIED.
- NO UNRESTRAINED PIPE JOINTS WITHIN 10 FEET OF FITTINGS LARGER THAN 8", UNLESS OTHERWISE SPECIFIED.
- ALL PIPE JOINTS SHALL BE RESTRAINED WHEN DOUBLE BLUE LINES ARE SHOWN:

12"W

- SEE SDDOT PLANS FOR STORM SEWER
- NEW WATER SERVICES MUST BE TIED OVER PRIOR TO CUTTING THROUGH THE EXISTING WATER MAIN FOR HYDRANTS, ETC.

REGISTERED PROFESSIONAL ENGINEER
REG. NO. 9737
DAVID P. MAXWELL
SOUTH DAKOTA
12/28/15

FOR BIDDING PURPOSES ONLY

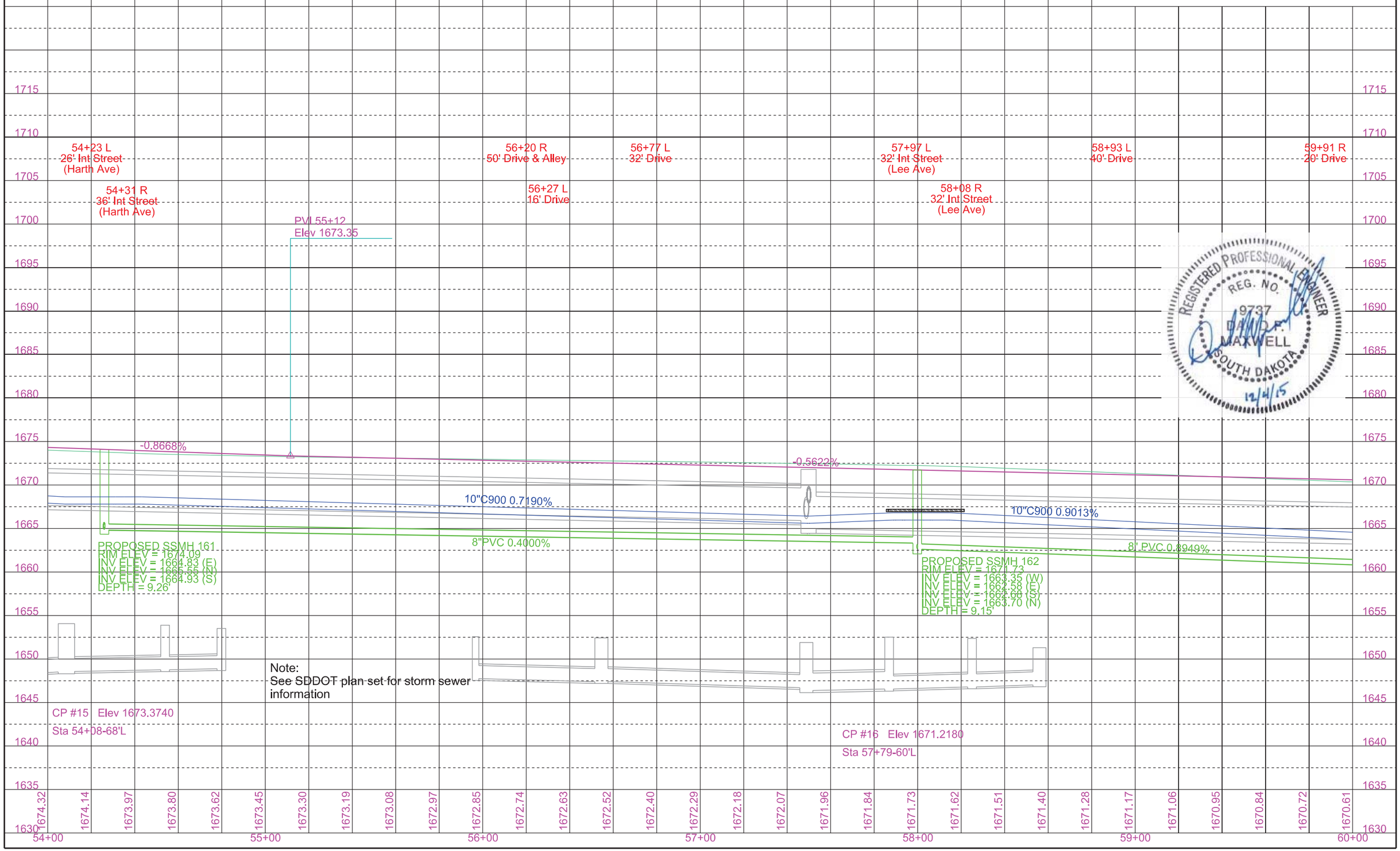

REGISTERED PROFESSIONAL ENGINEER
REG. NO. 9737
DAVID P. MAXWELL
SOUTH DAKOTA
12/4/15

FOR BIDDING PURPOSES ONLY

STATE OF SOUTH DAKOTA	PROJECT	SHEET	TOTAL SHEETS
	NH 0034(160)386	33	45

Plotting Date: 12/3/2015

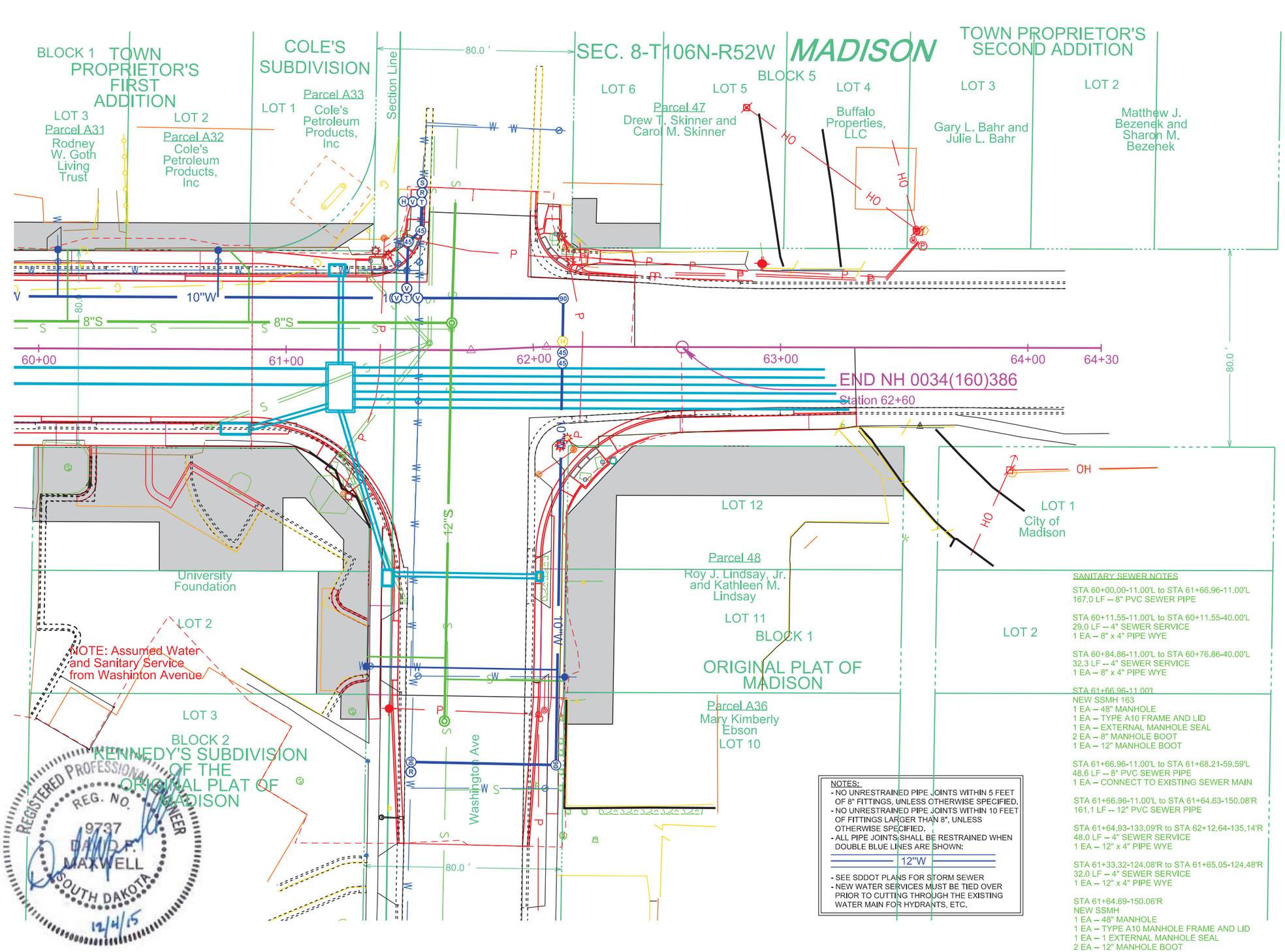

NOTES:
- NO UNRESTRAINED PIPE JOINTS WITHIN 5 FEET OF 8" FITTINGS, UNLESS OTHERWISE SPECIFIED.
- NO UNRESTRAINED PIPE JOINTS WITHIN 10 FEET OF FITTINGS LARGER THAN 8", UNLESS OTHERWISE SPECIFIED.
- ALL PIPE JOINTS SHALL BE RESTRAINED WHEN DOUBLE BLUE LINES ARE SHOWN:

12"W

- SEE SDDOT PLANS FOR STORM SEWER
- NEW WATER SERVICES MUST BE TIED OVER PRIOR TO CUTTING THROUGH THE EXISTING WATER MAIN FOR HYDRANTS, ETC.

WATER REMOVALS

STA 60+00.00-31.55'L to STA 61+53.74-32.14'L
153.9 LF – REMOVE WATER MAIN
1 EA – REMOVE GATE VALVE

STA 61+45.04-32.13'L to STA 61+45.08-42.27'L
10.1 LF – REMOVE WATER MAIN
1 EA – REMOVE GATE VALVE
1 EA – REMOVE FIRE HYDRANT

STA 61+53.74-32.14'L to STA 61+54.60-59.81'L
27.7 LF – REMOVE WATER MAIN
1 EA - REMOVE GATE VALVE

STA 61+51.28-166.60'R to STA 61+53.74-32.14'L
198.8 LF – REMOVE WATER MAIN
1 EA – REMOVE GATE VALVE

SANITARY SEWER REMOVALS

STA 60+00.00-8.22'L to STA 61+66.84-8.46'L
165.7 LF – REMOVE SEWER PIPE
1 EA – REMOVE MANHOLE

STA 61+66.84-8.46'L to STA 61+68.21-59.59'L
50.0 LF – REMOVE SEWER PIPE

STA 61+64.69-150.06'R to STA 61+66.84-8.46'L
157.3 LF – REMOVE SEWER PIPE

WATER NOTES

STA 60+00.00-21.00'L to STA 61+48.57-21.01'L
148.7 LF – 10" PVC WATER MAIN

STA 60+07.56-21.00'L to STA 60+07.56-40.00'L
19.0 LF – 1" WATER SERVICE

STA 60+72.37-21.00'L to STA 60+72.37-40.00'L
19.0 LF – 1" WATER SERVICE

STA 62+12.12-19.52'L to STA 62+09.50-169.11'R
188.7 LF – 10" PVC WATER MAIN
4 EA – 10" PIPE BEND
1 EA – 6" WATER MAIN RESTRAINING DEVICE

STA 61+51.28-166.60'R to STA 62+09.50-169.11'R
60.5 LF – 10" PVC WATER MAIN
2 EA – 10" PIPE BEND
1 EA – 10" x 6" REDUCER
5 EA – 10" WATER MAIN RESTRAINING DEVICE
1 EA – 6" WATER MAIN RESTRAINING DEVICE
1 EA – CONNECT TO EXISTING WATER MAIN

STA 61+32.97-128.08'R to STA 62+10.04-130.57'R
77.3 LF – 1" WATER SERVICE

STA 62+10.00-133.50'R to STA 62+13.00-133.51'R
3.0 LF – 1.5" WATER SERVICE

STA 61+48.57-21.01'L to STA 61+54.60-59.81'L
41.1 LF – 10" PVC WATER MAIN
1 EA – 10" x 10" PIPE TEE
3 EA – 10" GATE VALVE WITH BOX
2 EA – 10" PIPE BEND
1 EA – 10" x 6" PIPE TEE
1 EA – 10" x 6" PIPE REDUCER
1 EA – 6" PIPE SLEEVE
16 EA – 10" WATER MAIN RESTRAINING DEVICE
3 EA – 6" WATER MAIN RESTRAINING DEVICE
1 EA – CONNECT TO EXISTING WATER MAIN

STA 61+54.40-52.06'L to STA 61+47.07-52.27'L
7.3 LF – 6" PVC WATER MAIN
1 EA – 6" GATE VALVE WITH BOX
4 EA – 6" WATER MAIN RESTRAINING DEVICE
1 EA – STANDARD FIRE HYDRANT

1 EA – TEMPORARY FIRE HYDRANT

SANITARY SEWER NOTES

STA 60+00.00-11.00'L to STA 61+66.96-11.00'L
167.0 LF -- 8" PVC SEWER PIPE

STA 60+11.55-11.00'L to STA 60+11.55-40.00'L
29.0 LF -- 4" SEWER SERVICE
1 EA – 8" x 4" PIPE WYE

STA 60+84.86-11.00'L to STA 60+76.86-40.00'L
32.3 LF -- 4" SEWER SERVICE
1 EA – 8" x 4" PIPE WYE

STA 61+66.96-11.00'L
NEW SSMH 163
1 EA – 48" MANHOLE
1 EA – TYPE A10 FRAME AND LID
1 EA – EXTERNAL MANHOLE SEAL
2 EA – 8" MANHOLE BOOT
1 EA – 12" MANHOLE BOOT

STA 61+66.96-11.00'L to STA 61+68.21-59.59'L
48.6 LF -- 8" PVC SEWER PIPE
1 EA – CONNECT TO EXISTING SEWER MAIN

STA 61+66.96-11.00'L to STA 61+64.63-150.08'R
161.1 LF -- 12" PVC SEWER PIPE

STA 61+64.93-133.09'R to STA 62+12.64-135.14'R
48.0 LF – 4" SEWER SERVICE
1 EA – 12" x 4" PIPE WYE

STA 61+33.32-124.08'R to STA 61+65.05-124.48'R
32.0 LF – 4" SEWER SERVICE
1 EA – 12" x 4" PIPE WYE

STA 61+64.69-150.06'R
NEW SSMH
1 EA – 48" MANHOLE
1 EA – TYPE A10 MANHOLE FRAME AND LID
1 EA – 1 EXTERNAL MANHOLE SEAL
2 EA – 12" MANHOLE BOOT

FOR BIDDING PURPOSES ONLY

CITY OF MADISON	PROJECT	SHEET	TOTAL SHEETS
	2016-1	34	45

Plotting Date: 12/3/2015

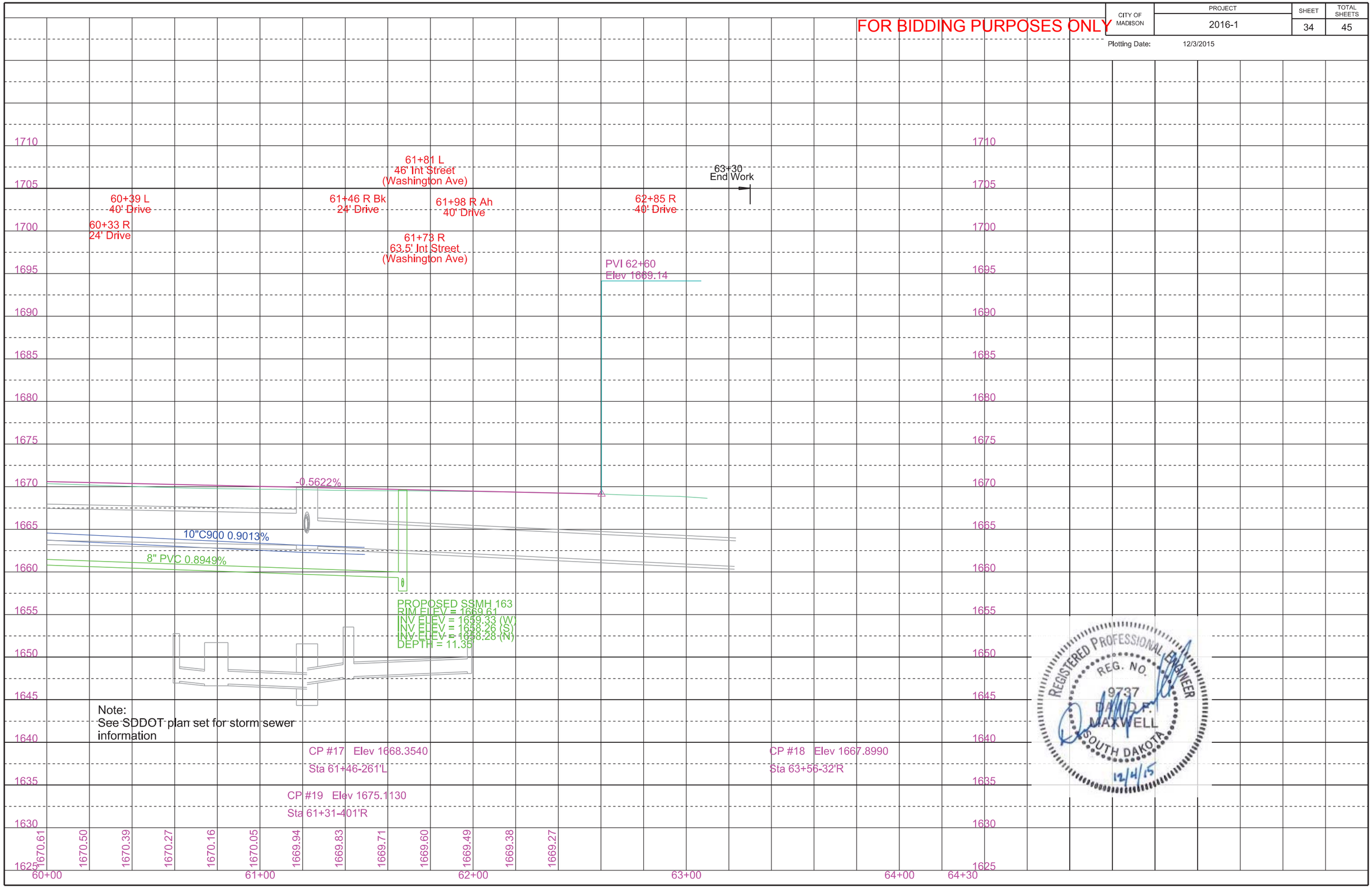

FOR BIDDING PURPOSES ONLY

REGISTERED PROFESSIONAL ENGINEER
REG. NO. 9737
DAVID J. MAXWELL
SOUTH DAKOTA
12/4/15

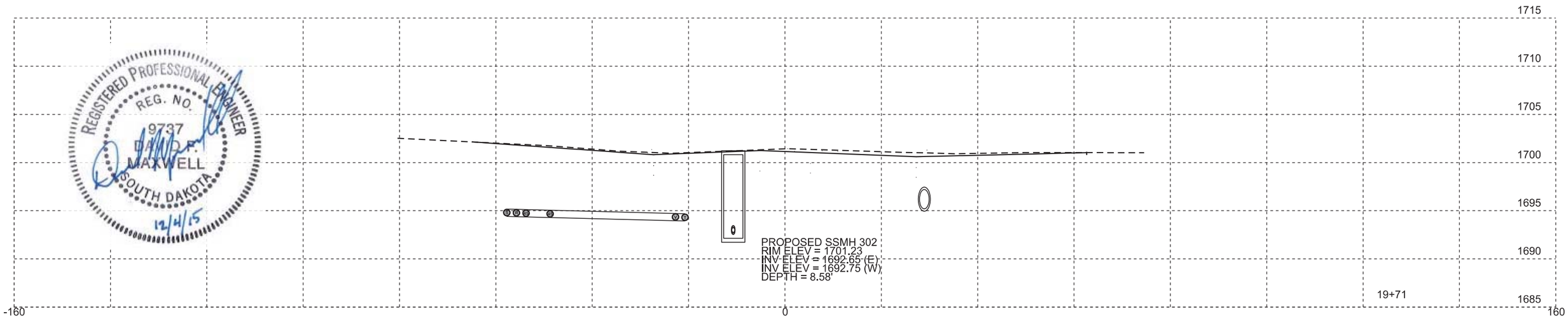

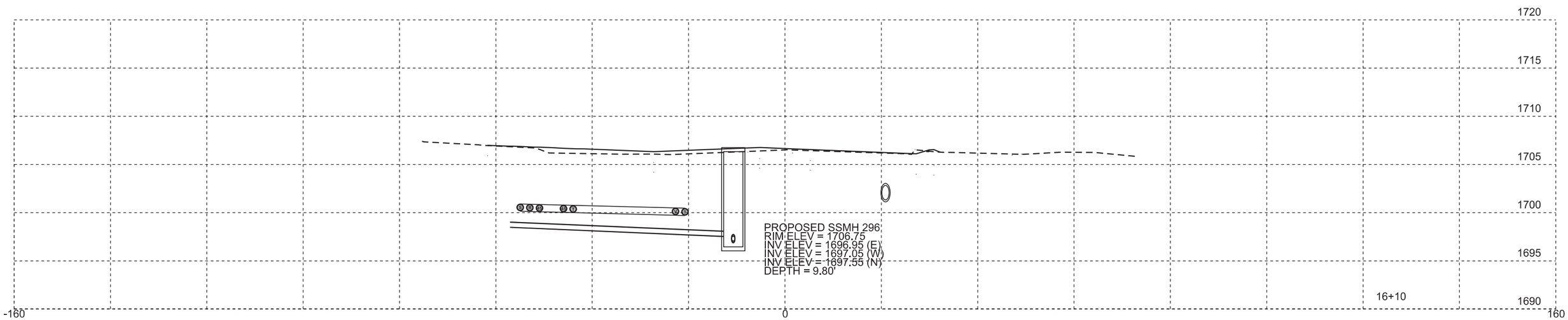

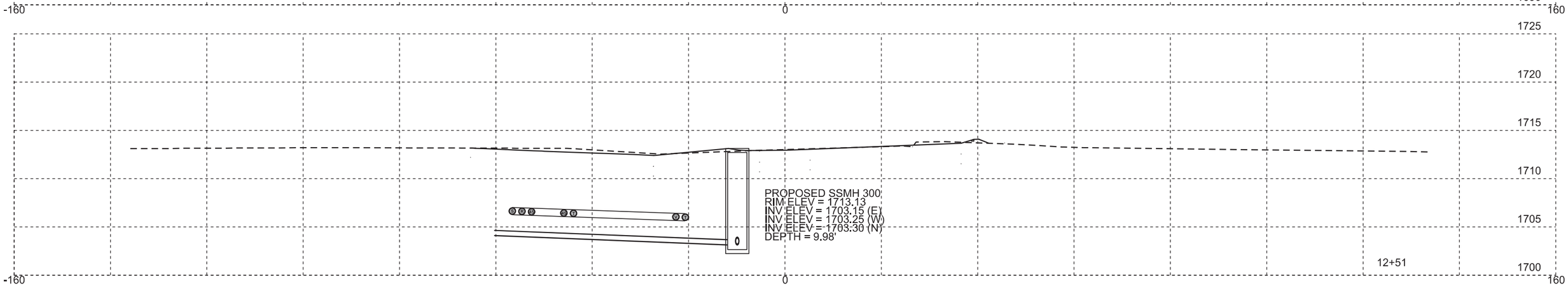

STATE OF SOUTH DAKOTA	PROJECT	SHEET NO.	TOTAL SHEETS
	2016-1	36	45

FOR BIDDING PURPOSES ONLY

REGISTERED PROFESSIONAL ENGINEER
REG. NO.
9737
DAVID P.
MAXWELL
SOUTH DAKOTA
12/4/15

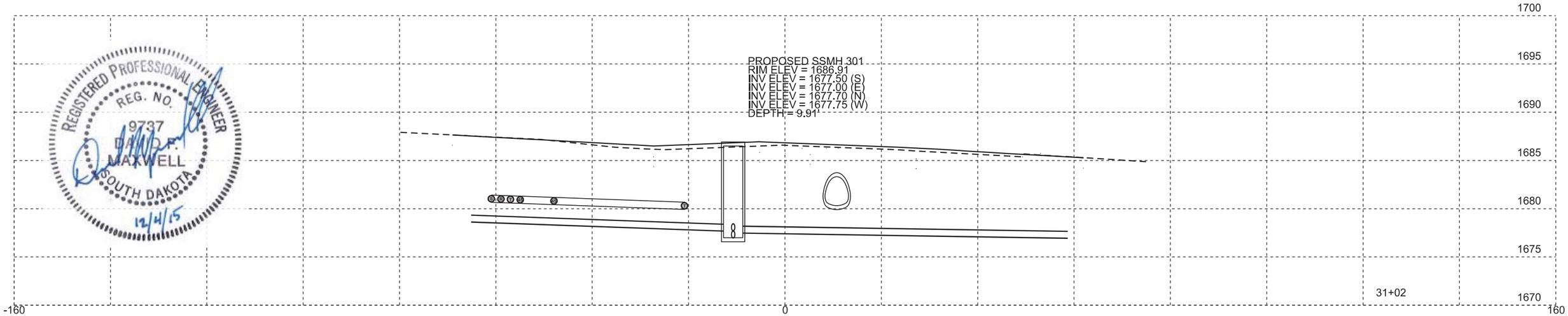

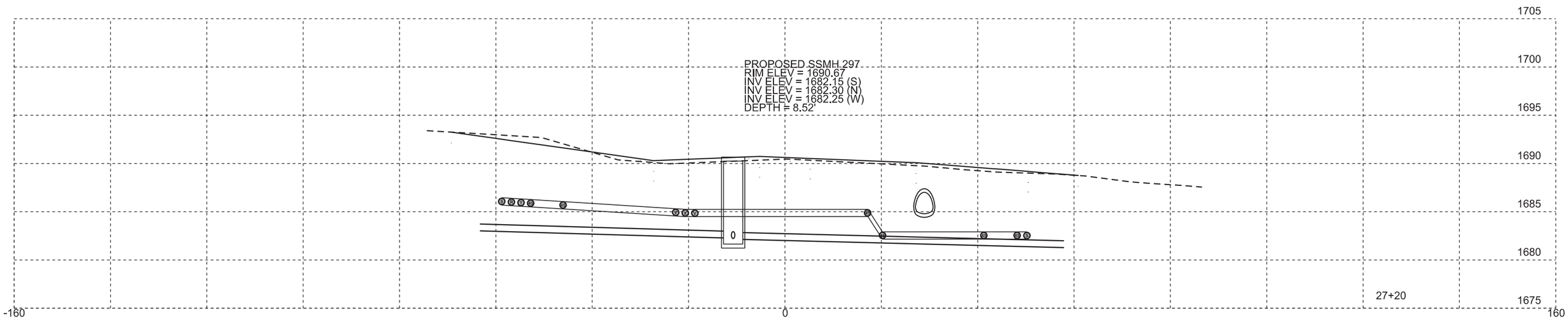

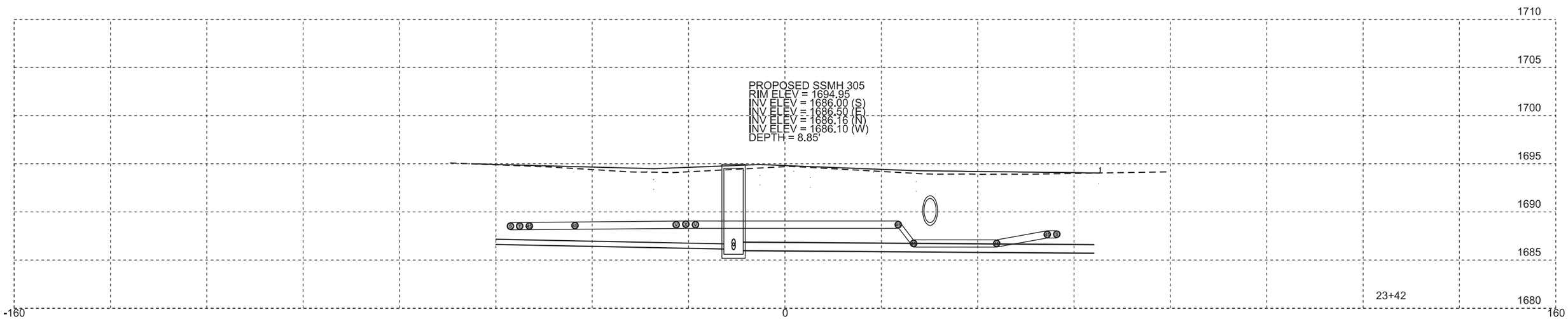

FOR BIDDING PURPOSES ONLY

REGISTERED PROFESSIONAL ENGINEER
REG. NO. 9737
DAVID P. MAXWELL
SOUTH DAKOTA
12/4/15

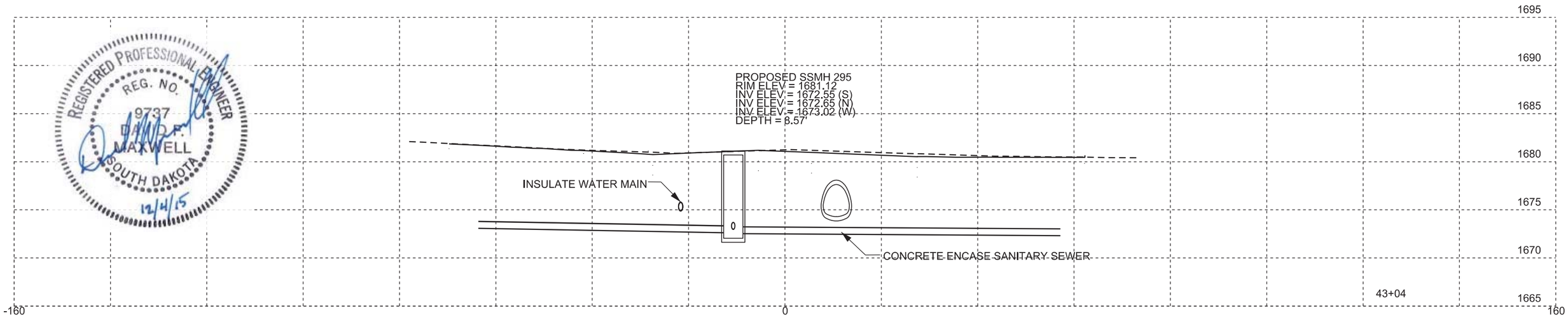

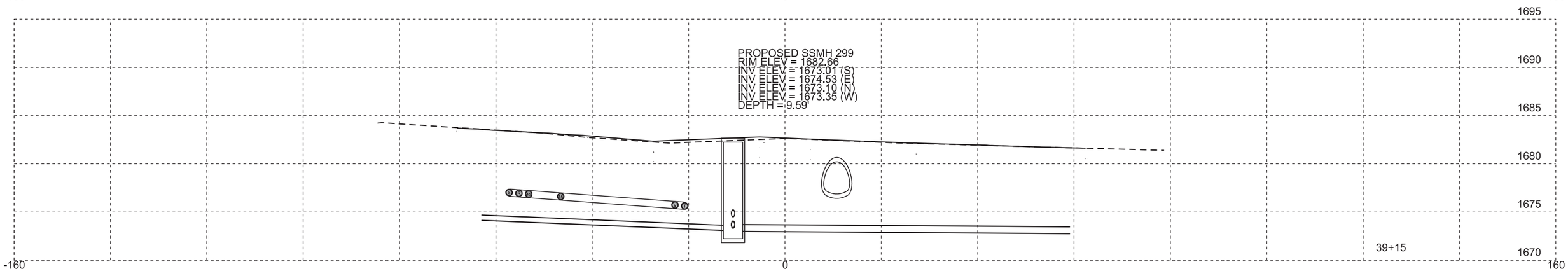

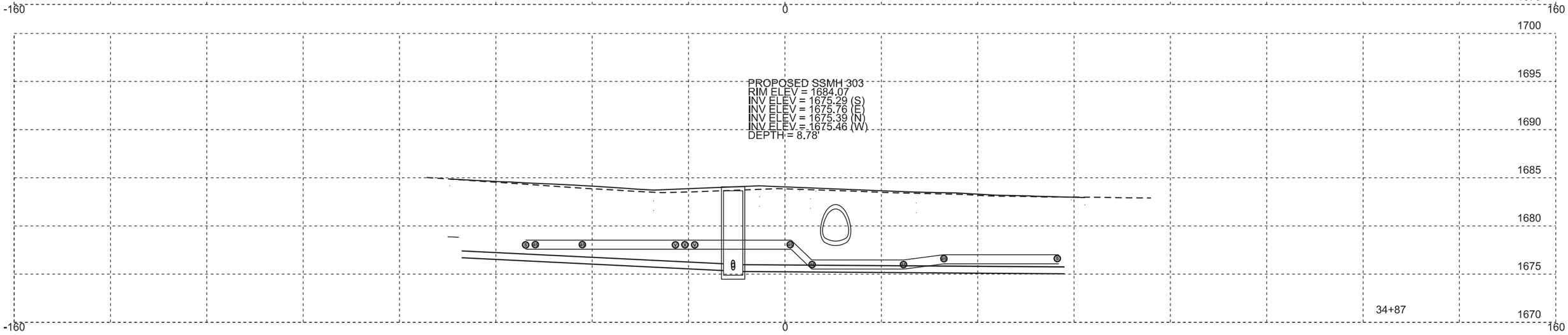

FOR BIDDING PURPOSES ONLY

REGISTERED PROFESSIONAL ENGINEER
REG. NO. 9737
DAVID P. MAXWELL
SOUTH DAKOTA
12/4/15

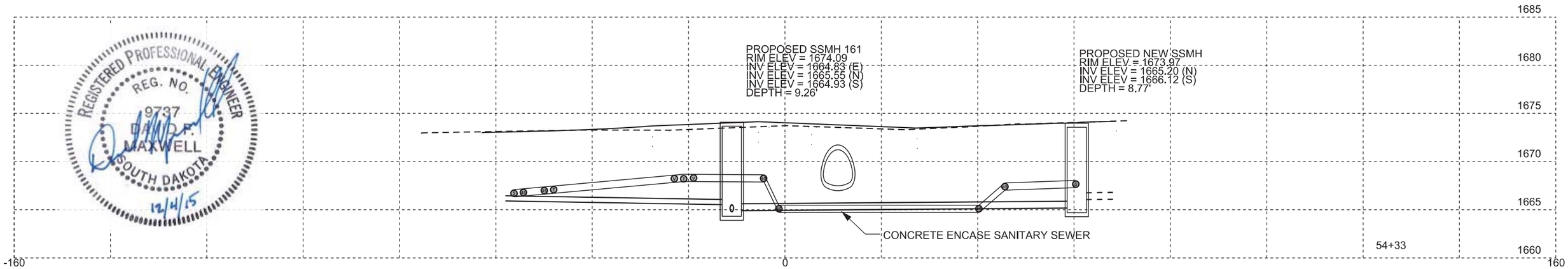

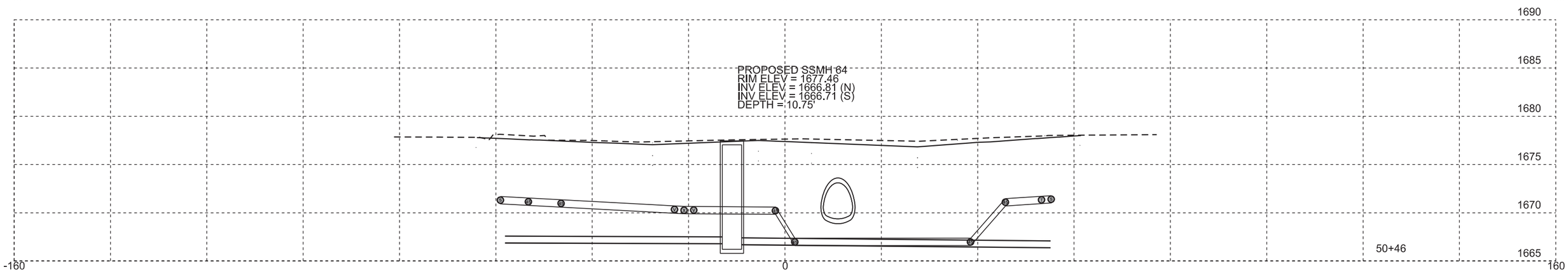

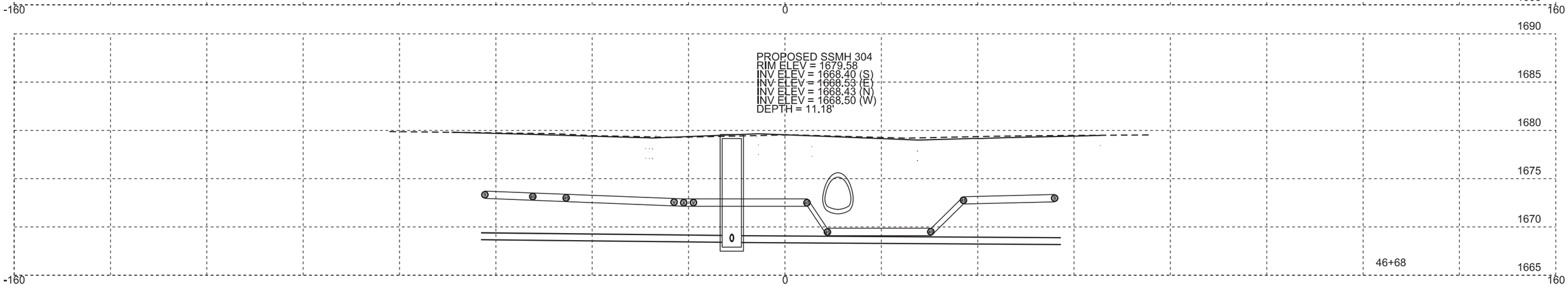

Revised 12/28/15 KAM

FOR BIDDING PURPOSES ONLY

STATE OF SOUTH DAKOTA	PROJECT	SHEET NO.	TOTAL SHEETS
	2016-1	39	45

REGISTERED PROFESSIONAL ENGINEER
REG. NO. 9737
DAVID P. MAXWELL
SOUTH DAKOTA
12/28/15

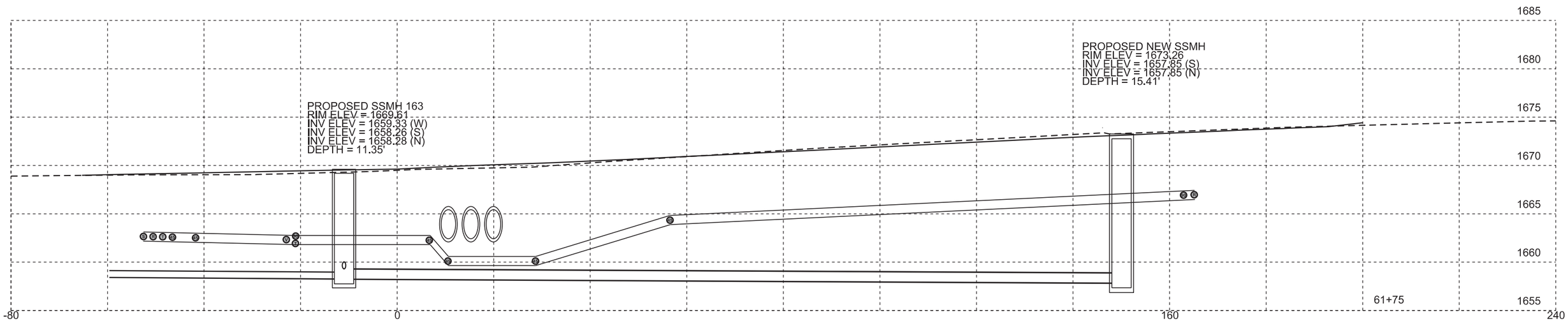

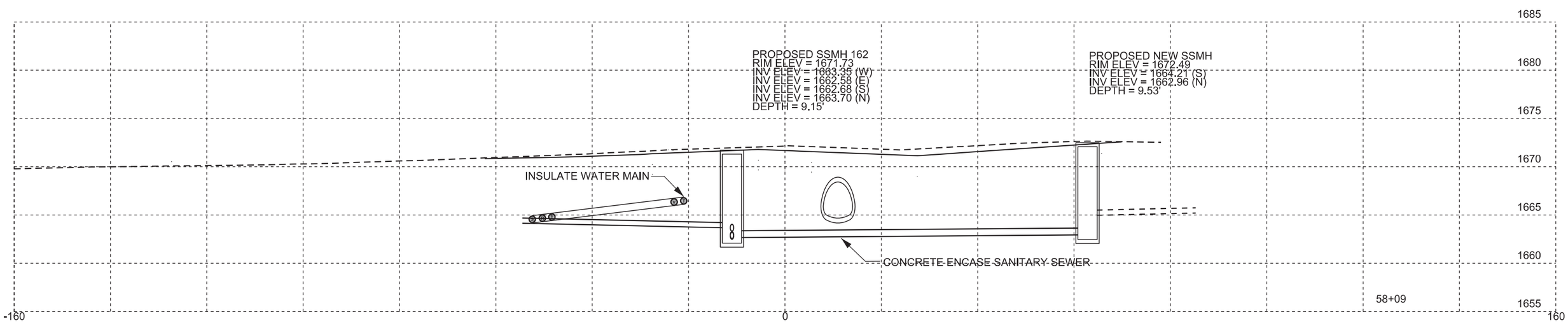

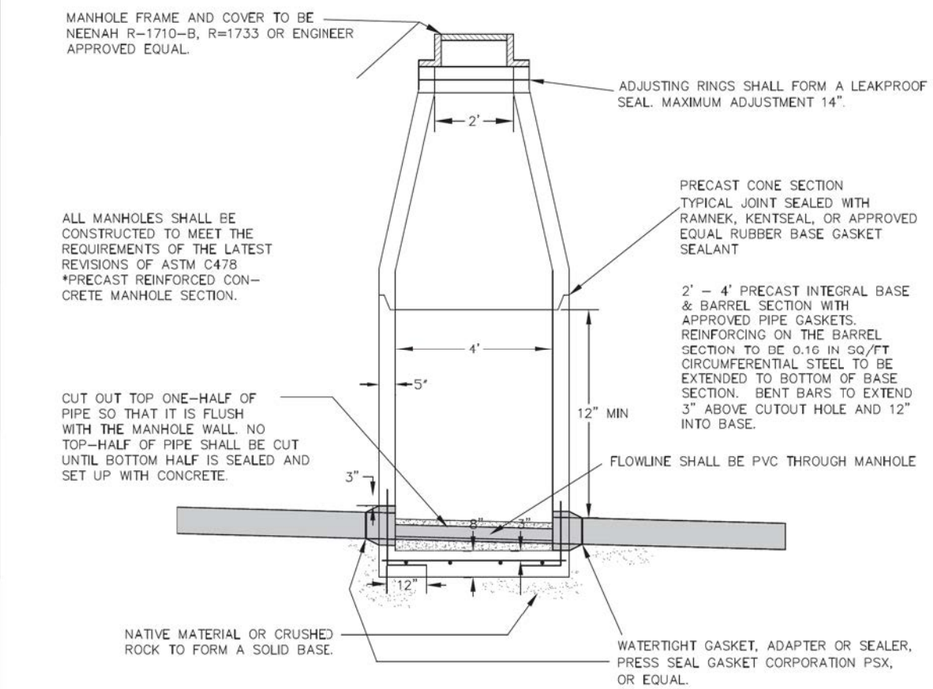

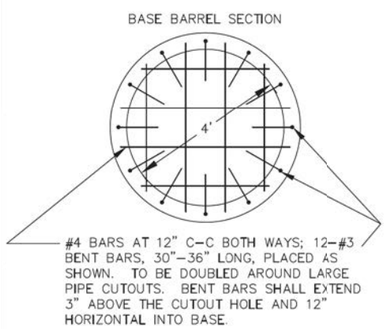

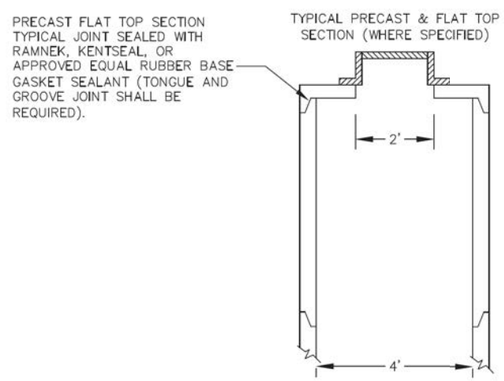

1 OF 2

Revised: April 2008

City of Madison
Engineering Department
Sanitary Sewer Manhole
Cross Sections

MADISON Engineering Department
PO Box 308
116 W. Center Street
Madison, SD 57042
Phone: (605)256-7514
Fax: (605)256-7511

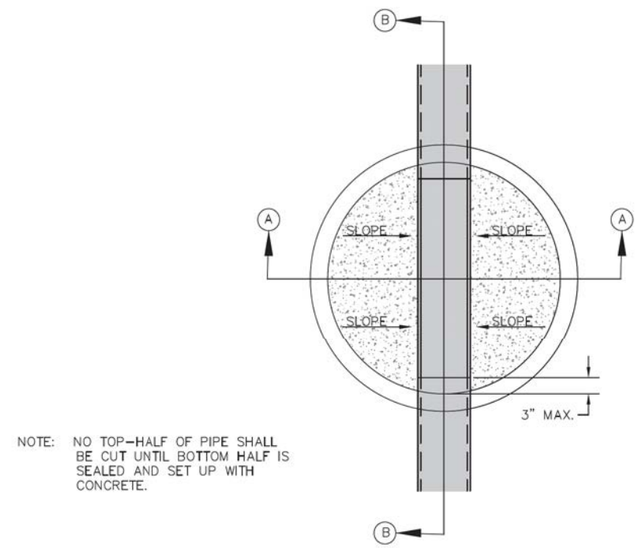

NOTE: NO TOP-HALF OF PIPE SHALL BE CUT UNTIL BOTTOM HALF IS SEALED AND SET UP WITH CONCRETE.

PLAN

TYPICAL STRAIGHT THROUGH MANHOLE

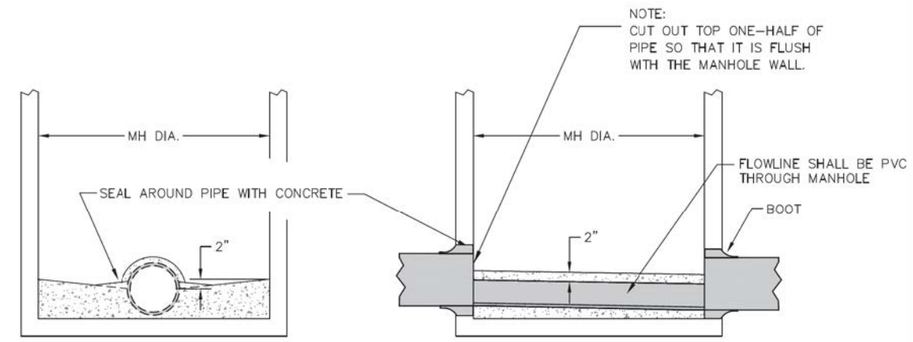

SECTION A–A

SECTION B–B

2 OF 2

Revised: April 2008

City of Madison
Engineering Department
Manhole Bench and
Invert Detail

MADISON Engineering Department
PO Box 308
116 W. Center Street
Madison, SD 57042
Phone: (605)256-7514
Fax: (605)256-7511

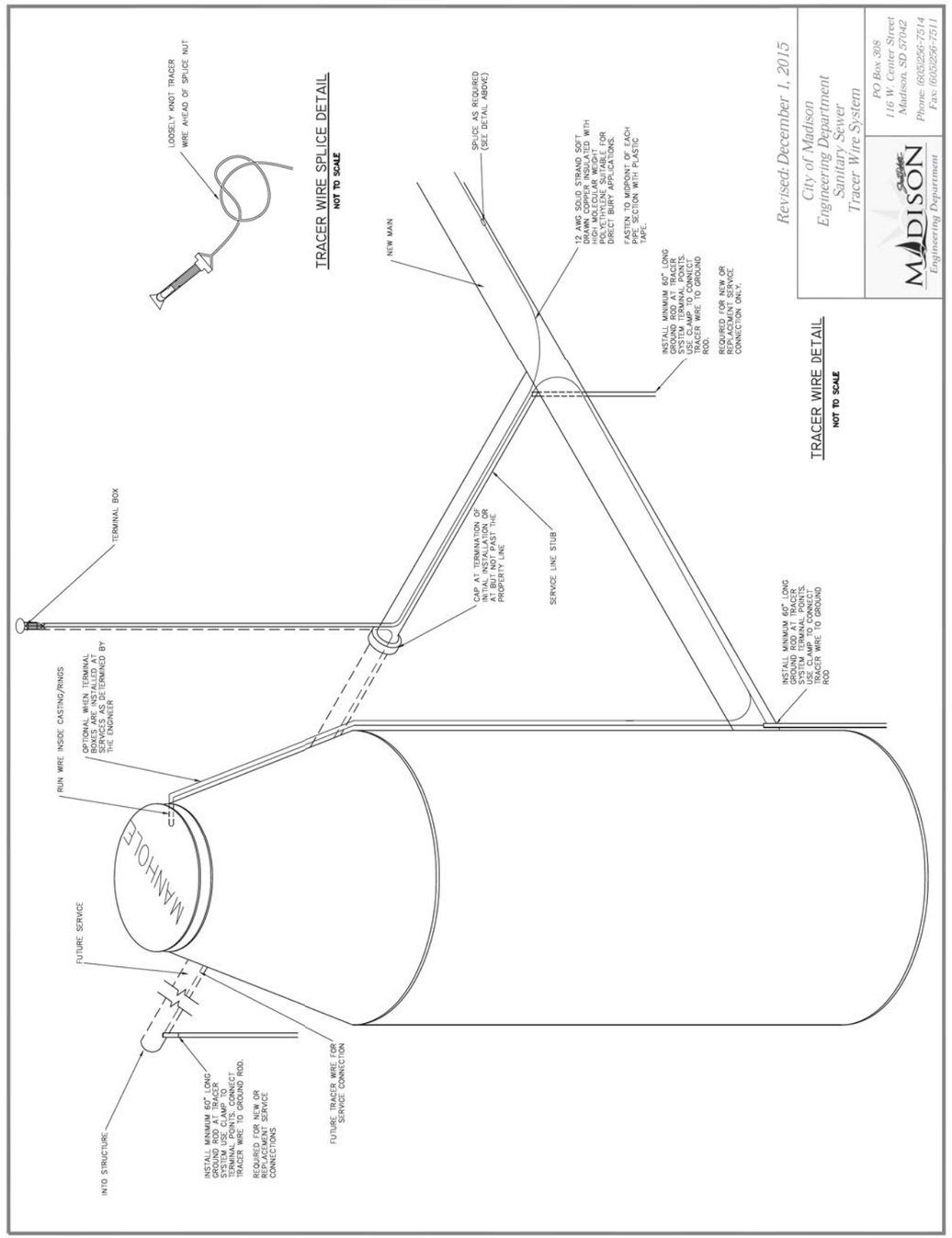

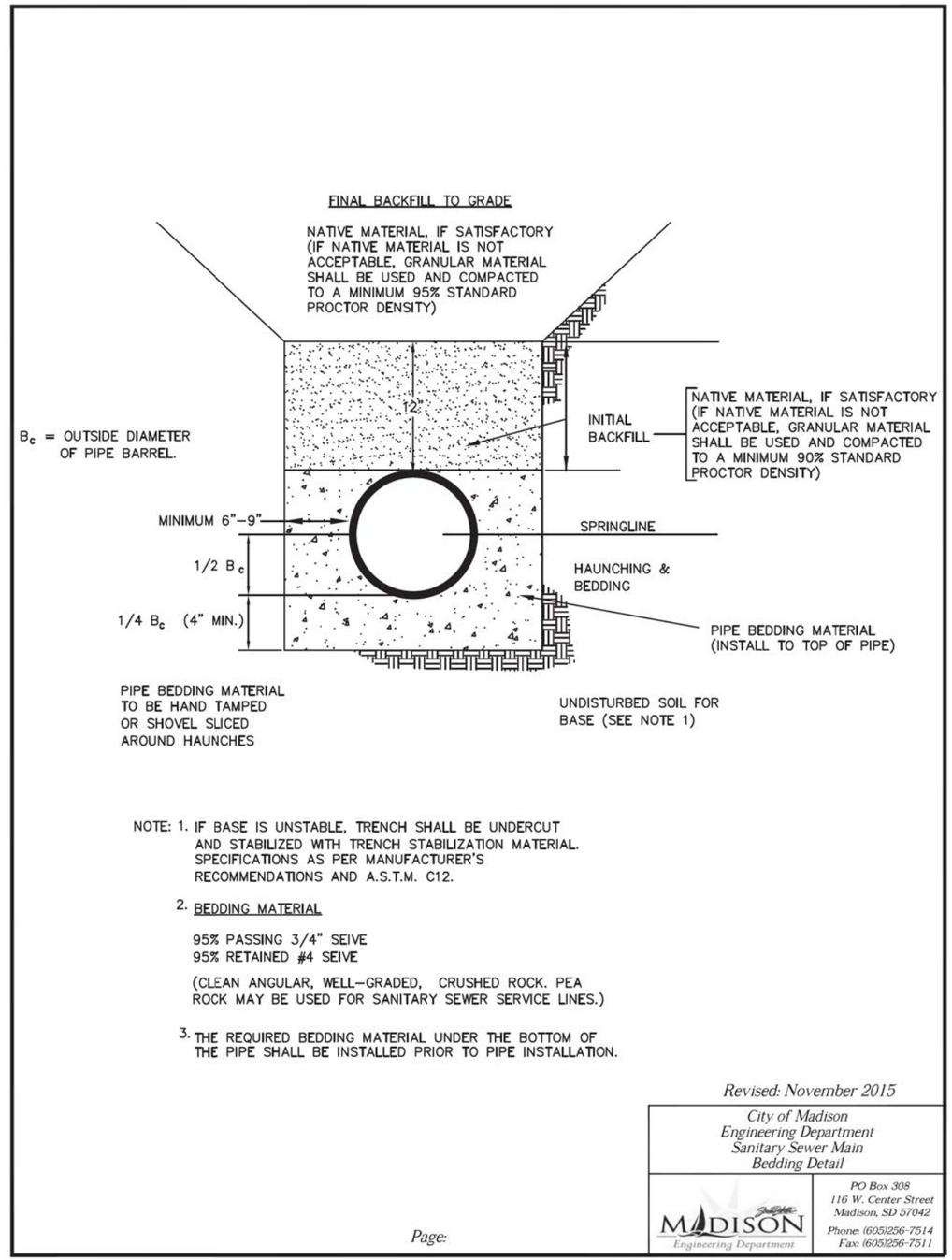

NOTE: 1. IF BASE IS UNSTABLE, TRENCH SHALL BE UNDERCUT AND STABILIZED WITH TRENCH STABILIZATION MATERIAL. SPECIFICATIONS AS PER MANUFACTURER'S RECOMMENDATIONS AND A.S.T.M. C12.

2. BEDDING MATERIAL

95% PASSING 3/4" SEIVE
95% RETAINED #4 SEIVE

(CLEAN ANGULAR, WELL–GRADED, CRUSHED ROCK. PEA ROCK MAY BE USED FOR SANITARY SEWER SERVICE LINES.)

3. THE REQUIRED BEDDING MATERIAL UNDER THE BOTTOM OF THE PIPE SHALL BE INSTALLED PRIOR TO PIPE INSTALLATION.

Revised: November 2015

City of Madison
Engineering Department
Sanitary Sewer Main
Bedding Detail

MADISON
Engineering Department

PO Box 308
116 W. Center Street
Madison, SD 57042
Phone: (605)256-7514
Fax: (605)256-7511

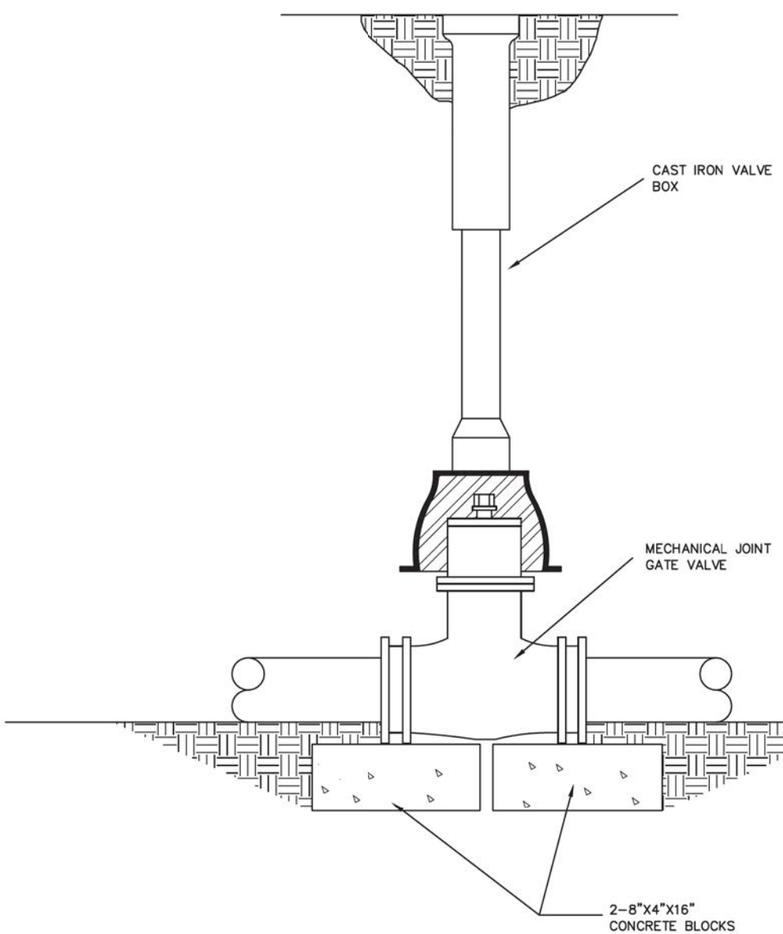

Revised: April 2008

City of Madison
Engineering Department
Gate Valve
Installation Drawing

MADISON Engineering Department

PO Box 308
116 W. Center Street
Madison, SD 57042

Phone: (605)256-7514
Fax: (605)256-7511

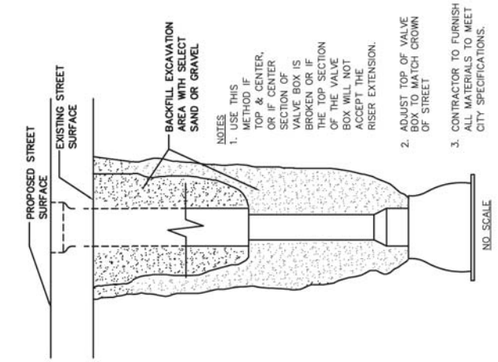

VALVE BOX INSTALLATION

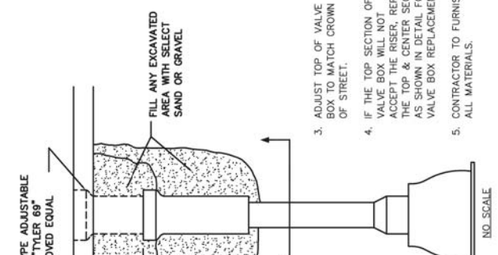

VALVE BOX EXTENSION
(OR REPLACEMENT OF TOP SECTION)

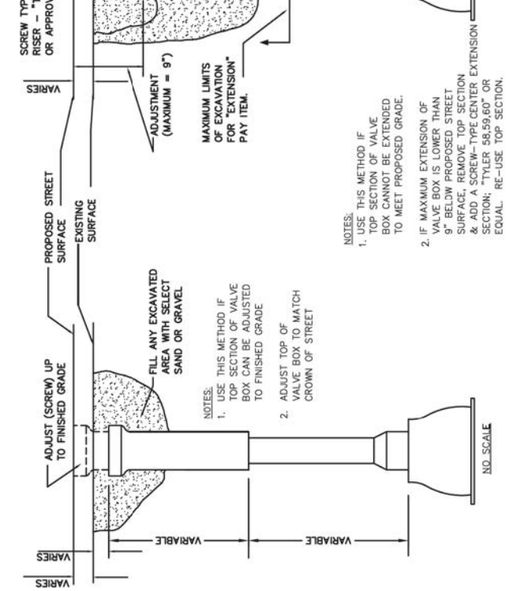

VALVE BOX ADJUSTMENT

VALVE BOX ADJUSTMENT / REPLACEMENT

Revised: April 2008

City of Madison
Engineering Department
Valve Box
Adjustment / Replacement

MADISON Engineering Department

PO Box 308
116 W. Center Street
Madison, SD 57042

Phone: (605)256-7514
Fax: (605)256-7511

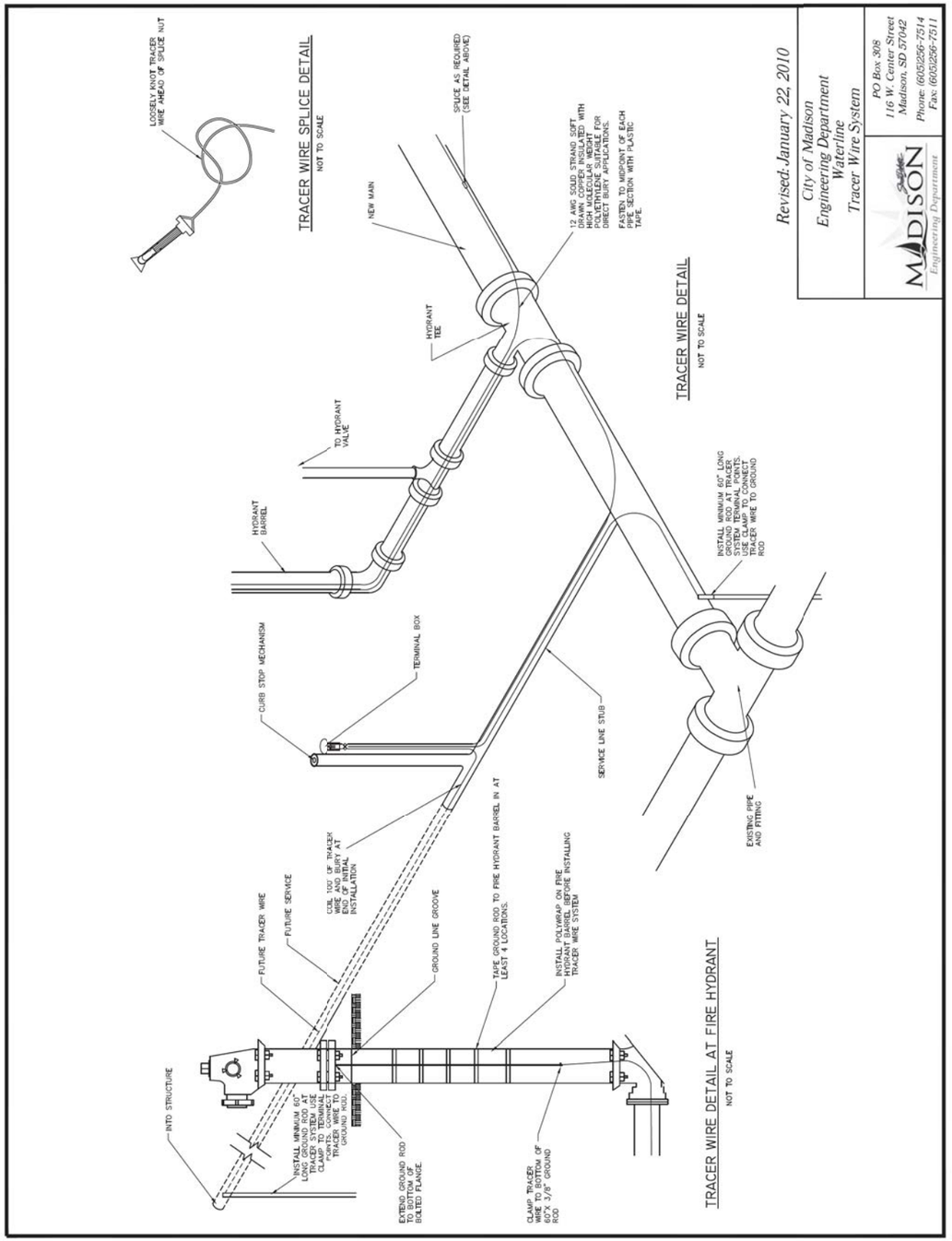
LOOSELY KNOT TRACER WIRE AHEAD OF SPLICE NOT
TRACER WIRE SPLICE DETAIL
NOT TO SCALE
NEW MAIN
SPACE AS REQUIRED (SEE DETAIL ABOVE)
12 AWG SOLID STRAND SOFT DRAWN COPPER INSULATED WITH HIGH MOLECULAR WEIGHT POLYETHYLENE SUITABLE FOR DIRECT BURY APPLICATIONS.
FASTEN TO MIDPOINT OF EACH PIPE SECTION WITH PLASTIC TAPE.
HYDRANT TEE
TO HYDRANT VALVE
HYDRANT BARREL
TRACER WIRE DETAIL
NOT TO SCALE
INSTALL MINIMUM 60" LONG COPPER CLAD STEEL GROUND ROD AT TRACER SYSTEM TERMINAL POINTS. USE CLAMP TO CONNECT TRACER WIRE TO GROUND ROD
CURB STOP MECHANISM
TERMINAL BOX
SERVICE LINE STUB
EXISTING PIPE AND FITTING
LOOP TOP OF TRACER WIRE AND BURY AT END OF INITIAL INSTALLATION
FUTURE TRACER WIRE
FUTURE SERVICE
GROUND LINE GROOVE
TAPE GROUND ROD TO FIRE HYDRANT BARREL IN AT LEAST 4 LOCATIONS.
INSTALL POLYWRAP ON FIRE HYDRANT BARREL BEFORE INSTALLING TRACER WIRE SYSTEM
INTO STRUCTURE
INSTALL MINIMUM 60" LONG GROUND ROD AT TRACER SYSTEM TERMINAL POINTS. USE CLAMP TO CONNECT TRACER WIRE TO GROUND ROD.
EXTEND GROUND ROD TO BOTTOM OF BOLTED FLANGE.
CLAMP TRACER WIRE TO BOTTOM OF 60"X 3/8" GROUND ROD
TRACER WIRE DETAIL AT FIRE HYDRANT
NOT TO SCALE
Revised: January 22, 2010
City of Madison
Engineering Department
Waterline
Tracer Wire System
MADISON
Engineering Department
PO Box 308
116 W. Center Street
Madison, SD 57042
Phone: (605)256-7514
Fax: (605)256-7511

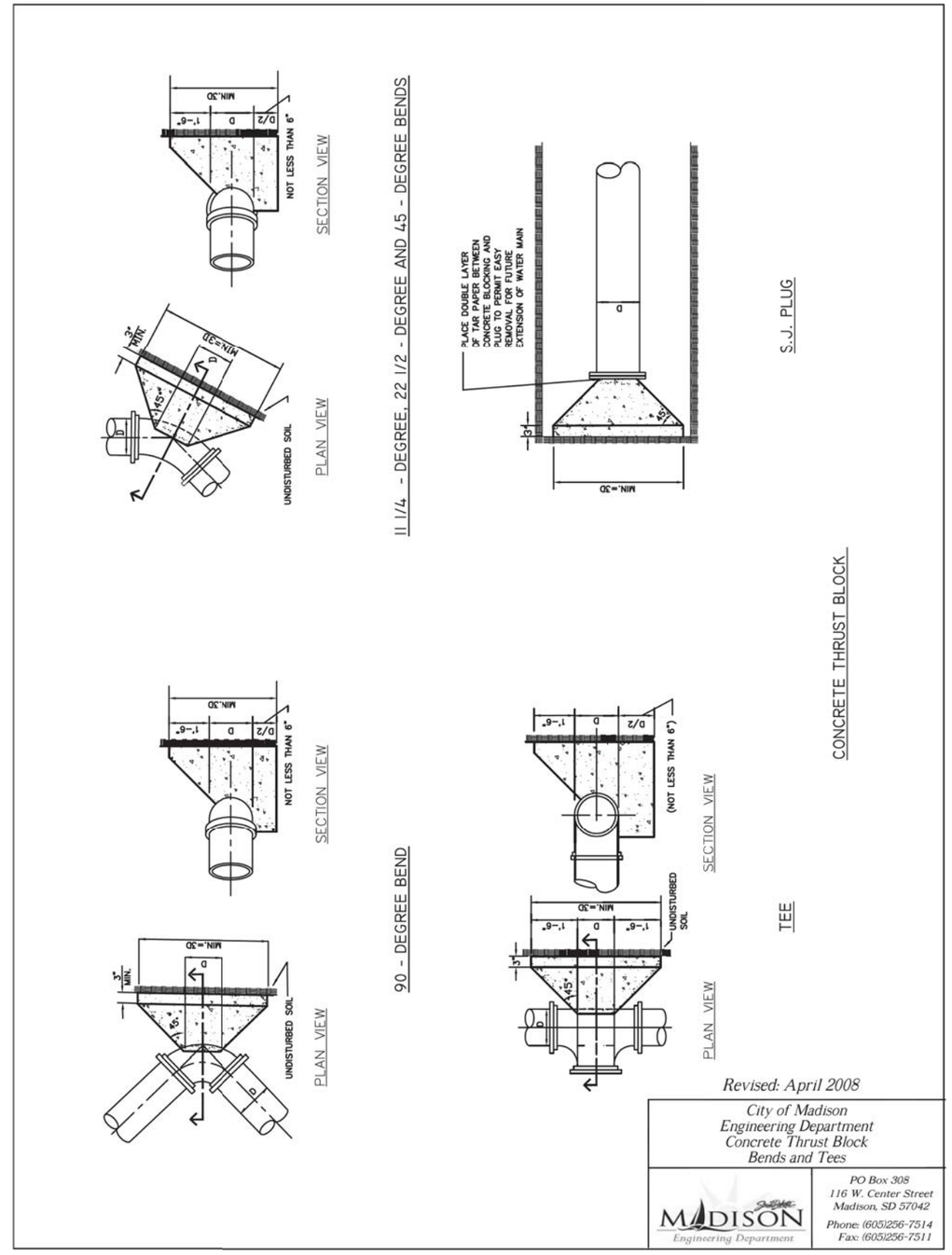
MIN.=30
D/2
D
1'-6"
NOT LESS THAN 6"
SECTION VIEW
3" MIN.
45°
UNDISTURBED SOIL
PLAN VIEW
11 1/4 - DEGREE, 22 1/2 - DEGREE AND 45 - DEGREE BENDS
PLACE DOUBLE LAYER OF TAR PAPER BETWEEN CONCRETE BLOCKING AND PLUG TO PERMIT EASY REMOVAL FOR FUTURE EXTENSION OF WATER MAIN
S.J. PLUG
90 - DEGREE BEND
TEE
CONCRETE THRUST BLOCK
Revised: April 2008
City of Madison
Engineering Department
Concrete Thrust Block
Bends and Tees
MADISON
Engineering Department
PO Box 308
116 W. Center Street
Madison, SD 57042
Phone: (605)256-7514
Fax: (605)256-7511

TYPICAL WATER & SANITARY SEWER SERVICE LAYOUT

(NOT TO SCALE)

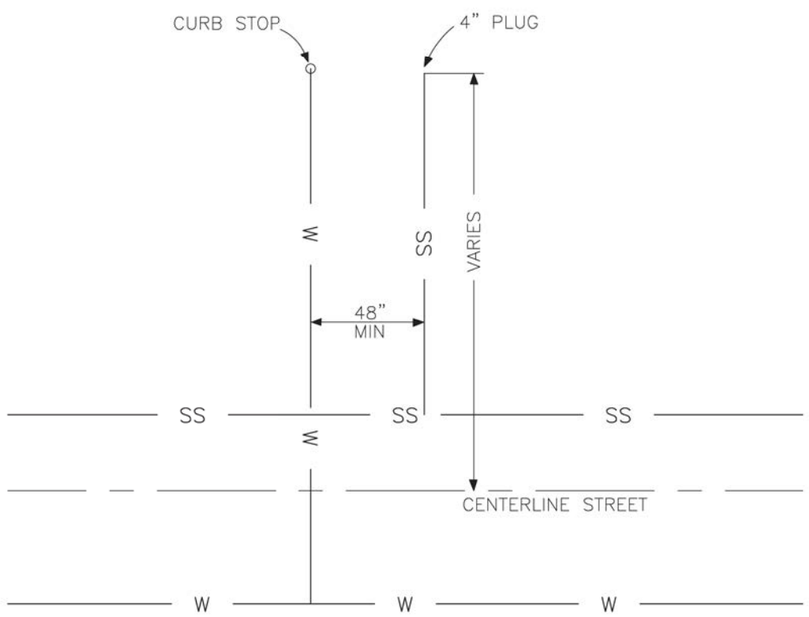

NOTES: (1) CONTRACTOR SHALL "BENCH" WATER LINE TO PROVIDE AN 18-INCH VERTICAL SEPARATION BETWEEN WATER AND SANITARY SEWER SERVICES.

(2) MARK & RECORD LOCATION OF CURB STOP & PLUGS.

Revised: April 2008

City of Madison
Engineering Department
Water and Sanitary Sewer
Typical Service Layout

MADISON Engineering Department

PO Box 308
116 W. Center Street
Madison, SD 57042
Phone: (605)256-7514
Fax: (605)256-7511

HYDRANT CONNECTION

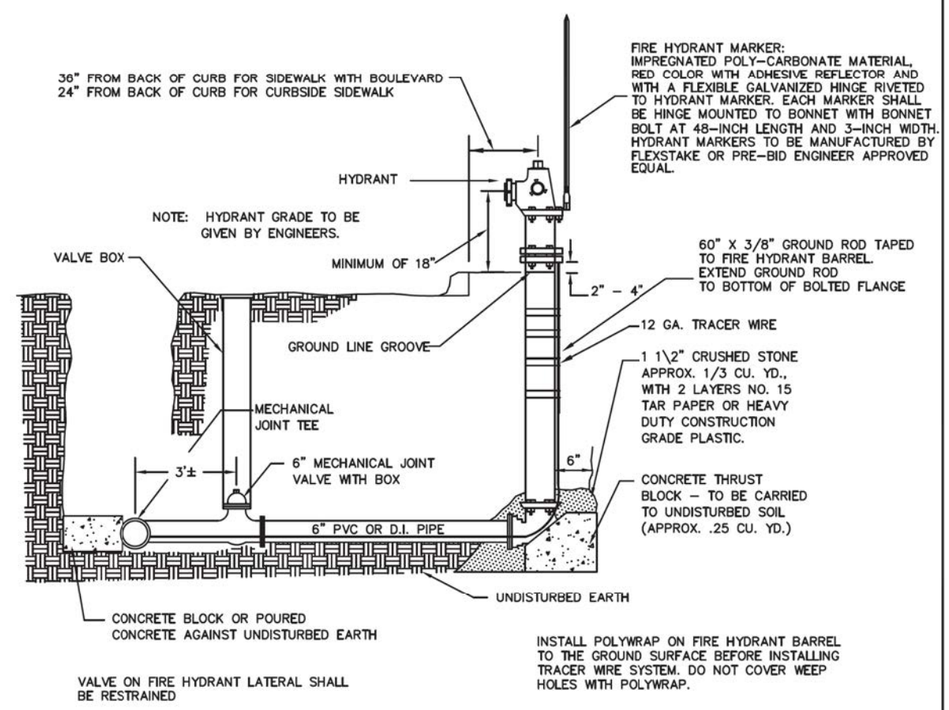

REVISED: DECEMBER 2013

SPECIFICATION REFERENCE NO. 900	CITY OF SIOUX FALLS ENGINEERING DIVISION HYDRANT CONNECTION	PLATE NUMBER 900.06

WATER MAIN BEDDING DETAIL

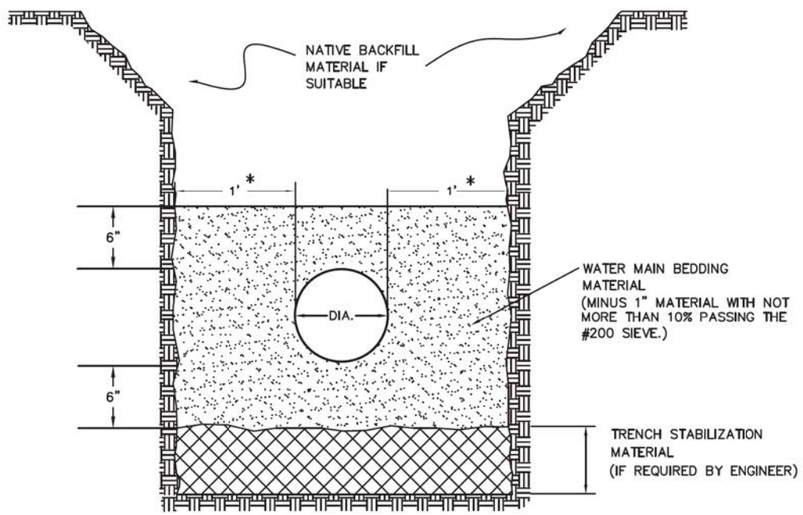

PIPE SIZE DIAMETER	TRENCH WIDTH	TRENCH HEIGHT	TRENCH AREA	PIPE AREA	WATER MAIN BEDDING MAT. AREA	WATER MAIN BEDDING MAT. TONS/LF
4"	28"	16"	3.11 SQ.FT.	.09 SQ.FT.	3.02 SQ.FT.	0.21
6"	30"	18"	3.75 SQ.FT.	.20 SQ.FT.	3.55 SQ.FT.	0.25
8"	32"	20"	4.44 SQ.FT.	.35 SQ.FT.	4.10 SQ.FT.	0.29
10"	34"	22"	5.19 SQ.FT.	.55 SQ.FT.	4.65 SQ.FT.	0.33
12"	36"	24"	6.00 SQ.FT.	.79 SQ.FT.	5.22 SQ.FT.	0.37
16"	40"	28"	7.78 SQ.FT.	1.40 SQ.FT.	6.38 SQ.FT.	0.45
20"	44"	32"	9.78 SQ.FT.	2.18 SQ.FT.	7.60 SQ.FT.	0.53
24"	48"	36"	12.00 SQ.FT.	3.14 SQ.FT.	8.86 SQ.FT.	0.62
30"	60"	42"	17.50 SQ.FT.	4.91 SQ.FT.	12.59 SQ.FT.	0.88

* IF >30" USE DIA./2 ON EACH SIDE OF WATER MAIN PIPE.
* LENGTH BASED ON ONE (1) FOOT OF MAIN.

Revised: November 2015

City of Madison
Engineering Department
Water Main
Bedding Detail

MADISON Engineering Department
PO Box 308
116 W. Center Street
Madison, SD 57042
Phone: (605)256-7514
Fax: (605)256-7511

Page:

WATER MAIN INSULATION DETAIL

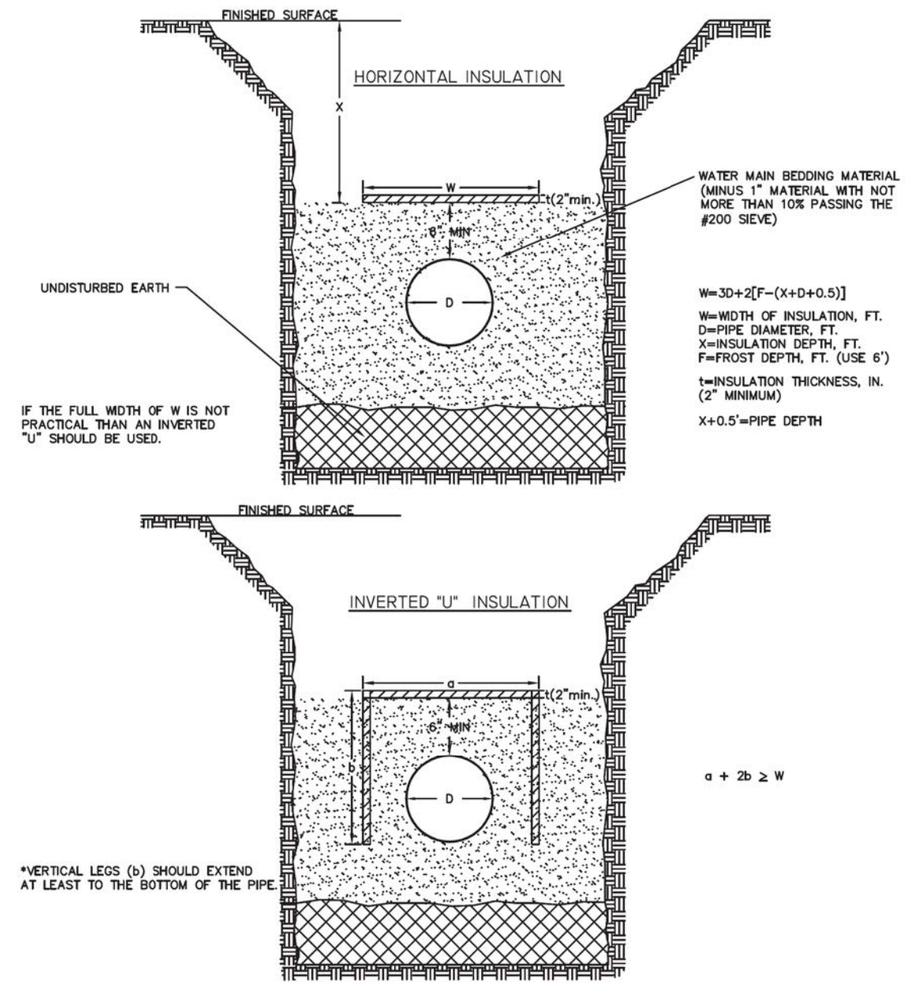

**THIS DETAIL IS A GENERAL GUIDELINE. INSULATION OF WATER MAIN WILL BE DETERMINED ON A CASE BY CASE SITUATION DEPENDING ON THE FOLLOWING FACTORS: DEPTH, PIPE DIAMETER, FLOW, LOCATION, AND PROXIMITY TO BEDROCK.
INSULATION MATERIAL AND INSTALLATION METHODS SHOULD FOLLOW THE WATER MAIN SUPPLEMENTAL SPECIFICATION SEC. 2.8 AND 3.7.

REVISED: SEPTEMBER 2005

SPECIFICATION REFERENCE NO. 900	CITY OF SIOUX FALLS ENGINEERING DIVISION WATER MAIN INSULATION DETAIL	PLATE NUMBER 900.14