FOR BIDDING PURPOSES ONLY

REVISED 12/15/15

City of Lennox

Lincoln County, South Dakota

Plans for Proposed Utility Reconstruction

US Highway 17

STOCKWELL ENGINEERS
600 N. Main Avenue #100
Sioux Falls, SD 57104
Ph. (605) 338-6668
Fax (605) 338-8750
www.stockwellengineers.com

CITY OF Lennox

PCN X04D

Stockwell No. 10214

Index of Sheets

SHEET NO. G1	TITLE SHEET
SHEET NO. G2 THRU G3	ESTIMATE OF QUANTITIES / GENERAL NOTES & TABLES
SHEET NO. G4 THRU G11	SANITARY SEWER TECHNICAL SPECIFICATIONS
SHEET NO. G12 THRU G17	WATER MAIN TECHNICAL SPECIFICATIONS
SHEET NO. G18	STORM SEWER TECHNICAL SPECIFICATIONS
SHEET NO. G19	WARRANTY SPECIFICATIONS
SHEET NO. G20 THRU G30	SANITARY SEWER PLANS
SHEET NO. G31 THRU G41	WATER MAIN PLANS
SHEET NO. G42 THRU G43	STORM SEWER PLANS
SHEET NO. G44 THRU G57	STANDARD PLATES

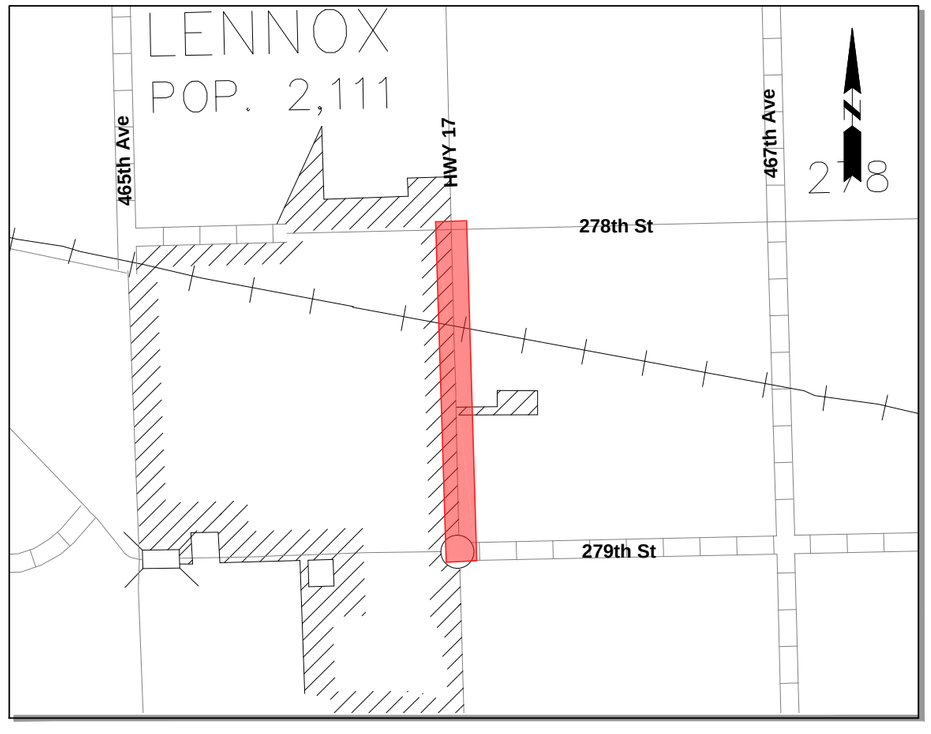

Location Map

Drawing indicates general utility locations only. Neither the correctness or completeness of locations are guaranteed.

Prior to excavation contact:
IOWA ONE CALL (1-800-292-8989)

REGISTERED PROFESSIONAL ENGINEER
REG. NO. 9237
MITCHELL M. MERGEN
SOUTH DAKOTA

I, Mitchell M. Mergen, hereby certify that these plans were prepared by me, or under my direct supervision and that I am a duly registered engineer under the laws of the State of South Dakota.

Mitchell Mergen 12/14/15

Mitchell M. Mergen | S.D. No. #### | Date

SECTION G ESTIMATE OF QUANTITIES

BID ITEM NUMBER	ITEM	QUANTITY	UNIT
009E0010	Mobilization	1	LS
110E0460	Remove Manhole	3	Each
110E0520	Remove Sewer Pipe	74	Ft
110E0530	Remove Storm Sewer Pipe	250	Ft
110E1970	Remove Water Main	67	Ft
250E0010	Incidental Work	1	LS
450E0203	48" RCP Class 3, Furnish	534	Ft
450E0210	48" RCP, Install	534	Ft
450E3053	48" RCP Arch Class 3, Furnish	344	Ft
450E3060	48" RCP Arch, Install	344	Ft
450E8450	Storm Sewer Video Inspection	860	Ft
450E8500	Trash Guard, Furnish	1	Each
450E8501	Trash Guard, Install	1	Each
451E0116	16" Steel Encasement Pipe	252	Ft
451E0300	Install Carrier Pipe	180	Ft
451E0606	6" PVC Water Main	5	Ft
451E0608	8" PVC Water Main	1445	Ft
451E1008	8" PVC Sewer Pipe	863	Ft
451E1206	6" Sewer Service	68	Ft
451E1278	2" Water Service	3	Each
451E1550	Sanitary Sewer Video Inspection	863	Ft
451E2013	8" X 6" Pipe Wye	3	Each
451E2213	8" x 6" Pipe Tee	1	Each
451E2214	8" x 8" Pipe Tee	3	Each
451E2314	8" x 8" Pipe Cross	1	Each
451E2808	2" Corporation Stop with Taping Saddle	3	Each
451E2908	2" Curb Stop with Box	3	Each
451E3008	8" Pipe Bend	2	Each
451E3008	8" Pipe Bend	1	Each
451E3108	8" Pipe Cap	3	Each
451E3206	6" Pipe Coupling	3	Each
451E3208	8" Pipe Coupling	4	Each
451E3708	8" Oversize Sleeve	7	Each
451E4208	8" Gate Valve with Box	9	Each
451E4506	6" Fire Hydrant Extension	2	Each
451E4580	Standard Fire Hydrant	1	Each
451E4581	Temporary Fire Hydrant	1	Each
451E4630	Casing Pipe Spacer	31	Each
451E4905	Trench Stabilization Material	50	Ton
451E5052	Trench 8' to 10' Deep	78	Ft
451E5053	Trench 10' to 12' Deep	767	Ft
451E5055	Trench 14' to 16' Deep	18	Ft
451E5116	Bore and Jack 16" Pipe	180	Ft
451E6106	Cut and Tie To Existing Water Main	5	Each
451E7010	Reconnect Sewer Service	3	Each
451E7020	Sewer Bypass Pumping	1	LS
451E7500	Locate Utilities	15	Each
451E8000	PVC Pipe Deflection Test	863	Ft
462E0100	Class M6 Concrete	34.45	CuYd
480E0100	Reinforcing Steel	7131	Lb
632E2520	Type 2 Object Marker	1	Each
634E0120	Traffic Control Miscellaneous	1	LS
671E1132	48" Manhole 8'-10' Deep	1	Each
671E1133	48" Manhole 10'-12' Deep	1	Each
671E1135	48" Manhole 14'-16' Deep	1	Each
671E2000	External Manhole Seal	6	Each
671E2008	8" Manhole Boot	8	Each
671E6007	Type A7 Manhole Frame and Lid	8	Each
671E7010	Adjust Manhole	6	Each
671E7020	Connect Into Existing Manhole	1	Each
671E8000	Reconstruct Manhole	3	Each
671E9000	Manhole Exfiltration/Vacuum Test	3	Each
671E9005	Abandon Manhole	1	Each

FOR BIDDING PURPOSES ONLY

GENERAL NOTES

UTILITY SCOPE

This project consists of the realignment of water main West of Highway 17 in Lennox, the extension of water main east across Highway 17 south of Boynton Avenue, the extension of water main east across the intersection of Highway 17 and Highway 44, the realignment of sanitary sewer west of Highway 17 and the extension of sanitary sewer east across Highway 17 south of Boynton Avenue.

SUBMITTALS

The following documents shall be submitted by the Contractor:

1. Shop Drawings
2. Sanitary Sewer Temporary Bypass Plan

DRAINAGE

Drainage is the Contractor's responsibility. Contractor shall be aware of existing drainage conditions and facilities, and shall provide for drainage during all phases of construction. Damage caused by improper temporary drainage facilities shall be repaired at the Contractor's expense and to the satisfaction of the Engineer.

UTILITIES

All utilities shall be verified by the Contractor prior to starting work. Any time existing utilities impede the progress of work, the Contractor shall immediately notify the Engineer.

All utilities, whether privately or publicly owned, shall be moved, relocated, and/or replaced as necessary, by the respective utility company or companies except as noted in the plans. These modifications shall take place in advance of construction when applicable or when advised by the Engineer. No payment shall be made to the Contractor unless specified in the contract documents.

The Contractor shall safeguard all utilities and coordinate his efforts to coincide with utility work by others in order to minimize inconvenience to the public and utility companies. When pipe utility installation crosses existing utilities, the Contractor shall be responsible for supporting the utilities in a manner that is acceptable to the owner of the utility. Any damage caused to the utilities due to Contractor carelessness shall be repaired at the Contractor's expense to the satisfaction of the utility owner.

Abandoned utilities (gas lines, telephone lines, etc.) encountered during construction shall be removed and disposed of by the Contractor. Costs associated with this work shall be incidental to the various bid items associated with work adjacent to the abandoned utility.

The Contractor shall be responsible for the coordination of all work associated with the disturbance, removal, or replacement of unidentified metallic natural gas mains or services when encountered. The Contractor shall, in advance and prior to proceeding with the work, coordinate with the City of Lennox, MidAmerican Energy Company, and all other companies related to the associated work.

Existing utility locations shown on drawings are approximate. There is no guarantee that the utilities shown include all such utilities or that the locations indicated are exact. The Contractor shall contact South Dakota One Call system, utility companies, and the City of Lennox to verify locations of all existing utilities prior to excavation.

The Contractor shall be responsible for notifying South Dakota One Call 1-800-781-7474 to have utilities field located.

The following utility companies are known to have facilities on the project:

CITY OF LENNOX
Public Works Director
Greg Stack
(602) 448-6514

CITY OF LENNOX
Sewer and Water
Jeremy Gulbranson
(651) 357-5701

CITY OF LENNOX
Streets
Dave Tipton
(605) 647-2286

MIDAMERICAN ENERGY
Distribution Specialist
Tim Forsch
(605) 373-6040

VAST
Shawn Anderson
(605) 661-1018

XCEL ENERGY
Mike Ronfeldt
(605) 339-8358

SOUTHEASTERN ELECTRIC
Tim Chance
(605) 333-2859

The Contractor shall cooperate with and coordinate his efforts to work with the utility companies and their contractors. Each bidder shall be responsible prior to bid letting, for determining the effects of utility work on the project work scope and schedule, and shall account for all such effects in his bid. No consideration will be given to the Contractor after the bid letting on account of utility work done by others.

LOCATING UTILITY

This work consists of excavating material to locate and verify the depth of an existing utility line, (Private or Public), when the utility owner cannot find said line, or utility line is not within four (4) feet either side of markings established by the utility owner. Payment for this item will be at the contract unit price per each.

After verification, the Contractor shall coordinate information with the Engineer.

WASTE DISPOSAL SITE

All material generated from this project for disposal must be disposed of at a state-permitted solid waste disposal site. Depending on what material is generated and whether it is contaminated or uncontaminated will determine which permitted facility can accept it. Permitted facilities include construction and demolition debris sites, restricted use sites, and regional landfills. The Contractor can contact SDDENR Waste Management Program at (605) 773-3153 to identify locally permitted disposal sites for various categories of contaminated and uncontaminated materials.

All costs associated with disposing of waste shall be incidental to the various contract items.

DIFFERING SUBSURFACE OR PHYSICAL CONDITIONS

The contractor shall be responsible for verifying the accuracy of the construction documents. All elevations and alignments of proposed and existing facilities as presented within the construction documents are theoretical and shall be verified in the field by the contractor. If the contractor believes that any subsurface or physical condition within the site varies from the contract documents, the engineer shall be notified immediately. The contractor shall not further disturb such condition or perform any work in connection therewith without the Engineer's approval to do so.

REGISTERED PROFESSIONAL ENGINEER
REG. NO.
Mitchell M. Mersen
SOUTH DAKOTA
12/11/15

Highway 17
Lennox, South Dakota

REVISED 12/21/2015

General Notes

DESIGNED BY: REK
DRAWN BY: MMM
CHECKED BY: MMM
REVISIONS:

ACAD FILE: GENERAL NOTES
DATE: 11/19/2015
BY: DATE:
BY: DATE:

STOCKWELL ENGINEERS
SIOUX FALLS, SD

SHEET NO.
G2

FOR BIDDING PURPOSES ONLY

TABLE OF PIPE QUANTITIES

Station	Offset (L/R)	Circular RCP 48" Cl. 3 (Ft)	Arch RCP 48" Arch Cl. 3 (Ft)
0+26.9 - 48.9' L to 0+31.7 - 109.0' L		54	
0+28.7 - 48.9' L to 1+57.4 - 10.0' L		134	
1+63.4 - 10.0' L to 5+08.7 - 10.0' L		346	
5+14.7 - 10.0' L to 8+49.6 - 10.0' L			344
	Total:	534	344

TABLE OF DROP INLETS / JUNCTION BOXES

J.B.	D.I.	STATION	OFFSET	TYPE	SIZE	RIM	TOP OF WALL	INVERT	CLASS M6 CONC. (CUYD)	REINF. STEEL (LB)	TYPE A7 F&C (EACH)	TYPE B1 F&G (EACH)	NEENAH R-1772A CASTING (EACH)
1		0+32.72	108.99'LT	6X6 JB	6'X6'	1329.14	1328.16	1323.53 (S)	5.53	1186	1		
								1323.80 (N)					
2		0+25.60	35.18'LT	6'X6' JB	6'X6'	1328.71	1327.89	1323.26 (E)	5.53	1186	1		
								1323.36 (N)					
3		1+60.41	10.00' LT	6'X6' JB	6'X6'	1331.39	1330.39	1322.76 (E)	7.24	1445	1		
								1322.86 (W)					
4		5+11.71	10.00' LT	7'X7' JB	7'X7'	1330.22	1329.30	1321.63 (E)	9.06	1808	1		
								1321.73 (W)					
5		8+52.47	10.04' LT	7'X7' JB	7'x7'	1325.64	1325.06	1320.50 (S)	7.09	1506	1		
								1320.60 (W)					
								SUBTOTAL:	34.45	7131	5	0	0

REGISTERED PROFESSIONAL ENGINEER
REG. NO. 9237
MITCHELL M. MERGEN
SOUTH DAKOTA
12/16/15

REVISED 12/15/15

279TH STREET

LENNOX, SOUTH DAKOTA

PIPE & STRUCTURE TABLES

DESIGNED BY: JRB
DRAWN BY: BAB ACAD FILE: 10214 – Storm.dwg DATE: 11/19/2015
CHECKED BY: (CHK) BY: DATE:
REVISIONS: BY: DATE:

STOCKWELL ENGINEERS
SIOUX FALLS, SD

SHEET NO.
G3

Standard Specifications for Sanitary Sewer Construction

FOR BIDDING PURPOSES ONLY

1.0 GENERAL

1.1 SCOPE OF WORK

1.1.1 The Contractor shall furnish all the necessary labor, materials, equipment, tools, and supplies that are necessary to install a complete sanitary sewer system, as shown on the plans and/or called for in the specifications or its addenda. It is the intent of the specifications to install a complete system or job.

1.2 QUALITY CONTROL AND SUBMITTALS

1.2.1 Shop Drawings: The Contractor shall submit the number of copies as required in the general conditions of the contract. The Contractor shall obtain shop drawing approval before any of the work related to that material is performed. Shop drawings and data shall be submitted for all materials to be installed under the contract. The following is a list of examples

a. Manholes, castings, pipe, pipe fittings, bedding material, stabilization material, granular material, and any other pertinent information concerning construction materials that the Engineer deems necessary for the review of the materials used on the project in accordance with the specifications and drawings.

b. Manhole shop drawings shall be submitted for each manhole and shall indicate the sections to be used with sizes and heights. A drawing showing the profile of the manhole must be submitted and shall be detailed to scale to show all segments of the manhole in a profile view.

1.2.2 O&M Manuals: Manuals of operation and maintenance shall be provided when requested by the engineer.

1.2.3 Sanitary Sewer Bypass Plan: A comprehensive Sanitary Sewer Bypass Plan shall be submitted to the engineer prior to the preconstruction meeting.

1.2.4 Retesting of work required because of nonconformance to the specified requirements shall be performed by the same independent firm on the instructions of the Engineer. Payment for retesting performed during the contract period and during the warranty period will be charged to and will be the responsibility of the Contractor.

1.3 PAYMENT

1.3.1 Payments to the Contractor shall be made in accordance with the General Conditions.

1.4 ACCEPTANCE

1.4.1 Acceptance of the work shall be in accordance with the General Conditions.

1.5 TERM OF WARRANTY

1.5.1 Warranty of the work shall be in accordance with the Standard Specifications for Warranty for Construction and the General Condtions.

1.6 REFERENCES

1.6.1 ASTM A48-83—Gray Iron Castings (Class 35).

1.6.2 ASTM A53—Standard Specification for Pipe, Steel, Black and Hot-Dipped, Zinc-Coated, Welded, and Seamless.

1.6.3 ASTM C478—Precast Reinforced Concrete Manhole Sections and Steps.

1.6.4 ASTM F679—Standard Specification for Poly (Vinyl Chloride) (PVC) Large Diameter Plastic Gravity Sewer Pipe and Fittings.

1.6.5 ASTM C923—Resilient Connectors Between Reinforced Concrete Manhole Structures and Pipes.

1.6.6 ASTM C-990—Joints for Concrete Pipe, Manholes, and Precast Box Sections Using Preformed Flexible Joint Sealants.

1.6.7 ASTM D1248—Standard Specification for Polyethylene Plastics Extrusion Materials for Wire and Cable.

1.6.8 ASTM D1784—Standard Specifications for Rigid Poly (Vinyl Chloride) (PVC) Compounds and Chlorinated Poly (Vinyl Chloride) (CPVC) Compounds.

1.6.9 ASTM D1785—Polyvinyl Chloride (PVC) Plastic Pipe, Schedules 40, 80, and 120.

1.6.10 ASTM D2241—Standard Specification for Poly (Vinyl Chloride) (PVC) Pressure Rated Pipe (SDR Series).

1.6.11 ANSI/ASTM D2321—Recommended Practice for Underground Installation of Flexible Thermoplastic Sewer Pipe.

1.6.12 ASTM D2680—Standard Specification for Acrylonitrile-Butadiene-Styrene (ABS) and Poly (Vinyl Chloride) (PVC) Composite Sewer Piping.

1.6.13 ANSI/ASTM D3034—Type PSM Polyvinyl Chloride (PVC) Sewer Pipe and Fittings.

1.6.14 ASTM D3212—Joints for Drain and Sewer Plastic Pipes Using Flexible Elastomeric Seal.

1.6.15 ANSI/AWWA C105—Polyethylene Encasement for Ductile Iron Piping for Water and Other Liquids.

1.6.16 ANSI/AWWA C111—Rubber Gasket Joints for Ductile Iron Pressure Pipe and Fittings.

1.6.17 ANSI/AWWA C151—Ductile Iron Pipe, Centrifugally Cast, for Wastewater and Other Liquids.

1.6.18 ANSI/AWWA C600—Installation of Ductile Iron Water Mains and Their Appurtenances.

1.6.19 ANSI/AWWA C905—Standard Specification for Polyvinyl Chloride (PVC) Water Transmission Pipe (Nominal Diameters 14–36 inches).

1.6.20 AASHTO M-198.

1.6.21 Federal Specifications CRD-D-572.

1.6.22 Federal Specifications SS-S-210A.

1.6.23 Federal Specifications TT-S-001657.

1.6.24 South Dakota Department of Transportation Standard Specifications for Roads and Bridges.

2.0 MATERIALS

2.1 SANITARY SEWER GRAVITY PIPE

2.1.1 POLYVINYL CHLORIDE (PVC) SEWER PIPE AND FITTINGS.

a. PVC pipe 15 inches in diameter or smaller shall meet the requirements of ASTM D 3034, Type PSM, SDR 35 minimum; PVC pipe 18 inches through 36 inches in diameter shall meet the requirements of ASTM F 679, minimum wall thickness T 1. The pipe shall be made of PVC plastic having a cell classification of 12454 B or 12454 C or 12364 C or 13364 B.

b. Wyes and service line bends installed at a depth of greater than 14 feet shall be SDR 26. All other wyes shall be SDR 35 minimum.

2.2 PIPE JOINT MATERIALS

2.2.1 POLYVINYL CHLORIDE (PVC) SEWER PIPE.

a. PVC Sewer Pipe shall have a flexible elastomeric seal (O ring or rubber sealing elastomeric gasket joint), and conform to the latest revisions of ASTM D3212. Solvent cement joints will not be allowed for pipe and fittings.

2.3 MISCELLANEOUS PIPE MATERIALS

2.3.1 PIPE COUPLINGS

a. Clamp style couplings shall be "Power Seal Model 3541" as manufactured by Power Seal Pipeline Products Corporation, Adjustable Repair Coupling with 300 series stainless steel shear ring as manufactured by Mission Rubber Company, Inc., "Strong Back RC Series Repair Coupling," as manufactured by Fernco, Inc., or approved equal shall be used on all pipe.

b. All couplings shall bear the manufacturer's identifying mark and size.

c. Reducing couplings will not be allowed.

2.3.2 CAPS / PLUGS

PVC caps and plugs shall be the gasketed or solvent welded sewer fitting type. Caps and plugs for clay pipe shall be made using nonshrink grout placed continuously for a 1-foot distance into the pipe.

2.3.3 SANITARY SEWER SERVICE WYES

a. Refer to Section 2.1 for material type. Wyes with the same main line and branch line diameter will not be allowed (example: 4x4, 6x6, 8x8, etc.).

2.4 MANHOLE MATERIALS

2.4.1 PRECAST MANHOLES.

a. Precast concrete manholes shall conform to ASTM Designation C478 with all current revisions. The inside diameter shall be 48 inches unless otherwise stated in the plans or Special Provisions. The wall thickness shall be a minimum of 5 inches with one cage reinforcing with a minimum of 0.12 square inches of reinforcement per lineal foot of wall. The upper section of the manhole shall be a special precast cone made expressly for this purpose providing a 24-inch diameter opening at the top. The cone section shall be concentric and shall not be eccentric (offset). All manholes shall be constructed without steps or ladders. Where precast concrete sections are used, the base section shall be cast with proper cutouts to accommodate the required sewer pipes.

b. All manholes that are constructed, unless otherwise specified, shall be built with the base and bottom barrel section being precasted together in one integral concrete pour. Such will provide for no joint between the base and barrel section ensuring a watertight seal. This section shall be constructed to meet the Specifications of the latest revision of ASTM C478 and the manhole details in the Standard Plates.

c. O-ring gaskets, "Tylox Super Seal" gasket as manufactured by Hamilton Kent, or continuous butyl rubber rope gasket shall be provided for constructing watertight manhole joints. The butyl rubber rope gasket shall conform to or exceed all requirements of Federal Specification SS-S-210A and AASHTO M-198.

d. Lift holes shall not extend through the manhole walls on 48-inch diameter manholes. Lift holes shall be filled with nonshrink grout. Nonshrink grout shall conform to the following requirements:

e. Premixed compound consisting of no-metallic aggregate, cement, water reducing, and plasticizing agents; capable of developing minimum compressive strength of 2,400 psi in 48 hours and 7,000 psi in 28 days. Approved manufacturers are:

REGISTERED PROFESSIONAL ENGINEER
REG. NO. 9231
Mitchell M. Mergen
SOUTH DAKOTA
12/14/15

REVISED 12/15/15

Highway 17
Lennox, South Dakota

General Notes

DESIGNED BY: BEK
DRAWN BY: MMM
CHECKED BY: MMM
ACAD FILE: GENERAL NOTES
DATE: 11/19/2015
REVISIONS: BY: DATE:
BY: DATE:

STOCKWELL ENGINEERS
SIOUX FALLS, SD

SHEET NO.
G4

1. "Supreme Grout" – by Hanson Pipe and Products
2. "Crystex" – by L & M Construction Chemicals
3. "588 Non-Metallic, Nonshrink Grout" – by W.R. Meadows
4. "Master Flow 713" – by Master Builders
5. "Songrout" – by Sonneborn
6. "Five Star Grout" – U.S. Grout Corp.
7. or approved equal.

f. On manholes where the lift holes extend through the wall sections, a lift hole plug as manufactured by Press Seal Corporation or approved equal and nonshrink grout shall be installed at each lift hole.

2.4.2 REINFORCEMENT.

a. Reinforcement bars for manholes shall be structural grade, manufactured by the open hearth process from new billets. All bars shall be deformed and Grade 60.

2.4.3 BENCH AND INVERTS.

a. All manhole bench and inverts shall be preformed at the manufacture. Hand forming of manhole bench and inverts will not be allowed on new manholes, except as approved by the City Engineer. Bench and inverts shall be polyethylene preformed invert as manufactured by Royal Environmental Systems or approved equal. Bench and inverts may also be formed by using a bench and invert forming system as manufactured by Press Seal, A-Lok or approved equal.

2.4.4 DROP MANHOLES

a. The "Reliner Inside Drop System" as manufactured by Duran, Inc. or approved equal shall be used for all drop manhole connections with an incoming pipe size of 12 inches or less. For all incoming pipes that are greater than 12 inches, which require drop manhole sections, a pipe section shall be used to construct the drop manhole section. See the Standard Plates for details.

b. Clamping brackets: The clamping brackets shall be stainless steel "Reliner" adjustable clamping brackets with stainless steel fasteners as Manufactured by Duran, Inc. or approved equal as shown in the Standard Plates.

c. Pipe and fittings: PVC

d. Couplings: Fernco rubber coupling or approved equal for the drop manhole assembly.

2.4.5 MANHOLE CASTINGS.

a. All frame and covers shall be constructed with gray iron having a tensile strength of not less than 35,000 pounds per square inch. The frame and covers shall conform to ASTM A48, Class 35B. The castings shall be heavy-duty type, designed for H20 loading conditions. The castings shall be free from cracks, blowholes, porosity, shrinkage distortion, or other imperfections. They shall be true to pattern and free from warpage. The frame and covers shall fit together in a satisfactory manner. Machined bearing surfaces shall be provided to prevent rocking and rattling. All covers shall be supplied with concealed pick holes as specified in the standard plates. All covers shall be letter marked "SANITARY SEWER."

b. All covers shall be supplied with self-sealing type "T" gaskets as manufactured by Neenah Foundry Company or approved equal. The covers shall be delivered from the manufacturer with pre-installed glued-in gaskets. The gasket shall be installed in a machined groove and be continuous around the perimeter. The gasket material shall be oil resistant Nitrile (60 DURO) glued in the groove, and have a maximum swell of 90 percent when tested in accordance with ASTM D471 using ASTM No. 3 oil. The glue shall be Lock-rite Black Max as manufactured by 3M Products.

c. Manhole frame and covers shall be installed in accordance with the standard plates or as specified. Neenah R1772A manhole frame and covers shall be installed at all manholes unless otherwise specified. Neenah R1713 manhole frame and covers shall be installed where manholes are located into concrete pavement thicker than 6 inches. Neenah R1712 bolt down type manhole frame and covers shall be installed in specified areas outside of the street ROW which are in areas without hard surfacing. Neenah R1916C bolt down type manhole frame and covers shall be installed in specified areas outside of the street ROW which are in areas with hard surfacing.

d. Covers and frames shall be dimensioned as follows:

1. Neenah R1772A as manufactured by Neenah Foundry Company or approved equal. The cover diameter = 22 3/4 inches, cover height = 1 3/4 inches, frame height = 7 inches.

e. Other frame and covers that are acceptable, but shall only be installed where specified and in specific conditions are:

1. Neenah R1713 as manufactured by Neenah Foundry or approved equal. The cover and frame shall be dimensioned as follows: 22 3/4 inches, cover height = 1 3/4 inches, frame height = 9 inches.
2. Neenah R1712 (with bolt down cover plate) as manufactured by Neenah Foundry or approved equal. The cover and frame shall be dimensioned as follows: 22 3/4 inches, cover height = 1 3/4 inches, frame height = 9 inches. See Standard Plates for bolt-down cover plate dimensions.
3. Neenah R1916C bolt down type as manufactured by Neenah Foundry or approved equal dimensions shown on Standard Plates.

2.4.6 MANHOLE ADJUSTING RINGS

a. Materials for Plastic Adjusting Rings

1. Sealant: Butyl Rubber Sealant in trowelable form shall be used. EZ-STIK #3 as manufactured by Pre-seal Gasket Corporation or approved equal. The material must meet or exceed the requirements of Federal Specification TT-S-001657, ASTM C-990 and AASHTO M-198.
2. Plastic Adjusting rings: The adjusting rings shall be injection molded HDPE as manufactured by Ladtech, Inc. or approved equal. The adjusting rings shall be manufactured from polyethylene plastic as identified in ASTM D-1248 (Standard Specification for Polyethylene Plastic Molding and Extrusion Materials). Material properties shall be tested and qualified for usage in accordance with the ASTM Test Methods referenced in ASTM D-1248. The plastic adjusting rings shall be manufactured utilizing the injection molding process as defined by SPE (Society of Plastic Engineers). The adjusting rings shall be tested to assure compliance with impact and loading requirements in accordance with the AASHTO Standard Specification for Highway Bridges. The adjusting rings shall meet and exceed the static load requirements of ASSHTO highway Bridge Specification HS-25 (21,280 lbs). The rings must withstand 1,000,000 plus full load cycles of 10 seconds or less duration. The rings must perform without failure to a minimum of 150 percent of these load values. The adjusting rings shall be sized to conform to the standard 24-inch manhole opening.

b. Materials for rubber adjusting rings

1. Sealant: Butyl Rubber Sealant in trowelable form shall be used. EZ-STIK #3 as manufactured by Pre-seal Gasket Corporation or approved equal. The material must meet or exceed the requirements of Federal Specification TT-S-001657, ASTM C-990 and AASHTO M-198.
2. Rubber Adjusting Rings: Rubber adjustment rings shall be a minimum of 80% by weight recycled rubber and a minimum of 10% by volume, recycled RFL coated fiber. Rings shall be of uniform quality, free from cracks, holes, and any other surface defects. Adjustment risers shall be designed for heavy duty street traffic, and shall meet or exceed minimum load capacity requirements of the American Association of State Highway Transportation Officials (AASHTO) and the Canadian Highway Bridge Design Code (CHBDC). The supplier shall provide load test results to that effect, upon request by the engineer.

i. Approved manufactures include Infra-Riser as manufactured by East Jordan Iron Works, Inc.

2.4.7 MANHOLE BOOTS

a. Manhole boots for connecting pipes to the manholes shall be a watertight flexible connection meeting the requirements of ASTM C923. The rubber boots shall be supplied with two stainless steel clamps for attaching the boot to the pipe. A stainless steel "power sleeve" shall be supplied for connecting the boot to the manhole. The boots shall be type PSX as manufactured by Press Seal Corporation or approved equal.

2.4.8 MANHOLE EXTERNAL FRAME SEAL

a. Manhole external frame seals shall be Infi-Sheild as manufactured by Sealing Systems Inc., Wrapid Seal as manufactured by CANUSA-CPS, Cretex or approved equal. Infi-Sheild manhole external frame seals manufactured by Sealing Systems will only be allowed in street pavement areas. The seal (for the Sealing Systems, Inc. product) shall be a continuous band made of high quality EPDM (Ethylene Propylene Diene Monomer) rubber with a minimum thickness of 60 mils. Each unit shall have a 2-inch-wide mastic strip on the top and bottom of the band. The mastic shall be nonhardening butyl rubber sealant with a minimum thickness of 3/16 inch and shall seal to the cone/top of the manhole section and over the flange of the casting.

2.4.9 MANHOLE EXTERNAL JOINT SEALS

a. Manhole external joints seals, meeting the requirements of ASTM C877 Type III, shall be used on all manhole joints unless otherwise specified. Manhole external joint seals shall be Infi-Sheild Gator Wrap as manufactured by Sealing Systems Inc., WrapidSeal as manufactured by CANUSA-CPS, or an approved equal. The external joint seal materials shall be a minimum of 12 inches wide.

Manhole external joint seals shall be considered incidental per manhole regardless of depth or number of joints.

2.4.10 MANHOLE MARKERS

a. Two types of manholes markers shall be used were indicated. Type 1 Manhole markers shall be a minimum of 3 3/4 inches wide and 78 inches in length. The markers shall be green in color. The markers shall be ultraviolet resistant and stable in all weather conditions. The markers shall be Composite Composition Utility Markers as manufactured by Carsonite International or approved equal. The markers shall be labeled "CAUTION SANITARY SEWER PIPELINE / MANHOLE CALL BEFORE DIGGING."

REGISTERED PROFESSIONAL ENGINEER
REG. NO. 11023
Mitchell M. Mersen
SOUTH DAKOTA
12/14/15

FOR BIDDING PURPOSES ONLY

REVISED 12/15/15

Highway 17
Lennox, South Dakota

General Notes

DESIGNED BY: REK
DRAWN BY: MMM
CHECKED BY: MMM
REVISIONS:
ACAD FILE: GENERAL NOTES
DATE: 11/19/2015
BY: DATE:
BY: DATE:

STOCKWELL ENGINEERS
SIOUX FALLS, SD

SHEET NO.
G5

b. Type 2 manhole markers shall be in accordance with the SDDOT standard specifications and the standard plates. Type 2 manhole markers shall be used in all interstate and highway ditch right-of-way areas and where specified. Type 1 manhole markers shall be used in all other installations.

2.4.11 MANHOLE CONSTRUCTION PLATE MARKER

a. Manhole construction plate markers shall be constructed in accordance with the Standard Plates detail. The manhole construction plate marker shall be constructed using "Flex-Guide 300 Series" delineator post and base as manufactured by Davidson Traffic Control Products or approved equal.

2.5 BEDDING MATERIAL

2.5.1 Bedding material shall meet the requirements of detail 950.01.

2.6 TRENCH STABILIZATION MATERIAL

2.6.1 The trench stabilization for all sanitary sewer trenches where necessary shall be ¾ inch to 4 inches crushed angular, well graded material. Larger material may be used if necessary and required to stabilize the bottom of the trench.

2.7 GEOTEXTILE FABRIC

2.7.1 Geotextile fabric shall be as specified in the Special Provisions.

2.8 SANITARY SEWER SERVICE LINES

2.8.1 GENERAL

a. Pipe shall meet the requirements of main line pipe.

2.8.2 REDUCERS

a. Where reducers are necessary and approved for connections to existing service lines, reducers shall be eccentric type manufactured of approved pipe material. Coupling connections shall not be made to the reducers and reducing couplings will not be allowed. Reducer will only be allowed for special situations as determined necessary by the City Engineer.

3.0 CONSTRUCTION REQUIREMENTS

3.1 ALIGNMENT AND GRADE

3.1.1 The Engineer will furnish all the necessary line and grade stakes, benchmarks, or other necessary control. It is the responsibility of the Contractor to protect these stakes, and any replacement of stakes shall be at the expense of the Contractor. The Contractor shall carry line and grade into the trench by means of an approved laser beam system and by a surveying level instrument. At no time shall the Contractor change the grade without approval of the Engineer. If underground interference is encountered at the assigned grade, the Contractor shall notify the Engineer and wait until the revised grade for the sewer has been determined, if necessary. As a secondary check to the laser beam device, the Contractor shall check the grade from the grade stake to pipe invert a minimum of every 100 feet using a surveying level instrument.

3.2 UNDERGROUND INTERFERENCE

3.2.1 The location of underground public or private utilities may be shown on the plans, as reported by the various utility companies and the City, but this does not relieve the Contractor of the responsibility of determining the accuracy or completeness of said locations. The Contractor shall determine the location of all underground ducts, conduits, pipes, cables, or structures which will be affected by the work, and shall take steps necessary to support and protect said structures by any means suitable to the owners of the structure involved and the Engineer. When necessary, the Contractor shall conduct operations as to permit access to the work site and provide time for utility work to be accomplished during the progress of the work.

3.2.2 Portions of utilities which are found to interfere with the line and grade of the sewer will be relocated, altered, or reconstructed by the owners, or the Engineer may order changes in the work to avoid interference. Such changes will be considered to be extra work and will be paid for through a change order. When the plans or specifications provide for the Contractor to alter, relocate, or reconstruct a utility, all costs for such work shall be included in the bid for the items of work necessitating such work unless a separate bid item is provided. Temporary or permanent relocation or alteration of utilities requested by the Contractor for the Contractor's convenience shall be the Contractor's responsibility, and the Contractor shall make all arrangements and bear all costs. In those instances where utility relocation or reconstruction is impractical, the Engineer may order a deviation from line and grade.

FOR BIDDING PURPOSES ONLY

3.2.3 The Contractor shall be responsible for notifying the various utility companies if the Contractor's work will expose, affect, or endanger any existing utility. All cost of investigation and any necessary protection, support, removal, or relocation of said structures shall be included in the contract bid price for installing pipe or manholes. The Contractor shall not begin construction until all utility companies have been contacted and their respective underground utilities have been located and marked.

3.2.4 The bid item "Locating Utilities" will be used to locate sanitary sewer service. This work consists of excavating material to locate and verify the depth of an existing utility line, (Private or Public), when the utility owner cannot find said line, or utility line is not within four (4) feet either side of markings established by the utility owner. Payment for this item will be at the contract unit price per each. . All costs of other exploratory investigation/excavation necessary for determining the location and depth of utilities shall be considered incidental to locate utilities.

3.2.5 After verification, the Contractor shall coordinate information with the Engineer.

3.3 EXCAVATION AND TRENCHING

3.3.1 GENERAL

a. Excavation shall be classed as either earth or rock excavation. Rock excavation shall consist of solid rock lying in its natural bed which requires fracturing for its removal and boulders of 1 yard or more in volume. All other material shall be classed as earth excavation.

3.3.2 EARTH EXCAVATION

a. All sewers shall be built in open cut, except that where conditions warrant, the Engineer may permit the use of short tunnels.

b. The Contractor may use any means he desires to excavate to the proper depth and width necessary for the construction of the sewer according to the plans and specifications. The width of the trench at the top of the pipe shall be a minimum of 6 to 9 inches on each side of the pipe. Trenches shall be excavated with vertical sides from pipe flowline to a point 1 foot above top of pipe where possible.

3.3.3 SHEETING AND BRACING

a. If City, state, or federal regulations dictate the necessity of sheeting, bracing, or pulling a trench box or shield, the cost of such sheeting, unless a special price is called for in the contract proposal form, shall be included in the contract bid price for installing pipe.

3.3.4 EXCAVATION BELOW PIPE GRADE

a. Trench excavation below pipe grade shall be backfilled with bedding material approved by the Engineer and thoroughly tamped to provide a uniform and continuous bearing and support for the pipe.

3.3.5 EXCAVATION IN UNSTABLE OR UNSUITABLE SOIL

a. The Contractor shall notify the Engineer when material considered unstable for the pipe foundation is encountered and where additional support, stabilization, and undercutting of the pipe trench are necessary. If the Contractor cannot assure a product in accordance with the specifications, the Contractor may request the use of trench stabilization material and/or geotextile fabric where the trench base is not structurally adequate or otherwise unstable to provide a uniform stable pipe foundation and requires additional undercutting for placement of trench stabilization material and/or geotextile fabric.

b. The undercutting and use of trench stabilization material and/or geotextile fabric shall only be approved for use in extreme conditions where it is obviously necessary. Approval for the limits of the payment lines for use of trench stabilization material and geotextile fabric must be obtained from the Engineer, prior to installation. If trench stabilization material and/or geotextile fabric is necessary to stabilize the trench foundation, they shall be installed by the Contractor at the unit bid prices for those respective items.

c. If geotextile fabric is used, it should be placed on the neutral soils and extended up the trench sidewalls to a level of at least the mid-point of the pipe. Placement of the fabric should then be followed by placement of the stabilization material.

d. The Contractor will be fully responsible for constructing the sanitary sewer on a stable base and any defects resulting from improperly preparing the pipe foundation shall be the Contractor's responsibility.

e. The Contractor will be required to furnish weigh tickets for trench stabilization material on a daily basis.

f. Pipe bedding material will always be required in addition to trench stabilization material where trench stabilization material is used.

3.3.6 ROCK EXCAVATION

a. All rock excavation shall be under one classification. It shall include solid ledge rock in its natural location that requires systematic quarrying, drilling, and/or blasting for its removal and also boulders that exceed 1 cubic yard in volume.

b. When rock is encountered in the trench, it shall be stripped of earth and the Engineer shall be notified by the Contractor and given ample time to make a profile before removal operation begins.

c. Procedures for rock removal operations shall be subject to the approval of the Engineer. The use of explosives shall be limited to the magnitude of the charge that will not cause damage to the adjoining property through shock vibrations or other stress loadings. Also, the Contractor shall provide adequate blanket protection to assure that there will not be fragments of rock or other debris flying through the air when discharging explosives. The Contractor shall employ personnel certified to execute blasting operations.

d. The entire rock removal operations shall be the responsibility of the Contractor, and the Contractor shall pay for any damages caused by the rock removal operations. Adequate insurance protection, in addition to the standard liability insurance required, shall be purchased by the Contractor for payment of any damages that may be caused by the use of explosives.

e. The Contractor shall notify the City one week prior to rock removal on any project so the City can televise any sanitary sewer lines in the area that might be disturbed. Once all rock removal is complete, the Contractor shall notify the City so the City can re-televise the line.

f. Explosive permits must be obtained from the Fire Department as per City ordinance.

3.3.7 DEWATERING

a. Pipe jointing shall be accomplished in a relatively dry trench condition. Joints shall not be connected under water. If ground water is encountered, the Contractor shall dewater the trench with suitable pumps and equipment. Lowering of the groundwater level shall be by means of wells, well points, or other suitable means.

b. Water resulting from the dewatering operation shall be disposed of in a manner approved by the Engineer and South Dakota Department of Environment and Natural Resources. It shall not be

REGISTERED PROFESSIONAL ENGINEER
REG. NO. 19237
Mitchell M. Meyer
SOUTH DAKOTA
12/14/15

REVISED 12/15/15

Highway 17
Lennox, South Dakota

General Notes

DESIGNED BY: REK
DRAWN BY: MMM
CHECKED BY: MMM
REVISIONS:

ACAD FILE: GENERAL NOTES
DATE: 11/19/2015
BY: DATE:
BY: DATE:

STOCKWELL ENGINEERS
SIOUX FALLS, SD

SHEET NO.
G6

FOR BIDDING PURPOSES ONLY

pumped onto private property without the property owner's approval. Any damage to property, either public or private, shall be rectified to the satisfaction of the owner and the City. All applicable permits must be obtained by the Contractor before the dewatering operation begins.

c. The water discharged from the dewatering operations shall not be allowed to wash through any excavated material. The Contractor shall be responsible for any damages that might result from this operation.

3.3.8 SANITARY SEWER TEMPORARY BYPASS

a. The Contractor shall be responsible for continuity of sanitary sewer service to each facility connected to the affected section(s) of sewer main and shall also bypass the main sewer flow around the pipe being replaced, or into adjacent sanitary sewers. No sewage will be allowed outside of the sanitary sewer collection system (sewage will not be allowed to be discharged onto the ground). The Contractor shall be responsible for the design, installation, and operation of the temporary bypass system. The temporary bypasses, automated or otherwise, shall be of adequate capacity and size to handle all flows without sewage backup into property. The Contractor shall be solely responsible for cleanup, repair, property damage costs, and claims resulting from failure of the bypass system.

b. The Contractor shall (as an incidental part of the project) contact all property residents (that are at the property at the time of construction/service interruption) along any sanitary sewer project where the property residents have the potential to discharge sanitary sewer into the construction area due to an open service line in the trench or other means. The Contractor shall inform the residents not to discharge sanitary sewer during the time(s) when the resident's sewer service is not connected to the city's sanitary sewer system. The Contractor shall inform the resident of the estimated time that the service will not be functional and inform them immediately (by door hanger if not home) when their service can be used.

c. The contractor shall coordinate with the city to install door hangers on each affected property residents door. The door hanger shall indicate the time of when the property will not be allowed to discharge sewage to the sanitary sewer system and a phone number for answering questions.

d. The Contractor shall submit a detailed temporary bypass plan in writing to the Engineer for approval before or at the preconstruction meeting. The Contractor shall also provide the Engineer a detailed drawing showing the location of temporary bypasses for each line segment(s) around which flows are being bypassed.

e. The Contractor shall submit the specifications for all pumping equipment to the Engineer for approval when requested. The submittal shall include the following information:

1. The size (pumps and piping), quantity, capacity, and location of all pumping equipment.
2. The pump manufacturer's pump performance curves.
3. A list of all backup pumping equipment to be held in reserve on the job site shall also be submitted.

f. The pumps and bypass lines shall be of adequate capacity and size to handle all flows. The Contractor shall demonstrate that the pumping system is in good working order and is sufficiently sized to successfully handle flows by performing a test run prior to beginning the work. The Contractor shall cease temporary bypassing operations and return flows to the new and/or existing sewer when directed by the Engineer. All temporary bypass pumping operations shall be manned continuously during operation.

g. All pumps used for bypassing shall be fully automatic self-priming units that do not require the use of foot valves in the priming system. All pumps used must be constructed to allow dry running for extended periods of time to accommodate the cyclical discharge of wastewater flows.

h. Manholes that are used for the pump suction and discharge points shall be adequately protected to prevent storm water from entering the manholes.

3.3.9 INSTALLATION OF PIPE

a. Sewer pipe shall not be installed in frozen ground or in water, and no water will be allowed to run into or through the pipe.

b. Pipe shall be carefully installed to line and grade in accordance with line and grade stakes set by the Engineer so that the finished sewer will present a uniform bore. Any noticeable variations from true alignment or grade will be cause for rejection of the work.

c. All pipe shall be installed upgrade with spigot ends pointing in the direction of flow. The bottom of the trench shall be freed of all rocks and stones and shall be hand shaped and bedded with bedding material as hereafter specified, and the pipe shall be in firm contact with the bedding material for its entire length. At each joint of bell and spigot pipe, a hole shall be dug of sufficient size so that the weight of the pipe will rest on the barrel of the pipe and not on the bells, and the bell hole shall not be compacted. All pipe must be properly fitted together. A suitable stopper shall be kept in the end of the pipe so as to prevent any dirt or water from entering during the progress of the work at all times. Any dirt, loose material, or cement mortar which may accumulate in the pipe shall be removed as the work progresses. The backfilling around and to a depth of 1 foot over the pipe shall be completed and thoroughly hand tamped as the pipe installation progresses as hereafter specified in bedding and backfill requirements. Whenever pipe is installed in rock trenches it shall be bedded to at least a 4-inch depth, and then shall be covered to a depth of at least 1 foot with bedding material or granular material.

d. Standard length pipe shall be utilized for all installations. Shorter lengths will only be allowed for use at manhole terminations and service line tie-ins to service connections. A full standard length pipe shall be used upstream of all manholes.

3.4 SANITARY SEWER PIPE JOINTS

3.4.1 JOINTS IN PVC SANITARY SEWER PIPE

a. All pipe, fittings, and joints shall be installed in full compliance with the recommended practices of the pipe manufacturer and as specified in the latest revision of ASTM D2321. The joint surfaces (external and internal) shall be wiped free of all foreign materials, and the spigot end shall be centered on grade into the bell end and the joint shall be properly seated in accordance with the manufacturer's recommendations. Any pipe that is field cut shall have a square end with beveled edge equal to a factory cut and all field repairs shall be performed per manufacturer's recommendations.

3.5 MANHOLES

3.5.1 GENERAL

a. All manholes are to be built to the dimensions shown in the plans, special information, detail plates, or cut sheets furnished by the Engineer. All manhole sections shall be numbered and/or measured by the Contractor prior to installation to assure that the finished manhole will be to the grade specified on the grade sheet as there may be variations between plan sheet depths and the final depths shown on the grade sheet.

b. Construction of all cast-in-place manholes shall conform to the South Dakota Department of Transportation "Standard Specifications for Roads and Bridges" and Standard Plates, unless otherwise indicated.

3.5.2 BASE AND SECTIONS

a. Precast sections shall be connected together using a specified gasket material and shall be in place on all manhole joints to assure watertight joints. All lift holes on the interior and exterior of the manhole sections shall be filled with nonshrink grout. Where installation of lift hole plugs is required, they shall be installed into the center of the manhole wall. The area on either side of the lift hole plug shall be filled with nonshrink grout.

b. All manholes shall be constructed of precast base, barrel, and cone sections. The joints between sections shall be of watertight construction utilizing a specified gasket material.

c. Manholes shall not be constructed at the manufacturer or in the field with piping installed in the manhole boots prior to setting the manhole in the trench. This type of installation will be cause for rejection of the work.

3.5.3 BENCH AND INVERT

a. All inverts shall be formed to the diameter of the incoming and outgoing pipe diameter up to the pipe centerline and vertical beyond that point. The invert shall be formed to a depth of one-half to two-thirds the pipe diameter. The forming of the bench and invert shall allow for a sewer television camera with skids to be installed in the invert and into any pipe connection into the manhole. Where lateral connections are required into the manhole, a gradual change in the direction of the manhole invert for each lateral shall be formed. Sharp angles without gradual changes in direction will not be allowed. Flat bottomed manholes will not be allowed. Such work will be cause for rejection of the work. The City Standard Plates for the manhole bench and invert construction illustrates the construction for a typical manhole.

b. Where hand formed and reconstructed manhole bench and inverts are determined necessary by the Engineer, they shall be constructed with concrete. The manhole invert shall be shaped and finished in a glass smooth-like finish (a steel trowel will give this finish). The bench shall have a broomed finish.

3.5.4 ADJUST MANHOLE

a. There shall be at least one 2-inch adjusting ring, and a maximum of 14 inches of adjustment used on each manhole. Unless otherwise specified, the manhole cover shall be set approximately 6 inches below the finished street elevation by the sewer contractor to be raised to finished grade elevation by the contractor prior to paving.

b. Plastic adjusting rings shall be installed as recommended by the manufacturer. No shims or other leveling devices, other than leveling rings provided by the manufacturer, will be permitted with use of the plastic adjusting rings. The annular space between the adjusting rings shall be sealed using an approved butyl rubber sealant. The first plastic adjusting ring on existing manholes may require leveling with concrete mortar, and therefore the first plastic ring may be set in mortar.

c. Concrete adjusting rings shall not be allowed.

3.5.5 MANHOLE EXTERNAL FRAME SEAL

a. Manhole external frame seals shall be used on all new concrete surfacing street projects and on existing concrete surfacing street projects where the manholes are adjusted to the corbel section. Manhole external frame seals shall also be required for all manholes located outside of the street ROW area, in unpaved areas, and where specified. The manhole external frame seal shall extend onto the casting and the cone section a minimum of 2 inches. Manhole external frame seals shall be installed in accordance with the manufacturer's recommendations.

REGISTERED PROFESSIONAL ENGINEER
REG. NO. 9237
Mitchell M. Mersen
SOUTH DAKOTA
12/15/15

REVISED 12/15/15

Highway 17
Lennox, South Dakota

General Notes

DESIGNED BY: BEK
DRAWN BY: MMM
CHECKED BY: MMM
REVISIONS:

ACAD FILE: GENERAL NOTES
DATE: 11/19/2015
BY: DATE:
BY: DATE:
BY:

STOCKWELL ENGINEERS
SIOUX FALLS, SD

SHEET NO.
G7

FOR BIDDING PURPOSES ONLY

3.5.6 DROP MANHOLES

a. Drop manholes will be permitted only when approved or specified by the Engineer. Where changes in elevation within the manhole are not sufficient for a drop section, the manhole invert shall be filleted so that a smooth channel is formed from the end of the drop pipe throughout the length of the drop. Connections to a drop manhole will require ASTM D2241 Class 200 psi pipe to be laid through the excavation area.

b. The drop manhole shall be constructed in accordance with the manufacturer recommendations and as shown on the Standard Plates. A V-notch shall be cut into the flow line of the incoming pipe end. The V-notch is to provide improved flow control.

3.5.7 FRAME AND COVER

a. Manhole frame and covers shall be installed in accordance with the Standard Plates or as specified.

b. Manhole frames that are installed onto plastic adjusting rings shall be installed using the manufacturer's recommended sealant between the frame and adjusting rings to form a watertight seal.

c. Manhole frames shall be set on a butyl rubber sealant where the manhole is located in an unpaved area.

d. Bolt-down type manhole frames and covers shall be installed on the corbel section without adjusting rings and bolted to the corbel section as shown in the Standard Plates to form a watertight seal, unless otherwise indicated.

e. Manhole frames offset by more than 2 inches from the adjusting rings or corbel section will be rejected.

f. Manhole frames and covers shall be set to the grade specified on the grade sheet and plans.

g. Manhole frame and covers in permanent gravel surfaced streets shall be vertically installed so that the manhole rim is set 6 to 8 inches below the finished street grade.

3.5.8 MANHOLE MARKERS

a. Manhole markers shall be installed for all manholes outside of the street ROW that are not in paved areas unless otherwise indicated. Manhole markers shall be installed as detailed on the Standard Plates.

3.5.9 MANHOLE RECONSTRUCTION

a. Any manhole that cannot be adjusted within the 14-inch height limit of the bid item for adjusting manholes shall be reconstructed. When an existing manhole is lower than the proposed finished grade elevation, the manhole shall be required to be reconstructed by:

b. Removal of the cone section and adding the appropriate height of barrel section(s) to increase the manhole height to a level that the manhole can be adjusted using the appropriate height of adjusting rings.

c. When an existing manhole is higher than the proposed finished grade elevation, the manhole shall be required to be reconstructed by:

d. Removal of the cone and barrel section(s) and installing the appropriate height of barrel section to decrease the manhole height to a level that the manhole can be adjusted using the appropriate height of adjusting rings.

3.5.10 MANHOLE CONSTRUCTION PLATE MARKER

a. The manhole construction plate markers shall be used on all projects or where designated. Manhole construction plate markers will be required on development projects where designated by the City. Manhole construction plate markers shall be installed on existing manholes immediately after construction surfacing removals have been completed and on new manholes immediately after installation. The markers, on asphalt streets, shall remain on the manhole until after the first lift of asphalt is installed (with exception to when any internal manhole construction work may need to be performed). The markers on concrete streets shall remain on the manhole until concrete paving occurs. The Contractor shall ensure that all manholes are secured, protected, and watertight at the end of each work day. Under no circumstances shall an uncompleted or completed manhole be left uncovered, unprotected, or not watertight overnight.

3.6 CONNECTIONS TO EXISTING SANITARY SEWER PIPES

3.6.1 Pipe couplings shall be used where it is necessary to connect two spigot ends of the same diameter pipe together and where bell and spigot connections are not possible.

3.7 STUBS AND FUTURES FROM MANHOLES FOR FUTURE EXTENSIONS

a. Futures from manholes shall be defined as piping and plugs that extend longer than one standard 13-foot section of pipe. Stubs from manholes shall be defined as piping and plugs/caps that extend less than a 5-foot section of pipe. Stubs and futures from a manhole shall be installed to the grade staked and/or specified. Futures shall be plugged with a suitable watertight plug at a bell end section of pipe.

b. Stubs can be plugged at the bell end section of pipe or capped on a plain end section of pipe. Connecting onto stubs will not be allowed. Stubs must be removed from the existing manhole when connections to the manhole are installed and a full section of pipe must be installed. Stubs shall not extend more than 5 feet and no less than 3 feet in length from the manhole unless otherwise specified.

3.8 SERVICE CONNECTIONS

3.8.1 In all new sanitary sewer mains, prefabricated wyes shall be installed at all service stubout locations and sealed with an approved watertight cap or plug. Wyes with the same branch pipe diameter as the main line sewer will not be permitted.

3.8.2 Approximate locations of the existing sanitary sewer services are shown on the plans. Actual locations will be determined by the Contractor during construction. The approximate locations of existing service wyes and /or taps are shown in the drawings included in this bid package. Some of the wyes and /or taps may be "inactive" or may have never been used. It shall be the responsibility of the Contractor to determine, as the sewer installation progresses, which services are active and need to be reconnected. Some of the wye and tap service connections will require the Contractor to perform a dye test to determine which buildings are connected. The contractor shall contact the Engineer to assist with working with property owners, dye testing and other methods necessary to investigate which services need to be reconnected. Locating the sewer service and dye testing the service shall be included in the unit price bid per each for "Reconnect Sewer Service".

3.8.3 Any future taps on the existing main shall be coordinated with the City of Lennox. Taps on existing pipes shall be made by removing a section of main line and installing a prefabricated wye. Non-shear couplings shall be installed as necessary to reconstruct the main line. Taps or saddles such as inserta-tees will not be allowed.

3.9 BEDDING, BACKFILL, AND COMPACTION

3.9.1 GENERAL

a. Installation of PVC pipe, including bedding and backfill of the pipe, shall conform to the latest revision of ASTM D2321 "Standard Recommended Practice for Underground Installation of Flexible Thermoplastic Sewer Pipe," and the specifications and Standard Plates of the City.

b. All bedding and backfill areas shall be subject to compaction testing by nuclear or standard methods according to the latest applicable ASTM Specifications. In addition to the construction and testing procedures outlined in other sections of the specifications, the Contractor shall be required to install the pipe in such a manner so that the diametric deflection of the pipe shall not exceed 5 percent (see pipe testing section) and the materials surrounding the pipe shall be compacted to the required Standard Proctor Densities outlined in D2321. The areas requiring compaction shall include the bedding, initial backfill, and final backfill areas, as defined in the following sections. The Engineer may take random compaction tests of the material. If any of these tests indicate that the material has not been compacted to the required density, the Contractor shall recompact said material at no additional cost to the Owner, and the Engineer shall then have the right to take additional compaction tests to assure that this or other material is compacted to the proper density without any additional cost to the Owner.

c. The contractor shall notify the City's Engineer to coordinate density tests as needed. The city will contract testing with a certified testing agency. Tests that pass will be paid for by the city. Any failing tests will be paid by the contractor. In the case of a failed test, the contractor shall recompact the area to be retested.

d. Material for all areas of backfilling is to be free of rock, frozen materials, and hard clay. Care shall be taken in placing backfill over the crown of the pipe to avoid damage to the pipe.

3.9.2 BEDDING OF PIPE

a. The trench base shall be undercut a minimum of 4 inches or one-fourth of the outside diameter of the pipe barrel (whichever is larger) below the grade line of the pipe and uniformly backfilled with bedding material to the grade-line of pipe. After the pipe has been installed on top of the first layer of bedding material, the haunching area shall be backfilled with bedding material up to the "spring-line" (halfway) on the pipe (bedding material shall be used to the top of the pipe for all pipes with a diameter of 12 inches or less). The bedding material shall be "shovel-sliced" or hand tamped around and under the haunches of the pipe to assure adequate and uniform support along the bottom of the pipe. Care shall be taken to prevent dislodging and misalignment of the pipe and to provide adequate bell hole for the pipe.

b. All sewer service lines shall be installed with bedding material from 2 inches below the pipe to the top of the pipe.

c. When the foundation material is not suitable to provide a uniform base for the pipe, the trench shall be undercut to sufficient depth to build an acceptable base. Such areas shall be backfilled with trench stabilization and/or geotextile fabric material to build a uniform foundation. The trench stabilization material shall be brought up to the bottom of the bedding material specified for the pipe and the bedding material shall be used up to the spring line (bedding material shall be used to the top of the pipe for all pipes with a diameter of 12 inches or less).

3.9.3 INITIAL BACKFILLING OF PIPE TRENCH

a. All sewer pipe installed in an open trench shall be initial backfilled to at least 12 inches above the top of the pipe. The initial backfill shall be placed evenly so as not to disturb the grade or line of the pipe. Above the bedding area the pipe shall be backfilled with acceptable native material (Class I, II, and III as described in ASTM D2321), approved by the Engineer, or with granular material to a minimum of 90 percent Standard Proctor Density to 12 inches above the top of the pipe.

b. Where no suitable backfill material is available, the initial backfilling shall be constructed with granular material.

3.9.4 FINAL BACKFILLING OF TRENCH TO GRADE

a. All final backfill material shall consist of approved excavation material, granular material, or as otherwise specified. Sand may be used if approved by the Engineer. The final backfill shall be placed in layers and compacted by suitable and approved compaction methods in a manner approved by the Engineer to at least 95 percent Standard Proctor

REGISTERED PROFESSIONAL ENGINEER
REG. NO. 19234
Mitchell M. Morgan
SOUTH DAKOTA
12/14/15

Highway 17
Lennox, South Dakota

REVISED 12/15/15

General Notes
DESIGNED BY: REK
DRAWN BY: MMM
CHECKED BY: MMM
ACAD FILE: GENERAL NOTES
DATE: 11/19/2015
REVISIONS: BY: DATE: BY: DATE:

STOCKWELL ENGINEERS
SIOUX FALLS, SD

SHEET NO.
G8

FOR BIDDING PURPOSES ONLY

Density, or as otherwise specified.

b. Excess material not required for final backfilling shall be removed by the Contractor or otherwise disposed of as ordered by the Engineer.

c. If the material encountered in the trench excavations is unsuitable to be used as final backfill material, it shall be replaced with other suitable material available at the project site or with granular material, as approved by the Engineer. In final backfill areas below pavement, the Engineer may direct the Contractor to use native material a specified distance below the pavement elevation to ensure a consistent material is utilized under the pavement section.

d. At least 36 inches of cover shall be placed over the top of the pipe before the trench is wheel-loaded, and 48 inches of cover shall be placed over the top of the pipe before the trench is hydro-hammered for compaction.

3.10 REMOVAL AND ABANDONING SEWER PIPE AND MANHOLES

3.10.1 REMOVAL OF PIPE AND MANHOLES

a. This work shall consist of removal and disposal of pipe and manholes which are not designated or permitted to remain and which are not removed and disposed of under other items in the contract. Removals shall be in accordance with the Standard Specifications. Manholes that are to be removed shall be entirely removed and disposed of unless otherwise indicated.

3.10.2 ABANDONING OF PIPE AND MANHOLES

a. Abandon sanitary sewer pipe that is to remain in-place shall be filled with K-crete on both ends. Manholes that are to be abandon in-place shall be abandon by removing the top 3 feet below finish grade elevation, seal off any incoming piping with K-crete, install a 2-inch minimum diameter hole in the base section of the manhole, and fill the manhole with sand.

3.11 PIPE INSULATION

3.11.1 Pipe insulation shall be required on all sanitary sewer pipe installations where the cover depth to finished grade elevation is 5 feet or less above the pipe. The insulation work shall be in accordance with the Special Provisions, drawings, and manufacturer's recommendations.

3.12 SANITARY SEWER SERVICES

3.12.1 GENERAL

a. Glued connections will only be allowed at the connection between the SDR 35 and the Schedule 40 PVC pipe at the building. 45-degree bends shall not be located closer than 3 feet from each other.

3.12.2 CLEANOUTS

a. Cleanouts shall be used only on service lines in approved locations. Cleanouts used for service lines shall be covered at finished grade with a Neenah R1976 frame and cover except for cleanouts located adjacent (within 5 feet) to the structure it services. The cleanout shall be constructed as shown on the Standard Plates.

b. Cleanouts must be located within 5 feet of all commercial buildings. At least one cleanout shall be provided for all commercial buildings. The size of the cleanout piping shall be in accordance with the South Dakota Utility Contractor Handbook.

3.12.3 COUPLINGS

a. Couplings, on new construction, will not be allowed unless the building sewer stubout exists before the service from the property line to the building is installed. If couplings are determined to be necessary, only one coupling for each service line will be allowed on new construction.

3.12.4 COMMON TRENCH FOR SERVICE LINES

a. All sewer service lines within public street right of way shall be installed at least 10 feet horizontally from any existing or proposed water service line. Any variation to this requirement is subject to the approval of the City Engineer. On private property, a sewer service line may be laid in the same trench with a water service line. In such a case, the elevation of the crown of the sewer service line shall be at least 12 inches below the invert of the water service line. The water service will be allowed to be benched or additional pipe bedding material may be used to create the separation between water and sanitary sewer services. The sewer service line and water service line shall not have less than 1-foot horizontal distance between the piping.

b. Whenever sewer service lines must cross under water service lines, the sewer service line shall be laid at such an elevation that the crown of the sewer service line is at least 12 inches below the invert of the water service line.

3.12.5 RECONNECT SEWER SERVICE

a. Connections to existing sewer services shall be completed by installing a non-shear coupling at the point of connection.

3.12.6 CAPS AND PLUGS

a. Existing clay service lines that are to be abandoned shall be capped with nonshrink grout placed continuously for a 1-foot distance into the pipe.

b. New PVC service lines that are to be plugged shall be plugged at a bell end section of pipe.

3.13 INSPECTION AND TESTING

3.13.1 GENERAL

a. The Engineer shall have access at all times to all parts of the job, and the Contractor must furnish such personnel, facilities, equipment, tools, and materials as are necessary to make whatever tests and inspection that are deemed necessary.

3.13.2 PIPE MATERIAL TESTING

a. The Engineer may require a test of specimens not to exceed 5 percent of the quantity of pipe to be furnished in order to prove the acceptability of the pipe. The manufacturer shall provide an approved testing stand near the site of the plant.

3.13.3 PIPE INSPECTION

a. Prior to being lowered into the trench, each pipe shall be carefully inspected by the Contractor and those not meeting the specified requirements shall be removed from the site immediately. Rejections may be made for any of the reasons as stated in the specifications for each specific type of pipe. Pipe having minor flaws not serious enough to cause rejection shall be installed so as to bring such flaws in the top half of the sewer. Pipe shall be protected during handling against impact, shocks, and free fall.

b. The engineer shall inspect all mainline and service fittings once constructed in place and prior to backfilling operations. Fittings shall remain exposed for the engineer to visually inspect and record data for as-built plans. The Contractor shall notify the engineer when they are ready for an inspection.

3.13.4 TELEVISION INSPECTION

a. The Contractor will perform an inspection of the completed sewer line prior to acceptance through the use of a television camera. The expense of the initial television will be borne entirely by the Contractor. If defective workmanship of material or construction is noted, the deficiency shall be corrected by the Contractor at no expense to the City. The Contractor will perform additional television inspections to review if the repairs were made properly and in accordance with the specifications. The expense of any additional television inspections will be borne entirely by the Contractor. The Contractor will be responsible for providing all television inspection reports to the Engineer.

3.13.5 CLEANING

a. The Contractor shall be responsible for all work necessary to make the sewer acceptable for usage including removal of all mud, silt, rocks, or blockages that might hinder the flow and make said sewer unacceptable for final acceptance and usage. Also included is all work necessary in the manholes and all cleanup work required prior to final acceptance.

b. The City will not be responsible for cleaning lines prior to televising the sewer. In the event that the line is not acceptable for televising, due to the Contractor's operations, the Contractor will be notified. It will be the Contractor's responsibility to make arrangements to clean the sewer and make it acceptable for the television work.

3.13.6 BACKFILL DENSITY TEST

a. The Contractor shall expose the compacted soil layers, as required by the Engineer, to enable the Engineer to perform density tests. The cost of exposing the soil layers for testing shall be incidental to the pipe and/or manhole installation.

b. A minimum of one density test and moisture content shall be made for every 500 lineal feet of trench per four (4) feet of depth. A minimum of one (1) standard density and optimum moisture determination shall be made for the project and one (1) additional test for each change in backfill.

3.13.7 PIPE AND MANHOLE LEAKAGE FIELD TESTING—GENERAL

a. All manholes and piping shall be tested and inspected for leakage by the Contractor. Exfiltration testing with water will only be allowed where specifically specified.

b. After each section of sanitary sewer between manholes has been completely installed and backfilled, the line and manholes shall be inspected by the Contractor for leakage. All visual leakage at individual joints or other parts of the sewer and/or leakage in excess of that specified shall be repaired by the Contractor at the Contractor's expense before the sewer is accepted. The repair of leaks may require the removal and replacement of manhole sections and pipe sections. The gasket shall be the sole element depended upon to make the joint leak proof. The use of grout to repair leaks will not be allowed. The actual method of correction shall be approved by the Engineer prior to performing the repair.

c. When existing sanitary sewers which have service connections are being reconstructed or replaced (example: street reconstruction projects), the leakage test requirements may be waived or other testing methods substituted, subject to the approval of the City Engineer.

d. The Contractor shall notify the Engineer 24 hours prior to performing the test to enable the Engineer to be present during the testing operations. All data will be recorded and evaluated by the Engineer. All lined manholes and pipe shall be tested prior to welding the joints.

3.13.8 MANHOLE VACUUM TEST

a. The manhole vacuum test shall be performed in accordance with ASTM C1244. The following procedure is summarized from ASTM C1244 and shall be followed in conjunction with ASTM C1244 unless modified by the Engineer. The vacuum test shall include testing the top of the manhole, excluding the adjusting rings and manhole frame and cover. Testing will be allowed after backfilling has occurred or as specified in the Special Provisions. Manhole vacuum tester assembly and vacuum pumps shall be as manufactured by Cherne Industries, Inc. or approved equal. Repair of leaks may require the removal and replacement of manhole sections. The use of grout to repair leaks will not be allowed.

REGISTERED PROFESSIONAL ENGINEER
REG. NO.
Mitchell M. Mergen
SOUTH DAKOTA
12/14/15

REVISED 12/15/15

Highway 17
Lennox, South Dakota

General Notes

DESIGNED BY: BEK
DRAWN BY: MMM
CHECKED BY: MMM
ACAD FILE: GENERAL NOTES
DATE: 11/19/2015
REVISIONS: BY: DATE:
BY: DATE:

STOCKWELL ENGINEERS
SIOUX FALLS, SD

SHEET NO.
G9

b. Procedure

1. All lift holes shall be plugged.
2. All pipes entering the manhole shall be temporarily plugged, taking care to securely brace the pipes and plugs to prevent them from being drawn into the manhole.
3. The test head shall be placed at the top of the manhole in accordance with the manufacturer's recommendations.
4. A vacuum of 10 in. of mercury shall be drawn on the manhole, the valve on the vacuum line of the test head closed, and the vacuum pump shut off. The time shall be measured for the vacuum to drop to 9 in. of mercury.
5. The manhole shall pass if the time for the vacuum reading to drop from 10 in. of mercury to 9 in. of mercury meets or exceeds the values indicated in Table 3.17.12.
6. If the manhole fails the initial test, necessary repairs shall be made by an approved method. The manhole shall then be retested until a satisfactory test is obtained.

	Diameter of Manhole		
Depth (Ft)	48 Inch	60 Inch	72 Inch
8	20	26	33
10	25	33	41
12	30	39	49
14	35	46	57
16	40	52	67
18	45	59	73
20	50	65	81
22	55	72	89
24	59	78	97
26	64	85	105
28	69	91	113
30	74	98	121

3.13.9 PIPE DEFLECTION TEST

a. Deflection tests shall be performed by the Contractor on all PVC sewers. Deflection tests shall be conducted after the final backfill has been in place at least 30 days. Deflection tests shall be conducted no more than 45 days after the final backfill has been in place. Deflection tests shall be made using a deflection gauge (mandrel) device or other approved method. The diameter of the deflection gauge device shall be 95 percent of the undeflected inside diameter of the flexible pipe. The Contractor shall be required to install the pipe in such a manner so that the diametric deflection of the pipe shall not exceed 5 percent. All pipes exceeding the 5 percent deflection within the two-year warranty period shall be re-laid or replaced by the Contractor at no additional cost to the Owner.

4.0 METHOD OF MEASUREMENT AND BASIS OF PAYMENT

4.1 REMOVAL OF SEWER PIPE

4.1.1 The removal of sewer pipe shall be measured as lineal foot of pipe removed. The removal footage shall be rounded up to the nearest 1-foot increment.

4.1.2 The removal of a sewer pipe shall be paid for at the contract unit price for each foot of sewer removed. Payment for removal of sewer pipe shall be full compensation for excavation, removal and disposal of the pipe, and all appurtenances necessary for the proper removal of the pipe.

4.2 REMOVAL OF SEWER MANHOLE

4.2.1 The removal of sewer manhole shall be measured as a unit for each manhole removed.

4.2.2 The removal of a sewer manhole shall be paid for at the contract unit price for each sewer manhole removed. Payment for removal of sewer manhole shall be full compensation for removal and disposal of the manhole, frame and covers, boots, and all appurtenances necessary for the proper removal of the manhole.

FOR BIDDING PURPOSES ONLY

4.3 TRENCH STABILIZATION MATERIAL

4.3.1 The furnishing and installing of trench stabilization material shall be measured as cubic yards of trench stabilization material to the nearest 0.1 ton.

4.3.2 The accepted quantities of furnished and installed trench stabilization material will be paid for at the contract unit price per ton. Payment for trench stabilization material will be full compensation for furnishing and installing of trench stabilization material, excavation, removal and disposal of unstable soils, and all appurtenances necessary for the proper installation of it.

4.4 K-CRETE

4.4.1 The furnishing and installing of K-Crete shall be measured as cubic yards of K-Crete to the nearest 0.1 cubic yard.

4.4.2 The furnishing and installing of K-Crete will be paid for at the contract unit price for K-Crete. Payment for K-Crete will be full compensation for furnishing and installing of K-Crete and all appurtenances necessary for the proper installation of it.

4.5 ADJUST MANHOLE

4.5.1 The furnishing and installing of manhole adjustments shall be measured as a unit for the manhole adjustment at each manhole.

4.5.2 The furnishing and installing of adjusting rings shall be paid for at the contract unit price for each manhole adjustment. Payment for adjust manhole will be full compensation for furnishing and installing of the manhole adjusting rings, sealant, mortar, and all appurtenances necessary for the proper installation of the manhole adjusting rings. Payment for adjust manhole will also be full compensation for replacement of all or a portion of the existing adjusting rings if necessary or required. Manhole adjustments will be paid for at new and existing manholes where necessary.

4.6 MANHOLE RECONSTRUCTION

4.6.1 The work of reconstructing manholes shall be measured by each respective manhole reconstruction unless otherwise indicated.

4.6.2 The work of reconstructing manholes shall be paid for at the contract unit price for each manhole reconstruction unless otherwise noted. Payment for reconstructing manholes will be full compensation for furnishing and installing of the manhole sections, gaskets, manhole sealant, and all appurtenances necessary for the proper installation of the manhole reconstruction.

4.7 MANHOLE FRAME AND COVER

4.7.1 The furnishing and installing of manhole frame and covers shall be measured as a unit for each type of manhole frame and cover installation.

4.7.2 The furnishing and installing of frame and covers shall be paid for at the contract unit price for each type of manhole frame and cover. Payment for manhole frame and covers will be full compensation for furnishing and installing of the manhole frame and covers, sealant, mortar, and all appurtenances necessary for the proper installation of the manhole frame and cover.

4.8 MANHOLE EXTERNAL FRAME SEAL

4.8.1 The furnishing and installing of manhole frame seal shall be measured as a unit for each manhole frame seal installation at a manhole.

4.8.2 The furnishing and installing of the manhole frame seal shall be paid for at the contract unit price for each manhole frame seal. Payment for manhole frame seal will be full compensation for furnishing and installing of the complete manhole frame seal and all appurtenances necessary for the proper installation of the manhole frame seal for the manhole. Payment will be made for a complete frame seal system and not be made for individual extensions unless otherwise specified.

4.9 SANITARY SEWER PIPE

4.9.1 Sanitary sewer pipe shall be measured by the lineal foot of the respective type, classes, and sizes of pipe. Piping shall be measured from end to end with no deduction for length through manholes. Where two or more pipes of different size enter a manhole, each pipe will be measured to the center of the manhole. The measured length shall be rounded up to the nearest 1-foot increment.

4.9.2 The furnishing and installing of sanitary sewer pipe shall be paid for at the contract unit price per lineal foot for the types, classes, and sizes furnished and accepted. Payment for sanitary sewer pipe will be full compensation for furnishing and installing of the sanitary sewer pipe, gaskets, trench dewatering (unless otherwise specified), excavation, backfilling, bedding material, and all appurtenances necessary for the proper installation of the sanitary sewer pipe.

4.10 BEDDING MATERIAL

4.10.1 The furnishing and installing of sanitary sewer bedding material shall be incidental to the installation of each type, class, and size of water main furnished and accepted. No additional payment shall be made for sanitary sewer bedding material.

4.11 SANITARY SEWER SERVICE PIPE

4.11.1 Sanitary sewer service pipe shall be measured by the lineal foot of the respective type, classes, and sizes of pipe. The measured length shall be rounded up to the nearest 1-foot increment. Unless otherwise shown on the plans, couplings, bends, or other fittings will be included in the length of measurement.

4.11.2 The furnishing and installing of sanitary sewer service pipe shall be paid for at the contract unit price per lineal foot for the types, classes, and sizes furnished and accepted. Payment for sanitary sewer service pipe will be full compensation for furnishing and installing of the sanitary sewer service pipe, gaskets, bedding material, trench dewatering (unless otherwise specified), and all appurtenances necessary for the proper installation of the sanitary sewer service pipe.

4.12 SEWER WYE/TAP

4.12.1 Sanitary sewer wyes and taps shall be measured by each unit of the respective type and size of pipe.

4.12.2 The furnishing and installing of sanitary sewer wyes and taps shall be paid for at the contract unit price per each for the types and sizes furnished and accepted. Payment for sanitary sewer wyes and taps will be full compensation for furnishing and installing of the sanitary sewer wyes and taps, gaskets, bands, cutting of pipe openings, and all appurtenances necessary for the proper installation of the sanitary sewer wyes and taps.

4.13 SEWER COUPLINGS

4.13.1 Sanitary sewer couplings shall be measured by each unit of the respective type and size of pipe.

4.13.2 The furnishing and installing of sanitary sewer couplings shall be paid for at the contract unit price per each for the types and sizes furnished and accepted. Payment for sanitary sewer couplings will be full compensation for furnishing and installing of the sanitary sewer couplings, bands, pipe, and all appurtenances necessary for the proper installation of the sanitary sewer couplings.

4.14 SEWER CAPS/PLUGS

4.14.1 Sanitary sewer caps/plugs shall be measured by each unit of the respective type and size of pipe.

4.14.2 The furnishing and installing of sanitary sewer caps/plugs shall be paid for at the contract unit price per each for the types and sizes furnished and accepted. Payment for sanitary sewer caps/plugs will be full compensation for furnishing and installing of the sanitary sewer caps/plugs and all appurtenances necessary for the proper installation of the sanitary sewer caps/plugs.

REGISTERED PROFESSIONAL ENGINEER
REG. NO. 9237
Mitchell M. Morgan
SOUTH DAKOTA
12/11/15

4.15 MANHOLE

4.15.1 Manholes shall be measured as each unit, by inside nominal diameter, and at 2-foot depth increments. Manhole depths will be measured from the top of the rim to the lowest pipe invert.

4.15.2 The furnishing and installing of manholes shall be paid for at the contract unit price per each for the types and sizes furnished and accepted. Payment for

REVISED 12/15/15

Highway 17
Lennox, South Dakota

General Notes

DESIGNED BY: BEK
DRAWN BY: MMM
CHECKED BY: MMM
ACAD FILE: GENERAL NOTES
DATE: 11/19/2015
REVISIONS:
BY: DATE:
BY: DATE:

STOCKWELL ENGINEERS
SIOUX FALLS, SD

SHEET NO.
G10

manholes will be full compensation for furnishing and installing of the manhole sections, gaskets or butyl rubber rope sealant, futures (pipe, plugs and/or caps), and all appurtenances necessary for the proper installation of the manhole.

4.16 MANHOLE BOOTS

4.16.1 Manhole boots shall be measured by each unit of the respective size of pipe.

4.16.2 The furnishing and installing of manhole boots shall be paid for at the contract unit price per each for the sizes furnished and accepted. Payment for manhole boots will be full compensation for furnishing and installing of the manhole boots onto the manhole and pipe, bands, and all appurtenances necessary for the proper installation of the sanitary sewer couplings.

4.17 DROP MANHOLE

4.17.1 The furnishing and installing of each manhole drop section shall be incidental to manhole installation. Payment for drop manhole will be included in manhole installation and will be full compensation for furnishing of the pipe and fittings, drop manhole assembly, clamping brackets, stainless steel, setting of the drop section in concrete in the bottom of the manhole, and all appurtenances necessary for the proper installation of the drop manhole section.

4.18 RECONNECT SEWER SERVICE

4.18.1 (Reconnecting Sewer Service lines where new main line sewer pipe is installed to replace existing main line sewer.)

4.18.2 Bid item, “Sewer Wye/Tap” (for each specified size), shall be used for payment for the furnishing and installing of the wye or tap and tapping saddle. The wye or tap and tapping saddle size shall be indicated on the drawings and in the bid form. Bid item, “Reconnect Sewer Service,” shall be used for payment for furnishing and installing pipe, fittings, couplings necessary for performing the service reconnection. All services shall be installed to the curb line along the street and connected to the existing service line unless otherwise noted. The pipe for extending services from the main line sewer to the curb line shall be furnished and installed and paid for under bid item “4-inch Sanitary Sewer Service,” bid item “6-inch Sanitary Sewer Service,” or as specified.

4.19 CONNECTION INTO EXISTING MANHOLE

4.19.1 Connections into existing manholes shall be measured by each unit connection.

4.19.2 The furnishing and installing of connections into existing manholes shall be paid for at the contract unit price per each furnished and accepted. Payment for connections into existing manholes will be full compensation for furnishing and installing of the pipe into the manhole, core drilling of the manhole, manhole boot(s), grout, water seal, and all appurtenances necessary for the proper installation of the connection into existing manhole.

4.20 MANHOLE EXFILTRATION/VACUUM TEST

4.20.1 Manhole exfiltration/vacuum test shall be measured by each acceptable unit test.

4.20.2 The manhole exfiltration/vacuum test shall be paid for at the contract unit price per each furnished and accepted. Payment for manhole exfiltration/vacuum test will be full compensation for testing of the manhole and all appurtenances necessary for the proper manhole exfiltration/vacuum testing.

4.21 PVC SEWER PIPE DEFLECTION TEST

4.21.1 PVC sewer pipe deflection test shall be measured by lineal foot of pipe tested that is acceptable. The lineal footage shall not include the length of connected sanitary sewer service pipes. The measured length shall be rounded up to the nearest 1-foot increment.

4.21.2 The PVC sewer deflection test shall be paid for at the contract unit price per lineal foot furnished and accepted. Payment for PVC sewer deflection test will be full compensation for testing of the pipe and all appurtenances necessary for the proper PVC sewer deflection test.

4.22 TELEVISION INSPECTION

4.22.1 The Contractor shall be responsible for all related costs, including concrete or asphalt resurfacing, if the street has been surfaced. The Contractor shall be required to repair all areas of infiltration and other deficiencies.

4.23 TRENCH DEWATERING

4.23.1 Trench dewatering shall incidental to the pipe and manhole installation. Service line dewatering shall be measured as incidental to the main line dewatering where main line sewer is installed in conjunction with service lines.

4.23.2 Payment for trench dewatering shall be incidental to the pipe and manhole installation unless otherwise noted.

4.24 SANITARY SEWER TEMPORARY BYPASS

4.24.1 Sanitary sewer temporary bypass shall be measured by lump sum for the work.

4.24.2 The furnishing, installing, operating, and maintaining of sanitary sewer temporary bypass shall be paid for at the contract lump sum price for the sanitary sewer temporary bypass furnished and accepted. Payment for sanitary sewer temporary bypass will be full compensation for furnishing, installing, operating, and maintaining of the sanitary sewer temporary bypass system and all appurtenances necessary for the proper operation of sanitary sewer temporary bypass. Payment for sanitary sewer temporary bypass will be included with the payment for the price per lineal foot of pipe or manholes unless otherwise noted on the drawings or Special Provisions.

4.25 MANHOLE MARKERS

4.25.1 The furnishing and installing of manhole markers shall be incidental to manhole installation. Payment for manhole markers will be included in the manholes and will be full compensation for furnishing and installing of the manhole markers, concrete, and all appurtenances necessary for the proper installation of the manhole markers.

4.26 MANHOLE CONSTRUCTION PLATE MARKER

4.26.1 Manhole construction plate markers shall be incidental to manhole installation. The project quantity for manhole construction plate markers shall be measured for each location the manhole construction plate markers are used

4.26.2 The furnishing and installing of manhole construction plate markers shall be incidental to manholes. Payment for manhole construction plate markers will be included in the manholes and will be full compensation for furnishing, installing, and removal of the manhole construction plate marker and all appurtenances necessary for the proper installation of the manhole construction plate marker.

FOR BIDDING PURPOSES ONLY

REGISTERED PROFESSIONAL ENGINEER
REG. NO.
Mitchell M. Morgan
SOUTH DAKOTA
12/14/15

REVISED 12/15/15

Highway 17
Lennox, South Dakota

General Notes

DESIGNED BY: BEK
DRAWN BY: MMM
CHECKED BY: MMM
REVISIONS:

ACAD FILE: GENERAL NOTES
DATE: 11/19/2015
BY: DATE:
BY: DATE:

STOCKWELL ENGINEERS
S OUX FALLS, SD

SHEET NO.
G11

Standard Specifications for Water Main Construction

FOR BIDDING PURPOSES ONLY

1.0 GENERAL

1.1 SCOPE OF WORK

1.1.1 The Contractor shall furnish all the necessary labor, materials, equipment, tools and supplies that are necessary to install a complete water main system, as shown on the plans and/or called for in these specifications or its addenda. It is the intent of these specifications to install a complete system or job.

1.2 TERM OF WARRANTY

1.2.1 Reference Section 500 – Warranty for Construction Activity.

1.3 QUALITY CONTROL AND SUBMITTALS

1.3.1 Retesting of work required because of nonconformance to the specified requirements shall be performed by the same independent firm on the instructions of the Engineer. Payment for retesting performed during the contract period and during the warranty period will be charged to and will be the responsibility of the Contractor.

1.3.2 Shop drawings and data shall be submitted for all materials to be installed under the contract. The following is a list of examples:

a. Fire hydrants, pipe, pipe fittings, corporation stops, curb stop and box, saddles, bedding material, stabilization material, granular material, and any other pertinent information concerning construction materials that the Engineer deems necessary for the review of the materials used on the project in accordance with the specifications and drawings.

1.3.3 The Contractor shall submit the number of copies that the Contract requires plus three copies which the Engineer will retain. The Contractor shall obtain shop drawing approval before any of the work related to that material is performed.

1.4 PAYMENT

1.4.1 Payments to the Contractor shall be made in accordance with the General Conditions.

1.5 ACCEPTANCE

1.5.1 Acceptance of the work shall be in accordance with the General Conditions.

1.6 WARRANTY

1.6.1 Warranty of the work shall be in accordance with the Standard Specifications for Warranty for Construction and the General Conditions.

1.7 REFERENCES

1.7.1 South Dakota Department of Transportation Standard Specifications for Roads and Bridges

1.7.2 American Society of Testing Material, ASTM

1.7.3 American National Standards Institute, ANSI

1.7.4 American Water Works Association, AWWA

2.0 MATERIALS

2.1 WATER MAIN PIPE

2.1.1 POLYVINYL CHLORIDE (PVC) PIPE

a. C900 Pipe: C900 pipe shall meet the requirements of the AWWA C900 specification. Minimum pressure class shall be 235psi (DR 18). PVC compounds used in the extrusion of the pipe shall meet or exceed the requirements of ASTM D-1784 cell class 12454. Pipes shall be constructed with an integral bell coupler which meets the requirements of ASTM D-3139 and include a gasket sealing system that conforms to the requirements of ASTM F-477. Spigot ends shall be beveled and include markings for insertion depth.

b. C905 Pipe: C905 pipe shall meet the requirements of the AWWA C905 specification. Minimum pressure class shall be 235psi (DR 18). PVC compounds used in the extrusion of the pipe shall meet or exceed the requirements of ASTM D-1784 cell class 12454. Pipes shall be constructed with an integral bell coupler which meets the requirements of ASTM D-3139 and include a gasket sealing system that conforms to the requirements of ASTM F-477. Spigot ends shall be beveled and include markings for insertion depth.

2.1.2 ENCASEMENT PIPE

a. Steel Encasement Pipe shall conform to all AREMA material and construction specifications. Steel Encasement pipe shall conform to carry Cooper's E-80 Railroad live loading with diesel impact. All steel pipe shall have a minimum yield strength of 35,000 psi with a minimum wall thickness that conforms to AREMA design standards. Encasement pipe shall be coated and catholically protected. The encasement pipe shall be new and installed with welded joints approved by the Engineer. The openings on each end of the encasement pipe shall be protected against the entrance of backfill materials. Sealing of the ends will be required if the ends of the encasement pipe are not above high water.

2.2 WATER MAIN FITTINGS

2.2.1 Mechanical Joint Fittings

Mechanical joint fittings shall be manufactured of ductile iron materials as specified in AWWA C110 and have a minimum working pressure of 250 psi. Fittings shall be lined with cement mortar in accordance with AWWA C104 and coated on the outside as required by AWWA C116. Joints shall be mechanical joint type conforming to the specifications of AWWA C111. A rubber gasket sealing system and stainless steel bolts shall be included.

1. Acceptable manufacturers are American, Griffin, Sigma, Star, Tyler/Union, and U.S. Pipe.

2.3 MECHANICAL JOINT RESTRAINER DEVICES

2.3.1 Restraining mechanisms shall provide wedges or full circle contact and support of the pipe wall. Restraint shall be accomplished by a series of ring or wedge segments mechanically retained inside the gland housing and designed to grip the pipe wall in an even and uniform manner. Restraining devices shall be actuated by bolts featuring twist off heads to ensure proper installation torque is applied. All components of the restrainer, including the gland, bolts, and restraint segments, shall be of high-strength ductile iron, ASTM A536. Bolts shall be stainless steel, low alloy corrosion-resistant high-strength steel in accordance with ANSI/AWWA C111/A21.11. Appropriate restrainer devices shall be supplied for the specific type of piping material being used on the project.

2.3.2 Restrainer devices shall be MEGALUG® by EBBA Iron, Uni-Flange® by The Ford Meter Box Company, Stargrip® by Star, or One Lok™ by Sigma. Restrainer devices for Ductile Iron Pipe can be Romac Industries "Romagrip."

2.4 VALVES

2.4.1 Valves 4 inches through 12 inches shall be gate valves and valves 16 inches and larger shall be butterfly valves.

2.4.2 GATE AND TAPPING VALVES

a. Gate and tapping valves shall meet the requirements of AWWA C509 or C515 and have a pressure rating of 250 psi. Valves shall be resilient seated and ferrous components shall be ductile iron. Gate valves shall be mechanical joint meeting the requirements of AWWA C111 and tapping valves shall have a mechanical joint end and a flanged end to correspond to the branch flange of the tapping sleeve. Bolts shall be stainless steel, low alloy corrosion-resistant high-strength steel in accordance with ANSI/AWWA C111/A21.11.

b. All internal and external ferrous surfaces shall have a fusion bonded epoxy coating applied electrostatically prior to assembly meeting the requirements of AWWA 550. Valves shall have a ductile iron wedge encapsulated with nitrile rubber or an EPDM rubber compound. Stems shall be nonrising, bronze or stainless steel, and shall be sealed by three o-rings. Valves shall have a 2-inch ductile iron operating nut and open left (counter clockwise). Bonnet and stuffing box bolts shall be stainless steel. Resilient seats shall be bonded or mechanically attached to the gate.

c. Acceptable manufacturers are American Flow Control, American AVK, and Clow/Kennedy/M&H, or an approved equal.

2.5 FIRE HYDRANTS

2.5.1 Fire hydrants shall be dry barrel and meet the requirements of AWWA C502. The rated working pressure shall be 250 psi and the rated test pressure shall be 500 psi. The nozzle section, upper and lower barrels, and the hydrant base shall be ductile or gray iron. The main valve closure shall be of the compression type, opening against the pressure and closing with the pressure. The main valve opening shall not be less than 5¼ inches and be designed so that removal of all working parts can be accomplished without excavating.

2.5.2 The bronze seat shall be threaded into mating threads of bronze for easy field repair. The draining system of the hydrant shall be bronze and be positively activated by the main operating rod. All threads shall be National Standard threads. Internal travel stop nut shall be bronze or zinc plated steel. Hydrant operating threads to be factory lubricated and sealed from the waterway with o-rings. Operating nuts shall be pentagon shaped and measure 1½ inches point to flat. Hydrants shall open left (counter clockwise).

2.5.3 Hydrants shall have a 6-inch mechanical joint inlet and the barrel shall be sized for a trench depth of 7 feet. Hydrants shall have two 2½-inch hose nozzles and one 4½-inch pumper nozzle, all located on the same horizontal plane. The centerline of the nozzles shall be a minimum of 18 inches above the ground line groove. Nozzle cap nuts shall be the same dimension and shape as the operating nuts described above, and the nozzle caps shall be furnished with security chains. The section of the hydrant above ground shall be painted red. Hydrants shall be capable of being extended in 6-inch increments and shall be equipped with traffic features that include a breakaway flange and stem with a shaft coupling.

2.5.4 All buried body parts are to be 304 Stainless steel. Bolts shall be fluorocarbon coated cor-ten steel t-bolts and nuts equal to NSS cor-blue or approved equal low alloy corrosion-resistant high-strength steel in accordance with ANSI/AWWA C111/A21.11

2.5.5 Fire hydrants shall be the Waterous Pacer WB-67-250 by American Flow Control, the American-Darling B-84-B by American Flow Control, or the Series 2700 by American AVK.

2.6 VALVE BOXES

2.6.1 Valve boxes shall be cast iron and screw-type adjustable with a 5¼-inch shaft. Lids shall be standard drop type labeled "WATER" with a 1½-inch long skirt.

Valve boxes shall be the 6850 Series or the 6860 Series by Tyler or an approved equal. The 6850 Series shall be the 666-S box and shall be installed with a valve box adaptor. Valve box adaptors shall be the Valve Box Adaptor II by Adaptor Inc. or an approved equal. The 6860 Series shall be the DD box with a #6 base.

2.7 CORPORATION STOP

2.7.1 The corporation stop shall be AWWA threads, 1" iron pipe size with compression type fitting. The corporation stop shall be Mueller H 15009, Ford F1001 or approved equal.

REGISTERED PROFESSIONAL ENGINEER
REG. NO. 9237
Mitchell M. Morgen
SOUTH DAKOTA
12/11/15

REVISED 12/15/15

Highway 17
Lennox, South Dakota

General Notes

DESIGNED BY: REK
DRAWN BY: MMM
CHECKED BY: MMM
REVISIONS:
ACAD FILE: GENERAL NOTES
DATE: 11/19/2015
BY: DATE:
BY: DATE:

STOCKWELL ENGINEERS
SIOUX FALLS, SD

SHEET NO.
G12

2.8 CURB STOP

2.8.1 The standard residential curb stops shall be Minneapolis pattern for 1" iron pipe size, female iron pipe size by female iron pipe with iron pipe size compression by male iron pipe adapter; Steal inserts for pipe curb stops shall be Mueller H10287, Ford B11-444M with adapters or B66-444M or approved equal.

2.9 CURB BOX

2.9.1 The curb box shall be iron construction, Minneapolis pattern. The box shall be Mueller H10300, A.J. McDonald 5614 or approved equal.

2.10 TRACER WIRE

2.10.1 The components of the tracer wire system shall be suitable for direct bury applications. The conductor shall be 12 AWG, solid-strand, soft-drawn copper per ASTM B-3. The conductor shall be insulated with high molecular weight polyethylene. The minimum insulation thickness shall be 0.045 inches and the color shall be blue. Splices and/or connectors shall be capable of handling from two to four wires per connection and be designated at "water proof." Ground rods shall be a 3/8-inch diameter, 60-inch-long steel rod uniformly coated with metallically bonded electrolytic copper. Ground rod clamps shall be a high-strength, corrosion-resistant copper alloy.

2.10.2 Acceptable manufacturers of the tracer wire are Coleman Cable, Kris-Tech Wire, or an approved equal. Splice kits/connectors shall be Scotchlok™ DBY by 3M, LV 9000 by SNAPLOC™, or an approved equal.

2.11 INSULATION

2.11.1 Water main insulation shall be an extruded polystyrene board and meet the requirements of ASTM C578, Type IV. The minimum R-value shall be 5.0 as determined by ASTM C518. The minimum compressive strength shall be 25 psi as determined by ASTM D1621. The maximum water absorption shall be 0.1 percent by volume as determined by ASTM C272. The maximum water vapor permeance shall be 1.1 perm as determined by ASTM E96.

2.11.2 Water main insulation shall be STYROFOAM™ Square Edge by the Dow Chemical Company, STYROFOAM™ Brand Scoreboard by the Dow Chemical Company, or an approved equal.

2.12 SELECT FILL AND WATER MAIN BEDDING

2.12.1 The material for select fill and water main bedding shall be minus 1 inch with not more than 10 percent passing the No. 200 sieve.

3.0 CONSTRUCTION REQUIREMENTS

3.1 WATER MAIN PIPE

3.1.1 Water main 12 inches in diameter and smaller shall be constructed of C900 pipe. Water mains larger than 12 inches shall be constructed of C905 pipe. Minimum depth of cover shall be 6 feet measured from the proposed finished ground to the top of the pipe installed.

3.2 ENCASEMENT PIPE

3.2.1 Rail elevations over the work must be monitored at intervals prescribed by BNSF to detect any track movement. Movements of over one-quarter (1/4) inch vertically shall be immediately reported to the BNSF Roadmaster. Due to the danger to rail traffic that is caused by only small amounts of track movement, BNSF forces may have to be called to surface the track several times.

3.2.2 Call Before You Dig! Call 1-800-533-2891 to arrange for a BNSF underground cable locate. BNSF form "Underground Cable Location & Acknowledge" will be completed by a BNSF representative and copy provided to the contractor. The contractor must have this completed form in possession at the job site at all times.

3.2.3 The following requirements shall apply to construction methods:

a. The use of water under pressure jetting or puddling will not be permitted to facilitate boring, pushing or jacking operations. Some boring may require water to lubricate cutter and pipe, and under such conditions, is considered dry boring.

b. Where unstable soil conditions exist, boring or tunneling operations shall be conducted in such a manner as not to be detrimental to the railroad being crossed.

c. If excessive voids or too large a bored hole is produced during casing or pipeline installations, or if it is necessary to abandon a bored or tunneled hole, prompt remedial action should be taken by the Utility Owner.

d. All voids or abandoned holes caused by boring or jacking are to be filled by pressure grouting. The grout material should be sand cement slurry with a minimum of two (2) sacks of cement per cubic yard and a minimum of water to assure satisfactory placement.

3.3 INTERRUPTION OF SERVICE

3.3.1 No valve or other control on the existing water distribution system shall be operated for any purpose by the Contractor. The Contractor shall notify all consumers affected by any interruption of water service at least 24 hours before the interruption of water service. Consumers shall be verbally notified when possible. In the event a consumer cannot be verbally notified, the Contractor shall secure a door hanger to the most frequently used entrance. The Contractor shall initiate valve operation requests with the City.

3.4 ALIGNMENT

3.4.1 The Engineer will stake all water main alignment and inspect all water main installation. All fittings, valves, hydrant extensions, etc., will be left open until inspected and measured by the Engineer. When necessary, the Engineer will provide grade stakes for alignment. The Contractor shall carry line and grade into the trench by means of approved survey methods.

3.4.2 At no time shall the Contractor or his employees change the grade without approval of the Engineer. If underground interference is encountered at the assigned grade, the Contractor shall notify the Engineer for alternate alignment.

3.4.3 Installation of water mains parallel to sanitary or storm sewer lines shall be completed in a manner such that the water mains shall be laid at least 10 feet horizontal distance from any existing or proposed sanitary sewer, storm sewer, or sewer manhole

3.4.4 The Contractor shall furnish help when requested to stake and measure water main.

3.5 UNDERGROUND INTERFERENCE

3.5.1 The location of existing underground public or private utilities may be shown on the plans, as reported by the various utility companies and owner, but this does not relieve the Contractor of the responsibility of determining the accuracy or completeness of said locations. The Contractor shall determine the location of all underground ducts, conduits, pipes, or structures which will be affected by the work, and shall take steps necessary to support, protect, remove, or relocate said structures by any means suitable to the owners of the structure involved and the Engineer. In those instances where their relocation or reconstruction is impracticable, a deviation from line and grade may be ordered by the Engineer. The Contractor shall be responsible for notifying the various utility companies if the Contractor's work will expose, affect, or endanger any existing utility. All cost of investigation and any necessary protection, support, removal, or relocation of said structures shall be included in the contract bid price for installing water main unless specifically provided for in the bid items. The Contractor shall not begin construction until all utility companies have been contacted and their respective underground utilities have been located and marked.

3.5.2 The bid item "locate utilities" will be used to locate water lines only if the service location marked exceeds the actual service location by 4 feet in either direction and additional excavation is required. All costs of other exploratory investigation/excavation necessary for determining the location and depth of utilities shall be incidental to "locate utilities" bid item.

3.5.3 Where water mains cross above storm sewers or sanitary sewers, there shall be at least 18 inches vertical clearance between the bottom of the water main and the top of the sewer pipe and one full length of water pipe must be located so both joints will be as far from the sewer as possible.

3.5.4 A water main may cross below a non-perforated sewer main if minimum vertical separation of 18 inches is provided and the sewer main is of acceptable water main pipe material and is a continuous piece of at least 20 feet in length with the length of the water pipe located so both joints are as far as possible from the sewer main. A water main may cross either above or below a non-perforated sewer line with a vertical separation of less than 18 inches if either the water or sewer line is encased in PVC or cast iron for at least 10 feet each side of the crossing. Where water mains are to be installed in parallel with a sewer or a sewer manhole that is less than 10 feet away horizontally and is not at least 18 inches below the water main, the water main shall be encased in PVC or cast iron for the entire distance that the sewer is too close to the water main. If PVC or cast iron is used as encasement material, the ends shall be adequately sealed with a rubber boot. Payment for crossings shall be incidental to the contract unit prices for the water main items.

FOR BIDDING PURPOSES ONLY

3.6 EXCAVATION AND TRENCHING

3.6.1 GENERAL

a. Excavation shall be classed as either earth or rock excavation. Rock excavation shall consist of solid rock lying in its natural bed which requires fracturing for its removal and boulders of 1 yard or more in volume. All other material shall be classed as earth excavation.

3.6.2 EARTH EXCAVATION

a. Water mains shall be installed using the open cut method, except that where conditions warrant, the Engineer may permit the use of short tunnels.

b. The Contractor may use any means he desires to excavate to the proper depth and width necessary for the construction of the sewer according to the plans and specifications. The width of the trench at the top of the pipe shall be a minimum of 6 to 9 inches on each side of the pipe. Trenches shall be excavated with vertical sides from pipe flowline to a point 1 foot above top of pipe where possible.

3.6.3 SHEETING AND BRACING

a. If City, state, or federal regulations dictate the necessity of sheeting, bracing, or pulling a trench box or shield, the cost of such sheeting, unless a special price is called for in the contract proposal form, shall be included in the contract bid price for installing water main.

3.6.4 EXCAVATION BELOW PIPE GRADE

a. Trench excavation below pipe grade shall be backfilled with bedding material approved by the Engineer and thoroughly tamped to provide a uniform and continuous bearing and support for the pipe.

3.6.5 EXCAVATION IN UNSTABLE OR UNSUITABLE SOIL

a. The Contractor shall notify the Engineer when material considered unstable for the pipe foundation is encountered and where additional support, stabilization, and undercutting of the pipe trench are necessary. If the Contractor cannot assure a product in accordance with the specifications, the Contractor may request the use of trench stabilization material and/or geotextile fabric where the trench base is not structurally adequate or otherwise unstable to provide a uniform stable pipe foundation and requires additional undercutting for placement of trench stabilization material and/or geotextile fabric.

REGISTERED PROFESSIONAL ENGINEER
REG. NO. 9237
Mitchell M. Morgan
SOUTH DAKOTA
12/11/15

REVISED 12/15/15

Highway 17
Lennox, South Dakota

General Notes
DESIGNED BY: REK
DRAWN BY: MMM
CHECKED BY: MMM
REVISIONS:
ACAD FILE: GENERAL NOTES
DATE: 11/19/2015
BY: DATE:
BY: DATE:

STOCKWELL ENGINEERS
SIOUX FALLS, SD

SHEET NO.
G13

b. The undercutting and use of trench stabilization material and/or geotextile fabric shall only be approved for use in extreme conditions where it is obviously necessary. Approval for the limits of the payment lines for use of trench stabilization material and geotextile fabric must be obtained from the Engineer, prior to installation. If trench stabilization material and/or geotextile fabric is necessary to stabilize the trench foundation, they shall be installed by the Contractor at the unit bid prices for those respective items.

c. The Contractor will be required to furnish weigh tickets for trench stabilization material on a daily basis.

d. Pipe bedding material will always be required in addition to trench stabilization material where trench stabilization material is used.

3.6.6 DEWATERING

a. Water main installation shall be accomplished in a relatively dry trench. Joints shall not be connected under water. If ground water is encountered, the Contractor shall dewater the trench with suitable pumps and equipment. Lowering of the groundwater level shall be by means of wells, well points, or other suitable means.

b. Water resulting from the dewatering operation shall be disposed of in a manner approved by the Engineer and South Dakota Department of Environment and Natural Resources (DENR). It shall not be pumped onto private property without the property owner's approval. Any damage to property, either public or private, shall be rectified to the satisfaction of the owner and the City. All applicable permits must be obtained by the Contractor before the dewatering operation begins.

c. The water discharged from the dewatering operations shall not be allowed to wash through any excavated material. The Contractor shall be responsible for any damages that might result from this operation.

3.7 WATER MAIN

3.7.1 Water main shall be installed in the locations shown on the plans or as directed by the Engineer. Ductile iron water main shall be installed in accordance with AWWA C600 and PVC water main shall be installed in accordance with AWWA C605. Ductile iron water main shall be encased in polyethylene in accordance with AWWA C105. Water main shall not be installed in frozen ground or in water, and no water will be allowed to run into or through the pipe. Before installing water main, it shall be cleaned of all foreign matter and kept clean thereafter. Open ends shall be protected at all times to prevent the entrance of dirt, trench water, animals, or foreign matter into the pipe. The bell and spigot shall be wiped clean and sufficient lubrication placed on the gasket and spigot before the pipe is pushed fully into the bell. The lubricant shall be approved for use with potable water.

3.7.2 Field cut spigot ends of push on joints shall have a square end with beveled edge equal to a factory cut prior to being pushed into the bell. Every pipe shall be bedded uniformly throughout its length with water main bedding material. Reference Standard Detail Plate 900.12 for water main bedding installation. Care shall be taken to not have any part of the pipe bearing on rocks or stones. Water main shall have a minimum of 6 feet of cover unless otherwise noted on the plans. If 6 feet of cover cannot be achieved/maintained, the Engineer shall be notified. If less than 4 feet of cover is expected, insulation shall be used to protect the water main from freezing. Cover between 4 and 6 feet will be evaluated on a case-by-case situation for insulation requirements. Whenever insulation is required for water main, individual water services should be evaluated for insulation requirements. The insulation work shall be in accordance with the special provisions, drawings, and manufacturer's recommendations.

3.8 VALVES AND FITTINGS

Valves and fittings shall be installed at the locations shown on the plans or as directed by the Engineer. Valves and fittings shall be installed in accordance with AWWA C600 and encased in polyethylene in accordance with AWWA C105. Valve and fitting locations shall be field verified and recorded on the as-built drawings by the Engineer. Valves and fittings shall remain exposed until the Engineer has visually inspected and measured the as-built locations.

3.8.1 Proper concrete blocking shall be installed under all valves. In addition, valves 12 inches in diameter and greater shall be installed with two restrainer devices per valve. A valve nut extension shall be installed on valves with more than 10 feet of cover as measured from the top of the pipe to the finished surface elevation. Gate valves in PVC water main shall be installed in conformance with the city's Standard Plates.

3.9 FIRE HYDRANTS

3.9.1 Fire hydrants shall be installed at the locations shown on the plans or as directed by the Engineer and in accordance with AWWA C600. The centerline of the nozzles shall be a minimum of 18 inches above the finished surface elevation. The bottom of the breakaway flange shall be 2 to 4 inches above the finished surface elevation. Fire hydrants shall be installed 3 feet behind the back of curb, stand plumb, and have their nozzles parallel with or at right angles to the street center line, with the pumper nozzle facing the street.

3.9.2 Flushing hydrants installed for testing purposes shall be removed once testing has been completed. If the flushing hydrants will remain in place for the duration of a winter season, they shall be installed behind proposed curb and gutter.

3.9.3 Hydrant leads shall be a minimum of 6 inches in diameter. Hydrant leads longer than 25 feet shall include a valve. Hydrant lead valves shall be attached to the tee with ¾-inch threaded rods. In situations where it is not appropriate to have the valve located close to the tee, the valve should be at least 30 feet from the fire hydrant. Restrainer devices will be required on all vertical bends. Hydrants shall be set on a concrete block to prevent settlement. Sufficient size concrete thrust blocks shall be installed against undisturbed soil to prevent.

3.9.4 Hydrant bases shall be backfilled with a minimum of 1/3 cubic yard of 1½-inch crushed rock to facilitate drainage. The crushed rock shall extend to 6 inches above the weep hole and be covered with two layers of heavy felt paper or heavy construction plastic. Before installing the ground rod or tracer wire, the fire hydrant barrel shall be encased in polyethylene up to the ground surface. The weep holes shall not be covered by the polyethylene. A 60-inch ground rod shall be taped to the fire hydrant barrel at a minimum of four locations and be extended to the bottom of the breakaway flange. Tracer wire shall be attached to the bottom of the ground rod. Fire hydrants and the tracer wire system shall be installed in conformance with the city's Standard Plates.

3.10 POLYETHYLENE ENCASEMENT

3.10.1 All buried ductile iron water main, fittings, valves, rods, and appurtenances shall be encased in polyethylene in accordance with AWWA C105, Method A. The polyethylene shall be cut 2 feet longer than the pipe section and shall overlap the ends of the pipe by 1 foot. The polyethylene shall be gathered and lapped to provide a snug fit and shall be secured at quarter points and each end with polyethylene tape.

3.10.2 The polyethylene shall prevent contact between the pipe and bedding material, but is not intended to be a completely airtight and watertight enclosure. Damaged polyethylene shall be repaired in a workmanlike manner using polyethylene tape or shall be replaced. The polyethylene encasement is considered to be a part of the price bid for the water main.

3.11 CONNECTIONS TO EXISTING WATER MAIN

3.11.1 Water main shall be connected to and extended by utilizing three different methods: removal of an appurtenance and extending, cutting in an appurtenance and extending, or smith tapping and extending. When a water main needs to be connected, a method that will minimize the interruption of service to surrounding properties should be utilized. When a connection is made utilizing methods other than smith tapping, the Contractor shall have all materials for the connection on site, and to the extent possible, shall have fittings assembled and tied prior to cutting the existing water main and making the connection. When necessary, pipe cutting shall be neat and completed in a workmanlike manner without damage to the pipe, interior lining, or exterior coating. Cutting shall be performed with an approved mechanical cutter, using a wheel cutter when applicable and practical.

3.11.2 When a smith tap connection is necessary, the Contractor will furnish the tapping sleeve and valve and complete the tap. The Contractor will be responsible for excavating and backfilling the trench for completion of the tapping process and for furnishing and installed the box for the tapping valve. The trench shall be excavated in a manner so as to provide adequate shoring or bench sloping of the sidewalls of the trench.

3.12 TRACER WIRE

3.12.1 Tracer wire shall be installed with PVC and ductile iron water mains. The wire shall be installed along the lower quadrant of the pipe, but the pipe shall not be laid directly on the wire. Ground rods shall be installed adjacent to connections to existing piping and in the locations specified on the plans. The tracer wire shall be brought to each fire hydrant and connected to a 60-inch ground rod that extends up to the bottom of the breakaway flange. The ground rod shall be taped to the fire hydrant barrel in at least four locations below the ground surface. The tracer wire shall be spliced only if approved by the Engineer. All underground splices shall be inspected by the Engineer prior to backfilling. The tracer wire system is considered to be a part of the price bid for water mains.

3.12.2 The Contractor shall be responsible for testing the tracer wire system for conductivity. Testing for conductivity shall be completed after the service lines have been tapped. If the tracer wire system does not function as intended, the Contractor shall repair the system to the satisfaction of the Engineer. Fire hydrants and the tracer wire system shall be installed in conformance with the city's Standard Plates.

3.13 CONCRETE THRUST BLOCKS

The Contractor shall brace all fittings by means of poured concrete or precast concrete thrust blocks. No wood shimming or bracing will be allowed in conjunction with the concrete blocks. Poured concrete blocking shall have a compressive strength of not less than 3,000 psi. Concrete shall be poured against undisturbed earth. Care shall be taken not to cover up joints, bolts, and fittings with concrete. If a concrete thrust block cannot be poured due to poor soil condition or inadequate support for blocking, restrained joints shall be utilized. The cost for blocking is considered to be a part of the cost of the fittings. Concrete thrust blocks shall be installed in conformance with the city's Standard Plates.

3.14 BEDDING, BACKFILL, AND COMPACTION

3.14.1 GENERAL

a. Installation of PVC pipe, including bedding and backfill of the pipe, shall conform to the latest revision of ASTM D2321 "Standard Recommended Practice for Underground Installation of Flexible Thermoplastic Sewer Pipe," and the city's Standard Specifications.

b. All bedding and backfill areas shall be subject to compaction testing by nuclear or standard methods according to the latest applicable ASTM Specifications. In addition to the construction and testing procedures outlined in other sections of the specifications, the Contractor shall be required to install the pipe in such a manner so that the diametric deflection of the pipe shall not exceed 5 percent (see pipe testing section) and the materials surrounding the pipe shall be compacted to the required Standard Proctor Densities outlined in D2321. The areas requiring compaction shall include the bedding, initial backfill, and final backfill areas, as defined in the following sections. The Engineer may take random compaction tests of the material. If any of these tests indicate that the material has not been compacted to the required density, the Contractor shall recompact said material at no additional cost to the Owner, and the Engineer shall then have the right to take additional compaction tests to assure that this or other material is compacted to the proper density without any additional cost to the Owner.

REGISTERED PROFESSIONAL ENGINEER
REG. NO. 9267
Mitchell M. Mergen
SOUTH DAKOTA
12/14/15

FOR BIDDING PURPOSES ONLY

REVISED 12/15/15

Highway 17
Lennox, South Dakota

General Notes
DESIGNED BY: REK
DRAWN BY: MMM
CHECKED BY: MMM
REVISIONS:
ACAD FILE: GENERAL NOTES
DATE: 11/19/2015
BY: DATE:
BY: DATE:

STOCKWELL ENGINEERS
SIOUX FALLS, SD

SHEET NO.
G14

FOR BIDDING PURPOSES ONLY

c. The contractor shall notify the City's Engineer to coordinate density tests as needed. The city will contract testing with a certified testing agency. Tests that pass will be paid for by the city. Any failing tests will be paid by the contractor. In the case of a failed test, the contractor shall recompact the area to be retested.

d. Material for all areas of backfilling is to be free of rock, frozen materials, and hard clay. Care shall be taken in placing backfill over the crown of the pipe to avoid damage to the pipe.

3.14.2 BEDDING OF PIPE

a. The trench base shall be undercut a minimum of 4 inches or one-fourth of the outside diameter of the pipe barrel (whichever is larger) below the grade line of the pipe and uniformly backfilled with bedding material to the grade-line of pipe. After the pipe has been installed on top of the first layer of bedding material, the haunching area shall be backfilled with bedding material up to the "spring-line" (halfway) on the pipe (bedding material shall be used to the top of the pipe for all pipes with a diameter of 12 inches or less). The bedding material shall be "shovel-sliced" or hand tamped around and under the haunches of the pipe to assure adequate and uniform support along the bottom of the pipe. Care shall be taken to prevent dislodging and misalignment of the pipe and to provide adequate bell hole for the pipe.

b. When the foundation material is not suitable to provide a uniform base for the pipe, the trench shall be undercut to sufficient depth to build an acceptable base. Such areas shall be backfilled with trench stabilization and/or geotextile fabric material to build a uniform foundation. The trench stabilization material shall be brought up to the bottom of the bedding material specified for the pipe and the bedding material shall be used up to the spring line (bedding material shall be used to the top of the pipe for all pipes with a diameter of 12 inches or less).

3.14.3 INITIAL BACKFILLING OF PIPE TRENCH

a. All pipe installed in an open trench shall be initial backfilled to at least 12 inches above the top of the pipe. The initial backfill shall be placed evenly so as not to disturb the grade or line of the pipe. Above the bedding area the pipe shall be backfilled with acceptable native material (Class I, II, and III as described in ASTM D2321), approved by the Engineer, or with granular material to a minimum of 90 percent Standard Proctor Density to 12 inches above the top of the pipe.

b. Where no suitable backfill material is available, the initial backfilling shall be constructed with granular material.

3.14.4 FINAL BACKFILLING OF TRENCH TO GRADE

a. All final backfill material shall consist of approved excavation material, granular material, or as otherwise specified. Sand may be used if approved by the Engineer. The final backfill shall be placed in layers and compacted by suitable and approved compaction methods in a manner approved by the Engineer to at least 95 percent Standard Proctor Density, or as otherwise specified.

b. Excess material not required for final backfilling shall be removed by the Contractor or otherwise disposed of as ordered by the Engineer.

c. If the material encountered in the trench excavations is unsuitable to be used as final backfill material, it shall be replaced with other suitable material available at the project site or with granular material, as approved by the Engineer. In final backfill areas below pavement, the Engineer may direct the Contractor to use native material a specified distance below the pavement elevation to ensure a consistent material is utilized under the pavement section.

d. At least 36 inches of cover shall be placed over the top of the pipe before the trench is wheel-loaded, and 48 inches of cover shall be placed over the top of the pipe before the trench is hydro-hammered for compaction.

3.15 REMOVAL AND ABANDONING OF MATERIALS

3.15.1 REMOVAL OF PIPE

a. This work shall consist of removal and disposal of pipe that is not designated or permitted to remain and which is not removed and disposed of under other items in the contract. Removals shall be in accordance with the Standard Specifications.

3.15.2 ABANDONING OF PIPE

a. Abandoned pipe that is to remain in-place shall be plugged with K-crete on either end unless otherwise indicated.

3.16 PIPE INSULATION

3.16.1 Pipe insulation shall be required on all water main pipe installations where the cover depth to finished grade elevation is 6 feet or less above the pipe. The insulation work shall be in accordance with the City's Standard Plates and manufacturer's recommendations.

3.17 INSPECTION AND TESTING

3.17.1 GENERAL

a. The Engineer shall have access at all times to all parts of the job, and the Contractor must furnish such personnel, facilities, equipment, tools, and materials as are necessary to make whatever tests and inspection that are deemed necessary.

3.17.2 PIPE MATERIAL TESTING

a. The Engineer may require a test of specimens not to exceed 5 percent of the quantity of pipe to be furnished in order to prove the acceptability of the pipe. The manufacturer shall provide an approved testing stand near the site of the plant.

3.17.3 PIPE INSPECTION

a. Prior to being lowered into the trench, each pipe shall be carefully inspected by the Contractor and those not meeting the specified requirements shall be removed from the site immediately. Rejections may be made for any of the reasons as stated in the specifications for each specific type of pipe. Pipe shall be protected during handling against impact, shocks, and free fall.

b. The engineer shall inspect all mainline and service fittings once constructed in place and prior to backfilling operations. Fittings shall remain exposed for the engineer to visually inspect and record data for as-built plans. The Contractor shall notify the engineer when they are ready for an inspection.

3.17.4 DISINFECTION AND BACTERIOLOGICAL TESTING

a. Water main installed shall be disinfected in accordance with AWWA C651 or as directed by the Engineer. The Contractor shall place sufficient chlorine tablets or chlorine powder in the water main as it is installed. Disinfection methods and procedures are available upon request from the City Engineer. Once water main construction is complete, the Contractor shall request to have the pipe segment filled by City personnel. Once the pipe segment has been filled, the Contractor can begin the hydrostatic pressure testing requirements (Section 3.18).

b. The chlorinated water shall remain in the water main for a minimum of 24 hours. Upon completion of the minimum contact time, the Contractor shall request to have the water main flushed by the City. In order to prevent corrosion damage to the pipe lining, heavily chlorinated water shall not remain in contact with the water main for more than 72 hours. The water main shall be adequately flushed to remove all heavily chlorinated water and remaining particulates. The contractor shall be responsible for the dechlorination and/or disposal of heavily chlorinated water.

c. Once flushing is complete, the contractor shall collect a water sample from an acceptable source for coliform bacteria testing. A minimum of two samples taken 24 hours apart will be required and tested at the contractor's expense for every 1,200 feet of water main installed. If the coliform bacteria test passes (coliform bacteria absent), the water main can be put into service and service lines tapped. If the coliform bacteria test fails (coliform bacteria present), the Contractor must have the water main fushed and resampled. If the coliform bacteria test fails after the second attempt, the Contractor shall rechlorinate the water main by the continuous feed or slug method (liquid chlorine injection through a service tap) until the coliform bacteria test passes.

d. After disinfection and final flushing and before the new water main is connected to the distribution system, two consecutive sets of acceptable samples, taken 24 hours apart, shall be collected from the new main. The samples must be submitted to a health laboratory acceptable to the state DENR, which includes the City of Sioux Falls health lab. The samples must be free of coliform bacteria before the system can be placed into service.

e. When flushing the water main, the water used for disinfecting the main shall not reach a stream, river, or water way if chlorine is detected in the water.

f. The Contractor shall notify all consumers affected by any interruption of water service at least 24 hours before the interruption of water service. Consumers shall be verbally notified when possible. In the event a consumer cannot be verbally notified, the Contractor shall secure a door hanger to the most frequently used entrance.

g. Water from the City's Water Distribution System that is drained into work areas or open trenches must be discharged without impact to the environment. The following is a prioritized list for dewatering of trenches in work areas:

h. Water from the distribution system shall be pumped to the City's sanitary sewer system. Contractor is responsible for verifying hydraulic loading on existing sanitary sewer system during trench dewatering operations to ensure that sewer backups do not occur.

i. Water from the distribution system shall be pumped to areas were water can be stored and discharged through infiltration. Overland flow is not allowed. If discharge is on private property, contractor shall secure permission prior to discharge

j. Water from the distribution system may be pumped into vactor trucks or septic tank trucks and hauled to a facility permitted by (DENR) to accept such discharge.

3.17.5 HYDROSTATIC PRESSURE TESTING

a. All newly constructed water main shall be pressure tested as discussed below. Mechanical joint fittings, service saddles, and corporation stops shall also be tested. In new developments, water services shall be tested to the curb stop.

b. Upon completion of the water main installation, it shall be hydrostatically tested at a pressure of 120 psi. This pressure shall be maintained for a period of two hours. The test pressure shall not vary by more than +/- 5 psi for the duration of the test. Before applying the specified test pressure, all air shall be expelled from the section of pipe being tested. The Engineer shall observe the pressure gauge readings before acceptance of the test.

REGISTERED PROFESSIONAL ENGINEER
REG. NO.
Mitchell M. Mergen
SOUTH DAKOTA
12/10/15

REVISED 12/15/15

Highway 17
Lennox, South Dakota

General Notes

DESIGNED BY: REK
DRAWN BY: MMM
CHECKED BY: MMM
REVISIONS:
ACAD FILE: GENERAL NOTES
DATE: 11/19/2015
BY: DATE:
BY: DATE:

STOCKWELL ENGINEERS
SIOUX FALLS, SD

SHEET NO.
G15

c. New water main will have an allowable leakage equal to the amount of makeup water that must be supplied to maintain pressure within 5 psi of the specified test pressure. The allowable leakage shall not exceed the values as calculated by the following formulas:

1. DUCTILE IRON PIPE

$$L = \frac{SD\sqrt{P}}{133,200}$$

L = testing allowance (makeup water), in gallons per hour

S = length of pipe tested, in feet

D = nominal diameter of the pipe, in inches

P = average test pressure during the hydrostatic test, in pounds per square inch (gauge)

2. PVC PIPE

$$L = \frac{ND\sqrt{P}}{7400}$$

L = allowable leakage, in gallons per hour

N = number of joints in the length of pipeline tested

D = nominal diameter of the pipe, in inches

P = average test pressure during the leakage test, in pounds per square inch (gauge)

d. Should the test disclose damaged or defective materials or leakage greater than that permitted, the Contractor shall at his own expense locate and repair and/or replace defective materials. The test shall be repeated until the leakage is within the permitted allowance. The Contractor shall furnish all pumping equipment, labor, and gauges required for the pressure test and any added costs for this test shall be included in the unit price bid for water mains.

4.0 METHOD OF MEASUREMENT AND BASIS OF PAYMENT

4.1 REMOVAL OF WATER MAIN PIPE

4.1.1 The removal of water main shall be measured as lineal foot of pipe removed. The removal footage shall be rounded up to the nearest 1-foot increment.

4.1.2 The removal of water main shall be paid for at the contract unit price for each foot of water main removed. Payment for removal of water main pipe shall be full compensation for excavation, removal and disposal of the pipe, removal and disposal of bedding material and all appurtenances necessary for proper removal.

4.2 WATER MAIN BEDDING MATERIAL

4.2.1 The furnishing and installing of water main bedding material shall be incidental to the installation of each type, class, and size of water main furnished and accepted. No additional payment shall be made for water main bedding material.

4.3 TRENCH STABILIZATION MATERIAL

4.3.1 The furnishing and installing of trench stabilization material shall be measured as cubic yards of trench stabilization material to the nearest 0.1 ton. The accepted quantities of furnished and installed trench stabilization material will be paid for at the contract unit price per ton. Payment for trench stabilization material will be full compensation for furnishing and installing the trench stabilization material, excavation, removal and disposal of unstable soils, and all appurtenances necessary for the proper installation of the material.

4.4 WATER MAIN INSULATION

4.4.1 The furnishing and installing of water main insulation shall be incidental to the installation of each type, class, and size of water main pipe furnished and accepted. No additional payment shall be made for water main insulation.

4.5 WATER MAIN

4.5.1 Water main shall be measured by the lineal foot for the respective types, classes, and sizes of pipe. Pipe shall be measured from center to center of fittings or to the end of pipe. The measured length shall be rounded up to the nearest 1-foot increment. The furnishing and installing of water main shall be paid for at the contract unit price per lineal foot for the types, classes, and sizes furnished and accepted. Payment for water main will be full compensation for furnishing and installing the water main pipe, gaskets, tracer wire, trench dewatering (unless otherwise specified), excavating and backfilling, disinfecting and all appurtenances for the proper installation of water main.

4.5.2 No additional payment shall be made for extra depth water main.

4.6 VALVES AND BOXES

4.6.1 Valves and boxes shall be measured as each unit of respective type and size. The furnishing and installing of valves and boxes shall be paid for at the contract unit price per each for type and size furnished and accepted. Payment for valves and boxes will be full compensation for furnishing and installing the valve, box, gaskets, bolts, operator, excavating, backfilling, blocking, dewatering, adjusting, and all appurtenances necessary for proper installation of the valves and boxes.

4.6.2 Furnishing and installing of valve box extensions to raise or lower the valve box to the finished ground surface shall be incidental to each type and size of valve box furnished and accepted. No additional payment shall be made for valve box extensions.

4.7 MECHANICAL JOINT FITTINGS

4.7.1 Mechanical Joint (MJ) Fittings shall be measured as each unit of respective type and size. Fittings include elbows, tees, reducers, crosses, plugs, and sleeves. The furnishing and installing of MJ fittings shall be paid for at the contract unit price per each for the types, classes, and sizes installed and accepted. Payment for MJ fittings will be full compensation for furnishing and installing the MJ fittings, gaskets, trench dewatering (unless otherwise specified), excavating, blocking, backfilling, and all appurtenances for the proper installation of MJ fittings.

4.8 FIRE HYDRANT

4.8.1 Fire hydrants shall be measured as each unit. The furnishing and installing of fire hydrants shall be paid for at the contract unit price per each for type furnished and accepted. Payment for fire hydrants will be full compensation for furnishing and installing the hydrant, gaskets, blocking, excavating, backfilling, and all appurtenances necessary for proper installation of the fire hydrant.

4.9 FIRE HYDRANT EXTENSION

4.9.1 The item for fire hydrant extension shall be measured as a unit for each respective size and type of extension. The fire hydrant extension shall be paid for at the contract unit price per each for the locations, types, and sizes indicated on the project plans and specifications. Payment for fire hydrant extension shall be full compensation for the extension, removal and reinstallation of the top section of the fire hydrant, and all necessary appurtenances for proper completion of the fire hydrant extension.

4.10 TEMPORARY FIRE HYDRANT

4.10.1 Temporary fire hydrants shall be measured as a unit for each respective hydrant required. The temporary fire hydrant shall be paid for at the contract unit price per each for the locations, types, and sizes indicated on the project plans and specifications. Payment for temporary fire hydrant shall be full compensation for the temporary fire hydrant, excavation, gaskets, connection, subsequent removal, backfilling, and all necessary appurtenances for proper completion of the temporary fire hydrant.

4.11 CONNECT TO EXISTING WATER MAIN

4.11.1 Connect to existing water main shall be measured as each unit connection. The connection to existing water main shall be paid for at the contract unit price per each for the connection to existing water mains for the purpose of extending an existing water main. Payment for connection to existing water main shall be full compensation for excavating, backfilling, dewatering of the water main and trench, removing the plug or hydrant, and all necessary appurtenances for proper completion of the connection to existing water main.

FOR BIDDING PURPOSES ONLY

4.12 CUT AND TIE TO EXISTING WATER MAIN

4.12.1 Cut and tie to existing water main shall be measured as a unit for each respective connection made. Payment for cut and tie to existing water main shall be at the contract unit price per each for cutting and tying to existing water main. Payment for cutting and tying to existing water main shall be paid for at the contract unit price per each for the locations indicated on the project plans and specifications. Payment for cutting and tying to existing water main shall be full compensation for excavating, backfilling, dewatering of water main and trench, cutting water main, tying to water main, and all necessary appurtenances for proper completion of the cutting and tying work item. Note: All materials required for the connection to the existing water main shall be paid for separately under their respective bid items.

4.13 WATER SERVICE

4.13.1 Water service shall be measured by each unit of respective size and type. The water service bid item shall be paid for at the contract unit price per each.

4.13.2 Payment for water service shall be paid for at the contract unit price per each at the locations indicated on the project plans and specifications. Payment for water service shall be full compensation for materials and installation including excavating, backfilling, and all necessary appurtenances for proper completion of the water service.

4.14 WATER SERVICE RECONNECT

4.14.1 Water service reconnect shall be measured by each unit of respective size and type. The water service reconnect shall be paid for at the contract unit price per each. Payment for water service reconnect shall be paid for at the contract unit price per each at the locations indicated on the project plans and specifications. Payment for water service reconnect shall be full compensation for all materials and labor including excavating, backfilling, and all necessary appurtenances for proper completion of the water service reconnection.

4.15 RESTRAINER DEVICES

Furnishing and installing restrainer devices shall incidental for the types, classes, and sizes installed in accordance with the specifications, and accepted. Payment for restrainer devices shall be included in installation of bends, oversize sleeves, valves, caps, tees, reducers, and all necessary appurtenances for proper completion of restrain device furnish and installation.

4.16 VALVE BOX MARKER

4.16.1 Valve box markers shall be incidental to installation of value box. Payment for valve box markers will be included installing the valve box and all necessary appurtenances for the proper installation of the valve box markers.

REGISTERED PROFESSIONAL ENGINEER
REG. NO. 9237
Mitchell M. Mergen
SOUTH DAKOTA
12/16/15

REVISED 12/21/2015

Highway 17
Lennox, South Dakota

General Notes

DESIGNED BY: REK
DRAWN BY: MMM
CHECKED BY: MMM
REVISIONS:
ACAD FILE: GENERAL NOTES
DATE: 11/19/2015
BY: DATE:
BY: DATE:

STOCKWELL ENGINEERS
SIOUX FALLS, SD

SHEET NO.
G16

FOR BIDDING PURPOSES ONLY

4.17 BORE AND JACK PIPE

4.17.1 The work under bid item “Bore and Jack 16” Pipe” shall include all materials, equipment, labor and other incidentals for excavation boring for installation of encasement pipe. The work under the bid item “16” Steel Encasement Pipe” shall include all materials, equipment, labor, and other incidentals for the encasement pipe and the installation of end seals at the locations as shown on the plans. Measurement will be based on the lineal feet of Encasement Pipe installed and payment will be based on the applicable unit price bid respectively for “Bore and Jack 16” Pipe” and “16” Steel Encasement Pipe”. The cost of jacking pits shall be incidental to the unit price bid for “Bore and Jack 16” Pipe”. The carrier pipe will be paid for under the bid item “8” PVC Water Main” and will include all materials, equipment, labor and other incidentals to properly install according to the detail included in the plans.

4.18 LOCATING UTILITY

4.18.1 This work consists of excavating material to locate and verify the depth of an existing utility line, (Private or Public), when the utility owner cannot find said line, or utility line is not within four (4) feet either side of markings established by the utility owner. Payment for this item will be at the contract unit price per each.

4.18.2 After verification, the Contractor shall coordinate information with the Engineer.

REGISTERED PROFESSIONAL ENGINEER
REG. NO. 11503
Mitchell M. Mergen
SOUTH DAKOTA
12/14/15

Highway 17
Lennox, South Dakota

REVISED 12/15/15

General Notes

DESIGNED BY: REK
DRAWN BY: MMM
CHECKED BY: MMM
REVISIONS:

ACAD FILE: GENERAL NOTES
DATE: 11/19/2015
BY: DATE:
BY: DATE:

STOCKWELL ENGINEERS
SIOUX FALLS, SD

SHEET NO.
G17

Standard Specifications for Storm Sewer Construction

FOR BIDDING PURPOSES ONLY

1.0 GENERAL

1.1 SCOPE OF WORK

1.1.1 The Contractor shall furnish all the necessary labor, materials, equipment, tools and supplies that are necessary to install a complete storm sewer system, as shown on the plans and/or called for in these specifications or its addenda. It is the intent of these specifications to install a complete system or job.

1.2 PAYMENT

1.2.1 Payment to the Contractor shall be made in accordance with the General Conditions.

1.3 ACCEPTANCE

1.3.1 Acceptance of the work shall be in accordance with the General Conditions.

1.4 REFERENCES

1.4.1 South Dakota Department of Transportation Standard Specifications for Road and Bridges

1.4.2 American Society of Testing Materials, ASTM

1.5 MATERIALS, CONSTRUCTION REQUIREMENTS & METHOD OF MEASUREMENT AND BASIS OF PAYMENT

1.5.1 Materials, construction requirements, and methods of measurement and basis for payment shall meet the requirements in the most recent version of the South Dakota Department of Transportation Standard Specifications for Roads and Bridges.

REGISTERED PROFESSIONAL ENGINEER
REG. NO. 9237
Mitchell M. Mergen
SOUTH DAKOTA
12/14/15

REVISED 12/15/15

Highway 17
Lennox, South Dakota

General Notes

DESIGNED BY: REK
DRAWN BY: MMM
CHECKED BY: MMM
REVISIONS:
ACAD FILE: GENERAL NOTES
DATE: 11/19/2015
BY: DATE:
BY: DATE:

STOCKWELL ENGINEERS
SIOUX FALLS, SD

SHEET NO.
G18

Standard Specifications for Warranty for Construction

FOR BIDDING PURPOSES ONLY

1.0 TERM OF WARRANTY

1.1 UTILITY CONSTRUCTION ACTIVITY

1.1.1 The warranty shall cover the contract as to workmanship and materials for a period of two (2) years for the following utility construction:

a. Storm sewer.

b. Sanitary sewer.

c. Water main.

1.1.2 The Contractor shall maintain all trenches and backfill any settlement and provide and place any necessary base and/or surfacing needed due to trench settlement for the maintenance period, which shall run for two (2) years after the completion and acceptance of the system. The Contractor shall repair and/or replace all defective workmanship and materials, and correct all deficiencies noted in the system in a method approved by the Engineer.

REGISTERED PROFESSIONAL ENGINEER
REG. NO. 8287
Mitchell M. Mergen
SOUTH DAKOTA
12/16/15

REVISED 12/15/15

Highway 17
Lennox, South Dakota

General Notes

DESIGNED BY: REK
DRAWN BY: MMM
CHECKED BY: MMM
REVISIONS:

ACAD FILE: GENERAL NOTES
DATE: 9/25/2015
BY: DATE:
BY: DATE:

STOCKWELL ENGINEERS
SIOUX FALLS, SD

SHEET NO.
G19

FOR BIDDING PURPOSES ONLY

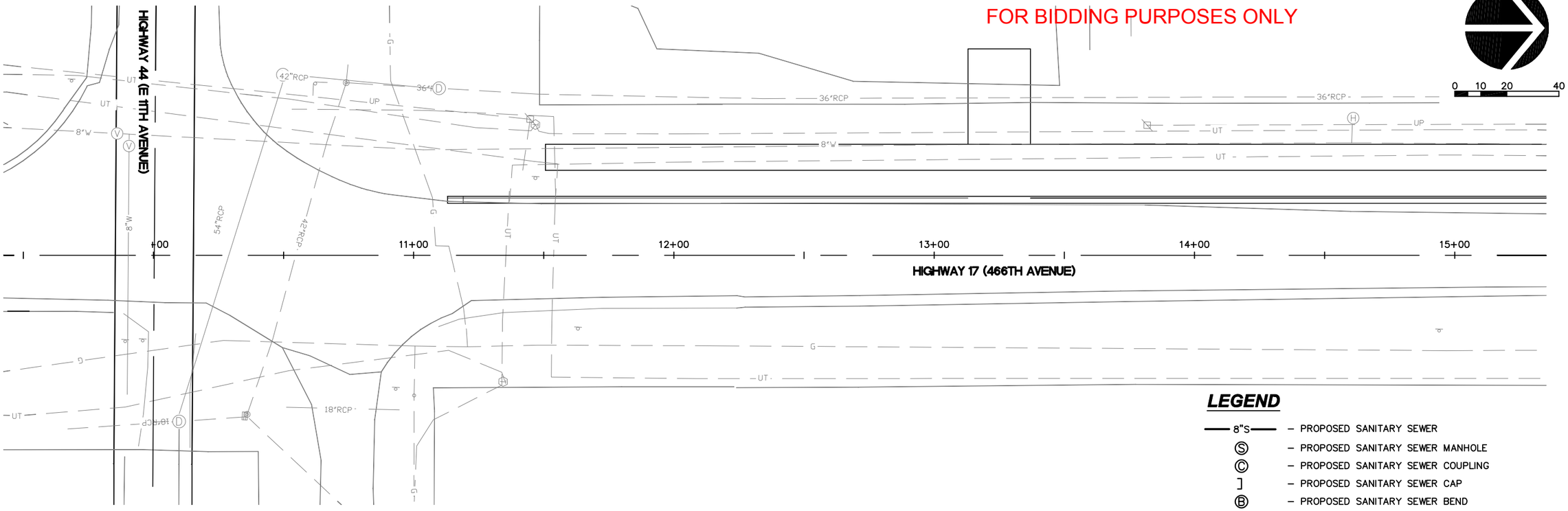

LEGEND

—— 8"S ——	– PROPOSED SANITARY SEWER
Ⓢ	– PROPOSED SANITARY SEWER MANHOLE
Ⓒ	– PROPOSED SANITARY SEWER COUPLING
]	– PROPOSED SANITARY SEWER CAP
Ⓑ	– PROPOSED SANITARY SEWER BEND

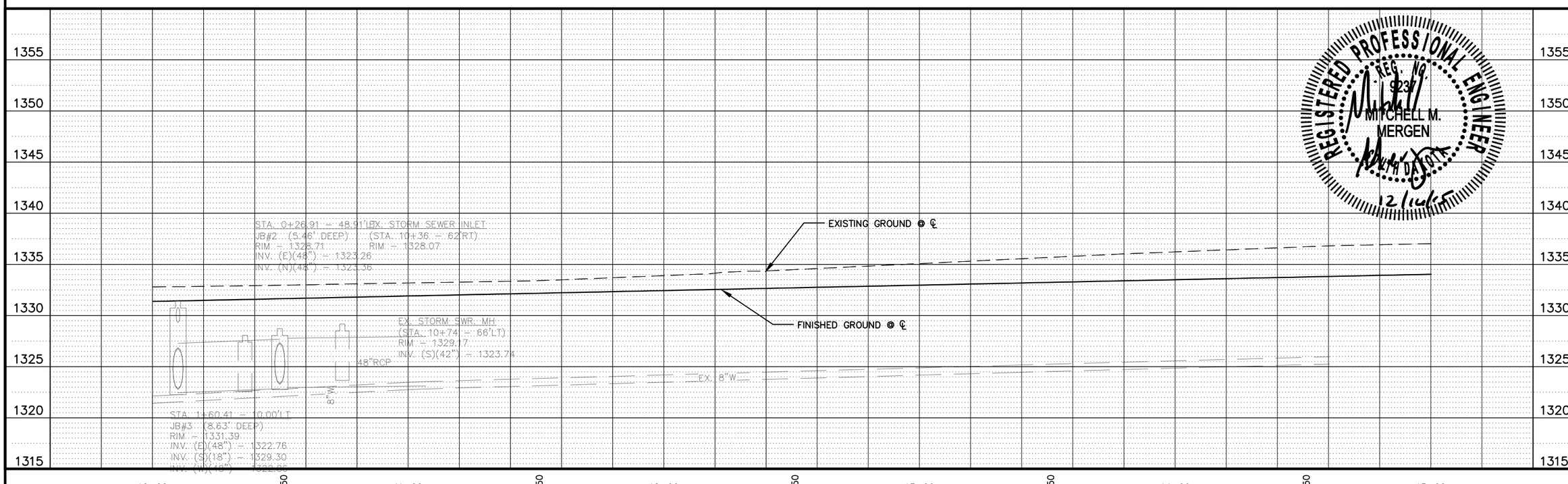

REGISTERED PROFESSIONAL ENGINEER
REG. NO. 9237
MITCHELL M. MERGEN
SOUTH DAKOTA
12/14/15

HIGHWAY 17

LENNOX, SOUTH DAKOTA

REVISED 12/15/15

SANITARY SEWER PLANS

DESIGNED BY: JRB
DRAWN BY: BAB ACAD FILE: 10214 – Sanitary.dwg DATE: 11/19/2015
CHECKED BY: (CHK) BY: DATE:
REVISIONS: BY: DATE:

STOCKWELL ENGINEERS
SIOUX FALLS, SD

SHEET NO.
G20

FOR BIDDING PURPOSES ONLY

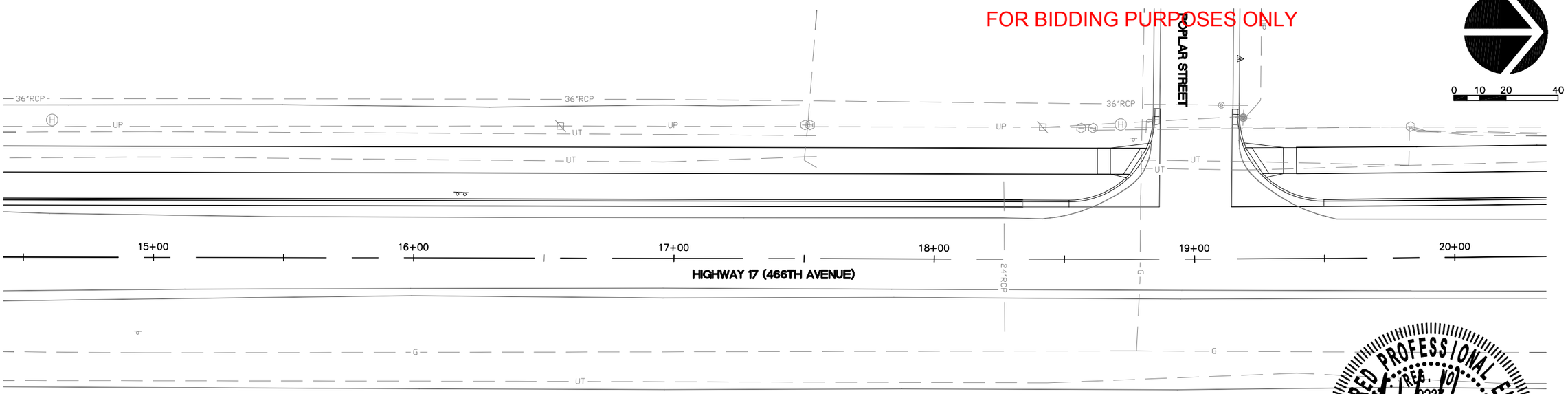

LEGEND

—— 8"S ——	– PROPOSED SANITARY SEWER
Ⓢ	– PROPOSED SANITARY SEWER MANHOLE
Ⓒ	– PROPOSED SANITARY SEWER COUPLING
]	– PROPOSED SANITARY SEWER CAP
Ⓑ	– PROPOSED SANITARY SEWER BEND

REGISTERED PROFESSIONAL ENGINEER
REG. NO. 9237
MITCHELL M. MERGEN
SOUTH DAKOTA
12/16/15

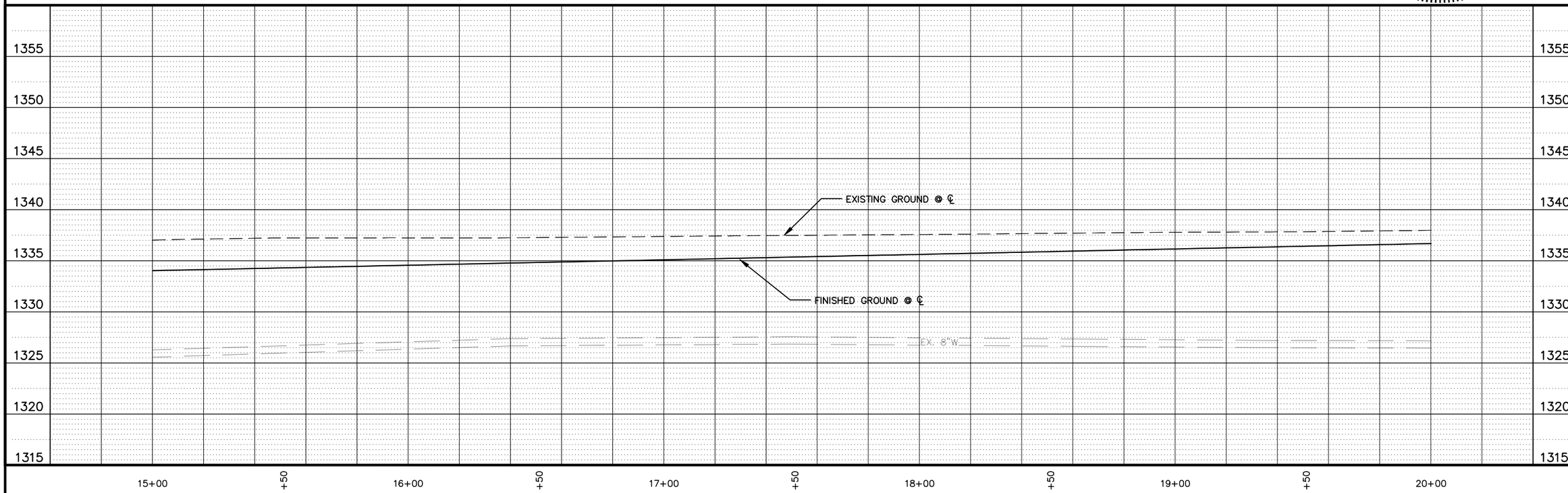

REVISED 12/15/15

HIGHWAY 17

LENNOX, SOUTH DAKOTA

SANITARY SEWER PLANS

DESIGNED BY: JRB
DRAWN BY: BAB
CHECKED BY: (CHK)
REVISIONS:

ACAD FILE: 10214 – Sanitary.dwg
DATE: 11/19/2015
BY: DATE:
BY: DATE:

STOCKWELL ENGINEERS
SIOUX FALLS, SD

SHEET NO.
G21

FOR BIDDING PURPOSES ONLY

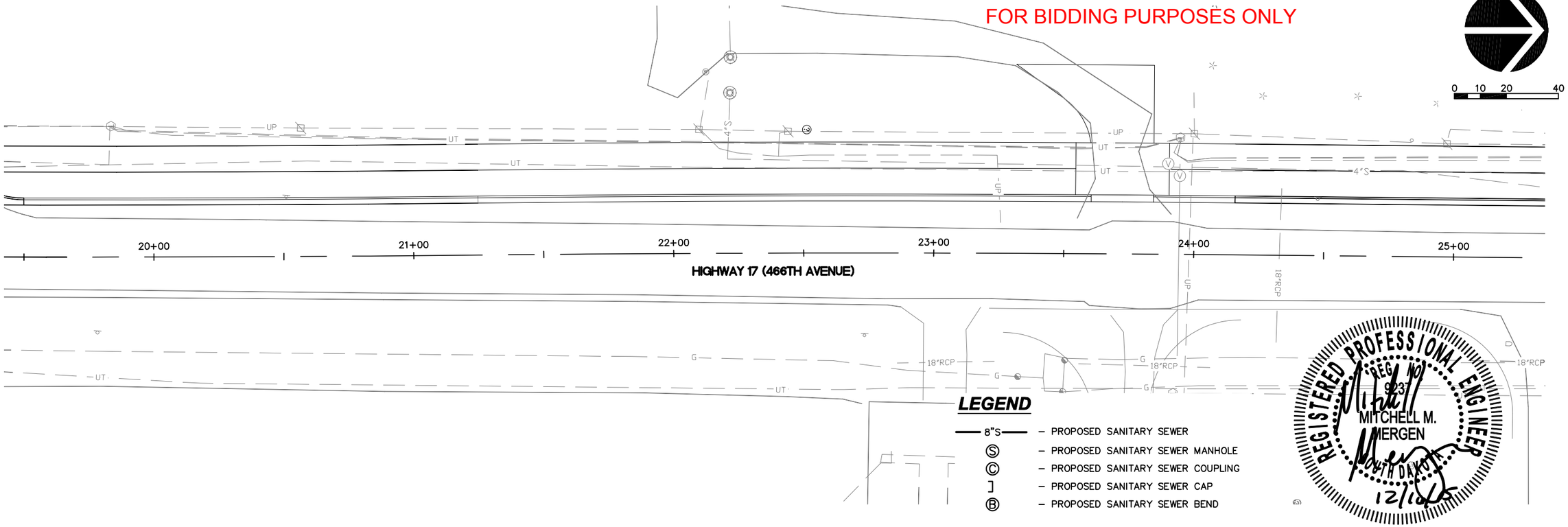

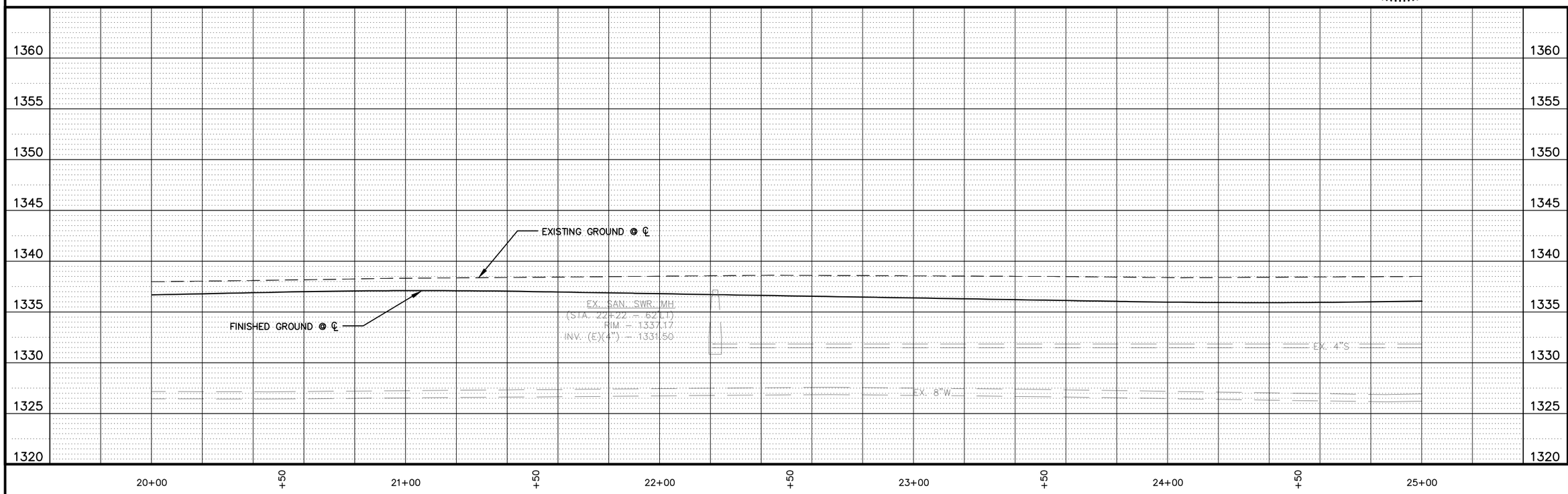

HIGHWAY 17

LENNOX, SOUTH DAKOTA

REVISED 12/15/15

SANITARY SEWER PLANS

DESIGNED BY: JRB
DRAWN BY: BAB ACAD FILE: 10214 – Sanitary.dwg DATE: 11/19/2015
CHECKED BY: (CHK) BY: DATE:
REVISIONS: BY: DATE:

STOCKWELL ENGINEERS
SIOUX FALLS, SD

SHEET NO.
G22

FOR BIDDING PURPOSES ONLY

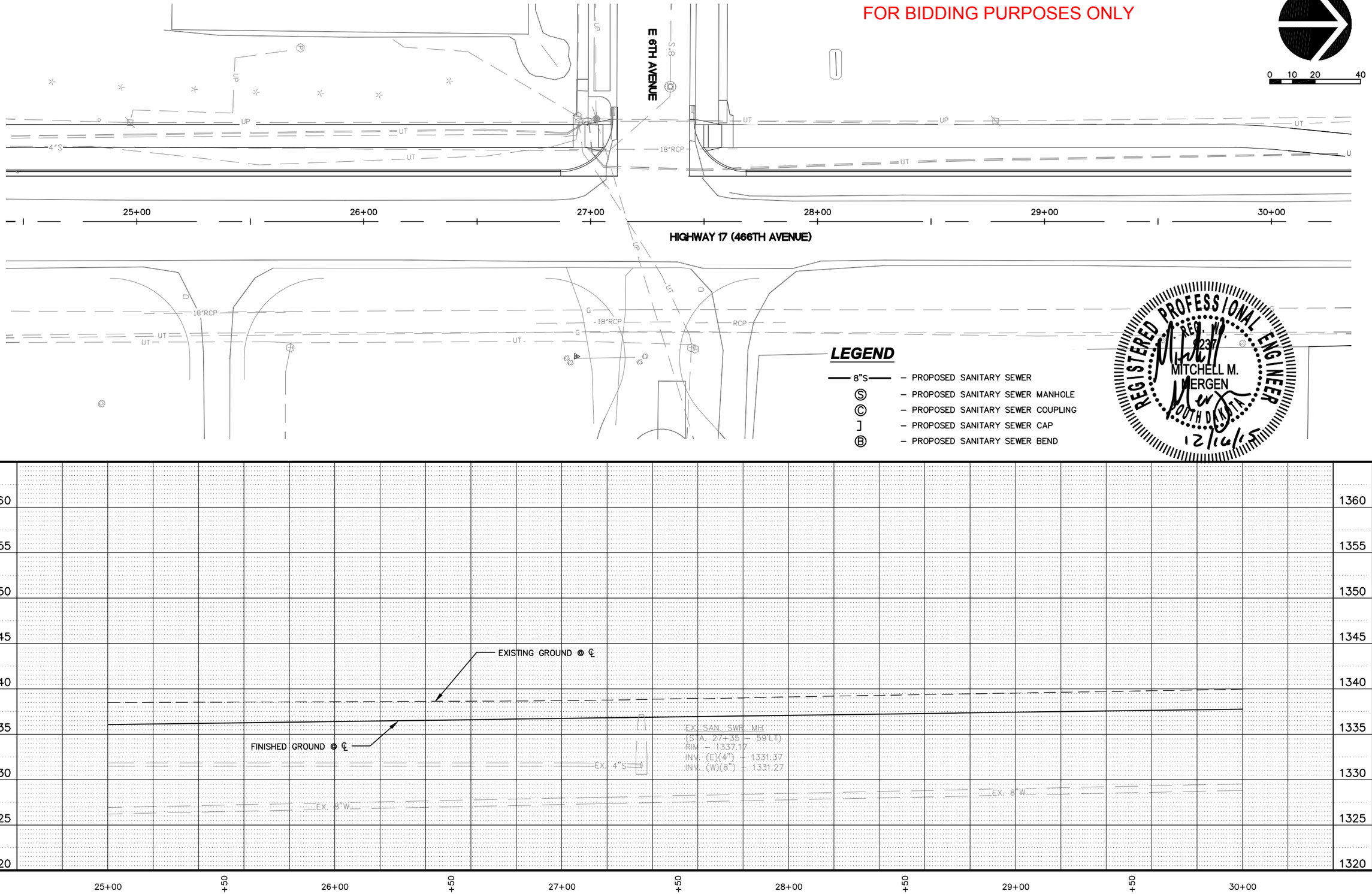

REGISTERED PROFESSIONAL ENGINEER
REG. NO. 8237
MITCHELL M. MERGEN
SOUTH DAKOTA
12/16/15

HIGHWAY 17

LENNOX, SOUTH DAKOTA

REVISED 12/15/15

SANITARY SEWER PLANS

DESIGNED BY: JRB
DRAWN BY: BAB ACAD FILE: 10214 – Sanitary.dwg DATE: 11/19/2015
CHECKED BY: (CHK) BY: DATE:
REVISIONS: BY: DATE:

STOCKWELL ENGINEERS
SIOUX FALLS, SD

SHEET NO.
G23

FOR BIDDING PURPOSES ONLY

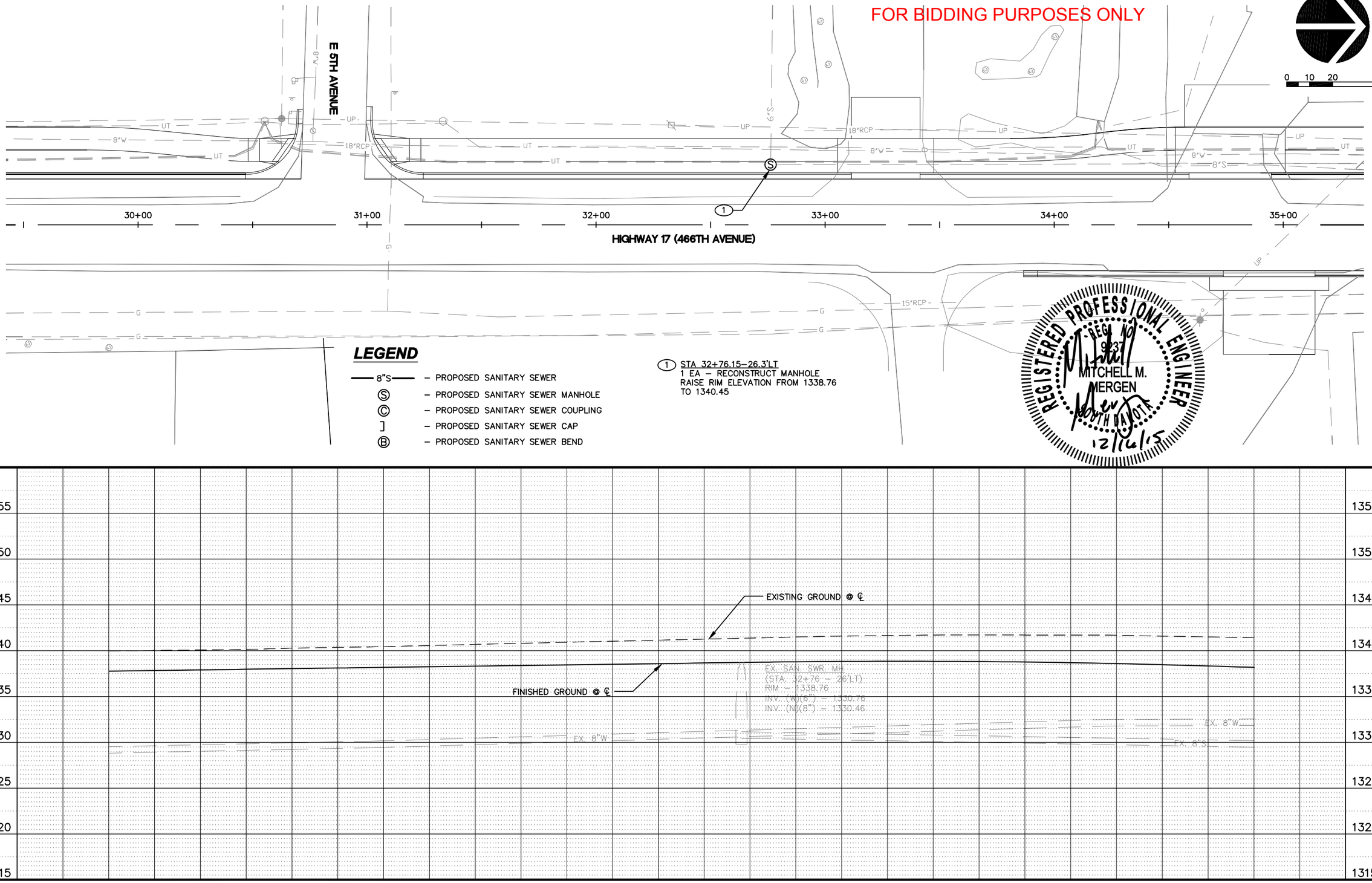

LEGEND

—— 8"S ——	– PROPOSED SANITARY SEWER
Ⓢ	– PROPOSED SANITARY SEWER MANHOLE
Ⓒ	– PROPOSED SANITARY SEWER COUPLING
]	– PROPOSED SANITARY SEWER CAP
Ⓑ	– PROPOSED SANITARY SEWER BEND

(1) STA 32+76.15–26.3'LT
1 EA – RECONSTRUCT MANHOLE
RAISE RIM ELEVATION FROM 1338.76
TO 1340.45

REGISTERED PROFESSIONAL ENGINEER
REG. NO. 9237
MITCHELL M. MERGEN
SOUTH DAKOTA
12/16/15

HIGHWAY 17

LENNOX, SOUTH DAKOTA

REVISED 12/15/15

SANITARY SEWER PLANS

DESIGNED BY: JRB
DRAWN BY: BAB
CHECKED BY: (CHK)
REVISIONS:

ACAD FILE: 10214 – Sanitary.dwg
DATE: 11/19/2015
BY: DATE:
BY: DATE:

STOCKWELL ENGINEERS
SIOUX FALLS, SD

SHEET NO.
G24

FOR BIDDING PURPOSES ONLY

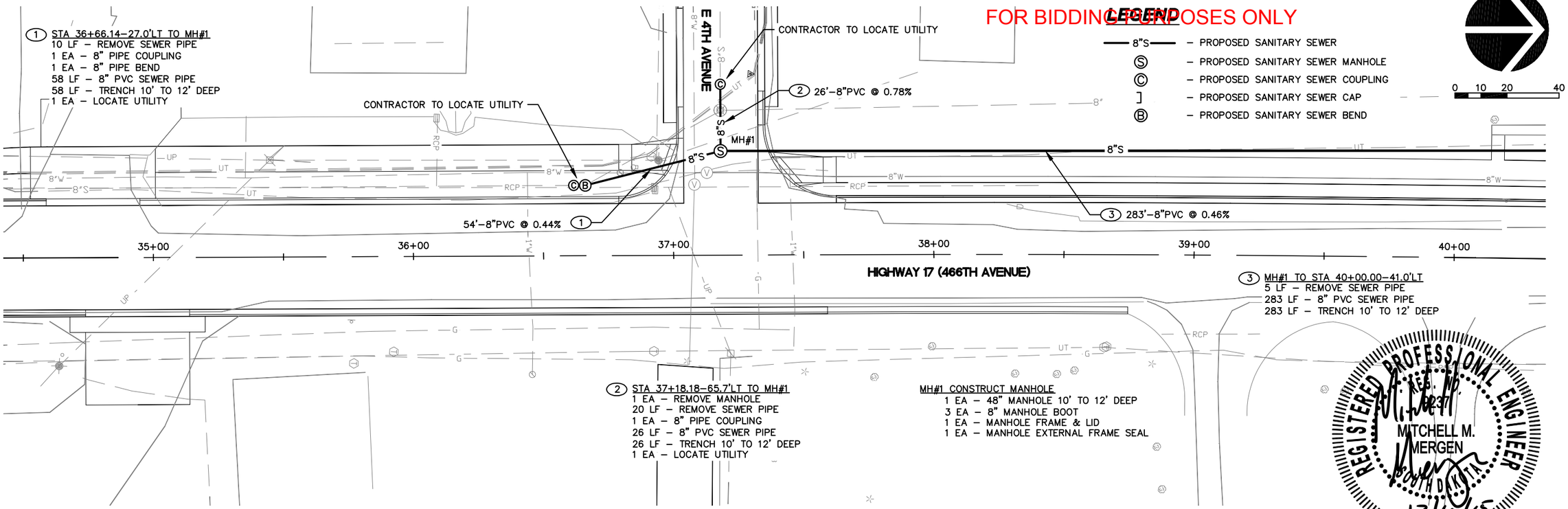

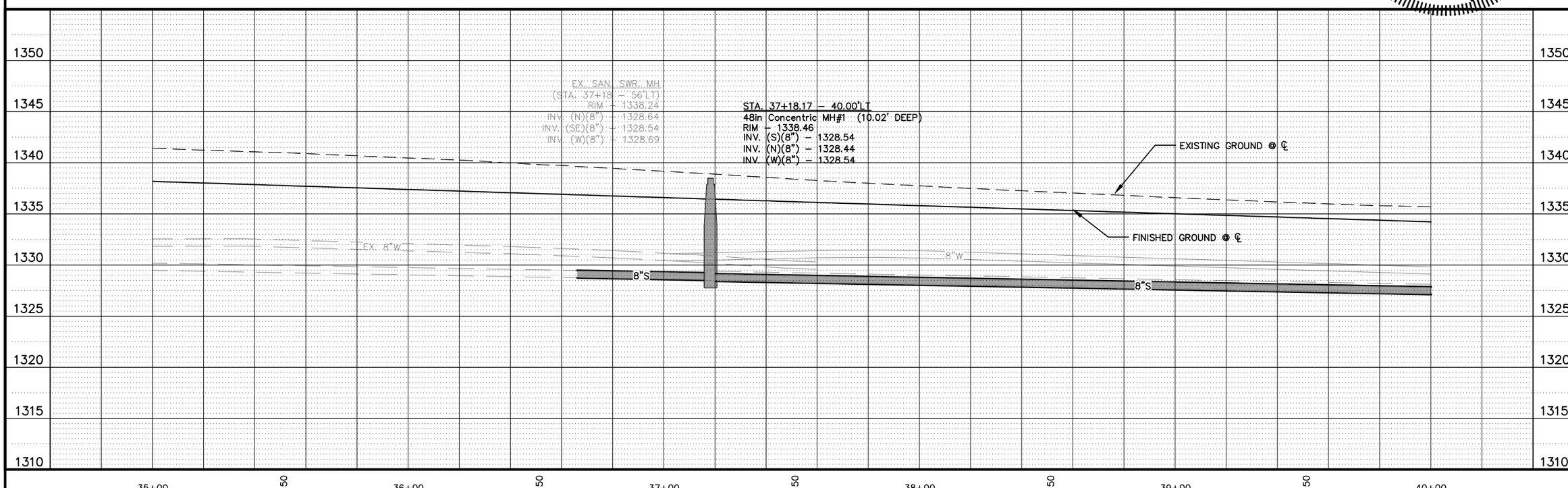

HIGHWAY 17

LENNOX, SOUTH DAKOTA

REVISED 12/15/15

SANITARY SEWER PLANS

DESIGNED BY: JRB
DRAWN BY: BAB ACAD FILE: 10214 – Sanitary.dwg DATE: 11/19/2015
CHECKED BY: (CHK) BY: DATE:
REVISIONS: BY: DATE:

STOCKWELL ENGINEERS
SIOUX FALLS, SD

SHEET NO.

G25

FOR BIDDING PURPOSES ONLY

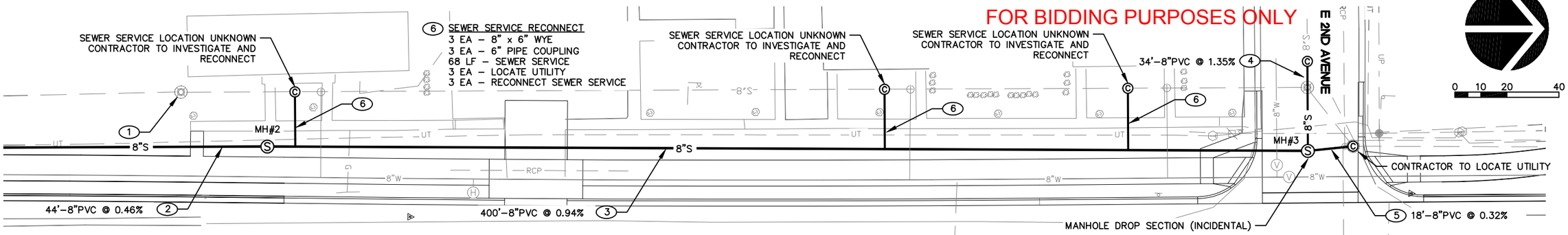

1 STA 40+09.98–62.2'LT
1 EA – ABANDON MANHOLE

2 STA 40+00.00–41.0'LT TO MH#2
44 LF – 8" PVC SEWER PIPE
44 LF – TRENCH 8' TO 10' DEEP

MH#2 CONSTRUCT MANHOLE
1 EA – 48" MANHOLE 8' TO 10' DEEP
2 EA – 8" MANHOLE BOOT
1 EA – MANHOLE FRAME & LID
1 EA – MANHOLE EXTERNAL FRAME SEAL
1 EA – TYPE 2 OBJECT MARKER

3 MH#2 TO MH#3
400 LF – 8" PVC SEWER PIPE
400 LF – TRENCH 10' TO 12' DEEP

4 STA 44+44.17–74.4'LT TO MH#3
1 EA – REMOVE MANHOLE
29 LF – REMOVE SEWER PIPE
1 EA – 8" PIPE COUPLING
34 LF – 8" PVC SEWER PIPE
34 LF – TRENCH 8' TO 10' DEEP
1 EA – LOCATE UTILITY

5 MH#3 TO STA 44+61.50–41.7'LT
1 EA – REMOVE MANHOLE
10 LF – REMOVE SEWER PIPE
1 EA – 8" PIPE COUPLING
18 LF – 8" PVC SEWER PIPE
18 LF – TRENCH 14' TO 16' DEEP
1 EA – LOCATE UTILITY

MH#3 CONSTRUCT MANHOLE
1 EA – 48" MANHOLE 14' TO 16' DEEP
3 EA – 8" MANHOLE BOOT
1 EA – MANHOLE FRAME & LID
1 EA – MANHOLE EXTERNAL FRAME SEAL

REGISTERED PROFESSIONAL ENGINEER
REG. NO. 9337
MITCHELL M. MERGEN
SOUTH DAKOTA
12/14/15

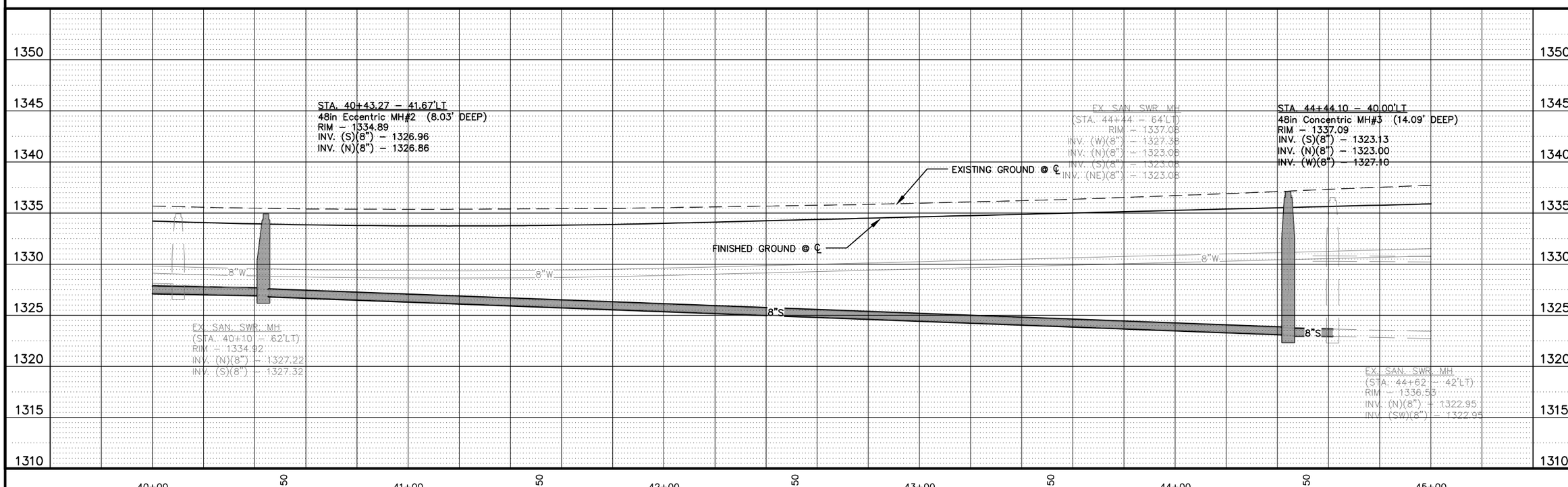

HIGHWAY 17
LENNOX, SOUTH DAKOTA
REVISED 12/15/15

SANITARY SEWER PLANS

DESIGNED BY: JRB
DRAWN BY: BAB ACAD FILE: 10214 – Sanitary.dwg DATE: 11/19/2015
CHECKED BY: (CHK) BY: DATE:
REVISIONS: BY: DATE:

STOCKWELL ENGINEERS
SIOUX FALLS, SD

SHEET NO.
G26

FOR BIDDING PURPOSES ONLY

REVISED 12/15/15

LEGEND

- 8"S — PROPOSED SANITARY SEWER
- (S) — PROPOSED SANITARY SEWER MANHOLE
- (C) — PROPOSED SANITARY SEWER COUPLING
-] — PROPOSED SANITARY SEWER CAP
- (B) — PROPOSED SANITARY SEWER BEND

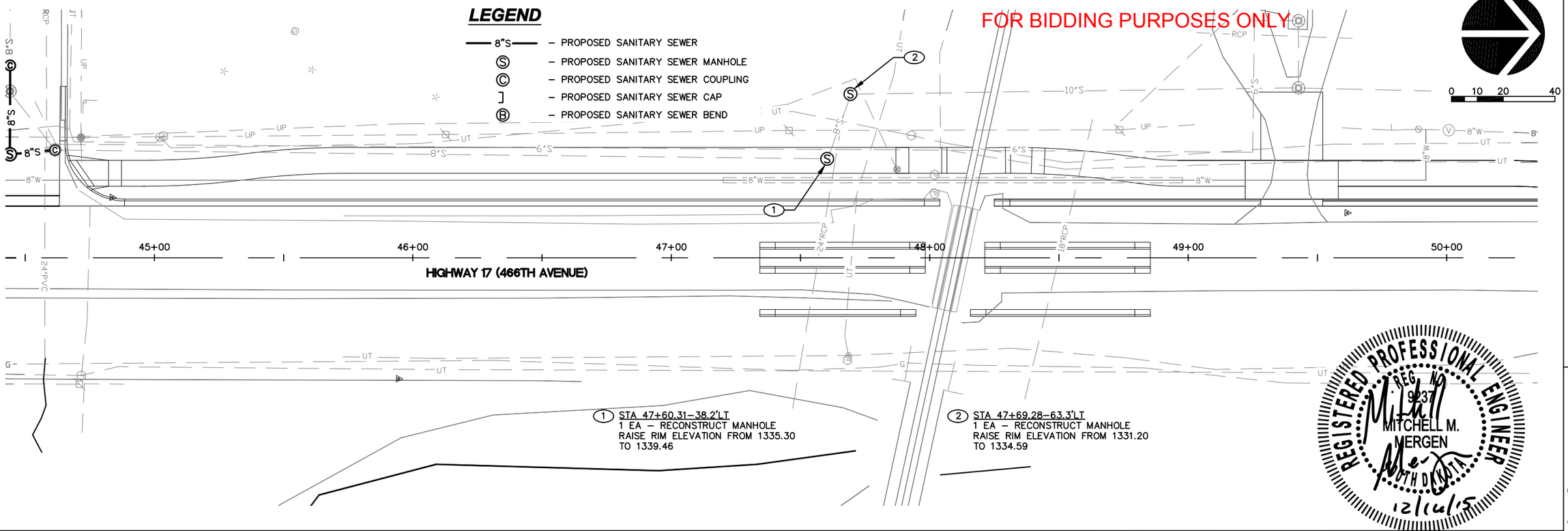

1 STA 47+60.31–38.2'LT
1 EA – RECONSTRUCT MANHOLE
RAISE RIM ELEVATION FROM 1335.30
TO 1339.46

2 STA 47+69.28–63.3'LT
1 EA – RECONSTRUCT MANHOLE
RAISE RIM ELEVATION FROM 1331.20
TO 1334.59

REGISTERED PROFESSIONAL ENGINEER
REG. NO. 9237
MITCHELL M. MERGEN
SOUTH DAKOTA
12/14/15

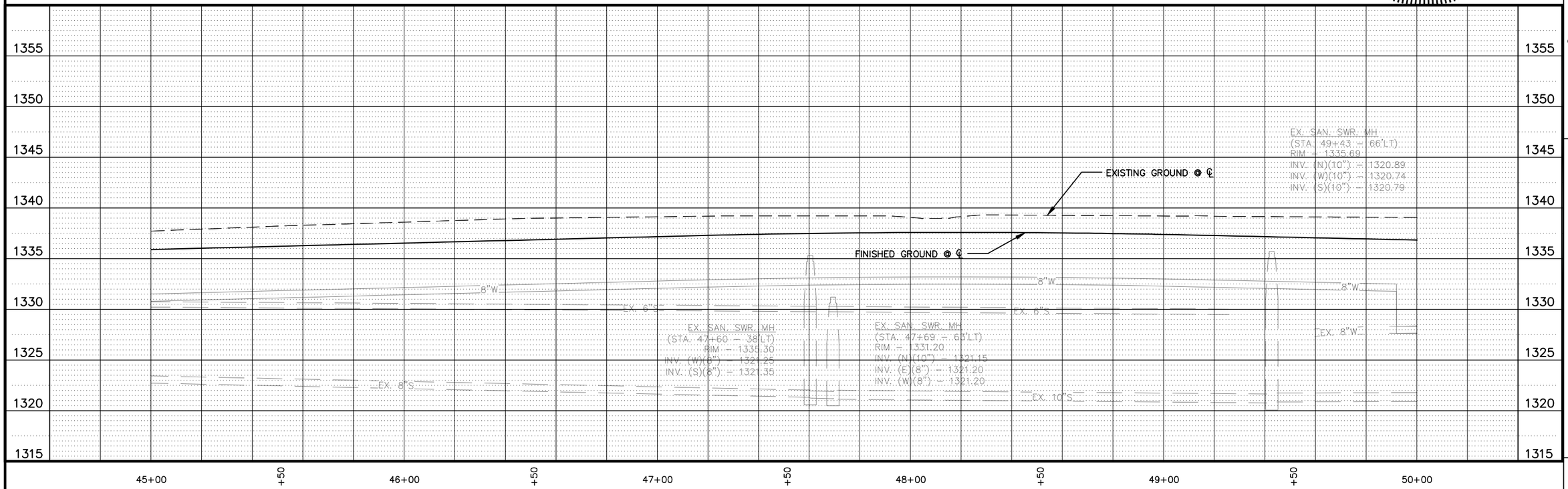

HIGHWAY 17

LENNOX, SOUTH DAKOTA

SANITARY SEWER PLANS

DESIGNED BY: JRB
DRAWN BY: BAB
CHECKED BY: (CHK)
REVISIONS:

ACAD FILE: 10214 – Sanitary.dwg
DATE: 11/19/2015
BY: DATE:
BY: DATE:

STOCKWELL ENGINEERS
SIOUX FALLS, SD

SHEET NO.
G27

FOR BIDDING PURPOSES ONLY

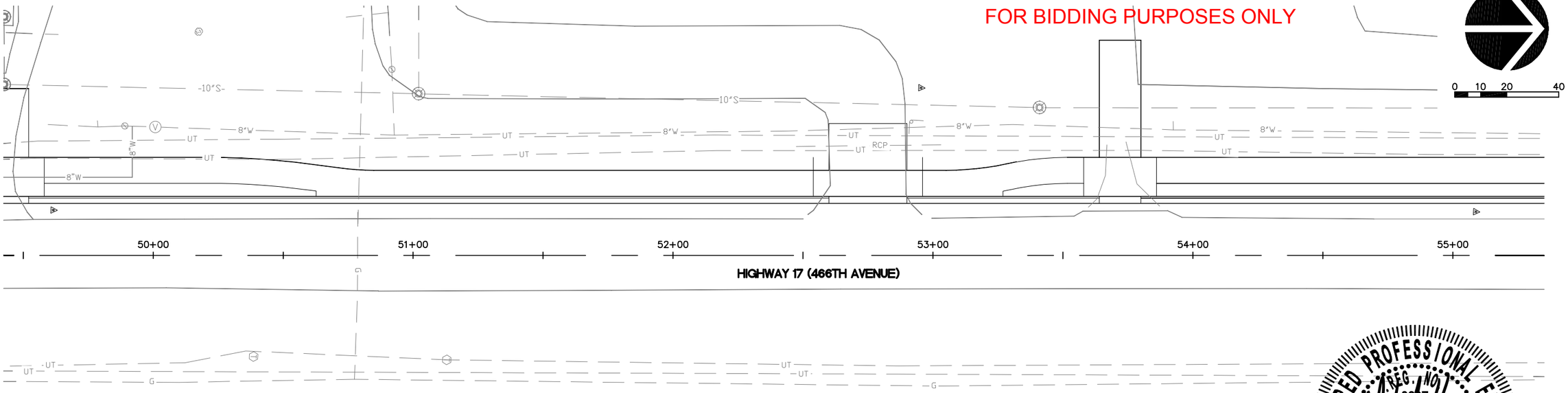

LEGEND

—— 8"S ——	– PROPOSED SANITARY SEWER
Ⓢ	– PROPOSED SANITARY SEWER MANHOLE
Ⓒ	– PROPOSED SANITARY SEWER COUPLING
]	– PROPOSED SANITARY SEWER CAP
Ⓑ	– PROPOSED SANITARY SEWER BEND

REGISTERED PROFESSIONAL ENGINEER
REG. NO. 9267
MITCHELL M. MERGEN
SOUTH DAKOTA
12/16/15

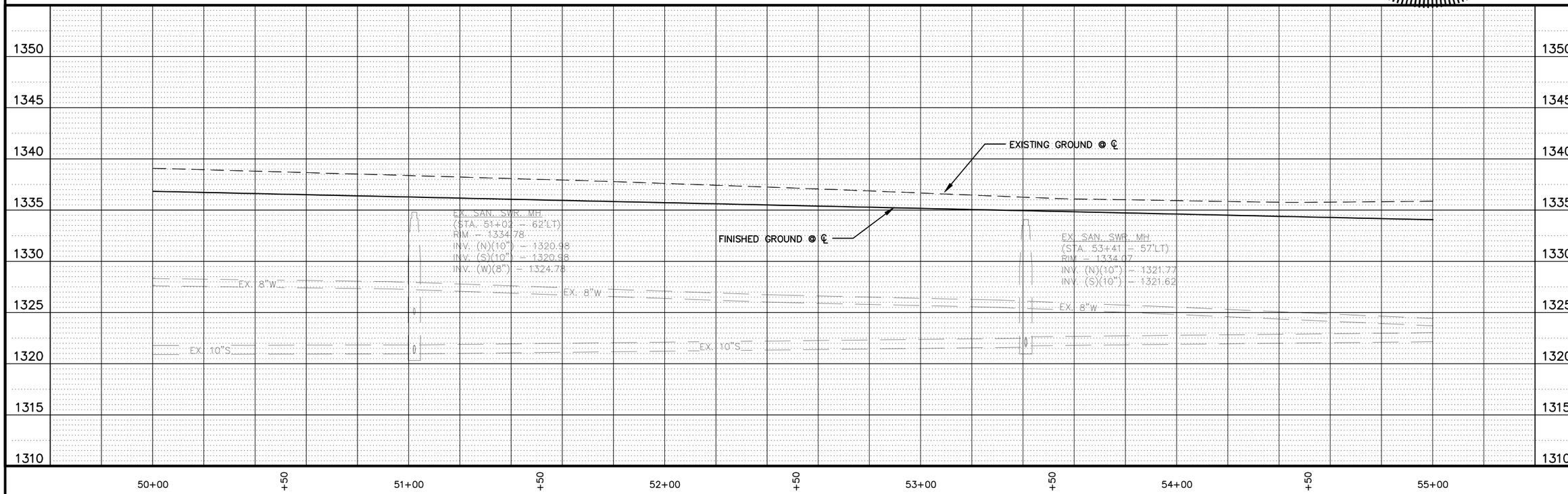

HIGHWAY 17

LENNOX, SOUTH DAKOTA

REVISED 12/15/15

SANITARY SEWER PLANS

DESIGNED BY: JRB
DRAWN BY: BAB
CHECKED BY: (CHK)
REVISIONS:

ACAD FILE: 10214 – Sanitary.dwg
DATE: 11/19/2015
BY: DATE:
BY: DATE:

STOCKWELL ENGINEERS
SIOUX FALLS, SD

SHEET NO.
G28

FOR BIDDING PURPOSES ONLY

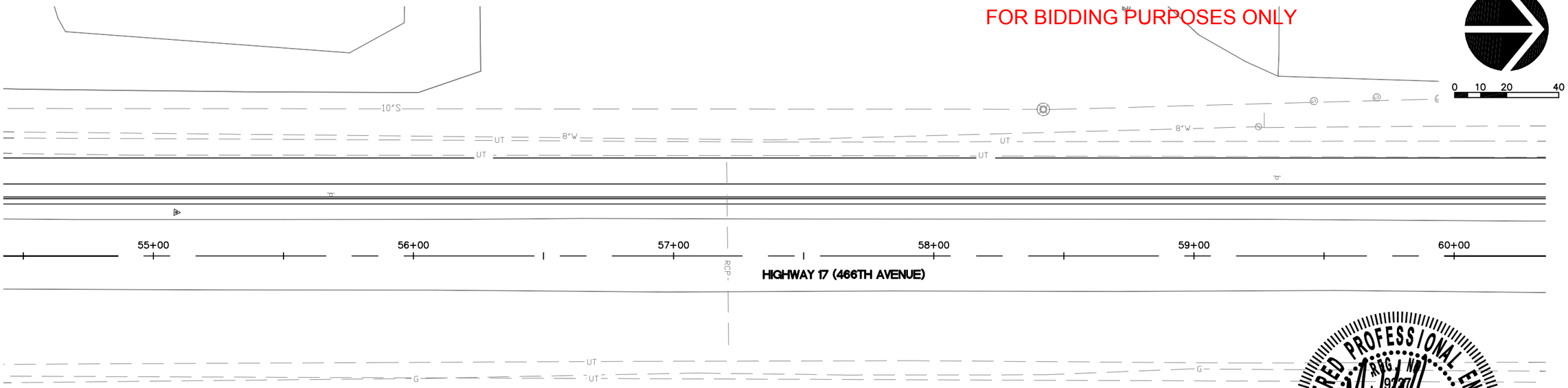

LEGEND

—— 8"S ——	– PROPOSED SANITARY SEWER
Ⓢ	– PROPOSED SANITARY SEWER MANHOLE
Ⓒ	– PROPOSED SANITARY SEWER COUPLING
]	– PROPOSED SANITARY SEWER CAP
Ⓑ	– PROPOSED SANITARY SEWER BEND

REGISTERED PROFESSIONAL ENGINEER
REG. NO. 9777
MITCHELL M. MERGEN
SOUTH DAKOTA
12/14/15

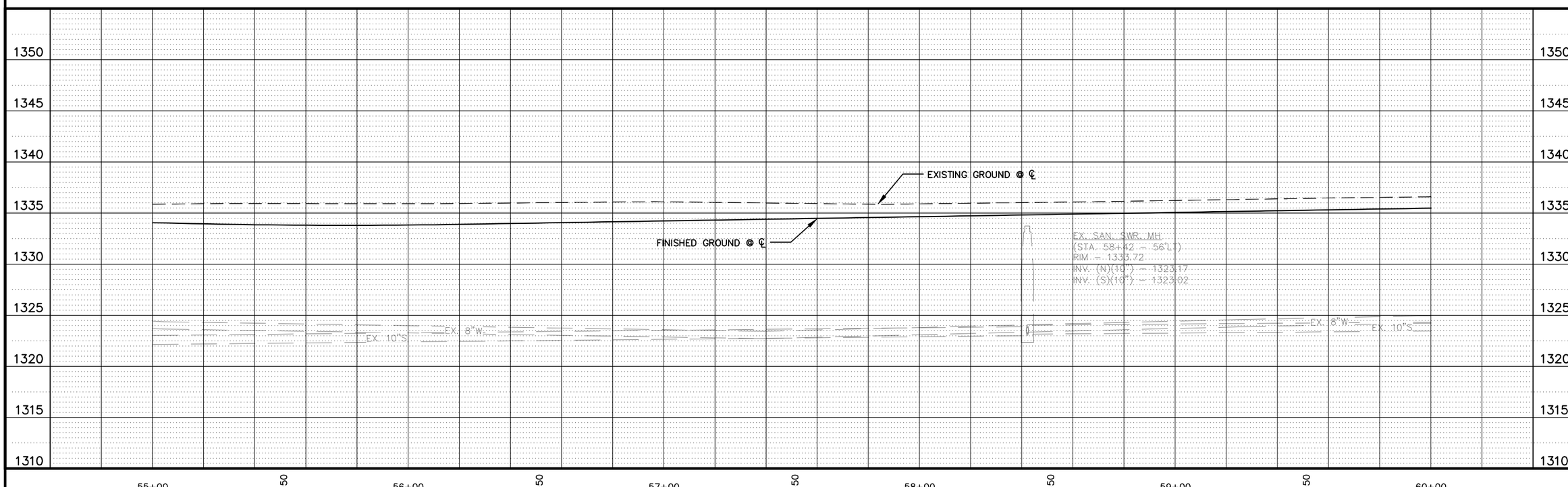

HIGHWAY 17

LENNOX, SOUTH DAKOTA

REVISED 12/15/15

SANITARY SEWER PLANS

DESIGNED BY: JRB
DRAWN BY: BAB ACAD FILE: 10214 – Sanitary.dwg DATE: 11/19/2015
CHECKED BY: (CHK) BY: DATE:
REVISIONS: BY: DATE:

STOCKWELL ENGINEERS
SIOUX FALLS, SD

SHEET NO.
G29

FOR BIDDING PURPOSES ONLY

REVISED 12/15/15

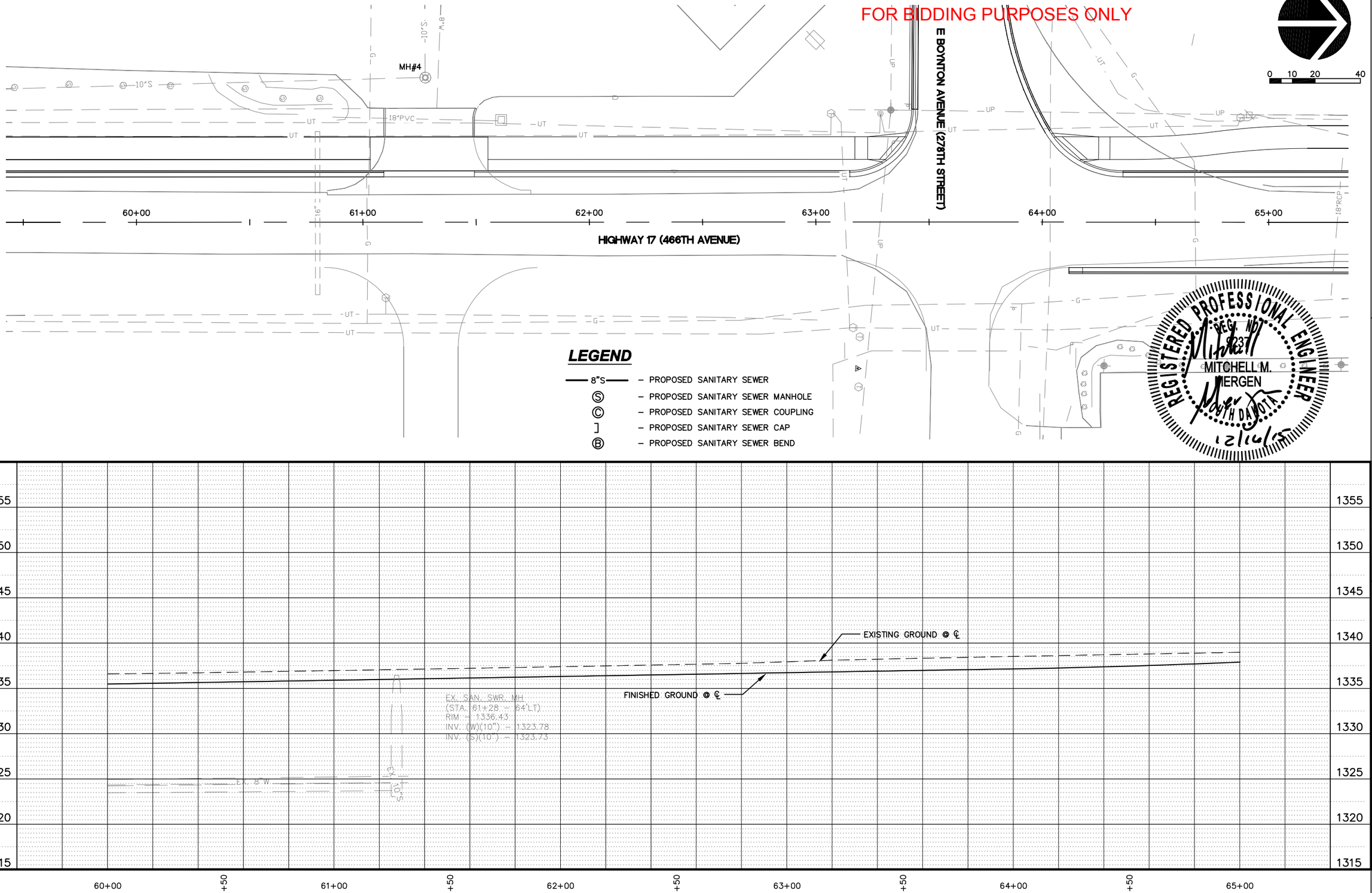

HIGHWAY 17

LENNOX, SOUTH DAKOTA

SANITARY SEWER PLANS

DESIGNED BY: JRB
DRAWN BY: BAB
CHECKED BY: (CHK)
REVISIONS:

ACAD FILE: 10214 – Sanitary.dwg
DATE: 11/19/2015
BY: DATE:
BY: DATE:

STOCKWELL ENGINEERS
SIOUX FALLS, SD

SHEET NO.
G30

FOR BIDDING PURPOSES ONLY

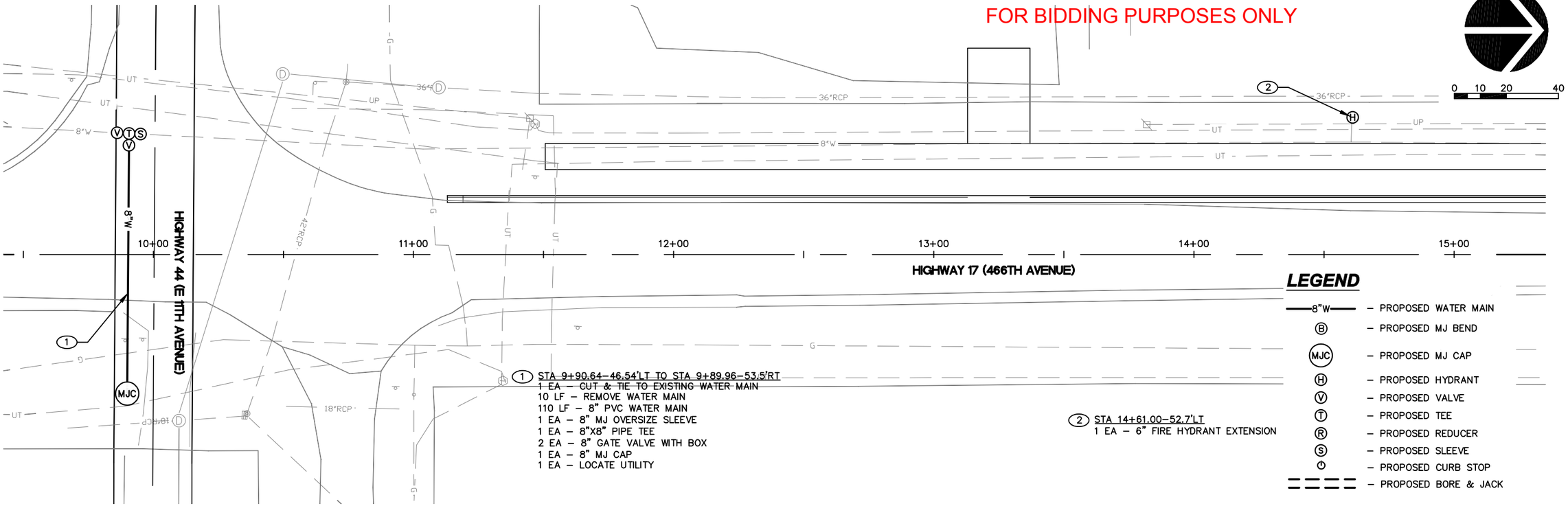

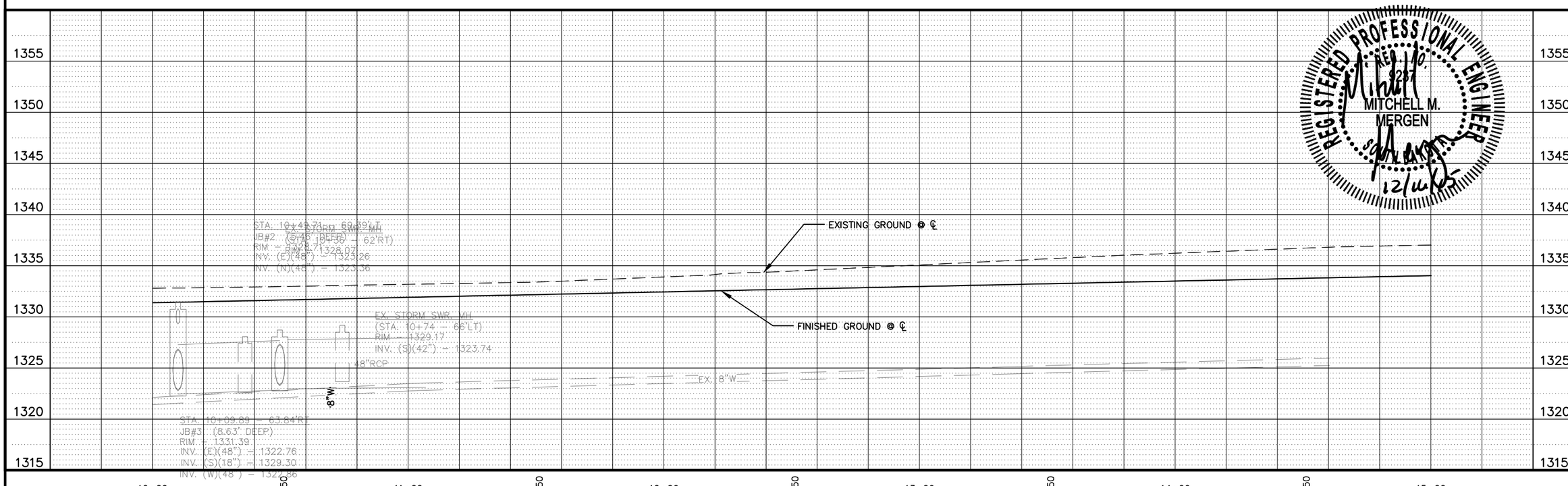

REGISTERED PROFESSIONAL ENGINEER
REG. NO. 8231
MITCHELL M. MERGEN
SOUTH DAKOTA
12/14/15

HIGHWAY 17

LENNOX, SOUTH DAKOTA

REVISED 12/15/15

WATER MAIN PLANS

DESIGNED BY: JRB
DRAWN BY: BAB ACAD FILE: 10214 – Water.dwg DATE: 11/19/2015
CHECKED BY: (CHK) BY: DATE:
REVISIONS: BY: DATE:
BY: DATE:

STOCKWELL ENGINEERS
SIOUX FALLS, SD

SHEET NO.
G31

FOR BIDDING PURPOSES ONLY

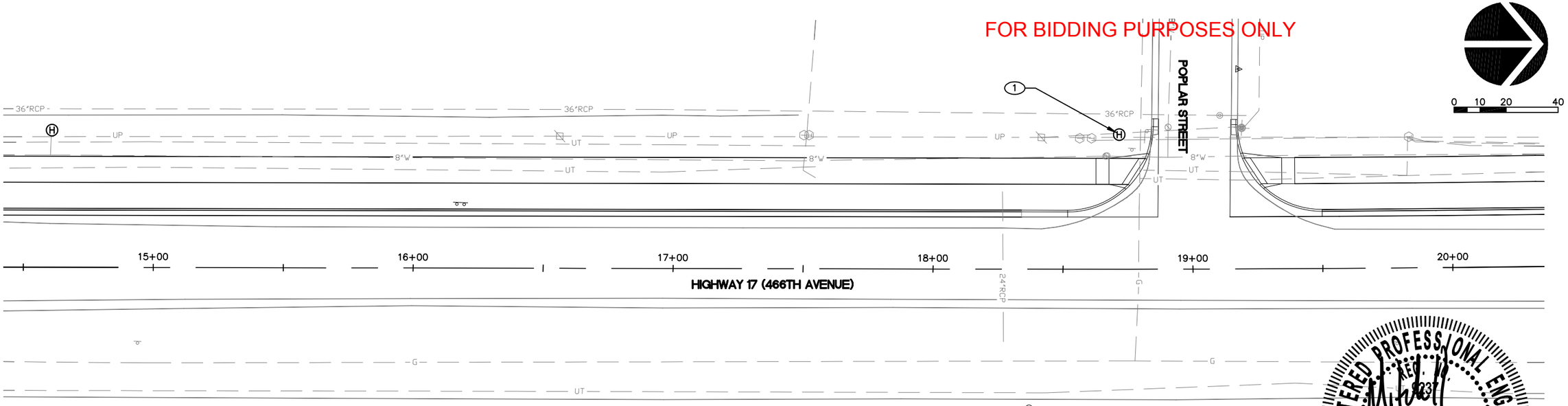

1 STA 18+71.67–51.7'LT
1 EA – 6" FIRE HYDRANT EXTENSION

REGISTERED PROFESSIONAL ENGINEER
REG. NO. 9237
MITCHELL M. IMERGEN
SOUTH DAKOTA
12/14/15

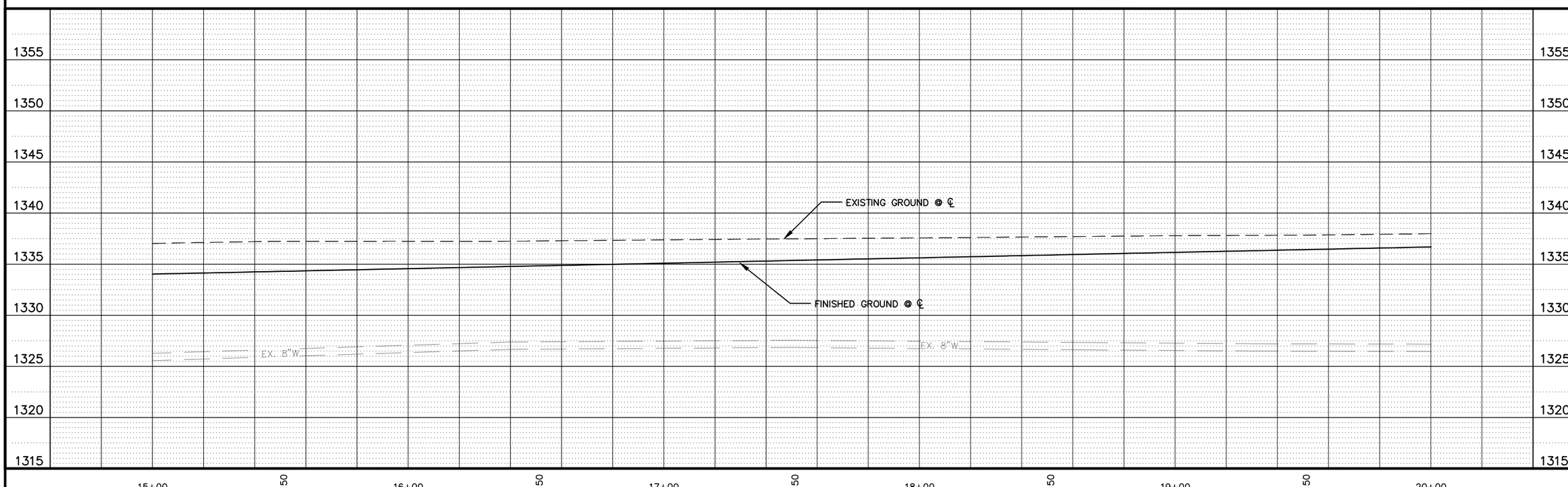

HIGHWAY 17

LENNOX, SOUTH DAKOTA

REVISED 12/15/15

WATER MAIN PLANS

DESIGNED BY: JRB
DRAWN BY: BAB ACAD FILE: 10214 – Water.dwg DATE: 11/19/2015
CHECKED BY: (CHK) BY: DATE:
REVISIONS: BY: DATE:

STOCKWELL ENGINEERS
SIOUX FALLS, SD

SHEET NO.
G32

FOR BIDDING PURPOSES ONLY

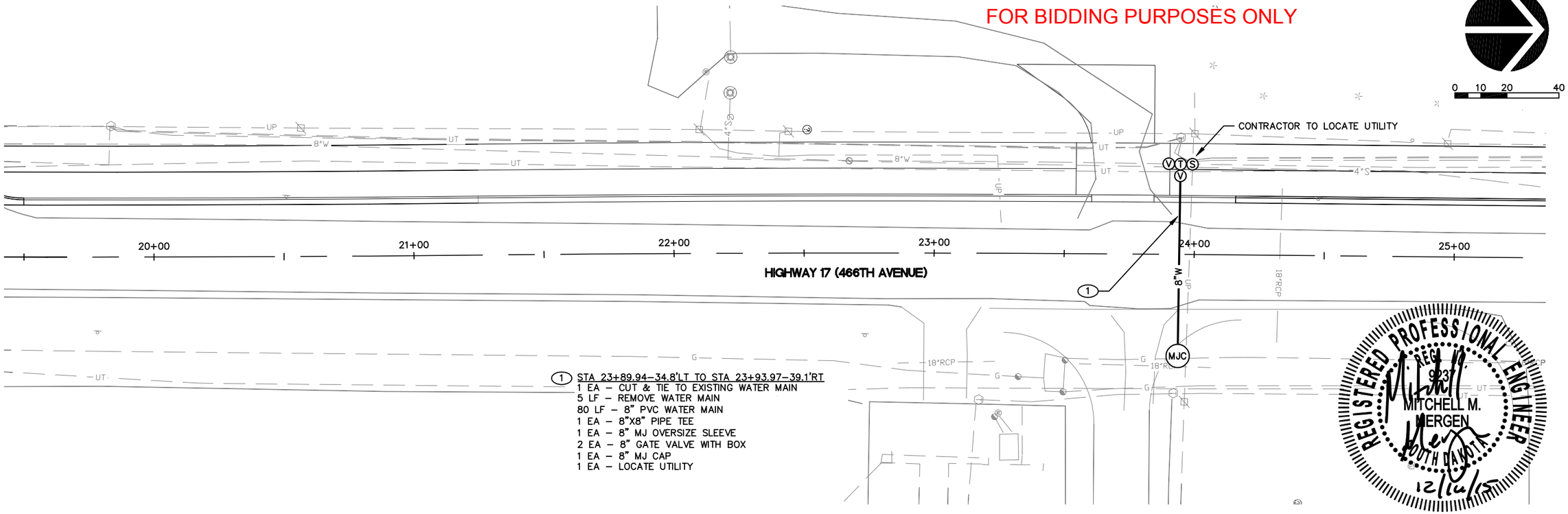

1 STA 23+89.94–34.8'LT TO STA 23+93.97–39.1'RT
1 EA – CUT & TIE TO EXISTING WATER MAIN
5 LF – REMOVE WATER MAIN
80 LF – 8" PVC WATER MAIN
1 EA – 8"X8" PIPE TEE
1 EA – 8" MJ OVERSIZE SLEEVE
2 EA – 8" GATE VALVE WITH BOX
1 EA – 8" MJ CAP
1 EA – LOCATE UTILITY

REGISTERED PROFESSIONAL ENGINEER
REG. NO. 9237
MITCHELL M. MERGEN
SOUTH DAKOTA
12/14/15

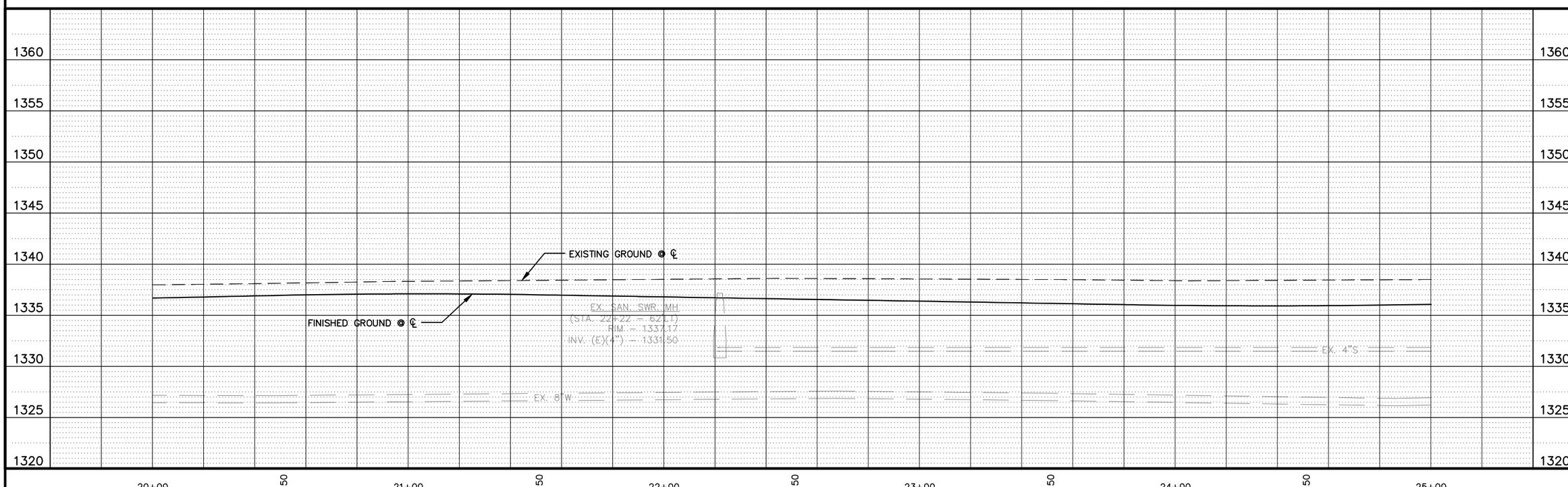

HIGHWAY 17

LENNOX, SOUTH DAKOTA

REVISED 12/15/15

WATER MAIN PLANS

DESIGNED BY: JRB
DRAWN BY: BAB ACAD FILE: 10214 – Water.dwg DATE: 11/19/2015
CHECKED BY: (CHK) BY: DATE:
REVISIONS: BY: DATE:

STOCKWELL ENGINEERS
SIOUX FALLS, SD

SHEET NO.
G33

FOR BIDDING PURPOSES ONLY

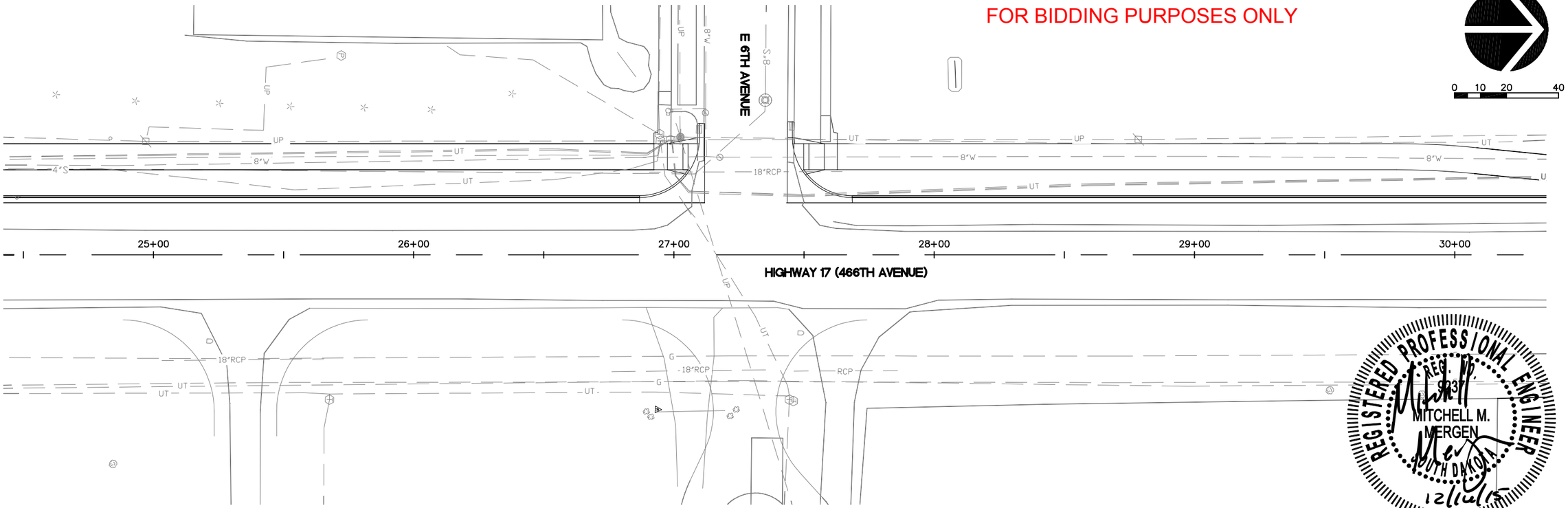

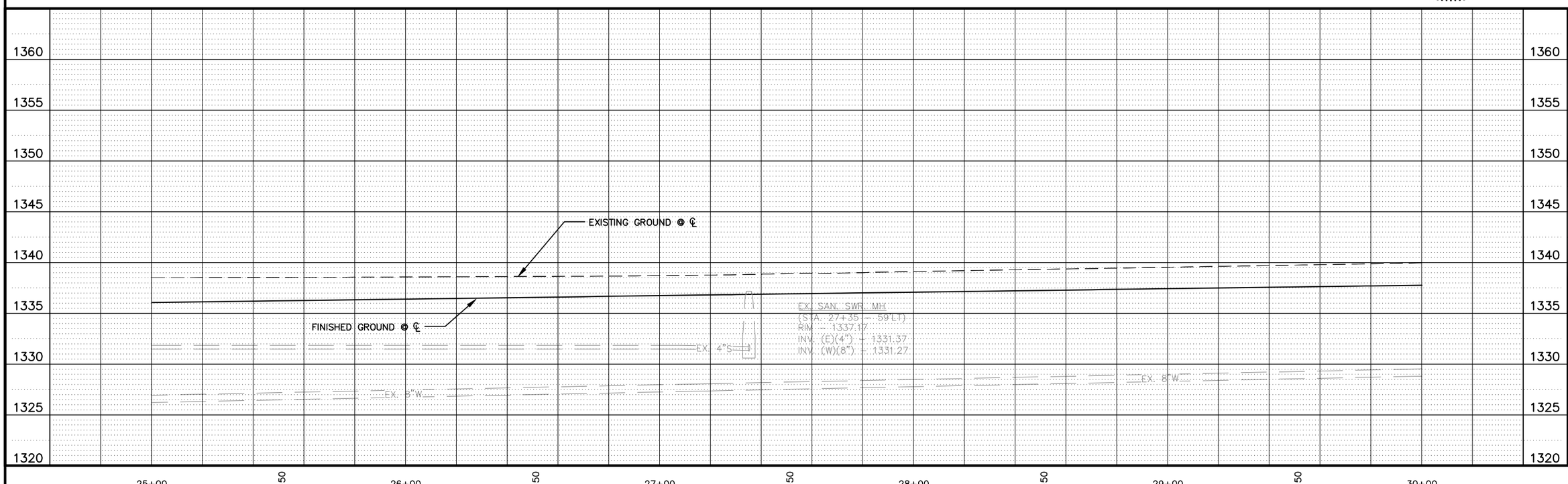

REGISTERED PROFESSIONAL ENGINEER
REG. NO. 9231
MITCHELL M. MERGEN
SOUTH DAKOTA
12/11/15

REVISED 12/15/15

HIGHWAY 17

LENNOX, SOUTH DAKOTA

WATER MAIN PLANS

DESIGNED BY: JRB
DRAWN BY: BAB ACAD FILE: 10214 – Water.dwg DATE: 11/19/2015
CHECKED BY: (CHK)
REVISIONS: BY: DATE:
BY: DATE:

STOCKWELL ENGINEERS
SIOUX FALLS, SD

SHEET NO.
G34

FOR BIDDING PURPOSES ONLY

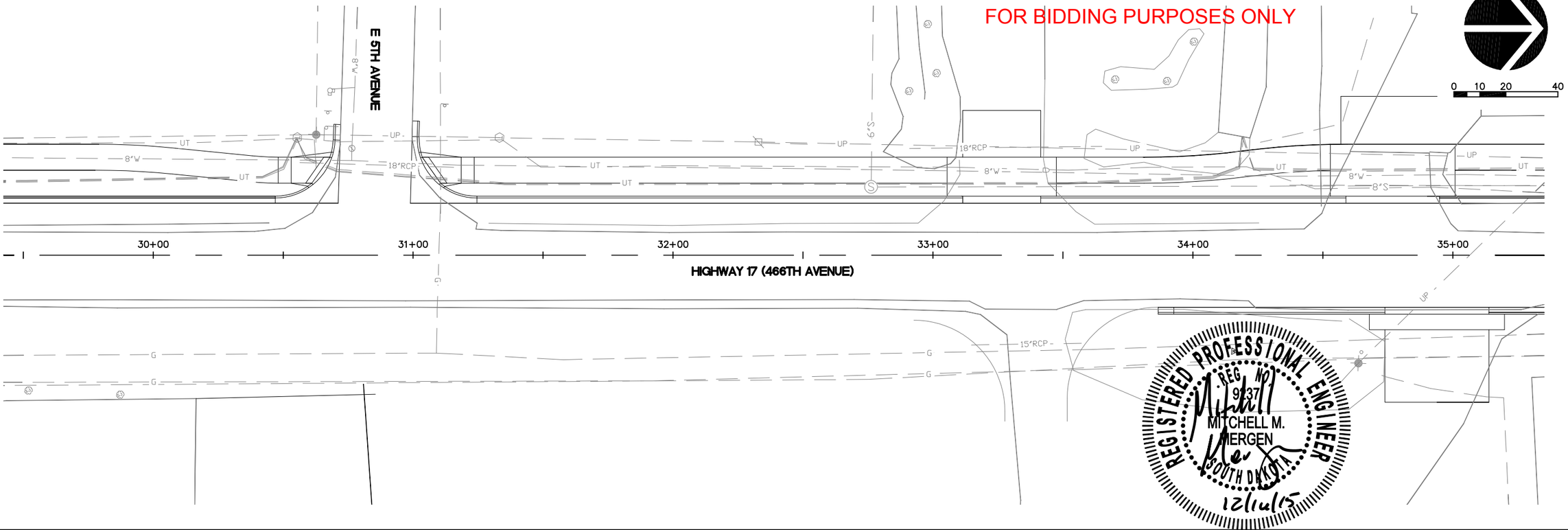

REGISTERED PROFESSIONAL ENGINEER
REG. NO. 9237
MITCHELL M. MERGEN
SOUTH DAKOTA
12/14/15

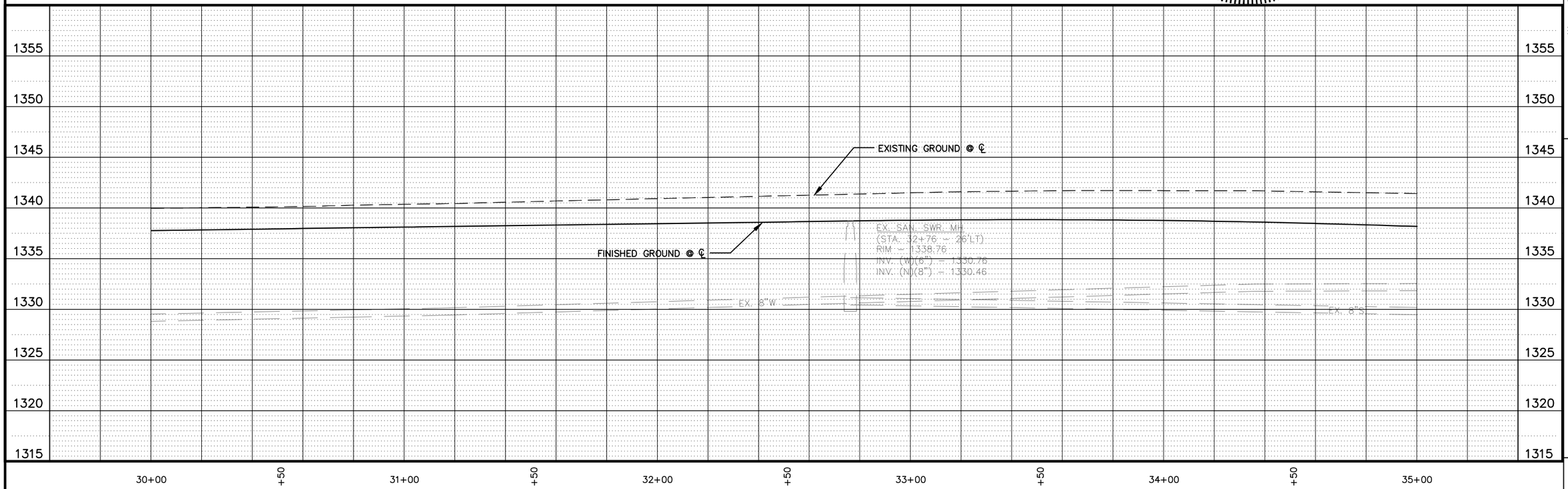

HIGHWAY 17

LENNOX, SOUTH DAKOTA

REVISED 12/15/15

WATER MAIN PLANS

DESIGNED BY: JRB
DRAWN BY: BAB ACAD FILE: 10214 – Water.dwg DATE: 11/19/2015
CHECKED BY: (CHK) BY: DATE:
REVISIONS: BY: DATE:

STOCKWELL ENGINEERS
SIOUX FALLS, SD

SHEET NO.

G35

FOR BIDDING PURPOSES ONLY

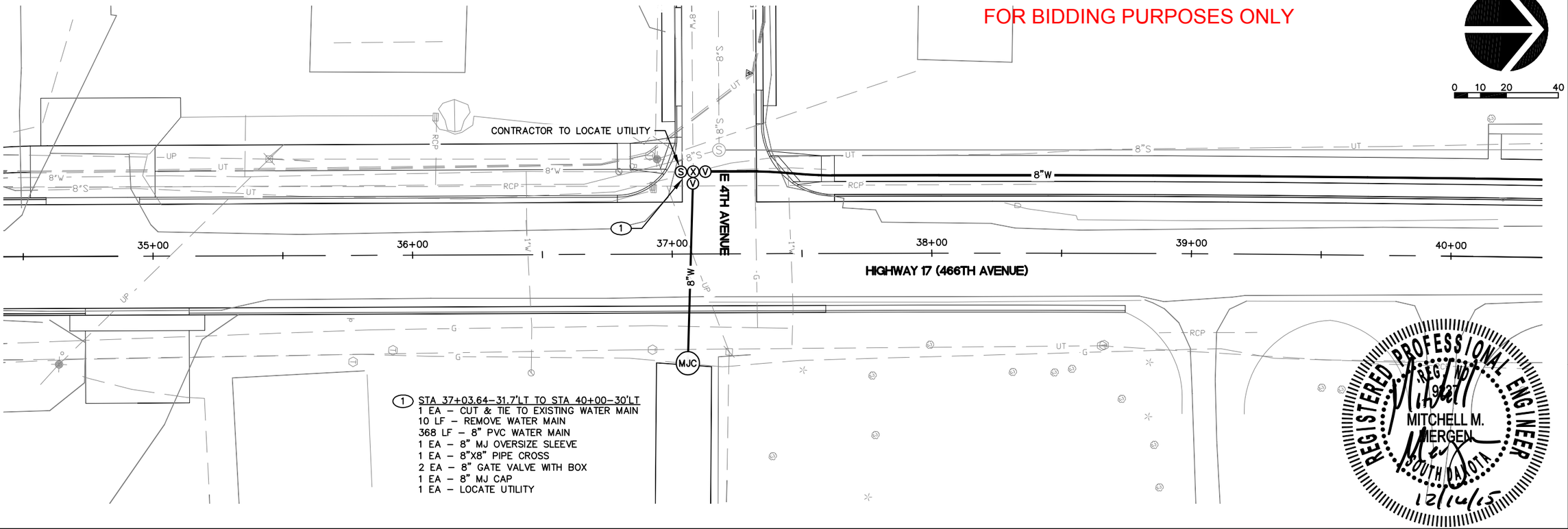

1 STA 37+03.64–31.7'LT TO STA 40+00–30'LT
1 EA – CUT & TIE TO EXISTING WATER MAIN
10 LF – REMOVE WATER MAIN
368 LF – 8" PVC WATER MAIN
1 EA – 8" MJ OVERSIZE SLEEVE
1 EA – 8"X8" PIPE CROSS
2 EA – 8" GATE VALVE WITH BOX
1 EA – 8" MJ CAP
1 EA – LOCATE UTILITY

REGISTERED PROFESSIONAL ENGINEER
REG. NO. 9927
MITCHELL M. MERGEN
SOUTH DAKOTA
12/14/15

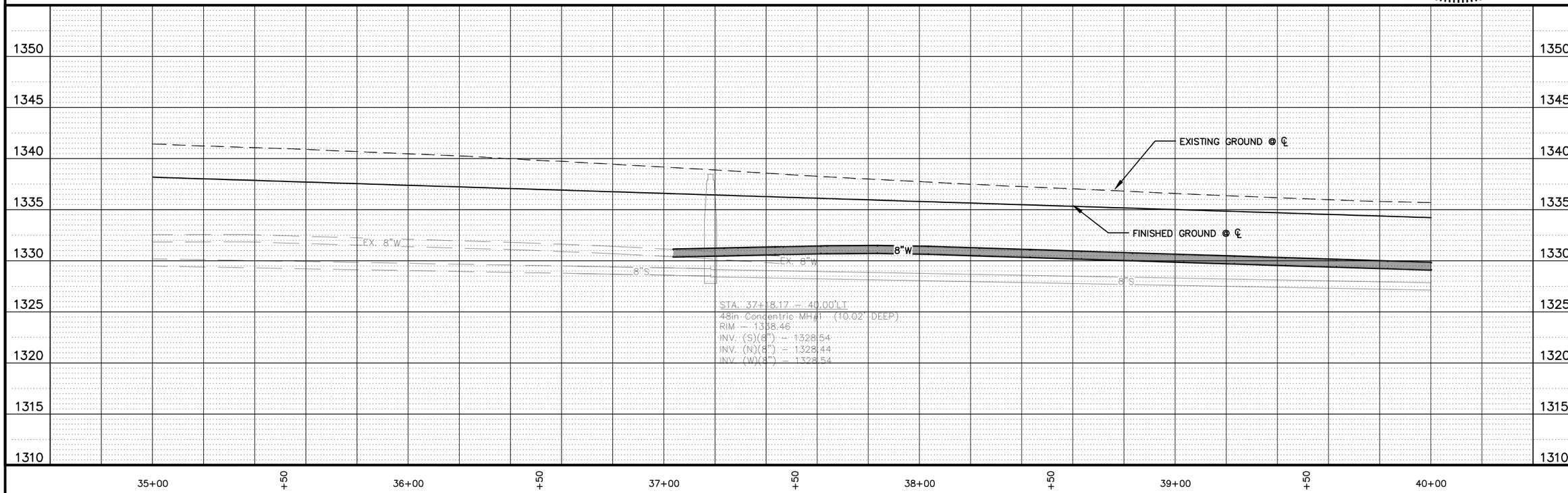

HIGHWAY 17

LENNOX, SOUTH DAKOTA

REVISED 12/15/15

WATER MAIN PLANS

DESIGNED BY: JRB
DRAWN BY: BAB ACAD FILE: 10214 – Water.dwg DATE: 11/19/2015
CHECKED BY: (CHK) BY: DATE:
REVISIONS: BY: DATE:

STOCKWELL ENGINEERS
SIOUX FALLS, SD

SHEET NO.
G36

FOR BIDDING PURPOSES ONLY

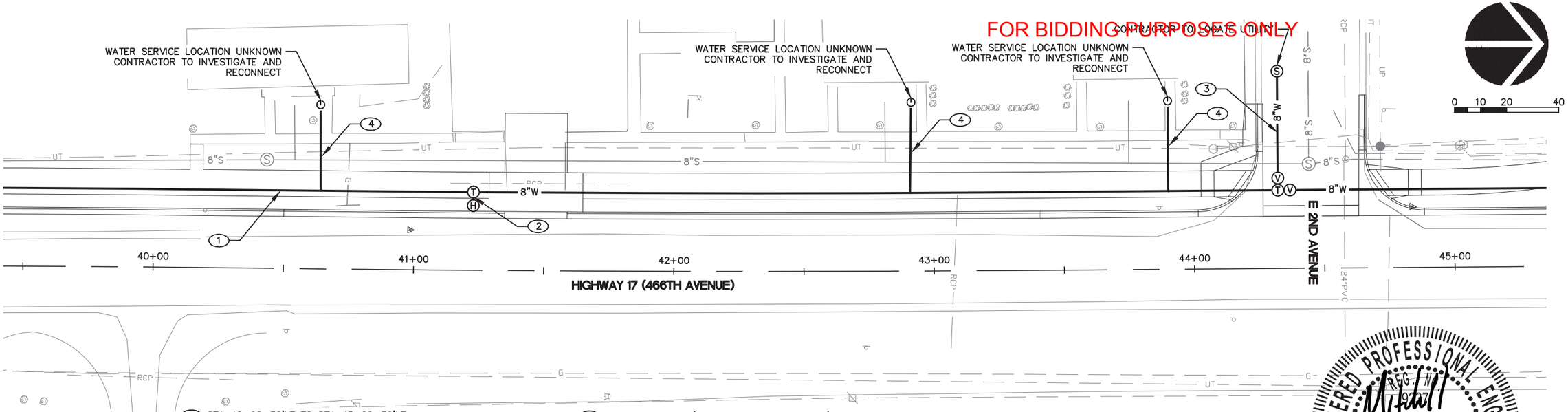

(1) STA 40+00–30'LT TO STA 45+00–30'LT
500 LF – 8" PVC WATER MAIN

(2) STA 41+22.78–30'LT TO STA 41+22.78–24.8'LT
5 LF – 6" PVC WATER MAIN
1 EA – 8"X6" PIPE TEE
1 EA – STANDARD FIRE HYDRANT

(3) STA 44+32.15–30'LT TO STA 44+32.15–75.6'LT
1 EA – CUT & TIE TO EXISTING WATER MAIN
1 EA – 8" MJ OVERSIZE SLEEVE
46 LF – 8" PVC WATER MAIN
1 EA – 8"X8" PIPE TEE
2 EA – 8" GATE VALVE WITH BOX
1 EA – LOCATE UTILITY

(4) RECONNECT WATER SERVICE
3 EA – 2" CORPORATION STOP WITH TAPPING SADDLE
3 EA – 2" WATER SERVICE (36 LF EACH LOCATION)
3 EA – CURB STOP WITH BOX
3 EA – LOCATE UTILITY

REGISTERED PROFESSIONAL ENGINEER
REG. NO. 9977
MITCHELL M. MERGEN
SOUTH DAKOTA
12/14/15

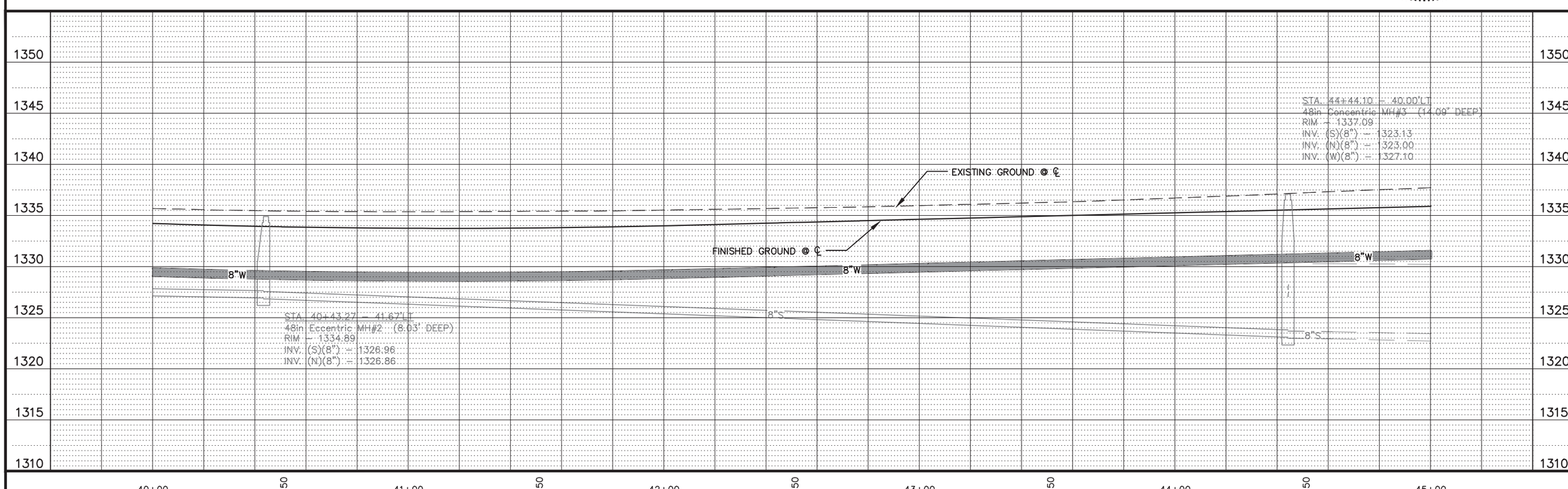

HIGHWAY 17
LENNOX, SOUTH DAKOTA
REVISED 12/21/2015

WATER MAIN PLANS

DESIGNED BY: JRB
DRAWN BY: BAB ACAD FILE: 10214 – Water.dwg DATE: 11/19/2015
CHECKED BY: (CHK) BY: DATE:
REVISIONS: BY: DATE:

STOCKWELL ENGINEERS
SIOUX FALLS, SD

SHEET NO.
G37

FOR BIDDING PURPOSES ONLY

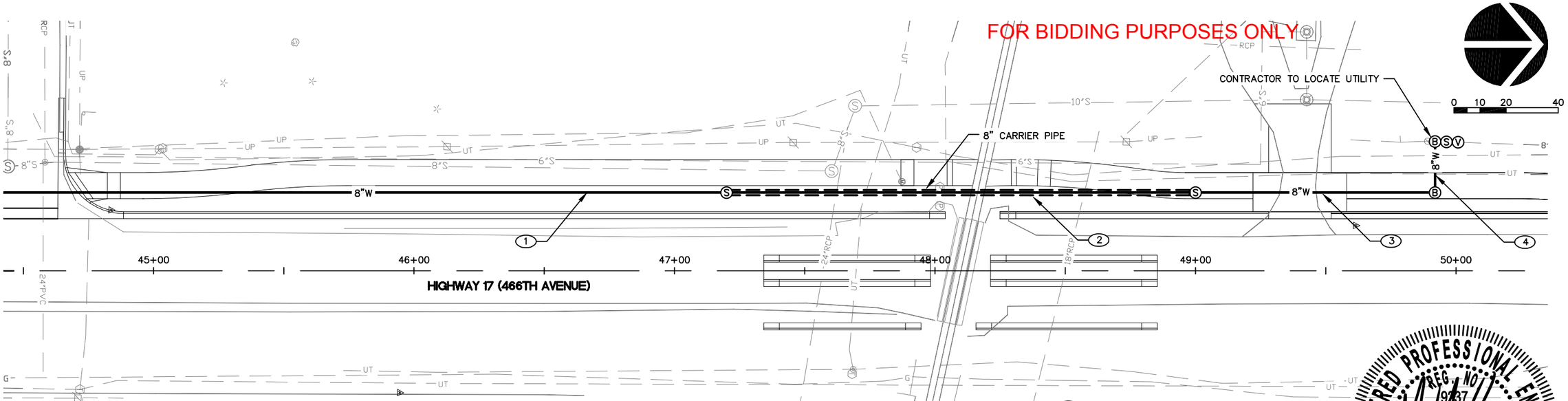

(1) STA 45+00–30'LT TO STA 47+20–30'LT
220 LF – 8" PVC WATER MAIN

(2) STA 47+20–30'LT TO STA 49+00–30'LT
180 LF – BORE AND JACK 16" PIPE
2 EA – 8" MJ LONG SLEEVE
180 LF – INSTALL CARRIER PIPE
180 LF – 16" STEEL ENCASEMENT PIPE
31 EA – CASING PIPE SPACERS

(3) STA 49+00–30'LT TO STA 49+91.90–30'LT
92 LF – 8" PVC WATER MAIN

(4) STA 49+91.90–30'LT TO STA 50+00.77–49.3'LT
1 EA – CUT & TIE TO EXISTING WATER MAIN
42 LF – REMOVE WATER MAIN
29 LF – 8" PVC WATER MAIN
2 EA – 8" PIPE BEND
1 EA – 8" MJ OVERSIZE SLEEVE
1 EA – 8" GATE VALVE WITH BOX
1 EA – TEMPORARY FIRE HYDRANT
1 EA – LOCATE UTILITY

REGISTERED PROFESSIONAL ENGINEER
REG. NO. 9737
MITCHELL M. MERGEN
SOUTH DAKOTA
12/14/15

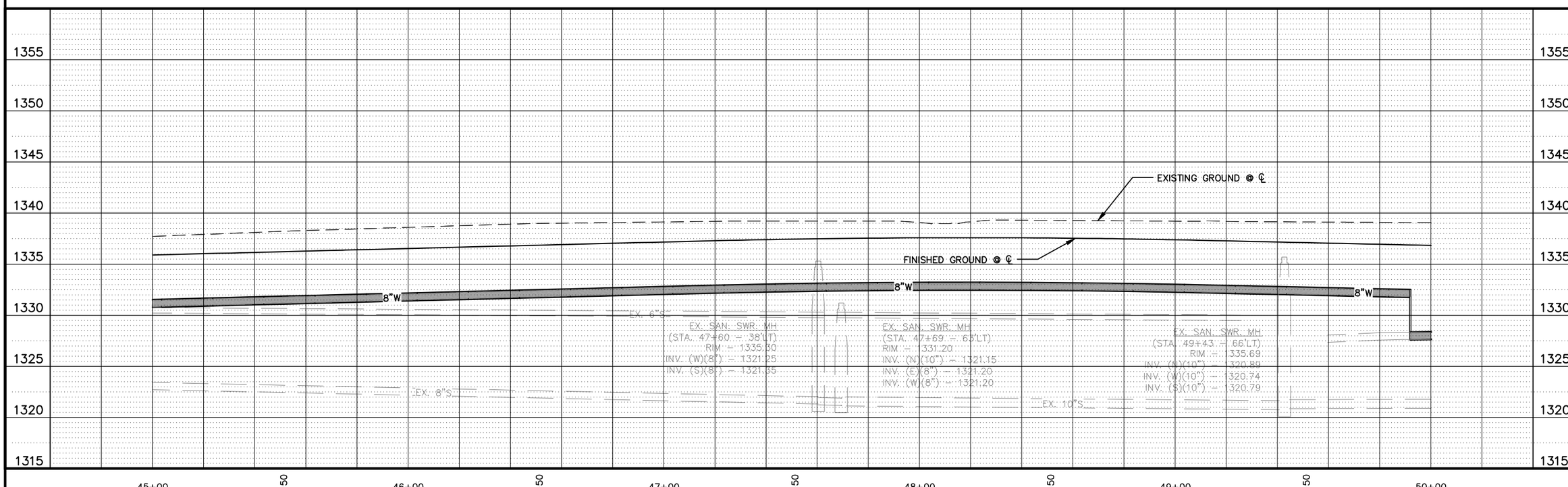

HIGHWAY 17
LENNOX, SOUTH DAKOTA
REVISED 12/15/15

WATER MAIN PLANS

DESIGNED BY: JRB
DRAWN BY: BAB ACAD FILE: 10214 – Water.dwg DATE: 11/19/2015
CHECKED BY: (CHK) BY: DATE:
REVISIONS: BY: DATE:

STOCKWELL ENGINEERS
SIOUX FALLS, SD

SHEET NO.
G38

FOR BIDDING PURPOSES ONLY

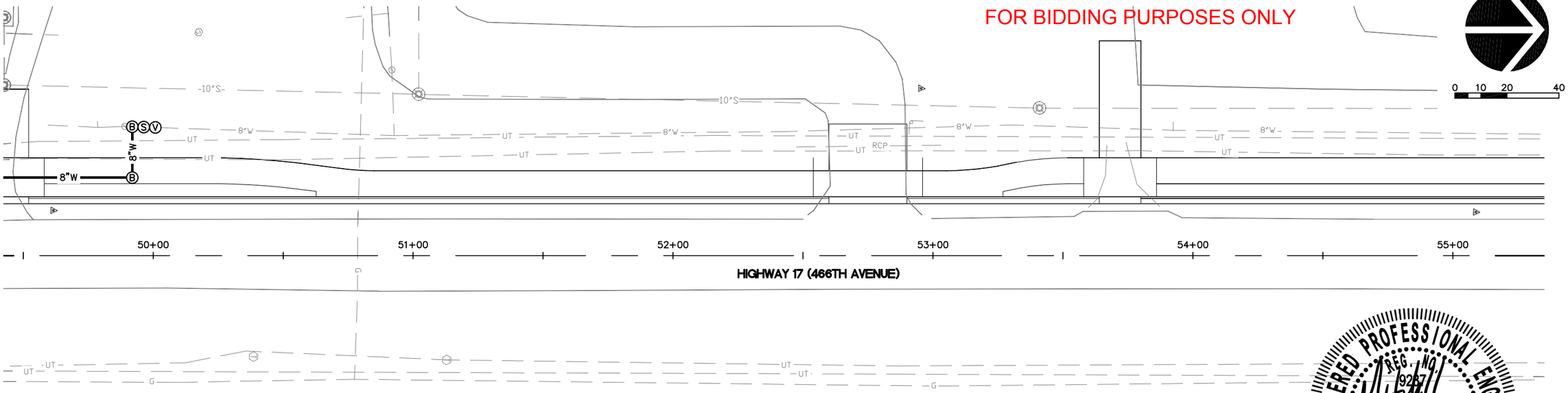

REGISTERED PROFESSIONAL ENGINEER
REG. NO. 9267
MITCHELL M. MERGEN
SOUTH DAKOTA
12/14/15

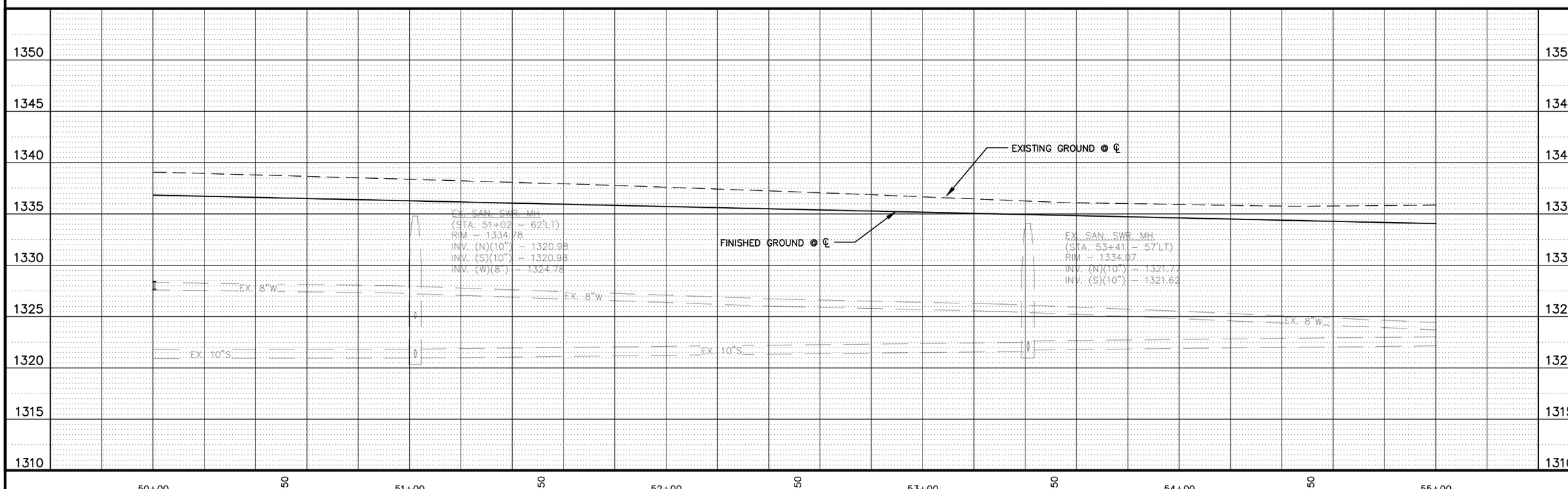

HIGHWAY 17

LENNOX, SOUTH DAKOTA

REVISED 12/15/15

WATER MAIN PLANS

DESIGNED BY: JRB
DRAWN BY: BAB ACAD FILE: 10214 – Water.dwg DATE: 11/19/2015
CHECKED BY: (CHK) BY: DATE:
REVISIONS: BY: DATE:

STOCKWELL ENGINEERS
SIOUX FALLS, SD

SHEET NO.
G39

FOR BIDDING PURPOSES ONLY

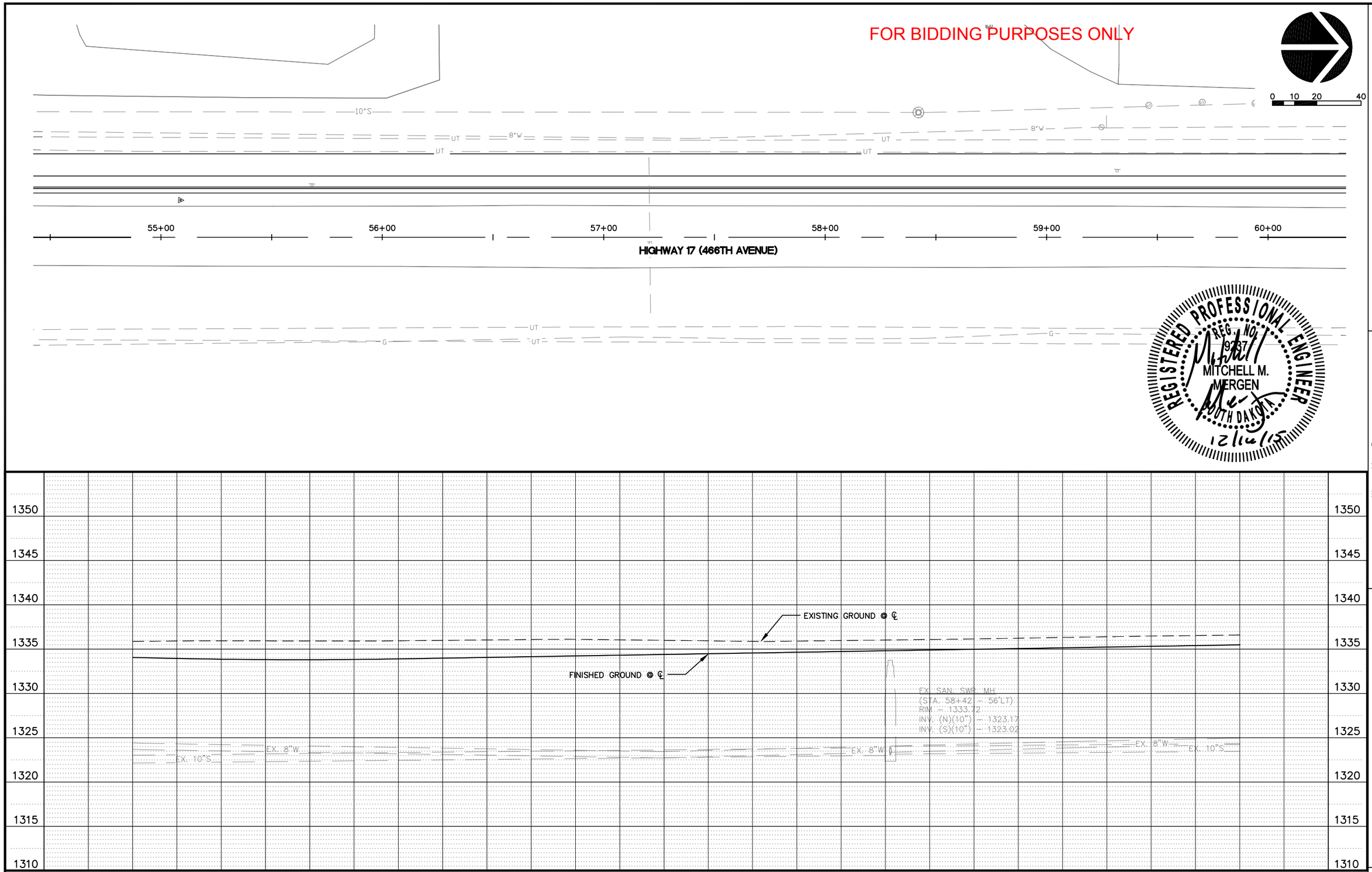

HIGHWAY 17

LENNOX, SOUTH DAKOTA

REVISED 12/15/15

WATER MAIN PLANS

DESIGNED BY: JRB
DRAWN BY: BAB ACAD FILE: 10214 – Water.dwg DATE: 11/19/2015
CHECKED BY: (CHK) BY: DATE:
REVISIONS: BY: DATE:

STOCKWELL ENGINEERS
SIOUX FALLS, SD

SHEET NO.

G40

FOR BIDDING PURPOSES ONLY

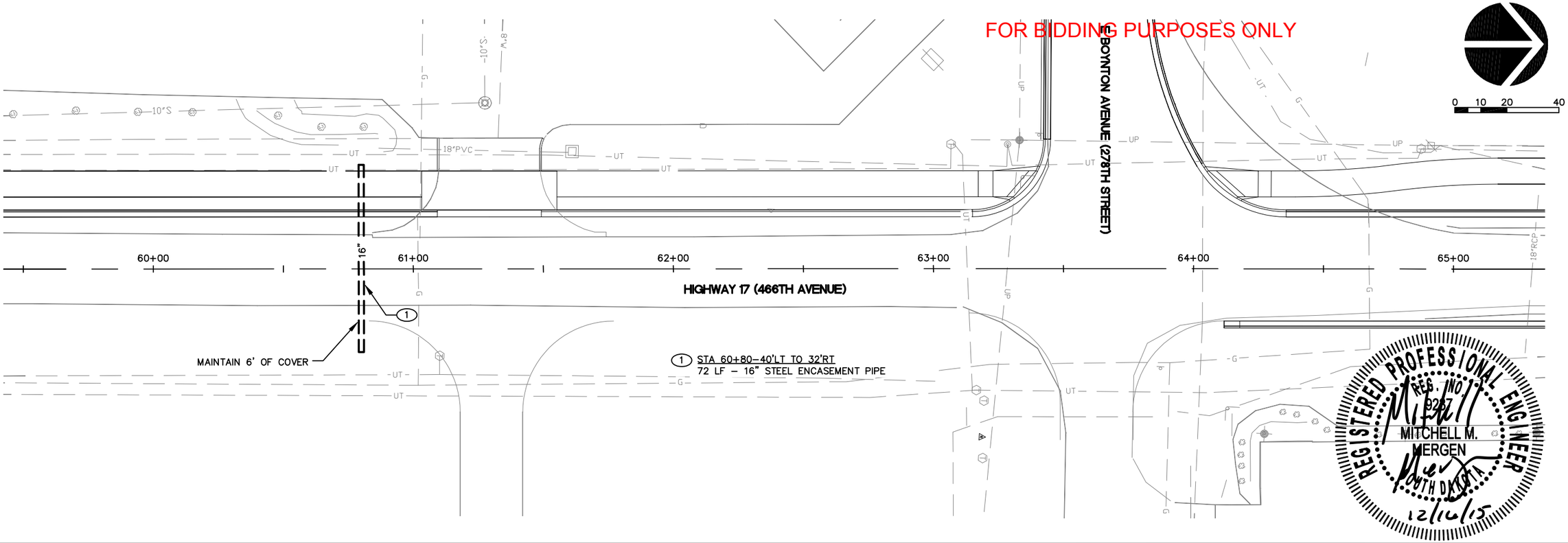

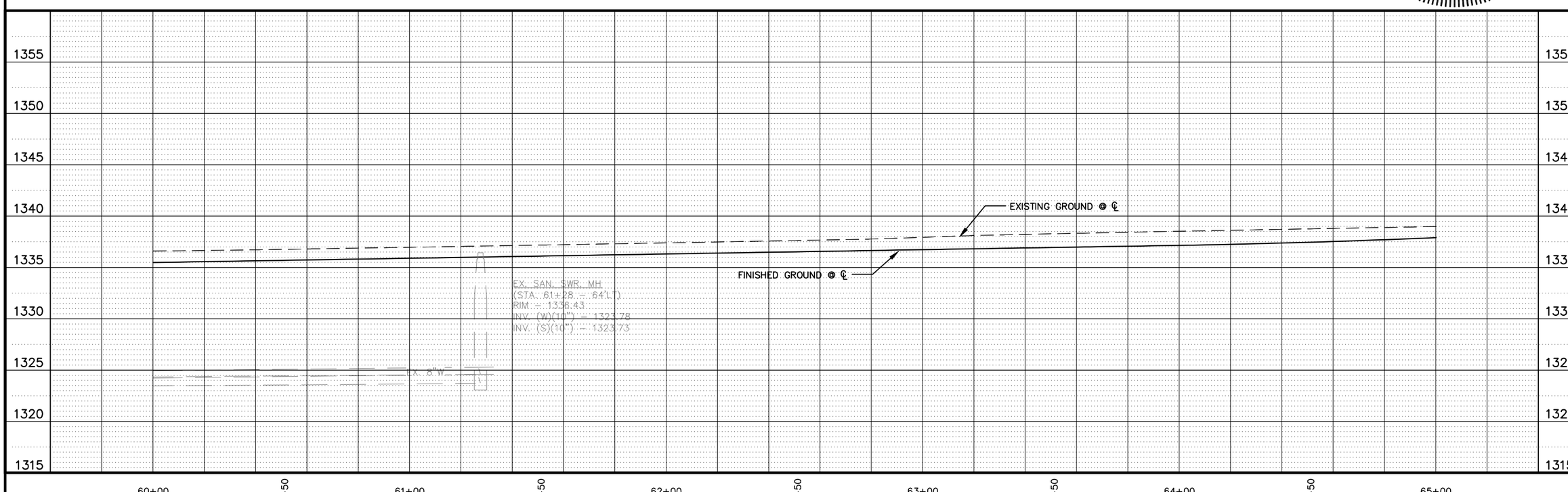

HIGHWAY 17

LENNOX, SOUTH DAKOTA

REVISED 12/15/15

WATER MAIN PLANS

DESIGNED BY: JRB
DRAWN BY: BAB ACAD FILE: 10214 - Water.dwg DATE: 11/19/2015
CHECKED BY: (CHK) BY: DATE:
REVISIONS: BY: DATE:

STOCKWELL ENGINEERS
SIOUX FALLS, SD

SHEET NO.

G41

FOR BIDDING PURPOSES ONLY

LEGEND

— 48"RCP — – PROPOSED STORM SEWER

(D) – PROPOSED JUNCTION BOX

0 10 20 40

JB#1 CONSTRUCT 6'X6' JUNCTION BOX
5.53 CY – CLASS M6 CONCRETE
1186 LB – REINFORCING STEEL
1 EA – TYPE A MANHOLE FRAME AND LID

CONTRACTOR TO VERIFY ELEVATION & CONNECT TO EXISTING PIPE(INCIDENTAL)

JB#1

48"RCP

REMOVE JUNCTION BOX (INCIDENTAL)

54'–48"RCP @ 0.30% (1)

JB#2

134'–48"RCP @ 0.30% (2)

48"RCP –0.30%

(3)

REMOVE JUNCTION BOX (INCIDENTAL)

JB#3

PLUG STORM SEWER WITH CONCRETE BULKHEAD (INCIDENTAL)

42"RCP

18"RCP

279TH STREET (EXISTING ALIGNMENT)

HIGHWAY 44 (E 11TH AVENUE)

HIGHWAY 17 (466TH AVENUE)

0+00 1+00 2+00 3+00 4+00 5+00

346'–48"RCP @ 0.30% (4)

48"RCP 0.30%

279TH STREET (PROPOSED ALIGNMENT)

8"W

CONTRACTOR TO VERIFY ELEVATION & CONNECT TO EXISTING PIPE(INCIDENTAL)

(1) STA JB#1 TO JB#2
54 LF – 48" RCP CLASS 3, FURNISH
54 LF – 48" RCP, INSTALL

(2) JB#2 TO JB#3
134 LF – 48" RCP CLASS 3, FURNISH
134 LF – 48" RCP, INSTALL

(3) STA 0+29.82–73.3'LT TO STA 1+59.15–36.9'LT
STA. 1+60.55–6.93LT TO STA. 1+58–36'LT
STA 1+59.15–36.9'LT TO STA 2+29.75–111'LT
230 LF – REMOVE STORM SEWER PIPE

(4) JB#3 TO STA. 5+00–10.0'LT
336 LF – 48" RCP CLASS 3, FURNISH
336 LF – 48" RCP, INSTALL

JB#2 CONSTRUCT 6'X6' JUNCTION BOX
5.53 CY – CLASS M6 CONCRETE
1186 LB – REINFORCING STEEL
1 EA – TYPE A MANHOLE FRAME AND LID

JB#3 CONSTRUCT 6'X6' JUNCTION BOX
10 LF – REMOVE STORM SEWER PIPE
7.24 CY – CLASS M6 CONCRETE
1445 LB – REINFORCING STEEL
1 EA – TYPE A MANHOLE FRAME AND LID

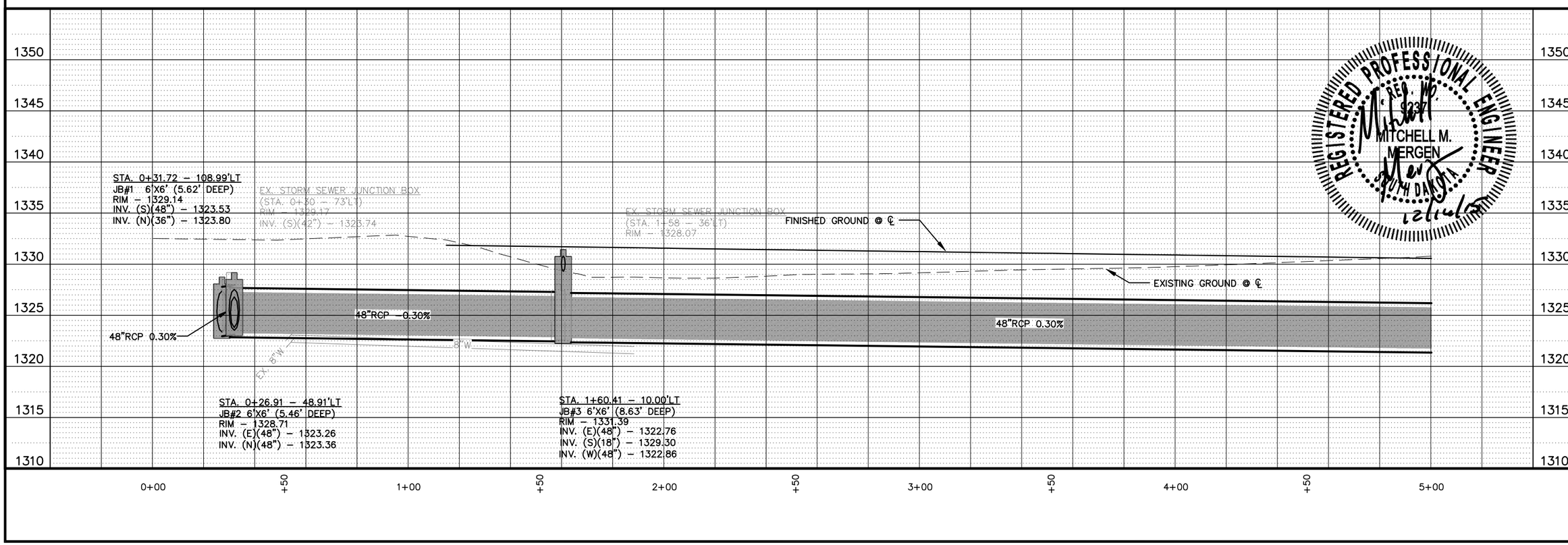

REGISTERED PROFESSIONAL ENGINEER
REG. NO. 9237
MITCHELL M. MERGEN
SOUTH DAKOTA
12/16/15

279TH STREET

LENNOX, SOUTH DAKOTA

REVISED 12/15/15

STORM SEWER PLANS

DESIGNED BY: JRB
DRAWN BY: BAB ACAD FILE: 10214 – Storm.dwg DATE: 11/19/2015
CHECKED BY: (CHK) BY: DATE:
REVISIONS: BY: DATE:

STOCKWELL ENGINEERS
SIOUX FALLS, SD

SHEET NO.
G42

FOR BIDDING PURPOSES ONLY

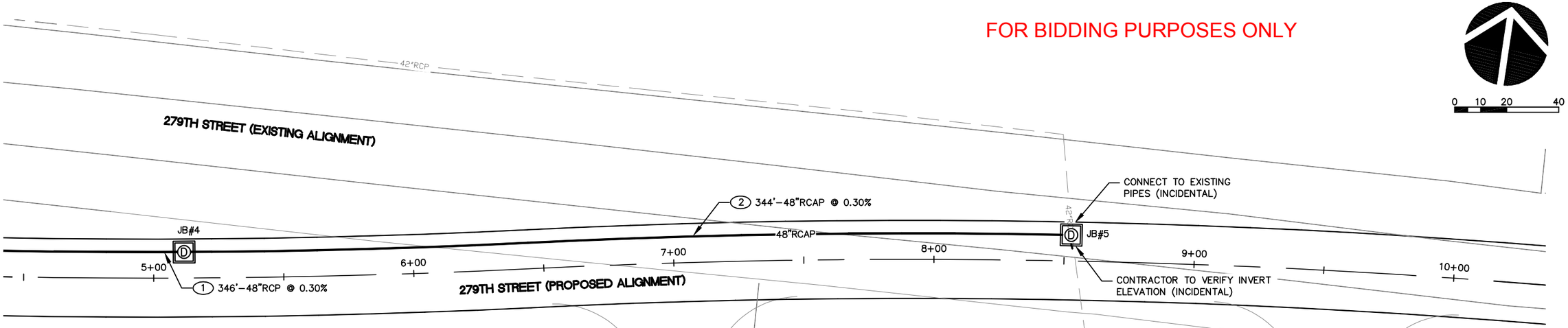

1 STA 5+00.00–10.0'LT TO JB#3
10 LF – 48" RCP CLASS 3, FURNISH
10 LF – 48" RCP, INSTALL

2 JB#4 TO JB#5
10 LF – REMOVE STORM SEWER PIPE
344 LF – 48" RCP ARCH CLASS 3, FURNISH
344 LF – 48" RCP ARCH, INSTALL

3 JB#5 TO STA 8+55.50–18.88'RT
1 EA – 42" TRASH GUARD, FURNISH
1 EA – 42" TRASH GUARD, INSTALL

JB#3 CONSTRUCT 7'X7' JUNCTION BOX
9.06 CY – CLASS M6 CONCRETE
1808 LB – REINFORCING STEEL
1 EA – TYPE A MANHOLE FRAME AND LID

JB#5 CONSTRUCT 7'X7' JUNCTION BOX
7.09 CY – CLASS M6 CONCRETE
1506 LB – REINFORCING STEEL
1 EA – TYPE A MANHOLE FRAME AND LID

3

LEGEND

—48"RCP— – PROPOSED STORM SEWER
(D) – PROPOSED JUNCTION BOX

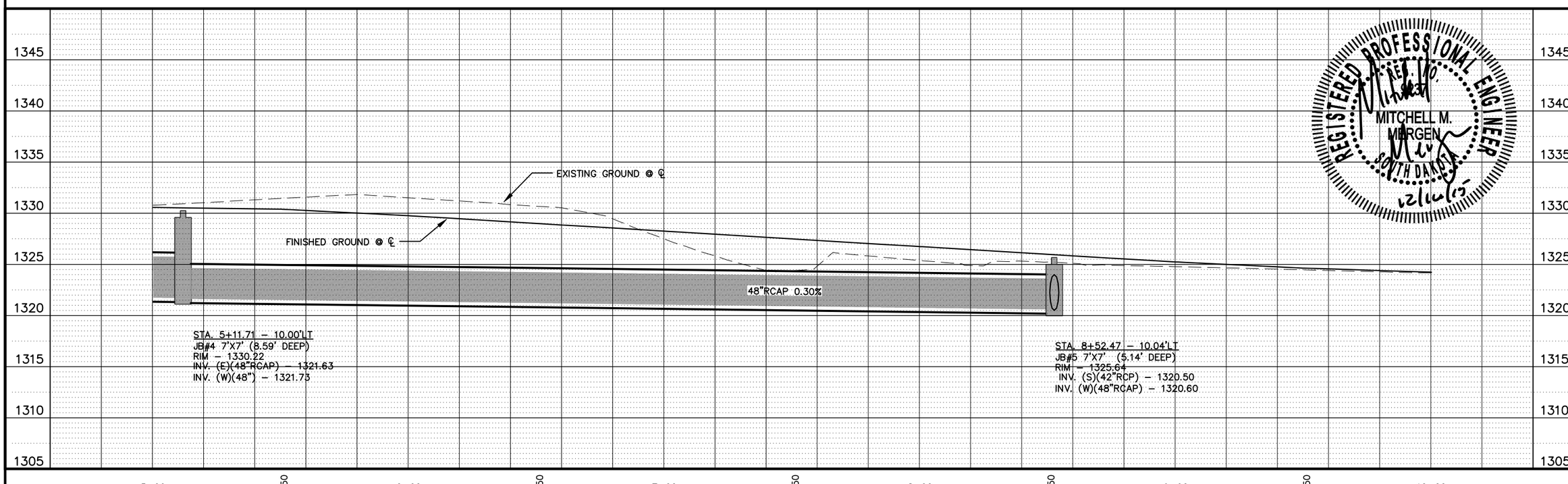

REGISTERED PROFESSIONAL ENGINEER
REG. NO. 11-2033
MITCHELL M. MORGEN
SOUTH DAKOTA
12/14/15

REVISED 12/15/15

279TH STREET

LENNOX, SOUTH DAKOTA

STORM SEWER PLANS

DESIGNED BY: JRB
DRAWN BY: BAB ACAD FILE: 10214 – Storm.dwg DATE: 11/19/2015
CHECKED BY: (CHK) BY: DATE:
REVISIONS: BY: DATE:

STOCKWELL ENGINEERS
SIOUX FALLS, SD

SHEET NO.
G43

FOR BIDDING PURPOSES ONLY

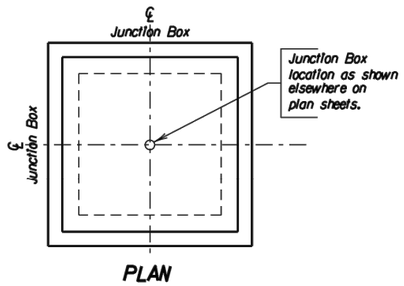

PLAN

SPECIFICATIONS

1. Design Specifications: AASHTO Specifications for Highway Bridges, 1996 Edition (Service Load).
2. Construction Specifications: South Dakota Standard Specifications for Roads and Bridges, Current Edition and required Provisions, Supplemental Specifications and/or Special Provisions as included in the Proposal.

DESIGN MIX OF CONCRETE

1. Mix shall be designed to produce a concrete having a minimum compressive strength of 4000 p.s.i. at 28 days.
2. Type II Cement is required.

GENERAL NOTES

1. Design Live Load: HS 20-44 and Alternate Loading. No construction loading in excess of legal Load was considered.
2. The design of the junction box is based on a maximum fill over the junction box of 5 feet.
3. Unit Stresses: Concrete fc = 1600 p.s.i.
   Reinforcing Steel fs = 24000 p.s.i.
4. All reinforcing steel shall conform to ASTM A615 Grade 60.
5. All exposed edges shall be chamfered ¾".
6. Use 1" clear cover on all reinforcing steel except as shown.
7. The cost of furnishing and installing the manhole steps shall be incidental to the contract unit price per Lb. for "Reinforcing steel".
8. Reinforcing steel shall be cut and bent in field as necessary to fit pipe and manhole openings. (Pipe openings are not shown in these details.) Number, size and location of pipes entering junction box are shown elsewhere on plan sheets.
9. All pipes entering the junction box must fit between the inside faces of the walls.

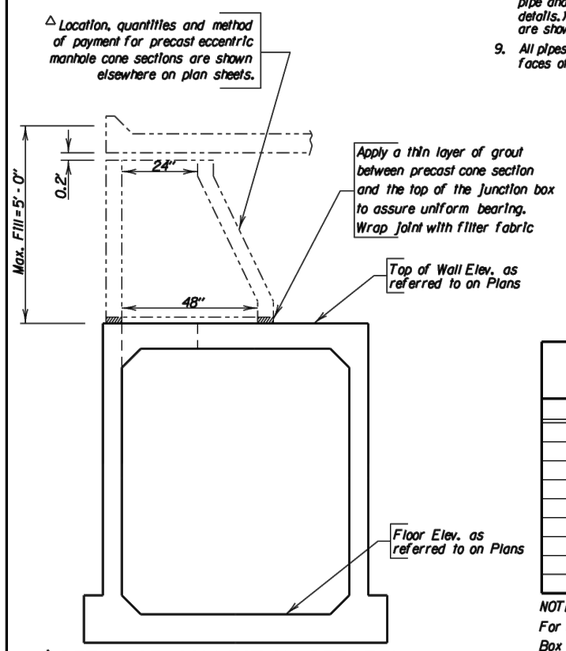

△ DETAIL OF CONNECTION BETWEEN PRECAST ECCENTRIC MANHOLE CONE SECTION AND JUNCTION BOX

ITEM	Class M6 Concrete	Reinforcing Steel
UNIT	Cu. Yd.	Lb.
H = 4' - 0"	5.53	1186
H = 4' - 6"	5.82	1215
H = 5' - 0"	6.10	1286
H = 5' - 6"	6.39	1316
H = 6' - 0"	6.67	1345
H = 6' - 6"	6.96	1416
H = 7' - 0"	7.24	1445
H = 7' - 6"	7.52	1475
H = 8' - 0"	7.81	1545

NOTE:
For informational purposes only, the estimated quantities for Junction Box height H are shown above. These quantities do not include quantity reduction for pipe openings, but do include the reduction for the 24" diameter manhole opening.

March 31, 2000

Published Date: 4th Qtr. 2015 | SDDOT | 6' X 6' JUNCTION BOX | PLATE NUMBER 671.02 | Sheet 1 of 3

REINFORCING SCHEDULE

	Mk.	No.	Size	Length	Type
H = 4' - 0"	⊄a1	1	6	9' - 0"	T3
	⌀a2	4	-	——	-
	h14	32	4	5' - 9"	17A
	k14	56	4	8' - 9"	17
	m2	22	6	7' - 9"	Str.
	n2	22	6	6' - 9"	Str.
	p2	56	4	6' - 0"	Str.
	q1	8	4	3' - 6"	17A
H = 4' - 6"	⊄a1	1	6	9' - 0"	T3
	⌀a2	4	-	——	-
	h15	32	4	6' - 3"	17A
	k15	56	4	9' - 3"	17
	m2	22	6	7' - 9"	Str.
	n2	22	6	6' - 9"	Str.
	p2	56	4	6' - 0"	Str.
	q1	8	4	3' - 6"	17A
H = 5' - 0"	⊄a1	1	6	9' - 0"	T3
	⌀a2	5	-	——	-
	h16	32	4	6' - 9"	17A
	k16	56	4	9' - 9"	17
	m2	22	6	7' - 9"	Str.
	n2	22	6	6' - 9"	Str.
	p2	64	4	6' - 0"	Str.
	q1	12	4	3' - 6"	17A
H = 5' - 6"	⊄a1	1	6	9' - 0"	T3
	⌀a2	5	-	——	-
	h17	32	4	7' - 3"	17A
	k17	56	4	10' - 3"	17
	m2	22	6	7' - 9"	Str.
	n2	22	6	6' - 9"	Str.
	p2	64	4	6' - 0"	Str.
	q1	12	4	3' - 6"	17A
H = 6' - 0"	⊄a1	1	6	9' - 0"	T3
	⌀a2	6	-	——	-
	h18	32	4	7' - 9"	17A
	k18	56	4	10' - 9"	17
	m2	22	6	7' - 9"	Str.
	n2	22	6	6' - 9"	Str.
	p2	64	4	6' - 0"	Str.
	q1	12	4	3' - 6"	17A
H = 6' - 6"	⊄a1	1	6	9' - 0"	T3
	⌀a2	6	-	——	-
	h19	32	4	8' - 3"	17A
	k19	56	4	11' - 3"	17
	m2	22	6	7' - 9"	Str.
	n2	22	6	6' - 9"	Str.
	p2	72	4	6' - 0"	Str.
	q1	16	4	3' - 6"	17A
H = 7' - 0"	⊄a1	1	6	9' - 0"	T3
	⌀a2	7	-	——	-
	h20	32	4	8' - 9"	17A
	k20	56	4	11' - 9"	17
	m2	22	6	7' - 9"	Str.
	n2	22	6	6' - 9"	Str.
	p2	72	4	6' - 0"	Str.
	q1	16	4	3' - 6"	17A

Bending Details

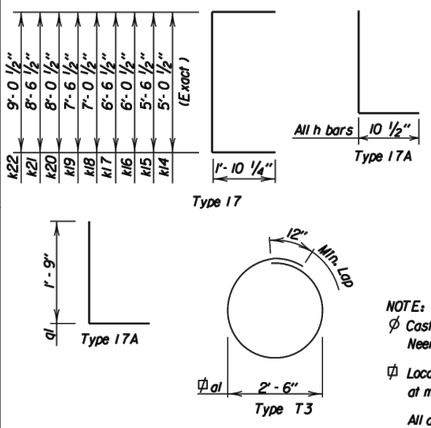

	Mk.	No.	Size	Length	Type
H = 7' - 6"	⊄a1	1	6	9' - 0"	T3
	⌀a2	7	-	——	-
	h21	32	4	9' - 3"	17A
	k21	56	4	12' - 3"	17
	m2	22	6	7' - 9"	Str.
	n2	22	6	6' - 9"	Str.
	p2	72	4	6' - 0"	Str.
	q1	16	4	3' - 6"	17A
H = 8' - 0"	⊄a1	1	6	9' - 0"	T3
	⌀a2	8	-	——	-
	h22	32	4	9' - 9"	17A
	k22	56	4	12' - 9"	17
	m2	22	6	7' - 9"	Str.
	n2	22	6	6' - 9"	Str.
	p2	80	4	6' - 0"	Str.
	q1	20	4	3' - 6"	17A

NOTE:
⌀ Cast Iron Manhole Steps (R - 1980 - C) from Neenah Foundry or equivalent.

⊄ Locate in center of top slab with 3" clearance at manhole opening.

All dimensions are out to out of bars.

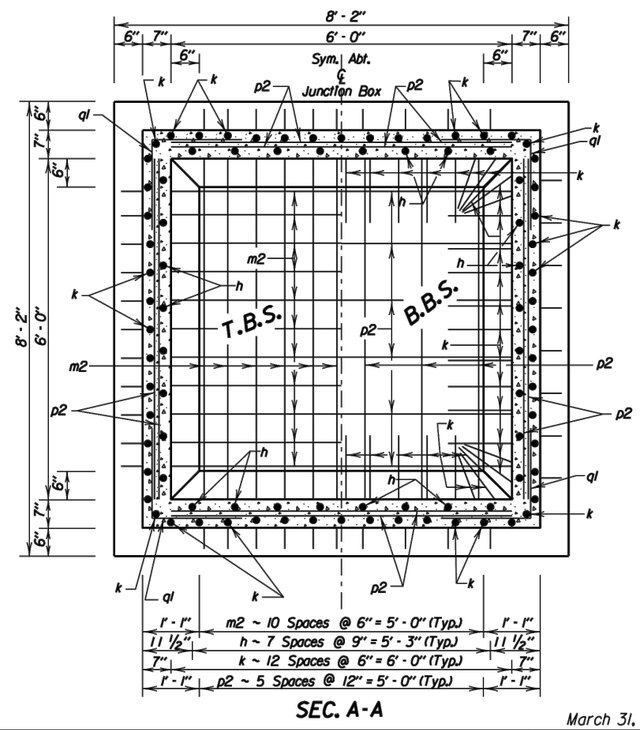

SEC. A-A

March 31, 2000

Published Date: 4th Qtr. 2015 | SDDOT | 6' X 6' JUNCTION BOX | PLATE NUMBER 671.02 | Sheet 2 of 3

REVISED 12/15/15

HIGHWAY 17

LENNOX, SOUTH DAKOTA

STANDARD PLATES

DESIGNED BY: JRB
DRAWN BY: BAB ACAD FILE: 10214 – Details.dwg DATE: 11/19/2015
CHECKED BY: (CHK) BY: DATE:
REVISIONS: BY: DATE:

STOCKWELL ENGINEERS
SIOUX FALLS, SD

SHEET NO.

G44

FOR BIDDING PURPOSES ONLY

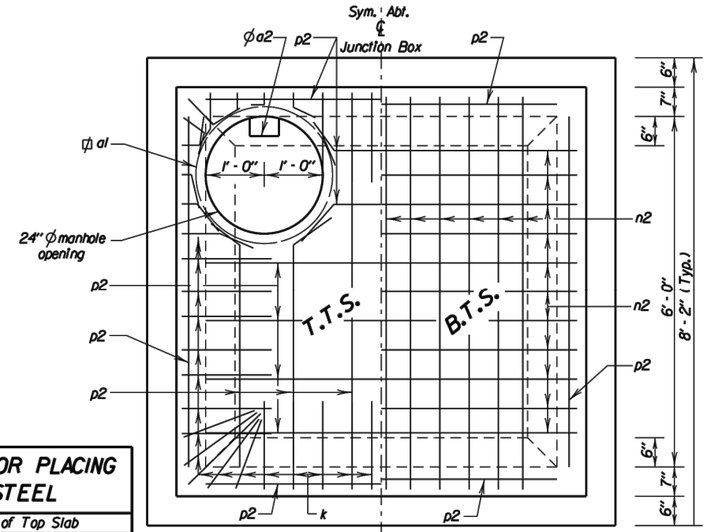

PLAN

LEGEND FOR PLACING RE-STEEL
T. T. S. - Top of Top Slab
B. T. S. - Bottom of Top Slab
T. B. S. - Top of Bottom Slab
B. B. S. - Bottom of Bottom Slab
O. F. W. - Outside Face of Wall
I. F. W. - Inside Face of Wall

1'-1" n2 ~ 10 Spaces @ 6" = 5'-0" (Typ.) 1'-1"
11 1/2" h ~ 7 Spaces @ 9" = 5'-3" (Typ.) 11 1/2"
7" k ~ 12 Spaces @ 6" = 6'-0" (Typ.) 7"
1'-1" p2 ~ 5 Spaces @ 12" = 5'-0" (Typ.) 1'-1"

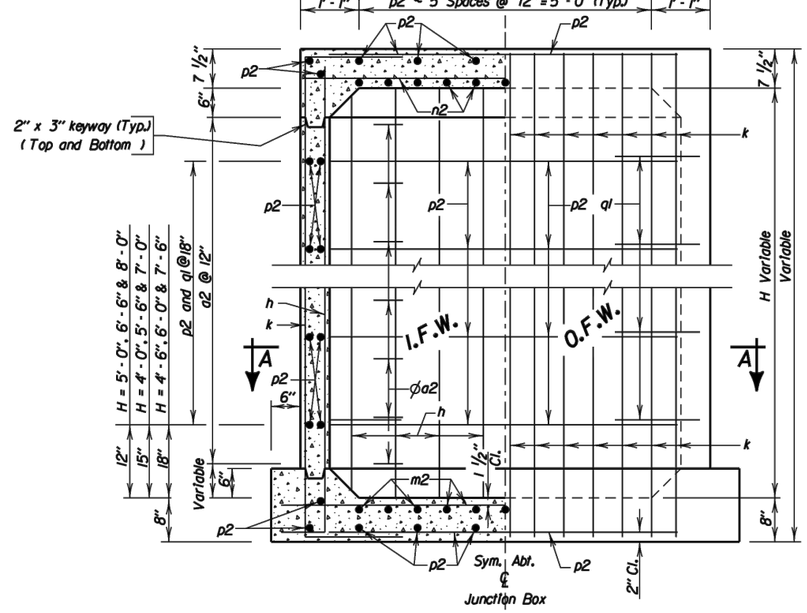

ELEVATION

March 31, 2000

Published Date: 4th Qtr. 2015 | SDDOT | 6'X 6' JUNCTION BOX | PLATE NUMBER 671.02 | Sheet 3 of 3

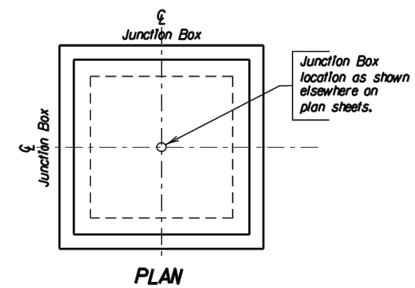

PLAN

SPECIFICATIONS

1. Design Specifications: AASHTO Specifications for Highway Bridges, 1996 Edition (Service Load).
2. Construction Specifications: South Dakota Standard Specifications for Roads and Bridges, Current Edition and required Provisions, Supplemental Specifications and/or Special Provisions as included in the Proposal.

DESIGN MIX OF CONCRETE

1. Mix shall be designed to produce a concrete having a minimum compressive strength of 4000 p.s.i. at 28 days.
2. Type II Cement is required.

GENERAL NOTES

1. Design Live Load: HS 20-44 and Alternate Loading. No construction loading in excess of legal Load was considered.
2. The design of the junction box is based on a maximum fill over the junction box of 5 feet.
3. Unit Stresses: Concrete fc = 1600 p.s.i.
   Reinforcing Steel fs = 24000 p.s.i.
4. All reinforcing steel shall conform to ASTM A615 Grade 60.
5. All exposed edges shall be chamfered ¾".
6. Use 1" clear cover on all reinforcing steel except as shown.
7. The cost of furnishing and installing the manhole steps shall be incidental to the contract unit price per Lb. for "Reinforcing steel".
8. Reinforcing steel shall be cut and bent in field as necessary to fit pipe and manhole openings. (Pipe openings are not shown in these details.) Number, size and location of pipes entering junction box are shown elsewhere on plan sheets.
9. All pipes entering the junction box must fit between the inside faces of the walls.

△ Location, quantities and method of payment for precast eccentric manhole cone sections are shown elsewhere on plan sheets.

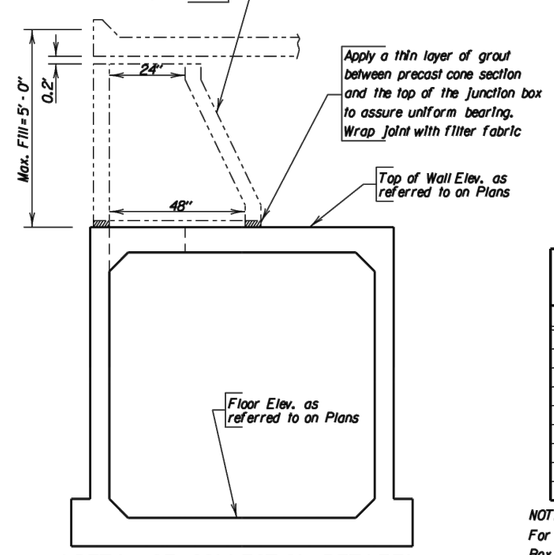

△DETAIL OF CONNECTION BETWEEN PRECAST ECCENTRIC MANHOLE CONE SECTION AND JUNCTION BOX

ITEM	Class M6 Concrete	Reinforcing Steel
UNIT	Cu. Yd.	Lb.
H = 4'-0"	7.09	1506
H = 4'-6"	7.42	1541
H = 5'-0"	7.75	1622
H = 5'-6"	8.08	1657
H = 6'-0"	8.40	1692
H = 6'-6"	8.73	1773
H = 7'-0"	9.06	1808
H = 7'-6"	9.39	1843
H = 8'-0"	9.71	1924

NOTE:
For informational purposes only, the estimated quantities for Junction Box height H are shown above. These quantities do not include quantity reduction for pipe openings, but do include the reduction for the 24" diameter manhole opening.

March 31, 2000

Published Date: 4th Qtr. 2015 | SDDOT | 7'X 7' JUNCTION BOX | PLATE NUMBER 671.03 | Sheet 1 of 3

REVISED 12/15/15

HIGHWAY 17
LENNOX, SOUTH DAKOTA

STANDARD PLATES
DESIGNED BY: JRB
DRAWN BY: BAB ACAD FILE: 10214 - Details.dwg DATE: 11/19/2015
CHECKED BY: (CHK) BY: DATE:
REVISIONS: BY: DATE:
BY: DATE:

STOCKWELL ENGINEERS
SIOUX FALLS, SD

SHEET NO.
G45

FOR BIDDING PURPOSES ONLY

REINFORCING SCHEDULE

	Mk.	No.	Size	Length	Type
H = 4'-0"	⌀a1	1	6	9'-0"	T3
	⌀a2	4	-	——	-
	h25	40	4	5'-9"	17A
	k25	64	4	9'-3"	17
	m3	26	6	8'-9"	Str.
	n3	26	6	7'-9"	Str.
	p3	60	4	7'-0"	Str.
	q1	8	4	3'-6"	17A
H = 4'-6"	⌀a1	1	6	9'-0"	T3
	⌀a2	4	-	——	-
	h26	40	4	6'-3"	17A
	k26	64	4	9'-9"	17
	m3	26	6	8'-9"	Str.
	n3	26	6	7'-9"	Str.
	p3	60	4	7'-0"	Str.
	q1	8	4	3'-6"	17A
H = 5'-0"	⌀a1	1	6	9'-0"	T3
	⌀a2	5	-	——	-
	h27	40	4	6'-9"	17A
	k27	64	4	10'-3"	17
	m3	26	6	8'-9"	Str.
	n3	26	6	7'-9"	Str.
	p3	68	4	7'-0"	Str.
	q1	12	4	3'-6"	17A
H = 5'-6"	⌀a1	1	6	9'-0"	T3
	⌀a2	5	-	——	-
	h28	40	4	7'-3"	17A
	k28	64	4	10'-9"	17
	m3	26	6	8'-9"	Str.
	n3	26	6	7'-9"	Str.
	p3	68	4	7'-0"	Str.
	q1	12	4	3'-6"	17A
H = 6'-0"	⌀a1	1	6	9'-0"	T3
	⌀a2	6	-	——	-
	h29	40	4	7'-9"	17A
	k29	64	4	11'-3"	17
	m3	26	6	8'-9"	Str.
	n3	26	6	7'-9"	Str.
	p3	68	4	7'-0"	Str.
	q1	12	4	3'-6"	17A
H = 6'-6"	⌀a1	1	6	9'-0"	T3
	⌀a2	6	-	——	-
	h30	40	4	8'-3"	17A
	k30	64	4	11'-9"	17
	m3	26	6	8'-9"	Str.
	n3	26	6	7'-9"	Str.
	p3	76	4	7'-0"	Str.
	q1	16	4	3'-6"	17A
H = 7'-0"	⌀a1	1	6	9'-0"	T3
	⌀a2	7	-	——	-
	h31	40	4	8'-9"	17A
	k31	64	4	12'-3"	17
	m3	26	6	8'-9"	Str.
	n3	26	6	7'-9"	Str.
	p3	76	4	7'-0"	Str.
	q1	16	4	3'-6"	17A

Bending Details

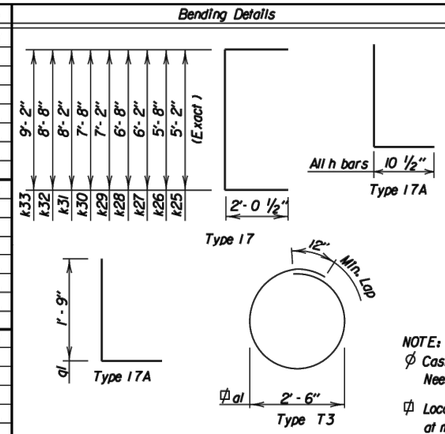

	Mk.	No.	Size	Length	Type
H = 7'-6"	⌀a1	1	6	9'-0"	T3
	⌀a2	7	-	——	-
	h32	40	4	9'-3"	17A
	k32	64	4	12'-9"	17
	m3	26	6	8'-9"	Str.
	n3	26	6	7'-9"	Str.
	p3	76	4	7'-0"	Str.
	q1	16	4	3'-6"	17A
H = 8'-0"	⌀a1	1	6	9'-0"	T3
	⌀a2	8	-	——	-
	h33	40	4	9'-9"	17A
	k33	64	4	13'-3"	17
	m3	26	6	8'-9"	Str.
	n3	26	6	7'-9"	Str.
	p3	84	4	7'-0"	Str.
	q1	20	4	3'-6"	17A

NOTE:

⌀ Cast Iron Manhole Steps (R - 1980 - C) from Neenah Foundry or equivalant.

⌀ Locate in center of top slab with 3" clearance at manhole opening.

All dimensions are out to out of bars.

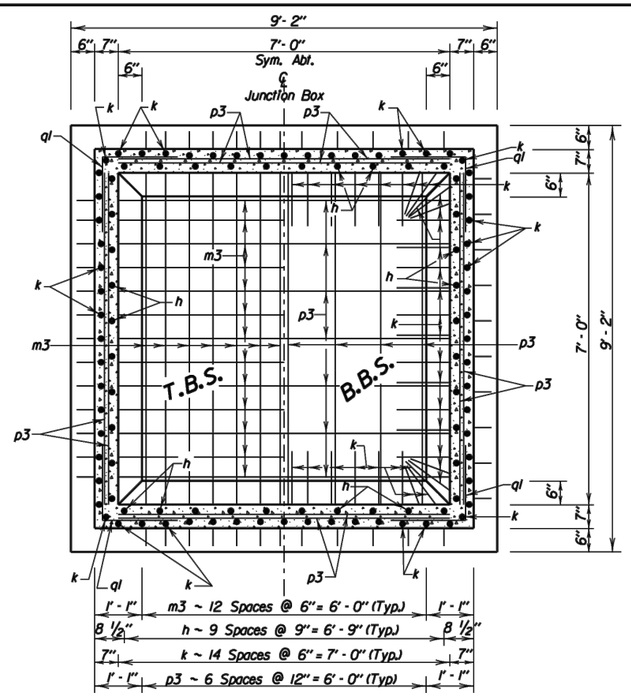

SEC. A-A

March 31, 2000

Published Date: 4th Qtr. 2015

SDDOT

7'X 7' JUNCTION BOX

PLATE NUMBER 671.03

Sheet 2 of 3

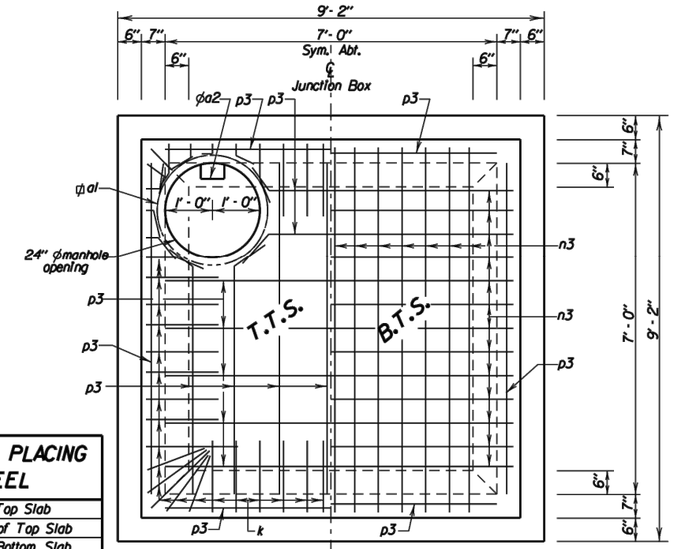

PLAN

LEGEND FOR PLACING RE-STEEL
T. T. S. - Top of Top Slab
B. T. S. - Bottom of Top Slab
T. B. S. - Top of Bottom Slab
B. B. S. - Bottom of Bottom Slab
O. F. W. - Outside Face of Wall
I. F. W. - Inside Face of Wall

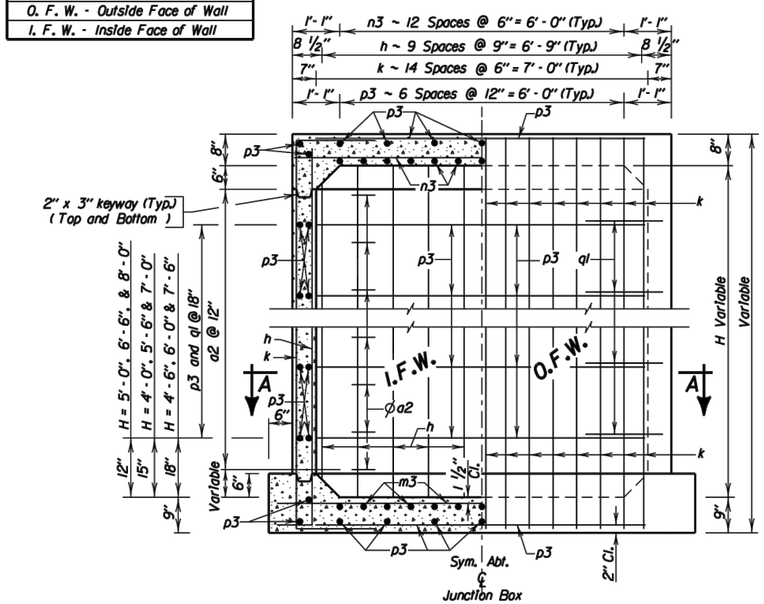

ELEVATION

March 31, 2000

Published Date: 4th Qtr. 2015

SDDOT

7'X 7' JUNCTION BOX

PLATE NUMBER 671.03

Sheet 3 of 3

REVISED 12/15/15

HIGHWAY 17

LENNOX, SOUTH DAKOTA

STANDARD PLATES

DESIGNED BY: JRB
DRAWN BY: BAB ACAD FILE: 10214 — Details.dwg DATE: 11/19/2015
CHECKED BY: (CHK.) BY: DATE:
REVISIONS: BY: DATE:

STOCKWELL ENGINEERS
SIOUX FALLS, SD

SHEET NO.

G46

FOR BIDDING PURPOSES ONLY

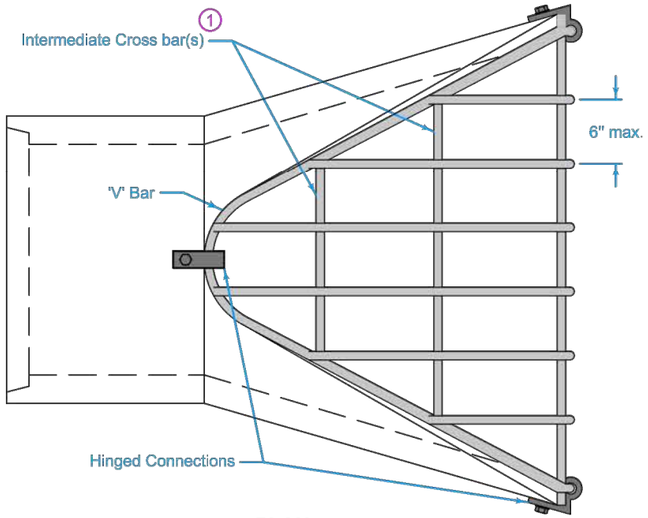

PLAN

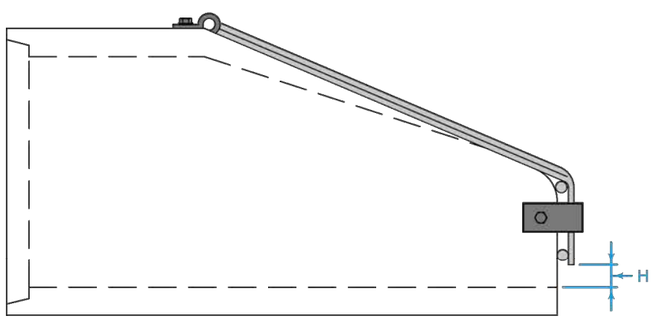

PROFILE

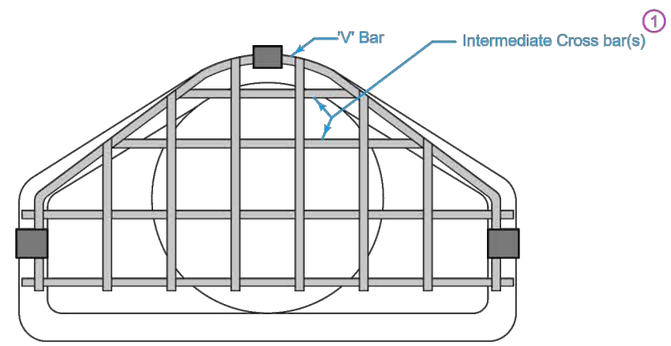

FRONT

Provide guard dimensions to fit with Type of apron provided (DR-201 or DR-202). 'V' Bar is to completely rest on apron.

Use ASTM A615, Grade 40, or merchant quality, smoothed or deformed steel bars in construction of the guard. Comply with fabrication requirements of Section 2404 of the Standard Specifications.

Hot-dip galvanize the completed apron guard according to ASTM A123.

Use bolts, nuts, washers, and fasteners complying with Article 4153.06 of the Standard Specifications.

1 All guards are to have at least one intermediate cross bar. If pipe size is 60 inches or greater, use two intermediate cross bars equally spaced.

ROUND		ARCH	
PIPE SIZE	H	PIPE SIZE	H
12"	$2\frac{1}{2}$"	22" x 14" to 29" x 18"	4"
15"	3"	37" x 23" to 44" x 27"	5"
18" - 24"	4"	52" x 32" to 65" x 40"	6"
27" - 36"	5"	73" x 45" to 88" x 54"	7"
42" - 54"	6"		
60" - 72"	7"		
78" - 90"	8"		

BAR SIZES				
	PIPE SIZE	HOLE DIA. REQ'D.	BOLT DIA.	BAR SIZE
ROUND	12" - 24"	$\frac{3}{4}$"	$\frac{5}{8}$"	$\frac{3}{4}$"
	27" - 48"	$\frac{7}{8}$"	$\frac{3}{4}$"	1"
	54" - 90"	$1\frac{1}{8}$"	1"	$1\frac{1}{4}$"
ARCH	up to 29" x 18"	$\frac{3}{4}$"	$\frac{5}{8}$"	$\frac{3}{4}$"
	37" x 23" to 59" x 36"	$\frac{7}{8}$"	$\frac{3}{4}$"	1"
	65" x 40" to 88" x 54"	$1\frac{1}{8}$"	1"	$1\frac{1}{4}$"
BOLT LENGTH = PIPE WALL THICKNESS + $2\frac{1}{2}$"				

Possible Tabulation:
104-3

IOWA DOT

STANDARD ROAD PLAN

REVISION
New 04-21-15

DR-213

SHEET 1 of 1

REVISIONS: New. replaces RF-26.

Brian Smith
APPROVED BY DESIGN METHODS ENGINEER

PIPE APRON GUARD

HIGHWAY 17

LENNOX, SOUTH DAKOTA

REVISED 12/15/15

STANDARD PLATES

DESIGNED BY: JRB
DRAWN BY: BAB ACAD FILE: 10214 – Details.dwg DATE: 11/19/2015
CHECKED BY: (CHK) BY: DATE:
REVISIONS: BY: DATE:

STOCKWELL ENGINEERS
SIOUX FALLS, SD

SHEET NO.
G47

FOR BIDDING PURPOSES ONLY

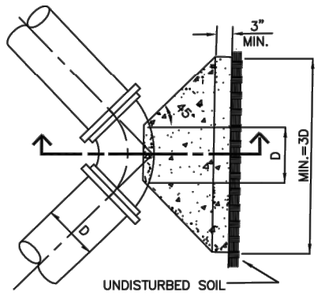

PLAN VIEW

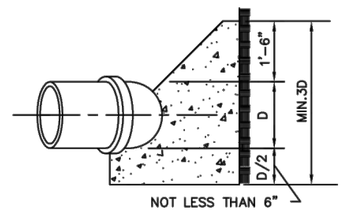

SECTION VIEW

90 - DEGREE BEND

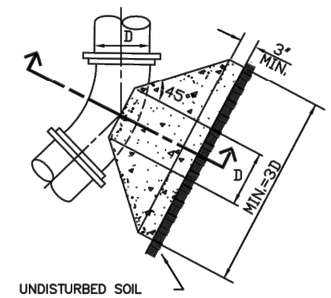

PLAN VIEW

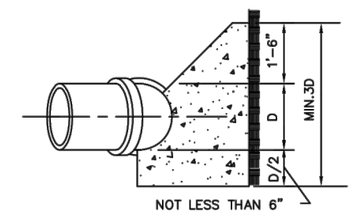

SECTION VIEW

11 1/4 - DEGREE, 22 1/2 - DEGREE AND 45 - DEGREE BENDS

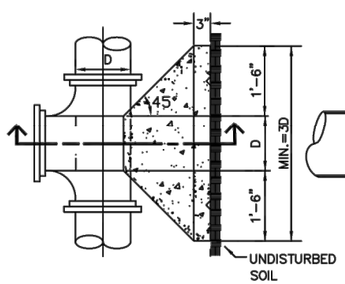

PLAN VIEW

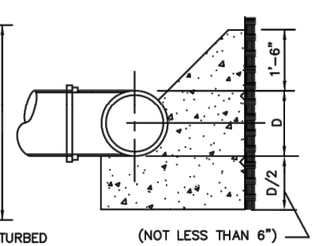

SECTION VIEW

TEE

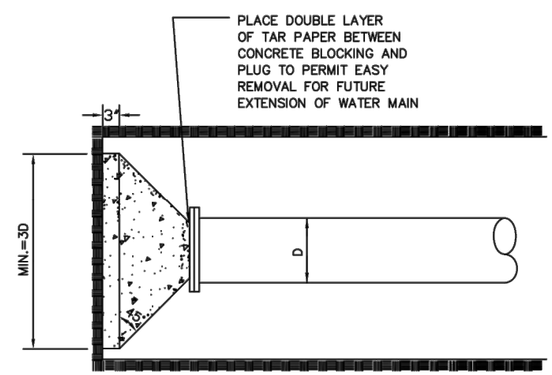

S.J./M.J. PLUG

CONCRETE THRUST BLOCK

REGISTERED PROFESSIONAL ENGINEER
REG. NO. 8237
MITCHELL M. MERGEN
SOUTH DAKOTA
12/14/15

REVISED: AUGUST 2014

CONCRETE THRUST BLOCK	
SPECIFICATION REFERENCE NO. 900	PLATE NUMBER 900.01

REVISED 12/15/15

HIGHWAY 17

LENNOX, SOUTH DAKOTA

STANDARD PLATES

DESIGNED BY: JRB
DRAWN BY: BAB ACAD FILE: 10214 - Details.dwg DATE: 11/19/2015
CHECKED BY: (CHK) BY: DATE:
REVISIONS: BY: DATE:

STOCKWELL ENGINEERS
SIOUX FALLS, SD

SHEET NO.
G48

FOR BIDDING PURPOSES ONLY

HYDRANT CONNECTION

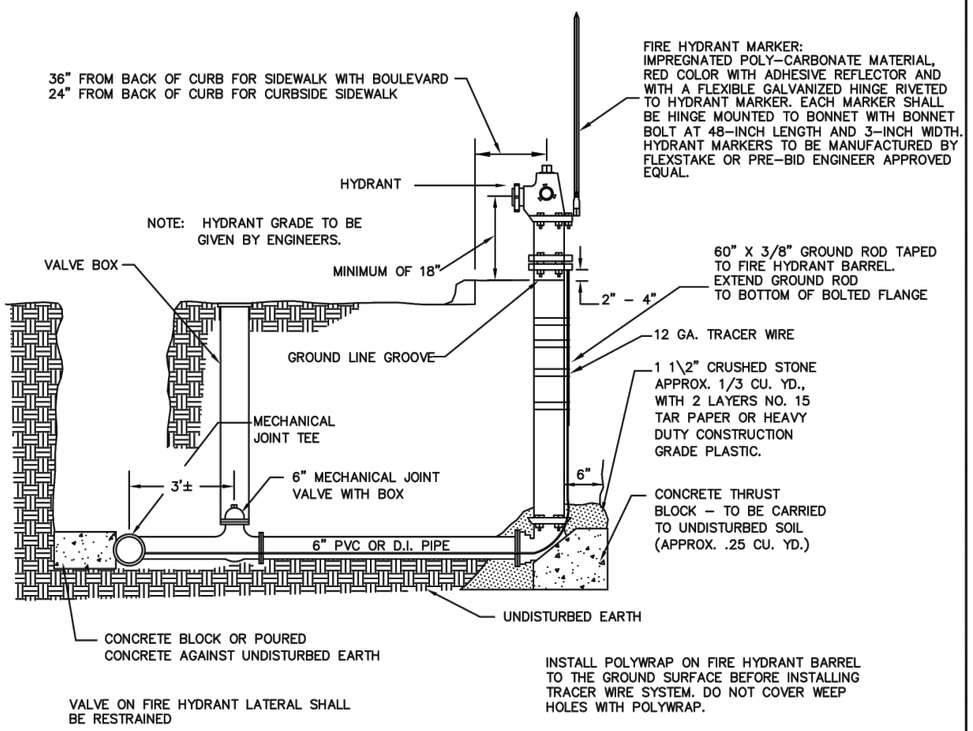

REVISED: DECEMBER 2013

SPECIFICATION REFERENCE NO. 900	HYDRANT CONNECTION	PLATE NUMBER 900.06

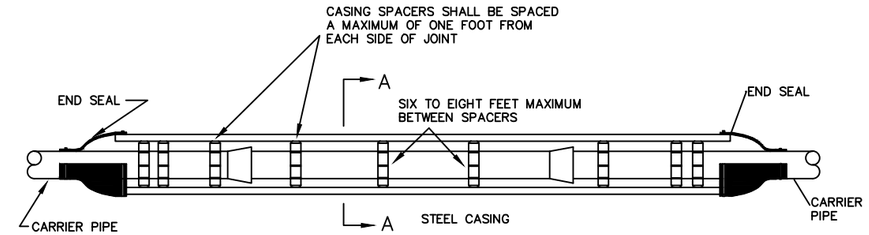

ELEVATION

CASING SPACERS AND END SEALS SHALL BE MANUFACTURED BY ADVANCED PRODUCTS AND SYSTEMS, INC. P.O. BOX 60399 LAFAYETTE, LA. 70596-0399 OR EQUAL AND MEET THESE REQUIREMENTS.

CASING SPACERS - MODEL SSI-8 (PIPE SIZES 24 INCHES IN DIAMETER AND SMALLER) OR MODEL SSI-12-2 (PIPE SIZES 30 INCHES IN DIAMETER AND GREATER) WITH T-304 STAINLESS STEEL SPACER.
BAND - 10 GAUGE T-304 STAINLESS STEEL.
RISER - 10 GAUGE T-304 STAINLESS STEEL.

RUNNERS - TWO INCH WIDE MINIMUM GLASS REINFORCED PLASTIC. THE NUMBER OF RISERS SHALL BE AS RECOMMENDED BY THE MANUFACTURER, BUT FOUR IS THE MINIMUM.

STUDS, NUTS AND WASHERS - T-304 STAINLESS STEEL.

HEIGHTS - AS REQUIRED FOR CENTER RESTRAINING

END SEALS - CONICAL SHAPED WRAP-AROUND 1/8 INCH SYNTHETIC RUBBER WITH T-304 STAINLESS STEEL STRAPS.

CASING PIPE MUST CONFORM TO AREMA DESIGN STANDARDS. MINIMUM YIELD STRENGTH OF 35,000 POUNDS PER SQUARE INCH.

WALL THICKNESS SHALL CONFORM TO AREMA DESIGN STANDARDS.

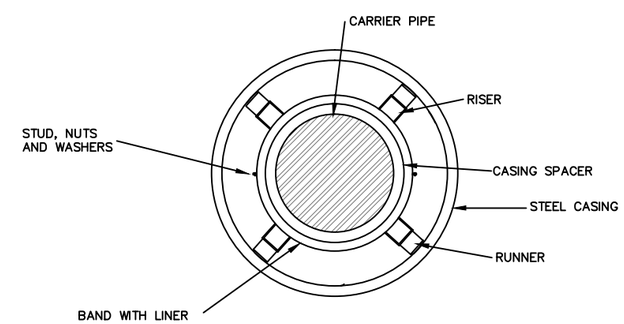

SECTION A-A

PIPE SIZE	CASING SIZE
4"	10"
6"	12"
8"	16"
10"	18"
12"	20"
16"	24"
20"	30"
24"	36"
30"	42"
>36"	*

* AS RECOMMENDED BY MANUFACTURER

REVISED: DECEMBER 2007

SPECIFICATION REFERENCE NO. 900	STANDARD CASING/CARRIER FOR WATER PIPE	PLATE NUMBER 900.09

REGISTERED PROFESSIONAL ENGINEER
REG. NO. 9087
MITCHELL M. MERGEN
SOUTH DAKOTA
12/16/15

REVISED 12/15/15

HIGHWAY 17
LENNOX, SOUTH DAKOTA

STANDARD PLATES

DESIGNED BY: JRB
DRAWN BY: BAB ACAD FILE: 10214 - Details.dwg DATE: 11/19/2015
CHECKED BY: (CHK) DATE:
REVISIONS: BY: DATE:
BY: DATE:

STOCKWELL ENGINEERS
SIOUX FALLS, SD

SHEET NO.
G49

FOR BIDDING PURPOSES ONLY

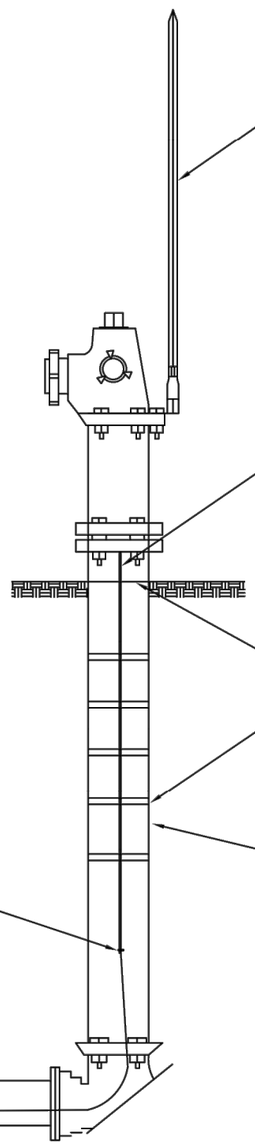

TRACER WIRE DETAIL AT FIRE HYDRANT

NOT TO SCALE

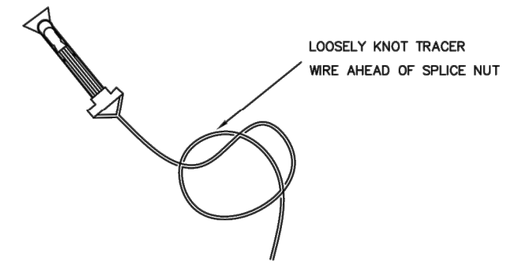

TRACER WIRE SPLICE DETAIL

NOT TO SCALE

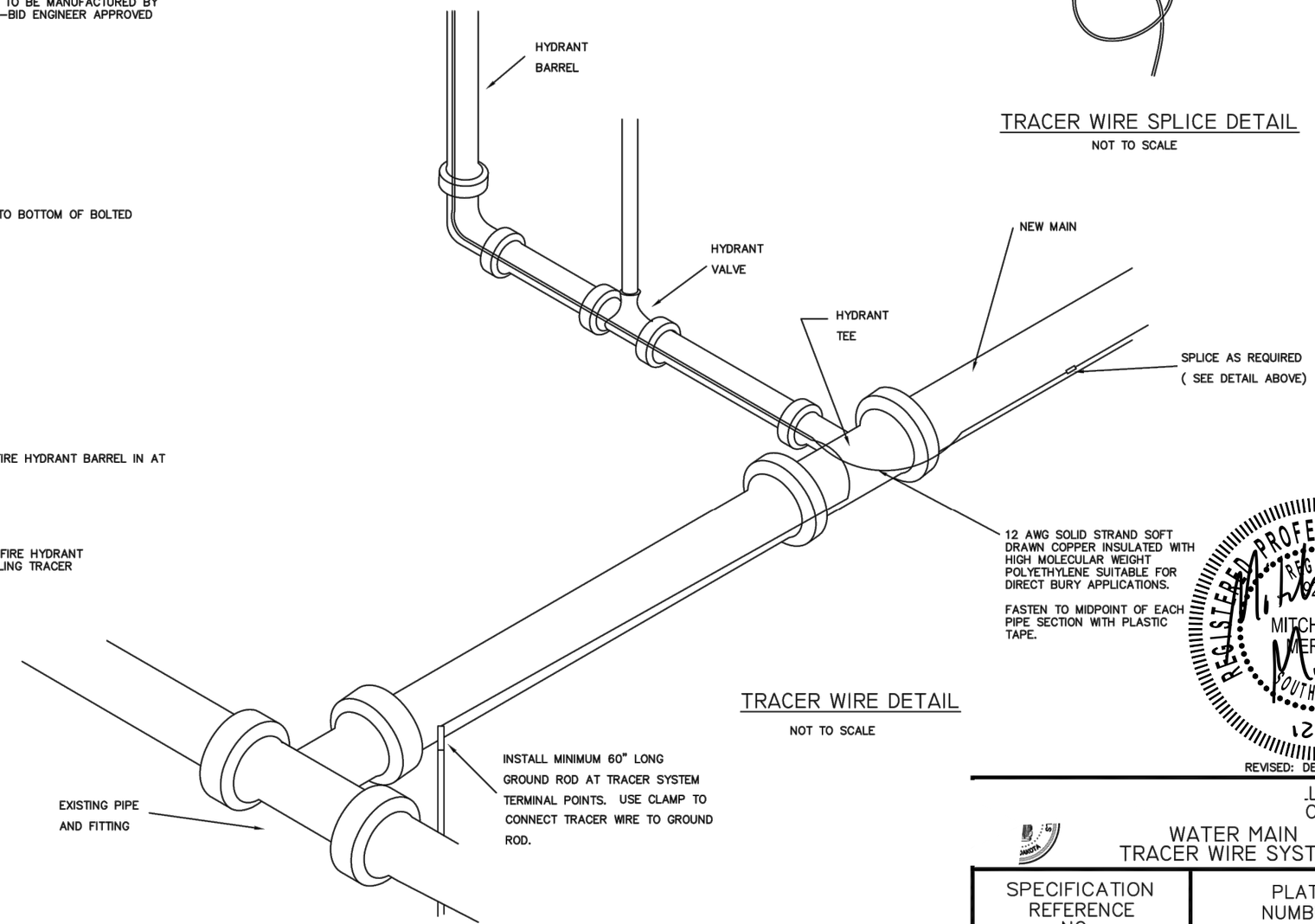

TRACER WIRE DETAIL

NOT TO SCALE

REGISTERED PROFESSIONAL ENGINEER
REG. NO. 9237
MITCHELL M. MERGEN
SOUTH DAKOTA
12/16/15

REVISED: DECEMBER 2013

LS
ON

WATER MAIN
TRACER WIRE SYSTEM

SPECIFICATION REFERENCE NO.	PLATE NUMBER
900	900.07

HIGHWAY 17

LENNOX, SOUTH DAKOTA

REVISED 12/15/15

STANDARD PLATES

DESIGNED BY: JRB
DRAWN BY: BAB ACAD FILE: 10214 - Details.dwg DATE: 11/19/2015
CHECKED BY: (CHK) BY: DATE:
REVISIONS: BY: DATE:

STOCKWELL ENGINEERS
SIOUX FALLS, SD

SHEET NO.

G50

FOR BIDDING PURPOSES ONLY

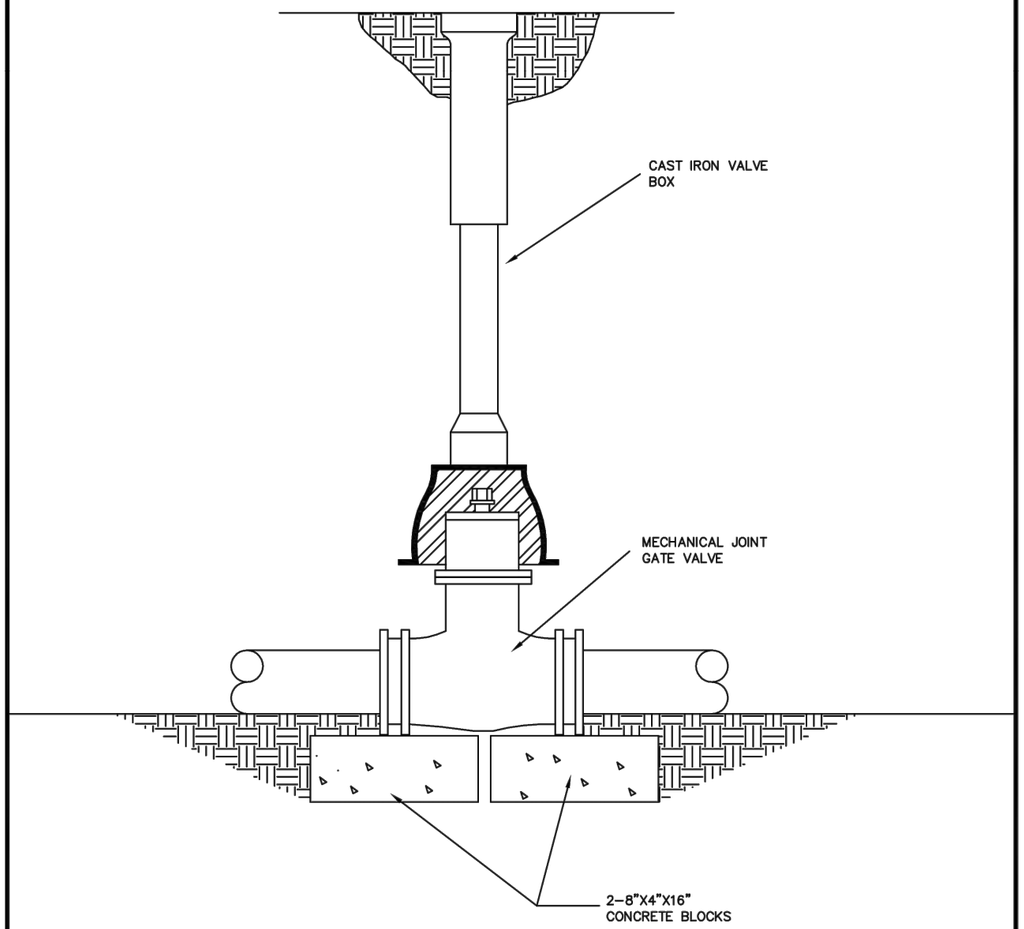

PVC GATE VALVE INSTALLATION

NO SCALE

REVISED: JANUARY 1999

SPECIFICATION REFERENCE NO.		PLATE NUMBER
900	PVC GATE VALVE INSTALLATION	900.08

WATER MAIN BEDDING DETAIL

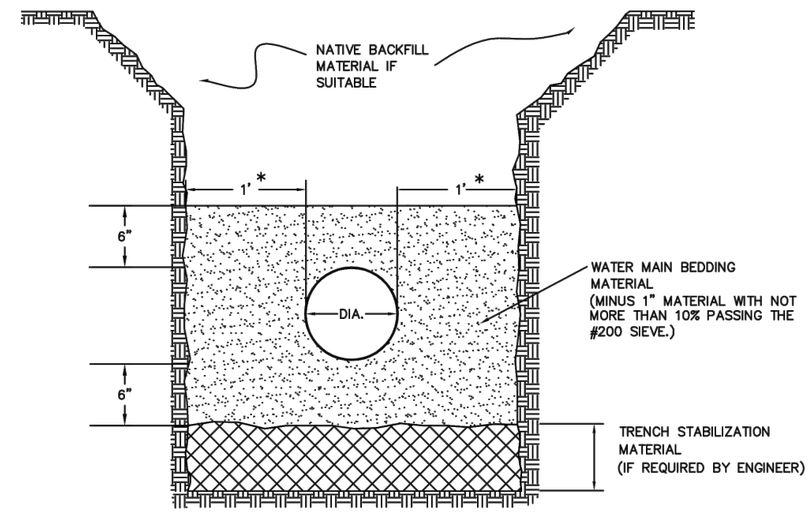

PIPE SIZE DIAMETER	TRENCH WIDTH	TRENCH HEIGHT	TRENCH AREA	PIPE AREA	WATER MAIN BEDDING MAT. AREA	WATER MAIN BEDDING MAT. TONS/LF
4"	28"	16"	3.11 SQ.FT.	.09 SQ.FT.	3.02 SQ.FT.	0.21
6"	30"	18"	3.75 SQ.FT.	.20 SQ.FT.	3.55 SQ.FT.	0.25
8"	32"	20"	4.44 SQ.FT.	.35 SQ.FT.	4.10 SQ.FT.	0.29
10"	34"	22"	5.19 SQ.FT.	.55 SQ.FT.	4.65 SQ.FT.	0.33
12"	36"	24"	6.00 SQ.FT.	.79 SQ.FT.	5.22 SQ.FT.	0.37
16"	40"	28"	7.78 SQ.FT.	1.40 SQ.FT.	6.38 SQ.FT.	0.45
20"	44"	32"	9.78 SQ.FT.	2.18 SQ.FT.	7.60 SQ.FT.	0.53
24"	48"	36"	12.00 SQ.FT.	3.14 SQ.FT.	8.86 SQ.FT.	0.62
30"	60"	42"	17.50 SQ.FT.	4.91 SQ.FT.	12.59 SQ.FT.	0.88

* IF >30" USE DIA./2 ON EACH SIDE OF WATER MAIN PIPE.
* LENGTH BASED ON ONE (1) FOOT OF MAIN.

REVISED: MAY 2007

SPECIFICATION REFERENCE NO.		PLATE NUMBER
900	WATER MAIN BEDDING DETAIL	900.12

REGISTERED PROFESSIONAL ENGINEER
REG. NO. 8237
MITCHELL M. MERGEN
SOUTH DAKOTA
12/14/15

HIGHWAY 17
LENNOX, SOUTH DAKOTA
REVISED 12/15/15

STANDARD PLATES

DESIGNED BY: JRB
DRAWN BY: BAB ACAD FILE: 10214 - Details.dwg DATE: 11/19/2015
CHECKED BY: (CHK) BY: DATE:
REVISIONS: BY: DATE:

STOCKWELL ENGINEERS
SIOUX FALLS, SD

SHEET NO.
G51

FOR BIDDING PURPOSES ONLY

FOR 4" TO 12" DIAMETER PIPE

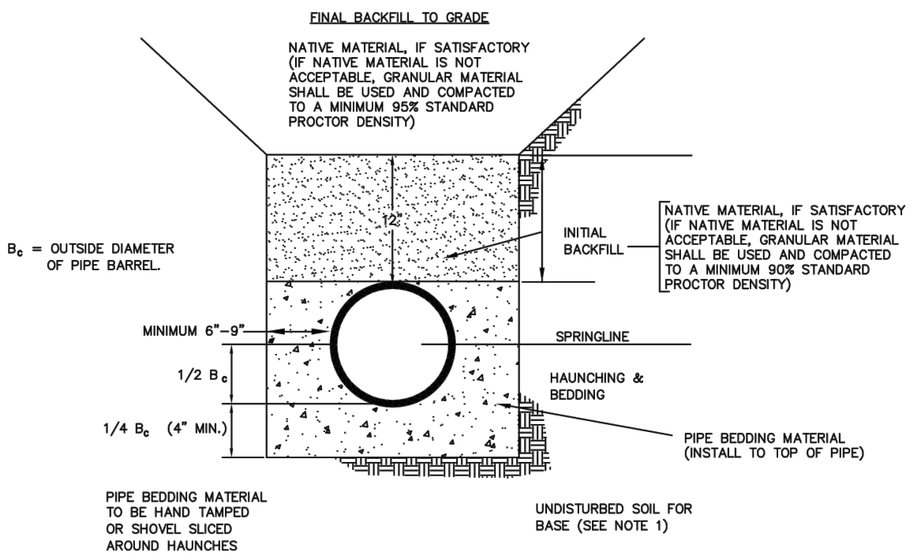

NOTE: 1. IF BASE IS UNSTABLE, TRENCH SHALL BE UNDERCUT AND STABILIZED WITH TRENCH STABILIZATION MATERIAL. SPECIFICATIONS AS PER MANUFACTURER'S RECOMMENDATIONS AND A.S.T.M. C12.

2. BEDDING MATERIAL

95% PASSING 3/4" SEIVE
95% RETAINED #4 SEIVE

(CLEAN ANGULAR, WELL–GRADED, CRUSHED ROCK. PEA ROCK MAY BE USED FOR SANITARY SEWER SERVICE LINES.)

3. THE REQUIRED BEDDING MATERIAL UNDER THE BOTTOM OF THE PIPE SHALL BE INSTALLED PRIOR TO PIPE INSTALLATION.

REVISED: NOVEMBER 2006

SPECIFICATION REFERENCE NO. 950	BEDDING AND BACKFILL REQUIREMENTS FOR 4" TO 12" SANITARY SEWER PIPE	PLATE NUMBER 950.01

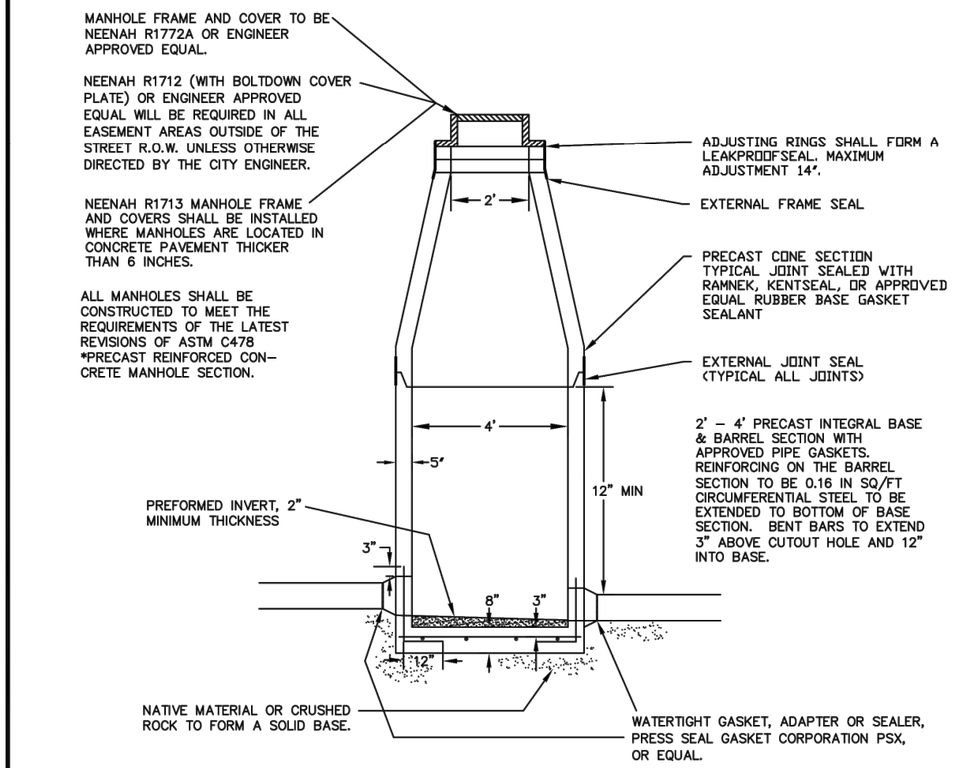

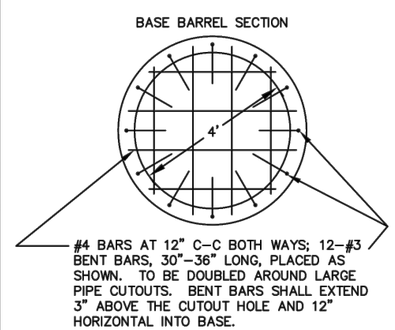

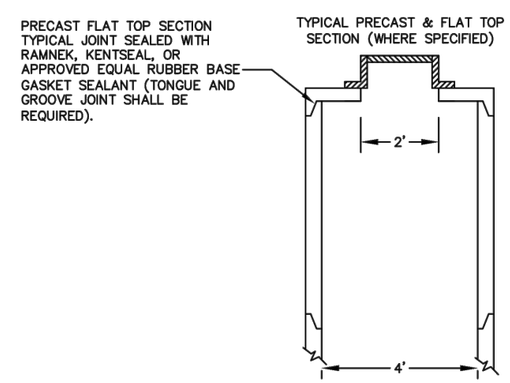

REVISED: DECEMBER 2013

SPECIFICATION REFERENCE NO. 950	SANITARY SEWER MANHOLE	PLATE NUMBER 950.03

REGISTERED PROFESSIONAL ENGINEER
REG. NO. 9231
MITCHELL M. MERGEN
SOUTH DAKOTA
12/16/15

HIGHWAY 17
LENNOX, SOUTH DAKOTA
REVISED 12/15/15

STANDARD PLATES
DESIGNED BY: JRB
DRAWN BY: BAB ACAD FILE: 10214 – Details.dwg DATE: 11/19/2015
CHECKED BY: (CHK) BY: DATE:
REVISIONS: BY: DATE:

STOCKWELL ENGINEERS
SIOUX FALLS, SD

SHEET NO.
G52

FOR BIDDING PURPOSES ONLY

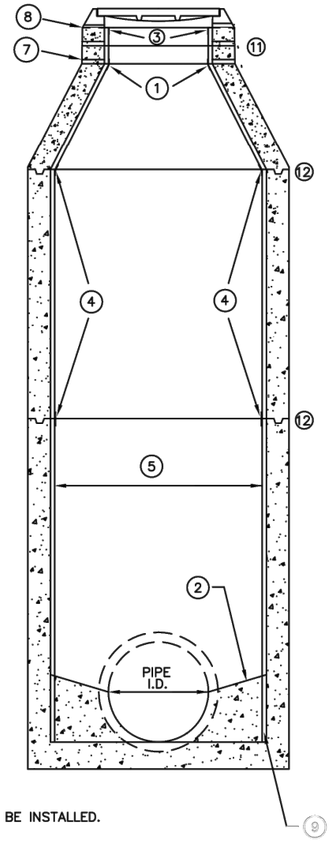

1. PREFORMED CORNER WELD STRIP TO BE INSTALLED.
2. PRE-FORMED BENCH AND INVERT.
3. INSTALL 2 PREFORMED CORNER TURNBACKS UNDER RING.
4. WELD STRIPS
5. ALL CONCRETE SURFACES, EXCEPT THE INVERTS, WHICH WILL BE EXPOSED TO SEWER GASES SHALL BE LINED. THIS INCLUDES ALL CONCRETE PIPE SURFACES IF CONCRETE PIPE IS USED.
6. INSTALLATION OF THE MANHOLE LINER PLATE SHALL CONFORM TO THE REQUIREMENTS OF THE SUPPLEMENTAL SPECIFICATIONS.
7. THE LINER SHALL BE EXTENDED OVER THE TOP OF THE CORBEL SECTION TO FORM A CONTINUOUS SEAL WITH THE MANHOLE WALL LINING. THE LINER SHALL BE EXTENDED TO ONE-HALF THE THICKNESS OF THE CORBEL TOP SECTION.
8. WHERE ADJUSTING RINGS ARE ALLOWED AND/OR REQUIRED, PLASTIC ADJUSTING RINGS SHALL BE USED WHEN CONDITIONS ALLOW FOR THEIR USE. IF CONCRETE ADJUSTING RINGS ARE NECESSARY, (FOR CONCRETE STREET INSTALLATIONS) THE TOP AND INTERIOR FACE OF THE TOP CONCRETE ADJUSTING RING SHALL BE LINED. IF CONCRETE ADJUSTING RINGS ARE USED, THE SEAL BETWEEN THE CASTING AND TOP ADJUSTING RING SHALL BE MADE WITH 3/16" TO 1/4" THICK CONTINUOUS TROWELABLE BUTYL RUBBER. THE BUTYL RUBBER MATERIAL SHALL BE CONTINUOUS AROUND THE ENTIRE CASTING FLANGE SURFACE.
9. THE LINER SHALL BE EXTENED DOWN TO THE BOTTOM OF THE BASE SECTION TO FORM A CONTINUOUS SEAL WITH THE MANHOLE WALL LINING.
10. ALL VERTICAL LINER JOINTS SHALL BE WELDED IN THE SHOP.
11. EXTERNAL FRAME SEAL
12. EXTERNAL JOINT SEAL (TYPICAL ALL JOINTS)

REVISED: DECEMBER 2013

SPECIFICATION REFERENCE NO. 950	SANITARY SEWER MANHOLE LINED TYPE	PLATE NUMBER 950.04

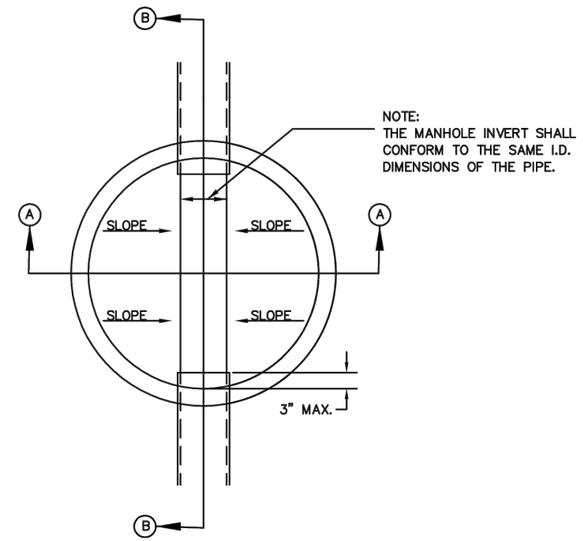

PLAN

TYPICAL STRAIGHT THROUGH MANHOLE

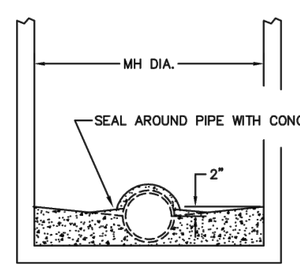

SECTION A–A

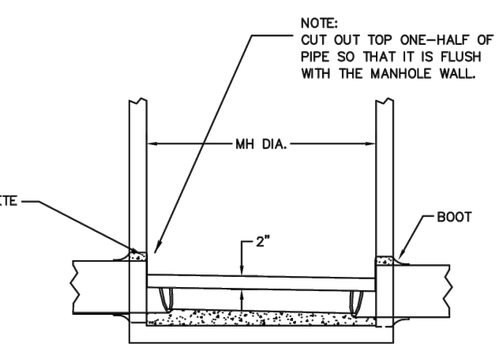

SECTION B–B

REVISED: NOVEMBER 2003

SPECIFICATION REFERENCE NO. 950	MANHOLE BENCH AND INVERT DETAIL	PLATE NUMBER 950.07

REGISTERED PROFESSIONAL ENGINEER
REG. NO. 9237
MITCHELL M. MERGEN
SOUTH DAKOTA
12/10/15

HIGHWAY 17
LENNOX, SOUTH DAKOTA
REVISED 12/15/15

STANDARD PLATES

DESIGNED BY: JRB
DRAWN BY: BAB ACAD FILE: 10214 – Details.dwg DATE: 11/19/2015
CHECKED BY: (CHK)
REVISIONS: BY: DATE:
BY: DATE:

STOCKWELL ENGINEERS
SIOUX FALLS, SD

SHEET NO.
G53

FOR BIDDING PURPOSES ONLY

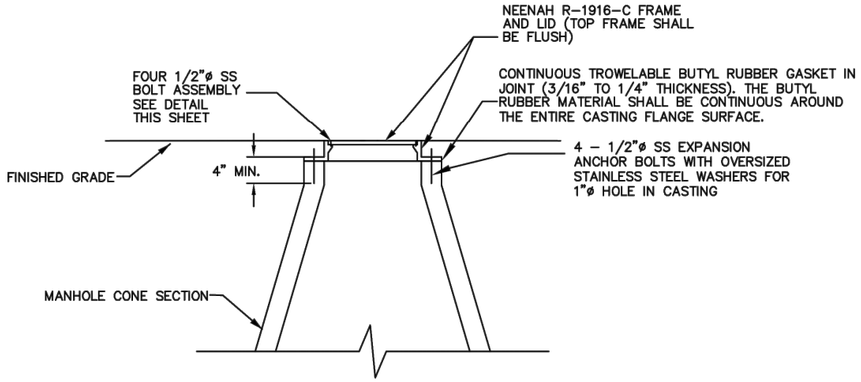

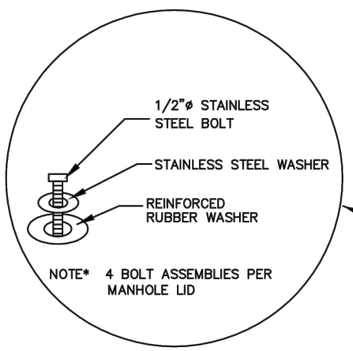

HOLES IN LID SHALL BE OVERSIZED TO ALLOW ASSEMBLY OF LID IN ANY CONFIGURATION

(4) – DRILL AND TAP FRAME FOR 1/2 – 13 x 1 3/4" STNLS. STL. HEX. HD. CAP SCREWS WITH REINFORCED RUBBER AND STAINLESS STEEL WASHERS.

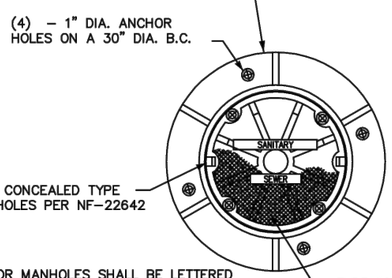

NOTES: 1. ALL LIDS FOR MANHOLES SHALL BE LETTERED WITH "SANITARY SEWER"

2. MANHOLE FRAME AND COVER SHALL BE NEENAH R-1916-C OR ENGINEER APPROVED EQUAL

3. MANHOLE FRAME AND COVER NEENAH R-1916-C SHALL BE INSTALLED IN SPECIFIED AREAS OUTSIDE OF THE STREET ROW WHICH ARE IN AREAS WITH HARD SURFACING

REVISED: OCTOBER 2005

SPECIFICATION REFERENCE NO. 950	SANITARY SEWER WATERTIGHT FRAME AND BOLTED COVER	PLATE NUMBER 950.08

MANHOLE COVER SECTION

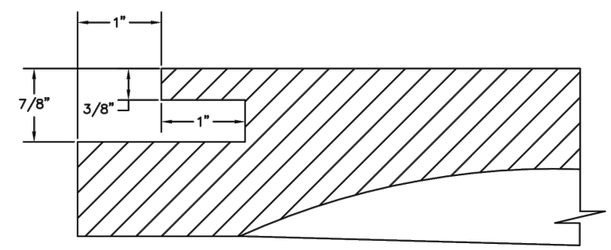

WIDTH = 2 INCHES

NOTE: CONCEALED PICK HOLES AND THE SEAL BETWEEN THE FRAME AND COVER SHALL BE PROTECTED FROM ASPHALT, CONCRETE PAVEMENT, CHIP SEAL AND SOIL. IT SHALL BE THE CONTRACTORS RESPONSIBILITY TO PROVIDE A SYSTEM TO PREVENT MATERIAL FROM ENTERING THE CONCEALED PICK HOLE AND FRAME AND COVER SEAL DURING THE WORK.

REVISED: OCTOBER 2004

SPECIFICATION REFERENCE NO. 950	CONCEALED PICK HOLE FOR SANITARY MANHOLE COVERS	PLATE NUMBER 950.09

REGISTERED PROFESSIONAL ENGINEER
REG. NO. 9237
MITCHELL M. MERGEN
SOUTH DAKOTA
12/14/15

HIGHWAY 17
LENNOX, SOUTH DAKOTA
REVISED 12/15/15

STANDARD PLATES
DESIGNED BY: JRB
DRAWN BY: BAB ACAD FILE: 10214 – Details.dwg DATE: 11/19/2015
CHECKED BY: (CHK) BY: DATE:
REVISIONS: BY: DATE:

STOCKWELL ENGINEERS
SIOUX FALLS, SD

SHEET NO.
G54

FOR BIDDING PURPOSES ONLY

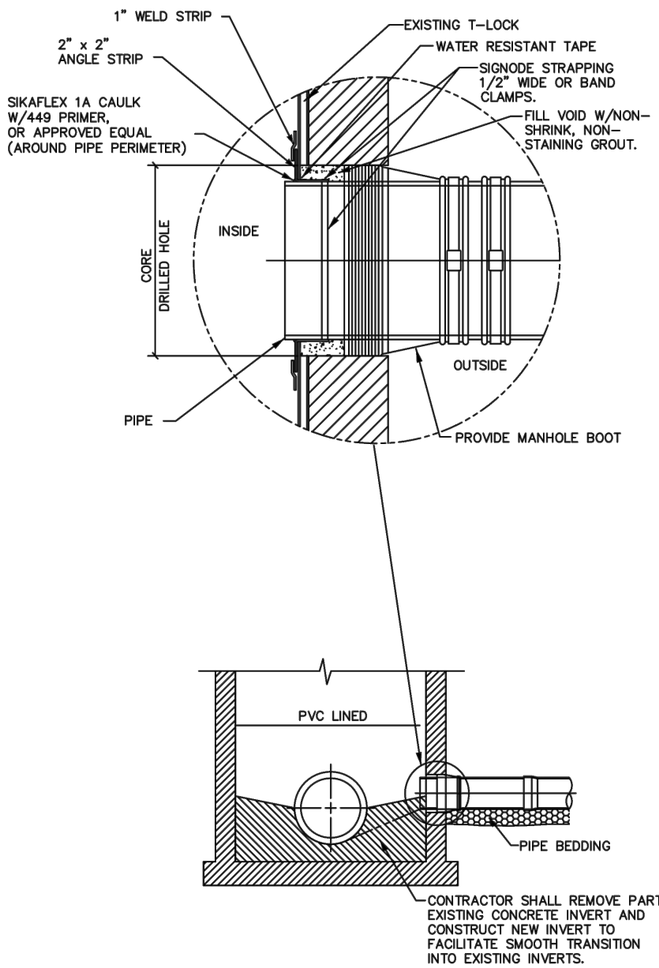

REVISED: DECEMBER 2013

SPECIFICATION REFERENCE NO.		PLATE NUMBER
950	SANITARY SEWER LINED MANHOLE PIPE CONNECTION	950.11

TYPICAL SANITARY SEWER RISER SERVICE

NOTE: JOINTS SHALL BE WIPED CLEAN AND DRY – AND COATED WITH LUBRICANT. SPIGOT SHALL BE INSERTED INTO BELL AS DEEP AS POSSIBLE. TRENCHES SHALL BE KEPT WATER FREE AND AS DRY AS POSSIBLE DURING BEDDING, LAYING AND JOINTING OF PIPE.

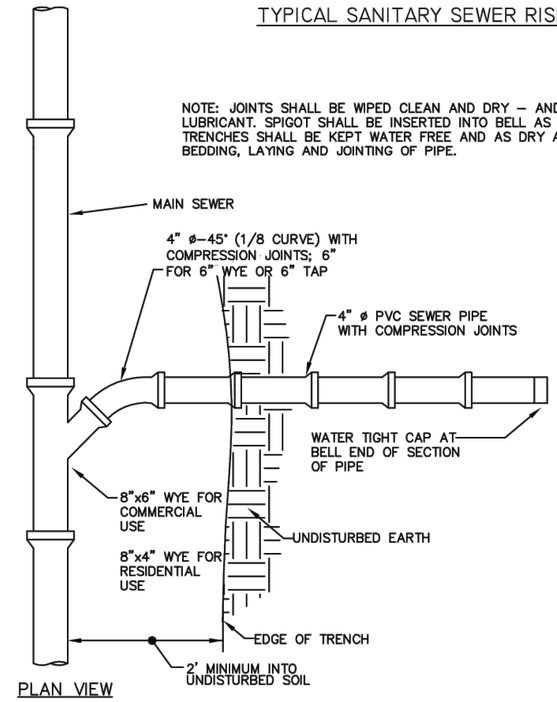

PLAN VIEW

NOTES:
1. USE FOR SERVICE CONNECTION WHEN SANITARY SEWER DEPTH EXCEEDS 12' UNLESS ADDITIONAL DEPTH IS NECESSARY TO SERVE ADJACENT PROPERTY.

2. CONTRACTOR SHALL INSTALL SERVICE AND RISER OUTSIDE OF THE SANITARY MAIN SEWER TRENCH

3. CONTRACTOR SHALL MARK THE LOCATION OF THE END OF THE SERVICE LINE (SEE STANDARD DETAIL 950.14)

4. FACTORY TEES OR WYES SHALL BE USED ON NEW CONSTRUCTION

5 PAYMENT AND MEASUREMENT:
PAYMENT UNDER BID ITEM FOR SANITARY SEWER SERVICES SHALL INCLUDE:
A. PIPE DIAMETER X SEWER WYE (SIZE SHOWN ON PLANS)
B. ALL PVC SERVICE LINE PIPING AND FITTINGS
C. BEDDING MATERIAL FOR PVC SERVICE LINE
D. WATER TIGHT PLUG
E. ANY OTHER MATERIALS REQUIRED TO COMPLETE SEWER SERVICE INSTALLATION

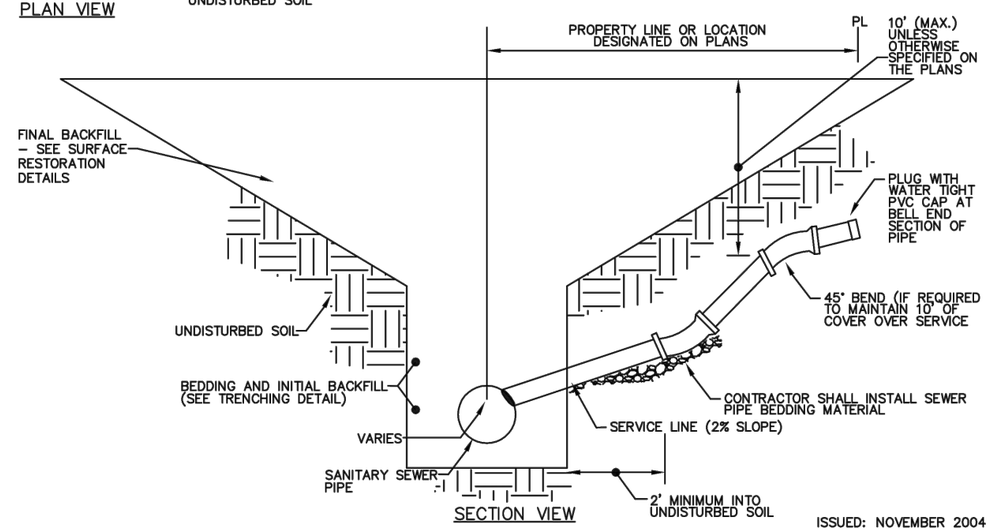

SECTION VIEW

ISSUED: NOVEMBER 2004

SPECIFICATION REFERENCE NO.		PLATE NUMBER
950	TYPICAL SANITARY SEWER RISER SERVICE DETAIL	950.19

REGISTERED PROFESSIONAL ENGINEER
REG. NO. 9437
MITCHELL M. MERGEN
SOUTH DAKOTA
12/14/15

REVISED 12/15/15

HIGHWAY 17
LENNOX, SOUTH DAKOTA

STANDARD PLATES
DESIGNED BY: JRB
DRAWN BY: BAB ACAD FILE: 10214 – Details.dwg DATE: 11/19/2015
CHECKED BY: (CHK) BY: DATE:
REVISIONS: BY: DATE:

STOCKWELL ENGINEERS
SIOUX FALLS, SD

SHEET NO.
G55

FOR BIDDING PURPOSES ONLY

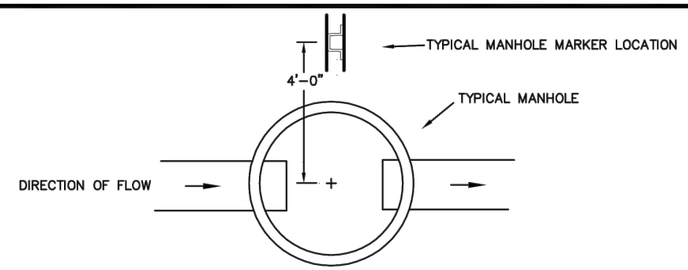

MANHOLE MARKER LOCATIONS WILL VARY.
VERIFY LOCATION WITH ENGINEER IN THE FIELD.

PLAN VIEW

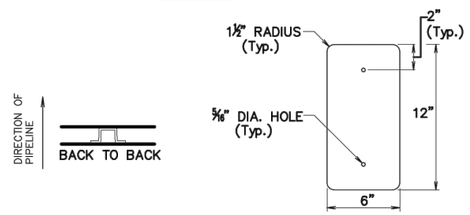

TYPE 2 OBJECT MARKER DETAIL
⅞" TO 1⅛" GRIP RANGE
¼" TWIN RIVET (SINGLE AND BACK TO BACK)

TYPE 2 OBJECT MARKER DETAILS AND POST ORIENTATION

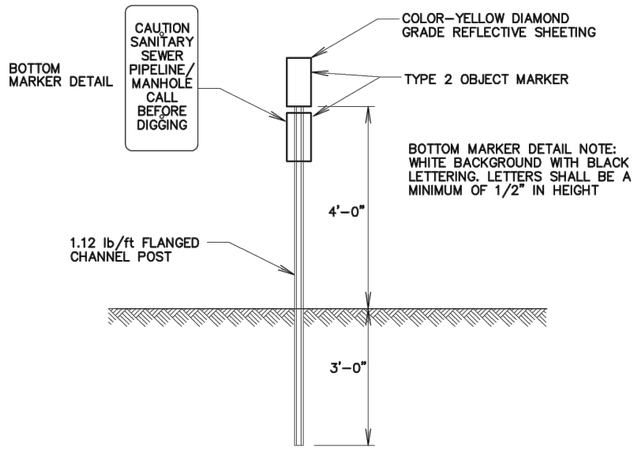

SECTION VIEW

GENERAL NOTES:

THE TYPE 2 OBJECT MARKERS SHALL CONFORM TO SDDOT STANDARD SPECIFICATIONS SECTION 982.2 I.

THE 1.12 lb/ft FLANGED CHANNEL POST SHALL CONFORM TO SDDOT STANDARD SPECIFICATIONS SECTION 982.2 I. 6.

TYPE 2 MANHOLE MARKERS SHALL BE USED IN ALL INTERSTATE AND HIGHWAY DITCH RIGHT-OF-WAY AREAS AND WHERE SPECIFIED.

REVISED: AUGUST 2012

SPECIFICATION REFERENCE NO. 950	TYPICAL MANHOLE MARKER TYPE 2	PLATE NUMBER 950.20

SECTION

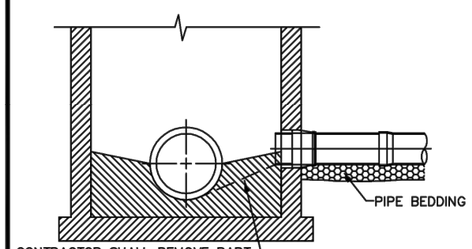

CONTRACTOR SHALL REMOVE PART OF EXISTING CONCRETE BENCH AND INVERT AND CONSTRUCT NEW BENCH AND INVERT TO FACILITATE SMOOTH TRANSITION INTO EXISTING INVERTS.

PLAN

TYPICAL STRAIGHT THROUGH MANHOLE

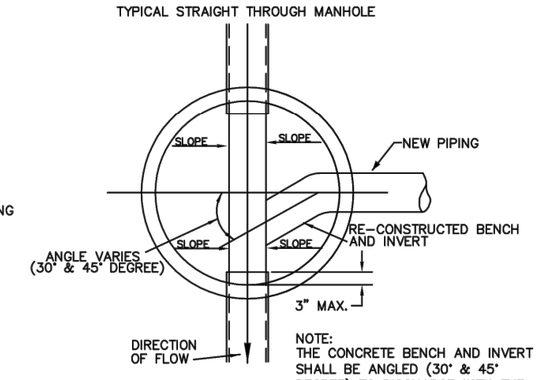

NOTE:
THE CONCRETE BENCH AND INVERT SHALL BE ANGLED (30° & 45° DEGREE) TO DISCHARGE WITH THE FLOW. THE MANHOLE BENCH SHALL BE RECONSTRUCTED WITH A SMOOTH AS GLASS INVERT FOR THE NEW PIPE TO DISCHARGE INTO.

CONNECTION DETAIL

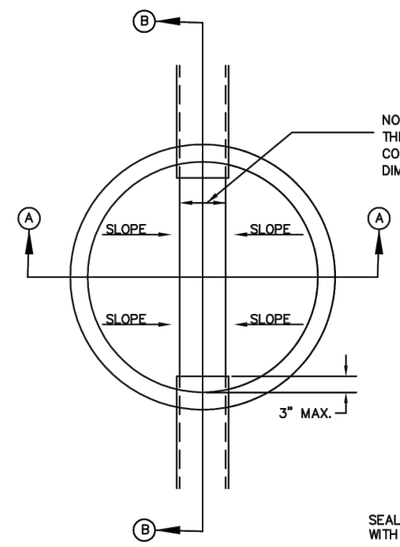

NOTE:
THE MANHOLE INVERT SHALL CONFORM TO THE SAME I.D. DIMENSIONS OF THE PIPE.

PLAN

TYPICAL STRAIGHT THROUGH MANHOLE

SECTION A–A

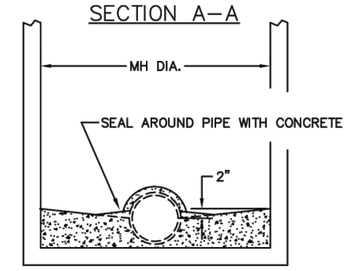

SECTION B–B

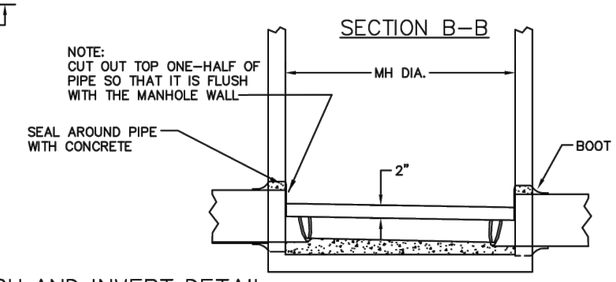

MANHOLE BENCH AND INVERT DETAIL

ISSUED: NOVEMBER 2006

SPECIFICATION REFERENCE NO. 950	CONNECTION TO EXISTING MANHOLE	PLATE NUMBER 950.21

REGISTERED PROFESSIONAL ENGINEER
REG. NO. 8237
MITCHELL M. MERGEN
SOUTH DAKOTA
12/11/15

HIGHWAY 17
LENNOX, SOUTH DAKOTA
REVISED 12/15/15

STANDARD PLATES

DESIGNED BY: JRG
DRAWN BY: BAB ACAD FILE: 10214 - Details.dwg DATE: 11/19/2015
CHECKED BY: (CHK) BY: DATE:
REVISIONS: BY: DATE:
BY: DATE:

STOCKWELL ENGINEERS
SIOUX FALLS, SD

SHEET NO.
G56

FOR BIDDING PURPOSES ONLY

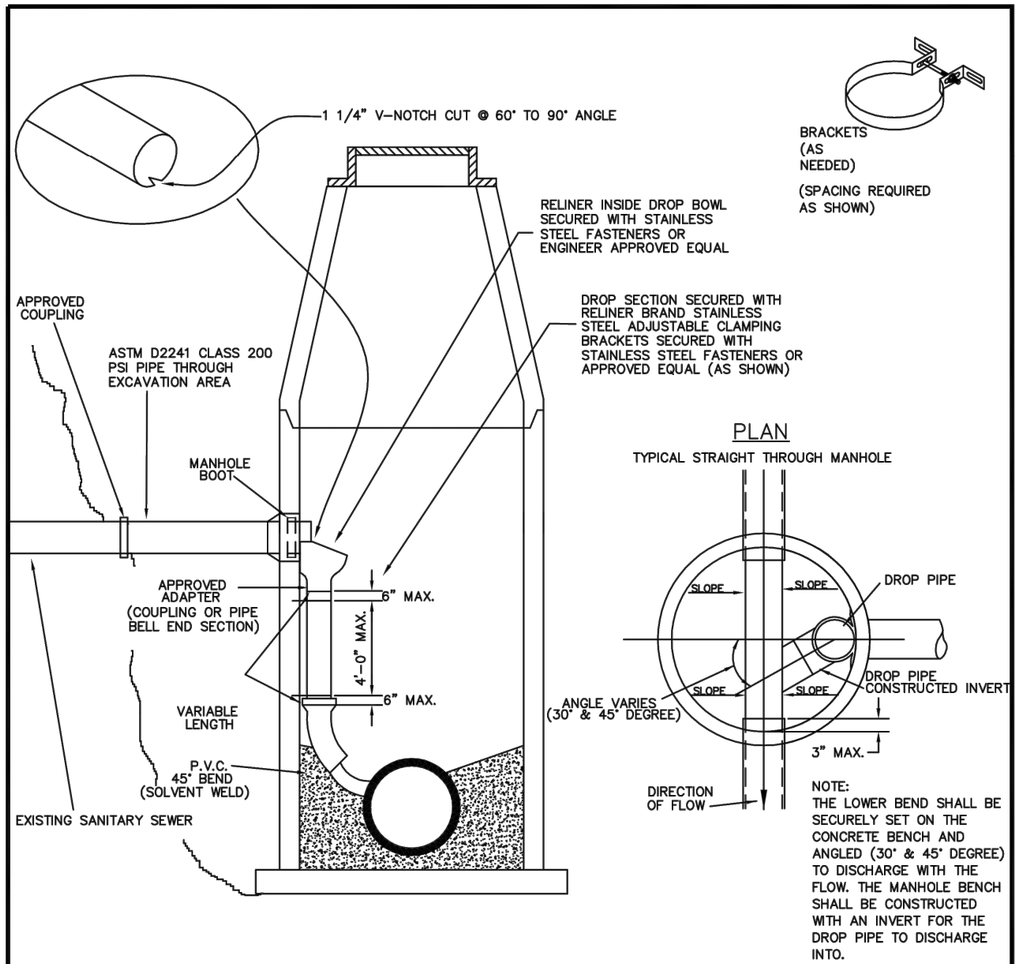

NOTE:
THE LOWER BEND SHALL BE SECURELY SET ON THE CONCRETE BENCH AND ANGLED (30° & 45° DEGREE) TO DISCHARGE WITH THE FLOW. THE MANHOLE BENCH SHALL BE CONSTRUCTED WITH AN INVERT FOR THE DROP PIPE TO DISCHARGE INTO.

NOTE:

THE P.V.C. DROP SECTION SHALL BE SECURED TO THE BARREL SECTION WITH APPROVED NON-CORROSIVE ADJUSTABLE CLAMPING BRACKET(S), AND THE LOWER BEND SHALL BE SECURED AND FORMED INTO THE BENCH OF THE FLOWLINE. THE DROP BOWL SHALL BE SECURED WITH STAINLESS STEEL FASTENERS OR ENGINEER APPROVED EQUAL AND CONNECTED TO THE DROP PIPE WITH APPROVED ADAPTERS. THE DROP BOWL SHALL ALLOW CLEARANCE FOR MAINTENANCE EQUIPMENT INTO THE EXISTING LINE. ASTM D2241 CLASS 200 PSI PIPE SHALL BE LAID THROUGH THE EXCAVATION AREA (TO PREVENT BREAKAGE DURING SETTLEMENT) AND CONNECTED TO THE EXISTING MANHOLE THROUGH A MANHOLE BOOT. THE COST OF THE ASTM D2241 CLASS 200 PSI PIPE SHALL BE ABSORBED IN THE UNIT PRICE BID FOR THE MANHOLE DROP SECTION.

THE MANHOLE BOOT SHALL BE SIMILAR TO THE MANHOLE BASE SECTION SPECIFICATION MINIMUM OF 8" BETWEEN THE OPENING FOR THE DROP SECTION AND THE NEAREST JOINT.

REVISED: AUGUST 2012

SPECIFICATION REFERENCE NO. 950	SANITARY SEWER MANHOLE BOWL TYPE DROP SECTION	PLATE NUMBER 950.05

REGISTERED PROFESSIONAL ENGINEER
REG NO. 9437
MITCHELL M. BERGEN
SOUTH DAKOTA
12/14/15

HIGHWAY 17
LENNOX, SOUTH DAKOTA
REVISED 12/15/15

STANDARD PLATES
DESIGNED BY: JRB
DRAWN BY: BAB ACAD FILE: 10214 - Details.dwg DATE: 11/19/2015
CHECKED BY: (CHK) BY: DATE:
REVISIONS: BY: DATE:

STOCKWELL ENGINEERS
SIOUX FALLS, SD

SHEET NO.
G57