7

Connecting South Dakota and the Nation

DEPARTMENT OF TRANSPORTATION

NOTICE TO CONTRACTORS,

PROPOSAL, SPECIAL PROVISIONS,

CONTRACT AND CONTRACT BOND

FOR

REPLACE STRUCTURE (106' CONTINUOUS CONCRETE BRIDGE) & APPROACH GRADING

FEDERAL PROJECT NO. P 0034(150)272
(PCN 02RW)

SD HIGHWAY 34

IN BUFFALO COUNTY

NOTICE TO ALL BIDDERS

TO REPORT BID RIGGING ACTIVITIES, CALL: 1-800-424-9071

THE U.S. DEPARTMENT OF TRANSPORTATION (DOT) OPERATES THE ABOVE TOLL-FREE “HOTLINE” MONDAY THROUGH FRIDAY, 8:00 A.M. TO 5:00 P.M., EASTERN TIME. ANYONE WITH KNOWLEDGE OF POSSIBLE BID RIGGING, BIDDER COLLUSION, OR OTHER FRAUDULENT ACTIVITIES SHOULD USE THE “HOTLINE” TO REPORT SUCH ACTIVITIES.

THE “HOTLINE” IS PART OF THE DOT’S CONTINUING EFFORT TO IDENTIFY AND INVESTIGATE HIGHWAY CONSTRUCTION CONTRACT FRAUD AND ABUSE AND IS OPERATED UNDER THE DIRECTION OF THE DOT INSPECTOR GENERAL.

ALL INFORMATION WILL BE TREATED CONFIDENTIALLY AND CALLER ANONYMITY WILL BE RESPECTED.

*** * * ***

PLANS, PROPOSALS AND ADDENDA

AFTER AWARD OF CONTRACT, THE LOW BIDDER WILL RECEIVE TEN (10) COMPLIMENTARY SETS OF PLANS, PROPOSALS, PROJECT Q & A FORUM, AND ADDENDA FOR FIELD AND OFFICE USE. AN ELECTRONIC COPY WILL ALSO BE PROVIDED. ANY ADDITIONAL COPIES REQUIRED WILL BE THE RESPONSIBILITY OF THE CONTRACTOR.

*** * * ***

Project Number: P 0034(150)272

Revised 6/24/15
PCN 02RW

NOTICE TO CONTRACTORS

Bid proposals for this project will be received electronically by the South Dakota Department of Transportation (SDDOT) via the SDDOT secure bid submission site at http://apps.sd.gov/hc65bidletting/bidsubmittallogin.aspx until 10 A.M. Central time, on February 17, 2016, at which time the SDDOT will open bids. All bids will be checked for qualifications with results posted on the SDDOT website. The South Dakota Transportation Commission will consider all bids at a scheduled Commission meeting.

The work for which proposals are hereby requested is to be completed within the following requirement(s):

FIELD WORK COMPLETION: **OCTOBER 14, 2016**

THE DBE GOAL FOR THIS PROJECT IS: **NOT SPECIFIED.**

WORK TYPE FOR THIS PROJECT IS: **Work Type 7.**

Bidding package for the work may be obtained at: http://apps.sd.gov/hc65bidletting/ebslettings1.aspx

An electronic version of the most recent version of the South Dakota Standard Specifications for Roads and Bridges may be obtained at http://www.sddot.com/business/contractors/specs/2015specbook/Default.aspx

The electronic bid proposal must be submitted by a valid bidder as designated on the Bidding Authorization Form. The Bidder ID and Password, coupled with a previously Department assigned Company ID, will serve as authentication that an individual is a valid bidder and will assure the secure electronic delivery of bid proposals to the Department. This authorization shall remain in full force and effect until written notice of termination of this authorization is sent by an Officer of the company and received by the Department.

PROPOSAL Revised 8/10/11

SOUTH DAKOTA DEPARTMENT OF TRANSPORTATION, STATE OF SOUTH DAKOTA:

Ladies / Gentlemen:

The following proposal is made on behalf of the undersigned and no others. It is in all respects fair and is made without collusion on the part of any other person, firm or corporation not appearing in the signature to this proposal.

The undersigned certifies that she / he has carefully examined the plans listed herein, the Specifications hereinbefore referred to, the Special Provisions and the form of contract, both of which are attached hereto. The undersigned further certifies that she / he has personally inspected the actual location of the work, together with the local sources of supply and that she / he understands the conditions under which the work is to be performed, or, that if she / he has not so inspected the actual location of the work, that she / he waives all right to plea any misunderstanding regarding the location of the work or the conditions peculiar to the same.

On the basis of the plans, Specifications, Special Provisions and form of contract proposed for use, the undersigned proposes to furnish all necessary machinery, tools, apparatus and other means of construction, to do all the work and furnish all the materials in the manner specified, to finish the entire project **within the contract time specified** and to accept as full compensation therefore the amount of the summation of the products of the actual quantities, as finally determined, multiplied by the unit prices bid.

The undersigned understands that the quantities as shown in the Bid Schedule are subject to increase or decrease, and hereby proposes to perform all quantities of work, as increased or decreased, in accordance with the provisions of the specifications, and subject to any applicable special provisions, and at the unit prices bid.

The undersigned understands that the "Total or Gross Amount Bid" as immediately hereinbefore set forth is not the final amount which will be paid if this proposal is accepted and the work done, but that such amount is computed for the purpose of comparison of the bids submitted and the determination of the amount of the performance bond.

The undersigned further proposes to perform all extra work that may be required on the basis provided in the specifications, and to give such work personal attention in order to see that it is economically performed.

The undersigned further proposes to both execute the contract agreement and to furnish a satisfactory performance bond, in accordance with the terms of the specifications, within twenty (20) calendar days after the date of Notice of Award from the South Dakota Department of Transportation that this proposal has been accepted.

CERTIFICATION REGARDING LOBBYING

I certify, to the best of my knowledge and belief, that: No Federal appropriated funds have been paid or will be paid, by or on behalf of the undersigned, to any person for influencing or attempting to influence an officer or employee of any agency, a member of Congress, an officer or employee of Congress, or an employee of a member of Congress in connection with the awarding of any Federal contract, the making of any Federal grant, the making of any Federal loan, the entering into of any cooperative agreement, and the extension, continuation, renewal, amendment, or modification of a Federal contract, grant, loan, or cooperative agreement. If any funds other than Federal appropriated funds have been paid or will be paid to any of the above mentioned parties, the undersigned shall complete and submit Standard Form LLL, “Disclosure Form to Report Lobbying,” in accordance with its instructions.

The undersigned shall require that the language of this certification be included in the award documents for all subawards at all tiers (including subcontracts, subgrants, and contracts under grants, loans, and cooperative agreements) and that all subrecipients shall certify and disclose accordingly. This certification is a material representation of fact upon which reliance was placed when this transaction was made or entered into. Submission of this certification is a prerequisite for making or entering into this transaction imposed by section 1352, title 31, U.S. Code. Any person who fails to file the required certification shall be subject to a civil penalty or not less than $10,000 and not more than $100,000 for each such failure.

REV. 1/20/16

SPECIAL PROVISIONS

PROJECT NUMBER(S): P 0034(150)272 PCN: 02RW

TYPE OF WORK: REPLACE STRUCTURE (106' CONTINUOUS CONCRETE BRIDGE) & APPROACH GRADING

COUNTY: BUFFALO

The following clauses have been prepared subsequent to the Standard Specifications for Roads and Bridges and refer only to the above described improvement, for which the following Proposal is made.

The Contractor's attention is directed to the need for securing from the Department of Environment & Natural Resources, Foss Building, Pierre, South Dakota, permission to remove water from public sources (lakes, rivers, streams, etc.). The Contractor should make his request as early as possible after receiving his contract, and insofar as possible at least 30 days prior to the date that the water is to be used.

Mark Anderson is the official in charge of the Pierre Career Center for Buffalo County.

THE FOLLOWING ITEMS ARE INCLUDED IN THIS PROPOSAL FORM:

Special Provision for Indian Employment and Contracting on the Crow Creek Reservation, dated 1/8/16.

Special Provision Regarding Right of Entry, dated 1/19/16.

Special Provision Regarding Section 404 of the Clean water Act, dated 9/21/15.

Fact Sheet #23.

Special Provision for Concrete Penetrating Sealer, dated 2/22/10.

Special Provision for Contractor Staking with Machine Control Grading Option, dated 1/14/16.

Special Provision for Dynamic Pile Monitoring and Static Pile Load Testing, dated 8/18/15.

List of Utilities.

Special Provision for Contractor Administered Preconstruction Meeting, dated 4/18/13.
Fuel Adjustment Affidavit, DOT form 208 dated 7/15.
Standard Title VI Assurance, dated 7/14/08.
Special Provision For Disadvantaged Business Enterprise, dated 5/20/15.
Special Provision For EEO Affirmative Action Requirements on Federal and Federal-aid Construction Contracts, dated 9/1/97.

Special Provision For Required Contract Provisions Federal-aid Construction Contracts, Form FHWA 1273 (Rev. May/1/12), dated 4/30/13.
Required Contract Provisions Federal-aid Construction Contracts, Form FHWA 1273 (Rev. 5/1/12).
Special Provision for Cargo Preference Act, dated 1/20/16.
Special Provision Regarding Minimum Wage on Federal-Aid Projects, dated 4/30/13.
Wage and Hour Division US Department of Labor Washington DC.
- US Dept. of Labor Decision Number SD150001, dated 10/9/15.
Special Provision for Price Schedule for Miscellaneous Items, dated 10/14/15.

Special Provision Regarding Storm Water Discharge to Waters of the United States Within Indian Reservations, dated 5/3/13.
National Pollutant Discharge Elimination System General Permit for Discharges from Large and Small Construction Activities.
http://www.epa.gov/npdes/pubs/cgp2012_finalpermit.pdf

*** * * ***

STATE OF SOUTH DAKOTA
DEPARTMENT OF TRANSPORTATION

SPECIAL PROVISION FOR INDIAN EMPLOYMENT AND CONTRACTING ON THE CROW CREEK RESERVATION

PROJECT NO. P 0034(150)272; PCN 02RW
BUFFALO COUNTY
JANUARY 8, 2016

PURPOSE

The purpose of the Indian Employment and Contracting Special Provision is to establish the specifications for Indian preference and the responsibilities of the contractor and subcontractors for this project.

All of this project is located within the exterior boundaries of the Crow Creek Reservation.

Title 23 United States Code (USC), Section 140(d), recognizes and permits the preferential employment of Indians living on or near a reservation on projects and contracts on Indian reservations roads. The State of South Dakota and the Department of Transportation, consistent with the intent of Section 140(d), affirms that it is their policy to encourage employment of minorities.

DEFINITIONS

For the purposes of this Special Provision, the following definitions will apply:

A. **Indian:** An enrolled member of a federally recognized Indian tribe.

B. **Qualified Indian Applicant** is defined as one or more of the following:

1) Applicants who have demonstrated or are presently demonstrating their work qualifications during a probationary work period on this project.
2) Applicants certified by the Tribal TERO offices, as having adequate skills and training necessary to perform the duties of the position

C. **Core Crew Employee**: A contractor's or subcontractor's core crew is composed of full-time employed individuals necessary to satisfy his/her reasonable needs for supervisory or specially experienced personnel to assure an efficient execution of the contract work. Any Indian already employed by a contractor will be included in the core crew, regardless of job function, to avoid the unintended results of having a contractor lay-off or terminate an Indian employee to hire another under this provision.

D. **Pre-Employment Standards**: Directly related job standards of fitness and ability which indicate that with a reasonable amount of job training a person would be capable of satisfactorily performing an entry level position as well as jobs at a higher level which, with a reasonable amount of training, are normally filled by progression from an entry-level position. This applies to those persons who, at the time of application for employment, are not fully qualified for the available jobs but have general potential of becoming qualified through a reasonable amount of training.

DEPARTMENT RESPONSIBILITIES

The Department (Civil Rights Office or Area Office):

A. Will monitor contractor and subcontractors for compliance with the requirements of this special provision and will perform necessary reviews of contractors and subcontractors to ensure compliance with the Special Provision.

B. Will assist the contractor and subcontractor with any disputes with the TERO Office or other Tribal entity.

C. Will establish on-the-job training opportunities as specified in the On-the-Job Training Special Provision.

D. Will provide notification to the TERO Office of the name of the successful low bidder.

E. Will provide notification to the successful low bidder regarding the TERO requirements.

F. Will invite a representative of the TERO Office to attend the preconstruction meeting and provide a copy of the preconstruction meeting minutes to the TERO Office.

G. Will not allow a contractor or subcontractor to commence work until the contractor's or subcontractor's compliance plan has been approved and the Department's Area Office has received a copy of the approved compliance plan or verbal or written notification of approval by the TERO Office.

CONTRACTOR RESPONSIBILITIES

A. The contractor and subcontractor will give preference in employment opportunities under this contract to qualified Indian applicants who can perform the work required regardless of race, color, creed, age, sex, religion, national origin, disability, or tribal affiliation to the extent set out in the paragraphs below.

B. The contractor and subcontractor will not use pre-employment standards, qualifications, criteria, or other personnel requirements as a barrier to Indian employment except when such criteria or standards are required by business necessity. The contractor and subcontractor have the burden of showing that such criteria or standards are required by business necessity.

C. The contractor agrees that Indians will be given preference for at least seventy percent (70%) of the project work force provided that sufficient qualified Indian applicants are available. The phrase "work force" will not include "core crew employees".

D. The contractor and subcontractor are required to complete a compliance plan and submit the compliance plan to the TERO Office at least two (2) weeks prior to beginning work. Prior to commencing work, contractors and subcontractors are expected to contact the Crow Creek Sioux Tribe TERO Office concerning an identified core crew, project work force needs, and (sub)contractor/TERO interface. No contractor or subcontractor will begin work until the compliance plan has been approved by the TERO Office. The contractor and any subcontractor must submit a copy of the approved compliance plan to the Department's Area Office prior to commencing work unless arrangements are made for the TERO Office to provide the copy of the compliance plan directly to the Department's Area Office. In lieu of a copy of the approved compliance plan, the Department's Area Office may seek approval directly from the TERO Office.

E. The contractor will provide the TERO Director at least forty-eight (48) hours' notice to locate and refer a qualified Indian applicant for any vacancy or new position except when circumstances require the position be filled within a shorter period of time. If the TERO Office is unable to fill the vacancy, the contractor and subcontractor may recruit and hire workers from whatever sources are available and by whatever process, provided the contractor and subcontractor notifies the TERO Office of any job vacancies, positions, or any negotiated positions.

F. The contractor and subcontractor will provide for maintenance of records and be prepared to furnish such periodic reports documenting compliance under this Special Provision as the Department determines necessary. The contractor and subcontractor will submit the following information on a weekly basis to the Tribal TERO Office:

    1. Weekly TERO Employment Report which includes the following data (forms for the weekly TERO Employment Report available from the TERO Office):
        a) Wage and hour reports; and,
        b) Personnel actions which include new hires, promotions, terminations, and disciplinary actions
    2. Copies of official payrolls.

G. The contractor and subcontractor agree that all qualified Indian employees will be adequately trained for the position for which they are hired. The contractor and subcontractor will evaluate and pay all Indian employees in accordance with current company policies and contract provisions.

H. Nothing in this Special Provision will be construed to interfere with the contractor's ability to dismiss any employee for cause including, but not limited to, lack of adequate skills or training, inability to perform by virtue of Tribal, state, or federal law, or breach of the contractor's standards of conduct.

OTHER PROVISIONS

This Special Provision supplements but does not replace the existing equal employment opportunity and disadvantaged business enterprise requirements, which may be included in this Agreement.

The Tribal TERO Office will maintain a Job Skills Bank, listing available Indians by job classification based on skill level as indicated on their TERO application. The contractor and subcontractors agree to utilize the Tribal TERO office to locate qualified applicants.

The contractor is authorized to include in the bid an amount necessary to cover the employment rights fee as follows: three percent (3%) for all projects with a total contract dollar amount of $100,000 and over, and two percent (2%) for all projects with a total contract dollar amount under $100,000, which is applicable to this project, based on the portion of the project which is located on Tribal lands. The Department has determined that one hundred percent (100%) of the project is within those boundaries; therefore the contractor is authorized to include a TERO fee amount based on 100% of the total contract dollar amount.

The contractor is authorized to include in the bid an amount necessary to cover a Tribal Training Fee. This fee is one percent (1%) and based on the portion of the project which is located within the boundaries of the Crow Creek Reservation. The Department has determined that one hundred percent (100%) of the project is within those boundaries; therefore the contractor is authorized to include a Tribal Training fee amount based on 100% of the total contract dollar amount. Contact the Tribal TERO Office for complete details at 605-245-2221.

The Crow Creek Sioux Tribe has an Indian Preference Subcontracting goal, which has been established at the same level as the Department's DBE goal for this project and is concurrent with the Department's DBE goal. The Tribe recognizes that FHWA policy does not permit the Department to extend Indian preference in subcontracting for this project and is satisfied that the Department and the contractor will seek qualified and DBE-certified Indian firms for this project. The contractor will make every reasonable effort to inform certified Indian DBE firms of the subtracting opportunities of the project and to solicit bids from such firms. Contact the Tribal TERO Office at 605-245-2221 or the Department's Civil Rights Office at 605-773-3540 for assistance.

ENFORCEMENT

The contractor and all subcontractors are made aware that this Special Provision is made part of the contract requirements, and that the Department of Transportation will monitor and enforce these provisions in a manner similar to other special provisions, as outlined in Division I, General Provisions of the Standard Specifications for Roads and Bridges, 2015 edition.

The TERO Special Provision will apply to the entire project and not just the portion located within the boundaries of the Crow Creek Reservation with the exception of the fees that are calculated based on the portion located on Tribal lands.

It is the intent of all parties that this Special Provision be implemented on a cooperative basis without regard to jurisdictional issues. It is agreed that nothing in this Special Provision will prevent the Tribe, the Department, or any contractor from instituting any litigation pertaining to any jurisdictional issue with regard to the employment rights code or any other matter.

****

STATE OF SOUTH DAKOTA
DEPARTMENT OF TRANSPORTATION

SPECIAL PROVISION REGARDING
SECTION 404 OF
THE CLEAN WATER ACT

P 0034(150)272, PCN 02RW
BUFFALO COUNTY

SEPTEMBER 21, 2015
NATIONWIDE PERMIT NO NWO-2015-1509-PIE

The above referenced project is authorized by the Department of the Army Nationwide Permit Section (23), found in the February 21, 2012 Federal Register (77 FR 10184), Reissuance of Nation Wide Permits.

This Nationwide Permit verification will be valid until March 18, 2017.

The following general conditions must be adhered to in order for any authorization by a nationwide permit to be valid:

Please refer to the attached ***Fact Sheet Nationwide Permit __23___ and 2012 Nationwide Permits Regional Conditions***

The above authorization permits placement of fill in the drainage crossings or wetlands noted below:

Drainage Crossing(s) Permanent:

Str. 09-094-080 Campbell Creek

*** * * ***

Nationwide Permit 23

Approved Categorical Exclusions

Activities undertaken, assisted, authorized, regulated, funded, or financed, in whole or in part, by another Federal agency or department where:

(a) That agency or department has determined, pursuant to the Council on Environmental Quality's implementing regulations for the National Environmental Policy Act (40 CFR part 1500 et seq.), that the activity is categorically excluded from environmental documentation, because it is included within a category of actions which neither individually nor cumulatively have a significant effect on the human environment; and

(b) The Office of the Chief of Engineers (Attn: CECW-CO) has concurred with that agency's or department's determination that the activity is categorically excluded and approved the activity for authorization under NWP 23.

The Office of the Chief of Engineers may require additional conditions, including pre-construction notification, for authorization of an agency's categorical exclusions under this NWP.

Notification: Certain categorical exclusions approved for authorization under this NWP require the permittee to submit a pre-construction notification to the district engineer prior to commencing the activity. The activities that require pre-construction notification are listed in the appropriate Regulatory Guidance Letters.

(Sections 10 and 404)

Nationwide Permit General Conditions

Note: To qualify for NWP authorization, the prospective permittee must comply with the following general conditions, as applicable, in addition to any regional or case-specific conditions imposed by the division engineer or district engineer.

1. Navigation. (a) No activity may cause more than a minimal adverse effect on navigation.

(b) Any safety lights and signals prescribed by the U.S. Coast Guard, through regulations or otherwise, must be installed and maintained at the permittee's expense on authorized facilities in navigable waters of the United States.

(c) The permittee understands and agrees that, if future operations by the United States require the removal, relocation, or other alteration, of the structure or work herein authorized, or if, in the opinion of the Secretary of the Army or his authorized representative, said structure or work shall cause unreasonable obstruction to the free navigation of the navigable waters, the

permittee will be required, upon due notice from the Corps of Engineers, to remove, relocate, or alter the structural work or obstructions caused thereby, without expense to the United States. No claim shall be made against the United States on account of any such removal or alteration.

2. Aquatic Life Movements. No activity may substantially disrupt the necessary life cycle movements of those species of aquatic life indigenous to the waterbody, including those species that normally migrate through the area, unless the activity's primary purpose is to impound water. All permanent and temporary crossings of waterbodies shall be suitably culverted, bridged, or otherwise designed and constructed to maintain low flows to sustain the movement of those aquatic species.

3. Spawning Areas. Activities in spawning areas during spawning seasons must be avoided to the maximum extent practicable. Activities that result in the physical destruction (e.g., through excavation, fill, or downstream smothering by substantial turbidity) of an important spawning area are not authorized.

4. Migratory Bird Breeding Areas. Activities in waters of the United States that serve as breeding areas for migratory birds must be avoided to the maximum extent practicable.

5. Shellfish Beds. No activity may occur in areas of concentrated shellfish populations, unless the activity is directly related to a shellfish harvesting activity authorized by NWPs 4 and 48, or is a shellfish seeding or habitat restoration activity authorized by NWP 27.

6. Suitable Material. No activity may use unsuitable material (e.g., trash, debris, car bodies, asphalt, etc.). Material used for construction or discharged must be free from toxic pollutants in toxic amounts (see Section 307 of the Clean Water Act).

7. Water Supply Intakes. No activity may occur in the proximity of a public water supply intake, except where the activity is for the repair or improvement of public water supply intake structures or adjacent bank stabilization.

8. Adverse Effects From Impoundments. If the activity creates an impoundment of water, adverse effects to the aquatic system due to accelerating the passage of water, and/or restricting its flow must be minimized to the maximum extent practicable.

9. Management of Water Flows. To the maximum extent practicable, the pre-construction course, condition, capacity, and location of open waters must be maintained for each activity, including stream channelization and storm water management activities, except as provided below. The activity must be constructed to withstand expected high flows. The activity must not restrict or impede the passage of normal or high flows, unless the primary purpose of the activity is to impound water or manage high flows. The activity may alter the pre-construction course, condition, capacity, and location of open waters if it benefits the aquatic environment (e.g., stream restoration or relocation activities).

10. Fills Within 100-Year Floodplains. The activity must comply with applicable FEMA-approved state or local floodplain management requirements.

11. Equipment. Heavy equipment working in wetlands or mudflats must be placed on mats, or other measures must be taken to minimize soil disturbance.

12. Soil Erosion and Sediment Controls. Appropriate soil erosion and sediment controls must be used and maintained in effective operating condition during construction, and all exposed soil and other fills, as well as any work below the ordinary high water mark or high tide line, must be permanently stabilized at the earliest practicable date. Permittees are encouraged to perform work within waters of the United States during periods of low-flow or no-flow.

13. Removal of Temporary Fills. Temporary fills must be removed in their entirety and the affected areas returned to pre-construction elevations. The affected areas must be revegetated, as appropriate.

14. Proper Maintenance. Any authorized structure or fill shall be properly maintained, including maintenance to ensure public safety and compliance with applicable NWP general conditions, as well as any activity-specific conditions added by the district engineer to an NWP authorization.

15. Single and Complete Project. The activity must be a single and complete project. The same NWP cannot be used more than once for the same single and complete project.

16. Wild and Scenic Rivers. No activity may occur in a component of the National Wild and Scenic River System, or in a river officially designated by Congress as a "study river" for possible inclusion in the system while the river is in an official study status, unless the appropriate Federal agency with direct management responsibility for such river, has determined in writing that the proposed activity will not adversely affect the Wild and Scenic River designation or study status. Information on Wild and Scenic Rivers may be obtained from the appropriate Federal land management agency responsible for the designated Wild and Scenic River or study river (e.g., National Park Service, U.S. Forest Service, Bureau of Land Management, U.S. Fish and Wildlife Service).

17. Tribal Rights. No activity or its operation may impair reserved tribal rights, including, but not limited to, reserved water rights and treaty fishing and hunting rights.

18. Endangered Species. (a) No activity is authorized under any NWP which is likely to directly or indirectly jeopardize the continued existence of a threatened or endangered species or a species proposed for such designation, as identified under the Federal Endangered Species Act (ESA), or which will directly or indirectly destroy or adversely modify the critical habitat of such species. No activity is authorized under any NWP which "may affect" a listed species or critical habitat, unless Section 7 consultation addressing the effects of the proposed activity has been completed.

(b) Federal agencies should follow their own procedures for complying with the requirements of the ESA. Federal permittees must provide the district engineer with the appropriate documentation to demonstrate compliance with those requirements. The district

engineer will review the documentation and determine whether it is sufficient to address ESA compliance for the NWP activity, or whether additional ESA consultation is necessary.

(c) Non-federal permittees must submit a pre-construction notification to the district engineer if any listed species or designated critical habitat might be affected or is in the vicinity of the project, or if the project is located in designated critical habitat, and shall not begin work on the activity until notified by the district engineer that the requirements of the ESA have been satisfied and that the activity is authorized. For activities that might affect Federally-listed endangered or threatened species or designated critical habitat, the pre-construction notification must include the name(s) of the endangered or threatened species that might be affected by the proposed work or that utilize the designated critical habitat that might be affected by the proposed work. The district engineer will determine whether the proposed activity "may affect" or will have "no effect" to listed species and designated critical habitat and will notify the non-Federal applicant of the Corps' determination within 45 days of receipt of a complete pre-construction notification. In cases where the non-Federal applicant has identified listed species or critical habitat that might be affected or is in the vicinity of the project, and has so notified the Corps, the applicant shall not begin work until the Corps has provided notification the proposed activities will have "no effect" on listed species or critical habitat, or until Section 7 consultation has been completed. If the non-Federal applicant has not heard back from the Corps within 45 days, the applicant must still wait for notification from the Corps.

(d) As a result of formal or informal consultation with the FWS or NMFS the district engineer may add species-specific regional endangered species conditions to the NWPs.

(e) Authorization of an activity by a NWP does not authorize the "take" of a threatened or endangered species as defined under the ESA. In the absence of separate authorization (e.g., an ESA Section 10 Permit, a Biological Opinion with "incidental take" provisions, etc.) from the U.S. FWS or the NMFS, The Endangered Species Act prohibits any person subject to the jurisdiction of the United States to take a listed species, where "take" means to harass, harm, pursue, hunt, shoot, wound, kill, trap, capture, or collect, or to attempt to engage in any such conduct. The word "harm" in the definition of "take" means an act which actually kills or injures wildlife. Such an act may include significant habitat modification or degradation where it actually kills or injures wildlife by significantly impairing essential behavioral patterns, including breeding, feeding or sheltering.

(f) Information on the location of threatened and endangered species and their critical habitat can be obtained directly from the offices of the U.S. FWS and NMFS or their world wide web pages at http://www.fws.gov/ or http://www.fws.gov/ipac and http://www.noaa.gov/fisheries.html respectively.

19. Migratory Birds and Bald and Golden Eagles. The permittee is responsible for obtaining any "take" permits required under the U.S. Fish and Wildlife Service's regulations governing compliance with the Migratory Bird Treaty Act or the Bald and Golden Eagle Protection Act. The permittee should contact the appropriate local office of the U.S. Fish and Wildlife Service to determine if such "take" permits are required for a particular activity.

20. Historic Properties. (a) In cases where the district engineer determines that the activity may affect properties listed, or eligible for listing, in the National Register of Historic Places, the activity is not authorized, until the requirements of Section 106 of the National Historic Preservation Act (NHPA) have been satisfied.

(b) Federal permittees should follow their own procedures for complying with the requirements of Section 106 of the National Historic Preservation Act. Federal permittees must provide the district engineer with the appropriate documentation to demonstrate compliance with those requirements. The district engineer will review the documentation and determine whether it is sufficient to address section 106 compliance for the NWP activity, or whether additional section 106 consultation is necessary.

(c) Non-federal permittees must submit a pre-construction notification to the district engineer if the authorized activity may have the potential to cause effects to any historic properties listed on, determined to be eligible for listing on, or potentially eligible for listing on the National Register of Historic Places, including previously unidentified properties. For such activities, the pre-construction notification must state which historic properties may be affected by the proposed work or include a vicinity map indicating the location of the historic properties or the potential for the presence of historic properties. Assistance regarding information on the location of or potential for the presence of historic resources can be sought from the State Historic Preservation Officer or Tribal Historic Preservation Officer, as appropriate, and the National Register of Historic Places (see 33 CFR 330.4(g)). When reviewing pre-construction notifications, district engineers will comply with the current procedures for addressing the requirements of Section 106 of the National Historic Preservation Act. The district engineer shall make a reasonable and good faith effort to carry out appropriate identification efforts, which may include background research, consultation, oral history interviews, sample field investigation, and field survey. Based on the information submitted and these efforts, the district engineer shall determine whether the proposed activity has the potential to cause an effect on the historic properties. Where the non-Federal applicant has identified historic properties on which the activity may have the potential to cause effects and so notified the Corps, the non-Federal applicant shall not begin the activity until notified by the district engineer either that the activity has no potential to cause effects or that consultation under Section 106 of the NHPA has been completed.

(d) The district engineer will notify the prospective permittee within 45 days of receipt of a complete pre-construction notification whether NHPA Section 106 consultation is required. Section 106 consultation is not required when the Corps determines that the activity does not have the potential to cause effects on historic properties (see 36 CFR §800.3(a)). If NHPA section 106 consultation is required and will occur, the district engineer will notify the non-Federal applicant that he or she cannot begin work until Section 106 consultation is completed. If the non-Federal applicant has not heard back from the Corps within 45 days, the applicant must still wait for notification from the Corps.

(e) Prospective permittees should be aware that section 110k of the NHPA (16 U.S.C. 470h-2(k)) prevents the Corps from granting a permit or other assistance to an applicant who, with intent to avoid the requirements of Section 106 of the NHPA, has intentionally significantly adversely affected a historic property to which the permit would relate, or having legal power to prevent it, allowed such significant adverse effect to occur, unless the Corps, after consultation with the Advisory Council on Historic Preservation (ACHP), determines that circumstances justify granting such assistance despite the adverse effect created or permitted by the applicant. If circumstances justify granting the assistance, the Corps is required to notify the ACHP and provide documentation specifying the circumstances, the degree of damage to the integrity of any historic properties affected, and proposed mitigation. This documentation must include any views obtained from the applicant, SHPO/THPO, appropriate Indian tribes if the undertaking

occurs on or affects historic properties on tribal lands or affects properties of interest to those tribes, and other parties known to have a legitimate interest in the impacts to the permitted activity on historic properties.

21. <u>Discovery of Previously Unknown Remains and Artifacts</u>. If you discover any previously unknown historic, cultural or archeological remains and artifacts while accomplishing the activity authorized by this permit, you must immediately notify the district engineer of what you have found, and to the maximum extent practicable, avoid construction activities that may affect the remains and artifacts until the required coordination has been completed. The district engineer will initiate the Federal, Tribal and state coordination required to determine if the items or remains warrant a recovery effort or if the site is eligible for listing in the National Register of Historic Places.

22. <u>Designated Critical Resource Waters</u>. Critical resource waters include, NOAA-managed marine sanctuaries and marine monuments, and National Estuarine Research Reserves. The district engineer may designate, after notice and opportunity for public comment, additional waters officially designated by a state as having particular environmental or ecological significance, such as outstanding national resource waters or state natural heritage sites. The district engineer may also designate additional critical resource waters after notice and opportunity for public comment.

(a) Discharges of dredged or fill material into waters of the United States are not authorized by NWPs 7, 12, 14, 16, 17, 21, 29, 31, 35, 39, 40, 42, 43, 44, 49, 50, 51, and 52 for any activity within, or directly affecting, critical resource waters, including wetlands adjacent to such waters.

(b) For NWPs 3, 8, 10, 13, 15, 18, 19, 22, 23, 25, 27, 28, 30, 33, 34, 36, 37, and 38, notification is required in accordance with general condition 31, for any activity proposed in the designated critical resource waters including wetlands adjacent to those waters. The district engineer may authorize activities under these NWPs only after it is determined that the impacts to the critical resource waters will be no more than minimal.

23. <u>Mitigation</u>. The district engineer will consider the following factors when determining appropriate and practicable mitigation necessary to ensure that adverse effects on the aquatic environment are minimal:

(a) The activity must be designed and constructed to avoid and minimize adverse effects, both temporary and permanent, to waters of the United States to the maximum extent practicable at the project site (i.e., on site).

(b) Mitigation in all its forms (avoiding, minimizing, rectifying, reducing, or compensating for resource losses) will be required to the extent necessary to ensure that the adverse effects to the aquatic environment are minimal.

(c) Compensatory mitigation at a minimum one-for-one ratio will be required for all wetland losses that exceed 1/10-acre and require pre-construction notification, unless the district engineer determines in writing that either some other form of mitigation would be more environmentally appropriate or the adverse effects of the proposed activity are minimal, and provides a project-specific waiver of this requirement. For wetland losses of 1/10-acre or less that require pre-construction notification, the district engineer may determine on a case-by-case basis that compensatory mitigation is required to ensure that the activity results in minimal

adverse effects on the aquatic environment. Compensatory mitigation projects provided to offset losses of aquatic resources must comply with the applicable provisions of 33 CFR part 332.

(1) The prospective permittee is responsible for proposing an appropriate compensatory mitigation option if compensatory mitigation is necessary to ensure that the activity results in minimal adverse effects on the aquatic environment.

(2) Since the likelihood of success is greater and the impacts to potentially valuable uplands are reduced, wetland restoration should be the first compensatory mitigation option considered.

(3) If permittee-responsible mitigation is the proposed option, the prospective permittee is responsible for submitting a mitigation plan. A conceptual or detailed mitigation plan may be used by the district engineer to make the decision on the NWP verification request, but a final mitigation plan that addresses the applicable requirements of 33 CFR 332.4(c)(2) – (14) must be approved by the district engineer before the permittee begins work in waters of the United States, unless the district engineer determines that prior approval of the final mitigation plan is not practicable or not necessary to ensure timely completion of the required compensatory mitigation (see 33 CFR 332.3(k)(3)).

(4) If mitigation bank or in-lieu fee program credits are the proposed option, the mitigation plan only needs to address the baseline conditions at the impact site and the number of credits to be provided.

(5) Compensatory mitigation requirements (e.g., resource type and amount to be provided as compensatory mitigation, site protection, ecological performance standards, monitoring requirements) may be addressed through conditions added to the NWP authorization, instead of components of a compensatory mitigation plan.

(d) For losses of streams or other open waters that require pre-construction notification, the district engineer may require compensatory mitigation, such as stream rehabilitation, enhancement, or preservation, to ensure that the activity results in minimal adverse effects on the aquatic environment.

(e) Compensatory mitigation will not be used to increase the acreage losses allowed by the acreage limits of the NWPs. For example, if an NWP has an acreage limit of 1/2-acre, it cannot be used to authorize any project resulting in the loss of greater than 1/2-acre of waters of the United States, even if compensatory mitigation is provided that replaces or restores some of the lost waters. However, compensatory mitigation can and should be used, as necessary, to ensure that a project already meeting the established acreage limits also satisfies the minimal impact requirement associated with the NWPs.

(f) Compensatory mitigation plans for projects in or near streams or other open waters will normally include a requirement for the restoration or establishment, maintenance, and legal protection (e.g., conservation easements) of riparian areas next to open waters. In some cases, riparian areas may be the only compensatory mitigation required. Riparian areas should consist of native species. The width of the required riparian area will address documented water quality or aquatic habitat loss concerns. Normally, the riparian area will be 25 to 50 feet wide on each side of the stream, but the district engineer may require slightly wider riparian areas to address documented water quality or habitat loss concerns. If it is not possible to establish a riparian area on both sides of a stream, or if the waterbody is a lake or coastal waters, then restoring or establishing a riparian area along a single bank or shoreline may be sufficient. Where both wetlands and open waters exist on the project site, the district engineer will determine the appropriate compensatory mitigation (e.g., riparian areas and/or wetlands compensation) based

on what is best for the aquatic environment on a watershed basis. In cases where riparian areas are determined to be the most appropriate form of compensatory mitigation, the district engineer may waive or reduce the requirement to provide wetland compensatory mitigation for wetland losses.

(g) Permittees may propose the use of mitigation banks, in-lieu fee programs, or separate permittee-responsible mitigation. For activities resulting in the loss of marine or estuarine resources, permittee-responsible compensatory mitigation may be environmentally preferable if there are no mitigation banks or in-lieu fee programs in the area that have marine or estuarine credits available for sale or transfer to the permittee. For permittee-responsible mitigation, the special conditions of the NWP verification must clearly indicate the party or parties responsible for the implementation and performance of the compensatory mitigation project, and, if required, its long-term management.

(h) Where certain functions and services of waters of the United States are permanently adversely affected, such as the conversion of a forested or scrub-shrub wetland to a herbaceous wetland in a permanently maintained utility line right-of-way, mitigation may be required to reduce the adverse effects of the project to the minimal level.

24. Safety of Impoundment Structures. To ensure that all impoundment structures are safely designed, the district engineer may require non-Federal applicants to demonstrate that the structures comply with established state dam safety criteria or have been designed by qualified persons. The district engineer may also require documentation that the design has been independently reviewed by similarly qualified persons, and appropriate modifications made to ensure safety.

25. Water Quality. Where States and authorized Tribes, or EPA where applicable, have not previously certified compliance of an NWP with CWA Section 401, individual 401 Water Quality Certification must be obtained or waived (see 33 CFR 330.4(c)). The district engineer or State or Tribe may require additional water quality management measures to ensure that the authorized activity does not result in more than minimal degradation of water quality.

26. Coastal Zone Management. In coastal states where an NWP has not previously received a state coastal zone management consistency concurrence, an individual state coastal zone management consistency concurrence must be obtained, or a presumption of concurrence must occur (see 33 CFR 330.4(d)). The district engineer or a State may require additional measures to ensure that the authorized activity is consistent with state coastal zone management requirements.

27. Regional and Case-By-Case Conditions. The activity must comply with any regional conditions that may have been added by the Division Engineer (see 33 CFR 330.4(e)) and with any case specific conditions added by the Corps or by the state, Indian Tribe, or U.S. EPA in its section 401 Water Quality Certification, or by the state in its Coastal Zone Management Act consistency determination.

28. Use of Multiple Nationwide Permits. The use of more than one NWP for a single and complete project is prohibited, except when the acreage loss of waters of the United States authorized by the NWPs does not exceed the acreage limit of the NWP with the highest specified

acreage limit. For example, if a road crossing over tidal waters is constructed under NWP 14, with associated bank stabilization authorized by NWP 13, the maximum acreage loss of waters of the United States for the total project cannot exceed 1/3-acre.

29. Transfer of Nationwide Permit Verifications. If the permittee sells the property associated with a nationwide permit verification, the permittee may transfer the nationwide permit verification to the new owner by submitting a letter to the appropriate Corps district office to validate the transfer. A copy of the nationwide permit verification must be attached to the letter, and the letter must contain the following statement and signature:

"When the structures or work authorized by this nationwide permit are still in existence at the time the property is transferred, the terms and conditions of this nationwide permit, including any special conditions, will continue to be binding on the new owner(s) of the property. To validate the transfer of this nationwide permit and the associated liabilities associated with compliance with its terms and conditions, have the transferee sign and date below."

_____

(Transferee)

_____

(Date)

30. Compliance Certification. Each permittee who receives an NWP verification letter from the Corps must provide a signed certification documenting completion of the authorized activity and any required compensatory mitigation. The success of any required permittee-responsible mitigation, including the achievement of ecological performance standards, will be addressed separately by the district engineer. The Corps will provide the permittee the certification document with the NWP verification letter. The certification document will include:

(a) A statement that the authorized work was done in accordance with the NWP authorization, including any general, regional, or activity-specific conditions;

(b) A statement that the implementation of any required compensatory mitigation was completed in accordance with the permit conditions. If credits from a mitigation bank or in-lieu fee program are used to satisfy the compensatory mitigation requirements, the certification must include the documentation required by 33 CFR 332.3(l)(3) to confirm that the permittee secured the appropriate number and resource type of credits; and

(c) The signature of the permittee certifying the completion of the work and mitigation.

31. Pre-Construction Notification. (a) Timing. Where required by the terms of the NWP, the prospective permittee must notify the district engineer by submitting a pre-construction notification (PCN) as early as possible. The district engineer must determine if the PCN is complete within 30 calendar days of the date of receipt and, if the PCN is determined to be incomplete, notify the prospective permittee within that 30 day period to request the additional information necessary to make the PCN complete. The request must specify the information needed to make the PCN complete. As a general rule, district engineers will request

additional information necessary to make the PCN complete only once. However, if the prospective permittee does not provide all of the requested information, then the district engineer will notify the prospective permittee that the PCN is still incomplete and the PCN review process will not commence until all of the requested information has been received by the district engineer. The prospective permittee shall not begin the activity until either:

(1) He or she is notified in writing by the district engineer that the activity may proceed under the NWP with any special conditions imposed by the district or division engineer; or

(2) 45 calendar days have passed from the district engineer's receipt of the complete PCN and the prospective permittee has not received written notice from the district or division engineer. However, if the permittee was required to notify the Corps pursuant to general condition 18 that listed species or critical habitat might be affected or in the vicinity of the project, or to notify the Corps pursuant to general condition 20 that the activity may have the potential to cause effects to historic properties, the permittee cannot begin the activity until receiving written notification from the Corps that there is "no effect" on listed species or "no potential to cause effects" on historic properties, or that any consultation required under Section 7 of the Endangered Species Act (see 33 CFR 330.4(f)) and/or Section 106 of the National Historic Preservation (see 33 CFR 330.4(g)) has been completed. Also, work cannot begin under NWPs 21, 49, or 50 until the permittee has received written approval from the Corps. If the proposed activity requires a written waiver to exceed specified limits of an NWP, the permittee may not begin the activity until the district engineer issues the waiver. If the district or division engineer notifies the permittee in writing that an individual permit is required within 45 calendar days of receipt of a complete PCN, the permittee cannot begin the activity until an individual permit has been obtained. Subsequently, the permittee's right to proceed under the NWP may be modified, suspended, or revoked only in accordance with the procedure set forth in 33 CFR 330.5(d)(2).

(b) Contents of Pre-Construction Notification: The PCN must be in writing and include the following information:

(1) Name, address and telephone numbers of the prospective permittee;

(2) Location of the proposed project;

(3) A description of the proposed project; the project's purpose; direct and indirect adverse environmental effects the project would cause, including the anticipated amount of loss of water of the United States expected to result from the NWP activity, in acres, linear feet, or other appropriate unit of measure; any other NWP(s), regional general permit(s), or individual permit(s) used or intended to be used to authorize any part of the proposed project or any related activity. The description should be sufficiently detailed to allow the district engineer to determine that the adverse effects of the project will be minimal and to determine the need for compensatory mitigation. Sketches should be provided when necessary to show that the activity complies with the terms of the NWP. (Sketches usually clarify the project and when provided results in a quicker decision. Sketches should contain sufficient detail to provide an illustrative description of the proposed activity (e.g., a conceptual plan), but do not need to be detailed engineering plans);

(4) The PCN must include a delineation of wetlands, other special aquatic sites, and other waters, such as lakes and ponds, and perennial, intermittent, and ephemeral streams, on the project site. Wetland delineations must be prepared in accordance with the current method required by the Corps. The permittee may ask the Corps to delineate the special aquatic sites and other waters on the project site, but there may be a delay if the Corps does the delineation,

especially if the project site is large or contains many waters of the United States. Furthermore, the 45 day period will not start until the delineation has been submitted to or completed by the Corps, as appropriate;

(5) If the proposed activity will result in the loss of greater than 1/10-acre of wetlands and a PCN is required, the prospective permittee must submit a statement describing how the mitigation requirement will be satisfied, or explaining why the adverse effects are minimal and why compensatory mitigation should not be required. As an alternative, the prospective permittee may submit a conceptual or detailed mitigation plan.

(6) If any listed species or designated critical habitat might be affected or is in the vicinity of the project, or if the project is located in designated critical habitat, for non-Federal applicants the PCN must include the name(s) of those endangered or threatened species that might be affected by the proposed work or utilize the designated critical habitat that may be affected by the proposed work. Federal applicants must provide documentation demonstrating compliance with the Endangered Species Act; and

(7) For an activity that may affect a historic property listed on, determined to be eligible for listing on, or potentially eligible for listing on, the National Register of Historic Places, for non-Federal applicants the PCN must state which historic property may be affected by the proposed work or include a vicinity map indicating the location of the historic property. Federal applicants must provide documentation demonstrating compliance with Section 106 of the National Historic Preservation Act.

(c) Form of Pre-Construction Notification: The standard individual permit application form (Form ENG 4345) may be used, but the completed application form must clearly indicate that it is a PCN and must include all of the information required in paragraphs (b)(1) through (7) of this general condition. A letter containing the required information may also be used.

(d) Agency Coordination: (1) The district engineer will consider any comments from Federal and state agencies concerning the proposed activity's compliance with the terms and conditions of the NWPs and the need for mitigation to reduce the project's adverse environmental effects to a minimal level.

(2) For all NWP activities that require pre-construction notification and result in the loss of greater than 1/2-acre of waters of the United States, for NWP 21, 29, 39, 40, 42, 43, 44, 50, 51, and 52 activities that require pre-construction notification and will result in the loss of greater than 300 linear feet of intermittent and ephemeral stream bed, and for all NWP 48 activities that require pre-construction notification, the district engineer will immediately provide (e.g., via e-mail, facsimile transmission, overnight mail, or other expeditious manner) a copy of the complete PCN to the appropriate Federal or state offices (U.S. FWS, state natural resource or water quality agency, EPA, State Historic Preservation Officer (SHPO) or Tribal Historic Preservation Office (THPO), and, if appropriate, the NMFS). With the exception of NWP 37, these agencies will have 10 calendar days from the date the material is transmitted to telephone or fax the district engineer notice that they intend to provide substantive, site-specific comments. The comments must explain why the agency believes the adverse effects will be more than minimal. If so contacted by an agency, the district engineer will wait an additional 15 calendar days before making a decision on the pre-construction notification. The district engineer will fully consider agency comments received within the specified time frame concerning the proposed activity's compliance with the terms and conditions of the NWPs, including the need for mitigation to ensure the net adverse environmental effects to the aquatic environment of the proposed activity are minimal. The district engineer will provide no response to the resource

agency, except as provided below. The district engineer will indicate in the administrative record associated with each pre-construction notification that the resource agencies' concerns were considered. For NWP 37, the emergency watershed protection and rehabilitation activity may proceed immediately in cases where there is an unacceptable hazard to life or a significant loss of property or economic hardship will occur. The district engineer will consider any comments received to decide whether the NWP 37 authorization should be modified, suspended, or revoked in accordance with the procedures at 33 CFR 330.5.

(3) In cases of where the prospective permittee is not a Federal agency, the district engineer will provide a response to NMFS within 30 calendar days of receipt of any Essential Fish Habitat conservation recommendations, as required by Section 305(b)(4)(B) of the Magnuson-Stevens Fishery Conservation and Management Act.

(4) Applicants are encouraged to provide the Corps with either electronic files or multiple copies of pre-construction notifications to expedite agency coordination.

Further Information

1. District Engineers have authority to determine if an activity complies with the terms and conditions of an NWP.
2. NWPs do not obviate the need to obtain other federal, state, or local permits, approvals, or authorizations required by law.
3. NWPs do not grant any property rights or exclusive privileges.
4. NWPs do not authorize any injury to the property or rights of others.
5. NWPs do not authorize interference with any existing or proposed Federal project.

2012 NATIONWIDE PERMITS
REGIONAL CONDITIONS
OMAHA DISTRICT
STATE OF SOUTH DAKOTA

The following Nationwide Permit (NWP) regional conditions will be used in the State of South Dakota. Regional conditions are placed on NWPs to ensure projects result in less than minimal adverse impacts to the aquatic environment and to address local resources concerns.

Wetlands Classified as Peatlands – Revoked for Use

All NWPs, with the exception of 3, 5, 20, 27, 30, 32, 38, and 45, are revoked for use in peatlands in South Dakota.

"Peatlands" are saturated and inundated wetlands where conditions inhibit organic matter decomposition and allow for the accumulation of peat. Under cool, anaerobic, and acidic conditions, the rate of organic matter accumulation exceeds organic decay. Peatlands can be primarily classified into ombrotrophic bogs and minerotrophic fens; the latter subdivided into poor, moderate-rich, and extreme-rich fens, each with distinctive indicator species, community physiognomy, acidity, alkalinity, and base cation content.

Wetlands Classified as Peatlands – Pre-construction Notification Requirement

For NWPs 3, 5, 20, 27, 30, 32, 38, and 45 permittees must notify the Corps in accordance with General Condition No. 31 (Notification) prior to initiating any regulated activity impacting peatlands in South Dakota.

Waters Adjacent to Natural Springs – Pre-construction Notification Requirement – All Nationwide Permits

For all NWPs, permittees must notify the Corps in accordance with General Condition No. 31 (Notification) for regulated activities located within 100 feet of the water source in natural spring areas in South Dakota. For purposes of this condition, a spring source is defined as any location where there is artesian flow emanating from a distinct point at any time during the growing season. Springs do not include seeps and other groundwater discharge areas where there is no distinct point source.

Borrow Site Identification – All Nationwide Permits

The permittee is responsible for ensuring that the Corps is notified of the location of any borrow site that will be used in conjunction with the construction of the authorized activity so that the Corps may evaluate the site for potential impacts to aquatic resources, historic properties, and endangered species. For projects where there is another lead Federal agency, the permittee shall provide the Corps documentation indicating that the lead Federal agency has complied with the National Historic Preservation Act and Endangered Species Act for the borrow site. The permittee shall not initiate work at the borrow site in conjunction with the authorized activity until approval is received from the Corps.

Minimum Culvert Width – All Nationwide Permits

The permittee shall size culvert stream crossings based on the estimated two-year storm event or the width of the bankfull stream channel. Culverts placed in streams with a discernable bed and bank shall have a maximum width that is at least as wide as the bankfull channel width in the section of stream where the culvert will be placed. In lieu of bankfull width as a reference for minimum culvert size, the permittee may install a culvert that can pass the two-year storm event without causing rise of flood flows upstream of the culvert. Bankfull width shall be defined as the width of the stream at where over-bank flow begins during a flood event. In incised stream channels that do not or infrequently access their floodplains bankfull indicators may include slope changes, vegetation changes, the maximum elevation of deposited bedload, or the top of undercut banks.

Culvert Countersink Depth for Aquatic Organism Depth – All Nationwide Permits

The permittee shall install culverts as so that the culvert invert is set below the natural flowline of the water body according to the below table.

Culvert Type	Drainage Area	Culvert Invert Depression Below Stream Grade Line
All culvert types	$\leq$ 100 acres	Not required
Pipe diameter < 8.0 ft	100 to 640 acres	0.5 ft
Pipe diameter < 8.0 ft	> 640 acres	1.0 ft
Pipe diameter $\geq$ 8.0 ft	All drainage sizes	20 % of pipe diameter
Box culvert	All drainage sizes	1.0 ft

- **The stream grade line shall be defined as the longitudinal average of the low-flow stream channel.**
- **The slope of the culvert should be parallel to the slope of the stream grade line.**
- **The culvert invert depression depth shall be measured at the culvert inlet for culverts installed at a slope less than the slope of the stream grade line.**
- **Riprap inlet and outlet protection shall be placed to match the height of the culvert invert.**

GENERAL CONDITIONS (REGIONAL ADDITIONS)

General Condition 3 - Spawning Areas

In order to further minimize adverse impacts in certain waters of the United States and to comply with General Condition No. 3, projects authorized under all available Section 404 NWPs that would occur in South Dakota's cold water streams must comply with the following regional condition:

In all South Dakota streams classified as cold water streams, when water flow is present, the discharge of dredged or fill material shall not take place without the permittee notifying the Corps in accordance with General Condition No. 31 (Notification) prior to initiating any regulated activity between October 15 and April 1. The Corps of Engineers, the South Dakota Department of Game, Fish and Parks, or the South Dakota Department of Environment and Natural Resources can be contacted for the location of State classified cold water streams. The cold water fisheries rivers and streams in South Dakota may be found at http://legis.state.sd.us/rules/DisplayRule.aspx?Rule=74:51:03.

General Condition 6 - Suitable Material

Permittees are reminded that General Condition No. 6 prohibits the use of unsuitable material. In addition, the following materials are not suitable for discharge into waters of the United States in the State of South Dakota:

1. Vehicle bodies, farm machinery and metal junk, including appliances and metal containers, are prohibited.

2. The use of old or used asphalt paving material as a fill material and the use of new or used asphalt for bank stabilization or erosion control is prohibited.

3. The use of organic debris as fill material is prohibited. (Properly anchored trees, treetops, root wads, logs, and hay bales may be allowed on a case-by-case basis.)

4. Any material subject to leaching when in an aquatic environment is prohibited (for example, but not limited to, chemically-treated building material, roofing material, and wood debris).

5. Individual or unanchored tires are prohibited. (Tires may be allowed on a case-by-case basis when placed in the form of a mat or grid with multiple anchoring points to reduce the risk of design failure.)

6. Small aggregate (i.e. less than 6 inches in diameter) may not be placed below the ordinary high water mark (OHWM) of a water body for the purpose of bank stabilization or erosion control when such aggregate will be unstable or subject to frequent failure. Small aggregate may, however, be placed below the OHWM if its purpose is to fill the interstices of a well-graded rock riprap revetment or channel lining.

7. Slab material, regardless of source, must be broken before placement so that the dimension of the largest slab will not be more than 3.5 times the dimension of the smallest slab (unless justified by a qualified engineer) and must be free of exposed rebar, wire and wire mesh.

8. The use of clean brick, broken concrete and cinder block for erosion control or bank stabilization will be considered on a case-by-case basis. If allowed, the broken concrete must be free of exposed rebar, wire, wire mesh, asphalt paving material, paint, and other erodible materials. Broken concrete must range in size from 6 to 36 inches (unless justified by a qualified engineer).

STATE OF SOUTH DAKOTA
DEPARTMENT OF TRANSPORTATION

SPECIAL PROVISION
FOR
CONCRETE PENETRATING SEALER

FEBRUARY 22, 2010

I. DESCRIPTION

This work consists of furnishing and applying a concrete penetrating sealer to a properly prepared bridge deck surface in compliance with these specifications and the manufacturer's recommendations.

II. MATERIALS

The acceptable sealers are listed on the approved products list for Bridge Deck Sealants on the SDDOT Website.

The Contractor shall furnish the Engineer the manufacturer's technical data sheets, materials safety data sheet (MSDS), and sufficient evidence that the material to be used has not exceeded the manufacturer's specified shelf life. This documentation shall be furnished to the Engineer a minimum of 5 days prior to application of the sealer.

III. CONSTRUCTION REQUIREMENTS

A. Surface Protection and Preparation: The concrete deck surface shall be protected from contamination from dirt and debris by covering the deck with a material approved by the Engineer until such time that the surface preparation for the penetrating sealer is begun. Any materials or equipment placed on the deck during this protection period shall be placed such that there is no danger of spillage, leakage, or other contamination to the concrete surface.

Concrete surfaces shall be cleaned by power washing such that all traces of laitance, dirt, dust, salt, oil, asphalt, paint, and other foreign materials and deleterious substances are removed prior to application of the penetrating sealer. In the event that oil, grease, or other contaminants are inadvertently spilled on the concrete surface, detergent cleaning along with an abrasive blast cleaning will be required on the affected areas.

Other methods and equipment for surface preparation may be used if prior approval is obtained from the Engineer.

If necessary, solvents and hand tools shall be used in conjunction with the blasting media to remove bonded materials detrimental to the treatment of the concrete surface.

The cleaning process shall not cause undue damage to the concrete surface, remove or substantially alter the existing surface finish, or expose the coarse aggregate of the concrete. The method of cleaning shall be performed in such a manner as to provide a reasonably uniform appearing surface color and texture.

The sealer may be harmful to materials such as rubber, asphalt, and joint compounds; therefore, the Contractor shall be required to mask off all joints, strip seals, etc. prior to applying the sealer.

The Engineer shall approve the prepared surface prior to application of the penetrating sealer.

B. **Sealer Application:** The Contractor shall have a sufficient quantity of sealer on the project prior to the start of application such that the manufacturer's maximum rate of coverage (minimum ft^2/gal) can be attained. Sealer application shall conform to the manufacturer's recommendations and the following:

1. **Weather Limitations:** The penetrating sealer shall only be applied when the ambient air and concrete surface temperatures are between 40° F and 100° F unless otherwise recommended by the manufacturer. The treatment solution shall not be sprayed when blowing winds or other conditions prevent proper application.

   The sealer shall not be applied during inclement weather or rain, or if inclement weather or rain is anticipated within 24 hours.

2. **Application Equipment:** Spray equipment for the application of the treatment solution shall be a low-pressure airless type sprayer with a maximum application pressure of 15 psi.

3. **Application:** Concrete shall be cured for 28 days prior to the application of the sealer. The sealer may be applied prior to the 28 day cure period, but no sooner than 14 days, provided that there is no evidence of moisture in the concrete when tested in accordance with ASTM D4263 and the concrete has attained 80% of the specified design strength.

All surfaces shall be substantially dry prior to application of the sealer. The concrete surfaces shall be allowed to dry a minimum of 3 days after powerwashing or precipitation. The Engineer will determine when the surface is sufficiently dry.

All loose dust and debris shall be blown off of the concrete surface with compressed air immediately prior to application of the sealer.

The sealer shall be used as supplied by the manufacturer and shall not be diluted or altered in any way.

The solution shall be sprayed on to the concrete surfaces at the manufacturer's recommended maximum rate of coverage (minimum ft^2/gal) or to refusal, whichever is achieved first. Refusal is defined such that additional spray applications remain on the concrete surface and do not soak in, as determined by the Engineer.

If the plans specify a grooved bridge deck surface, the grooving shall be accomplished prior to the application of the sealer.

4. **Traffic Limitations:** Traffic will not be permitted on treated surfaces nor shall pavement markings be applied until the solution has completely penetrated and the treated surface is dry. The Engineer will determine when the surface is sufficiently dry.

IV. METHOD OF MEASUREMENT

Concrete Penetrating sealer will be measured to the nearest 0.1 square yard.

V. BASIS OF PAYMENT

Concrete Penetrating sealer will be paid for at the contract unit price per square yard. Payment will be full compensation for equipment, labor, materials, and all other incidental items required to prepare the concrete surfaces, and to furnish and apply the penetrating concrete sealer.

* * * * *

STATE OF SOUTH DAKOTA
DEPARTMENT OF TRANSPORTATION

SPECIAL PROVISION
REGARDING
RIGHT OF ENTRY

P 0034(150)272, PCN 02RW
BUFFALO COUNTY

JANUARY 19, 2016

All right of way and/or right of entry for this project has been secured or will be secured prior to the day of the letting, and all improvements/personal property to be removed under right of way negotiations have been moved or will be moved prior to the day of the letting, **except for those listed below**, unless an extension of time is granted in writing by the Right of Way Program Manager, or his authorized representative. Any extension of time after the letting will be in writing by the Region Engineer, or his authorized representative, subject to concurrence of the construction contractor.

The successful contractor shall arrange his work so as not to interfere with the improvements / personal property listed below until the date(s) stipulated:

	ANTICIPATED POSSESSION DATE
All allotment parcels for the Project	2/17/16

*** * * ***

STATE OF SOUTH DAKOTA
DEPARTMENT OF TRANSPORTATION

SPECIAL PROVISION
FOR
CONTRACTOR STAKING
WITH MACHINE CONTROL GRADING OPTION

PROJECT P 0034(150)272, PCN 02RW
BUFFALO COUNTY

JANUARY 14, 2016

Delete Section 5.8 of the specifications and insert the following:

SECTION 5.8
CONSTRUCTION STAKES, LINES AND GRADES
CONTRACTOR GRADE STAKING

A. DESCRIPTION

The Contractor will perform all construction staking. The Contractor may elect to use grading equipment with an automated machine control system for Machine Control Grading (MCG) provided the equipment and methods used provide the same results in the finished work as conventional construction staking. The Engineer may require the Contractor to revert to conventional staking methods for all or part of the work at any point during construction if, in the Engineer's own opinion, the MCG produces unacceptable results.

The Department will not allow the Contractor to use MCG as a substitute for conventional construction staking for slope staking and slope stake referencing, paving hub staking, structure staking, miscellaneous staking, or final cross section surveying.

The staking work includes, but is not limited to, establishing or re-establishing the project centerline; establishing control points and benchmarks as needed; setting additional benchmarks as needed; taking original and final cross sections of all Contractor secured borrow sources and State designated borrow sources; taking cross sections of all topsoil stockpiles; and staking right-of-way, easements, and fence.

The Contractor will perform all construction layout and reference staking necessary for the accurate control and completion of all structures, grading,

paving, drainage, median crossovers, signing, pavement marking, permanent benchmarks, detours, fence, and all other appurtenances required for the complete construction and acceptance of the work. The layout will include, but is not limited to, staking clearing line, slope staking and slope stake referencing, grade staking (blue tops), structure staking, and performing the miscellaneous staking as described in the plans and in this specification.

The Department has established horizontal and vertical control as shown on the plans. Each horizontal and vertical control point will be preserved or reset out of the work limits and available during and after construction is complete. Prior to the Department's final acceptance of the project, the Contractor will replace or reset any control that is disturbed during the construction of the project. The Contractor will provide the Department a list of the in-place control points, including coordinates and elevations relevant to the project control, at the end of the project.

The Department will provide a MCG packet to all prospective bidders consisting of a XML file containing the original surface Digital Terrain Model (DTM) and 4 design files for each new alignment on the project. The electronic design files will include, a XML file containing mainline alignment data, a XML file containing mainline design surface DTM, a DGN file containing triangles for mainline surface, and a DWG file containing triangles for mainline surface. The MCG packet will be available on the Department's electronic bid letting website when the project is advertised for bid letting.

The Contractor will convert the electronic information provided by the Department into the format required by the Contractor's MCG system. The Department makes no guarantee the information provided is directly compatible with the Contractor's MCG system.

The information shown in the plans will govern over the provided electronic information. The Contractor assumes the risk of error if the information is used for any purpose for which the information was not intended. The Contractor assumes all risk of any assumptions made regarding the electronic information.

The Contractor bears all costs, including but not limited to the cost of actual reconstruction of work, that may be incurred due to errors in application of MCG techniques. Grade elevation errors, rework resulting from errors or failures of the MCG system, and associated quantity adjustments resulting from the Contractor's activities are at no cost to the Department. Delays due to late submittals or satellite reception of signals to operate the MCG system will not result in adjustment to any contract unit prices or be justification for granting contract extensions.

The electronic information is not to be considered a representation of actual conditions to be encountered during construction. Providing the Contractor this

information does not relieve the Contractor from the responsibility of making an investigation of conditions to be encountered, including but not limited to, site visits and basing the bid on information obtained from these investigations and the Contractor's professional interpretations and judgment. The Contractor assumes the risk of error if the information is used for any purposes for which the information was not intended. Any assumptions the Contractor makes from this electronic information or manipulation of the electronic information is at the Contractor's own risk.

The Contractor will perform the staking work in accordance with the Department's Survey Manual, except as modified by this specification.

If the Contractor elects to use MCG, the Contractor will submit a comprehensive written MCG work plan to the Engineer for review prior to scheduling the preconstruction meeting. The Department will review the plan to determine if the plan conforms to the requirements of the contract.

The Contractor will include in the MCG work plan how MCG will be incorporated into other technologies used on the project. The Contractor's MCG work plan will include, but is not limited to, the following:

1. A designation of which portions of the subgrade will be completed using MCG and which portions, if any, will be completed using conventional subgrade staking methods.
2. A description of the manufacturer, model, and software version of all MCG equipment.
3. Information on the qualifications of the Contractor's staff including, but not limited to, formal training and field experience.
4. A designation of a single person as the primary contact for MCG technology issues.
5. A description of site calibration procedures.
6. A description of site calibration and checking frequency and procedures for documenting site calibration and checking.
7. A description of the Contractor's quality control procedures including procedures for checking, mechanical calibration, and maintenance of equipment.
8. A description of the frequency and types of checks the Contractor will perform to ensure the constructed subgrade conforms to the contract requirements.

B. MATERIALS

The Contractor will furnish all staking materials of adequate quality for the purpose intended including all stakes, stake chasers, paint, field note books, and all other materials and equipment necessary to perform the required work.

C. CONSTRUCTION REQUIREMENTS

1. **General:** The Department will set control points. The Contractor is responsible for the preservation of ties and references to all control points necessary for the accurate re-establishment of all base lines and centerlines shown in the plans, whether established by the Contractor or found on or adjacent to the project. The Department will also establish benchmark elevations. It is the responsibility of the Contractor to verify the accuracy of the benchmark elevations prior to use on the project.

   The Engineer may check the accuracy and control of the Contractor's survey, staking work, and MCG at any time. The checks performed by the Engineer will not relieve the Contractor of the responsibility for the accuracy of the survey layout or the construction work. If the random checks show the grade is out of tolerance, the Engineer may require the Contractor to set additional stakes, and grade stakes at the discretion of the Engineer, at no additional cost to the Department. If the Engineer orders additional stakes, the Contractor will perform the additional staking until the Contractor can show the staking operations achieve the specified grade tolerances.

   Prior to any project staking, the Contractor will run a level circuit to check the plan benchmarks the full length of the project. At structure sites, the circuit will include two benchmarks, one on each end of the structure.

   The Contractor will perform all staking and MCG work under the supervision of a qualified surveyor or engineer who is experienced and competent in road and bridge construction surveying, staking, and MCG procedures. The surveyor or engineer will be available to review work, resolve problems, and make decisions in a timely manner. A crew chief, competent to perform all required surveying duties, will supervise the staking in the absence of the surveyor or engineer from the project. The Contractor will submit the qualifications and work experience history of the surveyor or engineer who will supervise the construction survey and MCG work to the Engineer for review at least 14 calendar days prior to beginning the staking or MCG work.

   a. **Conventional Construction Staking:** The Contractor will also submit the proposed starting date of the staking and the anticipated surveying work schedule.

      The Contractor will furnish, set, and properly reference all stakes, references, lines, grades, and batter boards required. Minimum reference notations will be for type, location, and alignment (when there are multiple alignments in the same area). The Contractor will perform the survey and staking work in a manner consistent with standard engineering practices and approved by the Engineer.

The Contractor is solely responsible for the accuracy of the survey and staking work. The Contractor will notify the Engineer of any errors and discrepancies found in previous surveys, plans, specifications, or special provisions prior to proceeding with the survey work.

The Contractor will be responsible for the supervision of the construction staking personnel. The Contractor will correct any deficient survey or staking work that results in construction errors at no additional cost to the Department.

The Contractor will keep field notes in conventional handwritten notebooks or in a computerized form acceptable to the Engineer in a clear, orderly, and neat manner. The notebooks will become the property of the Department upon completion of the project. The notebooks will provide enough information such that quantity measurements are verifiable by the Department. Field notes are subject to inspection by the Engineer at any time.

The Contractor is required to submit any remaining required quantity calculations and notes to the Engineer no later than 60 calendar days after completion of the survey and staking work.

The Contractor will furnish stakes and wooden hubs or steel pins of sufficient length to provide a solid set in the ground. The Contractor will place half-length lath stakes or stake chasers or an alternate, acceptable to the Engineer, adjacent to or on the blue top hubs for guards. Stakes set not meeting these requirements will be reset at the Contractors expense. The Contractor will replace stakes damaged, destroyed, or made unusable at no additional expense to the Department.

b. Machine Control Grading: If the Contractor elects to use MCG, the Contractor will confirm the design surface DTM agrees with the contract plans, make adjustments to the design surface DTM as approved by the Engineer, and will maintain the design surface DTM for all areas of the project where MCG is used. The Contractor will also provide constructed surface DTM information to the Department in LandXML or other Engineer approved format.

The Contractor will notify the Department of any errors or discrepancies in Department provided information. The Department will determine what revisions may be required. The Department will revise the contract plans, if necessary, to address errors or discrepancies the Contractor identifies. The Department will provide the best available information related to those contract plan revisions.

The Contractor will revise the design surface DTM as required to support construction operations and to reflect any contract plan revisions the Department makes. The Contractor will perform checks to confirm the revised design surface DTM agrees with the contract plan revisions. The Contractor will provide a copy of the resultant revised design surface DTM to the Engineer in LandXML. The Department will pay for costs incurred to incorporate contract plan revisions as extra work.

The Contractor will designate a set of control points, including a total of at least 6 horizontal and vertical points or 2 per mile, whichever is greater, for site calibration for the portion of the project employing MCG. The Contractor will incorporate the Department provided control framework used for the original survey and design.

The Contractor will calibrate the site by determining the parameters governing the transformation of satellite information into the project coordinate system. The Contractor will use the control points provided by the Department for the initial site calibration. The Contractor will provide the resulting site calibration file to the Engineer before beginning subgrade construction.

In addition to the site calibration, the Contractor will perform site calibration checks at individual control points not used in the initial site calibration. At a minimum, the Contractor will check the calibration at the start of each day as described in the contractor's MCG work plan. The Contractor will report out-of-tolerance checks to the Engineer. The measured position must match the established position at each individual control point within the horizontal tolerance of ±0.1 foot and the vertical tolerance of ±0.05 foot.

The Contractor will construct the subgrade as the Contractor’s MCG work plan indicates and in accordance with the contract requirements. The Contractor will update the plan as necessary during construction of the subgrade. The Contractor will perform periodic sensor calibrations, checks for blade wear, and other routine adjustments as required to ensure the final subgrade conforms to the contract requirements.

2. **Slope Staking:** The Contractor will set slope stakes at the catch points. The slope stake reference hubs will be offset behind the slope stake. The Contractor will place slope stake reference hubs behind the slope stakes at a set distance, at the right-of-way line, or at the easement line, as approved by the Engineer.

   The slope stakes will be set at 100-foot intervals on tangents and at 50-foot intervals in horizontal curves. The horizontal tolerance is ±0.2 foot and the vertical tolerance is ±0.1 foot. The Contractor will reference the subgrade

shoulders with slope stake reference hubs set with a horizontal tolerance of ±0.2 foot and a vertical tolerance of ±0.05 foot.

The Contractor will retain the slope stakes and hub references until the final cross sections are completed and accepted by the Department.

The Department will provide slope stake notes.

3. **Grade Staking:** In accordance with the requirements of this provision, the Contractor may elect to use MCG equipment or may use conventional construction staking methods for all or part of the grade staking work, excluding paving hub staking.

   a. **Conventional Blue Tops:** The Contractor will set grade finishing stakes (blue tops) for grade elevations and horizontal alignment on the roadway centerline and at each shoulder at the top of the subgrade. Where additional lanes or turnouts are to be constructed, The Contractor will set blue tops at centerline, the normal shoulder distance, and the extended shoulder distance or outside the additional lane edge.

      The transverse distance between blue tops will not exceed 20 feet. The Contractor will be required to set intermediate blue tops when the transverse distance is greater than 20 feet. When intermediate blue tops are required, The Contractor will set the intermediate blue tops at locations approved by the Engineer.

      The blue top grade stakes will be set at 100-foot intervals on tangents and 50-foot intervals on horizontal curves. The horizontal tolerance for blue tops is ±0.2 foot and the vertical tolerance is ±0.02 foot.

      The Department will provide grade staking (blue top) notes.

      The Contractor will retain the shoulder blue tops and guards through placement of the base course material.

      The Contractor will not be required to set grade stakes at the top of the base course. If the Contractor deems it necessary to place grade stakes to achieve typical section as per section 260.3 A of the specifications, the staking will be incidental to the contract unit price for base course.

   b. **Machine Control Grading:** The Contractor will set conventional construction staking grade finishing stakes (blue tops) for grade elevations and horizontal alignment on the roadway centerline and at each shoulder at the top of the subgrade (and gravel cushion for PCC paving projects) at a minimum of 1000 foot intervals on mainline or at least one location for sections less than 1000 foot long, at least two locations on side roads,

side streets, and ramps, and at least one location within 100 feet of each bridge end. In addition, the Contractor will set blue tops for grade elevations and horizontal alignment on the roadway centerline and at each shoulder at the top of the subgrade (and gravel cushion for PCC paving projects) at critical transition points including, but not limited to, PC's, PT's, super elevations transition points, and other critical points required for the construction of drainage and roadway structures. The Contractor will also provide conventional construction staking grade finishing stakes (blue tops) at additional locations designated by the Engineer.

The Contractor will establish these grade staking (blue top) grades using the Department provided grade staking (blue top) notes, plan typical sections, and cross sections. The Contractor will use these stakes to check the accuracy of the MCG during construction. The Contractor will notify the Engineer at least 3 calendar days before making subgrade checks to allow the Engineer to observe the process.

The Contractor will ensure at least four of any five consecutive conventional construction staking grade finishing stakes (blue tops) locations are within the horizontal and vertical tolerances specified in Section 120.3. The Contractor will notify the Engineer if more than one of any five consecutive conventional construction staking grade finishing stakes (blue tops) locations is not within the horizontal or vertical tolerance.

The Department may conduct periodic independent subgrade checks. The Department will notify the Contractor if any individual check is not within the horizontal or vertical tolerance.

4. **Structure Staking:** The Contractor will stake and reference bridges and box culverts to ensure adequate horizontal and vertical control of the substructure and superstructure components. The Contractor will stake and reference the bridge chord or the bridge tangent and centerline of each pier, bent, and abutments for bridges. The Contractor will stake the box culvert centerline(s) in both longitudinal and transverse directions.

   When the work requires bridge rehabilitation work, the structure staking will include all surveying and staking required for completion of the project. The staking work may include, but not be limited to, setting the rail for the deck overlay. The plans will indicate the grade line for the deck overlay; and if necessary, the Engineer may modify the grade line.

   When staking retaining walls (except Type C), the Contractor will survey and record the original ground profile along the front face of the proposed wall at the elevation break points. The Contractor will supply the wall designer the original ground profile data prior to the wall designer performing the design.

Set adequate stakes and references for horizontal and vertical control during construction.

For structures and retaining walls, the horizontal tolerance is ±0.04 foot and vertical tolerance is ±0.02 foot.

The Contractor is responsible for all notes required to stake structures including bridges, box culverts, and walls.

5. **Miscellaneous Staking:** Miscellaneous staking includes the following work:

   a. Approach road staking;
   b. Topsoil measurement and computation of quantities;
   c. Special ditch staking;
   d. Staking of signs, delineators, pavement markings, guardrail, curb & gutter, light poles, conduit, junction boxes, and related items (Staking is for all aspects, i.e. detours, temporary and permanent);
   e. Right-of-way staking including easement lines and fence post panels;
   f. Pipe and storm sewer staking including drop inlets, manholes, cattle passes, and related items. If additional pipe, storm sewer, drop inlets, manholes, or cattle passes are required which are not shown on the plans, the staking will be paid in accordance with the bid item Three Man Survey Crew;
   g. Mark limits of removal items (trees, foundations, curb & gutter, sidewalk, etc.);
   h. Detours, roadway diversions, and crossovers (The Contractor will furnish all notes required.);
   i. Final and original cross sections of Contractor and State furnished borrow pits and computations. The Contractor will perform earthwork computations by the average end area method;
   j. Resetting horizontal and vertical control, if disturbed;
   k. Approach slab and sleeper slab staking; and,
   l. Staking of sidewalks and curb ramps.

   The Contractor will perform the pipe staking so the pipe will fit the field conditions. The plans show only approximate pipe locations and grades. The Contractor will not install pipe prior to gaining the Engineer's approval of minor location and grade adjustments necessary for proper staking of the pipe.

   The Contractor will stake the slope catch points to determine the inlet and outlet locations, set reference stakes for the inlet and outlet locations, and stake ditches and special inlet and outlet grades to ensure proper drainage. The staking of manholes and drop inlets will be included in pipe and storm sewer staking. The Contractor will stake precast cattle passes similar to drainage pipes.

The horizontal tolerance for the pipe and storm sewer staking is ±0.05 foot and the vertical tolerance is ±0.03 foot.

The Contractor will keep pipe staking notes on a DOT Form 214.

6. **Three Man Survey Crew:** The use of the three-man survey crew is intended for surveying not included in the plan notes and this special provision. The Contractor may use a three man survey crew to perform additional survey work caused or required by the Department. The Engineer will use a written order to authorize the hourly three man survey crew item and describe the staking work required of the Contractor.

D. METHOD OF MEASUREMENT

Refer to the Table of Contractor Staking in the plans for more detail on how quantities were calculated.

1. **Slope Staking:** The Department will not measure slope staking. The Department will pay the plan quantity as the final quantity unless the Engineer orders additional slope staking in writing.

   The Department will consider all combinations of roadway widths as one set of slope stakes. On projects with ramps, the Department will consider ramps as roadway and include the ramps in the slope staking quantity. All additional slope staking for intersections will be incidental to the contract unit price for slope staking.

2. **Grade Staking:** The Department will not measure grade staking. The Department will pay the plan quantity as the final quantity unless the Engineer orders additional grade staking in writing. The Department will make no adjustment to the plan quantity of grade staking regardless if the Contractor elects to use MCG on all or part of the project.

   The Department will consider a two-lane roadway as one set of grade stakes. The Department will proportionately increase the plan quantity for multi-lane roadways in excess to two-lanes as shown in the table of construction staking (lane factor). For example, a three-lane roadway is equivalent to 1.5 times the quantity for a two-lane roadway. On projects requiring grade staking on ramps, the Department will consider ramps as a two-lane roadway for measurement as shown in the table of construction staking. The Department will not consider Acceleration/deceleration lanes and turning lanes for intersecting roads, and median crossovers as an additional roadway. All cost for additional grade staking for acceleration/deceleration lanes, turning lanes, intersecting roads, grade adjustments, and median crossovers will be incidental to the contract unit price for grade staking. All additional grade

staking for intersections and medians will be incidental to the roadway grade staking. Any additional staking the Contractor feels necessary to complete the grade staking work is the responsibility of the contractor and will be incidental to the contract unit price for grade staking.

3. **Structure Staking:** The Department will measure structure staking by the each for bridges, box culverts, and retaining walls.

4. **Miscellaneous Staking:** The Department will not measure miscellaneous staking. The Department will pay the plan quantity as the final quantity.

5. **Three Man Survey Crew:** The Department will measure three man survey crew by the hour with the following restrictions:

   The use of a three-man survey crew will be for the work ordered by the Engineer. The measured quantity will be the actual time the survey crew is working on the project, physically performing the field survey work. The Department will not include travel time for the survey crew in the measurement.

   The Contractor may use a two-man survey crew with the Engineer's prior approval. When a two-man survey crew is used, measurement for payment will be at 75 percent of the hours for a three-man crew. For example: 8 hours of two-man survey crew will result in 6 hours measured for payment as three-man survey crew time.

   The Contractor may use a one-man survey crew with the Engineer's prior approval. When a one-man survey crew is used, measurement for payment will be at 50 percent of the hours for a three-man crew. For example: 8 hours of a one-man survey crew will result in 4 hours measured for payment as three-man survey crew time.

   The Engineer will issue a DOT 75 ticket for the hours authorized for three-man survey crew.

E. BASIS OF PAYMENT

Payment for all of the survey items will be considered full compensation for furnishing all necessary personnel, vehicles, surveying equipment, software, supplies, materials, recording fees, transportation, and incidentals to accurately and satisfactory complete the work.

The Department reserves the right to omit any of these bid items without providing compensation to the contractor if the Department deems the bid prices are unreasonable.

1. **Slope Staking:** The Department will pay slope staking at the contract unit price per mile.

2. **Grade Staking:** The Department will pay grade staking at the contract unit price per mile.

3. **Structure Staking:** The Department will pay structure staking at the contract unit price per each.

4. **Miscellaneous Staking:** The Department will pay miscellaneous staking at the contract unit price per mile.

   The Department will make partial payment as follows:

   a. Upon submission of the name, experience, and qualifications of the surveyor or engineer who will supervise the staking, the proposed starting date, and the staking schedule, the Department will pay the Contractor 25 percent of the plan quantity for the miscellaneous staking.

   b. The Department will make intermediate payments based on the amount of the staking work completed.

   c. The Department will make full payment at the plan quantity for miscellaneous staking upon completion of all surveying and staking and when the Contractor has furnished all field notebooks and records to the Engineer.

   The Department will not adjust the contract unit price or plan quantity for miscellaneous staking due to overruns or under runs in the other contract items.

5. **Three Man Survey Crew:** The Department will pay three man survey crew on an hourly basis as per the Price Schedule for Miscellaneous Items. The value listed in the Price Schedule for Miscellaneous Items includes salaries, travel time, equipment, staking supplies, payroll additive, and all incidental expenses related to providing the survey crew.

*** * * * ***

STATE OF SOUTH DAKOTA
DEPARTMENT OF TRANSPORTATION

SPECIAL PROVISION
FOR
DYNAMIC PILE MONITORING AND
STATIC PILE LOAD TESTING

PROJECT P0034(150)272, PCN 02RW
BUFFALO COUNTY

AUGUST 18, 2015

I. DESCRIPTION

This work shall consist of furnishing all labor, equipment, materials and qualified personnel necessary to conduct dynamic monitoring and static load testing of driven piles in accordance with this special provision at locations designated in the plans or as directed by the Engineer.

The purpose of this testing program is to obtain load deflection and load transfer data required to accurately determine the nominal resistance of the pile under static loading conditions for comparison and correlation with dynamic driving data predictions and subsequent calibration of Load and Resistance Factor Design (LRFD) load factors based on local practice.

Five test piles will be driven by the Contractor. Three will be located adjacent to the bridge and two are part of the normal production piling for the bridge. Dynamic monitoring and static load testing of three HP 10 X 42 steel test piles along with the dynamic monitoring of two HP 10 X 42 steel production piling shall be performed by the Contractor.

The Contractor shall engage the services of a specialty subcontractor experienced in high-strain dynamic monitoring and static load testing of driven piles to perform the tasks listed in this special provision and report results to the Department. The specialty subcontractor shall have at least five years of documented experience in the performance and interpretation of dynamic and static pile testing. The individual responsible for operating the instrumentation shall be under the direct supervision of a licensed Professional Engineer registered in the state of South Dakota and be fully capable of understanding and interpreting the data being collected. The specialty subcontractor shall be selected by the Contractor and submitted for approval, by the Engineer, a minimum of 30 days prior to work beginning. Approval will be based upon qualifications and applicable previous experience on other projects.

II. MATERIALS

Pile shall conform to ASTM A572 grade 50.

III. PROCEDURE

One 60 foot, one 50 foot, and one 65 foot HP 10 X 42 steel piles will be driven in the test area adjacent to the proposed bridge location. The pile lengths are based upon a ground elevation of 1462 within the test pile area, an anticipated tip elevation of 1407 to obtain nominal resistance, and an additional 5' in length for attachment of monitoring gauges, etc.

TP 1 – 60 foot test pile: This pile shall be driven first. Drive to 192 tons of nominal resistance as indicated by the dynamic test equipment. This pile shall be driven with a pile hammer which has a ram weight of 4,000 lb.

TP 2 – 50 foot test pile: Drive to depth ordered by the Engineer. Tip elevation will be approximately 10 ft higher than TP 1. This pile shall be driven with a pile hammer which has a ram weight of 4,000 lb.

TP 3 – 65 foot test pile: Drive to 192 tons of nominal resistance as indicated by the dynamic test equipment. This pile shall be driven with a pile hammer which has a ram weight of 5,500 lb.

These piles will be allowed to setup for 7 days. After the 7 day setup, the Contractor shall restrike each of the test piles. Restrike of all test piles will be accomplished with the smaller 4,000 lb. hammer.

After completion of the restrike, the piles will again be allowed to setup for 7 days. On the 7th day the Static Load Testing of TP 1, TP 2, and TP 3 shall begin. Static load testing of TP 1, TP 2, and TP 3 will be accomplished prior to driving of the piling for the abutments.

TP 4– 55 foot test pile that will become part of abutment No. 1 pile group. TP 4 will be the first piling driven in abutment No. 1. Drive pile to 192 tons of nominal resistance as indicated by the dynamic test equipment or as directed by the Engineer.

TP 5– 55 foot test pile that will become part of the abutment No. 4 pile group. TP 5 will be the first piling driven in abutment No. 4. Drive pile to 192 tons of nominal resistance as indicated by the dynamic test equipment or as directed by the Engineer.

The remainder of the production piling in the abutments will be driven to a field verified nominal bearing resistance of 192 tons per pile as determined by SDDOT's pile driving formula. Piling will be driven in one continuous operation with no allowance for delayed bearing set up or to a tip elevation as directed by the Engineer.

The contractor shall review the subsurface sheet to determine pile splice sequencing based on anticipated pile contact with the shale. It will be required the shorter section of pile is driven first so false bearing and setup is not obtained during welding operations.

A. Dynamic Pile Monitoring:

All equipment, testing, and reporting procedures shall be provided and performed in accordance with ASTM D4945 – *Standard Test Method for High-Strain Dynamic Testing of Deep Foundations.*

The specialty subcontractor shall perform preconstruction wave equation analyses and prepare a summary report of the results. The wave equation analyses shall be used to assess the ability of all proposed pile driving systems to install piles to the required capacity and the desired penetration depth within allowable driving stresses. The report shall include a drivability graph relating pile capacity, blow count and driving stresses to depth. The report shall include a bearing graph relating the pile capacity to the pile driving resistance. The bearing graph shall indicate blow count versus capacity and stroke. The report shall also contain a constant capacity analysis or inspectors chart to assist the Engineer in determining the required driving resistance at other field observed strokes. Acceptability of the wave equation report and the adequacy of analyses will be determined by the Department's Foundation Engineer.

Dynamic pile testing field measurements shall be carried out using approved equipment, software, and recording equipment. The data collected at the end of initial driving and the beginning of restrike shall be analyzed using approved signal matching techniques and software.

The Contractor shall drive the test pile to the penetration depth at which the dynamic test equipment indicates that the nominal resistance required in the plans has been achieved. The testing equipment shall monitor pile stresses during driving to prevent pile damage and ensure pile integrity and capacity. If the testing equipment indicates overstressing or damage to the pile, the Contractor shall immediately discontinue driving and notify the Engineer.

If the testing equipment determines that pile stresses during driving exceed acceptable levels, a new pile driving system, modifications to existing system, or new pile installation procedures shall be proposed by the Contractor. Changes or modifications to the approved pile driving system will require additional wave equation analyses and approval by the Department's Foundation Engineer.

All field testing and measurements shall be made in the presence of the Engineer.

Monitoring of pile driving shall begin when pile driving begins. The data shall be

recorded and processed immediately in the field by the pile driving monitoring equipment and software. Unless monitoring indicates that additional driving will damage the pile, pile driving and monitoring shall continue until the specified pile capacity is reached. For each pile tested, pile driving analysis using signal matching techniques shall be performed for a selected blow at the end of driving to determine the relative capacities from end bearing and skin friction along the pile.

Restrike tests shall be performed on the test piles. The time interval between the end of initial driving and the beginning of restrike for the three test piles adjacent to the structure shall be 7 days. The time interval between the end of initial driving and the beginning of restrike for the two production piling in the abutments shall be 24 hours.

During restrike, the pile shall be instrumented and monitored similar to during initial driving. For each restrike test, pile driving analysis using signal matching techniques shall be performed for a selected blow from the beginning of restrike to determine the relative capacities from end bearing and skin friction along the pile.

The hammer shall be warmed up before restrike begins by applying at least 20 blows to another pile or other fixed object. The restrike test shall consist of striking the pile for 20 blows, until the pile penetrates an additional 3 inches, or as directed by the Engineer. If testing equipment indicates overstressing or damage to the pile, the Contractor shall immediately discontinue driving and notify the Engineer.

Case Pile Wave Analysis Program (CAPWAP) analyses shall be performed for all initial drives and restrikes of dynamically tested piles. A minimum of one CAPWAP analysis shall be performed for a representative blow near the end of each initial drive and towards the beginning of the restrike.

Within 14 working days of the completion of the static load testing, the Contractor's specialty subcontractor shall submit to the Department a report meeting the requirements of this special provision that is signed and sealed by a Professional Engineer licensed in the State of South Dakota. In addition to the raw data and ASTM D4945 requirements, the report shall include detailed results of the CAPWAP analyses including, but not limited to, all extrema tables; pile profile and pile model tables; simulated load test curves for the tip and top of the pile; the soil parameters used in the analysis by matching the measured and computed values of forces, velocities, and displacements; and static resistance distribution along the length of the pile, in a format approved by the Department’s Foundation Engineer.

If the Contractor’s pile driving schedule does not allow the dynamic monitoring results and all supporting data for the two HP 10 X 42 steel production piling to be included in the report submitted for the three static load test pile, an additional report will be submitted within 7 working days of the

completion of the last dynamic test.

All raw data and computer analyses shall be made available in electronic format to the Department for additional analysis.

B. Static Load Test:

Equipment and materials shall be of sufficient size and strength to apply an axial load greater than the yield capacity of the pile section.

All welding shall conform to the latest addition of the AWS D1.5 Bridge welding code.

All equipment, testing and reporting procedures shall be provided and performed in accordance with ASTM D1143 – *Standard Test Methods for Deep Foundations Under Static Axial Compressive Load*

A static load test shall be conducted on three non-production test pile at the location shown on the plans in accordance with ASTM D1143, Quick Load Test Method.

The top elevation of all test piles shall be determined immediately after driving and again just before load testing to check for heave. A pile which heaves more than 1/4 in. shall be redriven, or jacked, to the original elevation prior to testing.

The Contractor shall furnish and construct a suitable reaction frame to provide a load greater than the ultimate strength of the pile section. Load shall be applied to the pile by jacking against the reaction frame using one or more hydraulic jacks. If multiple jacks are used, they must be connected in parallel and calibrated together.

A minimum of four symmetrically arranged anchor piles will be required. The anchor piles shall be installed after installation of the test pile and located as far from the test pile as practical but in no case closer than 8 feet from the edge of the test pile. The length of anchor piles will be determined by the Contractor.

A minimum of 30 days prior to driving the static load test pile the Contractor shall submit, for review and approval, detailed plans for the reaction frame and loading apparatus including the distances between the load test pile and all reaction piles and reference beam supports. The submittal shall also include a proposed load test and reaction pile driving sequence, a scaled drawing of the loading apparatus detailing the ground surface elevation, the pile cutoff elevation, and the dimensions and locations of all bearing plates, the jack, the load cell, the spherical bearing plate, and the reaction beam. Plans for the reaction frame and loading apparatus shall be designed and stamped by a Professional Engineer licensed in the State of South Dakota. The submittal

shall include calibration certifications for the hydraulic jacks, load cell, pressure gauges, and hydraulic pumps conducted within 60 days of the load test.

The loading apparatus shall be constructed to allow the various increments of the load to be placed gradually, without causing vibration to the test pile. The primary method of determining the applied load shall be from a calibrated load cell. Support for the load test plates, jack, and ancillary devices shall be provided to prevent them from falling in the event of a release of load due to hydraulic failure, test pile failure, or other cause.

Hydraulic jacks and pressure gauges shall be used for the superimposed load. The jacks, pressure gauges, load cell, and hydraulic pumps shall be calibrated with each other within 60 days prior to the load test by an independent laboratory. When a jack, pressure gauge, load cell, and hydraulic pump are calibrated, they shall be calibrated and used as a unit. All calibration checks shall be within 5% of the applied load. Changing one of the four components shall require recalibration prior to use. Pressure gauges shall be a minimum of 4 1/2 in. in diameter with gradations in accordance with ASTM D1143. Hydraulic jacks shall have a nominal load capacity exceeding the maximum anticipated jack load by at least 20%. The jack, pump, and any hoses, pipes, fittings, gauges, or transducers used shall be rated to a safe pressure corresponding to the nominal jack capacity. Calibrated jacks, gauges and pumps shall have identifiable serial numbers to insure traceability to calibration tests.

A primary and secondary monitoring system shall be used to measure the vertical movement of the pile. The primary system shall utilize linear variable differential transformers (LVDT) or dial gauges. The secondary system shall consist of either dial gauges (if LVDT are used for the primary system) or a wire, mirror, and scale.

Pile compression and strain measurements shall be collected during the static load test. The Contractor shall supply and attach telltales and strain gauges to the test piles. Two pile telltales will be installed in each test pile to monitor the deflection of the pile base. A minimum of four vibrating wire strain gauges will be attached to each test pile; one near the top, one near the bottom, and two at locations along the pile length as recommended by the specialty subcontractor and detailed in the submittal for approval. Readings of tip movement and pile strain will be taken simultaneously with the measurements of applied load and movement. Details and data collection procedures for determining the pile compression and measuring the strain in the pile will be included in the Contractor's submittal.

The Contractor shall provide site protection for the reaction frame, reaction pile supports, static load test pile and reference beam from wind, direct sunlight, and other disturbances such as temperature extremes as required by the specialty subcontractor.

Within 14 working days of the completion of the static load testing, the Contractor's specialty subcontractor shall submit to the Department a report meeting the requirements of this special provision that is signed and sealed by a Professional Engineer licensed in the State of South Dakota. In addition to all the raw data and ASTM D1143 requirements, the report shall include but not limited to a plot of the load settlement curve superimposed with the Davisson failure criteria, in a format approved by the Engineer.

All raw data and computer analyses shall be made available in electronic format to the Department for additional analysis. The Contractor's specialty subcontractor shall be available with respect to any questions that may arise.

Upon completion of the static load test, test and anchor piles shall be removed or cut off at least one foot below the finished ground elevation. The area shall be restored to the satisfaction of the Engineer.

IV. METHOD OF MEASUREMENT

A. Dynamic Pile Test (during driving): Dynamic pile test (during driving) will be measured on a per each basis.

B. Dynamic Pile Test (during restrike): Dynamic pile test (during restrike) will be measured on a per each basis.

C. Static Pile Load Test: Static pile load test will be measured on a per each basis.

V. BASIS OF PAYMENT

A. Dynamic Pile Test (during driving): Dynamic pile test (during driving) will be paid for at the contract unit price per each. All costs associated with the dynamic pile test (during driving) except the cost of furnishing and driving the pile and restrike shall be included in the cost of the dynamic pile test (during driving). Payment will be full compensation labor, equipment, and materials needed to perform the test as specified and the preparation of the report.

B. Dynamic Pile Test (during restrike): Dynamic pile test (during restrike) will be paid for at the contract unit price per each. All costs associated with the dynamic pile test (during restrike) shall be included in the cost of the dynamic pile test (during restrike). Payment will be full compensation labor, equipment, and materials needed to perform the load test as specified and the preparation of the report.

C. Static Pile Load Test: Static pile load test will be paid for at the contract unit price per each. All costs associated with the static pile load test except the cost of furnishing and driving the test pile shall be included in the cost of the static pile load test. Payment will be full compensation for furnishing and constructing the reaction frame, supplying and driving the anchor piles, labor,

equipment, and other materials needed to perform the load test as specified and the preparation of the report.

* * * * *

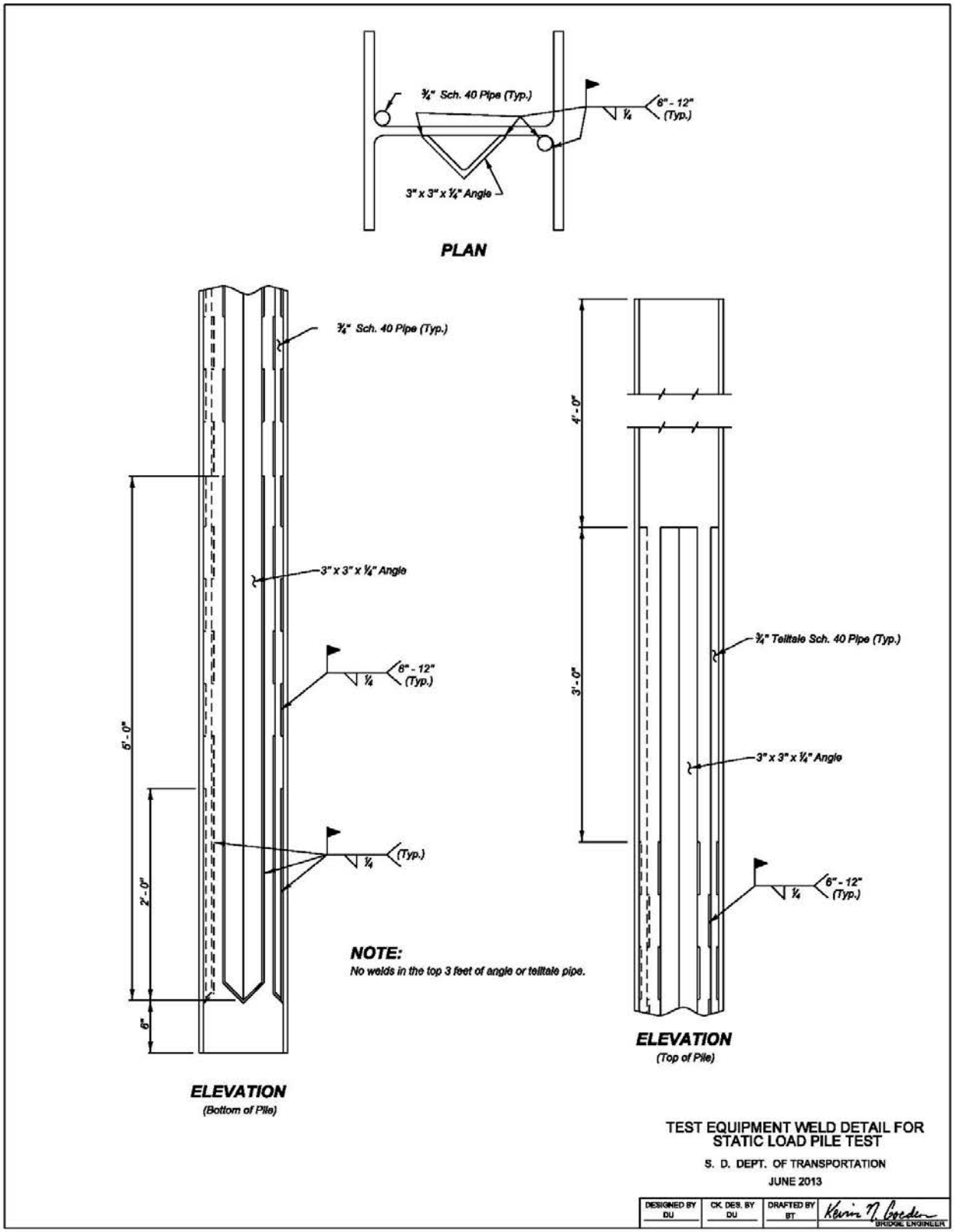
¾" Sch. 40 Pipe (Typ.)
6" - 12" (Typ.)
¼
3" x 3" x ¼" Angle
PLAN
¾" Sch. 40 Pipe (Typ.)
3" x 3" x ¼" Angle
6" - 12" (Typ.)
¼
(Typ.)
¼
6' - 0"
2' - 0"
6"
ELEVATION
(Bottom of Pile)
NOTE:
No welds in the top 3 feet of angle or telltale pipe.
4' - 0"
3' - 0"
¾" Telltale Sch. 40 Pipe (Typ.)
3" x 3" x ¼" Angle
6" - 12" (Typ.)
¼
ELEVATION
(Top of Pile)
TEST EQUIPMENT WELD DETAIL FOR
STATIC LOAD PILE TEST
S. D. DEPT. OF TRANSPORTATION
JUNE 2013
DESIGNED BY DU
CK. DES. BY DU
DRAFTED BY BT
BRIDGE ENGINEER

THE FOLLOWING UTILITY COMPANIES ARE INVOLVED ON

PROJECT P 0034(150)272, Buffalo County, PCN 02RW

The contractor shall contact the following utilities in a sufficient amount of time prior to starting work. The companies will identify their facilities and it is the responsibility of the contractor and the company to coordinate their work to avoid damage to existing facilities and to allow for relocation of facilities as may be required for grading work:

The following utilities were determined to be involved and were formally notified on September 30, 2014, that if their facility is located within the existing public right-of-way, any adjustment of their facility would have to be accomplished at no cost to the State, **within 90 days from receipt of the notice, unless other arrangements are made with the Area Engineer.**

(1) Central Electric Coop
PO Box 850
Mitchell SD 57301-0850
CONTACT: BRIAN BULTJE, TELE. #605-996-7516
The Company has overhead power lines along the south side of SD34 located on private easement and crossing SD34 at approximate station 10+60. After the Company's review of the highway construction plans, no adjustments should be necessary. The Company plans to protect their facilities in place and coordinate with the highway contractor if clearance issues arise during construction.

(2) Midstate Communications
PO Box 48
Kimball SD 57355-0048
CONTACT: JAMIE BOSWORTH, TELE. #605-778-6221 or CELL #605-682-8888
The Company has buried copper telecommunication cable along the north side of SD34 on private easement located north of the construction limits. The Company also has a buried fiber optic cable along the north side of SD34 on private easement, approximately 12 feet north of the fence. After the Company's review of the highway construction plans, no adjustments should be necessary. The Company plans to protect their facilities in place and will coordinate with the highway contractor during the test pile installation to protect their facilities.

(3) Western Area Power Administration
200 4th St SW
Huron SD 57350-2474
CONTACT: LILA VASELAAR, TELE. #605-353-2556
The Administration has a 230 kV electric transmission line crossing SD34 approximately 1,000 feet east of the east end of the bridge which is outside of this project's limits. After Administration's review of the highway construction plans, no adjustments should be necessary.

(4) US Geological Survey
111 Kansas Ave SE
Huron SD 57350-2005
CONTACT: BRUCE VENNER, TELE. #605-224-8440
The Agency has a Crest Stage Gauge (CSG) at the site of this bridge. A 2 inch steel pipe is attached to the downstream left wing wall, which has a wood stick and granular cork inside that records high water levels. The Agency plans to leave this CSG in place for as long as possible prior to construction. The Agency shall coordinate with the highway contractor to find the best time to remove the CSG prior to construction beginning. The Agency requests an invite to the Pre Construction Meeting and an estimated date when construction will begin.

The requirements relating to Cooperation Between Contractors, as set forth in Section 5.7 of the Standards Specifications for Roads and Bridges, 2015 edition, shall prevail throughout the limits of this project.

STATE OF SOUTH DAKOTA
DEPARTMENT OF TRANSPORTATION

SPECIAL PROVISION
FOR
CONTRACTOR ADMINISTERED PRECONSTRUCTION MEETING

APRIL 18, 2013

I. DESCRIPTION

This work consists of the Contractor scheduling and conducting a preconstruction meeting prior to beginning work on this contract. Additionally this work consists of the Contractor providing the Area Engineer a completed list of required submittals.

II. MATERIALS (Not Specified)

III. CONSTRUCTION REQUIREMENTS

For the purposes of this special provision, a business day is any calendar day except Saturdays, holidays, and days designated by the Governor of this State as an administrative leave day for state employees.

The Department will provide the Contractor a list of required submittals and the Authorization Form for Preconstruction Meeting (Form DOT-270) within five (5) business days of the date of the Notice to Proceed.

The Contractor's Required Submittals Form (Form DOT-272) is a document outlining information required prior to the completion of the project. This list will include two types of submittals; 1) information required before scheduling a preconstruction meeting and 2) information required before the Contractor begins related work. The Department reserves the right to request additional information not included in the original list of required submittals. The list of required submittals will include, but is not limited to, proposed sequence changes, shop drawings, permits, certifications, mix designs, labor compliance, equal employment opportunity, and disadvantaged business enterprise documents.

Prior to scheduling the preconstruction meeting, the Contractor will complete and provide the Area Engineer all items on the list of required submittals that are required as described in 1) above. If the Contractor cannot complete and provide a submittal item required prior to scheduling the preconstruction meeting, the Contractor will contact the Area Engineer to establish a mutually agreed upon

date when the required submittal will be completed and provided to the Area office.

The Contractor will not begin work on an item until the Contractor has provided the Area Engineer with all required information for the applicable work item and the appropriate office has approved the information, if necessary. The Contractor will make every reasonable effort to deliver the required submittals at the earliest possible time.

The Contractor's authorized representative as indicated on the Signature Authorization Form (Form DOT-209) will complete, in its entirety, the first page of the Authorization Form for Preconstruction Meeting and will initial each proceeding section. By initialing each section, the Contractor is confirming comprehension of each section.

When the Contractor has provided the Area Engineer all required submittals, unless the Contractor and Department have established an agreement in writing providing future dates of outstanding required submittal items, the Contractor will schedule a preconstruction meeting with the Area Engineer.

Within two (2) business days following the Contractor scheduling the preconstruction meeting, the Area Engineer will prepare and send the Contractor a meeting confirmation and the Preconstruction Meeting Outline (Form DOT-271) of discussion items including specific Department items.

The Contractor will complete the Contractor's portion of the Preconstruction Meeting Outline and will add additional discussion items as needed. The Contractor will send the meeting notice and final Preconstruction Meeting Outline to the Area Engineer, all subcontractors, utility companies, and all suppliers at least five (5) business days prior to the preconstruction meeting.

The Area Engineer will send the notice of the meeting and the final Preconstruction Meeting Outline of discussion items to any other government entities and other principle stakeholders involved in the project at least three (3) business days prior to the preconstruction meeting.

At the discretion of the Area Engineer, the preconstruction meeting may be held in person, videoconference, or over the phone. The Contractor's competent superintendent, as required by Section 5.5, who will be working on this project, is required to attend the preconstruction meeting.

The Contractor will lead the meeting discussion as described in the Preconstruction Meeting Outline. The Area Engineer will prepare the meeting minutes including any unresolved items and distribute them to all attendees and principle stakeholders within five (5) business days following the preconstruction meeting.

IV. METHOD OF MEASUREMENT

The Department will not make a separate measurement for the preconstruction meeting.

V. BASIS OF PAYMENT

The Department will not make a separate payment for the preconstruction meeting. All costs associated with the preconstruction meeting will be incidental to other contract items.

* * * * *

FUEL ADJUSTMENT AFFIDAVIT

Project Number _____
PCN _____
County _____

For project let using the SDEBS) and in accordance with Section 9.12, the bidder is not required to notify the Department at the time of submitting bids whether the Contractor will or will not participate in the fuel cost adjustment program. Prior to execution of the contract, the successful bidder must submit this completed form to the Department for approval. The Fuel Adjustment Affidavit shall include the anticipated fuel cost of subcontractors.

Does your company elect to participate in a fuel adjustment for this contract for the fuels that do not have a fixed price? No adjustments in fuel prices will be made if "No" is checked.

☐ Yes ☐ No

If yes, provide the total dollars for each of the applicable fuels. No adjustments in fuel price will be made for the fuel types that are left blank or completed with a $0.00 value.

Diesel (x) $_____

Unleaded (y) $_____

Burner Fuel (z) $_____ Type of Burner Fuel Used: _____

Sum (x + y + z) = $_____

Note: The sum of the x, y, and z may not exceed 15% of the original contract amount.

The following must be completed regardless of whether the Contractor elects to participate in the fuel adjustment affidavit

Under the penalty of law for perjury or falsification, the undersigned, _____,
(Printed Name)

_____ of _____,
(Title) *(Contractor)*

hereby certifies that the documentation is submitted in good faith, that the information provided is accurate and complete to the best of their knowledge and belief, and that the monetary amount identified accurately reflects the cost for fuel, and that they are duly authorized to certify the above documentation on behalf of the company.

I hereby agree that the Department or its authorized representative shall have the right to examine and copy all Contractor records, documents, work sheets, bid sheets, and other data pertinent to the justification of the fuel costs shown above.

Dated _____ Signature _____

Notarization is required only when the Contractor elects to participate in the fuel adjustment affidavit

Subscribed and sworn before me this _____ day of _____ , 20___.

_____ _____
Notary Public *My Commission Expires*

STATE OF SOUTH DAKOTA DEPARTMENT OF TRANSPORTATION
TITLE VI AND NONDISCRIMINATION ASSURANCE
JULY 14, 2008

During the performance of this contract, the contractor, for itself, its assignees and successors in interest (hereinafter referred to as the "contractor") agrees as follows:

(1) Compliance with Regulations: The contractor shall comply with the Regulations relative to nondiscrimination in Federally-assisted programs of the Department of Transportation, Title 49, Code of Federal Regulations, Part 21, as they may be amended (hereinafter referred to as the "Regulations"), incorporated by reference and made a part of this contract.

(2) Nondiscrimination: The contractor, with regard to the work performed by it during the contract, shall not discriminate on the grounds of race, color, religion, national origin, sex, age or disability in the selection and retention of subcontractors, including procurements of materials and leases of equipment. The contractor shall not participate either directly or indirectly in the discrimination prohibited by section 21.5 of the Regulations, including employment practices when the contract covers a program set forth in Appendix B of the Regulations.

(3) Solicitations for Subcontracts, Including Procurements of Materials and Equipment: In all solicitations either by competitive bidding or negotiation made by the contractor for work to be performed under a subcontract, including procurements of materials or leases of equipment, each potential subcontractor or supplier shall be notified by the contractor of the contractor's obligations under this contract and the Regulations relative to nondiscrimination on the grounds of race, color, religion, national original, sex, age or disability.

(4) Information and Reports: The contractor shall provide all information and reports required by the Regulations, or directives issued pursuant thereto, and shall permit access to its books, records, accounts, other sources of information, and its facilities as may be determined by the South Dakota Department of Transportation or the Federal Highway Administration to be pertinent to ascertain compliance with such Regulations or directives. Where any information required of a contractor is in the exclusive possession of another who fails or refuses to furnish this information, the contractor shall so certify to the South Dakota Department of Transportation, or the Federal Highway Administration as appropriate, and shall set forth what efforts it has made to obtain this information.

(5) Sanctions for Noncompliance: In the event of the contractor's noncompliance with the nondiscrimination provisions of this contract, the South Dakota Department of Transportation shall impose such contract sanctions as it or the Federal Highway Administration may determine to be appropriate, including but not limited to:

(a) withholding of payments to the contractor under the contract until the contractor complies, and/or
(b) cancellation, termination or suspension of the contract, in whole or in part.

(6) Incorporation of Provisions: The contractor shall include the provisions of paragraphs (1) through (6) in every subcontract, including procurements of materials and leases of equipment, unless exempt by the Regulations, or directives pursuant thereto.

The contractor shall take such action with respect to any subcontract or procurement as the South Dakota Department of Transportation or the Federal Highway Administration may direct as a means of enforcing such provisions including sanctions for non-compliance. Provided, however, that, in the event of a contractor becomes involved in, or is threatened with, litigation with a subcontractor or supplier as a result of such direction, the contractor may request the South Dakota Department of Transportation to enter into such litigation to protect the interest of the State, and, in addition, the contractor may request the United States to enter such litigation to protect the interests of the United States.

****

STATE OF SOUTH DAKOTA
DEPARTMENT OF TRANSPORTATION

SPECIAL PROVISION
FOR
DISADVANTAGED BUSINESS ENTERPRISE

MAY 20, 2015

The Contractor, subrecipient, or subcontractor shall not discriminate on the basis of race, color, national origin, or sex in the performance of this contract. The Contractor shall carry out applicable requirements of 49 CFR Part 26 in the award and administration of Department-assisted contracts. Failure by the Contractor to carry out these requirements is a material breach of this contract, which may result in the termination of this contract or such other remedy as the Department deems appropriate.

I. Definitions

A. Specified Goal: A DBE participation goal for a contract as indicated by a specific numerical percentage of the total dollar amount of the contract in the bidding documents.

B. Not Specified: No specific DBE participation goal is specified for a contract.

C. Disadvantaged Business Enterprise (DBE): A for-profit small business that is certified by the Department and is listed in the DBE Directory available on the Department's web site.

D. Good Faith Effort (GFE): Efforts to achieve a DBE goal which; by their scope, intensity, and appropriateness to the objective; can reasonably be expected to meet the objective of the Department's DBE program pursuant to 49 CFR 26.1.

E. Positive Contact: Communication between the bidder and the DBE in which the bidder receives an oral or written response from the DBE stating the DBE's intention to quote or not quote a project.

F. Commitment: The dollar amount of work to be subcontracted to DBEs, according to the bidder's bid. The commitment may be compared to the dollar amount of all contract items in the bidder's bid and expressed as a percentage of the total bid amount.

II. Bidding Requirements

A bidder must not discriminate on the basis of race, color, national origin, or sex in the solicitation or award to subcontractors and material suppliers. Bidders who demonstrate a pattern of possible discrimination through consistent and repeated under-utilization of DBEs may be subject to investigation and sanctions allowed by regulation, administrative rule, or law.

The Bidder's failure to carry out the requirements of this special provision will be treated as a non-responsive bid.

On contracts that specify a specific DBE contract participation goal, all bidders must include their DBE commitment for the contract in the bidding files provided by the Department.

If the contract indicates "Not Specified," all bidders are encouraged to include their anticipated DBE utilization for the contract in the bidding files provided by the Department.

Each bidder must submit a list of all subcontractors and suppliers (DBEs and non-DBEs) the bidder received quotes from for that contract with the bid files.

A Contractor must make reasonable efforts to provide opportunities for DBEs to participate on Federal-aid contracts throughout the life of the contract.

On contracts let with a specified DBE contract participation goal, where the low bidder has not met or exceeded that goal, the bidder must provide GFE documentation as indicated in Section III of this special provision.

When the DBE participation is "Not Specified" on a contract, each bidder is encouraged to use DBE Contractors; however no bidder will be required to furnish GFE documentation.

The apparent low bidder must submit GFE documentation, when requested by the Department, within 2 business days from the date the apparent low bidder is contacted by the Department. Section III of this special provision provides information on the types of action bidders should make as part of their GFE to obtain DBE participation. The apparent low bidder may submit documentation with the bidding files provided all pertinent information is included. The apparent low bidder must submit any missing documentation within 2 business days from the date the Department contacts the low bidder.

If the apparent low bidder does not provide documentation showing GFE as required by this special provision, the Department will consider that bid nonresponsive and may either award the contract to the next lowest responsible bidder with a responsive bid, or reject all bids. Subsequent to the DBE

committee's decision that the apparent low bidder's efforts do not establish GFE, the apparent low bidder will be notified that the bid is not responsive. The apparent low bidder will have 2 business days from the date of notification to contact the Bid Letting Engineer to arrange a meeting with the Department Secretary, or the Secretary's designee, to present documentation and argument about why the bid should not be rejected. The Department Secretary or the Secretary's designee will issue a written decision on responsiveness of the bid within 2 business days after the meeting.

If the apparent low bid is rejected for failure to meet the GFE or other requirements, the next apparent low bidder will be notified, unless all bids are rejected. The next apparent low bidder's DBE commitment will also be reviewed, and GFE documentation may be requested. Unless all bids are rejected, award of the contract will be made to the lowest bidder with a responsive bid.

The lowest responsive bidder will be required to complete form DOT-289B, as included in the contract documents, when the contract is sent for signature. This form requires a signature from each DBE identified in the low bidder's DBE commitment. A separate form will be supplied for each DBE and will be included in the contract documents.

Bidders are encouraged to assist interested DBEs in obtaining bonding, lines of credit, insurance, necessary equipment, supplies, materials, or other related services.

III. Good Faith Efforts

If a GFE package is requested on a contract with a specified goal, the apparent low bidder must submit documentation showing compliance with the following requirements:

A. The apparent low bidder will submit a contact log of all solicitation efforts including:

- Name of the DBE firm
- Name and phone number of the individual with whom contact was made
- Date, time, and manner of each and every contact (by phone, in person, fax, mail, e-mail, etc.)
- The DBE's response to the solicitation
- Result of the solicitation effort

An example of a solicitation log is available on the Department's Bid Letting website. When bidding utilizing the South Dakota Department of Transportation Electronic Bid System (SDEBS), SDEBS may be used to document the log of solicitation efforts for the project.

B. The apparent low bidder will also submit documentation that shows GFE in relation to the following requirements:

1. The bidder must select contract work items to encourage DBE participation. This includes breaking out contract work items into economically feasible units to facilitate DBE participation, even when the bidder might otherwise prefer to perform these work items with its own forces.

2. The bidder must solicit all certified DBEs that are listed in the appropriate work classifications in the DBE directory and that have indicated in the directory they are willing to work in the project's geographic area. Without exception, all DBEs who are listed on the plan holders list by 10 AM central time 7 calendar days prior to the bid letting must be solicited in accordance with Section III.B.3 of this special provision. If the bidder has not solicited any DBE meeting these requirements, the bidder will provide a detailed written explanation showing why the DBE was not solicited.

3. To provide adequate time for the DBE to respond with a quote in the normal course of business, the bidder must make the initial solicitation at least 6 calendar days by mail or 5 calendar days by phone, fax, or e-mail prior to the letting date. Without exception, all DBEs who are listed on the plan holders list by 10 AM central time 7 calendar days prior to the bid letting must be solicited.

4. If the bidder does not receive a positive contact from a DBE, the bidder must follow up the initial solicitation with a second solicitation by phone, fax, or e-mail to determine whether the DBE is interested in quoting. The bidder must make this second solicitation at least 2 business days prior to the letting.

5. The bidder will provide interested DBEs with adequate and timely information about plans, specifications, and requirements of the contract to assist DBEs in responding to a solicitation.

6. If a bidder rejects a DBE quote because of previous problems with a particular DBE, the bidder must prepare a detailed written explanation of the problem. Additional cost involved in finding and using DBEs is not, in itself, sufficient reason for a bidder to reject a quote. A bidder must not reject a DBE as being unqualified without sound reasons based on a thorough investigation of the DBE's capabilities.

7. Any additional information requested by the Department.

C. The bidder must consider qualified DBEs whose quotes are reasonably competitive. If the bidder rejects any quote because it is considered not to be

"reasonably competitive," the bidder must provide copies of all DBE and non-DBE quotes, and a work item price spreadsheet comparing DBE quotes to non-DBE quotes. The spreadsheet must show which quote was included in the bid for the work items being compared. The ability or desire of a bidder to perform the work with its own forces does not relieve the bidder of the responsibility to make GFE. In the event a bidder elects to use its own forces over a DBE, the bidder must include, on the spreadsheet, documentation of the costs of using the bidder's own forces. This can be shown in a number of ways, which may include submitting portions of the bidder's work sheets used to prepare the bid.

D. The bidder must explain why the specified goal could not be met.

E. The bidder must identify any additional efforts the bidder made to secure DBE participation.

IV. Counting DBE Participation

On projects with a specified goal, the contract commitment, as submitted with the bid, will be documented on form DOT-289R/C as included in the contract documents.

If the project is shown as "Not Specified," the anticipated DBE utilization, as submitted with the bid, will be documented on form DOT-289 R/N – DBE Utilization Form, as included in the contract documents. The DBE utilization shown on this form is not a commitment to use the DBE. This information will be used by the Department to track anticipated DBE usage.

Only the portion of a contract performed by the DBE's own forces will count toward DBE participation. Included is the cost of supplies and materials obtained by the DBE for the contract, including supplies purchased or equipment leased by the DBE. Supplies and equipment the DBE subcontractor purchased or leased from the Contractor or its affiliate is not allowed to be included.

When a DBE performs as a participant in an approved joint venture, only the portion of the total dollar value of the contract equal to the distinct, clearly defined portion of the work of the contract that the DBE performs with its own forces will count toward DBE participation.

A bidder may count toward its DBE participation only that percentage of expenditures to DBEs that perform a commercially useful function (CUF) in the performance of a contract. A DBE performs a CUF when the DBE is responsible for execution of the work of a contract and is carrying out the DBE's responsibilities by actually performing, managing and supervising the work involved. To perform a CUF, the DBE must also be responsible, with respect to materials and supplies used on the contract, for negotiating prices, determining

quality and quantity, ordering and installing (where applicable) the materials, and paying for the material itself. To determine whether a DBE is performing a CUF, the Department will evaluate the amount of work subcontracted, the industry practice, and whether the amount the DBE is to be paid is commensurate with the work it is actually performing, DBE credit claimed for performance of the work, and other relevant factors.

A DBE is not performing a CUF if the DBE performs less than 30% of the total cost of its contract with its own work force, or if its role is limited to that of an extra participant in a transaction, project, or contract through which funds are passed in order to obtain the appearance of DBE participation. In determining whether a DBE is simply an extra participant, the Department will examine similar transactions, particularly those in which DBEs do not participate.

DBE participation will be counted for trucking services as follows:

The bidder/Contractor will receive credit toward DBE participation for the total value of the transportation services the DBE provides on the contract using trucks the DBE owns, insures, and operates and which are driven by drivers the DBE employs.

A DBE may lease trucks from another DBE firm, including an owner-operator who is certified as a DBE. When a DBE leases trucks from another DBE, the bidder/Contractor can count the total value of the transportation services the lessee DBE provides on the contract toward DBE participation.

The DBE may also lease trucks from a non-DBE firm, including an owner-operator. When a DBE leases trucks from a non-DBE, the bidder/Contractor can count toward DBE participation only the fee or commission the DBE receives as a result of the lease arrangement. The bidder/Contractor does not receive credit toward DBE participation for the total value of the transportation services, since all services are not provided by a DBE.

The bidder may count toward DBE participation expenditures to DBE firms for materials, supplies, or services as follows:

If the materials or supplies are obtained from a DBE manufacturer, count 100% of the cost of the materials or supplies toward DBE participation. A manufacturer is a firm that operates or maintains a factory or establishment that produces, on the premises, the materials, supplies, articles, or equipment required under the contract and of general character described by the specifications.

If the materials or supplies are purchased from a DBE regular dealer, count 60% of the cost of the materials or supplies toward DBE participation. A regular dealer is a firm that owns, operates, or maintains a store, warehouse

or other establishment in which the materials, supplies, articles, or equipment are bought, kept in stock, and regularly sold or leased to the public in the usual course of business.

If the materials or supplies are purchased from a DBE which is neither a manufacturer nor a regular dealer, count only the amount of fee or commission charged for assistance in the procurement of the materials or supplies or fee or transportation charges for the delivery of materials or supplies required at the job site toward DBE participation. In order to be counted, the Department must determine the fee to be reasonable and not excessive as compared to fees customarily allowed for similar services. The cost of the materials and supplies themselves will not count toward DBE goals.

The Department will not count toward DBE participation materials or services provided by a DBE who is not currently certified.

No intended or actual subcontracting arrangement which is contrived to artificially inflate DBE participation is allowed. This includes, but is not limited to, DBE middlemen which serve no commercially useful function, or arrangements where a DBE is acting essentially as a broker of goods or services, but has been counted as a manufacturer, regular dealer, or subcontractor.

The Department will review and monitor projects for compliance with the bidder's intended DBE participation. Failure by the Contractor to fulfill the contract commitment constitutes a breach of contract. The Department may also investigate the form and substance of particular business arrangements between and among DBE and Contractors with regard to specific contracts. If, as a result of an investigation, the Department determines a particular business arrangement is not allowable, the dollar amount of the unallowable DBE participation will be subtracted from the Contractor's DBE participation on that project. The Contractor will be notified if the apparent DBE participation is not adequate to meet the DBE participation stated on the form DOT-289R/C. The Contractor will be directed to seek additional participation from other DBEs to meet the unallowable portion on that contract.

All Contractors and DBEs shall cooperate fully and promptly with the Department in compliance reviews, investigations, and other requests for information. If the Department determines a Contractor was a knowing and willing participant in an unallowable business arrangement, or in the event of repeated violations, falsification, or misrepresentation, the Department will impose sanctions. Sanctions may include, but are not limited to one or more of the following:

- Assessment of liquidated damages as stated in Section VII of this special provision
- Suspension of bidding privileges or debarment

- Withholding progress payments
- Securing additional DBE participation on future Federal-aid contracts sufficient to make up for the DBE participation found to be unallowable
- Referral of the matter for criminal prosecution

V. Joint Checks to DBEs

A joint check is a check issued by a prime Contractor to a DBE subcontractor and to a material supplier or another third party for items or services to be incorporated into a project. For a prime Contractor to receive DBE credit, the DBE must perform a commercially useful function and be responsible for negotiating price, determining quality and quantity, ordering materials and installing (where applicable) and paying for materials.

To ensure that the DBE is independent of the prime Contractor and in compliance with the regulation, use of joint checks will be reviewed and allowed only under following conditions:

- Issued for valid reasons only, not simply for the convenience of the prime Contractor
- Used for a specific contract or specific time frame and not long-term or open ended
- Payment is made to the DBE and not directly to the supplier
- Requested and received prior written approval from the DBE Compliance Officer.

The request must include the following:

- Name of the DBE
- The DOT contract number(s)
- The DOT PCN number(s)
- The work the DBE will be performing on each contract
- Name of the supplier(s) used by the DBE
- The specific reason(s) for issuing joint checks

The Department will review the request and verify the circumstances indicated in the request with the DBE. A copy of the request and approval will be provided to the prime Contractor and the DBE.

VI. Certification of DBE Performance and Payments

Within 30 calendar days of the date of the Acceptance of Field Work the Contractor is required to submit form DOT-289 (Certification of DBE Performance and Payments), listing all DBEs that participated in the contract, and the total dollar amount paid (and anticipated to be paid) to each. DBE attainments are compared to commitments on form DOT-289R/C and any payments less than

90% of that commitment, without proper justification and documentation, will have liquidated damages assessed against the contract. The Contractor's final payment is not released until receipt of the form DOT-289.

Contractors are required to maintain a running tally of payments to DBEs. For reports of payments not being made in accordance with the prompt payment provision, alleged discrimination against a DBE or other similar complaint, the tally may be requested for review by the Department. The Department may perform audits of contract payments to DBEs to ensure that the amounts paid were as reported on the form DOT-289. All Contractors participating in Federal-aid contracts are expected cooperate fully and promptly with the Department in compliance reviews, investigations and other requests for information regarding payments to DBEs. Their failure to do so is grounds for appropriate sanctions or action against the Contractor.

The Department will monitor the running tally on a program basis and if reporting issues are identified, additional reporting requirements may be implemented.

The Contractor is required to report payments to DBEs twice a year from the date of the Notice to Proceed until the date of the Acceptance of Field Work. Reporting periods and deadlines for payment reporting submittals will be in accordance with the following:

Reporting Period:	**Reporting Deadline:**
October 1 to March 31	April 30
April 1 to September 30	October 31

For each reporting period, the Contractor is required to submit form DOT-289 listing all DBEs that participated in the contract, the payments to DBEs for that reporting period, and the total dollar amount paid to each DBE. For each reporting period after the Notice to Proceed, the Contractor will mark the form DOT-289 as "On-Going" when reporting payments to DBEs prior to the Date of the Acceptance of Field Work. Within 30 calendar days of the date of the Acceptance of Field Work and all DBE payments have been made, the Contractor is required to submit form DOT-289 and the Contractor will mark the form DOT-289 as "Final".

Each form DOT-289 must be provided to the Engineer by the reporting deadline stated above.

DBE payment are compared to commitment on form DOT-289R/C and any payment less than 90% of that commitment, without proper justification and documentation, will result in the Department assessing liquidated damages against the contract. The Contractor's final payment will not be released until receipt of the form DOT-289 marked "Final".

VII. Liquidated Damages

A. If the Contractor does not meet its contract commitment documented on form DOT-289 R/C, the Department will assess liquidated damages according to the following schedule:

1. For the first $1,000 DBE deficiency, 100% of the deficiency.

2. For the next $9,000 DBE deficiency, 50% of the deficiency.

3. For the next $10,000 DBE deficiency, 25% of the deficiency.

4. For any remaining DBE deficiency in excess of $20,000, 10% of the deficiency.

This liquidated damage provision will not be applicable where actual payment to a DBE is within 90% of the commitment or where there are good and sufficient reasons, properly documented, for the deficiency such as quantity under-runs, project changes, or other unexpected occurrences.

B. If a Contractor finds it impossible, for reasons beyond its control, to meet the contract commitment on form DOT-289R/C, the Contractor may, at any time prior to completion of the project, provide a written request to the DBE Compliance Officer for a complete or partial waiver of liquidated damages. No request for a waiver will be accepted after Acceptance of Field Work has been issued.

VIII. Termination or Substitution of a DBE

The Contractor will not be allowed to terminate or substitute a DBE without the Department's prior verbal consent followed by written approval. This includes, but is not limited to, instances in where the Contractor desires to perform work originally committed to a DBE with its own forces, with an affiliated company, with a non-DBE, or with another DBE. Department approval is required when the contract contains a "specified goal" on form DOT-289R/C and the DBE to be terminated or substituted is listed as a commitment on the form DOT-289R/C.

The Department will provide written consent only if the Department agrees the Contractor has good cause to terminate the DBE listed on the form DOT-289R/C. Good cause includes the following:

- The DBE fails or refuses to execute a written contract
- The DBE fails or refuses to perform the work of the DBE subcontract in a manner consistent with normal industry standards or Department specifications unless the failure or refusal by the DBE is a result of unfair or discriminatory actions by the Contractor

- The DBE fails or refuses to meet the Contractor's reasonable nondiscriminatory bond requirements
- The DBE becomes bankrupt, insolvent, or exhibits credit unworthiness
- The DBE in ineligible to work on public works projects because of suspension and debarment proceedings pursuant to 2 CFR Parts 180, 215, and 1,200 or applicable state law
- The Department has determined that the DBE is not a responsible Contractor
- The DBE voluntarily withdraws from the project and provided the Department with a written notice of withdrawal
- The DBE is found to be ineligible to receive DBE credit for the type of work required
- A DBE owner dies or becomes disabled with the result that the DBE is unable to complete its work on the contract
- Other documented good cause that the Department determines to substantiate the termination of the DBE.

Good cause does not exist if the Contractor seeks to terminate a DBE so the Contractor can self-perform the work for which the DBE was committed, or so the Contractor can substitute another DBE or non-DBE Contractor after the contract award.

Before submitting a request to terminate or substitute a DBE to the Department, the Contractor must first provide written notice to the DBE, with a copy of the notice to the DBE Compliance Officer, of the Contractor's intent to request to terminate or substitute, and the reason for the request.

The Contractor must give the DBE 5 calendar days to respond to the notice and advise the Department and the Contractor of the reasons, if any, why it objects to the proposed termination of its subcontract and why the Department should not approve the Contractor's action. If required in a particular case as a matter of public necessity (e.g. safety), the Department may provide a response period shorter than 5 calendar days.

When a DBE is terminated or fails to complete its work on the contract for any reason, the Contractor must make good faith efforts to replace the committed DBE with another DBE. The Contractor must make efforts to find another DBE to perform the same amount of work under the contract as the DBE that was terminated. The letter to the Department requesting termination or substitution must include the name of the DBE and dollar amount of the replacement DBE. If the Contractor is unable to find another DBE, the Contractor must provide the names of the DBEs it contacted and reason why they were unable to use those DBEs.

If the Contractor does not utilize or pay DBEs as required, liquidated damages will be assessed as specified in Section VII of this special provision. In addition, if

the Contractor is found to have knowingly and willingly attempted to circumvent the DBE contract provisions, sanctions referred to in Section IV of this special provision may be imposed.

The Contractor does not need Department approval to terminate or substitute a DBE under the following circumstances:

- The DBE is being used on a contact with a “Specified Goal” however the DBE was not listed as a DBE commitment on form DOT-289R/C.
- The DBE was listed as a commitment on a “Not Specified” DBE goal contract on form DOT-289R/N.

* * * * *

SPECIAL PROVISION FOR
EEO AFFIRMATIVE ACTION REQUIREMENTS ON
FEDERAL AND FEDERAL-AID CONSTRUCTION CONTRACTS

SEPTEMBER 1, 1997

APPENDIX A

Notice or Requirement for Affirmative Action to Ensure Equal Employment Opportunity (Executive Order 11246)

1. The Offeror's or Bidder's attention is called to the "Equal Opportunity Clause" and the "Standard Federal Equal Employment Opportunity Construction Contract Specifications" set forth herein.

2. The goals and timetables for minority and female participation, expressed in percentage terms for the Contractor's aggregate workforce in each trade on all construction work in the covered area, are as follows:

GOALS FOR MINORITY PARTICIPATION FOR EACH TRADE

Aurora	0.8%	Fall River	7.9%	Marshall	1.3%
Beadle	0.8%	Faulk	1.3%	Meade	3.4%
Bennett	7.9%	Grant	1.3%	Mellette	7.9%
Bon Homme	1.2%	Gregory	0.8%	Miner	0.8%
Brookings	0.8%	Haakon	7.9%	Minnehaha	1.2%
Brown	1.3%	Hamlin	1.3%	Moody	0.8%
Brule	0.8%	Hand	0.8%	Pennington	3.4%
Buffalo	7.9%	Hanson	0.8%	Perkins	7.9%
Butte	7.9%	Harding	7.9%	Potter	7.9%
Campbell	7.9%	Hughes	7.9%	Roberts	1.3%
Charles Mix	0.8%	Hutchinson	0.8%	Sanborn	0.8%
Clark	1.3%	Hyde	7.9%	Shannon	7.9%
Clay	1.2%	Jackson	7.9%	Spink	1.3%
Codington	1.3%	Jerauld	0.8%	Stanley	7.9%
Corson	7.9%	Jones	7.9%	Sully	7.9%
Custer	7.9%	Kingsbury	0.8%	Todd	7.9%
Davison	0.8%	Lake	0.8%	Tripp	7.9%
Day	1.3%	Lawrence	7.9%	Turner	0.8%
Deuel	1.3%	Lincoln	0.8%	Union	1.2%
Dewey	7.9%	Lyman	7.9%	Walworth	7.9%
Douglas	0.8%	McCook	0.8%	Yankton	1.2%
Edmunds	1.3%	McPherson	1.3%	Ziebach	7.9%

GOALS FOR FEMALE PARTICIPATION IN EACH TRADE

Statewide - - - - - - - - - - 6.9%

These goals are applicable to all the contractor's construction work (whether or not it is Federal or federally assisted) performed in the covered area. If the contractor performs construction work in a geographical area located outside of the covered area, it shall apply the goals established for such geographical area where the work is actually performed. With regard to this second area, the contractor also is subject to the goals for both its federally involved and nonfederally involved construction.

The Contractor's compliance with the Executive Order and the regulations in 41 CFR Part 60-4 shall be based on its implementation of the Equal Opportunity Clause specific affirmative action obligations required by the specifications set forth in 41 CFR 60-4.3 (a), and its efforts to meet the goals established for the geographical area where the contract resulting from this solicitation is to be performed. The hours of minority and female employment and training must be substantially uniform throughout the length of the contract, and in each trade, and the contractor shall make good faith effort to employ minorities and women evenly on each of its projects. The transfer of minority or female employees or trainees from Contractor to Contractor or from project to project

for the sole purpose of meeting the contractor's goals shall be a violation of the contract, the Executive Order and the regulations in 41 CFR Part 60-4. Compliance with the goals will be measured against the total work hours performed.

3. The Contractor when requesting permission to sublet shall provide written notification to the Department of Transportation as specified in Section 8.1 of the Standard Specifications for Roads and Bridges. When the subcontract is in excess of $10,000, the request for permission to sublet shall list the name, address and telephone number of subcontractor; employer identification number; estimated dollar amount of the subcontract; estimated starting and completion dates of the subcontract; and the geographical area in which the contract is to be performed. The Department of Transportation will then provide written notification to the Director of the Office of Federal Contract Compliance Programs through proper channels.

4. As used in this Notice, and in the contract resulting from this solicitation, the "covered area" is as shown by county designation on the Title Sheet of the plans.

APPENDIX B

Standard Federal Equal Employment Opportunity Construction Contract Specifications (Executive Order 11246)

1. As used in these specifications:

   a. "Covered area" means the geographical area described in the solicitation from which this contract resulted;

   b. "Director" means Director, Office of Federal Contract Compliance Programs, United States Department of Labor, or any person to whom the Director delegates authority;

   c. "Employer identification number" means the Federal Social Security number used on the Employer's Quarterly Federal Tax Return, U.S. Treasury Department Form 941.

   d. "Minority" includes:

      (I) Black (all persons having origins in any of the Black African racial groups not of Hispanic origin);

      (II) Hispanic (all persons of Mexican, Puerto Rican, Cuban, Central or South American or other Spanish Culture or origin, regardless of race);

      (III) Asian and Pacific Islander (all persons having origins in any of the original peoples of the Far East, Southeast Asia, the Indian Subcontinent, or the Pacific Islands); and

      (IV) American Indian or Alaskan Native (all persons having origins in any of the original peoples of North America and maintaining identifiable tribal affiliations through membership and participation or community identification).

2. Whenever the Contractor, or any Subcontractor at any tier, subcontracts a portion of the work involving any construction trade, it shall physically include in each subcontract in excess of $10,000 the provisions of these specifications and the Notice which contains the applicable goals for minority and female participation and which is set forth in the solicitations from which this contract resulted.

3. If the Contractor is participating (pursuant to 41 CFR 60-4.5) in a Hometown Plan approved by the U.S. Department of Labor in the covered area either individually or through an association, its affirmative action obligations on all work in the Plan area (including goals and timetables) shall be in accordance with that Plan for those trades which have unions participating in the Plan. Contractors must be able to demonstrate their participation in and compliance with the provisions of any such Hometown Plan. Each Contractor of Subcontractor participating in an approved Plan is individually required to comply with its obligations under the EEO clause, and to make a good faith effort to achieve each goal under the Plan in each trade in which each goal under the Plan in each trade in which it has employees. The overall good faith performance by other Contractors or Subcontractors toward a goal in an approved Plan does not excuse any covered Contractor's or Subcontractor's failure to take good faith efforts to achieve the Plan goals and timetables.

4. The Contractor shall implement the specific affirmative action standards provided in paragraphs 7a through p of these specifications. The goals set forth in the solicitation from which this contract resulted are expressed

as percentages of the total hours of employment and training of minority and female utilization the Contractor should reasonably be able to achieve in each construction trade in which it has employees in the covered area. Covered Construction contractors performing construction work in geographical areas where they do not have a Federal or federally assisted construction contract shall apply the minority and female goals established for the geographical area where the work is being performed. Goals are published periodically in the Federal Register in notice form, and such notices may be obtained from any Office of Federal Contract Compliance Programs office, from Federal procurement contracting officers or from the South Dakota Department of Transportation. The Contractor is expected to make substantially uniform progress toward its goals in each craft during the period specified.

5. Neither the provisions of any collective bargaining agreement, nor the failure by a union with whom the Contractor has a collective bargaining agreement, to refer either minorities or women shall excuse the Contractor's obligations under these specifications, Executive Order 11246, or the regulations promulgated pursuant thereto.

6. In order for the nonworking training hours of apprentices and trainees to be counted in meeting the goals, such apprentices and trainees must be employed by the Contractor during the training period, and the Contractor must have made a commitment to employ the apprentices and trainees at the completion of their training, subject to the availability of employment opportunities. Trainees must be trained pursuant to training programs approved by the U.S. Department of Labor.

7. The Contractor shall take specific affirmative actions to ensure equal employment opportunity. The evaluation of the Contractor's compliance with these specifications shall be based upon its effort to achieve maximum results from its actions. The Contractor shall document these efforts fully and shall implement affirmative action steps at least as extensive as the following:

    a. Ensure and maintain a working environment free of harassment, intimidation, and coercion at all sites, and in all facilities at which the Contractor's employees are assigned to work. The Contractor, where possible, will assign two or more women to each construction project. The Contractor shall specifically ensure that all foremen, superintendents, and other on-site supervisory personnel are aware of and carry out the Contractor's obligation to maintain such a working environment, with specific attention to minority or female individuals working at such sites or in such facilities.

    b. Establish and maintain a current list of minority and female recruitment sources, provide written notification to minority and female recruitment sources and to community organizations when the Contractor or its union have employment opportunities available, and maintain a record of the organization's responses.

    c. Maintain a current file of the names, addresses and telephone numbers of each minority and female off-the-street applicant and minority or female referral from a union, a recruitment source or community organization and of what action was taken with respect to each individual. If such individual was sent to the union hiring hall for referral and was not referred back to the Contractor by the union or if referred, not employed by the Contractor, this shall be documented in the file with the reason thereof, along with whatever additional actions the Contractor may have taken.

    d. Provide immediate written notification to the Director when the union with which the Contractor has a collective bargaining agreement has not referred to the Contractor a minority person or woman sent by the Contractor, or when the Contractor has other information that the union referral process has impeded the Contractor's efforts to meet its obligations.

    e. Develop on-the-job training opportunities and/or participate in training programs for the area which expressly include minorities and women, including upgrading programs and apprenticeship and trainee programs relevant to the Contractor's employment needs, especially those programs funded or approved by the Department of Labor. The Contractor shall provide notice of these programs to the sources complied under 7b above.

    f. Disseminate the Contractor's EEO policy by providing notice of the policy to unions and training programs and requesting their cooperation in assisting the Contractor in meeting its EEO obligations; by including it in any policy manual and collective bargaining agreement; by publicizing it in the company newspaper, annual report, etc., by specific review of the policy

with all management personnel and with all minority and female employees at least once a year; and by posting the company EEO policy on bulletin boards accessible to all employees at each location where construction work is performed.

g. Review, at least annually, the company's EEO policy and affirmative action obligations under these specifications with all employees having any responsibility for hiring, assignment, layoff, termination or other employment decisions including specific review of these items with onsite supervisory personnel such as Superintendents, General Foremen, etc., prior to the initiation of construction work at any job site. A written record shall be made and maintained identifying the time and place of these meetings, persons attending, subject matter discussed, and disposition of the subject matter.

h. Disseminate the Contractor's EEO policy externally by including it in any advertising in the news media, specifically including minority and female news media, and providing written notification to and discussing the Contractors and Subcontractors with whom the Contractor does or anticipates doing business.

i. Direct its recruitment efforts, both oral and written, to minority, female and community organizations, to schools with minority and female students and to minority and female recruitment and training organizations serving the Contractor's recruitment area and employment needs. Not later than one month prior to the date for the acceptance of applications for apprenticeship or other training by any recruitment source, the Contractor shall send written notification to organizations such as the above, describing the openings, screening procedures, and tests to be used in the selection process.

j. Encourage present minority and female employees to recruit other minority persons and women and, where reasonable, provide after school, summer and vacation employment to minority and female youth both on the site and in other areas of a Contractor's workforce.

k. Validate all tests and other selection requirements where there is an obligation to do so under 41 CFR Part 60-3.

l. Conduct, at least annually, an inventory and evaluation at least of all minority and female personnel for promotional opportunities and encourage these employees to seek or to prepare for, through appropriate training, etc. such opportunities.

m. Ensure that seniority practices, job classifications, work assignments and other personnel practices, do not have a discriminatory effect by continually monitoring all personnel and employment related activities to ensure that the EEO policy and the Contractor's obligations under these specifications are being carried out.

n. Ensure that all facilities and company activities are nonsegregated except that separate or single-user toilet and necessary changing facilities shall be provided to assure privacy between the sexes.

o. Document and maintain a record of all solicitations of offers for subcontracts from minority and female construction contractors and suppliers, including circulation of solicitations to minority and female contractor associations and other business associations.

p. Conduct a review, at least annually, of all supervisors' adherence to and performance under the Contractor's EEO policies and affirmative action obligation.

8. Contractors are encouraged to participate in voluntary associations which assist in fulfilling one or more of their affirmative action obligations (7a through p). The efforts of a contractor association, joint contractor-union contractor-community, or other similar group of which the contractor is a member and participant, may be asserted as fulfilling any one or more of its obligations under 7a through p of these specifications provided that the contractor actively participates in the group, makes every effort to assure that the group, has a positive impact on the employment of minorities and women in the industry, ensures that the concrete benefits of the program are reflected in the Contractor's minority and female workforce participation, makes a good faith effort to meet its individual goal and timetables, and can provide access to documentation which demonstrates the effectiveness of actions taken on behalf of the Contractor. The obligation to comply,

however, is the Contractor's and failure of such a group to fulfill an obligation shall not be a defense for the Contractor's noncompliance.

9. A single goal for minorities and a separate single goal for women have been established. The Contractor, however, is required to provide equal employment opportunity and to take affirmative action for all minority groups, both male and female, and all women, both minority and non-minority. Consequently, the Contractor may be in violation of the Executive Order if a particular group is employed in a substantially disparate manner (for example, even though the Contractor has achieved its goals for women generally, the Contractor may be in violation of the Executive Order if a specific minority group of women is underutilized).

10. The Contractor shall not use the goals and timetables or affirmative action standards to discriminate against any person because of race, color, religion, sex, or national origin.

11. The Contractor shall not enter into any Subcontract with any person or firm debarred from Government contracts pursuant to Executive Order 11246.

12. The Contractor shall carry out such sanctions and penalties for violation of these specifications and of the Equal Opportunity Clause, including suspension, termination and cancellation of existing subcontracts as may be imposed or ordered pursuant to Executive Order 11246, as amended, and its implementing regulations, by the Office of Federal Contract Compliance Programs. Any contractor who fails to carry out such sanctions and penalties shall be in violation of these specifications and Executive Order 11246, as amended.

13. The Contractor in fulfilling its obligations under these specifications, shall implement specific affirmative action steps, at least as extensive as those standards prescribed in paragraph 7 of these specifications, so as to achieve maximum results from its efforts to ensure equal employment opportunity. If the Contractor fails to comply with the requirements of the Executive Order, the implementing regulations, or these specifications, the Director shall proceed in accordance with 41 CFR 60-4.8.

14. The Contractor shall designate a responsible official to monitor all employment related activity to ensure that the company EEO policy is being carried out, to submit reports relating to the provisions hereof as may be required by the Government and to keep records. Records shall at least include for each employee the name, address, telephone numbers, construction trade, union affiliation if any, employee identification number when assigned, social security number, race, sex, status (e.g., mechanic, apprentice, trainee, or laborer), dates of changes in status, hours worked per week in the indicated trade, rate of pay, and locations at which the work was performed. Records shall be maintained in an easily understandable and retrievable form; however, to the degree that existing records satisfy this requirement, contractors shall not be required to maintain separate records.

15. Nothing herein provided shall be construed as a limitation upon the application of other laws which establish different standards of compliance or upon application of requirements for the hiring of local or other area residents (e.g., those under the Public Works Employment Act of 1977 and the Community Development Block Grant Program).

*** * * ***

STATE OF SOUTH DAKOTA
DEPARTMENT OF TRANSPORTATION

SPECIAL PROVISION FOR
REQUIRED CONTRACT PROVISIONS
FEDERAL-AID CONSTRUCTION CONTRACTS
FHWA 1273 (MAY 1, 2012)

APRIL 30, 2013

The following are amendments to the above contract provisions.

Section I.4.

Delete this section and replace with the following:

4. Selection of Labor: During the performance of this contract, the contractor shall not use convict labor for any purpose within the limits of a Federal-aid construction project unless it is labor performed by convicts who are on parole, supervised release, or probation.

Section IV.

Delete the first paragraph and replace with the following:

This section is applicable to all Federal-aid construction projects exceeding $2,000 and to all related subcontracts and lower-tier subcontracts (regardless of subcontract size). The requirements apply to all projects located within the right-of-way of a roadway.

Section IV.3.b.(1)

Delete the first sentence and replace with the following:

The contractor and each related subcontractor must submit weekly, for each week in which any contract work is performed, a copy of a completed certified weekly payroll report to the South Dakota Department of Transportation (SDDOT) Labor Compliance Officer (LCO) within fourteen (14) calendar days of the end of the workweek. The address of the Labor Compliance Officer is: South Dakota Department of Transportation, Labor Compliance Program, 700 E. Broadway Avenue, Pierre, SD 57501-2586.

Section IV.3.b.(2)

Delete the first paragraph and replace with the following:

Each submitted certified weekly payroll report must set out accurately and completely all information required by the Instructions for SDDOT Statement of Compliance & Certified Payroll Report (located on the SDDOT Labor Compliance website). Each certified weekly payroll report must include the most recent SDDOT Statement of Compliance Form, signed by the Contractor or related subcontractor or his or her agent who pays or supervises the payment of the persons employed under the contract. The SDDOT will not accept any payroll report which does not include the most recent SDDOT Statement of Compliance Form. This SDDOT Statement of Compliance Form must certify the following:

Section IV.3.b.(3)

Delete this paragraph and replace with the following:

The weekly submission of a properly executed SDDOT Statement of Compliance Form shall satisfy the requirement for submission of the "Statement of Compliance Form" required by paragraph 3.b.(2) of this section.

Section IV.4.a

Delete the first sentence of the third paragraph and replace with the following:

Every apprentice must be paid the higher of the Common Laborer wage rate contained in the bid documents or the rate specified in the registered program for the apprentice's level of progress, expressed as a percentage of the journeymen hourly rate specified in the applicable wage determination.

* * * * *

REQUIRED CONTRACT PROVISIONS
FEDERAL-AID CONSTRUCTION CONTRACTS

I. General
II. Nondiscrimination
III. Nonsegregated Facilities
IV. Davis-Bacon and Related Act Provisions
V. Contract Work Hours and Safety Standards Act Provisions
VI. Subletting or Assigning the Contract
VII. Safety: Accident Prevention
VIII. False Statements Concerning Highway Projects
IX. Implementation of Clean Air Act and Federal Water Pollution Control Act
X. Compliance with Governmentwide Suspension and Debarment Requirements
XI. Certification Regarding Use of Contract Funds for Lobbying

ATTACHMENTS

A. Employment and Materials Preference for Appalachian Development Highway System or Appalachian Local Access Road Contracts (included in Appalachian contracts only)

I. GENERAL

1. Form FHWA-1273 must be physically incorporated in each construction contract funded under Title 23 (excluding emergency contracts solely intended for debris removal). The contractor (or subcontractor) must insert this form in each subcontract and further require its inclusion in all lower tier subcontracts (excluding purchase orders, rental agreements and other agreements for supplies or services).

The applicable requirements of Form FHWA-1273 are incorporated by reference for work done under any purchase order, rental agreement or agreement for other services. The prime contractor shall be responsible for compliance by any subcontractor, lower-tier subcontractor or service provider.

Form FHWA-1273 must be included in all Federal-aid design-build contracts, in all subcontracts and in lower tier subcontracts (excluding subcontracts for design services, purchase orders, rental agreements and other agreements for supplies or services). The design-builder shall be responsible for compliance by any subcontractor, lower-tier subcontractor or service provider.

Contracting agencies may reference Form FHWA-1273 in bid proposal or request for proposal documents, however, the Form FHWA-1273 must be physically incorporated (not referenced) in all contracts, subcontracts and lower-tier subcontracts (excluding purchase orders, rental agreements and other agreements for supplies or services related to a construction contract).

2. Subject to the applicability criteria noted in the following sections, these contract provisions shall apply to all work performed on the contract by the contractor's own organization and with the assistance of workers under the contractor's immediate superintendence and to all work performed on the contract by piecework, station work, or by subcontract.

3. A breach of any of the stipulations contained in these Required Contract Provisions may be sufficient grounds for withholding of progress payments, withholding of final payment, termination of the contract, suspension / debarment or any other action determined to be appropriate by the contracting agency and FHWA.

4. Selection of Labor: During the performance of this contract, the contractor shall not use convict labor for any purpose within the limits of a construction project on a Federal-aid highway unless it is labor performed by convicts who are on parole, supervised release, or probation. The term Federal-aid highway does not include roadways functionally classified as local roads or rural minor collectors.

II. NONDISCRIMINATION

The provisions of this section related to 23 CFR Part 230 are applicable to all Federal-aid construction contracts and to all related construction subcontracts of $10,000 or more. The provisions of 23 CFR Part 230 are not applicable to material supply, engineering, or architectural service contracts.

In addition, the contractor and all subcontractors must comply with the following policies: Executive Order 11246, 41 CFR 60, 29 CFR 1625-1627, Title 23 USC Section 140, the Rehabilitation Act of 1973, as amended (29 USC 794), Title VI of the Civil Rights Act of 1964, as amended, and related regulations including 49 CFR Parts 21, 26 and 27; and 23 CFR Parts 200, 230, and 633.

The contractor and all subcontractors must comply with: the requirements of the Equal Opportunity Clause in 41 CFR 60-1.4(b) and, for all construction contracts exceeding $10,000, the Standard Federal Equal Employment Opportunity Construction Contract Specifications in 41 CFR 60-4.3.

Note: The U.S. Department of Labor has exclusive authority to determine compliance with Executive Order 11246 and the policies of the Secretary of Labor including 41 CFR 60, and 29 CFR 1625-1627. The contracting agency and the FHWA have the authority and the responsibility to ensure compliance with Title 23 USC Section 140, the Rehabilitation Act of 1973, as amended (29 USC 794), and Title VI of the Civil Rights Act of 1964, as amended, and related regulations including 49 CFR Parts 21, 26 and 27; and 23 CFR Parts 200, 230, and 633.

The following provision is adopted from 23 CFR 230, Appendix A, with appropriate revisions to conform to the U.S. Department of Labor (US DOL) and FHWA requirements.

1. Equal Employment Opportunity: Equal employment opportunity (EEO) requirements not to discriminate and to take affirmative action to assure equal opportunity as set forth under laws, executive orders, rules, regulations (28 CFR 35, 29 CFR 1630, 29 CFR 1625-1627, 41 CFR 60 and 49 CFR 27) and orders of the Secretary of Labor as modified by the provisions prescribed herein, and imposed pursuant to 23 U.S.C. 140 shall constitute the EEO and specific affirmative action standards for the contractor's project activities under

this contract. The provisions of the Americans with Disabilities Act of 1990 (42 U.S.C. 12101 et seq.) set forth under 28 CFR 35 and 29 CFR 1630 are incorporated by reference in this contract. In the execution of this contract, the contractor agrees to comply with the following minimum specific requirement activities of EEO:

a. The contractor will work with the contracting agency and the Federal Government to ensure that it has made every good faith effort to provide equal opportunity with respect to all of its terms and conditions of employment and in their review of activities under the contract.

b. The contractor will accept as its operating policy the following statement:

"It is the policy of this Company to assure that applicants are employed, and that employees are treated during employment, without regard to their race, religion, sex, color, national origin, age or disability. Such action shall include: employment, upgrading, demotion, or transfer; recruitment or recruitment advertising; layoff or termination; rates of pay or other forms of compensation; and selection for training, including apprenticeship, pre-apprenticeship, and/or on-the-job training."

2. EEO Officer: The contractor will designate and make known to the contracting officers an EEO Officer who will have the responsibility for and must be capable of effectively administering and promoting an active EEO program and who must be assigned adequate authority and responsibility to do so.

3. Dissemination of Policy: All members of the contractor's staff who are authorized to hire, supervise, promote, and discharge employees, or who recommend such action, or who are substantially involved in such action, will be made fully cognizant of, and will implement, the contractor's EEO policy and contractual responsibilities to provide EEO in each grade and classification of employment. To ensure that the above agreement will be met, the following actions will be taken as a minimum:

a. Periodic meetings of supervisory and personnel office employees will be conducted before the start of work and then not less often than once every six months, at which time the contractor's EEO policy and its implementation will be reviewed and explained. The meetings will be conducted by the EEO Officer.

b. All new supervisory or personnel office employees will be given a thorough indoctrination by the EEO Officer, covering all major aspects of the contractor's EEO obligations within thirty days following their reporting for duty with the contractor.

c. All personnel who are engaged in direct recruitment for the project will be instructed by the EEO Officer in the contractor's procedures for locating and hiring minorities and women.

d. Notices and posters setting forth the contractor's EEO policy will be placed in areas readily accessible to employees, applicants for employment and potential employees.

e. The contractor's EEO policy and the procedures to implement such policy will be brought to the attention of employees by means of meetings, employee handbooks, or other appropriate means.

4. Recruitment: When advertising for employees, the contractor will include in all advertisements for employees the notation: "An Equal Opportunity Employer." All such advertisements will be placed in publications having a large circulation among minorities and women in the area from which the project work force would normally be derived.

a. The contractor will, unless precluded by a valid bargaining agreement, conduct systematic and direct recruitment through public and private employee referral sources likely to yield qualified minorities and women. To meet this requirement, the contractor will identify sources of potential minority group employees, and establish with such identified sources procedures whereby minority and women applicants may be referred to the contractor for employment consideration.

b. In the event the contractor has a valid bargaining agreement providing for exclusive hiring hall referrals, the contractor is expected to observe the provisions of that agreement to the extent that the system meets the contractor's compliance with EEO contract provisions. Where implementation of such an agreement has the effect of discriminating against minorities or women, or obligates the contractor to do the same, such implementation violates Federal nondiscrimination provisions.

c. The contractor will encourage its present employees to refer minorities and women as applicants for employment. Information and procedures with regard to referring such applicants will be discussed with employees.

5. Personnel Actions: Wages, working conditions, and employee benefits shall be established and administered, and personnel actions of every type, including hiring, upgrading, promotion, transfer, demotion, layoff, and termination, shall be taken without regard to race, color, religion, sex, national origin, age or disability. The following procedures shall be followed:

a. The contractor will conduct periodic inspections of project sites to insure that working conditions and employee facilities do not indicate discriminatory treatment of project site personnel.

b. The contractor will periodically evaluate the spread of wages paid within each classification to determine any evidence of discriminatory wage practices.

c. The contractor will periodically review selected personnel actions in depth to determine whether there is evidence of discrimination. Where evidence is found, the contractor will promptly take corrective action. If the review indicates that the discrimination may extend beyond the actions reviewed, such corrective action shall include all affected persons.

d. The contractor will promptly investigate all complaints of alleged discrimination made to the contractor in connection with its obligations under this contract, will attempt to resolve such complaints, and will take appropriate corrective action within a reasonable time. If the investigation indicates that the discrimination may affect persons other than the complainant, such corrective action shall include such other persons. Upon completion of each investigation, the contractor will inform every complainant of all of their avenues of appeal.

6. Training and Promotion:

a. The contractor will assist in locating, qualifying, and increasing the skills of minorities and women who are

applicants for employment or current employees. Such efforts should be aimed at developing full journey level status employees in the type of trade or job classification involved.

b. Consistent with the contractor's work force requirements and as permissible under Federal and State regulations, the contractor shall make full use of training programs, i.e., apprenticeship, and on-the-job training programs for the geographical area of contract performance. In the event a special provision for training is provided under this contract, this subparagraph will be superseded as indicated in the special provision. The contracting agency may reserve training positions for persons who receive welfare assistance in accordance with 23 U.S.C. 140(a).

c. The contractor will advise employees and applicants for employment of available training programs and entrance requirements for each.

d. The contractor will periodically review the training and promotion potential of employees who are minorities and women and will encourage eligible employees to apply for such training and promotion.

7. Unions: If the contractor relies in whole or in part upon unions as a source of employees, the contractor will use good faith efforts to obtain the cooperation of such unions to increase opportunities for minorities and women. Actions by the contractor, either directly or through a contractor's association acting as agent, will include the procedures set forth below:

a. The contractor will use good faith efforts to develop, in cooperation with the unions, joint training programs aimed toward qualifying more minorities and women for membership in the unions and increasing the skills of minorities and women so that they may qualify for higher paying employment.

b. The contractor will use good faith efforts to incorporate an EEO clause into each union agreement to the end that such union will be contractually bound to refer applicants without regard to their race, color, religion, sex, national origin, age or disability.

c. The contractor is to obtain information as to the referral practices and policies of the labor union except that to the extent such information is within the exclusive possession of the labor union and such labor union refuses to furnish such information to the contractor, the contractor shall so certify to the contracting agency and shall set forth what efforts have been made to obtain such information.

d. In the event the union is unable to provide the contractor with a reasonable flow of referrals within the time limit set forth in the collective bargaining agreement, the contractor will, through independent recruitment efforts, fill the employment vacancies without regard to race, color, religion, sex, national origin, age or disability; making full efforts to obtain qualified and/or qualifiable minorities and women. The failure of a union to provide sufficient referrals (even though it is obligated to provide exclusive referrals under the terms of a collective bargaining agreement) does not relieve the contractor from the requirements of this paragraph. In the event the union referral practice prevents the contractor from meeting the obligations pursuant to Executive Order 11246, as amended, and these special provisions, such contractor shall immediately notify the contracting agency.

8. Reasonable Accommodation for Applicants / Employees with Disabilities: The contractor must be familiar with the requirements for and comply with the Americans with Disabilities Act and all rules and regulations established there under. Employers must provide reasonable accommodation in all employment activities unless to do so would cause an undue hardship.

9. Selection of Subcontractors, Procurement of Materials and Leasing of Equipment: The contractor shall not discriminate on the grounds of race, color, religion, sex, national origin, age or disability in the selection and retention of subcontractors, including procurement of materials and leases of equipment. The contractor shall take all necessary and reasonable steps to ensure nondiscrimination in the administration of this contract.

a. The contractor shall notify all potential subcontractors and suppliers and lessors of their EEO obligations under this contract.

b. The contractor will use good faith efforts to ensure subcontractor compliance with their EEO obligations.

10. Assurance Required by 49 CFR 26.13(b):

a. The requirements of 49 CFR Part 26 and the State DOT's U.S. DOT-approved DBE program are incorporated by reference.

b. The contractor or subcontractor shall not discriminate on the basis of race, color, national origin, or sex in the performance of this contract. The contractor shall carry out applicable requirements of 49 CFR Part 26 in the award and administration of DOT-assisted contracts. Failure by the contractor to carry out these requirements is a material breach of this contract, which may result in the termination of this contract or such other remedy as the contracting agency deems appropriate.

11. Records and Reports: The contractor shall keep such records as necessary to document compliance with the EEO requirements. Such records shall be retained for a period of three years following the date of the final payment to the contractor for all contract work and shall be available at reasonable times and places for inspection by authorized representatives of the contracting agency and the FHWA.

a. The records kept by the contractor shall document the following:

(1) The number and work hours of minority and non-minority group members and women employed in each work classification on the project;

(2) The progress and efforts being made in cooperation with unions, when applicable, to increase employment opportunities for minorities and women; and

(3) The progress and efforts being made in locating, hiring, training, qualifying, and upgrading minorities and women;

b. The contractors and subcontractors will submit an annual report to the contracting agency each July for the duration of the project, indicating the number of minority, women, and non-minority group employees currently engaged in each work classification required by the contract work. This information is to be reported on Form FHWA-1391. The staffing data should represent the project work force on board in all or any part of the last payroll period preceding the end of July. If on-the-job training is being required by special provision, the contractor

will be required to collect and report training data. The employment data should reflect the work force on board during all or any part of the last payroll period preceding the end of July.

III. NONSEGREGATED FACILITIES

This provision is applicable to all Federal-aid construction contracts and to all related construction subcontracts of $10,000 or more.

The contractor must ensure that facilities provided for employees are provided in such a manner that segregation on the basis of race, color, religion, sex, or national origin cannot result. The contractor may neither require such segregated use by written or oral policies nor tolerate such use by employee custom. The contractor's obligation extends further to ensure that its employees are not assigned to perform their services at any location, under the contractor's control, where the facilities are segregated. The term "facilities" includes waiting rooms, work areas, restaurants and other eating areas, time clocks, restrooms, washrooms, locker rooms, and other storage or dressing areas, parking lots, drinking fountains, recreation or entertainment areas, transportation, and housing provided for employees. The contractor shall provide separate or single-user restrooms and necessary dressing or sleeping areas to assure privacy between sexes.

IV. DAVIS-BACON AND RELATED ACT PROVISIONS

This section is applicable to all Federal-aid construction projects exceeding $2,000 and to all related subcontracts and lower-tier subcontracts (regardless of subcontract size). The requirements apply to all projects located within the right-of-way of a roadway that is functionally classified as Federal-aid highway. This excludes roadways functionally classified as local roads or rural minor collectors, which are exempt. Contracting agencies may elect to apply these requirements to other projects.

The following provisions are from the U.S. Department of Labor regulations in 29 CFR 5.5 “Contract provisions and related matters” with minor revisions to conform to the FHWA-1273 format and FHWA program requirements.

1. Minimum wages

a. All laborers and mechanics employed or working upon the site of the work, will be paid unconditionally and not less often than once a week, and without subsequent deduction or rebate on any account (except such payroll deductions as are permitted by regulations issued by the Secretary of Labor under the Copeland Act (29 CFR part 3)), the full amount of wages and bona fide fringe benefits (or cash equivalents thereof) due at time of payment computed at rates not less than those contained in the wage determination of the Secretary of Labor which is attached hereto and made a part hereof, regardless of any contractual relationship which may be alleged to exist between the contractor and such laborers and mechanics.

Contributions made or costs reasonably anticipated for bona fide fringe benefits under section 1(b)(2) of the Davis-Bacon Act on behalf of laborers or mechanics are considered wages paid to such laborers or mechanics, subject to the provisions of paragraph 1.d. of this section; also, regular contributions made or costs incurred for more than a weekly period (but not less often than quarterly) under plans, funds, or programs which cover the particular weekly period, are deemed to be constructively made or incurred during such weekly period. Such laborers and mechanics shall be paid the appropriate wage rate and fringe benefits on the wage determination for the classification of work actually performed, without regard to skill, except as provided in 29 CFR 5.5(a)(4). Laborers or mechanics performing work in more than one classification may be compensated at the rate specified for each classification for the time actually worked therein: Provided, That the employer's payroll records accurately set forth the time spent in each classification in which work is performed. The wage determination (including any additional classification and wage rates conformed under paragraph 1.b. of this section) and the Davis-Bacon poster (WH–1321) shall be posted at all times by the contractor and its subcontractors at the site of the work in a prominent and accessible place where it can be easily seen by the workers.

b.(1) The contracting officer shall require that any class of laborers or mechanics, including helpers, which is not listed in the wage determination and which is to be employed under the contract shall be classified in conformance with the wage determination. The contracting officer shall approve an additional classification and wage rate and fringe benefits therefore only when the following criteria have been met:

(i) The work to be performed by the classification requested is not performed by a classification in the wage determination; and

(ii) The classification is utilized in the area by the construction industry; and

(iii) The proposed wage rate, including any bona fide fringe benefits, bears a reasonable relationship to the wage rates contained in the wage determination.

(2) If the contractor and the laborers and mechanics to be employed in the classification (if known), or their representatives, and the contracting officer agree on the classification and wage rate (including the amount designated for fringe benefits where appropriate), a report of the action taken shall be sent by the contracting officer to the Administrator of the Wage and Hour Division, Employment Standards Administration, U.S. Department of Labor, Washington, DC 20210. The Administrator, or an authorized representative, will approve, modify, or disapprove every additional classification action within 30 days of receipt and so advise the contracting officer or will notify the contracting officer within the 30-day period that additional time is necessary.

(3) In the event the contractor, the laborers or mechanics to be employed in the classification or their representatives, and the contracting officer do not agree on the proposed classification and wage rate (including the amount designated for fringe benefits, where appropriate), the contracting officer shall refer the questions, including the views of all interested parties and the recommendation of the contracting officer, to the Wage and Hour Administrator for determination. The Wage and Hour Administrator, or an authorized representative, will issue a determination within 30 days of receipt and so advise the contracting officer or

will notify the contracting officer within the 30-day period that additional time is necessary.

(4) The wage rate (including fringe benefits where appropriate) determined pursuant to paragraphs 1.b.(2) or 1.b.(3) of this section, shall be paid to all workers performing work in the classification under this contract from the first day on which work is performed in the classification.

c. Whenever the minimum wage rate prescribed in the contract for a class of laborers or mechanics includes a fringe benefit which is not expressed as an hourly rate, the contractor shall either pay the benefit as stated in the wage determination or shall pay another bona fide fringe benefit or an hourly cash equivalent thereof.

d. If the contractor does not make payments to a trustee or other third person, the contractor may consider as part of the wages of any laborer or mechanic the amount of any costs reasonably anticipated in providing bona fide fringe benefits under a plan or program, Provided, That the Secretary of Labor has found, upon the written request of the contractor, that the applicable standards of the Davis-Bacon Act have been met. The Secretary of Labor may require the contractor to set aside in a separate account assets for the meeting of obligations under the plan or program.

2. Withholding

The contracting agency shall upon its own action or upon written request of an authorized representative of the Department of Labor, withhold or cause to be withheld from the contractor under this contract, or any other Federal contract with the same prime contractor, or any other federally-assisted contract subject to Davis-Bacon prevailing wage requirements, which is held by the same prime contractor, so much of the accrued payments or advances as may be considered necessary to pay laborers and mechanics, including apprentices, trainees, and helpers, employed by the contractor or any subcontractor the full amount of wages required by the contract. In the event of failure to pay any laborer or mechanic, including any apprentice, trainee, or helper, employed or working on the site of the work, all or part of the wages required by the contract, the contracting agency may, after written notice to the contractor, take such action as may be necessary to cause the suspension of any further payment, advance, or guarantee of funds until such violations have ceased.

3. Payrolls and basic records

a. Payrolls and basic records relating thereto shall be maintained by the contractor during the course of the work and preserved for a period of three years thereafter for all laborers and mechanics working at the site of the work. Such records shall contain the name, address, and social security number of each such worker, his or her correct classification, hourly rates of wages paid (including rates of contributions or costs anticipated for bona fide fringe benefits or cash equivalents thereof of the types described in section 1(b)(2)(B) of the Davis-Bacon Act), daily and weekly number of hours worked, deductions made and actual wages paid. Whenever the Secretary of Labor has found under 29 CFR 5.5(a)(1)(iv) that the wages of any laborer or mechanic include the amount of any costs reasonably anticipated in providing benefits under a plan or program described in section 1(b)(2)(B) of the Davis-Bacon Act, the contractor shall maintain records which show that the commitment to provide such benefits is enforceable, that the plan or program is financially responsible, and that the plan or program has been communicated in writing to the laborers or mechanics affected, and records which show the costs anticipated or the actual cost incurred in providing such benefits. Contractors employing apprentices or trainees under approved programs shall maintain written evidence of the registration of apprenticeship programs and certification of trainee programs, the registration of the apprentices and trainees, and the ratios and wage rates prescribed in the applicable programs.

b.(1) The contractor shall submit weekly for each week in which any contract work is performed a copy of all payrolls to the contracting agency. The payrolls submitted shall set out accurately and completely all of the information required to be maintained under 29 CFR 5.5(a)(3)(i), except that full social security numbers and home addresses shall not be included on weekly transmittals. Instead the payrolls shall only need to include an individually identifying number for each employee (e.g. , the last four digits of the employee's social security number). The required weekly payroll information may be submitted in any form desired. Optional Form WH–347 is available for this purpose from the Wage and Hour Division Web site at http://www.dol.gov/esa/whd/forms/wh347instr.htm or its successor site. The prime contractor is responsible for the submission of copies of payrolls by all subcontractors. Contractors and subcontractors shall maintain the full social security number and current address of each covered worker, and shall provide them upon request to the contracting agency for transmission to the State DOT, the FHWA or the Wage and Hour Division of the Department of Labor for purposes of an investigation or audit of compliance with prevailing wage requirements. It is not a violation of this section for a prime contractor to require a subcontractor to provide addresses and social security numbers to the prime contractor for its own records, without weekly submission to the contracting agency..

(2) Each payroll submitted shall be accompanied by a "Statement of Compliance," signed by the contractor or subcontractor or his or her agent who pays or supervises the payment of the persons employed under the contract and shall certify the following:

(i) That the payroll for the payroll period contains the information required to be provided under §5.5 (a)(3)(ii) of Regulations, 29 CFR part 5, the appropriate information is being maintained under §5.5 (a)(3)(i) of Regulations, 29 CFR part 5, and that such information is correct and complete;

(ii) That each laborer or mechanic (including each helper, apprentice, and trainee) employed on the contract during the payroll period has been paid the full weekly wages earned, without rebate, either directly or indirectly, and that no deductions have been made either directly or indirectly from the full wages earned, other than permissible deductions as set forth in Regulations, 29 CFR part 3;

(iii) That each laborer or mechanic has been paid not less than the applicable wage rates and fringe benefits or cash equivalents for the classification of work performed, as specified in the applicable wage determination incorporated into the contract.

(3) The weekly submission of a properly executed certification set forth on the reverse side of Optional Form WH–347 shall satisfy the requirement for submission of the "Statement of Compliance" required by paragraph 3.b.(2) of this section.

(4) The falsification of any of the above certifications may subject the contractor or subcontractor to civil or criminal prosecution under section 1001 of title 18 and section 231 of title 31 of the United States Code.

c. The contractor or subcontractor shall make the records required under paragraph 3.a. of this section available for inspection, copying, or transcription by authorized representatives of the contracting agency, the State DOT, the FHWA, or the Department of Labor, and shall permit such representatives to interview employees during working hours on the job. If the contractor or subcontractor fails to submit the required records or to make them available, the FHWA may, after written notice to the contractor, the contracting agency or the State DOT, take such action as may be necessary to cause the suspension of any further payment, advance, or guarantee of funds. Furthermore, failure to submit the required records upon request or to make such records available may be grounds for debarment action pursuant to 29 CFR 5.12.

4. Apprentices and trainees

a. Apprentices (programs of the USDOL).

Apprentices will be permitted to work at less than the predetermined rate for the work they performed when they are employed pursuant to and individually registered in a bona fide apprenticeship program registered with the U.S. Department of Labor, Employment and Training Administration, Office of Apprenticeship Training, Employer and Labor Services, or with a State Apprenticeship Agency recognized by the Office, or if a person is employed in his or her first 90 days of probationary employment as an apprentice in such an apprenticeship program, who is not individually registered in the program, but who has been certified by the Office of Apprenticeship Training, Employer and Labor Services or a State Apprenticeship Agency (where appropriate) to be eligible for probationary employment as an apprentice.

The allowable ratio of apprentices to journeymen on the job site in any craft classification shall not be greater than the ratio permitted to the contractor as to the entire work force under the registered program. Any worker listed on a payroll at an apprentice wage rate, who is not registered or otherwise employed as stated above, shall be paid not less than the applicable wage rate on the wage determination for the classification of work actually performed. In addition, any apprentice performing work on the job site in excess of the ratio permitted under the registered program shall be paid not less than the applicable wage rate on the wage determination for the work actually performed. Where a contractor is performing construction on a project in a locality other than that in which its program is registered, the ratios and wage rates (expressed in percentages of the journeyman's hourly rate) specified in the contractor's or subcontractor's registered program shall be observed.

Every apprentice must be paid at not less than the rate specified in the registered program for the apprentice's level of progress, expressed as a percentage of the journeymen hourly rate specified in the applicable wage determination. Apprentices shall be paid fringe benefits in accordance with the provisions of the apprenticeship program. If the apprenticeship program does not specify fringe benefits, apprentices must be paid the full amount of fringe benefits listed on the wage determination for the applicable classification. If the Administrator determines that a different practice prevails for the applicable apprentice classification, fringes shall be paid in accordance with that determination.

In the event the Office of Apprenticeship Training, Employer and Labor Services, or a State Apprenticeship Agency recognized by the Office, withdraws approval of an apprenticeship program, the contractor will no longer be permitted to utilize apprentices at less than the applicable predetermined rate for the work performed until an acceptable program is approved.

b. Trainees (programs of the USDOL).

Except as provided in 29 CFR 5.16, trainees will not be permitted to work at less than the predetermined rate for the work performed unless they are employed pursuant to and individually registered in a program which has received prior approval, evidenced by formal certification by the U.S. Department of Labor, Employment and Training Administration.

The ratio of trainees to journeymen on the job site shall not be greater than permitted under the plan approved by the Employment and Training Administration.

Every trainee must be paid at not less than the rate specified in the approved program for the trainee's level of progress, expressed as a percentage of the journeyman hourly rate specified in the applicable wage determination. Trainees shall be paid fringe benefits in accordance with the provisions of the trainee program. If the trainee program does not mention fringe benefits, trainees shall be paid the full amount of fringe benefits listed on the wage determination unless the Administrator of the Wage and Hour Division determines that there is an apprenticeship program associated with the corresponding journeyman wage rate on the wage determination which provides for less than full fringe benefits for apprentices. Any employee listed on the payroll at a trainee rate who is not registered and participating in a training plan approved by the Employment and Training Administration shall be paid not less than the applicable wage rate on the wage determination for the classification of work actually performed. In addition, any trainee performing work on the job site in excess of the ratio permitted under the registered program shall be paid not less than the applicable wage rate on the wage determination for the work actually performed.

In the event the Employment and Training Administration withdraws approval of a training program, the contractor will no longer be permitted to utilize trainees at less than the applicable predetermined rate for the work performed until an acceptable program is approved.

c. Equal employment opportunity. The utilization of apprentices, trainees and journeymen under this part shall be in conformity with the equal employment opportunity requirements of Executive Order 11246, as amended, and 29 CFR part 30.

d. Apprentices and Trainees (programs of the U.S. DOT).

Apprentices and trainees working under apprenticeship and skill training programs which have been certified by the Secretary of Transportation as promoting EEO in connection with Federal-aid highway construction programs are not subject to the requirements of paragraph 4 of this Section IV. The straight time hourly wage rates for apprentices and trainees under such programs will be established by the particular programs. The ratio of apprentices and trainees to journeymen shall not be greater than permitted by the terms of the particular program.

5. Compliance with Copeland Act requirements. The contractor shall comply with the requirements of 29 CFR part 3, which are incorporated by reference in this contract.

6. Subcontracts. The contractor or subcontractor shall insert Form FHWA-1273 in any subcontracts and also require the subcontractors to include Form FHWA-1273 in any lower tier subcontracts. The prime contractor shall be responsible for the compliance by any subcontractor or lower tier subcontractor with all the contract clauses in 29 CFR 5.5.

7. Contract termination: debarment. A breach of the contract clauses in 29 CFR 5.5 may be grounds for termination of the contract, and for debarment as a contractor and a subcontractor as provided in 29 CFR 5.12.

8. Compliance with Davis-Bacon and Related Act requirements. All rulings and interpretations of the Davis-Bacon and Related Acts contained in 29 CFR parts 1, 3, and 5 are herein incorporated by reference in this contract.

9. Disputes concerning labor standards. Disputes arising out of the labor standards provisions of this contract shall not be subject to the general disputes clause of this contract. Such disputes shall be resolved in accordance with the procedures of the Department of Labor set forth in 29 CFR parts 5, 6, and 7. Disputes within the meaning of this clause include disputes between the contractor (or any of its subcontractors) and the contracting agency, the U.S. Department of Labor, or the employees or their representatives.

10. Certification of eligibility.

a. By entering into this contract, the contractor certifies that neither it (nor he or she) nor any person or firm who has an interest in the contractor's firm is a person or firm ineligible to be awarded Government contracts by virtue of section 3(a) of the Davis-Bacon Act or 29 CFR 5.12(a)(1).

b. No part of this contract shall be subcontracted to any person or firm ineligible for award of a Government contract by virtue of section 3(a) of the Davis-Bacon Act or 29 CFR 5.12(a)(1).

c. The penalty for making false statements is prescribed in the U.S. Criminal Code, 18 U.S.C. 1001.

V. CONTRACT WORK HOURS AND SAFETY STANDARDS ACT

The following clauses apply to any Federal-aid construction contract in an amount in excess of $100,000 and subject to the overtime provisions of the Contract Work Hours and Safety Standards Act. These clauses shall be inserted in addition to the clauses required by 29 CFR 5.5(a) or 29 CFR 4.6. As used in this paragraph, the terms laborers and mechanics include watchmen and guards.

1. Overtime requirements. No contractor or subcontractor contracting for any part of the contract work which may require or involve the employment of laborers or mechanics shall require or permit any such laborer or mechanic in any workweek in which he or she is employed on such work to work in excess of forty hours in such workweek unless such laborer or mechanic receives compensation at a rate not less than one and one-half times the basic rate of pay for all hours worked in excess of forty hours in such workweek.

2. Violation; liability for unpaid wages; liquidated damages. In the event of any violation of the clause set forth in paragraph (1.) of this section, the contractor and any subcontractor responsible therefor shall be liable for the unpaid wages. In addition, such contractor and subcontractor shall be liable to the United States (in the case of work done under contract for the District of Columbia or a territory, to such District or to such territory), for liquidated damages. Such liquidated damages shall be computed with respect to each individual laborer or mechanic, including watchmen and guards, employed in violation of the clause set forth in paragraph (1.) of this section, in the sum of $10 for each calendar day on which such individual was required or permitted to work in excess of the standard workweek of forty hours without payment of the overtime wages required by the clause set forth in paragraph (1.) of this section.

3. Withholding for unpaid wages and liquidated damages. The FHWA or the contacting agency shall upon its own action or upon written request of an authorized representative of the Department of Labor withhold or cause to be withheld, from any moneys payable on account of work performed by the contractor or subcontractor under any such contract or any other Federal contract with the same prime contractor, or any other federally-assisted contract subject to the Contract Work Hours and Safety Standards Act, which is held by the same prime contractor, such sums as may be determined to be necessary to satisfy any liabilities of such contractor or subcontractor for unpaid wages and liquidated damages as provided in the clause set forth in paragraph (2.) of this section.

4. Subcontracts. The contractor or subcontractor shall insert in any subcontracts the clauses set forth in paragraph (1.) through (4.) of this section and also a clause requiring the subcontractors to include these clauses in any lower tier subcontracts. The prime contractor shall be responsible for compliance by any subcontractor or lower tier subcontractor with the clauses set forth in paragraphs (1.) through (4.) of this section.

VI. SUBLETTING OR ASSIGNING THE CONTRACT

This provision is applicable to all Federal-aid construction contracts on the National Highway System.

1. The contractor shall perform with its own organization contract work amounting to not less than 30 percent (or a greater percentage if specified elsewhere in the contract) of the total original contract price, excluding any specialty items designated by the contracting agency. Specialty items may be performed by subcontract and the amount of any such specialty items performed may be deducted from the total original contract price before computing the amount of work required to be performed by the contractor's own organization (23 CFR 635.116).

a. The term “perform work with its own organization” refers to workers employed or leased by the prime contractor, and equipment owned or rented by the prime contractor, with or without operators. Such term does not include employees or equipment of a subcontractor or lower tier subcontractor, agents of the prime contractor, or any other assignees. The term may include payments for the costs of hiring leased employees from an employee leasing firm meeting all relevant Federal and State regulatory requirements. Leased employees may only be included in this term if the prime contractor meets all of the following conditions:

(1) the prime contractor maintains control over the supervision of the day-to-day activities of the leased employees;
(2) the prime contractor remains responsible for the quality of the work of the leased employees;
(3) the prime contractor retains all power to accept or exclude individual employees from work on the project; and
(4) the prime contractor remains ultimately responsible for the payment of predetermined minimum wages, the submission of payrolls, statements of compliance and all other Federal regulatory requirements.

b. "Specialty Items" shall be construed to be limited to work that requires highly specialized knowledge, abilities, or equipment not ordinarily available in the type of contracting organizations qualified and expected to bid or propose on the contract as a whole and in general are to be limited to minor components of the overall contract.

2. The contract amount upon which the requirements set forth in paragraph (1) of Section VI is computed includes the cost of material and manufactured products which are to be purchased or produced by the contractor under the contract provisions.

3. The contractor shall furnish (a) a competent superintendent or supervisor who is employed by the firm, has full authority to direct performance of the work in accordance with the contract requirements, and is in charge of all construction operations (regardless of who performs the work) and (b) such other of its own organizational resources (supervision, management, and engineering services) as the contracting officer determines is necessary to assure the performance of the contract.

4. No portion of the contract shall be sublet, assigned or otherwise disposed of except with the written consent of the contracting officer, or authorized representative, and such consent when given shall not be construed to relieve the contractor of any responsibility for the fulfillment of the contract. Written consent will be given only after the contracting agency has assured that each subcontract is evidenced in writing and that it contains all pertinent provisions and requirements of the prime contract.

5. The 30% self-performance requirement of paragraph (1) is not applicable to design-build contracts; however, contracting agencies may establish their own self-performance requirements.

VII. SAFETY: ACCIDENT PREVENTION

This provision is applicable to all Federal-aid construction contracts and to all related subcontracts.

1. In the performance of this contract the contractor shall comply with all applicable Federal, State, and local laws governing safety, health, and sanitation (23 CFR 635). The contractor shall provide all safeguards, safety devices and protective equipment and take any other needed actions as it determines, or as the contracting officer may determine, to be reasonably necessary to protect the life and health of employees on the job and the safety of the public and to protect property in connection with the performance of the work covered by the contract.

2. It is a condition of this contract, and shall be made a condition of each subcontract, which the contractor enters into pursuant to this contract, that the contractor and any subcontractor shall not permit any employee, in performance of the contract, to work in surroundings or under conditions which are unsanitary, hazardous or dangerous to his/her health or safety, as determined under construction safety and health standards (29 CFR 1926) promulgated by the Secretary of Labor, in accordance with Section 107 of the Contract Work Hours and Safety Standards Act (40 U.S.C. 3704).

3. Pursuant to 29 CFR 1926.3, it is a condition of this contract that the Secretary of Labor or authorized representative thereof, shall have right of entry to any site of contract performance to inspect or investigate the matter of compliance with the construction safety and health standards and to carry out the duties of the Secretary under Section 107 of the Contract Work Hours and Safety Standards Act (40 U.S.C.3704).

VIII. FALSE STATEMENTS CONCERNING HIGHWAY PROJECTS

This provision is applicable to all Federal-aid construction contracts and to all related subcontracts.

In order to assure high quality and durable construction in conformity with approved plans and specifications and a high degree of reliability on statements and representations made by engineers, contractors, suppliers, and workers on Federal-aid highway projects, it is essential that all persons concerned with the project perform their functions as carefully, thoroughly, and honestly as possible. Willful falsification, distortion, or misrepresentation with respect to any facts related to the project is a violation of Federal law. To prevent any misunderstanding regarding the seriousness of these and similar acts, Form FHWA-1022 shall be posted on each Federal-aid highway project (23 CFR 635) in one or more places where it is readily available to all persons concerned with the project:

18 U.S.C. 1020 reads as follows:

"Whoever, being an officer, agent, or employee of the United States, or of any State or Territory, or whoever, whether a person, association, firm, or corporation, knowingly makes any false statement, false representation, or false report as to the character, quality, quantity, or cost of the material used or to be used, or the quantity or quality of the work performed or to be performed, or the cost thereof in connection with the submission of plans, maps, specifications, contracts, or costs of construction on any highway or related project submitted for approval to the Secretary of Transportation; or

Whoever knowingly makes any false statement, false representation, false report or false claim with respect to the character, quality, quantity, or cost of any work performed or to be performed, or materials furnished or to be furnished, in connection with the construction of any highway or related project approved by the Secretary of Transportation; or

Whoever knowingly makes any false statement or false representation as to material fact in any statement, certificate, or report submitted pursuant to provisions of the Federal-aid Roads Act approved July 1, 1916, (39 Stat. 355), as amended and supplemented;

Shall be fined under this title or imprisoned not more than 5 years or both."

IX. IMPLEMENTATION OF CLEAN AIR ACT AND FEDERAL WATER POLLUTION CONTROL ACT

This provision is applicable to all Federal-aid construction contracts and to all related subcontracts.

By submission of this bid/proposal or the execution of this contract, or subcontract, as appropriate, the bidder, proposer, Federal-aid construction contractor, or subcontractor, as appropriate, will be deemed to have stipulated as follows:

1. That any person who is or will be utilized in the performance of this contract is not prohibited from receiving an award due to a violation of Section 508 of the Clean Water Act or Section 306 of the Clean Air Act.
2. That the contractor agrees to include or cause to be included the requirements of paragraph (1) of this Section X in every subcontract, and further agrees to take such action as the contracting agency may direct as a means of enforcing such requirements.

X. CERTIFICATION REGARDING DEBARMENT, SUSPENSION, INELIGIBILITY AND VOLUNTARY EXCLUSION

This provision is applicable to all Federal-aid construction contracts, design-build contracts, subcontracts, lower-tier subcontracts, purchase orders, lease agreements, consultant contracts or any other covered transaction requiring FHWA approval or that is estimated to cost $25,000 or more – as defined in 2 CFR Parts 180 and 1200.

1**. Instructions for Certification – First Tier Participants:**

a. By signing and submitting this proposal, the prospective first tier participant is providing the certification set out below.

b. The inability of a person to provide the certification set out below will not necessarily result in denial of participation in this covered transaction. The prospective first tier participant shall submit an explanation of why it cannot provide the certification set out below. The certification or explanation will be considered in connection with the department or agency's determination whether to enter into this transaction. However, failure of the prospective first tier participant to furnish a certification or an explanation shall disqualify such a person from participation in this transaction.

c. The certification in this clause is a material representation of fact upon which reliance was placed when the contracting agency determined to enter into this transaction. If it is later determined that the prospective participant knowingly rendered an erroneous certification, in addition to other remedies available to the Federal Government, the contracting agency may terminate this transaction for cause of default.

d. The prospective first tier participant shall provide immediate written notice to the contracting agency to whom this proposal is submitted if any time the prospective first tier participant learns that its certification was erroneous when submitted or has become erroneous by reason of changed circumstances.

e. The terms "covered transaction," "debarred," "suspended," "ineligible," "participant," "person," "principal," and "voluntarily excluded," as used in this clause, are defined in 2 CFR Parts 180 and 1200. “First Tier Covered Transactions” refers to any covered transaction between a grantee or subgrantee of Federal funds and a participant (such as the prime or general contract). “Lower Tier Covered Transactions” refers to any covered transaction under a First Tier Covered Transaction (such as subcontracts). “First Tier Participant” refers to the participant who has entered into a covered transaction with a grantee or subgrantee of Federal funds (such as the prime or general contractor). “Lower Tier Participant” refers any participant who has entered into a covered transaction with a First Tier Participant or other Lower Tier Participants (such as subcontractors and suppliers).

f. The prospective first tier participant agrees by submitting this proposal that, should the proposed covered transaction be entered into, it shall not knowingly enter into any lower tier covered transaction with a person who is debarred, suspended, declared ineligible, or voluntarily excluded from participation in this covered transaction, unless authorized by the department or agency entering into this transaction.

g. The prospective first tier participant further agrees by submitting this proposal that it will include the clause titled "Certification Regarding Debarment, Suspension, Ineligibility and Voluntary Exclusion-Lower Tier Covered Transactions," provided by the department or contracting agency, entering into this covered transaction, without modification, in all lower tier covered transactions and in all solicitations for lower tier covered transactions exceeding the $25,000 threshold.

h. A participant in a covered transaction may rely upon a certification of a prospective participant in a lower tier covered transaction that is not debarred, suspended, ineligible, or voluntarily excluded from the covered transaction, unless it knows that the certification is erroneous. A participant is responsible for ensuring that its principals are not suspended, debarred, or otherwise ineligible to participate in covered transactions. To verify the eligibility of its principals, as well as the eligibility of any lower tier prospective participants, each participant may, but is not required to, check the Excluded Parties List System website (https://www.epls.gov/), which is compiled by the General Services Administration.

i. Nothing contained in the foregoing shall be construed to require the establishment of a system of records in order to render in good faith the certification required by this clause. The knowledge and information of the prospective participant is not required to exceed that which is normally possessed by a prudent person in the ordinary course of business dealings.

j. Except for transactions authorized under paragraph (f) of these instructions, if a participant in a covered transaction knowingly enters into a lower tier covered transaction with a person who is suspended, debarred, ineligible, or voluntarily excluded from participation in this transaction, in addition to other remedies available to the Federal Government, the department or agency may terminate this transaction for cause or default.

* * * * *

2. Certification Regarding Debarment, Suspension, Ineligibility and Voluntary Exclusion – First Tier Participants:

a. The prospective first tier participant certifies to the best of its knowledge and belief, that it and its principals:

(1) Are not presently debarred, suspended, proposed for debarment, declared ineligible, or voluntarily excluded from participating in covered transactions by any Federal department or agency;

(2) Have not within a three-year period preceding this proposal been convicted of or had a civil judgment rendered against them for commission of fraud or a criminal offense in connection with obtaining, attempting to obtain, or performing a public (Federal, State or local) transaction or contract under a public transaction; violation of Federal or State antitrust statutes or commission of embezzlement, theft, forgery, bribery, falsification or destruction of records, making false statements, or receiving stolen property;

(3) Are not presently indicted for or otherwise criminally or civilly charged by a governmental entity (Federal, State or local) with commission of any of the offenses enumerated in paragraph (a)(2) of this certification; and

(4) Have not within a three-year period preceding this application/proposal had one or more public transactions (Federal, State or local) terminated for cause or default.

b. Where the prospective participant is unable to certify to any of the statements in this certification, such prospective participant shall attach an explanation to this proposal.

2. **Instructions for Certification - Lower Tier Participants:**

(Applicable to all subcontracts, purchase orders and other lower tier transactions requiring prior FHWA approval or estimated to cost $25,000 or more - 2 CFR Parts 180 and 1200)

a. By signing and submitting this proposal, the prospective lower tier is providing the certification set out below.

b. The certification in this clause is a material representation of fact upon which reliance was placed when this transaction was entered into. If it is later determined that the prospective lower tier participant knowingly rendered an erroneous certification, in addition to other remedies available to the Federal Government, the department, or agency with which this transaction originated may pursue available remedies, including suspension and/or debarment.

c. The prospective lower tier participant shall provide immediate written notice to the person to which this proposal is submitted if at any time the prospective lower tier participant learns that its certification was erroneous by reason of changed circumstances.

d. The terms "covered transaction," "debarred," "suspended," "ineligible," "participant," "person," "principal," and "voluntarily excluded," as used in this clause, are defined in 2 CFR Parts 180 and 1200. You may contact the person to which this proposal is submitted for assistance in obtaining a copy of those regulations. “First Tier Covered Transactions” refers to any covered transaction between a grantee or subgrantee of Federal funds and a participant (such as the prime or general contract). “Lower Tier Covered Transactions” refers to any covered transaction under a First Tier Covered Transaction (such as subcontracts). “First Tier Participant” refers to the participant who has entered into a covered transaction with a grantee or subgrantee of Federal funds (such as the prime or general contractor). “Lower Tier Participant” refers any participant who has entered into a covered transaction with a First Tier Participant or other Lower Tier Participants (such as subcontractors and suppliers).

e. The prospective lower tier participant agrees by submitting this proposal that, should the proposed covered transaction be entered into, it shall not knowingly enter into any lower tier covered transaction with a person who is debarred, suspended, declared ineligible, or voluntarily excluded from participation in this covered transaction, unless authorized by the department or agency with which this transaction originated.

f. The prospective lower tier participant further agrees by submitting this proposal that it will include this clause titled "Certification Regarding Debarment, Suspension, Ineligibility and Voluntary Exclusion-Lower Tier Covered Transaction," without modification, in all lower tier covered transactions and in all solicitations for lower tier covered transactions exceeding the $25,000 threshold.

g. A participant in a covered transaction may rely upon a certification of a prospective participant in a lower tier covered transaction that is not debarred, suspended, ineligible, or voluntarily excluded from the covered transaction, unless it knows that the certification is erroneous. A participant is responsible for ensuring that its principals are not suspended, debarred, or otherwise ineligible to participate in covered transactions. To verify the eligibility of its principals, as well as the eligibility of any lower tier prospective participants, each participant may, but is not required to, check the Excluded Parties List System website (https://www.epls.gov/), which is compiled by the General Services Administration.

h. Nothing contained in the foregoing shall be construed to require establishment of a system of records in order to render in good faith the certification required by this clause. The knowledge and information of participant is not required to exceed that which is normally possessed by a prudent person in the ordinary course of business dealings.

i. Except for transactions authorized under paragraph e of these instructions, if a participant in a covered transaction knowingly enters into a lower tier covered transaction with a person who is suspended, debarred, ineligible, or voluntarily excluded from participation in this transaction, in addition to other remedies available to the Federal Government, the

department or agency with which this transaction originated may pursue available remedies, including suspension and/or debarment.

* * * * *

Certification Regarding Debarment, Suspension, Ineligibility and Voluntary Exclusion--Lower Tier Participants:

1. The prospective lower tier participant certifies, by submission of this proposal, that neither it nor its principals is presently debarred, suspended, proposed for debarment, declared ineligible, or voluntarily excluded from participating in covered transactions by any Federal department or agency.

2. Where the prospective lower tier participant is unable to certify to any of the statements in this certification, such prospective participant shall attach an explanation to this proposal.

* * * * *

XI. CERTIFICATION REGARDING USE OF CONTRACT FUNDS FOR LOBBYING

This provision is applicable to all Federal-aid construction contracts and to all related subcontracts which exceed $100,000 (49 CFR 20).

1. The prospective participant certifies, by signing and submitting this bid or proposal, to the best of his or her knowledge and belief, that:

a. No Federal appropriated funds have been paid or will be paid, by or on behalf of the undersigned, to any person for influencing or attempting to influence an officer or employee of any Federal agency, a Member of Congress, an officer or employee of Congress, or an employee of a Member of Congress in connection with the awarding of any Federal contract, the making of any Federal grant, the making of any Federal loan, the entering into of any cooperative agreement, and the extension, continuation, renewal, amendment, or modification of any Federal contract, grant, loan, or cooperative agreement.

b. If any funds other than Federal appropriated funds have been paid or will be paid to any person for influencing or attempting to influence an officer or employee of any Federal agency, a Member of Congress, an officer or employee of Congress, or an employee of a Member of Congress in connection with this Federal contract, grant, loan, or cooperative agreement, the undersigned shall complete and submit Standard Form-LLL, "Disclosure Form to Report Lobbying," in accordance with its instructions.

2. This certification is a material representation of fact upon which reliance was placed when this transaction was made or entered into. Submission of this certification is a prerequisite for making or entering into this transaction imposed by 31 U.S.C. 1352. Any person who fails to file the required certification shall be subject to a civil penalty of not less than $10,000 and not more than $100,000 for each such failure.

3. The prospective participant also agrees by submitting its bid or proposal that the participant shall require that the language of this certification be included in all lower tier subcontracts, which exceed $100,000 and that all such recipients shall certify and disclose accordingly.

ATTACHMENT A - EMPLOYMENT AND MATERIALS PREFERENCE FOR APPALACHIAN DEVELOPMENT HIGHWAY SYSTEM OR APPALACHIAN LOCAL ACCESS ROAD CONTRACTS

This provision is applicable to all Federal-aid projects funded under the Appalachian Regional Development Act of 1965.

1. During the performance of this contract, the contractor undertaking to do work which is, or reasonably may be, done as on-site work, shall give preference to qualified persons who regularly reside in the labor area as designated by the DOL wherein the contract work is situated, or the subregion, or the Appalachian counties of the State wherein the contract work is situated, except:

a. To the extent that qualified persons regularly residing in the area are not available.

b. For the reasonable needs of the contractor to employ supervisory or specially experienced personnel necessary to assure an efficient execution of the contract work.

c. For the obligation of the contractor to offer employment to present or former employees as the result of a lawful collective bargaining contract, provided that the number of nonresident persons employed under this subparagraph (1c) shall not exceed 20 percent of the total number of employees employed by the contractor on the contract work, except as provided in subparagraph (4) below.

2. The contractor shall place a job order with the State Employment Service indicating (a) the classifications of the laborers, mechanics and other employees required to perform the contract work, (b) the number of employees required in each classification, (c) the date on which the participant estimates such employees will be required, and (d) any other pertinent information required by the State Employment Service to complete the job order form. The job order may be placed with the State Employment Service in writing or by telephone. If during the course of the contract work, the information submitted by the contractor in the original job order is substantially modified, the participant shall promptly notify the State Employment Service.

3. The contractor shall give full consideration to all qualified job applicants referred to him by the State Employment Service. The contractor is not required to grant employment to any job applicants who, in his opinion, are not qualified to perform the classification of work required.

4. If, within one week following the placing of a job order by the contractor with the State Employment Service, the State Employment Service is unable to refer any qualified job applicants to the contractor, or less than the number requested, the State Employment Service will forward a certificate to the contractor indicating the unavailability of applicants. Such certificate shall be made a part of the contractor's permanent project records. Upon receipt of this certificate, the contractor may employ persons who do not normally reside in the labor area to fill positions covered by the certificate, notwithstanding the provisions of subparagraph (1c) above.

5. The provisions of 23 CFR 633.207(e) allow the contracting agency to provide a contractual preference for the use of mineral resource materials native to the Appalachian region.

6. The contractor shall include the provisions of Sections 1 through 4 of this Attachment A in every subcontract for work which is, or reasonably may be, done as on-site work.

STATE OF SOUTH DAKOTA
DEPARTMENT OF TRANSPORTATION

SPECIAL PROVISION
FOR
CARGO PREFERENCE ACT

JANUARY 20, 2016

In accordance with the Cargo Preference Act of 1954 and 46 CFR 381.7 the following shall apply:

A. Agreement Clauses - Use of United States-flag vessels:

1. Pursuant to Pub. L. 664 (43 U.S.C. 1241(b)) at least 50% of any equipment, materials or commodities procured, contracted for or otherwise obtained with funds granted, guaranteed, loaned, or advanced by the U.S. Government under this agreement, and which may be transported by ocean vessel, shall be transported on privately owned United States-flag commercial vessels, if available.

2. Within 20 business days following the date of loading for shipments originating within the United States or within 30 business days following the date of loading for shipments originating outside the United States, a legible copy of a rated, 'on-board' commercial ocean bill-of-lading in English for each shipment of cargo described in paragraph A.1 of this special provision shall be furnished to both the Engineer (through the prime contractor in the case of subcontractor bills-of-lading) and to the Division of National Cargo, Office of Market Development. Maritime Administration, Washington, DC 20590.

B. Contractor and Subcontractor Clauses - Use of United States-flag vessels, the Contractor agrees:

1. To utilize privately owned United States-flag commercial vessels to ship at least 50% of the gross tonnage (computed separately for dry bulk carriers, dry cargo liners, and tankers) involved, whenever shipping any equipment, material, or commodities pursuant to this contract, to the extent such vessels are available at fair and reasonable rates for United States-flag commercial vessels.

2. To furnish within 20 business days following the date of loading for shipments originating within the United States or within 30 business days following the date of loading for shipments originating outside the United States. a legible copy of a rated, 'on-board' commercial ocean bill-of-lading in English for each shipment of cargo described in paragraph B.1 of this special provision to both the Department

(through the prime contractor in the case of subcontractor bills-of-lading) and to the Division of National Cargo, Office of Market Development, Maritime Administration, Washington, DC 20590.

3. To insert the substance of the provisions of this clause in all subcontracts issued pursuant to this contract.

* * * * *

STATE OF SOUTH DAKOTA
DEPARTMENT OF TRANSPORTATION

SPECIAL PROVISION REGARDING
MINIMUM WAGE ON FEDERAL-AID PROJECTS

APRIL 30, 2013

This proposal contains a copy of the most recent United States Department of Labor (USDOL) Davis-Bacon Act Wage Decision.

The Contractor and each related subcontractor will pay their respective employees not less than the USDOL minimum wage for each work classification an employee actually performs at the site of the work.

The Contractor and each related subcontractor must submit weekly, for each week in which any contract work is performed, a copy of a completed certified weekly payroll report to the South Dakota Department of Transportation (SDDOT) Labor Compliance Officer (LCO) within fourteen (14) calendar days of the end of the workweek.

Each certified weekly payroll report must include the most recent SDDOT Statement of Compliance Form. The Department will not accept any payroll report which does not include the most recent SDDOT Statement of Compliance Form.

* * * * *

Wage and Hour Division
U.S. Department of Labor (DOL)
200 Constitution Avenue, N.W.
Washington, DC 20210

Davis-Bacon Act Wage Decisions
State: South Dakota
Construction Types: Heavy and Highway
Counties: South Dakota Statewide

Agency: U.S. DOL
Wage Decision Number: **SD150001 SD1**
Counties: SD Statewide
Wage Decision Date: **10/09/2015**

***SUSD2015-001 08-13-2015**

	Rates	Fringes
LABORERS		
GROUP GL1		
Air Tool Operator; Common Laborer; Landscape Worker; Flagger; Pilot Car Driver; Trucks under 26,000 GVW; Blue-top Checker; Materials Checker	15.74	0.00
GROUP GL2		
Mechanic Tender (Helper); Pipe Layer (except culvert); Form Builder Tender; Special Surface Finish Applicator; Striping	17.51	0.00
GROUP GL3		
Asphalt Plant Tender; Pile Driver Leadsman; Form Setter; Oiler/Greaser	18.95	0.00
GROUP GL5		
Carpenter; Form Builder	22.77	0.00
GROUP GL6		
Concrete Finisher; Painter; Grade Checker	21.41	0.00
POWER EQUIPMENT OPERATORS		
GROUP G01		
Concrete Paving Cure Machine; Concrete Paving Joint Sealer; Conveyor; Tractor (farm type with attachments); Self Propelled Broom; Concrete Routing Machine; Paver Feeder; Pugmill; Skid Steer	16.85	0.00
GROUP G02		
Bull Dozer 80 HP or less; Front End Loader 1.25 CY or less; Self Propelled Roller (except Hot Mix); Sheepsfoot/50Ton Pneumatic Roller; Pneumatic Tired Tractor or Crawler (includes Water Wagon and Power Spray units); Wagon Drill; Air Trac; Truck Type Auger; Concrete Paving Saw	18.13	0.00
GROUP G03		
Asphalt Distributor; Bull Dozer over 80 HP; Concrete Paving Finishing Machine; Backhoes/ Excavators 20 tons or less; Crusher (may include internal screening plant); Front End Loader over 1.25 CY; Rough Motor Grader; Self Propelled Hot Mix Roller; Push Tractor; Euclid or Dumpster; Material Spreader; Rumble Strip Machine	19.89	0.00
GROUP G04		
Asphalt Paving Machine Screed; Asphalt Paving Machine; Cranes/Derricks/Draglines/Pile Drivers/Shovels 30 to 50 tons; Backhoes/Excavators 21 to 40 tons; Maintenance Mechanic; Scrapers; Concrete Pump Truck	20.30	0.00
GROUP G05		
Asphalt Plant; Concrete Batch Plant; Backhoes/Excavators over 40 Tons; Cranes/ Derricks/Draglines/Pile Drivers/Shovels over 50 tons; Heavy Duty Mechanic; Finish Motor Grader; Automatic Fine Grader; Milling Machine; Bridge Welder	22.75	0.00
TRUCK DRIVERS		
GROUP GT1		
Tandem Truck without trailer or pup; Single Axle Truck over 26,000 GVW with Trailer	16.57	0.00
GROUP GT2		
Semi-Tractor and Trailer; Tandem Truck with Pup	18.82	0.00
ELECTRICIANS		
GROUP E01		
Electrician	22.79	0.00

WELDERS – Receive rate prescribed for craft performing operation to which welding is incidental.

Unlisted classifications needed for work not included within the scope of the classifications listed may be added after award, pursuant to 29 CFR 5.5(a)(1)(ii); contractors are responsible for requesting SDDOT to secure necessary additional work classifications and rates.

*Classifications listed under an "SU" identifier were derived from survey data and the published rate is the weighted average rate of all the rates reported in the survey for that classification. As this weighted average rate includes all rates reported in the survey, it may include both union and non-union rates.

Survey wage rates are not updated and will remain in effect until a new survey is conducted.

A COPY OF THIS DOCUMENT, COLORED TURQUOISE, MUST BE CONSPICUOUSLY POSTED AT THE PROJECT SITE

Wage and Hour Division
U.S. Department of Labor
200 Constitution Avenue, N.W.
Washington, DC 20210

Davis-Bacon Act Wage Decisions
State: South Dakota
Construction Types: Heavy and Highway
Counties: South Dakota Statewide

==========

In the listing above, the "SU" identifier indicates the rates were derived from survey data. As these weighted average rates include all rates reported in the survey, it may include both union and non-union rates. Example: SULA2012-007 5/13/2014. SU indicates the rates are survey rates based on weighted average calculation of rates and are not majority rates. LA indicates the State of Louisiana. 2012 is the year of the survey on which these classifications and rates are based. The next number, 007 in this example, is an internal number used in producing the wage determination. 5/13/2014 indicates the survey completion date for the classifications and rates.

Survey wage rates are not updated and remain in effect until a new survey is conducted.

For SDDOT Defined Work Classifications, please visit: http://www.sddot.com/business/contractors/labor/wcwr/Default.aspx

---

WAGE DETERMINATION APPEALS PROCESS

1.) Has there been an initial decision in the matter? This can be:

- an existing published wage determination
- a survey underlying a wage determination
- a Wage and Hour Division letter setting forth a position on a wage determination matter
- a conformance (additional classification and rate) ruling

On survey related matters, initial contact, including requests for summaries of surveys, should be with the Wage and Hour Regional Office for the area in which the survey was conducted because those Regional Offices have responsibility for the Davis-Bacon survey program. If the response from this initial contact is not satisfactory, then the process described in 2.) and 3.) should be followed.

With regard to any other matter not yet ripe for the formal process described here, initial contact should be with the Branch of Construction Wage Determinations. Write to:

Branch of Construction Wage Determinations
Wage and Hour Division
U.S. Department of Labor
200 Constitution Avenue, N.W.
Washington, DC 20210

2.) If the answer to the question in 1.) is yes, then an interested party (those affected by the action) can request review and reconsideration from the Wage and Hour Administrator (See 29 CFR Part 1.8 and 29 CFR Part 7). Write to:

Wage and Hour Administrator
U.S. Department of Labor
200 Constitution Avenue, N.W.
Washington, DC 20210

The request should be accompanied by a full statement of the interested party's position and by any information (wage payment data, project description, area practice material, etc.) that the requestor considers relevant to the issue.

3.) If the decision of the Administrator is not favorable, an interested party may appeal directly to the Administrative Review Board (formerly the Wage Appeals Board). Write to:

Administrative Review Board
U.S. Department of Labor
200 Constitution Avenue, N.W.
Washington, DC 20210

4.) All decisions by the Administrative Review Board are final.

==========

END OF GENERAL DECISION

STATE OF SOUTH DAKOTA
DEPARTMENT OF TRANSPORTATION

SPECIAL PROVISION
FOR
PRICE SCHEDULE FOR MISCELLANEOUS ITEMS

AUGUST 3, 2015

The following unit bid prices have been established by the South Dakota Department of Transportation Commission.

These prices will be pre-entered in the bidding package for each project or will establish a standard price to be used whenever no project contract unit price exists for that item.

Each unit price listed is considered full compensation for the cost of labor, material, and equipment to provide the item of work and/or material, complete in place, including (but not limited to) royalty, waste of unsuitable materials, equipment rental, overhead, profit, and incidentals.

Items specified in this document may be paid for on progressive estimates without the benefit of a prior approved Construction Change Order.

Specification Section Number	Specification Section Name	Item Name	Price per Item
5.8	Construction Stakes, Lines and Grades	Three-Man Survey Crew	$160.00/hour
7.7	Public Convenience and Safety	Water	$15.00/M.Gal
9.3	Payment for extra haul of Materials	Extra Haul	$0.15/ton mile
120.5 A.5.	Roadway and Drainage Exc. & Emb.	Unclassified Excavation Digouts	$8.00/cu.yd.
120.5 H.	Roadway and Drainage Exc. & Emb.	Extra Haul	$0.05/cu.yd. station
120.5 I.	Roadway and Drainage Exc. & Emb.	Water for Embankment	$15.00/M.Gal
421.5	Undercutting Pipe & Plate Pipe	Undercutting Culverts	$12.00/cu.yd.
510.5 D.	Timber, Prestressed, and Steel Piles	Timber Pile Splice	$550.00/each

		Steel Pile Splices (*All Weights)	Splice made after one of the pieces has been driven.
		8 HP*	$220.00/each
		10 HP*	$300.00/each
		12 HP*	$360.00/each
		14 HP*	$420.00/each
			Splice made before either of the pieces has been driven.
		8 HP*	$105.00/each
		10 HP*	$125.00/each
		12 HP*	$140.00/each
		14 HP*	$160.00/each
510.5 E	Timber, Prestressed, and Steel Piles	Pile Shoes (Timber Pile)	$110.00/each
510.5.H	Timber, Prestressed, and Steel Piles	Pile Tip Reinforcement (Steel Pile)	
		10” HP Tip Reinforced	$120.00/each
		12” HP Tip Reinforced	$140.00/each
		14” HP Tip Reinforced	$170.00/each
601.5	Haul Roads	Granular Material	$12.00/ton
601.5	Haul Roads	Asphalt Concrete (including asphalt)	$80.00/ton
601.5	Haul Roads	Cover Aggregate	$25.00/ton
601.5	Haul Roads	Asphalt for Prime	$700.00/ton
601.5	Haul Roads	Asphalt (Tack, Flush & Surface Treatment)	$450.00/ton
601.5	Haul Roads	Water	$15.00/M.Gal
601.5	Haul Roads	Dust Control Chlorides	$0.35/lb
634.5	Temporary Traffic Control	Flagging	$23.55/hour
634.5	Temporary Traffic Control	Pilot Car	$39.62/hour

* * * * *

STATE OF SOUTH DAKOTA
DEPARTMENT OF TRANSPORTATION

SPECIAL PROVISION
REGARDING
STORM WATER DISCHARGE
TO WATERS OF THE UNITED STATES
WITHIN INDIAN RESERVATIONS

MAY 3, 2013

In compliance with the provisions of the Clean Water Act as amended by the Water Quality Act of 1987, the State of South Dakota has been issued Permit No. SDR12#### or NDR12#### "NATIONAL POLLUTANT DISCHARGE ELIMINATION SYSTEM GENERAL PERMIT FOR DISCHARGES FROM CONSTRUCTION ACTIVITIES". This permit authorizes the discharge of storm water in accordance with the conditions and requirements set forth in the permit.

The Contractor, by submitting a bid or proposal, certifies the following:

> "I certify under penalty of law that this document and all attachments were prepared under my direction or supervision in accordance with a system designed to assure that qualified personnel properly gathered and evaluated the information contained therein. Based on my inquiry of the person or persons who manage the system, or those persons directly responsible for gathering the information, the information contained is, to the best of my knowledge and belief, true, accurate, and complete. I am aware that there are significant penalties for submitting false information, including the possibility of fine and imprisonment for knowing violations."

A copy of the full version of the Environmental Protection Agency National Pollutant Discharge Elimination System General Permit for Discharges from Large and Small Construction Activities, dated 02/16/2012 must be posted on the job site. The permit is available for downloading and printing from the US EPA website:

http://www.epa.gov/npdes/pubs/cgp2012_finalpermit.pdf

The Contractor may also obtain a printed copy of the permit from the SDDOT Project Development office or from the SDDOT Area Office assigned to this project.

* * * * *