Section B: Grading Plans

STATE OF SOUTH DAKOTA	PROJECT	SHEET	TOTAL SHEETS
	NH 0085(81)112	B1	B9

Plotting Date: 10/10/2014

INDEX OF SHEETS

B1	General Layout W/Index
B2	Estimate With General Notes & Tables
B3	Typical Grading Section
B4	Horizontal Alignment Sheet
B5	Control Data Sheet
B6	Topography Symbology & Legend
B7	Plan Sheets
B8-B9	Standard Plates

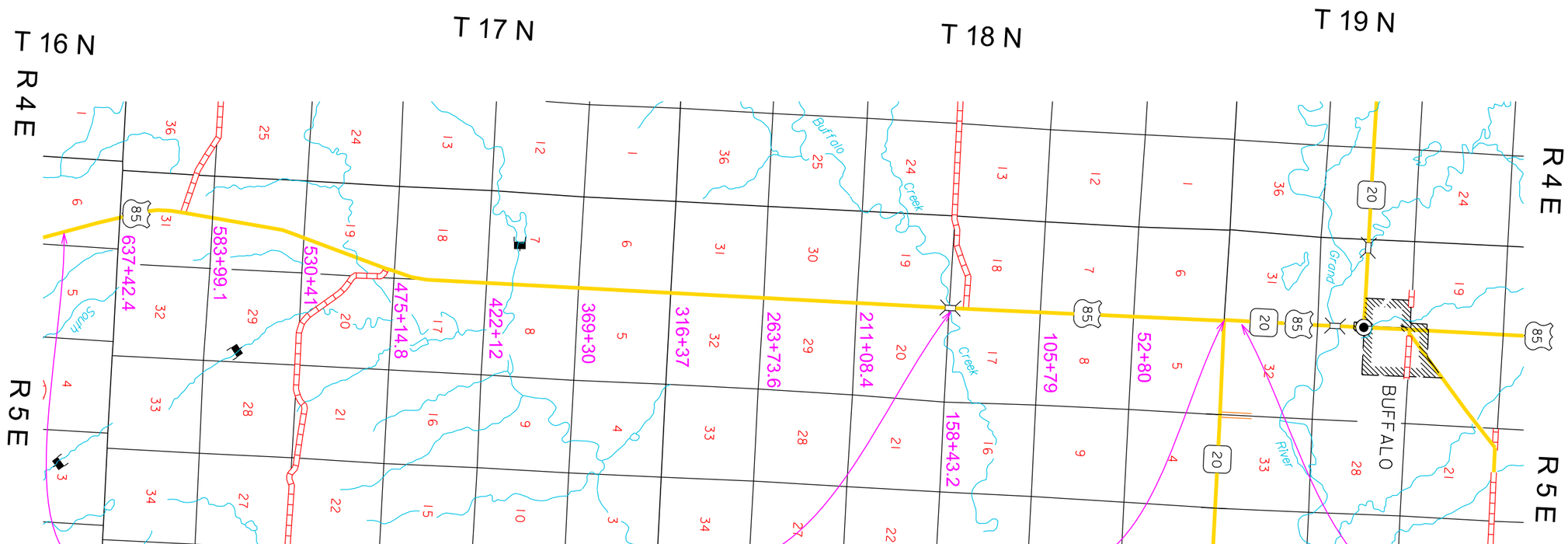

END PROJECT
Sta 664+63.8
2420.2' North & 9843 West of the
Southeast Corner of Section 6 -
Township 16 North - Range 5 East
MRM 112.00 + 0.321

Exception
Sta 156+77.25 to Sta 157+82.75
Continuous Concrete Bridge
Length = 105.5' = 0.019 mile
MRM 121.82

Equation
Sta 500+55.3 Bk =
Sta 0+00 Ah
MRM 124.87

BEGIN PROJECT
Sta 496+55.3
400' North of the
Northwest Corner Section 5 -
Township 18 North - Range 5 East
MRM 124.87

Plot Scale - 1:200
Plotted From - trrc11610
File - ...\Design\Title\B_036g.dgn

SECTION B ESTIMATE OF QUANTITIES

Bid Item Number	Item	Quantity	Unit
009E0010	Mobilization	Lump Sum	LS
110E0510	Remove Pipe End Section	1	Each
120E0600	Contractor Furnished Borrow	503	CuYd
450E4759	18" CMP 16 Gauge, Furnish	22	Ft
450E4760	18" CMP, Install	22	Ft
450E5010	18" CMP Elbow, Furnish	1	Each
450E5011	18" CMP Elbow, Install	1	Each
450E5406	18" CMP Safety End, Furnish	1	Each
450E5407	18" CMP Safety End, Install	1	Each
600E0300	Type III Field Laboratory	1	Each

GRADING OPERATIONS

Water for Embankment is estimated at the rate of 10 gallons of water per cubic yard of Embankment minus Waste. The estimated quantity of Water for Embankment is 6 MGal. No separate payment will be made for the Water for Embankment and all costs associated shall be incidental to the contract unit price per cubic yard of “Contractor Furnished Borrow”.

The estimated cubic yards of Contractor Furnished Borrow required to construct approach radii at weigh station are included in the earthwork balance notes on the profile sheets.

TYPE III FIELD LABORATORY

The lab shall be equipped with an internet connection such as DSL, cable modem, or other approved service. The internet connection shall be provided with a multi-port wireless router. The internet connection shall be a minimum speed of 512 Kb unless limited by job location and approved by the DOT. Prior to installing the wireless router the Contractor shall submit the wireless router’s technical data to the Area Office to check for compatibility with the state’s computer equipment. The internet connection is intended for state personnel usage only. The Contractor’s personnel are prohibited from using the internet connection unless pre-approved by the Project Engineer.

The Contractor shall submit a copy of each monthly bill for calls charged to this phone at the end of each month. The Project Engineer will then audit the bills to ensure all calls are legitimate and then initiate a Construction Change Order (CCO) to reimburse the Contractor for the actual phone calls made, including local and long distance calls. Reimbursement will not be made for fees associated with the purchase, installation, disconnection, monthly line charges, and incidentals involved in the installation, maintenance, and disconnection of the phone (including attachments). These items shall be incidental to the contract unit price per each for “Type III Field Laboratory”.

UTILITIES

The Contractor shall be aware that the existing utilities shown in the plans were surveyed prior to the design of this project and might have been relocated or replaced by a new utility facility prior to construction of this project, might be relocated or replaced by a new utility facility during the construction of this project, or might not require adjustment and may remain in its current location. The Contractor shall contact each utility owner and confirm the status of all existing and new utility facilities. The utility contact information is provided elsewhere in the plans or bidding documents.

SHRINKAGE FACTOR: Embankment +30%

TABLE OF CONTRACTOR FURNISHED BORROW

Station to	Station	L/R	Contractor Furnished Borrow (CuYd)
491+50	495+00	R	58
1+18	1+50	L	109
3+50	11+50	L/R	336
	Totals:		503

CONTRACTOR FURNISHED BORROW

The Contractor shall provide a suitable site for Contractor furnished borrow material. The Contractor is responsible for obtaining all required permits and clearances for the borrow site. The borrow material shall be approved by the Engineer. The plans quantity for “Contractor Furnished Borrow” as shown in the Estimate of Quantities will be the basis of payment for this item.

Restoration of the Contractor furnished borrow site shall be the responsibility of the Contractor.

TYPICAL SHOULDER WIDENING SECTION

STATE OF SOUTH DAKOTA	PROJECT	SHEET	TOTAL SHEETS
	NH 0085(81)112	B3	B9

Plotting Date: 10/16/2014

* New Transition
491+15 to 495+05 Transition -12' to 18'
495+05 to 7+80 - 18'
7+80 to 11+70 Transition - 18' to 12'

Sta 491+50 R to Sta 495+00 R
Sta 3+50 L to Sta 7+10 L
Sta 8+00 L to Sta 11+50 L
Sta 9+00 R to Sta 11+00 R

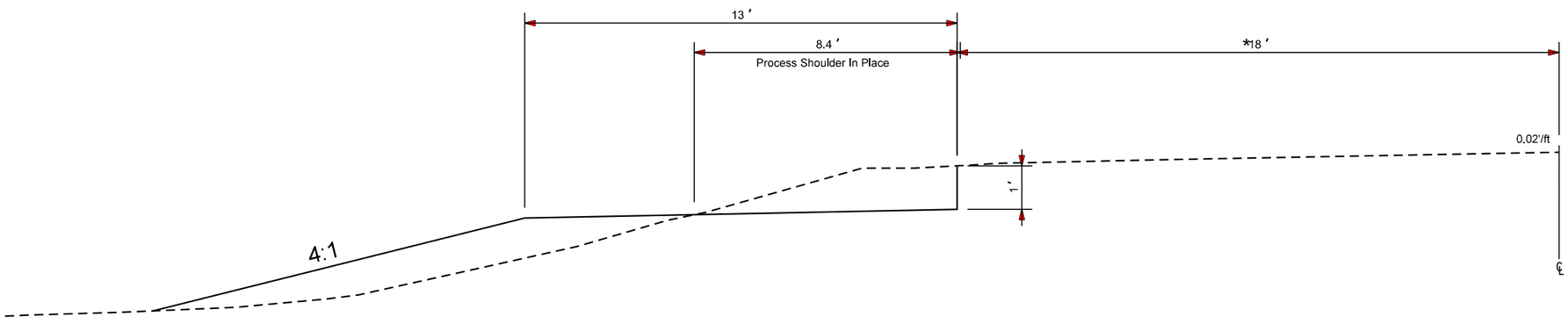

Plot Scale - 1:4

Plotted From - trrc11610

File - ...\prj\Hard036G\Designtyp.dgn

HORIZONTAL ALIGNMENT DATA

MAINLINE (North of SD 20 East)

Type	Station			Northing	Easting
POB	489+29.26			650452.341	1060583.835
		TL= 300.89	S 2°25'20" W		
PI	492+30.16			650151.719	1060571.119
		TL= 825.14	S 2°28'19" W		
POE	500+55.30			649327.345	1060535.530

MAINLINE (South of SD 20 East)

Type	Station			Northing	Easting
POB	0+00.00			649327.345	1060535.530
		TL= 1252.79	S 2°29'49" W		
PI	12+52.79			648075.747	1060480.951
		TL= 44411.01	S 2°27'57" W		
PC	456+63.80			603705.857	1058570.314
PI	465+44.40	R = 5730.00	Delta = 17°28'27" R	602826.069	1058532.429
PT	474+11.33			601998.256	1058232.114
		TL= 6406.58	S 19°56'23" W		
PC	538+17.91			595975.743	1056047.263
PI	543+52.83	R = 5730.00	Delta = 10°40'00" L	595472.892	1055864.839
PT	548+84.65			594944.964	1055778.641
		TL= 6025.89	S 9°16'23" W		
PC	609+10.55			588997.821	1054807.624
PI	617+07.13	R = 3820.00	Delta = 23°33'30" L	588211.643	1054679.261
PT	624+81.21			587439.685	1054875.818
		TL= 3932.71	S 14°17'07" E		
POE	664+13.93			583628.574	1055846.208

The coordinates shown on this sheet are based on the South Dakota State Plane Coordinate System. North Zone (NAD 83/2007); Geoid xxx; SF = 0.9998471039

CONTROL DATA

HORIZONTAL AND VERTICAL CONTROL POINTS – Shoulder Widening SD 20 East & Weigh Station						
Point	**Station**	**Offset**	**Description**	**Northing**	**Easting**	**Elevation**
3000	410+48.07	44.15 R	BENCH MARK	658328.202	1060877.339	2878.67
QT0327_1	496+76.64	97.87 R	REFERENCE MARK	649709.867	1060454.084	2884.70
QT0327	496+76.64	97.87 R	REFERENCE MARK	649709.868	1060454.085	2884.70

The coordinates shown on this sheet are based on the South Dakota State Plane Coordinate System. North Zone (NAD 83/2007);
Geoid xxx; SF = 0.9998471039
The elevations shown on this sheet are based on NAVD 88.

STATE OF SOUTH DAKOTA	PROJECT	SHEET	TOTAL SHEETS
	NH 0085(81)112	B6	B9

Plotting Date: 10/10/2014

EXISTING TOPOGRAPHY SYMBOLOGY AND LEGEND

Anchor
Antenna
Approach
Assumed Corner
Azimuth Marker
BBQ Grill/ Fireplace
Bearing Tree
Bench Mark
Box Culvert
Bridge
Brush
Buildings
Bulk Tank
Cattle Guard
Cemetery
Centerline
Cistern
Clothes Line
Commercial Sign Double Face
Commercial Sign One Post
Commercial Sign Overhead
Commercial Sign Two Post
Concrete Symbol
Creek Edge
Curb/Gutter
Curb
Dam Grade/Dike/Levee
Deck Edge
Ditch Block
Doorway Threshold
Drainage Profile
Drop Inlet
Edge Of Asphalt
Edge Of Concrete
Edge Of Gravel
Edge Of Other
Edge Of Shoulder
Elec. Trans./Power Jct. Box
Fence Barbwire
Fence Chainlink
Fence Electric
Fence Misc.
Fence Rock
Fence Snow
Fence Wood
Fence Woven
Fire Hydrant
Flag Pole
Flower Bed
Gas Valve Or Meter
Gas Pump Island
Grain Bin
Guardrail
Guide Sign One Post
Guide Sign Two Post
Gutter
Guy Pole
Haystack

Hedge
Highway R.O.W. Marker
Interstate Close Gate
Iron Pin
Irrigation Ditch
Lake Edge
Lawn Sprinkler
Mailbox
Manhole Electric
Manhole Gas
Manhole Misc
Manhole Sanitary Sewer
Manhole Storm Sewer
Manhole Telephone
Manhole Water
Merry-Go-Round
Microwave Radio Tower
Misc. Line
Misc. Property Corner
Misc. Post
Overhang Or Encroachment
Overhead Utility Line — OH —
Parking Meter
Pipe With End Section
Pipe With Headwall
Pipe Without End Section
Playground Slide
Playground Swing
Power And Light Pole
Power And Telephone Pole
Power Meter
Power Pole
Power Pole And Transformer
Power Tower Structure
Propane Tank
Property Pipe
Property Pipe With Cap
Property Stone
Public Telephone
Railroad Crossing Signal
Railroad Milepost Marker
Railroad Profile
Railroad R.O.W. Marker
Railroad Signs
Railroad Switch
Railroad Track
Railroad Trestle
Rebar
Rebar With Cap
Reference Mark
Regulatory Sign One Post
Regulatory Sign Two Post
Retaining Wall
Riprap
River Edge
Rock And Wire Baskets
Rockpiles
Satellite Dish
Septic Tank

Shrub Tree
Sidewalk
Sign Face
Sign Post
Slough Or Marsh
Spring
Stream Gauge
Street Marker
Subsurface Utility Exploration Test Hole
Telephone Fiber Optics — T/F —
Telephone Junction Box
Telephone Pole
Television Cable Jct Box
Television Tower
Test Wells/Bore Holes
Traffic Signal
Trash Barrel
Tree Belt
Tree Coniferous
Tree Deciduous
Tree Stumps
Triangulation Station
Underground Electric Line — P —
Underground Gas Line — G —
Underground High Pressure Gas Line — HG —
Underground Sanitary Sewer — S —
Underground Storm Sewer — S —
Underground Tank
Underground Telephone Line — T —
Underground Television Cable — TV —
Underground Water Line — W —
Warning Sign One Post
Warning Sign Two Post
Water Fountain
Water Hydrant
Water Meter
Water Tower
Water Valve
Water Well
Weir Rock
Windmill
Wingwall
Witness Corner

State and National Line
County Line
Section Line
Quarter Line
Sixteenth Line
Property Line
Construction Line
R. O. W. Line
New R. O. W. Line
Cut and Fill Limits
Control of Access
New Control of Access
Proposed ROW
(After Property Disposal)

Plot Scale - 1:200
Plotted From - trrc11610
File - ...\Hardt036G\Design\toposymb.dgn

STATE OF SOUTH DAKOTA	PROJECT	SHEET	TOTAL SHEETS
	NH 0085(81)112	B7	B9

Plotting Date: 10/16/2014

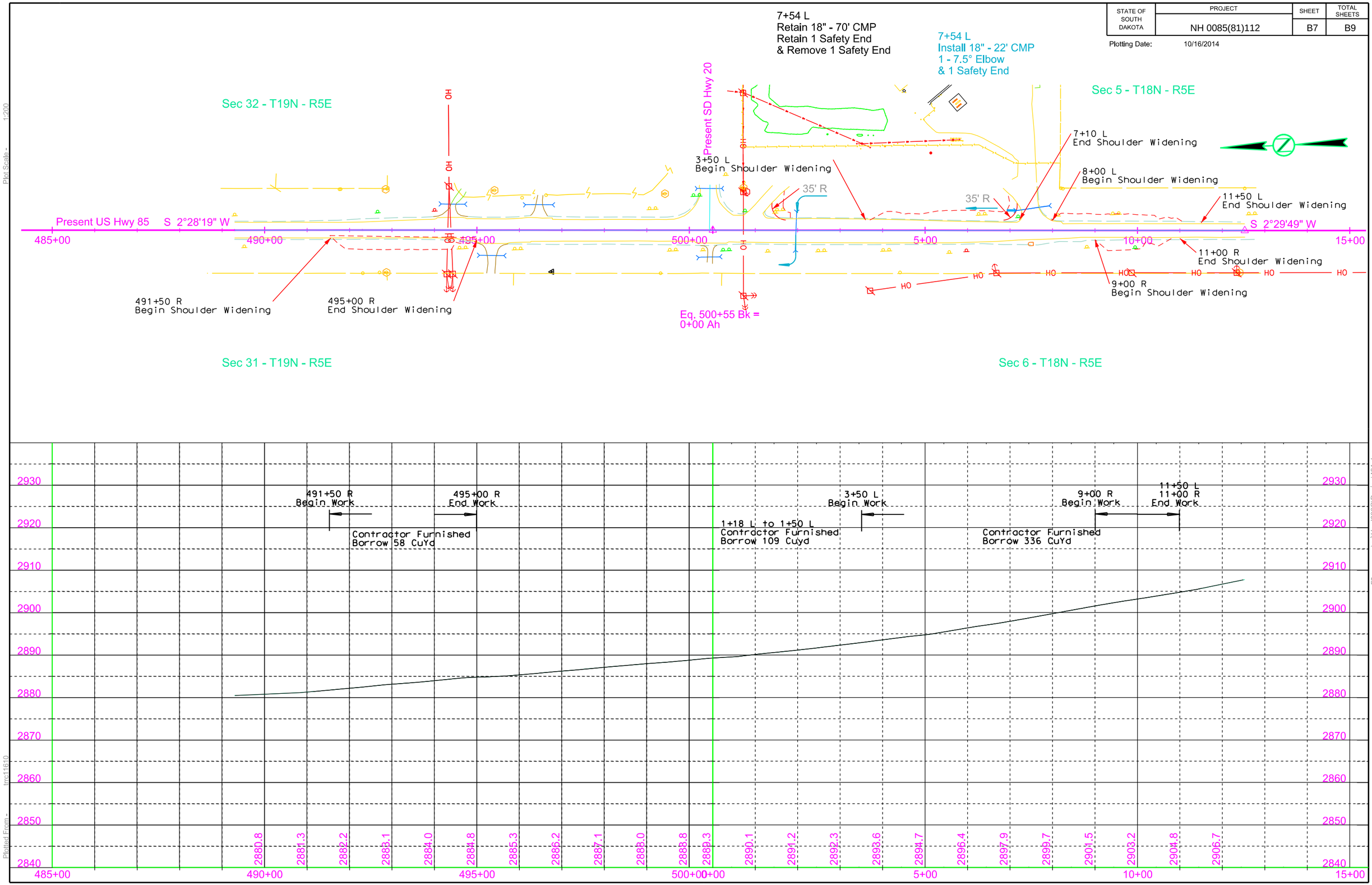

STATE OF SOUTH DAKOTA	PROJECT	SHEET	TOTAL SHEETS
	NH 0085(81)112	B8	B9

Plotting Date: 10/10/2014

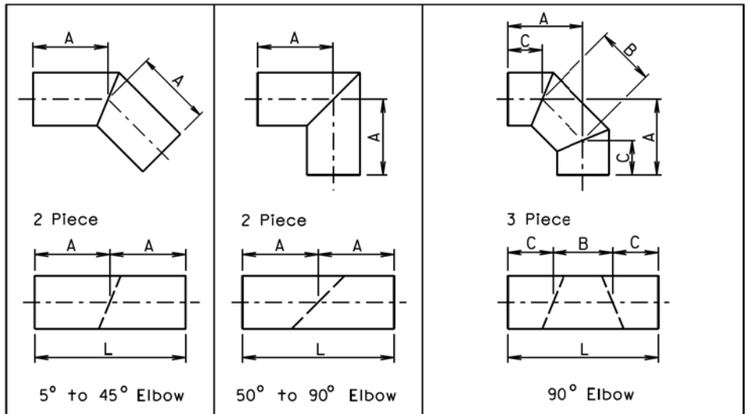

Diameter	A	L	Diameter	A	L	Diameter	A	B	C	L
Inches	Feet	Feet	Inches	Feet	Feet	Inches	Inches			Feet
12	1	2	12	2	4	12	25½	11	18½	4
15	1	2	15	2	4	15	26½	12	18	4
18	1	2	18	2	4	18	27	14	17	4
21	2	4	21	2	4	21	27	15	16½	4
24	2	4	24	2	4	24	27½	16	16	4
27	2	4	27	2	4	27	27½	17	15½	4
30	2	4	30	3	6	30	40	19	26½	6
33	2	4	33	3	6	33	40	20	26	6
36	2	4	36	3	6	36	40½	21	25½	6
42	2	4	42	3	6	42	41	23	24½	6
48	2	4	48	4	8	48	53½	26	35	8
54	3	6	54	4	8	54	54	28	34	8
60	3	6	60	4	8	60	54½	31	32½	8
66	3	6	66	4	8	66	54	33	31½	8
72	3	6	72	5	10	72	67½	36	42	10
78	3	6	78	5	10	78	68	39	40½	10
84	3	6	84	5	10	84	68½	41	39½	10
90	3	6	90	6	12	90	70	46	37	10
96	3	6	96	6	12	96	82	46	49	12

FABRICATED ELBOW LENGTHS FOR ALL CORRUGATIONS

GENERAL NOTES:

All dimensions shown are nominal.

L = Linear Feet of C.M.P. required to fabricate fitting.

June 26, 2001

Published Date: 3rd Qtr. 2014

SDDOT

C.M.P. FABRICATED LENGTHS FOR ELBOWS

PLATE NUMBER 450.32

Sheet 1 of 1

Plot Scale - 1:200
- Plotted From - trrc11610
File - ...\Design\BStdPlatePg1.dgn

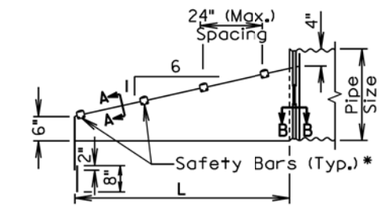

ELEVATION VIEW

*Number of bars required will vary depending on the length of the end section.

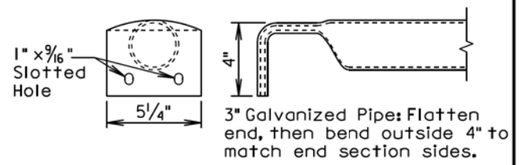

DETAIL OF SAFETY BARS

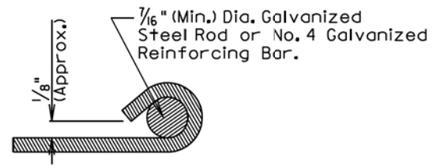

SECTION A-A

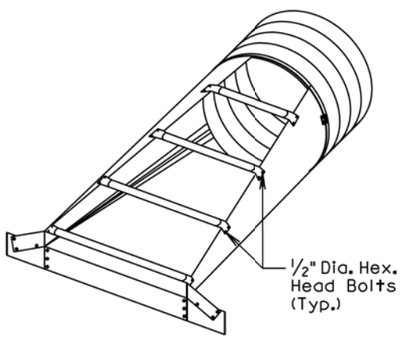

ISOMETRIC VIEW

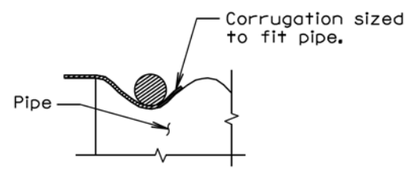

SECTION B-B

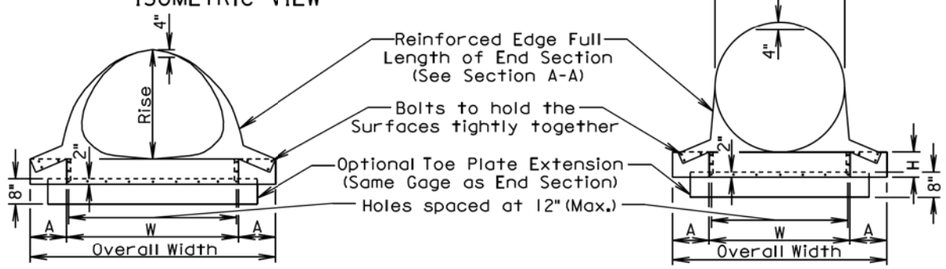

FRONT VIEW

FRONT VIEW

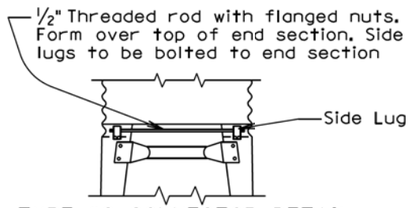

TYPE #2 CONNECTOR DETAIL
(For 30" and Larger)
(For 21" X 15" and Larger)

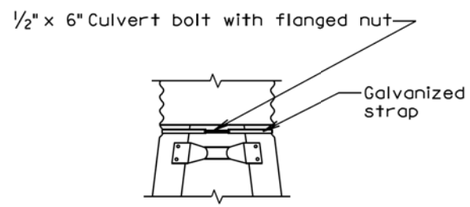

TYPE #1 CONNECTOR DETAIL
(For 15" Through 24")

August 31, 2013

Published Date: 3rd Qtr. 2014	SDDOT	C. M. P. SAFETY ENDS	PLATE NUMBER 450.38
			Sheet 1 of 2

ARCH C.M.P. SAFETY ENDS										
Equv. Dia. (Inch)	(Inches)		Min. Thick.		Dimensions (Inches)				L Dimensions	
	Span	Rise	Inch	Gage	A	H	W	Overall Width	Slope	Length (Inch)
18	21	15	.064	16	8	6	27	43	6:1	30
21	24	18	.064	16	8	6	30	46	6:1	48
24	28	20	.064	16	8	6	34	50	6:1	60
30	35	24	.079	14	12	9	41	65	6:1	84
36	42	29	.109	12	12	9	48	72	6:1	114
42	49	33	.109	12	16	12	55	87	6:1	138
48	57	38	.109	12	16	12	63	95	6:1	168
54	64	43	.109	12	16	12	70	102	6:1	198
60	71	47	.109	12	16	12	77	109	6:1	222
72	83	57	.109	12	16	12	89	121	6:1	282

CIRCULAR C.M.P. SAFETY ENDS								
Pipe Dia. (Inch)	Min. Thick.		Dimensions (Inches)				L Dimensions	
	Inch	Gage	A	H	W	Overall Width	Slope	Length (Inch)
15	.064	16	8	6	21	37	6:1	30
18	.064	16	8	6	24	40	6:1	48
21	.064	16	8	6	27	43	6:1	66
24	.064	16	8	6	30	46	6:1	84
30	.109	12	12	9	36	60	6:1	120
36	.109	12	12	9	42	66	6:1	156
42	.109	12	16	12	48	80	6:1	192
48	.109	12	16	12	54	86	6:1	228
54	.109	12	16	12	60	92	6:1	264
60	.109	12	16	12	66	98	6:1	300

GENERAL NOTES:

Safety ends shall be fabricated from galvanized steel conforming to the requirements of the Standard Specifications.

Safety bars shall be fabricated from steel schedule 40 pipe in conformance with ASTM A53, grade B or HSS 3.5X.216 in conformance with ASTM A500, grade B.

Slotted holes for safety bar attachment shall be provided for all end sections.

Attachment to circular pipes 15" through 24" diameter shall be made with Type #1 straps. All other sizes shall be attached with Type #2 rods and lugs.

When stated in the plans, optional toe plate extension shall be punched and bolted to end section apron lip with 3/8" diameter galvanized bolts. Steel for toe plate extension shall be same gauge as end section. Dimensions shall be overall width less 6" by 8" high.

Installation shall be performed in accordance with the Standard Specifications.

Cost of all work and materials required for fabrication and installation of safety ends shall be incidental to the bid items for the various sizes of safety ends.

August 31, 2013

Published Date: 3rd Qtr. 2014	SDDOT	C. M. P. SAFETY ENDS	PLATE NUMBER 450.38
			Sheet 2 of 2

Plot Scale - 1:200
- Plotted From - trrc11610
File - ...\Design\BStdPlatePg1a.dgn