DEPARTMENT OF TRANSPORTATION

Planning & Engineering
Office of Project Development
700 E. Broadway Avenue
Pierre, SD 57501
O: 605.773.3275
dot.sd.gov

November 8, 2024

Re: Project's NH-CR 0014(185)229, 436( ) – PCN's 026Z & X05W– Urban Grading, Curb & Gutter, Sidewalk, Signals, Storm Sewer, Lighting, Asphalt Concrete Surfacing, PCC Surfacing, Water Main Improvement & Sewer Manhole Adjustments

To Whom It May Concern,

A pre-bid meeting for the US 14 (Euclid Ave) Reconstruction project is being held on November 26th at 1:30 PM CST via Microsoft TEAMS. Interested contracting parties are invited to attend the meeting virtually via the Microsoft Teams Meeting Link provided below.

This meeting will include a presentation of the project covering topics such as the overall scope of work, design aspects, traffic control, and contract time. There will be an opportunity for Contractors to present questions to Department staff, consultants, and project stakeholders.

Attendance is not a requirement, but all interested contracting parties are strongly encouraged to attend.

If attending the meeting you must join the meeting via the link provided. In order to reduce sound feedback please mute the microphone on your computer. Due to the meeting being virtual we are requesting that you please enter the name of your company followed by the individuals from your company attending the meeting into the chat feature of Microsoft Teams.

Join Pre-bid Meeting

Date: November 26, 2024

Time: 1:30-3:30 PM (CST)

Meeting ID: 211 221 837 478

Additional instructions regarding the meeting format will be provided at the beginning of the meeting.

We look forward to seeing you there!

Sincerely,
SD DOT

SECTION B: GRADING PLANS

STATE OF SOUTH DAKOTA	PROJECT	SHEET	TOTAL SHEETS
	NH-CR 0014(185)229	B1	B151

Plotting Date: 3/21/2024 REV 4-16-24 GE

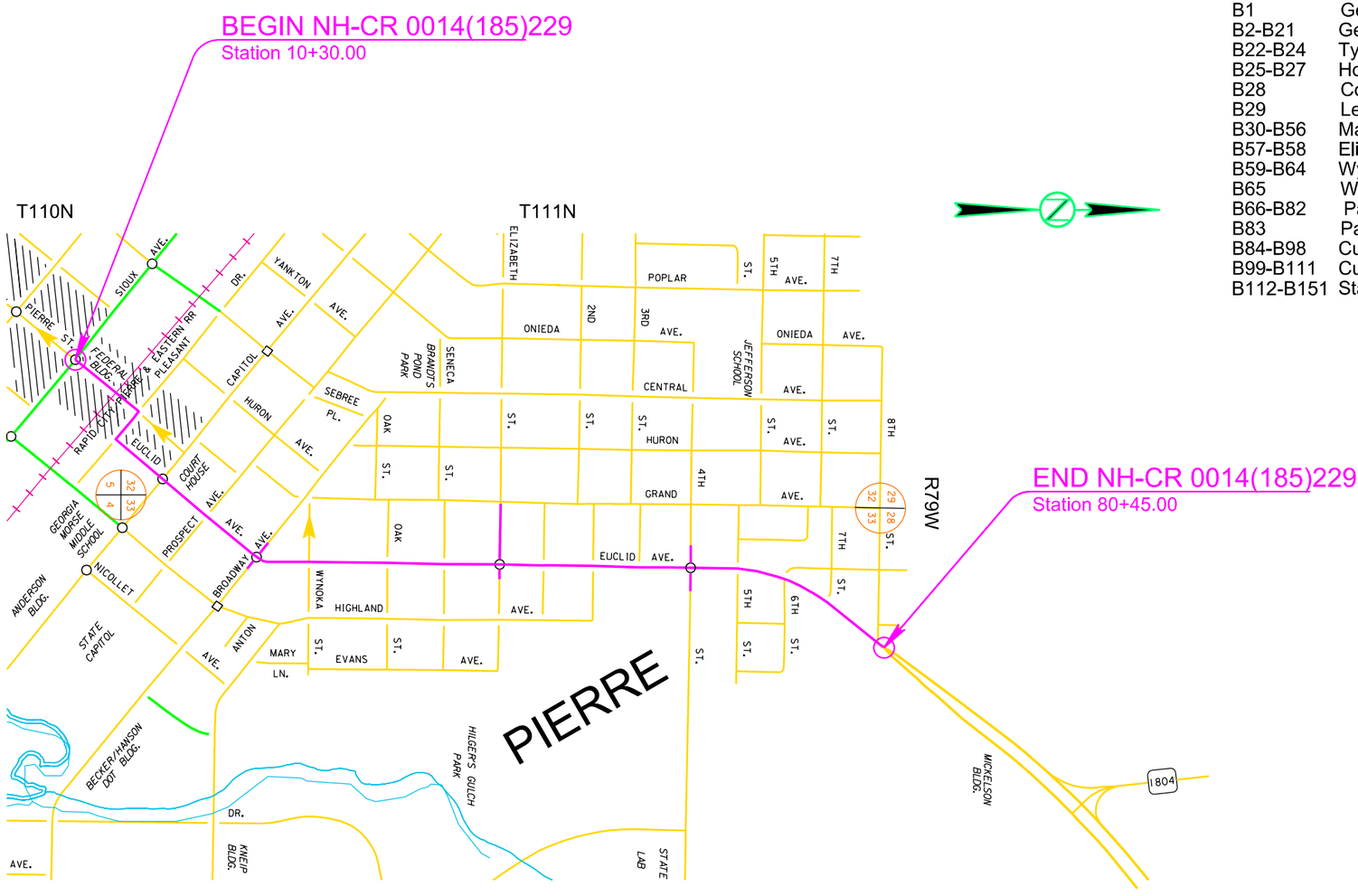

INDEX OF SHEETS

B1	General Layout with Index
B2-B21	General Notes and Tables
B22-B24	Typical Grading Sections
B25-B27	Horizontal Alignment Data
B28	Control Data
B29	Legend
B30-B56	Mainline Plan and Profile Sheets
B57-B58	Elizabeth Street Plan and Profile Sheets
B59-B64	Wynoka Street Plan and Profile Sheets
B65	Wynoka Street to Church Street Plan
B66-B82	Pavement Removal Layout
B83	Pavement Transition Layout
B84-B98	Curb and Gutter Layout
B99-B111	Curb Ramp Layout
B112-B151	Standard Plates

REGISTERED PROFESSIONAL ENGINEER
REG. NO. 13586
DUSTIN LEIGH HAMILTON
SOUTH DAKOTA
4/16/24

Plot Scale - 1:200
Plotted From - GENSZ
File - ...\Section_B\TitleB.dgn

REV 4-16-24 GE
REV 7-9-24 GE
REV 08-27-24 GE

SECTION B ESTIMATE OF QUANTITIES

BID ITEM NUMBER	ITEM	QUANTITY	UNIT
009E0010	Mobilization	Lump Sum	LS
009E3220	Reestablish Right-of-Way and Property Corner	152	Each
009E3230	Grade Staking	2.902	Mile
009E3250	Miscellaneous Staking	1.392	Mile
009E3301	Engineer Directed Surveying/Staking	80.0	Hour
009E4300	Construction Schedule, Category III	Lump Sum	LS
009E4330	Project Management, Category III	Lump Sum	LS
100E0020	Clear and Grub Tree	70	Each
100E0100	Clearing	Lump Sum	LS
110E0300	Remove Concrete Curb and/or Gutter	15,215	Ft
110E0400	Remove Drop Inlet	39	Each
110E1100	Remove Concrete Pavement	1,433.0	SqYd
110E1130	Remove Concrete Driveway Pavement	2,711.3	SqYd
110E1140	Remove Concrete Sidewalk	9,383.3	SqYd
110E5720	Salvage Drop Inlet Frame and Grate Assembly	5	Each
120E0010	Unclassified Excavation	41,396	CuYd
120E6000	Water for Dust Control	50.0	MGal
120E6100	Water for Embankment	14.5	MGal
250E0020	Incidental Work, Grading	Lump Sum	LS
260E6010	Granular Material	2,241.0	Ton
270E0022	Salvage Asphalt Mix Material	11,612.1	Ton
270E0112	Salvage Granular Material	21,353.1	Ton
380E2564	4" Barrier Type Colored Median PCC Pavement	344.6	SqYd
380E3540	8" PCC Approach Pavement	3,736.7	SqYd
380E4050	8" PCC Fillet Section	1,542.0	SqYd
450E0122	18" RCP Class 2, Furnish	4,214	Ft
450E0130	18" RCP, Install	4,214	Ft
450E0142	24" RCP Class 2, Furnish	2,028	Ft
450E0150	24" RCP, Install	2,028	Ft
450E0162	30" RCP Class 2, Furnish	542	Ft
450E0170	30" RCP, Install	542	Ft
450E0182	36" RCP Class 2, Furnish	826	Ft
450E0190	36" RCP, Install	826	Ft
450E0192	42" RCP Class 2, Furnish	2,064	Ft
450E0200	42" RCP, Install	2,064	Ft
450E0212	54" RCP Class 2, Furnish	162	Ft
450E0220	54" RCP, Install	162	Ft
450E0222	60" RCP Class 2, Furnish	64	Ft
450E0230	60" RCP, Install	64	Ft
450E2044	60" RCP Flared End, Furnish	1	Each
450E2045	60" RCP Flared End, Install	1	Each
450E3062	54" RCP Arch Class 2, Furnish	398	Ft
450E3070	54" RCP Arch, Install	398	Ft
450E4798	42" CMP 14 Gauge, Furnish	302	Ft
450E4800	42" CMP, Install	302	Ft
450E5030	42" CMP Elbow, Furnish	2	Each
450E5031	42" CMP Elbow, Install	2	Each
451E0518	8" PVC Pipe	28	Ft
451E3118	18" Pipe Cap	1	Each
462E0100	Class M6 Concrete	334.1	CuYd
480E0100	Reinforcing Steel	63,179	Lb
600E0300	Type III Field Laboratory	1	Each
650E0060	Type B66 Concrete Curb and Gutter	13,563	Ft
650E0080	Type B68 Concrete Curb and Gutter	1,843	Ft
650E4660	Type P6 Concrete Gutter	1,272	Ft
650E4680	Type P8 Concrete Gutter	70	Ft
650E6280	8" Concrete Valley Gutter	333.5	SqYd
651E0040	4" Concrete Sidewalk	24,073	SqFt
651E0060	6" Concrete Sidewalk	84,113	SqFt
651E0560	6" Colored Concrete Sidewalk	29,250	SqFt
651E5000	Sidewalk Drain	23.0	Ft
651E7000	Type 1 Detectable Warnings	1,737	SqFt
670E1200	Type B Frame and Grate	84	Each
670E4448	7' x 11' Concrete Type S Drop Inlet Base	3	Each
670E5340	4' x 11' Precast Concrete Type S Drop Inlet Lid	3	Each
670E5400	Precast Drop Inlet Collar	84	Each
671E4048	48" Manhole Riser Section	41.3	Ft
671E6009	Type A9 Manhole Frame and Lid	33	Each
900E0010	Refurbish Single Mailbox	7	Each
900E1150	Right of Way Marker	6	Each
900E5145	Bollard	2	Each
998E0100	Railroad Protective Insurance	Lump Sum	LS

GRADING OPERATIONS

Water for Embankment is estimated at the rate of 10 gallons of water per cubic yard of Embankment minus Waste.

The estimated cubic yards of excavation and/or embankment required to construct outlet ditches, ditch blocks, and approaches are included in the earthwork balance notes on the profile sheets.

Special ditch grades and other sections of the roadway different than the typical section(s) will be constructed to the limits shown on the cross sections. If significant changes to the cross sections are necessary during construction, the Engineer will contact the Designer for the proposed change.

Generally, all shallow inlet and outlet ditches as noted on the plan sheets will be cut with a 10-foot wide bottom with 5:1 backslopes. However, the Engineer may direct the Contractor to adjust the ditch width for proper alignment with the drainage structure.

A copy of the subsurface investigation for this project is available for review at the Pierre Region and Pierre Area offices.

Table for Water for Embankment

Water for Embankment

Station to	Station	Embankment (CuYd)
Mainline		
10+00	29+93	181
29+93	61+50	178
61+50	80+45	1,076
	Total Mainline	**1,435**
	Subtotal Mainline Water at 10gal/cy	**14.4**
Elizabeth Street		
698+07	701+50	14
	Total Elizabeth Street	**14**
	Subtotal Mainline Water at 10gal/cy	**0.1**
	Total Project	1,449
	Water at 10 gal/cy Total Project	**14.5**



SOIL CONDITIONS

Station	Offset (ft)	Depth (ft)	Description	Initial Water Level (ft)	Final Water Level (ft)	Time Between Reading (hrs)
12+15	28.4 RT	1.6-3.3 3.3-7.0 7.0-15.0	Light brown sandy silt Dark brown clay silt Brown silt clay	Dry	Dry/caved @ 14.6	45
16+00	22.2 LT	1.5-15.0	Brown sandy silt	Dry	Dry/caved @ 12.4	90
19+50	23.6 LT	1.0-7.5 7.5-8.5 8.5-15.0	Brown silt clay Brown gravelly silty sand Brown silt clay	Dry	Dry/caved @ 14.2	91
25+00	25.4 LT	1.6-15.0	Brown clay silt	Dry	Dry/caved @ 13.2	95
29+00	27.0 RT	0.6-7.0 7.0-13.0 13.0-15.0	Light brown clay silt Light brown silt clay Light brown clay silt	Dry	Dry/caved @ 14.0	44
35+00	24.2 RT	0.9-9.0 9.0-15.0	Light brown clay silt Brown gravelly clay sand	Dry	Dry/caved @ 13.2	93
39+00	24.0 RT	0.5-15.0	Brown clay silt	Dry	Dry/caved @ 14.4	42
42+80	23.0 RT	0.5-11.0 11.0-15.0	Light brown clay silt Brown gravelly clay sand	Dry	Dry/caved @ 13.1	41
48+00	25.6 RT	0.9-15.0	Light brown silt clay	Dry	Dry/caved @ 14.7	40
53+00	25.2 RT	0.9-6.0 6.0-15.0	Light brown silt clay Brown clay	Dry	10.0	24
59+00	28.0 LT	1.6-3.1 3.1-15.0	Brown silt clay Gray clay	Dry	Dry/caved @ 14.8	19
66+00	5.0 RT	2.0-15.0	Gray clay	Dry	Dry/caved @ 14.5	22
73+00	18.4 RT	2.1-6.0 6.0-15.0	Brown sandy clay Brown clay	Dry	Dry/caved @ 14.0	20
77+80	22.4 RT	2.4-12.0 12.0-15.0	Brown sandy clay Brown silt clay	Dry	Dry/caved @ 13.8	19

While free water was not encountered in most of the borings at the time of the investigation, this may not be the case with seasonal changes in moisture. The contractor is advised to be prepared to dewater any excavations and to use proper safety equipment and techniques during construction.



REV 4-16-24 GE

TABLE OF IN PLACE SURFACING AND GRANULAR MATERIAL

Test holes were drilled to check the depth of in place surfacing. A log of these test holes is shown below. For information only.

Station	Centerline Offset (ft)	Thickness (in) AC	Concrete	Base Course	Road Width (ft)
12+15	28.4 RT	7.0		11.0	64.0
16+00	22.2 LT	5.0		12.0	39.0
19+50	23.6 LT	4.0	7.5	0.0	58.0
25+00	25.4 LT	5.0		13.0	58.0
29+00	27.0 RT	6.0		12.0	54.0
35+00	24.6 LT	4.0		5.0	62.6
39+00	24.0 RT	5.0		0.0	62.2
42+80	23.0 RT	2.0		4.0	62.4
48+00	25.6 RT	5.0		6.0	62.6
53+00	25.2 RT	5.0		5.0	62.6
59+00	28.0 LT	3.0		15.0	62.4
66+00	5.0 RT	5.0		19.0	47.8
73+00	18.4 RT	5.0		20.0	48.4
77+80	22.4 RT	3.0		25.0	56.4

TYPE III FIELD LABORATORY

Substitution of a cellular telephone for the hard-wired touch-tone telephone is not allowed, as state personnel need the ability to download information over direct phone lines. The phone is intended for state personnel usage only. Contractor personnel are prohibited from using this phone unless pre-approved by the Project Engineer. Reimbursement will not be made for fees associated with the purchase, installation, disconnection, monthly line charges, and incidentals involved in the installation, maintenance, and disconnection of the phone (including attachments). These items will be incidental to the contract unit price per each for “Type III Field Laboratory”.

UTILITIES

The Contractor will be aware that the existing utilities shown in the plans were surveyed prior to the design of this project and might have been relocated or replaced by a new utility facility prior to construction of this project, might be relocated or replaced by a new utility facility during the construction of this project, or might not require adjustment and may remain in its current location. The Contractor will contact each utility owner and confirm the status of all existing and new utility facilities. The utility contact information is provided elsewhere in the plans or bidding documents.

Prior to excavation in or adjacent to BNSF (Burlington Northern Santa Fe) Railway ROW and in conjunction with contacting the SD One-Call, the Contractor will call the BNSF Utility Locate number 1-800-533-2891.

TABLE OF CLEAR AND GRUB TREE (>6” DIAMETER)

Station	L/R	Quantity (Each)	Station	L/R	Quantity (Each)
10+93	R	1	68+05	L	1
32+35	R	1	68+17	L	1
32+57	R	1	68+28	L	1
35+64	L	1	68+38	L	1
36+04	L	1	68+48	L	1
37+36	R	1	68+59	L	1
37+52	R	1	68+70	L	1
37+70	R	1	68+83	L	1
37+89	R	1	68+94	L	1
37+93	L	1	69+03	L	1
38+10	L	1	69+16	L	1
38+27	L	1	69+29	L	1
38+45	L	1	69+42	L	1
38+56	R	1	69+57	L	1
40+32	L	1	69+68	L	1
40+41	R	1	69+79	L	1
40+54	L	1	69+92	L	1
40+57	R	1	70+00	L	1
40+73	R	1	70+60	R	1
41+12	R	1	71+01	L	1
42+24	L	1	71+32	L	1
42+51	L	1	71+64	L	1
43+84	R	1	72+25	L	1
44+06	R	1	72+55	L	1
44+49	R	1	72+88	L	1
44+89	R	1	72+89	R	1
45+63	R	1	73+24	L	1
46+48	R	1	73+67	R	1
62+97	R	1	73+91	R	1
65+90	L	1	74+11	R	1
66+51	L	1	74+31	R	1
66+69	R	1	74+51	R	1
67+75	L	1	74+73	R	1
67+86	L	1	74+92	R	1
67+96	L	1	76+04	R	1
				Total:	70

SPRINKLER SYSTEMS

Based on available landowner information, sprinkler systems likely exist on these properties. It is likely that not all sprinklers were located, and additional sprinkler systems may be encountered.

When sprinkler systems are encountered during construction, the Contractor will contact the property owner to coordinate the removal of the system where necessary. Sprinkler water lines will be capped as necessary.

All cost to remove the sprinkler system, cap sprinkler water lines and coordinate with the property owner will be incidental to the various contract items.

TABLE OF SPRINKLER SYSTEMS

Station	Properties
18+00 to 19+60 R	Parcel A9 First Railway Add. Block 1 Lot 7
22+25 to 24+00 L	Parcel 2 First Railway Add. Block 4 Lot 26
22+25 to 23+01 R	Parcel 3 First Railway Add Block 3 Lot 8
24+50 to 25+50 L	Parcel A12 First Railway Add. Block 3 Lot 9
24+50 to 25+50 R	First Railway Add. Block 3 Lot 6
28+19 to 29+93 L	Parcel A14 First Railway Add. Block 6 Lot 1
30+48 to 33+88 R	Parcel 5 St. Peter and Paul Catholic Church
34+37 to 34+77 R	Parcel 6 Steigmeyers Add. Block 11 Lot 23
36+00 to 36+75 L	Steigmeyers Add. Block 12 Lots 7 & 8
39+80 to 40+60 L	Parcel A22 Steigmeyers Add Block 5 Lots 7 & 8
42+20 to 43+00 L	Steigmeyers Add. Block 5 Lots 1 & 2
43+50 to 47+25 L	Steigmeyers Add. Block 4 Lots 1-8
44+00 to 45+25 R	Steigmeyers Add. Block 3 Lot 10-12
48+64 to 49+14 R	Parcel A31 Central Add. Block 2 Lots 2 &3
49+25 to 50+00 L	Central Add. Block 3 Lot 6
54+00 to 56+64 L	Parcel 7 & A34 Central Add. Block 9 Lots 17-27
63+75 to 67+00 L	Entire West side of US 14



STATE OF SOUTH DAKOTA	PROJECT	SHEET	TOTAL SHEETS
	NH-CR 0014(185)229	B5	B151

REV 4-16-24 GE

SHRINKAGE FACTOR: Embankment +20%

TABLE OF EXCAVATION QUANTITIES BY BALANCES

TABLE OF EXCAVATION QUANTITIES BY BALANCES		
Station to	Station	Excavation (CuYd)
Mainline		
10+00	29+93	5,799
29+93	61+50	10,211
61+50	80+45	5,615
	Total Mainline	**21,625**
Elizabeth Street		
698+07	701+50	1,126
	Total Elizabeth Street	**1,126**
Wynoka Street		
926+00	940+00	
	Total Wynoka Street	
	Project Total	**22,751**
(1) The quantities for these items are in the Estimate of Quantities under their respective contract items.		
(2) The quantities for these items are for information only.		

TABLE OF UNCLASSIFIED EXCAVATION

Project Total	(CuYd)
Excavation	22,751
Topsoil	1,203
Salvaged Asphalt Mix and Granular Base Material	17,442
Total	**41,396**



PROCEDURES FOR DETERMINING UNCLASSIFIED EXCAVATION QUANTITY

When plan quantities are used for payment, the Unclassified Excavation quantity will be used for final payment and the plans quantity of Topsoil and salvaged surfacing items listed in the Table of Unclassified Excavation will not be adjusted according to field measurements.

The following paragraphs are general earthwork information and information in regard to computing the Unclassified Excavation quantity when final cross sections are taken in the field:

The Unstable Material Excavation quantity is included in the Excavation quantity listed in the Table of Unclassified Excavation. When finaling a project, the Unstable Material Excavation quantity will be added to the Excavation quantity to compute the Unclassified Excavation quantity.

Out-of-Balance Excavation is material obtained from waste generated from excavation from other balances. The quantity of Out-of-Balance Excavation is included in the Excavation quantity in the balance where it is excavated and is paid for once as Unclassified Excavation.

The Topsoil quantity in the Table of Unclassified Excavation is an estimate. When finaling a project, the total quantity of field measured Topsoil will be used in place of the estimated Topsoil quantity. The quantity of Topsoil from the cuts will be paid for twice as Unclassified Excavation, as it will be in both the Excavation and Topsoil quantities. This will be full compensation for Excavation, which includes necessary undercutting to provide space for placement of topsoil.

The Excavation quantities from individual balances and the Table of Unclassified Excavation have been reduced by the volume of in place surfacing that will be removed and/or salvaged.

SALVAGE ASPHALT MIX MATERIAL

The Los Angeles Abrasion Loss value on the aggregate used for the in-place asphalt concrete was unknown.

An estimated 11,612.1 tons (6,144.0 Cubic Yards) of asphalt mix material will be salvaged from the existing highway according to the in-place surfacing typical sections.

The Contractor will ensure that no vegetation, topsoil, subgrade, or other foreign material is incorporated into the salvaged asphalt mix material.

The quantity of salvaged asphalt mix material may vary from the plans.

The quantity of salvageable material is estimated from the in-place surfacing typical sections. This estimated quantity was included in the unclassified excavation quantities.

SALVAGE GRANULAR MATERIAL

An estimated 21,353.1 tons (11,298.0 Cubic Yards) of granular material will be salvaged from the existing highway according to the in-place surfacing typical sections.

The Contractor will ensure that no vegetation, topsoil, subgrade, or other foreign material is incorporated into the salvaged granular material.

The quantity of salvaged granular material may vary from the plans.

The quantity of salvageable material is estimated from the in-place surfacing typical sections. This estimated quantity was included in the unclassified excavation quantities.

The following table is furnished for information only.

Surface Material

Beg. Station	End Station	Length	Average Width	Depth	Volume (Cu Yd)	Tons
10+30.00	13+36.00	306.00	64.00	0.38	272.0	514.1
13+36.00	15+65.80	229.80	66.00	0.42	234.1	442.4
15+65.80	35+08.80	1943.00	58.00	0.42	1,739.1	3,286.9
35+08.80	60+87.50	2578.70	62.00	0.42	2,467.3	4,663.1
35+08.80	80+45.00	4536.20	52.65	0.38	1,431.5	2,705.6
	Total:				6,144.0	**11,612.1**

Base Material

Beg. Station	End Station	Length	Average Width	Depth	Volume (Cu Yd)	Tons
10+30.00	13+36.00	306.00	64.00	0.80	577.2	1,091.0
13+36.00	15+65.80	229.80	66.00	0.63	351.1	663.5
15+65.80	35+08.80	1943.00	58.00	0.63	2,608.7	4,930.4
35+08.80	60+87.50	2578.70	62.00	0.79	4,691.1	8,866.2
60+87.50	80+45.00	1957.50	52.65	0.80	3,069.8	5,802.0
	Total:				11,298.0	**21,353.1**

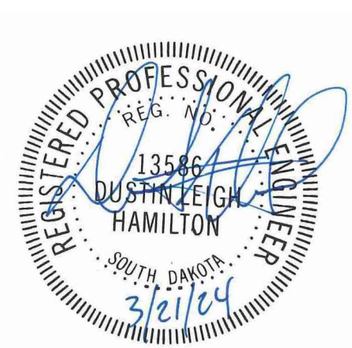

INCIDENTAL WORK, GRADING

Station	L/R	Remarks
10+30 - 10+39	R	Take Out 55" - 9' RCP
10+34 - 18'	R	Take Out Manhole with Frame & Cover
10+34 - 10+39	R	Take Out 18" - 9' RCP
10+34 - 10+53	R	Take Out 15" - 24' RCP
10+34 - 10+35	R	Take Out 12" - 45' PVC
10+39 - 10'	R	Take Out Manhole with Frame & Cover
10+39 - 10+83	L/R	Take Out 12" - 62' PVC
10+39 - 11+70	R	Take Out 30" - 132' RCP
11+70 - 13'	R	Take Out Manhole with Frame & Cover
11+70 - 12+08	R	Take Out 30" - 38' RCP
11+83 - 11+84	R	Take Out 10" - 21' PVC
11+90 - 11+93	R	Take Out 6" - 45' PVC
12+08 - 10'	R	Take Out Manhole with Frame & Cover
12+08 - 12+09	L/R	Take Out 20" - 25' RCP
12+08 - 12+85	R	Take Out 30" - 76' RCP
12+09 - 12+09	L	Take Out 20" - 36' RCP
12+09 - 15'	L	Take Out Manhole with Frame & Cover
12+85 - 12+85	R	Take Out 15" - 33' RCP
12+85 - 13+71	R	Take Out 30" - 86' RCP
12+85 - 11'	R	Take Out Manhole with Frame & Cover
13+71 - 13+91	R	Take Out 28" - 21' RCP
13+71 - 10'	R	Take Out Manhole with Frame & Cover
13+91 - 9'	R	Take Out Manhole with Frame & Cover
13+91 - 13+92	R	Take Out 18" - 18' CMP
13+91 - 13+92	R	Take Out 18" - 24' RCP
13+91 - 15+25	R	Take Out 28" - 134' RCP
15+42 - 15+29	L	Take Out 10" - 24' PVC
15+18 - 15+29	L	Take Out 10" - 24' PVC
15+21 - 15+34	L	Take Out 20" - 53' Clay
15+28 - 1'	R	Take Out Manhole with Frame & Cover
15+28 - 15+70	R	Take Out 20" - 52' RCP
15+28 - 15+34	L/R	Take Out 20" - 60' Clay
15+28 - 15+57	L/R	Take Out 20" - 70' Clay
15+29 - 15+42	L	Take Out 10" - 31' Clay
15+57 - 58'	L	Take Out Manhole with Frame & Cover
15+57 - 15+61	L	Take Out 20" - 19' Clay
15+57 - 15+72	L	Take Out 12" - 29' Clay
15+70 - 15+84	R	Take Out 12" - 23' PVC
15+70 - 17+64	R	Take Out 20" - 193' RCP
15+75 - 15+77	L	Cut, Cap and Fill - 24" RCP
17+50 – 30+50	L/R	Monitor & Control Building Vibrations
17+64 - 17+97	R	Take Out 10" - 52' Clay
17+64 - 27'	R	Take Out Manhole with Frame & Cover
17+64 - 21+86	L/R	Take Out 18" - 435' Clay
17+87 - 17+98	L	Take Out 10" - 25' Clay
21+58 - 21+59	L/R	Take Out 10" - 47' PVC
21+86 - 22+22	L/R	Take Out 10" - 50' Clay
21+86 - 25+95	L	Take Out 18" - 409' Clay
21+86 - 2'	L	Take Out Manhole with Frame & Cover
22+31 - 22+33	L	Take Out 8" - 25' PVC
25+68 - 25+70	L	Take Out 10" - 40' RCP
25+95 - 30+48	L/R	Take Out 18" - 453' Clay
25+95 - 26+40	L/R	Take Out 10" - 57' RCP
25+95 - 2'	L	Take Out Manhole with Frame & Cover
25+95 - 26+40	L/R	Take Out 10" - 57' RCP
26+19 - 26+19	L	Take Out 8" - 39' PVC
26+38 - 26+41	L	Take Out 10" - 26' RCP
30+46 - 30+58	R	Take Out 10" - 39' Clay
30+46 - 30+51	L/R	Take Out 10" - 39' RCP
30+46 - 33+93	L/R	Take Out 15" - 347' RCP
30+46 - 8'	R	Take Out Manhole with Frame & Cover
30+82 - 30+86	L	Take Out 10" - 11' RCP
33+93 - 4'	L	Take Out Manhole with Frame & Cover
34+08 - 22'	L	Take Out Manhole with Frame & Cover
34+09 - 33'	R	Take Out Manhole with Frame & Cover
34+08 - 39+71	L	Take Out 18" - 563' RCP
34+08 - 34+15	L	Take Out 10" - 12' PVC
34+08 - 34+41	L	Take Out 10" - 34' PVC
34+08 - 34+09	L/R	Take Out 18" - 55' PVC
34+09 - 34+09	R	Take Out 18" - 30' RCP
34+09 - 34+41	R	Take Out 10" - 33' PVC
34+09 - 39+83	R	Take Out 15" - 575' RCP
39+15 - 39+15	L	Take Out Unknown Material - 8' Unknown Size
39+70 - 43+03	L	Take Out 18" - 332' RCP
39+70 - 23'	L	Take Out Manhole with Frame & Cover
39+70 - 39+70	L	Take Out Unknown Material - 10' Unknown Size
39+83 - 39+87	R	Take Out 10" - 5' PVC
39+83 - 43+02	R	Take Out 15" - 319' RCP
39+83 - 30'	R	Take Out Manhole with Frame & Cover
43+00 - 43+03	L	Take Out 12" - 8' PVC
43+01 - 43+60	L	Take Out 12" - 59' PVC
43+02 - 43+02	R	Take Out 12" - 4' PVC
43+02 - 30'	R	Take Out Manhole with Frame & Cover
43+02 - 34'	L	Take Out Manhole with Frame & Cover
60+31 - 60+52	R	Take Out 24" - 307' CMP
60+31 - 60+79	R	Take Out 24" - 48' CMP
60+31 - 30'	R	Take Out Manhole with Frame & Cover
60+78 - 60+79	L/R	Take Out 18" - 50' CMP
60+79 - 64+12	R	Take Out 18" - 331' CMP
64+07 - 64+12	L/R	Take Out 18" - 55' CMP
67+44 - 67+59	L/R	Take Out 18" - 52' CMP
67+59 - 71+51	R	Take Out 18" - 382' CMP
71+51 - 75+82	R	Take Out 18" - 431' CMP
75+82 - 75+82	L/R	Take Out 18" - 51' CMP

SALVAGED ITEMS

All salvaged items noted on the plans will be salvaged for future highway use and hauled to the Department of Transportation's Maintenance Yard at 104 S. Garfield, Pierre, SD. as directed by the Engineer. Care will be taken not to damage the structural properties of the items during dismantling and transporting. All broken concrete and materials not salvaged will be disposed of in accordance with the Specifications. All costs for salvaging and transporting the items will be incidental to the contract lump sum price for "Incidental Work, Grading". Before preparing his/her bid, the Contractor will make a visual inspection of the project to verify the extent of the work and material involved.

EXISTING PCC PAVEMENT

The existing concrete pavement on mainline, is 7" concrete mesh reinforced P.C.C. Pavement. The welded wire fabric weight and gauge of wire is unknown. The existing transverse joints are perpendicular and are spaced at 46 feet with 1" dowels.

The coarse aggregate in the existing P.C.C. Pavement is limestone.

Locations for concrete removal are provided in the "Remove Concrete Pavement Table".



TABLE OF DROP INLET REMOVAL

Station	L/R	Quantity (Each)
10+53	R	1
11+84	R	1
11+90	L	1
13+91	R	1
13+92	R	1
15+18	L	1
15+42	L	1
15+71	L	1
15+83	R	1
17+87	L	1
17+97	R	1
21+59	R	1
22+22	R	1
22+31	L	1
25+70	L	1
26+19	L	1
26+38	L	1
26+40	R	1
30+51	L	1
30+58	R	1
30+82	L	1
34+15	L	1
34+41	L	1
34+41	R	1
39+15	L	1
39+71	L	1
39+87	R	1
43+01	L	1
43+02	R	1
43+60	L	1
60+78	L	1
60+79	R	1
64+07	L	1
64+12	R	1
67+44	L	1
67+59	R	1
71+51	R	1
75+82	R	1
75+82	L	1
	Total:	39

CORRUGATED METAL PIPE

Corrugated metal pipes will have 2 ⅔-inch x ½-inch corrugations for 42-inch and smaller round pipe and 48-inch and smaller arch pipe unless otherwise stated in the plans. Corrugated metal pipes will have 3-inch x 1-inch or 5-inch x 1-inch corrugations for 48-inch and larger round pipe and 54-inch and larger arch pipe unless otherwise stated in the plans.

Areas within the project have soils that are highly corrosive to steel. Corrugated metal pipe in these areas will be polymer coated 14 gauge steel as specified in the Table of Pipe Quantities. Any required connection bands, elbows, tees, crosses, wyes, reducers, and transitions will also be polymer coated. The connection bands will be 24 inches wide. All polymer coated corrugated metal pipe and components will be in conformance with AASHTO M245. Riveted pipe will not be allowed.

All damage to the polymer coating will be repaired in accordance with the manufacturer's recommendations prior to installation of the pipe.

All costs associated with the polymer coating including repair of polymer coating will be incidental to the corresponding CMP contract items.

Metal pipe end sections connected to polymer coated CMP will be aluminum-coated (Type 2) in accordance with AASHTO M36 as specified in the Table of Pipe Quantities. All costs associated for gauge, coating, and connections will be incidental to the corresponding CMP End Section contract items.

PIPE FOR DOWNSPOUTS

The substitution of Class 2 reinforced concrete pipe, high density polyethylene pipe, polypropylene pipe, or steel reinforced polyethylene pipe for corrugated metal downspout pipes is not allowed.

CONCRETE PIPE CONNECTIONS

Pipe connections to existing pipes, manholes, junction boxes, and drop inlets will be done by breaking a hole into the existing structure and inserting the pipe. A concrete collar will then be poured around the pipe in the area of the connection.

When it is not possible to use a normal pipe joint (male-female ends), connections to existing pipe will be made by placing a 2' wide by 6" thick M6 concrete collar around the outside of the connection. The concrete collar will be reinforced with 6x6 W2.9 x W2.9 wire mesh.

All costs for constructing the concrete collars including materials and labor will be incidental to the contract unit price per foot for the corresponding pipe contract item.

PIPE COVER

The earthen subgrade cover for some pipe installations is less than one foot. The Contractor will take the necessary precautions to ensure the structural properties of the pipes are not damaged after installation and prior to the placement of final surfacing. Any additional costs for preventing damage to these pipes will be incidental to the contract unit price per foot for the corresponding pipe installation contract item.



STORM SEWER

Reinforced concrete pipe may be bell and spigot. The pipe sections will be adjoined such that the ends are fully entered and the inner surfaces are reasonably flush and even.

Lift holes in the reinforced concrete pipe will be plugged with grout.

Watertight joints are required for reinforced concrete pipe, drop inlets, manholes, and junction boxes where storm sewers run parallel to and within 10 feet horizontally from existing or proposed water mains.

Watertight joints are required where reinforced concrete pipes, drop inlets, manholes, or junction boxes cross water mains and are separated a distance of 18 inches or less, above or below, the water main.

If watertight joints are required then the watertight joints will extend for a distance of 10 feet beyond the water main. This measurement will be from the sealed concrete joint to the outer most surface of the water main.

Watertight joint seals will conform to the following requirements:

1. Reinforced Concrete Pipe (Circular): Gasketed pipe will conform to the requirements of ASTM C443 and the gasket will be in conformance with Section 990 of the Specifications. Non-gasketed concrete pipe will be sealed with a mastic joint seal conforming to the requirements of ASTM C990 and encased with a minimum 2-foot wide by 6-inch thick M6 concrete collar reinforced with 6x6 W2.9 x W2.9 wire mesh.

2. Reinforced Concrete Pipe (Arch): Gasketed pipe will conform to the requirements of ASTM C443 and the gasket will be in conformance with Section 990 of the Specifications. Non-gasketed concrete pipe joints will be sealed with a hydrophilic flexible water stop seal and wrapped with a 1-foot wide strip of fabric above the cradle. The fabric will conform to the requirements of Section 831 of the Specifications for Type A Drainage Fabric. The hydrophilic flexible water stop will be from the list below.

3. Drop Inlets, Manholes, and Junction Boxes: Joints will be sealed with one of the following methods:

    A. A flexible strip seal placed in the joints conforming to the requirements of ASTM C990 and the perimeter encased with a minimum 2-foot wide by 6-inch thick M6 concrete collar reinforced with 6x6 W2.9 x W2.9 wire mesh.

    B. A hydrophilic flexible water stop seal placed in the joints and a 1-foot wide strip of fabric wrapped around the perimeter of the pipe. The fabric will conform to the requirements of Section 831 of the Specifications for Type A Drainage Fabric. The hydrophilic flexible water stop will be from the list below.

    C. A self-adhesive external joint seal wrap. The seal wrap will be from the list below.

Approved List of Self-adhesive Joint Wrap

Product	Manufacturer
Mar Mac Seal Wrap	Mar Mac Construction Products McBee, SC 843-335-5909 www.marmac.com
ConWrap CS-212	Concrete Sealants, Inc. Tipp City, OH 800-332-7325 http://www.conseal.com

Approved List of Hydrophilic Flexible Water Stop Seal:

Product	Manufacturer
Waterstop RX	Cetco Hoffman Estates, IL 800-527-9948 www.cetco.com
Conseal CS-231	Concrete Sealants, Inc. Tipp City, OH 800-332-7325 http://www.conseal.com

Gaskets and seals (mastic, waterstop, and seal wraps) will be installed in accordance with the Manufacturer's recommendations.

The cost for furnishing and installing all gaskets, mastic joint seal, water stop seal, seal wrap, concrete collars, and for plugging the lift holes will be incidental to the contract unit price per foot for the corresponding pipe contract item.

SALVAGING OF FRAMES, GRATES, AND LIDS

5 Frames, grates, and lids will be salvaged by the Contractor will be stockpiled at the State Maintenance Yard at 104 S. Garfield, Pierre, SD.

DROP INLETS

Where drop inlets are constructed within areas of curb and gutter, the Contractor will construct weep holes of at least 3 inches in diameter in the drop inlet walls. The weep holes will be constructed at the same elevation as the adjacent top of the earthen subgrade and will be maintained clean and open at all times until the permanent surfacing is placed. The drop inlets will be covered throughout construction operations as necessary with an Engineer approved cover to provide safe travel for motorists and to prevent materials from entering the storm sewer system. After the permanent surfacing has been placed, the Contractor will seal the weep holes with grout and remove all debris from the drop inlet. All costs involved with the coverings, weep holes, and removing debris from the drop inlets will be incidental to the contract unit prices for the components of the drop inlets.

The plan shown quantities of the drop inlet components such as Class M6 Concrete, Reinforcing Steel, Type B Frame and Grate, Precast Drop Inlet Collar, and Precast Concrete Type S Drop Inlet Lid will be the basis of payment for these items.

If additions or reductions to the number of drop inlets are ordered by the Engineer, payment for the components required to construct the drop inlets will be made at the contract unit prices for the components of the drop inlets.

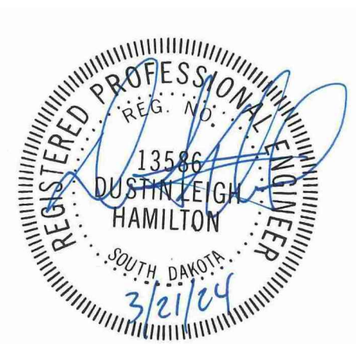

COLORED CONCRETE FOR SIDEWALK

The colored concrete will have the integral color Solomon Brick Red #417 or an equal approved by the Engineer.

ColorFlo Liquid Color
Color #417 Brick Red
Solomon Colors, Inc.
www.solomoncolors.com

Brick Red requires a rate of 12.50 pounds of Solomon ColorFlo #417 Red per cubic yard of concrete. The colored concrete must be cured according to the manufacturer's recommendations with two coats of a non-yellowing acrylic curing and sealing compound. The curing and sealing compound will meet ASTM C309. The curing and sealing product will be DECRA-SEAL or an equal approved by the Engineer.

DECRA-SEAL
W.R. Meadows, Inc.
1-800-342-5976
www.wrmeadows.com

White pigmented cure will not be used. The Contractor will protect the colored concrete to ensure white pigmented curing compound will not come in contact with the colored concrete. All costs for furnishing, handling, applying the curing and sealing compound, and liquid integral color, including the materials, equipment, labor, and incidentals necessary will be incidental to the contract unit price for "6" Colored Concrete Sidewalk".

Church Street to Wynoka Street Access – Hilgers Gulch

The Contractor will exercise caution and be cognizant of park infrastructure when using the Church Street to Wynoka Street access through Hilgers Gulch. The existing pedestrian route/pathway will not be used for vehicular/machine access with the exception of any areas of pathway perpendicular to the construction access route. There is 2,000 SqFt of sidewalk quantity included for incidental damage to sidewalks which cross the access route. Any sidewalks damaged which parallel or do not cross the access route will be replaced at the cost of the Contractor.

Sidewalk Subgrade Preparation

From Station 10+30 to Station 30+00 (beginning of project to Broadway Ave), the thickness of the cushion material beneath the sidewalk will be increased to 6 inches. Prior to placing cushion material, the upper 6 inches of subgrade will be reworked and recompacted to moisture and density requirements as per Standard Specifications. The scarification will extend from outside edge of the sidewalk to the opposite edge of the sidewalk.

SIDEWALK ADJACENT TO BUILDINGS

When placing sidewalk adjacent to buildings, the elevation of the new sidewalk may be either higher or lower than the existing sidewalk. This may require that modification be made to building exteriors such as: removal of siding, installation of flashing, installation of siding, or other necessary modifications. Building modifications will be approved by the Engineer. All costs associated with modifying the buildings for sidewalk placement will be incidental to the contract unit price per square foot for the corresponding concrete sidewalk contract item.

Sidewalk placed adjacent to building doorways should nearly match the doorway threshold and will have a maximum 1/4-inch vertical rise at the doorway threshold. A sidewalk turning space will be provided at building doorways in accordance with the plans. Sidewalk should ramp or slope down from the turning space to the typical sidewalk as specified in the plans. Additional sidewalk ramp or slope locations may be required. In the plans, the locations without ramps were assumed by the design Engineer as sites that slopes of less than 5 percent could be used from the turning space to the typical sidewalk. The limits of the ramp and steepened sidewalk shown in the plans may need to be adjusted to the actual doorway location and to meet sidewalk slope requirements as specified in the plans.

8" PCC FILLET SECTIONS

Payment for "8" PCC Fillet Section" will be based on plans quantity. If additions or reductions to the area of PCC fillet sections are ordered by the Engineer, payment will be made in accordance with the contract unit price per square yard for "8" PCC Fillet Section".

DETECTABLE WARNINGS

Detectable warnings will be in compliance with the Americans with Disabilities Act regulations.

The detectable warnings will be installed according to the manufacturer's installation instructions.

A concrete thickness equal to the adjacent concrete sidewalk thickness and 2 inches of granular cushion material will be placed below the Type 1 Detectable Warnings. When concrete is placed below the detectable warnings then the concrete thickness will be transitioned at the rate of 1" per foot to match the adjacent concrete sidewalk thickness.

The detectable warnings will be a brick red color for application in concrete curb ramps. Cast iron plates may be a natural patina (weathered steel).

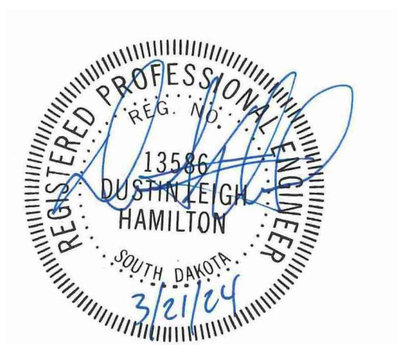

Type 1 Detectable Warning Panels will be one of the following products:

Type 1 Detectable Warnings

Product	Manufacturer
Detectable Warning Plate Cast Iron Plate	Neenah Foundry Company Neenah, WI 800-558-5075 http://www.neenahfoundry.com/
Detectable Warning Plate Cast Iron Plate	Deeter Foundry Lincoln, NE 800-234-7466 http://www.deeter.com/
Detectable Warning Plate Cast Iron Plate(No Coating)	East Jordan Iron Works, Inc. 301 Spring Street East Jordan, MI 49727 800-626-4653 http://www.ejiw.com
Iron Dome Cast Iron Detectable Warning Tile	ADA Solutions, Inc. 323 Andover Street Suite 3 Wilmington, MA 01887 800-372-0519 https://adatile.com
TufTile (wet-set) Cast Iron Replaceable Tile	TufTile 1200 Flex Court Lake Zurich, IL 60047 888-960-8897 http://www.tuftile.com/
Advantage Tactile Detectable Warning Cast Iron Plate	Advantage Tactile Systems, Inc. 241 Main Street, Suite 100 Buffalo, NY 14203 800-679-4022 https://advantagetactile.com/
ADA Arcis Tactile Detectable Warning Tile Concrete Panel Reinforced with Stainless Steel Prestress Strands	Arcis Corporation 10680 NW 289th Place PO Box 1250 North Plains, Oregon 97133 503-647-5042 http://www.arcis-corp.com/#/tactile/
CASTinTACT Concrete Panel Reinforced with Stainless Steel Prestress Strands	MASCO Mason Supply 6018 234th St SE Woodinville, Washington 98072 425-487-6161 http://www.castintact.com
CASTinTACT 3 Concrete Panel Enhanced with Microsilica and Fiber Reinforced	MASCO Mason Supply 6018 234th St SE Woodinville, Washington 98072 425-487-6161 http://www.castintact.com

MAILBOXES

The Contractor will reset the existing mailboxes on new posts with the necessary support hardware for single mailbox assemblies. The local Postmaster will determine the recommended mounting height of the mailboxes throughout the project. The Contractor will coordinate with the Engineer on the proper postal representative to contact.

All costs for removing existing mailboxes, providing temporary mailboxes, and resetting mailboxes with new posts and necessary support hardware will be incidental to the contract unit price per each for “Refurbish Single Mailbox”.

TABLE OF REFURBISH MAILBOX

Station	L/R	Single (Each)
40+97	L	1
41+53	L	1
41+83	R	1
700+18	L	1
700+80	L	1
50+90	L	1
52+12	L	1
	Total:	7

Table of Special Driveway

Station	Location	Driveway Type
Mainline		
12+87.6	R	Special Approach
16+27.3	L	Special Approach
16+75.4	L	Special Approach
20+14.4	R	Special Approach
22+62.1	R	Special Approach
23+10.6	R	Special Approach
23+99.6	R	Special Approach
37+24.4	R	Special Approach
41+29.7	R	Special Approach
41+60.5	R	Special Approach
42+06.5	R	Special Approach
55+84.7	R	Special Approach
58+87.2	R	Special Approach
68+83.2	R	Special Approach
75+39.7	R	Special Approach
Elizabeth Street		
669+75.0	L	Special Drop Curb
700+33.4	L	Special Drop Curb
700+95.6	L	Special Drop Curb

BOLLARDS

The Contractor will install bollards at the locations listed in the table below in accordance with the following detail. Two of the bollards are in an area of existing parking lot concrete surfacing. All costs to furnish and install the bollard, including the concrete footing, pavement removal, pavement patching, etc. will be incidental to the contract unit price per each for “Bollard”.

Location	Quantity (Each)
15+49.36-36.44’ R	1
15+74.16-36.29’ R	1
Total:	2

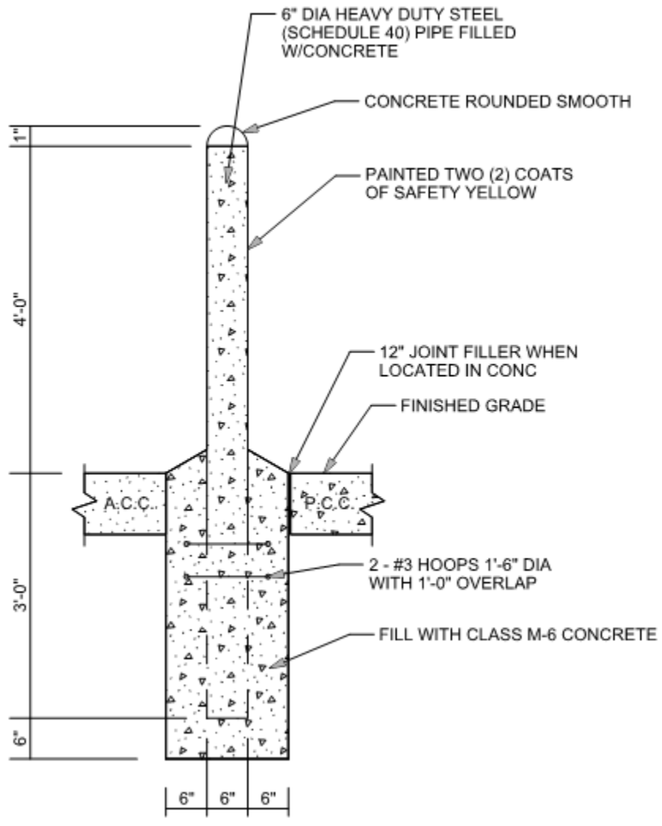

TABLE OF SUPERELEVATION

Station	to	Station	
19+00		61+74.00	Normal Crown Section
61+74.00		63+45.00	Superelevation Transition
63+45.00		64+34.14	1,140’ Radius Curve Right 4.6% Superelevation Rate Point of Rotation at Centerline
64+34.14		64+85.86	Superelevation Transition
64+85.86		69+92.79	1,140’ Radius Curve Right 6% Superelevation Rate Point of Rotation at Centerline
69+92.79		72+00	Superelevation Transition
72+00		80+45	Normal Crown Section

For road cross slope transitions for Station 15+00.00 to 19+00.00 please see the Pavement Transition Layout Sheet.

PUBLIC LANDS SURVEY SYSTEM, RIGHT OF WAY, AND PROPERTY CORNERS

The Contractor will have a Land Surveyor, licensed in the State of South Dakota, to set, reestablish or verify public land survey system (PLSS) corners, right of way (ROW) corners, and property corners as directed by the appropriate SDDOT Region Land Surveyor. It is estimated that 152 ROW and property corners will be set, reestablished, or verified for this project. The Contractor’s Land Surveyor, under the direction of the Region Land Surveyor, will set, reestablish, or verify all corner monuments after surfacing and fencing operations are completed in accordance with the PUBLIC LANDS SURVEY SYSTEM CORNERS section and the RIGHT OF WAY AND PROPERTY CORNERS section in Chapter 8 of the SDDOT Survey Manual.

< https://dot.sd.gov/doing-business/engineering/design-services/surveyors >

All costs associated with furnishing and installing PLSS caps, rebar, and all other materials associated with setting, reestablishing, or verifying PLSS, ROW corners, and property corners in accordance with the SDDOT Survey Manual will be incidental to the contract unit price per each for “Reestablish Public Land Survey System Corner” and/or “Reestablish Right-of-Way and Property Corner”.



Right of Way Marker

The Right of Way Marker and installation locations will conform to the detail on standard plate 900.15. Install Right of Way Markers 10 feet from both sides of entrances that are centered on property lines without fence, so that a marker is not placed in the entrance.

Station	L/R	Quantity (Each)
78+15.78	R	1
78+74.58	L	1
81+34.13	L	1
82+67.25	R	1
83+34.32	L	1
83+34.53	R	1
	Total:	6

Vibration Control for Buildings

Some buildings located throughout the project limits are adjacent to construction activities. Foundation walls are of unknown construction and condition. Depths and dimensions of the basements are also unknown. These structures may be susceptible to damage from construction vibrations.

Contractor will be responsible for any damage resulting from highway construction activities. Before any construction activities begin, the Contractor will furnish the Engineer a plan of operations showing proposed methods for the prevention of damage. In order to ensure adequate protection, the plan may be modified to meet the conditions that may develop.

The Contractor is advised to use caution during excavation activities adjacent to buildings. Size equipment to minimize construction vibrations. Additional consideration should be given to reduce the lift thickness when scarifying the subgrade and placing granular material.

All costs associated with controlling vibrations, including the building condition surveys, will be incidental to the contract lump sum price for “Incidental Work, Grading”.

Building Condition Surveys

The Contractor will arrange for pre-construction and post-construction surveys of the buildings identified to be at risk. The survey methods used will be acceptable to the Contractor's insurance company. The condition survey records will be made available to the Engineer for review. Owners and occupants of the building will be notified by the Contractor prior to the commencement of construction activities.



TABLE OF CONSTRUCTION STAKING

(See Special Provision for Contractor Staking)

					Grade Staking				
Roadway and Description	Begin Station	End Station	Number of Lanes	Length (Ft)	Length (Mile)	Lane Factor	*Sets of Stakes	**Grade Staking Quantity (Mile)	Miscellaneous Staking Quantity (Mile)
US 14/Euclid (Transitioning from 4 lanes to 3 lanes, PCC Pavement)	10+30.00	12+60.00	4	230	0.044	2	2	0.174	0.044
US 14/Euclid (3 lanes, PCC Pavement)	12+60.00	13+17.00	3	57	0.011	1.5	2	0.032	0.011
US 14/Euclid (2 lanes, PCC Pavement)	13+17.00	13+94.00	2	77	0.015	1	2	0.029	0.015
US 14/Euclid (3 lanes, PCC Pavement)	13+94.00	19+07.00	3	513	0.097	1.5	2	0.291	0.097
US 14/Euclid (3 lanes, ACC Pavement)	19+07.00	30+77.00	3	1170	0.222	1.5	1	0.332	0.222
US 14/Euclid (Transitioning from 3 lanes to 5 lanes, ACC Pavement)	30+77.00	33+06.00	5	229	0.043	2.5	1	0.108	0.043
US 14/Euclid (5 lanes, ACC Pavement)	33+06.00	34+43.00	5	137	0.026	2.5	1	0.065	0.026
US 14/Euclid (5 lanes, ACC Pavement)	34+43.00	36+54.00	5	211	0.040	2.5	1	0.100	0.040
US 14/Euclid (Transitioning from 5 lanes to 4 lanes, ACC Pavement)	36+54.00	37+69.00	5	115	0.022	2.5	1	0.054	0.022
US 14/Euclid (4 lanes, ACC Pavement)	37+69.00	43+38.00	4	569	0.108	2	1	0.216	0.108
US 14/Euclid (4 lanes, ACC Pavement)	43+38.00	77+74.00	4	3436	0.651	2	1	1.302	0.651
US 14/Euclid (4 lanes, ACC Pavement)	77+74.00	80+45.00	4	271	0.051	2	1	0.103	0.051
Elizabeth Street (3 lanes, ACC Pavement)	698+07.00	701+42.00	3	335	0.063	1.5	1	0.095	0.063
							Totals:	2.902	1.392

* 1 = Blue Top Stakes Only (Asphalt Concrete Pavement)
2 = Blue Top and Paving Hub Stakes (PCC Pavement)

** Grade Staking Quantity = (Length) x (Lane Factor) x (Sets of Stakes)

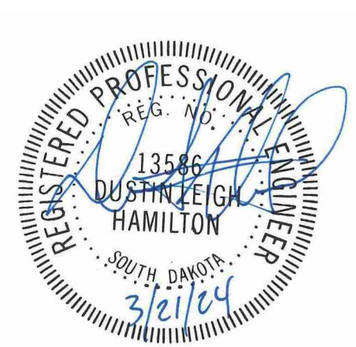

STATE OF SOUTH DAKOTA	PROJECT	SHEET	TOTAL SHEETS
	NH-CR 0014(185)229	B14	B151

PAVEMENT REMOVAL QUANTITIES

Station to Station		Concrete Pavement SqYd	Concrete Driveway Pavement SqYd	Concrete Sidewalk SqYd	Concrete Curb and/or Gutter Ft
Sioux Ave. West. to Pleasant Dr. East					
9+50 R	15+00 R	462.4	142.4	766.9	374.9
9+50 L	15+00 L	462.4	85.8	596.2	409.9
Pleasant Dr. East. to Capital Ave. East.					
15+00 R	21+85 R		259.5	575.8	699.7
15+00 L	21+85 L	508.2	129.5	629.3	691.6
Capital Ave. East. to Prospect Ave. East.					
21+85 R	25+94 R		84.0	330.0	356.5
21+85 L	25+94 L		32.6	323.0	407.6
Prospect Ave. East. to Broadway Ave. East.					
25+94 R	30+25 R		102.5	277.5	368.2
25+94 L	30+25 L		45.4	332.1	418.2
Broadway Ave. East. to Wynoka St. East.					
30+25 R	34+07 R		0.0	362.7	441.4
30+25 L	33+99 L		33.7	267.3	405.1
Wynoka St. East. to Oak St. East					
34+07 R	39+51 R		92.2	334.9	550.7
33+99 L	39+47 L		38.5	336.9	574.4
Oak St. East. to Seneca St. East.					
39+51 R	43+36 R		150.5	193.3	347.5
39+47 L	43+33 L		33.2	231.2	411.9
Seneca St. East. to Elizabeth St. East.					
43+36 R	47+20 R		21.1	211.7	393.8
43+33 L	47+20 L		0.0	265.4	476.7
Elizabeth St. East. to 1st St. East.					
47+20 R	50+36 R		132.8	248.1	288.1
47+20 L	50+36 L		19.9	181.1	366.7
1st St. East. to 2nd St. East.					
50+36 R	53+62 R		134.2	226.0	303.5
50+36 L	53+62 L		30.2	212.0	361.2
2nd St. East. to 3rd St. East.					
53+62 R	56+87 R		104.5	484.2	307.3
53+62 L	56+87 L		69.4	222.4	319.7
3rd St. East. to 4th St. East.					
56+87 R	60+40 R		182.7	379.8	309.2
56+87 L	60+40 L		212.4	138.4	308.9
4th St. East. to 5th St. East.					
60+40 R	63+70 R		92.8	70.6	344.2
60+40 L	63+70 L		79.0	242.9	365.7
5th St. East. to 6th St. East.					
63+70 R	67+15 R		0.0	174.6	385.7
63+70 L	67+05 L		0.0	254.8	462.5
6th St. East. to 7th St. East.					
67+15 R	70+32 R		21.4	22.1	314.7
67+05 L	70+32 L		0.0	24.4	402.4
7th St. East. to 8th St. East.					
70+32 R	74+54 R		0.0	0.0	343
70+32 L	74+54 L		48.8	174.5	467.7
8th St. East. to 80+45					
74+54 R	80+45 R		0.0	0.0	863.3
74+54 L	80+45 L		22.2	0.0	887.1
Elizabeth St. East. to Maineline					
698+06 R	701+08 R		166.1	117.0	222.8
698+06 L	701+08 L		139.3	96.3	179.4
Wynoka St. East. to Maineline					
926+79 R	940+00 R		4.6	0.0	84.0
926+79 L	940+00 L		0.0	80.0	0
	Total:	1433	2711.3	9383.3	15215.2

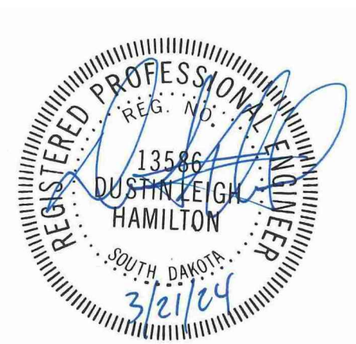

STATE OF SOUTH DAKOTA	PROJECT	SHEET	TOTAL SHEETS
	NH-CR 0014(185)229	B15	B151

PAVEMENT, CURB AND GUTTER, AND SIDEWALK QUANTITIES

Station	to Station	Concrete Curb and Gutter Type B 66	Concrete Curb and Gutter Type B 68	Concrete Gutter Type P 6"	Concrete Gutter Type P 8"	Concrete Gutter Valley 8"	Concrete Fillet 8"	PCC Approach Pavement Type A 8"	Barrier Type Median PCC Pavement 4"	Concrete Sidew alk 4"	Concrete Sidew alk 6"	Detectable Warning Type 1	Colored Concrete Sidew alk
		Ft	Ft	Ft	Ft	SqYd	SqYd	SqYd	SqYd	SqFt	SqFt	SqFt	SqFt
US14 (PCN 026Z)													
9+50 R	15+00 R		637.5		30.0		36.28	232.1	344.6	0.0	4682.8	78.0	3182.3
9+50 L	15+00 L		703.8		40.0		50.9	139.7		0.0	5596.7	80.0	4469.0
15+00 R	21+85 R	454.9	248.5	148.0			36.5	173.4		165.1	6253.2	96.0	2288.7
15+00 L	21+85 L	495.1	253.2	78.0		39.7	154.2	418.3		2882.5	715.6	100.0	3434.4
21+85 R	25+94 R	370.1		54.0			39.8	130.8		306.7	3003.5	51.0	1241.1
21+85 L	25+94 L	480.7		24.0			27.2	36.1		1855.6	156.5	30.0	1679.4
25+94 R	30+25 R	405.9		72.0			39.7	241.5		167.8	3238.6	56.0	1049.0
25+94 L	30+25 L	426.9		68.0		25.2	28.0	100.2		1928.9	339.2	40.0	1503.9
30+25 R	34+07 R	450.0					56.4	0.0		58.2	4300.1	65.0	44.0
30+25 L	33+99 L	381.8		30.0		19.2	62.3	47.3		1723.2	290.1	40.0	681.9
34+07 R	39+51 R	562.4		20.0			52.9	84.5		135.2	5305.1	60.0	379.0
33+99 L	39+47 L	566.9		20.0		30.2	51.0	49.0		2612.6	494.2	40.0	15.0
39+51 R	43+36 R	370.4		50.0			51.9	155.4		132.7	3275.8	60.0	55.6
39+47 L	43+33 L	412.9		20.0		29.3	51.9	39.0		1763.0	465.9	40.0	21.8
43+36 R	47+20 R	386.3		16.0		22.7	51.9	43.7		92.3	3560.2	60.0	33.5
43+33 L	47+20 L	467.5				29.3	51.8	0.0		1749.9	662.1	40.0	61.9
47+20 R	50+36 R	283.2		62.0			51.8	171.4		74.3	2658.3	50.0	963.6
47+20 L	50+36 L	360.6		10.0		17.2	51.9	30.3		1275.6	704.9	42.0	141.8
50+36 R	53+62 R	327.8		40.0			51.9	117.3		106.0	3006.5	55.0	522.8
50+36 L	53+62 L	349.7		12.0		17.4	51.9	32.9		1295.8	527.2	38.0	102.1
53+62 R	56+87 R	322.1		24.0			25.9	80.0		0.0	3480.1	50.0	2095.9
53+62 L	56+87 L	309.0		32.0			51.9	70.0		527.2	1295.8	45.0	484.6
56+87 R	60+40 R	362.2		24.0		39.1	26.0	215.2		0.0	3371.2	48.0	2335.6
56+87 L	60+40 L	345.2		40.0			51.7	105.1		1281.7	508.8	46.0	548.1
60+40 R	63+70 R	323.9		56.0		31.0	51.4	159.4		0.0	2716.8	70.0	723.9
60+40 L	63+70 L	362.9		32.0			52.4	84.3		1052.2	647.8	45.0	472.2
63+70 R	67+15 R	368.8		20.0		33.2	46.3	44.0		0.0	3190.3	68.0	134.3
63+70 L	67+05 L	464.4					43.7	0.0		1524.7	967.6	44.0	137.6
67+15 R	70+32 R	291.6		30.0			50.4	99.4		0.0	3483.6	47.0	16.7
67+05 L	70+32 L	367.7					29.8	0.0		123.4	1760.1	43.0	44.8
70+32 R	74+54 R	390.8		30.0				150.3		0.0	4167.7	20.0	0.0
70+32 L	74+54 L	429.7		24.0			32.3	44.8		425.1917	1787.6	40.0	111.2
74+54 R	80+45 R	559.9		30.0				167.5		0.0	4703.5	10.0	251.4
74+54 L	80+45 L	606.3		30.0			20.3	23.3		105.1	320.8	30.0	22.7
Wynoka Street (PCN 026Z)													0.0
926+79 R	940+00 R	81.9		20.0			9.8	17.8		69.6	327.1	10.0	0.0
926+79 L	940+00 L	0.0						0.0		0.0	942.0		0.0
Elizabeth Street (PCN 026Z)													0.0
698+06 R	702+00 R	212.1		88.0				109.9		318.9	703.2		0.0
698+06 L	702+00 L	211.6		68.0				123.1		319.7	502.1		0.0
Subtotal:		13563	1843	1272	70	333.5	1542.0	3736.7	344.6	24073	84113	1737.0	29250



STATE OF SOUTH DAKOTA	PROJECT	SHEET	TOTAL SHEETS
	NH-CR 0014(185)229	B16	B151

REV 04-16-24 GE
REV 08-12-24 GE
REV 08-27-24 GE

TABLE OF STORM SEWER DROP INLETS AND JUNCTION BOXES

Station	Offset		Inlet Type	Class M6 Concrete (CuYd)	Reinforcing Steel (Lb)	Frame and Grate / Lid				
						Type B (Each)	Precast 6" Drop Inlet Collar (Each)	48" Manhole Riser Section (Ft)	Type A9 (Each)	4'x11' Type S Lid (Each)
10+86.22	32'	R	DOT 7x11 Type S	5.50	1767.4					1
10+86.23	36.70'	L	DOT 2x3 Type B	1.20	206.5	1	1			
12+07.88	28.42'	R	DOT 7x11 Type S	5.20	1714.4					1
13+92.19	16.50'	R	DOT 7x7 JB	9.00	1830.5					
13+92.19	26.50	R	DOT 4x11 Type S	2.70	623.6					1
13+93.45	26.18'	L	DOT 2x3 Type B	1.10	191.7	1	1			
16+57.34	17.17'	R	DOT 4x4 Type B	2.50	433.5	1	1			
906+02.12	27.42	R	DOT 2x3 Type B	1.10	191.7	1	1			
906+20.24	24.44'	L	DOT 2x3 Type B	1.10	191.1	1	1			
906+66.83	46.09'	L	DOT 2x3 Type B	0.70	142.1	1	1			
906+83.13	47.23	L	DOT 2x3 Type B	0.70	142.1	1	1			
909+25.00	17.17'	R	DOT 4x4 Type B	2.20	397.3	1	1			
18+49.31	25.13'	L	DOT 2x3 Type B	0.90	165.0	1	1			
18+49.60	26.17'	R	DOT 4x4 Type B	2.40	403.0	1	1			
19+16.19	25.17'	L	DOT 2x3 Type B	0.80	156.0	1	1			
19+16.19	25.18	R	DOT 4x4 Type B	2.30	390.8	1	1			
20+81.06	25.18'	L	DOT 2x3 Type B	0.80	156.3	1	1			
20+81.06	25.18	R	DOT 4x4 Type B	2.30	391.2	1	1			
911+91.45	27.11	L	DOT 2x3 Type B	0.90	162.7	1	1			
22+60.65	25.00'	L	DOT 3x4 Type B	2.00	306.0	1	1			
22+80.00	17.50'	R	DOT 2x3 Type B	1.10	191.1	1	1			
912+14.69	27.04	R	DOT 2x3 Type B	1.10	191.4	1	1			
915+81.45	25.98'	R	DOT 2x3 Type B	1.10	191.1	1	1			
26+70.64	26.18'	L	DOT 2x3 Type B	1.10	202.7	1	1			
26+69.79	27.64'	R	DOT 2x3 Type B	0.80	157.2	1	1			
28+59.79	26.14'	L	DOT 2x3 Type B	1.00	192.0	1	1			
28+70.94	17.50'	R	DOT 2x3 Type B	1.10	191.4	1	1			
920+90.00	20.67'	R	DOT 2x3 Type B	1.10	191.1	1	1			
30+89.39	18.53'	L	DOT 3x4 Type B	1.90	275.6	1	1			
30+90+78	28.00'	R	DOT 2x3 Type B	1.40	246.7	1	1			
32+61.04	26.45'	L	DOT 2x3 Type B	0.90	177.5	1	1			
32+61.05	28.50'	R	DOT 2x3 Type B	0.90	168.2	1	1			
34+82.01	28.50'	L	DOT 2x3 Type B	1.00	191.4	1	1			
34+84.28	34.83'	R	DOT 5.5x5.5 Type B	6.70	1011.1	1	1			
925+45.22	11.80'	L	DOT 2x3 Type B	1.10	192.0	1	1			
925+45.22	11.80'	R	DOT 2x3 Type B	1.00	191.7	1	1			
37+08.13	25.90'	L	DOT 2x3 Type B	1.10	192.3	1	1			
37+08.13	32.90'	R	DOT 5.5x5.5 Type B	6.70	1011.1	1	1			
39+08.00	22.00'	R	DOT 5.5x5.5 Type B	6.70	1011.1	1	1			
930+49.22	19.18'	L	DOT 2x3 Type B	1.10	191.1	1	1			
930+49.22	18.17'	R	DOT 2x3 Type B	1.00	190.8	1	1			
40+25.13	31.00'	L	DOT 2x3 Type B	1.10	191.7	1	1			
40+25.13	30.50'	R	DOT 5.5x5.5 Type B	6.70	1011.1	1	1			
41+83.13	30.50'	R	DOT 5.5x5.5 Type B	6.70	1011.1	1	1			
			Total	99.80	18734.89	40.00	40.00	0.00	0.00	3.00



STATE OF SOUTH DAKOTA	PROJECT	SHEET	TOTAL SHEETS
	NH-CR 0014(185)229	B17	B151

REV 04-16-24 GE
REV 08-12-24 GE

TABLE OF STORM SEWER DROP INLETS AND JUNCTION BOXES CONT.

					Frame and Grate / Lid				
Station	Offset		Inlet Type	Class M6 Concrete (CuYd)	Reinforcing Steel (Lb)	Type B (Each)	Precast 6" Drop Inlet Collar (Each)	48" Manhole Riser Section (Ft)	Type A9 (Each)	4'x11' Type S Lid (Each)
935+75.00	18.17'	L	DOT 2x3 Type B	1.10	191.7	1	1			
935+75.00	18.17'	R	DOT 2x3 Type B	1.10	194.0	1	1			
43+78.13	23.17'	R	DOT 3x5.5 Type B	2.50	302.9	1	1			
43+78.13	23.00'	L	DOT 2x3 Type B	1.00	173.7	1	1			
45+57.89	28.50'	L	DOT 2x3 Type B	1.10	192.0	1	1			
45+58.13	28.67'	R	DOT 3x5.5 Type B	2.50	298.2	1	1			
701+35.00	18.17'	L	DOT 2x3 Type B	1.10	190.8	1	1			
701+35.00	18.17'	R	DOT 2x3 Type B	1.00	191.1	1	1			
47+78.13	28.67'	R	DOT 4x4 Type B	2.50	426.1	1	1			
47+78.13	28.67'	L	DOT 2x3 Type B	1.10	188.8	1	1			
49+83.13	28.50'	R	DOT 4x4 Type B	2.20	368.5	1	1			
49+83.13	28.67'	L	DOT 2x3 Type B	1.00	185.3	1	1			
50+88.13	29.17'	R	DOT 3x4 Type B	1.70	267.6	1	1			
50+88.13	29.17'	L	DOT 2x3 Type B	0.90	168.5	1	1			
52+68.13	29.17'	R	DOT 3x4 Type B	2.00	303.0	1	1			
52+68.13	29.17'	L	DOT 2x3 Type B	1.10	196.9	1	1			
54+13.13	29.17'	R	DOT 2x3 Type B	1.00	199.5	1	1			
54+13.13	29.17'	L	DOT 2x3 Type B	1.10	191.4	1	1			
55+63.10	29.17'	L	DOT 2x3 Type B	1.10	190.8	1	1			
55+63.10	29.29'	R	DOT 2x3 Type B	1.00	199.2	1	1			
57+38.13	29.17'	L	DOT 2x3 Type B	1.10	192.0	1	1			
57+38.13	29.17'	R	DOT 2x3 Type B	1.10	200.1	1	1			
61+03.13	28.17'	L	DOT 4x4 Type B	2.10	343.2	1	1			
61+03.13	28.17'	R	DOT 4x4 Type B	2.40	383.3	1	1			
62+01.11	28.17'	R	DOT 2x3 Type B	1.20	200.1	1	1			
62+98.12	28.17'	R	DOT 2x3 Type B	1.00	178.6	1	1			
64+78.13	29.17'	R	DOT 2x3 Type B	1.10	191.7	1	1			
956+58.00	18.10'	R	DOT 2x3 Type B	1.60	260.3	1	1			
66+28.13	28.17'	R	DOT 3x4 Type B	2.00	291.4	1	1			
67+78.13	28.17'	R	DOT 3x4 Type B	1.90	287.0	1	1			
69+28.13	28.17'	R	DOT 3x4 Type B	2.10	312.2	1	1			
70+78.13	29.17'	R	DOT 3x4 Type B	1.90	286.6	1	1			
71+88.13	29.17'	R	DOT 3x4 Type B	1.70	272.0	1	1			
71+88.13	29.17'	L	DOT 2x3 Type B	1.10	190.5	1	1			
73+93.13	28.67'	R	DOT 2x3 Type B	1.00	199.5	1	1			
73+93.13	28.67'	L	DOT 2x3 Type B	1.10	191.7	1	1			
74+98.13	29.17'	R	DOT 2x3 Type B	1.00	191.1	1	1			
75+18.13	29.17'	L	DOT 2x3 Type B	1.10	192.3	1	1			
75+88.03	29.17'	R	DOT 2x3 Type B	1.00	190.8	1	1			
77+83.81	31.50'	R	DOT 2x3 Type B	1.10	198.1	1	1			
77+84.77	4.20'	R	DOT 2x3 Type B	1.20	211.1	1	1			
77+85.07	3.83'	L	DOT 2x3 Type B	1.20	211.1	1	1			
77+86.64	29.17'	L	DOT 2x3 Type B	1.10	191.4	1	1			
929+82.21	17.70'	R	DOT 2x3 Type B	0.60	132.0	1	1			
			Total	60.80	10117.47	44.00	44.00	0.00	0.00	0.00

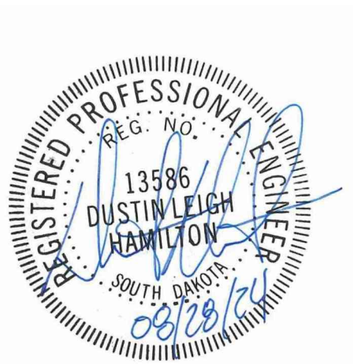

STATE OF SOUTH DAKOTA	PROJECT	SHEET	TOTAL SHEETS
	NH-CR 0014(185)229	B18	B151

REV 04-16-24 GE
REV 08-12-24 GE
REV 08-27-24 GE

TABLE OF STORM SEWER DROP INLETS AND JUNCTION BOXES CONT.

					Frame and Grate / Lid				
Station	Offset		Inlet Type	Class M6 Concrete (CuYd)	Reinforcing Steel (Lb)	Type B (Each)	Precast 6" Drop Inlet Collar (Each)	48" Manhole Riser Section (Ft)	Type A9 (Each)	4'x11' Type S Lid (Each)
10+15.14	21.70'	L	DOT 7x7 JB	8.90	1795.9			1.25	1	
10+34.27	28.94'	R	DOT 7x7 JB	6.80	1450.3			1.25	1	
12+84.39	32.11'	R	DOT 7x7 JB	6.30	1363.9			1.25	1	
15+54.21	0'	L	DOT 6x6 JB	5.90	1288.5			1.25	1	
906+10.60	4.05'	R	DOT 5x5 JB	3.60	679.3			1.25	1	
906+75.16	45.60'	L	DOT 5x5 JB	3.10	592.7			1.25	1	
910+20.99	9.55'	R	DOT 5x5 JB	3.60	641.3			1.25	1	
21+55.54	28.27'	L	DOT 5x5 JB	4.50	802.4			1.25	1	
911+92.93	27.07'	R	DOT 5x5 JB	3.40	626.1			1.25	1	
21+55.62	25.18	R	DOT 5x5 JB	3.70	845.0			1.25	1	
25+69.15	28.66'	L	DOT 5x5 JB	3.70	673.2			1.25	1	
30+01.19	27.73'	L	DOT 5x5 JB	3.70	664.1			1.25	1	
33+93.49	41.46'	R	DOT 6x6 JB	8.10	1621.1			1.25	1	
43+15.13	23.17'	R	DOT 5x5 JB	4.20	805.5			1.25	1	
47+01.59	28.77'	R	DOT 5x5 JB	3.80	750.0			1.25	1	
61+03.12	5.50'	R	DOT 5x5 JB	3.90	736.3			1.25	1	
62+01.58	5.50'	R	DOT 5x5 JB	3.90	717.3			1.25	1	
62+98.12	5.50'	R	DOT 5x5 JB	3.90	730.2			1.25	1	
63+52.32	5.50'	R	DOT 5x5 JB	3.80	710.5			1.25	1	
64+78.13	5.50'	R	DOT 5x5 JB	4.30	776.6			1.25	1	
714+24.23	10.42'	R	DOT 5x5 JB	3.70	649.7			1.25	1	
66+30.00	5.50'	R	DOT 5x5 JB	4.30	778.1			1.25	1	
67+60.35	5.30'	R	DOT 5x5 JB	4.10	729.5			1.25	1	
926+41.29	14.43'	R	DOT 6x6 JB	7.80	1564.7			1.25	1	
927+31.50	7.41'	R	DOT 6x6 JB	7.00	1408.3			1.25	1	
929+84.60	9.42'	R	DOT 6x6 JB	4.90	1049.9			1.25	1	
930+23.03	11.68'	R	DOT 6x6 JB	6.50	1318.2			1.25	1	
932+73.25	9.02'	R	DOT 6x6 JB	8.20	1621.1			1.25	1	
933+47.48	7.96'	R	DOT 6x6 JB	8.20	1621.1			1.25	1	
935+00.76	5.82'	R	DOT 6x6 JB	5.00	1064.7			1.25	1	
935+54.14	82.21'	L	DOT 6x6 JB	5.80	1198.4			1.25	1	
936+15.00	82.39'	L	DOT 6x6 JB	8.20	1615.2			1.25	1	
938+35.38	83.47'	L	DOT 7x7 JB	6.70	1437.4			1.25	1	
			Total	173.5	34326.4	0.0	0.0	41.3	33.0	0.0
			Grand Total	334.10	63178.74	84.00	84.00	41.25	33.00	3.00



STATE OF SOUTH DAKOTA	PROJECT	SHEET	TOTAL SHEETS
	NH-CR 0014(185)229	B19	B151

REV 08-12-24 GE
REV 08-27-24 GE

	Reinforced Concrete										CMP		PVC
	Circular							Arch	Flared Ends	Pipe Cap	Circular	Elbow	
Station Offset (L/R)	18" Cl. 2 Ft	24" Cl.2 Ft	30" Cl. 2 Ft	36" Cl. 2 Ft	42" Cl.2 Ft	54" Cl.2 Ft	60" Cl.2 Ft	54" Cl.2 Ft	60" Each	18" Each	42" Ft	42" 10° Each	8" Ft
US14 Euclid													
10+15-21.70' L to 10+34-28.94' R								48					
10+34-28.94' R to 10+86-32' R								48					
10+86-36.70' L to 10+86-32' R	68												
10+86-32' R to 12+08-26.07' R								120					
12+40-39.11' L to 12+08-28.42' R	68												
12+08-28.42' R to 12+78-32.11' R								72					
12+78-32.11' R to 12+78-52' R	22												
12+78-32.11' R to 13+92-26.50' R								110					
13+92-20.60' R to 13+92-26.17' R	6												
13+93-26.18' L to 13+92-24.39' R	38												
13+92-24.39' R to 15+54-0' L						162							
906+67-46.09' L to 906+75-45.60' L	6												
906+83-47.23' L to 906+75-45.60' L	8												
15+54-0' L to 16+57-16.75' R				98									
906+02-27.42' R to 906+11-4.05' R	22												
906+20-24.44' L to 906+11-4.05' R	28												
906+75-45.60' L to 15+54-0' L		72											
906+11-4.05' R to 15+54-0' L			122										
15+65-70.71' L to 15+77-85.85' L		28											
16+57-16.75' R to 17+59-35' R				132									
909+25-16.50' R to 910+21-7.80' R		76											
18+49-25.13' L to 18+50-26.17' R	50												
17+59-35' R to 18+49-25.13' L			110										
19+16-25.17' L to 18+49-25.13' L			68										
19+16-33.96' L to 19+16-25.17' L													10
19+16-26.17' L to 19+16-25.18' R	50												
20+81-25.18' L to 19+16-25.17' L			166										
20+81-33.63' L to 20+81-25.18' L													10
20+81-26.18' L to 20+81-25.18' R	50												
21+56-28.27' L to 20+81-25.18' L			76										
911+91-26.11' L to 911+93-24.57' R	52												
912+15-27.04' R to 911+93+27.07' R	22												
911+93-34.47' R to 911+93-27.07' R													8
911+93-27.07' R to 21+56-25.18' R	22												
21+56-28.27' L to 21+56-25.18' R		54											
22+61-25.67' L to 21+56-28.27' L		106											
22+84-25.50' R to 22+61-25' L	54												
25+69-28.66' L to 22+61-25' L		304											
Totals:	566	640	542	230	0	162	0	398	0	0	0	0	28

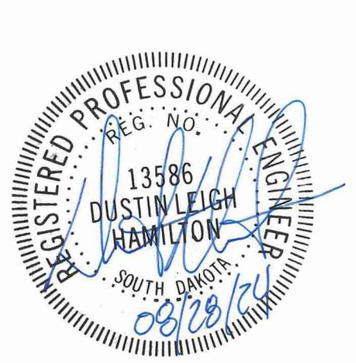

STATE OF SOUTH DAKOTA	PROJECT	SHEET	TOTAL SHEETS
	NH-CR 0014(185)229	B20	B151

	Reinforced Concrete										CMP		PVC
	Circular							Arch	Flared Ends	Pipe Cap	Circular	Elbow	
Station Offset (L/R)	18" Cl. 2 Ft	24" Cl.2 Ft	30" Cl. 2 Ft	36" Cl. 2 Ft	42" Cl.2 Ft	54" Cl.2 Ft	60" Cl.2 Ft	54" Cl.2 Ft	60" Each	18" Each	42" Ft	42" 10° Each	8" Ft
915+81-25.98' R to 25+69-28.66' L	36												
26+71-26.18' L to 25+69-28.66' L	108												
26+70-27.64' R to 26+71-26.18' L	54												
28+60-26.14' L to 26+71-26.18' L	190												
28+71-17.50' R to 28+60-26.14' L	46												
30+01-27.73' L to 28+60-26.14' L	138												
920+90-20.67' R to 30+01-27.73' L	34												
30+89-18.53' L to 30+01-27.73' L	88												
30+91-28' R to 30+89-18.53' L	44												
32+61-26.45' L to 30+89-18.53' L	190												
32+61-26.45' L to 32+61-28.50' R	56												
925+45-11.80' L to 925+45-11.80' R	22												
925+45-11.80' R to 33+93-41.46' R	96												
33+95-36.17' R to 927+26-7.41' R					92								
34+84-34.83' R to 33+93-41.46' R					88								
37+08-32.90' R to 34+84-34.83' R					220								
37+08-25.90' L to 37+08-32.90' R	56												
39+08-22' R to 37+08-32.90' R					194								
930+49-19.18' L to 930+49-18.17' R	36												
930+49-18.17' R to 39+08-22' R	74												
40+25-30.50' R to 39+08-22' R					114								
40+25-31' L to 40+25-30.50' R	58												
41+83-30.50' R to 40+25-30.50' R					154								
43+15-23.17' R to 41+83-30.50' R					132								
935+75-18.17' L to 935+75-18.17' R	36												
935+75-18.17' R to 43+15-23.17' R	78												
43+78-23.17' R to 43+15-23.17' R					62								
43+78-23' L to 43+78-23.17' R	44												
45+58-28.67' R to 43+78-23.17' R				178									
45+58-28.50' L to 45+58-28.67' R	56												
47+02-28.77' R to 45+58-28.67' R				142									
701+35-18.17' L to 701+35-18.17' R	36												
701+35-18.17' R to 47+02-28.77' R	88												
47+78-28.67' R to 47+02-28.77' R				74									
47+78-28.67' L to 47+78-28.67' R	54												
47+02-28.77' R to 702+57-18.98' R	32									1			
49+83-28.67' R to 47+78-28.67' R				202									
49+83-28.67' L to 49+83-28.50' R	56												
49+83-28.50' R to 50+88-29.17' R		102											
50+88-29.17' L to 50+88-29.17' R	56												
50+88-29.17' R to 52+68-29.17' R		176											
52+68-29.17' L to 52+68-29.17' R	56												
52+68-29.17' R to 54+13-29.17' R	142												
Totals:	2060	278	0	596	1056	0	0	0	0	1	0	0	0

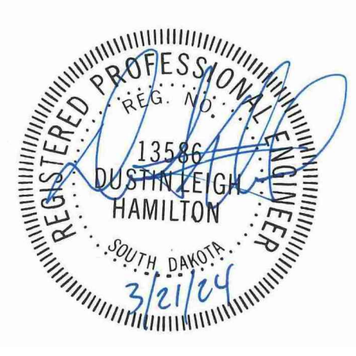

STATE OF SOUTH DAKOTA	PROJECT	SHEET	TOTAL SHEETS
	NH-CR 0014(185)229	B21	B151

REV 08-12-24 GE
REV 08-27-24 GE

	Reinforced Concrete										CMP		PVC
	Circular							Arch	Flared Ends	Pipe Cap	Circular	Elbow	
Station Offset (L/R)	18" Cl. 2 Ft	24" Cl.2 Ft	30" Cl. 2 Ft	36" Cl. 2 Ft	42" Cl.2 Ft	54" Cl.2 Ft	60" Cl.2 Ft	54" Cl.2 Ft	60" Each	18" Each	42" Ft	42" 10° Each	8" Ft
54+13-29.17' L to 54+13-29.17' R	58												
55+63-29.17' R to 54+13-29.17' R	148												
55+65-29.29' R to 55+63-29.17' L	58												
57+38-29.17' R to 55+63-29.17' R	172												
57+38-29.17' L to 57+38-29.17' R	58												
61+03-5.50' R to 61+03-28.17' R		20											
61+03-28.17' L to 61+03-5.50' R		30											
61+03-28.17' R to 714+24-10.42' R		70											
62+02-5.50' R to 61+03-5.50' R		100											
62+01-28.17' R to 62+02-5.50' R	22												
62+98-5.50' R to 62+02+5.50' R		98											
62+98-28.17' R to 62+98-5.50' R	22												
63+52-5.50' R to 62+98-5.50' R		54											
956+58-18.10' R to 63+52-5.50' R	52												
64+78-5.50' R to 63+52-5.50' R		126											
64+78-29.17' R to 64+78-5.50' R	24												
66+30-5.50' R to 64+78-5.50' R		152											
66+28-28.17' R to 66+30-5.50' R	24												
67+60-5.30' R to 66+30-5.50' R		132											
67+78-28.17' R to 67+60-5.30' R		28											
69+28-28.17' R to 67+78-28.17' R		150											
70+78-29.17' R to 69+28-28.17' R		150											
71+88-29.17' R to 70+78-29.17' R	110												
71+88-29.17' L to 71+88-29.17' R	58												
73+93-28.67' R to 71+88-29.17' R	206												
73+93-28.67' L to 73+93-28.67' R	58												
74+98-29.17' R to 73+93-28.67' R	106												
75+18-29.17' L to 74+98-29.17' R	60												
75+88-29.17' R to 74+98-29.17' R	90												
77+83-31.50' R to 75+88-29.17' R	196												
77+85-4.20' R to 77+84-31.50' R	26												
77+85-3.83' L to 77+85-4.20' R	8												
77+87-29.17' L to 77+85-3.83' L	26												
Wynoka Street													
926+41-14.43' R to 927+32-7.41' R					86								
927+32-7.41' R to 929+85-9.42' R					248								
929+82-17.70' R to 929+85-9.42' R	6												
929+85-9.42' R to 930+23-11.68' R					34								
930+23-11.68' R to 932+73-9.02' R					250								
932+73.9.02' R to 933+53-7.96' R					80								
933+53-7.96' R to 935+06-5.82' R					20						164	1	
935+06-5.82' R to 935+59-82.21' L					8						76	1	
935+29-82.21' L to 936+20-82.39' L											62		
936+20-82.39' L to 938+35-83.47' L					282								
938+35-83.47' L to 936+02-83.96' L							64		1				
Totals:	1588	1110	0	0	1008	0	64	0	1	0	302	2	0
Grand Total:	4214	2028	542	826	2064	162	64	398	1	1	302	2	28

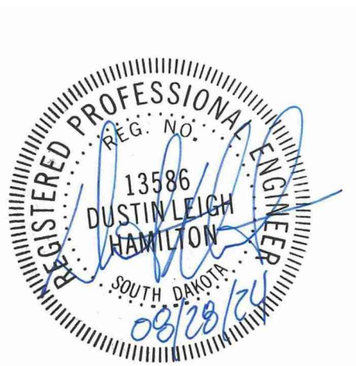

STATE OF SOUTH DAKOTA	PROJECT	SHEET	TOTAL SHEETS
	NH-CR 0014(185)229	B22	B151

TYPICAL GRADING SECTIONS

EUCLID AVENUE MAINLINE

10+30 to 12+60

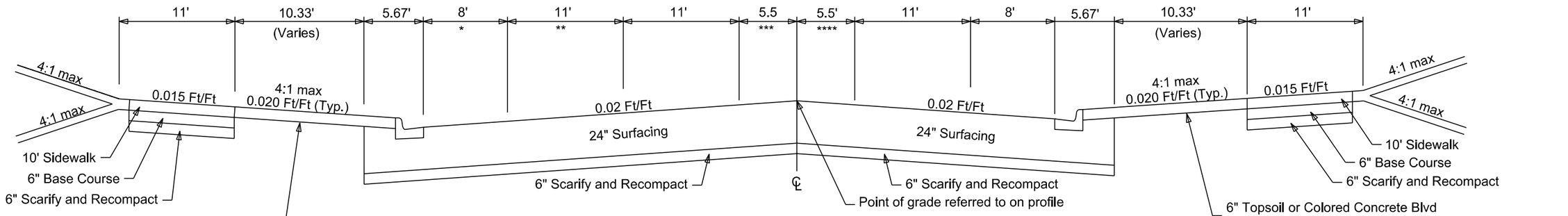

Transitions:
* 10+30 to 10+65 - 0'
10+65 to 10+84 - 0' to 13'
10+84 to 11+16 - 13'
11+16 to 11+20 - 13' to 8'

Transitions:
** 11+10 to 12+60 - 11' to 0'

Transitions:
*** 10+30 to 11+10 - 0'
11+10 to 12+60 - 0' to 5.5'

Transitions:
**** 10+30 to 11+10 - 11'
11+10 to 12+60 - 11' to 5.5'

- Surfacing to transition from 24" to 20" from 10+60 to 13+17 and from 20" to 24" from 13+94 to 15+50 by transitioning the granular material between 12" and 16".

EUCLID AVENUE MAINLINE

12+60 to 13+17
13+94 to 19+07

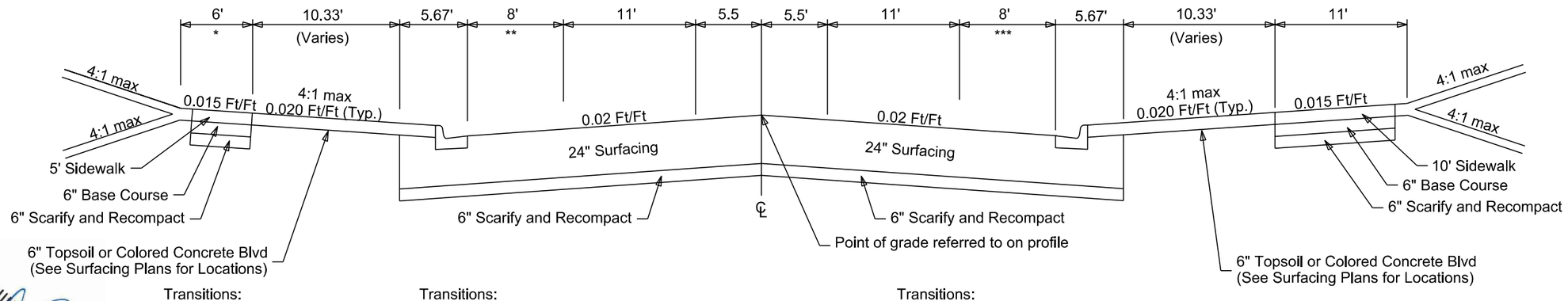

Transitions:
* 12+60 to 15+48 - 11'

Transitions:
** 14+70 to 14+91 - 8' to 0'
14+91 to 16+09 - 8' to 4'
16+09 to 17+11 - 4'
17+11 to 18+25 - 4' to 0'
18+25 to 18+46 - 0' to 8'
18+46 to 19+07 - 8'

Transitions:
*** 14+42 to 14+62 - 8' to 0'
14+62 to 17+21 - 0'
17+21 to 18+05 - 0' to 8'
18+05 to 19+07 - 8'

- Surfacing to transition from 24" to 20" from 10+60 to 13+17 and from 20" to 24" from 13+94 to 15+50 by transitioning the granular material between 12" and 16".

REGISTERED PROFESSIONAL ENGINEER
REG. NO.
13586
DUSTIN LEIGH
HAMILTON
SOUTH DAKOTA
3/21/24

STATE OF SOUTH DAKOTA	PROJECT	SHEET	TOTAL SHEETS
	NH-CR 0014(185)229	B23	B151

TYPICAL GRADING SECTIONS

EUCLID AVENUE MAINLINE

13+17 to 13+94

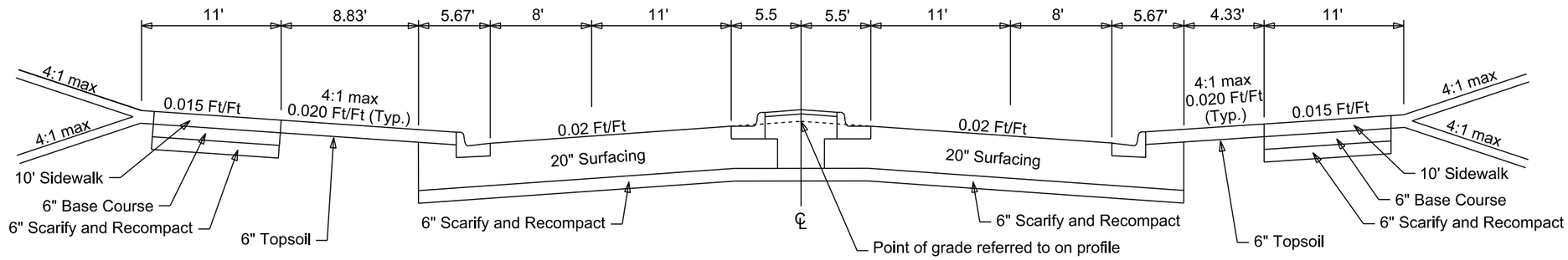

- Surfacing to transition from 24" to 20" from 10+60 to 13+17 and from 20" to 24" from 13+94 to 15+50 by transitioning the granular material between 12" and 16".

EUCLID AVENUE MAINLINE

19+07 to 30+77

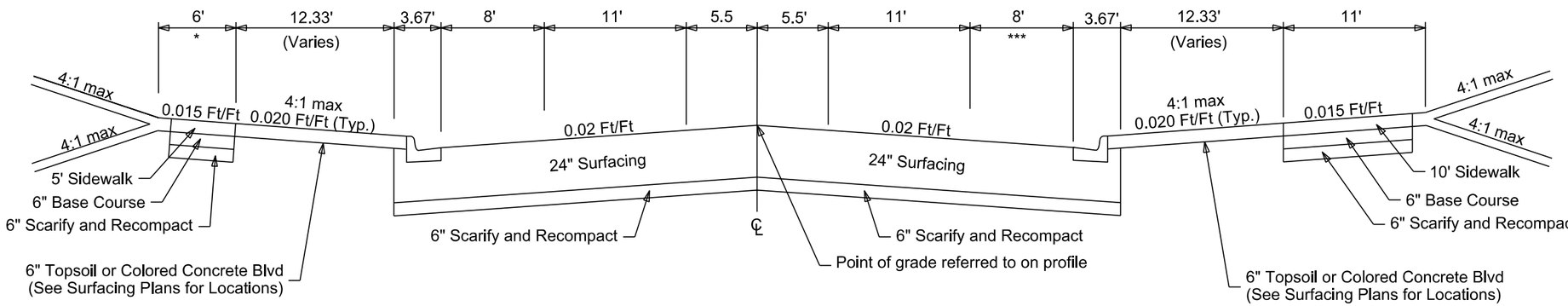

Transitions:
*** 19+07 to 25+56 - 8'
25+56 to 26+31 - 8' to 15.6'
26+31 to 26+84 - 15.6' to 8'
26+84 to 27+70 - 8'
27+70 to 27+90 - 8' to 0'
27+90 to 30+77 - 0'

- Surfacing to transition from 24" to 20" from 10+60 to 13+17 and from 20" to 24" from 13+94 to 15+50 by transitioning the granular material between 12" and 16".

EUCLID AVENUE MAINLINE

30+77 to 34+43

43+38 to 77+74

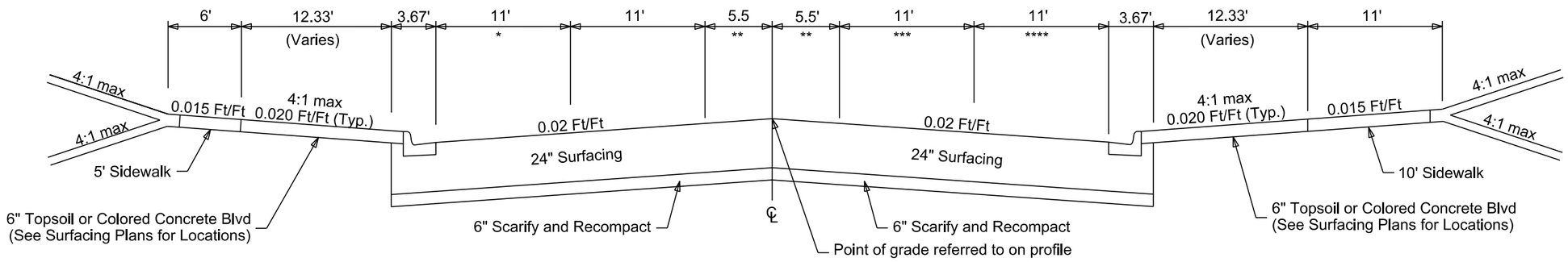

Transitions:
* 30+77 to 33+06 - 0' to 11'

Transitions:
** 43+38 to 44+07 - 0'
44+07 to 45+22 - 0' to 5.5'

Transitions:
*** 77+52 to 77+74 - 11' to 12'

Transitions:
**** 77+28 to 77+52 - 11' to 12'
77+52 to 77+74 - 12'

REGISTERED PROFESSIONAL ENGINEER
REG. NO. 13586
DUSTIN LEIGH HAMILTON
SOUTH DAKOTA
3/21/24

STATE OF SOUTH DAKOTA	PROJECT	SHEET	TOTAL SHEETS
	NH-CR 0014(185)229	B24	B151

TYPICAL GRADING SECTIONS

EUCLID AVENUE MAINLINE

34+43 to 43+38

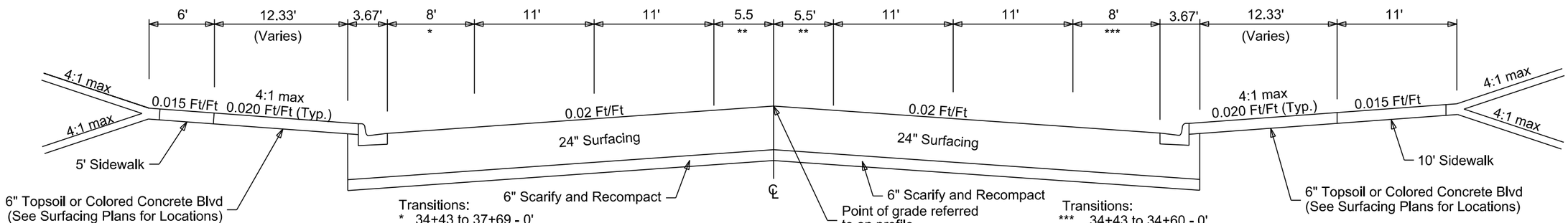

Transitions:
* 34+43 to 37+69 - 0'
37+69 to 37+89 - 0' to 8'
38+76 to 38+96 - 8' to 0'
38+96 to 40+00 - 0'
40+00 to 40+20 - 0' to 8'
42+61 to 42+82 - 8' to 0'
42+82 to 43+38 - 0'

Transitions:
** 36+54 to 37+69 - 5.5' to 0'
37+69 to 43+38 - 0'

Transitions:
*** 34+43 to 34+60 - 0'
34+60 to 34+80 - 0' to 8'
38+79 to 38+99 - 8' to 0'
38+99 to 40+03 - 0'
40+03 to 40+23 - 0' to 8'
42+61 to 42+82 - 8' to 0'
42+82 to 43+38 - 0'

EUCLID AVENUE MAINLINE

77+74 to 80+45

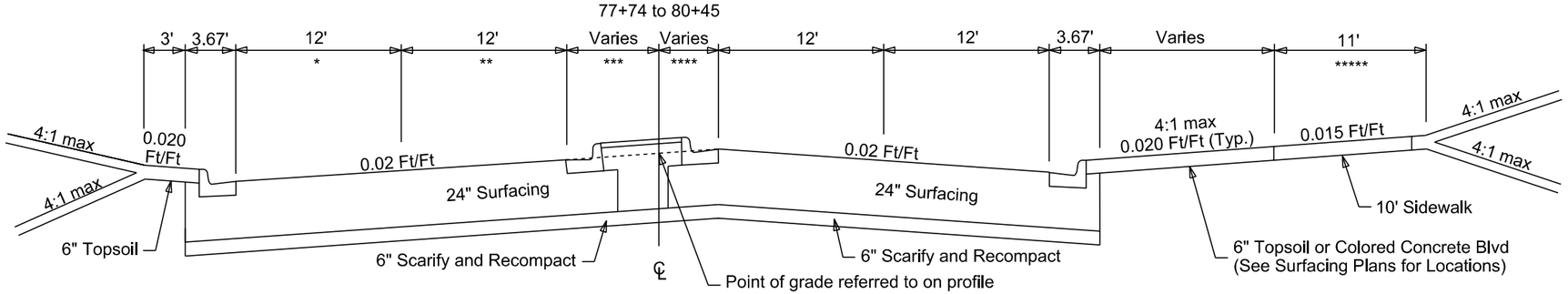

Transitions:
* 77+74 to 78+33 - 11'
78+33 to 78+56 - 11' to 12'

Transitions:
** 78+56 to 78+79 - 11' to 12'

Transitions:
*** 77+76 to 80+45 - 5.5' to 12.8'

Transitions:
**** 77+76 to 80+45 - 5.5' to 16.8'

Transitions:
***** 79+74.55 to 80+45 - 11' to 8.06'

ELIZABETH STREET

698+07 to 701+42

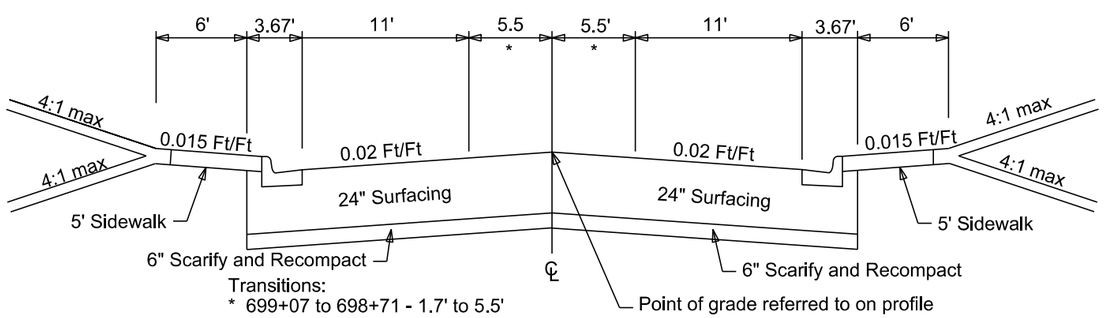

Transitions:
* 699+07 to 698+71 - 1.7' to 5.5'

REGISTERED PROFESSIONAL ENGINEER
REG. NO.
13586
DUSTIN LEIGH
HAMILTON
SOUTH DAKOTA
3/21/24

HDR

STATE OF SOUTH DAKOTA	PROJECT	SHEET	TOTAL SHEETS
	NH CR 0014(185)229	B25	B151

HORIZONTAL ALIGNMENT DATA

MAINLINE (Euclid Ave [US-14])

Type	Station			Northing	Easting
POB	8+00.00			741007.483	1963034.298
		TL= 691.44	N 38°30'01" E		
PC	14+91.44			741548.610	1963464.734
PI	15+66.48	R = 75.00	Delta = 90°01'47" R	741607.336	1963511.447
PT	16+09.29			741560.592	1963570.149
		TL= 112.06	S 51°28'12" E		
PC	17+21.35			741490.787	1963657.811
PI	17+81.19	R = 60.00	Delta = 89°50'34" L	741453.514	1963704.619
PT	18+15.43			741500.220	1963742.021
		TL= 410.10	N 38°41'14" E		
PI	22+25.54			741820.332	1963998.362
		TL= 725.95	N 38°37'34" E		
PC	29+51.48			742387.470	1964451.526
PI	30+74.62	R = 350.00	Delta = 38°45'55" L	742483.668	1964528.392
PT	31+88.29			742606.803	1964528.093
		TL= 163.52	N 0°08'21" W		
PC	33+51.81			742770.321	1964527.696
PI	34+26.90	R = 4100.00	Delta = 2°05'55" R	742845.417	1964527.513
PRC	35+01.98			742920.469	1964530.081
PI	35+77.08	R = 4100.00	Delta = 2°05'55" L	742995.521	1964532.648
PT	36+52.16			743070.616	1964532.466
		TL= 1098.36	N 0°08'21" W		
PI	47+50.51			744168.969	1964529.797
		TL= 1561.00	N 0°05'56" W		
PC	63+11.51			745729.965	1964527.105
PI	67+01.52	R = 1140.00	Delta = 37°46'22" R	746119.972	1964526.433
PT	70+63.07			746428.663	1964764.793
		TL= 1577.51	N 37°40'27" E		
PI	84+00.00			747486.844	1965581.884

Cross Road at Sta. 10+00.00 (Sioux Ave)

Type	Station			Northing	Easting
POB	900+00.00			741250.617	1963049.995
		TL= 275.89	S 51°28'45" E		
POE	902+75.89			741078.795	1963265.843

Cross Road at Sta. 16+09.29 (Pleasant Dr)

Type	Station			Northing	Easting
POB	905+00.00			741720.637	1963369.161
		TL= 600.00	S 51°28'12" E		
POE	911+00.00			741346.882	1963838.530

Cross Road at Sta. 21+85.15 (Capitol Ave)

Type	Station			Northing	Easting
POB	910+00.00			741880.386	1963858.767
		TL= 293.00	S 51°18'46" E		
POE	912+93.00			741697.240	1964087.474

Cross Road at Sta. 25+94.73 (Prospect Ave)

Type	Station			Northing	Easting
POB	915+00.00			742198.964	1964115.941
		TL= 300.00	S 51°22'26" E		
POE	918+00.00			742011.693	1964350.311

Cross Road at Sta. 30+25.06 (Broadway Ave)

Type	Station			Northing	Easting
POB	920+00.00			742540.629	1964376.636
		TL= 300.00	S 51°25'31" E		
POE	923+00.00			742353.569	1964611.175



The coordinates shown on this sheet are based on the South Dakota State Plane Coordinate System. South Zone (NAD 83/11); epoch 2010.00; Geoid 03; SF = 0.9999220427

STATE OF SOUTH DAKOTA	PROJECT	SHEET	TOTAL SHEETS
	NH CR 0014(185)229	B26	B151

HORIZONTAL ALIGNMENT DATA

Cross Road at Sta. 33+99.97 (Wynoka St, Lt)

Type	Station			Northing	Easting
POB	925+00.00			742818.240	1964427.862
		TL= 100.00	N 89°51'39" E		
POE	926+00.00			742818.483	1964527.861

Cross Road at Sta. 34+07.50 (Wynoka St, Rt)

Type	Station			Northing	Easting
POB	926+00.00			742826.009	1964527.938
		TL= 110.62	N 89°51'39" E		
PI	927+10.62			742826.277	1964638.561
		TL= 1214.50	S 89°57'20" E		
POE	939+25.12			742825.335	1965853.060

Cross Road at Sta. 39+47.87 (Oak St, Lt)

Type	Station			Northing	Easting
POB	930+00.00			743366.081	1964431.748
		TL= 100.00	N 89°51'39" E		
POE	931+00.00			743366.324	1964531.747

Cross Road at Sta. 39+51.97 (Oak St, Rt)

Type	Station			Northing	Easting
POB	931+00.00			743370.429	1964531.737
		TL= 100.00	N 89°51'39" E		
POE	932+00.00			743370.672	1964631.737

Cross Road at Sta. 43+33.61 (Seneca St, Lt)

Type	Station			Northing	Easting
POB	935+00.00			743751.750	1964400.811
		TL= 130.00	N 89°51'39" E		
POE	936+30.00			743752.066	1964530.810

Cross Road at Sta. 43+36.26 (Seneca St, Rt)

Type	Station			Northing	Easting
POB	936+30.00			743754.712	1964530.804
		TL= 130.00	N 89°51'39" E		
POE	937+60.00			743755.028	1964660.803

Cross Road at Sta. 47+20.55 (Elizabeth St)

Type	Station			Northing	Easting
POB	697+50.00			744138.387	1964085.370
		TL= 650.00	N 89°55'12" E		
POE	704+00.00			744139.296	1964735.370

Cross Road at Sta. 50+36.92 (First St)

Type	Station			Northing	Easting
POB	940+00.00			744455.206	1964431.803
		TL= 200.00	N 89°54'04" E		
POE	942+00.00			744455.551	1964631.803

Cross Road at Sta. 53+62.17 (Second St)

Type	Station			Northing	Easting
POB	945+00.00			744780.459	1964431.243
		TL= 200.00	N 89°54'04" E		
POE	947+00.00			744780.803	1964631.242

Cross Road at Sta. 56+87.57 (Third St)

Type	Station			Northing	Easting
POB	950+00.00			745105.813	1964408.182
		TL= 120.00	N 89°54'04" E		
POE	951+20.00			745106.020	1964528.181

REGISTERED PROFESSIONAL ENGINEER
REG. NO.
13586
DUSTIN LEIGH
HAMILTON
SOUTH DAKOTA
3/21/24

The coordinates shown on this sheet are based on the South Dakota State Plane Coordinate System. South Zone (NAD 83/11); epoch 2010.00; Geoid 03; SF = 0.9999220427

STATE OF SOUTH DAKOTA	PROJECT	SHEET	TOTAL SHEETS
	NH CR 0014(185)229	B27	B151

HORIZONTAL ALIGNMENT DATA

Cross Road at Sta. 60+40.16 (Fourth St)

Type	Station			Northing	Easting
POB	710+00.00			745458.938	1964133.074
		TL= 800.00	S 89°57'10" E		
POE	718+00.00			745458.279	1964933.073

Cross Road at Sta. 63+70.14 (Fifth St)

Type	Station			Northing	Easting
POB	955+00.00			745788.329	1964431.056
		TL= 200.00	N 89°51'39" E		
POE	957+00.00			745788.815	1964631.056

Cross Road at Sta. 67+06.00 (N Euclid Ave)

Type	Station			Northing	Easting
POB	960+00.00			746224.807	1964521.564
		TL= 46.90	S 0°00'00" W		
PC	960+46.90			746177.911	1964521.564
PI	960+82.09	R = 50.00	Delta = 70°16'36" L	746142.720	1964521.564
PT	961+08.22			746130.844	1964554.690
		TL= 41.78	S 70°16'36" E		
POE	961+50.00			746116.746	1964594.016

Cross Road at Sta. 67+15.74 (Sixth St)

Type	Station			Northing	Easting
POB	965+00.00			746125.897	1964597.342
		TL= 19.06	S 69°47'23" E		
PC	965+19.06			746119.312	1964615.230
PI	965+32.44	R = 80.00	Delta = 18°59'22" L	746114.690	1964627.786
PT	965+45.58			746114.405	1964641.163
		TL= 54.42	S 88°46'45" E		
POE	966+00.00			746113.245	1964695.575

Cross Road at Sta. 70+32.98 (Seventh St)

Type	Station			Northing	Easting
POB	970+00.00			746435.833	1964625.200
		TL= 52.33	N 89°52'42" E		
PC	970+52.33			746435.944	1964677.528
PI	970+78.51	R = 80.00	Delta = 36°14'38" R	746435.999	1964703.710
PT	971+02.93			746420.565	1964724.858
		TL= 27.07	S 53°52'40" E		
POE	971+30.00			746404.609	1964746.721

Cross Road at Sta. 74+54.67 (Eighth St)

Type	Station			Northing	Easting
POB	975+00.00			746771.155	1964898.314
		TL= 49.35	S 89°27'37" E		
PC	975+49.35			746770.690	1964947.660
PI	975+64.46	R = 45.00	Delta = 37°08'04" R	746770.548	1964962.775
PT	975+78.51			746761.309	1964974.739
		TL= 37.13	S 52°19'33" E		
POE	976+15.65			746738.616	1965004.128

REGISTERED PROFESSIONAL ENGINEER
REG. NO.
13586
DUSTIN LEIGH
HAMILTON
SOUTH DAKOTA
3/21/24

The coordinates shown on this sheet are based on the South Dakota State Plane Coordinate System. South Zone (NAD 83/11); epoch 2010.00; Geoid 03; SF = 0.9999220427

CONTROL DATA

STATE OF SOUTH DAKOTA	PROJECT	SHEET	TOTAL SHEETS
	NH CR 0014(185)229	B28	B151

HORIZONTAL AND VERTICAL CONTROL POINTS

POINT	STATION	OFFSET	DESCRIPTION	NORTHING	EASTING	ELEVATION
CP300	15+61.79	32.74' R	PK NAIL	741544.152	1963525.082	1452.683
E2680	15+61.81	32.75' R	MOBIL1	741544.150	1963525.093	1452.32
RS8	18+02.00	49.29' R	-	741452.18	1963763.201	1466.52
TP_DAVE	19+29.28	53.20' R	-	741555.833	1963854.713	1473.11
TP_DAVF	19+29.34	53.21' R	-	741555.869	1963854.749	1473.11
RS10	19+87.28	30.00' L	-	741653.112	1963826.019	1478.06
RS11	20+58.78	41.18' R	-	741664.429	1963926.273	1482.83
RS12	22+22.82	45.62' R	-	741789.698	1964032.274	1490.40
RS13	22+23.62	43.94' R	-	741791.372	1964031.468	1490.88
TP_COURT	22+36.48	104.18' L	-	741893.918	1963923.806	1489.22
TP_COURT1	22+36.48	104.24' L	-	741893.950	1963923.757	1489.08
TP_PIPE1	23+01.60	41.11' R	-	741854.094	1964077.959	1488.24
TP_PROSPECT	25+64.31	85.99' R	60P NAIL	742031.314	1964277.020	1502.55
CP555	26+44.27	41.45' R	PK NAIL	742121.593	1964292.132	1506.924
CP20	26+44.30	41.45' R	MAGNAIL ON SIDEWALK	742121.614	1964292.156	1506.57
CP400	28+95.18	42.00' R	PC THIELAN	742317.267	1964449.190	1529.402
E2505	29+89.40	35.99' L	X ON SIDEWALK	742437.605	1964443.165	1537.04
TP_BROADWAY	29+89.40	36.02' L	X ON SIDEWALK	742437.626	1964443.141	1537.06
TP_BROADWAY2	29+89.42	36.01' L	X ON SIDEWALK	742437.633	1964443.160	1537.04
CP2019	34+32.72	42.28' L	RBAR	742851.962	1964486.020	1557.220
6583	53+37.55	51.56' R	PK NAIL SHAFER RLS 6118	744756.090	1964580.340	1590.87
CP2009	53+37.56	51.57' R	PK NAIL	744756.107	1964580.354	1590.864
CP2004	58+61.19	51.98' R	PIPE	745279.731	1964579.862	1604.945
CP300	80+97.30	175.97	RBAR	747139.710	1965536.168	1710.022
SDPR	83+48.62	352.13' R	DCI BUILDING	747230.963	1965829.189	1730.44

The coordinates shown on this sheet are based on the South Dakota State Plane Coordinate System. South Zone (NAD 83/11); epoch 2010.00
Geoid 03; SF = 0.9999220427
The elevations shown on this sheet are based on NAVD 88.

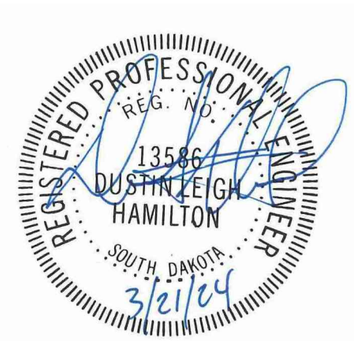

LEGEND

STATE OF SOUTH DAKOTA	PROJECT	SHEET	TOTAL SHEETS
	NH-CR 0014(185)229	B29	B151

Plotting Date: 3/21/2024

Plot Scale - 1:200

- Anchor
- Antenna
- Approach
- Assumed Corner
- Azimuth Marker
- BBQ Grill/ Fireplace
- Bearing Tree
- Bench Mark
- Box Culvert
- Bridge
- Brush
- Buildings
- Bulk Tank
- Cattle Guard
- Cemetery
- Centerline
- Cistern
- Clothes Line
- Commercial Sign Double Face
- Commercial Sign One Post
- Commercial Sign Overhead
- Commercial Sign Two Post
- Concrete Symbol
- Creek Edge
- Curb/Gutter
- Curb
- Dam Grade/Dike/Levee
- Deck Edge
- Ditch Block
- Doorway Threshold
- Drainage Profile
- Drop Inlet
- Edge Of Asphalt
- Edge Of Concrete
- Edge Of Gravel
- Edge Of Other
- Edge Of Shoulder
- Elec. Trans./Power Jct. Box
- Fence Barbwire
- Fence Chainlink
- Fence Electric
- Fence Misc.
- Fence Rock
- Fence Snow
- Fence Wood
- Fence Woven
- Fire Hydrant
- Flag Pole
- Flower Bed
- Gas Valve Or Meter
- Gas Pump Island
- Grain Bin
- Guardrail
- Guide Sign One Post
- Guide Sign Two Post
- Gutter
- Guy Pole
- Haystack
- Hedge
- Highway R.O.W. Marker
- Interstate Close Gate
- Iron Pin
- Irrigation Ditch
- Lake Edge
- Lawn Sprinkler
- Mailbox
- Manhole Electric
- Manhole Gas
- Manhole Misc
- Manhole Sanitary Sewer
- Manhole Storm Sewer
- Manhole Telephone
- Manhole Water
- Merry-Go-Round
- Microwave Radio Tower
- Misc. Line
- Misc. Property Corner
- Misc. Post
- Overhang Or Encroachment
- Overhead Utility Line — OH —
- Parking Meter
- Pedestrian Push Button Pole
- Pipe With End Section
- Pipe With Headwall
- Pipe Without End Section
- Playground Slide
- Playground Swing
- Power And Light Pole
- Power And Telephone Pole
- Power Meter
- Power Pole
- Power Pole And Transformer
- Power Tower Structure
- Propane Tank
- Property Pipe
- Property Pipe With Cap
- Property Stone
- Public Telephone
- Railroad Crossing Signal
- Railroad Milepost Marker
- Railroad Profile
- Railroad R.O.W. Marker
- Railroad Signs
- Railroad Switch
- Railroad Track
- Railroad Trestle
- Rebar
- Rebar With Cap
- Reference Mark
- Regulatory Sign One Post
- Regulatory Sign Two Post
- Retaining Wall
- Riprap
- River Edge
- Rock And Wire Baskets
- Rockpiles
- Satellite Dish
- Septic Tank
- Shrub Tree
- Sidewalk
- Sign Face
- Sign Post
- Slough Or Marsh
- Spring
- Stream Gauge
- Street Marker
- Subsurface Utility Exploration Test Hole
- Telephone Fiber Optics — T/F —
- Telephone Junction Box
- Telephone Pole
- Television Cable Jct Box
- Television Tower
- Test Wells/Bore Holes
- Traffic Signal
- Trash Barrel
- Tree Belt
- Tree Coniferous
- Tree Deciduous
- Tree Stumps
- Triangulation Station
- Underground Electric Line — P —
- Underground Gas Line — G —
- Underground High Pressure Gas Line — HG —
- Underground Sanitary Sewer — S —
- Underground Storm Sewer — S —
- Underground Tank
- Underground Telephone Line — T —
- Underground Television Cable — TV —
- Underground Water Line — W —
- Warning Sign One Post
- Warning Sign Two Post
- Water Fountain
- Water Hydrant
- Water Meter
- Water Tower
- Water Valve
- Water Well
- Weir Rock
- Windmill
- Wingwall
- Witness Corner

- State and National Line
- County Line
- Section Line
- Quarter Line
- Sixteenth Line
- Property Line
- Construction Line
- R. O. W. Line
- New R. O. W. Line
- Cut and Fill Limits
- Control of Access
- New Control of Access
- Proposed ROW (After Property Disposal)

- Drainage Arrow

- Remove Concrete Pavement
- Remove Concrete Driveway Pavement
- Remove Asphalt Concrete Pavement
- Remove Concrete Sidewalk
- Remove Concrete Median Pavement
- Remove Concrete Curb and/or Gutter

- Detectable Warning
- Pedestrian Push Button Pole and 30" x 48" Clear Space with 1.5% slope

REGISTERED PROFESSIONAL ENGINEER
REG. NO. 13586
DUSTIN LEIGH HAMILTON
SOUTH DAKOTA
3/21/24

HDR

Plotted From - GENSZ

File - ...\Section_B\legend.dgn

STATE OF SOUTH DAKOTA	PROJECT	SHEET	TOTAL SHEETS
	NH-CR 0014(185)229	B30	B151

REV 09-17-23 DBT
REV 04-16-24 GE
REV 06-17-24 GE
REV 08-27-24 GE

10+30 - 9' R to 10+39 - 10' R
Take Out 55" - 9' RCP
(Incidental Work, Grading)

10+34-18' R
Take Out Manhole
with Frame & Cover
(Incidental Work, Grading)

10+34 - 18'R to 10+39 - 10'R
Take Out 18" - 9' RCP
(Incidental Work, Grading)

10+34 - 18'R to 10+53 - 33'R
Take Out 15" - 24' RCP
(Incidental Work, Grading)

10+34 - 18'R to 10+35 - 63'R
Take Out 12" - 45' PVC
(Incidental Work, Grading)

10+39-10' R
Take Out Manhole
with Frame & Cover
(Incidental Work, Grading)

10+39 - 10'R to 10+83 - 34'L
Take Out 12" - 62' PVC
(Incidental Work, Grading)

10+39 - 10'R to 11+70 - 13'R
Take Out 30" - 132' RCP
(Incidental Work, Grading)

11+70-13' R
Take Out Manhole
with Frame & Cover
(Incidental Work, Grading)

11+70 - 13'R to 12+08 - 10'R
Take Out 30" - 38' RCP
(Incidental Work, Grading)

11+83 - 12'R to 11+84 - 33'R
Take Out 10" - 21' PVC
(Incidental Work, Grading)

11+90 - 34'L to 11+93 - 11'R
Take Out 6" - 45' PVC
(Incidental Work, Grading)

12+08-10' R
Take Out Manhole
with Frame & Cover
(Incidental Work, Grading)

12+08 - 10'R to 12+09 - 15'L
Take Out 20" - 25' RCP
(Incidental Work, Grading)

12+08 - 10'R to 12+85 - 11'R
Take Out 30" - 76' RCP
(Incidental Work, Grading)

12+09 - 15'L to 12+09 - 51'L
Take Out 20" - 36' RCP
(Incidental Work, Grading)

12+09-15' L
Take Out Manhole
with Frame & Cover
(Incidental Work, Grading)

12+85 - 11'R to 12+85 - 44'R
Take Out 15" - 33' RCP
(Incidental Work, Grading)

12+85 - 11'R to 13+71 - 10'R
Take Out 30" - 86' RCP
(Incidental Work, Grading)

12+85-11' R
Take Out Manhole
with Frame & Cover
(Incidental Work, Grading)

13+71 - 10'R to 13+91 - 9'R
Take Out 28" - 21' RCP
(Incidental Work, Grading)

13+71-10' R
Take Out Manhole
with Frame & Cover
(Incidental Work, Grading)

Clear and Grub Tree at
the following locations:
10+93-36' R

12+84.39-32.11' R to 12+84.39-52' R
Install 18"-22' RCP
(Between Junction Box and Existing Pipe)

12+84.39-32.11' R to 13+92.19-26.50' R
Install 65"x40"-104' RCP Arch
(Between Junction Box and Drop Inlet)

13+93.45-26.18' L to 13+92.19-24.39' R
Install 18"-38' RCP
(Between Drop Inlets)

13+92.19-20.60' R to 13+92.20-26.17' R
Install 18"-6' RCP
(Between Drop Inlet and Junction Box)

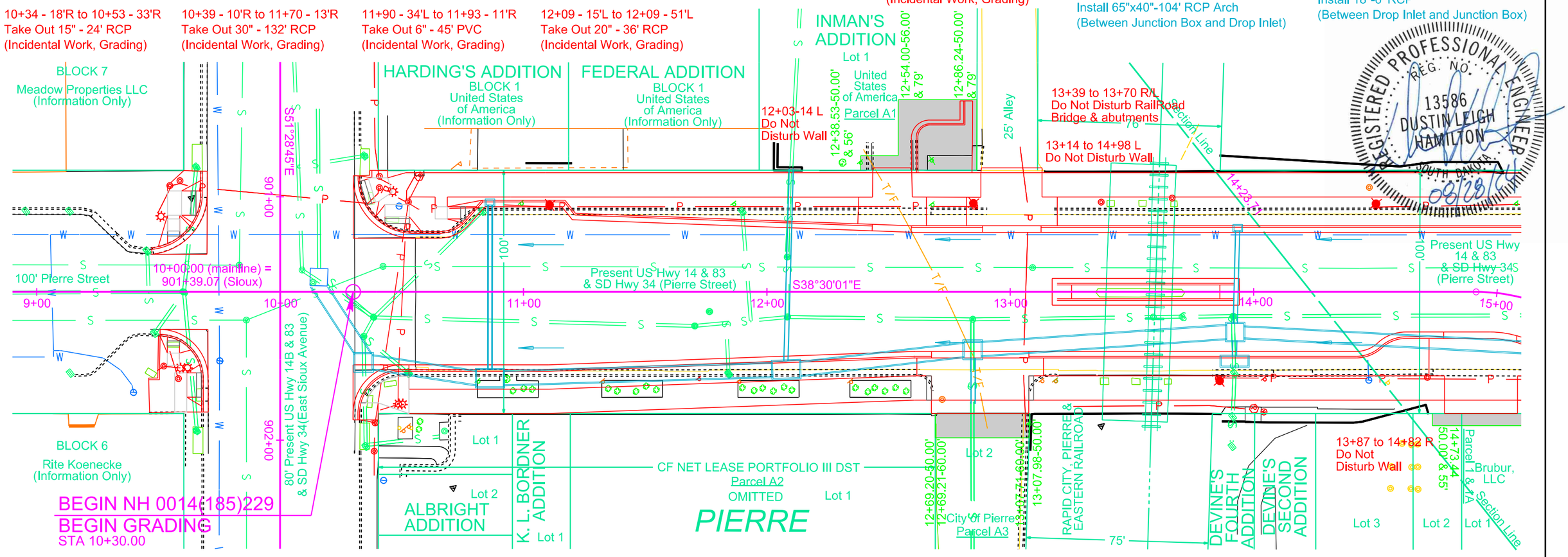

Remove Drop Inlets with
Frame and Grate at the
following locations:
10+53-33' R
11+84-33' R
11+90-34' L
13+91-51' R
13+92-33' R

10+15.91-6.10' L to 10+34.27-28.94' R
Install 65"X40"-33' RCP Arch
(Between Existing 9x8 Junction Box and
Proposed Junction Box)

10+34.17-28.94' R to 10+86.22-32.00' R
Install 65"X40"-48' RCP Arch
(Between Junction Box and Drop Inlet)

10+86.23-36.70' L to 10+86.22-32.00' R
Install 18"-67' RCP
(Between Drop Inlets)
Parcel A1
12+38.53 to 12+86.24 L
Temporary Easement Containing
1,028 Sq Ft, more or less

10+86.22-32.00' R to 12+07.88-26.07' R
Install 65"x40"-120' RCP Arch
(Between Junction Box and Drop Inlet)

12+39.93-39.11' L to 12+07.88-28.42' R
Install 18"-67' RCP
(Between Existing Pipe and Drop Inlet)

12+07.88-28.42' R to 12+84.39-32.11' R
Install 65"x40"-78' RCP Arch
(Between Drop Inlet and Junction Box)

Install 7' x 11' Concrete Type S
Drop Inlet Base and 4' x 11' Precast
Concrete Type S Drop Inlet Lid at
the following locations:
10+86.22-35.50' R
12+07.88-31.92' R
13+92.19-30.00' R

13+91.84-39.50' R
Install 10 LF Sidewalk Drain

Install 4' x 11' Concrete Type S
Drop Inlet Base and 4' x 11' Precast
Concrete Type S Drop Inlet Lid at
the following locations:
13+92.19-28.50' R

13+91-9' R
Take Out Manhole
with Frame & Cover
(Incidental Work, Grading)

13+91 - 51'R to 13+92 - 33'R
Take Out 18" - 18' CMP
(Incidental Work, Grading)

Install 2' x 3' Type B Drop Inlet with
6" Concrete Collar and Type B
Frame & Grate at the following
locations:
10+86.23-36.70' L
13+93.45-26.18' L

Parcel A3
12+69.20 to 13+07.98 R
Temporary Easement Containing
386 Sq Ft, more or less

13+91 - 9'R to 13+92 - 33'R
Take Out 18" - 24' RCP
(Incidental Work, Grading)

13+91 - 9'R to 15+25 - 1'R
Take Out 28" - 134' RCP
(Incidental Work, Grading)

13+92.19-24.39' R to 15+54.21-0' L
Install 54" - 162' RCP
(Between Drop Inlet and Junction Box)

Install 7' x 7' Junction Box with 15"
Riser Section & Type A9 Manhole
Frame & Lid at the following
locations:
10+15.14-21.70' L
10+34.27-28.94' R
12+84.39-32.11' R
13+92.19-16.50' R

REGISTERED PROFESSIONAL ENGINEER
REG. NO.
13586
DUSTIN LEIGH
HAMILTON
SOUTH DAKOTA
08/28/24

STATE OF SOUTH DAKOTA	PROJECT	SHEET	TOTAL SHEETS
	NH-CR 0014(185)229	B31	B151

Plotting Date: 8/27/2024

REV 08-12-24 GCE
REV 08-27-24 GCE

HDR

Plot Scale - 1:40

Earthwork Balance - Mainline station 10+00 to 29+93				
EXCAVATION		**EMBANKMENT**		
Excavation	5,799	Embankment	151	
		+20%	30	181
Subtotal	5,799	Scarification (incidental) +20%		404
		Waste		5,214
Total	5,799	Excess		5,799

Waste is excess excavation to be disposed of at a site approved by the Engineer.

REGISTERED PROFESSIONAL ENGINEER
REG. NO. 13586
DUSTIN LEIGH HAMILTON
SOUTH DAKOTA
08/28/24

10+00
Begin Work

~~12+51.3 L~~
16' Drive

~~13+00.7 L~~
24' Alley

~~12+87.6 R~~
40' Drive

~~14+93.7 R~~
30' Drive

PVI 10+30
Elev 1437.29

PVI 11+10
Elev 1438.35

PVI 13+50
Elev 1439.22

1.3212%

0.3638%

7.6353%

54" RCP 6.2883%

65"x40" RC ARCH 1.1000%

65"X40" RC ARCH 1.1000%

65"X40" RC ARCH 1.1380%

65"X40" RC ARCH 1.1960%

65"X40" RC ARCH 1.1605%

INV=1430.15

(EXIST.) INV=1428.30

INV=1430.66

INV=1430.66

INV=1431.12

INV=1431.12

INV=1432.58

INV=1432.39

INV=1432.39

INV=1433.70

INV=1433.20

INV=1433.20

INV=1435.92

INV=1434.40

INV=1434.40

INV=1437.47

INV=1438.00

~~L 100.00ft~~
~~G1 1.3212%~~
~~G2 0.3638%~~
~~K 104~~

L 150.00ft
G1 0.3638%
G2 7.6353%
K 21

L 100.00ft
G1 7.6353%
G2 4.4043%
K 31

1437.42 1437.69 1437.93 1438.14 1438.31 1438.44 1438.53 1438.60 1438.67 1438.75 1438.82 1438.89 1438.97 1439.19 1439.60 1440.21 1441.01 1442.00 1443.19 1444.57 1446.09 1447.60 1449.00 1450.27

9+00 10+00 11+00 12+00 13+00 14+00 15+00

1505 1500 1495 1490 1485 1480 1475 1470 1465 1460 1455 1450 1445 1440 1435 1430 1425 1420 1415

Plotted From - GENSZ

File - ...\Sheet Files\Section_B110v.dgn

STATE OF SOUTH DAKOTA	PROJECT	SHEET	TOTAL SHEETS
	NH-CR 0014(185)229	B32	B151

REV 12-14-22 DBT
REV 01-30-23 DBT
REV 02-14-23 DBT
REV 12-06-23 GCE
REV 08-12-24 GCE
REV 08-27-24 GCE

15+42 - 89'L to 15+29- 71'L
Take Out 10" - 24' PVC
(Incidental Work, Grading)

15+18 - 60'L to 15+29 - 71'L
Take Out 10" - 24' PVC
(Incidental Work, Grading)

15+21 - 109'L to 15+34 - 58'L
Take Out 20" - 53' Clay
(Incidental Work, Grading)

15+75 - 41' L to 15+77 - 86' L
Cut, Cap and Fill - 24" RCP
(Incidental Work, Grading)

15+28-1'R
Take Out Manhole
with Frame & Cover
(Incidental Work, Grading)

15+28 - 1'R to 15+70 - 8'R
Take Out 20" - 52' RCP
(Incidental Work, Grading)

15+28 - 1'R to 15+34 - 58'L
Take Out 20" - 60' Clay
(Incidental Work, Grading)

15+28 - 1'R to 15+57 - 58'L
Take Out 20" - 70' Clay
(Incidental Work, Grading)

15+29 - 71'L to 15+42- 89'L
Take Out 10" - 31' Clay
(Incidental Work, Grading)

15+57-58' L
Take Out Manhole
with Frame & Cover
(Incidental Work, Grading)

15+57 - 58'L to 15+61 - 76'L
Take Out 20" - 19' Clay
(Incidental Work, Grading)

15+57 - 58'L to 15+72 - 44'L
Take Out 12" - 29' Clay
(Incidental Work, Grading)

15+70 - 8'R to 15+84 - 28'R
Take Out 12" - 23' PVC
(Incidental Work, Grading)

15+70- 8'R to 17+64 - 27'R
Take Out 20" - 193' RCP
(Incidental Work, Grading)

17+64 - 27'R to 17+97 - 40'R
Take Out 10" - 52' Clay
(Incidental Work, Grading)

17+64-27' R
Take Out Manhole
with Frame & Cover
(Incidental Work, Grading)

17+64 - 27'R to 21+86 - 2'L
Take Out 18" - 435' Clay
(Incidental Work, Grading)

17+87 - 23'L to 17+98 - 0'L
Take Out 10" - 25' Clay
(Incidental Work, Grading)

Remove Drop Inlets with
Frame and Grate at the
following locations:
15+18-60' L
15+42-89' L
15+71-44' L
15+83-28' R
17+87-23' L
17+97-40' R

16+57.34-17.17' R to 17+65.92-44.76' R
Install 36"-132' RCP
(Between Drop Inlets)

17+65.92-4476' R to 910+20.99-7.80' R
Install 24"-76' RCP
(Between Drop Inlet and Junction Box)
Tie to Existing Pipe

18+49.31-25.13' L to 18+49.60-26.17' R
Install 18"-50' RCP
(Between Drop Inlets)

17+65.92-44.76' R to 18+49.60-26.17' R
Install 30"-110' RCP
(Between Drop Inlets)

Install 2' x 3' Type B Drop Inlet with
6" Concrete Collar and Type B
Frame & Grate at the following
locations:
906+02.12-27.42' R
906+20.24-24.44' L
906+66.83-46.09' L
906+83.13-47.23' L

Install Bollards
at the following locations:
15+49.36-36.44' R
15+74.16-36.29' R

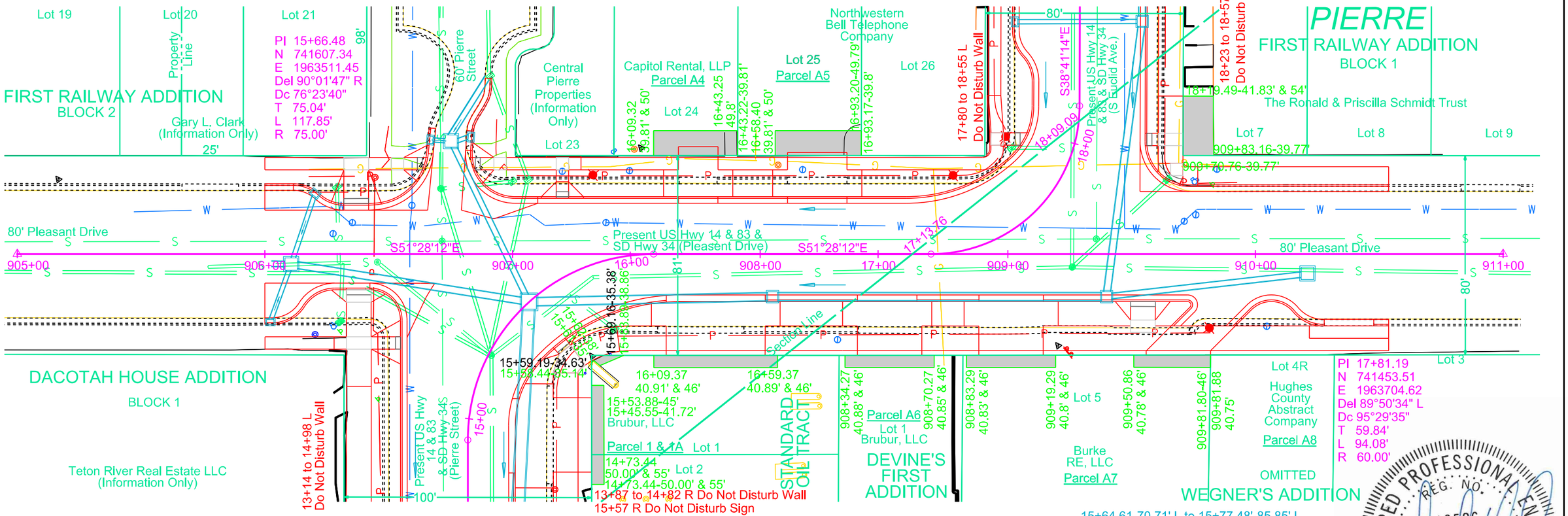

906+66.83-46.09' L to 906+75.16-45.60' L
Install 18"-6' RCP
(Between Drop Inlet and Junction Box)

906+83.13-47.23' L to 906+75.16-45.60' L
Install 18"-8'RCP
(Between Drop Inlet and Junction Box)

15+54.21-0' L to 16+57.34-16.75' R
Install 36"-98' RCP
(Between Junction Box and Drop Inlet)

906+02.12-27.42' R to 906+10.60-4.05' R
Install 18"-22' RCP
(Between Drop Inlet and Junction Box)

906+20.24-24.44' L to 906+10.60-4.05' R
Install 18"-28' RCP
(Between Drop Inlet and Junction Box)

906+75.16-45.60' L to 15+54.21-0' L
Install 30"-72' RCP
(Between Junction Boxes)

906+10.60-4.05' R to 15+54.21-0' L
Install 30"-121' RCP
(Between Junction Boxes)

Install 4' x 4' Type B Drop Inlet with
6" Concrete Collar and Type B
Frame & Grate at the following
locations:
16+57.34-17.17' R
17+65.92-44.76' R

Install 6' x 6' Junction Box with 15"
Riser Section & Type A9 Manhole
Frame & Lid at the following
locations:
15+54.21-0' L

Install 5' x 5' Junction Box with 15"
Riser Section & Type A9 Manhole
Frame & Lid at the following
locations:
906+10.60-4.05' R
906+75.16-45.60' L
910+20.99-7.80' R

15+64.61-70.71' L to 15+77.48'-85.85' L
Install 24"-28' RCP
(Between Exist Drop Inlet and Junction Box)

Parcel A6
908+34.27 to 980+70.27 R
Temporary Easement Containing
180 Sq Ft, more or less

Parcel A7
908+83.29 to 909+19.29 R
Temporary Easement Containing
180 Sq Ft, more or less

Parcel A7
909+50.86 to 909+81.88 R
Temporary Easement Containing
156 Sq Ft, more or less

Parcel A9
18+03.83 to 18+19.45 R
Temporary Easement Containing
294 Sq Ft, more or less

Parcel A9
18+74.75 to 19+60.54 R
Temporary Easement Containing
559 Sq Ft, more or less

Parcel A4
16+09.32 to 16+43.25 L
Temporary Easement Containing
339 Sq Ft, more or less

Parcel A5
16+58.40 to 16+93.20 L
Temporary Easement Containing
348 Sq Ft, more or less

Parcel 1A
14+73.44 to 15+53.88 R
Temporary Easement Containing
200 Sq Ft, more or less

Parcel 1A
15+58.44 to 15+83.89 R
Temporary Easement Containing
24 Sq Ft, more or less

Parcel 1A
16+09.37 to 16+59.37 R
Temporary Easement Containing
250 Sq Ft, more or less

REGISTERED PROFESSIONAL ENGINEER
REG. NO.
13586
DUSTIN LEIGH HAMILTON
SOUTH DAKOTA
08/28/24

STATE OF SOUTH DAKOTA	PROJECT	SHEET	TOTAL SHEETS
	NH-CR 0014(185)229	B33	B151

Plotting Date: 8/27/2024 REV 08-12-24 GCE REV 08-27-24 GCE

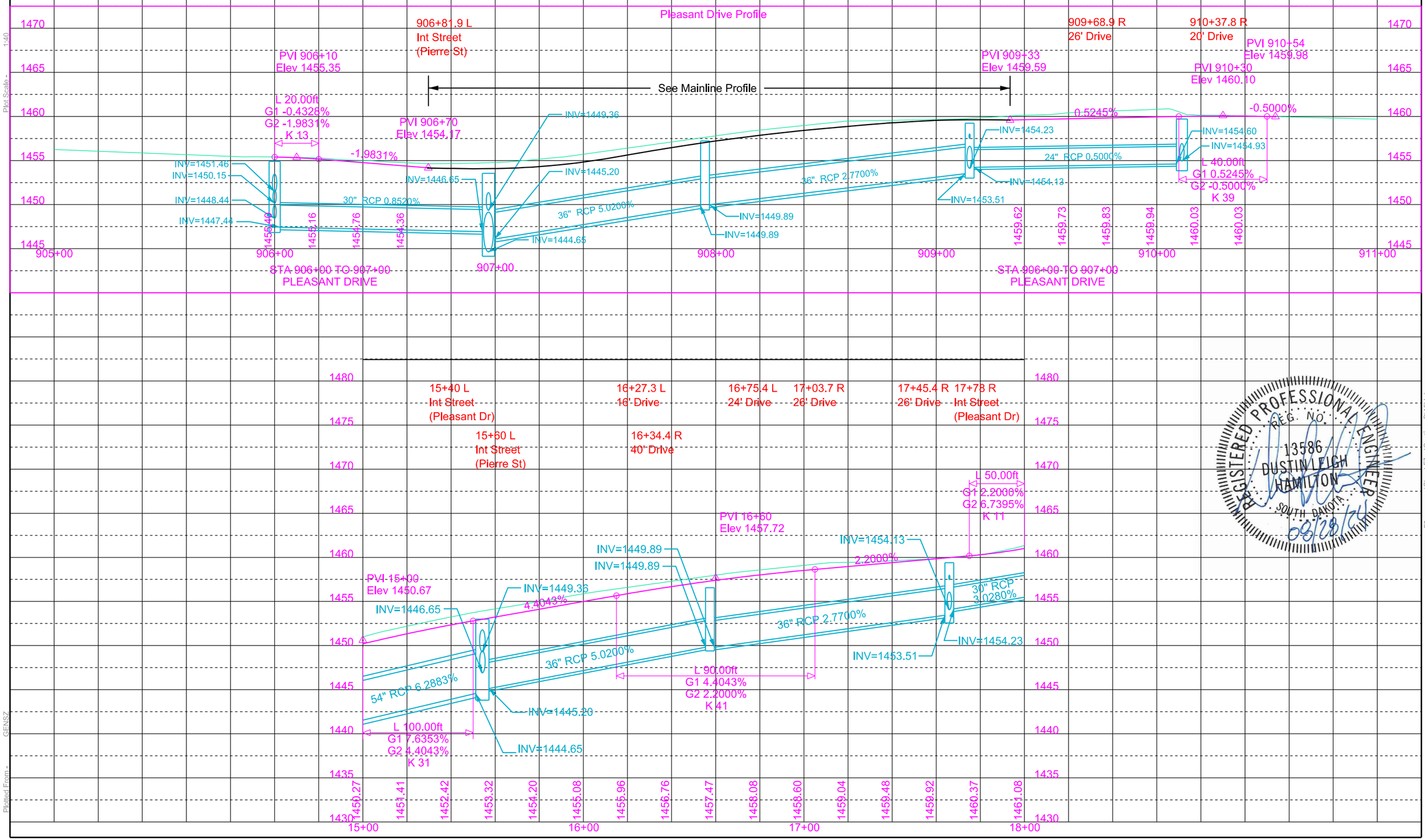

REGISTERED PROFESSIONAL ENGINEER
REG. NO. 13586
DUSTIN LEIGH HAMILTON
SOUTH DAKOTA
08/28/24

Plot Scale - 1:40
Plotted From - GENSZ
File - ...\Sheet Files\Section_B15V.dgn

STATE OF SOUTH DAKOTA	PROJECT	SHEET	TOTAL SHEETS
	NH-CR 0014(185)229	B34	B151

Plotting Date: 8/13/2024 REV 08-12-24 GCE

STA 906+00 TO 907+00
PLEASANT DRIVE

Pleasant Drive Storm Profile

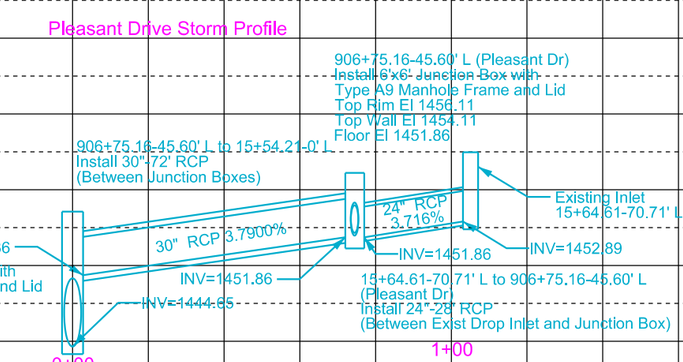

STA 906+00 TO 907+00
PLEASANT DRIVE

Pleasant Drive Storm Profile

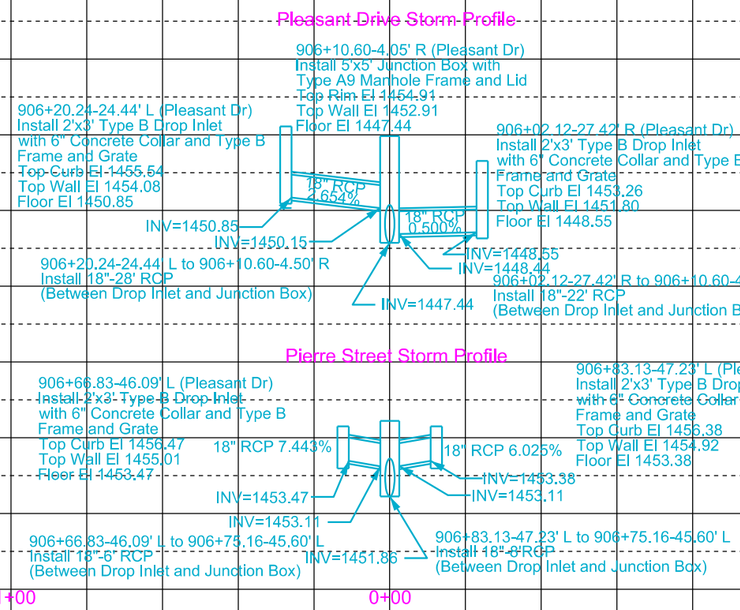

Pierre Street Storm Profile

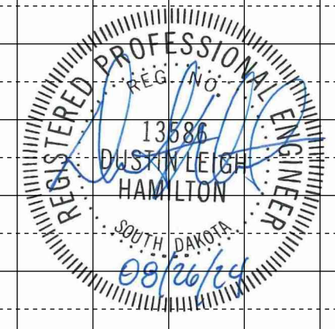

Plot Scale - 1:40
Plotted From - GENSZ
File - ...\15V_2_Pleasant Dr Storm.dgn

STATE OF SOUTH DAKOTA	PROJECT	SHEET	TOTAL SHEETS
	NH-CR 0014(185)229	B35	B151

REV 11-30-23 GCE
REV 08-12-24 GCE

REGISTERED PROFESSIONAL ENGINEER
REG. NO. 13586
DUSTIN LEIGH HAMILTON
SOUTH DAKOTA
08/26/24

21+58 - 2'L to 21+59 - 46'R
Take Out 10" - 47' PVC
(Incidental Work, Grading)

21+86 - 2'L to 22+22 - 33'R
Take Out 10" - 50' Clay
(Incidental Work, Grading)

21+86 - 2'L to 25+95 - 2'L
Take Out 18" - 409' Clay
(Incidental Work, Grading)

Remove Drop Inlets with Frame and Grate at the following locations:
21+59-46' R
22+22-33' R
22+31-27' L

21+86-2' L
Take Out Manhole with Frame & Cover
(Incidental Work, Grading)

22+31 - 27'L to 22+33 - 2'L
Take Out 8" - 25' PVC
(Incidental Work, Grading)

19+16.19-26.17' R to 18+49.60-25.13' R
Install 30"-68' RCP
(Between Drop Inlets)

19+16.06-33.96' L to 19+16.19-26.17' L
Install 8"-10' PVC
(Between Open End Pipe and Drop Inlet)

20+81.06-25.18' R to 19+16.19-25.17' R
Install 30"-166' RCP
(Between Drop Inlets)

19+16.19-26.17' L to 19+16.19-25.18' R
Install 18"-50' RCP
(Between Drop Inlets)

22+83.65-26.17' R to 22+60.65-25.67' L
Install 18"-54' RCP
(Between Drop Inlets)

25+69.15-28.66' L to 22+60.65-25.67' L
Install 24"-304' RCP
(Between Drop Inlet and Manhole)

Install 5' X 5' Junction Box with 15" Riser Section & Type A9 Manhole Frame & Lid at the following locations:
21+55.54-28.27' L
21+55.62-25.18' R
911+92.93-27.07' R

Install 3' X 4' Type B Drop Inlet with 6" Concrete Collar and Type B Frame & Grate at the following locations:
22+60.65-25.67' L

21+55.62-25.18' R to 20+81.06-25.18' R
Install 30"-76' RCP
(Between Manhole and Drop Inlet)

20+81.06-26.18' L to 20+81.06-25.18' R
Install 18"-50' RCP
(Between Drop Inlets)

Sec. 32 - T111N - R79W

FIRST RAILWAY ADDITION
BLOCK 2

Outlot Hyde 1

Lot 26

Northwestern Bell Telephone Company (Information Only)

30' Alley

19+88.80
38.17' & 51'

20+16.80
38.17' & 51'

JHO, LLC
Parcel E1
Parcel A41
Lot 1

17+80 to 18+55 L
Do Not Disturb Wall

19+80 to 19+94, 20+17-43 L
Do Not Disturb Walls

21+15.9 L
Elim Ent

910+00

S51°18'46"E

80' Capitol Avenue

911+00

22+25.24-61.55'
22+32.39-61.57'
22+32.36-38.16'

PI 22+25.54
N 741820.33
E 1963998.36
Del 0°03'40" L

FIRST RAILWAY ADDITION
BLOCK 4

Lot 26
County of Hughes
Parcel 2

20' Vacated Alley

24+00.13-37.98'
24+00.12-42.98'

Present US Hwy 14 & 83 & SD Hwy 34 (S Euclid Ave.)

S38°41'14"E

80'

18+00

19+00

20+00

21+00

22+00

23+00

24+00

N38°37'34"E

18+23 to 18+57 R
Do Not Disturb Walls

18+74.75
41.83' & 52'

Lot 7

19+00
46.83' & 52'

The Ronald & Priscilla Schmidt Trust
Parcel A9

18+09.09

Section Line

19+60.54
41.83' & 46.83'

20' Alley

Lot 3

19+97.42
41.83' & 47'

Lot 2

Foster Rentals Inc.

20+31.43
41.83' & 47'

Parcel A10

Lot 1

Lot 5

Lot 4

912+00

80' Capitol Avenue

912+93

22+25.54-47.04'
22+28.00-41.83' & 47.04'

Lot 8

22+43.12-41.85' & 52'

Jerald Dodson & Joann Dodson
Parcel 3

76'

22+81.12-41.89' & 52'

23+01.08-41.89'

23+01.14
51.83'

Property Line

Section Line

24+01.98

Carla A. Sahr
Parcel A12

23+28.62-41.94' & 52'

BLOCK 3
FIRST RAILWAY ADDITION

20' Alley

FIRST RAILWAY ADDITION
BLOCK 1

Lot 8

BALLARD'S RESUBDIVISION

19+80 to 20+48 R
Do Not Disturb Bollards

BLOCK 1
FIRST RAILWAY ADDITION

Lot 9

89'

23+00 R
Do Not Disturb Sign
Do Not Disturb Wall

23+35 to 23+70 R
Do Not Disturb Building
Do Not Disturb Steps

22+71 to 23+00 R
Do Not Disturb Building

Sec. 33 - T111N - R79W

Lot 10

Parcel A9
18+03.83 to 18+19.45 R
Temporary Easement Containing
294 Sq Ft, more or less

Parcel A9
18+74.75 to 19+60.54 R
Temporary Easement Containing
559 Sq Ft, more or less

Parcel A41
19+91.80 to 20+13.80 L
Temporary Easement Containing
364 Sq Ft, more or less

Parcel A10
19+97.42 to 20+31.43 R
Temporary Easement Containing
170 Sq Ft, more or less

Parcel A11
24+00.12 to 24+47.37 L
Temporary Easement Containing
236 Sq Ft, more or less

20+81.14-33.63' L to 20+81.06-26.18' L
Install 8"-10' PVC
(Between Open End Pipe and Drop Inlet)

21+55.54-28.27' L to 21+55.62-25.18' R
Install 24"-54' RCP
(Between Manhole and Drop Inlet)

912+14.69-27.04' R to 911+92.93-27.07' R
Install 18"-22' RCP
(Between Drop Inlet and Manhole)

Parcel 3
22+43.12 to 22+81.12 R
Temporary Easement Containing
380 Sq Ft, more or less

911+92.70-34.47' R to 911+92.93-27.07' R
Install 8"-8' PVC
(Between Open End Pipe and Manhole)

911+91.45-26.11' L to 911+92.93-24.57' R
Install 18"-52' RCP
(Between Drop Inlet and Manhole)

911+92.93-27.07' R to 21+55.62-25.18' R
Install 18"-22' RCP
(Between Manholes)

22+60.65-25.67' L to 21+55.54-28.27' L
Install 24"-106' RCP
(Between Manhole and Drop Inlet)

Parcel A12
23+01.08 to 23+28.62 R
Temporary Easement Containing
272 Sq Ft, more or less

Install 2' X 3' Type B Drop Inlet with 6" Concrete Collar and Type B Frame & Grate at the following locations:
18+49.31-26.17' L
19+16.19-26.17' L
20+81.06-26.17' L
22+83.65-26.17' R
911+91.45-27.11' L
912+14.69-27.04' R

Install 4' X 4' Type B Drop Inlet with 6" Concrete Collar and Type B Frame & Grate at the following locations:
18+49.60-25.13' R
19+16.19-25.17' R
20+81.06-25.18' R

STATE OF SOUTH DAKOTA	PROJECT	SHEET	TOTAL SHEETS
	NH-CR 0014(185)229	B36	B151

Plotting Date: 8/12/2024 REV 08-12-24 GCE

Plot Scale - 1:40

Capitol Avenue Profile

PVI 910+93
Elev 1484.24

PVI 910+73
Elev 1484.33

PVI 911+30
Elev 1483.69

PVI 911+63
Elev 1483.69

PVI 911+78
Elev 1483.91

PVI 912+20
Elev 1484.99

-0.4411%

-1.5000%

1.5000%

2.5459%

L 30.00ft
G1 -0.4411%
G2 -1.5000%
K 28

1484.30 1484.13 1483.84 1483.97 1484.48 1484.99

910+00 911+00 912+00

21+85.2 L&R
Int Street
(Capital Ave)

22+62.1 R
18' Drive

23+10.6 R
16' Drive

23+99.6 R
20' Alley

L 70.00ft
G1 4.3818%
G2 5.6499%
K 55

19+70.26 L
18' Alley

20+02.8 L
12' Drive

20+51.2 L
8' Drive

18+87.7 R
16' Drive

19+68.6 R
16' Alley

20+14.4 R
24' Drive

L 80.00ft
G1 2.2703%
G2 4.5972%
K 34

PVI 23+30
Elev 1489.48

PVI 21+40
Elev 1483.07

PVI 20+58
Elev 1477.39

PVI 19+40
Elev 1470.24

PVI 23+74
Elev 1491.41

PVI 22+40
Elev 1485.34

INV=1481.88

INV=1480.11

INV=1472.62

INV=1478.87

INV=1478.68

INV=1480.11

INV=1481.10

INV=1480.37

INV=1478.10

INV=1477.17

INV=1477.00

INV=1480.20

INV=1474.43

INV=1472.62

6.9275%

6.0683%

4.5972%

4.3818%

24" RCP 5.2630%

30" RCP 6.2370%

24" RCP 1.9981%

18" RCP 0.5000%

30" RCP 6.4336%

L 120.00ft
G1 6.9275%
G2 2.2703%
K 26

911+91.45-27.11' L (Capitol Ave)
Install 2'x3' Type B Drop Inlet with
6" Concrete Collar and Type B
Frame and Grate
Top Curb El 1484.83
Top Wall El 1483.33
Floor El 1480.37

L 50.00ft
G1 2.2000%
G2 6.7395%
K 11

INV=1464.08

INV=1459.77

6.7395%

30" RCP 6.8220%

30" RCP 3.0280%

INV=1462.27
INV=1462.27

INV=1458.00
INV=1457.50

PVI 18+00
Elev 1460.80

1461.08 1462.16 1463.50 1464.84 1466.19 1467.54 1468.89 1470.24 1471.45 1472.66 1473.87 1475.09 1476.30 1477.53 1478.91 1480.22 1481.37 1482.37 1483.21 1483.90 1484.43 1484.94 1485.57 1486.32 1487.18 1488.10 1488.02 1489.92 1490.83 1491.82 1492.88

18+00 19+00 20+00 21+00 22+00 23+00 24+00

REGISTERED PROFESSIONAL ENGINEER
REG. NO.
13586
DUSTIN LEIGH
HAMILTON
SOUTH DAKOTA
08/26/24

Plotted From - GENSZ

File - ...\Sheet Files\Section_B18V.dgn

STATE OF SOUTH DAKOTA	PROJECT	SHEET	TOTAL SHEETS
	NH-CR 0014(185)229	B37	B151

REV 07-09-2024 GE

25+68 - 2'L to 25+70 - 41'L
Take Out 10" - 40' RCP
(Incidental Work, Grading)

25+95 - 2'L to 30+48 - 8'R
Take Out 18" - 453' Clay
(Incidental Work, Grading)

25+95 - 2'L to 26+40 - 33'R
Take Out 10" - 57' RCP
(Incidental Work, Grading)

25+95-2' L
Take Out Manhole
with Frame & Cover
(Incidental Work, Grading)

24+58 L
Do not Disturb
Historical Marker
Sign

26+19 - 41'L to 26+19 - 2'L
Take Out 8" - 39' PVC
(Incidental Work, Grading)

26+38 - 28'L to 26+41 - 2'L
Take Out 10" - 26' RCP
(Incidental Work, Grading)

27+27.33-38.60' L
Install 13 LF Sidewalk Drain

Remove Drop Inlets with
Frame and Grate at the
following locations:
25+70-41' L
26+19-41' L
26+38-28' L
26+40-33' R

REGISTERED PROFESSIONAL ENGINEER
REG. NO. 13588
DUSTIN LEIGH HAMILTON
SOUTH DAKOTA
07/09/24

28+20 L
Do Not Disturb Sign

28+46 to 28+53 L
Do Not Disturb Steps

28+53 to 29+89 L
Do Not Disturb Wall

920+56 to 920+98 R
Do Not Disturb Steps

Sec. 32 - T111N - R79W
FIRST RAILWAY ADDITION
BLOCK 4

PIERRE

FIRST RAILWAY ADDITION
BLOCK 6

Lot 2
County of Hughes
Parcel A11
Lot 1
Lot 15
Lot 16
Falcon Partnership
(Information Only)
Property Line
Matt D.
Eberhard
Parcel A13
107.6'
Lot 2
Matt D.
Eberhard
Parcel A14
Lot 1

Section Line 24+01.98

80' Prospect Avenue
80' Broadway Avenue
20' Alley

S51°22'26"E
S51°25'31"E

915+00
916+00
920+00
921+00

24+00.13-37.98'
24+00.12-42.98'
24+47.37
37.93'
& 43'
27+27.33
37.91' & 43'
27+33.40
37.9' & 43'
27+61.88
37.82' & 43'
27+68.43
37.80' & 43'
28+19.47-51.09'
28+19.51- 37.67'
28+57.16
37.57' & 51'
29+22.53
37.39' & 48'
29+54.91
37.29' & 48'

123A
24' Drive
128A
40' Drive
123A
22' Drive

Present US Hwy 14 & 83
& SD Hwy 34 (S Euclid Ave.)

N38°37'34"E
80'

24+00
25+00
26+00
27+00
28+00
29+00
30+00

20' Drive
122A
121A
12' Drive

Lot 7
South Dakota
Wheat, Inc.
(Information
Only)
Property Line
Dennis J. Ryckman &
Carolyn J. Ryckman
(Information Only)
BLOCK 3
FIRST RAILWAY ADDITION
Lot 6
24+30 to 24+65 R
Do Not Disturb Building / Steps

16'
89'
100'

915+81.45-26.65' R to 25+69.15-28.66' L
Install 18"-36' RCP
(Between Drop Inlet and Manhole)

26+70.64-26.18' L to 25+69.15-28.66' L
Install 18"-108' RCP
(Between Drop Inlet and Manhole)

Parcel A13
27+27.33 to 27+33.40 L
Temporary Easement Containing
30 Sq Ft, more or less

917+00
918+00
922+00
923+00

80' Prospect Avenue
80' Broadway Avenue

16' Drive
121A

26+43.29-41.86' & 74'
26+33.75-41.83' & 74.38'

26+64 to 27+98 R
Do Not Disturb Fence

Thomas M. Maher and Thomas P. Maher
Parcel A15
Lot 8
Lot 9

26+69.79-28.31' R to 26+70.64-26.18' L
Install 18"-54' RCP
(Between Drop Inlets)

28+59.79-26.14' L to 26+70.64-26.18' L
Install 18"-190' RCP
(Between Drop Inlets)

28+70.94-18.17' R to 28+59.79-26.14' L
Install 18"-46' RCP
(Between Drop Inlets)

Lot 1
Lot 2
Kelly Kruse
Parcel A16
BLOCK 5
FIRST RAILWAY ADDITION
Sec. 33 - T111N - R79W

28+44.67-42.40'
28+44.73
52.40'
28+94.88-52.53'
28+94.85-42.53'
29+16.36
42.59' & 53'
29+29.01
42.62' & 53'

Lot 4
Mary DeWolf
Parcel A17
Property Line

28+98 to 28+16
29+29 to 29+47 R
Do Not
Disturb Walls

29+29 to 29+82 R
Do Not
Disturb Fence

30+01.19-27.73' L to 28+59.79-26.14' L
Install 18"-138' RCP
(Between Manhole and Drop Inlet)

920+90.00-21.34' R to 30+01.19-27.73' L
Install 18"-34' RCP
(Between Drop Inlet and Manhole)

Install 2' X 3' Type B Drop Inlet with
6" Concrete Collar and Type B Frame
& Grate at the following locations:
26+70.64-26.18' L
26+70.08-28.24' R
28+59.79-26.17' L
28+70.94-18.17' R
915+81.50-25.94' R

Install 5' X 5' Junction Box with 15" Riser
Section & Type A9 Manhole Frame & Lid
at the following locations:
25+69.15-28.66' L

Parcel A11
24+00.12 to 24+47.37 L
Temporary Easement Containing
236 Sq Ft, more or less

Parcel A13
27+61.88 to 27+68.43 L
Temporary Easement Containing
33 Sq Ft, more or less

Parcel A14
28+19.47 to 28+57.16 R
Temporary Easement Containing
508 Sq Ft, more or less

Parcel A14
29+22.53 to 29+54.91 R
Temporary Easement Containing
350 Sq Ft, more or less

Parcel A15
26+33.75 to 26+43.29 R
Temporary Easement Containing
304 Sq Ft, more or less

Parcel A16
28+44.67 to 28+94.88 R
Temporary Easement Containing
502 Sq Ft, more or less

Parcel A17
29+16.36 to 29+29.01 R
Temporary Easement Containing
127 Sq Ft, more or less

STATE OF SOUTH DAKOTA	PROJECT	SHEET	TOTAL SHEETS
	NH-CR 0014(185)229	B38	B151

Plotting Date: 4/16/2024 REV 4-16-24 GE

Plot Scale - 1:40

Prospect Avenue Profile

PVI 915+80
Elev 1504.48

PVI 916+28
Elev 1503.83

PVI 916+61
Elev 1503.83

PVI 917+00
Elev 1504.39

PVI 917+35
Elev 1504.00

-1.3516%

1.4376%

-1.2887%

L 20.00ft
G1 1.4376%
G2 -0.8387%
K 10

1504.48 1504.21 1503.94 1504.10 1504.34 1504.20

915+00 916+00 917+00 918+00

917+00.9 L
16' Drive

25+94.7 L&R
~~Int Street~~
(Prospect Ave)

29+22.7 R
12' Drive

29+93

28+22.5 L 28+54.3 R
46' Drive 12' Drive

28+88.3 R
12' Drive

29+40.2 L
22' Drive

28+09.6 L
20' Alley

28+09.6 R
20' Alley

PVI 29+40
Elev 1535.55

INV=1521.85

PVI 28+01
Elev 1521.01

10.4628%

18" RCP 8.1342%

INV=1532.70

INV=1521.85

INV=1521.85

L 140.00ft
G1 10.4628%
G2 3.8934%
K 21

L 140.00ft
G1 4.4827%
G2 9.5264%
K 28

9.5264%

18" RCP 9.6160%

24+23.7 L
24' Drive

PVI 25+23
Elev 1500.83

INV=1497.52

4.4827%

18" RCP 6.0910%

INV=1504.75

INV=1503.95

INV=1503.54

PVI 26+48
Elev 1506.44

L 70.00ft
G1 5.6499%
G2 6.9416%
K 54

L 70.00ft
G1 4.3818%
G2 5.6499%
K 55

6.9416%

5.6499%

24" RCP 5.2630%

INV=1497.60

INV=1497.10

L 80.00ft
G1 6.9416%
G2 4.4827%
K 33

PVI 24+45
Elev 1495.42

1492.88 1494.01 1495.22 1496.50 1497.85 1499.19 1500.41 1501.51 1502.49 1503.39 1504.37 1505.50 1506.77 1508.18 1509.74 1511.45 1513.29 1515.20 1517.11 1519.01 1520.92 1523.00 1525.09 1527.18 1529.25 1531.16 1532.88 1534.40 1535.75 1536.90 1537.87

24+00 25+00 26+00 27+00 28+00 29+00 30+00

REGISTERED PROFESSIONAL ENGINEER
REG. NO. 13586
ROSS A. HAMILTON
SOUTH DAKOTA
4/16/24

Plotted From - GENSZ

File - ...\Sheet Files\Section_B124V.dgn

STATE OF SOUTH DAKOTA	PROJECT	SHEET	TOTAL SHEETS
	NH-CR 0014(185)229	B39	B151

REV 4-18-23 DBT

Clear and Grub Tree at the following locations:
32+35-42' R
32+57-42' R
35+64 34' L

30+46 - 8'R to 30+58 - 45'R
Take Out 10" - 39' Clay
(Incidental Work, Grading)
30+46 - 8'R to 30+51 - 31'L
Take Out 10" - 39' RCP
(Incidental Work, Grading)
30+46 - 8'R to 33+93 - 4'L
Take Out 15" - 347' RCP
(Incidental Work, Grading)
30+46-8' R
Take Out Manhole
with Frame & Cover
(Incidental Work, Grading)

30+82 - 16'L to 30+86 - 5'L
Take Out 10" - 11' RCP
(Incidental Work, Grading)

33+93-4' L
Take Out Manhole
with Frame & Cover
(Incidental Work, Grading)

34+08-22' L
Take Out Manhole
with Frame & Cover
(Incidental Work, Grading)

34+09-33' R
Take Out Manhole
with Frame & Cover
(Incidental Work, Grading)

34+08 - 22'L to 39+71 - 23'L
Take Out 18" - 563' RCP
(Incidental Work, Grading)

34+08 - 22'L to 34+15 - 32'L
Take Out 10" - 12' PVC
(Incidental Work, Grading)

34+08 - 22'L to 34+41 - 30'L
Take Out 10" - 34' PVC
(Incidental Work, Grading)

34+08 - 22'L to 34+09 - 33'R
Take Out 18" - 55' PVC
(Incidental Work, Grading)

34+09 - 63'R to 34+09 - 33'R
Take Out 18" - 30' RCP
(Incidental Work, Grading)

34+09 - 33'R to 34+41 - 35'R
Take Out 10" - 33' PVC
(Incidental Work, Grading)

34+09 - 33'R to 39+83 - 30'R
Take Out 15" - 575' RCP
(Incidental Work, Grading)

Remove Drop Inlets with
Frame and Grate at the
following locations:
30+51-36' L
30+58-45' R
30+82-16' L
34+15-32' L
34+41-30' L
34+41-35' R

Parcel 4
30+77.96 to 31+08.49 L
Temporary Easement Containing
165 Sq Ft, more or less

Install 2' X 3' Type B Drop Inlet with
6" Concrete Collar and Type B Frame
& Grate at the following locations:
920+90.00-21.34' R
30+89.36-19.20' L
32+61.04-27.12' L
32+61.05-29.17' R
34+82.01-29.17' L
925+45.22-12.47' L
925+45.22-12.47' R

34+82.01-29.17' L to 34+84.28-34.83' R
Install 18"-64' RCP
(Between Drop Inlets)

Install 3' X 4' Type B Drop Inlet with
6" Concrete Collar and Type B Frame
& Grate at the following locations:
30+90.78-28.67' R

Install 5.5' X 5.5' Type B Drop Inlet with
Type B Frame & Grate at the
following locations:
34+84.36-34.75' R
(Adjust Lid Opening in Field to align with C&G)

Install 5' X 5' Junction Box with 15" Riser
Section & Type A9 Manhole Frame & Lid
at the following locations:
30+01.19-27.73' L

Install 6' X 6' Junction Box with 15" Riser
Section & Type A9 Manhole Frame & Lid
at the following locations:
33+93.49-41.46' R

REGISTERED PROFESSIONAL ENGINEER
REG. NO. 13586
DUSTIN LEIGH HAMILTON
SOUTH DAKOTA
3/21/24

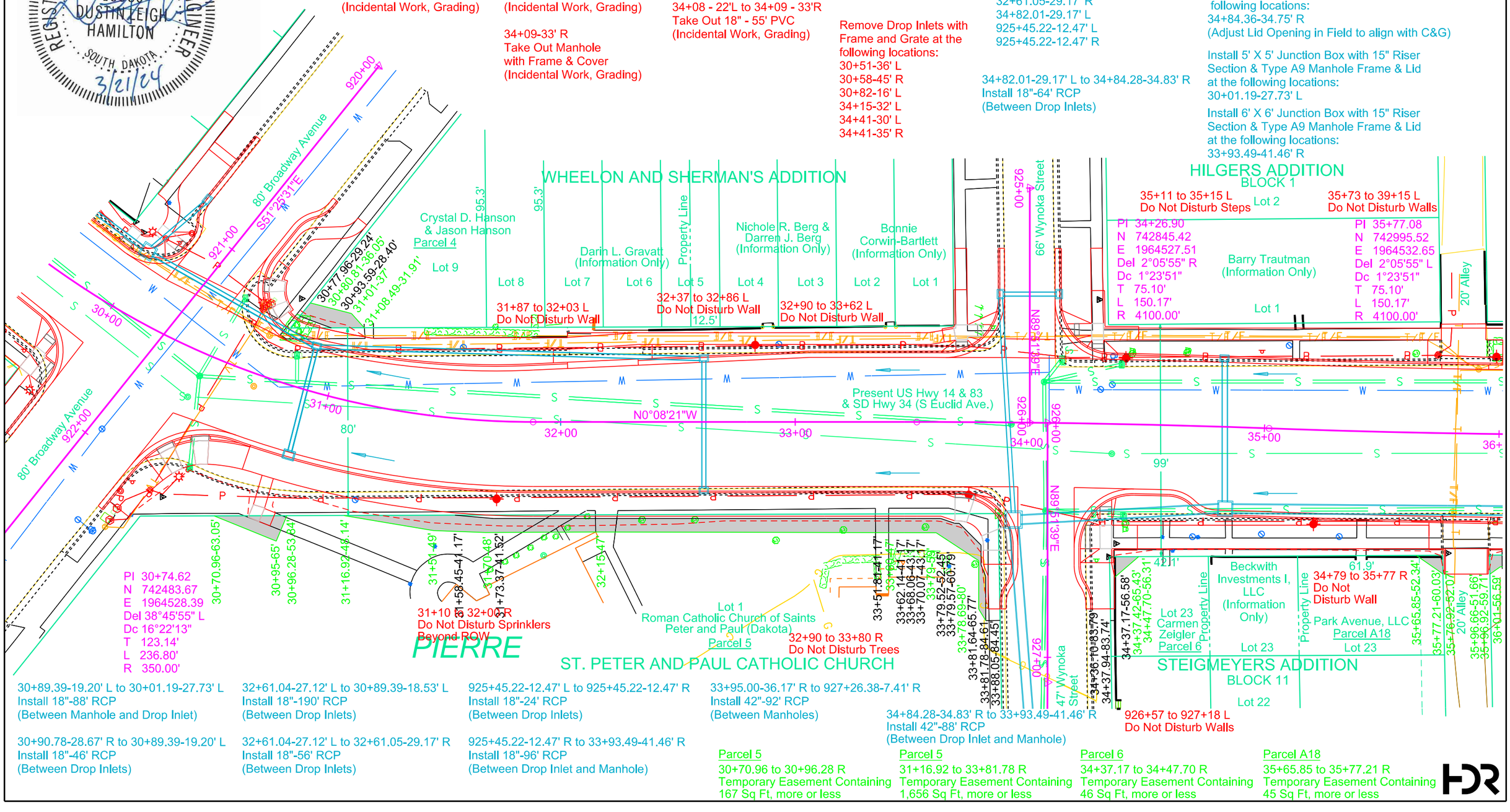

30+89.39-19.20' L to 30+01.19-27.73' L
Install 18"-88' RCP
(Between Manhole and Drop Inlet)

30+90.78-28.67' R to 30+89.39-19.20' L
Install 18"-46' RCP
(Between Drop Inlets)

32+61.04-27.12' L to 30+89.39-18.53' L
Install 18"-190' RCP
(Between Drop Inlets)

32+61.04-27.12' L to 32+61.05-29.17' R
Install 18"-56' RCP
(Between Drop Inlets)

925+45.22-12.47' L to 925+45.22-12.47' R
Install 18"-24' RCP
(Between Drop Inlets)

925+45.22-12.47' R to 33+93.49-41.46' R
Install 18"-96' RCP
(Between Drop Inlet and Manhole)

33+95.00-36.17' R to 927+26.38-7.41' R
Install 42"-92' RCP
(Between Manholes)

34+84.28-34.83' R to 33+93.49-41.46' R
Install 42"-88' RCP
(Between Drop Inlet and Manhole)

926+57 to 927+18 L
Do Not Disturb Walls

Parcel 5
30+70.96 to 30+96.28 R
Temporary Easement Containing
167 Sq Ft, more or less

Parcel 5
31+16.92 to 33+81.78 R
Temporary Easement Containing
1,656 Sq Ft, more or less

Parcel 6
34+37.17 to 34+47.70 R
Temporary Easement Containing
46 Sq Ft, more or less

Parcel A18
35+65.85 to 35+77.21 R
Temporary Easement Containing
45 Sq Ft, more or less

STATE OF SOUTH DAKOTA	PROJECT	SHEET	TOTAL SHEETS
	NH-CR 0014(185)229	B40	B151

Plotting Date: 4/16/2024 REV 4-16-24 GE

Plot Scale - 1:40

Broadway Avenue Profile

PVI 920+56
Elev 1539.33
-0.2628%
PVI 920+93
Elev 1539.23
1.5000%
PVI 921+29
Elev 1538.69
PVI 921+63
Elev 1538.41
1.5000%
PVI 921+96
Elev 1538.90
-4.5189%
PVI 922+21
Elev 1537.77

L 30.00ft
G1 -0.2628%
G2 -1.5000%
K 24

L 20.00ft
G1 1.5000%
G2 -4.5189%
K 3

1539.32 1539.27 1539.12 1538.83 1538.66 1538.67 1537.82

921+00 922+00

Wynoka Street (Left) Profile

PVI 925+36
Elev 1556.00
G1 -4.0250%
G2 -1.4848%
K 8
L 20.00ft
PVI 925+73
Elev 1554.95
PVI 925+26
Elev 1556.20
-1.9417%
-1.4848%
PVI 925+56
Elev 1555.19

L 20.00ft
G1 -1.9417%
G2 -4.0250%
K 10

1555.82 1555.16

925+00 926+00

Wynoka Street (Right) Profile

PVI 926+60
Elev 1555.39
PVI 926+28
Elev 1555.16
PVI 926+79
Elev 1554.73
0.7050%
-3.4378%

L 30.00ft
G1 0.7050%
G2 -3.4378%
K 7

1555.25 1555.24

926+00 927+00

30+25.1 L&R
Int Street
(Broadway Ave)

32+18.0 L
30' Drive

925+45.22-11.80' R (Wynoka St)
Install 2'x3' Type B Drop Inlet with
6" Concrete Collar and Type B
Frame and Grate
Top Curb El 1554.81
Top Wall El 1553.35
Floor El 1550.10

34+07.5 R
Int Street
(Wynoka St)
34+00.0 L
Int Street
(Wynoka St)
PVI 34+01
Elev 1555.92

925+45.22-11.80' L (Wynoka St)
Install 2'x3' Type B Drop Inlet with
6" Concrete Collar and Type B
Frame and Grate
Top Curb El 1555.37
Top Wall El 1553.91
Floor El 1550.65

35+85.2 L
20' Alley
35+85.9 R
20' Alley

925+45.22-11.80' L to 925+45.22-11.80' R
(Wynoka St)
Install 18"-22' RCP
(Between Drop Inlets)

L 130.00ft
G1 3.8934%
G2 5.2422%
K 96

PVI 31+48
Elev 1544.57

3.8934%
5.2422%
4.4920%
1.2710%

INV=1532.76
INV=1534.24
18" RCP 1.8216%
18" RCP 6.0805%
INV=1544.82
INV=1544.82
INV=1549.64
18"RCP 2.546%
42"RCP 1.0360%
INV=1543.52
INV=1543.52
INV=1551.50
42"RCP 1.3220%
INV=1544.40
INV=1544.40

L 140.00ft
G1 10.4628%
G2 3.8934%
K 21

PVI 30+80
Elev 1541.01

L 100.00ft
G1 4.4920%
G2 1.2710%
K 31

INV=1532.70
INV=1534.24
INV=1534.24

1537.87 1538.67 1539.48 1540.33 1541.22 1542.16 1543.13 1544.15 1545.11 1546.01 1546.91 1547.80 1548.70 1549.60 1550.50 1551.40 1552.30 1553.19 1554.08 1554.85 1555.50 1556.01 1556.40 1556.67 1556.93 1557.18 1557.44 1557.69 1557.94 1558.20 1558.45

30+00 31+00 32+00 33+00 34+00 35+00 36+00

REGISTERED PROFESSIONAL ENGINEER
REG. NO.
13586
DUSTIN LEIGH
HAMILTON
SOUTH DAKOTA
4/16/24

Plotted From - GENSZ

File - ...\Sheet Files\Section_B130V.dgn

STATE OF SOUTH DAKOTA	PROJECT	SHEET	TOTAL SHEETS
	NH-CR 0014(185)229	B41	B151

REV 12-14-22 DBT

39+15 - 23'L to 39+15 - 31'L
Take Out Unknown Material - 8' Unknown Size
(Incidental Work, Grading)

39+70 - 23'L to 43+03 - 22'L
Take Out 18" - 332' RCP
(Incidental Work, Grading)

39+70-23' L
Take Out Manhole
with Frame & Cover
(Incidental Work, Grading)

39+70 - 23'L to 39+70 - 33'L
Take Out Unknown Material - 10' Unknown Size
(Incidental Work, Grading)

39+83 - 30'R to 39+87 - 35'R
Take Out 10" - 5' PVC
(Incidental Work, Grading)

39+83 - 30'R to 43+02 - 30'R
Take Out 15" - 319' RCP
(Incidental Work, Grading)

39+83-30' R
Take Out Manhole
with Frame & Cover
(Incidental Work, Grading)

Clear and Grub Tree at the following locations:
36+04-36' L
37+36-39' R
37+52-39' R
37+70-39' R
37+89-39' R
37+93-36' L
38+10-36' L
38+27-36' L
38+45-36' L
38+56-39' R
40+32-36' L
40+41-40' R
40+54-36' L
40+57-40' R
40+73-40' R
41+12-40' R

Remove Drop Inlets with Frame and Grate at the following locations:
39+15-31' L
39+71-32' L
39+87-35' R

40+34 R
Do Not Disturb Mailbox

40+97 L
Refurbish Mailbox

41+53 L
Refurbish Mailbox

41+83 R
Refurbish Mailbox

REGISTERED PROFESSIONAL ENGINEER
REG. NO. 13586
DUSTIN LEIGH HAMILTON
SOUTH DAKOTA
3/21/24

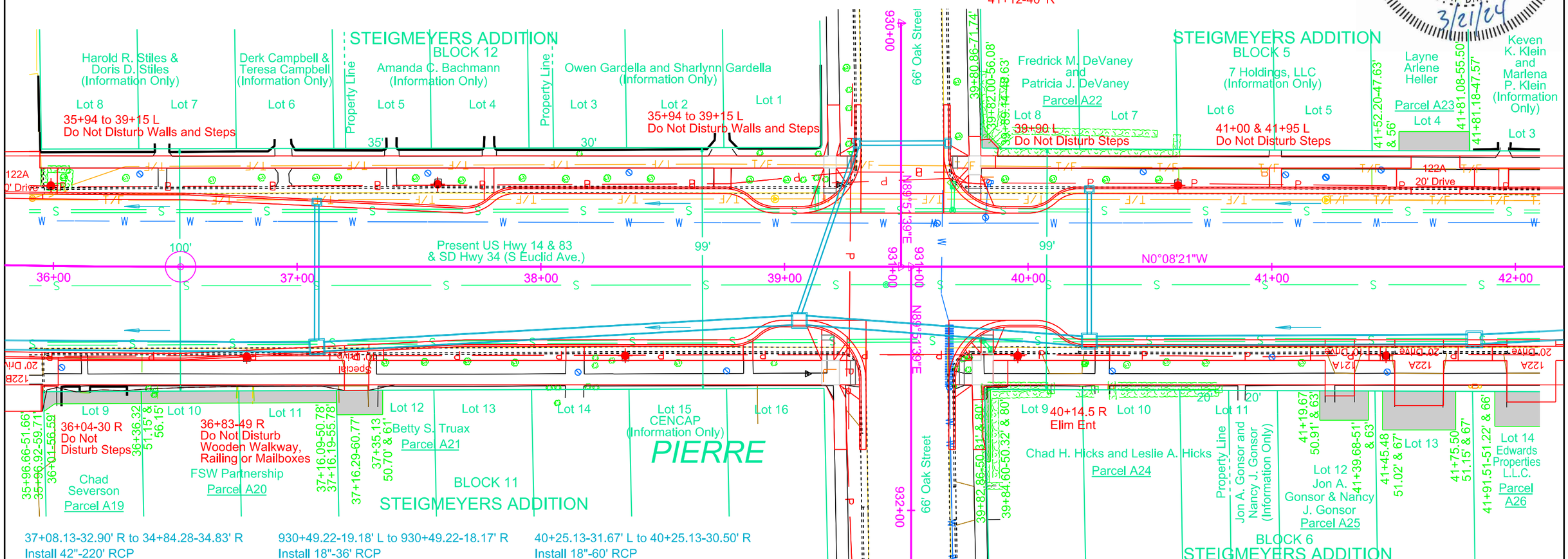

37+08.13-32.90' R to 34+84.28-34.83' R
Install 42"-220' RCP
(Between Drop Inlets)

37+08.13-26.57' L to 37+08.13-32.90' R
Install 18"-56' RCP
(Between Drop Inlets)

39+08.00-22.00' R to 37+08.13-32.90' R
Install 42"-194' RCP
(Between Drop Inlets)

930+49.22-19.18' L to 930+49.22-18.17' R
Install 18"-36' RCP
(Between Drop Inlets)

930+49.22-18.17' R to 39+08.00-22.00' R
Install 18"-74' RCP
(Between Drop Inlets)

40+25.13-30.50' R to 39+08.00-22.00' R
Install 42"-114' RCP
(Between Drop Inlets)

40+25.13-31.67' L to 40+25.13-30.50' R
Install 18"-60' RCP
(Between Drop Inlets)

41+83.13-30.50' R to 40+25.13-30.50' R
Install 42"-154' RCP
(Between Drop Inlets)

Install 2' X 3' Type B Drop Inlet with 6" Concrete Collar and Type B Frame & Grate at the following locations:
37+08.13-26.57' L
930+49.22-19.18' L
930+49.30-18.17' R
40+25.13-31.67' L

Install 5.5' X 5.5' Type B Drop Inlet with Type B Frame & Grate at the following locations:
37+08.13-32.90' R
39+06.13-22.00' R
40+25.13-30.50' R
41+83.13-29.75' R
(Adjust Lid Opening in Field to align with C&G)

Parcel A26
41+45.48 to 41+75.50 R
Temporary Easement Containing
478 Sq Ft, more or less

Parcel A26
41+91.51 to 42+21.52 R
Temporary Easement Containing
427 Sq Ft, more or less

Parcel A19
35+96.66 to 36+36.32 R
Temporary Easement Containing
207 Sq Ft, more or less

Parcel A20
36+36.32 to 37+16.19 R
Temporary Easement Containing
400 Sq Ft, more or less

Parcel A21
37+16.09 to 37+35.13 R
Temporary Easement Containing
189 Sq Ft, more or less

Parcel A22
39+80.86 to 39+89.14 L
Temporary Easement Containing
41 Sq Ft, more or less

Parcel A23
41+52.20 to 41+81.18 R
Temporary Easement Containing
228 Sq Ft, more or less

Parcel A24
39+82.09 to 39+84.60 R
Temporary Easement Containing
61 Sq Ft, more or less

Parcel A25
41+19.67 to 41+39.68 R
Temporary Easement Containing
241 Sq Ft, more or less

STATE OF SOUTH DAKOTA	PROJECT	SHEET	TOTAL SHEETS
	NH-CR 0014(185)229	B42	B151

Plotting Date: 3/21/2024

HDR

REGISTERED PROFESSIONAL ENGINEER
REG. NO.
13586
DUSTIN LEIGH HAMILTON
SOUTH DAKOTA
3/21/24

Plot Scale - 1:40

Oak Street (Left) Profile

PVI 930+78
Elev 1562.22
L 30.00ft
PVI 930+34
Elev 1562.99
G1 -2.1334%
G2 -1.5000%
K 47
-2.1334%
-1.5000%
PVI 930+50
Elev 1562.64
1562.86
1562.49
930+00
931+00

Oak Street (Right) Profile

PVI 931+65
Elev 1563.08
PVI 931+22
Elev 1562.28
L 10.00ft
G1 1.5000%
G2 2.5591%
K 9
PVI 931+77
Elev 1563.11
1.5000%
0.2212%
PVI 931+50
Elev 1562.70
L 20.00ft
G1 2.5591%
G2 0.2212%
K 9
1562.55
1562.94
931+00
932+00

39+52.0 R
Int Street
(Oak St)

41+67.2 L
20' Drive

37+24.4 R
10' Drive

930+49.22-18.17' R (Oak St)
Install 2'x3' Type B Drop Inlet with
6" Concrete Collar and Type B
Frame and Grade
Top Curb El 1562.13
Top Wall El 1560.67
Floor El 1557.45

39+47.9 L
Int Street
(Oak St)

930+49.22-19.18' L (Oak St)
Install 2'x3' Type B Drop Inlet with
6" Concrete Collar and Type B
Frame and Grade
Top Curb El 1562.69
Top Wall El 1561.23
Floor El 1558.00

41+29.7 R
10' Drive

41+60.5 R
20' Drive

PVI 38+57
Elev 1561.73

PVI 39+00
Elev 1562.04

PVI 40+12
Elev 1563.48

1.2710%
0.7385%
1.2814%
0.9942%
42"RCP 1.3220%
42"RCP 1.3020%
18"RCP 1.556%
42"RCP 1.3000%
42"RCP 0.9270%

INV=1547.30
INV=1547.30
INV=1549.81
NV=1556.90
INV=1549.81
INV=1557.91
INV=1551.29
INV=1551.29
INV=1557.60
INV=1552.71

930+49.22-19.18' L to 930+49.22-18.17' R
(Oak St)
Install 15"-36" RCP
(Between Drop Inlets)

1558.45 1558.71 1558.96 1559.22 1559.47 1559.72 1559.98 1560.23 1560.49 1560.74 1561.00 1561.25 1561.50 1561.74 1561.89 1562.04 1562.30 1562.55 1562.81 1563.07 1563.32 1563.55 1563.75 1563.95 1564.15 1564.35 1564.55 1564.75 1564.95 1565.15 1565.34

36+00 37+00 38+00 39+00 40+00 41+00 42+00

Plotted From - GENSZ

File - ...\Sheet Files\Section_B136V.dgn

STATE OF SOUTH DAKOTA	PROJECT	SHEET	TOTAL SHEETS
	NH-CR 0014(185)229	B43	B151

REV 12-14-22 DBT
REV 5-18-23 DBT

43+00 - 30'L to 43+03 - 22'L
Take Out 12" - 8' PVC
(Incidental Work, Grading)

43+01 - 30'L to 43+60 - 30'L
Take Out 12" - 59' PVC
(Incidental Work, Grading)

43+02 - 30'R to 43+02 - 34'R
Take Out 12" - 4' PVC
(Incidental Work, Grading)

43+02-30' R
Take Out Manhole
with Frame & Cover
(Incidental Work, Grading)

43+02-34' L
Take Out Manhole
with Frame & Cover
(Incidental Work, Grading)

Remove Drop Inlets with Frame and Grate at the following locations:
43+01-30' L
43+02-34' R
43+60-30' L

REGISTERED PROFESSIONAL ENGINEER
REG. NO. 13586
DUSTIN LEIGH HAMILTON
SOUTH DAKOTA
3/21/24

Install 2' X 3' Type B Drop Inlet with 6" Concrete Collar and Type B Frame & Grate at the following locations:
935+75.00-18.17' L
935+75.00-18.17' R
43+78.13-23.67' L
45+57.89-29.17' L
47+78.13-29.17' L
701+35.00-18.17' L
701+35.00-18.17' R

Install 5' X 5' Junction Box with 15" Riser Section & Type A9 Manhole Frame & Lid at the following locations:
43+15.13-23.17' R
47+01.59-28.77' R

Install 4' X 4' Type B Drop Inlet with 6" Concrete Collar and Type B Frame & Grate at the following locations:
47+78.13-28.67' R
(Adjust Lid Opening in Field to align with C&G)

Install 3' X 5.5' Type B Drop Inlet with 6" Concrete Collar and Type B Frame & Grate at the following locations:
45+58.13-28.67' R
43+78.13-23.17' R
(Adjust Lid Opening in Field to align with C&G)

Clear and Grub Tree at the following locations:
42+24-36' L
42+51-36' L
43+84-41' R
44+06-41' R
44+49-39' R
44+89-39' R
45+63-39' R
46+48-39' R

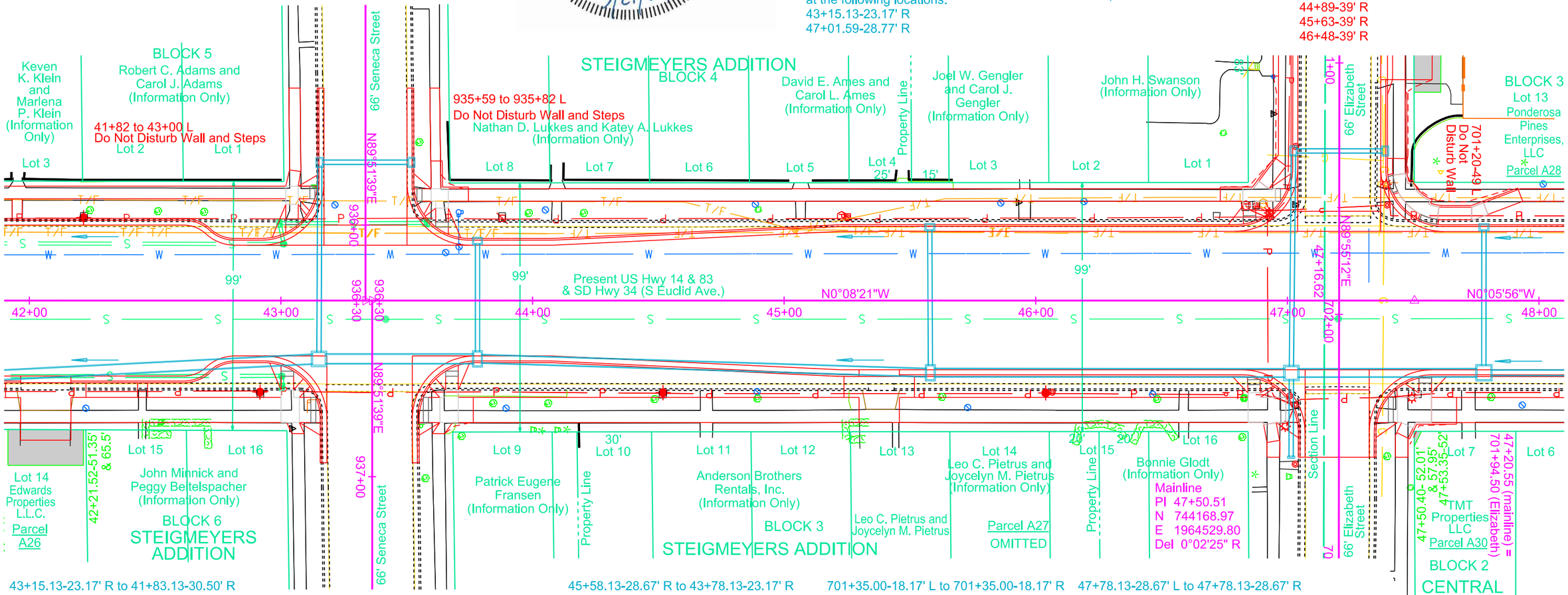

43+15.13-23.17' R to 41+83.13-30.50' R
Install 42"-132' RCP
(Between Manhole and Drop Inlet)

935+75.00-18.17' L to 935+75.00-18.17' R
Install 18"-36' RCP
(Between Drop Inlets)

935+75.00-18.17' R to 43+15.13-23.17' R
Install 18"-78' RCP
(Between Drop Inlet and Manhole)

43+78.13-23.17' R to 43+15.13-23.17' R
Install 42"-62' RCP
(Between Drop Inlet and Manhole)

43+78.13-23.67' L to 43+78.13-23.17' R
Install 18"-46' RCP
(Between Drop Inlets)

45+58.13-28.67' R to 43+78.13-23.17' R
Install 36"-178' RCP
(Between Drop Inlets)

45+57.89-29.17' L to 45+58.13-28.67' R
Install 18"-56' RCP
(Between Drop Inlets)

47+01.59-28.77' R to 45+58.13-28.67' R
Install 36"-142' RCP
(Between Manhole and Drop Inlet)

701+35.00-18.17' L to 701+35.00-18.17' R
Install 18"-36' RCP
(Between Drop Inlets)

701+35.00-18.17' R to 47+01.59-28.77' R
Install 18"-88' RCP
(Between Drop Inlet and Manhole)

47+78.13-28.67' R to 47+01.59-28.77' R
Install 36"-74' RCP
(Between Drop Inlet and Manhole)

47+78.13-28.67' L to 47+78.13-28.67' R
Install 18"-54' RCP
(Between Drop Inlets)

47+01.59-28.77' R to 702+56.81-18.98' R
Install 18"-32' RCP & Pipe Cap
(Between Pipe Cap and Manhole)

Parcel A26
41+91.51 to 42+21.52 R
Temporary Easement Containing
427 Sq Ft, more or less

Parcel A28
700+17.17 to 700+49.41 L
Temporary Easement Containing
401 Sq Ft, more or less

Parcel A28
700+79.61 to 701+11.61 L
Temporary Easement Containing
343 Sq Ft, more or less

Parcel A29
47+50.40 to 47+53.35 R
Temporary Easement Containing
9 Sq Ft Ac, more or less

STATE OF SOUTH DAKOTA	PROJECT	SHEET	TOTAL SHEETS
	NH-CR 0014(185)229	B44	B151

Plotting Date: 3/21/2024 REV 11/30/23 GCE

Plot Scale - 1:40

Seneca Street (Left) Profile

PVI 935+60
Elev 1567.80

PVI 935+46
Elev 1568.32

L 15.00ft
G1 -5.7415%
G2 -1.5000%
K 4

PVI 936+08
Elev 1566.23

-3.5599%
-5.7415%
-1.5000%

L 20.00ft
G1 -3.5599%
G2 -5.7415%
K 9

PVI 935+80
Elev 1566.65

1567.74
1566.73
1566.35

935+00
936+00

Seneca Street (Right) Profile

PVI 936+52
Elev 1566.26

PVI 936+95
Elev 1566.59

0.7780%

1566.32
1566.47

936+00
937+00

42+06.5 R
20' Drive

43+33.6 L
Int Street
(Seneca St)

43+36.3 R
Int Street
(Seneca St)

45+37.8 R
16' Drive

47+20.5 L&R
Int Street
(Elizabeth Ave)

Earthwork Balance - Mainline
station 29+93 to 61+50

EXCAVATION		EMBANKMENT		
Excavation	10,211	Embankment	148	
		+20%	30	178
Subtotal	10,211	Scarification (incidental) +20%		703
		Waste		9,329
Total	10,211	Excess		10,211

Waste is excess excavation to be disposed of at a site approved by the Engineer.

935+75.00-18.17' R (Seneca St)
Install 2' x 3' Type B Drop Inlet
with 6" Concrete Collar and Type B
Frame and Grate
Top Curb El 1566.36
Top Wall El 1564.99
Floor El 1561.48

935+75.00-18.17' L to 935+75.00-18.17' R
(Seneca St)
Install 18"-36" RCP
(Between Drop Inlets)

PVI 43+60
Elev 1566.93

935+75.00-18.17' L (Seneca St)
Install 2' x 3' Type B Drop Inlet
with 6" Concrete Collar and Type B
Frame and Grate
Top Curb El 1566.36
Top Wall El 1564.90
Floor El 1561.65

PVI 45+23
Elev 1569.74

701+35.00-18.17' R (Elizabeth St)
Install 2' x 3' Type B Drop Inlet
with 6" Concrete Collar and Type B
Frame and Grate
Top Curb El 1573.09
Top Wall El 1571.63
Floor El 1568.40

701+35.00-18.17' L to 701+35.00-18.17' R
(Elizabeth St)
Install 18"-36" RCP
(Between Drop Inlets)

701+35.00-18.17' L (Elizabeth St)
Install 2' x 3' Type B Drop Inlet
with 6" Concrete Collar and Type B
Frame and Grate
Top Curb El 1573.09
Top Wall El 1571.63
Floor El 1568.67

PVI 47+42
Elev 1574.00

0.9942%
1.7206%
1.9473%
2.8276%

18"RCP 0.500%
42"RCP 1.2138%
42"RCP 1.1864%
36"RCP 1.7505%
36"RCP 0.5200%
18"RCP 0.7860%
36"RCP 0.5200%

INV=1559.15
INV=1560.35
INV=1561.11
INV=1559.15
INV=1561.75
INV=1559.85
INV=1564.75
INV=1563.45
INV=1563.65
INV=1567.83
INV=1564.38
INV=1564.75
INV=1564.38
INV=1569.50
INV=1569.00 [R]

1565.34 1565.54 1565.74 1565.94 1566.14 1566.34 1566.54 1566.74 1566.93 1567.28 1567.62 1567.97 1568.31 1568.66 1569.00 1568.34 1569.69 1570.07 1570.46 1570.85 1571.24 1571.63 1572.02 1572.41 1572.80 1573.19 1573.58 1573.97 1574.51 1575.08 1575.64

42+00 43+00 44+00 45+00 46+00 47+00 48+00

REGISTERED PROFESSIONAL ENGINEER
REG. NO.
13586
DUSTIN LEIGH
HAMILTON
SOUTH DAKOTA
3/21/24

Plotted From - GENSZ

File - ...\Sheet Files\Section_B42V.dgn

STATE OF SOUTH DAKOTA	PROJECT	SHEET	TOTAL SHEETS
	NH-CR 0014(185)229	B45	B151

REV 12-14-22 DBT

49+83.13-28.67' R to 47+78.13-28.67' R
Install 36"-202' RCP
(Between Drop Inlets)

49+83.13-28.67' L to 49+83.13-28.50' R
Install 18"-56' RCP
(Between Drop Inlets)

49+83.13-28.50' R to 50+88.13-29.17' R
Install 24"-102' RCP
(Between Drop Inlets)

50+88.13-29.17' L to 50+88.13-29.17' R
Install 18"-56' RCP
(Between Drop Inlets)

50+88.13-29.17' R to 52+68.13-29.17' R
Install 24"-176' RCP
(Between Drop Inlets)

52+68.13-29.17' L to 52+68.13-29.17' R
Install 18"-56' RCP
(Between Drop Inlets)

52+68.13-29.17' R to 54+13.13-29.17' R
Install 18"-142' RCP
(Between Drop Inlets)

Install 4' X 4' Type B Drop Inlet with
6" Concrete Collar and Type B Frame
& Grate at the following locations:
49+83.13-28.50' R

Install 2' X 3' Type B Drop Inlet with
6" Concrete Collar and Type B Frame
& Grate at the following locations:
49+83.13-29.17' L
50+88.17-29.17' L
52+68.13-29.17' L

Install 3' X 4' Type B Drop Inlet with
6" Concrete Collar and Type B Frame
& Grate at the following locations:
50+88.13-28.67' R
52+68.03-28.67' R
(Adjust Lid Opening in Field to align
with C&G)

50+90 L
Refurbish Mailbox
52+12 L
Refurbish Mailbox

48+62 & 48+98 L
Do Not Disturb Steps

49+86 to 49+96 L
Do Not Disturb Railing

940+25 to 940+50 L
Do Not Disturb Wall

50+63 to 50+90 L, 50+99 to 51+24 L
Do Not Disturb Walls

50+62 to 51+07 R
Take Out Chain Link Fence

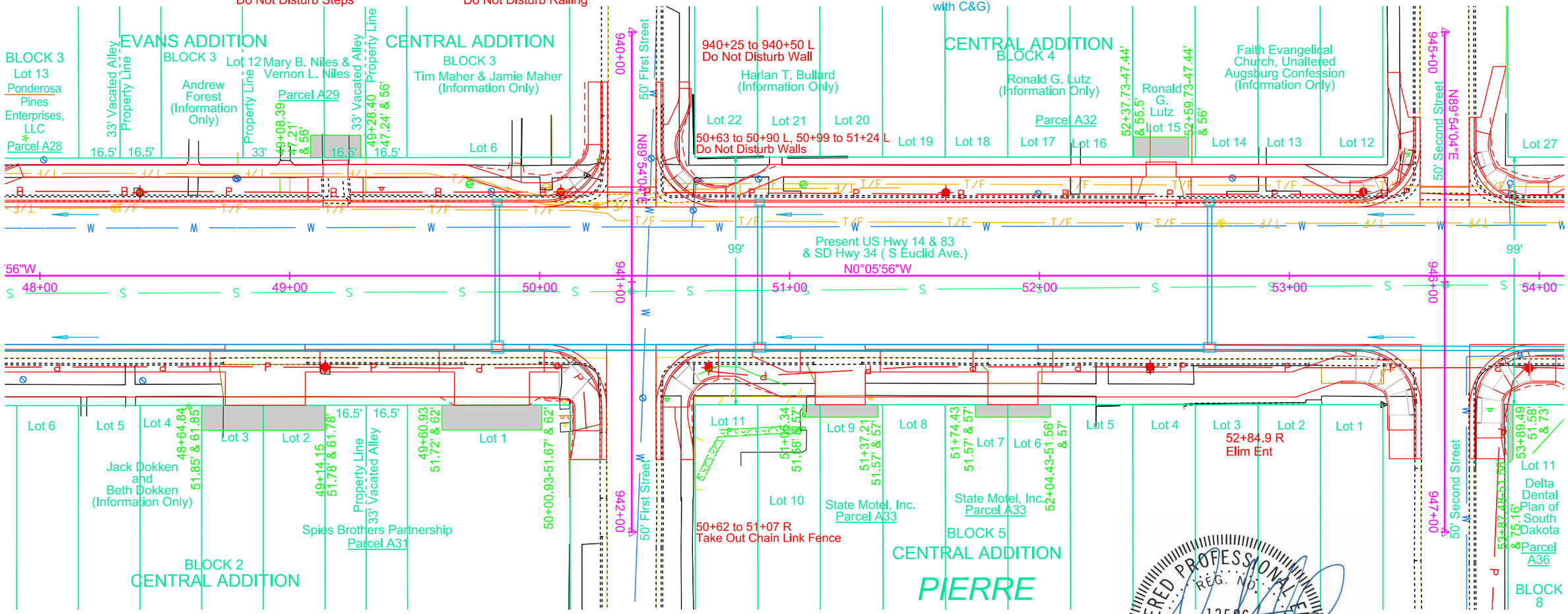

REGISTERED PROFESSIONAL ENGINEER
REG. NO.
13586
DUSTIN LEIGH HAMILTON
SOUTH DAKOTA
3/21/24

Parcel A29
49+08.39 to 49+28.40 L
Temporary Easement Containing
180 Sq Ft, more or less

Parcel A31
48+64.84 to 49+14.15 R
Temporary Easement Containing
493 Sq Ft, more or less

Parcel A31
49+60.93 to 50+00.93 R
Temporary Easement Containing
400 Sq Ft, more or less

Parcel A32
52+37.73 to 52+59.73 L
Temporary Easement Containing
177 Sq Ft, more or less

Parcel A33
51+05.34 to 51+35.34 R
Temporary Easement Containing
150 Sq Ft, more or less

Parcel A33
51+74.43 to 52+04.43 R
Temporary Easement Containing
150 Sq Ft, more or less

Parcel A36
53+87.48 to 53+89.49 R
Temporary Easement Containing
45 Sq Ft, more or less

STATE OF SOUTH DAKOTA	PROJECT	SHEET	TOTAL SHEETS
	NH-CR 0014(185)229	B46	B151

Plotting Date: 3/21/2024

Plot Scale - 1:40

First Street Profile

PVI 940+30
Elev 1582.94
L 20.00ft
G1 -3.3000%
G2 -1.2812%
K 10

PVI 940+70
Elev 1582.02

PVI 941+25
Elev 1582.02

PVI 941+55
Elev 1582.55

PVI 941+71
Elev 1582.47

-1.2812%
1.7542%
-0.4776%

PVI 940+50
Elev 1582.28

L 20.00ft
G1 -0.4539%
G2 -3.3000%
K 7

L 30.00ft
G1 1.7542%
G2 -0.4776%
K 13

1582.99
1582.61
1582.15
1582.29
1582.49

940+00
941+00
942+00

Second Street Profile

PVI 945+31
Elev 1590.55

L 20.00ft
G1 -0.3998%
G2 0.3819%
K 26

PVI 946+25
Elev 1590.47

PVI 946+60
Elev 1590.68

PVI 946+71
Elev 1590.55

L 20.00ft
G1 -1.4893%
G2 1.4430%
K 7

0.3998%
0.3819%
-1.4893%
1.4430%
-1.2207%

PVI 945+60
Elev 1590.43

PVI 945+70
Elev 1590.47

PVI 946+35
Elev 1590.32

L 20.00ft
G1 1.4430%
G2 -1.2207%
K 8

1590.51
1590.45
1590.41
1590.61

945+00
946+00
947+00

48+90.2 R
32' Drive

49+18.4L
10' Drive

49+80.8 R
30' Drive

50+36.9 L&R
Int Street
(First St)

51+20.3 R
20' Drive

51+89.4 R
20' Drive

52+48.7 L
12' Drive

53+50.96 L&R
Int Street
(Second St)

PVI 49+45
Elev 1579.74

PVI 50+91
Elev 1584.22

PVI 52+57
Elev 1588.41

PVI 53+21
Elev 1590.22

2.8276%
3.0668%
2.5220%
2.8348%
1.9506%

24"RCP 3.0000%
24"RCP 3.2500%
24"RCP 2.0400%
18"RCP 2.4664%

INV=1575.00
INV=1575.50
INV=1579.30
INV=1578.81
INV=1578.81
INV=1582.40
INV=1582.90
INV=1582.90

1575.64 1576.21 1576.78 1577.34 1577.91 1578.47 1579.04 1579.60 1580.20 1580.82 1581.43 1582.04 1582.66 1583.27 1583.88 1584.45 1584.95 1585.46 1585.96 1586.47 1586.97 1587.47 1587.98 1588.49 1589.06 1589.63 1590.19 1590.59 1590.98 1591.37 1591.76

48+00 49+00 50+00 51+00 52+00 53+00 54+00

REGISTERED PROFESSIONAL ENGINEER
REG. NO.
13586
DUSTIN LEIGH
HAMILTON
SOUTH DAKOTA
3/21/24

Plotted From - GENSZ

File - ...\Sheet Files\Section_B148V.dgn

STATE OF SOUTH DAKOTA	PROJECT	SHEET	TOTAL SHEETS
	NH-CR 0014(185)229	B47	B151

REV 01-25-23 DBT

54+13.13-29.17' L to 54+13.13-29.17' R
Install 18"-58' RCP
(Between Drop Inlets)

55+63.13-29.17' R to 54+13.13-29.17' R
Install 18"-148' RCP
(Between Drop Inlets)

55+64.96-29.29' R to 55+63.10-29.17' L
Install 18"-58' RCP
(Between Drop Inlets)

57+38.13-29.17' R to 55+63.10-29.17' R
Install 18"-172' RCP
(Between Drop Inlets)

57+38.13-29.17' L to 57+38.13-29.17' R
Install 18"-58' RCP
(Between Drop Inlets)

Install 2' X 3' Type B Drop Inlet with
6" Concrete Collar and Type B Frame
& Grate at the following locations:
54+13.13-29.17' R
54+13.13-29.17' L
55+63.10-29.17' L
55+63.10-29.17' R
57+38.13-29.17' L
57+38.13-29.17' R

55+07 L
Do Not Disturb Sign

56+57 L
Do Not Disturb Tree

60+07 L
Do Not Disturb Sign

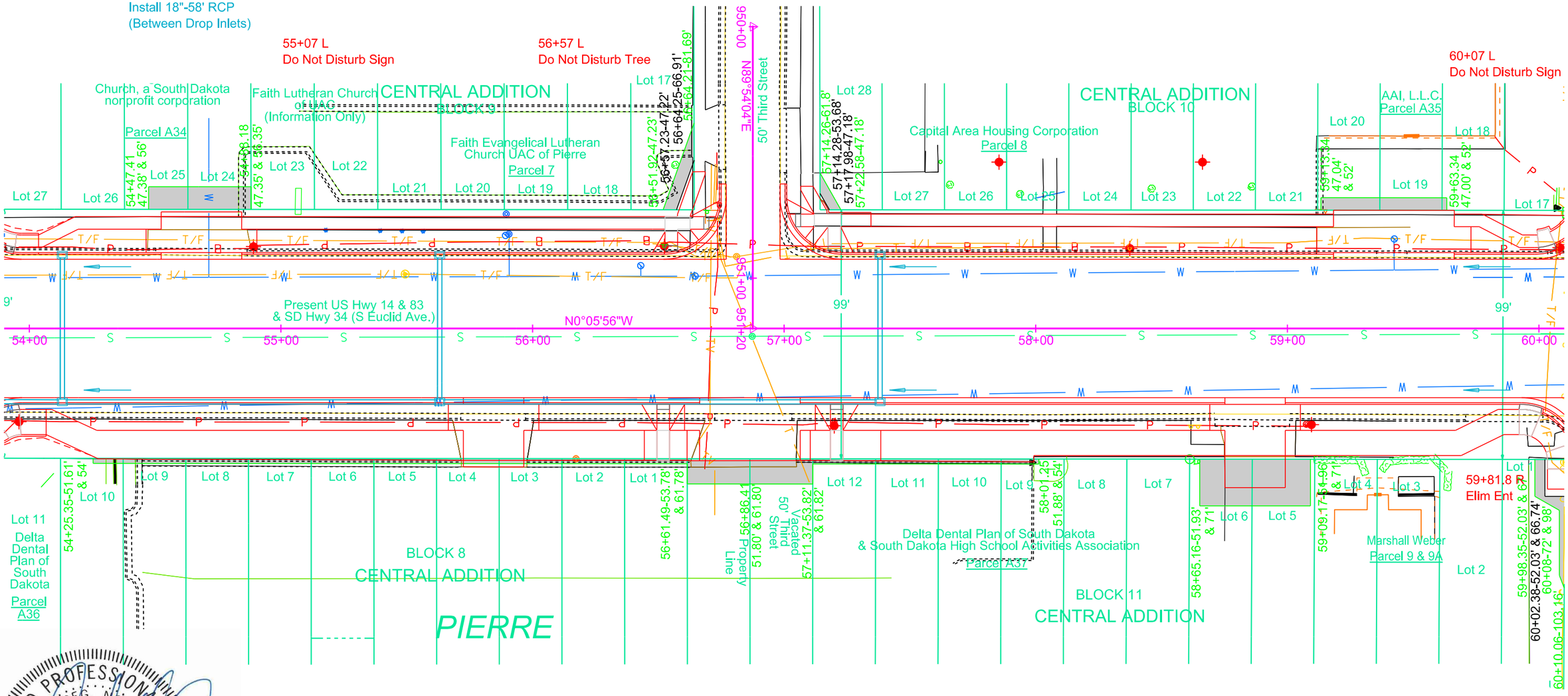

REGISTERED PROFESSIONAL ENGINEER
REG. NO.
13586
DUSTIN LEIGH HAMILTON
SOUTH DAKOTA
3/21/24

Parcel A34
54+47.41 to 54+88.18 L
Temporary Easement Containing
367 Sq Ft, more or less

Parcel A36
54+25.35 to 56+86.41 R
Temporary Easement Containing
721 Sq Ft, more or less

Parcel A35
59+13.34 to 59+63.34 L
Temporary Easement Containing
250 Sq Ft, more or less

Parcel A37
56+86.41 to 58+01.25 R
Temporary Easement Containing
429 Sq Ft, more or less

Parcel 7
56+51.92 to 56+64.21 L
Temporary Easement Containing
144 Sq Ft, more or less

Parcel 8
57+14.26 to 57+22.58 L
Temporary Easement Containing
49 Sq Ft, more or less

Parcel 9A
58+65.16 to 59+09.17 R
Temporary Easement Containing
817 Sq Ft, more or less

Parcel 9A
59+98.35 to 60+10.06 R
Temporary Easement Containing
157 Sq Ft, more or less

STATE OF SOUTH DAKOTA	PROJECT	SHEET	TOTAL SHEETS
	NH-CR 0014(185)229	B48	B151

Plotting Date: 3/21/2024

Plot Scale - 1:40

Third Street Profile

1605
1600
1595
1590
1585

PVI 950+62
Elev 1597.21

PVI 950+92
Elev 1597.47

0.8753%

1597.36

950+00

951+00

1620
1615
1610
1605
1600
1595
1590
1585
1580
1575
1570

54+68.4 L
32' Drive

55+84.7 R
24' Drive

56+87.6 L
Int Street
(Third St)

56+86.4 R
40' Drive

58+87.2 R
24' Drive

59+42.3 L
48' Drive

L 100.00ft
G1 1.8561%
G2 3.4024%
K 65

PVI 57+77
Elev 1600.49

PVI 56+43
Elev 1597.18

PVI 54+86
Elev 1593.44

1.9506%

2.3845%

1.8561%

3.4024%

3.8361%

18"RCP 2.0403%

18"RCP 2.2965%

INV=1586.67
INV=1586.39
INV=1586.39

INV=1589.67
INV=1589.67
INV=1589.67

INV=1593.90

INV=1593.62

PVI 57+24
Elev 1598.69

1591.76 1592.15 1592.54 1592.93 1593.32 1593.77 1594.25 1594.73 1595.21 1595.68 1596.16 1596.64 1597.11 1597.50 1597.87 1598.29 1598.78 1599.32 1599.93 1600.61 1601.37 1602.14 1602.91 1603.68 1604.44 1605.21 1605.98 1606.74 1607.51 1608.28 1609.05

54+00 55+00 56+00 57+00 58+00 59+00 60+00

REGISTERED PROFESSIONAL ENGINEER
REG. NO.
13586
DUSTIN LEIGH
HAMILTON
SOUTH DAKOTA
3/21/24

Plotted From - GENSZ

File - ...\Sheet Files\Section_BG4V.dgn

STATE OF SOUTH DAKOTA	PROJECT	SHEET	TOTAL SHEETS
	NH-CR 0014(185)229	B49	B151

REV 01-05-23 DBT

60+31 - 30'R to 60+52 - 400'R
Take Out 24" - 307' CMP
(Incidental Work, Grading)

60+31 - 30'R to 60+79 - 28'R
Take Out 24" - 48' CMP
(Incidental Work, Grading)

60+31-30' R
Take Out Manhole
with Frame & Cover
(Incidental Work, Grading)

60+78 - 22'L to 60+79 - 28'R
Take Out 18" - 50' CMP
(Incidental Work, Grading)

60+79 - 28'R to 64+12 - 29'R
Take Out 18" - 331' CMP
(Incidental Work, Grading)

64+07 - 26'L to 64+12 - 29'R
Take Out 18" - 55' CMP
(Incidental Work, Grading)

Remove Drop Inlets with
Frame and Grate at the
following locations:
60+78-21' L
60+79-28' R
64+07-26' L
64+12-29' R

62+01.58-5.50' R to 61+03.13-5.50' R
Install 24"-100' RCP
(Between Manholes)

62+01.11-28.17' R to 62+01.58-5.50' R
Install 18"-22' RCP
(Between Drop Inlet and Manhole)

62+98.12-5.50' R to 62+01.58-5.50' R
Install 24"-98' RCP
(Between Manholes)

62+98.12-28.17' R to 62+98.12-5.50' R
Install 18"-22' RCP
(Between Drop Inlet and Manhole)

63+52.32-5.50' R to 62+98.12-5.50' R
Install 24"-54' RCP
(Between Manholes)

956+58.00-18.10' R to 63+52.32-5.50' R
Install 18"-52' RCP
(Between Drop Inlet and Manhole)

64+78.13-5.50' R to 63+52.32-5.50' R
Install 24"-126' RCP
(Between Manholes)

64+78.13-29.17' R to 64+78.13-5.50' R
Install 18"-24' RCP
(Between Drop Inlet and Manhole)

66+30.00-5.50' R to 64+78.13-5.50' R
Install 24"-152' RCP
(Between Manholes)

61+03.13-28.17' L to 61+03.13-5.50' R
Install 24"-30' RCP
(Between Drop Inlet and Manhole)

61+03.13-28.17' R to 714+24.43-10.42' R
Install 24"-70' RCP
(Between Drop Inlet and Manhole)

61+03.12-5.50' R to 61+03.13-28.17' R
Install 24"-20' RCP
(Between Manhole and Drop Inlet)

955+21.0 L
Elim Ent

Clear and Grub Tree at
the following locations:
62+97-51' R
65+90-43' L

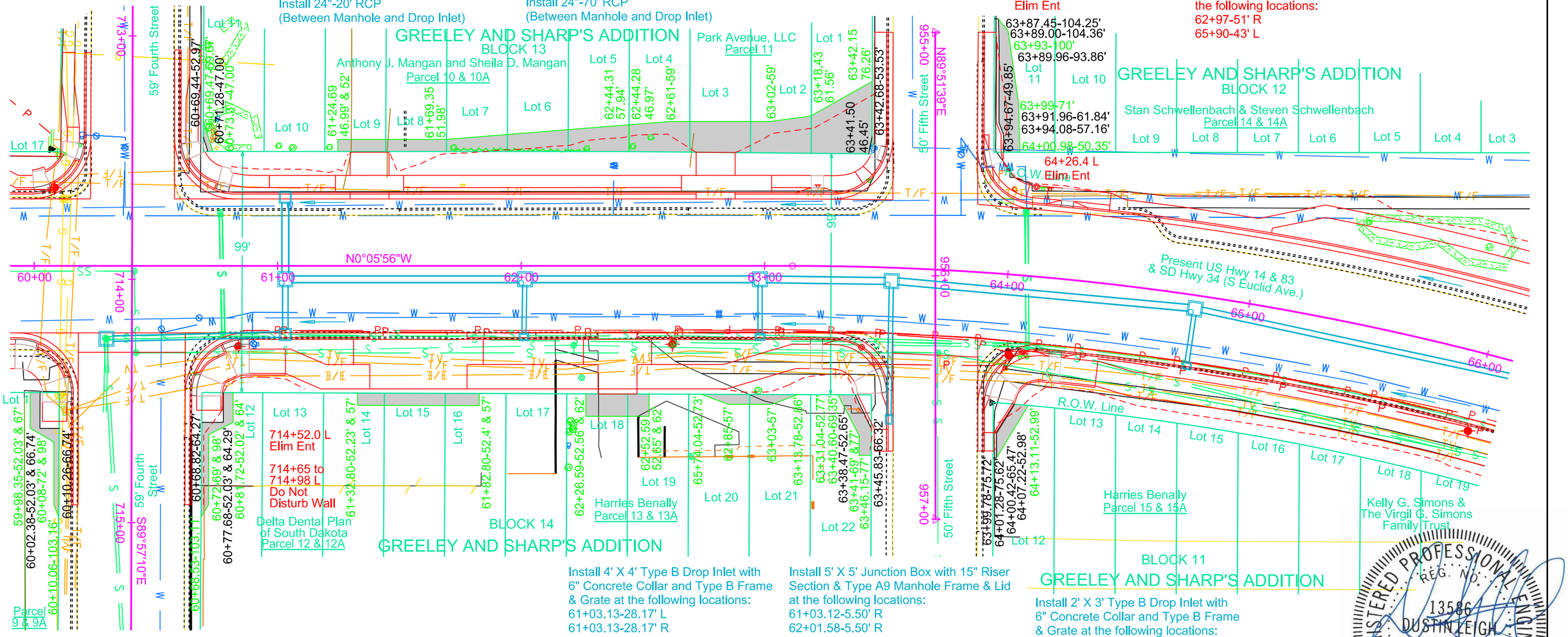

Install 4' X 4' Type B Drop Inlet with
6" Concrete Collar and Type B Frame
& Grate at the following locations:
61+03.13-28.17' L
61+03.13-28.17' R

Install 5' X 5' Junction Box with 15" Riser
Section & Type A9 Manhole Frame & Lid
at the following locations:
61+03.12-5.50' R
62+01.58-5.50' R
62+98.12-5.50' R
63+52.32-5.50' R
64+78.13-5.50' R
714+24.43-10.42' R

Install 2' X 3' Type B Drop Inlet with
6" Concrete Collar and Type B Frame
& Grate at the following locations:
62+01.11-29.18' R
62+98.13-29.17' R
64+78.13-29.17' R
956+59.00-19.07' R

Parcel 9A
59+98.35 to 60+10.06 R
Temporary Easement Containing
157 Sq Ft, more or less

Parcel 10A
61+24.69 to 62+44.31 L
Temporary Easement Containing
822 Sq Ft, more or less

Parcel 12A
60+68.53 to 60+81.72 R
Temporary Easement Containing
182 Sq Ft, more or less

Parcel 14A
63+89.00 to 64+00.42 L
Temporary Easement Containing
331 Sq Ft, more or less

Parcel 10A
60+69.44 to 60+73.37 L
Temporary Easement Containing
20 Sq Ft, more or less

Parcel 11
62+44.28 to 63+42.68 L
Temporary Easement Containing
1,518 Sq Ft, more or less

Parcel 12A
61+32.80 to 61+82.80 R
Temporary Easement Containing
250 Sq Ft, more or less

Parcel 13A
62+26.59 to 62+52.59 R
Temporary Easement Containing
239 Sq Ft, more or less

Parcel 13A
62+74.04 to 63+13.78 R
Temporary Easement Containing
117 Sq Ft, more or less

Parcel 13A
63+31.04 to 63+46.15 R
Temporary Easement Containing
151 Sq Ft, more or less

Parcel 15A
64+00.42 to 64+13.11 R
Temporary Easement Containing
102 Sq Ft, more or less

REGISTERED PROFESSIONAL ENGINEER
REG. NO.
13586
DUSTIN LEIGH
HAMILTON
SOUTH DAKOTA
3/21/24

HDR

STATE OF SOUTH DAKOTA	PROJECT	SHEET	TOTAL SHEETS
	NH-CR 0014(185)229	B50	B151

Plotting Date: 3/21/2024

Plot Scale - 1:40

Fourth Street Profile

PVI 713+06
Elev 1609.96

PVI 713+35
Elev 1610.33

PVI 713+67
Elev 1610.06

PVI 714+22
Elev 1610.06
L 30.00ft
G1 0.8862%
G2 1.7880%
K 33

PVI 714+44
Elev 1610.25
L 20.00ft
G1 1.2787%
G2 -0.8460%
K 9

PVI 714+80
Elev 1610.90

PVI 714+93
Elev 1610.83
L 20.00ft
G1 1.7880%
G2 -0.5516%
K 9

1.2787% -0.8460% 0.8862% 1.7880% -0.5516%

1610.14 1610.28 1610.12 1610.24 1610.54 1610.84

712+50 713+00 714+00 715+00 715+50

60+40.2 L&R
Int Street
(Fourth St)

61+37.7 L 61+57.8 R
16' Drive 40' Drive

62+39.6 R
16' Drive

62+79.9 L
16' Drive

61+50

Fifth Street Profile

PVI 955+00
Elev 1622.25

PVI 955+31
Elev 1624.13

PVI 955+61
Elev 1624.58

PVI 955+70
Elev 1624.54

PVI 956+25
Elev 1622.01

PVI 956+29
Elev 1622.05

PVI 956+37
Elev 1622.45

PVI 956+50
Elev 1622.64

PVI 956+67
Elev 1624.30

L 30.00ft
G1 6.0704%
G2 1.5000%
K 7

L 16.00ft
G1 1.5000%
G2 -0.5000%
K 8

L 8.00ft
G1 5.0000%
G2 1.5000%
K 2

L 8.00ft
G1 1.0000%
G2 5.0000%
K 2

L 8.00ft
G1 1.5000%
G2 9.5288%
K 1

L 10.00ft
G1 9.5288%
G2 2.5188%
K 1

6.0704% 1.5000% -0.5000% 1.0000% 1.5000% 9.5288%

1623.45 1624.24 1624.54 1622.49 1623.63

955+00 956+00 957+00

63+70.1 L&R
Int Street
(Fifth St)

PVI 64+22
Elev 1625.25

PVI 63+60
Elev 1622.86

3.8261% 3.8541% 4.5587%

24"RCP 2.0000%
24"RCP 3.8092%
24"RCP 3.8234%
24"RCP 4.5716%
24"RCP 3.5378%
24"RCP 4.7240%

INV=1605.38
EX. INV=1605.38
INV=1607.25
INV=1606.75
INV=1606.75
INV=1610.81
INV=1611.31
INV=1610.81
INV=1614.31
INV=1614.81
INV=1614.31
INV=1617.59
INV=1616.55
INV=1616.55
INV=1620.80
INV=1621.30
INV=1620.80

1609.05 1609.81 1610.58 1611.35 1612.11 1612.88 1613.65 1614.42 1615.18 1615.95 1616.72 1617.49 1618.25 1619.02 1619.79 1620.55 1621.32 1622.09 1622.86 1623.63 1624.40 1625.17 1626.07 1626.98 1627.89 1628.80 1629.71 1630.62 1631.54 1632.45 1633.36

60+00 61+00 62+00 63+00 64+00 65+00 66+00

REGISTERED PROFESSIONAL ENGINEER
REG. NO.
13586
DUSTIN LEIGH
HAMILTON
SOUTH DAKOTA
3/21/24

Plotted From - ...\Sheet Files\Section_B160V.dgn

File - ...\Sheet Files\Section_B160V.dgn

STATE OF SOUTH DAKOTA	PROJECT	SHEET	TOTAL SHEETS
	NH-CR 0014(185)229	B51	B151

REV 12-14-22 DBT
REV 12-20-22 DBT
REV 04-04-23 MJW

67+59 - 29'R to 71+51 - 28'R
Take Out 18" - 382' CMP
(Incidental Work, Grading)

71+51 - 28'R to 75+82 - 28'R
Take Out 18" - 431' CMP
(Incidental Work, Grading)

67+44 - 21'L to 67+59 - 29'R
Take Out 18" - 52' CMP
(Incidental Work, Grading)

Remove Drop Inlets with Frame and Grate at the following locations:
67+44-21' L
67+59-29' R
71+51-28' R

66+28.13-28.17' R to 66+30.00-5.50' R
Install 18"-24' RCP
(Between Manhole and Drop Inlet)

67+60.35-5.30' R to 66+30.00-5.50' R
Install 24"-132' RCP
(Between Manholes)

67+78.13-28.17' R to 67+60.35-5.30' R
Install 24"-28' RCP
(Between Manhole and Drop Inlet)

69+28.13-28.17' R to 67+78.13-28.17' R
Install 24"-150' RCP
(Between Drop Inlets)

70+78+.13-29.17' R to 69+28.13-28.17' R
Install 24"-150' RCP
(Between Drop Inlets)

71+88.13-29.17' R to 70+78.13-29.17' R
Install 18"-110' RCP
(Between Drop Inlets)

Clear and Grub Tree at the following locations:
66+51-44' L
66+69-58' R
70+60-47' R
71+01-37' L
71+32-37' L
71+64-32' L
67+85 to 69+90-40' L

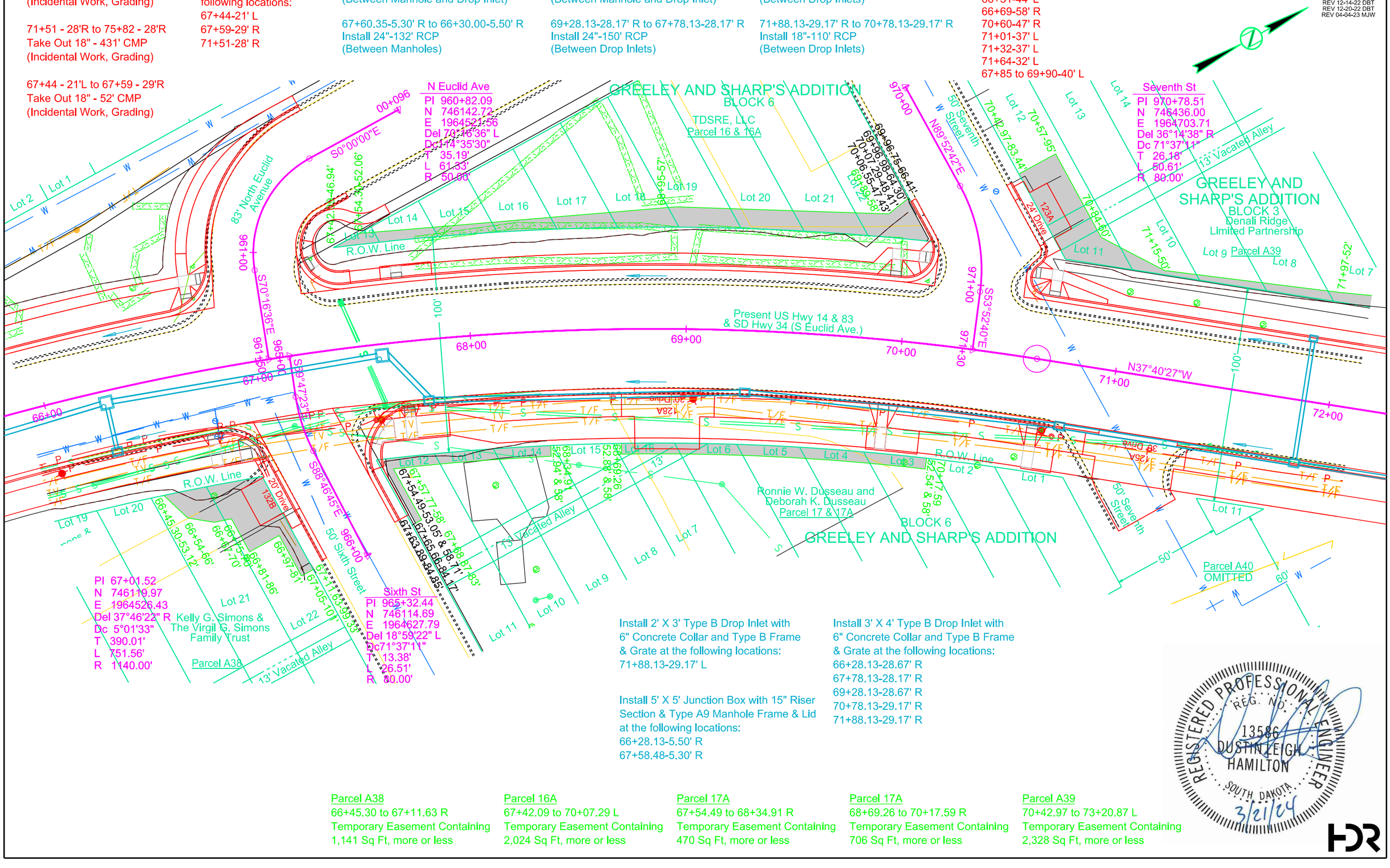

Install 2' X 3' Type B Drop Inlet with 6" Concrete Collar and Type B Frame & Grate at the following locations:
71+88.13-29.17' L

Install 5' X 5' Junction Box with 15" Riser Section & Type A9 Manhole Frame & Lid at the following locations:
66+28.13-5.50' R
67+58.48-5.30' R

Install 3' X 4' Type B Drop Inlet with 6" Concrete Collar and Type B Frame & Grate at the following locations:
66+28.13-28.67' R
67+78.13-28.17' R
69+28.13-28.67' R
70+78.13-29.17' R
71+88.13-29.17' R

Parcel A38
66+45.30 to 67+11.63 R
Temporary Easement Containing
1,141 Sq Ft, more or less

Parcel 16A
67+42.09 to 70+07.29 L
Temporary Easement Containing
2,024 Sq Ft, more or less

Parcel 17A
67+54.49 to 68+34.91 R
Temporary Easement Containing
470 Sq Ft, more or less

Parcel 17A
68+69.26 to 70+17.59 R
Temporary Easement Containing
706 Sq Ft, more or less

Parcel A39
70+42.97 to 73+20.87 L
Temporary Easement Containing
2,328 Sq Ft, more or less

REGISTERED PROFESSIONAL ENGINEER
REG. NO.
13586
DUSTIN LEIGH
HAMILTON
SOUTH DAKOTA
3/21/24

HDR

STATE OF SOUTH DAKOTA	PROJECT	SHEET	TOTAL SHEETS
	NH-CR 0014(185)229	B52	B151

Plotting Date: 3/21/2024

REV 04-04-23 MJW

Plot Scale - 1:40

Euclid Ave Profile

PVI 960+40
Elev 1639.82

PVI 961+22
Elev 1639.41

-0.5000%

1639.82 1639.72 1639.62 1639.52 1639.42

961+00

Sixth Street Profile

965+56.1 R
20' Drive

PVI 965+92
Elev 1639.72

PVI 965+87
Elev 1639.58

PVI 965+28
Elev 1636.53

PVI 965+35
Elev 1636.46

L 10.00ft
G1 1.5000%
G2 7.4969%
K 2

1.5000%
7.4969%
-1.0000%
2.7210%

PVI 965+48
Elev 1636.65

L 10.00ft
G1 7.4969%
G2 2.7210%
K 2

1636.53 1637.55 1639.05

965+00 966+00

Seventh Street (Left) Profile

970+76.0 L
24' Drive

PVI 970+85
Elev 1653.30

PVI 971+03
Elev 1652.84

PVI 970+40
Elev 1650.67

5.8877%
-2.6200%

L 30.00ft
G1 5.8877%
G2 -2.6200%
K 4

1651.83 1652.87 1652.91

970+00 971+00

67+15.7 R
Int Street
(Sixth St)

67+07.1 L
Int Street
(Euclid Ave)

68+91.4 R
30' Drive

70+33.0 L
Int Street
(Seventh St)

71+15.1 R
36' Drive

PVI 72+00
Elev 1660.11

PVI 66+38
Elev 1635.09

PVI 69+28
Elev 1646.56

PVI 70+00
Elev 1650.02

4.5587%
3.9547%
4.8086%
5.0437%

24"RCP 4.7240%
24"RCP 4.7250%
24"RCP 4.1492%
24"RCP 5.8587%
18"RCP 5.7925%
24"RCP
0.5881%

INV=1627.61
INV=1626.11
INV=1627.61
INV=1633.65
INV=1633.65
INV=1633.50
INV=1633.50
INV=1639.55
INV=1639.55
INV=1647.90
INV=1647.90
INV=1654.04
INV=1654.04
INV=1654.04

1633.36 1634.27 1635.17 1635.96 1636.75 1637.54 1638.33 1639.13 1639.92 1640.71 1641.50 1642.29 1643.08 1643.87 1644.66 1645.45 1646.24 1647.14 1648.10 1649.06 1650.02 1651.03 1652.04 1653.05 1654.06 1655.07 1656.07 1657.08 1658.09 1659.10 1660.11

66+00 67+00 68+00 69+00 70+00 71+00 72+00

REGISTERED PROFESSIONAL ENGINEER
REG. NO.
13586
DUSTIN LEIGH
HAMILTON
SOUTH DAKOTA
3/21/24

Plotted From - GENSZ

File - ...\Sheet Files\Section_B166V.dgn

STATE OF SOUTH DAKOTA	PROJECT	SHEET	TOTAL SHEETS
	NH-CR 0014(185)229	B53	B151

75+82 - 28'R to 75+82 - 23'L
Take Out 18" - 51' CMP
(Incidental Work, Grading)

Remove Drop Inlets with Frame and Grate at the following locations:
75+82-28' R
75+82-23' L

73+93.13-28.67' L to 73+93.13-28.67' R
Install 18"-58' RCP
(Between Drop Inlets)

73+93.13-28.67' R to 71+88.13-29.17' R
Install 18"-206' RCP
(Between Drop Inlets)

74+98.13-29.17' R to 73+93.13-28.67' R
Install 18"-106' RCP
(Between Drop Inlets)

75+18.13-29.17' L to 74+98.13-29.17' R
Install 18"-60' RCP
(Between Drop Inlets)

75+88.03-29.17' R to 74+98.13-29.17' R
Install 18"-90' RCP
(Between Drop Inlets)

77+83.81-31.50' R to 75+88.03-29.17' R
Install 18"-196' RCP
(Between Drop Inlets)

77+84.77-4.20' R to 77+83.81-31.50' R
Install 18"-26' RCP
(Between Drop Inlets)

77+85.07-3.83' L to 77+84.77-4.20' R
Install 18"-8' RCP
(Between Drop Inlets)

77+86.64-29.17' L to 77+85.07-3.83' L
Install 18"-26' RCP
(Between Drop Inlets)

Clear and Grub Tree at the following locations:
72+25-32' L
72+55-33' L
72+88-35' L
72+89-44' R
73+24-44' L
73+67-47' R
73+91-47' R
74+11-47' R
74+31-45' R
74+51-45' R
74+73-45' R
74+92-45' R
76+04-50' R

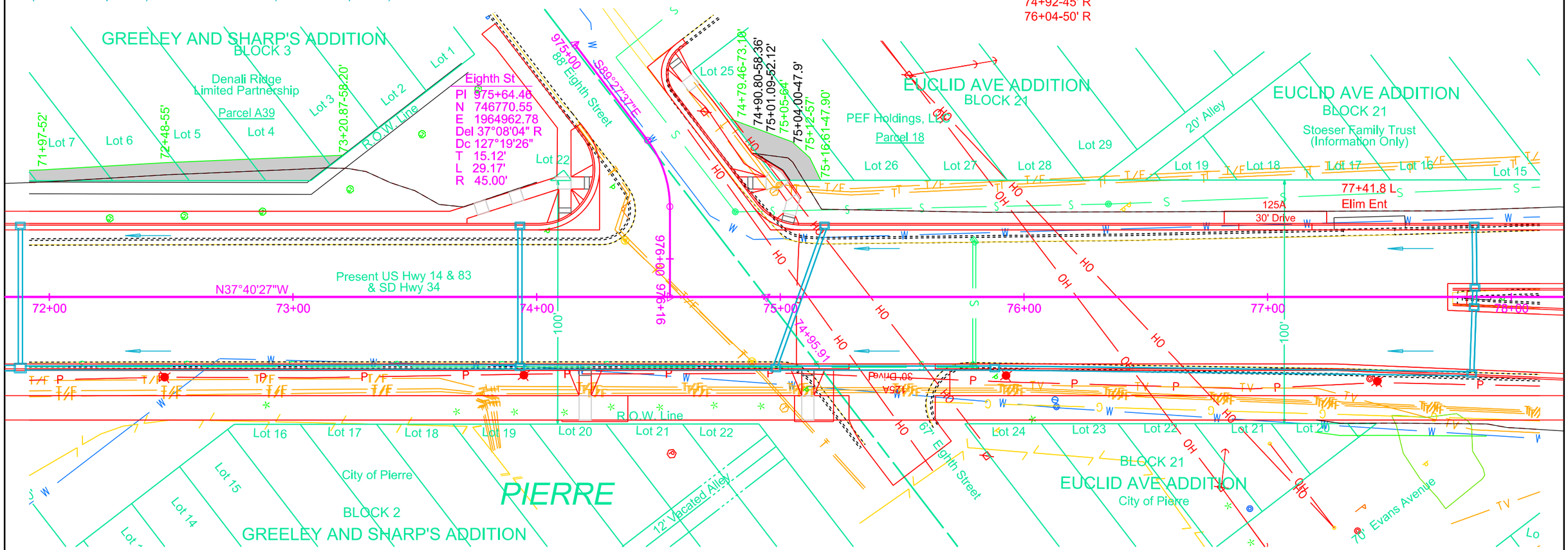

Install 2' X 3' Type B Drop Inlet with
6" Concrete Collar and Type B Frame
& Grate at the following locations:
73+93.13-28.67' R
73+93.13-29.17' L
74+98.13-29.17' R
75+18.13-29.17' L
75+88.03-29.17' R
77+83.81-31.50' R
77+84.77-4.20' R
77+85.07-3.83' L
77+84.78-29.17' L

Parcel 18
74+79.46 to 75+16.61 L
Temporary Easement Containing
349 Sq Ft, more or less

REGISTERED PROFESSIONAL ENGINEER
REG. NO.
13586
DUSTIN LEIGH HAMILTON
SOUTH DAKOTA
3/21/24

HDR

STATE OF SOUTH DAKOTA	PROJECT	SHEET	TOTAL SHEETS
	NH-CR 0014(185)229	B54	B151

Plotting Date: 3/21/2024

Plot Scale - 1:40

Eighth Street (Left) Profile

PVI 975+25
Elev 1670.78

PVI 975+40
Elev 1671.45

PVI 975+88
Elev 1670.87

4.4500%

-1.2071%

L 20.00ft
G1 4.4500%
G2 -1.2071%
K 4

1671.31 1671.21 1670.97

975+00 976+00

74+54.67 L
Int Street
(Eighth St)

75+45.9 R
35' Drive

77+03.2 L
30' Drive

PVI 75+55
Elev 1675.93

3.3816%

PVI 72+00
Elev 1660.11

4.4555%

18"RCP 4.4975%

18"RCP 5.0935%

18"RCP 4.2002%

18"RCP 3.3040%

INV=1663.08
INV=1663.08
INV=1663.08

INV=1668.25
INV=1668.25
INV=1668.25

INV=1671.70
INV=1671.70

INV=1678.07
INV=1678.07

L 100.00ft
G1 4.4555%
G2 3.3816%
K 93

1660.11 1661.00 1661.89 1662.78 1663.67 1664.57 1665.46 1666.35 1667.24 1668.13 1669.02 1669.91 1670.80 1671.69 1672.59 1673.48 1674.36 1675.19 1675.99 1676.74 1677.45 1678.12 1678.80 1679.48 1680.15 1680.83 1681.51 1682.18 1682.86 1683.54 1684.21

72+00 73+00 74+00 75+00 76+00 77+00 78+00

REGISTERED PROFESSIONAL ENGINEER
REG. NO.
13586
DUSTIN LEIGH
HAMILTON
SOUTH DAKOTA
3/21/24

Plotted From - GENSZ

File - ...\Sheet Files\Section_B172V.dgn

STATE OF SOUTH DAKOTA	PROJECT	SHEET	TOTAL SHEETS
	NH-CR 0014(185)229	B55	B151

REGISTERED PROFESSIONAL ENGINEER
REG. NO. 13586
DUSTIN ZEIGH HAMILTON
SOUTH DAKOTA
3/21/24

EUCLID AVE ADDITION
BLOCK 15
Steve Malsam-Rysdon and Kim Malsam-Rysdon
(Information Only)
Lot 25 Lot 26 Lot 27 Lot 28

70' Evans Avenue
Lot 48

EUCLID AVE ADDITION
BLOCK 21
Stoeser Family Trust
(Information Only)
Lot 16
Lot 15
Lot 14
Lot 13
R.O.W. Line

Present US Hwy 14 & 83
& SD Hwy 34 (S Euclid Ave.)

N37°40'27"W
78+00 79+00 80+00 81+00 82+00 83+00 84+00

END NH 0014(185)229
STA 80+45.00

Present US Hwy 14 & 83
& SD Hwy 34 (S Euclid Ave.)

PIERRE

Carol L. Barge
(Information Only)
Lot 31 Lot 32 Lot 33 Lot 34 Lot 35 Lot 36

BLOCK 22
EUCLID AVE ADDITION
Lot 12 Lot 11 Lot 10 Lot 9 Lot 8 Lot 7 Lot 6

70' Vacated Wisconsin Street

Lot 48
BLOCK 23
EUCLID AVE ADDITION

STATE OF SOUTH DAKOTA	PROJECT	SHEET	TOTAL SHEETS
	NH-CR 0014(185)229	B56	B151

Plotting Date: 3/21/2024

Earthwork Balance - Mainline
station 61+50 to 80+45

EXCAVATION		EMBANKMENT		
Excavation	5,615	Embankment	897	
		+20%	179	1,076
Subtotal	5,615	Scarification (incidental) +20%		332
		Waste		4,207
Total	5,615	Excess		5,615

Waste is excess excavation to be disposed of at a site approved by the Engineer.

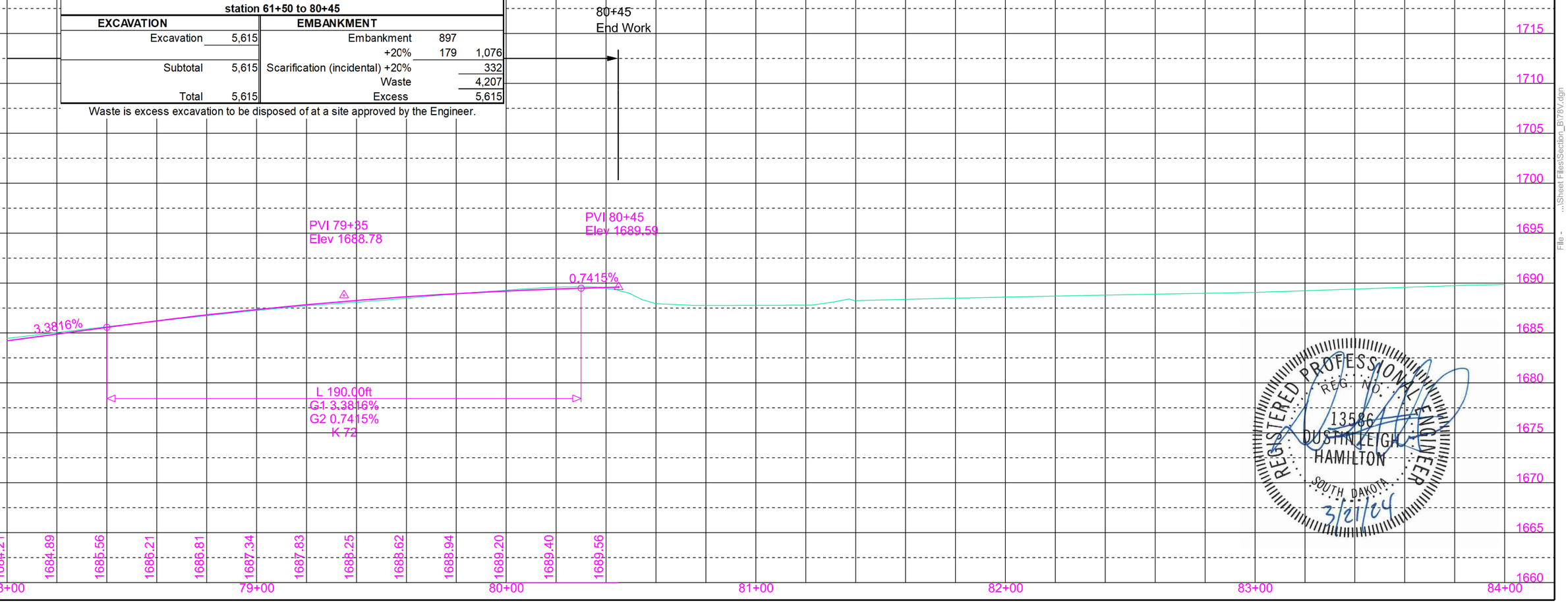

REGISTERED PROFESSIONAL ENGINEER
REG. NO. 13586
DUSTIN LEIGH HAMILTON
SOUTH DAKOTA
3/21/24

Plot Scale - 1:40
Plotted From - GENSZ
File - ...\Sheet Files\Section_B178V.dgn

Elizabeth Street

STATE OF SOUTH DAKOTA	PROJECT	SHEET	TOTAL SHEETS
	NH-CR 0014(185)229	B57	B151

REV 12-14-22 DBT

700+18 L
Refurbish
Mailbox

700+80 L
Refurbish
Mailbox

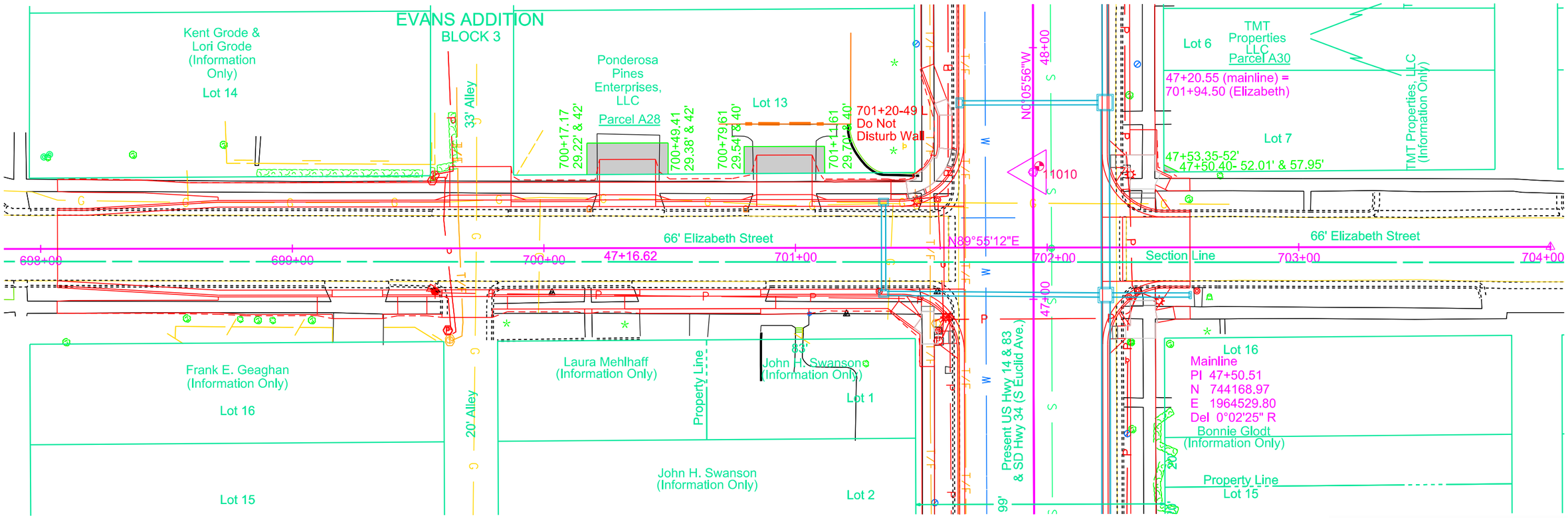

Parcel A28
700+17.17 to 700+49.41 L
Temporary Easement Containing
401 Sq Ft, more or less

Parcel A28
700+79.61 to 701+11.61 L
Temporary Easement Containing
343 Sq Ft, more or less

Parcel A30
47+50.40 to 47+53.35 R
Temporary Easement Containing
9 Sq Ft Ac, more or less

REGISTERED PROFESSIONAL ENGINEER
REG. NO.
13586
DUSTIN LEIGH HAMILTON
SOUTH DAKOTA
3/21/24

HDR

Elizabeth Street Profile

STATE OF SOUTH DAKOTA	PROJECT	SHEET	TOTAL SHEETS
	NH-CR 0014(185)229	B58	B151

Plotting Date: 3/21/2024

HDR

REGISTERED PROFESSIONAL ENGINEER
REG. NO.
13586
DUSTIN LEIGH
HAMILTON
SOUTH DAKOTA
3/21/24

Earthwork Balance - Elizabeth Street
station 698+07 to 701+50

EXCAVATION		EMBANKMENT		
Excavation	1,126	Embankment	11	
		+20%	2	14
Subtotal	1,126	Scarification (incidental) +20%		51
		Waste		1,062
Total	1,126	Excess		1,126

Waste is excess excavation to be disposed of at a site approved by the Engineer.

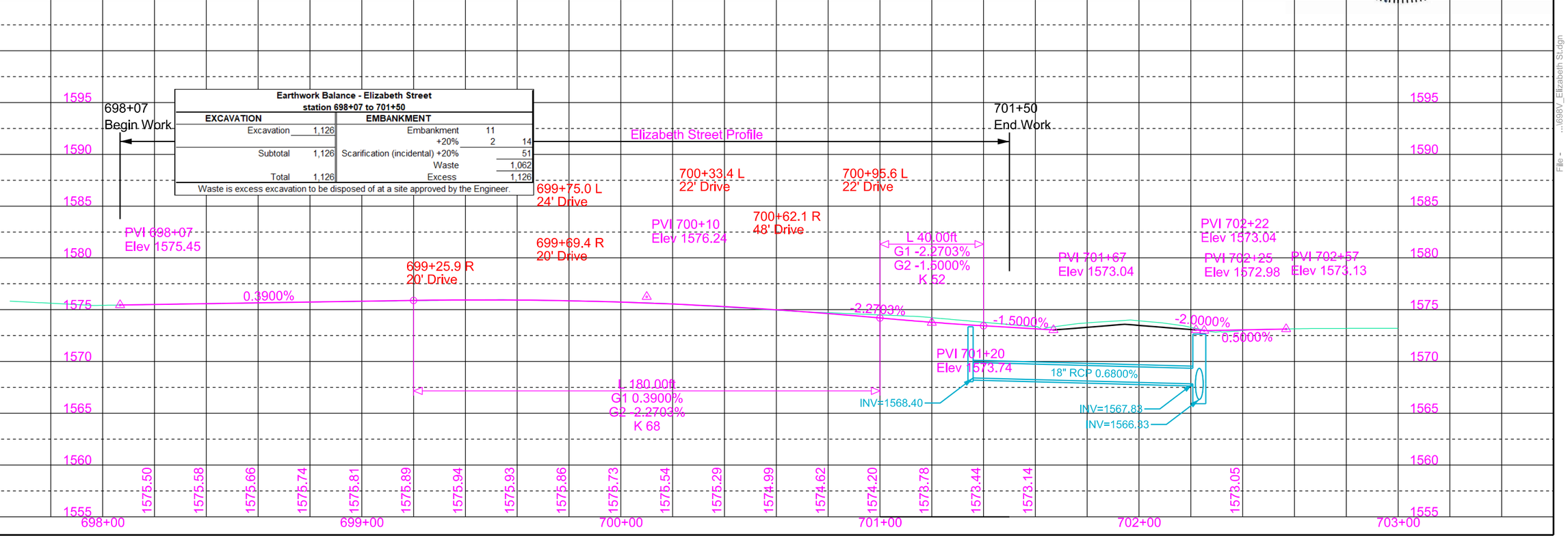

Plot Scale - 1:39.9999

Plotted From - GENSZ

File - ...\698V_Elizabeth St.dgn

Wynoka Street

STATE OF SOUTH DAKOTA	PROJECT	SHEET	TOTAL SHEETS
	NH-CR 0014(185)229	B59	B151

926+41.29-14.43' R to 927+31.50-7.41' R
Install 42"-86' RCP
(Between Junction Boxes)

927+31.50-7.41' R to 929+84.60-9.42' R
Install 42"-248' RCP
(Between Junction Boxes)

929+82.21-17.70' R to 929+84.60-9.42' R
Install 18"-6' RCP
(Between Drop Inlet and Junction Box)

929+84.60-9.42' R to 930+23.03-11.68' R
Install 42"-34' RCP
(Between Junction Boxes)

Install 6' x 6' Junction Box with Type A9 Manhole Frame & Lid at the following locations:
926+41.29-14.43' R
927+31.50-7.41' R
929+84.60-9.42' R
930+23.03-11.68' R

Install 2' X 3' Type B Drop Inlet with 6" Concrete Collar and Type B Frame & Grate at the following locations:
929+82.21-17.70' R

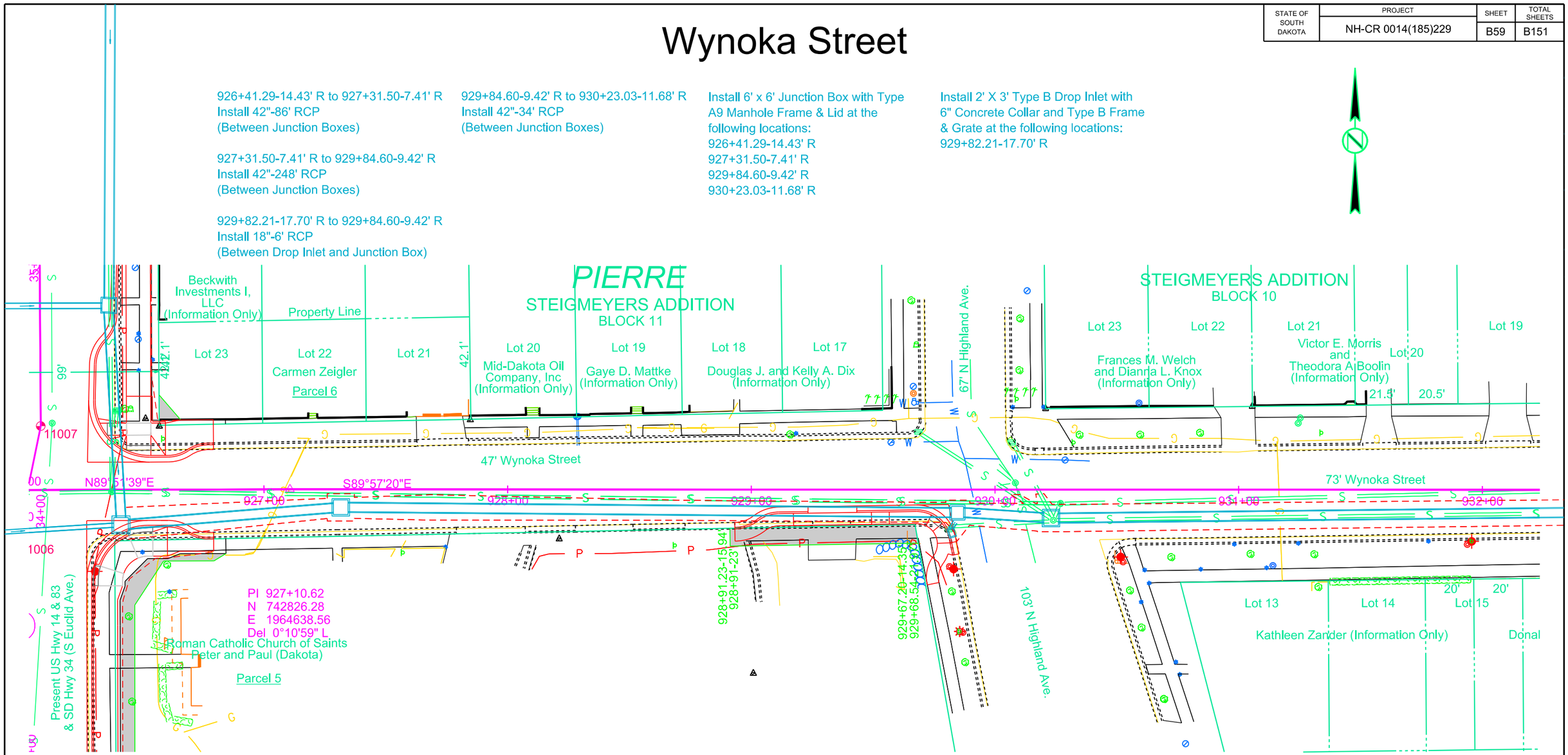

Parcel 5
928+91.23 to 929+68.54 R
Temporary Easement Containing
573 Sq Ft, more or less

REGISTERED PROFESSIONAL ENGINEER
REG. NO.
13586
DUSTIN LEIGH HAMILTON
SOUTH DAKOTA
3/21/24

HDR

Wynoka Street Drainage

STATE OF SOUTH DAKOTA	PROJECT	SHEET	TOTAL SHEETS
	NH-CR 0014(185)229	B60	B151

Plotting Date: 3/21/2024

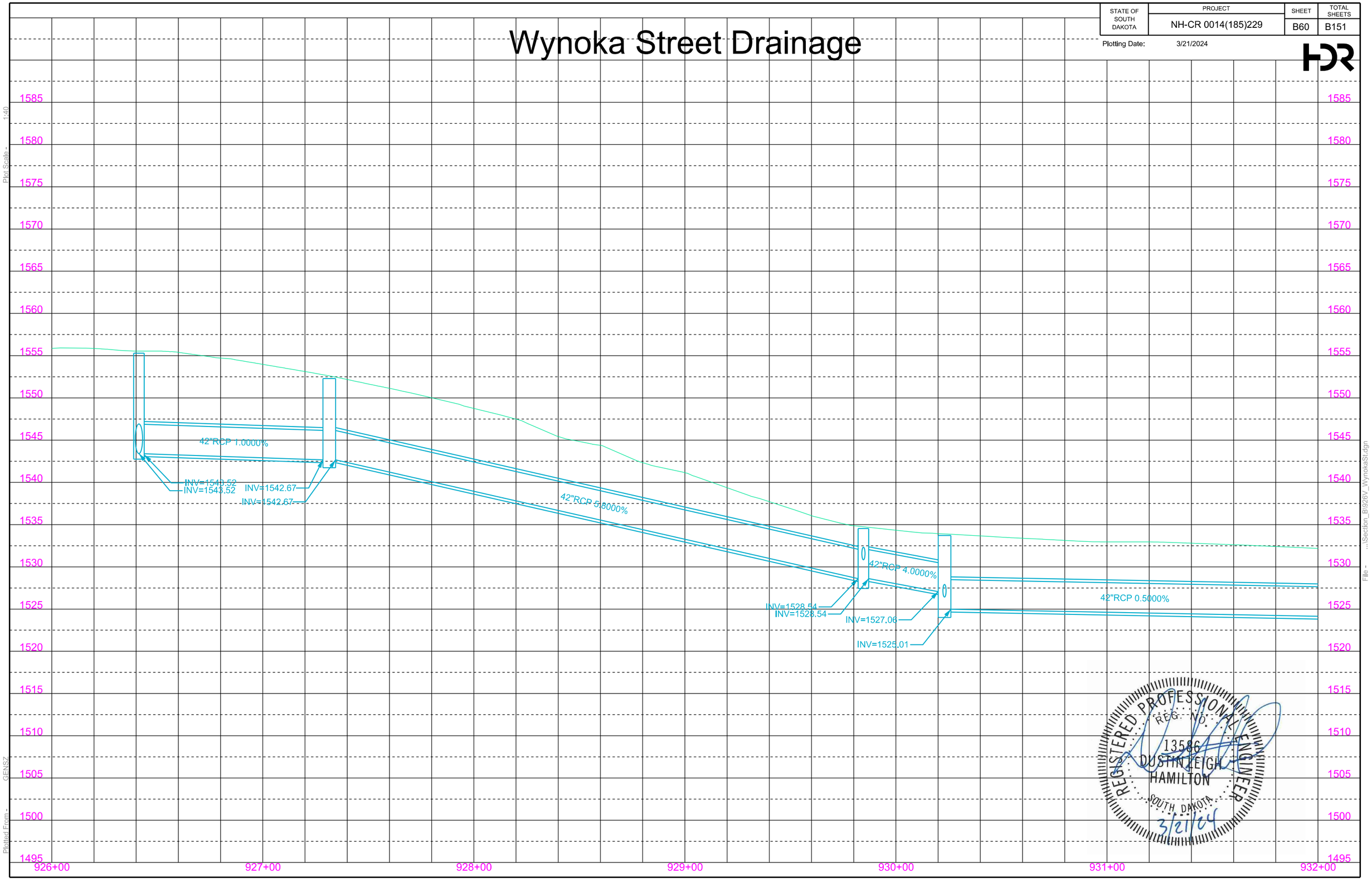

REGISTERED PROFESSIONAL ENGINEER
REG. NO.
13586
DUSTIN LEIGH
HAMILTON
SOUTH DAKOTA
3/21/24

Plot Scale - 1:40

Plotted From - GENS7

File - ...\Section_B926V_WynokaSt.dgn

Wynoka Street

STATE OF SOUTH DAKOTA	PROJECT	SHEET	TOTAL SHEETS
	NH-CR 0014(185)229	B61	B151

REV 11-11-22 DBT
REV 12-06-23 GCE

930+23.03-11.68' R to 932+73.25-9.02' R
Install 42"-250' RCP
(Between Junction Boxes)

932+73.25-9.02' R to 933+52.60-7.96'R
Install 42"-79' RCP
(Between Junction Boxes)

933+52.60-7.96' R to 935+05.88-5.82' R
Install 42"-20' RCP
Install Concrete Collar
Install 42"-144' CMP
& 1-10° Elbow
Install 42"- 20' CMP
(Between Junction Boxes)

935+05.88-5.82' R to 935+59.26-82.21' L
Install 42"-8' RCP
Install Concrete Collar
Install 42"-68' CMP
& 1-10° Elbow
Install 42"-8' CMP
(Between Junction Boxes)

935+59.26-82.21' L to 936+20.12-82.39' L
Install 42"-61' CMP
(Between Junction Boxes)

936+20.12-82.39' L to 938+35.38-83.47' L
Install 42"-282' RCP
(Between Junction Boxes)

Install 6' x 6' Junction Box with Type A9 Manhole Frame & Lid at the following locations:
932+73.25-9.02' R
933+47.48-7.96' R
935+00.76-5.82' R
935+54.14-82.21' L
936+15.00-82.39' L

936+20 - 103' L
Do Not Disturb
12" Ohio Buckeye

936+80 - 98' L
Do Not Disturb
6" Ohio Buckeye

937+09 L
Do Not Disturb
Sprinkler Head

937+94 - 96' L
Do Not Disturb
12" Locust

State of South Dakota
CAPITAL GROUNDS ADDITION
PIERRE
Parcel 20

Lot 19 | Lot 18 | Lot 17
Jeffrey J. Ice
(INFORMAYION ONLY)

66' N Evans Street

BLOCK 9
Randell H. and Tamara C. Kintz
(Information Only)
Parcel 19
Lot 10 | Lot 9

Vacated W1/2 Folsom Avenue
Property Line
Vacated E1/2 Folsom Avenue

935+48-102'
935+51-97'
934+96.20-9.05'
934+97-9
934+96.18-16.75'
935+16.29-40.28'
935+16.26-49.87'
935+68-67'
935+71-62'

935+74 -67' L
Do Not Disturb
9" Spruce

936+49 - 70' L
Do Not Disturb
7" Ohio Buckeye

73' Wynoka Street
Property Line
Vacated Wynoka Street
S89°57'20"E

933+00 | 934+00 | 935+00 | 936+00 | 937+00 | 938+00

20' Mary Lane
Donald G. and Kathryn L. Boyd
(Information Only)
Lot 16 | Lot 17

Lot 1
Damon Wheelhouse
(Information Only)

Lot 2
SUTHERLAND AND YARNELL SUBDIVISION

Property Line
Vacated W1/2 Folsom Avenue
934+96.46-20.95'
934+96.51-25.95'
935+14-21'
935+17-26'
Vacated E1/2 Folsom Avenue

935+15 - 5' R
Cut, Cap and Fill - 18" Pipe
(Incidental Work, Grading)

Parcel 19
934+96.18 to 935+36.40 L & R
Temporary Easement Containing
342 Sq Ft, more or less

Parcel 20
935+36.16 to 939+92.11 L & R
Temporary Easement Containing
43,705 Sq Ft, more or less

REGISTERED PROFESSIONAL ENGINEER
REG. NO.
13586
DUSTIN LEIGH
HAMILTON
SOUTH DAKOTA
3/21/24

HDR

Wynoka Street Drainage

STATE OF SOUTH DAKOTA	PROJECT	SHEET	TOTAL SHEETS
	NH-CR 0014(185)229	B62	B151

Plotting Date: 3/21/2024

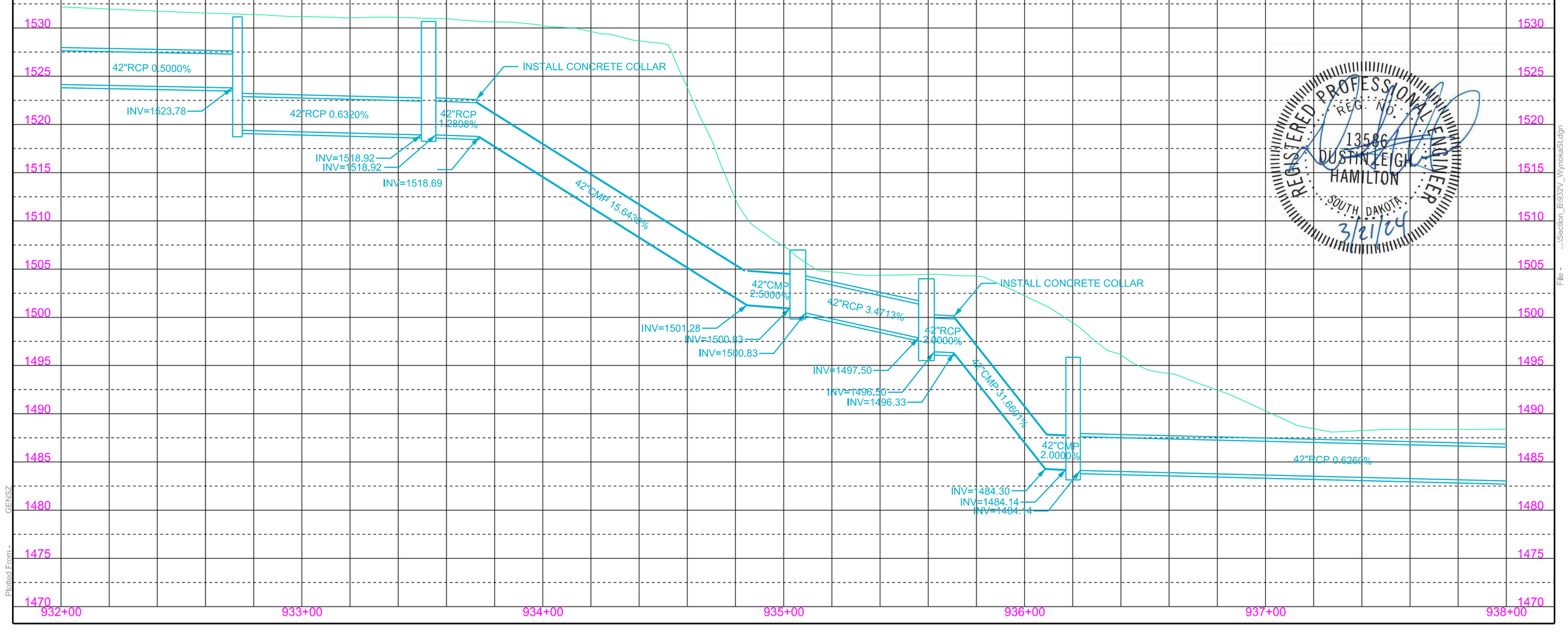

REGISTERED PROFESSIONAL ENGINEER
REG. NO.
13586
DUSTIN LEIGH
HAMILTON
SOUTH DAKOTA
3/21/24

Plot Scale - 1:40

Plotted From - GENSZ

File - ...\Section_B1932V_WynokaSt.dgn

Wynoka Street

STATE OF SOUTH DAKOTA	PROJECT	SHEET	TOTAL SHEETS
	NH-CR 0014(185)229	B63	B151

REV 11-11-22 DBT
REV 12-07-23 GCE
REV 08-26-24 GCE

938+35.38-83.47' L to 936+01.55-83.96' L
Install 60"-64' RCP & Flared End
(Between Junction Box and Pipe Outfall)

Install 7' x 7' Junction Box with
Type A9 Manhole Frame & Lid at
the following locations:
938+35.38-83.47' L

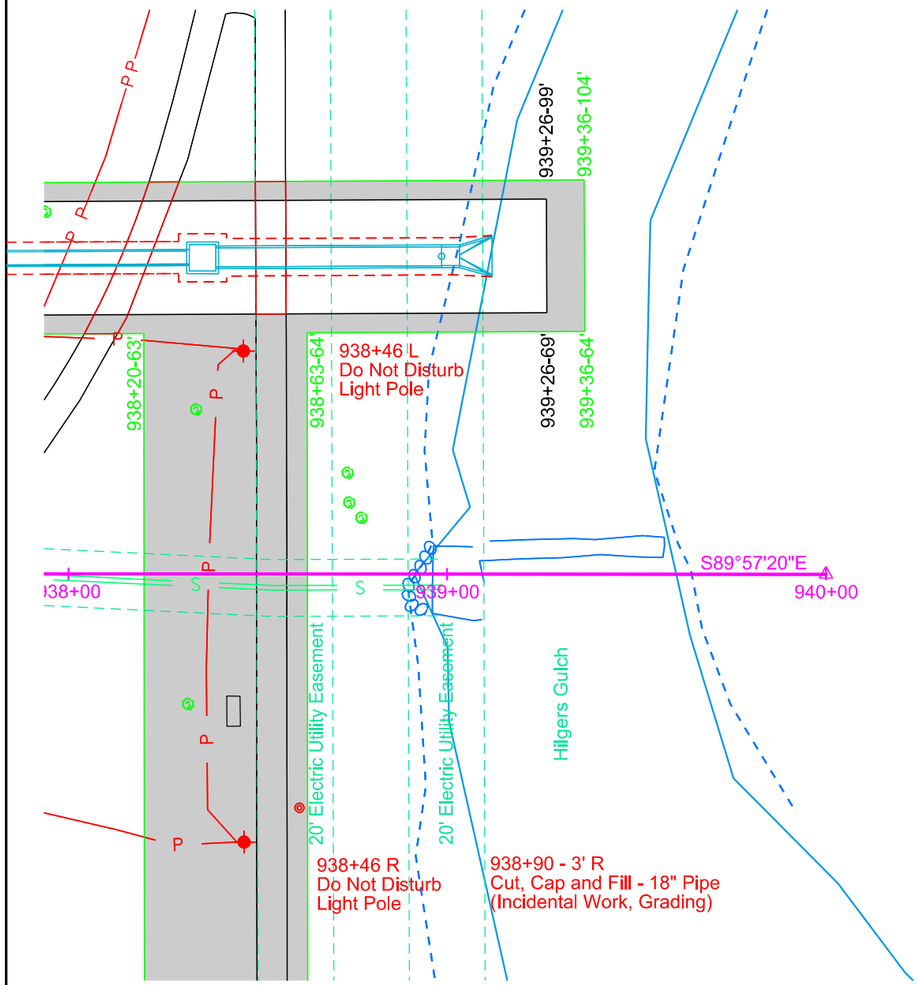

Parcel 20
State of South Dakota
CAPITAL GROUNDS ADDITION
PIERRE

REGISTERED PROFESSIONAL ENGINEER
REG. NO.
13586
DUSTIN LEIGH
HAMILTON
SOUTH DAKOTA
08/26/24

Parcel 20
935+36.16 to 939+92.11 L & R
Temporary Easement Containing
43,705 Sq Ft, more or less

Wynoka Street Drainage

STATE OF SOUTH DAKOTA	PROJECT	SHEET	TOTAL SHEETS
	NH-CR 0014(185)229	B64	B151

Plotting Date: 3/21/2024

HDR

1560
1555
1550
1545
1540
1535
1530
1525
1520
1515
1510
1505
1500
1495
1490
1485
1480
1475
1470

938+00
939+00
940+00

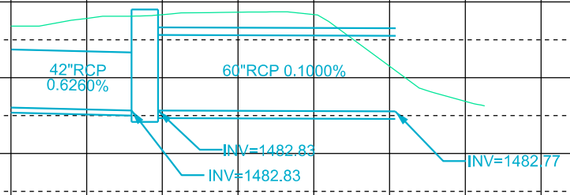

REGISTERED PROFESSIONAL ENGINEER
REG. NO.
13586
DUSTIN LEIGH
HAMILTON
SOUTH DAKOTA
3/21/24

Plot Scale - 1:40

Plotted From - GENSZ

File - ...\Section_B1938V_WynokaSt.dgn

Church Street to Wynoka Street Access

STATE OF SOUTH DAKOTA	PROJECT	SHEET	TOTAL SHEETS
	NH-CR 0014(185)229	B65	B151

State of South Dakota
Parcel 20

CAPITAL GROUNDS ADDITION
PIERRE

South Dakota Boulevard

95' Church Street

Do Not Disturb
Light Pole

Do Not Disturb
Flag Pole

Do Not Disturb
Flag Pole

Do Not Disturb
Flag Pole

Do Not Disturb
Light Pole

Do Not Disturb
Light Pole

Do Not Disturb
Sprinkler Head

Do Not Disturb
Light Pole

20' Electric Utility Easement

Do Not Disturb
Flag Pole

Do Not Disturb
Light Pole

20' Electric Utility Easement

Do Not Disturb
Flag Pole

Do Not Disturb
Flag Pole

Do Not Disturb
Flag Pole

Do Not Disturb
Light Pole

Parcel 20
935+36.16 to 939+92.11 L & R
Temporary Easement Containing
43,705 Sq Ft, more or less

REGISTERED PROFESSIONAL ENGINEER
REG. NO.
13586
DUSTIN LEIGH
HAMILTON
SOUTH DAKOTA
3/21/24

HDR

PAVEMENT REMOVAL LAYOUT

STATE OF SOUTH DAKOTA	PROJECT	SHEET	TOTAL SHEETS
	NH-CR 0014(185)229	B66	B151

REV 09-17-23 DBT

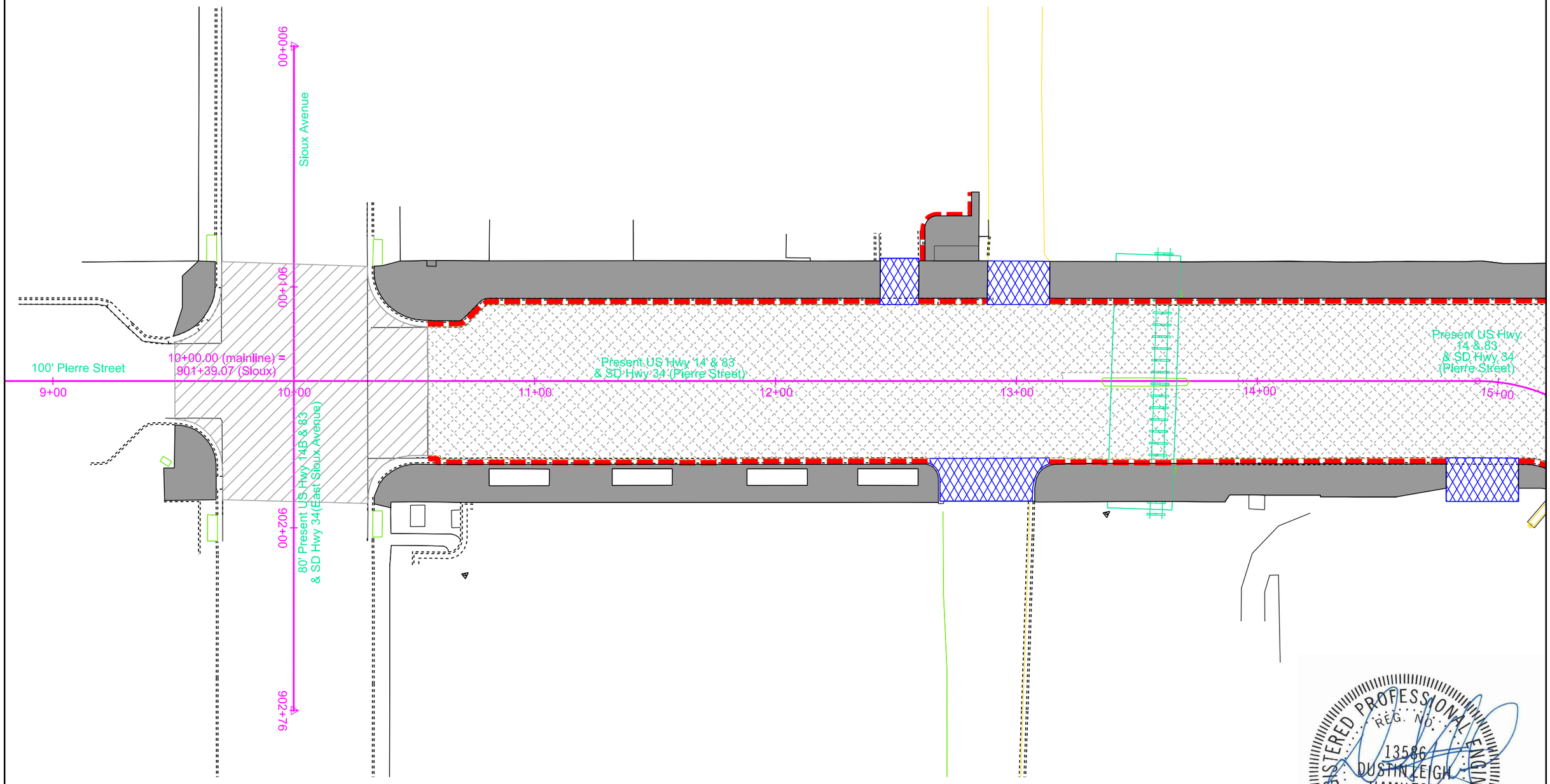

REGISTERED PROFESSIONAL ENGINEER
REG. NO.
13586
DUSTIN LEIGH
HAMILTON
SOUTH DAKOTA
3/21/24

HDR

PAVEMENT REMOVAL LAYOUT

STATE OF SOUTH DAKOTA	PROJECT	SHEET	TOTAL SHEETS
	NH-CR 0014(185)229	B67	B151

REV 12-06-23 GCE

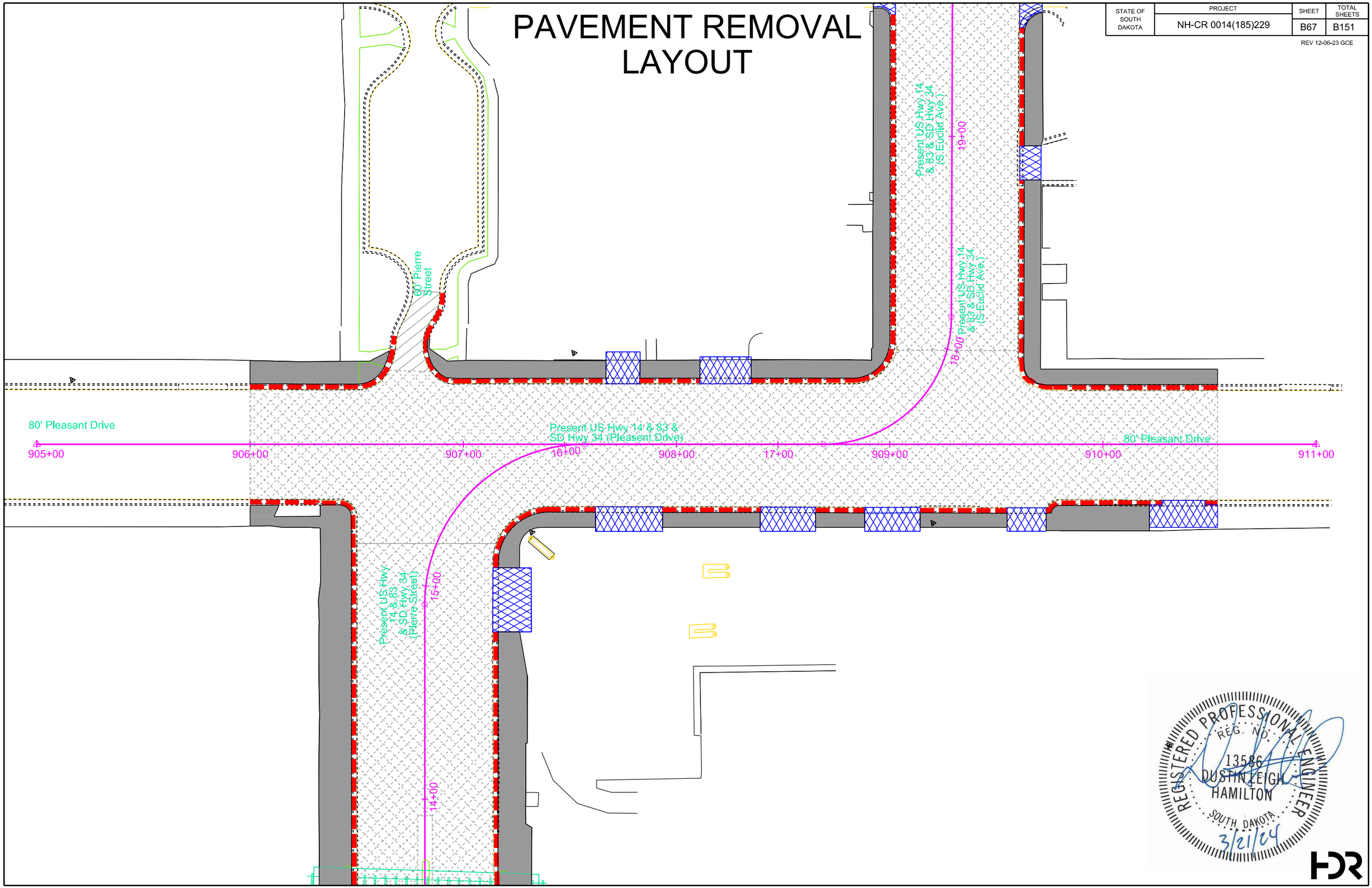

REGISTERED PROFESSIONAL ENGINEER
REG. NO.
13586
DUSTIN LEIGH HAMILTON
SOUTH DAKOTA
3/21/24

HDR

PAVEMENT REMOVAL LAYOUT

STATE OF SOUTH DAKOTA	PROJECT	SHEET	TOTAL SHEETS
	NH-CR 0014(185)229	B68	B151

REV 11/30/23 GCE

Present US Hwy 14 & 83 & SD Hwy 34 (S Euclid Ave.)

18+00

19+00

20+00

21+00

22+00

23+00

24+00

910+00

911+00

80' Capitol Avenue

20' Vacated Alley

912+00

912+93

80' Capitol Avenue

15' Vacated Alley

REGISTERED PROFESSIONAL ENGINEER
REG. NO.
13586
DUSTIN KEIGH
HAMILTON
SOUTH DAKOTA
3/21/24

STATE OF SOUTH DAKOTA	PROJECT	SHEET	TOTAL SHEETS
	NH-CR 0014(185)229	B69	B151

PAVEMENT REMOVAL LAYOUT

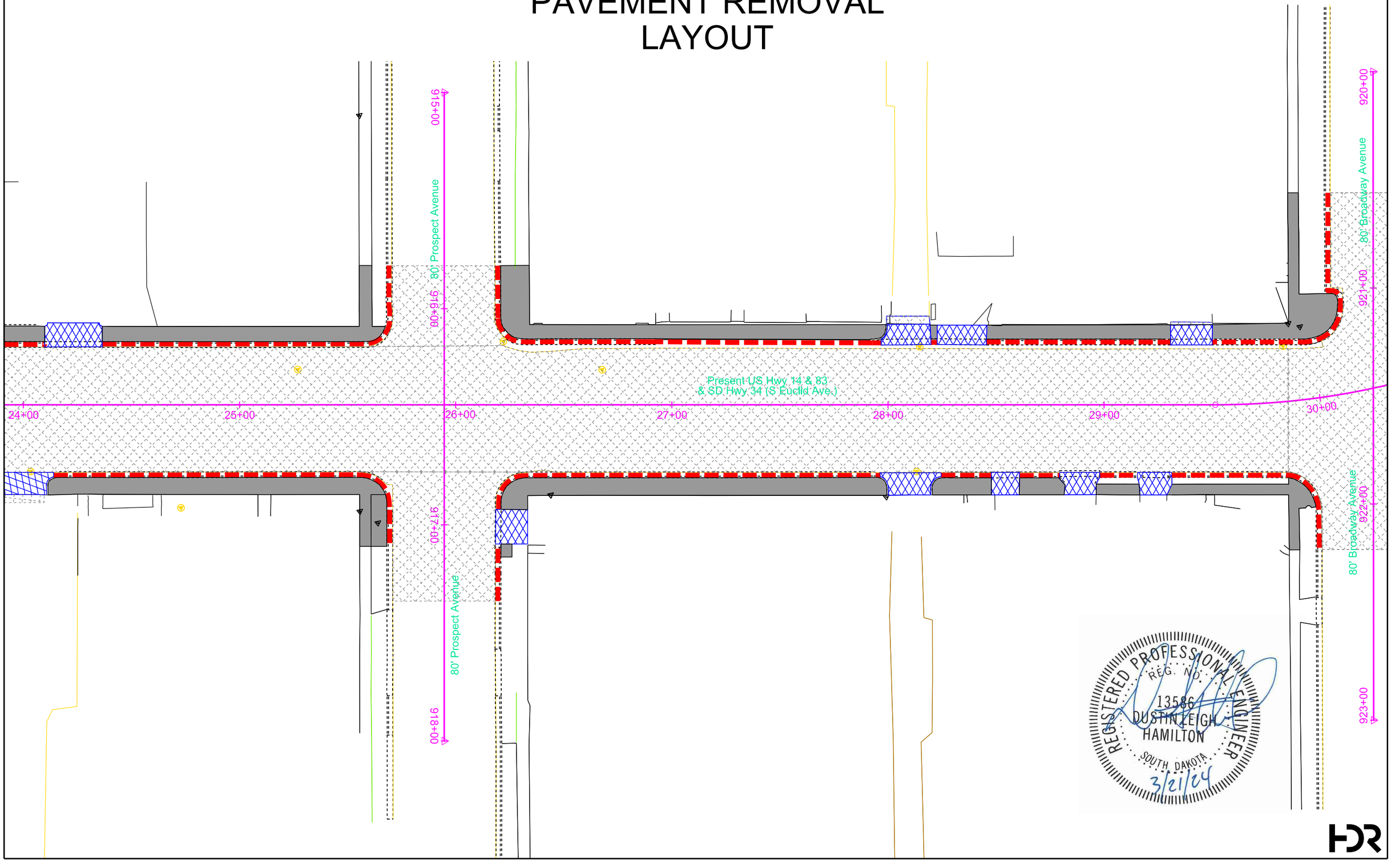

REGISTERED PROFESSIONAL ENGINEER
REG. NO.
13586
DUSTIN LEIGH
HAMILTON
SOUTH DAKOTA
3/21/24

HDR

STATE OF SOUTH DAKOTA	PROJECT	SHEET	TOTAL SHEETS
	NH-CR 0014(185)229	B70	B151

PAVEMENT REMOVAL LAYOUT

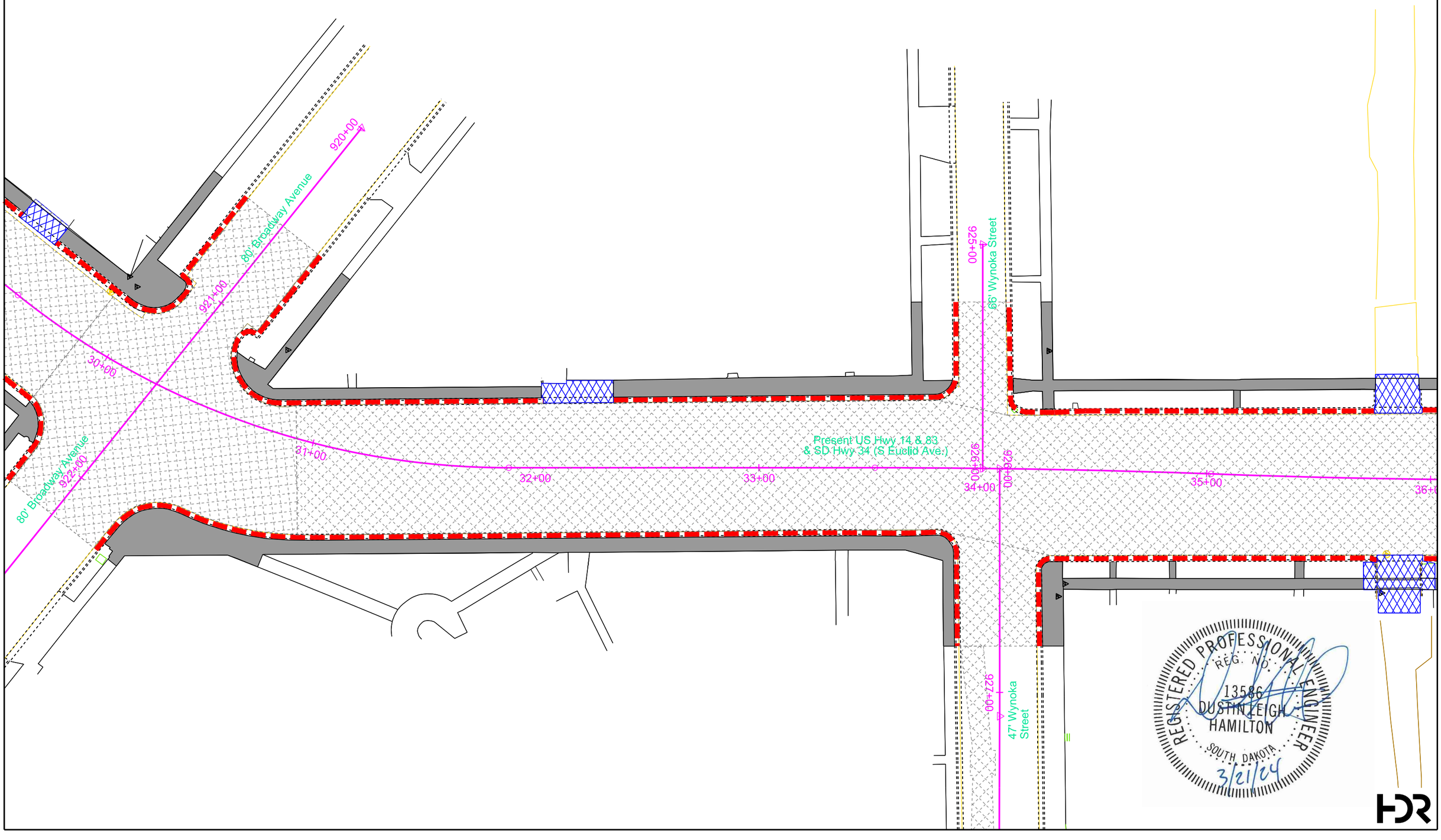

REGISTERED PROFESSIONAL ENGINEER
REG. NO.
13586
DUSTIN LEIGH
HAMILTON
SOUTH DAKOTA
3/21/24

PAVEMENT REMOVAL LAYOUT

STATE OF SOUTH DAKOTA	PROJECT	SHEET	TOTAL SHEETS
	NH-CR 0014(185)229	B71	B151

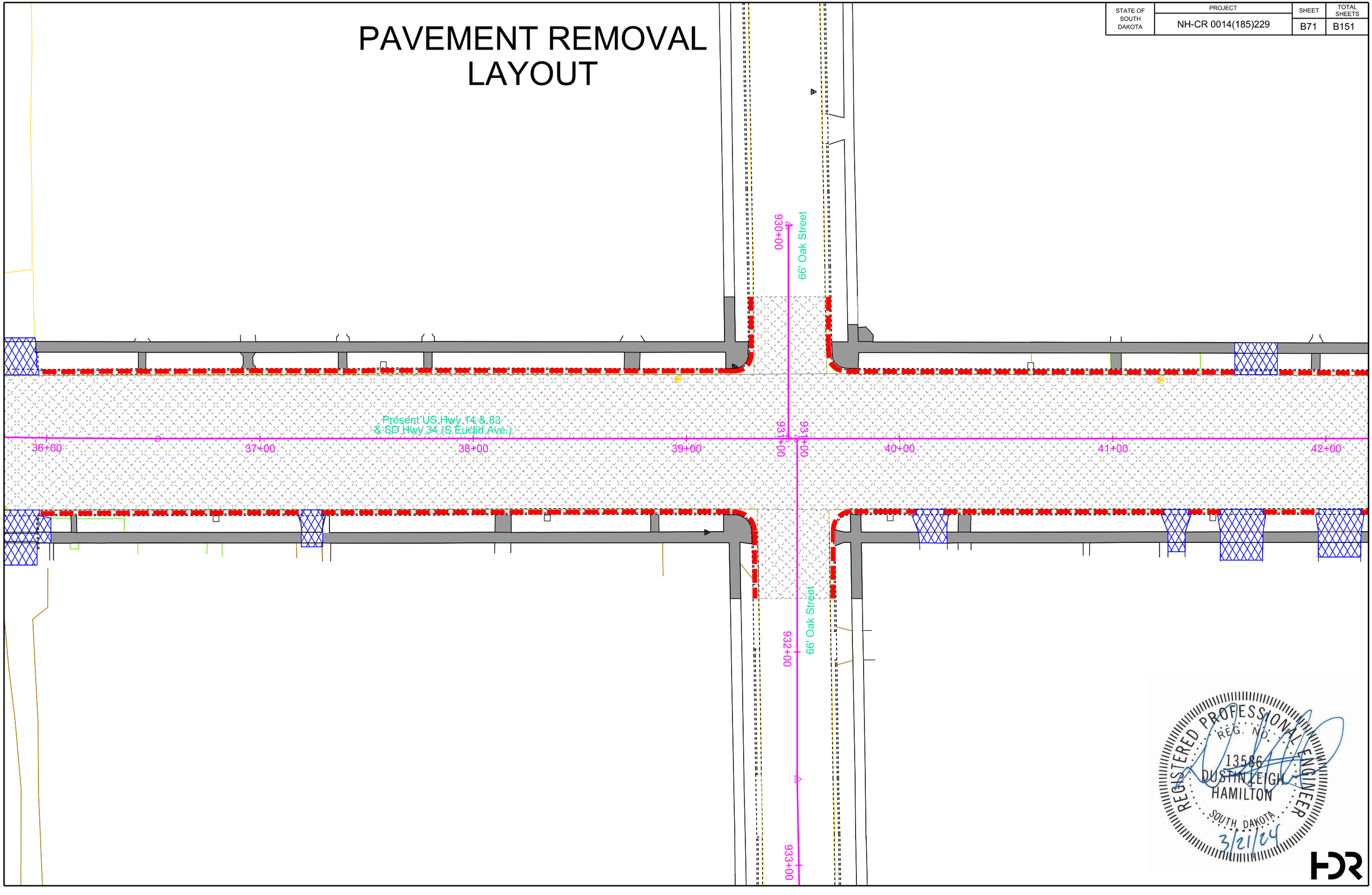

REGISTERED PROFESSIONAL ENGINEER
REG. NO.
13586
DUSTIN LEIGH
HAMILTON
SOUTH DAKOTA
3/21/24

HDR

PAVEMENT REMOVAL LAYOUT

STATE OF SOUTH DAKOTA	PROJECT	SHEET	TOTAL SHEETS
	NH-CR 0014(185)229	B72	B151

REV 5-18-23 DBT

935+00
66' Seneca Street
936+00
936+30
937+00
937+60
Present US Hwy 14 & 83
& SD Hwy 34 (S Euclid Ave.)
42+00
43+00
44+00
45+00
46+00
47+00
48+00
701+00
66' Elizabeth Street
702+00
703+00
704+00
47+20.55 (mainline) =
701+94.50 (Elizabeth)

REGISTERED PROFESSIONAL ENGINEER
REG. NO.
13586
DUSTIN LEIGH HAMILTON
SOUTH DAKOTA
3/21/24

PAVEMENT REMOVAL LAYOUT

STATE OF SOUTH DAKOTA	PROJECT	SHEET	TOTAL SHEETS
	NH-CR 0014(185)229	B73	B151

33' Vacated Alley

33' Vacated Alley

940+00

50' First Street

945+00

50' Second Street

Present US Hwy 14 & 83
& SD Hwy 34 (S Euclid Ave.)

48+00

49+00

50+00

941+00

51+00

52+00

53+00

946+00

54+00

47+20.55 (mainline) =
701+94.50 (Elizabeth)

942+00

50' First Street

947+00

50' Second Street

REGISTERED PROFESSIONAL ENGINEER
REG. NO.
13586
DUSTIN ZEIGH
HAMILTON
SOUTH DAKOTA
3/21/24

HDR

STATE OF SOUTH DAKOTA	PROJECT	SHEET	TOTAL SHEETS
	NH-CR 0014(185)229	B74	B151

PAVEMENT REMOVAL LAYOUT

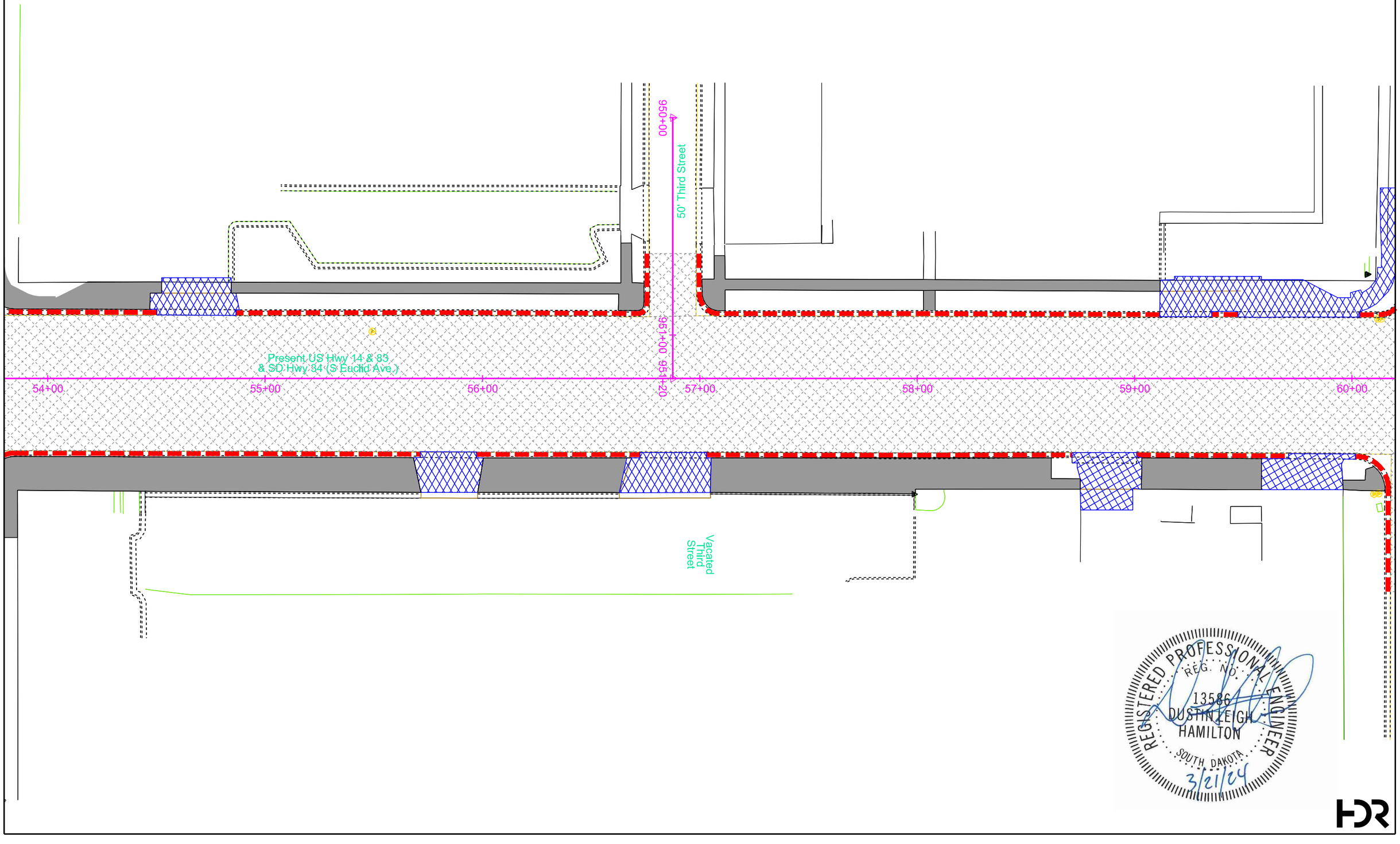

REGISTERED PROFESSIONAL ENGINEER
REG. NO.
13586
DUSTIN LEIGH
HAMILTON
SOUTH DAKOTA
3/21/24

HDR

PAVEMENT REMOVAL LAYOUT

STATE OF SOUTH DAKOTA	PROJECT	SHEET	TOTAL SHEETS
	NH-CR 0014(185)229	B75	B151

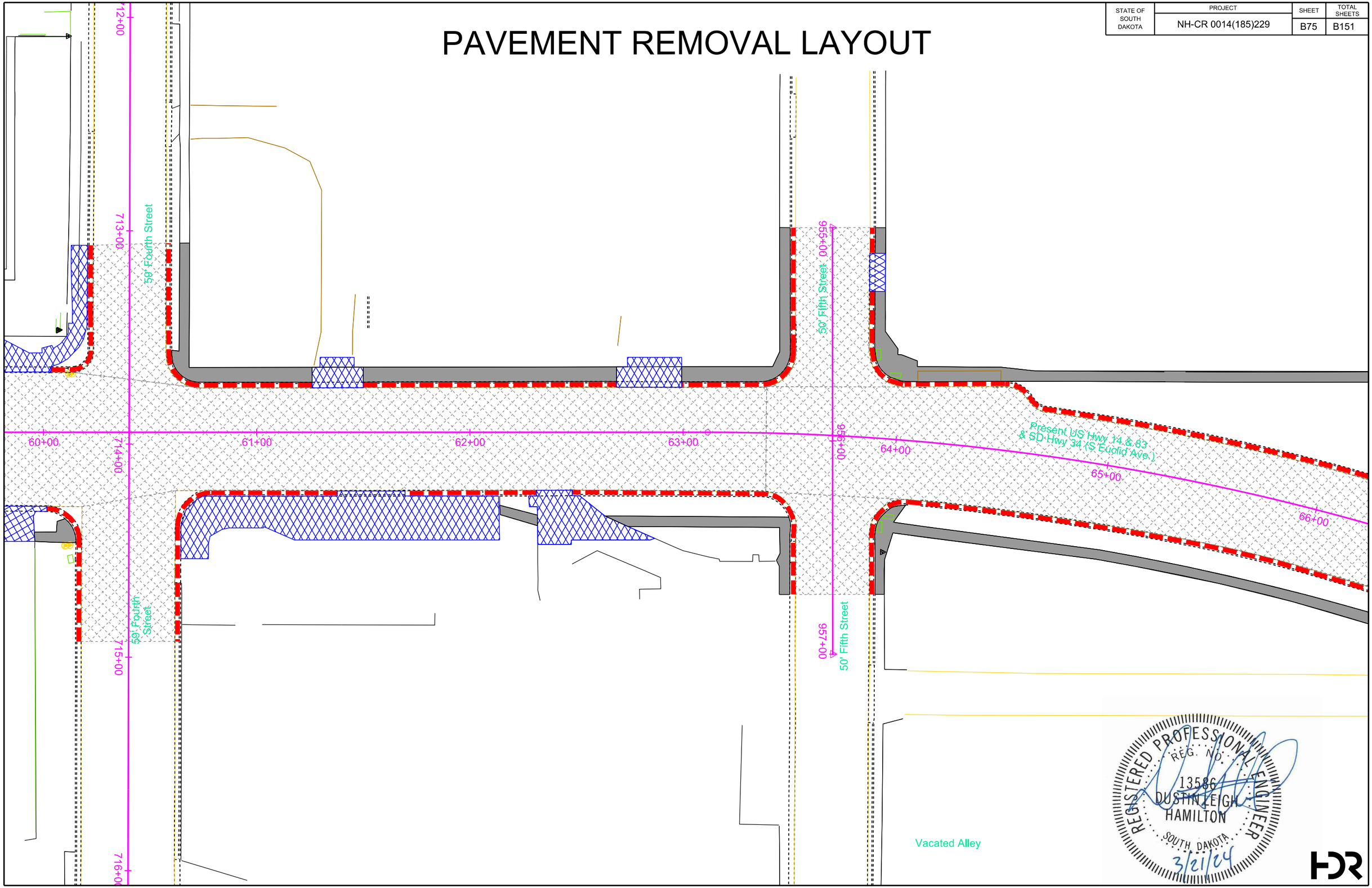

REGISTERED PROFESSIONAL ENGINEER
REG. NO.
13586
DUSTIN LEIGH
HAMILTON
SOUTH DAKOTA
3/21/24

HDR

PAVEMENT REMOVAL LAYOUT

STATE OF SOUTH DAKOTA	PROJECT	SHEET	TOTAL SHEETS
	NH-CR 0014(185)229	B76	B151

REV 04-04-23 MJW

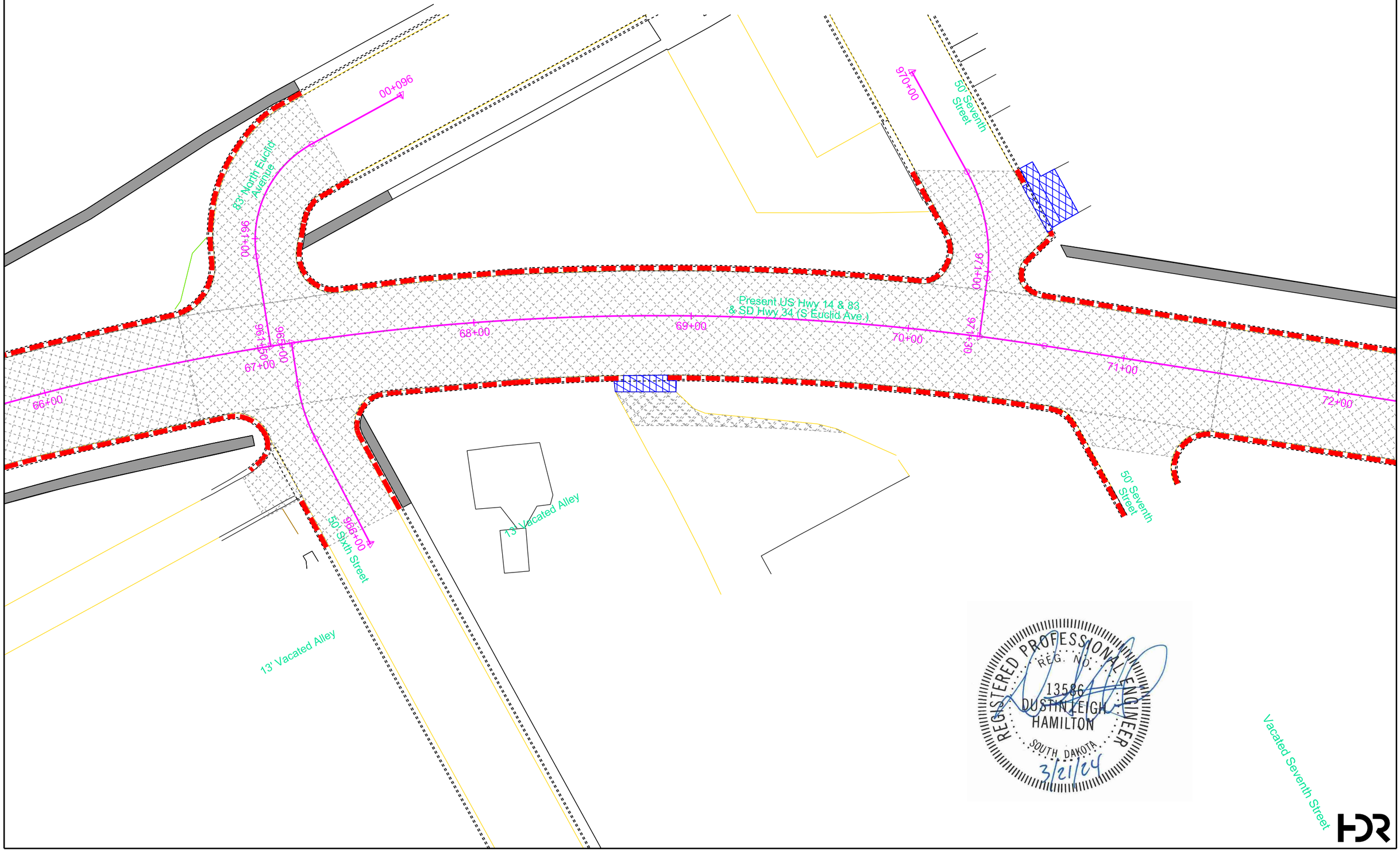

PAVEMENT REMOVAL LAYOUT

STATE OF SOUTH DAKOTA	PROJECT	SHEET	TOTAL SHEETS
	NH-CR 0014(185)229	B77	B151

975+00
88' Eighth Street

976+00

976+76

Present US Hwy 14 & 83
& SD Hwy 34

72+00 73+00 74+00 75+00 76+00 77+00 78+00

67' Eighth Street

12' Vacated Alley

Vacated Seventh Street

REGISTERED PROFESSIONAL ENGINEER
REG. NO.
13586
DUSTIN LEIGH
HAMILTON
SOUTH DAKOTA
3/21/24

HDR

PAVEMENT REMOVAL LAYOUT

STATE OF SOUTH DAKOTA	PROJECT	SHEET	TOTAL SHEETS
	NH-CR 0014(185)229	B78	B151

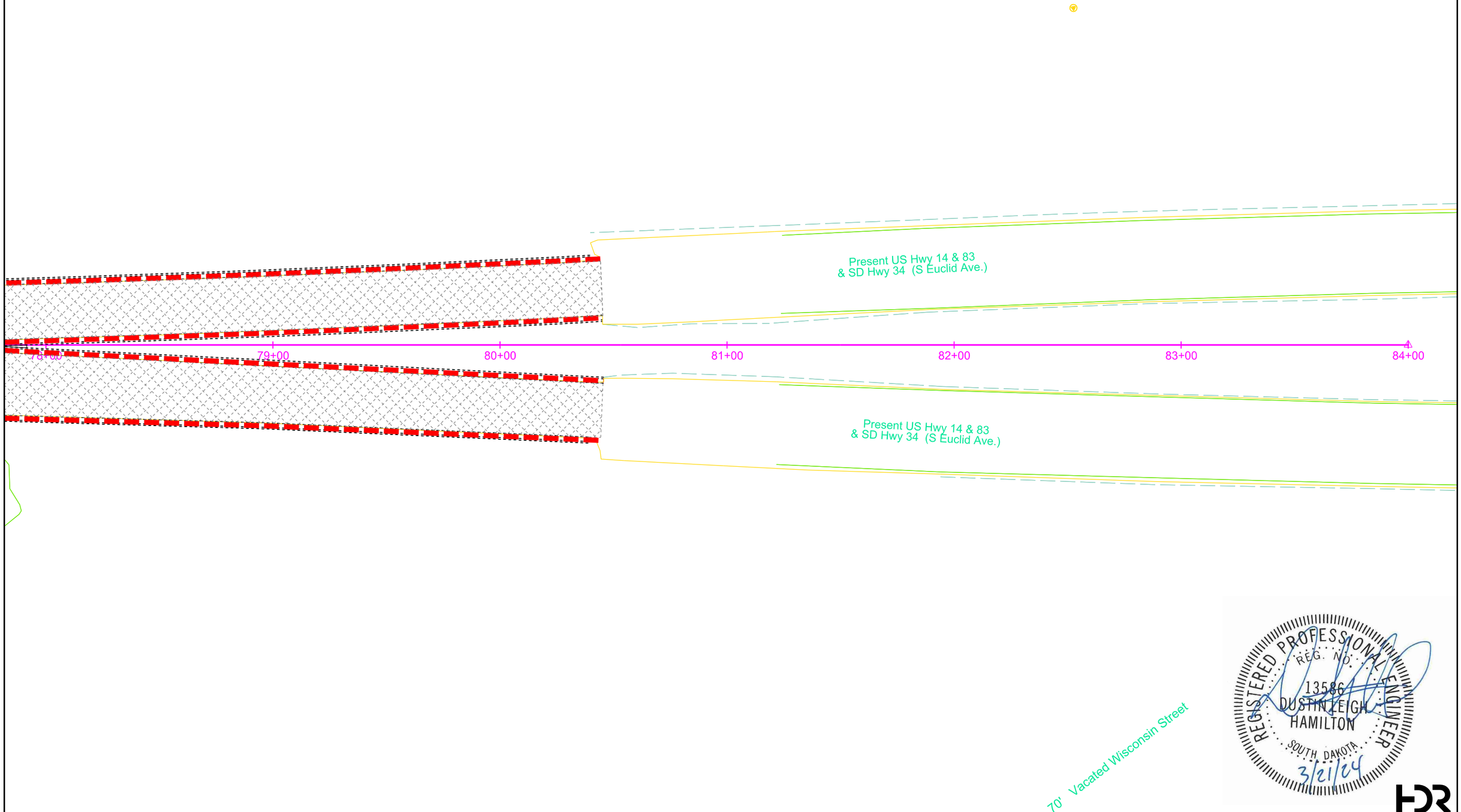

REGISTERED PROFESSIONAL ENGINEER
REG. NO.
13586
DUSTIN LEIGH
HAMILTON
SOUTH DAKOTA
3/21/24

HDR

PAVEMENT REMOVAL LAYOUT

STATE OF SOUTH DAKOTA	PROJECT	SHEET	TOTAL SHEETS
	NH-CR 0014(185)229	B79	B151

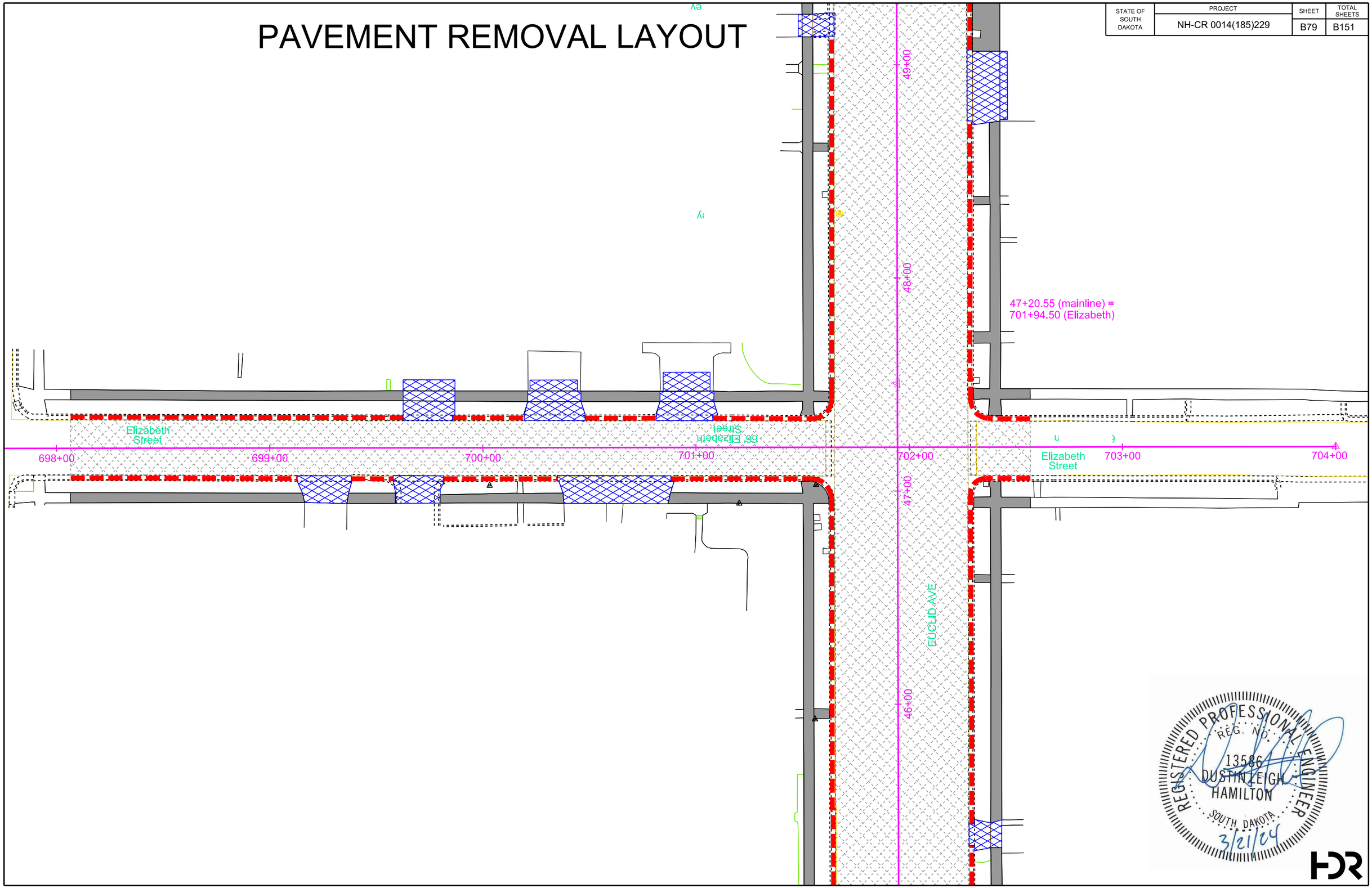

REGISTERED PROFESSIONAL ENGINEER
REG. NO.
13586
DUSTIN LEIGH HAMILTON
SOUTH DAKOTA
3/21/24

HDR

STATE OF SOUTH DAKOTA	PROJECT	SHEET	TOTAL SHEETS
	NH-CR 0014(185)229	B80	B151

PAVEMENT REMOVAL LAYOUT

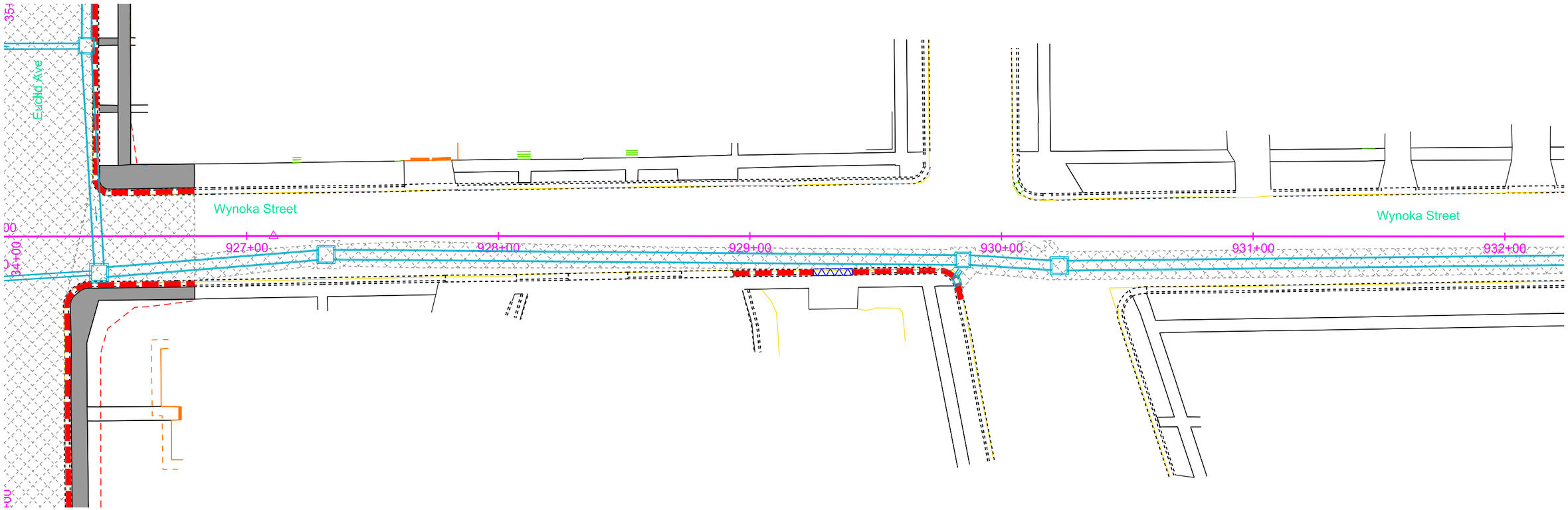

REGISTERED PROFESSIONAL ENGINEER
REG. NO.
13586
DUSTIN LEIGH
HAMILTON
SOUTH DAKOTA
3/21/24

HDR

STATE OF SOUTH DAKOTA	PROJECT	SHEET	TOTAL SHEETS
	NH-CR 0014(185)229	B81	B151

REV 12-06-23 GCE

PAVEMENT REMOVAL LAYOUT

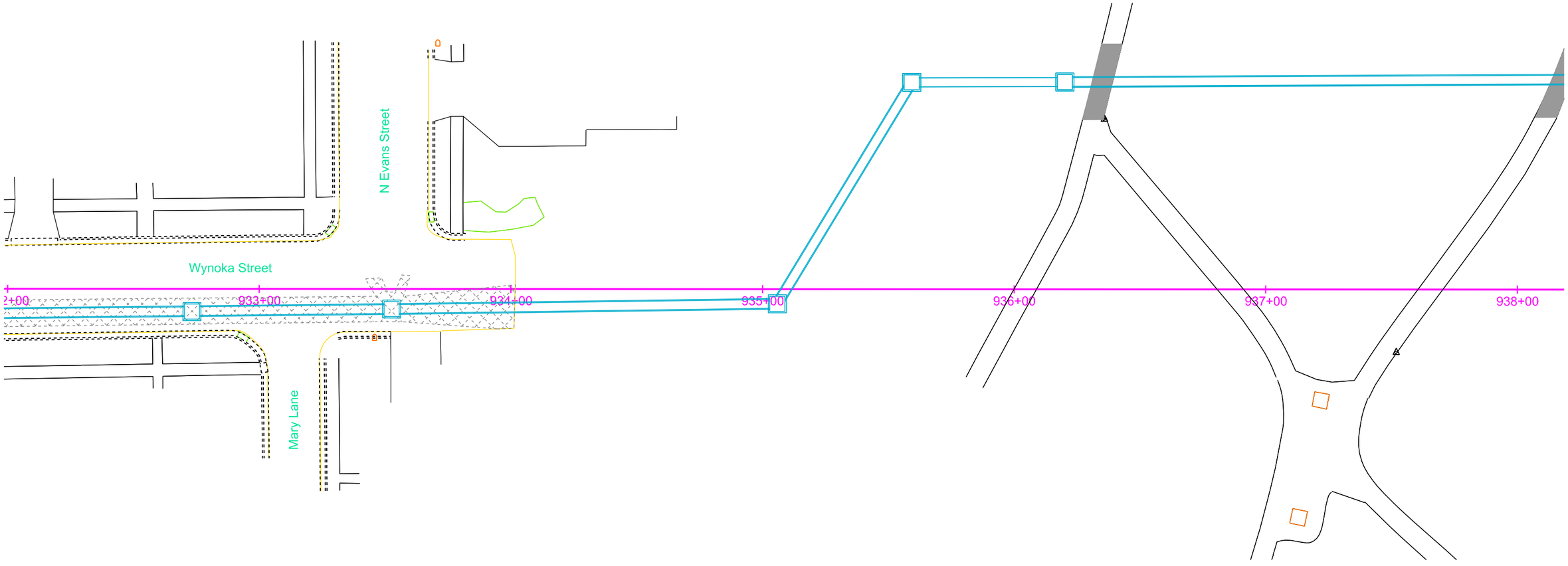

REGISTERED PROFESSIONAL ENGINEER
REG. NO.
13586
DUSTIN LEIGH
HAMILTON
SOUTH DAKOTA
3/21/24

HDR

PAVEMENT REMOVAL LAYOUT

STATE OF SOUTH DAKOTA	PROJECT	SHEET	TOTAL SHEETS
	NH-CR 0014(185)229	B82	B151

REV 12-06-23 GCE

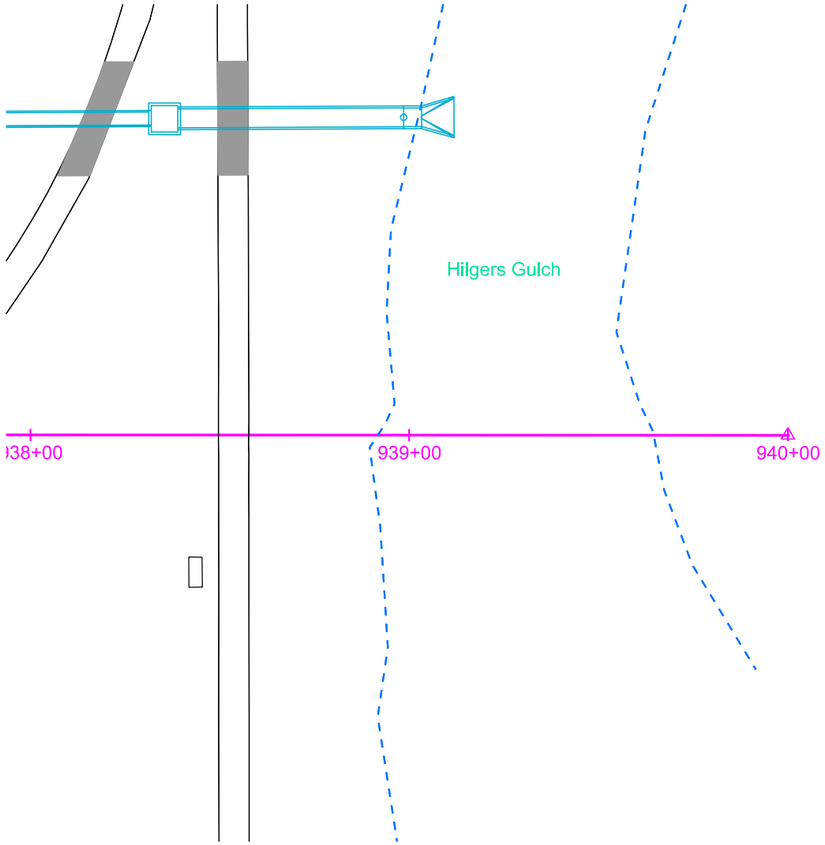

REGISTERED PROFESSIONAL ENGINEER
REG. NO.
13586
DUSTIN LEIGH
HAMILTON
SOUTH DAKOTA
3/21/24

HDR

Pavement Transition Layout

STATE OF SOUTH DAKOTA	PROJECT	SHEET	TOTAL SHEETS
	NH-CR 0014(185)229	B83	B151

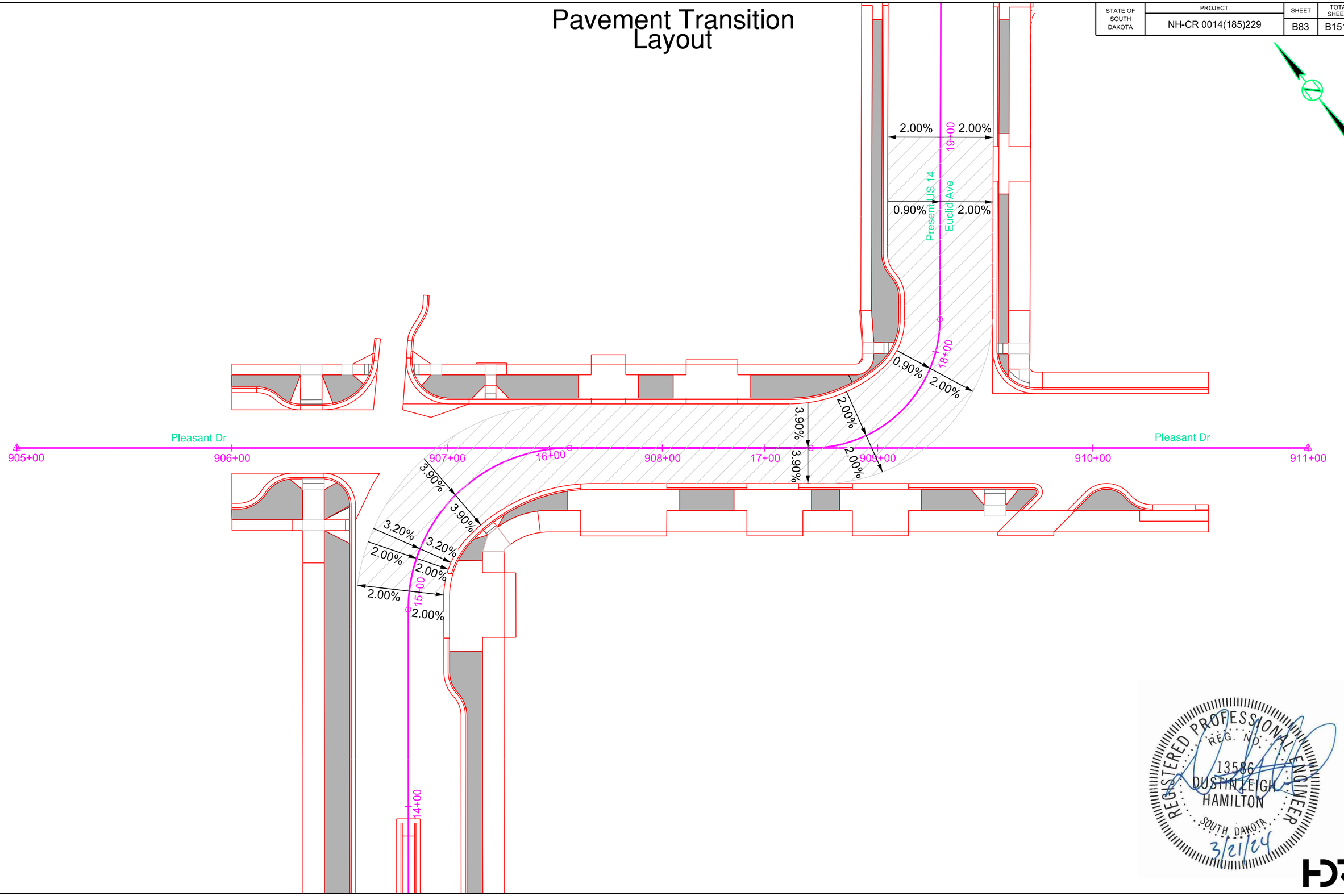

REGISTERED PROFESSIONAL ENGINEER
REG. NO.
13586
DUSTIN LEIGH
HAMILTON
SOUTH DAKOTA
3/21/24

HDR

Curb & Gutter Layout

Note: All curb and gutter shown on this sheet is Type B68 except as noted.

STATE OF SOUTH DAKOTA	PROJECT	SHEET	TOTAL SHEETS
	NH-CR 0014(185)229	B84	B151

REV 09-17-23 DBT

1 9+50.61 - 16.25' L
Begin 25' Rad C & G
TC Elev 1437.05
(Match Existing)

2 900+98.54 - 30.00' R
End 25' Rad C & G
Begin Str C & G
TC Elev 1436.95 (Theor)

3 900+89.51 - 30.00' R
End Str C & G
TC Elev 1436.97
(Match Existing)

4 900+91.33 - 30.00' L
Begin Str C & G
TC Elev 1437.34
(Match Existing)

5 900+92.05 - 30.00' L
End Str C & G
Begin 25' Rad C & G
TC Elev 1437.34 (Theor)

6 10+55.02 - 22.00' L
End 25' Rad C & G
Begin Str C & G
TC Elev 1437.94 (Theor)

7 10+65.00 - 22.00' L
End Str C & G
Begin 17' Rad C & G
TC Elev 1438.04

8 10+77.75 - 27.76' L
End 17' Rad C & G
Begin Str C & G
TC Elev 1438.17 (Theor)

9 10+84.14 - 35.00' L
Str C & G
TC Elev 1438.13 (Theor)

10 11+15.77 - 35.00' L
Str C & G
TC Elev 1438.34

11 11+20.03 - 29.64' L
Str C & G
TC Elev 1438.41

12 12+43.27 - 25.11' L
End Str C & G
Begin Str Type P Gutter
TC Elev 1438.41 (Theor)

13 12+59.26 - 24.54' L
End Str Type P Gutter
Begin Str C & G
TC Elev 1438.80 (Theor)

14 12+59.78 - 24.50' L
Str C & G
TC Elev 1438.80

15 12+88.68 - 24.50' L
End Str C & G
Begin Str Type P Gutter
TC Elev 1438.95 (Theor)

16 13+12.68 - 24.50' L
End Str Type P Gutter
Begin Str C & G
TC Elev 1439.34 (Theor)

33 13+17.24 - 5.50' L
Begin Str Type BL Gutter
TC Elev 1439.92

35 13+94.13 - 5.50' L
End Str Type BL Gutter
TC Elev 1442.96

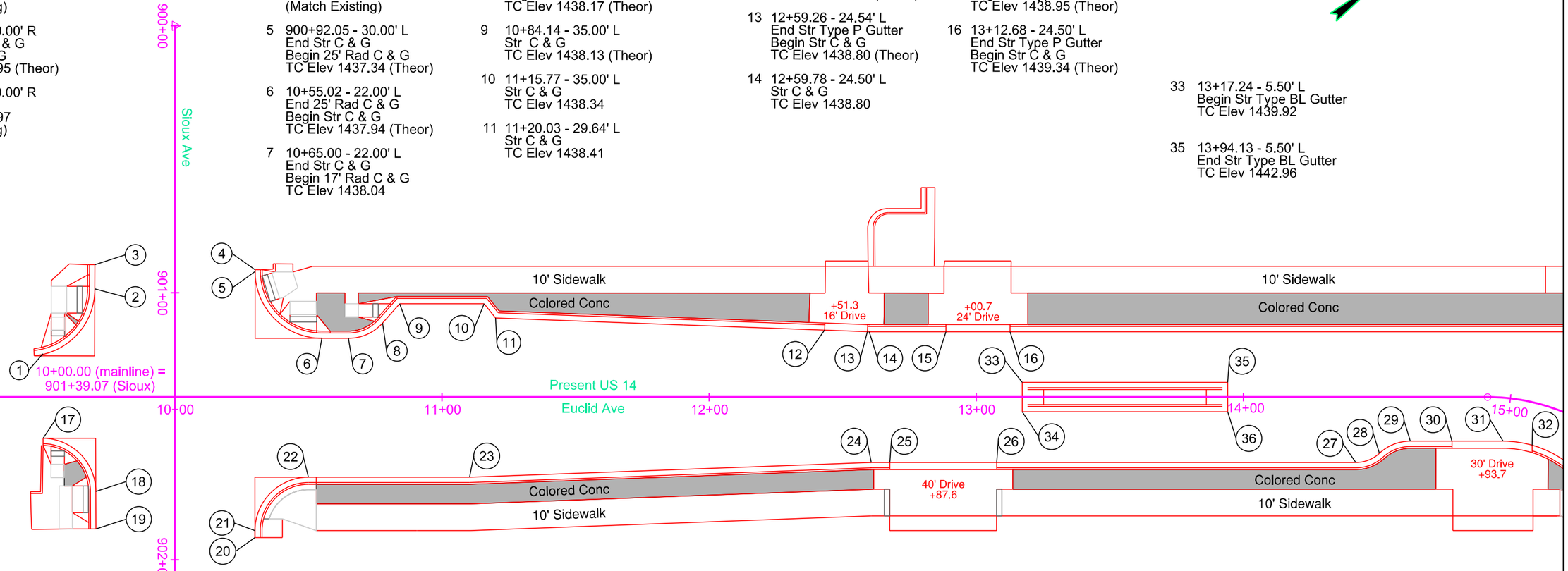

17 9+50.67 - 15.41' R
Begin 20' Rad C & G
TC Elev 1437.53
(Match Existing)

18 901+74.41 - 29.59' R
End 20' Rad C & G
Begin Str C & G
TC Elev 1437.22 (Theor)

19 901+88.45 - 29.53' R
End Str C & G
TC Elev 1437.25
(Match Existing)

20 901+91.67 - 30.00' L
Begin Str C & G
TC Elev 1437.84
(Match Existing)

21 901+86.05 - 30.00' L
End Str C & G
Begin 20' Rad C & G
TC Elev 1437.84

22 10+49.98 - 30.00' R
End 20' Rad C & G
Begin Str C & G
TC Elev 1437.80 (Theor)

23 11+10.33 - 30.00' R
Str C & G
TC Elev 1438.03

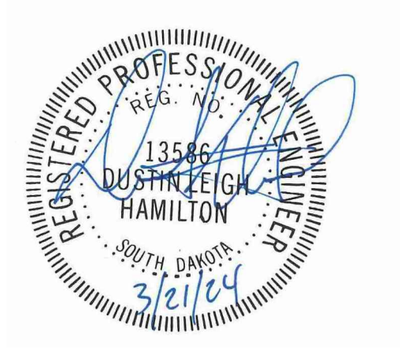

24 12+60.68 - 24.50' R
Str C & G
TC Elev 1438.06

25 12+67.64 - 24.50' R
End Str C & G
Begin Str Type P Gutter
TC Elev 1437.66 (Theor)

26 13+07.64 - 24.50' R
End Str Type P Gutter
Begin Str C & G
TC Elev 1439.23 (Theor)

34 13+17.24 - 5.50' R
Begin Str Type BL Gutter
TC Elev 1439.92

36 13+94.13 - 5.50' R
End Str Type BL Gutter
TC Elev 1442.96

27 14+42.09 - 24.50' R
End Str C & G
Begin 13' Rad C & G
TC Elev 1446.16

28 14+50.92 - 21.03' R
End 13' Rad C & G
Begin 17' Rad C & G
TC Elev 1446.91

29 14+62.48 - 16.50' R
End 17' Rad C & G
Begin Str C & G
TC Elev 1447.85

30 14+78.13 - 16.50' R
End Str C & G
Begin Str Type P Gutter
TC Elev 1448.94 (Theor)

31 14+98.80 - 16.22' R
End Str Type P Gutter
Begin 40.00' Rad Type P Gutter
TC Elev 1450.27 (Theor)

32 15+12.80 - 15.63' R
End 40.00' Rad Type P Gutter
Begin 40.00' Rad C & G
TC Elev 1451.07 (Theor)

STATE OF SOUTH DAKOTA	PROJECT	SHEET	TOTAL SHEETS
	NH-CR 0014(185)229	B85	B151

REV 12-06-23 GCE

1 906+00.00 - 25.75' L
Begin Str C & G
TC Elev 1456.16
(Match Existing)

2 906+11.48 - 25.75' L
End Str C & G
Begin 13' Rad C & G
TC Elev 1456.09

3 906+20.32 - 22.28' L
End 13' Rad C & G
Begin 17' Rad C & G
TC Elev 1456.04

4 906+31.87 - 17.75' L
End 13' Rad C & G
Begin Str C & G
TC Elev 1455.96 (Theor)

5 906+41.87 - 17.75' L
Str C & G
TC Elev 1455.88 (Theor)

6 906+44.57 - 17.91' L
End Str C & G
Begin 25' Rad C & G
TC Elev 1455.86 (Theor)

7 906+67.96 - 40.38' L
End 25' Rad C & G
Begin Str C & G
TC Elev 1456.58 (Theor)

8 906+68.99 - 50.71' L
End Str C & G
TC Elev 1456.77
(Match Existing)

9 906+88.94 - 71.01' L
Begin Str C & G
TC Elev 1458.41
(Match Existing)

10 906+88.85 - 68.92' L
End Str C&G
Begin 18' Rad C&G
TC Elev 1458.26

11 906+87.85 - 63.12' L
End 18' Rad C&G
Begin Str C&G
TC Elev 1457.78

12 906+83.14 - 55.06' L
End Str C & G
Begin 13' Rad C&G
TC Elev 1457.12

13 906+81.77 - 50.97' L
Begin Str C & G
End 13' Rad C & G
TC Elev 1456.87

14 906+81.61 - 49.83' L
Begin Str C & G
TC Elev 1456.80

Note: All curb and gutter shown on this sheet is Type B68 except as noted.

15 906+81.11 - 41.90' L
End Str C & G
Begin 20' Rad C & G
TC Elev 1456.55 (Theor)

16 907+01.01 - 20.50' L
End 20' Rad C & G
Begin Str C & G
TC Elev 1455.49

17 16+19.31 - 20.50' L
End Str C & G
Begin Str Type P Gutter
TC Elev 1457.13 (Theor)

18 16+35.31 - 20.50' L
End Str Type P Gutter
Begin Str C & G
TC Elev 1457.78 (Theor)

19 16+63.40 - 20.50' L
End Str C & G
Begin Str Type P Gutter
TC Elev 1458.78 (Theor)

20 16+87.40 - 20.50' L
End Str Type P Gutter
Begin Str C & G
TC Elev 1459.48 (Theor)

21 17+11.39 - 20.50' L
End Str C & G
Begin 65.00' Rad C & G
TC Elev 1460.05

22 17+79.92 - 19.42' L
End 65' Rad C & G
Begin 30' Rad C & G
TC Elev 1460.75

23 18+14.84 - 16.50' L
End 30' Rad C & G
Begin Str C & G
TC Elev 1462.10

24 18+25.44 - 16.50' L
End Str C & G
Begin 17' Rad C & G
TC Elev 1462.77

25 18+37.00 - 21.03' L
End 17' Rad C & G
Begin 13' Rad C & G
TC Elev 1463.50

26 18+45.84 - 24.50' L
End 13' Rad C & G
Begin Str C & G
TC Elev 1464.07

27 18+05.28 - 25.72' R
End 20' Rad C & G
Begin Str C & G
TC Elev 1461.22 (Theor)

28 909+73.44 - 25.27' L
End 20' Rad C & G
Begin Str C & G
TC Elev 1460.68 (Theor)

29 910+53.79 - 25.27' L
End STR C & G
TC Elev 1460.34
(Match Existing)

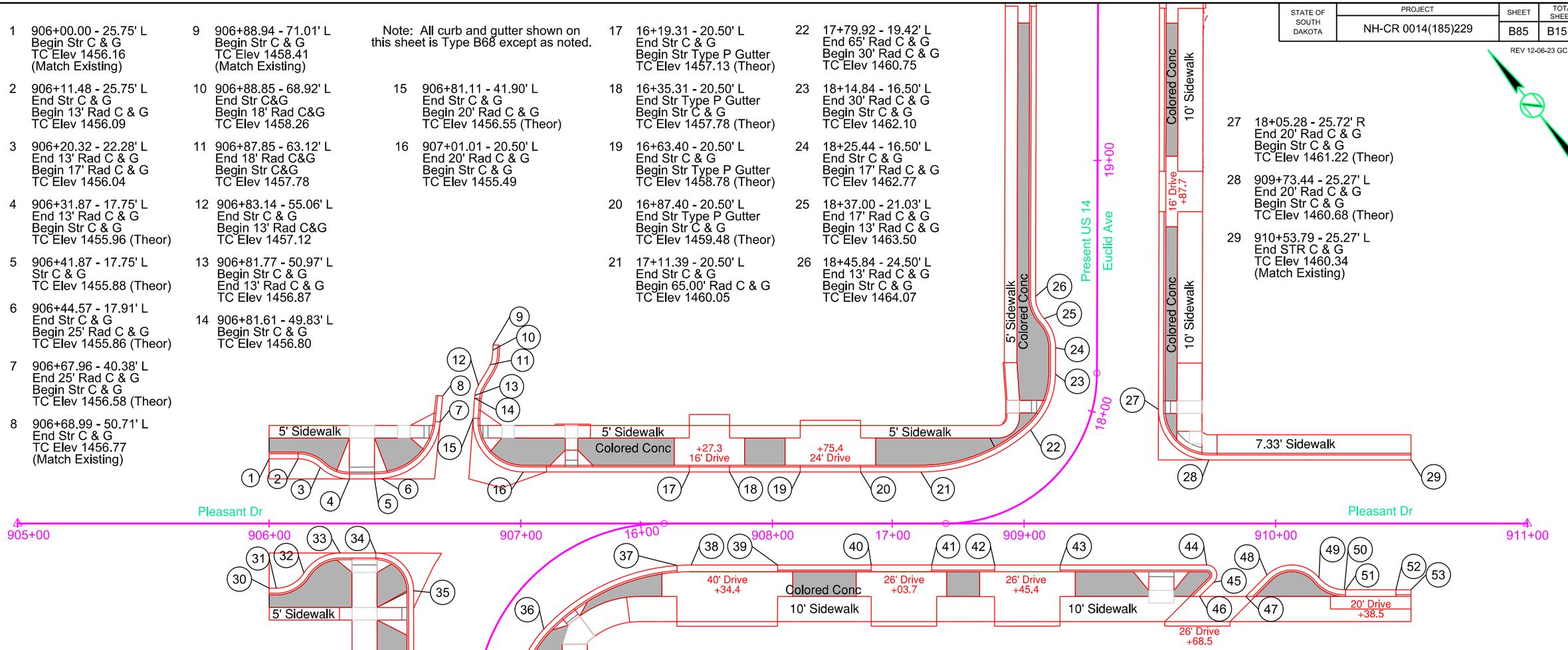

30 906+00.00 - 25.75' R
Begin Str C & G
TC Elev 1453.78
(Match Existing)

31 906+02.81 - 25.75' R
End Str C & G
Begin 13' Rad C & G
TC Elev 1453.75

32 906+13.80 - 19.68' R
End 13' Rad C & G
Begin 17' Rad C & G
TC Elev 1453.99

33 906+28.18 - 11.75' R
End 17' Rad C & G
Begin Str C & G
TC Elev 1454.63 (Theor)

34 906+42.40 - 11.75' R
End Str C & G
Begin 15' Rad C & G
TC Elev 1454.54 (Theor)

35 906+57.40 - 26.74' R
End 15' Rad C & G
Begin Str C & G
TC Elev 1453.48

36 15+36.81 - 16.93' R
End 40' Rad C & G
Begin 80' Rad C & G
TC Elev 1452.06

37 16+14.42 - 16.70' R
End 80' Rad C & G
Begin 80' Rad Type P Gutter
TC Elev 1455.46 (Theor)

38 16+20.07 - 16.50' R
End Str 80' Rad Type P Gutter
Begin Str Type P Gutter
TC Elev 1455.71 (Theor)

39 16+54.42 - 16.50' R
End Str Type P C & G
Begin Str C & G
TC Elev 1457.04 (Theor)

40 16+91.66 - 16.50' R
End Str C & G
Begin Str Type P Gutter
TC Elev 1458.15 (Theor)

41 17+15.66 - 16.50' R
End Str Type P Gutter
Begin Str C & G
TC Elev 1458.70 (Theor)

42 908+88.33 - 16.50' R
End Str C & G
Begin Str Type P Gutter
TC Elev 1459.27 (Theor)

43 909+14.33 - 16.50' R
End Str Type P Gutter
Begin Str C & G
TC Elev 1459.60 (Theor)

44 909+72.62 - 16.50' R
End Str C & G
Begin 4' Rad C & G
TC Elev 1459.88

45 909+75.44 - 23.33' R
End 4' Rad C & G
Begin Str C & G
TC Elev 1459.86

46 909+69.76 - 29.00' R
End Str C & G
TC Elev 1459.84

47 909+88.10 - 29.00' R
Begin Str C & G
TC Elev 1459.71

48 909+96.54 - 20.58' R
End Str C & G
Begin 14' Rad C & G
TC Elev 1459.93

49 910+17.24 - 21.59' R
End 14' Rad C & G
Begin 13' Rad C & G
TC Elev 1459.98

50 910+27.28 - 26.33' R
End 13' Rad C & G
Begin Str C & G
TC Elev 1459.92

51 910+27.79 - 26.33' R
End Str C & G
Begin Str Type P Gutter
TC Elev 1459.92 (Theor)

52 910+47.79 - 26.33' R
End Str Type P Gutter
Begin Str C & G
TC Elev 1459.85 (Theor)

53 910+53.79 - 26.33' R
End Str C & G
TC Elev 1459.82
(Match Existing)

REGISTERED PROFESSIONAL ENGINEER
REG. NO.
13586
DUSTIN LEIGH
HAMILTON
SOUTH DAKOTA
3/21/24

STATE OF SOUTH DAKOTA	PROJECT	SHEET	TOTAL SHEETS
	NH-CR 0014(185)229	B86	B151

REV 11/30/23 GCE

Note: Curb and gutter shown on this sheet is Type B68 to Sta. 19+07 and Type B66 from Sta. 19+07 forward.

1 19+16+61.24 - 24.50' L
End Str C & G
Begin Str Type P Gutter
TC Elev 1471.43 (Theor)

2 19+79.29 - 24.50' L
End Str Type P Gutter
Begin Str C & G
TC Elev 1472.53 (Theor)

3 19+96.82 - 24.50' L
End Str C & G
Begin Str Type P Gutter
TC Elev 1473.59 (Theor)

4 20+08.82 - 24.50' L
End Str Type P Gutter
Begin Str C & G
TC Elev 1474.32 (Theor)

5 20+47.23 - 24.50' L
End Str C & G
Begin Str Type P Gutter
TC Elev 1476.65 (Theor)

6 20+55.23 - 24.50' L
End Str Type P Gutter
Begin Str C & G
TC Elev 1477.13 (Theor)

7 21+44.56 - 24.50' L
End Str C & G
Begin 15' Rad C & G
TC Elev 1482.73

8 911+06.96 - 26.50' R
End 15' Rad C & G
Begin Str C & G
TC Elev 1483.73

9 910+72.59 - 25.70' R
End Str C & G
TC Elev 1483.76
(Match Existing)

10 910+72.59 - 26.00' L
Begin Str C & G
TC Elev 1484.34
(Match Existing)

11 911+07.00 - 26.00' L
End Str C & G
Begin 15' Rad C & G
TC Elev 1484.61

12 22+26.20 - 24.50' L
End 15' Rad C & G
Begin Str C & G
TC Elev 1485.28

13 18+79.73 - 24.50' R
End Str C & G
Begin Str Type P Gutter
TC Elev 1466.08 (Theor)

14 18+95.93 - 24.50' R
End Str Type P Gutter
Begin Str C & G
TC Elev 1467.16 (Theor)

15 19+60.63 - 24.50' R
End Str C & G
Begin Str Type P Gutter
TC Elev 1471.40 (Theor)

16 19+76.63 - 24.50' R
End Str Type P Gutter
Begin Str C & G
TC Elev 1472.37 (Theor)

17 20+02.41 - 24.50' R
End Str C & G
Begin Str Type P Gutter
TC Elev 1473.93 (Theor)

18 20+26.41 - 24.50' R
End Str Type P Gutter
Begin Str C & G
TC Elev 1475.38 (Theor)

19 21+39.75 - 24.50' R
End Str C & G
Begin 20' Rad C & G
TC Elev 1482.51

20 911+91.00 - 25.40' R
End 20' Rad C & G
Begin Str C & G
TC Elev 1484.01

21 912+20.00 - 25.40' R
End Str C & G
TC Elev 1484.42
(Match Existing)

22 912+20.00 - 26.20' L
Begin Str C & G
TC Elev 1485.61
(Match Existing)

23 911+89.94 - 26.09' L
End Str C & G
Begin 12' Rad C & G
TC Elev 1484.83

24 911+80.08 - 31.20' L
End 12' Rad C & G
Begin 50' Rad C & G
TC Elev 1484.97

25 22+45.03 - 24.50' R
End 50' C & G
Begin Str C & G
TC Elev 1485.91

26 22+53.08 - 24.50' R
End Str C & G
Begin Str Type P Gutter
TC Elev 1486.19 (Theor)

27 22+71.08 - 24.50' R
End Str Type P Gutter
Begin Str C & G
TC Elev 1486.83 (Theor)

28 23+02.60 - 24.50' R
End Str C & G
Begin Type P Gutter
TC Elev 1488.13 (Theor)

29 23+18.60 - 24.50' R
End Str Type P Gutter
Begin Str C & G
TC Elev 1488.86 (Theor)

30 23+89.59 - 24.50' R
End Str C & G
Begin Str Type P Gutter
TC Elev 1492.23 (Theor)

REGISTERED PROFESSIONAL ENGINEER
REG. NO. 13586
DUSTIN LEIGH HAMILTON
SOUTH DAKOTA
3/21/24

STATE OF SOUTH DAKOTA	PROJECT	SHEET	TOTAL SHEETS
	NH-CR 0014(185)229	B87	B151

Note: All curb and gutter shown on this sheet is Type B66 except as noted.

1 24+11.71 - 24.50' L
End Str C & G
Begin Str Type P Gutter
TC Elev 1493.45 (Theor)

2 24+35.71 - 24.50' L
End Str Type P Gutter
Begin Str C & G
TC Elev 1494.87 (Theor)

3 25+52.46 - 24.50' L
End Str C & G
Begin 18' Rad C & G
TC Elev 1502.20

4 916+02.00 - 24.28' R
End 18' Rad C & G
Begin Str C & G
TC Elev 1502.74

5 915+80.00 - 24.28' R
End Str C & G
TC Elev 1502.87
(Match Existing)

6 915+80.00 - 23.39' L
Begin Str C & G
TC Elev 1505.32
(Match Existing)

7 916+05.000 - 23.39' L
End Str C & G
Begin 15' Rad C & G
TC Elev 1505.91 (Theor)

8 26+33.12 - 24.50' L
End 15' Rad C & G
Begin Str C & G
TC Elev 1506.50 (Theor)

9 27+99.49 - 24.50' L
End Str C & G
Begin Str Type P Gutter
TC Elev 1520.78 (Theor)

10 28+45.49 - 24.50' L
End Str Type P Gutter
Begin Str C & G
TC Elev 1525.58 (Theor)

11 29+27.55 - 24.50' L
End Str C & G
Begin Str Type P Gutter
TC Elev 1533.38 (Theor)

12 29+49.54 - 24.50' L
End Str Type P Gutter
Begin Str C & G
TC Elev 1534.98 (Theor)

13 29+91.12 - 22.40' L
End Str C & G
Begin 25' Rad C & G
TC Elev 1537.41 (Theor)

14 921+21.64 - 17.70' R
End 25' Rad C & G
Begin 15' Rad C & G
TC Elev 1538.06 (Theor)

15 30+14.99 - 21.10' L
Begin Valley Gutter

16 921+06.74 - 14.75' R
End 15' Rad C & G
Begin Str C & G
TC Elev 1538.32 (Theor)

17 921+08.28 - 13.67' R
End Str C & G
Begin 17' Rad C & G
TC Elev 1538.33 (Theor)

18 920+98.08 - 17.07' R
End 17' Rad C & G
Begin 13' Rad C & G
TC Elev 1538.37

19 920+90.28 - 19.67' R
End 13' Rad C & G
Begin Str C & G
TC Elev 1538.40

20 920+55.97 - 19.67' R
End Str C & G
TC Elev 1538.53
(Match Existing)

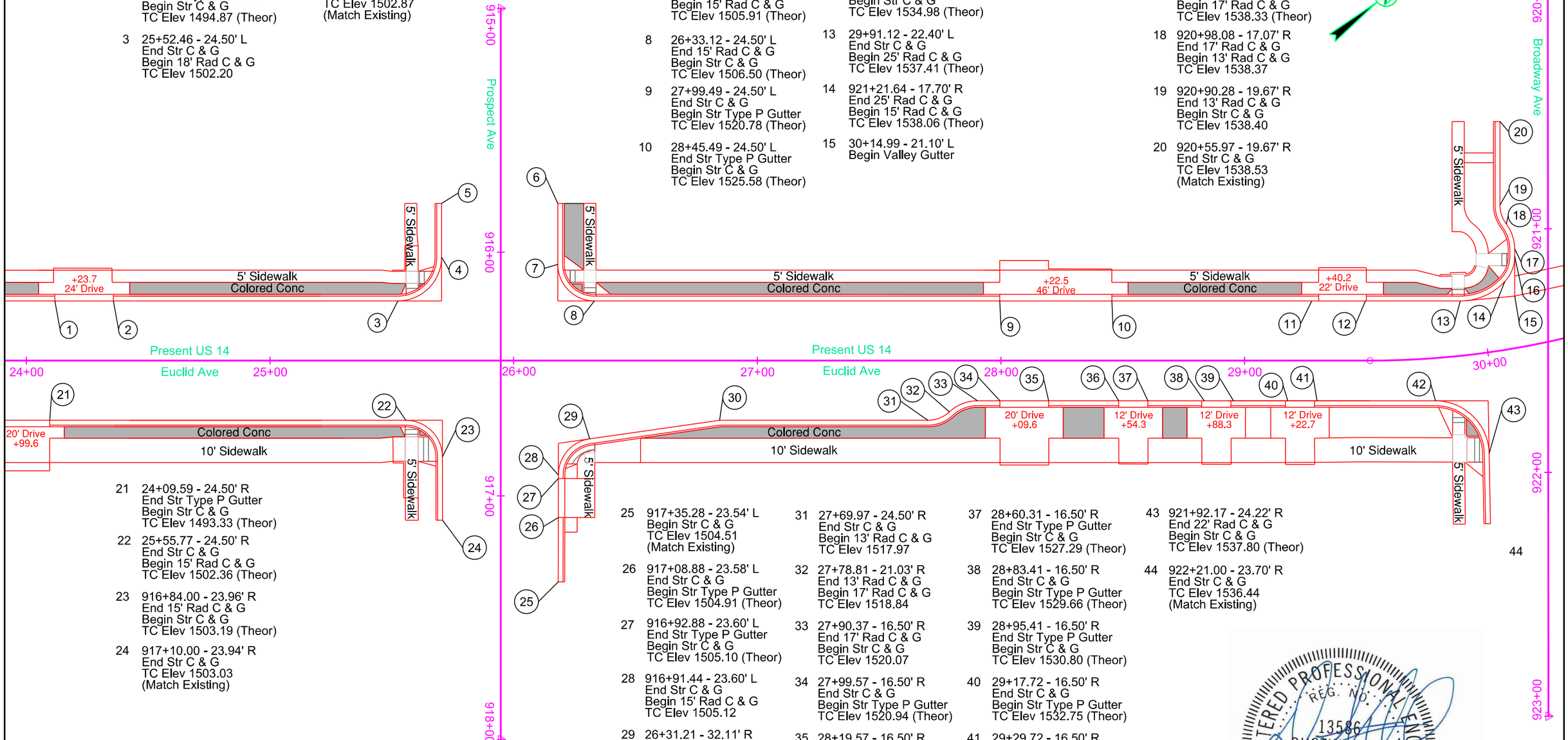

21 24+09.59 - 24.50' R
End Str Type P Gutter
Begin Str C & G
TC Elev 1493.33 (Theor)

22 25+55.77 - 24.50' R
End Str C & G
Begin 15' Rad C & G
TC Elev 1502.36 (Theor)

23 916+84.00 - 23.96' R
End 15' Rad C & G
Begin Str C & G
TC Elev 1503.19 (Theor)

24 917+10.00 - 23.94' R
End Str C & G
TC Elev 1503.03
(Match Existing)

25 917+35.28 - 23.54' L
Begin Str C & G
TC Elev 1504.51
(Match Existing)

26 917+08.88 - 23.58' L
End Str C & G
Begin Str Type P Gutter
TC Elev 1504.91 (Theor)

27 916+92.88 - 23.60' L
End Str Type P Gutter
Begin Str C & G
TC Elev 1505.10 (Theor)

28 916+91.44 - 23.60' L
End Str C & G
Begin 15' Rad C & G
TC Elev 1505.12

29 26+31.21 - 32.11' R
End 15' Rad C & G
Begin Str C & G
TC Elev 1506.23 (Theor)

30 26+84.49 - 24.50' R
Str C & G
TC Elev 1510.21

31 27+69.97 - 24.50' R
End Str C & G
Begin 13' Rad C & G
TC Elev 1517.97

32 27+78.81 - 21.03' R
End 13' Rad C & G
Begin 17' Rad C & G
TC Elev 1518.84

33 27+90.37 - 16.50' R
End 17' Rad C & G
Begin Str C & G
TC Elev 1520.07

34 27+99.57 - 16.50' R
End Str C & G
Begin Str Type P Gutter
TC Elev 1520.94 (Theor)

35 28+19.57 - 16.50' R
End Str Type P Gutter
Begin Str C & G
TC Elev 1523.02 (Theor)

36 28+48.31 - 16.50' R
End Str C & G
Begin Str Type P Gutter
TC Elev 1526.03 (Theor)

37 28+60.31 - 16.50' R
End Str Type P Gutter
Begin Str C & G
TC Elev 1527.29 (Theor)

38 28+83.41 - 16.50' R
End Str C & G
Begin Str Type P Gutter
TC Elev 1529.66 (Theor)

39 28+95.41 - 16.50' R
End Str Type P Gutter
Begin Str C & G
TC Elev 1530.80 (Theor)

40 29+17.72 - 16.50' R
End Str C & G
Begin Str Type P Gutter
TC Elev 1532.75 (Theor)

41 29+29.72 - 16.50' R
End Str Type P Gutter
Begin Str C & G
TC Elev 1533.71 (Theor)

42 29+77.09 - 17.48' R
End Str C & G
Begin 22' Rad C & G
TC Elev 1536.79

43 921+92.17 - 24.22' R
End 22' Rad C & G
Begin Str C & G
TC Elev 1537.80 (Theor)

44

44 922+21.00 - 23.70' R
End Str C & G
TC Elev 1536.44
(Match Existing)

REGISTERED PROFESSIONAL ENGINEER
REG. NO. 13586
DUSTIN LEIGH HAMILTON
SOUTH DAKOTA
3/21/24

HDR

STATE OF SOUTH DAKOTA	PROJECT	SHEET	TOTAL SHEETS
	NH-CR 0014(185)229	B88	B151

Note: All curb and gutter shown on this sheet is Type B66 except as noted.

REGISTERED PROFESSIONAL ENGINEER
REG. NO.
13586
DUSTIN LEIGH
HAMILTON
SOUTH DAKOTA
3/21/24

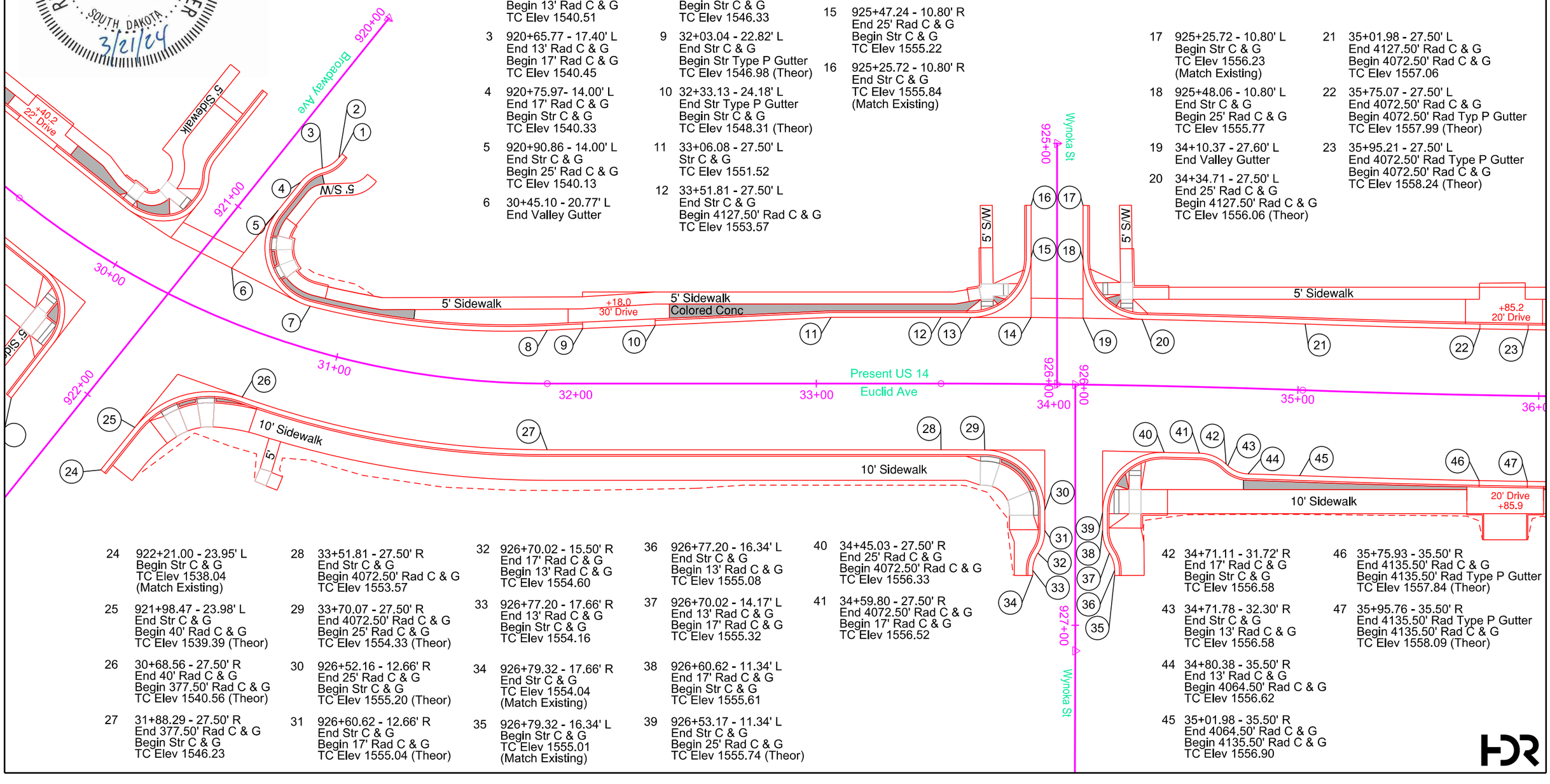

1 920+55.97 - 20.00' L
Begin Str C & G
TC Elev 1540.53
(Match Existing)

2 920+57.97 - 20.00' L
End Str C & G
Begin 13' Rad C & G
TC Elev 1540.51

3 920+65.77 - 17.40' L
End 13' Rad C & G
Begin 17' Rad C & G
TC Elev 1540.45

4 920+75.97- 14.00' L
End 17' Rad C & G
Begin Str C & G
TC Elev 1540.33

5 920+90.86 - 14.00' L
End Str C & G
Begin 25' Rad C & G
TC Elev 1540.13

6 30+45.10 - 20.77' L
End Valley Gutter

7 30+83.20 - 17.23' L
End 25' Rad C & G
Begin 329.74' Rad C & G
TC Elev 1541.43

8 31+88.29 - 22.15' L
End 329.74' Rad C & G
Begin Str C & G
TC Elev 1546.33

9 32+03.04 - 22.82' L
End Str C & G
Begin Str Type P Gutter
TC Elev 1546.98 (Theor)

10 32+33.13 - 24.18' L
End Str Type P Gutter
Begin Str C & G
TC Elev 1548.31 (Theor)

11 33+06.08 - 27.50' L
Str C & G
TC Elev 1551.52

12 33+51.81 - 27.50' L
End Str C & G
Begin 4127.50' Rad C & G
TC Elev 1553.57

13 33+64.01 - 27.50' L
End 4127.50' Rad C & G
Begin 25' Rad C & G
TC Elev 1554.09 (Theor)

14 33+88.92 - 27.61' L
Begin Valley Gutter

15 925+47.24 - 10.80' R
End 25' Rad C & G
Begin Str C & G
TC Elev 1555.22

16 925+25.72 - 10.80' R
End Str C & G
TC Elev 1555.84
(Match Existing)

17 925+25.72 - 10.80' L
Begin Str C & G
TC Elev 1556.23
(Match Existing)

18 925+48.06 - 10.80' L
End Str C & G
Begin 25' Rad C & G
TC Elev 1555.77

19 34+10.37 - 27.60' L
End Valley Gutter

20 34+34.71 - 27.50' L
End 25' Rad C & G
Begin 4127.50' Rad C & G
TC Elev 1556.06 (Theor)

21 35+01.98 - 27.50' L
End 4127.50' Rad C & G
Begin 4072.50' Rad C & G
TC Elev 1557.06

22 35+75.07 - 27.50' L
End 4072.50' Rad C & G
Begin 4072.50' Rad Typ P Gutter
TC Elev 1557.99 (Theor)

23 35+95.21 - 27.50' L
End 4072.50' Rad Type P Gutter
Begin 4072.50' Rad C & G
TC Elev 1558.24 (Theor)

24 922+21.00 - 23.95' L
Begin Str C & G
TC Elev 1538.04
(Match Existing)

25 921+98.47 - 23.98' L
End Str C & G
Begin 40' Rad C & G
TC Elev 1539.39 (Theor)

26 30+68.56 - 27.50' R
End 40' Rad C & G
Begin 377.50' Rad C & G
TC Elev 1540.56 (Theor)

27 31+88.29 - 27.50' R
End 377.50' Rad C & G
Begin Str C & G
TC Elev 1546.23

28 33+51.81 - 27.50' R
End Str C & G
Begin 4072.50' Rad C & G
TC Elev 1553.57

29 33+70.07 - 27.50' R
End 4072.50' Rad C & G
Begin 25' Rad C & G
TC Elev 1554.33 (Theor)

30 926+52.16 - 12.66' R
End 25' Rad C & G
Begin Str C & G
TC Elev 1555.20 (Theor)

31 926+60.62 - 12.66' R
End Str C & G
Begin 17' Rad C & G
TC Elev 1555.04 (Theor)

32 926+70.02 - 15.50' R
End 17' Rad C & G
Begin 13' Rad C & G
TC Elev 1554.60

33 926+77.20 - 17.66' R
End 13' Rad C & G
Begin Str C & G
TC Elev 1554.16

34 926+79.32 - 17.66' R
End Str C & G
TC Elev 1554.04
(Match Existing)

35 926+79.32 - 16.34' L
Begin Str C & G
TC Elev 1555.01
(Match Existing)

36 926+77.20 - 16.34' L
End Str C & G
Begin 13' Rad C & G
TC Elev 1555.08

37 926+70.02 - 14.17' L
End 13' Rad C & G
Begin 17' Rad C & G
TC Elev 1555.32

38 926+60.62 - 11.34' L
End 17' Rad C & G
Begin Str C & G
TC Elev 1555.61

39 926+53.17 - 11.34' L
End Str C & G
Begin 25' Rad C & G
TC Elev 1555.74 (Theor)

40 34+45.03 - 27.50' R
End 25' Rad C & G
Begin 4072.50' Rad C & G
TC Elev 1556.33

41 34+59.80 - 27.50' R
End 4072.50' Rad C & G
Begin 17' Rad C & G
TC Elev 1556.52

42 34+71.11 - 31.72' R
End 17' Rad C & G
Begin Str C & G
TC Elev 1556.58

43 34+71.78 - 32.30' R
End Str C & G
Begin 13' Rad C & G
TC Elev 1556.58

44 34+80.38 - 35.50' R
End 13' Rad C & G
Begin 4064.50' Rad C & G
TC Elev 1556.62

45 35+01.98 - 35.50' R
End 4064.50' Rad C & G
Begin 4135.50' Rad C & G
TC Elev 1556.90

46 35+75.93 - 35.50' R
End 4135.50' Rad C & G
Begin 4135.50' Rad Type P Gutter
TC Elev 1557.84 (Theor)

47 35+95.76 - 35.50' R
End 4135.50' Rad Type P Gutter
Begin 4135.50' Rad C & G
TC Elev 1558.09 (Theor)

STATE OF SOUTH DAKOTA	PROJECT	SHEET	TOTAL SHEETS
	NH-CR 0014(185)229	B89	B151

Note: All curb and gutter shown on this sheet is Type B66 except as noted.

1 36+52.16 - 27.50' L
End 4072.50' Rad C & G
Begin Str C & G
TC Elev 1558.97

2 36+53.90 - 27.50' L
Str C & G
TC Elev 1558.99

3 37+68.90 - 22.00' L
End Str C & G
Begin 17' Rad C & G
TC Elev 1560.56

4 37+80.46 - 26.53' L
End 17' Rad C & G
Begin 13' Rad C & G
TC Elev 1560.62

5 37+89.30 - 30.00' L
End 13' Rad C & G
Begin Str C & G
TC Elev 1560.66

6 38+75.87 - 30.00' L
End Str C & G
Begin 13' Rad C & G
TC Elev 1561.66

7 38+84.71 - 26.53' L
End 13' Rad C & G
Begin 17' Rad C & G
TC Elev 1561.80

8 38+96.27 - 22.00' L
End 17' Rad C & G
Begin Str C & G
TC Elev 1561.97

9 39+06.37 - 22.00' L
End Str C & G
Begin 25' Rad C & G
TC Elev 1562.08

10 39+31.37 - 22.00' L
Begin Valley Gutter

11 930+53.00 - 16.50' R
End 25' Rad C & G
Begin Str C & G
TC Elev 1562.59 (Theor)

12 930+33.50 - 16.50' R
End Str C & G
TC Elev 1562.83
(Match Existing)

13 930+33.50 - 17.50' L
Begin Str C & G
TC Elev 1563.44
(Match Existing)

14 930+53.00 - 17.50' L
End Str C & G
Begin 25' Rad C & G
TC Elev 1563.13 (Theor)

15 39+65.37 - 22.00' L
End Valley Gutter

16 39+90.37 - 22.00' L
End 25' Rad C & G
Begin Str C & G
TC Elev 1563.16

17 40+00.05 - 22.00' L
End Str C & G
Begin 17' Rad C & G
TC Elev 1563.28

18 40+11.60 - 26.53' L
End 17' Rad C & G
Begin 13' Rad C & G
TC Elev 1563.34

19 40+20.44 - 30.00' L
End 13' Rad C & G
Begin Str C & G
TC Elev 1563.36

20 41+57.19 - 30.00' L
End Str C & G
Begin Str Type P Gutter
TC Elev 1564.72 (Theor)

21 41+77.19 - 30.00' L
End Str Type P Gutter
Begin Str C & G
TC Elev 1564.92 (Theor)

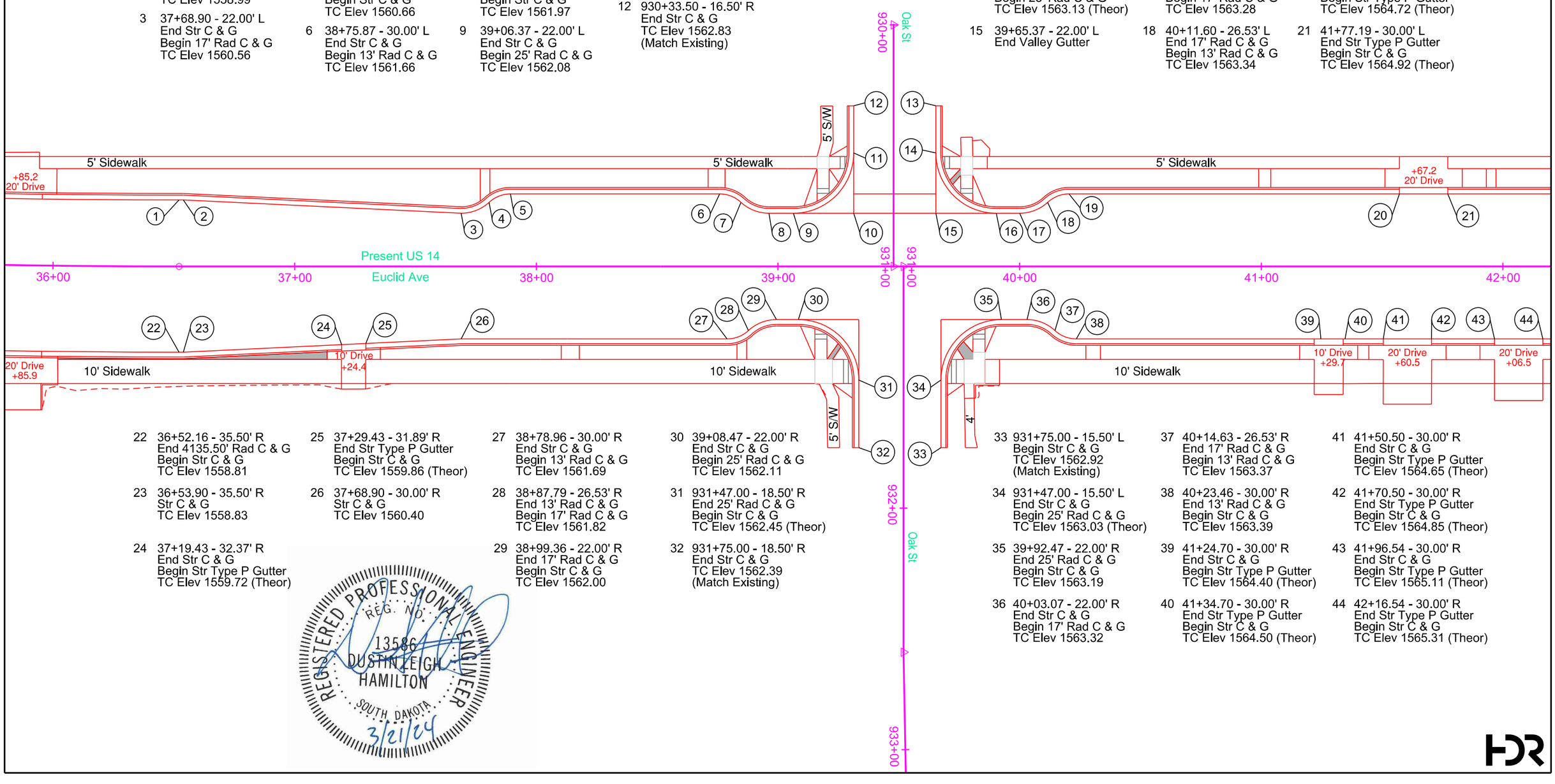

22 36+52.16 - 35.50' R
End 4135.50' Rad C & G
Begin Str C & G
TC Elev 1558.81

23 36+53.90 - 35.50' R
Str C & G
TC Elev 1558.83

24 37+19.43 - 32.37' R
End Str C & G
Begin Str Type P Gutter
TC Elev 1559.72 (Theor)

25 37+29.43 - 31.89' R
End Str Type P Gutter
Begin Str C & G
TC Elev 1559.86 (Theor)

26 37+68.90 - 30.00' R
Str C & G
TC Elev 1560.40

27 38+78.96 - 30.00' R
End Str C & G
Begin 13' Rad C & G
TC Elev 1561.69

28 38+87.79 - 26.53' R
End 13' Rad C & G
Begin 17' Rad C & G
TC Elev 1561.82

29 38+99.36 - 22.00' R
End 17' Rad C & G
Begin Str C & G
TC Elev 1562.00

30 39+08.47 - 22.00' R
End Str C & G
Begin 25' Rad C & G
TC Elev 1562.11

31 931+47.00 - 18.50' R
End 25' Rad C & G
Begin Str C & G
TC Elev 1562.45 (Theor)

32 931+75.00 - 18.50' R
End Str C & G
TC Elev 1562.39
(Match Existing)

33 931+75.00 - 15.50' L
Begin Str C & G
TC Elev 1562.92
(Match Existing)

34 931+47.00 - 15.50' L
End Str C & G
Begin 25' Rad C & G
TC Elev 1563.03 (Theor)

35 39+92.47 - 22.00' R
End 25' Rad C & G
Begin Str C & G
TC Elev 1563.19

36 40+03.07 - 22.00' R
End Str C & G
Begin 17' Rad C & G
TC Elev 1563.32

37 40+14.63 - 26.53' R
End 17' Rad C & G
Begin 13' Rad C & G
TC Elev 1563.37

38 40+23.46 - 30.00' R
End 13' Rad C & G
Begin Str C & G
TC Elev 1563.39

39 41+24.70 - 30.00' R
End Str C & G
Begin Str Type P Gutter
TC Elev 1564.40 (Theor)

40 41+34.70 - 30.00' R
End Str Type P Gutter
Begin Str C & G
TC Elev 1564.50 (Theor)

41 41+50.50 - 30.00' R
End Str C & G
Begin Str Type P Gutter
TC Elev 1564.65 (Theor)

42 41+70.50 - 30.00' R
End Str Type P Gutter
Begin Str C & G
TC Elev 1564.85 (Theor)

43 41+96.54 - 30.00' R
End Str C & G
Begin Str Type P Gutter
TC Elev 1565.11 (Theor)

44 42+16.54 - 30.00' R
End Str Type P Gutter
Begin Str C & G
TC Elev 1565.31 (Theor)

REGISTERED PROFESSIONAL ENGINEER
REG. NO.
13586
DUSTIN LEIGH
HAMILTON
SOUTH DAKOTA
3/21/24

STATE OF SOUTH DAKOTA	PROJECT	SHEET	TOTAL SHEETS
	NH-CR 0014(185)229	B90	B151

REV 5-18-23 DBT

Note: All curb and gutter shown on this sheet is Type B66 except as noted.

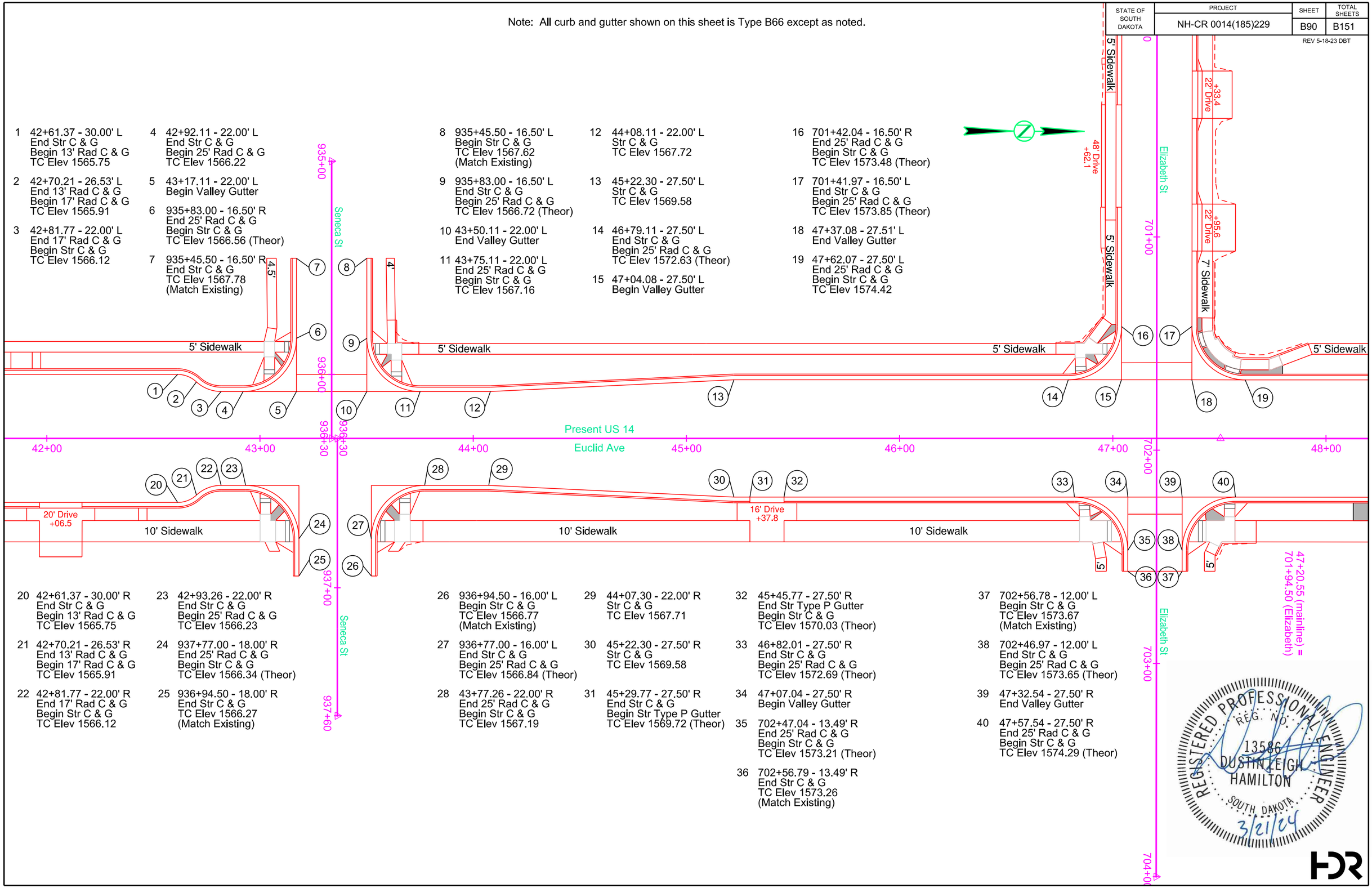

1 42+61.37 - 30.00' L
End Str C & G
Begin 13' Rad C & G
TC Elev 1565.75

2 42+70.21 - 26.53' L
End 13' Rad C & G
Begin 17' Rad C & G
TC Elev 1565.91

3 42+81.77 - 22.00' L
End 17' Rad C & G
Begin Str C & G
TC Elev 1566.12

4 42+92.11 - 22.00' L
End Str C & G
Begin 25' Rad C & G
TC Elev 1566.22

5 43+17.11 - 22.00' L
Begin Valley Gutter

6 935+83.00 - 16.50' R
End 25' Rad C & G
Begin Str C & G
TC Elev 1566.56 (Theor)

7 935+45.50 - 16.50' R
End Str C & G
TC Elev 1567.78
(Match Existing)

8 935+45.50 - 16.50' L
Begin Str C & G
TC Elev 1567.62
(Match Existing)

9 935+83.00 - 16.50' L
End Str C & G
Begin 25' Rad C & G
TC Elev 1566.72 (Theor)

10 43+50.11 - 22.00' L
End Valley Gutter

11 43+75.11 - 22.00' L
End 25' Rad C & G
Begin Str C & G
TC Elev 1567.16

12 44+08.11 - 22.00' L
Str C & G
TC Elev 1567.72

13 45+22.30 - 27.50' L
Str C & G
TC Elev 1569.58

14 46+79.11 - 27.50' L
End Str C & G
Begin 25' Rad C & G
TC Elev 1572.63 (Theor)

15 47+04.08 - 27.50' L
Begin Valley Gutter

16 701+42.04 - 16.50' R
End 25' Rad C & G
Begin Str C & G
TC Elev 1573.48 (Theor)

17 701+41.97 - 16.50' L
End Str C & G
Begin 25' Rad C & G
TC Elev 1573.85 (Theor)

18 47+37.08 - 27.51' L
End Valley Gutter

19 47+62.07 - 27.50' L
End 25' Rad C & G
Begin Str C & G
TC Elev 1574.42

20 42+61.37 - 30.00' R
End Str C & G
Begin 13' Rad C & G
TC Elev 1565.75

21 42+70.21 - 26.53' R
End 13' Rad C & G
Begin 17' Rad C & G
TC Elev 1565.91

22 42+81.77 - 22.00' R
End 17' Rad C & G
Begin Str C & G
TC Elev 1566.12

23 42+93.26 - 22.00' R
End Str C & G
Begin 25' Rad C & G
TC Elev 1566.23

24 937+77.00 - 18.00' R
End 25' Rad C & G
Begin Str C & G
TC Elev 1566.34 (Theor)

25 936+94.50 - 18.00' R
End Str C & G
TC Elev 1566.27
(Match Existing)

26 936+94.50 - 16.00' L
Begin Str C & G
TC Elev 1566.77
(Match Existing)

27 936+77.00 - 16.00' L
End Str C & G
Begin 25' Rad C & G
TC Elev 1566.84 (Theor)

28 43+77.26 - 22.00' R
End 25' Rad C & G
Begin Str C & G
TC Elev 1567.19

29 44+07.30 - 22.00' R
Str C & G
TC Elev 1567.71

30 45+22.30 - 27.50' R
Str C & G
TC Elev 1569.58

31 45+29.77 - 27.50' R
End Str C & G
Begin Str Type P Gutter
TC Elev 1569.72 (Theor)

32 45+45.77 - 27.50' R
End Str Type P Gutter
Begin Str C & G
TC Elev 1570.03 (Theor)

33 46+82.01 - 27.50' R
End Str C & G
Begin 25' Rad C & G
TC Elev 1572.69 (Theor)

34 47+07.04 - 27.50' R
Begin Valley Gutter

35 702+47.04 - 13.49' R
End 25' Rad C & G
Begin Str C & G
TC Elev 1573.21 (Theor)

36 702+56.79 - 13.49' R
End Str C & G
TC Elev 1573.26
(Match Existing)

37 702+56.78 - 12.00' L
Begin Str C & G
TC Elev 1573.67
(Match Existing)

38 702+46.97 - 12.00' L
End Str C & G
Begin 25' Rad C & G
TC Elev 1573.65 (Theor)

39 47+32.54 - 27.50' R
End Valley Gutter

40 47+57.54 - 27.50' R
End 25' Rad C & G
Begin Str C & G
TC Elev 1574.29 (Theor)

REGISTERED PROFESSIONAL ENGINEER
REG. NO.
13586
DUSTIN LEIGH
HAMILTON
SOUTH DAKOTA
3/21/24

HDR

STATE OF SOUTH DAKOTA	PROJECT	SHEET	TOTAL SHEETS
	NH-CR 0014(185)229	B91	B151

Note: All curb and gutter shown on this sheet is Type B66 except as noted.

1 49+13.38 - 27.50' L
End Str C & G
Begin Str Type P Gutter
TC Elev 1578.70 (Theor)

2 49+23.38 - 27.50' L
End Str Type P Gutter
Begin Str C & G
TC Elev 1578.98 (Theor)

3 50+02.22 - 27.50' L
End Str C & G
Begin 25' Rad C & G
TC Elev 1581.35

4 50+27.22 - 27.50' L
Begin Valley Gutter

5 940+45.00 - 9.70' R
End 25' Rad C & G
Note:Trans Curb Height to Match
Exist Driveway Curb Height
TC Elev 1582.57

6 940+20.00 - 9.70' R
TC Elev 1582.84
(Match Existing)

7 940+20.00 - 9.70' L
Begin Str C & G
TC Elev 1583.03
(Match Existing)

8 940+45.00 - 9.70' L
End Str C & G
Begin 25' Rad C & G
TC Elev 1582.76

9 50+46.62 - 27.50' L
End Valley Gutter

10 50+71.62 - 27.50' L
End 25' Rad C & G
Begin Str C & G
TC Elev 1583.48 (Theor)

11 52+42.74 - 27.50' L
End Str C & G
Begin Str Type P Gutter
TC Elev 1587.90 (Theor)

12 52+54.74 - 27.50' L
End Str Type P Gutter
Begin Str C & G
TC Elev 1588.21 (Theor)

13 53+27.37 - 27.50' L
End Str C & G
Begin 25' Rad C & G
TC Elev 1590.20 (Theor)

14 53+52.45 - 27.50' L
Begin Valley Gutter

15 945+45.00 - 9.80' R
End 25' Rad C & G
Begin Str C & G
TC Elev 1590.46 (Theor)

16 945+34.13 - 9.80' R
End Str C & G
TC Elev 1590.40
(Match Existing)

17 945+34.13 - 9.80' L
Begin Str C & G
TC Elev 1591.27
(Match Existing)

18 945+45.00 - 9.80' L
End Str C & G
Begin 25' Rad C & G
TC Elev 1591.23 (Theor)

19 53+71.97 - 27.50' L
End Valley Gutter

20 53+96.97 - 27.50' L
End 25' Rad C & G
Begin Str C & G
TC Elev 1591.55 (Theor)

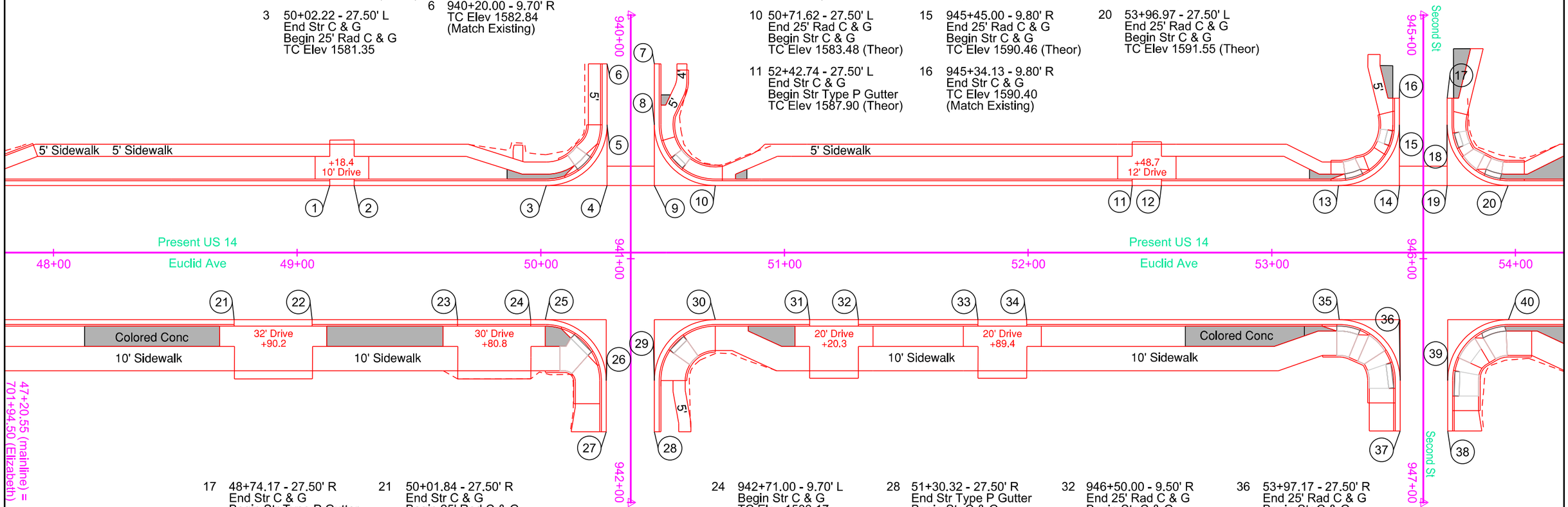

17 48+74.17 - 27.50' R
End Str C & G
Begin Str Type P Gutter
TC Elev 1577.59 (Theor)

18 49+06.17 - 27.50' R
End Str Type P Gutter
Begin Str C & G
TC Elev 1578.50 (Theor)

19 49+65.84 - 27.50' R
End Str C & G
Begin Str Type P Gutter
TC Elev 1580.23 (Theor)

20 49+95.84 - 27.50' R
End Str Type P Gutter
Begin Str C & G
TC Elev 1581.15 (Theor)

21 50+01.84 - 27.50' R
End Str C & G
Begin 25' Rad C & G
TC Elev 1581.34

22 941+50.00 - 10.08' R
End 25' Rad C & G
Begin Str C & G
TC Elev 1582.44 (Theor)

23 941+71.00 - 10.08' R
End Str C & G
TC Elev 1582.48
(Match Existing)

24 942+71.00 - 9.70' L
Begin Str C & G
TC Elev 1583.17
(Match Existing)

25 941+50.00 - 9.70' L
End Str C & G
Begin 25' Rad C & G
TC Elev 1583.24

26 50+71.62 - 27.50' R
End 25' Rad C & G
Begin Str C & G
TC Elev 1583.48

27 51+10.32 - 27.50' R
End Str C & G
Begin Str Type P Gutter
TC Elev 1584.56 (Theor)

28 51+30.32 - 27.50' R
End Str Type P Gutter
Begin Str C & G
TC Elev 1585.06 (Theor)

29 51+79.41 - 27.50' R
End Str C & G
Begin Str Type P Gutter
TC Elev 1586.30 (Theor)

30 51+99.41 - 27.50' L
End Str Type P Gutter
Begin Str C & G
TC Elev 1586.81 (Theor)

31 52+27.67 - 27.50' R
End Str C & G
Begin 25' Rad C & G
TC Elev 1590.20 (Theor)

32 946+50.00 - 9.50' R
End 25' Rad C & G
Begin Str C & G
TC Elev 1590.73 (Theor)

33 946+70.65 - 9.50' R
End Str C & G
TC Elev 1590.73
(Match Existing)

34 946+70.65 - 10.00' L
Begin Str C & G
TC Elev 1591.05
(Match Existing)

35 946+50.00 - 10.00' L
End Str C & G
Begin 25' Rad C & G
TC Elev 1591.11 (Theor)

36 53+97.17 - 27.50' R
End 25' Rad C & G
Begin Str C & G
TC Elev 1591.56 (Theor)

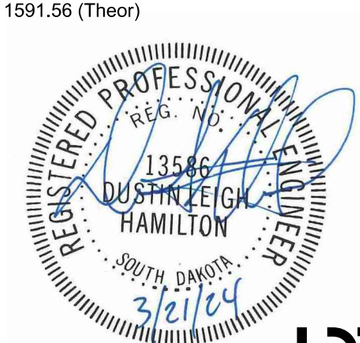

STATE OF SOUTH DAKOTA	PROJECT	SHEET	TOTAL SHEETS
	NH-CR 0014(185)229	B92	B151

Note: All curb and gutter shown on this sheet is Type B66 except as noted.

1 54+52.43 - 27.50' L
End Str C & G
Begin Str Type P Gutter
TC Elev 1592.64 (Theor)

2 54+84.43 - 27.50' L
End Str Type P Gutter
Begin Str C & G
TC Elev 1593.26 (Theor)

3 56+51.97 - 27.50' L
End Str C & G
Begin 25' Rad C & G
TC Elev 1597.20 (Theor)

4 950+67.50 - 10.60' R
End 25' Rad C & G
Begin Str C & G
TC Elev 1597.41

5 950+62.51 - 10.60' R
End Str C & G
TC Elev 1597.35
(Match Existing)

6 950+62.51 - 10.80' L
Begin Str C & G
TC Elev 1597.76
(Match Existing)

7 950+67.50 - 10.80' L
End Str C & G
Begin 25' Rad C & G
TC Elev 1597.83

8 57+23.37 - 27.50' L
End 25' Rad C & G
Begin Str C & G
TC Elev 1598.72 (Theor)

9 59+18.33 - 27.50' L
End Str C & G
Begin Str Type P Gutter
TC Elev 1605.76 (Theor)

10 59+58.32 - 27.50' L
End Str Type P Gutter
Begin Str C & G
TC Elev 1607.60 (Theor)

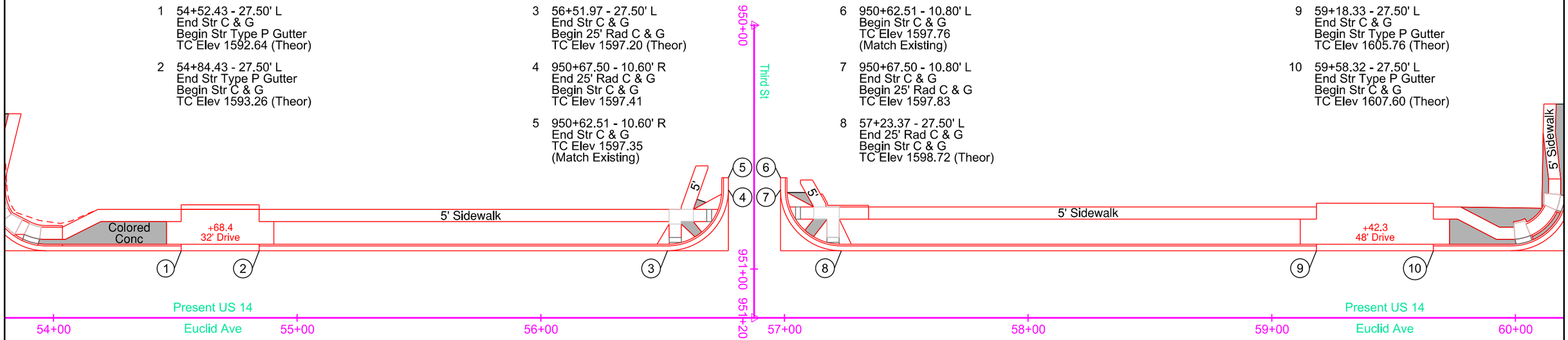

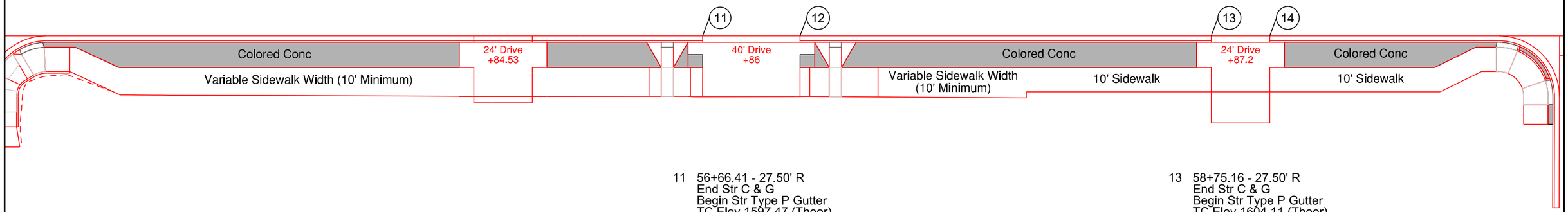

11 56+66.41 - 27.50' R
End Str C & G
Begin Str Type P Gutter
TC Elev 1597.47 (Theor)

12 57+06.41 - 27.50' R
End Str Type P Gutter
Begin Str C & G
TC Elev 1598.29 (Theor)

13 58+75.16 - 27.50' R
End Str C & G
Begin Str Type P Gutter
TC Elev 1604.11 (Theor)

14 58+99.16 - 27.50' R
End Str Type P Gutter
Begin Str C & G
TC Elev 1605.03 (Theor)

REGISTERED PROFESSIONAL ENGINEER
REG. NO.
13586
DUSTIN LEIGH
HAMILTON
SOUTH DAKOTA
3/21/24

STATE OF SOUTH DAKOTA	PROJECT	SHEET	TOTAL SHEETS
	NH-CR 0014(185)229	B93	B151

Note: All curb and gutter shown on this sheet is Type B66 except as noted.

1 59+98.23 - 27.50' L
End Str C & G
Begin 25' Rad C & G
TC Elev 1608.83 (Theor)

2 713+42.16 - 17.07' R
End 25' Rad C & G
Begin Str C & G
TC Elev 1609.94 (Theor)

3 713+06.84 - 16.99' R
End Str C & G
TC Elev 1609.29
(Match Existing)

4 713+05.73 - 17.32' L
Begin Str C & G
TC Elev 1610.19
(Match Existing)

5 713+41.91 - 17.35' L
End Str C & G
Begin 25' Rad C & G
TC Elev 1610.99 (Theor)

6 60+82.62 - 27.50' L
End 25' Rad C & G
Begin Str C & G
TC Elev 1612.07 (Theor)

7 61+29.70 - 27.50' L
End Str C & G
Begin Str Type P Gutter
TC Elev 1613.87 (Theor)

8 61+45.70 - 27.50' L
End Str Type P Gutter
Begin Str C & G
TC Elev 1614.48 (Theor)

9 62+71.87 - 27.50' L
End Str C & G
Begin Str Typ P Gutter
TC Elev 1620.36 (Theor)

10 62+87.87 - 27.50' L
End Str Type P Gutter
Begin Str C & G
TC Elev 1621.15 (Theor)

11 63+11.51 - 27.50' L
End Str C & G
Begin 1167.50' Rad C & G
TC Elev 1622.30

12 63+26.96 - 27.50' L
End 1167.50' Rad C & G
Begin 25' Rad C & G
TC Elev 1623.06

13 955+43.53 - 17.40' R
End 25' Rad C & G
Begin Str C & G
TC Elev 1623.92 (Theor)

14 955+36.94 - 17.40' R
Str C & G
TC Elev 1623.77

15 955+00.00 - 17.28' R
End Str C & G
TC Elev 1621.73
(Match Existing)

16 955+00.00 - 17.68' L
Begin Str C & G
TC Elev 1621.97
(Match Existing)

17 955+36.94 - 17.40' L
Str C & G
TC Elev 1624.69

18 955+47.76 - 17.40' L
End Str C & G
Begin 25' Rad C & G
TC Elev 1625.08 (Theor)

19 64+08.15 - 27.50' L
End 25' Rad C & G
Begin 1167.50' Rad C & G
TC Elev 1626.38

20 59+93.05 - 27.50' R
End Str C & G
Begin 25' Rad C & G
TC Elev 1608.63 (Theor)

21 60+18.12 - 27.50' R
Begin Valley Gutter

22 714+47.12 - 22.00' R
End 25' Rad C & G
Begin Str C & G
TC Elev 1609.90 (Theor)

23 714+92.69 - 22.00' R
End Str C & G
TC Elev 1610.12
(Match Existing)

24 714+92.69 - 22.00' L
Begin Str C & G
TC Elev 1611.67
(Match Existing)

25 714+46.88 - 22.00' L
End Str C & G
Begin 25' Rad C & G
TC Elev 1611.57 (Theor)

27 60+62.09 - 27.50' R
End Valley Gutter

27 60+87.03 - 27.50' R
End 25' Rad C & G
Begin Str C & G
TC Elev 1612.23 (Theor)

28 61+37.80 - 27.50' R
End Str C & G
Begin Str Type P Gutter
TC Elev 1614.18 (Theor)

29 61+77.80 - 27.50' R
End Str Type P Gutter
Begin Str C & G
TC Elev 1615.72 (Theor)

30 62+31.59 - 27.50' R
End Str C & G
Begin Str Type P Gutter
TC Elev 1617.78 (Theor)

31 62+47.59 - 27.50' R
End Str Type P Gutter
Begin Str C & G
TC Elev 1618.39 (Theor)

32 63+11.51 - 27.50' R
End Str C & G
Begin 1112.50' Rad C & G
TC Elev 1620.49 (Theor)

33 63+28.53 - 27.50' R
End 1112.50' Rad C & G
Begin 25' Rad C & G
TC Elev 1620.96 (Theor)

34 63+53.74 - 27.04' R
Begin Valley Gutter

35 956+48.54 - 17.40' R
End 25' Rad C & G
Begin Str C & G
TC Elev 1622.45 (Theor)

36 956+72.00 - 17.40' R
End Str C & G
TC Elev 1624.12
(Match Existing)

37 956+72.00 - 17.40' L
Begin Str C & G
TC Elev 1624.73
(Match Existing)

38 956+53.18 - 17.40' L
End Str C & G
Begin 25' Rad C & G
TC Elev 1623.59 (Theor)

39 63+89.43 - 26.87' R
End Valley Gutter

40 64+17.58 - 27.50' R
End 25' Rad C & G
Begin 1112.50' Rad C & G
TC Elev 1624.21 (Theor)

REGISTERED PROFESSIONAL ENGINEER
REG. NO.
13586
DUSTIN LEIGH
HAMILTON
SOUTH DAKOTA
3/21/24

STATE OF SOUTH DAKOTA	PROJECT	SHEET	TOTAL SHEETS
	NH-CR 0014(185)229	B94	B151

REV 04-04-23 MJW

Note: All curb and gutter shown on this sheet is Type B66 except as noted.

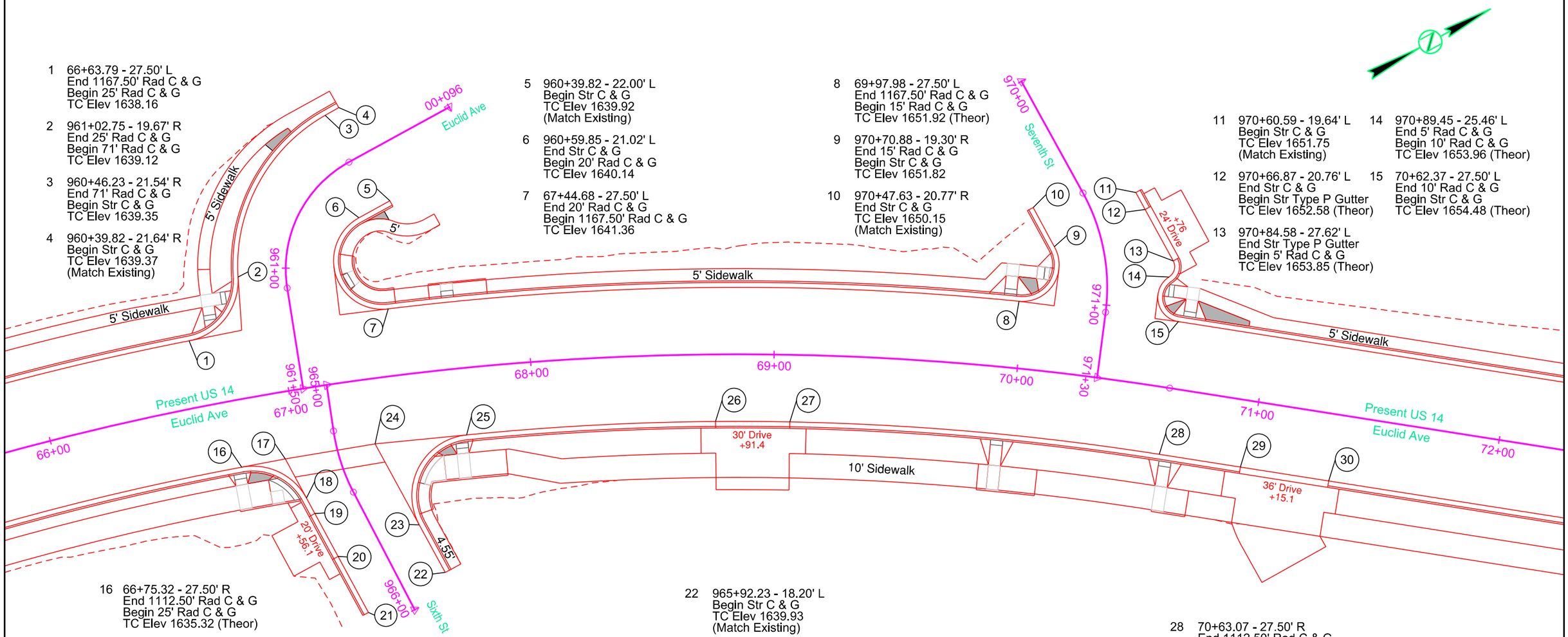

1 66+63.79 - 27.50' L
End 1167.50' Rad C & G
Begin 25' Rad C & G
TC Elev 1638.16

2 961+02.75 - 19.67' R
End 25' Rad C & G
Begin 71' Rad C & G
TC Elev 1639.12

3 960+46.23 - 21.54' R
End 71' Rad C & G
Begin Str C & G
TC Elev 1639.35

4 960+39.82 - 21.64' R
Begin Str C & G
TC Elev 1639.37
(Match Existing)

5 960+39.82 - 22.00' L
Begin Str C & G
TC Elev 1639.92
(Match Existing)

6 960+59.85 - 21.02' L
End Str C & G
Begin 20' Rad C & G
TC Elev 1640.14

7 67+44.68 - 27.50' L
End 20' Rad C & G
Begin 1167.50' Rad C & G
TC Elev 1641.36

8 69+97.98 - 27.50' L
End 1167.50' Rad C & G
Begin 15' Rad C & G
TC Elev 1651.92 (Theor)

9 970+70.88 - 19.30' R
End 15' Rad C & G
Begin Str C & G
TC Elev 1651.82

10 970+47.63 - 20.77' R
End Str C & G
TC Elev 1650.15
(Match Existing)

11 970+60.59 - 19.64' L
Begin Str C & G
TC Elev 1651.75
(Match Existing)

12 970+66.87 - 20.76' L
End Str C & G
Begin Str Type P Gutter
TC Elev 1652.58 (Theor)

13 970+84.58 - 27.62' L
End Str Type P Gutter
Begin 5' Rad C & G
TC Elev 1653.85 (Theor)

14 970+89.45 - 25.46' L
End 5' Rad C & G
Begin 10' Rad C & G
TC Elev 1653.96 (Theor)

15 70+62.37 - 27.50' L
End 10' Rad C & G
Begin Str C & G
TC Elev 1654.48 (Theor)

16 66+75.32 - 27.50' R
End 1112.50' Rad C & G
Begin 25' Rad C & G
TC Elev 1635.32 (Theor)

17 66+93.94 - 27.30' R
Begin Valley Gutter

18 965+40.10 - 18.44' R
End 25' Rad C & G
Begin Str C & G
TC Elev 1636.25

19 965+46.08 - 18.09' R
End Str C & G
Begin Str Type P Gutter
TC Elev 1636.47 (Theor)

20 965+66.08 - 17.76' R
End Str Type P Gutter
Begin Str C & G
TC Elev 1637.64 (Theor)

21 965+92.23 - 17.32' R
End Str C & G
TC Elev 1939.25
(Match Existing)

22 965+92.23 - 18.20' L
Begin Str C & G
TC Elev 1639.93
(Match Existing)

23 965+69.97 - 17.77' L
End Str C & G
Begin 25' Rad C & G
TC Elev 1639.02

24 67+32.21 - 26.74' R
End Valley Gutter

25 67+70.87 - 27.50' R
End 25' Rad C & G
Begin 1112.50' Rad C & G
TC Elev 1639.10 (Theor)

26 68+75.75 - 27.50' R
End Str C & G
Begin Str Type P Gutter
TC Elev 1643.24 (Theor)

27 69+07.00 - 27.50' R
End Str Type P Gutter
Begin Str C & G
TC Elev 1644.48 (Theor)

28 70+63.07 - 27.50' R
End 1112.50' Rad C & G
Begin Str C & G
TC Elev 1652.70 (Theor)

29 70+96.75 - 27.50' R
End Str C & G
Begin Str Type P Gutter
TC Elev 1654.75 (Theor)

30 71+33.44 - 27.50' R
End Str Type P Gutter
Begin Str C & G
TC Elev 1656.60 (Theor)

REGISTERED PROFESSIONAL ENGINEER
REG. NO.
13586
DUSTIN LEIGH
HAMILTON
SOUTH DAKOTA
3/21/24

HDR

STATE OF SOUTH DAKOTA	PROJECT	SHEET	TOTAL SHEETS
	NH-CR 0014(185)229	B95	B151

Note: All curb and gutter shown on this sheet is Type B66 except as noted.

1 74+00.85 - 27.50' L
End Str C & G
Begin 25' Rad C & G
TC Elev 1668.91

2 975+31.77 - 17.76' R
End 25' Rad C & G
Begin Str C & G
TC Elev 1670.66

3 975+27.29 - 17.76' R
End Str C & G
TC Elev 1670.64
(Match Existing)

4 975+24.82 - 36.54' L
Begin Str C & G
TC Elev 1671.21
(Match Existing)

5 975+24.92 - 32.65' L
End Str C & G
Begin 15' Rad C & G
TC Elev 1671.18 (Theor)

6 975+39.92 - 18.06' L
End 15' Rad C & G
Begin Str C & G
TC Elev 1671.45

7 975+78.36 - 33.89' L
End Str C & G
Begin 25' Rad C & G
TC Elev 1672.50

8 75+08.49 - 27.50' L
End 25' Rad C & G
Begin Str C & G
TC Elev 1673.71

9 76+88.20 - 27.50' L
End Str C & G
Begin Type P Gutter
TC Elev 1680.28 (Theor)

10 77+18.20 - 27.50' L
End Type P Gutter
Begin Str C & G
TC Elev 1681.30 (Theor)

11 77+73.93 - 5.50' L
Begin Str C & G
TC Elev 1683.72

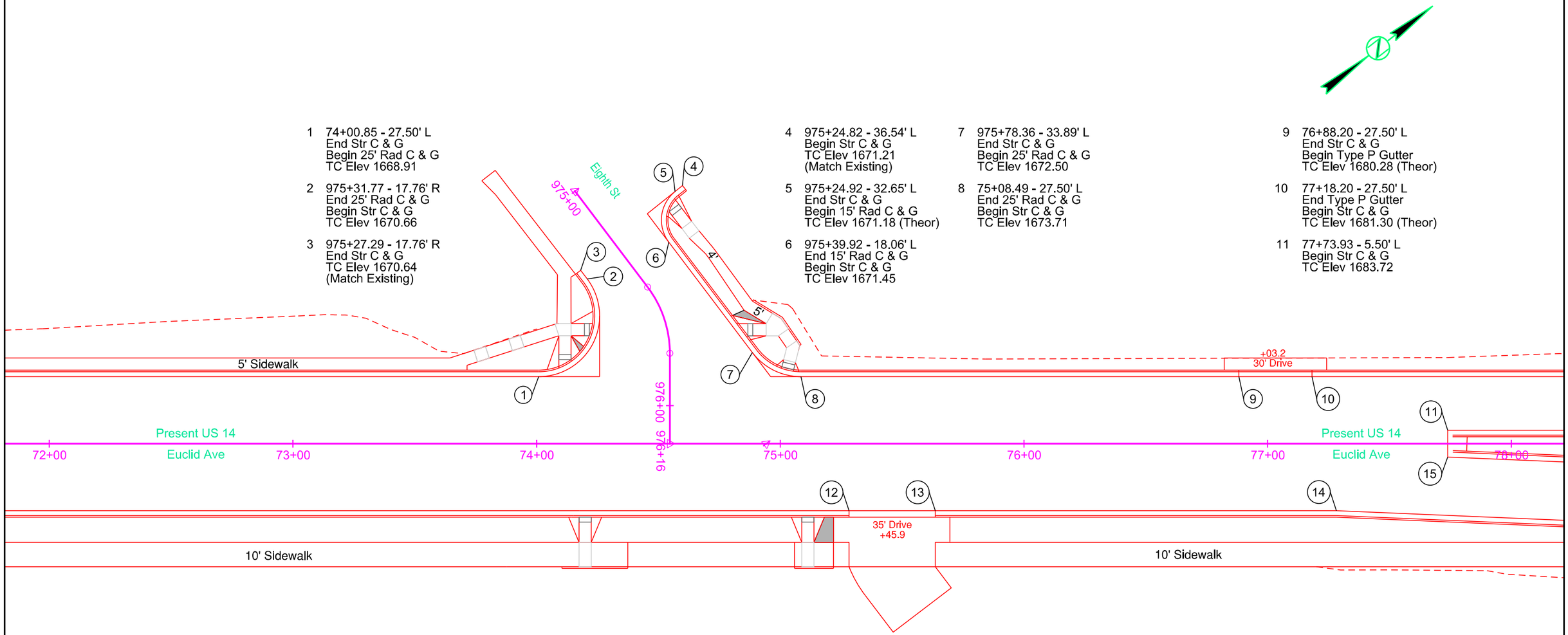

12 75+28.21 - 27.50' R
End Str C & G
Begin Str Type P Gutter
TC Elev 1674.55 (Theor)

13 75+63.60 - 27.50' R
End Str Type P Gutter
Begin Str C & G
TC Elev 1675.98 (Theor)

14 77+28.22 - 27.50' R
Str C & G
Str C & G
TC Elev 1681.63

15 77+73.93 - 5.50' R
Begin Str C & G
TC Elev 1683.72

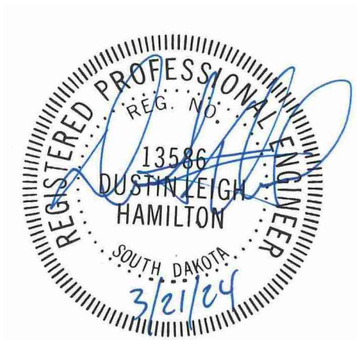

STATE OF SOUTH DAKOTA	PROJECT	SHEET	TOTAL SHEETS
	NH-CR 0014(185)229	B96	B151

Note: All curb and gutter shown on this sheet is Type B66 except as noted.

1 78+33.18 - 27.50' L
Str C & G
Str C & G
TC Elev 1684.98

2 80+44.23 - 36.77' L
End Str C & G
TC Elev 1689.54
(Match Existing)

3 78+78.97 - 5.50' L
Str C & G
Str C & G
TC Elev 1686.76

4 80+45.28 - 12.79' L
End Str C & G
TC Elev 1690.08
(Match Existing)

5 80+45.35 - 16.78' R
End Str C & G
TC Elev 1690.00
(Match Existing)

6 80+44.36 - 40.75' R
End Str C & G
TC Elev 1689.59
(Match Existing)

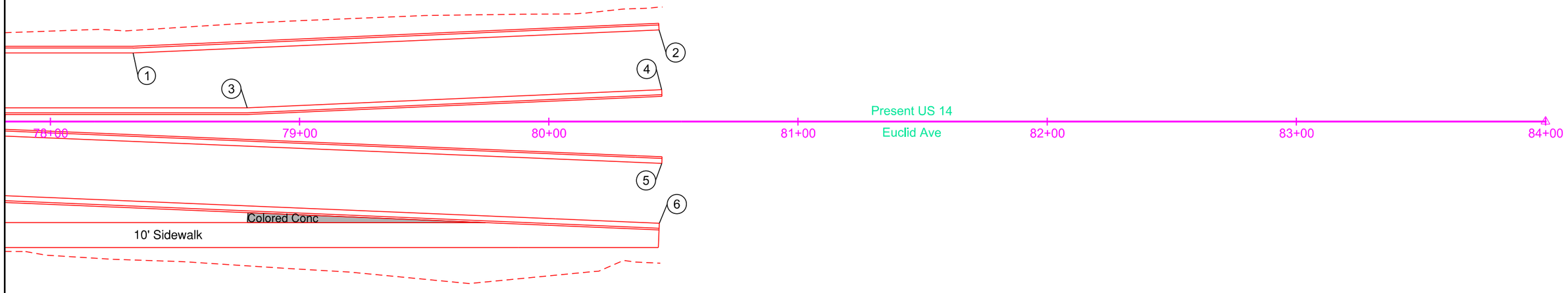

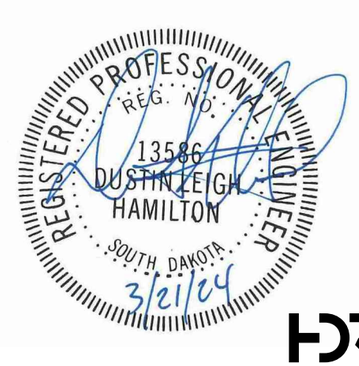

STATE OF SOUTH DAKOTA	PROJECT	SHEET	TOTAL SHEETS
	NH-CR 0014(185)229	B97	B151

Note: All curb and gutter shown on this sheet is Type B66 except as noted.

1 698+06.69 - 13.39' L
Begin Str C & G
TC Elev 1575.56
(Match Existing)

2 698+17.43 - 13.32' L
Str C & G
TC Elev 1575.62

3 698+70.64 - 16.50' L
Str C & G
TC Elev 1575.77

4 699+62.64 - 16.50' L
End Str C & G
Begin Str Type P Gutter
TC Elev 1575.99 (Theor)

5 699+86.98 - 16.50' L
End Str Type P Gutter
Begin Str C & G
TC Elev 1575.89 (Theor)

6 700+22.17 - 16.50' L
End Str C & G
Begin Str Type P Gutter
TC Elev 1575.59 (Theor)

7 700+44.41 - 16.50' L
End Str Type P Gutter
Begin Str C & G
TC Elev 1575.30 (Theor)

8 700+84.61 - 16.50' L
End Str C & G
Begin Str Type P Gutter
TC Elev 1574.60 (Theor)

9 701+06.61 - 16.50' L
End Str Type P Gutter
Begin Str C & G
TC Elev 1574.12 (Theor)

10 698+06.69 - 12.68' R
Begin Str C & G
TC Elev 1575.23
(Match Existing)

11 698+70.64 - 16.50' R
Str C & G
TC Elev 1575.70

12 699+15.86 - 16.50' R
End Str C & G
Begin Str Type P Gutter
TC Elev 1575.94 (Theor)

13 699+35.86 - 16.50' R
End Str Type P Gutter
Begin Str C & G
TC Elev 1576.00 (Theor)

14 699+59.44 - 16.50' R
End Str C & G
Begin Str Type P Gutter
TC Elev 1576.00 (Theor)

15 699+79.44 - 16.50' R
End Str Type P Gutter
Begin Str C & G
TC Elev 1575.93 (Theor)

16 700+38.10 - 16.50' R
End Str C & G
Begin Str Type P Gutter
TC Elev 1575.39 (Theor)

17 700+86.10 - 16.50' R
End Str Type P Gutter
Begin Str C & G
TC Elev 1574.57 (Theor)

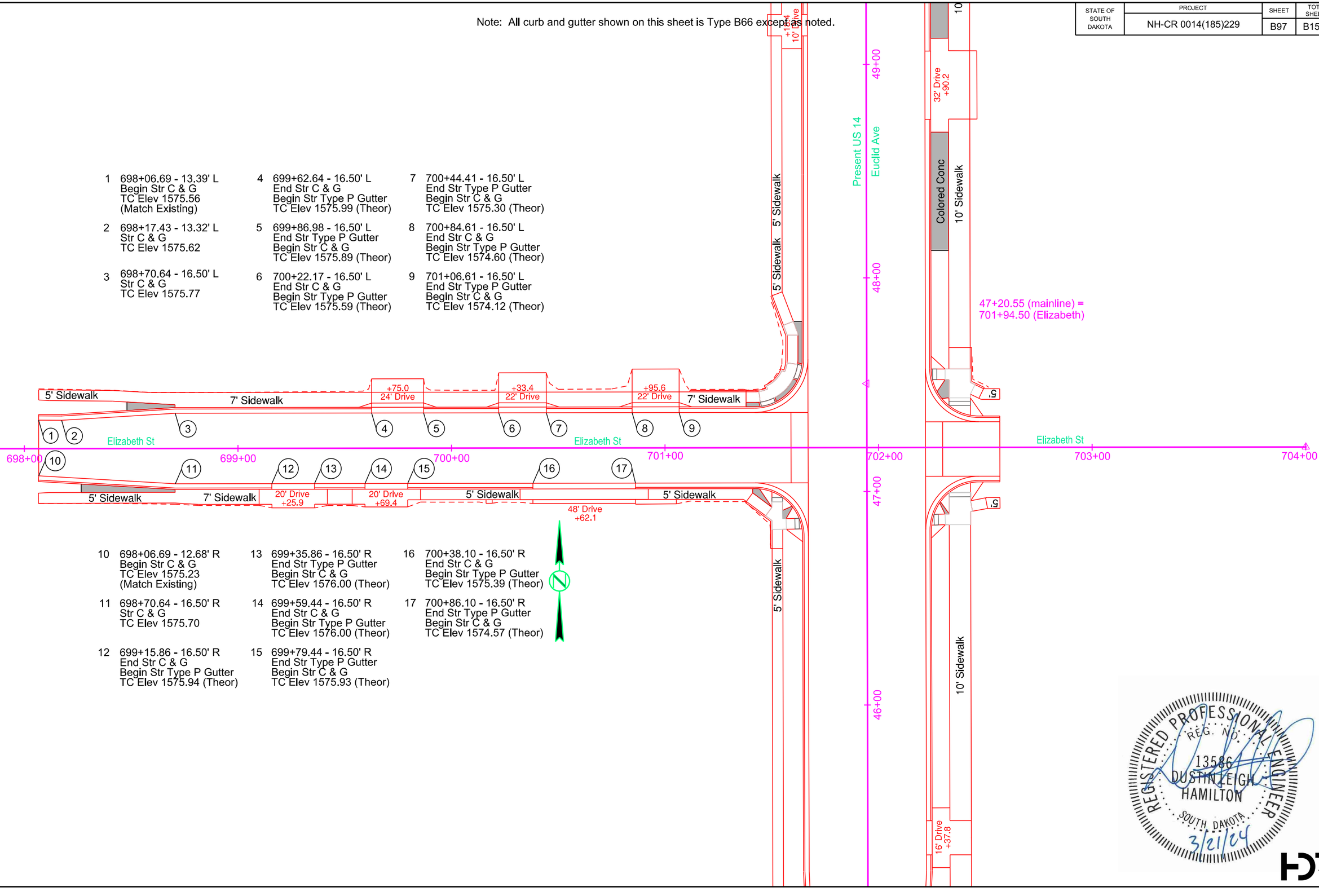

REGISTERED PROFESSIONAL ENGINEER
REG. NO.
13586
DUSTIN LEIGH
HAMILTON
SOUTH DAKOTA
3/21/24

HDR

STATE OF SOUTH DAKOTA	PROJECT	SHEET	TOTAL SHEETS
	NH-CR 0014(185)229	B98	B151

Note: All curb and gutter shown on this sheet is Type B66 except as noted.

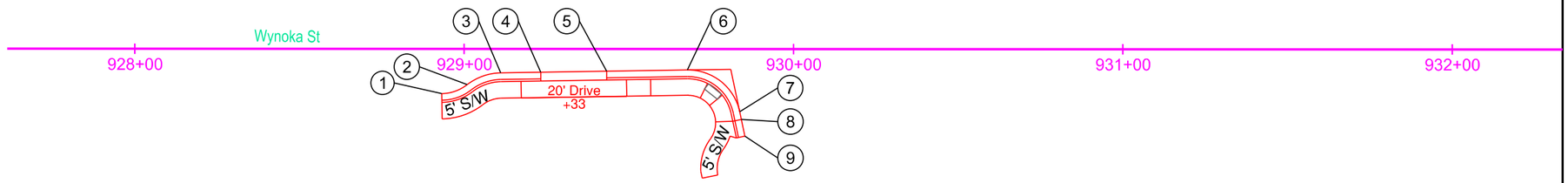

1 928+93.19 - 13.60' R
Begin 13' Rad C & G
TC Elev 1541.57
(Match Existing)

2 929+00.94 - 10.83' R
End 13' Rad C & G
Begin 17' Rad C & G
TC Elev 1541.33

3 929+11.09 - 7.27' R
End 13' Rad C & G
Begin Str C & G
TC Elev 1541.13

4 929+23.25- 7.07' R
End Str C & G
Begin Str Type P Gutter
TC Elev 1539.35 (Theor)

5 929+43.25 - 6.75' R
End Str Type P Gutter
Begin Str C & G
TC Elev 1537.65 (Theor)

6 929+67.77 - 6.36' R
End Str C & G
Begin 16' Rad C & G
TC Elev 1535.73 (Theor)

7 929+83.67 - 19.02' R
End 16' Rad C & G
Begin Str C & G
TC Elev 1534.85 (Theor)

8 929+84.17 - 21.32' R
Str C & G
TC Elev 1534.76

9 929+85.25 - 26.41' R
End Str C & G Gutter
TC Elev 1534.67
(Match Existing)

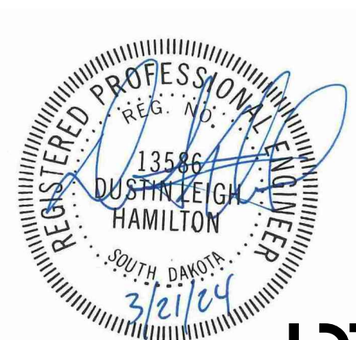

CURB RAMP LAYOUT

STATE OF SOUTH DAKOTA	PROJECT	SHEET	TOTAL SHEETS
	NH-CR 0014(185)229	B99	B151

* Turning Space with 1.5% slope
** Curb Ramp with 7.5% slope and 1.5% cross slope

1 9+50.61-16.25' L
Begin 25' Rad C & G
TC Elev (Match Existing)

2 9+56.21-22.99' L
Center of Detectable Warning
& Type 2 Curb Ramp

3 9+65.39-36.47' L
Center of Detectable Warning
& Type 2 Curb Ramp

4 9+70.02-40.54' L
End 25' Rad

5 9+70.05-49.57' L
End C&G
TC Elev (Match Existing)

6 9+56.23-29.98' L
Back of Turning Space

7 9+59.49-36.47' L
End Ramp Slope

8 9+53.74-41.47' L
Back of Turning Space

9 9+56.22-24.99' L
End Ramp Slope

10 9+56.61-31.47' L
End Ramp Slope

11 10+36.26-39.88' L
Center Type 1
Curb Ramp

12 10+48.08-28.13' L
Center Type 2
Curb Ramp

13 10+76.17-32.50' L
Center Type 2
Curb Ramp

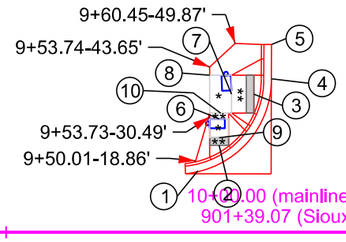

14 9+50.67-15.41' R
Begin X' Rad C & G
TC Elev (Match Existing)

15 9+70.40-35.33' R
End X' Rad

16 9+70.45-49.26' R
End C & G
TC Elev (Match Existing)

17 9+56.15-20.16' R
Center of Detectable Warning
& Type 2 Curb Ramp

18 9+56.14-25.16' R
End Ramp Slope

19 9+56.12-30.16' R
Back of Turning Space

20 9+67.60-38.26' R
Center of Detectable Warning
& Type 2 Curb Ramp

21 9+61.60-38.26' R
End Ramp Slope

22 9+56.60-38.26' R
Back of Turning Space

23 10+39.39-36.28' R
Center Type 3
Curb Ramp

24 12+67.59-39.50' R
Detectable Warnings at
Stop Controlled Driveway

25 13+07.59-39.50' R
Detectable Warnings at
Stop Controlled Driveway

REGISTERED PROFESSIONAL ENGINEER
REG. NO.
13586
DUSTIN LEIGH
HAMILTON
SOUTH DAKOTA
3/21/24

HDR

CURB RAMP LAYOUT

* Turning Space with 1.5% slope
** Curb Ramp with 7.5% slope and 1.5% cross slope

STATE OF SOUTH DAKOTA	PROJECT	SHEET	TOTAL SHEETS
	NH-CR 0014(185)229	B100	B151

REV 12-06-23 GCE

1 15+18.90-34.42' L
Center Type 1
Curb Ramp

2 906+36.88-20.42' L
Center Type 1
Curb Ramp

3 906+63.57-36.50' L
Center Type 2
Curb Ramp

4 906+84.94-36.50' L
Center Type 2
Curb Ramp

5 907+20.14-23.17' L
Center Type 1
Curb Ramp

6 17+93.99-21.57' L
Center Type 2
Curb Ramp

7 906+37.89-14.43' R
Center Type 1
Curb Ramp

8 15+51.39-20.93' R
Center Type 3
Curb Ramp

9 18+06.26-28.26' R
Center Type 2
Curb Ramp

10 909+65.29-29.98' L
Center Type 2
Curb Ramp

11 909+54.57-19.17' R
Center Type 1
Curb Ramp

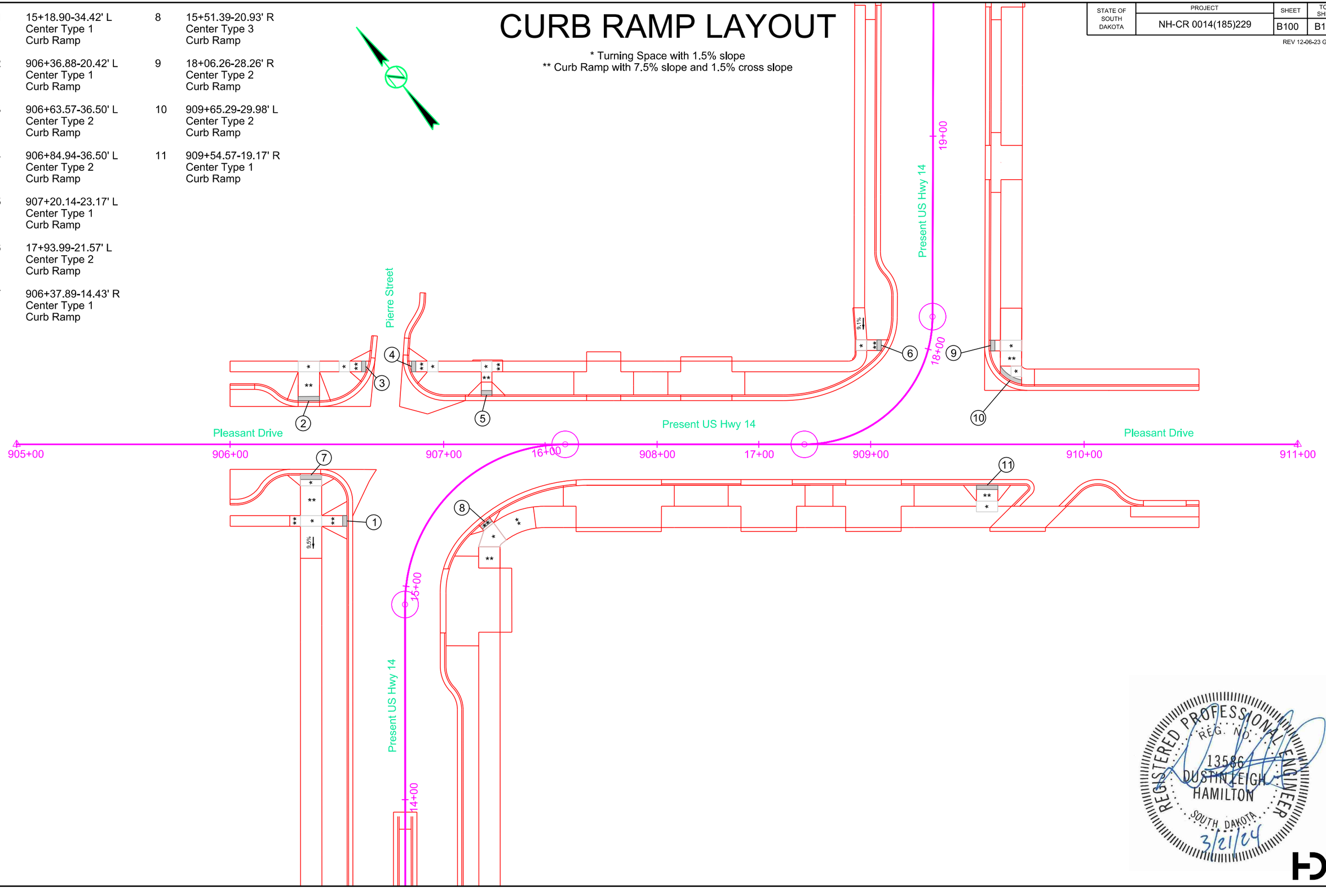

REGISTERED PROFESSIONAL ENGINEER
REG. NO.
13586
DUSTIN LEIGH
HAMILTON
SOUTH DAKOTA
3/21/24

HDR

CURB RAMP LAYOUT

STATE OF SOUTH DAKOTA	PROJECT	SHEET	TOTAL SHEETS
	NH-CR 0014(185)229	B101	B151

* Turning Space with 1.5% slope
** Curb Ramp with 7.5% slope and 1.5% cross slope

1	21+53.11-30.97' L Center Type 1 Curb Ramp	3	21+50.66-31.03' R Center Type 1 Curb Ramp
2	22+17.61-30.97' L Center Type 1 Curb Ramp	4	22+23.62-32.30' R Center Type 1 Curb Ramp

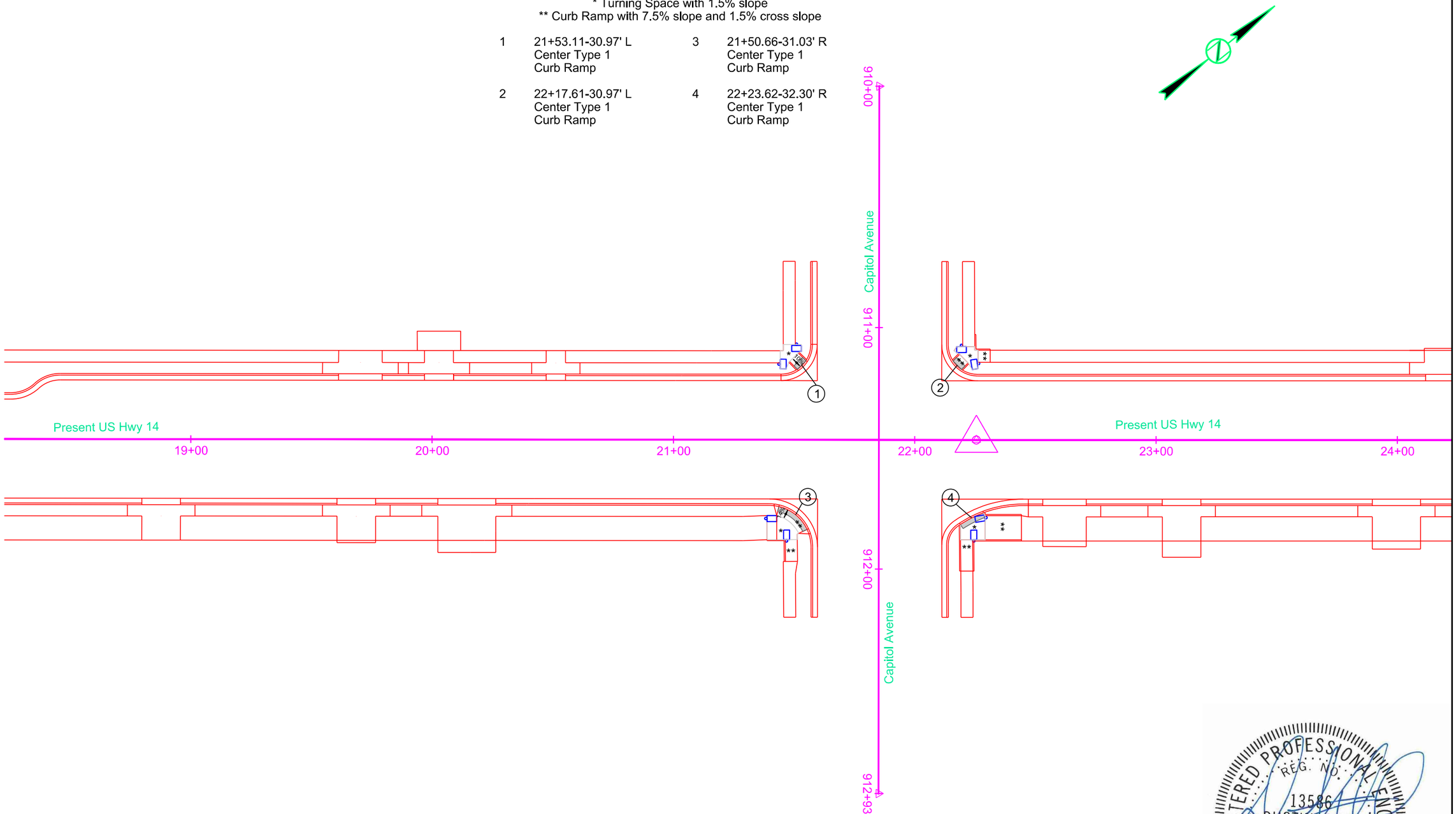

REGISTERED PROFESSIONAL ENGINEER
REG. NO.
13586
DUSTIN LEIGH
HAMILTON
SOUTH DAKOTA
3/21/24

HDR

CURB RAMP LAYOUT

STATE OF SOUTH DAKOTA	PROJECT	SHEET	TOTAL SHEETS
	NH-CR 0014(185)229	B102	B151

* Turning Space with 1.5% slope
** Curb Ramp with 7.5% slope and 1.5% cross slope

1 25+58.35-29.67' L
Center Type 2
Curb Ramp

2 25+63.31-34.17' L
Center Type 2
Curb Ramp

3 26+23.23-34.64' L
Center Type 2
Curb Ramp

4 26+31.33-27.93' L
Center Type 2
Curb Ramp

5 25+58.14-28.24' R
Center Type 2
Curb Ramp

6 25+65.01-36.33' R
Center Type 2
Curb Ramp

7 26+26.40-36.76' R
Center Type 1
Curb Ramp

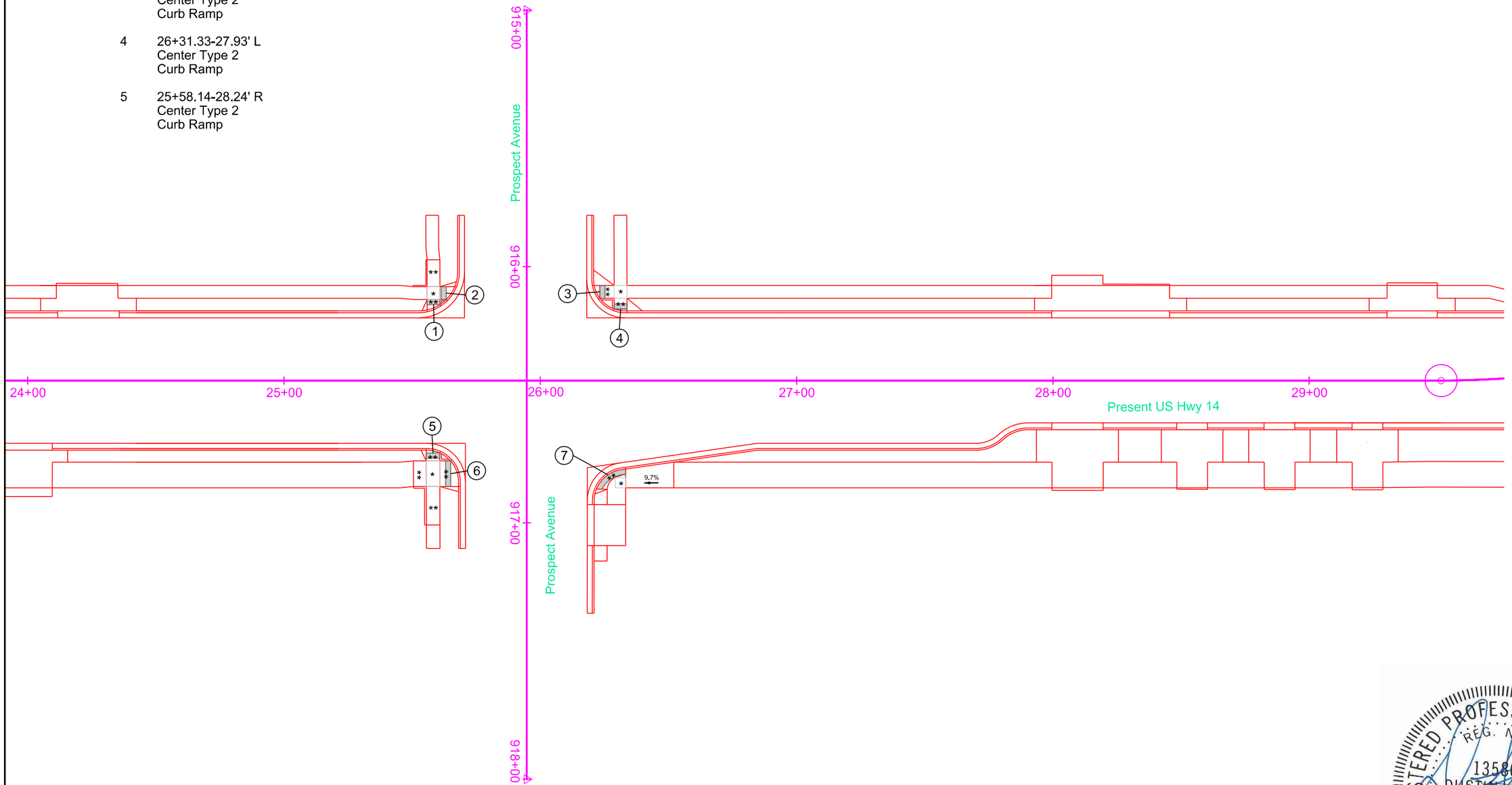

REGISTERED PROFESSIONAL ENGINEER
REG. NO.
13586
DUSTIN LEIGH
HAMILTON
SOUTH DAKOTA
3/21/24

CURB RAMP LAYOUT

STATE OF SOUTH DAKOTA	PROJECT	SHEET	TOTAL SHEETS
	NH-CR 0014(185)229	B103	B151

* Turning Space with 1.5% slope
** Curb Ramp with 7.5% slope and 1.5% cross slope

1	29+90.54-25.18' L Center Type 2 Curb Ramp	5	33+70.82-32.20' L Center Type 2 Curb Ramp
2	30+14.40-36.36' L Center Type 2 Curb Ramp	6	33+79.45-39.07' L Center Type 2 Curb Ramp
3	30+57.49-36.48' L Center Type 3 Curb Ramp	7	34+18.35-39.92' L Center Type 2 Curb Ramp
4	30+64.80-25.98' L Center Type 3 Curb Ramp	8	34+28.33-32.08' L Center Type 2 Curb Ramp

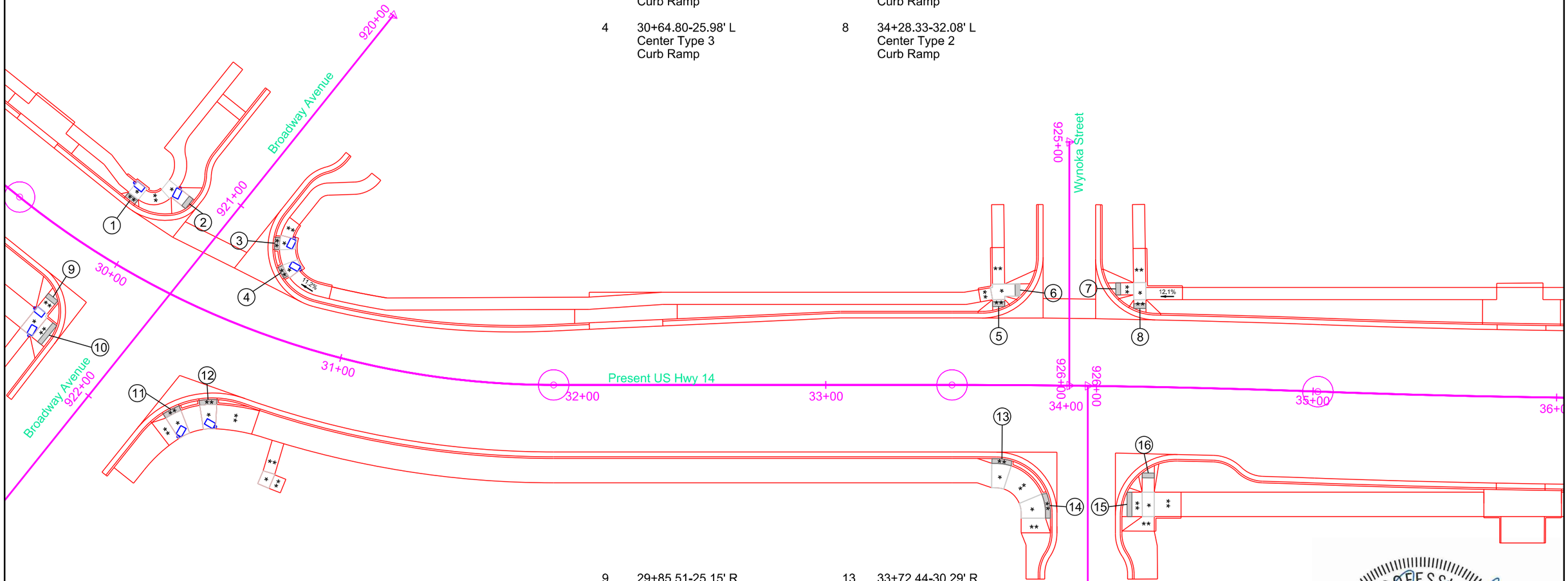

9	29+85.51-25.15' R Center Type 2 Curb Ramp	13	33+72.44-30.29' R Center Type 3 Curb Ramp
10	29+91.97-39.26' R Center Type 2 Curb Ramp	14	33+92.45-49.33' R Center Type 3 Curb Ramp
11	30+44.34-42.83' R Center Type 3 Curb Ramp	15	34+24.51-48.37' R Center Type 2 Curb Ramp
12	30+55.61-33.23' R Center Type 3 Curb Ramp	16	34+33.04-35.35' R Center Type 2 Curb Ramp

REGISTERED PROFESSIONAL ENGINEER
REG. NO.
13586
DUSTIN LEIGH
HAMILTON
SOUTH DAKOTA
3/21/24

HDR

CURB RAMP LAYOUT

STATE OF SOUTH DAKOTA	PROJECT	SHEET	TOTAL SHEETS
	NH-CR 0014(185)229	B104	B151

* Turning Space with 1.5% slope
** Curb Ramp with 7.5% slope and 1.5% cross slope

1 39+20.52-30.27' L
Center Type 2
Curb Ramp

2 39+29.60-43.00' L
Center Type 2
Curb Ramp

3 39+70.92-43.00' L
Center Type 2
Curb Ramp

4 39+79.99-30.27' L
Center Type 2
Curb Ramp

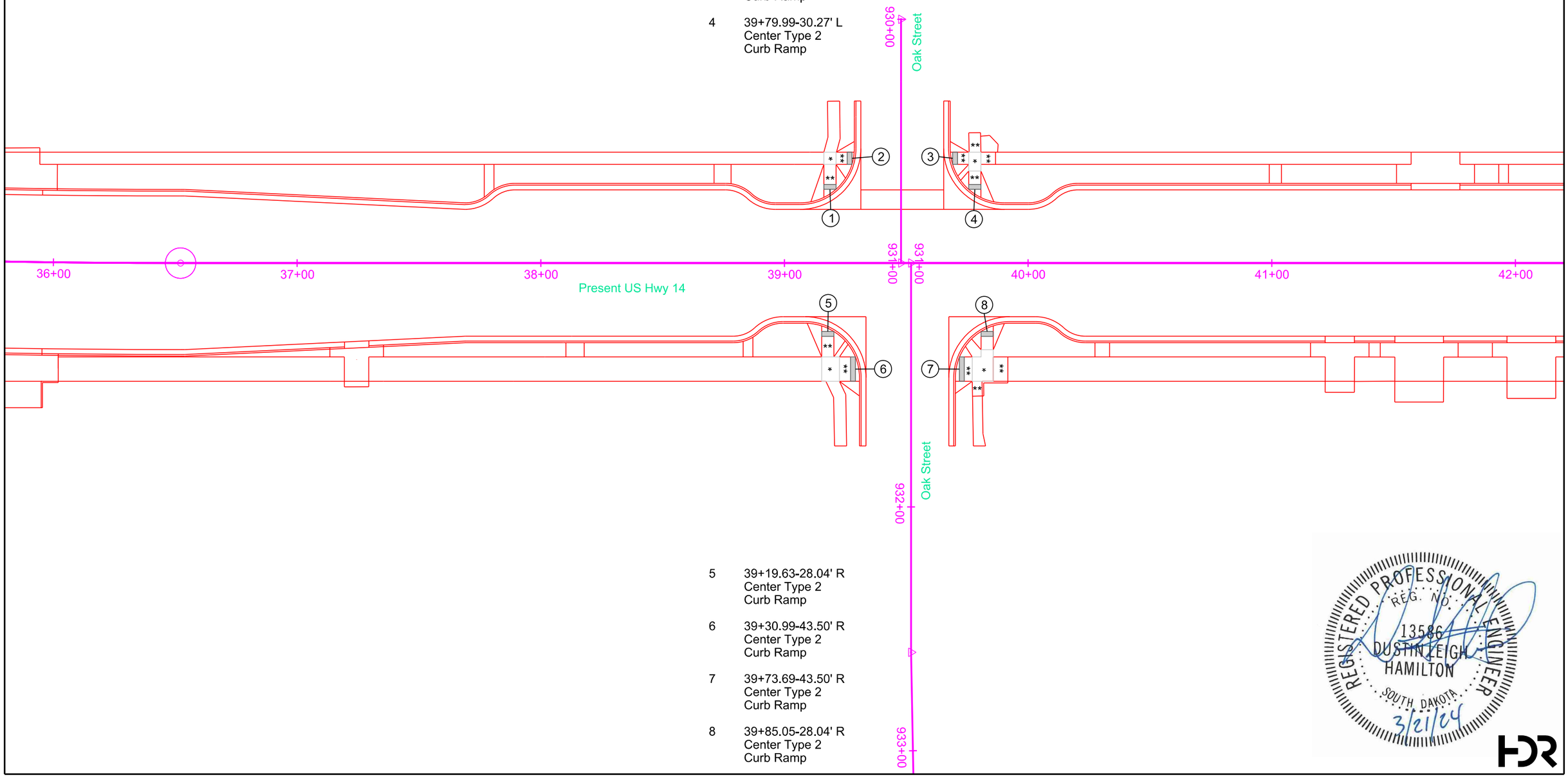

5 39+19.63-28.04' R
Center Type 2
Curb Ramp

6 39+30.99-43.50' R
Center Type 2
Curb Ramp

7 39+73.69-43.50' R
Center Type 2
Curb Ramp

8 39+85.05-28.04' R
Center Type 2
Curb Ramp

REGISTERED PROFESSIONAL ENGINEER
REG. NO.
13586
DUSTIN LEIGH
HAMILTON
SOUTH DAKOTA
3/21/24

HDR

CURB RAMP LAYOUT

STATE OF SOUTH DAKOTA	PROJECT	SHEET	TOTAL SHEETS
	NH-CR 0014(185)229	B105	B151

* Turning Space with 1.5% slope
** Curb Ramp with 7.5% slope and 1.5% cross slope

1	43+06.26-30.27' L Center Type 2 Curb Ramp	5	46+86.89-31.82' L Center Type 2 Curb Ramp
2	43+15.34-43.00' L Center Type 2 Curb Ramp	6	46+99.13-42.00' L Center Type 2 Curb Ramp
3	43+55.94-42.00' L Center Type 2 Curb Ramp	7	47+42.98-45.49' L Center Type 3 Curb Ramp
4	43+65.90-29.27' L Center Type 2 Curb Ramp	8	47+56.92-31.51' L Center Type 3 Curb Ramp

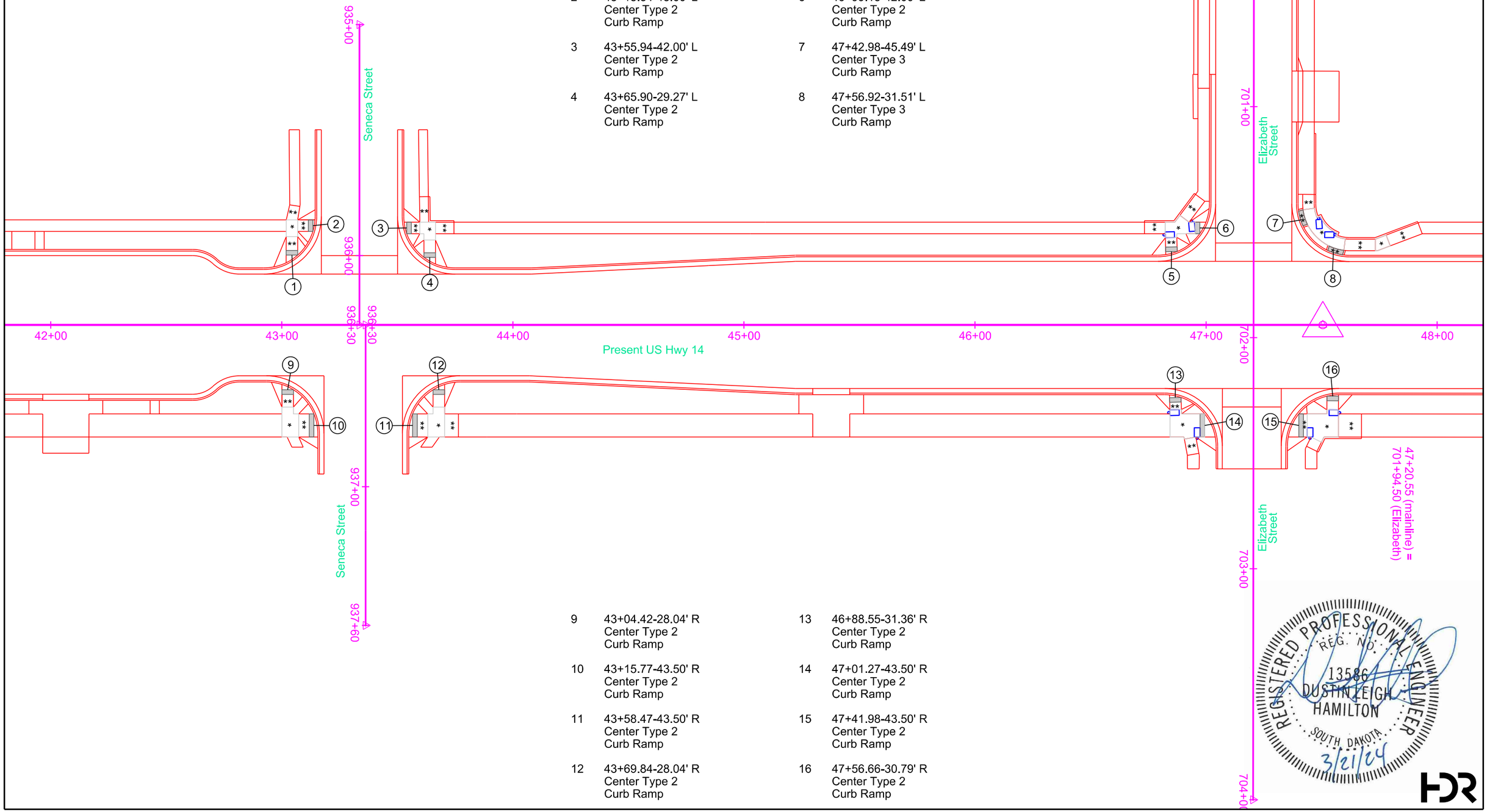

9	43+04.42-28.04' R Center Type 2 Curb Ramp	13	46+88.55-31.36' R Center Type 2 Curb Ramp
10	43+15.77-43.50' R Center Type 2 Curb Ramp	14	47+01.27-43.50' R Center Type 2 Curb Ramp
11	43+58.47-43.50' R Center Type 2 Curb Ramp	15	47+41.98-43.50' R Center Type 2 Curb Ramp
12	43+69.84-28.04' R Center Type 2 Curb Ramp	16	47+56.66-30.79' R Center Type 2 Curb Ramp

REGISTERED PROFESSIONAL ENGINEER
REG. NO.
13586
DUSTIN LEIGH
HAMILTON
SOUTH DAKOTA
3/21/24

HDR

CURB RAMP LAYOUT

STATE OF SOUTH DAKOTA	PROJECT	SHEET	TOTAL SHEETS
	NH-CR 0014(185)229	B106	B151

* Turning Space with 1.5% slope
** Curb Ramp with 7.5% slope and 1.5% cross slope

1	50+17.89-36.59' L Center Type 3 Curb Ramp	4	53+50.68-47.00' L Center Type 3 Curb Ramp
2	50+57.85-36.87' L Center Type 3 Curb Ramp	5	53+77.65-46.08' L Center Type 3 Curb Ramp
3	53+33.84-31.13' L Center Type 3 Curb Ramp	6	53+90.50-31.13' L Center Type 3 Curb Ramp

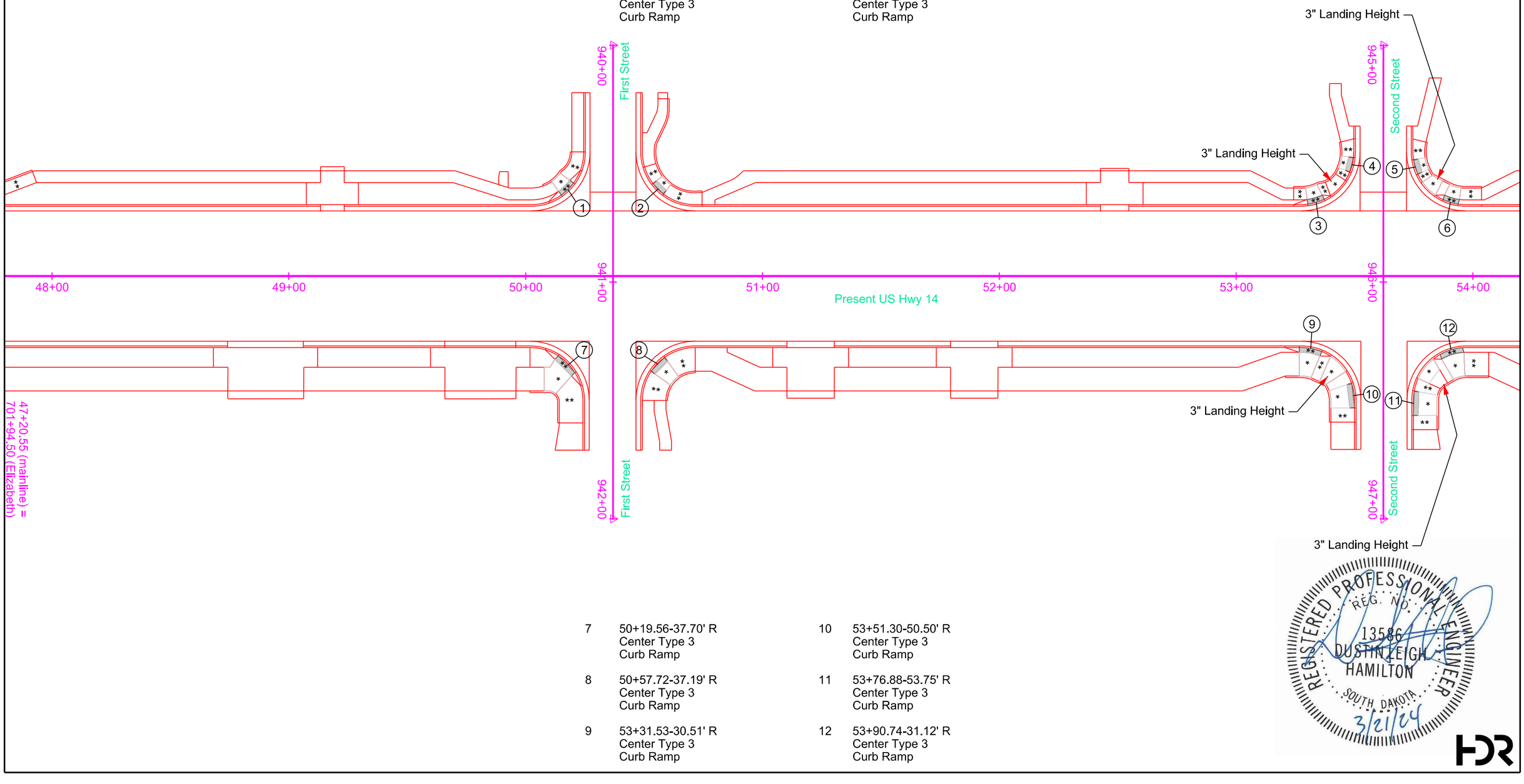

7	50+19.56-37.70' R Center Type 3 Curb Ramp	10	53+51.30-50.50' R Center Type 3 Curb Ramp
8	50+57.72-37.19' R Center Type 3 Curb Ramp	11	53+76.88-53.75' R Center Type 3 Curb Ramp
9	53+31.53-30.51' R Center Type 3 Curb Ramp	12	53+90.74-31.12' R Center Type 3 Curb Ramp

REGISTERED PROFESSIONAL ENGINEER
REG. NO.
13586
DUSTIN LEIGH
HAMILTON
SOUTH DAKOTA
3/21/24

HDR

CURB RAMP LAYOUT

STATE OF SOUTH DAKOTA	PROJECT	SHEET	TOTAL SHEETS
	NH-CR 0014(185)229	B107	B151

* Turning Space with 1.5% slope
** Curb Ramp with 7.5% slope and 1.5% cross slope

1 56+57.05-30.97' L
Center Type 2
Curb Ramp

2 56+71.99-42.00' L
Center Type 2
Curb Ramp

3 57+06.40-43.00' L
Center Type 2
Curb Ramp

4 57+21.82-30.97' L
Center Type 2
Curb Ramp

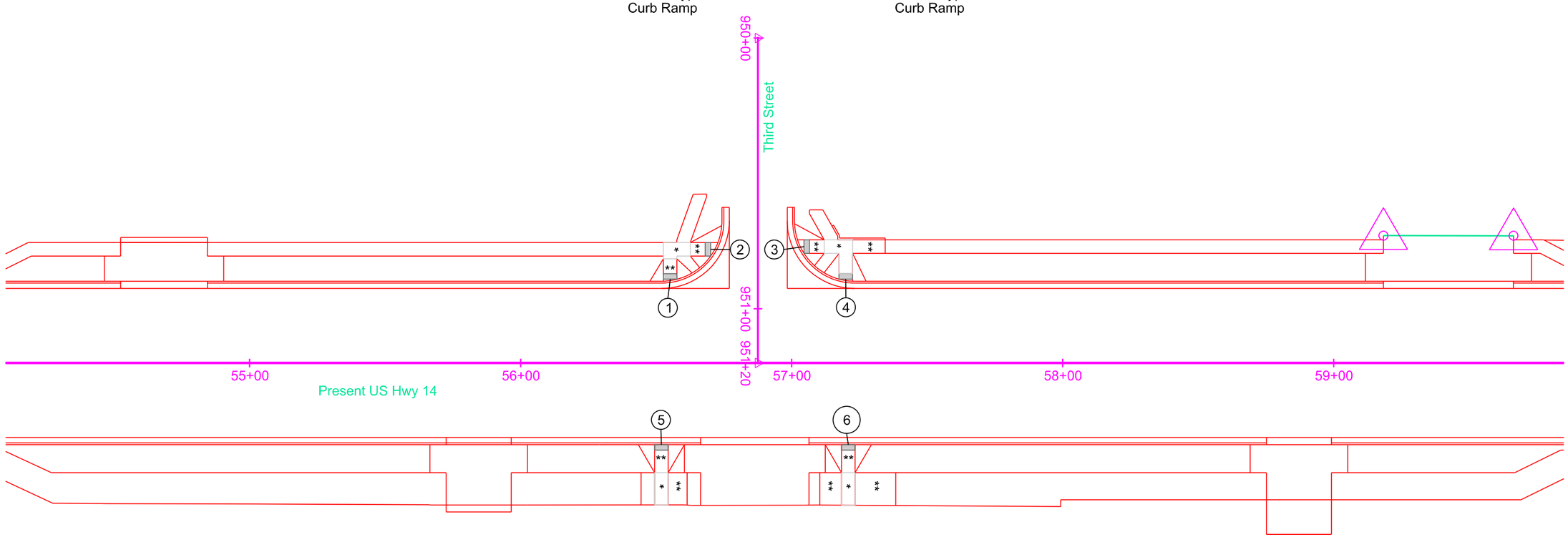

5 56+53.78-30.18' R
Center Type 1
Curb Ramp

6 57+22.78-30.18' R
Center Type 1
Curb Ramp

REGISTERED PROFESSIONAL ENGINEER
REG. NO.
13586
DUSTIN LEIGH
HAMILTON
SOUTH DAKOTA
3/21/24

HDR

CURB RAMP LAYOUT

STATE OF SOUTH DAKOTA	PROJECT	SHEET	TOTAL SHEETS
	NH-CR 0014(185)229	B108	B151

* Turning Space with 1.5% slope
** Curb Ramp with 7.5% slope and 1.5% cross slope

1 60+03.54-30.81' L
Center Type 3
Curb Ramp

2 60+19.80-46.73' L
Center Type 3
Curb Ramp

3 60+61.06-46.78' L
Center Type 3
Curb Ramp

4 60+77.28-30.99' L
Center Type 3
Curb Ramp

5 63+23.22-30.17' L
Center Type 3
Curb Ramp

6 63+49.26-46.53' L
Center Type 3
Curb Ramp

7 63+89.54-46.70' L
Center Type 3
Curb Ramp

8 64+23.42-30.16' L
Center Type 3
Curb Ramp

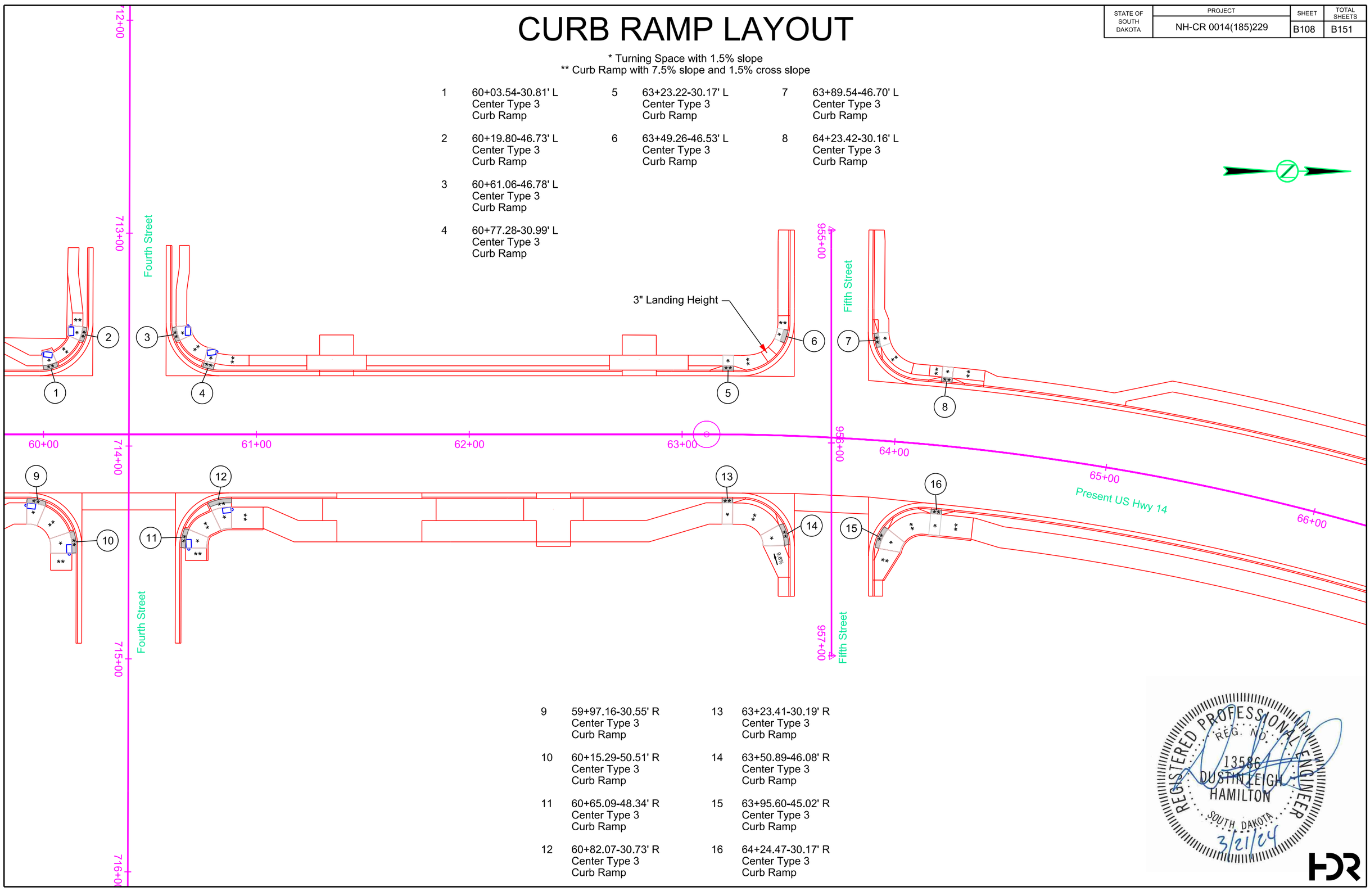

9 59+97.16-30.55' R
Center Type 3
Curb Ramp

10 60+15.29-50.51' R
Center Type 3
Curb Ramp

11 60+65.09-48.34' R
Center Type 3
Curb Ramp

12 60+82.07-30.73' R
Center Type 3
Curb Ramp

13 63+23.41-30.19' R
Center Type 3
Curb Ramp

14 63+50.89-46.08' R
Center Type 3
Curb Ramp

15 63+95.60-45.02' R
Center Type 3
Curb Ramp

16 64+24.47-30.17' R
Center Type 3
Curb Ramp

REGISTERED PROFESSIONAL ENGINEER
REG. NO.
13586
DUSTIN LEIGH
HAMILTON
SOUTH DAKOTA
3/21/24

HDR

CURB RAMP LAYOUT

STATE OF SOUTH DAKOTA	PROJECT	SHEET	TOTAL SHEETS
	NH-CR 0014(185)229	B109	B151

REV 04-04-23 MJW

* Turning Space with 1.5% slope
** Curb Ramp with 7.5% slope and 1.5% cross slope

1 66+75.59-34.29' L
Center Type 2
Curb Ramp

2 66+83.21-42.13' L
Center Type 2
Curb Ramp

3 67+31.50-40.70' L
Center Type 3
Curb Ramp

4 67+70.58-30.17' L
Center Type 3
Curb Ramp

5 69+94.35-30.17' L
Center Type 1
Curb Ramp

6 70+08.87-40.00' L
Center Type 2
Curb Ramp

7 70+58.71-39.51' L
Center Type 2
Curb Ramp

8 70+68.45-30.17' L
Center Type 1
Curb Ramp

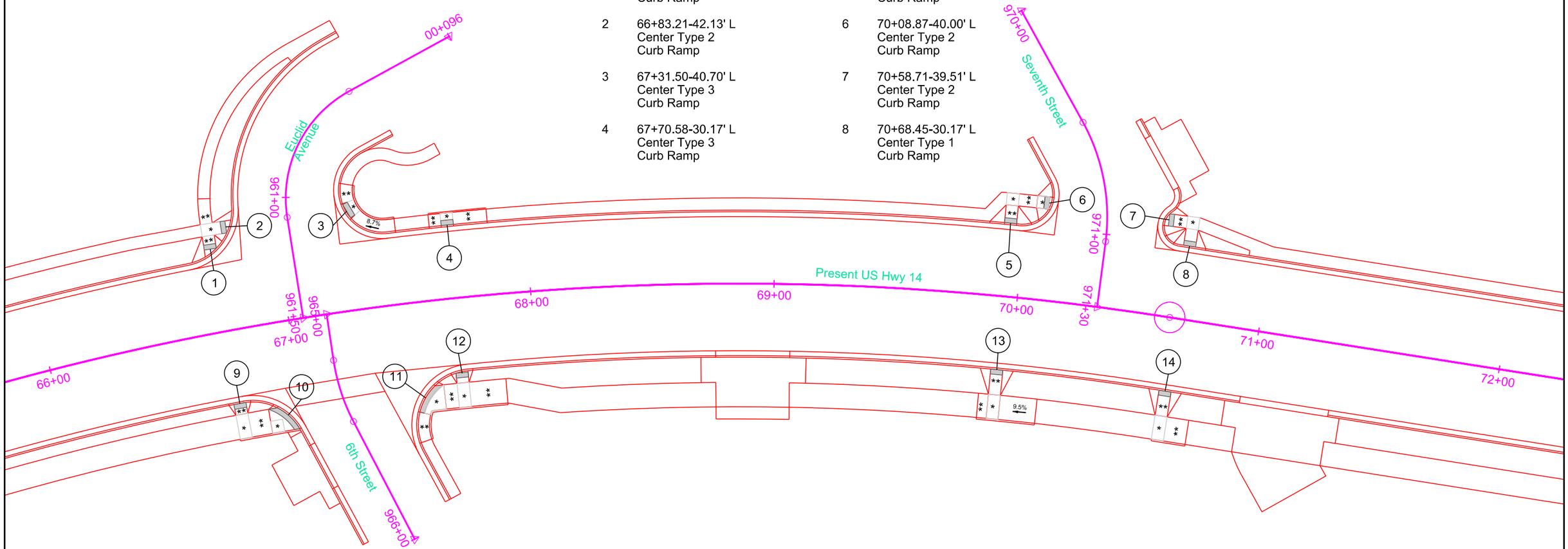

9 66+75.86-30.18' R
Center Type 2
Curb Ramp

10 66+93.32-38.35' R
Center Type 2
Curb Ramp

11 67+52.07-39.36' R
Center Type 2
Curb Ramp

12 67+70.47-30.98' R
Center Type 2
Curb Ramp

13 69+96.30-30.28' R
Center Type 1
Curb Ramp

14 70+67.76-30.17' R
Center Type 1
Curb Ramp

REGISTERED PROFESSIONAL ENGINEER
REG. NO.
13586
DUSTIN LEIGH
HAMILTON
SOUTH DAKOTA
3/21/24

HDR

CURB RAMP LAYOUT

STATE OF SOUTH DAKOTA	PROJECT	SHEET	TOTAL SHEETS
	NH-CR 0014(185)229	B110	B151

* Turning Space with 1.5% slope
** Curb Ramp with 7.5% slope and 1.5% cross slope

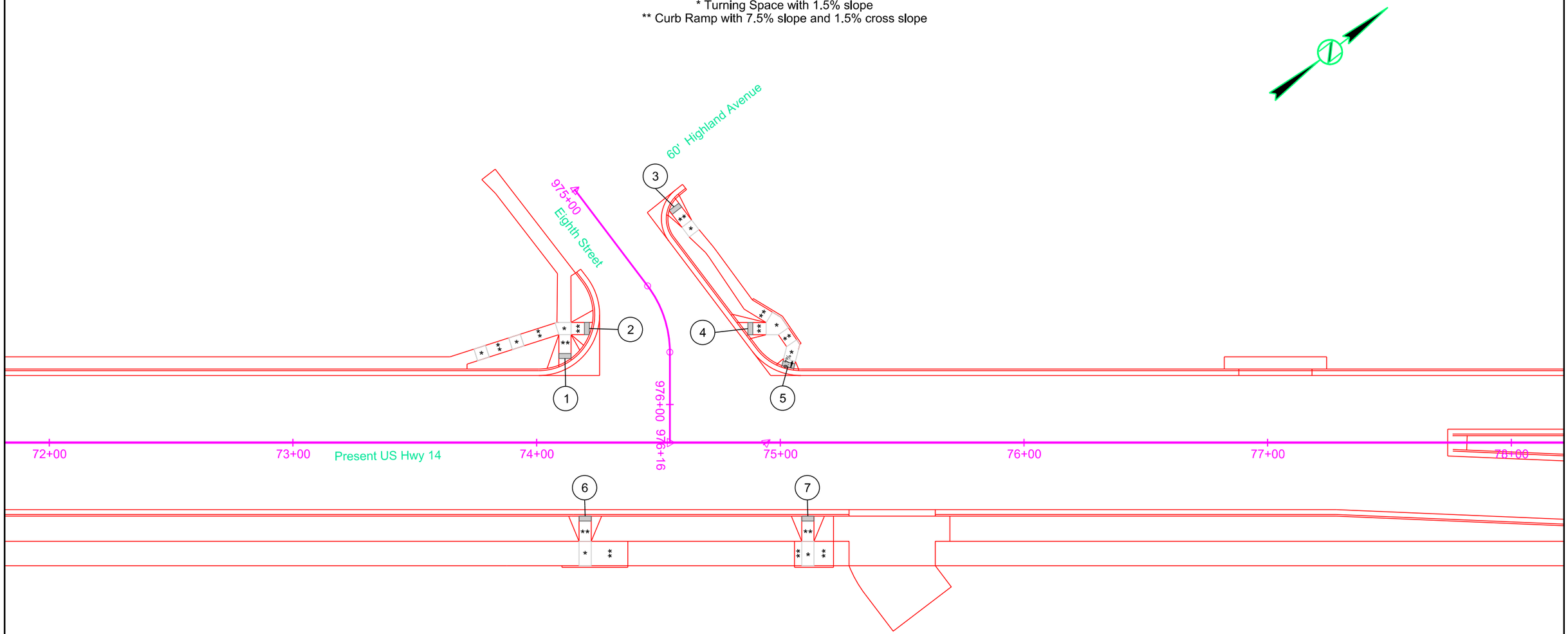

1 74+13.47-34.53' L
Center Type 2
Curb Ramp

2 74+23.47-46.82' L
Center Type 2
Curb Ramp

3 975+30.02-28.19' L
Center Type 2
Curb Ramp

4 74+88.58-46.77' L
Center Type 2
Curb Ramp

5 75+04.93-30.98' L
Center Type 1
Curb Ramp

6 74+21.80-30.17' R
Center Type 1
Curb Ramp

7 75+13.19-30.17' R
Center Type 1
Curb Ramp

REGISTERED PROFESSIONAL ENGINEER
REG. NO.
13586
DUSTIN LEIGH
HAMILTON
SOUTH DAKOTA
3/21/24

HDR

CURB RAMP LAYOUT

* Turning Space with 1.5% slope
** Curb Ramp with 7.5% slope and 1.5% cross slope

1 929+76.18-12.11' R
Center Type 3
Curb Ramp

STATE OF SOUTH DAKOTA	PROJECT	SHEET	TOTAL SHEETS
	NH-CR 0014(185)229	B111	B151

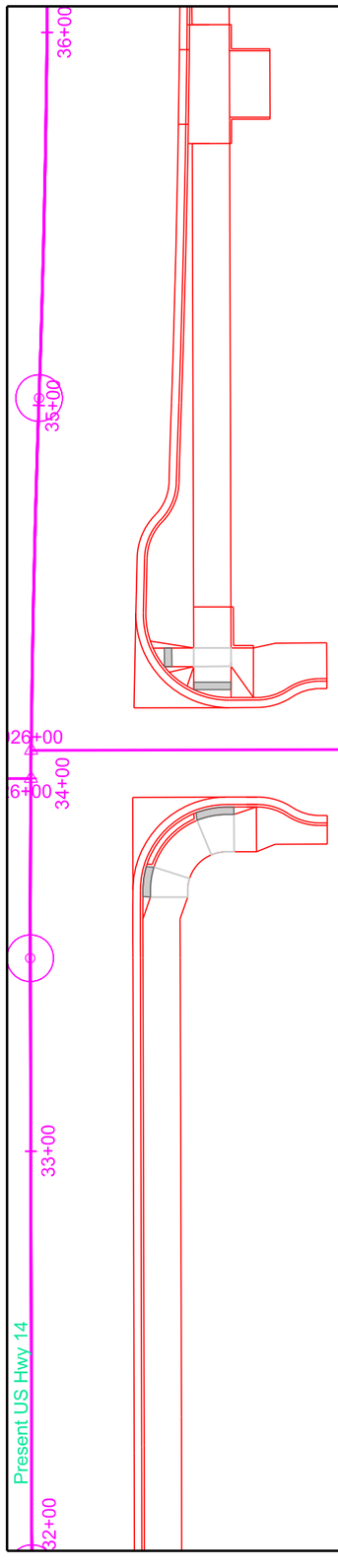

REGISTERED PROFESSIONAL ENGINEER
REG. NO.
13586
DUSTIN LEIGH
HAMILTON
SOUTH DAKOTA
3/21/24

HDR

STATE OF SOUTH DAKOTA	PROJECT	SHEET	TOTAL SHEETS
	NH-CR 0014(185)229	B112	B151

Plotting Date: 3/21/2024

Special PCC Approach Pavement

NOT TO SCALE

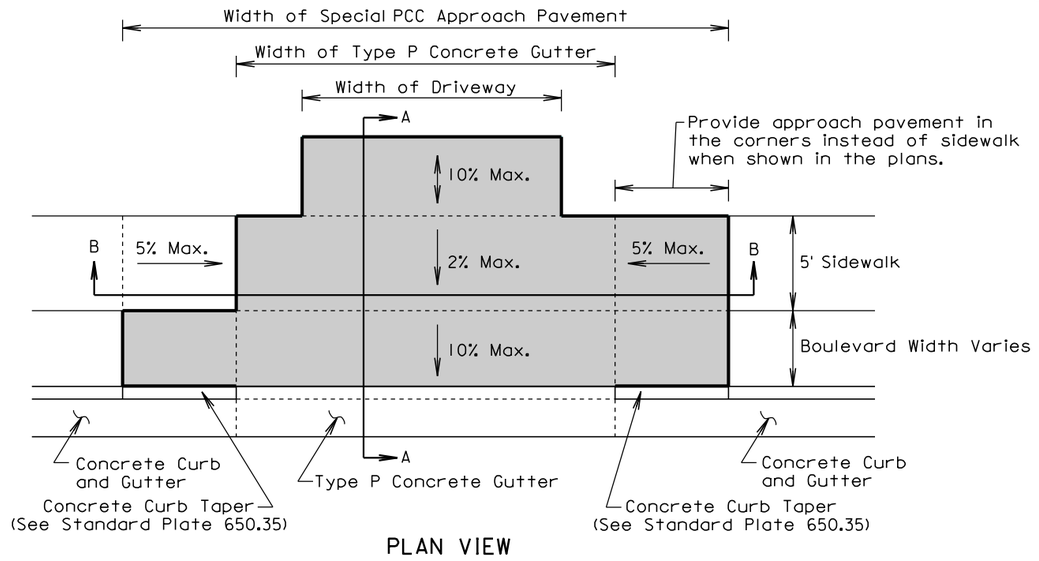

PLAN VIEW

Notes: Special PCC Approach Pavement shall follow the requirements of standard plate 380.41 except for the PCC Approach Pavement Limits.

PCC Approach Pavement Limits

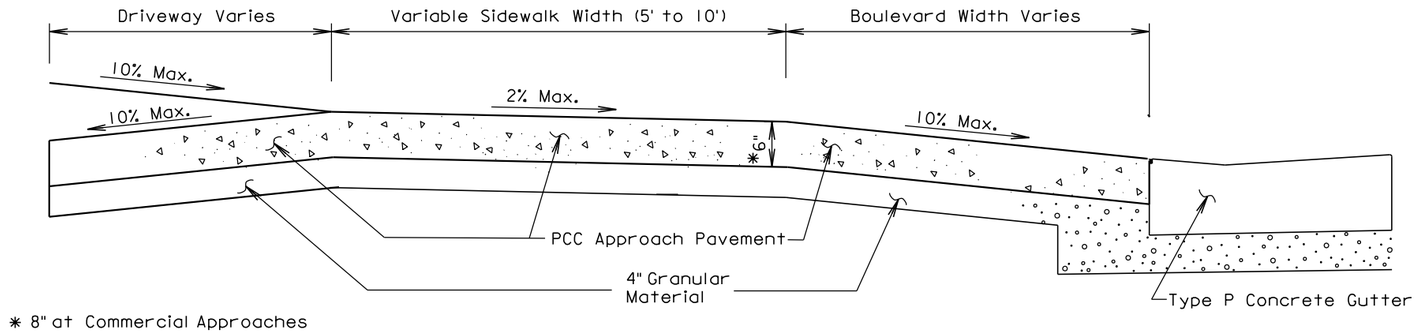

* 8" at Commercial Approaches

SECTION A-A

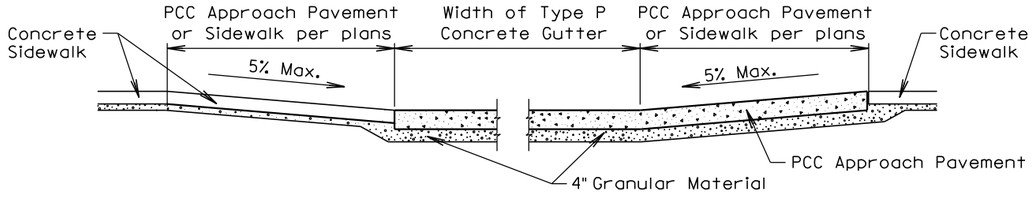

SECTION B-B

REGISTERED PROFESSIONAL ENGINEER
REG. NO.
13586
DUSTIN LEIGH HAMILTON
SOUTH DAKOTA
3/21/24

HDR

STATE OF SOUTH DAKOTA	PROJECT	SHEET	TOTAL SHEETS
	NH-CR 0014(185)229	B113	B151

Plotting Date: 3/21/2024

Special Drop Curb Approach Pavement

NOT TO SCALE

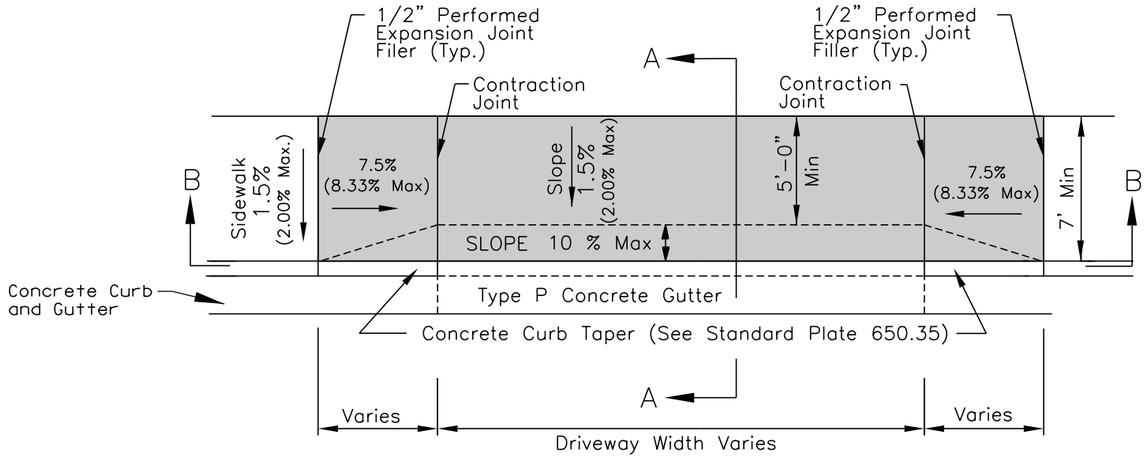

PLAN VIEW

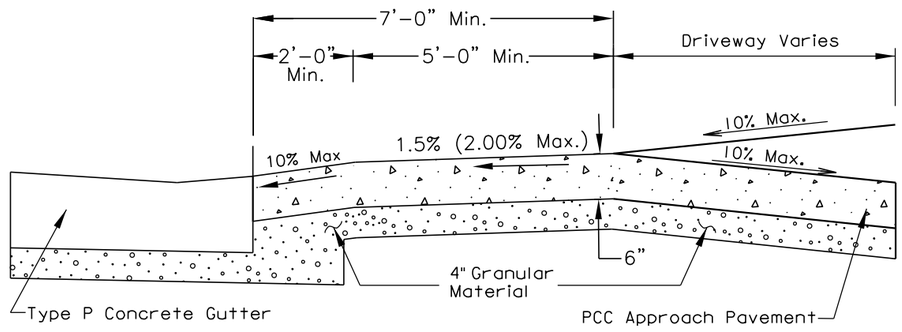

SECTION A – A

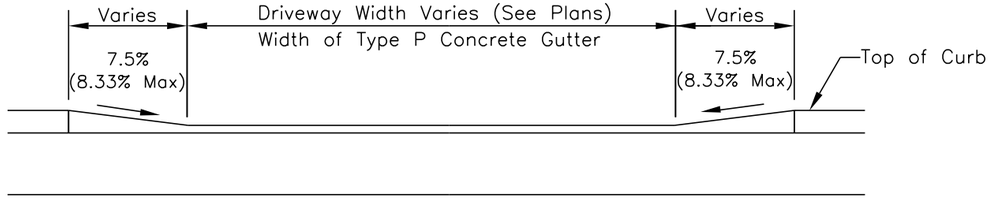

SECTION B – B

Notes: Special Drop Curb Approach Pavement shall follow the requirements of standard plate 380.41 except for the PCC Approach Pavement Limits.

PCC Approach Pavement Limits

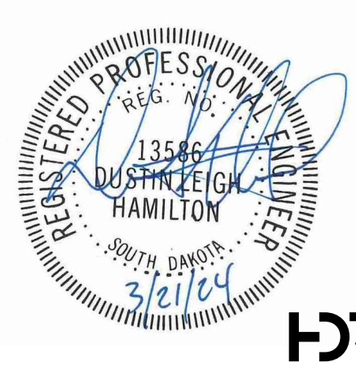

STATE OF SOUTH DAKOTA	PROJECT	SHEET	TOTAL SHEETS
	NH-CR 0014(185)229	B114	B151

Plotting Date: 12/05/2023

Additional Reinforcement for PCC Fillet with Curb and Gutter

All additional reinforcement will be #4 rebar with a minimum of 3" of clear cover. See Standard Plate 380.30 for additional guidance.

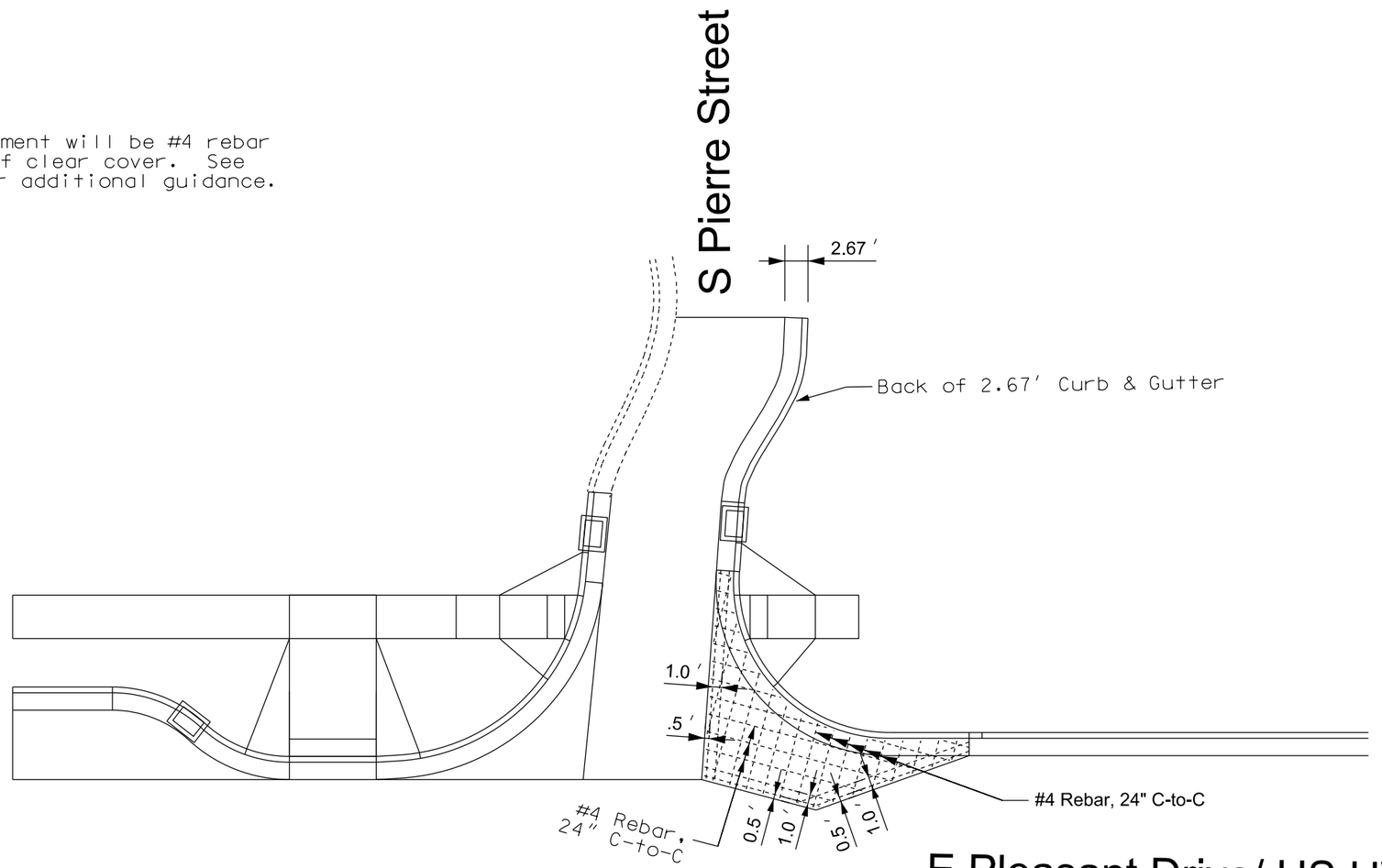

E Pleasant Drive/ US HWY 14/83

REGISTERED PROFESSIONAL ENGINEER
REG. NO.
13586
DUSTIN LEIGH HAMILTON
SOUTH DAKOTA
3/21/24

Plot Scale - 1:16

Plotted From - TRPR18387

File - U:\ms\prj\hugh0262\ms0262Z.dgn

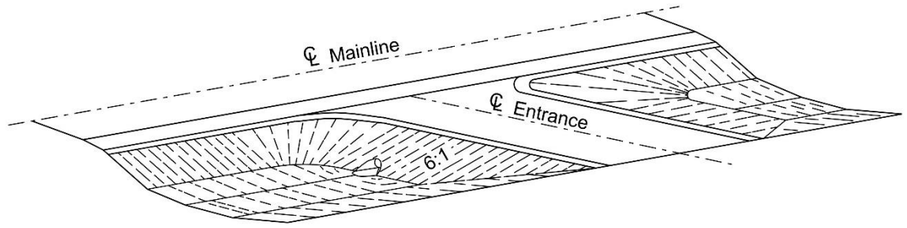

PERSPECTIVE OF ENTRANCE

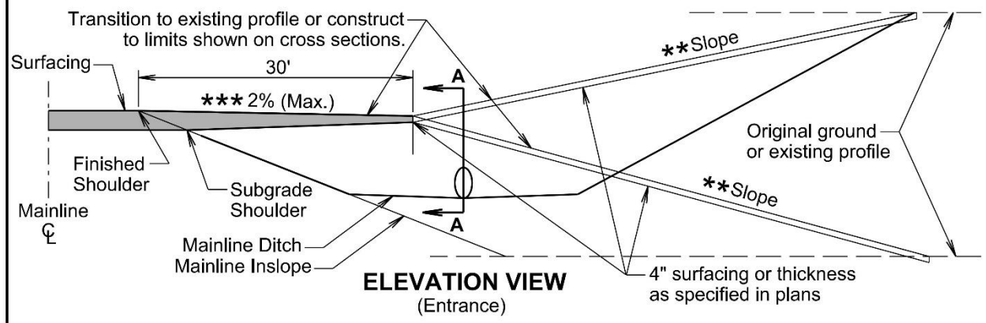

ELEVATION VIEW
(Entrance)

*** 2% When on the inside of superelevation and 0% or flat when on outside of superelevation.

** Entrance maximum slope is typically 10:1 for field entrances and 15:1 for farm/residential entrances.

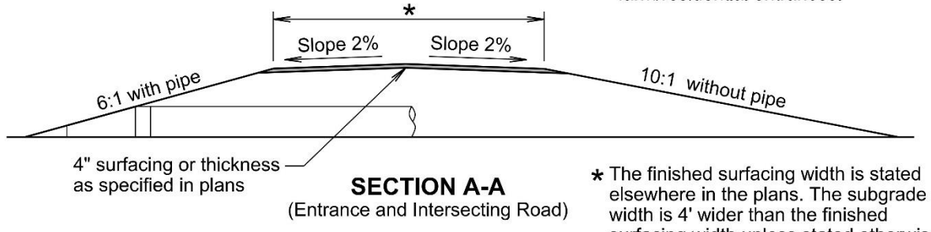

SECTION A-A
(Entrance and Intersecting Road)

* The finished surfacing width is stated elsewhere in the plans. The subgrade width is 4' wider than the finished surfacing width unless stated otherwise in the plans.

GENERAL NOTES:

The ditch section shown above in the perspective view is only for illustrative purpose.

The elevation view above is typical for either a ditch cut or fill section. Entrances that vary from above should be specified in the plans.

Pipe length will be adjusted if necessary during construction to obtain the 6:1 slope. For grading projects, the pipe length is estimated typically using a 4" thickness of surfacing directly over the subgrade above the pipe.

The transition area between the mainline inslope and the entrance or intersecting road inslope will be rounded to eliminate an abrupt transition.

The turning radii will be 35' for intersecting roads and entrances unless stated otherwise in the plans.

November 19, 2021

Published Date: 2024	SDDOT	INTERSECTING ROADS AND ENTRANCES	PLATE NUMBER 120.01
			Sheet 1 of 2

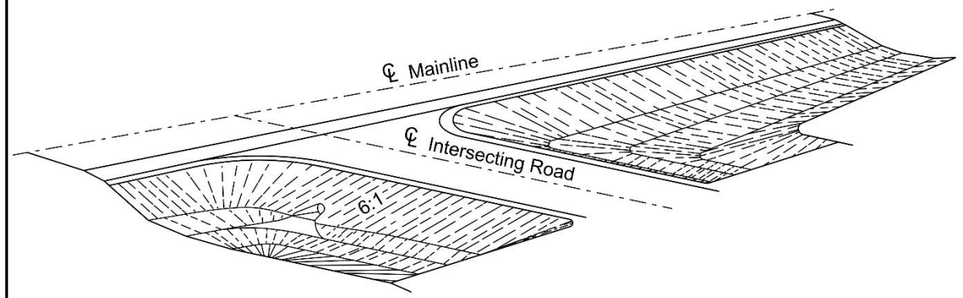

PERSPECTIVE OF INTERSECTING ROAD

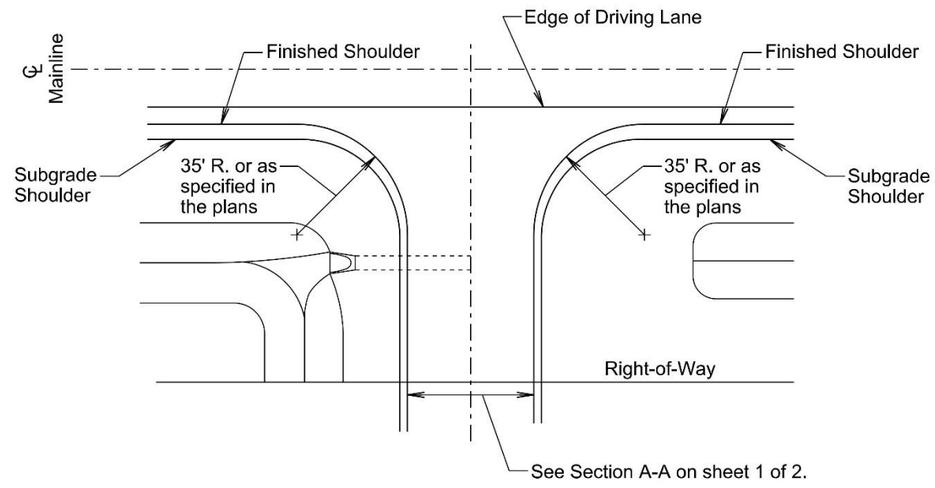

PLAN VIEW

GENERAL NOTES:

The 6:1 or 10:1 intersecting road inslope will transition to the existing intersecting road inslope near the right-of-way or at a location as determined by the Engineer.

November 19, 2021

Published Date: 2024	SDDOT	INTERSECTING ROADS AND ENTRANCES	PLATE NUMBER 120.01
			Sheet 2 of 2

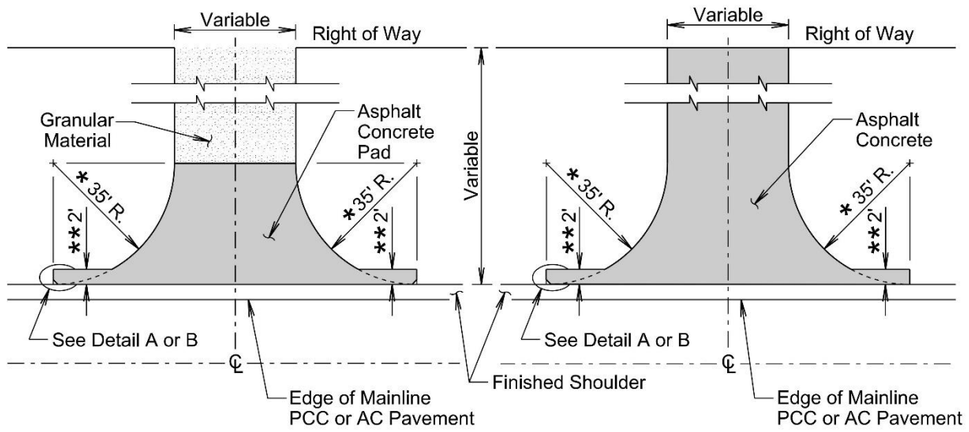

PLAN VIEW
(Intersecting Road)
(No Asphalt Concrete Surfacing Beyond Right of Way)

PLAN VIEW
(Intersecting Road)
(Asphalt Concrete Surfacing Beyond Right of Way)

GENERAL NOTES:

The precise construction limits for situations other than shown above will be determined by the Engineer during construction.

* For new construction, 35' radius typical or as specified in the plans. For resurfacing projects, radius is variable depending on existing conditions.

** The Contractor may adjust the screed of the paver during mainline paving operations to provide the 2-foot asphalt concrete pad or the Contractor may provide the 2-foot asphalt concrete pad during paving of the intersecting roads as shown above. The Engineer may eliminate the 2-foot asphalt concrete pads if the Engineer, in the Engineer's sole discretion, determines the pads are infeasible to construct due to site specific reasons including, but not limited to; existing inslope configuration, borrow and material availability, and right-of-way constraints.

August 27, 2020

Published Date: 2024	SDDOT	SURFACING OR RESURFACING OF INTERSECTING ROADS AND ENTRANCES (MAINLINE AND SHOULDERS: PCC OR AC PAVEMENT)	PLATE NUMBER 320.04
			Sheet 1 of 2

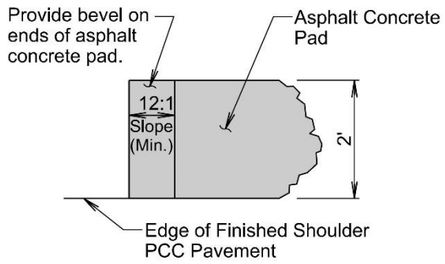

DETAIL A
(Typ. for Projects with PCC Pavement on Shoulder)

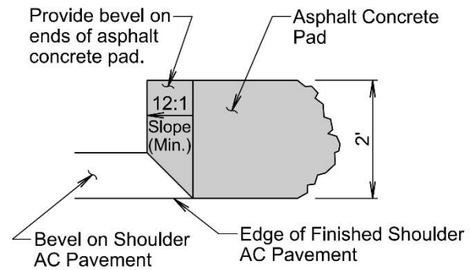

DETAIL B
(Typ. for Projects with AC Pavement on Shoulder)

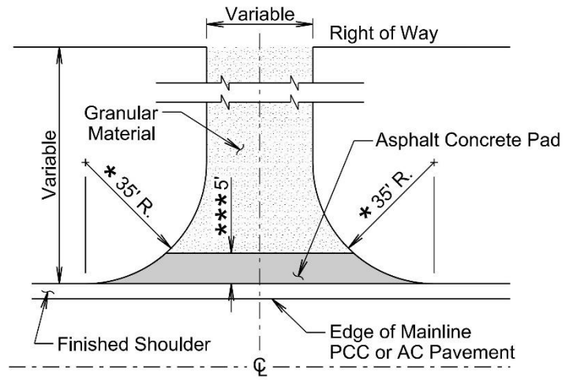

PLAN VIEW
(Entrance)

*** Not required if finished shoulder width is 4' or greater.

August 27, 2020

Published Date: 2024	SDDOT	SURFACING OR RESURFACING OF INTERSECTING ROADS AND ENTRANCES (MAINLINE AND SHOULDERS: PCC OR AC PAVEMENT)	PLATE NUMBER 320.04
			Sheet 2 of 2

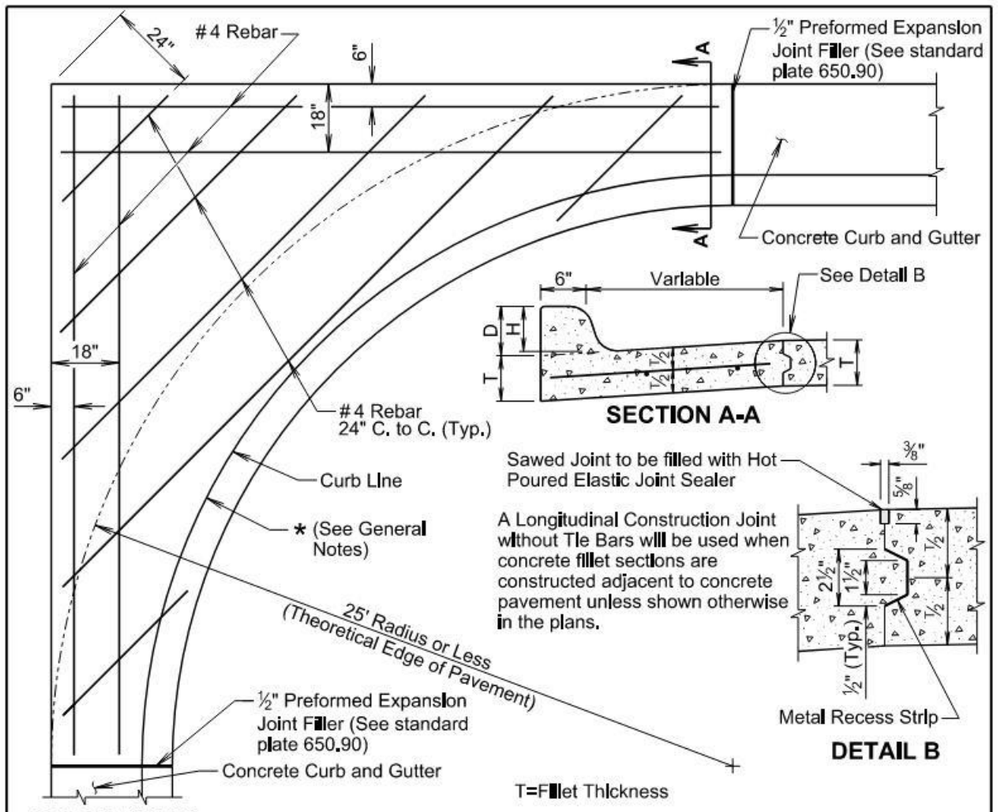

GENERAL NOTES:

* If a curb ramp is constructed adjacent to a PCC fillet section, the curb will need to be modified. Refer to the corresponding curb ramp standard plate or other special details in the plans for modification of the PCC fillet section.

Dimensions D, H, and T will conform to those shown on the appropriate curb and gutter standard plate.

All rebar will be in conformance with Sections 480 and 1010 of the Specifications. All rebar will have a minimum of 3 inches of clear cover.

Class M6 Concrete will be used in construction of the fillets.

The concrete curb will be monolithic with the concrete fillet. No separate payment for this curb will be made as the curb is considered a part of the fillet.

Joints will be constructed at 10-foot intervals except when fillets are constructed adjacent to PCC Pavement. If there is adjacent PCC Pavement the joints will be extended from edge of pavement through the fillet section as directed by the Engineer.

The cost for all materials, labor, and incidentals necessary to construct the PCC fillet section with curb and gutter will be incidental to the contract unit price per square yard for the corresponding PCC fillet section contract item.

November 19, 2022

Published Date: 2024	SDDOT	PCC FILLET SECTION WITH TYPE B CURB AND GUTTER	PLATE NUMBER 380.30
			Sheet 1 of 1

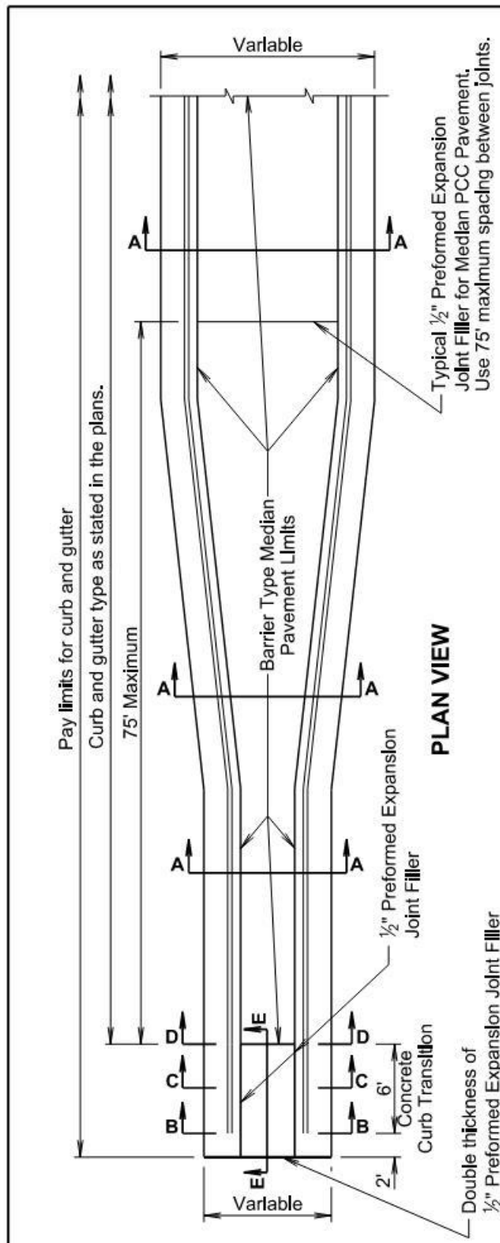

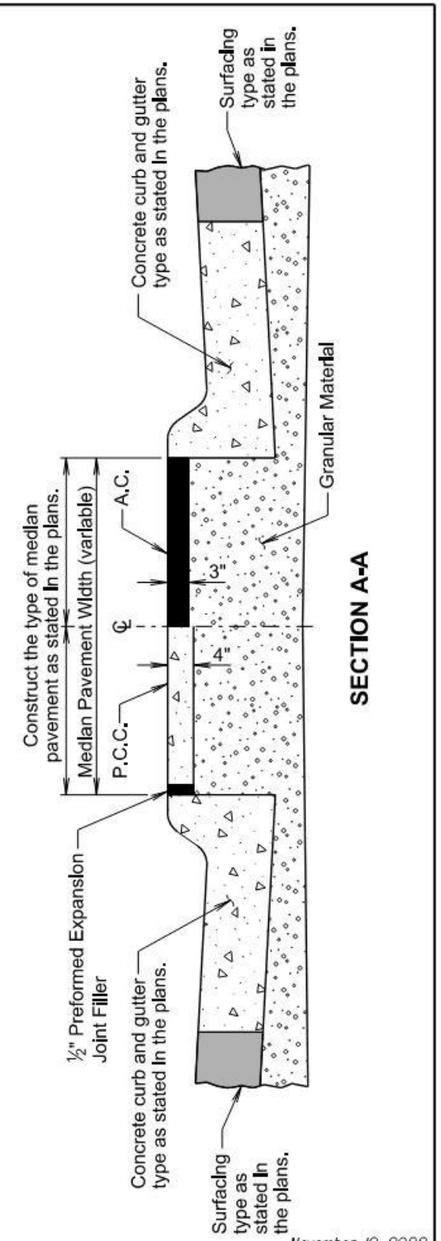

November 19, 2022

Published Date: 2024	SDDOT	BARRIER TYPE MEDIAN PAVEMENT	PLATE NUMBER 380.36
			Sheet 1 of 3

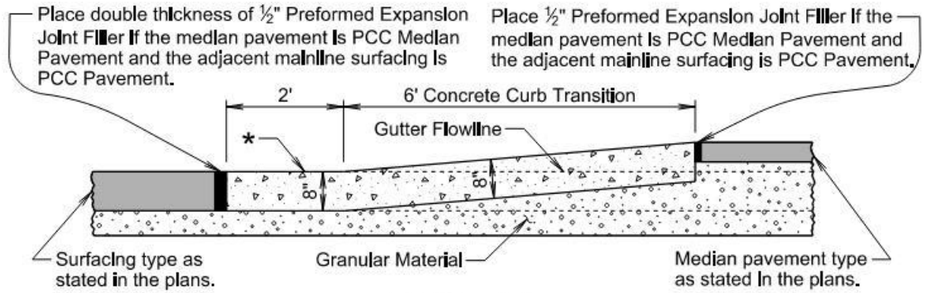

SECTION E-E

* The slope will be as shown on the standard plate for the corresponding curb and gutter type, on the typical sections, or on the cross sections. The slope will be modified when necessary at locations that would hold or pond water as determined by the Engineer.

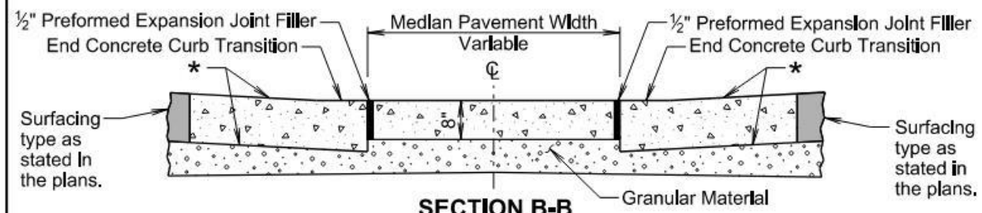

SECTION B-B

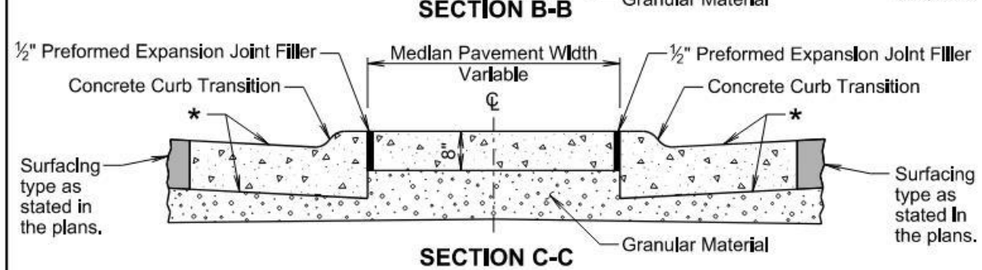

SECTION C-C

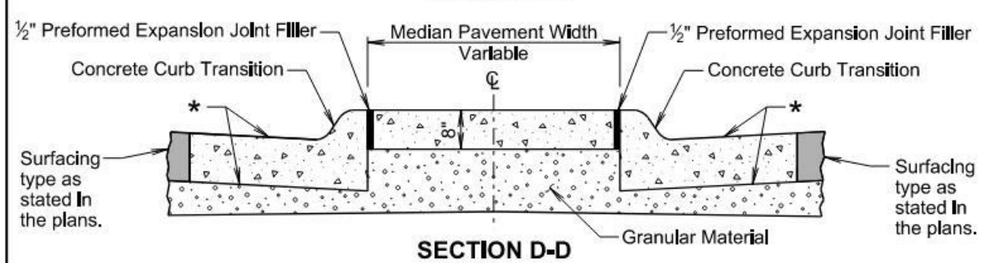

SECTION D-D

November 19, 2022

Published Date: 2024	SDDOT	BARRIER TYPE MEDIAN PAVEMENT	PLATE NUMBER 380.36
			Sheet 2 of 3

GENERAL NOTES:

Necessary excavation for construction of barrier type PCC and asphalt concrete median pavements and excavation for granular material will be measured and paid for as "Unclassified Excavation".

Concrete for barrier type median PCC pavement will comply with the requirements of the Specifications for Class M6 Concrete. One-half inch expansion joint filler will be placed transversely in the median PCC pavement at a maximum spacing of 75 feet. Where median PCC pavement is wider than 8 feet, a longitudinal joint will be sawed or grooved along the centerline of the median PCC pavement. Where the median PCC pavement is 4 feet or narrower and at width transitions, contraction joints will be sawed or grooved at spacings as approved by the Engineer. All other contraction joints will be sawed in square sections. All joints will be sawed or grooved to a depth of ⅓ the thickness of the median PCC pavement.

All costs for labor, materials, and incidentals necessary for construction of the barrier type median pavement will be incidental to the contract unit price per square yard for "Barrier Type Median PCC Pavement" or "Barrier Type Median Asphalt Concrete Pavement".

All costs for labor, materials, and incidentals necessary for construction of the 6-foot concrete curb transition (See Sections B-B, C-C, and D-D) and the adjacent 8-inch thick concrete (See Section E-E) will be incidental to the contract unit price per foot for the corresponding curb and gutter contract item.

Granular material will be paid for at the contract unit price for the respective granular material contract item.

November 19, 2022

Published Date: 2024	SDDOT	BARRIER TYPE MEDIAN PAVEMENT	PLATE NUMBER 380.36
			Sheet 3 of 3

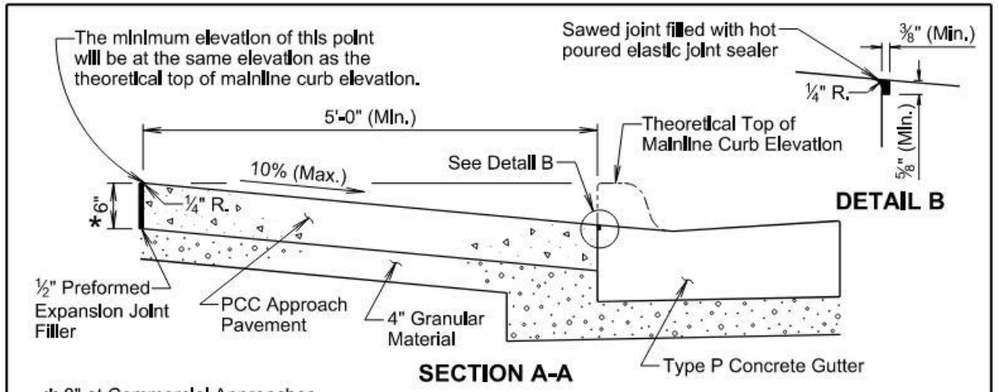

* 8" at Commercial Approaches

** Width for 6" high curb is 6' (See standard plate 650.35)

*** Within these areas, the surface of the type A PCC approach pavement will be sloped transitionally as approved by the Engineer.

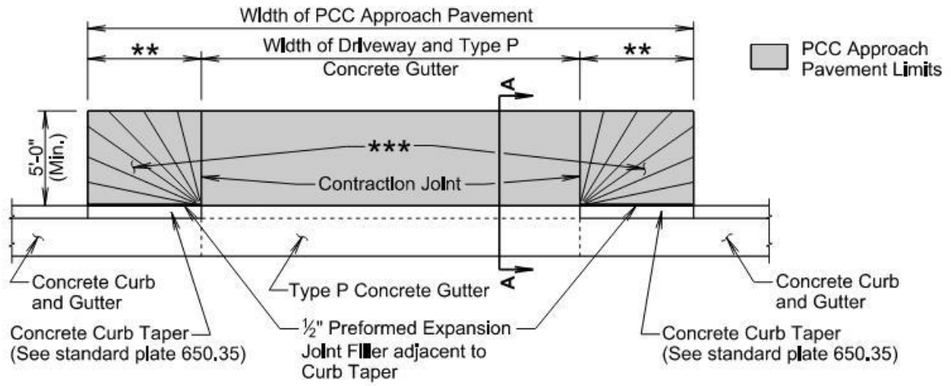

GENERAL NOTES:

The concrete for the type A PCC approach pavement and adjacent driveway will comply with the requirements of the Specifications for class M6 concrete unless otherwise stated in the plans.

Contraction joints in the type A PCC approach pavement will be 1½ inches deep if formed in the fresh concrete using a suitable grooving tool. If a saw is used to cut the contraction joints, then the depth of the joint will be at least ¼ the thickness of the approach pavement. Additional contraction joints not shown in the Plan View will be spaced as follows:

One joint at the center of the approach for driveways 16 feet to 24 feet wide.
Two joints spaced at equal intervals for driveways greater than 24 feet to 40 feet wide.

All costs for furnishing and placing the type A PCC approach pavement and constructing the expansion and contraction joints including labor, equipment, excavation, and materials including the earthen backfill and granular material, will be incidental to the contract unit price per square yard for the corresponding PCC Approach Pavement contract item.

June 26, 2019

Published Date: 2024	SDDOT	TYPE A PCC APPROACH PAVEMENT	PLATE NUMBER 380.40
			Sheet 1 of 1

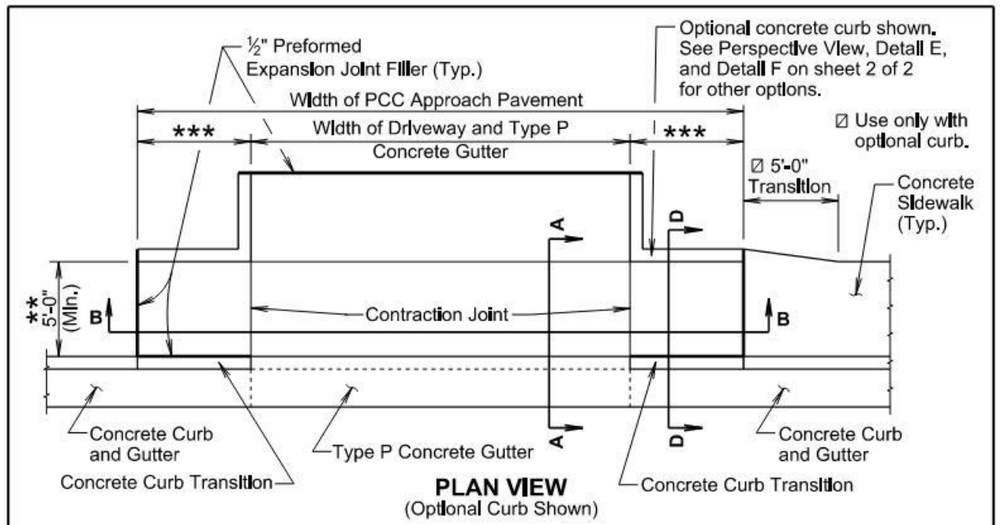

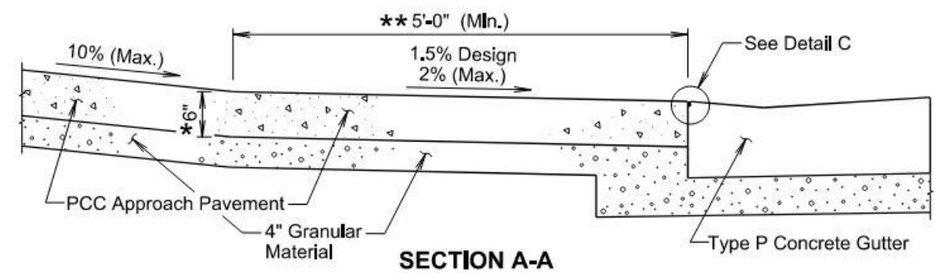

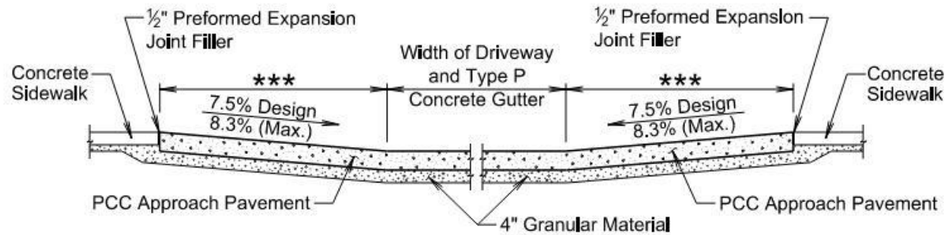

* 8 Inches at Commercial Approaches

** Sidewalk width is 5 feet unless specified otherwise in the plans. The cross slope of the sidewalk is designed at 1.5% and will not be steeper than 2% unless specified otherwise in the plans.

*** The slope of the type B PCC approach pavement in these areas will match the slope of the concrete curb transition and the length will not be longer than 15 feet. The slope is designed at 7.5% and will not be steeper than 8.3% unless specified otherwise in the plans.

June 26, 2019

Published Date: 2024	SDDOT	TYPE B PCC APPROACH PAVEMENT	PLATE NUMBER 380.41
			Sheet 1 of 2

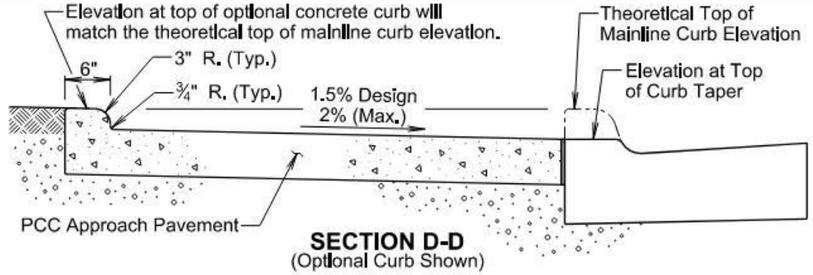

SECTION D-D
(Optional Curb Shown)

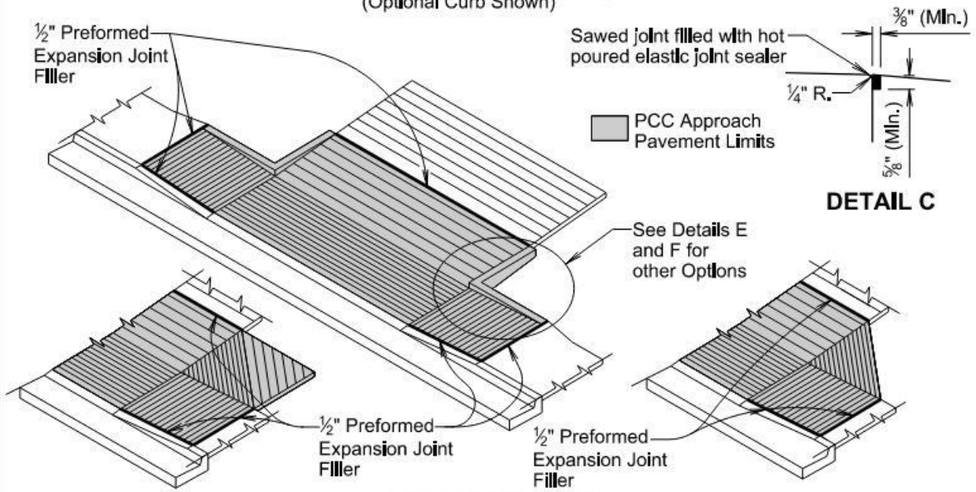

DETAIL C

DETAIL E
(Optional Rectangle Pavement Shown)

PERSPECTIVE VIEW
(Optional Curb Shown)

DETAIL F
(Optional Triangle Pavement Shown)

GENERAL NOTES:

Use the plan specified option for the pavement adjacent to the driveway and sidewalk. The options are shown above in the Perspective View, Detail E, and Detail F.

The concrete for the type B PCC approach pavement and adjacent driveway will comply with the requirements of the Specifications for class M6 concrete unless otherwise stated in the plans.

Contraction joints in the type B PCC approach pavement will be 1½ inches deep if formed in the fresh concrete using a suitable grooving tool. If a saw is used to cut the contraction joints, then the depth of the joint will be at least ¼ the thickness of the approach pavement. Additional contraction joints not shown in the Plan View will be spaced as follows:

One joint at the center of the approach for driveways 16 feet to 24 feet wide.
Two joints spaced at equal intervals for driveways greater than 24 feet to 40 feet wide.

All costs for furnishing and placing the type B PCC approach pavement and constructing the expansion and contraction joints including labor, equipment, excavation, and materials including the earthen backfill and granular material will be incidental to the contract unit price per square yard for the corresponding PCC Approach Pavement contract item.

June 26, 2019

Published Date: 2024	SDDOT	TYPE B PCC APPROACH PAVEMENT	PLATE NUMBER 380.41
			Sheet 2 of 2

TOLERANCES IN DIMENSIONS

Diameter: ±1.5% for 24" Dia. or less and ±1% or ⅜" whichever is more for 27" Dia. or greater.
Diameters at joints: ± 3/16" for 30" Dia. or less and ± ¼" for 36" or greater.
Length of joint (j): ± ¼".
Wall thickness (T): not less than design T by more than 5% or 3/16", whichever is greater.
Laying length: shall not underrun by more than ½".

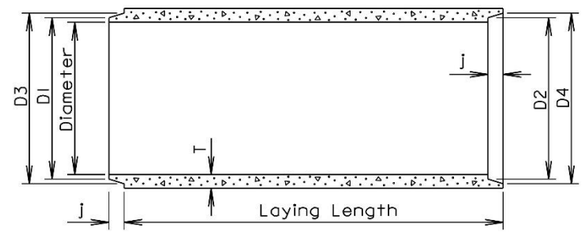

LONGITUDINAL SECTION

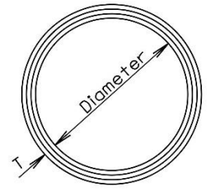

END VIEW

GENERAL NOTES:

Construction of R. C. P. shall conform to the requirements of Section 990 of the Specifications.

Not more than 2 four-foot sections shall be permitted near the ends of any culvert. Four-foot lengths shall be used only to secure the required length of culvert.

Diam. (in.)	Approx. Wt. /Ft. (lb.)	T (in.)	J (in.)	D1 (in.)	D2 (in.)	D3 (in.)	D4 (in.)
12	92	2	1¾	13¼	13⅝	13⅞	14¼
15	127	2¼	2	16½	16⅞	17¼	17⅝
18	168	2½	2¼	19⅝	20	20⅜	20¾
21	214	2¾	2½	22⅞	23¼	23¾	24⅛
24	265	3	2¾	26	26⅜	27	27⅜
27	322	3¼	3	29¼	29⅝	30¼	30⅝
30	384	3½	3¼	32⅜	32¾	33½	33⅞
36	524	4	3¾	38¾	39¼	40	40½
42	685	4½	4	45⅛	45⅝	46½	47
48	867	5	4½	51½	52	53	53½
54	1070	5½	4½	57⅞	58⅜	59⅜	59⅞
60	1296	6	5	64¼	64¾	66	66½
66	1542	6½	5½	70⅝	71⅛	72½	73
72	1810	7	6	77	77½	79	79½
78	2098	7½	6½	83⅜	83⅞	85⅝	86⅛
84	2410	8	7	89¾	90¼	92⅛	92⅝
90	2740	8½	7	95¾	96¼	98⅛	98⅝
96	2950	9	7	102⅛	102⅝	104½	105
102	3075	9½	7½	109	109½	111½	112
108	3870	10	7½	115½	116	118	118½

June 26, 2015

Published Date: 2024	SDDOT	REINFORCED CONCRETE PIPE	PLATE NUMBER 450.01
			Sheet 1 of 1

STATE OF SOUTH DAKOTA	PROJECT	SHEET	TOTAL SHEETS
	NH CR 0014(185)229	B121	B151

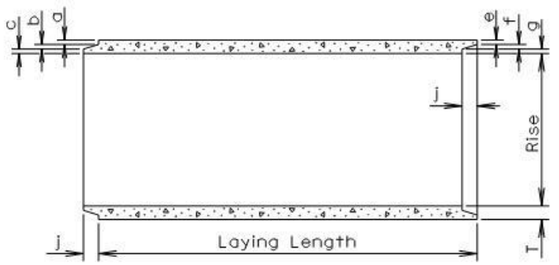

LONGITUDINAL SECTION

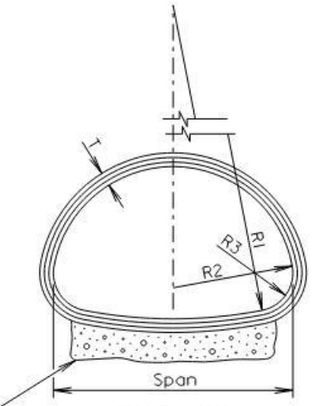

END VIEW

TOLERANCES IN DIMENSIONS

Radial dimensions at joints: ± 1/8" for 65" span or less and ± 1/4" for longer spans.
Rise and Span: ±2% of tabular values.
Length of Joint (J): ± 1/4".
Wall thickness (T): not less than design T by more than 5% or 3/16", whichever is greater.
Laying length: shall not underrun by more than 1/2".

Gravel Bedding Material shall be supplied for 102" to 169" spans. It shall be placed to a thickness of 6" (Min.) x 85% of the Span x Length of culvert and shall conform to the gradation requirements for gravel surfacing except material may be screened or may be plan provided material.

* Size (in.)	Approx. Wt./Ft. (lb.)	Rise (in.)	Span (in.)	T (in.)	a (in.)	b (in.)	c (in.)	j (in.)	e (in.)	f (in.)	g (in.)	R1 (in.)	R2 (in.)	R3 (in.)
18	170	13 1/2	22	2 1/2	1 3/8	3/8	3/4	2	1 1/8	3/8	1	27 1/2	13 3/4	5 1/4
24	320	18	28 1/2	3 1/2	1 5/8	1/2	1 3/8	3	1 3/8	1/2	1 5/8	40 11/16	14 3/4	4 5/8
30	450	22 1/2	36 1/4	4	1 13/16	5/8	1 9/16	3 1/2	1 9/16	5/8	1 13/16	51	18 3/4	6 1/8
36	600	26 5/8	43 3/4	4 1/2	2	3/4	1 3/4	4	1 3/4	3/4	2	62	22 1/2	6 1/2
42	740	31 5/16	51 1/8	4 1/2	2	3/4	1 3/4	4	1 3/4	3/4	2	73	26 1/4	7 3/4
48	890	36	58 1/2	5	2 1/4	3/4	2	5	2	3/4	2 1/4	84	30	8 7/8
54	1100	40	65	5 1/2	2 1/2	3/4	2 1/4	5	2 1/4	3/4	2 1/2	92 1/2	33 3/8	10
60	1400	45	73 1/2	6	3 5/16	3/4	1 15/16	5	2 3/4	3/4	2 1/2	105	37 1/2	11
72	1900	54	88	7	3 13/16	1	2 3/16	6	3 1/4	1	2 3/4	126	45	13 5/16
84	2500	62	102	8	4 1/8	1	2 7/8	6	3 1/2	1	3 1/2	162 1/2	52	14 1/2
96	3300	78	122 3/8	9	4 1/2	1	3 1/2	7	4	1	4	218	62	20
108	4200	88	138 1/2	10	5	1	4	7	4 1/2	1	4 1/2	269	70	22
120	5100	96 7/8	154	11	5 1/2	1	4 1/2	7	5	1	5	301 3/8	78	24
132	5100	106 1/2	168 3/4	10		1	4	7	4 1/2	1	4 1/2	329	85 5/8	26 7/8

* Equivalent Diameter of Circular R. C. P.

GENERAL NOTES:

Construction of R.C.P. Arch shall conform to the requirements of Section 990 of the Specifications. Not more than 2 four-foot sections shall be permitted near the ends of any culvert. Four-foot lengths shall be used only to secure the required length of culvert.

June 26, 2015

Published Date: 2024	SDDOT	REINFORCED CONCRETE PIPE ARCH	PLATE NUMBER 450.02
			Sheet 1 of 1

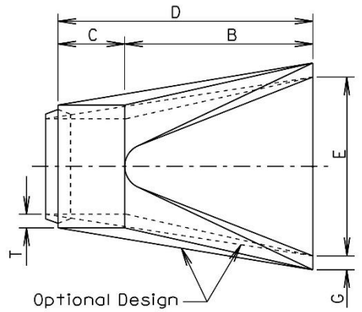

TOP VIEW

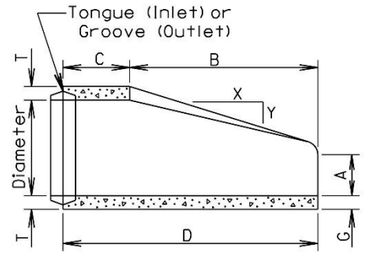

LONGITUDINAL SECTION

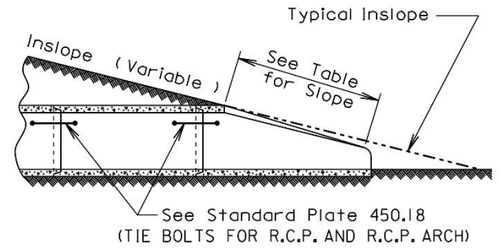

SLOPE DETAIL

GENERAL NOTES:

Lengths of concrete pipe shown on plan sheets are between flared ends only.

Construction of R.C.P. Flared End shall conform to the requirements of Section 990 of the Specifications.

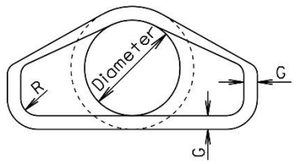

END VIEW

Dia. (in.)	Approx. Wt. of Section (lbs.)	Approx. Slope (X to Y)	T (in.)	A (in.)	B (in.)	C (in.)	D (in.)	E (in.)	G (in.)	R (in.)
12	530	2.4:1	2	4	24	48 7/8	72 7/8	24	2	1 1/2
15	740	2.4:1	2 1/4	6	27	46	73	30	2 1/4	1 1/2
18	990	2.3:1	2 1/2	9	27	46	73	36	2 1/2	1 1/2
21	1280	2.4:1	2 3/4	9	36	37 1/2	73 1/2	42	2 3/4	1 1/2
24	1520	2.5:1	3	9 1/2	43 1/2	30	73 1/2	48	3	1 1/2
27	1930	2.5:1	3 1/4	10 1/2	49 1/2	24	73 1/2	54	3 1/4	1 1/2
30	2190	2.5:1	3 1/2	12	54	19 3/4	73 3/4	60	3 1/2	1 1/2
36	4100	2.5:1	4	15	63	34 3/4	97 3/4	72	4	1 1/2
42	5380	2.5:1	4 1/2	21	63	35	98	78	4 1/2	1 1/2
48	6550	2.5:1	5	24	72	26	98	84	5	1 1/2
54	8240	2:1	5 1/2	27	65	33 1/4	98 1/4	90	5 1/2	1 1/2
60	8730	1.9:1	6	35	60	39	99	96	5	1 1/2
66	10710	1.7:1	6 1/2	30	72	27	99	102	5 1/2	1 1/2
72	12520	1.8:1	7	36	78	21	99	108	6	1 1/2
78	14770	1.8:1	7 1/2	36	90	21	111	114	6 1/2	1 1/2
84	18160	1.6:1	8	36	90 1/2	21	111 1/2	120	6 1/2	1 1/2
90	20900	1.5:1	8 1/2	41	87 1/2	24	111 1/2	132	6 1/2	6

June 26, 2015

Published Date: 2024	SDDOT	R. C. P. FLARED ENDS	PLATE NUMBER 450.10
			Sheet 1 of 1

Wall "t" (in.)	Rod Dia. (in.)	Pipe Sleeve Dia. (nominal)
≤ 3 1/4	5/8	3/4
3 1/2-6 1/2	3/4	1
≥ 7	1	1 1/4

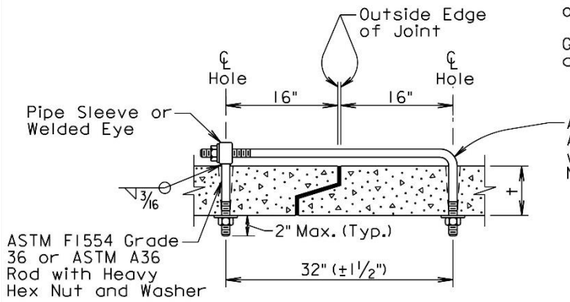

ADJUSTABLE EYE BOLT TIE

GENERAL NOTES:

Tie bolts shall conform to ASTM F1554 Grade 36 or ASTM A36. Nuts shall be heavy hex conforming to ASTM A563. Washers shall conform to ASTM F436.

Pipe Sleeve shall conform to ASTM A500 or A53, Grade B.

Galvanize adjustible eye bolt tie assembly in accordance with ASTM A153.

Pipe Dia. (in.)	"L" (in.)	Bolt Dia. (in.)
≤ 48	4	3/4
> 48	6	1

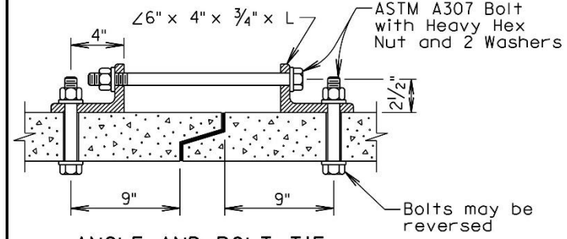

ANGLE AND BOLT TIE

GENERAL NOTES:

Angles shall conform to ASTM A36.

Bolts shall conform to ASTM A307. Nuts shall be heavy hex conforming to ASTM A563. Washers shall conform to ASTM F436.

Galvanize angles, bolts, nuts, and washers in accordance with ASTM A153.

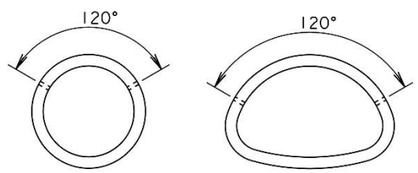

END VIEW "CIRCULAR"

END VIEW "ARCH"

GENERAL NOTES:

In lieu of the tie bolts detailed above other types of tie bolt connections may be installed as approved by the Office of Bridge Design.

All pipe sections of R.C.P. and R.C.P. Arch shall be tied with tie bolts except for pipe located between drop inlets, manholes, and junction boxes. All pipe sections of pipes that only enter or exit drop inlets, manhole, and junction boxes shall be tied with tie bolts.

There will be no separate measurement or payment for the tie bolts. The cost for furnishing and installing the tie bolts shall be incidental to the contract unit price per foot for the corresponding bid item for R.C.P. or R.C.P. Arch.

February 28, 2013

Published Date: 2024	SDDOT	TIE BOLTS FOR R.C.P. AND R.C.P. ARCH	PLATE NUMBER 450.18
			Sheet 1 of 1

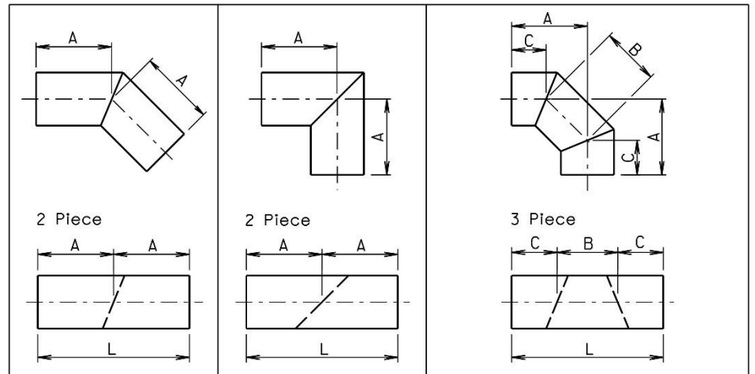

Diameter	A	L	Diameter	A	L	Diameter	A	B	C	L
Inches	Feet	Feet	Inches	Feet	Feet	Inches	Inches			Feet
12	1	2	12	2	4	12	25 1/2	11	18 1/2	4
15	1	2	15	2	4	15	26 1/2	12	18	4
18	1	2	18	2	4	18	27	14	17	4
21	2	4	21	2	4	21	27	15	16 1/2	4
24	2	4	24	2	4	24	27 1/2	16	16	4
27	2	4	27	2	4	27	27 1/2	17	15 1/2	4
30	2	4	30	3	6	30	40	19	26 1/2	6
33	2	4	33	3	6	33	40	20	26	6
36	2	4	36	3	6	36	40 1/2	21	25 1/2	6
42	2	4	42	3	6	42	41	23	24 1/2	6
48	2	4	48	4	8	48	53 1/2	26	35	8
54	3	6	54	4	8	54	54	28	34	8
60	3	6	60	4	8	60	54 1/2	31	32 1/2	8
66	3	6	66	4	8	66	54	33	31 1/2	8
72	3	6	72	5	10	72	67 1/2	36	42	10
78	3	6	78	5	10	78	68	39	40 1/2	10
84	3	6	84	5	10	84	68 1/2	41	39 1/2	10
90	3	6	90	6	12	90	70	46	37	10
96	3	6	96	6	12	96	82	46	49	12

FABRICATED ELBOW LENGTHS FOR ALL CORRUGATIONS

GENERAL NOTES:

All dimensions shown are nominal.

L = Linear Feet of C.M.P. required to fabricate fitting.

June 26, 2001

Published Date: 2024	SDDOT	C.M.P. FABRICATED LENGTHS FOR ELBOWS	PLATE NUMBER 450.32
			Sheet 1 of 1

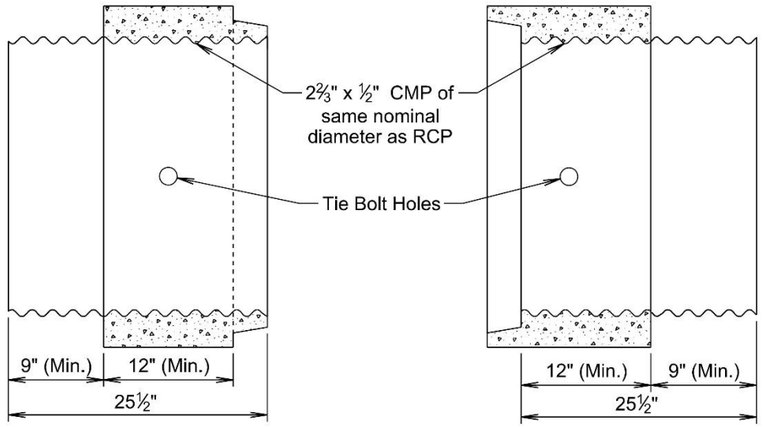

INLET
(CMP to RCP Transition)

OUTLET
(RCP to CMP Transition)

GENERAL NOTE:

Arch pipe transitions will be fabricated similar to the round transition shown above.

All pipe transitions will be precast as shown. Alternate designs other than shown will need to be approved by the Engineer.

November 19, 2022

Published Date: 2024	SDDOT	C.M.P. TO R.C.P. TRANSITION AND R.C.P. TO C.M.P. TRANSITION	PLATE NUMBER 450.50
			Sheet 1 of 1

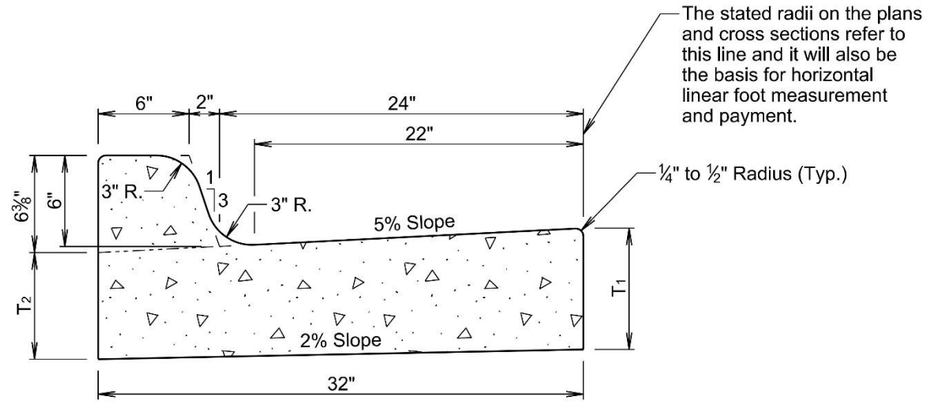

TYPE B CONCRETE CURB AND GUTTER				
Type	T_1 (Inches)	T_2 (Inches)	Cu. Yd. Per Lin. Ft.	Lin. Ft. Per Cu. Yd.
B66	6	5 1/16	0.057	17.7
B67	7	6 1/16	0.065	15.4
B68	8	7 1/16	0.073	13.7
B68.5	8.5	7 9/16	0.077	13.0
B69	9	8 1/16	0.081	12.3
B69.5	9.5	8 9/16	0.085	11.7
B610	10	9 1/16	0.090	11.2
B610.5	10.5	9 9/16	0.094	10.7
B611	11	10 1/16	0.098	10.2
B611.5	11.5	10 9/16	0.102	9.8
B612	12	11 1/16	0.106	9.4

GENERAL NOTES:

When concrete curb and gutter longitudinally adjoins new concrete pavement, the method of attachment will be by one of the methods shown on standard plate 380.21.

See standard plate 650.90 for expansion and contraction joints in the curb and gutter.

January 22, 2023

Published Date: 2024	SDDOT	TYPE B CONCRETE CURB AND GUTTER	PLATE NUMBER 650.01
			Sheet 1 of 1

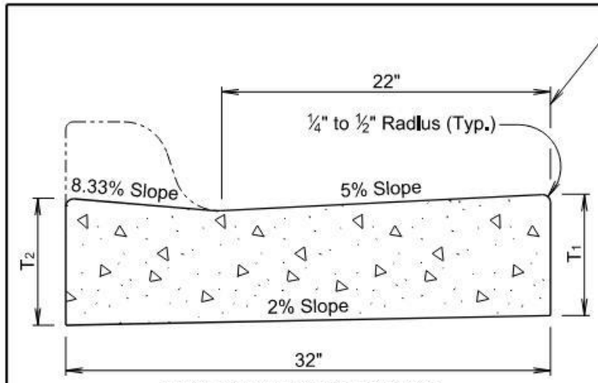

The stated radii on the plans and cross sections refer to this line and it will also be the basis for horizontal linear foot measurement and payment.

TRANSVERSE SECTION

TYPE P CONCRETE GUTTER				
Type	T_1 (Inches)	T_2 (Inches)	Cu. Yd. Per Lin. Ft.	Lin. Ft. Per Cu. Yd.
P6	6	6 3/8	0.047	21.2
P7	7	7 3/8	0.055	18.1
P8	8	8 3/8	0.064	15.7
P8.5	8.5	8 7/8	0.068	14.8
P9	9	9 3/8	0.072	13.9
P9.5	9.5	9 7/8	0.076	13.2
P10	10	10 3/8	0.080	12.5
P10.5	10.5	10 7/8	0.084	11.9
P11	11	11 3/8	0.088	11.3
P11.5	11.5	11 7/8	0.092	10.8
P12	12	12 3/8	0.096	10.4

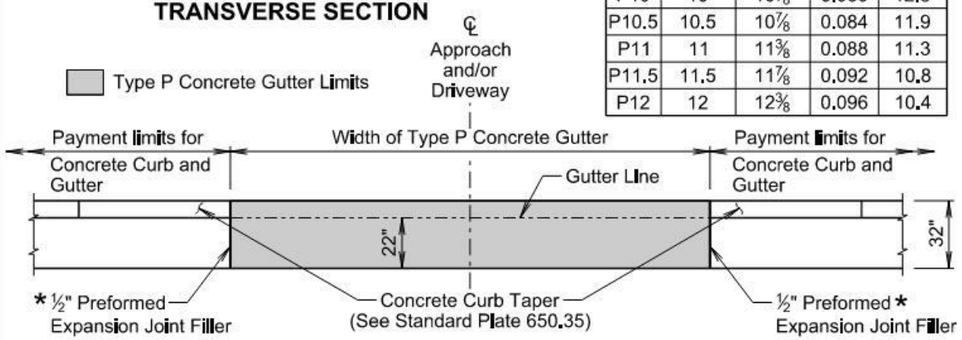

PLAN VIEW

* Joint will not be needed if concrete curb and gutter and type P concrete gutter is placed at the same time. If the ½" preformed expansion joint filler is provided, then the joint will be sealed in accordance with standard plate 650.90.

GENERAL NOTES:

The concrete for the type P concrete gutter will comply with the requirements of the specifications for class M6 concrete.

When concrete gutter longitudinally adjoins new concrete pavement, the method of attachment will be by one of the methods shown on standard plate 380.21.

Transverse contraction joints will be constructed at 10-foot intervals in the concrete gutter except when concrete gutter is constructed adjacent to mainline PCC pavement. When concrete gutter is constructed adjacent to mainline PCC pavement, a transverse contraction joint will be constructed in the concrete gutter at each mainline PCC pavement transverse contraction joint location.

When concrete gutter is placed monolithically with mainline PCC pavement, the transverse contraction joints in the concrete gutter will be sawed and sealed the same as the transverse contraction joints in the mainline PCC pavement.

When concrete gutter is not placed monolithically with the mainline PCC pavement and when the adjacent mainline surfacing is not PCC concrete, the transverse contraction joints in the concrete gutter will be 1½ inches deep if formed in the fresh concrete using a suitable grooving tool. If a saw is used to cut the contraction joints, then the depth of the joint will be at least ¼ the thickness of the concrete.

January 22, 2023

Published Date: 2024	SDDOT	TYPE P CONCRETE GUTTER	PLATE NUMBER 650.30
			Sheet 1 of 1

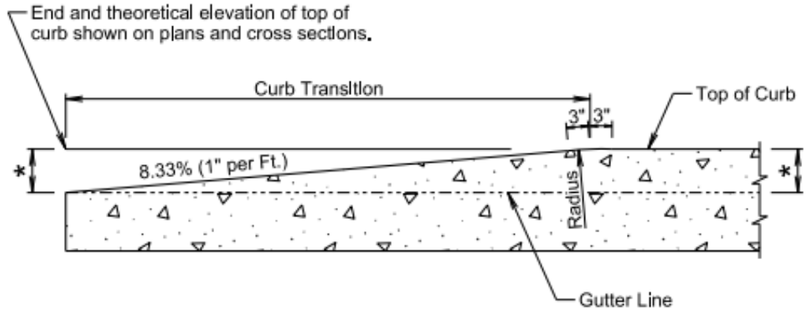

* Height of Curb

LONGITUDINAL SECTION
(Concrete Curb Taper)

December 23, 2019

Published Date: 2024	SDDOT	CONCRETE CURB TAPER	PLATE NUMBER 650.35
			Sheet 1 of 1

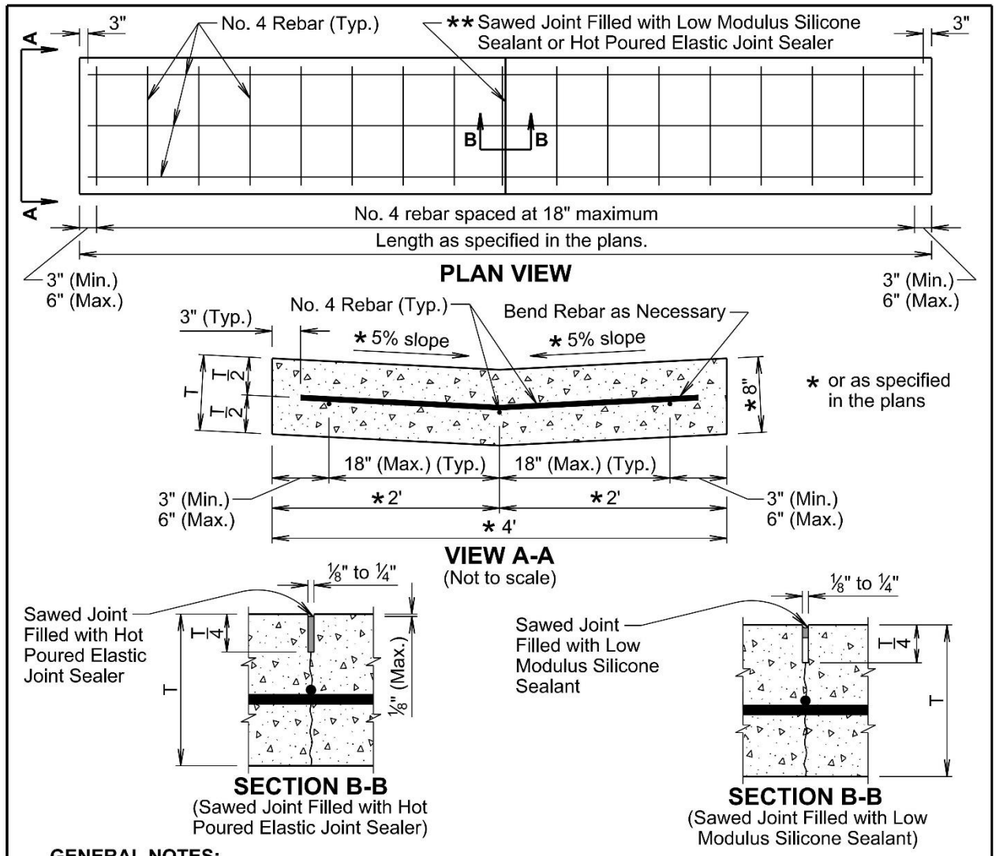

PLAN VIEW

* or as specified in the plans

VIEW A-A
(Not to scale)

SECTION B-B
(Sawed Joint Filled with Hot Poured Elastic Joint Sealer)

SECTION B-B
(Sawed Joint Filled with Low Modulus Silicone Sealant)

GENERAL NOTES:

The concrete will comply with the specifications for class M6 concrete.

The reinforcing steel will comply with the requirements of specification sections 480 and 1010.

If a lap splice is provided the No. 4 rebar will be lapped a minimum of 12 inches.

** The sawed joints will be spaced at 12 feet; however, when the length of the valley gutter is 12 feet to 24 feet there will be a joint at the midpoint of the length. The saw cut to control cracking will be a minimum of ¼ the thickness of the pavement.

All hot poured elastic joint sealer material spilled on the surface of the concrete pavement will be removed as soon as the material has cooled. The extent of removal of material will be to the satisfaction of the Engineer. All costs for removal of the spilled joint sealer material will be borne by the Contractor.

The silicone sealant will be bonded to the sides of a clean joint to completely seal the joint as approved by the Engineer.

All costs for furnishing and installing the valley gutter including materials, equipment, labor, and incidentals will be included in the contract unit price per square yard for the corresponding Valley Gutter contract item.

December 23, 2019

Published Date: 2024	SDDOT	VALLEY GUTTER	PLATE NUMBER 650.40
			Sheet 1 of 1

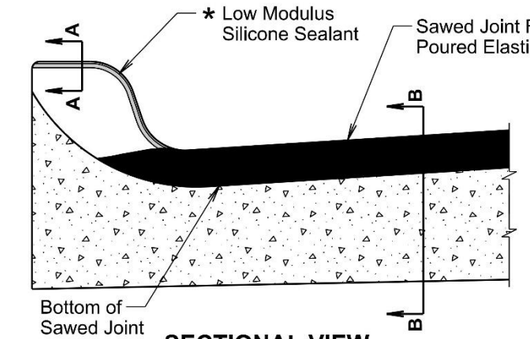

SECTIONAL VIEW
(Curb and Gutter Placed Monolithic with Adjacent Mainline PCC Pavement)

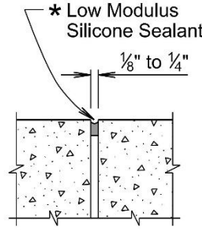

SECTION A-A

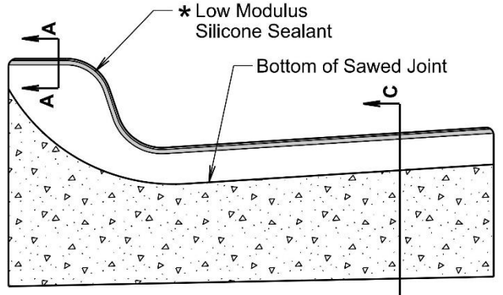

SECTIONAL VIEW
(Curb and Gutter not Placed Monolithic with Adjacent Mainline PCC Pavement or Mainline Surfacing is not PCC Pavement)

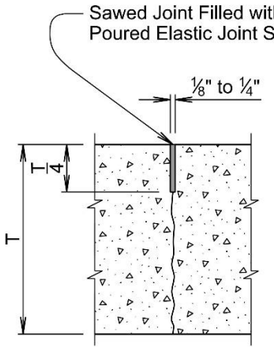

SECTION B-B

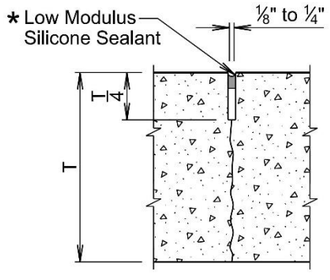

SECTION C-C

* The silicone sealant will be placed such that it completely seals the joint and is bonded to the sides of the clean joint as approved by the Engineer.

December 23, 2019

Published Date: 2024	SDDOT	JOINTS IN CONCRETE CURB AND GUTTER	PLATE NUMBER 650.90
			Sheet 1 of 2

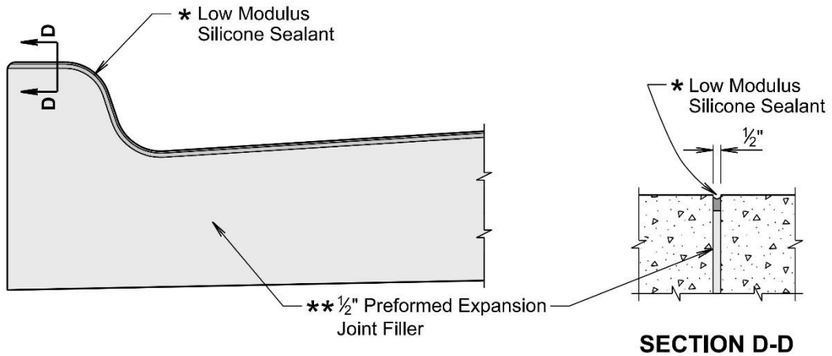

SECTIONAL VIEW
(Curb and Gutter at ½" Preformed Expansion Joint Filler Location)

SECTION D-D

* The silicone sealant will be placed such that it completely seals the joint and is bonded to the sides of the clean joint as approved by the Engineer.

GENERAL NOTES:

For illustrative reason, only the type B curb and gutter is shown.

** A ½-inch preformed expansion joint filler will be placed transversely in the curb and gutter at the following locations:

At each junction between the radius return of curb and gutter, and curb and gutter which is parallel to the project centerline.

At each junction between new curb and gutter and existing curb and gutter.

Transverse contraction joints will be constructed at 10 foot intervals in the concrete curb and gutter except when the concrete curb and gutter is constructed adjacent to mainline PCC pavement. When concrete curb and gutter is constructed adjacent to mainline PCC pavement, a transverse contraction joint will be constructed in the concrete curb and gutter at each mainline PCC pavement transverse contraction joint location.

When concrete curb and gutter is not placed monolithically with the mainline PCC pavement or when the adjacent mainline surfacing is not PCC concrete, the transverse contraction joints in the concrete curb and gutter will be 1½ inches deep if formed in the fresh concrete using a suitable grooving tool. If a saw is used to cut the contraction joints, then the depth of the joint will be at least ¼ the thickness of the concrete and the joint will be sealed in accordance with the details shown above.

December 23, 2019

Published Date: 2024	SDDOT	JOINTS IN CONCRETE CURB AND GUTTER	PLATE NUMBER 650.90
			Sheet 2 of 2

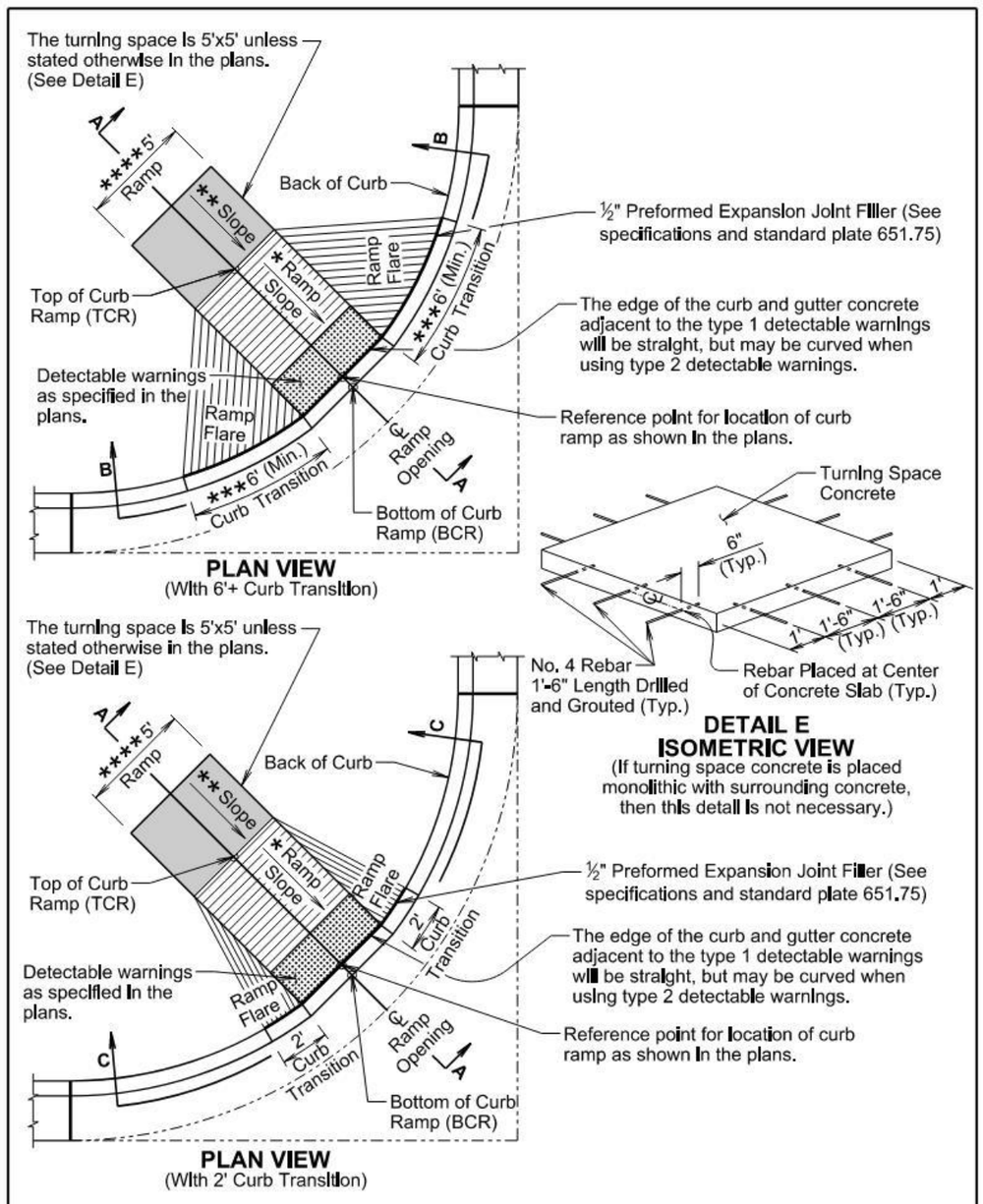

February 14, 2020

Published Date: 2024	SDDOT	TYPE 1 CURB RAMP (PERPENDICULAR CURB RAMP)	PLATE NUMBER 651.01
			Sheet 1 of 3

Curb ramp slopes are designed at 7.5% unless stated otherwise in the plans. The curb ramp may have a maximum slope of 8.3% and will not exceed 15' in length unless stated otherwise in the plans.

The curb ramp length may be computed based on the intersection of a continuous 1.5% theoretical slope from theoretical top of curb (TTOC) with the curb ramp using a continuous 7.5% curb ramp slope. The * elevation of point TCR will always be higher than the elevation of point TTOC unless specified otherwise in the plans. The curb ramp length dimension as shown in the plans will be adjusted as necessary to meet all slope and length requirements based on field geometrics.

The cross slope of the ramp will not be steeper than 2%. Plans are designed using a 1.5% slope unless stated otherwise in the plans.

** The slope in the turning space will not be steeper than 2% in any direction of pedestrian travel. Plans are designed using a 1.5% slope unless stated otherwise in the plans.

*** The curb transition will be a minimum of 6' long, a maximum of 10' long, and the curb transition slope will not be steeper than 10% unless stated otherwise in the plans. The curb transition length will be adjusted as necessary to meet slope and length requirements based on field geometrics.

**** The ramp width is 5' unless stated otherwise in the plans.

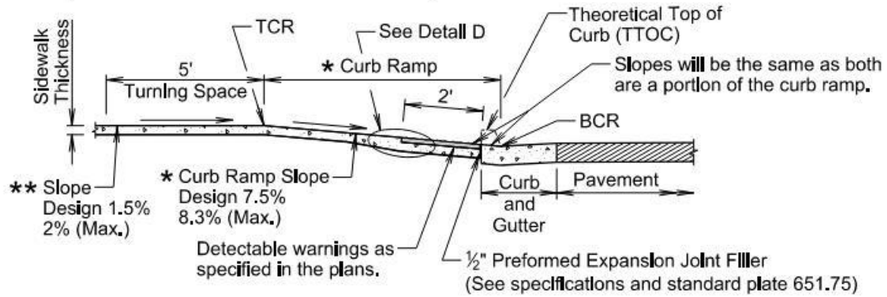

SECTION A-A

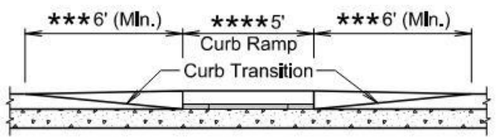

SECTIONAL VIEW B-B

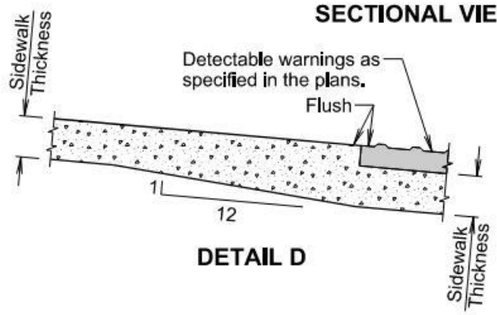

DETAIL D

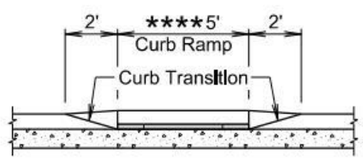

SECTIONAL VIEW C-C

February 14, 2020

Published Date: 2024	SDDOT	TYPE 1 CURB RAMP (PERPENDICULAR CURB RAMP)	PLATE NUMBER 651.01
			Sheet 2 of 3

GENERAL NOTES:

For illustrative purpose only, type 1 detectable warnings are shown in the drawings.

For illustrative purpose only, PCC fillet sections are shown in the drawings. The curb ramp depicted on this standard plate may be used with a PCC fillet section or curb and gutter.

For illustrative purpose only, the curb ramp location is shown at the center of a PCC fillet section. The curb ramp will be placed at the location stated in the plans.

Sidewalk will not be placed adjacent to the curb ramp flares when a 2-foot curb transition is used unless shown otherwise in the plans.

* Care will be taken to ensure a uniform grade on the curb ramp, free of sags and short grade changes.

Surface texture of the curb ramp will be obtained by coarse brooming transverse to the slope of the curb ramp.

The normal gutter line profile will be maintained through the area of the ramp opening.

Joints will be sawed or tooled into the concrete adjacent to the detectable warnings to alleviate possible corner cracking.

Care will be taken to ensure that the surface of the detectable warnings are clean and maintains a uniform color.

The detectable warnings will be cut as necessary to fit the plan specified limits of the detectable warnings. Cost for cutting the detectable warnings will be incidental to the corresponding detectable warning contract item.

There will be no separate payment for curb ramps. The curb ramp will be measured and paid for at the contract unit price per square foot for the corresponding concrete sidewalk contract item. The square foot area of the detectable warnings will be included in the measured and paid for quantity of sidewalk.

If rebar is placed in the turning space as depicted in detail E, the cost of the materials, labor, and equipment to furnish and install the rebar will be incidental to the contract unit price per square foot for the corresponding concrete sidewalk contract item.

The curb transitions and ramp opening will be measured and paid for at the contract unit price per foot for the corresponding curb and gutter contract item when curb and gutter is used. The curb transitions and ramp opening will be measured and paid for at the contract unit price per square yard for the corresponding PCC fillet section contract item when a PCC fillet section is used.

The type 1 detectable warnings will be measured to the nearest square foot. All costs for furnishing and installing the type 1 detectable warnings including labor, equipment, materials, and incidentals will be paid for at the contract unit price per square foot for "Type 1 Detectable Warnings".

The type 2 detectable warnings will be measured to the nearest square foot. All costs for furnishing and installing the type 2 detectable warnings including labor, equipment, and materials, including adhesive, necessary sealant or grout, and necessary grinding will be paid for at the contract unit price per square foot for "Type 2 Detectable Warnings".

February 14, 2020

Published Date: 2024	SDDOT	TYPE 1 CURB RAMP (PERPENDICULAR CURB RAMP)	PLATE NUMBER 651.01
			Sheet 3 of 3

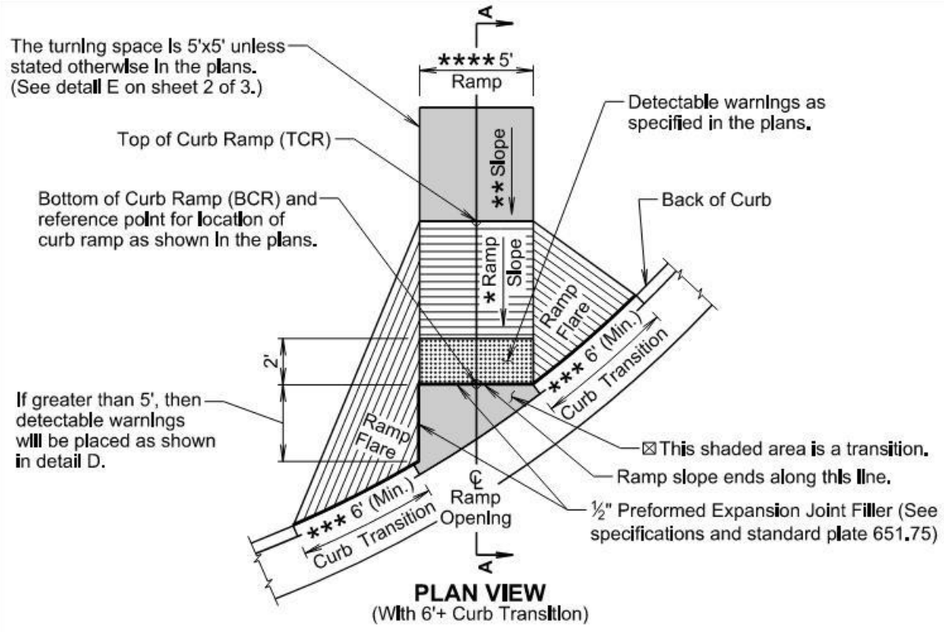

PLAN VIEW
(With 6'+ Curb Transition)

☒ The slope within the transition area will not be steeper than 5%. The concrete within the transition will be placed monolithic with the curb and gutter or fillet section concrete. The concrete thickness within the transition will be the same as the curb and gutter or fillet section concrete thickness.

*** The curb transition will be a minimum of 6' long, a maximum of 10' long, and the curb transition slope will not be steeper than 10% unless stated otherwise in the plans. The curb transition length will be adjusted as necessary to meet slope and length requirements based on field geometrics.

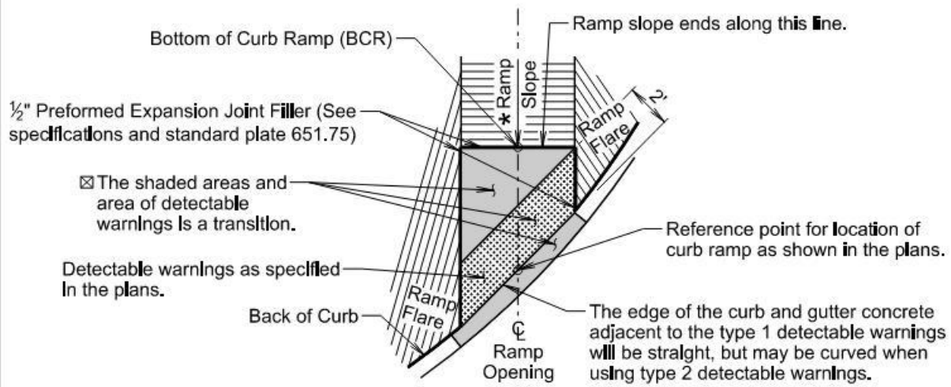

DETAIL D

February 14, 2020

Published Date: 2024	SDDOT	TYPE 2 CURB RAMP (DIRECTIONAL CURB RAMP)	PLATE NUMBER 651.02
			Sheet 1 of 3

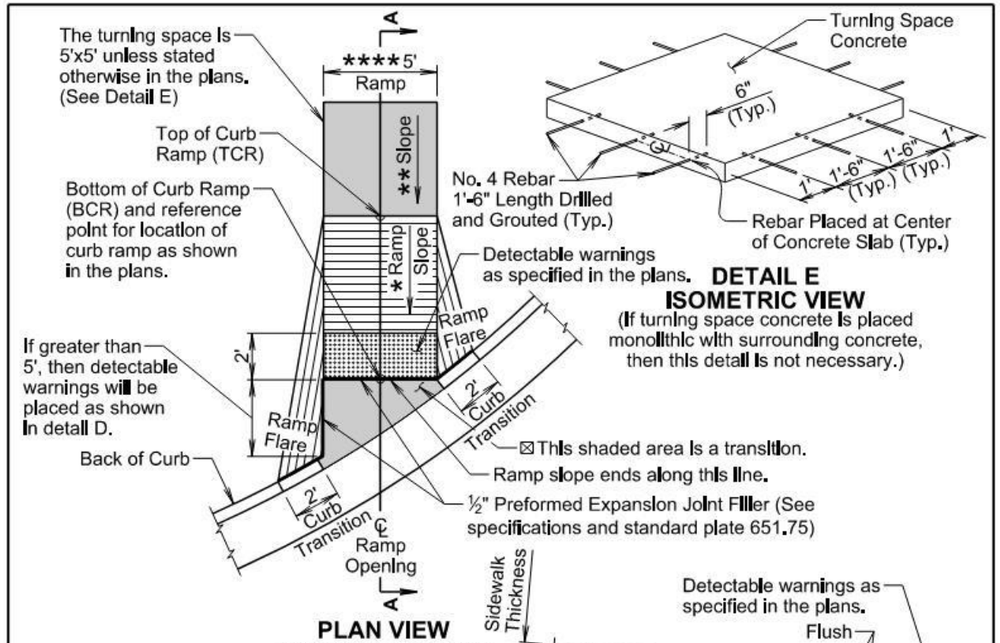

PLAN VIEW
(With 2' Curb Transition)

DETAIL E
ISOMETRIC VIEW
(If turning space concrete is placed monolithic with surrounding concrete, then this detail is not necessary.)

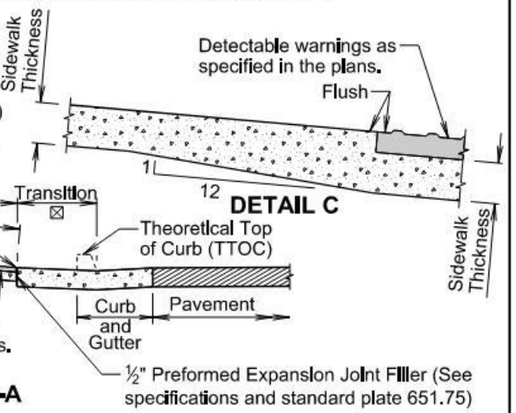

DETAIL C

SECTION A-A

Curb ramp slopes are designed at 7.5% unless stated otherwise in the plans. The curb ramp may have a maximum slope of 8.3% and will not exceed 15' in length unless stated otherwise in the plans.

* The elevation of point TCR will always be higher than the elevation of point TTOC unless specified otherwise in the plans. The curb ramp length dimension as shown in the plans will be adjusted as necessary to meet all slope and length requirements based on field geometrics.

The cross slope of the ramp will not be steeper than 2%. Plans are designed using a 1.5% slope unless stated otherwise in the plans.

** The slope in the turning space will not be steeper than 2% in any direction of pedestrian travel. Plans are designed using a 1.5% slope unless stated otherwise in the plans.

**** The ramp width is 5' unless stated otherwise in the plans.

February 14, 2020

Published Date: 2024	SDDOT	TYPE 2 CURB RAMP (DIRECTIONAL CURB RAMP)	PLATE NUMBER 651.02
			Sheet 2 of 3

GENERAL NOTES:

For illustrative purpose only, type 1 detectable warnings are shown in the drawings.

The curb ramp depicted on this standard plate may be used with a PCC fillet section or curb and gutter. The curb ramp will be placed at the location stated in the plans.

Sidewalk will not be placed adjacent to the curb ramp flares when a 2-foot curb transition is used unless shown otherwise in the plans.

* Care will be taken to ensure a uniform grade on the curb ramp, free of sags and short grade changes.

Surface texture of the curb ramp will be obtained by coarse brooming transverse to the slope of the curb ramp.

The normal gutter line profile will be maintained through the area of the ramp opening.

Joints will be sawed or tooled into the concrete adjacent to the detectable warnings to alleviate possible corner cracking.

Care will be taken to ensure that the surface of the detectable warnings are clean and maintains a uniform color.

The detectable warnings will be cut as necessary to fit the plan specified limits of the detectable warnings. Cost for cutting the detectable warnings will be incidental to the corresponding detectable warning contract item.

There will be no separate payment for curb ramps. The curb ramp will be measured and paid for at the contract unit price per square foot for the corresponding concrete sidewalk contract item. The square foot area of the detectable warnings will be included in the measured and paid for quantity of sidewalk.

If rebar is placed in the Turning Space as depicted in DETAIL E, the cost of the materials, labor, and equipment to furnish and install the rebar will be incidental to the contract unit price per square foot for the corresponding concrete sidewalk contract item.

The curb transitions and ramp opening will be measured and paid for at the contract unit price per foot for the corresponding curb and gutter contract item when curb and gutter is used. The curb transitions and ramp opening will be measured and paid for at the contract unit price per square yard for the corresponding PCC fillet section contract item when a PCC fillet section is used.

All costs for furnishing and installing the transition area at the base of the curb ramp will be incidental to the contract unit price per foot for the corresponding curb and gutter contract item when curb and gutter is used and will be incidental to the contract unit price per square yard for the corresponding PCC fillet section contract item when a PCC fillet section is used.

The type 1 detectable warnings will be measured to the nearest square foot. All costs for furnishing and installing the type 1 detectable warnings including labor, equipment, materials, and incidentals will be paid for at the contract unit price per square foot for "Type 1 Detectable Warnings".

The type 2 detectable warnings will be measured to the nearest square foot. All costs for furnishing and installing the type 2 detectable warnings including labor, equipment, and materials, including adhesive, necessary sealant or grout, and necessary grinding will be paid for at the contract unit price per square foot for "Type 2 Detectable Warnings".

February 14, 2020

Published Date: 2024	SDDOT	TYPE 2 CURB RAMP (DIRECTIONAL CURB RAMP)	PLATE NUMBER 651.02
			Sheet 3 of 3

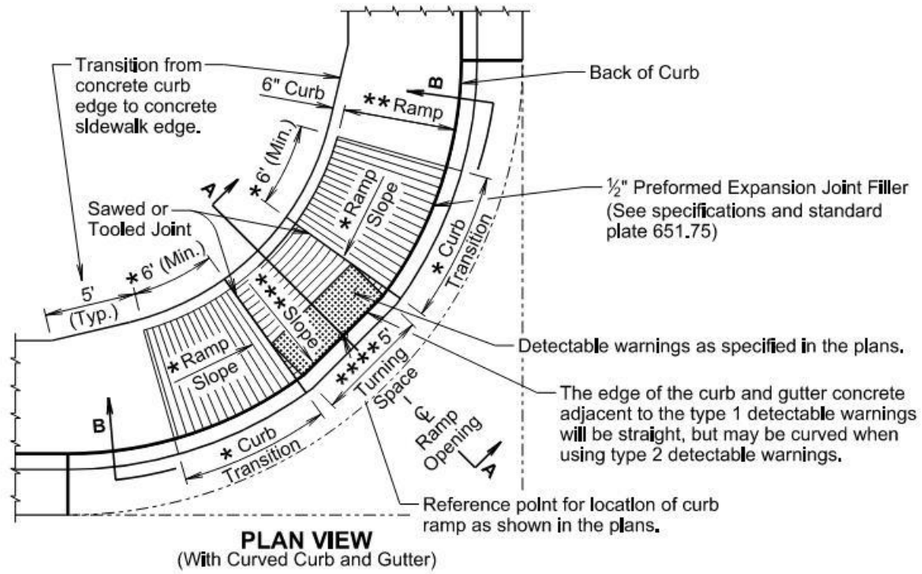

PLAN VIEW
(With Curved Curb and Gutter)

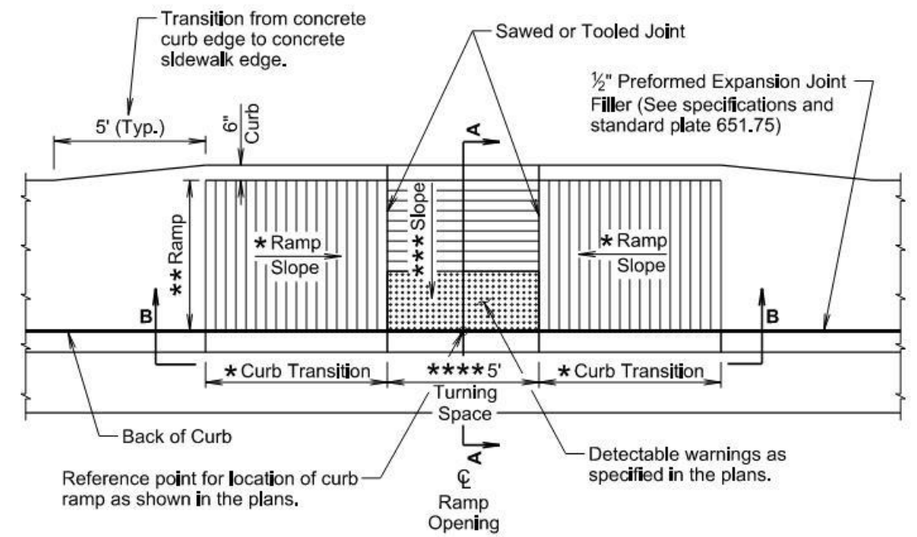

PLAN VIEW
(With Straight Curb and Gutter)

April 18, 2021

Published Date: 2024	SDDOT	TYPE 3 CURB RAMP (PARALLEL CURB RAMP)	PLATE NUMBER 651.03
			Sheet 1 of 3

* The curb transition slope will match the curb ramp slope. Curb ramp slopes are designed at 7.5% unless stated otherwise in the plans. The curb ramp may have a maximum slope of 8.3% at any location of the curb ramp and will not exceed 15' in length unless stated otherwise in the plans. The curb transitions and curb ramp lengths will be adjusted as necessary to meet all slope and length requirements based on field geometrics.

** The cross slope of the ramp will not be steeper than 2% and the ramp width is 5' unless stated otherwise in the plans. Plans are designed using a 1.5% cross slope for the ramp unless stated otherwise in the plans.

*** The slope in the turning space will not be steeper than 2% in any direction of pedestrian travel. Plans are designed using a 1.5% slope unless stated otherwise in the plans.

**** The turning space is 5'x5' unless stated otherwise in the plans.

☒ The curb height will be 6" unless stated otherwise in the plans.

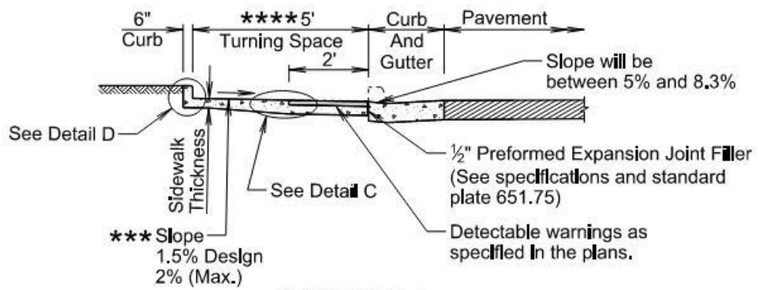

SECTION A-A

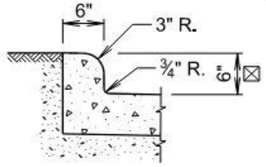

DETAIL D

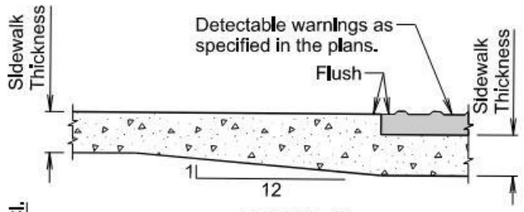

DETAIL C

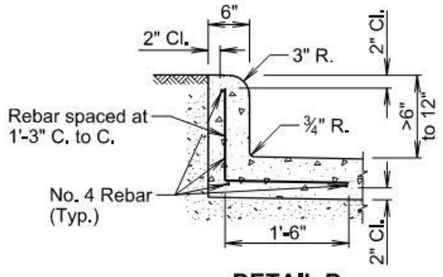

DETAIL D
(Use this detail when the curb height is greater than 6" and less than 12")

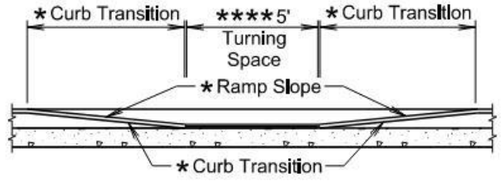

SECTIONAL VIEW B-B

April 18, 2021

Published Date: 2024	SDDOT	TYPE 3 CURB RAMP (PARALLEL CURB RAMP)	PLATE NUMBER 651.03
			Sheet 2 of 3

GENERAL NOTES:

For illustrative purpose only, type 1 detectable warnings are shown in the drawings.

For illustrative purpose only, a PCC fillet section is shown in one of the drawings. The curb ramp depicted on this standard plate may be used with a PCC fillet section or with curb and gutter.

The curb ramp will be placed at the location stated in the plans.

Sidewalk adjacent to the curb ramp will be as shown in the plans.

Care will be taken to ensure a uniform grade on the curb ramp, free of sags and short grade changes.

Surface texture of the curb ramp will be obtained by coarse brooming transverse to the slope of the curb ramp.

The normal gutter line profile will be maintained through the area of the ramp opening.

Joints will be sawed or tooled into the concrete adjacent to the detectable warnings to alleviate possible corner cracking (see plan view for joint location).

Care will be taken to ensure that the surface of the detectable warnings are clean and maintains a uniform color.

The detectable warnings will be cut as necessary to fit the plan specified limits of the detectable warnings. Cost for cutting the detectable warnings will be incidental to the corresponding detectable warning contract item.

When curb height is greater than 6" and less than 12", reinforcing steel is required in accordance with the detail on sheet 2 of 3. The reinforcing steel will conform to ASTM A615, Grade 60. Cost for furnishing and installing the reinforcing steel will be incidental to the contract unit price per square foot for the corresponding concrete sidewalk contract item.

There will be no separate payment for curb ramps. The curb ramp will be measured and paid for at the contract unit price per square foot for the corresponding concrete sidewalk contract item. The square foot area of the detectable warnings and the curb along the short radius will be included in the measured and paid for quantity of sidewalk.

The curb transitions and ramp opening will be measured and paid for at the contract unit price per foot for the corresponding curb and gutter contract item when curb and gutter is used. The curb transitions and ramp opening will be measured and paid for at the contract unit price per square yard for the corresponding PCC fillet section contract item when a PCC fillet section is used.

The type 1 detectable warnings will be measured to the nearest square foot. All costs for furnishing and installing the type 1 detectable warnings including labor, equipment, materials, and incidentals will be paid for at the contract unit price per square foot for "Type 1 Detectable Warnings".

The type 2 detectable warnings will be measured to the nearest square foot. All costs for furnishing and installing the type 2 detectable warnings including labor, equipment, and materials, including adhesive, necessary sealant or grout, and necessary grinding will be paid for at the contract unit price per square foot for "Type 2 Detectable Warnings".

April 18, 2021

Published Date: 2024	SDDOT	TYPE 3 CURB RAMP (PARALLEL CURB RAMP)	PLATE NUMBER 651.03
			Sheet 3 of 3

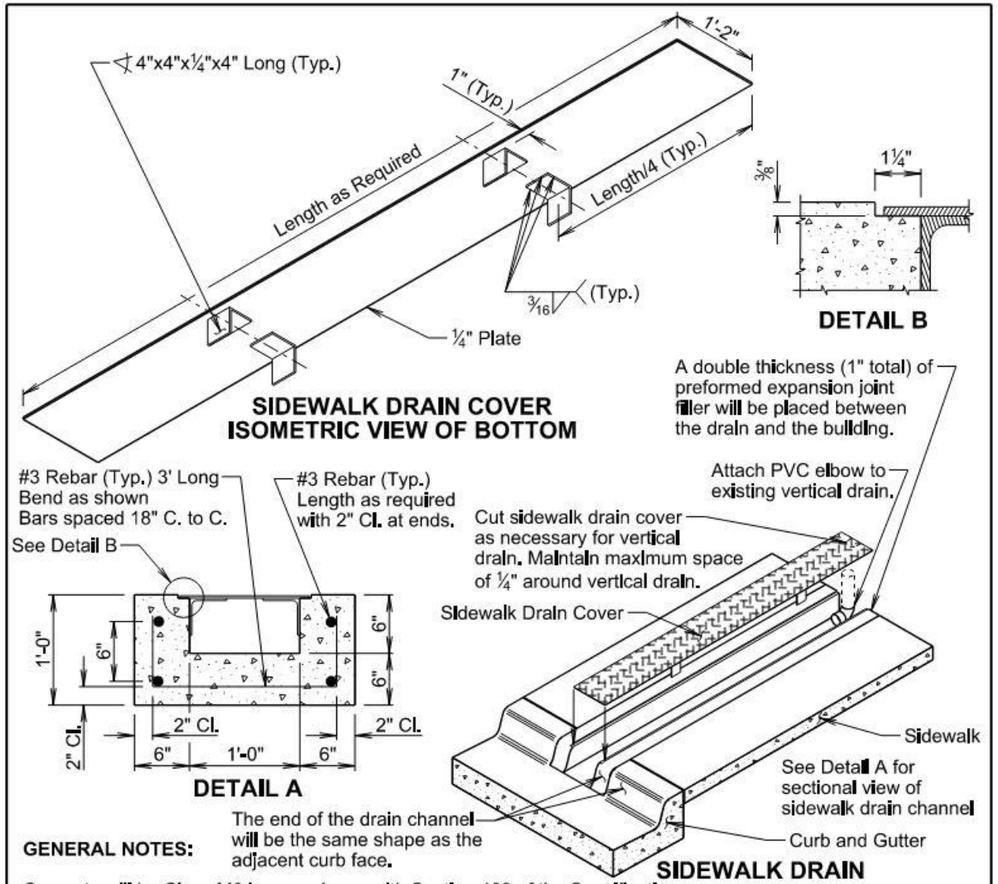

GENERAL NOTES:

Concrete will be Class M6 in accordance with Section 462 of the Specifications.

Reinforcing steel will conform to ASTM A615, Grade 60.

Structural Steel will conform to ASTM A36. The sidewalk drain cover will conform to ASTM A786.

Welding and weld inspection will be in conformance with the current edition of the AWS D1.1 Structural Welding Code-Steel.

The cover plate assembly will be galvanized after fabrication. Galvanizing will be in accordance with ASTM A123.

All costs associated for providing the required curb cut will be incidental to the contract unit price per foot for the corresponding curb and gutter contract item.

The sidewalk drain will be measured and paid for to the nearest tenth of a foot. The length of the drain will be measured from the gutter to the necessary end location adjacent to the building. All costs associated with furnishing and installing the sidewalk drain channel and cover including the attachment to the vertical drain will be incidental to the contract unit price per foot for "Sidewalk Drain".

February 14, 2020

Published Date: 2024	SDDOT	SIDEWALK DRAIN	PLATE NUMBER 651.50
			Sheet 1 of 1

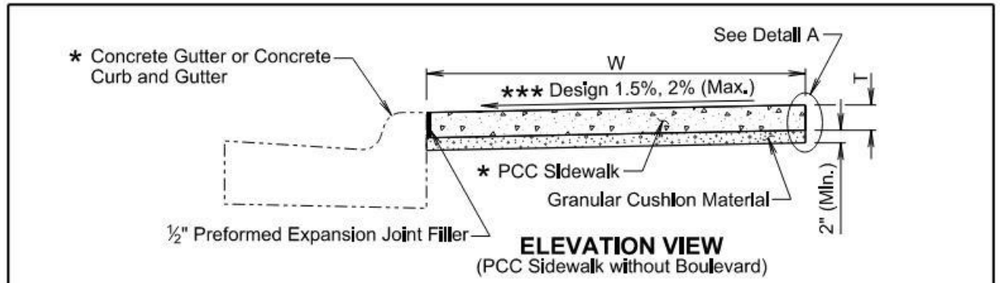

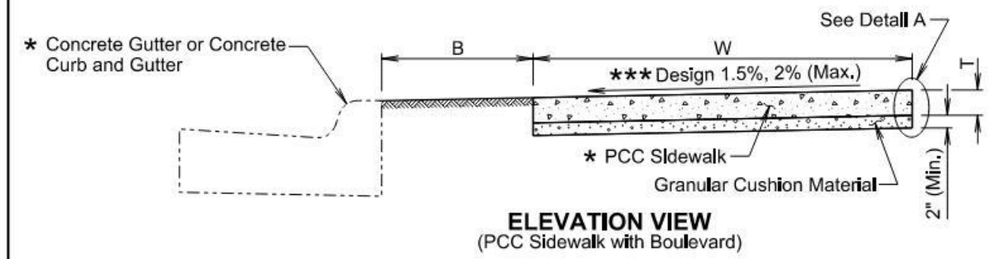

B Width of boulevard as specified in the plans.

T Thickness of PCC sidewalk as specified in the plans.

W Width of PCC sidewalk as specified in the plans.

* Type as specified in the plans.

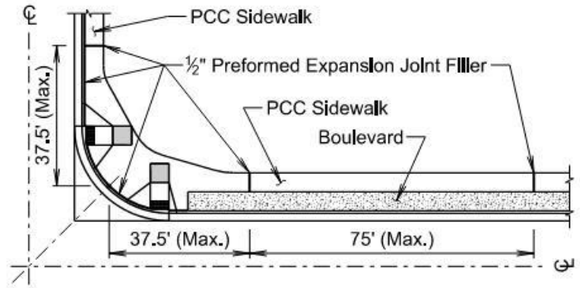

GENERAL NOTES:

The PCC sidewalk will be constructed in accordance with Section 651 of the Specifications.

*** The cross slope of the sidewalk is designed at 1.5% and the maximum slope allowed is 2% unless specified otherwise in the plans.

The maximum length between expansion joints in the PCC sidewalk is 75 feet.

PCC sidewalk placed adjacent to intersection of roadways will have an expansion joint placed transversely a maximum of 37.5 feet from the intersection. See Plan View.

An expansion joint in the PCC sidewalk will consist of a ½ -inch thick preformed expansion joint filler material placed full depth and width of the PCC sidewalk.

** Large areas of PCC pavement adjacent to the PCC sidewalk may require a different joint treatment than shown in the detail. If a different joint detail is necessary, plans will contain the joint detail and the Contractor will construct the joint treatment in accordance with the plans.

February 14, 2020

Published Date: 2024	SDDOT	PCC SIDEWALK	PLATE NUMBER 651.75
			Sheet 1 of 2

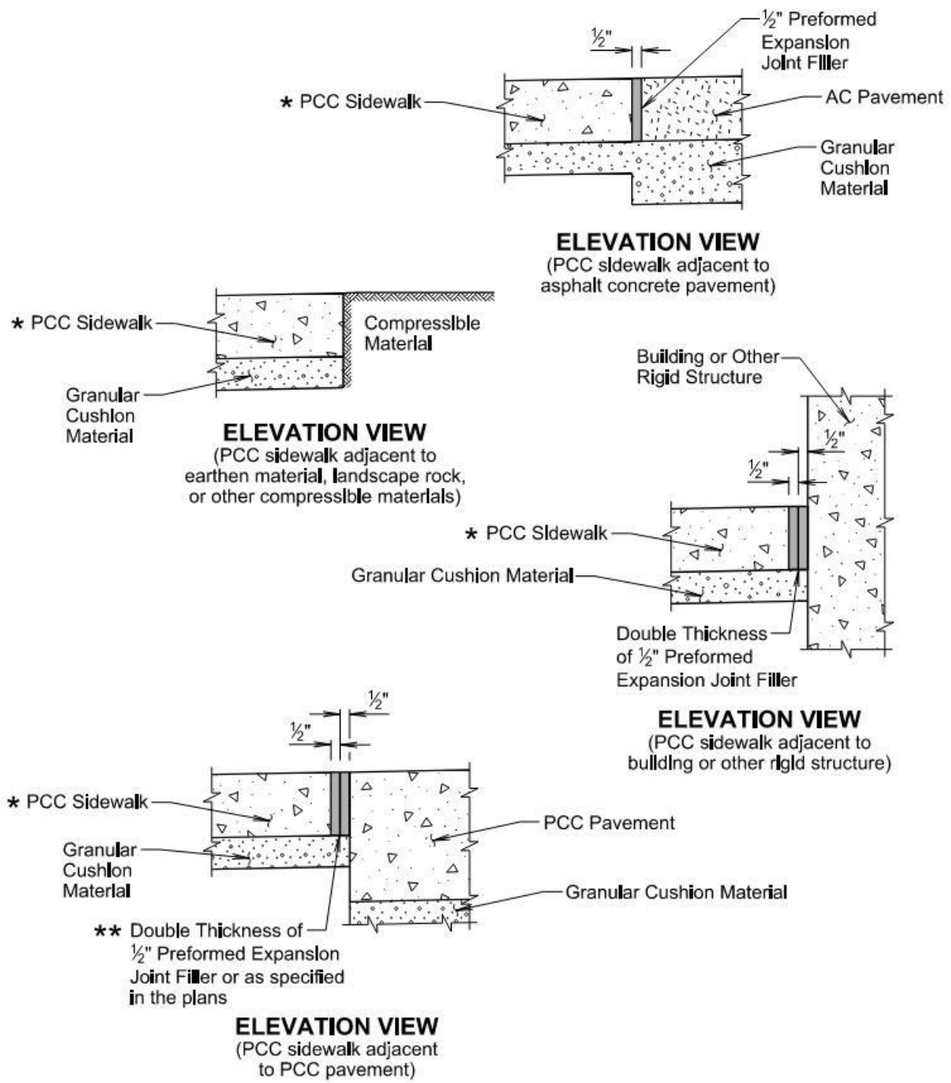

DETAIL A
(Use Appropriate Detail(s))

February 14, 2020

Published Date: 2024	SDDOT	PCC SIDEWALK	PLATE NUMBER 651.75
			Sheet 2 of 2

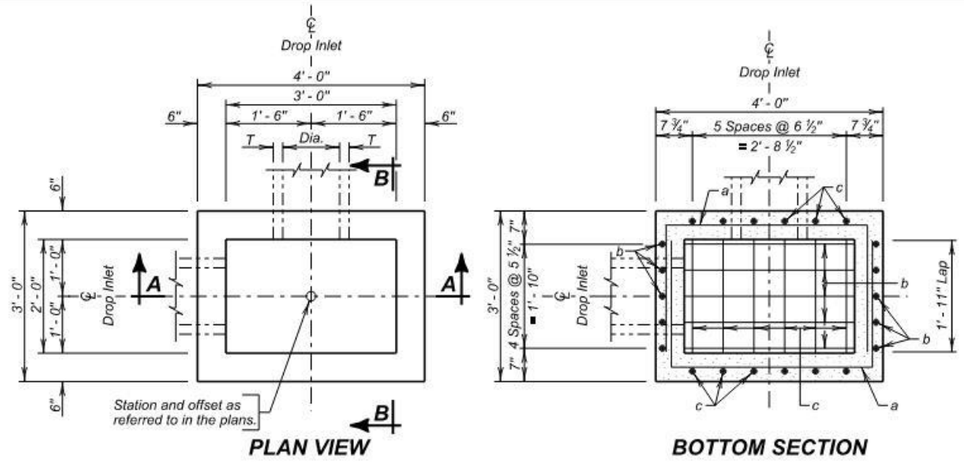

ESTIMATED QUANTITIES

ITEM	UNIT	CONSTANT QUANTITY	VARIABLE QUANTITY
✳ Class M6 Concrete	Cu. Yd.	0.26	0.22H
Reinforcing Steel	Lb.	83.03	28.97H
Frame and Grate Assembly	Each	1	———

DROP INLETS FOR 12" TO 24" DIAMETER PIPE

SPECIFICATIONS

Design Specifications: AASHTO LRFD Bridge Design Specifications, 2012 Edition.

Construction Specifications: South Dakota Standard Specifications for Roads and Bridges, Current Edition and required Provisions, Supplemental Specifications, and Special Provisions as included in the Proposal.

GENERAL NOTES:

Design Live Load: HL-93. No construction loading in excess of legal load was considered.

Reinforcing steel shall conform to ASTM A615 grade 60. The d bars shall be lapped 12 inches with the b and c bars. Cut and bend reinforcing steel as required to place pipe(s) through the drop inlet wall.

Drop inlet may be precast. If precast drop inlet details differ from this standard plate, submit a checked design done by a SD registered P.E. and shop plans to the Office of Bridge Design for approval.

✳ *Reduce total quantities of concrete by the amount of concrete displaced by the pipe(s). The total quantity of concrete shall be computed to the nearest hundredth of a cubic yard. The total quantity of reinforcing steel shall be computed to the nearest pound.*

Drop inlet shown may be modified by the addition or omission of connecting pipes as noted elsewhere in the plans. All pipes entering drop inlet must fit between the inside face of walls and shall not enter through the corners.

Maximum R.C.P. diameter shall not exceed 18 inches on the 2-foot wide side and shall not exceed 24 inches (24 inches for R.C. arch) on the 3-foot wide side of the drop inlet.

The dimension of H is in feet. Maximum H is 10 feet.

PIPE DISPLACEMENT REDUCTIONS

	Diameter (Inches)	Wall T (Inches)	Class M6 Concrete (Cu. Yd.)
R.C.P.	12	2	0.03
	15	2 ¼	0.04
	18	2 ½	0.05
	24	3	0.09
R.C. ARCH	18	2 ½	0.05
	24	3 ½	0.09

December 16, 2015

Published Date: 2024	SDDOT	2'X 3' TYPE B REINFORCED CONCRETE DROP INLET	PLATE NUMBER 670.01
			Sheet 1 of 2

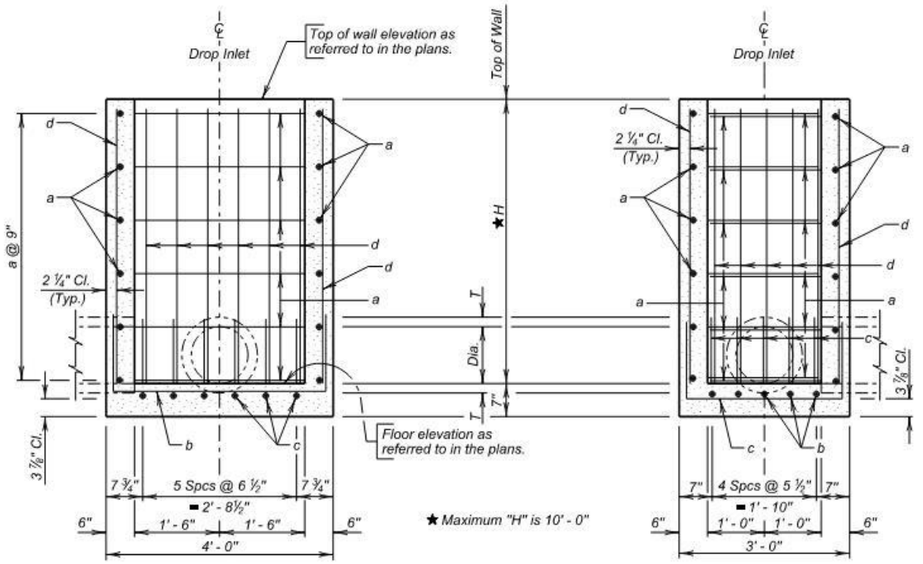

SEC. A - A **SEC. B - B**

REINFORCING SCHEDULE

Mk.	No.	Size	Length	Type	Bending Details
a	2.67H	4	8' - 0"	17	
b	5	5	6' - 3"	17	
c	6	4	5' - 3"	17	
d	22	4	H - 2"	Str.	

NOTE:
All dimensions are out to out of bars.

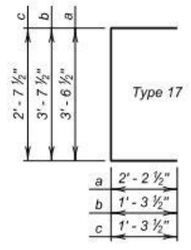

December 16, 2015

Published Date: 2024

SDDOT

2'X 3' TYPE B REINFORCED CONCRETE DROP INLET

PLATE NUMBER 670.01

Sheet 2 of 2

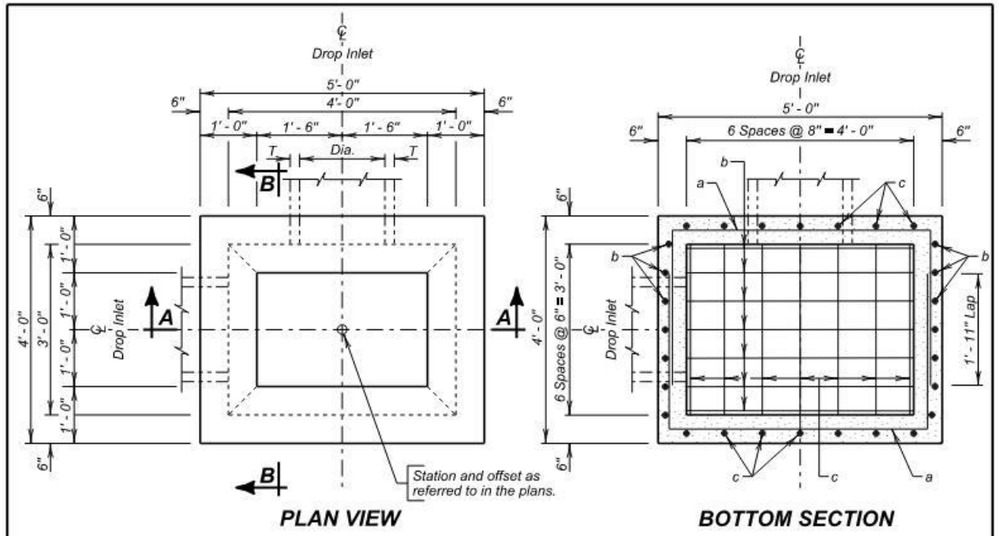

ESTIMATED QUANTITIES

ITEM	UNIT	CONSTANT QUANTITY	VARIABLE QUANTITY
⚹ Class M6 Concrete	Cu. Yd.	0.72	0.30H
Reinforcing Steel	Lb.	130.93	36.54H
Frame and Grate Assembly	Each	1	———

DROP INLETS FOR 12" TO 36" DIAMETER PIPE

SPECIFICATIONS

Design Specifications: AASHTO LRFD Bridge Design Specifications, 2012 Edition.

Construction Specifications: South Dakota Standard Specifications for Roads and Bridges, Current Edition and required Provisions, Supplemental Specifications, and Special Provisions as included in the Proposal.

GENERAL NOTES:

Design Live Load: HL-93. No construction loading in excess of legal load was considered.

Reinforcing steel shall conform to ASTM A615 grade 60. The d bars shall be lapped 12 inches with the b and c bars. Cut and bend reinforcing steel as required to place pipe(s) through the drop inlet wall.

Drop inlet may be precast. If precast drop inlet details differ from this standard plate, submit a checked design done by a SD registered P.E. and shop plans to the Office of Bridge Design for approval.

⚹ Reduce total quantities of concrete by the amount of concrete displaced by the pipe(s). The total quantity of concrete shall be computed to the nearest hundredth of a cubic yard. The total quantity of reinforcing steel shall be computed to the nearest pound.

Drop inlet shown may be modified by the addition or omission of connecting pipes as noted elsewhere in the plans. All pipes entering drop inlet must fit between the inside face of walls and shall not enter through the corners.

Maximum R.C.P. diameter shall not exceed 24 inches (24 inches for R. C. arch) on the 3-foot wide side and shall not exceed 36 inches (30 inches for R.C. arch) on the 4-foot wide side of the drop inlet.

The dimension of H is in feet. Maximum H is 10 feet.

PIPE DISPLACEMENT REDUCTIONS

	Diameter (Inches)	Wall T (Inches)	Class M6 Concrete (Cu. Yd.)
R.C.P.	12	2	0.03
	15	2 ¼	0.04
	18	2 ½	0.05
	24	3	0.09
	30	3 ½	0.14
	36	4	0.20
R.C. ARCH	18	2 ½	0.05
	24	3 ½	0.09
	30	4	0.14

December 16, 2015

Published Date: 2024

SDDOT

3'X 4' TYPE B REINFORCED CONCRETE DROP INLET

PLATE NUMBER 670.02

Sheet 1 of 2

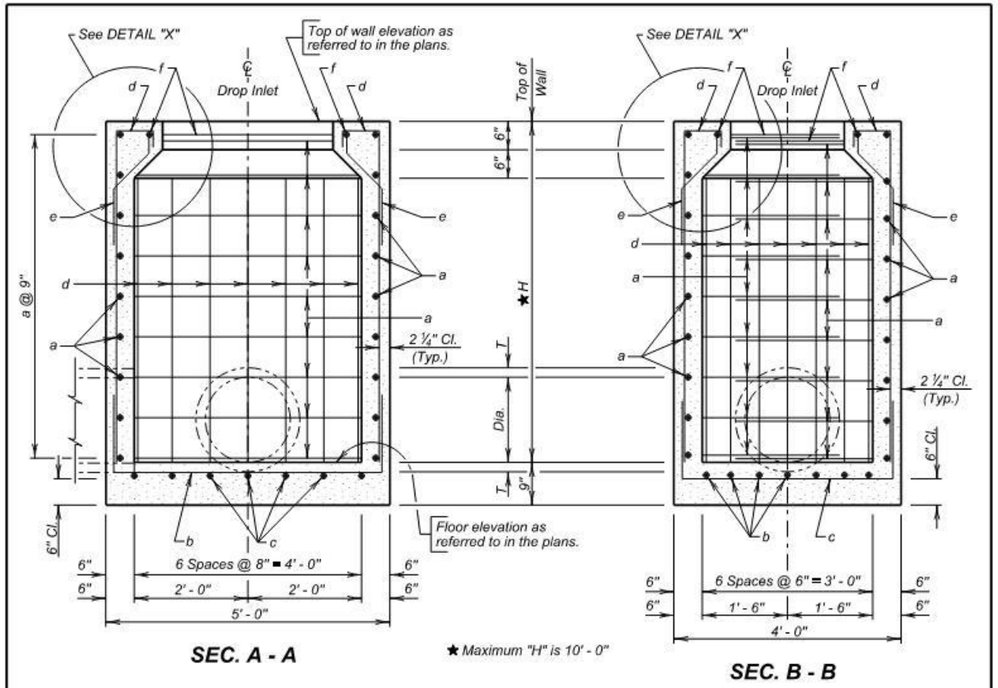

SEC. A - A

★ Maximum "H" is 10' - 0"

SEC. B - B

REINFORCING SCHEDULE

Mk.	No.	Size	Length	Type	Bending Details
a	2.67H	4	10' - 0"	17	
b	7	4	7' - 6"	17	
c	7	4	6' - 6"	17	
d	28	4	H + 9"	S17	
e	28	4	2' - 3"	S19	
f	2	4	7' - 0"	17	

NOTE:
All dimensions are out to out of bars.

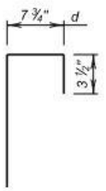

Type S17

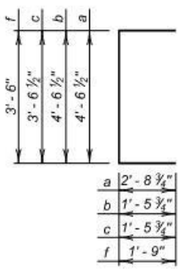

Type 17

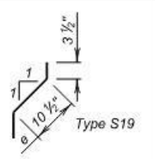

Type S19

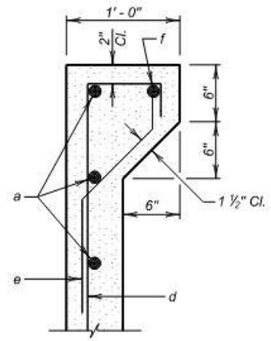

DETAIL "X"

December 16, 2015

Published Date: 2024	SDDOT	3'X 4' TYPE B REINFORCED CONCRETE DROP INLET	PLATE NUMBER 670.02
			Sheet 2 of 2

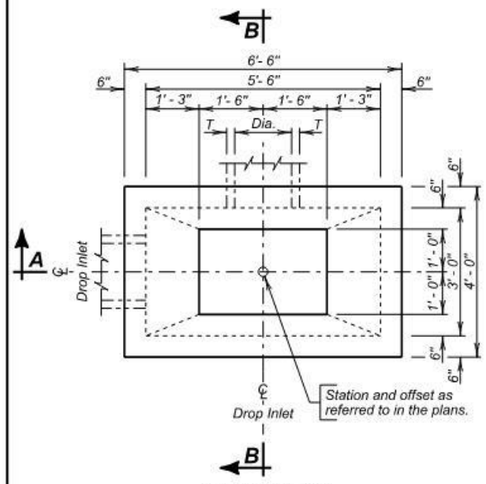

PLAN VIEW

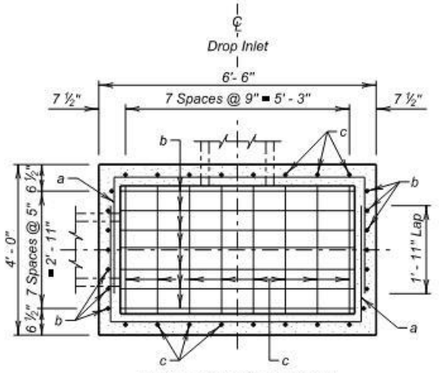

BOTTOM SECTION

ESTIMATED QUANTITIES

ITEM	UNIT	CONSTANT QUANTITY	VARIABLE QUANTITY
⚹ Class M6 Concrete	Cu. Yd.	1.02	0.35H
Reinforcing Steel	Lb.	130.93	31.2H
Frame and Grate Assembly	Each	1	———

DROP INLETS FOR 12" TO 54" DIAMETER PIPE

SPECIFICATIONS

Design Specifications: AASHTO LRFD Bridge Design Specifications, 2012 Edition.

Construction Specifications: South Dakota Standard Specifications for Roads and Bridges, Current Edition and required Provisions, Supplemental Specifications, and Special Provisions as included in the Proposal.

GENERAL NOTES

Design Live Load: HL-93. No construction loading in excess of legal load was considered.

Reinforcing steel shall conform to ASTM A615 grade 60. The d and e bars shall be lapped 12 inches with the c and b bars, respectively. Cut and bend reinforcing steel as required to place pipe(s) through the drop inlet wall.

Drop inlet may be precast. If precast drop inlet details differ from this standard plate, submit a checked design done by a SD registered P.E. and shop plans to the Office of Bridge Design for approval.

⚹ Reduce total quantities of concrete by the amount of concrete displaced by the pipe(s). The total quantity of concrete shall be computed to the nearest hundredth of a cubic yard. The total quantity of reinforcing steel shall be computed to the nearest pound.

Drop inlet shown may be modified by the addition or omission of connecting pipes as noted elsewhere in the plans. All pipes entering drop inlet must fit between the inside face of walls and shall not enter though the corners.

Maximum R.C.P. diameter shall not exceed 24 inches (24 inches for R. C. arch) on the 3-foot wide side and shall not exceed 54 inches (42 inches for R.C. arch) on the 5.5-foot wide side of the drop inlet.

The dimension of H is in feet. Maximum H is 10 feet.

PIPE DISPLACEMENT REDUCTIONS

	Diameter (Inches)	Wall T (Inches)	Class M6 Concrete (Cu. Yd.)
R.C.P.	12	2	0.03
	15	2 ¼	0.04
	18	2 ½	0.05
	24	3	0.09
	30	3 ½	0.14
	36	4	0.20
	42	4 ½	0.26
	48	5	0.34
	54	5 ½	0.43
R.C. ARCH	18	2 ½	0.05
	24	3 ½	0.09
	30	4	0.14
	36	4 ½	0.19
	42	4 ½	0.24

December 16, 2015

Published Date: 2024	SDDOT	3'X 5.5' TYPE B REINFORCED CONCRETE DROP INLET	PLATE NUMBER 670.03
			Sheet 1 of 2

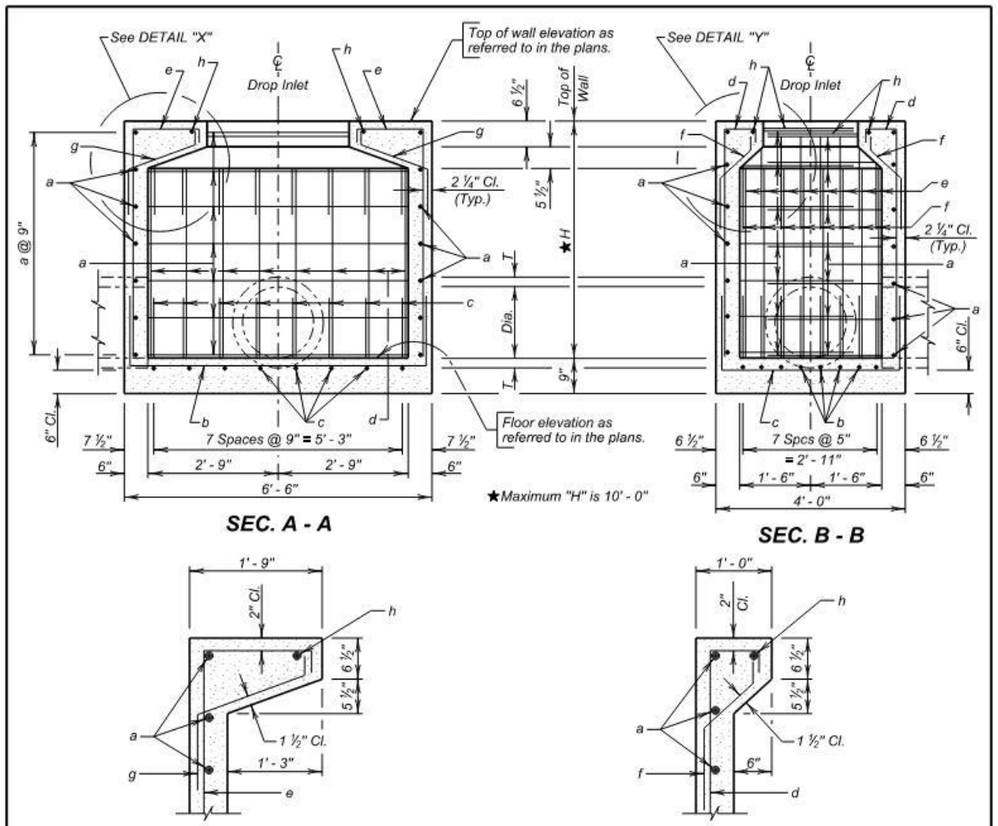

SEC. A - A **SEC. B - B**

DETAIL "X" **DETAIL "Y"**

REINFORCING SCHEDULE

Mk.	No.	Size	Length	Type	Bending Details
a	2.67H	4	11' - 6"	17	
b	8	4	9' - 0"	17	
c	8	4	6' - 6"	17	
d	8	4	H + 9"	S17	
e	8	4	H + 18"	S17	
f	8	4	2' - 3"	S19	
g	8	4	2' - 9"	S19	
h	2	4	7' - 0"	17	

NOTE:
All dimensions are out to out of bars.

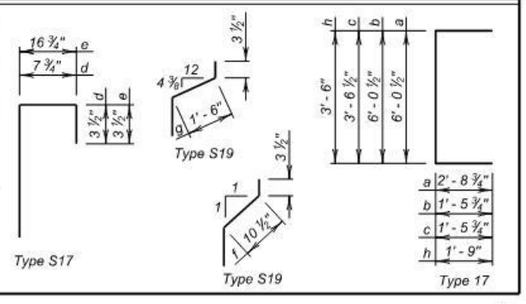

December 16, 2015

Published Date: 2024	SDDOT	3' X 5.5' TYPE B REINFORCED CONCRETE DROP INLET	PLATE NUMBER 670.03
			Sheet 2 of 2

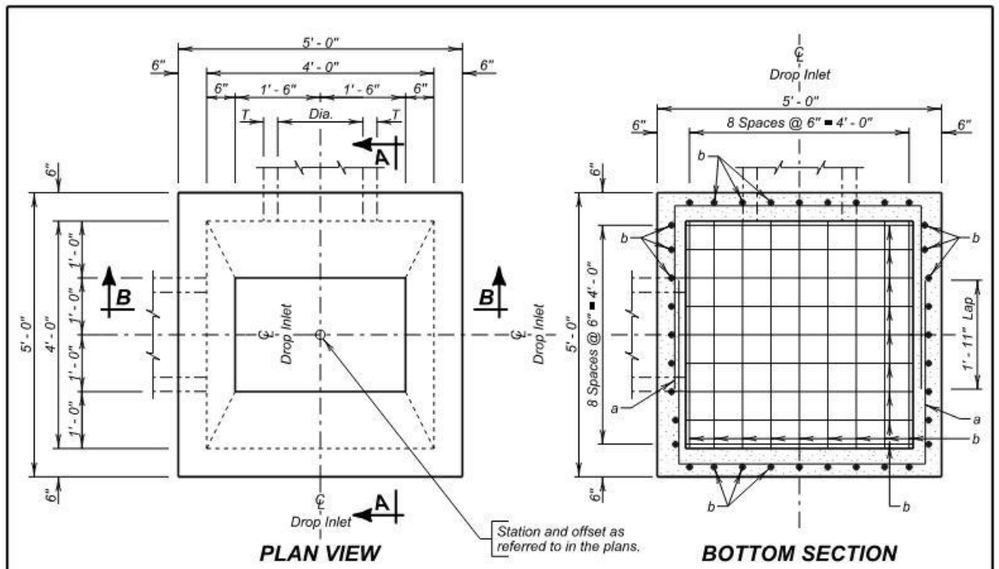

PLAN VIEW **BOTTOM SECTION**

ESTIMATED QUANTITIES

ITEM	UNIT	CONSTANT QUANTITY	VARIABLE QUANTITY
⚹ Class M6 Concrete	Cu. Yd.	0.98	0.33H
Reinforcing Steel	Lb.	180.69	43.67H
Frame and Grate Assembly	Each	1	———

DROP INLETS FOR 12" TO 36" DIAMETER PIPE

SPECIFICATIONS

Design Specifications: AASHTO LRFD Bridge Design Specifications, 2012 Edition.

Construction Specifications: South Dakota Standard Specifications for Roads and Bridges, Current Edition and required Provisions, Supplemental Specifications, and Special Provisions as included in the Proposal.

GENERAL NOTES:

Design Live Load: HL-93. No construction loading in excess of legal load was considered.

Reinforcing steel shall conform to ASTM A615 grade 60. The d bars shall be lapped 12 inches with the b and c bars. Cut and bend reinforcing steel as required to place pipe(s) through the drop inlet wall.

Drop inlet may be precast. If precast drop inlet details differ from this standard plate, submit a checked design done by a SD registered P.E. and shop plans to the Office of Bridge Design for approval.

⚹ Reduce total quantities of concrete by the amount of concrete displaced by the pipe(s). The total quantity of concrete shall be computed to the nearest hundredth of a cubic yard. The total quantity of reinforcing steel shall be computed to the nearest pound.

Drop inlet shown may be modified by the addition or omission of connecting pipes as noted elsewhere in the plans. All pipes entering drop inlet must fit between the inside face of walls and shall not enter through the corners.

Maximum R.C.P. diameter shall not exceed 36 inches (30 inches for R. C. arch) on the 4-foot wide side of the drop inlet.

The dimension of H is in feet. Maximum H is 10 feet.

PIPE DISPLACEMENT REDUCTIONS

	Diameter (Inches)	Wall T (Inches)	Class M6 Concrete (Cu. Yd.)
R.C.P.	12	2	0.03
	15	2 ¼	0.04
	18	2 ½	0.05
	24	3	0.09
	30	3 ½	0.14
	36	4	0.20
R.C. ARCH	18	2 ½	0.05
	24	3 ½	0.09
	30	4	0.14

December 16, 2015

Published Date: 2024	SDDOT	4' X 4' TYPE B REINFORCED CONCRETE DROP INLET	PLATE NUMBER 670.04
			Sheet 1 of 2

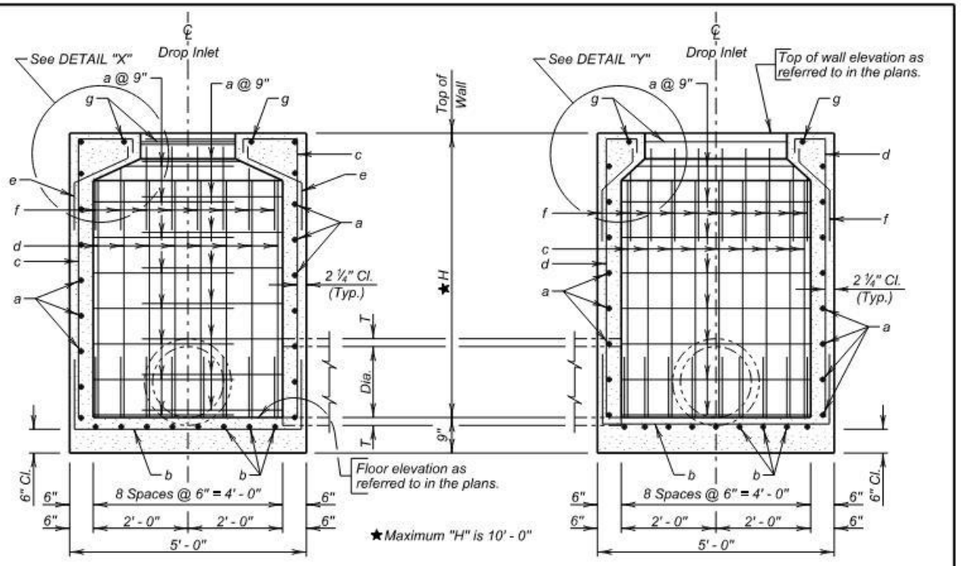

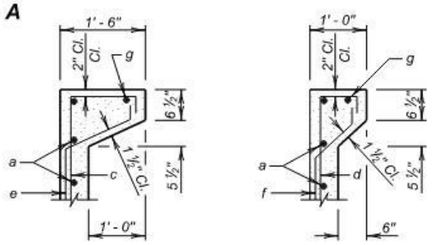

REINFORCING SCHEDULE

Mk.	No.	Size	Length	Type
a	2.67H	4	11' - 0"	17
b	18	4	7' - 6"	17
c	18	4	H + 15"	S17
d	18	4	H + 9"	S17
e	18	4	2' - 6"	S19
f	18	4	2' - 3"	S19
g	2	4	7' - 0"	17

NOTE:
All dimensions are out to out of bars.

Bending Details

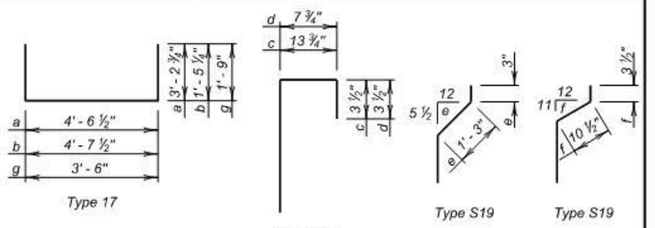

December 16, 2015

Published Date: 2024

SDDOT

4' X 4' TYPE B
REINFORCED CONCRETE DROP INLET

PLATE NUMBER
670.04

Sheet 2 of 2

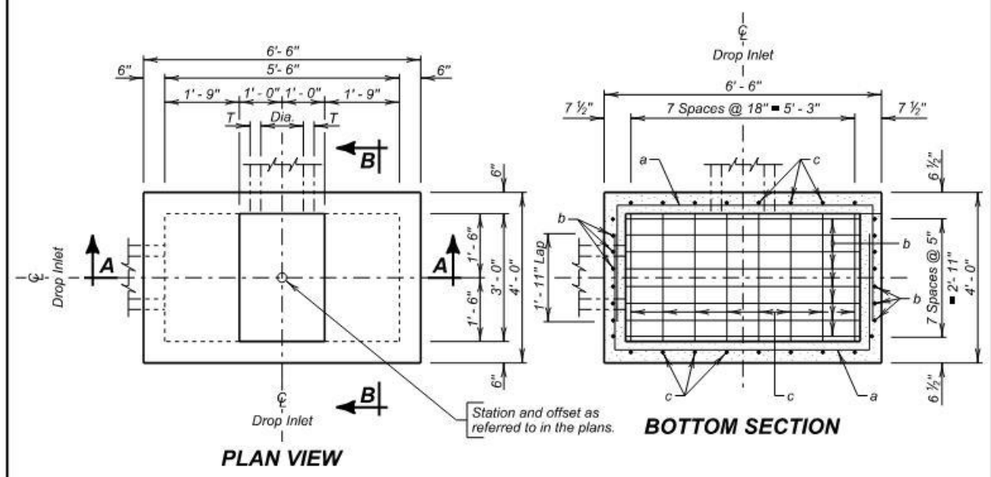

ESTIMATED QUANTITIES

ITEM	UNIT	CONSTANT QUANTITY	VARIABLE QUANTITY
⚹ Class M6 Concrete	Cu. Yd.	1.03	0.35H
Reinforcing Steel	Lb.	161.19	47.89H
Grate Assembly	Each	1	———

DROP INLETS FOR 12" TO 54" DIAMETER PIPE

SPECIFICATIONS

Design Specifications: AASHTO LRFD Bridge Design Specifications, 2012 Edition.

Construction Specifications: South Dakota Standard Specifications for Roads and Bridges, Current Edition and required Provisions, Supplemental Specifications, and Special Provisions as included in the Proposal.

GENERAL NOTES:

Design Live Load: HL-93. No construction loading in excess of legal load was considered.

Reinforcing steel shall conform to ASTM A615 grade 60. The d bars shall be lapped 12 inches with the b and c bars. Cut and bend reinforcing steel as required to place pipe(s) through the drop inlet wall.

Drop inlet may be precast. If precast drop inlet details differ from this standard plate, submit a checked design done by a SD registered P.E. and shop plans to the Office of Bridge Design for approval.

⚹ Reduce total quantities of concrete by the amount of concrete displaced by the pipe(s). The total quantity of concrete shall be computed to the nearest hundredth of a cubic yard. The total quantity of reinforcing steel shall be computed to the nearest pound.

Drop inlet shown may be modified by the addition or omission of connecting pipes as noted elsewhere in the plans. All pipes entering drop inlet must fit between the inside face of walls and shall not enter through the corners.

Maximum R.C.P. diameter shall not exceed 54 inches (42 inches for R. C. arch) on the 5.5-foot wide side and shall not exceed 24 inches (24 inches for R. C. arch) on the 3-foot wide side of the drop inlet.

The dimension of H is in feet. Maximum H is 10 feet.

PIPE DISPLACEMENT REDUCTIONS

	Diameter (Inches)	Wall T (Inches)	Class M6 Concrete (Cu. Yd.)
R.C.P.	12	2	0.03
	15	2 ¼	0.04
	18	2 ½	0.05
	24	3	0.09
	30	3 ½	0.14
	36	4	0.20
	42	4 ½	0.26
	48	5	0.34
	54	5 ½	0.43
R.C. ARCH	18	2 ½	0.05
	24	3 ½	0.09
	30	4	0.14
	36	4 ½	0.19
	42	4 ½	0.24

December 16, 2015

Published Date: 2024

SDDOT

5.5' X 3' TYPE B
REINFORCED CONCRETE DROP INLET

PLATE NUMBER
670.05

Sheet 1 of 2

STATE OF SOUTH DAKOTA	PROJECT	SHEET	TOTAL SHEETS
	NH CR 0014(185)229	B137	B151

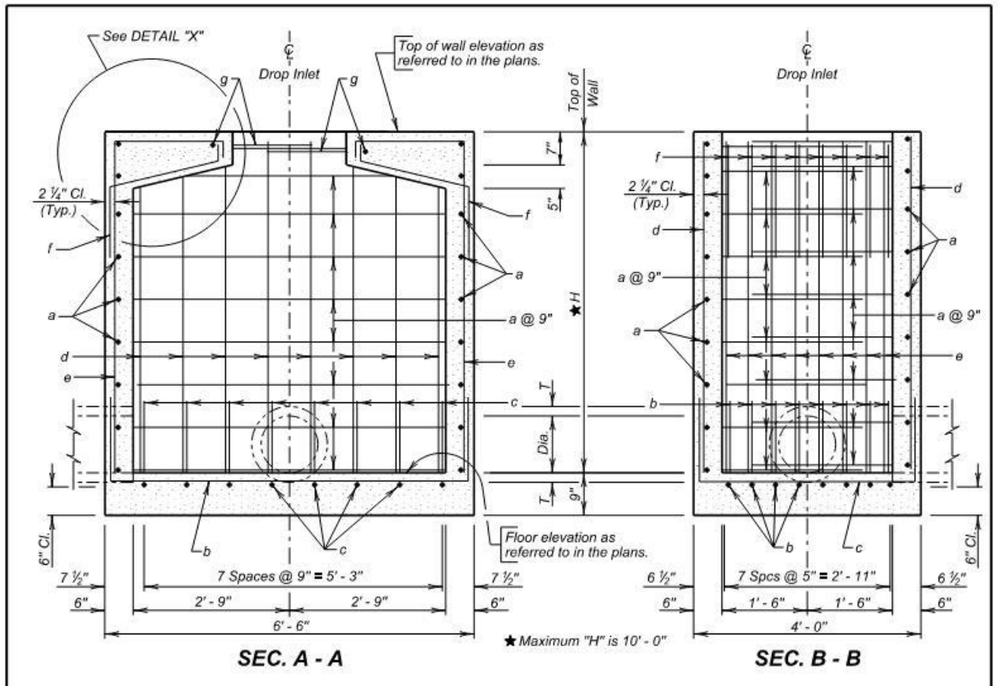

SEC. A - A

SEC. B - B

REINFORCING SCHEDULE

Mk.	No.	Size	Length	Type	Bending Details
a	2.67H	4	11' - 6"	17	
b	8	4	9' - 0"	17	
c	8	4	6' - 6"	17	
d	16	4	H - 2"	Str.	
e	16	5	H + 24"	S17	
f	16	4	3' - 6"	S19	
g	2	4	7' - 0"	17	

NOTE:
All dimensions are out to out of bars.

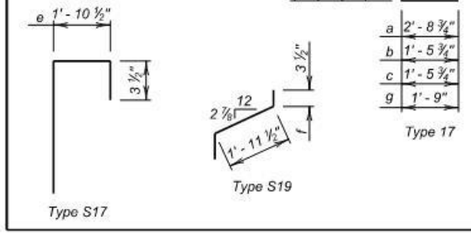

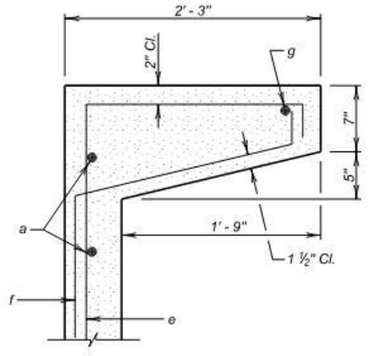

DETAIL "X"

December 16, 2015

Published Date: 2024	5.5' X 3' TYPE B REINFORCED CONCRETE DROP INLET	PLATE NUMBER 670.05
		Sheet 2 of 2

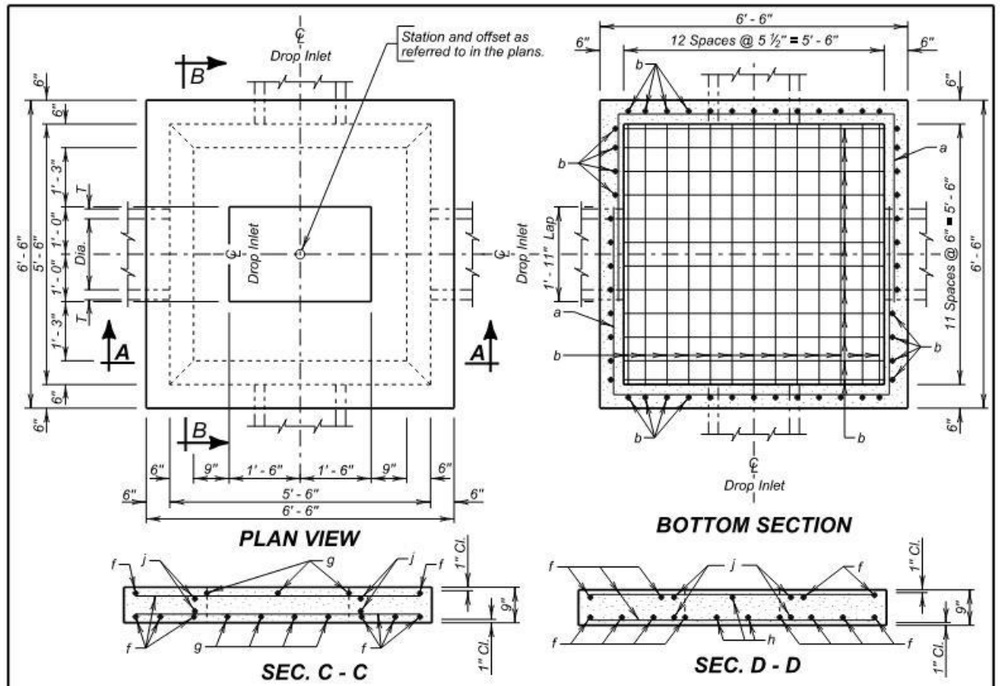

DROP INLETS FOR 12" TO 54" DIAMETER PIPE

SPECIFICATIONS

Design Specifications: AASHTO LRFD Bridge Design Specifications, 2012 Edition.

Construction Specifications: South Dakota Standard Specifications for Roads and Bridges, Current Edition and required Provisions, Supplemental Specifications, and Special Provisions as included in the Proposal.

GENERAL NOTES:

Design Live Load: HL-93. No construction loading in excess of legal load was considered.

Reinforcing steel shall conform to ASTM A615 grade 60. The c bars shall be lapped 12 inches with the b bars. Cut and bend reinforcing steel as required to place pipe(s) through the drop inlet wall.

Drop inlet may be precast. If precast drop inlet details differ from this standard plate, submit a checked design done by a SD registered P.E. and shop plans to the Office of Bridge Design for approval.

✳ *Reduce total quantities of concrete by the amount of concrete displaced by the pipe(s). The total quantity of concrete shall be computed to the nearest hundredth of a cubic yard. The total quantity of reinforcing steel shall be computed to the nearest pound.*

Apply a thin layer of grout between the drop inlet and cover to ensure uniform bearing. Grout shall conform to Section 460.2 K.

Drop inlet shown may be modified by the addition or omission of connecting pipes as noted elsewhere in the plans. All pipes entering drop inlet must fit between the inside face of walls and shall not enter through the corners.

Maximum R.C.P. diameter shall not exceed 54 inches (42 inches for R. C. arch) of the drop inlet.

The dimension of H is in feet. Maximum H is 10 feet.

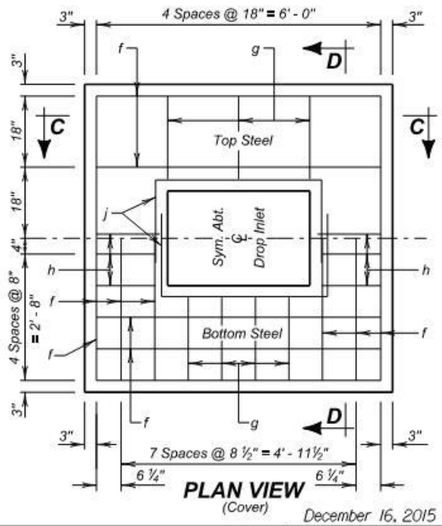

December 16, 2015

Published Date: 2024	5.5' X 5.5' TYPE B REINFORCED CONCRETE DROP INLET	PLATE NUMBER 670.06
		Sheet 1 of 2

STATE OF SOUTH DAKOTA	PROJECT	SHEET	TOTAL SHEETS
	NH CR 0014(185)229	B138	B151

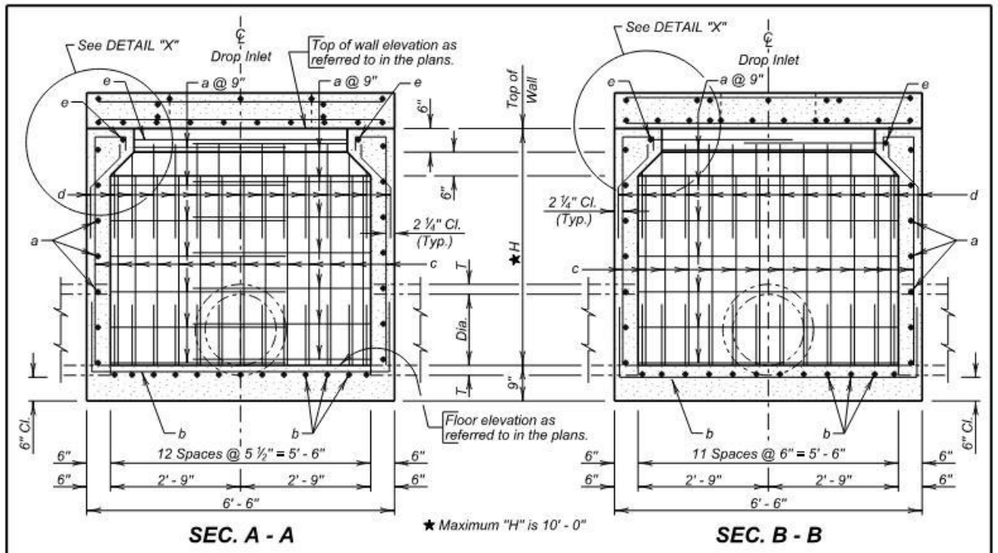

SEC. A - A

★ Maximum "H" is 10' - 0"

SEC. B - B

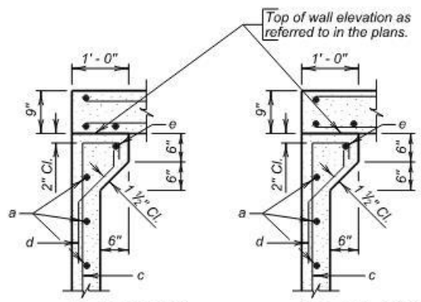

DETAIL "X"
From Sec. A - A

DETAIL "X"
From Sec. B - B

ESTIMATED QUANTITIES

ITEM	UNIT	CONSTANT QUANTITY	VARIABLE QUANTITY
✳ Class M6 Concrete	Cu. Yd.	2.46	0.44H
Reinforcing Steel	Lb.	380.09	58.37H
Frame and Grate Assembly	Each	1	———

REINFORCING SCHEDULE

Mk.	No.	Size	Length	Type
a	2.67H	4	14' - 0"	17
b	25	4	9' - 0"	17
c	50	4	H + 9"	S17
d	50	4	2' - 3"	S19
e	2	4	10' - 6"	17
f	18	4	6' - 0"	Str.
g	14	4	1' - 9"	Str.
h	10	4	1' - 3"	Str.
j	4	4	7' - 0"	17

NOTE:
All dimensions are out to out of bars.

Bending Details

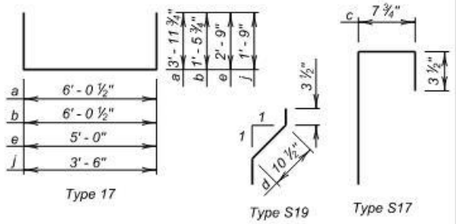

Type 17 Type S19 Type S17

PIPE DISPLACEMENT REDUCTIONS

	Diameter (Inches)	Wall T (Inches)	Class M6 Concrete (Cu. Yd.)
R.C.P.	12	2	0.03
	15	2 ¼	0.04
	18	2 ½	0.05
	24	3	0.09
	30	3 ½	0.14
	36	4	0.20
	42	4 ½	0.26
	48	5	0.34
	54	5 ½	0.43
R.C. ARCH	18	2 ½	0.05
	24	3 ½	0.09
	30	4	0.14
	36	4 ½	0.19
	42	4 ½	0.24

December 16, 2015

Published Date: 2024	SDDOT	5.5' X 5.5' TYPE B REINFORCED CONCRETE DROP INLET	PLATE NUMBER 670.06
			Sheet 2 of 2

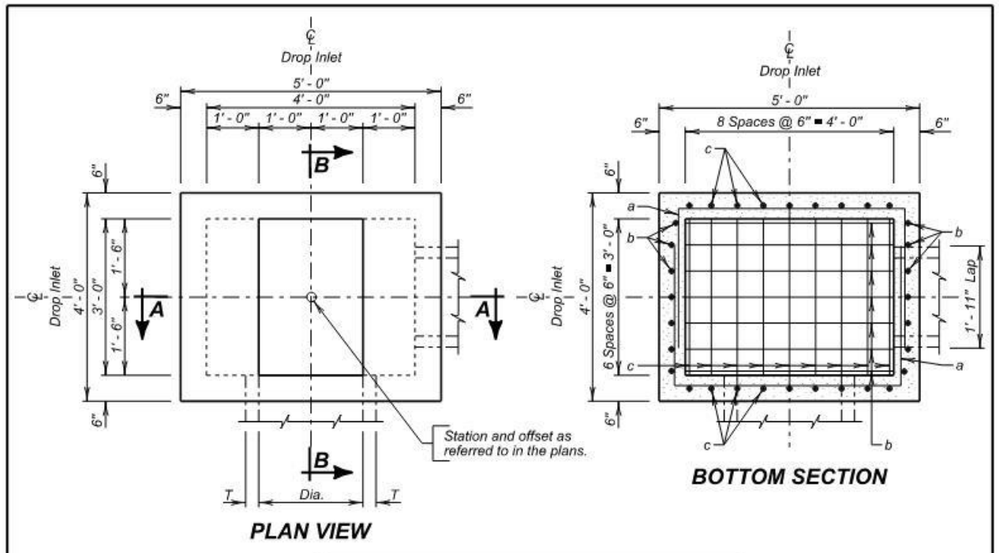

PLAN VIEW

BOTTOM SECTION

ESTIMATED QUANTITIES

ITEM	UNIT	CONSTANT QUANTITY	VARIABLE QUANTITY
✳ Class M6 Concrete	Cu. Yd.	0.58	0.33H
Reinforcing Steel	Lb.	116.24	39.21H
Frame and Grate Assembly	Each	1	———

DROP INLETS FOR 12" TO 36" DIAMETER PIPE

SPECIFICATIONS

Design Specifications: AASHTO LRFD Bridge Design Specifications, 2012 Edition.

Construction Specifications: South Dakota Standard Specifications for Roads and Bridges, Current Edition and required Provisions, Supplemental Specifications, and Special Provisions as included in the Proposal.

GENERAL NOTES:

Design Live Load: HL-93. No construction loading in excess of legal load was considered.

Reinforcing steel shall conform to ASTM A615 grade 60. The d and e bars shall be lapped 12 inches with the c and b bars, respectively. Cut and bend reinforcing steel as required to place pipe(s) through the drop inlet wall.

Drop inlet may be precast. If precast drop inlet details differ from this standard plate, submit a checked design done by a SD registered P.E. and shop plans to the Office of Bridge Design for approval.

✳ Reduce total quantities of concrete by the amount of concrete displaced by the pipe(s). The total quantity of concrete shall be computed to the nearest hundredth of a cubic yard. The total quantity of reinforcing steel shall be computed to the nearest pound.

Drop inlet shown may be modified by the addition or omission of connecting pipes as noted elsewhere in the plans. All pipes entering drop inlet must fit between the inside face of walls and shall not enter through the corners.

Maximum R.C.P. diameter shall not exceed 36 inches (30 inches for R. C. arch) on the 4-foot wide side and shall not exceed 24 inches (24 inches for R. C. arch) on the 3-foot wide side of the drop inlet.

The dimension of H is in feet. Maximum H is 10 feet.

PIPE DISPLACEMENT REDUCTIONS

	Diameter (Inches)	Wall T (Inches)	Class M6 Concrete (Cu. Yd.)
R.C.P.	12	2	0.03
	15	2 ¼	0.04
	18	2 ½	0.05
	24	3	0.09
	30	3 ½	0.14
	36	4	0.20
R.C. ARCH	18	2 ½	0.05
	24	3 ½	0.09
	30	4	0.14

December 16, 2015

Published Date: 2024	SDDOT	4' X 3' TYPE B REINFORCED CONCRETE DROP INLET	PLATE NUMBER 670.07
			Sheet 1 of 2

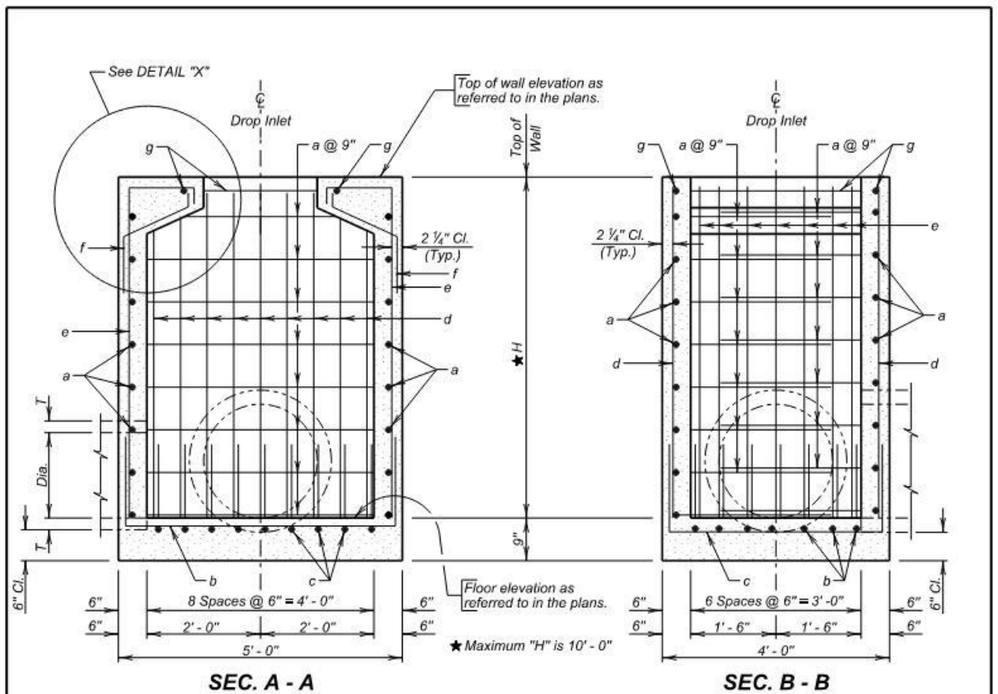

SEC. A - A **SEC. B - B**

REINFORCING SCHEDULE

Mk.	No.	Size	Length	Type	Bending Details
a	2.67H	4	10' - 0"	17	
b	7	4	7' - 6"	17	
c	9	4	6' - 6"	17	
d	18	4	H - 2"	Str.	
e	14	4	H + 15"	S17	
f	14	4	2' - 6"	S19	
g	2	4	6' - 9"	17	

NOTE:
All dimensions are out to out of bars.

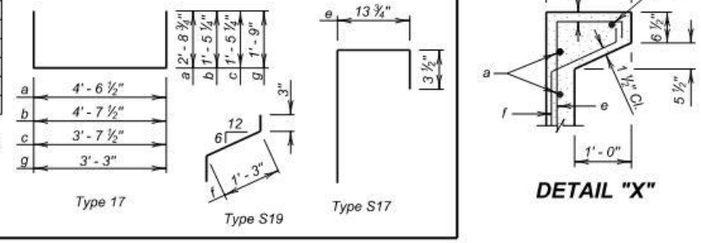

DETAIL "X"

December 16, 2015

Published Date: 2024	SDDOT	4'X 3'TYPE B REINFORCED CONCRETE DROP INLET	PLATE NUMBER 670.07
			Sheet 2 of 2

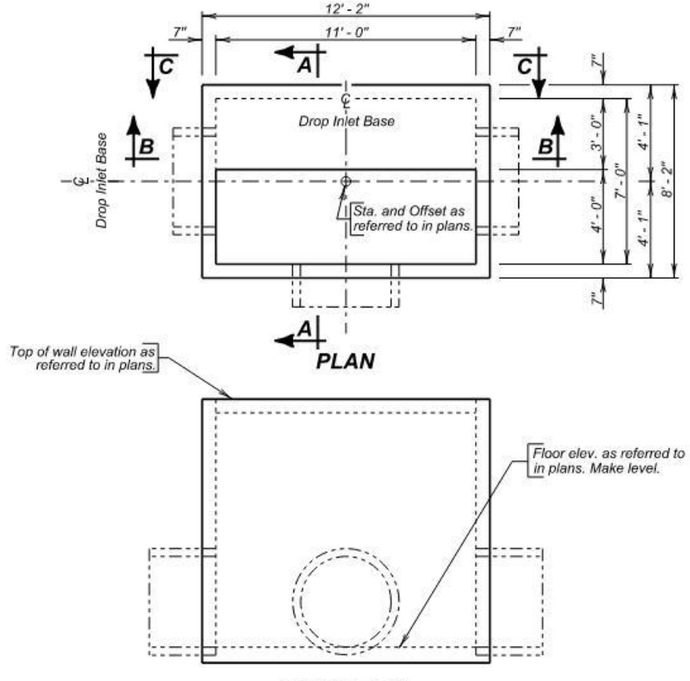

ELEVATION

SPECIFICATIONS:

1. Design Specifications: AASHTO LRFD Bridge Design Specifications, 2012 Edition.
2. Construction Specifications: South Dakota Standard Specifications for Roads and Bridges, Current Edition and required Provisions, Supplemental Specifications, and Special Provisions as included in the Proposal.

GENERAL NOTES:

1. Design Live Load: HL-93 loading. No construction loading in excess of legal load was considered.
2. Base is intended for use with a Precast Concrete Type S Drop Inlet Lid, Standard Plate 670.40. Base may be precast. If precast base used, and details differ from that shown, the precast base must be on the current approved list. The current approved list is available through proper channels from the SDDOT Office of Bridge Design.
3. To qualify for addition to the approved list, submit a checked design, by South Dakota Registered Professional Engineers and shop plans to the Office of Bridge Design for approval. Design shall be in accordance with the current edition of the AASHTO LRFD Bridge Design Specifications.
4. ✶ Reduce total quantities of concrete by the amount of concrete displaced by the pipe. The total quantity of concrete shall be computed to the nearest hundredth of a cubic yard. The total quantity of reinforcing steel shall be computed to the nearest pound.
5. Inlets shown may be modified by the addition or omission of connecting pipes as shown on the layouts. Connecting pipes shall not enter the inlet through the corners.
6. Maximum R.C.P. diameter shall not exceed 66 inches (54 inches for R.C. Arch) on the 7-foot wide side of the Drop Inlet.
7. Reinforcing steel shall conform to ASTM A615 Grade 60. Cut and bend reinforcing steel as required to place pipe(s) through the inlet wall.
8. Use 1 inch clear cover on all reinforcing steel unless otherwise noted.
9. The dimension of H is in feet. Maximum H is 10 feet.

June 26, 2015

Published Date: 2024	SDDOT	7'X 11'TYPE S DROP INLET BASE	PLATE NUMBER 670.34
			Sheet 1 of 4

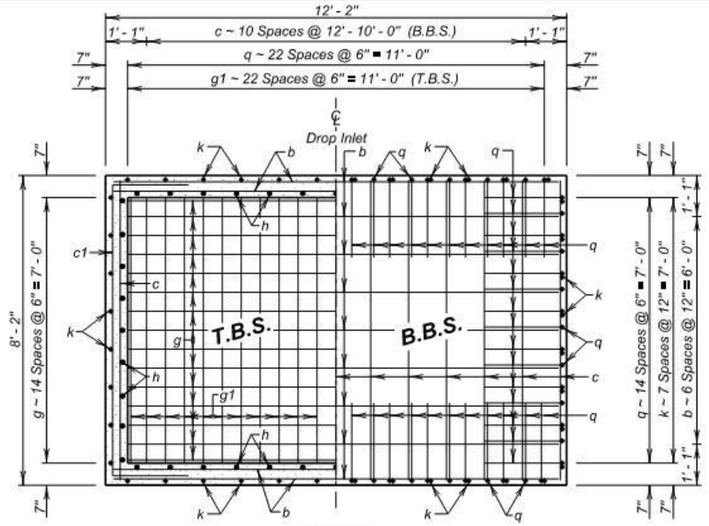

PLAN
(Bottom Slab)
(Pipe Not Shown)

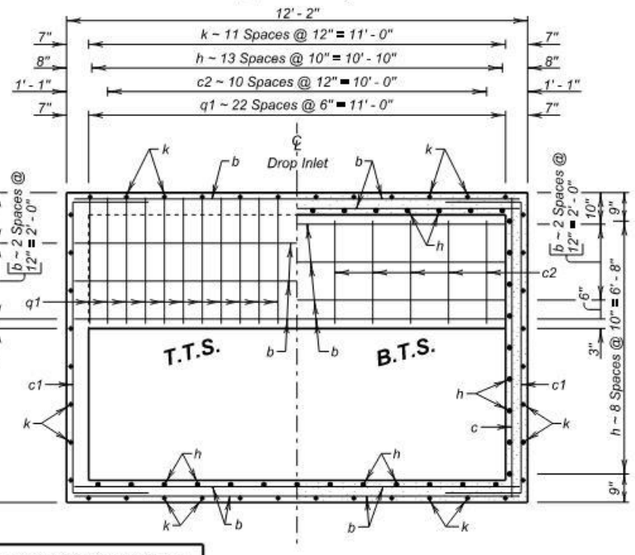

LEGEND FOR PLACING RE-STEEL

T.T.S. - Top of Top Slab
B.T.S. - Bottom of Top Slab
T.B.S. - Top of Bottom Slab
B.B.S. - Bottom of Bottom Slab

PLAN
(Top Slab)
(Pipe Not Shown)

June 26, 2015

Published Date: 2024	SDDOT	7'X 11' TYPE S DROP INLET BASE	PLATE NUMBER 670.34
			Sheet 2 of 4

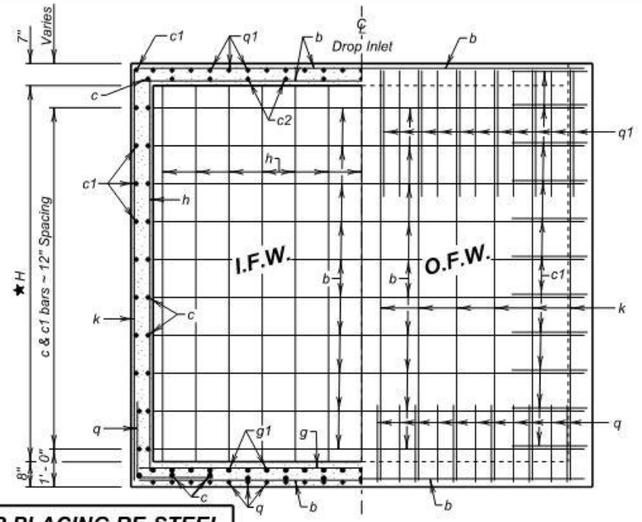

VIEW C - C
(Pipe Not Shown)

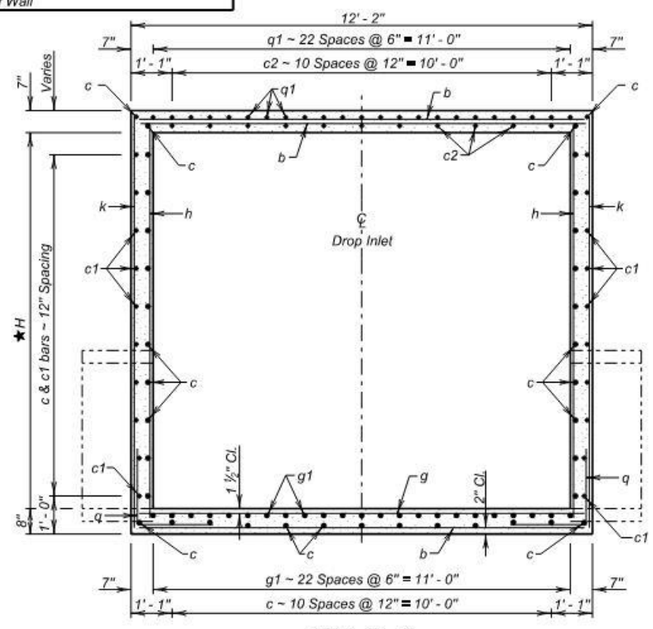

SEC. B - B

LEGEND FOR PLACING RE-STEEL

O.F.W. - Outside Face of Wall
I.F.W. - Inside Face of Wall

★ Maximum H is 10' - 0"

June 26, 2015

Published Date: 2024	SDDOT	7'X 11' TYPE S DROP INLET BASE	PLATE NUMBER 670.34
			Sheet 3 of 4

REINFORCING SCHEDULE

Mk.	No.	Size	Length	Type
b	19 + 4H	4	11' - 9"	Str.
c	15 + 2H	4	7' - 9"	Str.
c1	2 + 2H	4	11' - 10"	17
c2	11	4	2' - 10"	Str.
g	15	5	11' - 9"	Str.
g1	23	5	7' - 9"	Str.
h	46	5	H + 5"	Str.
k	40	5	H + 5"	Str.
q	76	5	5' - 6"	17A
q1	23	5	6' - 8"	17A

Bending Details

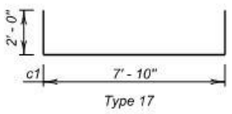

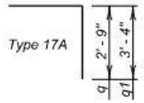

NOTE:
All dimensions are out to out of bars

ESTIMATED QUANTITIES

ITEM	UNIT	CONSTANT QUANTITY	VARIABLE QUANTITY
* Class M6 Concrete	Cu.Yd.	3.65	0.83H
Reinforcing Steel	Lb.	1266	147.26H

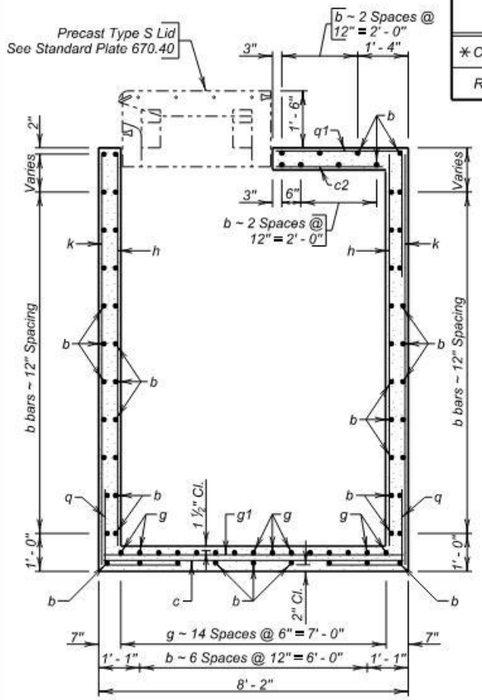

SEC. A - A
(Pipe Not Shown)

PIPE DISPLACEMENT REDUCTIONS

	Diameter (Inches)	Wall T (Inches)	Class M6 Concrete (Cu. Yd.)
R.C.P.	12	2	0.03
	15	2 ¼	0.04
	18	2 ½	0.06
	24	3	0.11
	30	3 ½	0.16
	36	4	0.23
	42	4 ½	0.31
	48	5	0.40
	54	5 ½	0.50
	60	6	0.61
R.C. ARCH	18	2 ½	0.06
	24	3 ½	0.11
	30	4	0.16
	36	4 ½	0.22
	42	4 ½	0.29
	48	5	0.37
	54	5 ½	0.46
	60	6	0.57
	72	7	0.82
	84	8	1.09

June 26, 2015

Published Date: 2024

SDDOT

7' X 11' TYPE S DROP INLET BASE

PLATE NUMBER 670.34

Sheet 4 of 4

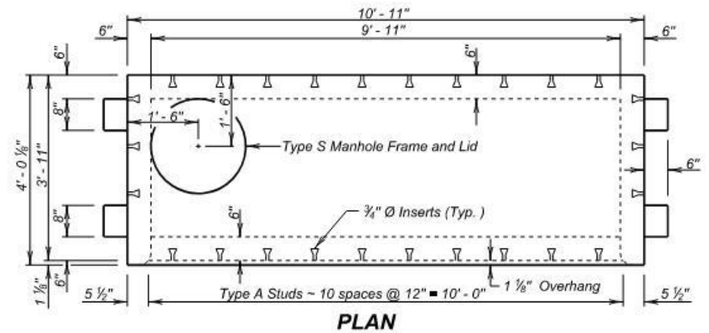

PLAN

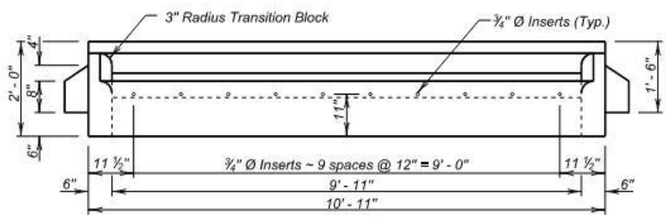

ELEVATION

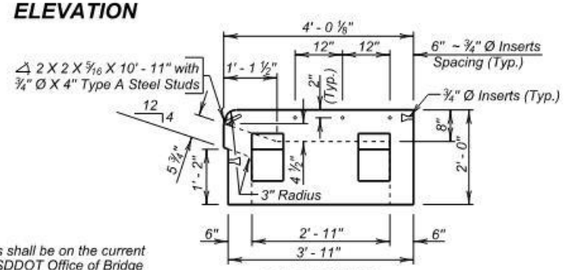

SIDE VIEW
(With Sidewalk Inserts)

GENERAL NOTES:

1. The Precast Concrete Type S Drop Inlet Lid and the shims shall be on the current approved list available through proper channels from the SDDOT Office of Bridge Design. To qualify for addition to the approved list, submit a checked design, done by South Dakota Registered Professional Engineers, and shop plans to the Office of Bridge Design for approval. Design shall be in accordance with the current edition of the AASHTO LRFD Bridge Design Specifications.
2. Design Live Load shall be HL - 93.
3. Concrete mix shall be as per fabricators design, however, minimum compressive strength shall not be less than 4500 psi. Type II Cement is required.
4. The Type S Manhole Frame and Lid shall conform to AASHTO M105, Class 30.
5. Structural Steel shall conform to ASTM A36. The ¾ inch diameter Headed Type A Steel Studs shall conform to Section 7 of the current edition of AWS D1. 1 Structural Steel Welding Code.
6. The ¾ inch diameter Concrete Inserts shall be galvanized or made of a corrosion resistant material. Provide ¾ inch diameter x 1' - 6" long dowels conforming to ASTM A615, Gr. 60 threaded to fit inserts with each lid.
7. All costs associated with furnishing and installing the Precast Concrete Type S Drop Inlet Lid including the type S manhole frame and lid, shims, inserts, and dowels shall be included in the contract unit price per each for " 4' x 11' Precast Concrete Type S Drop Inlet Lid ".

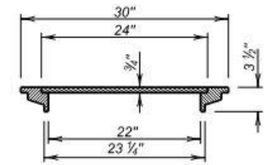

TYPICAL SECTION THROUGH TYPE S MANHOLE FRAME AND LID
(Weight 140 Lbs.)

December 23, 2012

Published Date: 2024

SDDOT

4' X 11' PRECAST CONCRETE TYPE S DROP INLET LID

PLATE NUMBER 670.40

Sheet 1 of 1

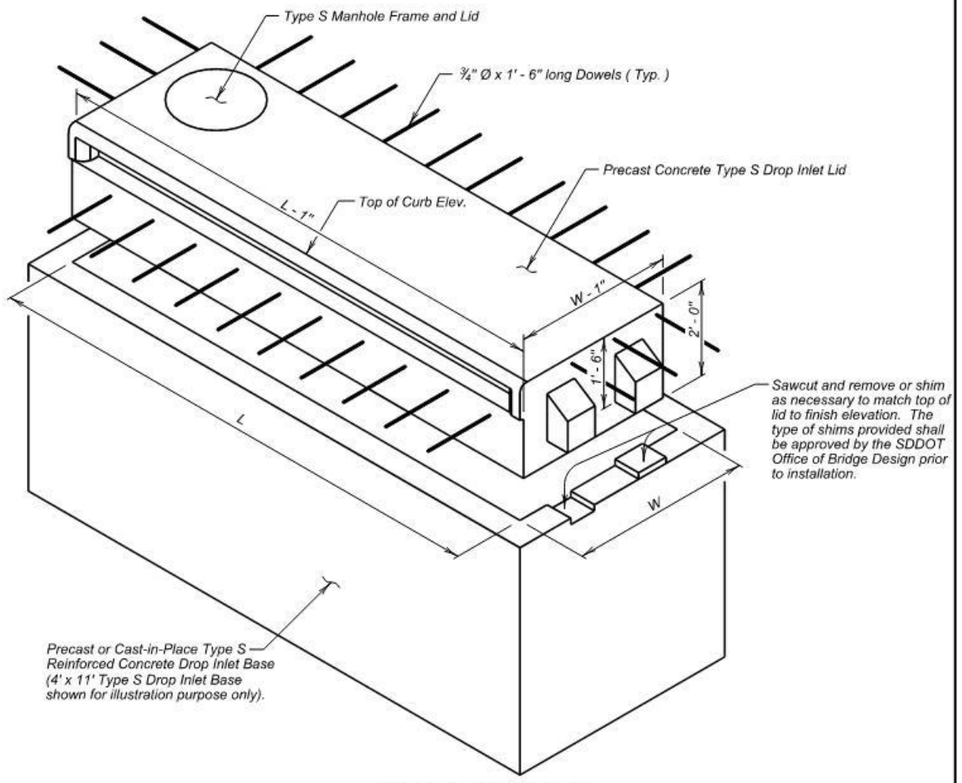

TYPE S DROP INLET

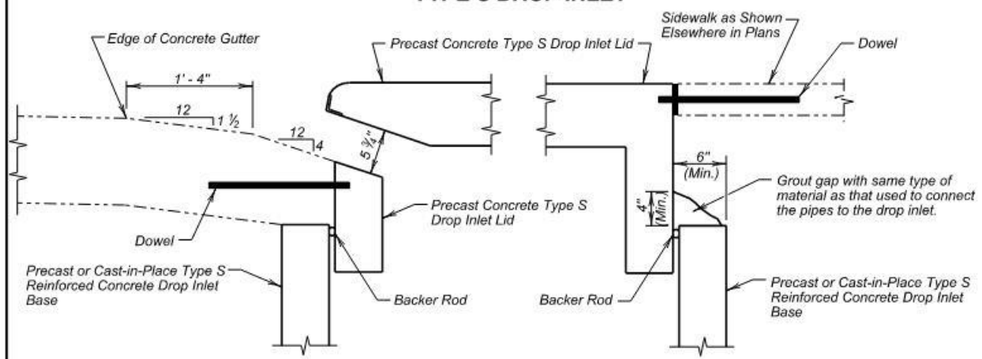

CONCRETE GUTTER DETAIL

GROUTING DETAIL
(Sides and Back, Adjacent to Sidewalk)

December 23,2012

Published Date: 2024	SDDOT	INSTALLATION DETAILS FOR PRECAST CONCRETE TYPE S DROP INLET LID	PLATE NUMBER 670.45
			Sheet 1 of 2

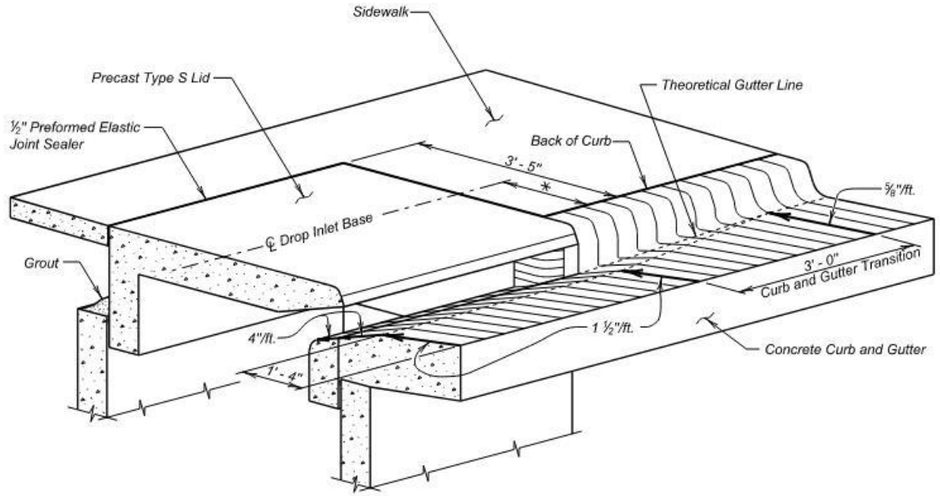

CURB AND GUTTER TRANSITION DETAILS

Drop Inlet Base Unit Size	* Distance
4' x 6'	1' - 5 ½"
4' x 11'	1' - 5 ½"
7' x 11'	2' - 11 ½"

GENERAL NOTES:

1. Dowels shall be used to anchor the precast concrete Type S drop inlet lid to the concrete gutter. See Standard Plate 670.38 or 670.40 as applicable. If there is sidewalk adjacent dowels shall be used to anchor the precast concrete Type S drop inlet lid to the sidewalk. If there is sidewalk adjacent to the drop inlet, the precast lid shall match the finish elevations and cross slopes of the sidewalk.
2. The sidewalk shall be steel reinforced when the sidewalk adjoins the precast lid. Refer to Standard Plate 651.70 for reinforced concrete sidewalk details.

December 23,2012

Published Date: 2024	SDDOT	INSTALLATION DETAILS FOR PRECAST CONCRETE TYPE S DROP INLET LID	PLATE NUMBER 670.45
			Sheet 2 of 2

GENERAL NOTE:

Top of grate elevation shall be 0.04' below theoretical elevation of gutter.

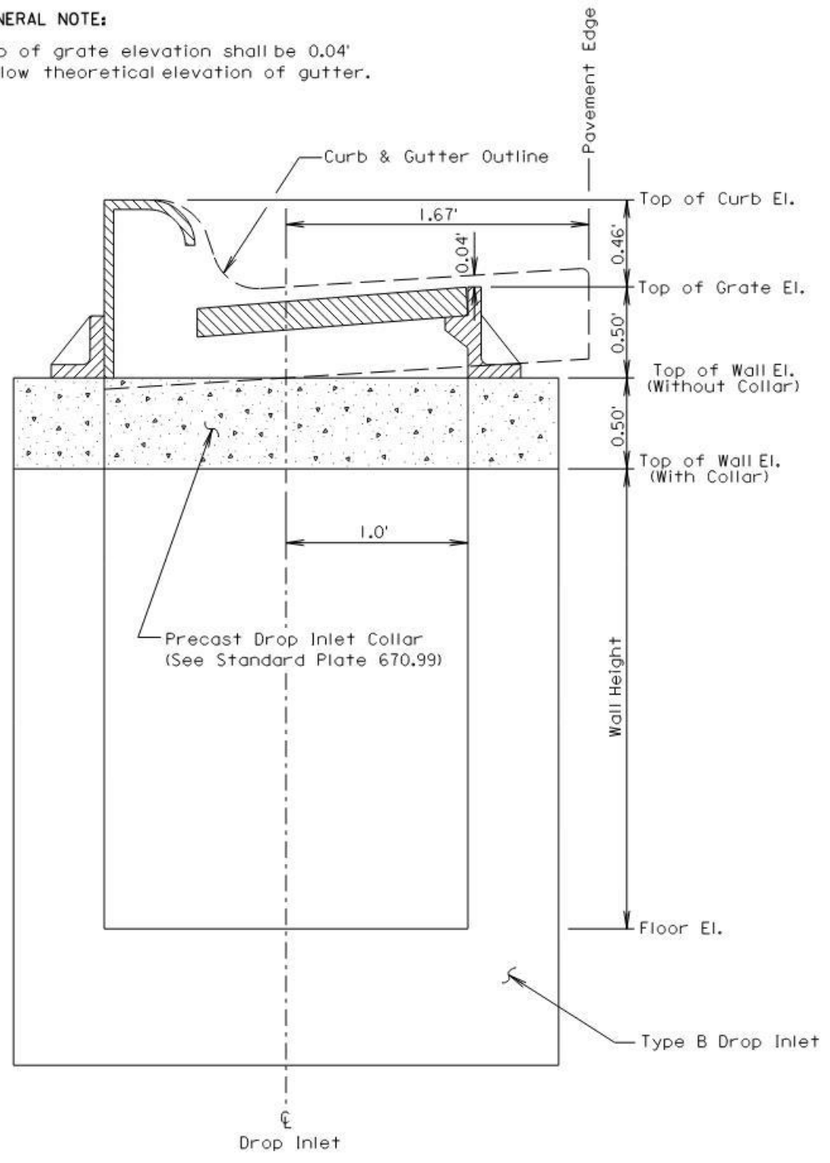

June 26, 2011

Published Date: 2024	SDDOT	INSTALLATION OF TYPE B DROP INLET	PLATE NUMBER 670.75
			Sheet 1 of 1

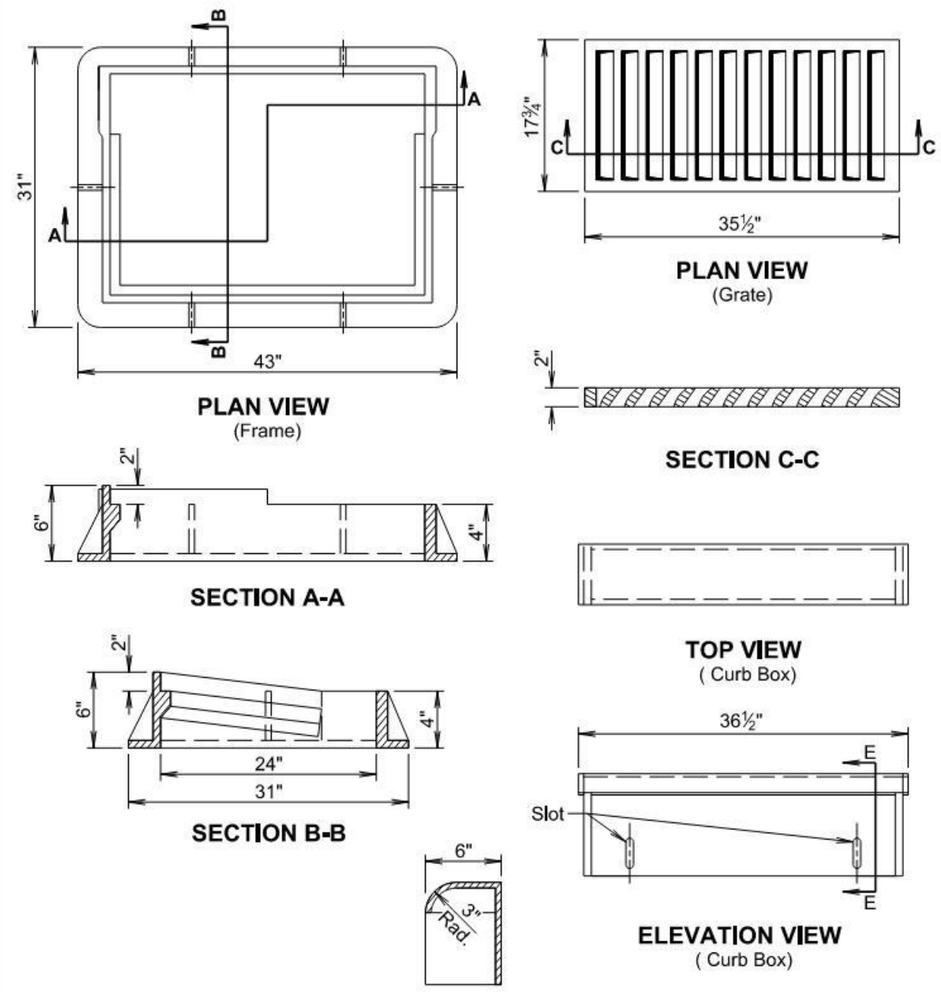

GENERAL NOTES:

The product dimensions may vary from those shown on the standard plate depending on the manufacturer. Grate size and configuration will be similar to the standard plate for hydraulic capacity and bicycle safety. Any variation in dimensions will be approved by the Engineer and the type B frame and grate assembly will be from a manufacturer on the approved products lists.

Design load for the grate will meet the requirements of AASHTO HL-93.

The curb box will be adjustable 6" to 9".

June 1, 2022

Published Date: 2024	SDDOT	TYPE B FRAME AND GRATE	PLATE NUMBER 670.80
			Sheet 1 of 1

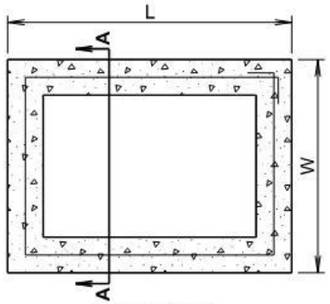

PLAN VIEW

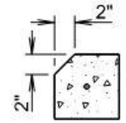

For Type D Drop Inlets only:
Use Precast Drop Inlet Collar with
2" chamfer on L sides only.

DETAIL B

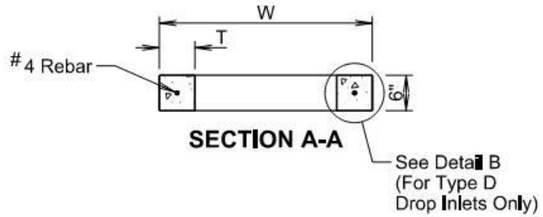

SECTION A-A

INFORMATIONAL QUANTITIES					
FRAME AND GRATE TYPE	L (Ft-In)	W (Ft-In)	T (In)	CLASS M6 CONCRETE (CuYd)	REINFORCING STEEL (Lb)
TYPE A, B, and E	4'-0"	3'-0"	6	0.11	9
TYPE C	5'-0"	4'-0"	6	0.15	11
TYPE D	4'-0"	2'-6"	6	0.10	8

GENERAL NOTES:

All reinforcing steel will conform to ASTM A615, Grade 60.

The ½" diameter bar will lap 6"± and will be centered in the concrete.

The cost of furnishing and installing Precast Drop Inlet Collars, including labor, materials, and incidentals will be incidental to the contract unit price per Each for "Precast Drop Inlet Collar".

June 1, 2022

Published Date: 2024	SDDOT	PRECAST DROP INLET COLLAR	PLATE NUMBER 670.99
			Sheet 1 of 1

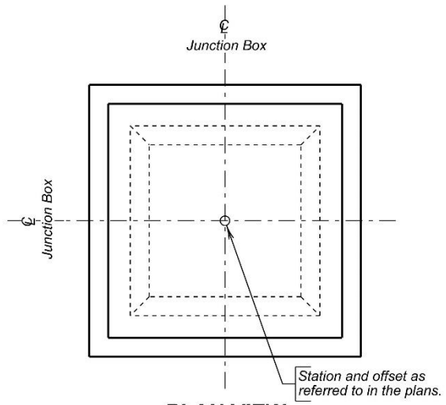

PLAN VIEW

SPECIFICATIONS

Design Specifications: AASHTO LRFD Bridge Design Specifications, 2012 Edition.

Construction Specifications: South Dakota Standard Specifications for Roads and Bridges, Current Edition and required Provisions, Supplemental Specifications, and Special Provisions as included in the Proposal.

GENERAL NOTES

Design Live Load: HL-93. No construction loading in excess of legal load was considered.

The design of the junction box is based on a maximum fill over the junction box of 5 feet and minimum fill over the junction box of 2 feet.

Reinforcing steel shall conform to ASTM A615 Grade 60. Cut and bend reinforcing steel as required to place pipe(s) through junction box wall.

Junction box may be precast. If precast junction box details differ from this standard plate, submit a checked design done by a SD registered P.E. and shop plans to the Office of Bridge Design for approval.

Use 1 inch clear cover on all reinforcing steel unless otherwise noted.

All exposed edges shall be chamfered ¾ inch.

Junction box shown may be modified by the addition or omission of connecting pipes as noted elsewhere in the plans. All pipes entering junction box must fit between the inside face of walls and shall not enter through the corners.

The cost of furnishing and installing the manhole steps shall be incidental to the contract unit price per pound for "Reinforcing Steel".

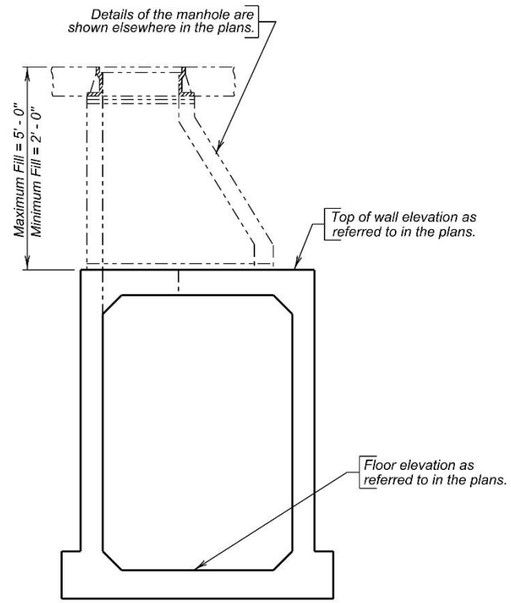

ELEVATION VIEW

PIPE DISPLACEMENT REDUCTIONS

	Diameter (Inches)	Wall T (Inches)	Class M6 Concrete (Cu. Yd.)
R.C.P.	12	2	0.03
	15	2 ¼	0.04
	18	2 ½	0.06
	24	3	0.11
	30	3 ½	0.16
	36	4	0.23
	42	4 ½	0.31
	48	5	0.40
	54	5 ½	0.50

ESTIMATED QUANTITIES

ITEM	⚹ Class M6 Concrete	Reinforcing Steel
UNIT	Cu. Yd.	Lb.
H = 4' - 0"	4.37	821
H = 4' - 6"	4.61	846
H = 5' - 0"	4.85	908
H = 5' - 6"	5.10	933
H = 6' - 0"	5.34	958
H = 6' - 6"	5.58	1020
H = 7' - 0"	5.82	1045
H = 7' - 6"	6.06	1071
H = 8' - 0"	6.30	1132

⚹ *Reduce total quantities of concrete by the amount of concrete displaced by the pipe(s). Quantity shown includes reduction for a 24-inch diameter manhole opening. The total quantity of concrete shall be computed to the nearest hundredth of a cubic yard.*

May 9, 2020

Published Date: 2024	SDDOT	5'X 5' JUNCTION BOX	PLATE NUMBER 671.01
			Sheet 1 of 3

STATE OF SOUTH DAKOTA	PROJECT	SHEET	TOTAL SHEETS
	NH CR 0014(185)229	B145	B151

REINFORCING SCHEDULE

	Mk.	No.	Size	Length	Type
H = 4' - 0"	⌀ a1	1	6	9' - 0"	T3
	▼ a2	4	–	———	—
	h3	28	4	5' - 9"	17A
	k3	48	4	8' - 6"	17
	m1	18	5	6' - 9"	Str.
	n1	18	5	5' - 9"	Str.
	p1	52	4	5' - 0"	Str.
	q1	8	4	3' - 6"	17A
H = 4' - 6"	⌀ a1	1	6	9' - 0"	T3
	▼ a2	4	–	———	—
	h4	28	4	6' - 3"	17A
	k4	48	4	9' - 0"	17
	m1	18	5	6' - 9"	Str.
	n1	18	5	5' - 9"	Str.
	p1	52	4	5' - 0"	Str.
	q1	8	4	3' - 6"	17A
H = 5' - 0"	⌀ a1	1	6	9' - 0"	T3
	▼ a2	5	–	———	—
	h5	28	4	6' - 9"	17A
	k5	48	4	9' - 6"	17
	m1	18	5	6' - 9"	Str.
	n1	18	5	5' - 9"	Str.
	p1	52	4	5' - 0"	Str.
	q1	8	4	3' - 6"	17A
H = 5' - 6"	⌀ a1	1	6	9' - 0"	T3
	▼ a2	5	–	———	—
	h6	28	4	7' - 3"	17A
	k6	48	4	10' - 0"	17
	m1	18	5	6' - 9"	Str.
	n1	18	5	5' - 9"	Str.
	p1	60	4	5' - 0"	Str.
	q1	12	4	3' - 6"	17A
H = 6' - 0"	⌀ a1	1	6	9' - 0"	T3
	▼ a2	6	–	———	—
	h7	28	4	7' - 9"	17A
	k7	48	4	10' - 6"	17
	m1	18	5	6' - 9"	Str.
	n1	18	5	5' - 9"	Str.
	p1	60	4	5' - 0"	Str.
	q1	12	4	3' - 6"	17A
H = 6' - 6"	⌀ a1	1	6	9' - 0"	T3
	▼ a2	6	–	———	—
	h8	28	4	8' - 3"	17A
	k8	48	4	11' - 0"	17
	m1	18	5	6' - 9"	Str.
	n1	18	5	5' - 9"	Str.
	p1	68	4	5' - 0"	Str.
	q1	16	4	3' - 6"	17A
H = 7' - 0"	⌀ a1	1	6	9' - 0"	T3
	▼ a2	7	–	———	—
	h9	28	4	8' - 9"	17A
	k9	48	4	11' - 6"	17
	m1	18	5	6' - 9"	Str.
	n1	18	5	5' - 9"	Str.
	p1	68	4	5' - 0"	Str.
	q1	16	4	3' - 6"	17A

Bending Details

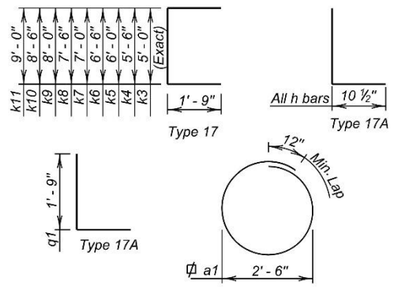

	Mk.	No.	Size	Length	Type
H = 7' - 6"	⌀ a1	1	6	9' - 0"	T3
	▼ a2	7	–	———	—
	h10	28	4	9' - 3"	17A
	k10	48	4	12' - 0"	17
	m1	18	5	6' - 9"	Str.
	n1	18	5	5' - 9"	Str.
	p1	68	4	5' - 0"	Str.
	q1	16	4	3' - 6"	17A
H = 8' - 0"	⌀ a1	1	6	9' - 0"	T3
	▼ a2	8	–	———	—
	h11	28	4	9' - 9"	17A
	k11	48	4	12' - 6"	17
	m1	18	5	6' - 9"	Str.
	n1	18	5	5' - 9"	Str.
	p1	76	4	5' - 0"	Str.
	q1	20	4	3' - 6"	17A

▼ Cast iron Manhole Steps (R - 1980 - C) from Neenah Foundry or equivalant.

⌀ Locate in center of top slab with 3" clearance at manhole opening.

All dimensions are out to out of bars.

LEGEND FOR PLACING RE-STEEL

T. B. S. - Top of Bottom Slab

B. B. S. - Bottom of Bottom Slab

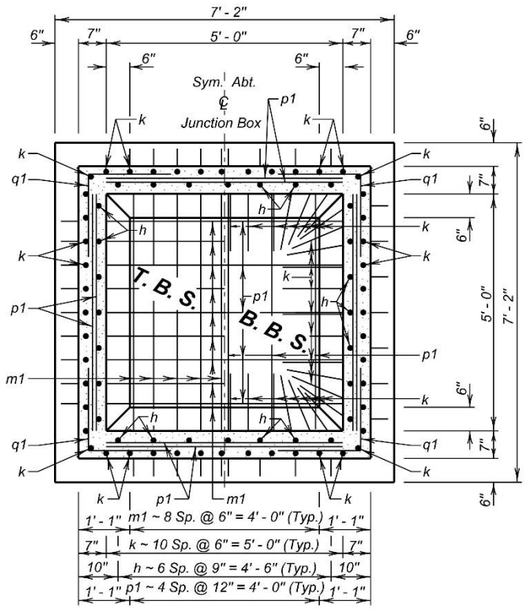

SEC. A - A

May 9, 2020

Published Date: 2024	SDDOT	5'X 5' JUNCTION BOX	PLATE NUMBER 671.01
			Sheet 2 of 3

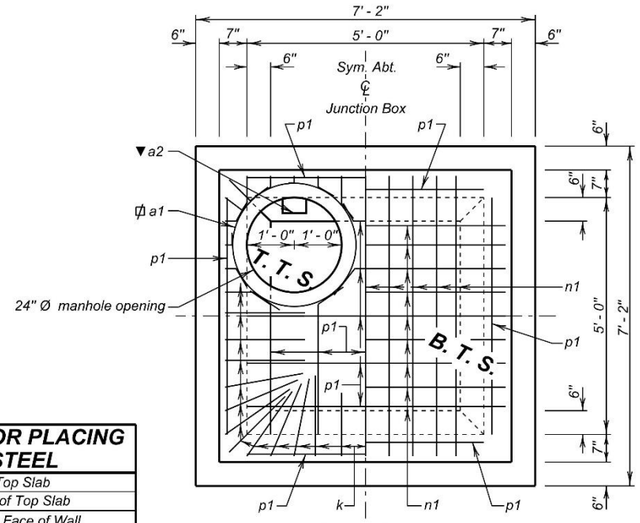

LEGEND FOR PLACING RE-STEEL

T. T. S. - Top of Top Slab

B. T. S. - Bottom of Top Slab

O. F. W. - Outside Face of Wall

I. F. W. - Inside Face of Wall

PLAN VIEW

ELEVATION VIEW

May 9, 2020

Published Date: 2024	SDDOT	5'X 5' JUNCTION BOX	PLATE NUMBER 671.01
			Sheet 3 of 3

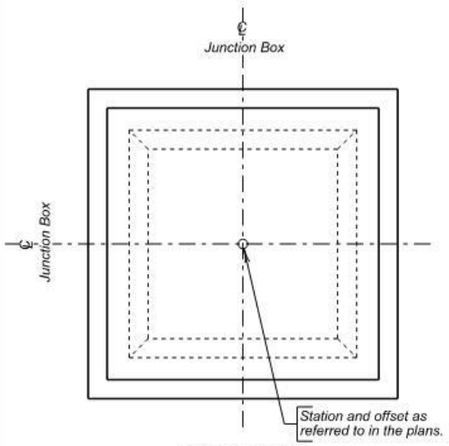

PLAN VIEW

SPECIFICATIONS

Design Specifications: AASHTO LRFD Bridge Design Specifications, 2012 Edition.

Construction Specifications: South Dakota Standard Specifications for Roads and Bridges, Current Edition and required Provisions, Supplemental Specifications, and Special Provisions as included in the Proposal.

GENERAL NOTES

Design Live Load: HL-93. No construction loading in excess of legal load was considered.

The design of the junction box is based on a maximum fill over the junction box of 5 feet and minimum fill over the junction box of 2 feet.

Reinforcing steel shall conform to ASTM A615 Grade 60. Cut and bend reinforcing steel as required to place pipe(s) through junction box wall.

Junction box may be precast. If precast junction box details differ from this standard plate, submit a checked design done by a SD registered P.E. and shop plans to the Office of Bridge Design for approval.

Use 1 inch clear cover on all reinforcing steel unless otherwise noted.

All exposed edges shall be chamfered ¾ inch.

Junction box shown may be modified by the addition or omission of connecting pipes as noted elsewhere in the plans. All pipes entering junction box must fit between the inside face of walls and shall not enter through the corners.

The cost of furnishing and installing the manhole steps shall be incidental to the contract unit price per pound for "Reinforcing Steel".

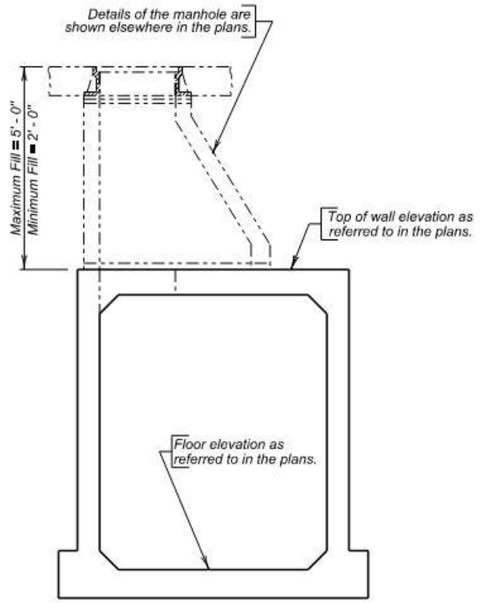

ELEVATION VIEW

PIPE DISPLACEMENT REDUCTIONS

	Diameter (Inches)	Wall T (Inches)	Class M6 Concrete (Cu. Yd.)
R.C.P.	12	2	0.03
	15	2 ¼	0.04
	18	2 ½	0.06
	24	3	0.11
	30	3 ½	0.16
	36	4	0.23
	42	4 ½	0.31
	48	5	0.40
	54	5 ½	0.50

ESTIMATED QUANTITIES

ITEM	⚹ Class M6 Concrete	Reinforcing Steel
UNIT	Cu. Yd.	Lb.
H = 4' - 0"	5.53	1186
H = 4' - 6"	5.82	1215
H = 5' - 0"	6.10	1286
H = 5' - 6"	6.39	1316
H = 6' - 0"	6.67	1345
H = 6' - 6"	6.96	1416
H = 7' - 0"	7.24	1445
H = 7' - 6"	7.52	1475
H = 8' - 0"	7.81	1545

⚹ *Reduce total quantities of concrete by the amount of concrete displaced by the pipe(s). Quantity shown includes reduction for a 24-inch diameter manhole opening. The total quantity of concrete shall be computed to the nearest hundredth of a cubic yard.*

May 9, 2020

Published Date: 2024	SDDOT	6'X 6' JUNCTION BOX	PLATE NUMBER 671.02
			Sheet 1 of 3

REINFORCING SCHEDULE

	Mk.	No.	Size	Length	Type
H = 4' - 0"	⌀ a1	1	6	9' - 0"	T3
	▼ a2	4	–	———	—
	h14	32	4	5' - 9"	17A
	k14	56	4	8' - 9"	17
	m2	22	6	7' - 9"	Str.
	n2	22	6	6' - 9"	Str.
	p2	56	4	6' - 0"	Str.
	q1	8	4	3' - 6"	17A
H = 4' - 6"	⌀ a1	1	6	9' - 0"	T3
	▼ a2	4	–	———	—
	h15	32	4	6' - 3"	17A
	k15	56	4	9' - 3"	17
	m2	22	6	7' - 9"	Str.
	n2	22	6	6' - 9"	Str.
	p2	56	4	6' - 0"	Str.
	q1	8	4	3' - 6"	17A
H = 5' - 0"	⌀ a1	1	6	9' - 0"	T3
	▼ a2	5	–	———	—
	h16	32	4	6' - 9"	17A
	k16	56	4	9' - 9"	17
	m2	22	6	7' - 9"	Str.
	n2	22	6	6' - 9"	Str.
	p2	64	4	6' - 0"	Str.
	q1	12	4	3' - 6"	17A
H = 5' - 6"	⌀ a1	1	6	9' - 0"	T3
	▼ a2	5	–	———	—
	h17	32	4	7' - 3"	17A
	k17	56	4	10' - 3"	17
	m2	22	6	7' - 9"	Str.
	n2	22	6	6' - 9"	Str.
	p2	64	4	6' - 0"	Str.
	q1	12	4	3' - 6"	17A
H = 6' - 0"	⌀ a1	1	6	9' - 0"	T3
	▼ a2	6	–	———	—
	h18	32	4	7' - 9"	17A
	k18	56	4	10' - 9"	17
	m2	22	6	7' - 9"	Str.
	n2	22	6	6' - 9"	Str.
	p2	64	4	6' - 0"	Str.
	q1	12	4	3' - 6"	17A
H = 6' - 6"	⌀ a1	1	6	9' - 0"	T3
	▼ a2	6	–	———	—
	h19	32	4	8' - 3"	17A
	k19	56	4	11' - 3"	17
	m2	22	6	7' - 9"	Str.
	n2	22	6	6' - 9"	Str.
	p2	72	4	6' - 0"	Str.
	q1	16	4	3' - 6"	17A
H = 7' - 0"	⌀ a1	1	6	9' - 0"	T3
	▼ a2	7	–	———	—
	h20	32	4	8' - 9"	17A
	k20	56	4	11' - 9"	17
	m2	22	6	7' - 9"	Str.
	n2	22	6	6' - 9"	Str.
	p2	72	4	6' - 0"	Str.
	q1	16	4	3' - 6"	17A

Bending Details

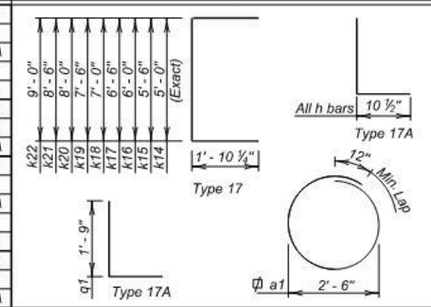

	Mk.	No.	Size	Length	Type
H = 7' - 6"	⌀ a1	1	6	9' - 0"	T3
	▼ a2	7	–	———	—
	h21	32	4	9' - 3"	17A
	k21	56	4	12' - 3"	17
	m2	22	6	7' - 9"	Str.
	n2	22	6	6' - 9"	Str.
	p2	72	4	6' - 0"	Str.
	q1	16	4	3' - 6"	17A
H = 8' - 0"	⌀ a1	1	6	9' - 0"	T3
	▼ a2	8	–	———	—
	h22	32	4	9' - 9"	17A
	k22	56	4	12' - 9"	17
	m2	22	6	7' - 9"	Str.
	n2	22	6	6' - 9"	Str.
	p2	80	4	6' - 0"	Str.
	q1	20	4	3' - 6"	17A

▼ *Cast iron Manhole Steps (R - 1980 - C) from Neenah Foundry or equivalent.*

⌀ *Locate in center of top slab with 3" clearance at manhole opening.*

All dimensions are out to out of bars.

LEGEND FOR PLACING RE-STEEL

T.B.S. - Top of Bottom Slab

B.B.S. - Bottom of Bottom Slab

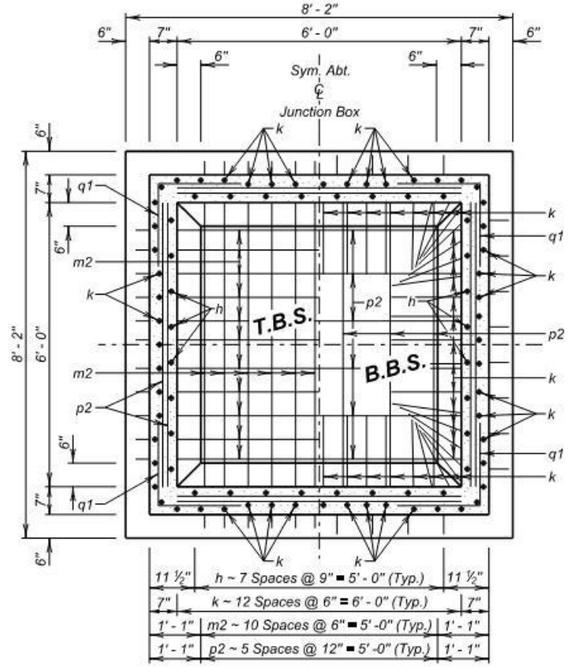

SEC. A - A

May 9, 2020

Published Date: 2024	SDDOT	6'X 6' JUNCTION BOX	PLATE NUMBER 671.02
			Sheet 2 of 3

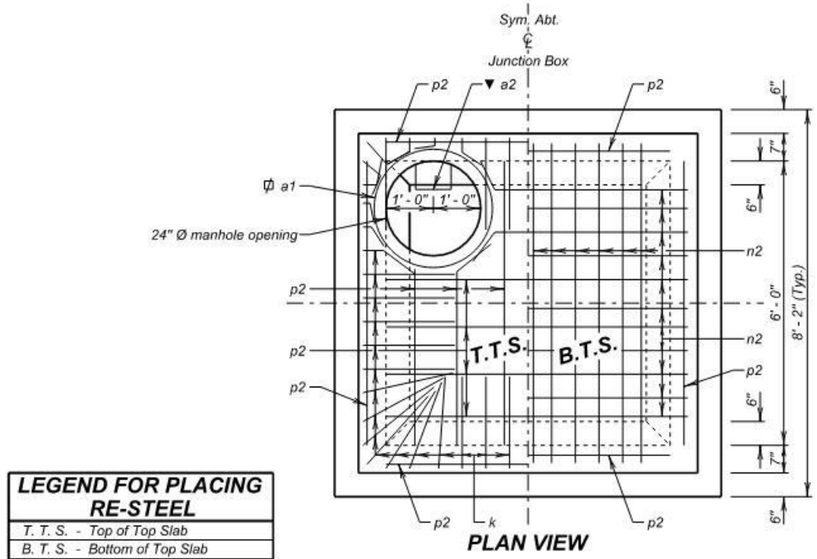

ELEVATION VIEW

LEGEND FOR PLACING RE-STEEL

T. T. S.	Top of Top Slab
B. T. S.	Bottom of Top Slab
O. F. W.	Outside Face of Wall
I. F. W.	Inside Face of Wall

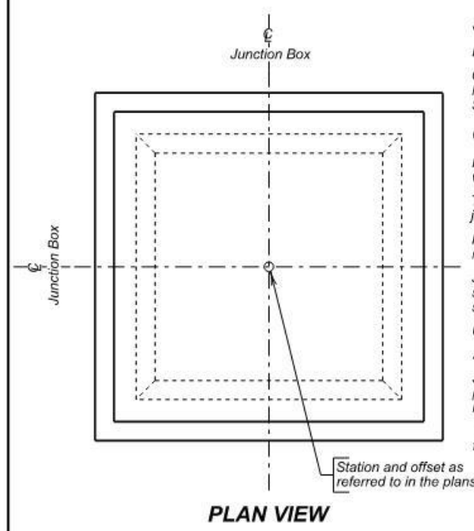

PLAN VIEW

May 9, 2020

Published Date: 2024	SDDOT	6'X 6' JUNCTION BOX	PLATE NUMBER 671.02
			Sheet 3 of 3

SPECIFICATIONS

Design Specifications: AASHTO LRFD Bridge Design Specifications, 2012 Edition.

Construction Specifications: South Dakota Standard Specifications for Roads and Bridges, Current Edition and required Provisions, Supplemental Specifications, and Special Provisions as included in the Proposal.

GENERAL NOTES

Design Live Load: HL-93. No construction loading in excess of legal load was considered.

The design of the junction box is based on a maximum fill over the junction box of 5 feet and minimum fill over the junction box of 2 feet.

Reinforcing steel shall conform to ASTM A615 Grade 60. Cut and bend reinforcing steel as required to place pipe(s) through junction box wall.

Junction box may be precast. If precast junction box details differ from this standard plate, submit a checked design done by a SD registered P.E. and shop plans to the Office of Bridge Design for approval.

Use 1 inch clear cover on all reinforcing steel unless otherwise noted.

All exposed edges shall be chamfered ¾ inch.

Junction box shown may be modified by the addition or omission of connecting pipes as noted elsewhere in the plans. All pipes entering junction box must fit between the inside face of walls and shall not enter through the corners.

The cost of furnishing and installing the manhole steps shall be incidental to the contract unit price per pound for "Reinforcing Steel".

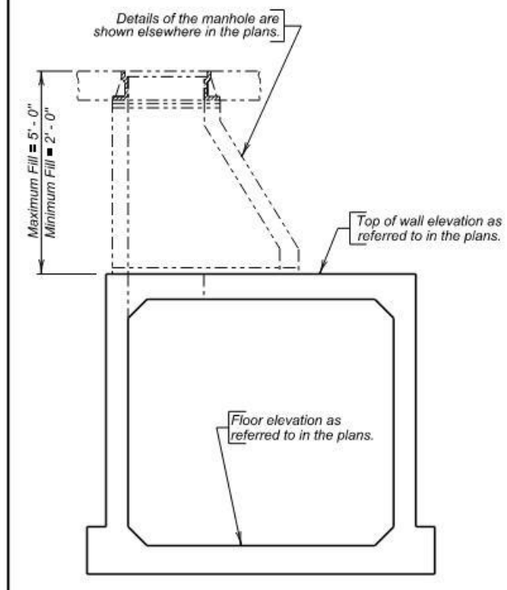

ELEVATION VIEW

PIPE DISPLACEMENT REDUCTIONS

	Diameter (Inches)	Wall T (Inches)	Class M6 Concrete (Cu. Yd.)
R.C.P.	12	2	0.03
	15	2 ¼	0.04
	18	2 ½	0.06
	24	3	0.11
	30	3 ½	0.16
	36	4	0.23
	42	4 ½	0.31
	48	5	0.40
	54	5 ½	0.50

ESTIMATED QUANTITIES

ITEM	⚹ Class M6 Concrete	Reinforcing Steel
UNIT	Cu. Yd.	Lb.
H = 4' - 0"	7.09	1506
H = 4' - 6"	7.42	1541
H = 5' - 0"	7.75	1622
H = 5' - 6"	8.08	1657
H = 6' - 0"	8.40	1692
H = 6' - 6"	8.73	1773
H = 7' - 0"	9.06	1808
H = 7' - 6"	9.39	1843
H = 8' - 0"	9.71	1924

⚹ *Reduce total quantities of concrete by the amount of concrete displaced by the pipe(s). Quantity shown includes reduction for a 24-inch diameter manhole opening. The total quantity of concrete shall be computed to the nearest hundredth of a cubic yard.*

May 9, 2020

Published Date: 2024	SDDOT	7'X 7' JUNCTION BOX	PLATE NUMBER 671.03
			Sheet 1 of 3

STATE OF SOUTH DAKOTA	PROJECT	SHEET	TOTAL SHEETS
	NH CR 0014(185)229	B148	B151

REINFORCING SCHEDULE

	Mk.	No.	Size	Length	Type
H = 4' - 0"	⌀ a1	1	6	9' - 0"	T3
	▼ a2	4	–	———	—
	h25	40	4	5' - 9"	17A
	k25	64	4	9' - 3"	17
	m3	26	6	8' - 9"	Str.
	n3	26	6	7' - 9"	Str.
	p3	60	4	7' - 0"	Str.
	q3	8	4	3' - 6"	17A
H = 4' - 6"	⌀ a1	1	6	9' - 0"	T3
	▼ a2	4	–	———	—
	h26	40	4	6' - 3"	17A
	k26	64	4	9' - 9"	17
	m3	26	6	8' - 9"	Str.
	n3	26	6	7' - 9"	Str.
	p3	60	4	7' - 0"	Str.
	q1	8	4	3' - 6"	17A
H = 5' - 0"	⌀ a1	1	6	9' - 0"	T3
	▼ a2	5	–	———	—
	h27	40	4	6' - 9"	17A
	k27	64	4	10' - 3"	17
	m3	26	6	8' - 9"	Str.
	n3	26	6	7' - 9"	Str.
	p3	68	4	7' - 0"	Str.
	q1	12	4	3' - 6"	17A
H = 5' - 6"	⌀ a1	1	6	9' - 0"	T3
	▼ a2	5	–	———	—
	h28	40	4	7' - 3"	17A
	k28	64	4	10' - 9"	17
	m3	26	6	8' - 9"	Str.
	n3	26	6	7' - 9"	Str.
	p3	68	4	7' - 0"	Str.
	q1	12	4	3' - 6"	17A
H = 6' - 0"	⌀ a1	1	6	9' - 0"	T3
	▼ a2	6	–	———	—
	h29	40	4	7' - 9"	17A
	k29	64	4	11' - 3"	17
	m3	26	6	8' - 9"	Str.
	n3	26	6	7' - 9"	Str.
	p3	68	4	7' - 0"	Str.
	q1	12	4	3' - 6"	17A
H = 6' - 6"	⌀ a1	1	6	9' - 0"	T3
	▼ a2	6	–	———	—
	h30	40	4	8' - 3"	17A
	k30	64	4	11' - 9"	17
	m3	26	6	8' - 9"	Str.
	n3	26	6	7' - 9"	Str.
	p3	76	4	7' - 0"	Str.
	q1	16	4	3' - 6"	17A
H = 7' - 0"	⌀ a1	1	6	9' - 0"	T3
	▼ a2	7	–	———	—
	h31	40	4	8' - 9"	17A
	k31	64	4	12' - 3"	17
	m3	26	6	8' - 9"	Str.
	n3	26	6	7' - 9"	Str.
	p3	76	4	7' - 0"	Str.
	q1	16	4	3' - 6"	17A

Bending Details

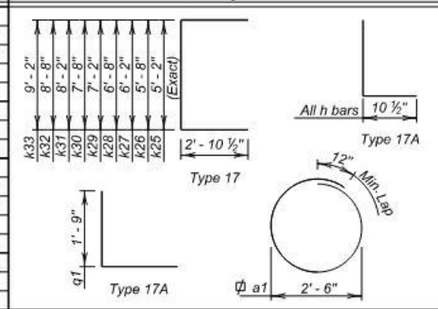

	Mk.	No.	Size	Length	Type
H = 7' - 6"	⌀ a1	1	6	9' - 0"	T3
	▼ a2	7	–	———	—
	h32	40	4	9' - 3"	17A
	k32	64	4	12' - 9"	17
	m3	26	6	8' - 9"	Str.
	n3	26	6	7' - 9"	Str.
	p3	76	4	7' - 0"	Str.
	q1	16	4	3' - 6"	17A
H = 8' - 0"	⌀ a1	1	6	9' - 0"	T3
	▼ a2	8	–	———	—
	h33	40	4	9' - 9"	17A
	k33	64	4	13' - 3"	17
	m3	26	6	8' - 9"	Str.
	n3	26	6	7' - 9"	Str.
	p3	84	4	7' - 0"	Str.
	q1	20	4	3' - 6"	17A

LEGEND FOR PLACING RE-STEEL

T.B.S.	- Top of Bottom Slab
B.B.S.	- Bottom of Bottom Slab

▼ Cast iron Manhole Steps (R - 1980 - C) from Neenah Foundry or equivalant.

⌀ Locate in center of top slab with 3" clearance at manhole opening.

All dimensions are out to out of bars.

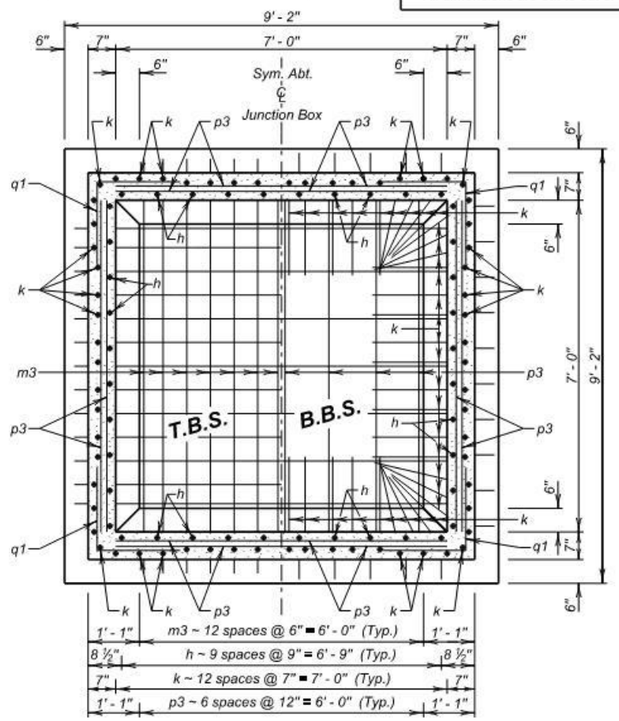

SEC. A - A

May 9, 2020

Published Date: 2024	SDDOT	7'X 7' JUNCTION BOX	PLATE NUMBER 671.03
			Sheet 2 of 3

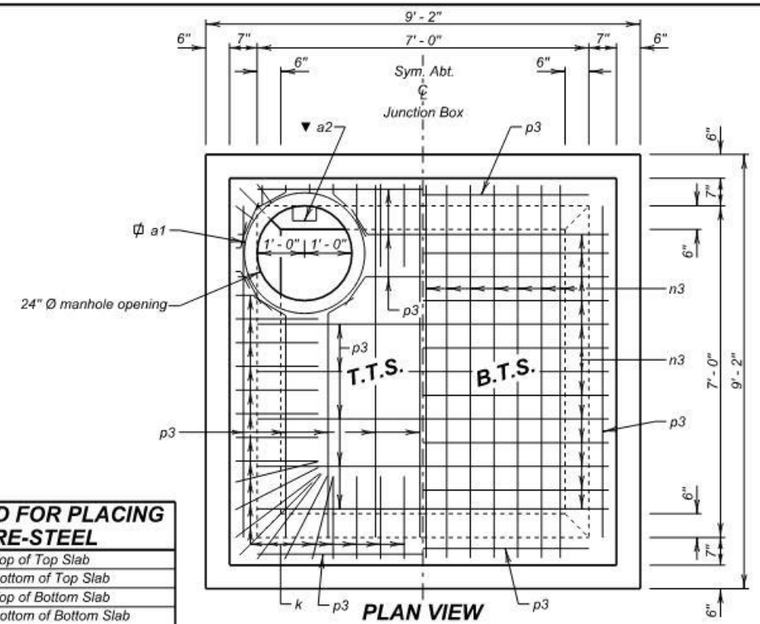

LEGEND FOR PLACING RE-STEEL

T. T. S.	- Top of Top Slab
B. T. S.	- Bottom of Top Slab
T. B. S.	- Top of Bottom Slab
B. B. S.	- Bottom of Bottom Slab
O. F. W.	- Outside Face of Wall
I. F. W.	- Inside Face of Wall

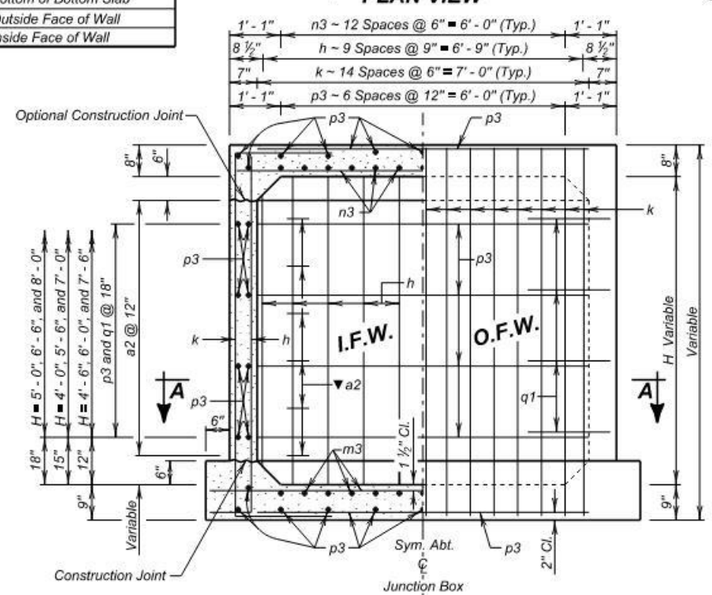

ELEVATION VIEW

May 9, 2020

Published Date: 2024	SDDOT	7'X 7' JUNCTION BOX	PLATE NUMBER 671.03
			Sheet 3 of 3

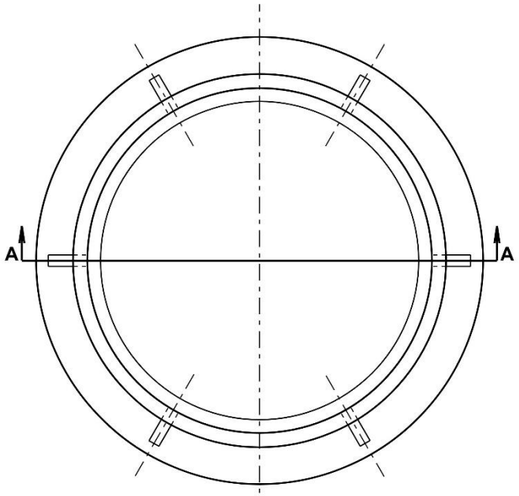

PLAN VIEW
(Frame)

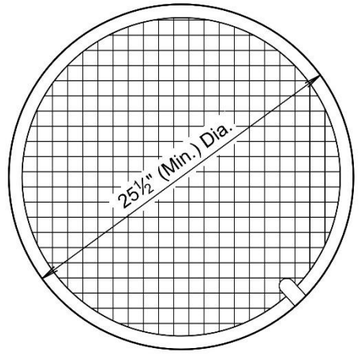

PLAN VIEW
(Lid)

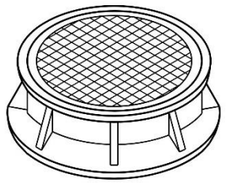

ISOMETRIC VIEW

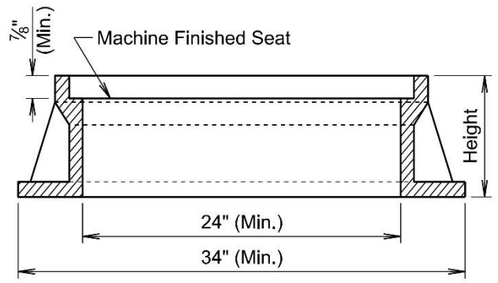

SECTION A-A

TYPE	HEIGHT (Inches)
A7	7
A8	8
A9	9
A10	10

GENERAL NOTES:

The product dimensions may vary from those shown on the standard plate depending on the manufacturer. Any variation in dimensions will be approved by the Engineer and the type A manhole frame and lid will be from a manufacturer on the approved products lists.

Design load for the grate will meet the requirements of AASHTO HL-93.

Geometric pattern on top of lid other than that shown will be approved by the Engineer.

June 1, 2022

Published Date: 2024	SDDOT	TYPE A MANHOLE FRAME AND LID	PLATE NUMBER 671.10 Sheet 1 of 1

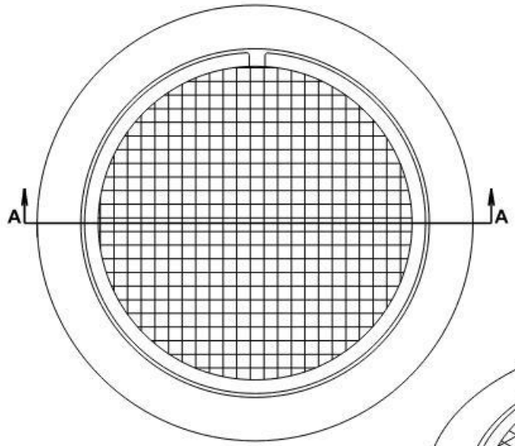

PLAN VIEW

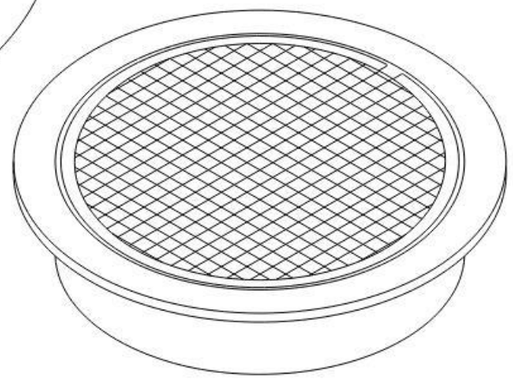

ISOMETRIC VIEW

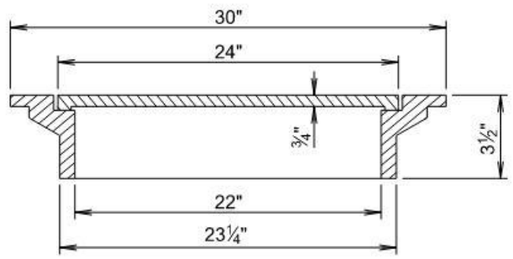

SECTION A-A

GENERAL NOTES:

The product dimensions may vary from those shown on the standard plate depending on the manufacturer. Any variation in dimensions will be approved by the Engineer and the type S manhole frame and lid will be from a manufacturer on the approved products list.

Design load for the grate will meet the requirements of AASHTO HL-93.

June 1, 2022

Published Date: 2024	SDDOT	TYPE S MANHOLE FRAME AND LID	PLATE NUMBER 671.30 Sheet 1 of 1

STATE OF SOUTH DAKOTA	PROJECT	SHEET	TOTAL SHEETS
	NH CR 0014(185)229	B150	B151

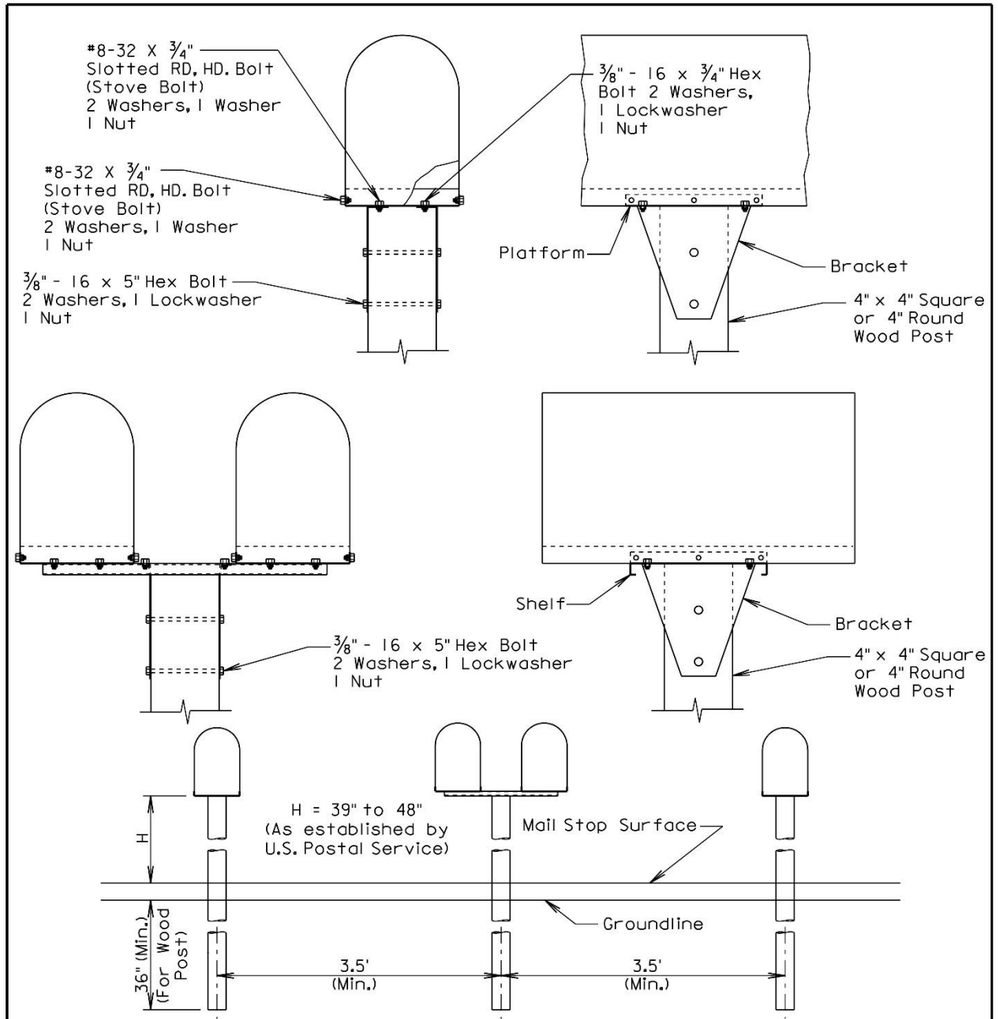

SPACING FOR MULTIPLE POST INSTALLATION

GENERAL NOTES:

The post support assemblies provided should be consistant throughout the project.

Single and double mailboxes may be in any sequence.

Post support assemblies shall be one from the approved products list, a 4"x4" or 4" round wood post, or an alternate post support assembly that meets the test level 3 crash testing requirements of NCHRP 350 or MASH.

Alternate mailbox support assemblies shall be approved by the Engineer prior to installation. The Contractor shall provide the Engineer written certification that the mailbox support assembly has met the crash testing requirements and will be installed in accordance with the manufacturer's installation instructions.

September 6, 2013

Published Date: 2024	SDDOT	***SINGLE AND DOUBLE MAILBOX ASSEMBLIES***	***PLATE NUMBER*** 900.02 *Sheet 1 of 1*

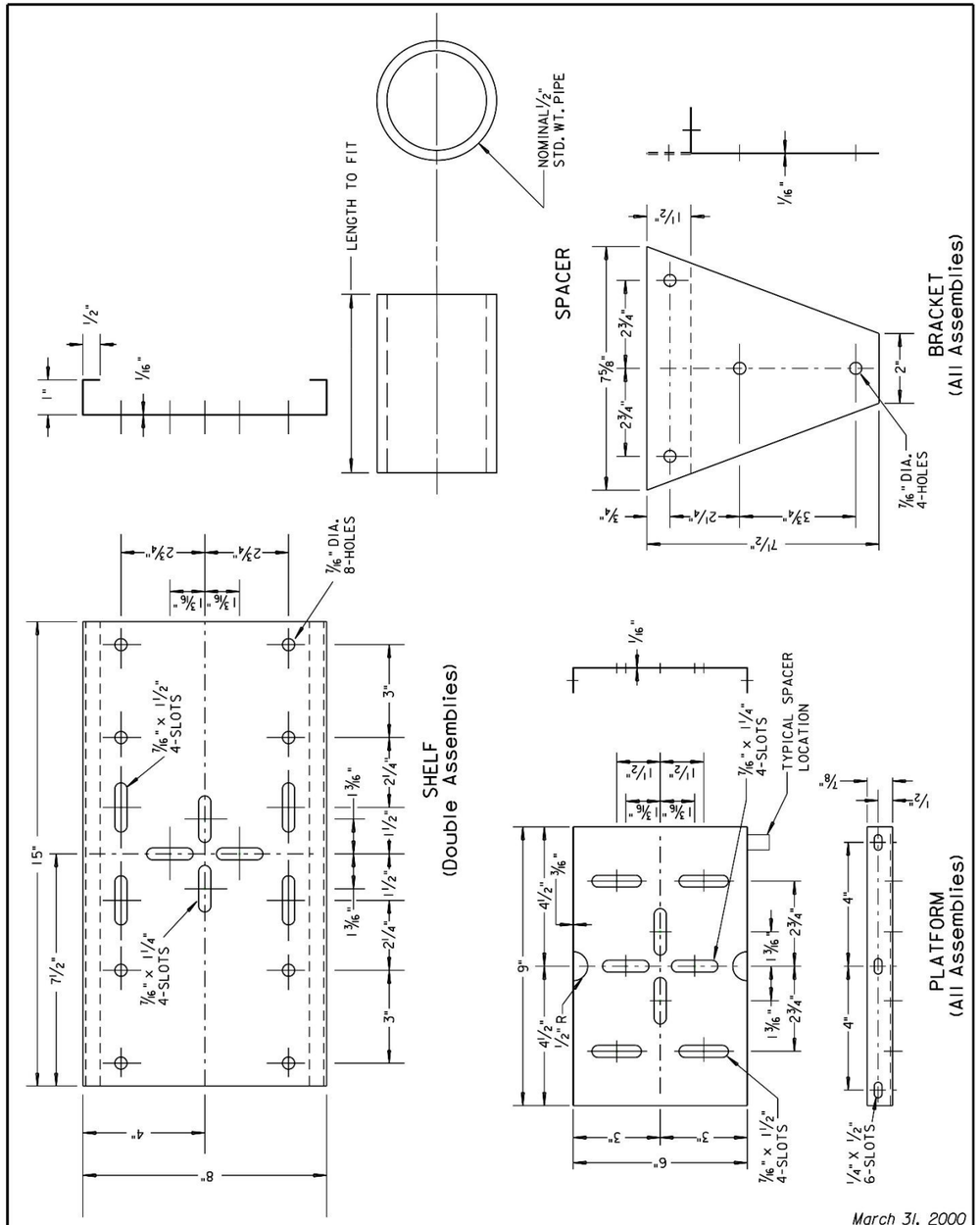

March 31, 2000

Published Date: 2024	SDDOT	***MAILBOX SUPPORT HARDWARE***	***PLATE NUMBER*** 900.03 *Sheet 1 of 1*

STATE OF SOUTH DAKOTA	PROJECT	SHEET	TOTAL SHEETS
	NH CR 0014(185)229	B151	B151

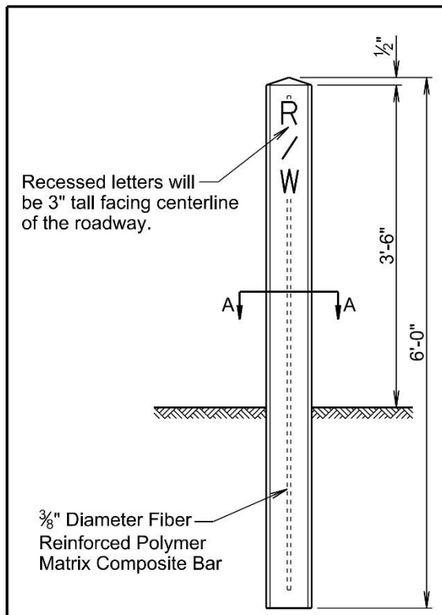

ELEVATION VIEW

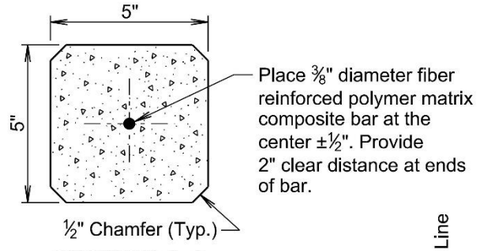

SECTION A-A

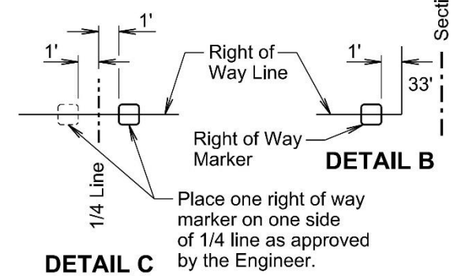

DETAIL C
(Drawing illustrates both options of right of way marker placement location.)

DETAIL B

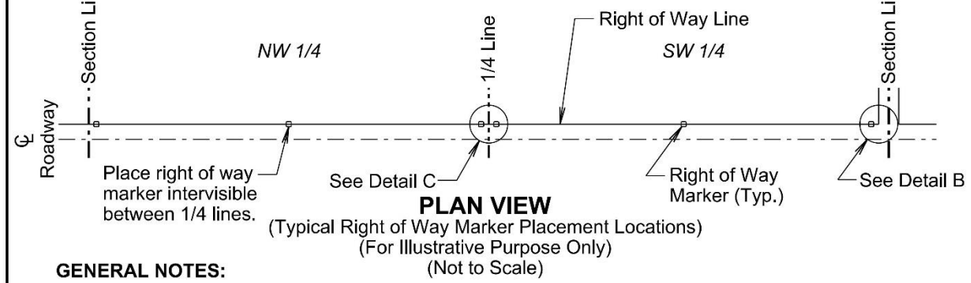

PLAN VIEW
(Typical Right of Way Marker Placement Locations)
(For Illustrative Purpose Only)
(Not to Scale)

GENERAL NOTES:

The right of way markers will be set plumb and backfilled as approved by the Engineer.

Additional right of way markers may need to be installed due to the terrain. Placement of additional right of way markers must be approved by the Engineer prior to installation.

The concrete will be Class M6 in accordance with specifications Section 462.

The fiber reinforced polymer matrix composite bar will have a minimum of 130 ksi tensile strength, a minimum ultimate tensile load of 19,675 lbs, and a minimum tensile modulus of elasticity of 6.7×10^6 psi in accordance with ASTM D7205. Bond strength will be a minimum of 2,047 psi in accordance with ACI 440.3R Part 2 B3. Minimum shear capacity will be 25.1 ksi in accordance with ASTM D7617.

All costs for furnishing and installing the right of way marker including materials, labor, and equipment will be incidental to the contract unit price per each for "Right of Way Marker".

June 26, 2019

Published Date: 2024	SDDOT	RIGHT OF WAY MARKER	PLATE NUMBER 900.15
			Sheet 1 of 1