SECTION B: GRADING PLANS

FOR BIDDING PURPOSES ONLY

INDEX OF SHEETS

B1	General Layout with Index
B2-B12	Estimate with General Notes & Tables
B13-B15	Table of Pavement Removals
B16-B17	Table of Pipe Quantities
B18-B23	Table of Pavement Quantities
B24	Table of Fence Quantities
B25-B41	Typical Grading Sections
B42	Horizontal Alignment Data
B43	Control Data
B44	Legend
B45-B77	Plan and Profile Sheets
B78-B92	Pavement Removal Layout
B93-B107	Curb and Gutter Layout
B108-B120	Curb Ramp Layout
B121	Special 9' - 3" x 5' Junction Box
B122	Special 7' - 6" x 5' Junction Box
B123-B124	Junction Box and Manhole Layout
B125-B126	Access Ramp Details
B127-B129	10' - 0" Retaining Wall Details
B130	2' - 6" Cocnrete Stairway Details
B131-B132	4' - 0" Concrete Stairway Details
B133	Modified PCC Fillet Details
B134-B166	Standard Plates

END NH-CR-EM 0018(195)103 - PCN 04FC
Station 228+00
End ADA Upgrades = Station 228+00

BEGIN NH-CR-EM 0018(195)103 - PCN 04FC
Station 99+00
Begin Grading = Station 99+03.71

END NH-CR-EM 0018(195)103 - PCN 04FC
Station 136+50
End Grading = Station 136+50

BEGIN NH-CR-EM 0018(195)103 - PCN 06N3
Station 200+00
Begin ADA Upgrades = Station 200+00

END NH-CR-EM 0018(195)103 - PCN 06N3
BEGIN NH-CR-EM 0018(195)103 - PCN 04FC
Station 215+19.40
Station 215+19.40 SD 407 = Station 100+00 US 18

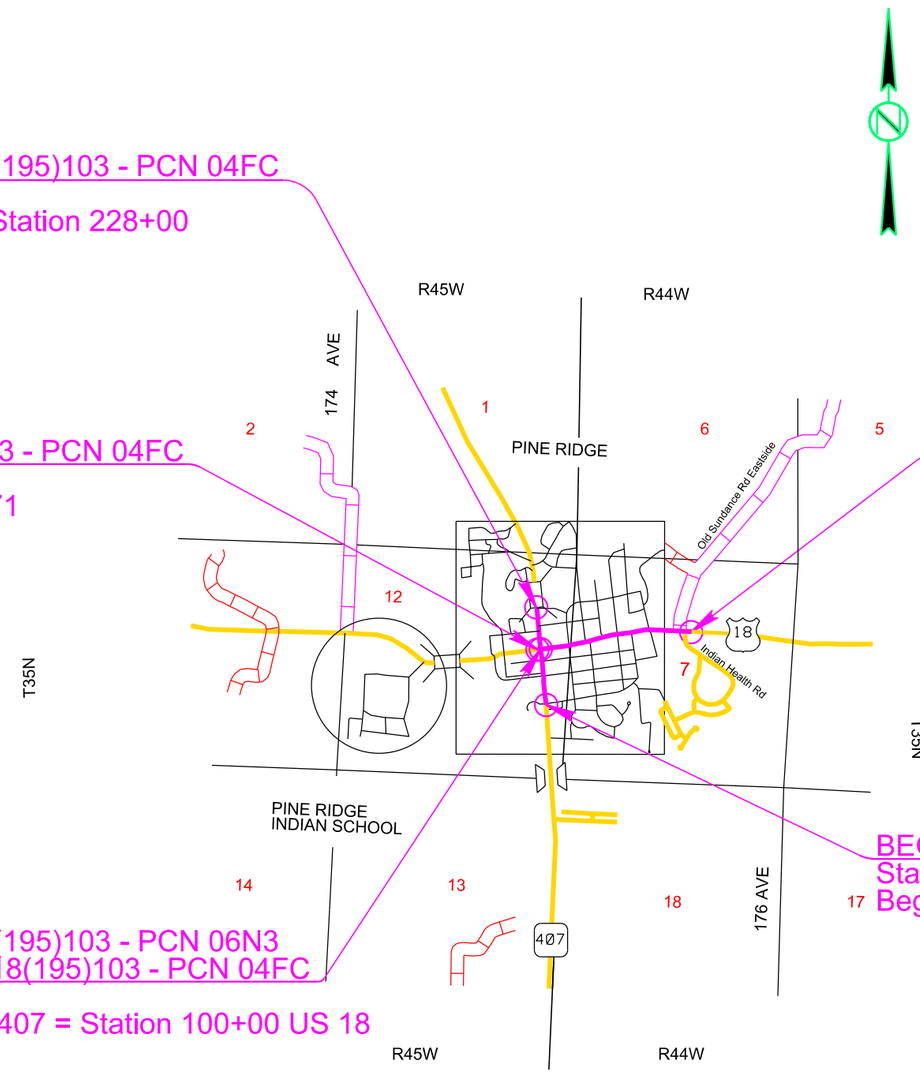

REGISTERED PROFESSIONAL ENGINEER
REG. NO.
11522
BRANDON
FRIED
SOUTH DAKOTA
10/17/24

Plot Scale - 1:200
Plotted From - BrandonFried
File - ...\Sections\SectionB\titleB.dgn

FOR BIDDING PURPOSES ONLY

SECTION B ESTIMATE OF QUANTITIES

Rev. 11/6/2024 BAF

PCN 04FC

BID ITEM NUMBER	ITEM	QUANTITY	UNIT
009E0010	Mobilization	Lump Sum	LS
009E4300	Construction Schedule, Category III	Lump Sum	LS
100E0020	Clear and Grub Tree	9	Each
100E0100	Clearing	Lump Sum	LS
110E0300	Remove Concrete Curb and/or Gutter	4,197	Ft
110E0600	Remove Fence	1,976	Ft
110E1010	Remove Asphalt Concrete Pavement	2,135.5	SqYd
110E1100	Remove Concrete Pavement	3,843.4	SqYd
110E1140	Remove Concrete Sidewalk	5,055.7	SqYd
110E7040	Remove Gate for Reset	2	Each
110E7510	Remove Pipe End Section for Reset	1	Each
120E0010	Unclassified Excavation	38,264	CuYd
120E0600	Contractor Furnished Borrow	7,652	CuYd
120E0900	Contaminated Material Excavation	100	CuYd
120E1000	Muck Excavation	898	CuYd
120E2000	Undercutting	19,418	CuYd
120E6100	Water for Embankment	71.0	MGal
250E0020	Incidental Work, Grading	Lump Sum	LS
270E0020	Salvage and Stockpile Asphalt Mix Material	7,219.0	Ton
270E0110	Salvage and Stockpile Granular Material	10,352.0	Ton
380E2566	6" Barrier Type Colored Median PCC Pavement	22.0	SqYd
380E2900	6" Raised Concrete Island with Pedestrian Access	38.5	SqYd
380E3520	6" PCC Approach Pavement	695.0	SqYd
380E4050	8" PCC Fillet Section	1,132.1	SqYd
420E0300	Structure Excavation, Retaining Wall	1	CuYd
421E0100	Pipe Culvert Undercut	86	CuYd
421E1000	Footing Undercut	2	CuYd
450E0122	18" RCP Class 2, Furnish	1,210	Ft
450E0130	18" RCP, Install	1,210	Ft
450E0142	24" RCP Class 2, Furnish	272	Ft
450E0150	24" RCP, Install	272	Ft
450E0182	36" RCP Class 2, Furnish	3,180	Ft
450E0190	36" RCP, Install	3,180	Ft
450E0192	42" RCP Class 2, Furnish	130	Ft
450E0200	42" RCP, Install	130	Ft
450E2028	36" RCP Flared End, Furnish	2	Each
450E2029	36" RCP Flared End, Install	2	Each
450E2032	42" RCP Flared End, Furnish	2	Each
450E2033	42" RCP Flared End, Install	2	Each
450E4789	36" CMP 16 Gauge, Furnish	4	Ft
450E4790	36" CMP, Install	4	Ft
450E5421	36" CMP Safety End with Bars, Furnish	1	Each
450E5423	36" CMP Safety End, Install	1	Each

BID ITEM NUMBER	ITEM	QUANTITY	UNIT
450E8023	36" CMP to RCP Transition, Furnish	1	Each
450E8025	36" Pipe Transition, Install	1	Each
* 450E8900	Cleanout Pipe Culvert	26	Each
450E9001	Reset Pipe End Section	1	Each
462E0100	Class M6 Concrete	204.4	CuYd
470E0020	Pipe Handrail	187.2	Ft
480E0100	Reinforcing Steel	35,388	Lb
480E0200	Epoxy Coated Reinforcing Steel	1,483	Lb
530E0300	Type C Concrete Retaining Wall	60	SqFt
600E0300	Type III Field Laboratory	1	Each
620E0020	Type 2 Right-of-Way Fence	172	Ft
620E1020	2 Post Panel	2	Each
620E2100	Reset Gate	2	Each
621E0050	5' Chain Link Fence with Top Rail	1,436	Ft
621E0244	Special 4' Fence	86	Ft
621E0420	Single Vehicular Swing Gate	2	Each
650E0079	Modified Type B68 Concrete Curb and Gutter	5,251	Ft
650E0080	Type B68 Concrete Curb and Gutter	1,394	Ft
650E4679	Modified Type P8 Concrete Gutter	582	Ft
650E4680	Type P8 Concrete Gutter	291	Ft
650E6080	8" Concrete Valley Gutter	129	Ft
651E0040	4" Concrete Sidewalk	42,069	SqFt
651E0160	6" Reinforced Concrete Sidewalk	5,371	SqFt
651E0540	4" Colored Concrete Sidewalk	24,009	SqFt
651E7000	Type 1 Detectable Warnings	648	SqFt
670E5340	4' x 11' Precast Concrete Type S Drop Inlet Lid	32	Each
670E5350	Special Precast Concrete Type S Drop Inlet Lid	2	Each
671E1048	48" Manhole	1	Each
671E4548	48" Manhole Cone Section	4.3	Ft
671E6008	Type A8 Manhole Frame and Lid	8	Each
671E6100	Manhole Frame & Lid, Install	8	Each
671E7010	Adjust Manhole	11	Each
700E0210	Class B Riprap	72.7	Ton
700E0310	Class C Riprap	76.0	Ton
831E0110	Type B Drainage Fabric	136	SqYd
831E0300	Reinforcement Fabric (MSE)	1,280	SqYd
900E5149	Landscaping Rock	15.0	CuYd

*** - Denotes Non-Participating**

PCN 06N3

BID ITEM NUMBER	ITEM	QUANTITY	UNIT
009E0010	Mobilization	Lump Sum	LS
100E0100	Clearing	Lump Sum	LS
110E0300	Remove Concrete Curb and/or Gutter	446	Ft
110E1010	Remove Asphalt Concrete Pavement	964.4	SqYd
110E1100	Remove Concrete Pavement	165.7	SqYd
110E1140	Remove Concrete Sidewalk	929.9	SqYd
120E0010	Unclassified Excavation	718	CuYd
120E0600	Contractor Furnished Borrow Excavation	258	CuYd
120E0900	Contaminated Material Excavation	100	CuYd
120E2000	Undercutting	349	CuYd
120E6100	Water for Embankment	2.0	MGal
270E0020	Salvage and Stockpile Asphalt Mix Material	176.0	Ton
270E0110	Salvage and Stockpile Granular Material	257.0	Ton
380E3520	6" PCC Approach Pavement	104.4	SqYd
380E4050	8" PCC Fillet Section	339.2	SqYd
* 450E8900	Cleanout Pipe Culvert	16	Each
650E0079	Modified Type B68 Concrete Curb and Gutter	67	Ft
650E0080	Type B68 Concrete Curb and Gutter	533	Ft
650E4680	Type P8 Concrete Gutter	140	Ft
651E0040	4" Concrete Sidewalk	11,539	SqFt
651E0160	6" Reinforced Concrete Sidewalk	939	SqFt
651E0540	4" Colored Concrete Sidewalk	2,241	SqFt
651E7000	Type 1 Detectable Warnings	220	SqFt
671E7010	Adjust Manhole	3	Each

*** - Denotes Non-Participating**

REGISTERED PROFESSIONAL ENGINEER
REG. NO.
11522
BRANDON
FRIED
SOUTH DAKOTA
11/6/24

GRADING OPERATIONS

Water for Embankment is estimated at the rate of 10 gallons of water per cubic yard of Embankment minus Waste.

The estimated cubic yards of excavation and/or embankment required to construct outlet ditches, ditch blocks, and approaches are included in the earthwork balance notes on the profile sheets.

Special ditch grades and other sections of the roadway different than the typical section(s) will be constructed to the limits shown on the cross sections. If significant changes to the cross sections are necessary during construction, the Engineer will contact the Designer for the proposed change.

UTILITIES

The Contractor will be aware that the existing utilities shown in the plans were surveyed prior to the design of this project and might have been relocated or replaced by a new utility facility prior to construction of this project, might be relocated or replaced by a new utility facility during the construction of this project, or might not require adjustment and may remain in its current location. The Contractor will contact each utility owner and confirm the status of all existing and new utility facilities. The utility contact information is provided elsewhere in the plans or bidding documents.

Pine Ridge Village – Indian Health Services will be adjusting and replacing portions of their water facilities under Project Number PR2021-CW-01 – PCN X06L.

PCN 04FC – TABLE OF CLEAR AND GRUB TREE (>6" DIAMETER)

Station	L/R	Quantity (Each)
102+71	L	1
103+12	L	1
110+03	L	1
110+10	L	1
222+91	R	1
223+07	R	1
223+35	R	1
224+47	R	1
224+48	R	1
	Total:	9

EXISTING SOIL CONDITIONS

Station	Offset (ft)	Depth (ft)	Description
105+00	23.6 Lt	1.5-3.3	Light brown silty sand
		3.3-6.5	Brown sandy silt
		6.5-15.0	Tan sand
109+00	22.2 Lt	1.5-2.3	Light brown silt clay
		2.3-6.5	Brown silty sand
		6.5-12.5	Tan sand
		12.5-15.0	Tan sandy clay
115+00	22.6 Lt	1.0-6.5	Light brown silty sand
		6.5-15.0	Tan sand
118+50	30.2 Lt	0.9-12.0	Brown to tan silty sand
		12.0-15.0	Tan sand
122+50	18.4 Lt	0.9-4.0	Light brown sandy silt
		4.0-15.0	Brown clay silt
127+00	19.8 Lt	0.9-3.5	Brown sandy silt
		3.5-10.0	Light brown silty sand
		10.0-15.0	Brown sand
132+50	20.1 Lt	0.9-11.0	Light brown sandy silt
		11.0-20.0	Brown clay silt

Station	Offset (ft)	Initial Water Level (ft)	Final Water Level (ft)	Time Between Reading (hrs)
105+00	23.6 Lt	Dry	Dry/Caved @ 13.7	21
109+00	22.2 Lt	Dry	Dry/Caved @ 13.0	22
115+00	22.6 Lt	Dry	Dry/Caved @ 13.4	23
118+50	30.2 Lt	Dry	Dry/Caved @ 13.8	24
122+50	18.4 Lt	Dry	Dry/Caved @ 14.5	19
127+00	19.8 Lt	Dry	Dry/Caved @ 14.0	20
132+50	20.1 Lt	Dry	Dry/Caved @ 19.0	21

While free water was not encountered in the borings at the time of the investigation, this may not be the case with seasonal changes in moisture. Also, the nature of the soil on this project is that most areas have very little binder and consequently may not hold steep trench slopes well. The contractor is advised to be prepared to dewater any excavations and to use proper safety equipment and techniques during construction.

A copy of the subsurface investigation for this project is available for review at the Rapid City Region and Custer Area offices.

REMOVAL OF EXISTING CONCRETE PAVEMENT
STA. 99+00.00 to STA. 136+50.00
STA. 200+00.00 to STA. 218+00.00

The existing concrete is Plain Jointed PCC Pavement. The existing transverse joints are perpendicular and are spaced at 20 feet. The aggregate in the existing Plain Jointed PCC Pavement is limestone.

TABLE OF IN PLACE P.C.C. PAVEMENT WIDTHS

Location	Pavement Width
North of the SD 407/ US 18 Intersection	40 Feet
South of the SD 407/ US 18 Intersection	44 Feet
West of the SD 407/ US 18 Intersection	38 Feet
East of the SD 407/ US 18 Intersection	Begins at 56 Feet and tapers to 50 Feet
Within the SD 407/ US 18 Intersection	40 Feet
127+00	19.8 Lt
132+50	20.1 Lt

The 8-inch P.C.C. fillets within the SD 407/ US 18 intersection are reinforced with No. 5 deformed steel bars spaced 18" center to center.

TABLE OF IN PLACE SURFACING AND GRANULAR MATERIAL (For Information Only)

Station	Centerline Offset (ft)	Thickness (in) AC	Thickness (in) Base Course	Width (ft) Mainline AC
105+00	23.6 Lt	5.0	12.0	49.6
109+00	22.2 Lt	5.0	12.0	48.0
115+00	22.4 Lt	6.0	5.0	48.4
118+50	38.0 Lt	5.0	5.0	60.2
122+50	18.4 Lt	5.0	4.0	24.2
127+00	19.8 Lt	5.0	4.0	24.0
132+50	20.1 Lt	5.0	4.0	24.8

REGISTERED PROFESSIONAL ENGINEER
REG. NO
11522
BRANDON
FRIED
SOUTH DAKOTA
8/2/24

SHRINKAGE FACTOR: Embankment +20

PCN 04FC – TABLE OF EXCAVATION QUANTITIES BY BALANCES

Station to	Station	Excavation (CuYd)	* Undercut (CuYd)	* Contractor Furnished Borrow Exc. (CuYd)	* Muck Exc. (CuYd)	Total Excavation (CuYd)	** Waste (CuYd)	** Haul (CuYdSta)
99+03.71	136+50.00	4,050	15,585	7,307	426	27,368	426	5,400
215+19.40	226+50.00	144	510	240	0	894	0	200
0+32.00	2+17.13	144	312	0	0	456	82	0
11+00.00	14+78.42	225	1,250	74	0	1,549	0	4,800
22+13.89	29+00.00	3,340	1,761	0	472	5,573	2,052	0
	Totals:	7,903	19,418	7,621	898	35,840	2,560	10,400

* The quantities for these items are in the Estimate of Quantities under their respective contract items.
** The quantities for these items are for information only.

PCN 06N3 – TABLE OF EXCAVATION QUANTITIES BY BALANCES

Station to	Station	Excavation (CuYd)	* Undercut (CuYd)	* Contractor Furnished Borrow Exc. (CuYd)	* Muck Exc. (CuYd)	Total Excavation (CuYd)	** Waste (CuYd)	** Haul (CuYdSta)
202+09.59	215+19.40	0	349	258	0	607	0	100
	Totals:	0	349	258	0	607	0	100

* The quantities for these items are in the Estimate of Quantities under their respective contract items.
** The quantities for these items are for information only.

PCN 04FC – TABLE OF UNCLASSIFIED EXCAVATION

	(CuYd)
Excavation	7,903
Undercut	19,418
Topsoil	1,948
Salvaged Asphalt Mix and Granular Base Material	8,995
Total	38,264

PCN 06N3 – TABLE OF UNCLASSIFIED EXCAVATION

	(CuYd)
Excavation	0
Undercut	349
Topsoil	147
Salvaged Asphalt Mix and Granular Base Material	222
Total	718

SALVAGE AND STOCKPILE ASPHALT MIX MATERIAL

The Los Angeles Abrasion Loss value on the aggregate used for the in-place asphalt concrete was unknown.

An estimated 7,219 tons (3,518 Cubic Yards) of asphalt mix material will be salvaged from US18 (PCN 04FC) and 176 tons (86 Cubic Yards) of asphalt mix material will be salvaged from SD407 (PCN 06N3) according to the in-place surfacing typical sections and stockpiled at a site furnished by the Contractor and satisfactory to the Engineer.

Salvaged material will be processed to meet the requirements of Section 884.2 D.6 prior to stockpiling. The Contractor will ensure that no vegetation, topsoil, subgrade, or other foreign material is incorporated into the salvaged asphalt mix material.

The salvaged material not used on the project will be disposed of as directed by the Engineer.

The quantity of salvaged asphalt mix material may vary from the plans.

The quantity of salvageable material is estimated from the in-place surfacing typical sections. This estimated quantity was included in the unclassified excavation quantities.

SALVAGE AND STOCKPILE GRANULAR MATERIAL

An estimated 10,352 tons (5,477 Cubic Yards) of granular material will be salvaged from US18 (PCN 04FC) and 257 tons (136 Cubic Yards) of granular material will be salvaged from SD407 (PCN 06N3) according to the in-place surfacing typical sections and stockpiled at a site furnished by the Contractor and satisfactory to the Engineer.

Salvaged material will be processed to meet the requirements of Section 884.2 D.8 prior to stockpiling. The Contractor will ensure that no vegetation, topsoil, subgrade, or other foreign material is incorporated into the granular material.

The salvaged material not used on the project will be disposed of as directed by the Engineer.

The quantity of salvaged granular material may vary from the plans.

The quantity of salvageable material is estimated from the in-place surfacing typical sections. This estimated quantity was included in the unclassified excavation quantities.

REGISTERED PROFESSIONAL ENGINEER
REG. NO
11522
BRANDON
FRIED
SOUTH DAKOTA
8/2/24

PROCEDURES FOR DETERMINING UNCLASSIFIED EXCAVATION QUANTITY

When plan quantities are used for payment, the Unclassified Excavation quantity will be used for final payment and the plans quantity of Topsoil and salvaged surfacing items listed in the Table of Unclassified Excavation will not be adjusted according to field measurements.

The following paragraphs are general earthwork information and information in regard to computing the Unclassified Excavation quantity when final cross sections are taken in the field:

The Unstable Material Excavation quantity is included in the Excavation quantity listed in the Table of Unclassified Excavation. When finaling a project, the Unstable Material Excavation quantity will be added to the Excavation quantity to compute the Unclassified Excavation quantity.

The Topsoil quantity in the Table of Unclassified Excavation is an estimate. When finaling a project, the total quantity of field measured Topsoil will be used in place of the estimated Topsoil quantity. The quantity of Topsoil from the cuts will be paid for twice as Unclassified Excavation, as it will be in both the Excavation and Topsoil quantities. This will be full compensation for Excavation, which includes necessary undercutting to provide space for placement of topsoil.

The Excavation quantities from individual balances and the Table of Unclassified Excavation have been reduced by the volume of in place surfacing that will be removed and/or salvaged.

Salvaged Asphalt Mix and Granular Base Material will be paid for at the contract unit price per ton and is also included in and paid for once as Unclassified Excavation. As shown in the Table of Unclassified Excavation, the estimated quantity of 8,995.0 cubic yards of Salvaged Asphalt Mix and Granular Base Material from fill sections will be added to the Excavation quantity to determine the Unclassified Excavation quantity. When finaling a project, the quantities of Salvaged Asphalt Mix and Granular Base Material from fill sections will not be adjusted according to field measurements. The quantity of Salvaged Asphalt Mix and Granular Base Material from cut sections will not be added to the Excavation quantity as it is already in the cuts on the final cross sections.

The volume of in place Concrete Surfacing and Asphalt Surfacing removed will NOT be paid for as Unclassified Excavation.

The Excavation quantities from individual balances and the table above have been reduced by the volume of in place concrete pavement and asphalt pavement that will be removed.

HAUL

Included in the Table of Excavation Quantities by Balances are Out-of-Balance Haul, and Haul. They are not pay items and are for informational purposes only. The mass haul diagram is available as part of the bid package for use in figuring this haul.

Haul: Estimated quantity (CuYdSta) for moving unclassified excavation material to the locations where it is needed throughout the earthwork balance.

GENERAL GEOLOGY

The project alignment underlain by a variable thickness of Quaternary Terrace Deposits overlaying the Arikaree Group. The South Dakota Geological Survey describes these deposits/formations as outlined below: Quaternary Terrace Deposits consist of varying thicknesses of clay to boulder sized clasts that were deposited pediments, paleochannels, and terrace fills of former flood plains. The Arikaree Group is comprised of the Rosebud, Harrison, Turtle Butte, Monroe Creek, and Sharps Formations. The formations included in the Arikaree Group consists of pale pink to gray clay, siltstone, sandstone and ash. Some harder sandstone and siltstone ledges form stair-step outcrops. Sandstones and siltstones are tan to buff colored in the middle formations of the group.

CLASSIFICATION OF EXCAVATION

Some cut sections and utility trenches may encounter sandstone, siltstone, and claystone ledgerock. The beds of rock are not expected to be massive. Durability of these rock units vary with the degree of weathering; extra effort may be required to excavate. Most of the materials encountered should be able to be excavated using conventional methods associated with normal Unclassified Excavation. Blasting is not anticipated. Muck Excavation will be required at the areas shown in the plans or as directed by the Engineer.

UNDERCUTTING

In all cut sections the earthen subgrade will be undercut 2 feet below the earthen subgrade surface. The undercut material or other suitable material, as directed by the Engineer, will then be replaced and compacted to the density specified for the section being constructed. In the curb and gutter sections, the undercut will extend from behind the outside curb to behind the opposite outside curb. The distance behind the curb will be determined based on the paving operation.

Shallow embankment sections, fills less than 2 feet in height measured at the finished subgrade shoulders, will be undercut to ensure a minimum 2-foot height of earth embankment for the entire width of roadbed. The upper 4 inches of undercut material that consists of topsoil with a high humus content will be used as topsoil, placed in the fill slopes outside the shoulders of the earthen subgrade, or placed in the lower portion (below 4 foot depth) in fills which are greater than 4 feet in height. The remaining undercut soil and soil obtained from adjacent excavation (excluding the upper 4 inches) will then be replaced and compacted to the density specified for the section being constructed.

Intersecting roads will be undercut to the same depth as the Mainline roadway out to the limits of asphalt concrete or PCC pavement placement on the intersecting road unless specified otherwise. Quantities are included in the "Table of Undercutting".

The plan shown quantity will be the basis of payment. However, if there are additional areas of undercut other than what is shown in the plans, the Engineer will direct removal of these areas and the additional areas will be measured according to the Engineer.

PCN 04FC – TABLE OF UNDERCUTTING QUANTITIES

Station	to	Station	Description	Quantity (CuYd)
99+03.71		136+50.00	US18	15,585
215+19.40		226+50.00	US18	510
0+32.00		2+17.13	Turn Lane	312
11+00.00		14+78.42	xr117	1,250
22+13.89		29+00.00	xr133	1,761
			Total:	19,418

PCN 06N3 – TABLE OF UNDERCUTTING QUANTITIES

Station	to	Station	Description	Quantity (CuYd)
202+09.59		226+50.00	SD407	349
			Total:	349

REINFORCEMENT FABRIC (MSE)

Although poor subgrade conditions are not anticipated, the conditions may change during construction. Any unstable areas should be reworked and recompacted. If, in the opinion of the Engineer, the subgrade will not stabilize by this method, the upper 6 inches of subgrade will be excavated and wasted. Reinforcement Fabric (MSE) and granular material may be used. Contact the Geotechnical Engineering Activity (605-773-3725) for assistance should the use of Reinforcement Fabric (MSE) and additional granular material become necessary.

1,280 square yards (50' x 200') of Reinforcement Fabric (MSE) and an additional 350 tons. (50' x 200' x 0.5') of base course is included in the materials quantities for bidding purposes. The Reinforcement Fabric (MSE) quantity has been increased by 15% to account for overlaps. These quantities can be adjusted or eliminated by CCO, depending on field conditions. See Section F for materials quantities.

PCN 04FC – TABLE OF REINFORCEMENT FABRIC (MSE)

Station to	Station	*Area (SqYd)
100+00	136+50	1,280
	Total:	1,280

*Areas include intersecting streets. (See Section F for materials quantities)

REGISTERED PROFESSIONAL ENGINEER
REG. NO
11522
BRANDON
FRIED
SOUTH DAKOTA
8/2/24

UNSTABLE MATERIAL EXCAVATION

The areas of unstable material excavation are drawn on the cross sections with a normal depth of 2 feet. The estimated quantity of 461 cubic yards of unstable material excavation will be paid for at the contract unit price per cubic yard for “Unclassified Excavation”.

All areas designated as Unstable will be excavated. The unstable material excavated on this project will be placed outside the subgrade shoulder in fill sections or stockpiled and used as topsoil.

Field measurement of unstable material excavation will not be made. However, if there are additional areas of unstable material excavation other than what is shown in the plans, the Engineer will direct removal of these areas and the additional areas will be measured according to the Engineer.

PCN 04FC – TABLE OF UNSTABLE MATERIAL EXCAVATION

Station	to	Station	L/R	Depth (Ft)	Quantity (CuYd)
110+65		113+70	L	2	338
131+25		132+75	L	2	123
				Total:	461

MUCK EXCAVATION

The areas of muck excavation are drawn on the cross sections with a normal depth of 3 feet. The estimated quantity of 898 cubic yards of muck excavation will be paid for at the contract unit price per cubic yard for “Muck Excavation”.

Muck excavation consists of the removal of highly organic and/or highly saturated material from the designated areas shown on the cross sections. Highly organic muck material will not be used in the embankment but may be used as topsoil. Non-organic muck material may be used as embankment outside of the fill subgrade shoulder if it is properly handled and dried prior to placement in the embankment.

Field measurement of muck excavation will not be made unless the Engineer orders additional excavation, or when the Engineer determines, in accordance with Section 120.3 A.1 of the Specifications, that the classification of excavation be changed.

If the areas designated as muck excavation can be removed with similar equipment and procedures as used for unclassified excavation, the material will be measured and paid for as “Unclassified Excavation”.

PCN 04FC – TABLE OF MUCK EXCAVATION

Station	to	Station	L/R	Depth (Ft)	Quantity (CuYd)
132+00		133+00	R	3	387
133+50		134+50	L	3	39
27+00		29+50	R	3	472
				Total:	898

CONTAMINATED MATERAIL EXCAVATION

The estimated quantity of “Contaminated Material Excavation” is 100 cubic yards. The quantity of “Contaminated Material Excavation” may vary from the plans. No adjustment will be made to the contract unit price for variations in the quantity of “Contaminated Material Excavation”.

CONTRACTOR FURNISHED BORROW EXCAVATION

The Contractor will provide a suitable site for Contractor furnished borrow excavation material. The Contractor is responsible for obtaining all required permits and clearances for the borrow site. The borrow material will be approved by the Engineer. The plans quantity for “Contractor Furnished Borrow Excavation” as shown in the Estimate of Quantities will be the basis of payment for this item.

Restoration of the Contractor furnished borrow excavation site will be the responsibility of the Contractor.

PCN 04FC – INCIDENTAL WORK, GRADING

Station	L/R	Remarks
100+99	L	Take Out Manhole with Frame & Cover
100+99 to 103+24	L	Take Out 24”-225’ RCP
103+07 to 103+24	R to L	Take Out 24”-56’ RCP
103+07	R	Take Out Drop Inlet & Drop Inlet Lid
103+24	L	Take Out Drop Inlet & Drop Inlet Lid
107+44 to 107+61	R	Take Out Retaining Wall
108+23 to 108+32	R	Take Out Shrubs
110+87	L	Take Out 24”-18’ RCP & 1 Flared End
110+87	L	Take Out Drop Inlet & Drop Inlet Lid
111+93	R	Take Out Drop Inlet & Drop Inlet Lid
111+89		Take Out 30”-104’ CMP
111+93	R	Take Out 18”-26’ RCP & 1 Flared End
113+62 to 114+56	L	Take Out 18”-96’ RCP & 1 Flared End
114+58	L	Take Out Drop Inlet with Frame and Grate
122+45		Take Out 30”-108’ CMP & 1 Manhole with Frame and Cover & 1 End Section
132+49 to 132+49	R to L	Take Out 30”-137’ CMP & 1 End Section
132+40 to 132+61	R	Take Out Shrubs
133+51 to 134+72	R	Take Out 30”-127’ RCP Arch & 1 Bend & 2 End Sections
215+62 to 215+84	R to L	Take Out 24”-130’ RCP
215+84	L	Take Out Manhole with Frame and Cover
215+84 to 219+18	L	Take Out 24”-334’ RCP
217+33 to 217+62	R	Take Out Rock Wall
219+65 to 219+79	R	Take Out Shrubs
219+18	L	Take Out Manhole with Frame and Cover
219+18 to 222+40	L	Take Out 24”-322 RCP
222+60 to 222+82	R	Take Out Shrubs
221+90 to 223+10	R	Take Out 120’ Electric Fence
222+40	L	Take Out Drop Inlet & Drop Inlet Lid
222+40 to 224+42	L	Take Out 24”-200’ RCP
224+42	L	Take Out Manhole with Frame and Cover
224+42 to 225+02	L	Take Out 24”-72’ RCP & 1 Flared End
225+02	L	Take Out Gabions

INSLOPE TRANSITIONS

Inslope transitions will be required at various pipe locations. Refer to Standard Plate 120.05 for details.

PCN 04FC – TABLE OF INSLOPE TRANSITIONS AT PIPE CULVERTS OR REINFORCED CONCRETE BOX CULVERTS

Station	L/R	Type
111+92	R	2
122+47	R	2
132+49	R	2
132+49	L	2
225+02	L	2

TYPE III FIELD LABORATORY

The lab will be equipped with an internet connection such as DSL, cable modem, or other approved service. The internet connection will be provided with a multi-port wireless router. The internet connection will be a minimum speed of 5 Mbps unless limited by job location and approved by the DOT. Prior to installing the wireless router, the Contractor will submit the wireless router’s technical data to the Area Office to check for compatibility with the state’s computer equipment. The internet connection is intended for state personnel usage only. The Contractor’s personnel are prohibited from using the internet connection unless pre-approved by the Project Engineer. These items will be incidental to the contract unit price per each for “Type III Field Laboratory”.

REGISTERED PROFESSIONAL ENGINEER
REG. NO
11522
BRANDON
FRIED
SOUTH DAKOTA
8/2/24

PIPE CULVERT UNDERCUT

The table includes undercut for 36 inch and larger pipe culverts. The depth of undercut is an estimate and the actual depth necessary will be determined during construction. Pipes listed may or may not require undercutting and pipes not listed may require undercutting. The Engineer will determine which pipe will be undercut in accordance with Section 421 of the Specifications.

PCN 04FC

Station	Undercut Depth (Ft)	Pipe Culvert Undercut (CuYd)
111+97 Rt	1	11.0
122+45	1	25.0
132+49 Rt	1	16.4
132+49 Lt	1	11.1
224+46 Lt	1	22.8
	Total:	86.3

The table below contains the rate for one-foot depth of pipe culvert undercut per foot of pipe length and should be used as an aid in determining the actual amount of undercut to be performed during construction. The table is derived from the drawing below and conforms to the Specifications. When calculating pipe culvert undercut, the length of pipe ends should be included in the overall pipe length.

Storm sewer and approach pipes do not require undercutting unless specified otherwise in these plans.

Pipe Diameter (In)	Round Pipe Undercut Rate for 1' Depth (CuYd/Ft)	Arch Pipe Undercut Rate for 1' Depth (CuYd/Ft)
24	0.2407	0.2577
30	0.2623	0.2847
36	0.2840	0.3110
42	0.3056	0.3337
48	0.3272	0.3596
54	0.3488	0.3827
60	0.3704	0.4105
66	0.3920	---
72	0.4136	0.4630
78	0.4352	---
84	0.4568	0.5123
90	0.4784	---

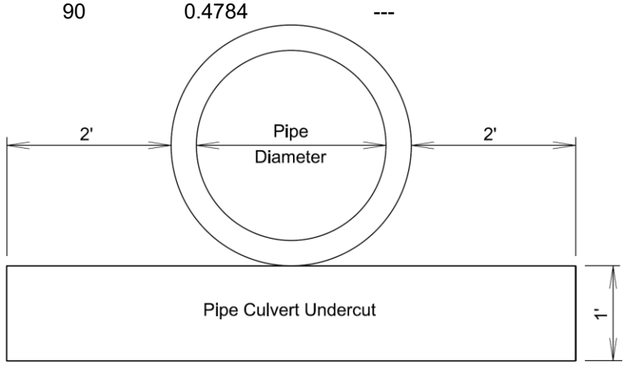

CURB AND GUTTER

The curb and gutter cannot be placed monolithically and must be placed with a separate operation according to Standard Plate 380.21.

CURING OF CONCRETE

Portland Cement Concrete Pavement, Concrete Curb & Gutter, Concrete Gutter, and Concrete Fillet will be cured with Linseed Oil Base Emulsion Compound. All costs for Curing of Concrete will be incidental to the contract unit price per various Portland Cement Concrete bid items.

CLEANOUT DROP INLET

Clean out accumulated debris in drop inlet at locations shown in the "Table of Cleanout Drop Inlet" It is the responsibility of the Contractor to visit the site to determine the extent of pipe cleaning work required.

All costs for this work will be included in the contract unit price per each for "Cleanout Pipe Culvert".

PCN 04FC – TABLE OF CLEANOUT DROP INLET

Station	L/R	Quantity (Each)
214+58	L	1
216+72	L	1
216+72	R	1
230+05	L	1
230+05	R	1
236+65	L	1
237+00	R	1
238+10	R	1
	Total:	8

PCN 06N3 – TABLE OF CLEANOUT DROP INLET

Station	L/R	Quantity (Each)
206+12	L	1
206+11	R	1
208+59	L	1
208+83	R	1
209+94	L	1
214+48	R	1
	Total:	6

CULVERT CLEANOUT

Material in existing mainline culverts as listed in the "Table of Culvert Cleanout" will be cleaned out by water flushing or other approved methods. Each culvert will be cleaned such that the pipe is visible throughout its length to reestablish the flow line and allow for inspection of the interior or the pipe.

The Contractor will examine the drop inlets at 208+59-L, 208+83-R, 209+94-L, 230+05-L, 230+05-R, 236+65-L, 237+00-R and 238+10-R to determine the direction of all existing storm sewer coming into or leaving the noted drop inlet. Any storm sewer line found that is not listed in the "Table of Culvert Cleanout" will be evaluated to determine if it needs to be cleaned out. The decision to clean out any discovered storm sewer line will be made by the Engineer. An additional quantity of 9 each for "Cleanout Pipe Culvert" has been included to cover any discovered line not listed in the "Table of Culvert Cleanout."

All costs for this work will be incidental to the contract unit price per each for "Cleanout Pipe Culvert".

04FC – TABLE OF CULVERT CLEANOUT

Station to	Station	Length (Ft)	Quantity (Each)
214+58-25'L	215+84-30'L	127	1
216+72-22'L	216+72-22'R	44	1
216+72-22'R	219+25-25'R	254	1
219+25-24'L	219+25-25'R	49	1
219+25-25'R	220+40-23'R	114	1
220+40-23'R	222+06-22'R	166	1
222+05-22'L	222+06-22'R	43	1
222+06-22'R	225+35-22'R	330	1
225+35-22'R	225+36-68'L	90	1
226+15-22'L	225+35-22'L	80	1
227+23-22'R	227+24-22'L	44	1
227+24-22'L	227+25-83'L	62	1
	Additional Quantity:		6
	Total:		18

PCN 06N3 – TABLE OF CULVERT CLEANOUT

Station to	Station	Length (Ft)	Quantity (Each)
206+12-53'L	206+12-28'L	25	1
206+12-28'L	206+11-19'R	47	1
206+11-19'R	206+10-34'R	88	1
208+58-28'L	207+91-58'L	80	1
208+58-28'L	208+83-20'R	54	1
208+58-28'L	209+93-27'L	135	1
214+49-24'R	214+58-25'L	49	1
	Additional Quantity:		3
	Total:		10

FOR BIDDING PURPOSES ONLY

Rev. 8/2/2024 BAF

EROSION REPAIR AT 230+05

Scour has developed at the end of the pipe located around 230+05-47' Lt. The Contractor will remove the existing end section for reset. The Contractor will take care to not damage the existing end section during removal.

Class B Riprap will be placed at a depth 2 ft below the flowline of the existing culvert beginning 1 ft behind the connection of the pipe and the end section. The Class B Riprap will extend beyond the end section to a total length of 15' The Class B Riprap that extends beyond the end section will be wrapped to match the existing drainage. Class B Riprap will be placed around the existing pipe to the top of the pipe and will be shaped to match the inslope along the end section. Class B Riprap will be placed to the flowline of the channel beyond the end of the reset end section. The width of Class B Riprap will be 2 ft beyond the outside edge of the existing pipe, and will remain a constant width throughout the entire length of the riprap channel.

Care will be taken to determine the location of the existing ROW. The Contractor will complete all work noted above within the existing ROW.

TABLE OF EROSION REPAIR QUANTITIES AT 230+05

BID ITEM NUMBER	ITEM	QUANTITY	UNIT
120E0500	Contractor Furnished Borrow	31	CY
110E7510	Remove Pipe End Section for Reset	1	Each
450E9001	Reset Pipe End Section	1	Each
700E0210	Class B Riprap	13.0	Ton
831E0110	Type B Drainage Fabric	20	SqYd

All quantities shown in the table above are an estimated. Payment will be made for the actual quantities used to complete the work.

All disturbed ground will be seeded using the same seed mix as specified in Section D. All costs to seed the disturbed area will be incidental to the unit price per pound of the specified seed mixture. The estimated amount of seed mix needed to cover the disturbed area is approximately 0.03 lb.

CORRUGATED METAL PIPE

Corrugated metal pipes will have 2 ⅔-inch x ½-inch corrugations for 42-inch and smaller round pipe and 48-inch and smaller arch pipe unless otherwise stated in the plans. Corrugated metal pipes will have 3-inch x 1-inch or 5-inch x 1-inch corrugations for 48-inch and larger round pipe and 54-inch and larger arch pipe unless otherwise stated in the plans.

The gauge of the corrugated metal and ends will match the thickest gauge of corrugated metal pipe it is connected to.

CONCRETE PIPE CONNECTIONS

Pipe connections to existing pipes, manholes, junction boxes, and drop inlets will be done by breaking a hole into the existing structure and inserting the pipe. A concrete collar will then be poured around the pipe in the area of the connection.

REGISTERED PROFESSIONAL ENGINEER
REG. NO. 11522
BRANDON FRIED
SOUTH DAKOTA
8/2/24

When it is not possible to use a normal pipe joint (male-female ends) connections to existing pipe will be made by placing a 2' wide by 6" thick M6 concrete collar around the outside of the connection. The concrete collar will be reinforced with 6x6 W2.9 x W2.9 wire mesh.

All costs for constructing the concrete collars including materials and labor will be incidental to the contract unit price per foot for the corresponding pipe contract item.

PIPE COVER

The earthen subgrade cover for some pipe installations is less than one foot. The Contractor will take the necessary precautions to ensure the structural properties of the pipes are not damaged after installation and prior to the placement of final surfacing. Any additional costs for preventing damage to these pipes will be incidental to the contract unit price per foot for the corresponding pipe installation contract item.

STORM SEWER

Reinforced concrete pipe may be bell and spigot. The pipe sections will be adjoined such that the ends are fully entered and the inner surfaces are reasonably flush and even.

Lift holes in the reinforced concrete pipe will be plugged with grout.

Watertight joints are required for reinforced concrete pipe, drop inlets, manholes, and junction boxes where storm sewers run parallel to and within 10 feet horizontally from existing or proposed water mains.

Watertight joints are required where reinforced concrete pipes, drop inlets, manholes, or junction boxes cross water mains and are separated a distance of 18 inches or less, above or below, the water main.

If watertight joints are required then the watertight joints will extend for a distance of 10 feet beyond the water main. This measurement will be from the sealed concrete joint to the outer most surface of the water main.

Watertight joint seals will conform to the following requirements:

1. Reinforced Concrete Pipe (Circular): Gasketed pipe will conform to the requirements of ASTM C443 and the gasket will be in conformance with Section 990 of the Specifications. Non-gasketed concrete pipe will be sealed with a mastic joint seal conforming to the requirements of ASTM C990 and encased with a minimum 2-foot wide by 6-inch thick M6 concrete collar reinforced with 6x6 W2.9 x W2.9 wire mesh.

2. Reinforced Concrete Pipe (Arch): Gasketed pipe will conform to the requirements of ASTM C443 and the gasket will be in conformance with Section 990 of the Specifications. Non-gasketed concrete pipe joints will be sealed with a hydrophilic flexible water stop seal and wrapped with a 1-foot wide strip of fabric above the cradle. The fabric will conform to the requirements of Section 831 of the Specifications for Type A Drainage Fabric. The hydrophilic flexible water stop will be from the list below.

3. Drop Inlets, Manholes, and Junction Boxes: Joints will be sealed with one of the following methods:

   A. A flexible strip seal placed in the joints conforming to the requirements of ASTM C990 and the perimeter encased with a minimum 2-foot wide by 6-inch thick M6 concrete collar reinforced with 6x6 W2.9 x W2.9 wire mesh.

   B. A hydrophilic flexible water stop seal placed in the joints and a 1-foot wide strip of fabric wrapped around the perimeter of the pipe. The fabric will conform to the requirements of Section 831 of the Specifications for Type A Drainage Fabric. The hydrophilic flexible water stop will be from the list below.

   C. A self-adhesive external joint seal wrap. The seal wrap will be from the list below.

Approved List of Self-adhesive Joint Wrap

Product	Manufacturer
Mar Mac Seal Wrap	Mar Mac Construction Products McBee, SC 843-335-5909 www.marmac.com
ConWrap CS-212	Concrete Sealants, Inc. Tipp City, OH 800-332-7325 http://www.conseal.com

Approved List of Hydrophilic Flexible Water Stop Seal:

Product	Manufacturer
Waterstop RX	Cetco Hoffman Estates, IL 800-527-9948 www.cetco.com
Conseal CS-231	Concrete Sealants, Inc. Tipp City, OH 800-332-7325 http://www.conseal.com

Gaskets and seals (mastic, waterstop, and seal wraps) will be installed in accordance with the Manufacturer's recommendations.

The cost for furnishing and installing all gaskets, mastic joint seal, water stop seal, seal wrap, concrete collars, and for plugging the lift holes will be incidental to the contract unit price per foot for the corresponding pipe contract item.

04FC – TABLE OF 48" MANHOLE

Station	L/R	Frame and Lid (Type)	** 48" Manhole (Each)
106+07.35	R	A	1
		Totals:	1

Total Type A8 Manhole Frame and Lid 1

04FC – TABLE OF JUNCTION BOXES AND QUANTITIES

Station	L / R	Size L'xW'xH'	Frame and Lid (Type)	Class M6 Concrete (CuYd)	Reinforcing Steel (Lb)	** 48" Manhole Cone Section (Ft)
100+91.31	L	5'x5'x8.0'	A	5.78	1,132	
215+84.13	L	Special	A	6.60	1,741	2.0
218+84.12	L	Special	A	5.00	1,117	2.3
221+84.12	L	5'x5'x8.0'	A	5.84	1,132	
224+44.06	L	5'x5'x7.0'	A	5.36	1,045	
			Totals:	28.58	6,167	4.3

Total Type A8 Manhole Frame and Lid 5

** Eccentric

DROP INLETS

Where drop inlets are constructed within areas of curb and gutter, the Contractor will construct weep holes of at least 3 inches in diameter in the drop inlet walls. The weep holes will be constructed at the same elevation as the adjacent top of the earthen subgrade and will be maintained clean and open at all times until the permanent surfacing is placed. The drop inlets will be covered throughout construction operations as necessary with an Engineer approved cover to provide safe travel for motorists and to prevent materials from entering the storm sewer system. After the permanent surfacing has been placed, the Contractor will seal the weep holes with grout and remove all debris from the drop inlet. All costs involved with the coverings, weep holes, and removing debris from the drop inlets will be incidental to the contract unit prices for the components of the drop inlets.

The plan shown quantities of the drop inlet components such as Class M6 Concrete, Reinforcing Steel, Type B Frame and Grate, Precast Drop Inlet Collar, and Precast Concrete Type S Drop Inlet Lid will be the basis of payment for these items.

If additions or reductions to the number of drop inlets are ordered by the Engineer, payment for the components required to construct the drop inlets will be made at the contract unit prices for the components of the drop inlets.

04FC – TABLE OF DROP INLETS AND QUANTITIES

Station	L/R	Drop Inlet Size	Drop Inlet Type	Class M6 Concrete (CuYd)	Reinf. Steel (Lb)
102+59.47	R	4'x11'	S	2.52	505
102+71.79	R	4'x11'	S	2.59	518
102+96.58	L	4'x11'	S	4.41	764
102+97.89	R	4'x11'	S	2.73	540
103+10.21	R	4'x11'	S	2.76	537
103+10.56	L	4'x11'	S	4.46	764
103+74.33	R	4'x11'	S	2.63	523
104+99.96	L	4'x11'	S	4.19	733
105+10.06	R	4'x11'	S	2.95	559
106+07.35	R	4'x11'	S	3.08	574
106+44.95	R	4'x11'	S	3.55	621
106+75.36	R	4'x11'	S	3.05	564
106+79.96	L	7'x11'	S	8.16	2,158
108+99.96	L	4'x11'	S	5.42	879
109+20.36	R	4'x11'	S	4.70	752
110+84.96	L	4'x11'	S	3.70	678
111+97.44	R	4'x11'	S	3.52	664
111+97.87	L	4'x11'	S	3.57	673
113+79.44	R	4'x11'	S	3.51	616
114+79.96	L	4'x11'	S	3.68	652
114+79.96	R	4'x11'	S	3.65	633
115+59.25	L	4'x11'	S	3.19	586
116+49.96	L	4'x11'	S	3.37	606
118+39.96	L	4'x11'	S	3.65	638
118+39.96	R	4'x11'	S	3.54	620
122+43.81	L	4'x11'	S	5.20	847
124+77.17	L	4'x11'	S	5.81	922
124+84.95	R	4'x11'	S	2.92	550
127+17.54	L	4'x11'	S	6.27	975
127+17.54	R	4'x11'	S	3.55	622
129+99.96	L	4'x11'	S	6.23	970
130+00.00	R	4'x11'	S	3.44	609
132+48.65	L	7'x11'	S	10.97	2,732
132+48.65	R	4'x11'	S	4.40	779
			Totals:	141.38	26,363

Total 4'x11' Precast Concrete Type S Drop Inlet Lid 32
Total 7'x11' Precast Concrete Type S Drop Inlet Lid 2

ADJUSTMENT OF MANHOLES

The Contractor will adjust manholes to the extent necessary on this project. Adjusting the manholes may consist of removing the upper course of brick or removing the concrete walls, replacing the removed materials with brick or Class M6 concrete, placing adjusting rings if necessary, and resetting the manhole frame and lid. The elevation of the lid will be set at the same elevation of the adjacent new pavement or surrounding ground. All manhole frames, lids, and rings that are cracked or broken due to carelessness of the Contractor will be replaced with new manhole frames, lids, and rings that conform with the Specifications at the Contractor's expense. Manholes will be adjusted to the satisfaction of the Engineer. All costs involved in adjusting the manholes will be incidental to the contract unit price per each for "Adjust Manhole".

The Engineer may direct adjustment of manholes that were not included in these plans. Payment for adjusting manholes that were not included in the plans will be at the contract unit price per each for "Adjust Manhole".

04FC – TABLE OF ADJUST MANHOLES

Station	L/R	Type of Adjustment
100+32.15	L	Raise Rim
103+46.27	L	Lower Rim
106+29.02	L	Lower Rim
106+59.13	L	Lower Rim
106+78.06	L	Lower Rim
110+42.11	L	Lower Rim
114+16.87	L	Lower Rim
117+96.10	L	Lower Rim
118+23.05	L	Lower Rim
215+49.50	R	Raise Rim
220+39.86	R	Raise Rim

06N3 – TABLE OF ADJUST MANHOLES

Station	L/R	Type of Adjustment
208+60.01	R	Lower Rim
214+78.92	L	Raise Rim
215+74.40	L	Raise Rim

REGISTERED PROFESSIONAL ENGINEER
REG. NO.
11522
BRANDON
FRIED
SOUTH DAKOTA
8/2/24

04FC – TABLE OF RIPRAP AND DRAINAGE FABRIC

Station	L/R	Class B Riprap (Ton)	Class C Riprap (Ton)	Type B Drainage Fabric (SqYd)
132+48.62	L	59.7		55
225+08.73	L		76.0	61
	Totals:	59.7	76.0	116

COLORED CONCRETE FOR BOULEVARDS, MEDIANS AND SIDEWALK ISLAND

The colored concrete will have the integral color Solomon Brick Red #417 or an equal approved by the Engineer.

ColorFlo Liquid Color
Color #417 Brick Red
Solomon Colors, Inc.
www.solomoncolors.com

Brick Red requires a rate of 12.50 pounds of Solomon ColorFlo #417 Red per cubic yard of concrete. The colored concrete must be cured according to the manufacturer's recommendations with two coats of a non-yellowing acrylic curing and sealing compound. The curing and sealing compound will meet ASTM C309. The curing and sealing product will be DECRA-SEAL or an equal approved by the Engineer.

DECRA-SEAL
W.R. Meadows, Inc.
1-800-342-5976
www.wrmeadows.com

White pigmented cure will not be used. The Contractor will protect the colored concrete to ensure white pigmented curing compound will not come in contact with the colored concrete. All costs for furnishing, handling, applying the curing and sealing compound, and liquid integral color, including the materials, equipment, labor, and incidentals necessary will be incidental to the contract unit price for "6" Barrier Type Colored Median PCC Pavement" and "4" Colored Concrete".

SIDEWALK ADJACENT TO BUILDINGS

When placing sidewalk adjacent to buildings, the elevation of the new sidewalk may be either higher or lower than the existing sidewalk. This may require that modification be made to building exteriors such as: removal of siding, installation of flashing, installation of siding, or other necessary modifications. Building modifications will be approved by the Engineer. All costs associated with modifying the buildings for sidewalk placement will be incidental to the contract unit price per square foot for the corresponding concrete sidewalk contract item.

Sidewalk placed adjacent to building doorways should nearly match the doorway threshold and will have a maximum 1/4-inch vertical rise at the doorway threshold. A sidewalk turning space will be provided at building doorways in accordance with the plans. Sidewalk should ramp or slope down from the turning space to the typical sidewalk as specified in the plans. Additional sidewalk ramp or slope locations may be required. In the plans, the locations without ramps were assumed by the design Engineer as sites that slopes of less than 5 percent could be used from the turning space to the typical sidewalk. The limits of the ramp and steepened sidewalk shown in the plans may need to be adjusted to the actual doorway location and to meet sidewalk slope requirements as specified in the plans.

8" PCC FILLET SECTIONS

Payment for "8" PCC Fillet Section" will be based on plans quantity. If additions or reductions to the area of PCC fillet sections are ordered by the Engineer, payment will be made in accordance with the contract unit price per square yard for "8" PCC Fillet Section".

WOODEN FENCE REMOVAL

Approximately 269 ft of wooden fence will be removed from Sta. 103+25-Lt to 105+89-Lt. The Contractor will take care during removal of the fence to not damage any boards. All damaged boards will be replaced by the Contractor at no cost to the State. The removed fence boards will remain the property of the landowner, and will be returned to the landowner. The Contractor will coordinate with the landowner to determine a location where the removed boards will be hauled to and stored.

All costs for removing the wooden fence, including materials, equipment, labor, incidentals, hauling and storage of boards will be incidental to the contract unit price per foot for "Remove Fence".

CONDUIT UNDER INDIAN HEALTH ROAD AT STATION 25+02.81

Underground power crosses the existing location of Indian Health Road at approximately 24+85-85' Rt and is approximately 4-foot deep. This is a 3-phase 7200/12470 Volt line that is the main feed to the hospital and everything east of Pine Ridge Village. The line is currently in a 4-inch conduit.

Nebraska Public Power will be responsible for relocating the conduit and cables prior to grading. The Contractor must contact Jay Thies (jwthies@nppd.com) of Nebraska Public Power to confirm that the relocation work is complete.

ELECTRICAL SERVICE WITH METER SOCKET AT STATION 116+65.45

The Contractor is responsible for contacting Nebraska Public Power 90 days prior to needing service with meter. Payment for Nebraska Public Power service installation will be required of Contractor and is incidental to the electrical service cabinet. Contractor to install 1 – 2" Schedule 40 PVC conduit from the power pole to each meter socket location shown on the plans for the signal and lighting services.

REGISTERED PROFESSIONAL ENGINEER
REG. NO.
11522
BRANDON
FRIED
SOUTH DAKOTA
9/16/24

TYPE 1 DETECTABLE WARNINGS

Detectable warnings will be in compliance with the Americans with Disabilities Act regulations.

The detectable warnings will be installed according to the manufacturer's installation instructions.

A concrete thickness equal to the adjacent concrete sidewalk thickness and 2 inches of granular cushion material will be placed below the Type 1 Detectable Warnings. When concrete is placed below the detectable warnings then the concrete thickness will be transitioned at the rate of 1" per foot to match the adjacent concrete sidewalk thickness.

The detectable warnings will be a brick red color for application in concrete curb ramps. Cast iron plates may be a natural patina (weathered steel).

Type 1 Detectable Warning Panels will be one of the following products:

Type 1 Detectable Warnings

Product	Manufacturer
Detectable Warning Plate Cast Iron Plate	Neenah Foundry Company Neenah, WI 800-558-5075 http://www.neenahfoundry.com/
Detectable Warning Plate Cast Iron Plate	Deeter Foundry Lincoln, NE 800-234-7466 http://www.deeter.com/
Detectable Warning Plate Cast Iron Plate(No Coating)	East Jordan Iron Works, Inc. 301 Spring Street East Jordan, MI 49727 800-626-4653 http://www.ejiw.com
Iron Dome Cast Iron Detectable Warning Tile	ADA Solutions, Inc. 323 Andover Street Suite 3 Wilmington, MA 01887 800-372-0519 https://adatile.com
TufTile (wet-set) Cast Iron Replaceable Tile	TufTile 1200 Flex Court Lake Zurich, IL 60047 888-960-8897 http://www.tuftile.com/
Advantage Tactile Detectable Warning Cast Iron Plate	Advantage Tactile Systems, Inc. 241 Main Street, Suite 100 Buffalo, NY 14203 800-679-4022 https://advantagetactile.com/
ADA Arcis Tactile Detectable Warning Tile Concrete Panel Reinforced with Stainless Steel Prestress Strands	Arcis Corporation 10680 NW 289th Place PO Box 1250 North Plains, Oregon 97133 503-647-5042 http://www.arcis-corp.com/#/tactile/
CASTinTACT Concrete Panel Reinforced with Stainless Steel Prestress Strands	MASCO Mason Supply 6018 234th St SE Woodinville, Washington 98072 425-487-6161 http://www.castintact.com
CASTinTACT 3 Concrete Panel Enhanced with Microsilica and Fiber Reinforced	MASCO Mason Supply 6018 234th St SE Woodinville, Washington 98072 425-487-6161 http://www.castintact.com
TufTile (wet-set) Polymer Replaceable Tile	TufTile 1200 Flex Court Lake Zurich, IL 60047 888-960-8897 http://www.tuftile.com/
Alertcast Composite Replaceable Cast in Place	Cape Fear Systems, III, LLC 215 South Water Street, Suite 103 Wilmington, NC 28401 877-232-6287 http://www.alerttile.com/
Detectable Warning Tile Composite Replaceable Wet-Set	ADA Solutions, Inc. North Billerica, MA 01862 800-372-0519 http://www.adatile.com
Access Tile Composite Replaceable Cast in Place	Access Products Inc. 241 Main Street, Suite 100 Buffalo, NY 14203 888-679-4022 http://www.accesstile.com/
Armorcast Detectable Warning Tile Composite Replaceable Wet-Set	Armorcast Products Company 13230 Saticoy Street North Hollywood, CA 91605 818-982-3600 http://www.armorcastprod.com/
TufTile (10 Gauge) Galvanized – Powder Coated Steel Replaceable Tile	TufTile 1200 Flex Court Lake Zurich, IL 60047 888-960-8897 http://www.tuftile.com/

SLIP RESISTANT COATING FOR CONCRETE STAIRWAY

Curing compounds will not be utilized on concrete stairway treads during the concrete curing process. Curing will be accomplished with a double layer of burlap mats and polyethylene sheeting.

The Contractor will apply a 2" wide slip resistant coating at the front of each stairway tread for the full width of the tread.

The slip resistant coating will be a red, tile red, or brick red color. The coating will be a single component epoxy and have a minimum coefficient of friction value of 0.9 for dry and 0.9 for wet as determined by ASTM F 609.

The slip resistant coating will be applied in accordance with the manufacturer's recommendations.

All cost for furnishing and applying the slip resistant epoxy coating including equipment, labor, and materials will be incidental to various contract items.

04FC – TABLE OF CONCRETE STAIRWAYS IN RETAINING WALLS

Station	L / R	Top Landing Elev.	Bottom Landing Elev.	No. of Steps (w)	Class M6 Concrete (CuYd)	Epoxy Coated Reinf. Steel (Lb)	* Structure Exc. (CuYd)	Pipe Handrail (Ft)	Sidewalk (SqFt)
100+68	L	3238.89	3237.33	2	1.43	127	3.34	10.7	33
107+57	L	3249.04	3246.55	5	8.30	491		74.0	
108+78	R	3253.64	3249.59	7	1.90	135	3.19	22.0	
219+95	R	3233.57	3233.05	0	0.88	80	1.83	6.5	33
				Totals:	12.51	833	8.36	113.2	66

* The quantities for structure excavation are for informational purposes only. Payment for all work necessary for structure excavation will be incidental to the various contract unit prices for the items listed in the above table.

REGISTERED PROFESSIONAL ENGINEER
REG. NO.
11522
BRANDON
FRIED
SOUTH DAKOTA
11/6/24

This Page was Intentionally Left Blank

REGISTERED PROFESSIONAL ENGINEER
REG. NO.
11522
BRANDON
FRIED
SOUTH DAKOTA
11/6/24

TABLE OF PAVEMENT REMOVALS

FOR BIDDING PURPOSES ONLY

KLJ	STATE OF SOUTH DAKOTA	PROJECT	SHEET	TOTAL SHEETS
		NH-CR-EM 0018(195)103 P 0407(05)01	B13	B166

Rev. 9/10/2024 BAF

Station	to Station	Concrete Curb and / or Gutter Ft	Concrete Pavement SqYd	Asphalt Concrete Pavement SqYd	Concrete Sidewalk SqYd
PCN 04FC - US 18					
99+03	99+39			106.5	
99+20 L	99+40 L	19.4			
99+39	103+02		3199.0		
100+23 R	102+23 R				206.4
100+26 L	106+06 L				475.4
102+12 R	102+17 R	5.0			
102+28 R	102+48 R			44.1	
102+28 R	106+09 R				439.3
103+01 R	105+89 R	287.3			
103+02 L	106+07 L	326.7			
103+28 R	103+62 R		37.7		
105+89 R	106+13 R		21.9		
105+94 R	106+10 R			12.0	
106+09 L	106+44 L	34.9		60.4	
106+10 R	106+10 R	18.9			
106+12 R	106+41 R	27.8		119.0	
106+40 R	106+61 R		21.3		
106+43 R	106+43 R	15.5			
106+47 L	110+29 L	449.9			
106+47 L	108+30 L		300.3		
106+47 L	110+18 L				208.9
106+48 R	111+20 R				322.3
106+61 R	111+25 R	402.0			
108+71 L	108+83 L		19.7		
110+67 L	113+90 L				174.4
110+68 L	114+00 L	426.5			
111+65 R	117+35 R	411.2			
111+75 R	117+52 R				503.0
112+71 R	113+12 R			64.9	
114+40 L	117+68 L	376.2			
114+42 L	117+66 L				171.6
117+35 R	117+60 R		22.3		
117+59 R	117+95 R	35.4			
117+92 R	118+11 R		16.9		
117+98 R	121+50 R				294.5
118+11 R	121+52 R	365.8			
118+14 L	119+23 L	114.6			107.8
119+39 L	119+63 L				18.6
119+52 R	119+92 R			30.8	
121+84 R	122+18 R	56.1			
121+91 R	125+53 R				306.6
122+38 L	122+48 L				10.6
124+95 R	125+35 R			101.3	
125+04 L	125+37 L				36.5
125+35 L	125+37 L	11.9			
125+59 R	126+19 R	89.3			
125+70 L	125+73 L	12.0			
126+00 R	126+34 R	45.2			
130+93 L	136+29 L				575.1
Subtotal:		3531.6	3639.1	539.0	3851.0

REGISTERED PROFESSIONAL ENGINEER
REG. NO.
11522
BRANDON
FRIED
SOUTH DAKOTA
9/10/24

TABLE OF PAVEMENT REMOVALS

FOR BIDDING PURPOSES ONLY

KLJ	STATE OF SOUTH DAKOTA	PROJECT	SHEET	TOTAL SHEETS
		NH-CR-EM 0018(195)103 P 0407(05)01	B14	B166

Rev. 9/10/2024 BAF

Station	to Station	Concrete Curb and / or Gutter Ft	Concrete Pavement SqYd	Asphalt Concrete Pavement SqYd	Concrete Sidewalk SqYd
PCN 04FC - US 18					
215+41 L	219+50 L				293.1
216+41 L	216+69 L	28.0			
216+59 R	216+71 R	11.8			
216+59 R	220+42 R				224.0
217+03 R	217+35 R	32.0		51.2	
218+42 L	218+70 L	28.0		16.1	
218+48 R	218+80 R	32.0			
219+31 L	220+07 L		118.7		
219+40 R	219+68 R	28.0			
219+77 R	220+21 R	44.5			
219+87 L	226+50 L				371.5
220+21 R	220+45 R		21.5		
220+27 L	220+46 L	19.0			
220+77 L	220+96 L	19.0			
220+78 R	221+01 R		20.2		
220+82 R	225+58 R				270.6
220+99 R	221+01 R	2.2			
221+29 L	221+68 L	39.0			
222+07 R	222+43 R	36.0			
223+04 R	223+40 R	36.0			
225+38 R	225+63 R		21.2	0.3	
225+39 R	225+39 R	2.5			
225+39 L	225+66 L	27.0			
225+58 R	225+58 R	1.3			
225+90 L	226+14 L	24.0			
225+93 R	226+20 R		22.7	1.9	
225+98 R	225+98 R	2.6			
225+98 R	226+50 R				32.2
226+17 R	226+20 R	3.7			
Eastridge Housing/Cherokee					
11+00 L	12+16 L	116.3			
11+00 R	12+21 R	120.6			
11+00	12+40			538.8	
11+00 R	12+13 R			142.9	
13+16	14+78			797.2	
13+85 L	13+93 L				7.6
14+71 L	14+78 L	7.2			3.4
14+73 R	14+78 R	5.0			2.3
Indian Health Road/Tribal 93					
26+59	26+70			48.1	
Subtotal:		665.7	204.3	1596.5	1204.7
Total:		4197.3	3843.4	2135.5	5055.7

REGISTERED PROFESSIONAL ENGINEER
REG. NO.
11522
BRANDON
FRIED
SOUTH DAKOTA
9/10/24

TABLE OF PAVEMENT REMOVALS

FOR BIDDING PURPOSES ONLY

KLJ	STATE OF SOUTH DAKOTA	PROJECT	SHEET	TOTAL SHEETS
		NH-CR-EM 0018(195)103 P 0407(05)01	B15	B166

Rev. 8/2/2024 BAF

Station	to Station	Concrete Curb and / or Gutter Ft	Concrete Pavement SqYd	Asphalt Concrete Pavement SqYd	Concrete Sidewalk SqYd
PCN 06N3 - SD 407					
202+10 L	202+48 L	52.7		20.4	
202+14 R	202+52 R	47.2		17.9	
202+15 R	209+38 R				404.0
207+80 R	208+23 R	53.5		19.2	
207+94 L	208+56 L	62.5		35.0	
208+01 L	208+20 L			31.5	
208+43 R	209+12 R	80.0		27.7	40.0
208+85 L	209+43 L	32.9	25.1	31.6	
209+61 L	209+92 L		27.0	19.1	
209+61 R	209+88 R	27.0		8.1	14.8
209+66 L	212+43 L				157.0
212+06 R	212+45 R				26.7
212+18 R	212+52 R	5.4	24.6	30.5	
212+24 L	212+47 L	12.5	22.0		
212+47 L	212+72 L			92.5	
212+67 R	214+16 R			396.0	
212+71 L	212+71 L	12.7			
212+71 L	214+50 L		67.0		
212+74 L	214+74 L			234.9	
212+74 L	214+95 L				200.9
212+93 R	213+00 R	7.1			
212+93 R	214+48 R				86.5
213+41 R	213+93 R	52.0			
Total:		445.5	165.7	964.4	929.9

REGISTERED PROFESSIONAL ENGINEER
REG. NO.
11522
BRANDON
FRIED
SOUTH DAKOTA
8/2/24

TABLE OF PIPE QUANTITIES

FOR BIDDING PURPOSES ONLY

KLJ	STATE OF SOUTH DAKOTA	PROJECT	SHEET	TOTAL SHEETS
		NH-CR-EM 0018(195)103 P 0407(05)01	B16	B166

Rev. 8/2/2024 BAF

	Reinforced Concrete							Corrugated Metal						Pipe Transition		
	Circular				Circular Flared End			Circular Pipe			Circular Safety End with Bars			Round CMP to RCP Transition		
	18" Cl. 2	24" Cl. 2	36" Cl. 2	42" Cl. 2	36"	42"			36" 16 Ga			36"			36" Inlet	
Station Offset (L/R)	Ft	Ft	Ft	Ft	Each	Each			Ft			Each			Each	
PCN 04FC - US18																
100+91.31-45.47' L to 102+96.58-32.18' L			198													
102+59.47-24.17' R to 102+71.79-24.17' R	2															
102+71.79-24.17' R to 102+97.89-24.17' R	16															
102+96.58-32.18' L to 103+10.56-30.95' L			4													
102+96.51-32.18' L to 102+97.89-24.17' R	52															
102+97.89-24.17' R to 103+10.21-24.17' R	2															
103+10.21-21.17' R to 103+74.33-24.17' R	54															
103+10.56-30.95' L to 104+99.96-24.17' L			178													
103+74.33-24.17' R to 105+10.06-24.17' R	124															
104+99.96-24.17' L to 106+79.96-25.67' L			174													
105+10.06-24.17' R to 106+07.35-24.17' R	92															
106+07.35-24.17' R to 106+07.35-50.50' R	18															
106+07.35-50.50' R to 106+44.95-50.62' R	34															
106+75.36-24.17' R to 106+79.96-25.67' L	46															
106+79.96-25.67' L to 108+99.96-24.17' L			206													
108+99.96-24.17' L to 109+20.36-24.17' R	48															
108+99.96-24.17' L to 110+84.96-24.17' L			174													
110+84.96-24.17' L to 111+97.87-24.17' L			102													
111+91.81-51.69' R to 111+97.44-24.17' R			20						4			1			1	
111+97.44-24.17' R to 111+97.87-24.17' L			44													
111+97.44-24.17' R to 113+79.44-24.17' R	172															
111+97.87-24.17' L to 114+79.96-24.17' L		272														
114+79.96-24.17' L to 114+79.96-24.17' R	44															
114+79.96-24.17' L to 115+59.25-24.17' L	68															
115+59.25-24.17' L to 116+49.96-24.17' L	80															
116+49.96-24.17' L to 118+39.96-24.17' L	180															
118+39.96-24.17' L to 118+39.96-24.17' R	44															
122+43.81-24.17' L to 122+46.65-57.54' R			80		1											
122+43.81-24.17' L to 124+77.17-24.17' L			224													
124+77.17-24.17' L to 124+84.95-24.17' R	46															
124+77.17-24.17' L to 127+17.54-24.17' L			230													
127+17.54-24.17' L to 127+17.54-24.17' R	44															
127+17.54-24.17' L to 129+99.96-24.17' L			274													
129+99.96-24.17' L to 130+00.00-24.17' R	44															
129+99.96-24.17' L to 132+48.65-25.67' L			238													
132+48.65-66.17 R to 132+48.65-36.17' R				28		1										
132+48.65-36.17 R to 132+48.65-25.67' L				56												
132+48.65-25.67' L to 132+48.65-75.17' L				46		1										
Subtotal:	1210	272	2146	130	1	2			4			1			1	

REGISTERED PROFESSIONAL ENGINEER
REG. NO
11522
BRANDON
FRIED
SOUTH DAKOTA
8/2/24

TABLE OF PIPE QUANTITIES

FOR BIDDING PURPOSES ONLY

KLJ	STATE OF SOUTH DAKOTA	PROJECT	SHEET	TOTAL SHEETS
		NH-CR-EM 0018(195)103 P 0407(05)01	B17	B166

Rev. 8/2/2024 BAF

	Reinforced Concrete							Corrugated Metal						Pipe Transition		
	Circular				Circular Flared End			Circular Pipe			Circular Safety End with Bars			Round CMP to RCP Transition		
	18" Cl. 2	24" Cl. 2	36" Cl. 2	42" Cl. 2	36"	42"			36" 16 Ga			36"			36" Inlet	
Station Offset (L/R)	Ft	Ft	Ft	Ft	Each	Each			Ft			Each			Each	
100+91.31-45.47' L to 215+84.13-29.70' L			116													
215+84.13-29.70' L to 218+84.12-30.50' L			296													
218+84.12-30.50' L to 221+84.12-31.30' L			296													
221+84.12-31.30' L to 224+44.06-32.00' L			254													
224+44.06-32.00' L to 225+02.35-78.24' L			72		1											
Subtotal:	0	0	1034	0	1	0			0			0			0	
Total:	1210	272	3180	130	2	2			4			1			1	

REGISTERED PROFESSIONAL ENGINEER
REG. NO.
11522
BRANDON
FRIED
SOUTH DAKOTA
8/2/24

TABLE OF PAVEMENT QUANTITIES

FOR BIDDING PURPOSES ONLY

KLJ	STATE OF SOUTH DAKOTA	PROJECT	SHEET	TOTAL SHEETS
		NH-CR-EM 0018(195)103 P 0407(05)01	B18	B166

Rev. 8/2/2024 BAF

Station to Station		Concrete Curb and Gutter		Concrete Gutter				Type A	PCC Fillet Section		Colored	Reinforced	Detectable Warning			
		Modified Type B	Type B	Modified Type P	Type P	Valley		PCC Approach Pavement		Concrete Sidewalk	Concrete Sidewalk	Concrete Sidewalk	Type 1	Type C Retaining Wall	Barrier Type Colored Median PCC	Raised Concrete Island with Pedestrian Access
		68	68	8	8	8		6"	8"	4"	4"	6"			6"	6"
		Ft	Ft	Ft	Ft	Ft		SqYd	SqYd	SqFt	SqFt	SqFt	SqFt	SqFt	SqYd	SqYd
PCN 04FC - US 18																
99+21, 18.3' L	99+37, 18.3' L		16.7													
100+21, 27.3' L	100+29, 16.5' L								7.1							
100+21, 27.3' L	100+21, 43.7' L		16.4													
100+21, 43.7' L	100+21, 48.7' L				5.0											
100+21, 48.7' L	100+21' 49.8' L		1.1													
100+21, 49.8' L	100+33, 54.4' L								8.1							
100+24, 27.3' L	100+41, 27.7' L															26.4
100+24, 43.6' L	100+46, 22.2' L									272.1			30.0			
100+24, 49.1' L	100+35, 48.9' L															3.7
100+29, 16.5' L	100+41, 16.5' L	12.8														
100+33, 54.4' L	100+38, 48.9' L		7.9													
100+38, 48.9' L	100+47, 40.5' L				11.9											
100+44, 104.4' L	100+67, 74.0' L													25.7		
100+41, 16.5' L	100+46, 16.5' L			5.0												
100+46, 16.5' L	100+49, 16.5' L	3.0														
100+47, 22.2' L	100+54, 27.4' L															8.4
100+38, 88.1' L	100+58, 65.0' L	30.1									57.0					
100+49, 16.5' L	100+55, 32.6' L								15.7							
100+58, 65.0' L	100+61, 61.5' L			5.0						32.7			10.0			
100+61, 61.5' L	101+23, 27.5' L	73.0								104.2	234.0					
100+70, 70.5' L	101+03, 46.3' L													28.7		
101+00, 16.5' R	102+28, 16.5' R	128.1														
101+03, 27.2' R	102+28, 27.2' R									704.7	596.3					
101+23, 27.5' L	104+46, 16.5' L	323.6								1749.0	1587.6					
102+12, 51.1' R	102+20, 51.1' R		7.6													
102+20, 51.1' R	102+28, 43.4' R								4.4							
102+28, 43.4' R	102+28, 32.2' R		11.3													
102+28, 16.5' R	102+48, 16.5' R			20.0				17.8				160.0				
102+48, 16.5' R	103+22, 16.5' R	74.6								313.0	313.0					
103+22, 16.5' R	103+62, 16.5' R			40.0				28.9				259.9				
103+62, 16.5' R	104+70, 16.5' R	108.0								526.3	480.2					
104+46, 16.5' L	104+70, 16.5' L			24.0				20.0				180.0				
104+70, 16.5' R	104+90, 16.5' R			20.0				17.8				160.0				
104+70, 16.5' L	105+90, 16.5' L	120.1								763.1	615.4		20.0			
104+90, 16.5' R	105+87, 16.5' R	96.7								671.3	495.5		20.0			
105+87, 16.5' R	106+12, 44.5' R								34.3							
105+90, 16.5' L	106+09, 39.7' L								24.4							
106+09, 16.5' L	106+44, 16.5' L						34.9									
106+09, 39.7' L	106+10, 55.0' L		15.3													
106+12, 44.5' R	106+13, 64.7' R		20.2													
106+40, 44.6' R	106+40, 64.7' R		20.0													
106+40, 44.6' R	106+65, 16.5' R								34.4							
106+44, 39.7' L	106+44, 55.0' L		15.3													
106+44, 39.7' L	106+63, 16.5' L								23.9							
106+63, 16.5' L	107+00, 16.5' L	36.5								341.7	126.3		20.0			
106+65, 16.5' R	106+88, 16.5' R	23.2								282.8	130.8		20.0			
106+88, 16.5' R	107+22, 16.5' R			34.0				25.6				230.3				
107+00, 16.5' L	107+70, 16.5' L			70.1				45.6								
107+22, 16.5' R	109+43, 16.5' R	223.6								1066.2	1063.2					
107+70, 16.5' L	108+69, 16.5' L	97.4								430.5	145.7					
108+69, 16.5' L	108+85, 16.5' L			16.0				15.5				139.8				
108+85, 16.5' L	110+03, 16.5' L	117.5								686.5	655.4		10.0			
109+43, 16.5' R	109+59, 16.5' R			16.0				15.5		31.8		140.1				
Subtotal:		1468.2	131.8	250.1	16.9		34.9	186.7	152.3	7975.9	6500.4	1270.1	130.0	54.4	0.0	38.5

REGISTERED PROFESSIONAL ENGINEER
REG. NO
11522
BRANDON
FRIED
SOUTH DAKOTA
8/2/24

TABLE OF PAVEMENT QUANTITIES

FOR BIDDING PURPOSES ONLY

KLJ	STATE OF SOUTH DAKOTA	PROJECT	SHEET	TOTAL SHEETS
		NH-CR-EM 0018(195)103 P 0407(05)01	B19	B166

Rev. 8/2/2024 BAF

Station to Station		Concrete Curb and Gutter		Concrete Gutter				Type A	PCC Fillet Section		Colored	Reinforced	Detectable Warning			
		Modified Type B	Type B	Modified Type P	Type P	Valley		PCC Approach Pavement		Concrete Sidewalk	Concrete Sidewalk	Concrete Sidewalk	Type 1	Type C Retaining Wall	Barrier Type Colored Median PCC	Raised Concrete Island with Pedestrian Access
		68	68	8	8	8		6"	8"	4"	4"	6"			6"	6"
		Ft	Ft	Ft	Ft	Ft		SqYd	SqYd	SqFt	SqFt	SqFt	SqFt	SqFt	SqYd	SqYd
PCN 04FC - US 18																
109+59, 16.5' R	109+94, 16.5' R	34.8								113.8	113.7					
109+94, 16.5' R	110+18, 16.5' R			24.0				20.0				180.0				
110+03, 16.5' L	110+23, 36.6' L								20.4							
110+18, 16.5' R	110+50, 16.5' R	31.6								98.1	98.1					
110+23, 36.6' L	110+31, 89.9' L		53.9													
110+50, 16.5' R	110+90, 16.5' R			40.0				28.9				236.5				
110+59, 41.9' L	110+66, 84.9' L		43.5													
110+59, 41.9' L	110+78, 16.5' L								29.2							
110+78, 16.5' L	113+69, 16.5' L	291.0								1839.1	1633.3		40.0			
110+89, 1.4' L	110+89, 1.6' R		3.0													
110+89, 1.4' L	110+93, 5.5' L								1.7							
110+89, 1.6' R	110+93, 5.5' R								1.6							
110+90, 16.5' R	111+03, 16.5' R		13.0							277.2	107.1		20.0			
110+93, 5.5' L	111+05, 5.5' L		11.6													
110+93, 5.5' R	111+05, 5.5' R		11.5													
111+05, 5.5' L	111+10, 5.5' L				5.0											
111+05, 5.5' R	111+10, 5.5' R				5.0											
110+92	111+04														7.7	
111+03, 16.5' R	111+32, 53.9' R								56.0							
111+10	111+33														14.3	
111+10, 5.5' L	111+32, 5.5' L	21.9														
111+10, 5.5' R	111+32, 5.5' R	22.0														
111+32, 53.9' R	111+28, 84.9' R		31.3													
111+32, 5.5' L	111+36, 1.6' L								1.6							
111+32, 5.5' R	111+36, 1.4' R								1.7							
111+36, 1.6' L	111+36, 1.4' R	3.0														
111+62, 90.0' R	111+71, 36.6' R		54.2													
111+71, 36.6' R	111+91, 16.5' R								20.3							
111+91, 16.5' R	112+71, 16.5' R	80.2								481.0	485.4		10.0			
112+71, 16.5' R	113+11, 16.5' R			40.0				28.9				260.0				
113+11, 16.5' R	113+98, 16.5' R	87.4								431.9	321.9		10.0			
113+69, 16.5' L	113+98, 45.1' L								35.7							
113+98, 45.1' L	114+03, 78.2' L		33.5													
113+98, 16.5' R	114+26, 16.5' R			28.0				22.2				200.0				
114+26, 16.5' R	115+28, 16.5' R	102.2								505.0	395.9		10.0			
114+34, 48.2' L	117+37, 73.1' L		25.2													
114+34, 48.2' L	114+59, 16.5' L								42.7							
114+59, 16.5' L	117+48, 16.5' L	289.2								1938.2	1798.0		40.0			
115+28, 16.5' R	115+56, 16.5' R			28.0				22.2				198.7				
115+56, 16.5' R	117+34, 16.5' R	177.9								1062.9	921.5		20.0			
117+34, 16.5' R	117+59, 48.6' R								43.7							
117+48, 16.5' L	117+73, 41.0' L								27.9							
117+64, 16.5' R	117+98, 16.5' R						34.5									
117+69, 16.5' L	118+02, 16.5' L						32.3									
117+95, 40.4' R	118+19, 16.5' R								26.9							
118+06, 48.0' L	118+31, 16.5' L								42.1							
118+19, 16.5' R	119+52, 16.5' R	132.2								834.3	687.4		20.0			
118+31, 16.5' L	119+33, 16.5' L	102.1								1333.0	129.3		30.0			
119+33, 16.5' L	119+53, 16.5' L			20.0				28.9		185.7						
119+52, 16.5' R	119+92, 16.5' R			40.0				28.8				259.0				
119+53, 16.5' L	125+11, 16.5' L	561.3								453.6						
119+92, 19.5' R	121+36, 19.5' R	143.6								781.1	714.6		10.0			
121+36, 19.5' R	121+56, 41.5' R								28.8							
Subtotal:		2080.4	280.7	220.0	10.0		66.8	179.9	380.3	10334.9	7406.2	1334.2	210.0	0.0	22.0	0.0

REGISTERED PROFESSIONAL ENGINEER
REG. NO.
11522
BRANDON
FRIED
SOUTH DAKOTA
8/2/24

TABLE OF PAVEMENT QUANTITIES

FOR BIDDING PURPOSES ONLY

KLJ	STATE OF SOUTH DAKOTA	PROJECT	SHEET	TOTAL SHEETS
		NH-CR-EM 0018(195)103 P 0407(05)01	B20	B166

Rev. 8/2/2024 BAF

Station to Station		Concrete Curb and Gutter		Concrete Gutter				Type A	PCC Fillet Section		Colored	Reinforced	Detectable Warning			
		Modified Type B	Type B	Modified Type P	Type P	Valley		PCC Approach Pavement		Concrete Sidewalk	Concrete Sidewalk	Concrete Sidewalk	Type 1	Type C Retaining Wall	Barrier Type Colored Median PCC	Raised Concrete Island with Pedestrian Access
		68	68	8	8	8		6"	8"	4"	4"	6"			6"	6"
		Ft	Ft	Ft	Ft	Ft		SqYd	SqYd	SqFt	SqFt	SqFt	SqFt	SqFt	SqYd	SqYd
PCN 04FC - US 18																
121+56, 41.5' R	121+55, 59.2' R	17.7														
121+59, 16.5' R	121+86, 16.5' R						27.1									
121+81, 61.7' R	121+83, 46.9' R	15.0														
121+83, 46.9' R	122+14, 16.5' R								39.3							
122+14, 16.5' R	124+98, 16.5' R	283.5								1498.7	1418.2		10.0			
124+98, 16.5' R	125+31, 16.5' R			32.0				24.4				182.7				
125+11, 16.5' L	125+40, 56.3' L								65.9							
125+31, 19.5' R	125+36, 19.5' R	5.1								138.9	87.0		10.0			
125+36, 19.5' R	125+53, 29.9' R								12.2							
125+40, 56.3' L	125+37, 67.8' L		11.8													
125+53, 29.9' R	126+20, 108.2' R		104.2													
125+68, 75.4' L	125+70, 65.6' L		10.0													
125+70, 65.6' L	126+27, 16.5' L								86.8							
125+98, 53.5' R	126+23, 16.5' R								80.5							
125+98, 53.5' R	126+33, 84.7' R	46.8														
126+23, 16.5' R	132+83, 28.5' R	658.8								3681.3	3342.9		40.0			
126+27, 16.5' L	127+30, 16.5' L	102.7								1627.1			36.0			
127+30, 16.5' L	127+70, 16.5' L			40.0				28.8				520.0				
127+70, 16.5' L	129+24' 16.5' L	154.7								244.2						
129+24, 16.5' L	129+63, 16.5' L			40.0				28.9								
129+63, 16.5' L	132+85, 16.5' L	322.7								2274.6	52.6		36.0			
132+83, 28.5' R	133+08, 56.5' R								34.3							
132+85, 16.5' L	133+10, 44.5' L								34.3							
133+42, 44.5' L	133+67, 16.5' L								34.3							
133+56, 56.5' R	133+56, 44.5' R	12.0														
133+56, 44.5' R	133+81, 16.5' R								34.3	236.0	90.5		20.0			
133+67, 19.5' L	133+84, 19.5' L	17.2														
133+45, 44.5' L	136+29, 36.8' L									2968.7	103.4		36.0			
133+81, 16.5' R	133+84, 16.5' R	3.2														
215+35, 62.9' L	215+35, 59.3' L	3.6														
215+35, 59.3' L	215+78, 19.6' L								68.4							
215+42, 53.5' L	216+47, 27.4' L									692.7	558.8		20.0			
215+78, 19.6' L	215+92, 19.8' L		13.4													
216+08, 36.7' R	216+64, 20.2' R	59.1														
216+64, 20.2' R	216+71, 20.2' R		6.7													
216+11, 41.4' R	217+09, 31.4' R									437.8	440.7					
216+00, 70.8' R	216+44, 35.1' R									303.8						
216+41, 19.9' L	216+47, 19.8' L		6.0													
216+47, 19.8' L	216+63, 19.8' L				16.0			15.6				140.0				
216+63, 19.8' L	216+69, 19.8' L		6.0													
216+69, 27.4' L	218+42, 27.6' L									897.1	863.1					
217+03, 20.2' R	217+09, 20.1' R		6.0													
217+09, 20.1' R	217+29, 20.2' R				20.0			17.8				274.7				
217+29, 20.2' R	217+35, 20.2' R		6.0													
217+35, 31.4' R	218+48, 32.1' R									587.5	626.5					
218+42, 19.9' L	218+48, 19.9' L		6.0													
218+48, 20.1' R	218+54, 20.1' R		6.0													
218+48, 19.9' L	218+64, 19.9' L				16.0			15.6				140.0				
218+54, 20.1' R	218+74, 20.1' R				20.0			17.8				298.0				
218+64, 19.9' L	218+70, 19.9' L		6.0													
218+70, 27.6' L	219+50, 62.5' L									552.2	210.6		10.0			
218+74, 20.1' R	218+80, 20.2' R		6.0													
218+80, 32.0' R	219+40, 30.4' R									305.6	337.9					
Subtotal:		1702.1	194.1	112.0	72.0	27.1		148.9	490.3	16446.2	8132.2	1555.4	218.0	0.0	0.0	0.0

REGISTERED PROFESSIONAL ENGINEER
REG. NO.
11522
BRANDON
FRIED
SOUTH DAKOTA
8/2/24

TABLE OF PAVEMENT QUANTITIES

FOR BIDDING PURPOSES ONLY

KLJ	STATE OF SOUTH DAKOTA	PROJECT	SHEET	TOTAL SHEETS
		NH-CR-EM 0018(195)103 P 0407(05)01	B21	B166

Rev. 8/2/2024 BAF

Station to Station		Concrete Curb and Gutter		Concrete Gutter				Type A	PCC Fillet Section		Colored	Reinforced	Detectable Warning				
		Modified Type B	Type B	Modified Type P	Type P	Valley		PCC Approach Pavement		Concrete Sidewalk	Concrete Sidewalk	Concrete Sidewalk	Type 1	Type C Retaining Wall	Barrier Type Colored Median PCC	Raised Concrete Island with Pedestrian Access	
		68	68	8	8	8		6"	8"	4"	4"	6"			6"	6"	
		Ft	Ft	Ft	Ft	Ft		SqYd	SqYd	SqFt	SqFt	SqFt	SqFt	SqFt	SqYd	SqYd	
PCN 04FC - US 18																	
219+31, 20.0' L	219+32, 20.0' L		1.8														
219+32, 20.0' L	219+52, 39.9' L								18.0								
219+40, 20.2' R	219+46, 20.0' R		6.0														
219+46, 20.0' R	219+62, 20.0' R				16.0			15.5				216.7					
219+52, 39.9' L	219+52, 41.9' L		2.0														
219+62, 20.0' R	220+25, 20.1' R		62.4							205.2	47.8		10.0	5.9			
219+84, 42.0' L	219+85, 40.1' L		1.9														
219+85, 40.1' L	220+04, 20.0' L								18.4								
219+87, 42.0' L	221+32, 27.6' L									842.0	453.3		30.0				
220+25, 20.1' R	220+45, 39.1' R								16.9								
220+27, 20.0' R	220+46, 20.0' R		19.0														
220+45, 39.1' R	220+45, 42.2' R		3.1														
220+77, 20.0' L	220+96, 20.0' L		19.0														
220+78, 42.2' R	220+78, 41.2' R		1.0														
220+78, 41.2' R	220+98, 20.1' R								19.8								
220+81, 42.1' R	222+07, 27.8' R									687.9	20.1		10.0				
220+98, 20.1' R	221+01, 20.1' R		3.1														
221+29, 19.9' L	221+38, 19.9' L		9.0														
221+38, 19.9' L	221+62, 19.9' L				24.0			20.0				180.0					
221+62, 19.9' L	221+68, 19.9' L		6.0														
221+68, 27.5' L	226+50, 22.0' L									2440.0	35.5		20.0				
222+07, 20.3' R	222+13, 20.1' R		6.0														
222+13, 20.1' R	222+37, 20.1' R				24.0			20.0				180.0					
222+37, 20.1' R	222+43, 20.2' R		6.0														
222+43, 27.8' R	223+04, 27.8' R									306.5	306.5						
223+04, 20.1' R	223+10, 20.1' R		6.0														
223+10, 20.1' R	223+34, 20.1' R				24.0			20.0				180.0					
223+34, 20.1' R	223+40, 20.2' R		6.0														
223+40, 27.7' R	224+16, 35.4' R									382.8	469.4						
224+16, 20.0' R	224+22, 20.1' R		6.0														
224+22, 20.1' R	224+46, 20.1' R				24.0			20.0				454.2					
224+46, 20.1' R	224+52, 20.0' R		6.0														
224+51, 35.3' R	225+58, 44.3' R									608.9	449.2		10.0				
225+37, 20.0' R	225+41, 20.0' R		3.9														
225+39, 20.0' L	225+66, 20.0' L		27.0														
225+41, 20.0' R	225+61, 39.2' R								17.2								
225+61, 39.2' R	225+61, 44.2' R		5.0														
225+90, 20.0' L	226+14, 20.0' L		24.0														
225+95, 45.4' R	225+95, 40.4' R		5.0														
225+95, 40.4' R	226+15, 20.0' R								18.9								
225+98, 43.8' R	226+50, 22.8' R									321.8			10.0				
226+15, 20.0' R	226+20, 20.1' R		5.0														
Total:		0.0	240.2	0.0	112.0	0.0		95.5	109.2	5795.1	1781.8	1210.9	90.0	5.9	0.0	0.0	

REGISTERED PROFESSIONAL ENGINEER
REG. NO.
11522
BRANDON
FRIED
SOUTH DAKOTA
8/2/24

TABLE OF PAVEMENT QUANTITIES

FOR BIDDING PURPOSES ONLY

KLJ	STATE OF SOUTH DAKOTA	PROJECT	SHEET	TOTAL SHEETS
		NH-CR-EM 0018(195)103 P 0407(05)01	B22	B166

Rev. 8/2/2024 BAF

Station to Station		Concrete Curb and Gutter			Concrete Gutter				Type A	PCC Fillet Section			Colored	Reinforced	Detectable Warning				
		Modified Type B		Type B	Modified Type P		Type P	Valley	PCC Approach Pavement			Concrete Sidewalk	Concrete Sidewalk	Concrete Sidewalk	Type 1		Type C Retaining Wall	Barrier Type Colored Median PCC	Raised Concrete Island with Pedestrian Access
			68	68		8	8	8	6"		8"	4"	4"	6"				6"	6"
			Ft	Ft		Ft	Ft	Ft	SqYd		SqYd	SqFt	SqFt	SqFt		SqFt	SqFt	SqYd	SqYd
Eastridge Housing/Cherokee																			
11+00, 16.4' L	12+24, 16.0' L			124.2															
11+00, 18.2' R	11+19, 18.0' R			19.3															
11+19, 18.0' R	11+59, 18.0' R						40.0		28.9										
11+59, 18.0' R	12+38, 18.0' R			78.8															
13+15, 16.0' L	13+57, 16.0' L			42.0								183.4	104.8						
13+27, 16.0' R	13+59, 16.0' R			32.0								150.3	83.4						
13+57, 16.0' L	13+77, 16.0' L						20.0		26.7										
13+59, 16.0' R	13+79, 16.0' R						20.0		28.4										
13+77, 16.0' L	14+78, 16.2' L			101.1								434.2							
13+79, 16.0' R	14+78, 22.1' R			99.9								683.4							
Indian Health Road																			
26+54, 16.0' L	26+79, 16.0' L			25.0															
26+54, 16.0' R	26+79, 16.0' R			25.0															
Subtotal:			0.0	547.3		0.0	80.0	0.0	84.0		0.0	1451.3	188.2	0.0	0.0		0.0	0.0	0.0
Total:			5250.7	1394.1		582.1	290.9	128.8	695.0		1132.1	42003.4	24008.8	5370.6	648.0		60.3	22.0	38.5

REGISTERED PROFESSIONAL ENGINEER
REG. NO.
11522
BRANDON
FRIED
SOUTH DAKOTA
8/2/24

TABLE OF PAVEMENT QUANTITIES

FOR BIDDING PURPOSES ONLY

KLJ	STATE OF SOUTH DAKOTA	PROJECT	SHEET	TOTAL SHEETS
		NH-CR-EM 0018(195)103 P 0407(05)01	B23	B166

Rev. 8/2/2024 BAF

Station to Station		Concrete Curb and Gutter		Concrete Gutter				Type A	PCC Fillet Section		Colored	Reinforced	Detectable Warning			
		Modified Type B	Type B	Modified Type P	Type P	Valley		PCC Approach Pavement		Concrete Sidewalk	Concrete Sidewalk	Concrete Sidewalk	Type 1	Type C Retaining Wall	Barrier Type Colored Median PCC	Raised Concrete Island with Pedestrian Access
		68	68	8	8	8		6"	8"	4"	4"	6"			6"	6"
		Ft	Ft	Ft	Ft	Ft		SqYd	SqYd	SqFt	SqFt	SqFt	SqFt	SqFt	SqYd	SqYd
PCN 06N3 - SD 407																
202+13, 64.8' L	202+48, 29.9' L		57.1								230.9					
202+15, 64.8' L	207+94, 33.9' L									3033.6			10.0			
202+17, 44.1' R	202+52, 14.4' R		51.6								90.1					
202+33, 21.4' R	208+17, 50.6' R									3105.5			20.0			
207+80, 17.7' R	208+20, 50.3' R		57.2													
207+94, 26.4' L	208+00, 26.3' L		6.0													
208+00, 26.3' L	208+20, 26.2' L				20.0			17.7			33.4	160.0				
208+20, 26.2' L	208+56, 26.1' L		36.5													
208+26, 33.9' L	209+38, 50.6' L									651.1	17.1		30.0			
208+46, 51.9' R	209+12, 18.5' R		80.0							405.3			20.0			
208+85, 25.9' L	209+15, 25.6' L		30.0													
209+15, 25.6' L	209+40, 50.6' L								26.4							
209+40, 50.6' L	209+40, 55.6' L		5.0													
209+61, 18.9' R	209+88, 19.0' R		27.0							148.5			10.0			
209+64, 56.4' L	209+64, 49.9' L		6.4													
209+64, 49.9' L	209+89, 25.1' L								25.3							
209+67, 50.0' L	212+44, 41.9' L									1542.4			30.0			
209+89, 25.1' L	209+92, 25.1' L		3.5													
212+06, 22.9' R	212+44, 38.6' R									283.9	110.1		20.0			
212+18, 20.3' R	212+23, 20.4' R		5.0													
212+23, 23.7' R	212+48, 44.3' R								25.5							
212+23, 23.7' L	212+48, 48.3' L								25.6		86.1					
212+48, 48.3' L	212+48, 58.3' L		10.0													
212+48, 44.3' R	212+48, 49.3' R		5.1													
212+70, 49.7' R	212+70, 45.4' R		4.3													
212+70, 45.4' R	212+95, 20.9' R								25.1							
212+71, 58.1' L	212+71, 48.1' L		10.0													
212+71, 48.1' L	212+96, 23.1' L								26.2							
212+73, 39.1' R	213+41, 28.8' R									465.5	265.2		20.0			
212+75, 41.7' L	213+18, 30.8' L									328.2	149.4		20.0			
212+95, 20.9' R	213+00, 20.9' R		5.0													
212+96, 23.1' L	213+25, 23.1' L		28.3													
213+25, 23.1' L	213+65, 22.9' L				40.0			28.9				260.0				
213+41, 21.2' R	213+47, 21.2' R		6.0													
213+47, 21.2' R	213+87, 21.5' R				40.0			28.9				260.0				
213+65, 22.9' L	213+71, 22.9' L		6.0													
213+65, 22.9' L	214+00, 22.7' L		35.3							116.5	116.5					
213+87, 21.5' R	213+93, 21.5' R		6.0													
213+93, 29.2' R	214+94, 103.1' R									1052.5	823.1		20.0			
214+00, 22.7' L	214+40, 22.5' L				40.0			28.9				258.7				
214+40, 22.5' L	214+56, 22.5' L		16.4													
214+50, 21.9' R	214+54, 22.0' R		3.5													
214+54, 22.0' R	214+79, 39.2' R		32.0													
214+54, 22.0' R	215+04, 100.1' R								114.5							
214+59, 22.5' L	215+03, 62.7' L								70.6	405.6	319.1		20.0			
214+79, 39.2' R	215+04, 100.1' R	67.2														
Total:		67.2	533.2	0.0	140.0	0.0		104.4	339.2	11538.6	2241.0	938.7	220.0	0.0	0.0	0.0

REGISTERED PROFESSIONAL ENGINEER
REG. NO.
11522
BRANDON
FRIED
SOUTH DAKOTA
8/2/24

TABLE OF FENCE QUANTITIES

FOR BIDDING PURPOSES ONLY

KLJ	STATE OF SOUTH DAKOTA	PROJECT	SHEET	TOTAL SHEETS
		NH-CR-EM 0018(195)103 P 0407(05)01	B24	B166

Rev. 8/2/2024 BAF

Station to Station		Side (L/R)		Type 2 (Ft)	5' Chain Link Fence (Ft)	Special Welded Wire (Ft)	Wood Privacy Fence (Ft)		Post Panels 2 Post Panel (Each)			Gates Remove Gate for Reset (Each)	Reset Gate (Each)	Single Vehicular Swing Gate (Each)		Remove Fence (Ft)	
PCN 04FC - US18																	
101+05	102+07	L			116											116	
103+25	104+45	L														141	
104+77	105+89	L														135	
108+02	108+73	R				73										68	
108+21	108+22	R				13										13	
108+31	108+47	L					16									16	
108+83	109+06	L			28											28	
108+94	109+39	R			46											47	
109+11	110+24	L			168											171	
125+95	126+38	L			30							2	2			30	
127+26	127+74	L			10									2		10	
134+61	136+33	L		172					2							172	
215+72	216+46	L			74											71	
216+64	217+26	L			63											80	
217+35	218+45	L			110											111	
218+06	218+45	R			45											45	
218+48	218+48	R			10											10	
220+57	221+43	L			86											82	
221+06	222+16	R			110											108	
221+72	225+02	L			346											366	
222+30	223+17	R			87											79	
223+33	224+14	R			82											67	
224+99	225+02	L			25											10	
		TOTALS:		172	1436	86			2			2	2	2		1976	

REGISTERED PROFESSIONAL ENGINEER
REG. NO.
11522
BRANDON
FRIED
SOUTH DAKOTA
8/2/24

TYPICAL GRADING SECTION

FOR BIDDING PURPOSES ONLY

KLJ	STATE OF SOUTH DAKOTA	PROJECT	SHEET	TOTAL SHEETS
		NH-CR-EM 0018(195)103 P 0407(05)01	B25	B166

Plotting Date: 8/2/2024

Rev. 8/2/2024 BAF

x - Modified Type B69 Curb & Gutter

MAINLINE US 18
99+03.71 to 99+20.55

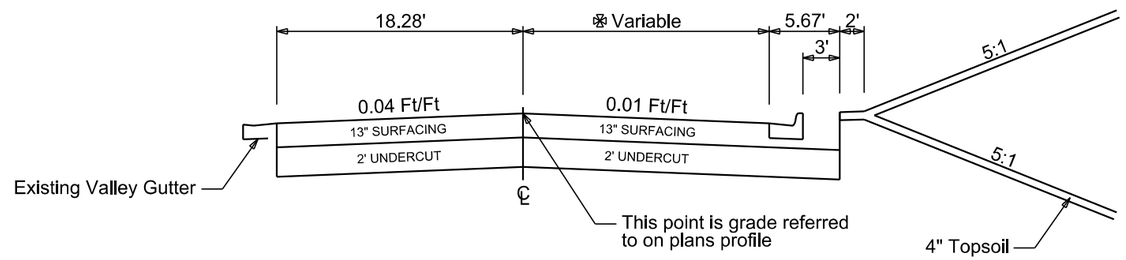

✠ 99+03.71 to 99+37.24 - 18.49' to 19.50'

MAINLINE US 18
99+20.55 to 99+37.24

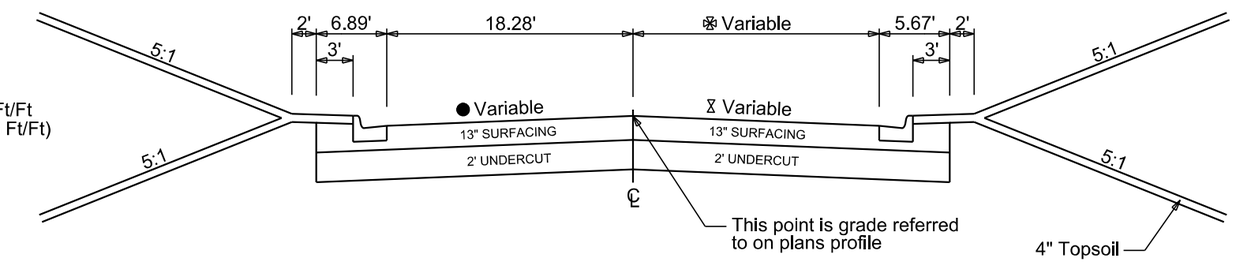

● 99+20.55 to 99+37.24 - 0.0400 Ft/Ft to 0.0236 Ft/Ft
⧖ 99+20.55 to 99+37.24 - 0.0100 Ft/Ft to (-0.0236 Ft/Ft)

MAINLINE US 18
99+37.24 to 99+80.45

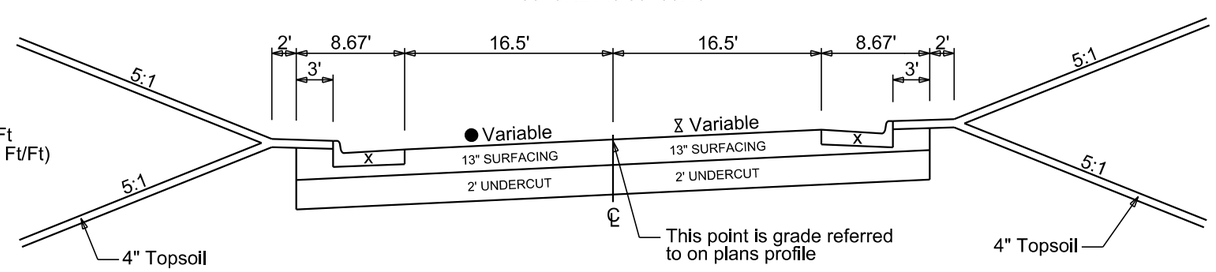

● 99+37.24 to 99+80.45 - 0.0236 Ft/Ft to 0.0200 Ft/Ft
⧖ 99+37.24 to 99+80.45 - (-0.0236 Ft/Ft) to (-0.0200 Ft/Ft)

Plot Scale - 1:200

Plotted From - brandonfried

File - ...\Sections\SectionB\typ_SecB.dgn

TYPICAL GRADING SECTION

FOR BIDDING PURPOSES ONLY

KLJ	STATE OF SOUTH DAKOTA	PROJECT	SHEET	TOTAL SHEETS
		NH-CR-EM 0018(195)103 P 0407(05)01	B26	B166

Plotting Date: 8/2/2024

Rev. 8/2/2024 BAF

x - Modified Type B69 Curb & Gutter

MAINLINE US 18
100+20.72 to 100+62.92

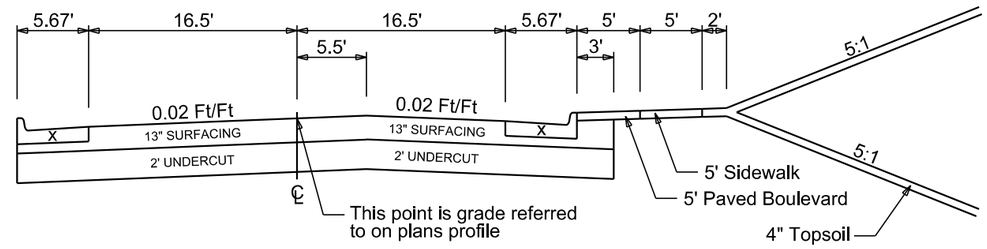

MAINLINE US 18
100+62.92 to 101+22.59

✠ 100+62.92 to 100+71.57 - 24.5' to 33.5'
100+71.57 to 101+22.59 - 33.5'

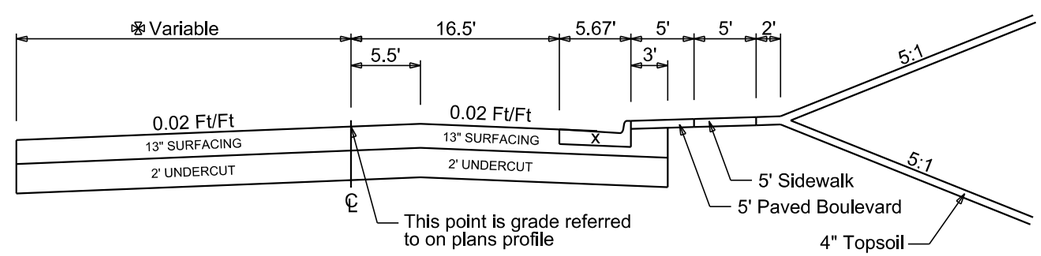

REGISTERED PROFESSIONAL ENGINEER
REG. NO.
11522
BRANDON
FRIED
SOUTH DAKOTA
8/2/24

Plot Scale - 1:200

Plotted From - brandonfried

File - ...\Sections\SectionBtyp_SecB.dgn

TYPICAL GRADING SECTION

FOR BIDDING PURPOSES ONLY

KLJ	STATE OF SOUTH DAKOTA	PROJECT	SHEET	TOTAL SHEETS
		NH-CR-EM 0018(195)103 P 0407(05)01	B27	B166

Plotting Date: 8/2/2024

Rev. 8/2/2024 BAF

MAINLINE US 18
TURN LANE
0+30.00 to 0+80.65
1+31.58 to 2+12.20

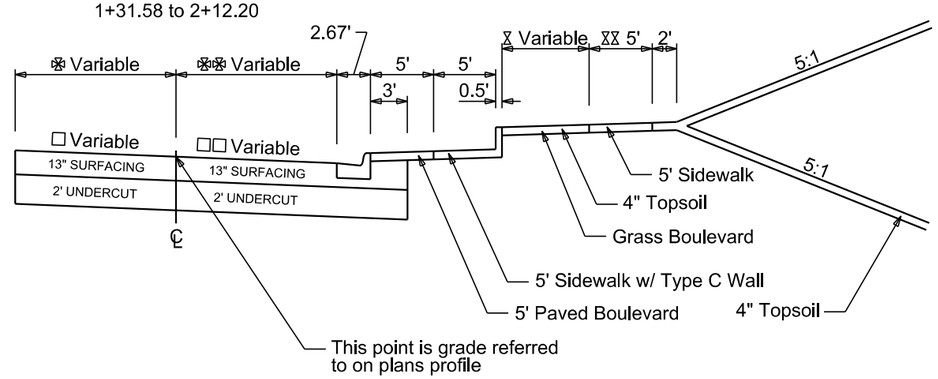

0+32.00 to 0+37.79 - 0.00'
0+37.79 to 0+84.19 - 0.00' to 18.62'
0+84.19 to 0+88.28 - 18.62' to 12.35'
0+88.28 to 0+95.05 - 12.35' to 12.00'
0+95.05 to 1+24.68 - 12.00'
1+24.68 to 1+36.37 - 12.00' to 12.90'
1+36.37 to 1+39.42 - 12.90' to 16.87'
1+39.42 to 1+63.53 - 16.87' to 0.00'
1+63.53 to 2+17.13 - 0.00'

0+32.00 to 0+32.64 - 11.00'
0+32.64 to 0+89.75 - 11.00' to 12.85'
0+89.75 to 0+95.03 - 12.85' to 13.00'
0+95.03 to 1+24.68 - 13.00'
1+24.68 tp 1+63.52 - Width varries beetween 12.65' and 13.00'
1+63.52 to 2+17.13 - 13.00' to 0.00'

0+30.00 to 1+07.09 - No Boulevard
1+07.09 to 1+12.34 - 12.46' to 7.41'
1+12.34 to 1+15.97 - 7.41' to 7.44'
1+15.97 to 1+84.99 - 7.44' to 6.90'
1+84.99 to 1+88.18 - 6.90' to 2.58'
1+88.18 to 2+12.20 - No Boulevard

0+30.00 to 1+07.09 - No Sidewalk
1+07.09 to 1+12.34 - 0.00' to 5.00'
1+92.35 to 2+12.20 - No Sidewalk

0+30.00 to 0+74.62 - 0.0200 Ft/Ft
0+74.62 to 0+90.64 - 0.0200 Ft/Ft to 0.0150 Ft/Ft
0+90.64 to 1+36.37 - 0.0150 Ft/Ft to 0.0117 Ft/Ft
1+36.37 to 1+51.92 - 0.0117 Ft/Ft to 0.0100 Ft/Ft
1+51.92 to 1+63.53 - 0.0100 Ft/Ft to 0.0000 Ft/Ft

0+30.00 to 0+74.62 - 0.0200 Ft/Ft
0+74.62 to 0+90.64 - 0.0200 Ft/Ft to 0.0150 Ft/Ft
0+90.64 to 1+51.92 - 0.0150 Ft/Ft
1+51.92 to 1+67.79 - 0.0150 Ft/Ft to 0.0100 Ft/Ft
1+67.79 to 1+82.87 - 0.0100 Ft/Ft to 0.0050 Ft/Ft
1+82.87 to 2+17.13 - 0.0050 Ft/Ft to 0.0000 Ft/Ft

MAINLINE US 18
TURN LANE
0+80.65 to 1+31.58

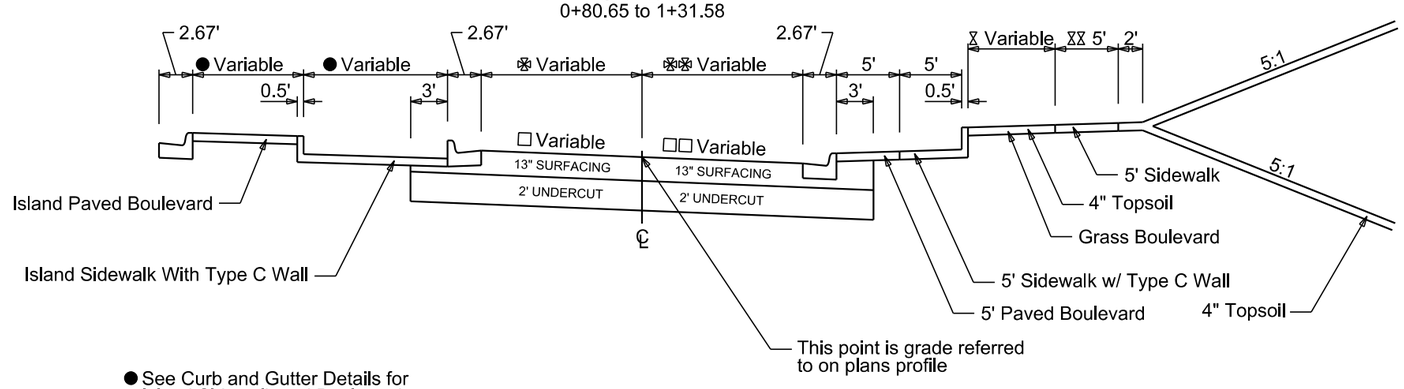

● See Curb and Gutter Details for Island Sidewalk and Boulevard

REGISTERED PROFESSIONAL ENGINEER
REG. NO.
11522
BRANDON
FRIED
SOUTH DAKOTA
8/2/24

Plot Scale - 1:200

Plotted From - brandonfried

File - ...\Sections\SectionBtyp_SecB.dgn

TYPICAL GRADING SECTION

FOR BIDDING PURPOSES ONLY

KLJ	STATE OF SOUTH DAKOTA	PROJECT	SHEET	TOTAL SHEETS
		NH-CR-EM 0018(195)103 P 0407(05)01	B28	B166

Plotting Date: 8/2/2024

Rev. 8/2/2024 BAF

x - Modified Type B69 Curb & Gutter

MAINLINE US 18
101+22.59 to 106+44.31
108+27.38 to 110+89.31
111+35.84 to 118+00.09

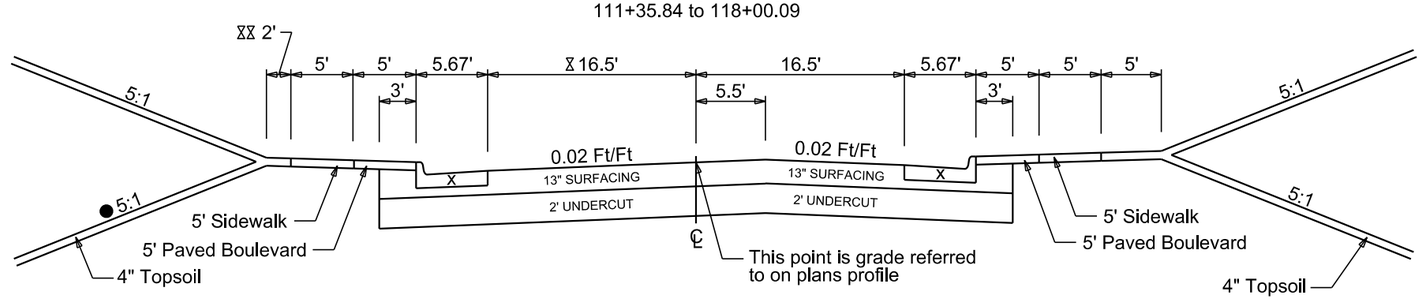

X 101+22.59 to 102+62.62 - 28.5'
102+62.62 to 103+87.62 - 28.5' to 16.5'

XX 110+56.10 to 110+89.31 - 5'
111+35.84 to 113+94.46 - 5'

● 110+56.10 to 110+89.31 - 4:1
111+35.84 to 113+94.46 - 4:1

MAINLINE US 18
106+42.21 to 107+10.10

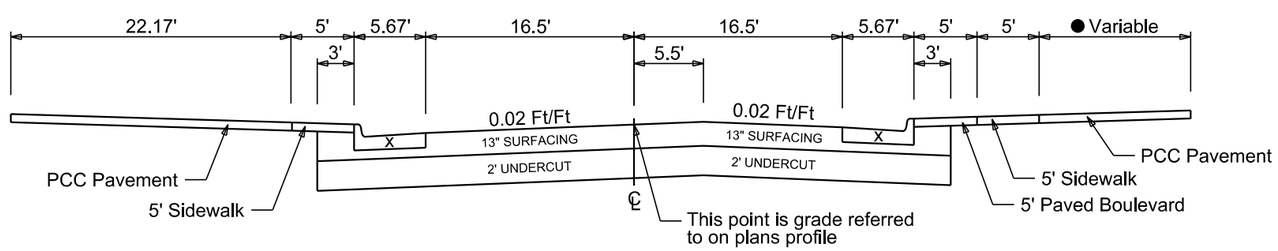

● 106+42.21 to 106+65.85 - 15.08' to 16.38'
106+65.85 to 106+66.38 - 16.38' to 9.55'
106+66.38 to 106+76.04 - 9.55' to 14.02'
106+76.04 to 107+08.49 - 23.56' to 25.89'
107+08.49 to 107+10.10 - 25.89' to 0.00'

REGISTERED PROFESSIONAL ENGINEER
REG. NO.
11522
BRANDON
FRIED
SOUTH DAKOTA
8/2/24

Plot Scale - 1:200

Plotted From - brandonfried

File - ...\Sections\SectionBtyp_SecB.dgn

TYPICAL GRADING SECTION

FOR BIDDING PURPOSES ONLY

KLJ	STATE OF SOUTH DAKOTA	PROJECT	SHEET	TOTAL SHEETS
		NH-CR-EM 0018(195)103 P 0407(05)01	B29	B166

Plotting Date: 8/2/2024

Rev. 8/2/2024 BAF

x - Modified Type B69 Curb & Gutter

MAINLINE US 18
107+10.10 to 107+24.17
107+84.12 to 108+27.38

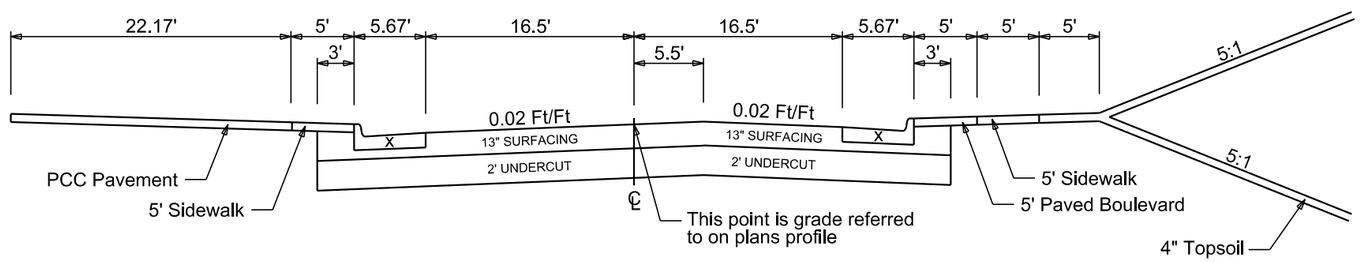

MAINLINE US 18
107+24.17 to 107+84.12

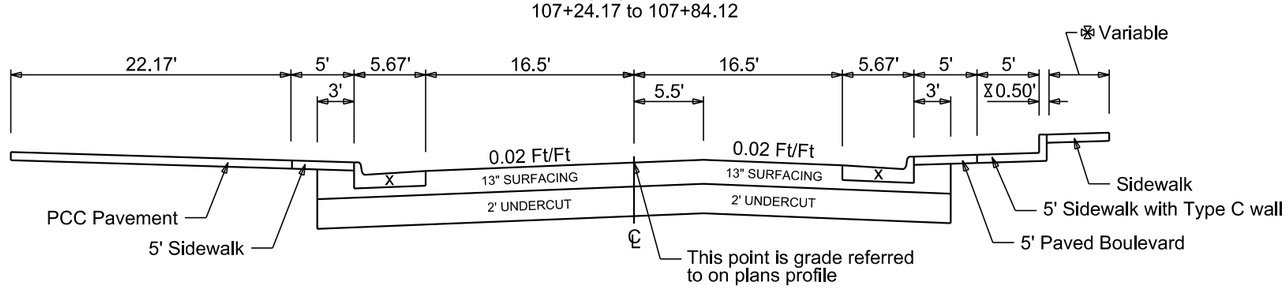

✠ 107+24.17 to 107+29.08 - 0.00'
107+29.08 to 107+34.42 - 0.00' to 0.50'
107+79.21 to 107+84.12 - 0.00'

⧖ 107+24.17 to 107+34.14 - 5.00' to 5.16'
107+34.14 to 107+79.21 - 5.16' to 5.27'
107+79.21 to 107+84.12 - 5.77' to 5.85'

REGISTERED PROFESSIONAL ENGINEER
REG. NO.
11522
BRANDON
FRIED
SOUTH DAKOTA
8/2/24

Plot Scale - 1:200

Plotted From - brandonfried

File - ...\Sections\SectionBtyp_SecB.dgn

TYPICAL GRADING SECTION

FOR BIDDING PURPOSES ONLY

KLJ	STATE OF SOUTH DAKOTA	PROJECT	SHEET	TOTAL SHEETS
		NH-CR-EM 0018(195)103 P 0407(05)01	B30	B166

Plotting Date: 8/2/2024

Rev. 8/2/2024 BAF

x - Modified Type B69 Curb & Gutter

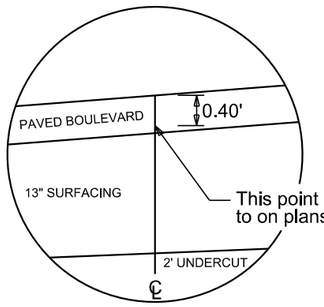

Inset A

MAINLINE US 18
110+89.31 to 111+35.84

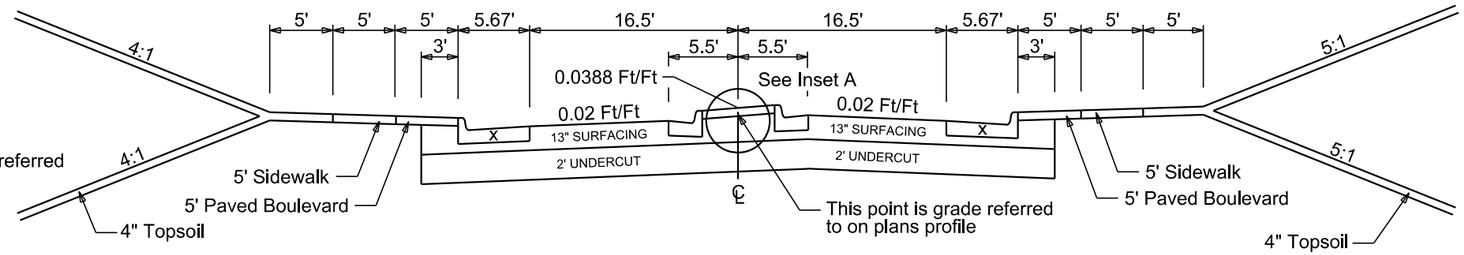

MAINLINE US 18
118+00.09 to 119+63.24
122+37.64 to 122+47.51
125+03.54 to 127+99.96
129+94.71 to 133+84.31

✠ 118+00.09 to 118+31.16 - 21.28'
118+31.16 to 118+59.18 - 21.28' to 10.55'
118+59.18 to 119+24.00 - 10.55' to 10.65'
119+24.00 to 119+63.24 - 10.65' to 17.31'
122+37.64 to 122+47.51 - 23.85' to 23.42'
125+03.54 to 125+13.43 - 17.98' to 17.66'
125+13.43 to 125+38.30 - 17.66' to 17.78'
125+79.24 to 126+32.80 - 17.66' to 17.29'
126+32.80 to 127+90.06 - 17.29' to 16.53'
127+90.06 to 127+99.96 - 16.53' to 17.24'
130+93.18 to 131+03.05 - 21.85' to 21.25'
131+03.05 to 131+90.08 - 21.25' to 19.27'
131+90.08 to 132+59.06 - 19.27' to 18.50'
132+59.06 to 132+81.64 - 18.50 to 10.35'
132+81.64 to 133+07.38 - 10.35'
133+44.90 to 133+75.64 - 10.33'
133+75.64 to 133+84.31 - 10.33' to 12.83'

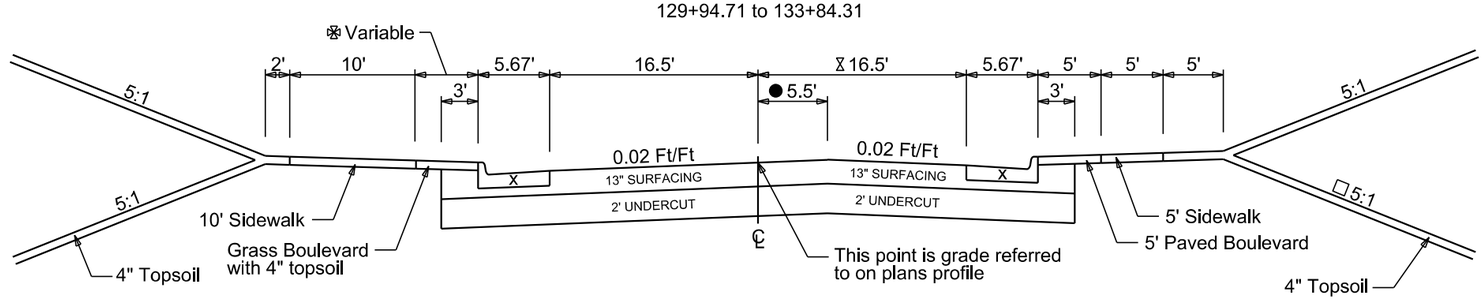

⧖ 131+22.80 to 131+83.08 - 16.50' to 28.50'
131+83.08 to 133+56.14 - 28.50'

● 133+59.36 to 133+84.31 - 5.50' to 0.00'

☐ 122+00.00 to 125+00.00 - 4:1
125+00.00 to 125+25.00 - 4:1 to 5:1

MAINLINE US 18
119+63.24 to 122+37.64
122+47.51 to 125+03.54
127+99.96 to 129+94.71

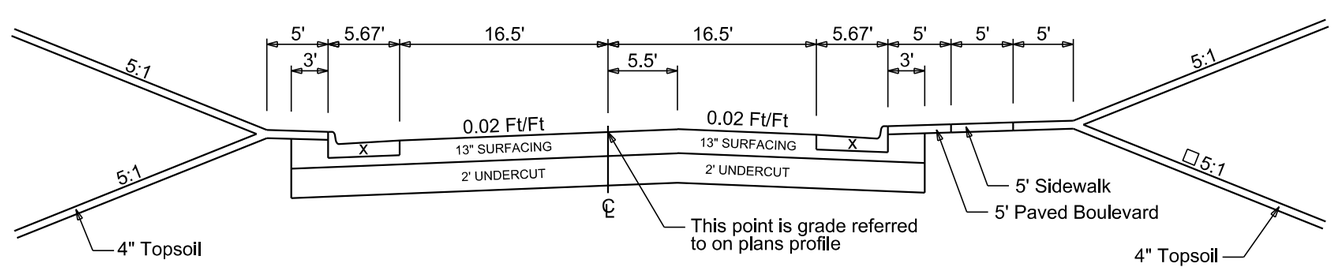

Plot Scale - 1:200

Plotted From - brandonfried

File - ...\Sections\SectionB\typ_SecB.dgn

TYPICAL GRADING SECTION

FOR BIDDING PURPOSES ONLY

KLJ	STATE OF SOUTH DAKOTA	PROJECT	SHEET	TOTAL SHEETS
		NH-CR-EM 0018(195)103 P 0407(05)01	B31	B166

Plotting Date: 8/2/2024

Rev. 8/2/2024 BAF

MAINLINE US 18
133+84.31 to 136+29.35

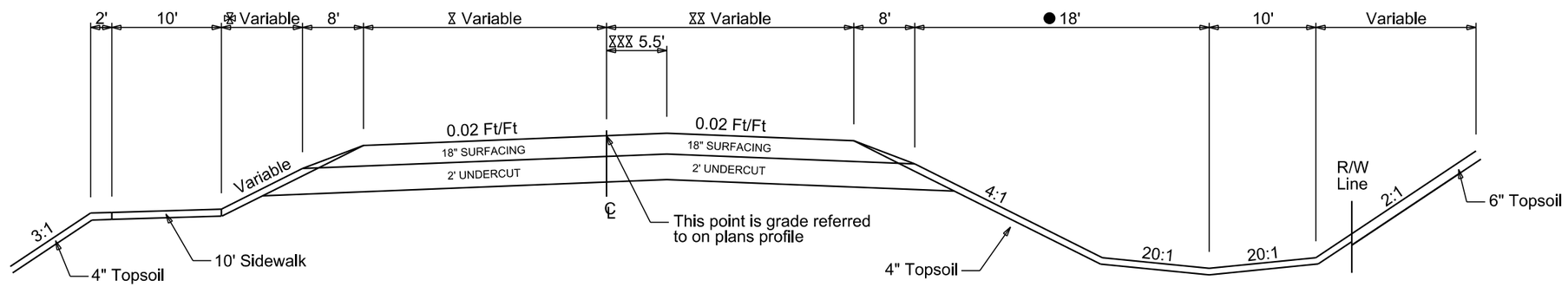

✠ 133+84 .32 to136+00.00 - 5.80' to 2.20'
136+00.00 to 136+19.35 - 2.20' to 1.35'
136+19.35 to 136+29.35 - 1.35' to 1.10'

Ⅹ 133+84.32 to 136+50.00 - 22.50' to 26.69'

ⅩⅩ 133+84.32 to 136+50.00 - 22.50' to 24.31'

ⅩⅩⅩ 133+84.32 to 134+09.32 - 5.50' to 0.00'
134+09.32 to 136+50.00 - 0.00'

● 136+00.00 to 136+50.00 - 18.00' to 10.98'

MAINLINE US 18
136+29.35 to 136+50.00

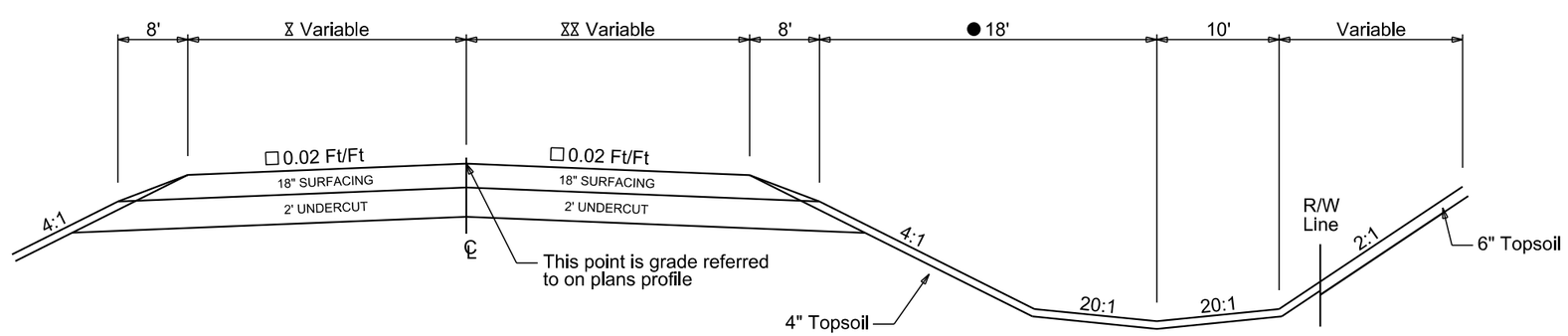

☐ 136+29.35 to 136+50.00 - Transition from 0.02 Ft/Ft to Existing

REGISTERED PROFESSIONAL ENGINEER
REG. NO.
11522
BRANDON
FRIED
SOUTH DAKOTA
8/2/24

Plot Scale - 1:200

Plotted From - brandonfried

File - ...\Sections\SectionB\typ_SecB.dgn

TYPICAL GRADING SECTION

FOR BIDDING PURPOSES ONLY

KLJ	STATE OF SOUTH DAKOTA	PROJECT	SHEET	TOTAL SHEETS
		NH-CR-EM 0018(195)103 P 0407(05)01	B32	B166

Plotting Date: 8/2/2024

Rev. 8/2/2024 BAF

xr133
22+13.89 to 25+53.15

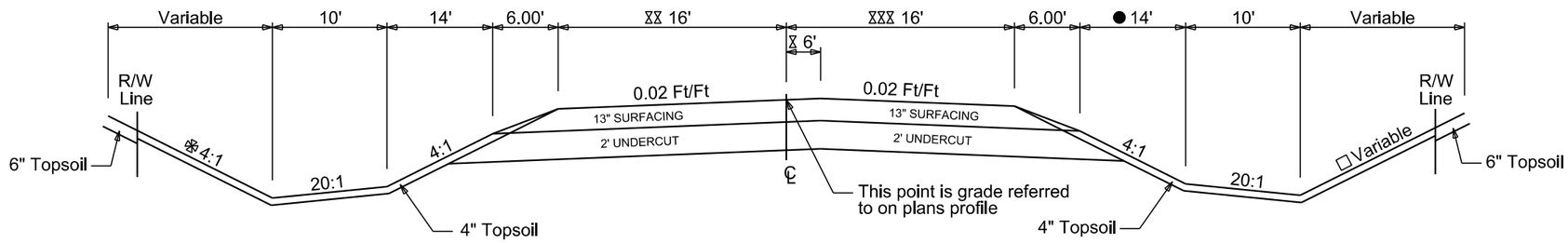

❄ 25+25.00 to 25+50.00 - 4.0:1 to (-20.0:1)
25+50.00 to 25+53.15 - (-20.0:1)
26+79.16 to 27+00.00 - (-50.0:1) to 4.0:1

● 22+13.89 to 23+00 - 1.00' to 14.00'

□ 22+13.89 to 23+50.00 - 4.0:1
23+50.00 to 24+00.00 - 4.0:1 to 11.5:1
24+00.00 to 24+50.00 - 11.5:1 to 16.5:1
24+50.00 to 25+00.00 - 16.5:1 to 18.5:1
25+00.00 to 25+25.00 - 18.5:1 to 21.5:1
25+25.00 to 25+50.00 - 21.5:1 to 31.5:1
25+50.00 to 25+53.14 - 31.5:1 to 35.5:1

⧖ 23+72.48 to 25+53.15 - 0.00' to 6.00'

⧖⧖ 22+13.89 to 22+23.89 - 14.64' to 16.00'
23+72.48 to 24+32.48 - 16.00' to 18.00'
24+32.48 to 25+53.15 - 18.00'
28+70.00 to 29+00.00 - 16.00' to 9.93'

⧖⧖⧖ 23+72.48 to 24+09.45 - 16.00' to 17.23'
24+09.45 to 24+43.64 - 17.23' to 25.64'
24+43.64 to 24+74.01 - 25.64' to 30.00'
24+74.01 to 25+53.15 - 30.00'
28+70.00 to 29+00.00 - 16.00' to 10.47'

xr133
26+79.16 to 28+00.00

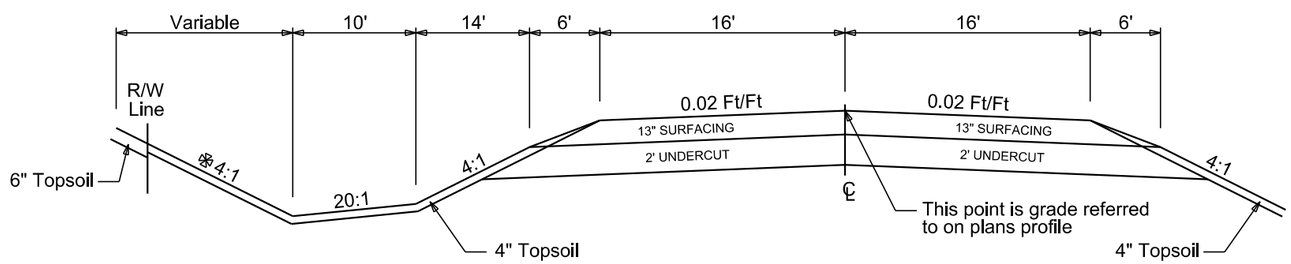

xr133
28+00.00 to 29+00.00

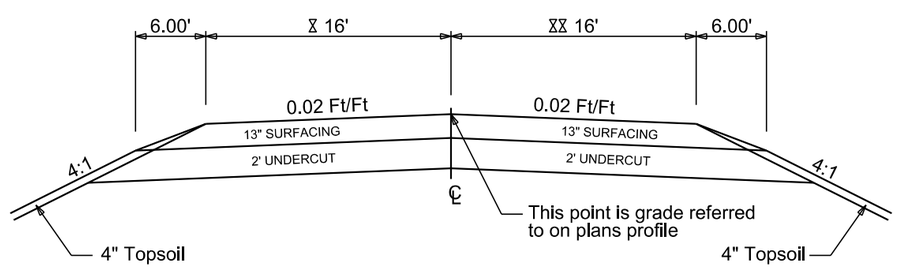

Depth of Gravel Surfacing along xr133 varies from 13" to the existing depth from 28+50 to 29+00.

Plot Scale - 1:200

Plotted From - brandonfried

File - ...\Sections\SectionB\typ_SecB.dgn

TYPICAL GRADING SECTION

FOR BIDDING PURPOSES ONLY

KLJ	STATE OF SOUTH DAKOTA	PROJECT	SHEET	TOTAL SHEETS
		NH-CR-EM 0018(195)103 P 0407(05)01	B33	B166

Plotting Date: 8/2/2024 Rev. 8/2/2024 BAF

REGISTERED PROFESSIONAL ENGINEER
REG. NO.
11522
BRANDON
FRIED
SOUTH DAKOTA
8/2/24

xr133
25+53.15 to 25+78.15
26+29.15 to 26+79.15

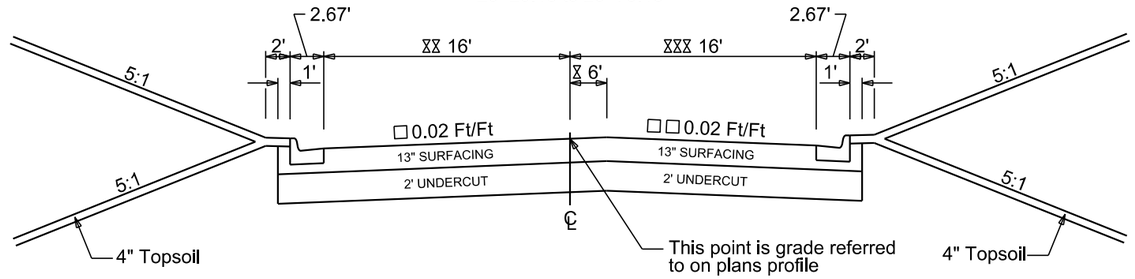

xr133

XX 23+53.15 to 25+78.15 - 18.00'
26+29.15 to 26+79.15 - 16.00'

xr133

X 26+29.15 to 26+79.15 - 0.00'

xr133

XXX 25+53.15 to 25+78.15 - 30.00'
26+29.15 to 26+79.15 - 16.00'

xr133

25+53.15 to 25+78.15 - 0.0200 Ft/Ft to (-0.0185 Ft/Ft)
26+29.15 to 26+54.15 - (-0.0185 Ft/Ft) to 0.0200 Ft/Ft

xr133

25+53.15 to 25+78.15 - 0.0200 Ft/Ft to 0.0174 Ft/Ft
26+29.15 to 26+54.15 - 0.0179 Ft/Ft to 0.0200 Ft/Ft

xr117
11+00.00 to 12+56.34
12+95.80 to 14+78.42

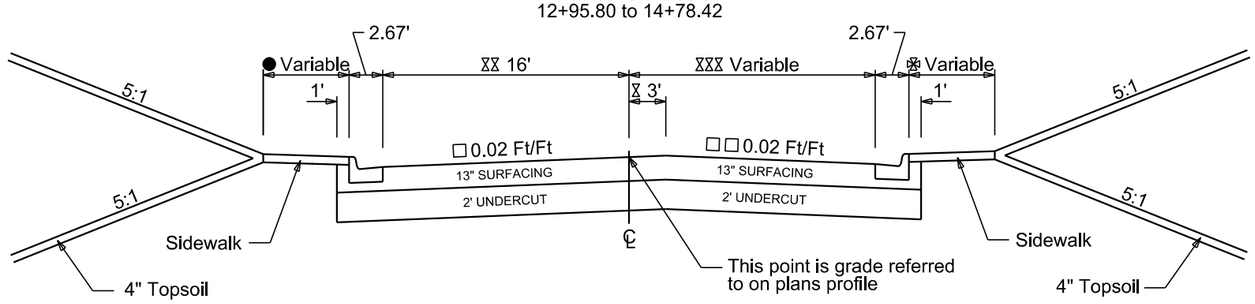

xr117

XX 11+00.00 to 11+10.00 - 16.42' to 16.00'
11+10.00 to 12+53.70 - 16.00'
12+53.70 to 12+56.34 - 16.00' to 0.00'
12+93.55 to 12+95.80 - 0.00' to 16.00'
12+98.50 to 14+71.15 - 16.00'
14+71.15 to 14+78.42 - 16.00' to 16.24'

xr117

● 11+00.00 to 12+56.34 - 0.00'
12+95.80 to 13+46.66 - 0.00'
13+46.66 to 13+92.79 - 7.50'
13+92.79 to 13+92.94 - 7.50' to 4.21'
13+92.94 to 14+33.94 - 4.21' to 4.10'
14+33.94 to 14+71.15 - 4.10' to 4.50'
14+71.15 to 14+78.42 - 4.50 to 4.23'

xr117

X 11+00.00 to 12+56.34 - 0.00'
12+95.80 to 13+91.98 - 0.00'
13+91.98 to 14+78.42 - 0.00' to 3.00'

xr117

XXX 11+00.00 to 11+10.00 - 18.24 to 18.00'
11+10.00 to 12+56.34 - 18.00'
12+56.34 to 12+59.32 - 18.00' to 0.00'
12+95.80 to 12+98.04 - 0.00' to 16.00'
12+98.04 to 13+97.98 - 16.00'
13+97.98 to 14+73.42 - 16.00' to 22.00'
14+73.42 to 14+78.42 - 22.00' to 22.05'

xr117

11+00.00 to 12+56.34 - 0.00'
12+95.80 to 13+52.75 - 0.00'
13+52.75 to 14+45.49 - 8.00'
14+45.49 to 14+73.42 - 8.00' to 4.50'
14+73.42 to 14+78.42 - 4.50' to 4.35'

xr117

11+00.00 to 11+10.00 - 0.0563 Ft/Ft to 0.0200 Ft/Ft
12+24.23 to 12+53.70 - 0.0200 Ft/Ft to 0.0263 Ft/Ft
12+98.04 to 13+34.71 - 0.0238 Ft/Ft to 0.0200 Ft/Ft
14+73.42 to 14+78.42 - 0.0200 Ft/Ft to 0.0150 Ft/Ft

xr117

11+00.00 to 11+10.00 - 0.0546 Ft/Ft to 0.0200 Ft/Ft
12+24.23 to 12+53.70 - 0.0200 Ft/Ft to (-0.0111 Ft/Ft)
12+98.04 to 13+34.71 - (-0.0219 Ft/Ft) to 0.0200 Ft/Ft
14+73.42 to 14+78.42 - 0.0200 Ft/Ft to 0.0165 Ft/Ft

Plot Scale - 1:200
Plotted From - brandonfried
File - ...\Sections\SectionBtyp_SecB.dgn

TYPICAL GRADING SECTION

FOR BIDDING PURPOSES ONLY

KLJ	STATE OF SOUTH DAKOTA	PROJECT	SHEET	TOTAL SHEETS
		NH-CR-EM 0018(195)103 P 0407(05)01	B34	B166

Plotting Date: 8/2/2024

Rev. 8/2/2024 BAF

MAINLINE SD 407/US 18
202+20.04 to 208+16.90
208+49.10 to 209+11.64
209+66.58 to 209+87.83

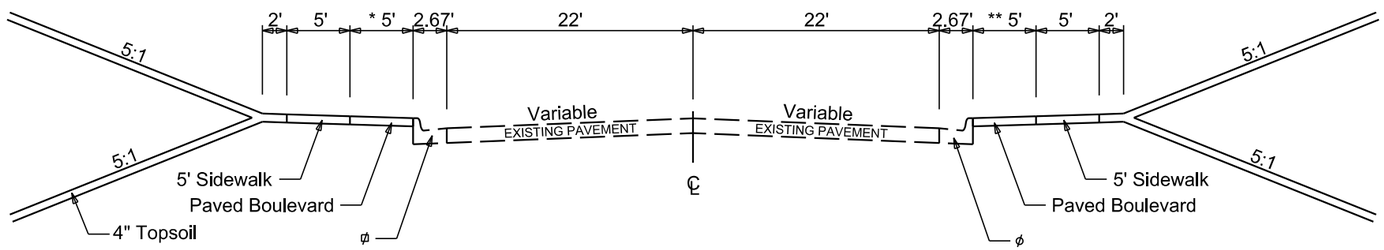

See Table of Pavement Transitions

* Paved Boulevard Width, West Side
** Paved Boulevard Width, East Side
ø Remove and Replace Curb and Gutter, West Side
ø Remove and Replace Curb and Gutter, East Side
★ Mainline Pavement Replacement Width
⊕ Asphalt Driveway Replacement Width
⊗ Asphalt Pavement Replacement Width, West Side
\# Asphalt Pavement Replacement Width, East Side

MAINLINE SD 407/US 18
202+15.36 to 202+20.04
209+11.64 to 209+37.63
209+87.83 to 212+03.39

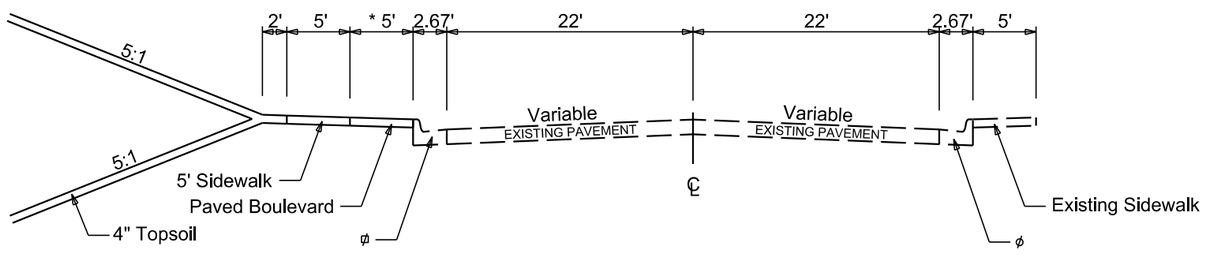

REGISTERED PROFESSIONAL ENGINEER
REG. NO.
11522
BRANDON
FRIED
SOUTH DAKOTA
8/2/24

Plot Scale - 1:200

Plotted From - brandonfried

File - ...\Sections\SectionB\typ_SecB.dgn

TYPICAL GRADING SECTION

FOR BIDDING PURPOSES ONLY

KLJ	STATE OF SOUTH DAKOTA	PROJECT	SHEET	TOTAL SHEETS
		NH-CR-EM 0018(195)103 P 0407(05)01	B35	B166

Plotting Date: 8/2/2024 Rev. 8/2/2024 BAF

MAINLINE SD 407/US 18
208+16.90 to 208+49.10

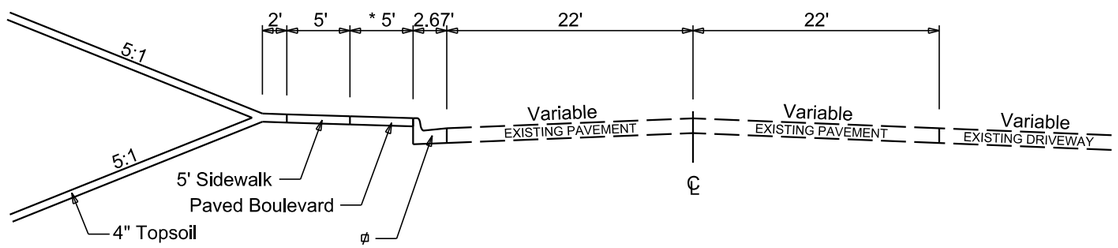

See Table of Pavement Transitions

* Paved Boulevard Width, West Side
** Paved Boulevard Width, East Side
⌀ Remove and Replace Curb and Gutter, West Side
ϕ Remove and Replace Curb and Gutter, East Side
★ Mainline Pavement Replacement Width
⌖ Asphalt Driveway Replacement Width
⊛ Asphalt Pavement Replacement Width, West Side
\# Asphalt Pavement Replacement Width, East Side

MAINLINE SD 407/US 18
209+37.63 to 209+66.58

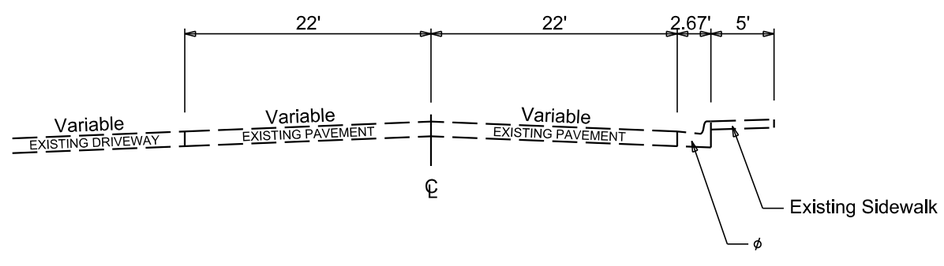

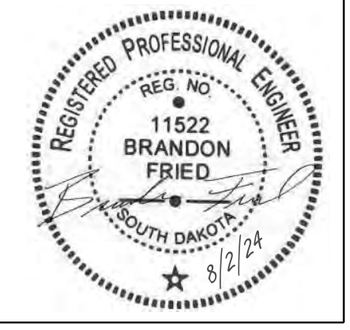

Plot Scale - 1:200
Plotted From - brandonfried
File - ...\Sections\SectionB\typ_SecB.dgn

TYPICAL GRADING SECTION

FOR BIDDING PURPOSES ONLY

KLJ	STATE OF SOUTH DAKOTA	PROJECT	SHEET	TOTAL SHEETS
		NH-CR-EM 0018(195)103 P 0407(05)01	B36	B166

Plotting Date: 8/2/2024

Rev. 8/2/2024 BAF

MAINLINE SD 407
212+03.39 to 212+06.23

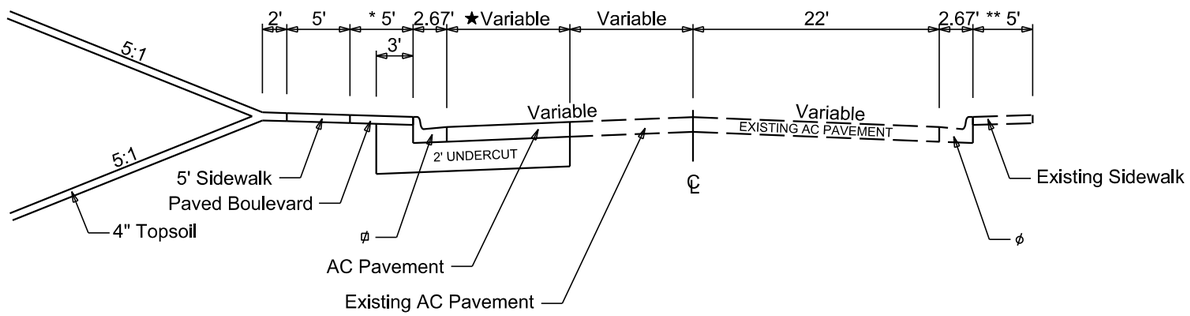

See Table of Pavement Transitions

* Paved Boulevard Width, West Side
** Paved Boulevard Width, East Side
ϕ Remove and Replace Curb and Gutter, West Side
ϕ Remove and Replace Curb and Gutter, East Side
★ Mainline Pavement Replacement Width
⊕ Asphalt Driveway Replacement Width
⊗ Asphalt Pavement Replacement Width, West Side
\# Asphalt Pavement Replacement Width, East Side

MAINLINE SD 407
212+06.23 to 212+45.68

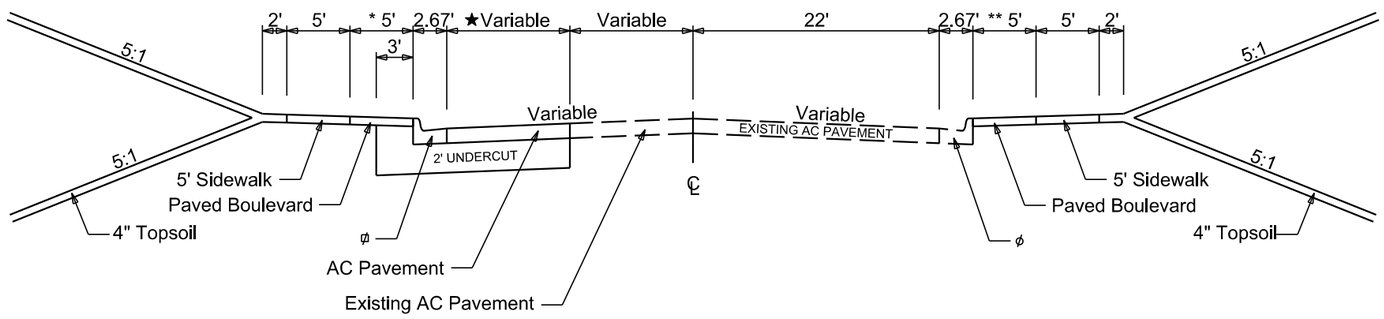

MAINLINE SD 407
212+45.68 to 212+72.57

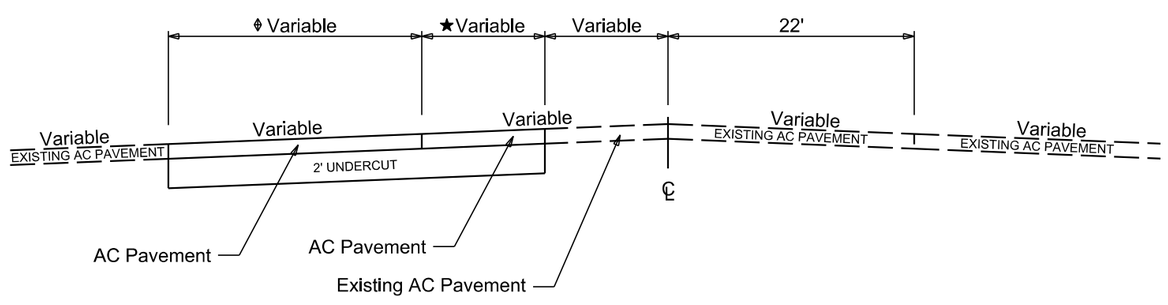

REGISTERED PROFESSIONAL ENGINEER
REG. NO.
11522
BRANDON
FRIED
SOUTH DAKOTA
8/2/24

Plot Scale - 1:200

Plotted From - brandonfried

File - ...\Sections\SectionB\typ_SecB.dgn

TYPICAL GRADING SECTION

FOR BIDDING PURPOSES ONLY

KLJ	STATE OF SOUTH DAKOTA	PROJECT	SHEET	TOTAL SHEETS
		NH-CR-EM 0018(195)103 P 0407(05)01	B37	B166

Plotting Date: 8/2/2024

Rev. 8/2/2024 BAF

MAINLINE SD 407
212+72.57 to 214+16.52

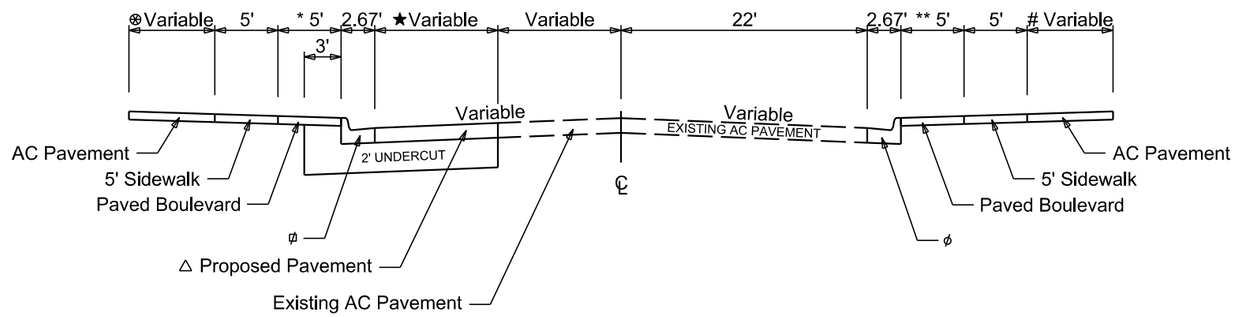

△ 212+87.20 to 212+97.20 - Proposed AC Pavement
△ 212+97.20 to 212+99.92 - Proposed PCC Pavement

See Table of Pavement Transitions

* Paved Boulevard Width, West Side
** Paved Boulevard Width, East Side
ϕ Remove and Replace Curb and Gutter, West Side
ϕ Remove and Replace Curb and Gutter, East Side
★ Mainline Pavement Replacement Width
ϕ Asphalt Driveway Replacement Width
⊛ Asphalt Pavement Replacement Width, West Side
\# Asphalt Pavement Replacement Width, East Side

MAINLINE SD 407
214+16.52 to 214+50.11

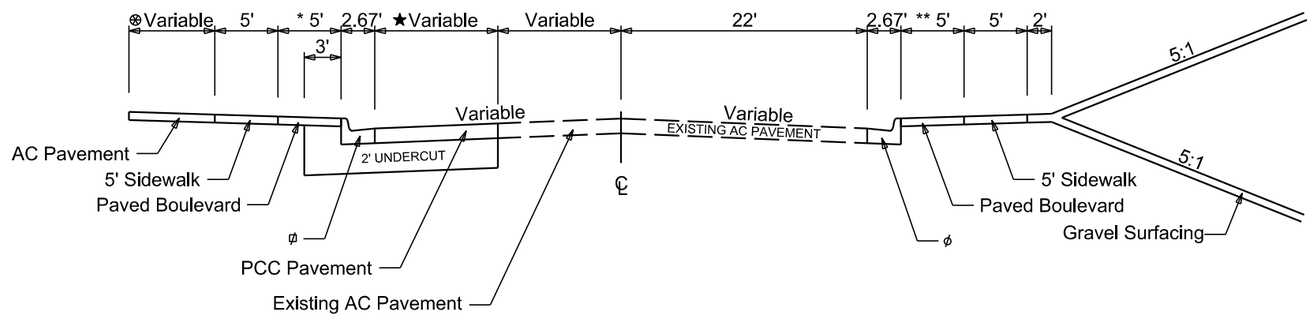

MAINLINE SD 407
214+50.11 to 214+99.91

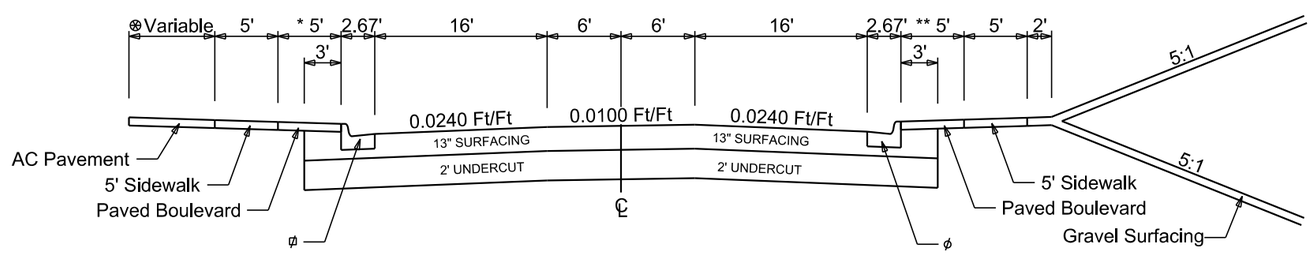

Plot Scale - 1:200
Plotted From - brandonfried
File - ...\Sections\SectionB\typ_SecB.dgn

TYPICAL GRADING SECTION

FOR BIDDING PURPOSES ONLY

KLJ	STATE OF SOUTH DAKOTA	PROJECT	SHEET	TOTAL SHEETS
		NH-CR-EM 0018(195)103 P 0407(05)01	B38	B166

Plotting Date: 8/2/2024

Rev. 8/2/2024 BAF

MAINLINE SD 407
214+99.91 to 215+38.90

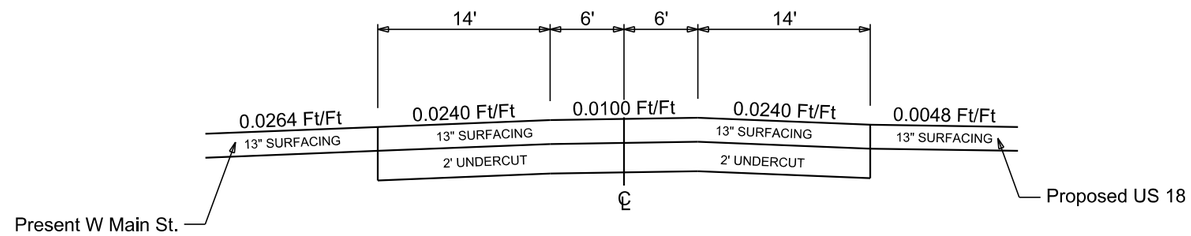

See Table of Pavement Transitions

* Paved Boulevard Width, West Side
** Paved Boulevard Width, East Side
ⓟ Remove and Replace Curb and Gutter, West Side
ⓔ Remove and Replace Curb and Gutter, East Side
★ Mainline Pavement Replacement Width
⊕ Asphalt Driveway Replacement Width
⊗ Asphalt Pavement Replacement Width, West Side
\# Asphalt Pavement Replacement Width, East Side

MAINLINE SD 407
215+38.90 to 215+91.68

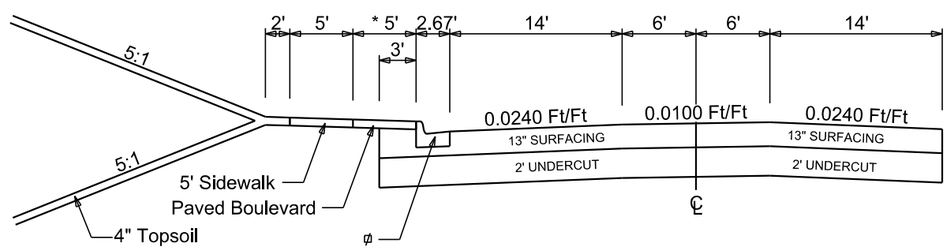

MAINLINE SD 407/US 18
215+91.68 to 216+63.98

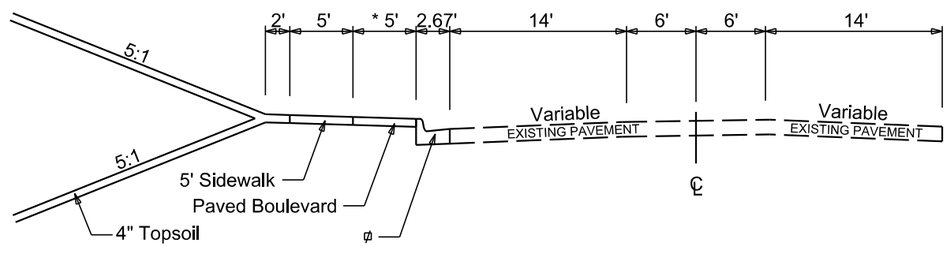

Plot Scale - 1:200

Plotted From - brandonfried

File - ...\Sections\SectionB\typ_SecB.dgn

TYPICAL GRADING SECTION

FOR BIDDING PURPOSES ONLY

KLJ	STATE OF SOUTH DAKOTA	PROJECT	SHEET	TOTAL SHEETS
		NH-CR-EM 0018(195)103 P 0407(05)01	B39	B166

Plotting Date: 8/2/2024

Rev. 8/2/2024 BAF

MAINLINE SD 407/US 18
216+63.98 to 219+49.74
219+87.16 to 220+16.57
220+36.58 to 220+42.04
220+81.10 to 224+16.68
224+36.68 to 225+58.13
225+98.05 to 226+50.00

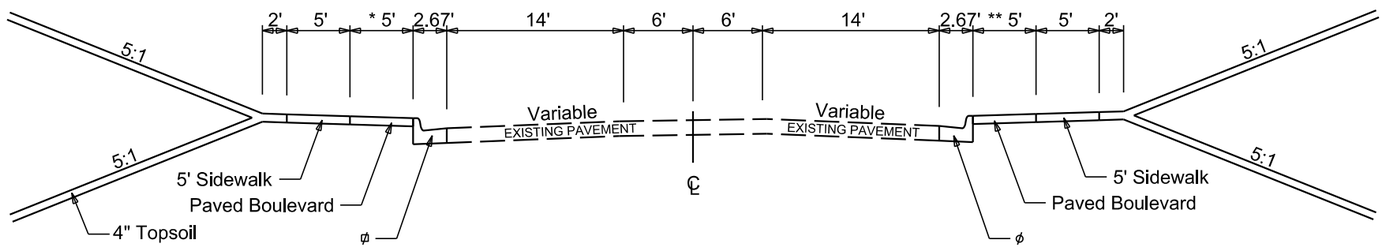

See Table of Pavement Transitions

* Paved Boulevard Width, West Side
** Paved Boulevard Width, East Side
ⓟ Remove and Replace Curb and Gutter, West Side
ⓟ Remove and Replace Curb and Gutter, East Side
★ Mainline Pavement Replacement Width
⊕ Asphalt Driveway Replacement Width
⊗ Asphalt Pavement Replacement Width, West Side
\# Asphalt Pavement Replacement Width, East Side

MAINLINE SD 407/US 18
220+16.57 to 220+36.58
224+16.68 to 224+36.68

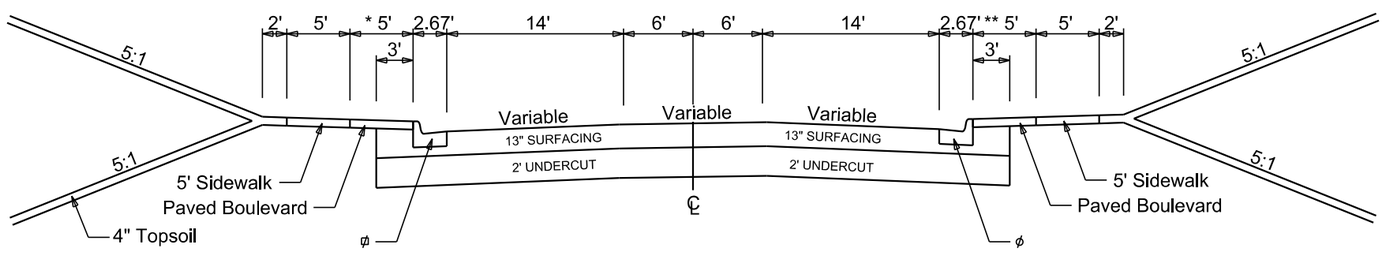

REGISTERED PROFESSIONAL ENGINEER
REG. NO.
11522
BRANDON
FRIED
SOUTH DAKOTA
8/2/24

Plot Scale - 1:200

Plotted From - brandonfried

File - ...\Sections\SectionB\typ_SecB.dgn

TYPICAL GRADING SECTION

FOR BIDDING PURPOSES ONLY

KLJ	STATE OF SOUTH DAKOTA	PROJECT	SHEET	TOTAL SHEETS
		NH-CR-EM 0018(195)103 P 0407(05)01	B40	B166

Plotting Date: 8/2/2024

Rev. 8/2/2024 BAF

MAINLINE SD 407/US 18
219+49.74 to 219+87.16

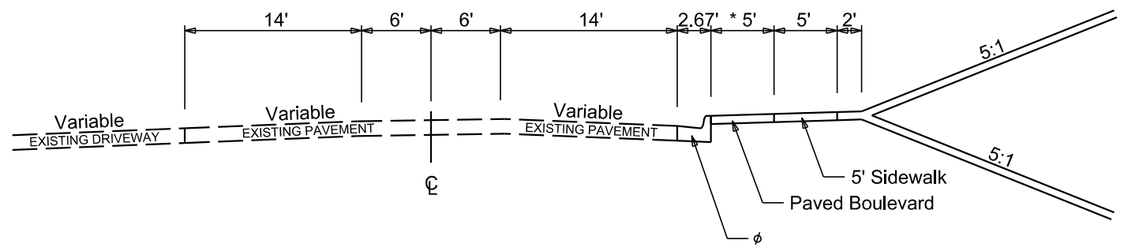

See Table of Pavement Transitions

* Paved Boulevard Width, West Side
** Paved Boulevard Width, East Side
ϕ Remove and Replace Curb and Gutter, West Side
ϕ Remove and Replace Curb and Gutter, East Side
★ Mainline Pavement Replacement Width
⊕ Asphalt Driveway Replacement Width
⊗ Asphalt Pavement Replacement Width, West Side
\# Asphalt Pavement Replacement Width, East Side

MAINLINE SD 407/US 18
220+42.04 to 220+81.10
225+58.13 to 225+98.05

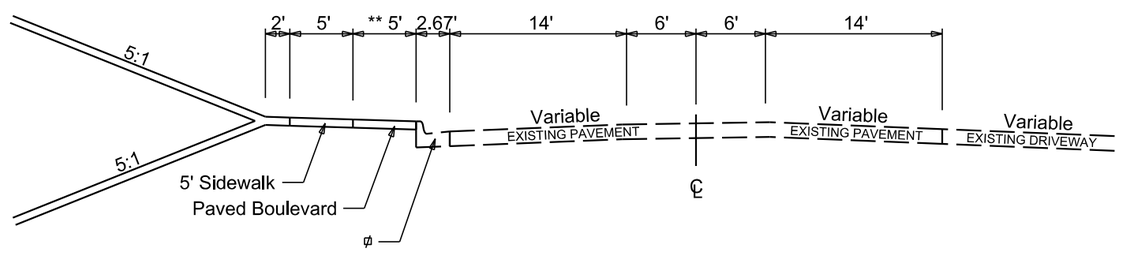

REGISTERED PROFESSIONAL ENGINEER
REG. NO.
11522
BRANDON
FRIED
SOUTH DAKOTA
8/2/24

Plot Scale - 1:200

Plotted From - brandonfried

File - ...\Sections\SectionB\typ_SecB.dgn

TYPICAL GRADING SECTION

FOR BIDDING PURPOSES ONLY

TABLE OF PAVEMENT TRANSITIONS

* Paved Boulevard Width, West Side

Station	Width
202+15.26 to 202+17.48	0.00' to 10.74'
202+17.48 to 202+30.95	10.74' to 6.51'
202+30.95 to 202+38.40	6.51' to 8.72'
202+38.40 to 202+60.59	8.72' to 0.00'
202+60.59 to 207+80.02	0.00'
207+80.02 to 207+93.84	0.00' to 4.84'
207+93.84 to 208+25.84	4.84' to 4.97'
208+25.84 to 208+32.70	4.97' to 0.00'
208+32.70 to 209+37.63	0.00'
209+66.58 to 212+12.72	0.00'
212+12.72 to 212+23.05	0.00' to 6.53'
212+23.05 to 212+29.66	6.53' to 9.75'
212+29.66 to 212+42.16	9.75' to 0.00'
212+76.90 to 212+89.46	0.00' to 9.72'
212+89.46 to 212+96.39	9.72' to 5.93'
212+96.39 to 212+97.67	5.93' to 5.04'
212+97.67 to 214+46.01	5.04' to 5.00'
214+46.01 to 214+59.44	5.00' to 7.78'
214+59.44 to 214+65.59	7.78' to 8.69'
214+65.59 to 214+70.59	8.69' to 12.46'
214+70.59 to 214+72.62	12.46' to 17.01'
214+72.62 to 214+92.30	17.01' to 0.00'
215+44.79 to 215+63.35	0.00' to 17.93'
215+63.35 to 215+63.36	17.93' to 7.51'
215+63.36 to 215+68.36	7.51' to 9.29'
215+68.36 to 215+87.59	9.29' to 4.99'
215+87.59 to 219+04.66	4.99' to 5.01'
219+04.66 to 219+18.81	5.01' to 0.00'
219+18.81 to 219+49.74	0.00'
219+87.16 to 220+22.96	0.00'
220+22.96 to 220+31.60	0.00' to 5.00'
220+31.60 to 221+68.33	5.00'
221+68.33 to 221+82.51	5.00' to 0.00'
221+82.51 to 226+50.00	0.00'

ϕ Remove and Replace Curb and Gutter, West Side

Station
202+15.36 to 202+47.64
207+93.83 to 208+56.29
208+84.98 to 209+37.63
209+66.58 to 209+92.31
212+03.38 to 212+45.68
212+73.71 to 214+56.38
214+59.44 to 214+97.88
215+40.93 to 215+91.80
216+40.99 to 216+68.99
218+41.61 to 218+69.61
219+30.60 to 219+49.74
219+87.16 to 220+45.69
220+76.54 to 220+45.69
221+29.37 to 221+68.33
225+38.96 to 225+65.96
225+89.55 to 226+13.55
226+34.15 to 226+46.32

** Paved Boulevard Width, East Side

Station	Width
202+32.53 to 202+37.53	7.50' to 10.09'
202+37.53 to 202+58.33	10.09' to 0.00'
202+58.33 to 208+16.90	0.00'
208+49.10 to 212+07.36	0.00'
212+07.36 to 212+23.13	0.00' to 7.56'
212+23.13 to 212+28.93	7.56' to 9.54'
212+28.93 to 212+41.88	9.54' to 0.00'
212+76.01 to 212+88.61	0.00' to 9.75'
212+88.61 to 212+94.92	9.75' to 6.30'
212+94.92 to 212+96.83	6.30' to 4.98'
212+96.83 to 214+48.36	4.98' to 5.00'
214+48.36 to 214+53.18	5.00' to 8.08'
214+53.18 to 214+65.16	8.08' to 11.89'
214+65.16 to 214+76.93	11.89 to 0.00'
216+63.98 to 216+83.24	5.00' to 5.02'
216+83.24 to 216+94.64	5.02' to 8.60'
216+94.64 to 217+34.91	8.60' to 8.57'
217+34.91 to 217+46.41	8.57' to 4.96'
217+46.41 to 218+31.72	4.96'
218+31.72 to 218+45.46	4.96' to 9.28'
218+45.46 to 218+80.21	9.28' to 9.22'
218+80.21 to 219+93.94	9.22' to 4.90'
219+93.94 to 219+31.53	4.90' to 4.88'
219+31.53 to 219+40.24	4.88' to 7.61'
219+40.24 to 219+68.25	7.61' to 7.64'
219+68.25 to 219+80.49	7.64' to 0.00'
219+80.49 to 220+42.04	0.00'
220+81.13 to 221+98.73	0.00'
221+98.73 to 222+07.16	0.00' to 4.77'
222+07.16 to 223+91.56	4.77' to 5.02'
223+91.56 to 224+15.84	5.02' to 12.68'
224+15.84 to 224+51.84	12.68' to 12.65'
224+51.84 to 224+76.06	12.65' to 5.03'
224+76.06 to 225+18.89	5.03'
225+18.89 to 225+27.22	5.03' to 0.00'
225+27.22 to 225+58.13	0.00'
225+98.05 to 226+50.00	0.00'

ϕ Remove and Replace Curb and Gutter, East Side

Station
202+20.04 to 202+52.13
207+79.90 to 208+16.90
208+49.10 to 208+80.94
208+84.64 to 209+11.64
209+60.83 to 209+87.83
212+18.13 to 212+45.19
212+72.57 to 212+99.92
213+41.28 to 213+93.28
214+49.92 to 214+99.91
216+63.98 to 216+70.71
217+02.91 to 217+34.91
218+48.21 to 218+80.21
219+40.24 to 220+42.04
220+81.10 to 221+01.47
222+07.16 to 222+43.16
223+04.45 to 223+40.45
224+15.84 to 224+51.84
225+36.69 to 225+58.13
225+98.05 to 226+20.33
226+33.65 to 226+45.83

⊛ Asphalt Pavement Replacement Width, West Side

Station	Width
212+73.71 to 212+76.71	10.00' to 16.41'
212+76.71 to 212+74.69	16.41' to 16.44'
212+74.69 to 212+76.71	16.44' to 5.57'
212+76.71 to 212+91.05	5.57' to 4.96'
212+91.05 to 212+99.25	4.96' to 4.50'
212+99.25 to 212+34.30	4.50' to 4.50'
213+34.30 to 213+44.30	25.65' to 25.65'
213+44.30 to 213+62.68	4.50' to 4.50'
213+62.68 to 214+10.37	10.00' to 9.99'
214+10.37 to 214+28.19	4.50' to 4.50'
214+28.19 to 214+45.50	4.50' to 10.42'
214+45.50 to 214+65.08	10.42' to 12.86'
214+65.08 to 214+69.21	12.86' to 4.07'
214+69.21 to 214+99.91	0.00' to 0.00'

★ Mainline Pavement Replacement Width

Station	Width
212+03.39 to 212+47.80	11.27' to 11.15'
212+47.80 to 212+71.13	11.15' to 10.70'
212+71.13 to 212+87.20	10.70' to 10.89'
212+87.20 to 212+97.20	16.36' to 16.46'
212+97.20 to 214+50.11	16.46' to 16.32'

⊕ Asphalt Driveway Replacement Width

Station	Width
212+47.80 to 212+71.13	34.77' to 35.17'

Asphalt Pavement Replacement Width, East Side

Station	Width
212+72.57 to 212+73.71	9.50' to 15.92'
212+73.71 to 212+89.86	15.92' to 16.05'
212+89.86 to 212+98.29	16.05' to 13.00'
212+98.29 to 213+28.06	13.00' to 13.38'
213+28.06 to 213+32.04	13.38' to 11.24'
213+32.04 to 213+37.04	11.24' to 11.30'
213+37.04 to 213+41.06	11.30' to 13.54'
213+41.06 to 213+77.11	13.54' to 14.00'
213+77.11 to 213+87.02	14.00' to 27.00'
213+87.02 to 213+93.02	27.00' to 27.00'
213+93.02 to 214+16.52	27.00' to 13.00'

REGISTERED PROFESSIONAL ENGINEER
REG. NO.
11522
BRANDON
FRIED
SOUTH DAKOTA
8/2/24

FOR BIDDING PURPOSES ONLY

HORIZONTAL ALIGNMENT DATA

Rev. 8/2/2024 BAF

MAINLINE – US18 E

Type	Station			Northing	Easting
POB	99+00.00			260276.324	1374030.159
		TL= 120.72	N 84°22'36" E		
PI	100+00.00			260288.153	1374150.298
		TL= 101.87	N 83°39'30" E		
PI	101+22.59			260299.405	1374251.540
		TL= 526.07	N 83°01'58" E		
PC	106+48.70			260363.219	1374773.728
PI	107+99.59	R = 1909.86	Delta = 9°02'05" L	260381.522	1374923.505
PT	109+49.81			260423.118	1375068.549
		TL= 946.84	N 73°59'53" E		
PC	118+96.66			260684.135	1375978.704
PI	125+49.62	R = 3819.72	Delta = 19°24'05" R	260864.136	1376606.364
PT	131+90.08			260825.419	1377258.175
		TL= 1479.81	S 86°36'02" E		
POE	146+69.88			260737.675	1378735.378

MAINLINE – TURN LANE

Type	Station			Northing	Easting
POB	0+00.00			260319.734	1374281.870
		TL= 34.82	S 83°01'58" W		
PC	0+34.82			260315.511	1374247.308
PI	0+66.60	R = 76.00	Delta = 45°23'29" R	260311.655	1374215.758
PT	0+95.03			260331.408	1374190.857
		TL= 29.65	N 51°34'34" W		
PI	1+24.68			260349.838	1374167.625
		TL= 9.32	N 49°17'32" W		
PI	1+34.01			260355.919	1374160.556
		TL= 17.92	N 42°37'03" W		
PI	1+51.92			260369.103	1374148.426
		TL= 11.61	N 35°23'01" W		
PI	1+63.53			260378.566	1374141.705
		TL= 88.12	N 05°16'28" W		
POE	2+51.65			260466.309	1374133.605

MAINLINE – LEFT SIDEWALK

Type	Station			Northing	Easting
POB	0+00.00			260856.967	1377400.196
		TL= 400.00	S 85°57'36" E		
POE	4+00.00			260828.787	13377799.203

MAINLINE – US18 N/SD407

Type	Station			Northing	Easting
POB	200+00.00			258773.474	1374272.743
		TL= 1517.80	N 5°24'11" W		
PI	215+17.80			260284.530	1374129.822
		TL= 1282.20	N 5°09'59" W		
POE	228+00.00			261561.523	1374014.359

xr117

Type	Station			Northing	Easting
POB	10+00.00			260378.566	1375901.371
		TL= 276.11	N 6°36'55" W		
PI	12+76.11			260652.835	1375869.563
		TL= 411.23	N 8°01'14" W		
POE	16+87.34			261060.045	1375812.185

xr133

Type	Station			Northing	Easting
POB	20+00.00			260278.487	1377624.881
		TL= 1.07	N 56°59'26" W		
PC	20+01.07			260279.073	1377623.979
PI	21+10.89	R = 350.00	Delta = 34°50'17" R	260338.895	1377531.894
PT	22+13.89			260440.600	1377490.488
		TL= 229.75	N 22°09'09" W		
PC	24+43.64			260653.394	1377403.854
PI	24+88.99	R = 200.00	Delta = 25°33'07" R	260695.397	1377386.753
PT	25+32.83			260740.667	1377389.442
		TL= 236.75	N 3°23'58" E		
PC	27+69.58			260977.000	1377403.480
PI	28+11.61	R = 1000.00	Delta = 4°48'46" R	261018.951	1377405.972
PT	28+53.58			261060.545	1377411.975
		TL= 126.21	N 8°12'44" E		
POE	29+79.80			261185.466	1377430.003

REGISTERED PROFESSIONAL ENGINEER
REG. NO. 11522
BRANDON FRIED
SOUTH DAKOTA
8/2/24

The coordinates shown on this sheet are based on the South Dakota State Plane Coordinate System. South Zone NAD 83(2007); epoch 2010.00; Geoid 09; SF = 0.9998076100

CONTROL DATA

FOR BIDDING PURPOSES ONLY

KLJ	STATE OF SOUTH DAKOTA	PROJECT	SHEET	TOTAL SHEETS
		NH-CR-EM 0018(195)103 P 0407(05)01	B43	B166

Rev. 8/2/2024 BAF

SDDOT Control Data

HORIZONTAL AND VERTICAL CONTROL POINTS						
POINT	STATION	OFFSET	DESCRIPTION	NORTHING	EASTING	ELEVATION
LM0298	214+68	33' L	Aluminum cap "AP1 BLM 2003"	260232.0090	1374101.3870	3240.20
18-104.00	121+92	66' R	NGS Benchmark. PID OT0925. Aluminum disk in concrete	260689.6940	1376278.6050	3266.66
15055	132+41	101' L	"LS 6014"	260923.1160	1377315.1030	3241.32
20011	135+81	82' R	5/8" rebar with RPC	260720.1080	1377643.5680	3264.02
CP4	105+83	38' L	5/8" rebar & aluminum cap	260393.2430	1374703.5090	3242.05
CP5	215+45	78' L	5/8" rebar & aluminum cap	260304.8570	1374050.0390	3237.26

KLJ Control Data

HORIZONTAL AND VERTICAL CONTROL POINTS						
POINT	STATION	OFFSET	DESCRIPTION	NORTHING	EASTING	ELEVATION
CP8	215+50	60' L	5/8" rebar & aluminum cap	260311.3050	1374067.6360	3237.86
CP9	104+66	40' R	5/8" rebar & aluminum cap	260301.4220	1374597.5270	3240.18
CP10	110+99	35' L	5/8" rebar & aluminum cap	260498.1420	1375201.9360	3249.94
CP11	119+73	32' L	5/8" rebar & aluminum cap	260735.5150	1376044.4000	3266.78
CP12	129+51	89' L	5/8" rebar & aluminum cap	260921.2680	1377018.8440	3263.05

The coordinates shown on this sheet are based on the South Dakota State Plane Coordinate System. South Zone NAD 83(2007); epoch 2010.00
Geoid 09; SF = 0.9998076100
The elevations shown on this sheet are based on NAVD 88.

REGISTERED PROFESSIONAL ENGINEER
REG. NO.
11522
BRANDON
FRIED
SOUTH DAKOTA
8/2/24

LEGEND

FOR BIDDING PURPOSES ONLY

KLJ	STATE OF SOUTH DAKOTA	PROJECT	SHEET	TOTAL SHEETS
		NH-CR-EM 0018(195)103 P 0407(05)01	B44	B166

Plotting Date: 8/2/2024

Rev. 8/2/2024 BAF

Anchor
Antenna
Approach
Assumed Corner
Azimuth Marker
BBQ Grill/ Fireplace
Bearing Tree
Bench Mark
Box Culvert
Bridge
Brush
Buildings
Bulk Tank
Cattle Guard
Cemetery
Centerline
Cistern
Clothes Line
Commercial Sign Double Face
Commercial Sign One Post
Commercial Sign Overhead
Commercial Sign Two Post
Concrete Symbol
Creek Edge
Curb/Gutter
Curb
Dam Grade/Dike/Levee
Deck Edge
Ditch Block
Doorway Threshold
Drainage Profile
Drop Inlet
Edge Of Asphalt
Edge Of Concrete
Edge Of Gravel
Edge Of Other
Edge Of Shoulder
Electric Transformer/Power Junction Box
Fence Barbwire
Fence Chainlink
Fence Electric
Fence Miscellaneous
Fence Rock
Fence Snow
Fence Wood
Fence Woven
Fire Hydrant
Flag Pole
Flower Bed
Gas Valve Or Meter
Gas Pump Island
Grain Bin
Guardrail
Guide Sign One Post
Guide Sign Two Post
Gutter
Guy Pole
Haystack
Hedge

Highway ROW Marker
Interstate Close Gate
Iron Pin
Irrigation Ditch
Lake Edge
Lawn Sprinkler
Mailbox
Manhole Electric
Manhole Gas
Manhole Miscellaneous
Manhole Sanitary Sewer
Manhole Storm Sewer
Manhole Telephone
Manhole Water
Merry-Go-Round
Microwave Radio Tower
Miscellaneous Line
Miscellaneous Property Corner
Miscellaneous Post
Overhang Or Encroachment
Overhead Utility Line — OH —
Parking Meter
Pedestrian Push Button Pole
Pipe With End Section
Pipe With Headwall
Pipe Without End Section
Playground Slide
Playground Swing
Power And Light Pole
Power And Telephone Pole
Power Meter
Power Pole
Power Pole And Transformer
Power Tower Structure
Propane Tank
Property Pipe
Property Pipe With Cap
Property Stone
Public Telephone
Railroad Crossing Signal
Railroad Milepost Marker
Railroad Profile
Railroad ROW Marker
Railroad Signs
Railroad Switch
Railroad Track
Railroad Trestle
Rebar
Rebar With Cap
Reference Mark
Regulatory Sign One Post
Regulatory Sign Two Post
Retaining Wall
Riprap
River Edge
Rock And Wire Baskets
Rockpiles
Satellite Dish
Septic Tank

Shrub Tree
Sidewalk
Sign Face
Sign Post
Slough Or Marsh
Spring
Stream Gauge
Street Marker
Subsurface Utility Exploration Test Hole
Telephone Fiber Optics — T/F —
Telephone Junction Box
Telephone Pole
Television Cable Jct Box
Television Tower
Test Wells/Bore Holes
Traffic Signal
Trash Barrel
Tree Belt
Tree Coniferous
Tree Deciduous
Tree Stumps
Triangulation Station
Underground Electric Line — P —
Underground Gas Line — G —
Underground High Pressure Gas Line — HG —
Underground Sanitary Sewer — S —
Underground Storm Sewer — S —
Underground Tank
Underground Telephone Line — T —
Underground Television Cable — TV —
Underground Water Line — W —
Warning Sign One Post
Warning Sign Two Post
Water Fountain
Water Hydrant
Water Meter
Water Tower
Water Valve
Water Well
Weir Rock
Windmill
Wingwall
Witness Corner

State and National Line
County Line
Section Line
Quarter Line
Sixteenth Line
Property Line
Construction Line
ROW Line
New ROW Line
Cut and Fill Limits
Control of Access
New Control of Access
Proposed ROW
(After Property Disposal)

Drainage Arrow

Remove Concrete Pavement
Remove Concrete Driveway Pavement
Remove Asphalt Concrete Pavement
Remove Concrete Sidewalk
Remove Concrete Median Pavement
Remove Concrete Curb and/or Gutter

Detectable Warning
Pedestrian Push Button Pole
and 30" x 48" Clear Space
with 1.5% slope

REGISTERED PROFESSIONAL ENGINEER
REG. NO.
11522
BRANDON
FRIED
SOUTH DAKOTA
8/2/24

Plot Scale - 1:200
Plotted From - brandonfried
File - ...\Sections\Section01\legend.dgn

FOR BIDDING PURPOSES ONLY

KLJ	STATE OF SOUTH DAKOTA	PROJECT	SHEET	TOTAL SHEETS
		NH-CR-EM 0018(195)103 P 0407(05)01	B45	B166

Plotting Date: 8/2/2024

Rev. 8/2/2024 BAF

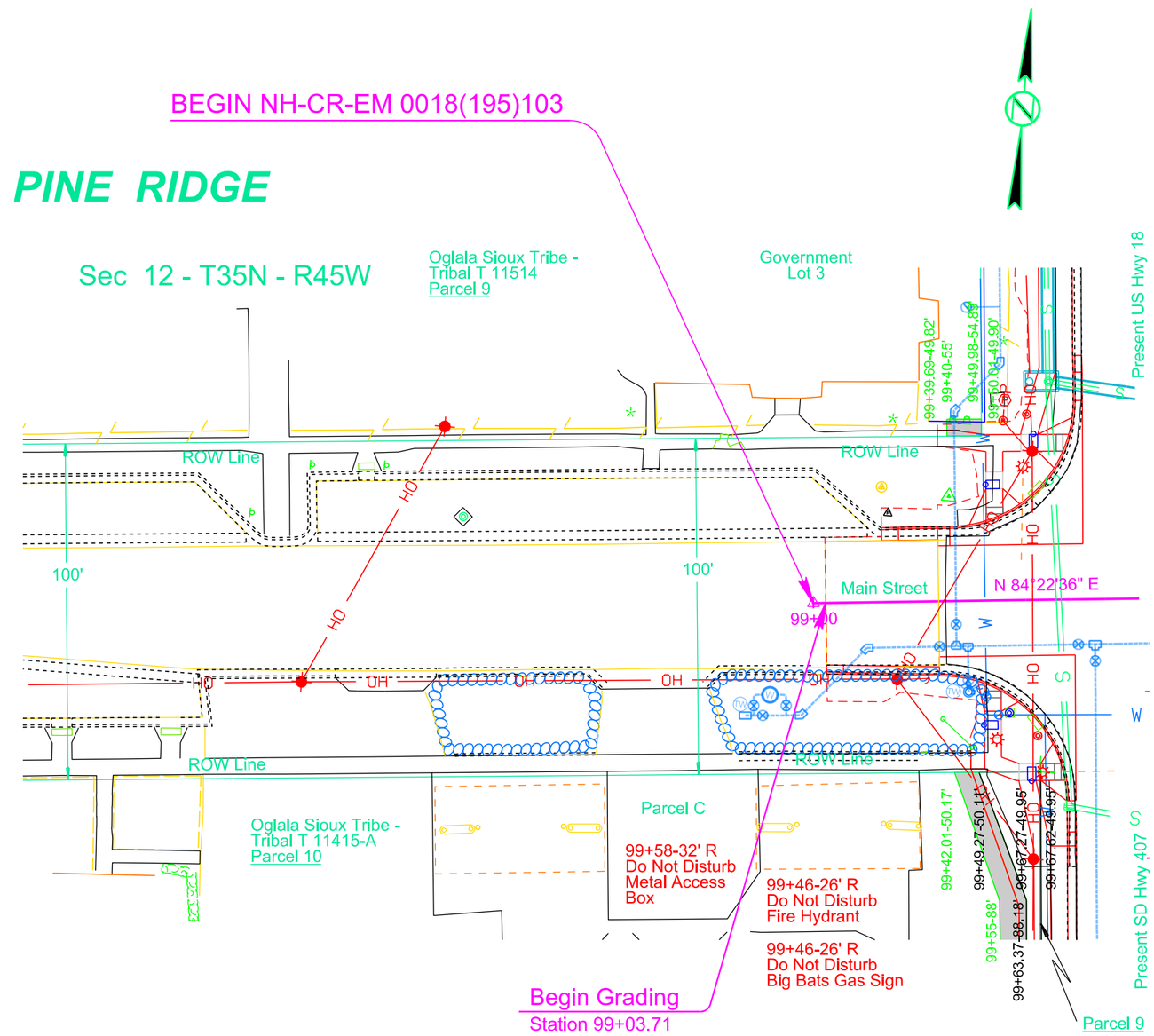

REGISTERED PROFESSIONAL ENGINEER
REG. NO.
11522
BRANDON
FRIED
SOUTH DAKOTA
8/2/24

Plot Scale - 1:40

Plotted From - brandonfried

File - ...\Plan&Profiles_40scale\099.dgn

FOR BIDDING PURPOSES ONLY

KLJ	STATE OF SOUTH DAKOTA	PROJECT	SHEET	TOTAL SHEETS
		NH-CR-EM 0018(195)103 P 0407(05)01	B46	B166

Plotting Date: 8/2/2024

Rev. 8/2/2024 BAF

REGISTERED PROFESSIONAL ENGINEER
REG. NO
11522
BRANDON
FRIED
SOUTH DAKOTA
8/2/24

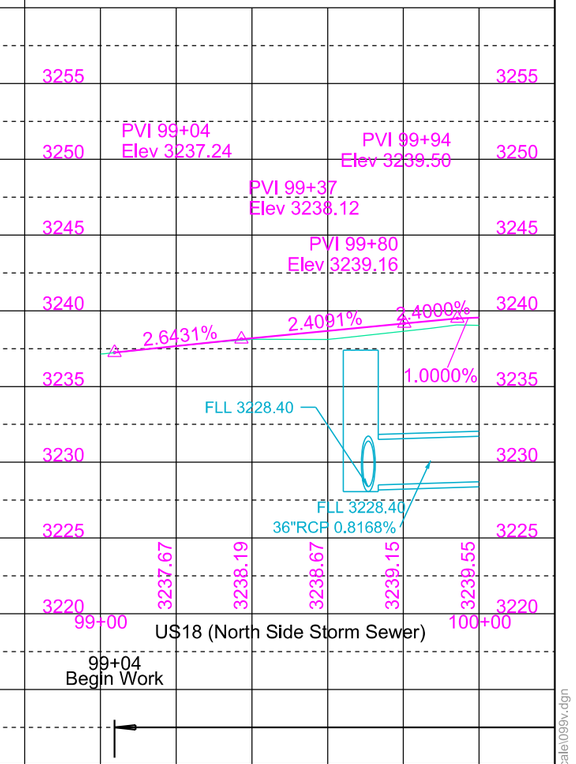

US18 (North Side Storm Sewer)

99+04
Begin Work

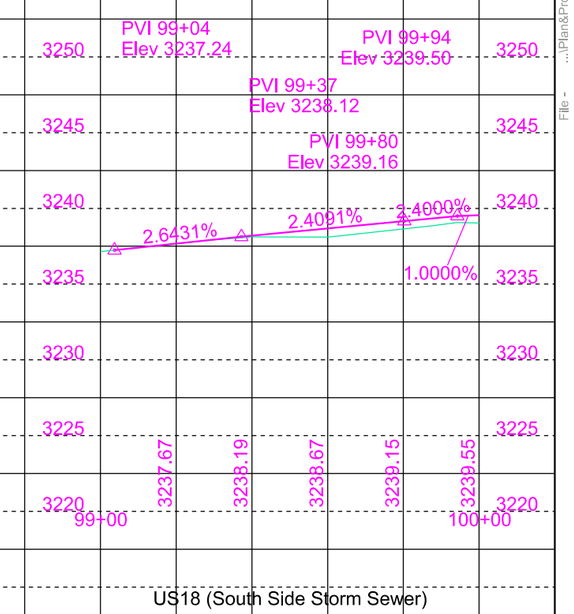

US18 (South Side Storm Sewer)

Plot Scale - 1:40
Plotted From - brandonfried
File - ...\Plan&Profiles_40scale\099v.dgn

STATE OF SOUTH DAKOTA	PROJECT	SHEET	TOTAL SHEETS
	NH-CR-EM 0018(195)103 P 0407(05)01	B47	B166

FOR BIDDING PURPOSES ONLY

Plotting Date: 8/2/2024

Rev. 8/2/2024 BAF

Adjust Manhole Frame and Lid
at the following locations:
100+32.15-29.70' L
103+46.27-22.07' L

100+99-41' L
Take Out Manhole
with Frame & Cover
(Incidental Work, Grading)

100+99-41' L to 103+24-31' L
Take Out 24"-225' RCP
(Incidental Word, Grading)

Install Type C Retaining Wall
at the following locations:
100+40.15-114.65' L to 100+66.51-73.97' L (25.7 SqFt)
100+70.06-70.45' L to 101+03.19-46.29' L (28.7 SqFt)

Remove Tree
at the following locations:
102+71-37' L
103+12-37' L

103+07-28' R to 103+24-31' L
Take Out 24"-56' RCP
(Incidental Work, Grading)

Take Out Drop Inlet
& Drop Inlet Lid
at the following locations:
103+07-28'R
103+24-31'L
(Incidental Work, Grading)

REGISTERED PROFESSIONAL ENGINEER
REG. NO
11522
BRANDON
FRIED
SOUTH DAKOTA
8/2/24

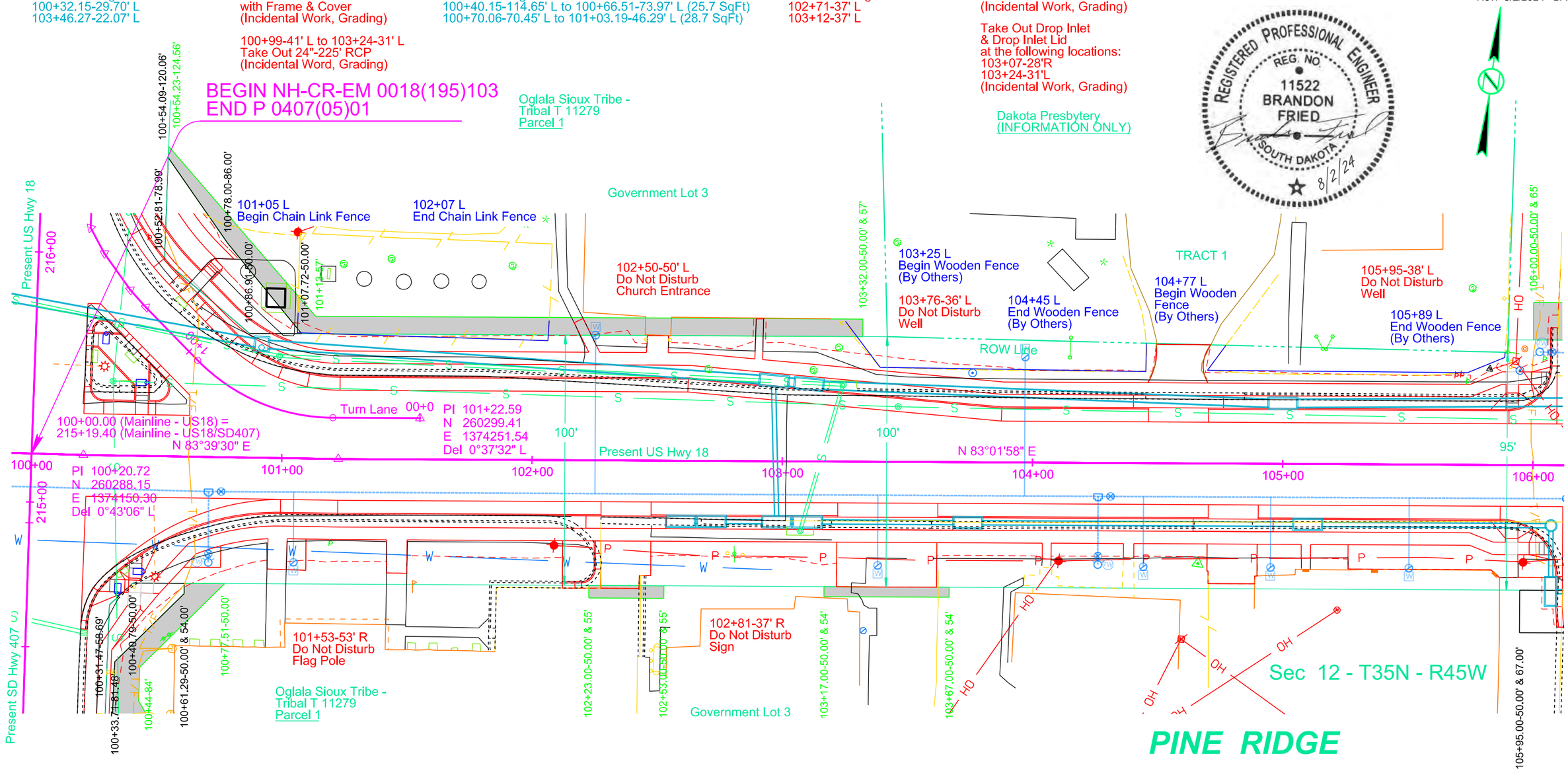

100+91.31-45.47' L to 102+96.58-32.18' L
Install 36"-198' RCP
(Between Junction Box & Drop Inlet)

102+59.47-24.17' R to 102+71.79-24.17' R
Install 18"-2' RCP
(Between Drop Inlets)

102+71.79-24.17' R to 102+97.89-24.17' R
Install 18"-16' RCP
(Between Drop Inlets)

102+96.58-32.18' L to 103+10.56-30.95' L
Install 36"-4' RCP
(Between Drop Inlets)

102+96.58-32.18' L to 102+97.89-24.17' R
Install 18"-52' RCP
(Between Drop Inlets)

102+97.89-24.17' R to 103+10.21-24.17' R
Install 18"-2' RCP
(Between Drop Inlets)

103+10.21-21.17' R to 103+74.33-24.17' R
Install 18"-54' RCP
(Between Drop Inlets)

103+10.56-30.95' L to 104+99.96-24.17' L
Install 36"-178' RCP
(Between Drop Inlets)

103+74.33-24.17' R to 105+10.06-24.17' R
Install 18"-124' RCP
(Between Drop Inlets)

104+99.96-24.17' L to 106+79.96-25.67' L
Install 36"-174' RCP
(Between Drop Inlets)

105+10.06-24.17' R to 106+07.35-24.17' R
Install 18"-92' RCP
(Between Drop Inlet & Manhole)

Install 5'x5' Junction Box with Type A
Frame & Lid at the following locations:
100+91.31-45.47' L

Install 4' X 11' Type S Drop Inlet
Base and Precast Concrete
Type S Drop Inlet Lid
at the following locations:
102+59.47-24.17' R
102+71.79-24.17' R
102+96.58-32.18' L
102+97.89-24.17' R
103+10.21-24.17' R
103+10.56-30.95' L
103+74.33-24.17' R
104+99.96-24.17' L
105+10.06-24.17' R

Parcel 1
100+54.09 to 103+32.00 L
Temporary Easement containing
2145 sq ft, more or less

Parcel 1
102+23.00 to 102+53.00 R
Temporary Easement containing
150 sq ft, more or less

Parcel 1
103+17.00 to 103+67.00 R
Temporary Easement containing
200 sq ft, more or less

Plot Scale - 1:40
Plotted From - brandonfried
File - ...\Plan&Profiles_40scale\100.dgn

STATE OF SOUTH DAKOTA	PROJECT	SHEET	TOTAL SHEETS
KLJ	NH-CR-EM 0018(195)103 P 0407(05)01	B48	B166

FOR BIDDING PURPOSES ONLY

Plotting Date: 8/2/2024

Rev. 8/2/2024 BAF

REGISTERED PROFESSIONAL ENGINEER
REG. NO. 11522
BRANDON FRIED
SOUTH DAKOTA
8/2/24

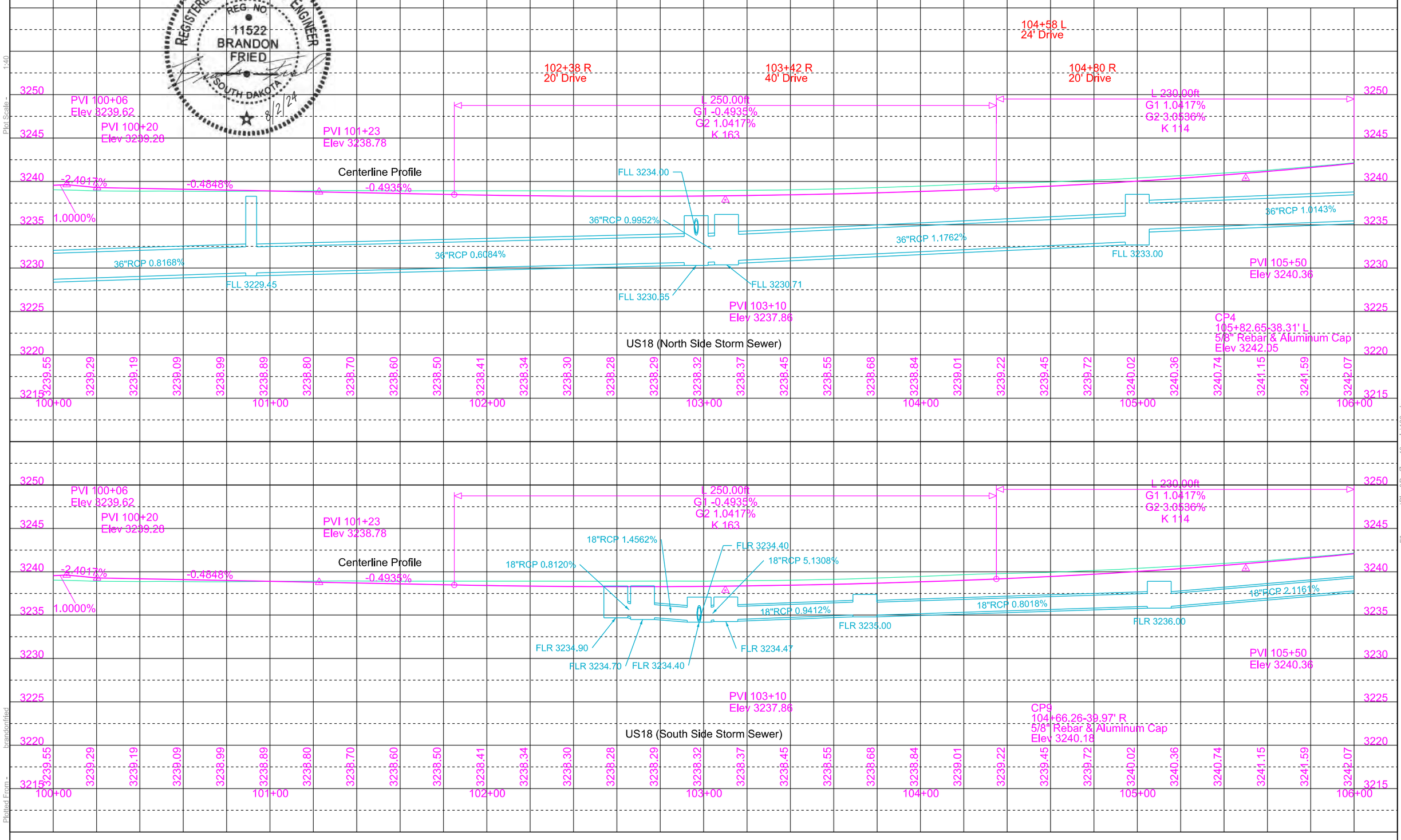

Plot Scale - 1:40

Plotted From - brandonfried

File - ...\Plan&Profiles_40scale\100v.dgn

KLJ	STATE OF SOUTH DAKOTA	PROJECT	SHEET	TOTAL SHEETS
		NH-CR-EM 0018(195)103 P 0407(05)01	B49	B166

FOR BIDDING PURPOSES ONLY

Plotting Date: 8/2/2024

Rev. 8/2/2024 BAF

Adjust Manhole Frame and Lid
at the following locations:
106+29.02-16.17' L
106+59.13-17.22' L
106+78.06-32.38' L
110+42.11-35.47' L

106+07.35-24.17' R to 106+07.35-50.50' R
Install 18"-18' RCP
(Between Manhole and Drop Inlet)

106+07.35-50.50' R to 106+44.95-50.62' R
Install 18"-34' RCP
(Between Drop Inlets)

106+75.36-24.17' R to 106+79.96-25.67' L
Install 18"-46' RCP
(Between Drop Inlets)

106+79.96-25.67' L to 108+99.96-24.17' L
Install 36"-206' RCP
(Between Drop Inlets)

107+44-35' R to 107+61-36' R
Take Out Retaining Wall
(Incidental Work, Grading)

108+23-47' R to 108+32-47' R
Take Out Shrubs
(Incidental Work, Grading)

107+34.42-32.17' R to 107+79.30-32.17' R
Install Access Ramp
(See Access Ramp Details)

108+99.96-24.17' L to 109+20.36-24.17' R
Install 18"-48' RCP
(Between Drop Inlets)

108+99.96-24.17' L to 110+84.96-24.17' L
Install 36"-174' RCP
(Between Drop Inlets)

110+84.96-24.17' L to 111+97.87-24.17' L
Install 36"-102' RCP
(Between Drop Inlets)

110+87-29' L
Take Out 24"-18' RCP
& 1 Flared End
(Incidental Work, Grading)

Remove Tree
at the following locations:
110+03-35' L (18")
110+10-46' L (24")

Take Out Drop Inlet
& Drop Inlet Lid
at the following locations:
110+87-29' L
111+93-27' R
(Incidental Work, Grading)

111+89
Take Out 30"-104' CMP
(Incidental Work, Grading)

111+93-27' R
Take Out 18"-26' RCP
& 1 Flared End
(Incidental Work, Grading)

111+91.81-51.69' R (31 Ac)
Install 36"-1 CMP Safety End with Bars

111+91.81-51.69' R to 111+97.44-24.17' R
Install 36"-20' RCP
Install 36"-4' CMP
& 1 CMP to RCP Transition
(Between Safety End and Drop Inlet)

111+97.44-24.17' R to 111+97.87-24.17' L
Install 36"- 44' RCP
(Between Drop Inlets)

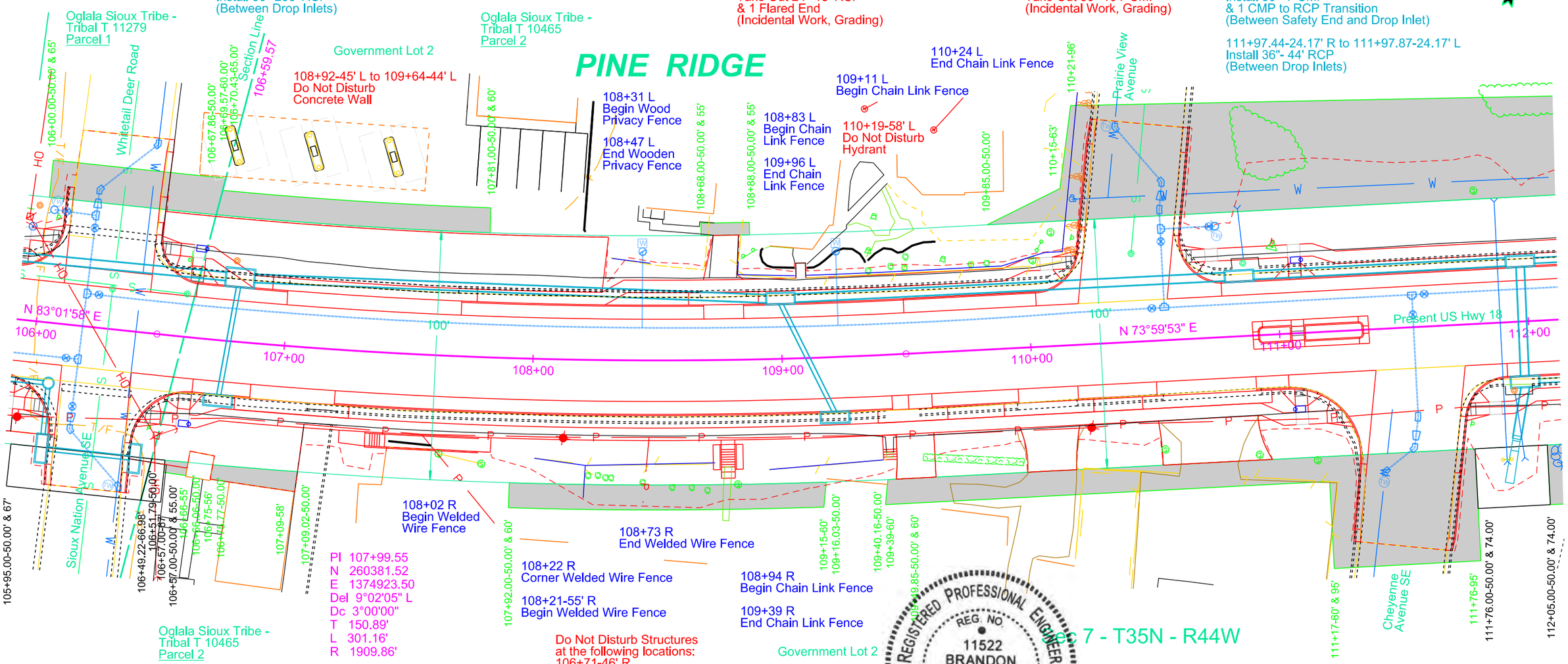

REGISTERED PROFESSIONAL ENGINEER
REG. NO. 11522
BRANDON FRIED
SOUTH DAKOTA
8/2/24

Parcel 1
106+00.00 to 106+70.43 L
Temporary Easement containing
1027 sq ft, more or less

Parcel 2
106+67.86 to 107+81.00 L
Temporary Easement containing
1090 sq ft, more or less

Parcel 2
106+57.00 to 106+66.06 R
Temporary Easement containing
47 sq ft, more or less

Parcel 2
106+75.00 to 107+09.02 R
Temporary Easement containing
237 sq ft, more or less

Parcel 2
107+92.00 to 109+16.03 R
Temporary Easement containing
1270 sq ft, more or less

Parcel 2
109+39.00 to 111+76.00 R
Temporary Easement containing
4433 sq ft, more or less

Parcel 2
108+68.00 to 108+88.00 L
Temporary Easement containing
97 sq ft, more or less

Parcel 2
109+85.00 to 114+49.00 L
Temporary Easement containing
17000 sq ft, more or less

Install 4' X 11' Type S Drop Inlet
Base and Precast Concrete
Type S Drop Inlet Lid
at the following locations:
106+07.35-50.50' R
106+44.95-50.62' R
106+75.36-24.17' R
108+99.96-24.17' L
109+20.36-24.17' R
110+84.96-24.17' L
111+97.44-24.17' R
111+97.87-24.17' L

Install 48" Manhole with
Type A Frame & Lid
at the following locations:
106+07.35-24.17' R

Install 7' x 11' Type S Drop Inlet
Base and Precast Concrete
Type S Drop Inlet Lid
at the following locations:
106+79.96-25.67' L

Plot Scale - 1:40
Plotted From - brandonfried
File - ...\Plan&Profiles_40scale\106.dgn

STATE OF SOUTH DAKOTA	PROJECT	SHEET	TOTAL SHEETS
	NH-CR-EM 0018(195)103 P 0407(05)01	B50	B166

FOR BIDDING PURPOSES ONLY

Plotting Date: 8/2/2024

Rev. 8/2/2024 BAF

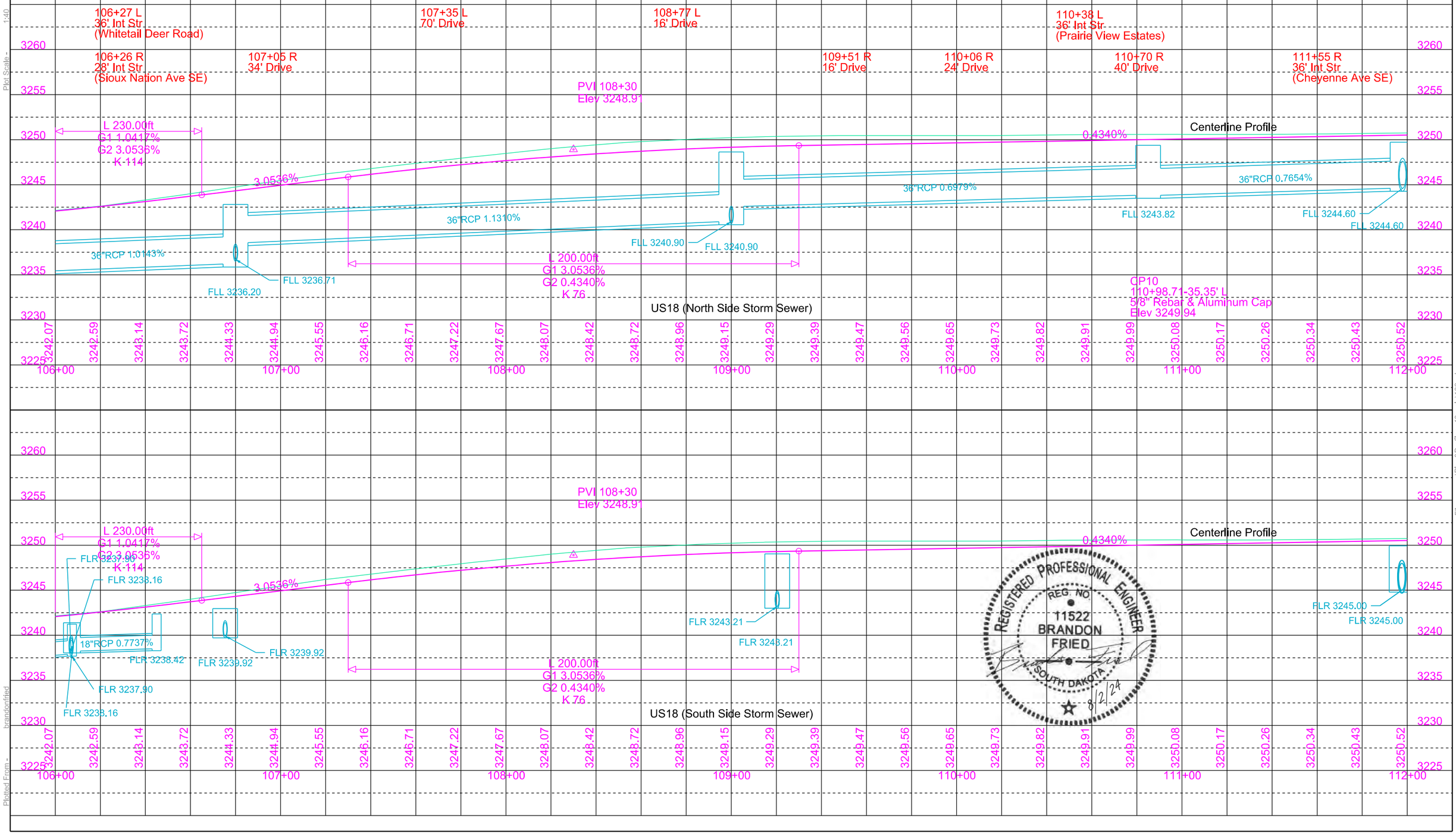

Plot Scale - 1:40

Plotted From - brandonfried

File - ...\Plan&Profiles_40scale\106v.dgn

KLJ	STATE OF SOUTH DAKOTA	PROJECT	SHEET	TOTAL SHEETS
		NH-CR-EM 0018(195)103 P 0407(05)01	B51	B166

FOR BIDDING PURPOSES ONLY

Plotting Date: 8/2/2024

Rev. 8/2/2024 BAF

REGISTERED PROFESSIONAL ENGINEER
REG. NO. 11522
BRANDON FRIED
SOUTH DAKOTA
8/2/24

Adjust Manhole Frame and Lid
at the following locations:
114+16.87-38.05' L
117+96.10-87.91' L

Take Out Drop Inlets
with Frame and Grate
at the following locations:
114+58-26' L
(Incidental Work, Grading)

113+62-48' L to 114+56-26' L
Take Out 18"-96' RCP &
1 Flared End
(Incidental Work, Grading)

111+97.44-24.17' R to 113+79.44-24.17' R
Install 18"-172' RCP
(Between Drop Inlets)

111+97.87-24.17' L to 114+79.96-24.17' L
Install 24"-272' RCP
(Between Drop Inlets)

114+79.96-24.17' L to 114+79.96-24.17' R
Install 18"-44' RCP
(Between Drop Inlets)

114+79.96-24.17' L to 115+59.25-24.17' L
Install 18"-68' RCP
(Between Drop Inlets)

115+59.25-24.17' L to 116+49.96-24.17' L
Install 18"-80' RCP
(Between Drop Inlets)

116+49.96-24.17' L to 118+39.96-24.17' L
Install 18"-180' RCP
(Between Drop Inlets)

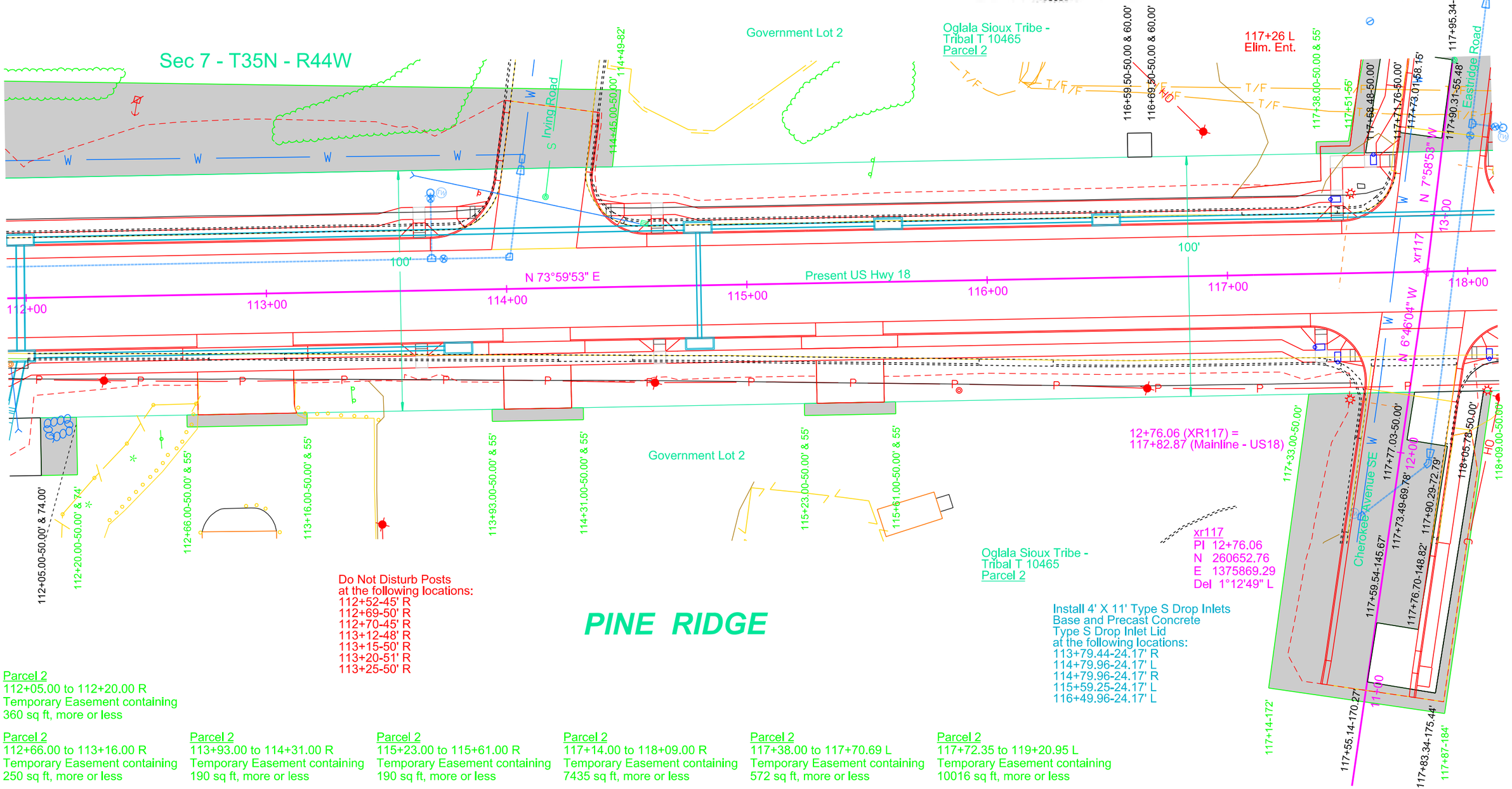

Do Not Disturb Posts
at the following locations:
112+52-45' R
112+69-50' R
112+70-45' R
113+12-48' R
113+15-50' R
113+20-51' R
113+25-50' R

xr117
PI 12+76.06
N 260652.76
E 1375869.29
Del 1°12'49" L

Install 4' X 11' Type S Drop Inlets
Base and Precast Concrete
Type S Drop Inlet Lid
at the following locations:
113+79.44-24.17' R
114+79.96-24.17' L
114+79.96-24.17' R
115+59.25-24.17' L
116+49.96-24.17' L

Parcel 2
112+05.00 to 112+20.00 R
Temporary Easement containing
360 sq ft, more or less

Parcel 2
112+66.00 to 113+16.00 R
Temporary Easement containing
250 sq ft, more or less

Parcel 2
113+93.00 to 114+31.00 R
Temporary Easement containing
190 sq ft, more or less

Parcel 2
115+23.00 to 115+61.00 R
Temporary Easement containing
190 sq ft, more or less

Parcel 2
117+14.00 to 118+09.00 R
Temporary Easement containing
7435 sq ft, more or less

Parcel 2
117+38.00 to 117+70.69 L
Temporary Easement containing
572 sq ft, more or less

Parcel 2
117+72.35 to 119+20.95 L
Temporary Easement containing
10016 sq ft, more or less

Plot Scale - 1:40

Plotted From - brandonfried

File - ...\Plan&Profiles_40scale\112.dgn

STATE OF SOUTH DAKOTA	PROJECT	SHEET	TOTAL SHEETS
KLJ	NH-CR-EM 0018(195)103 P 0407(05)01	B52	B166

FOR BIDDING PURPOSES ONLY

Plotting Date: 8/2/2024 Rev. 8/2/2024 BAF

REGISTERED PROFESSIONAL ENGINEER REG. NO. 11522 BRANDON FRIED SOUTH DAKOTA 8/2/24

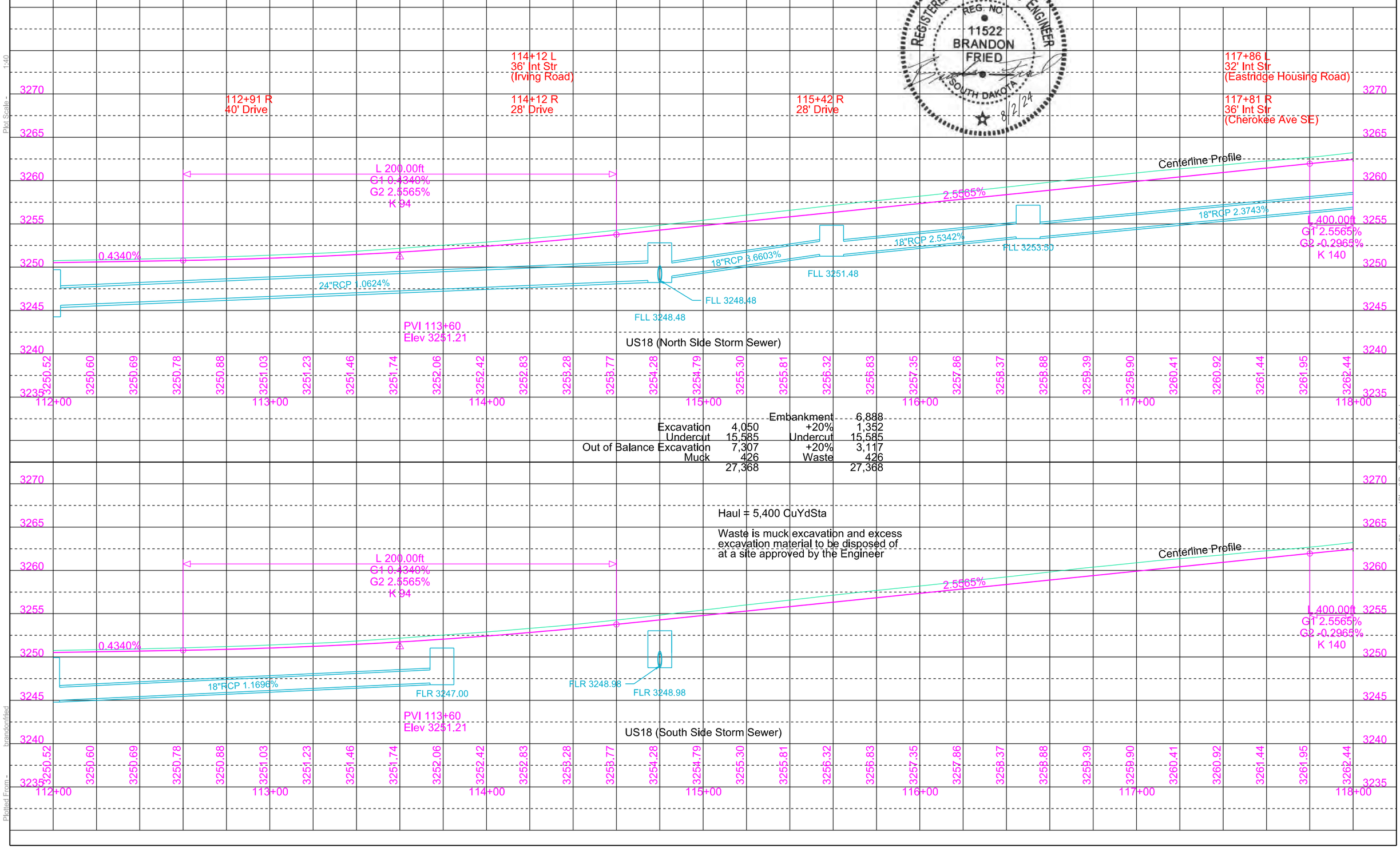

		Embankment	6,888
Excavation	4,050	+20%	1,352
Undercut	15,585	Undercut	15,585
Out of Balance Excavation	7,307	+20%	3,117
Muck	426	Waste	426
	27,368		27,368

Haul = 5,400 CuYdSta

Waste is muck excavation and excess excavation material to be disposed of at a site approved by the Engineer

Plot Scale - 1:40

Plotted From - brandonfried

File - ...\Plan&Profiles_40scale\112v.dgn

STATE OF SOUTH DAKOTA	PROJECT	SHEET	TOTAL SHEETS
	NH-CR-EM 0018(195)103 P 0407(05)01	B53	B166

Plotting Date: 8/2/2024

Rev. 8/2/2024 BAF

FOR BIDDING PURPOSES ONLY

118+39.96-24.17' L to 118+39.96-24.17' R
Install 18"-44' RCP
(Between Drop Inlets)

Adjust Manhole Frame and Lid
at the following locations:
118+23.05-37.15' L

122+45
Take Out 39'-108' CMP
& 1 Manhole with Frame and Cover
& 1 End Section
(Incidental Work, Grading)

122+43.81-24.17' L to 122+46.65-57.54' R
Install 36"-80' RCP
(Between Drop Inlet and Flared End)

122+46.65-57.54' R (24 Ac)
Install 36" - 1 RCP Flared End

122+43.81-24.17' L to 124+77.17-24.17' L
Install 36"-224' RCP
(Between Drop Inlets)

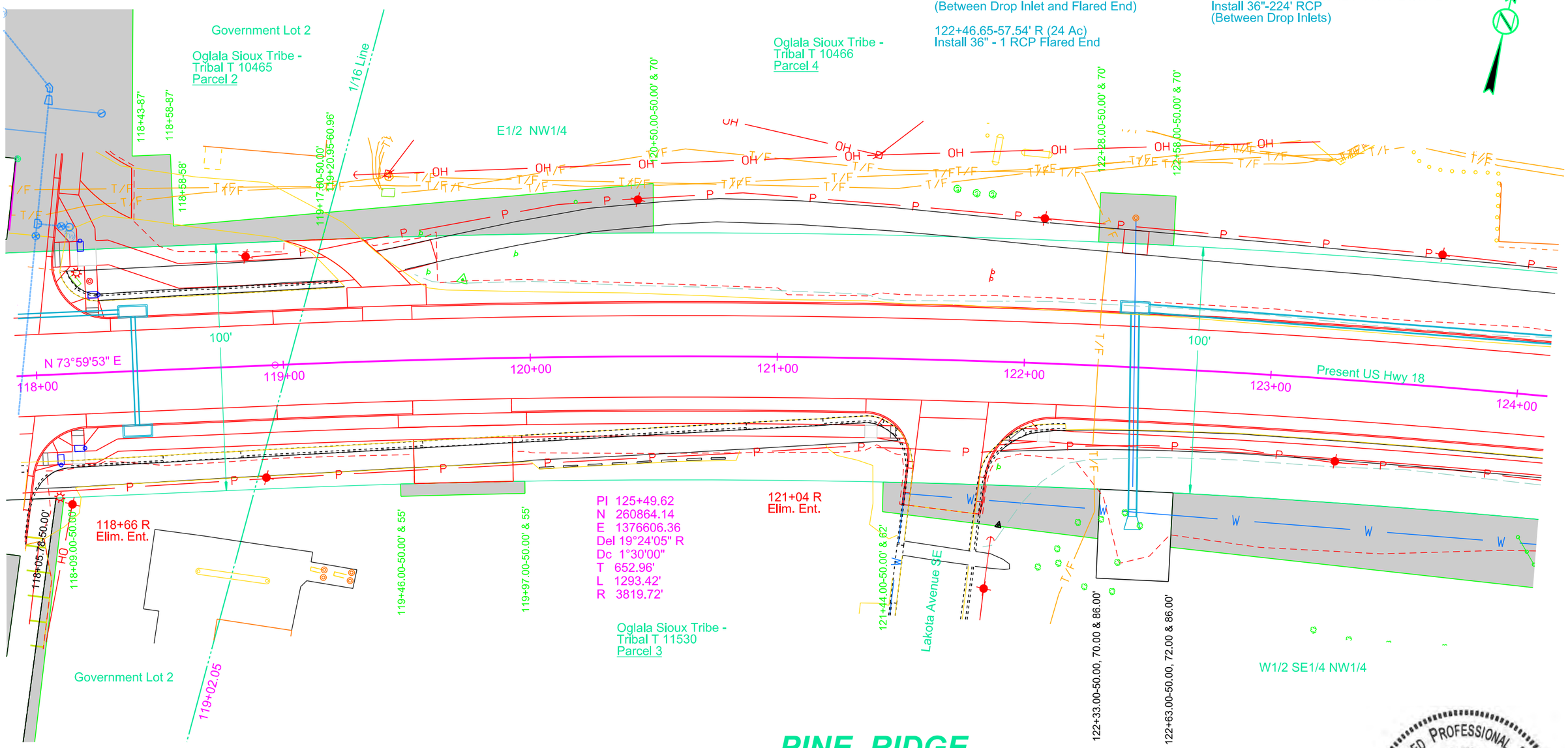

Install 4' X 11' Type S Drop Inlet
Base and Precast Concrete
Type S Drop Inlet Lid
at the following locations:
118+39.96-24.17' L
118+39.96-24.17' R
122+43.81-24.17' L

Parcel 4
119+17.60 to 120+50.00 L
Temporary Easement containing
1998 sq ft, more or less

Parcel 3
119+46.00 to 119+97.00 R
Temporary Easement containing
251 sq ft, more or less

Parcel 3
121+44.00 to 122+33.00 R
Temporary Easement containing
1417 sq ft, more or less

Parcel 4
122+28.00 to 122+58.00 L
Temporary Easement containing
609 sq ft, more or less

Parcel 3
122+63.00 to 125+73.33 R
Temporary Easement containing
8114 sq ft, more or less

REGISTERED PROFESSIONAL ENGINEER
REG. NO.
11522
BRANDON
FRIED
SOUTH DAKOTA
8/2/24

Plot Scale - 1:40
Plotted From - brandonfried
File - ...\Plan&Profiles_40scale\118.dgn

KLJ	STATE OF SOUTH DAKOTA	PROJECT	SHEET	TOTAL SHEETS
		NH-CR-EM 0018(195)103 P 0407(05)01	B54	B166

Plotting Date: 8/2/2024 Rev. 8/2/2024 BAF

FOR BIDDING PURPOSES ONLY

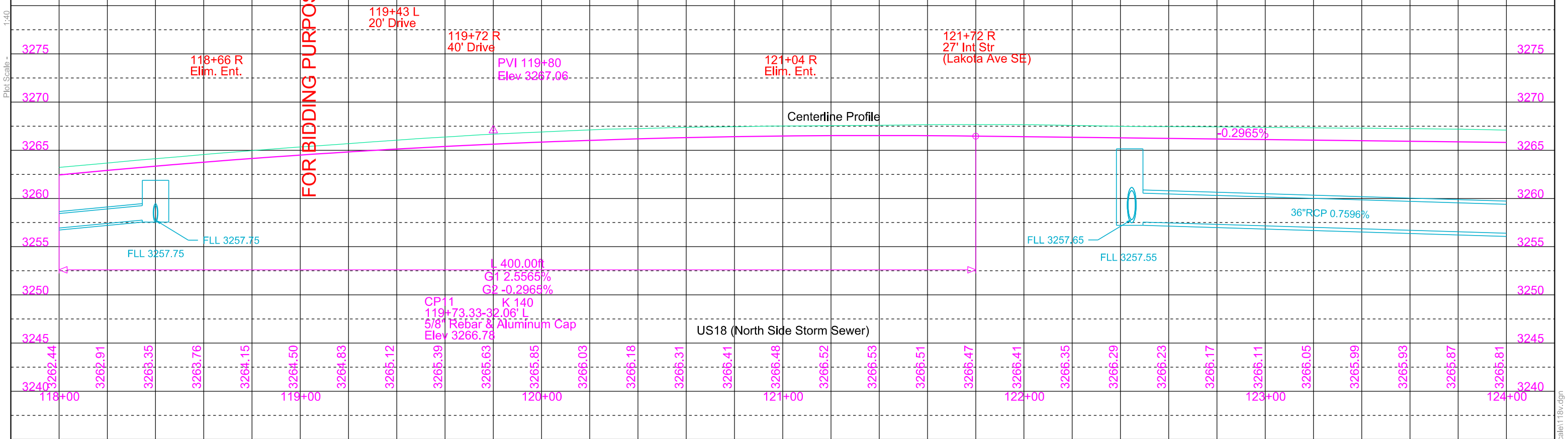

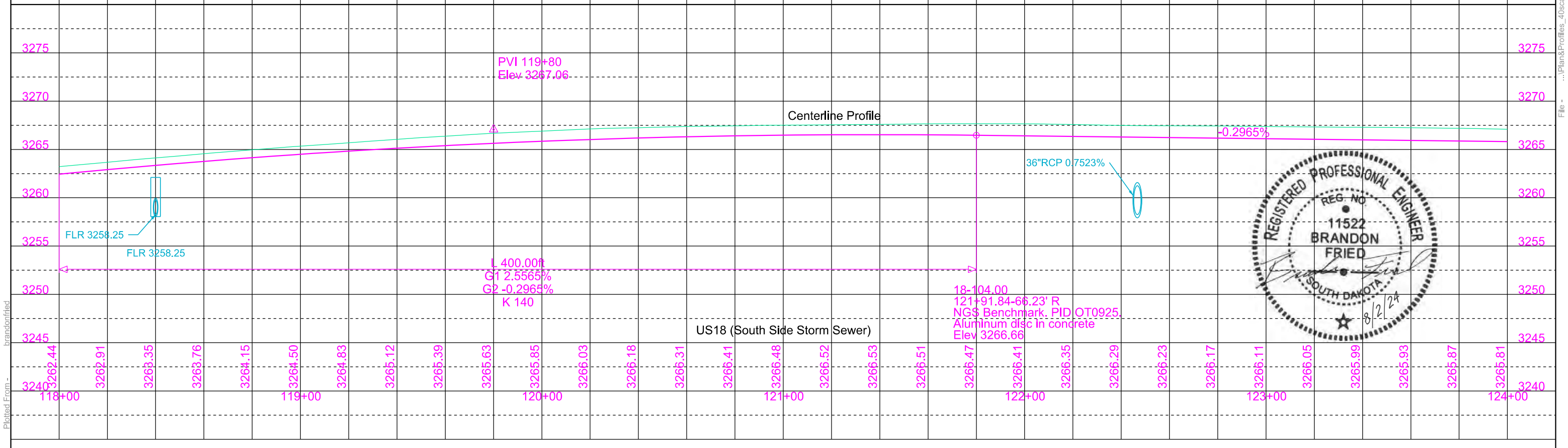

REGISTERED PROFESSIONAL ENGINEER
REG. NO.
11522
BRANDON
FRIED
SOUTH DAKOTA
8/2/24

Plot Scale - 1:40

Plotted From - brandonfried

File - ...\Plan&Profiles_40scale\118v.dgn

STATE OF SOUTH DAKOTA	PROJECT	SHEET	TOTAL SHEETS
	NH-CR-EM 0018(195)103 P 0407(05)01	B55	B166

FOR BIDDING PURPOSES ONLY

Plotting Date: 8/2/2024

Rev. 8/2/2024 BAF

124+77.17-24.17' L to 124+84.95-24.17' R
Install 18"-46' RCP
(Between Drop Inlets)

124+77.17-24.17' L to 127+17.54-24.17' L
Install 36"-230' RCP
(Between Drop Inlets)

127+17.54-24.17' L to 127+17.54-24.17' R
Install 18"-44' RCP
(Between Drop Inlets)

127+17.54-24.17' L to 129+99.96-24.17' L
Install 36"-274' RCP
(Between Drop Inlets)

129+99.96-24.17' L to 130+00.00-24.17' R
Install 18"-44' RCP
(Between Drop Inlets)

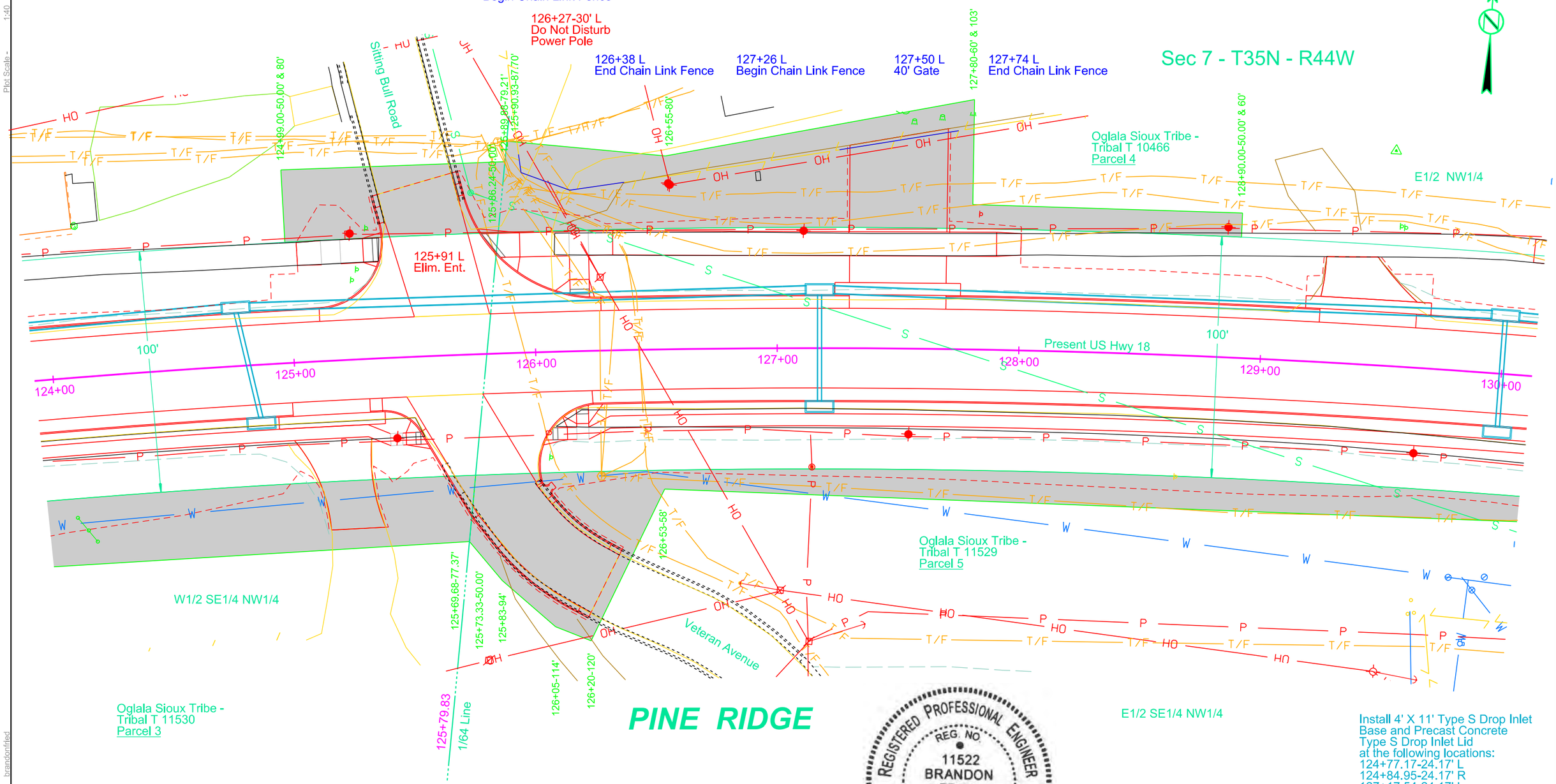

REGISTERED PROFESSIONAL ENGINEER
REG. NO.
11522
BRANDON
FRIED
SOUTH DAKOTA
8/2/24

Install 4' X 11' Type S Drop Inlet
Base and Precast Concrete
Type S Drop Inlet Lid
at the following locations:
124+77.17-24.17' L
124+84.95-24.17' R
127+17.54-24.17' L
127+17.54-24.17' R
129+99.96-24.17' L
130+00.00-24.17' R

Parcel 4
124+99.00 to 128+90.00 L
Temporary Easement containing
11307 sq ft, more or less

Parcel 5
125+69.68 to 132+34.00 R
Temporary Easement containing
13805 sq ft, more or less

Plot Scale - 1:40
Plotted From - brandonfried
File - ...\Plan&Profiles_40scale\124.dgn

KLJ	STATE OF SOUTH DAKOTA	PROJECT	SHEET	TOTAL SHEETS
		NH-CR-EM 0018(195)103 P 0407(05)01	B56	B166

FOR BIDDING PURPOSES ONLY

Plotting Date: 8/2/2024 Rev. 8/2/2024 BAF

REGISTERED PROFESSIONAL ENGINEER
REG. NO.
11522
BRANDON
FRIED
SOUTH DAKOTA
8/2/24

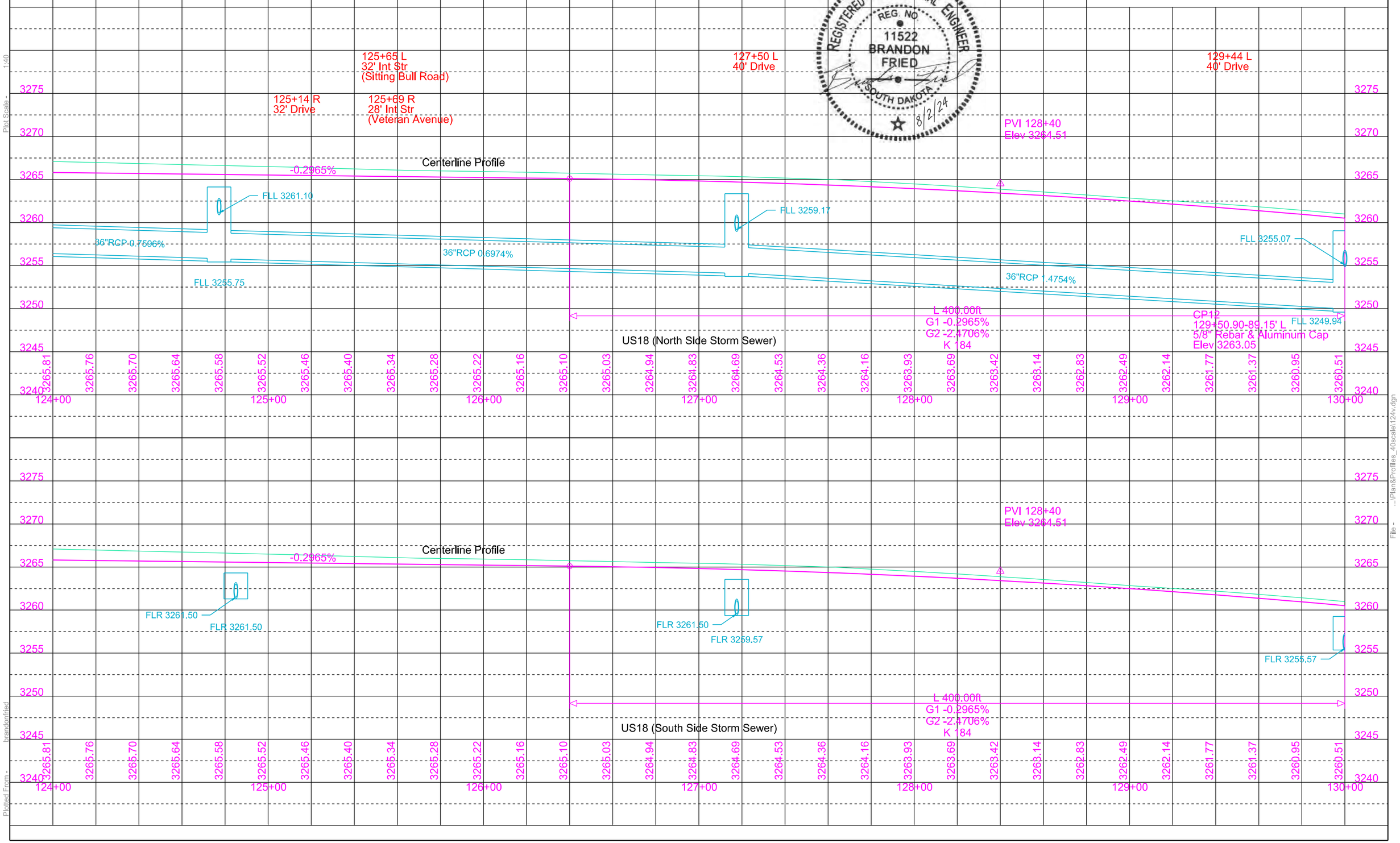

Plot Scale - 1:40

Plotted From - brandonfried

File - ...\Plan&Profiles_40scale\124v.dgn

STATE OF SOUTH DAKOTA	PROJECT	SHEET	TOTAL SHEETS
	NH-CR-EM 0018(195)103 P 0407(05)01	B57	B166

Plotting Date: 8/2/2024 Rev. 8/2/2024 BAF

FOR BIDDING PURPOSES ONLY

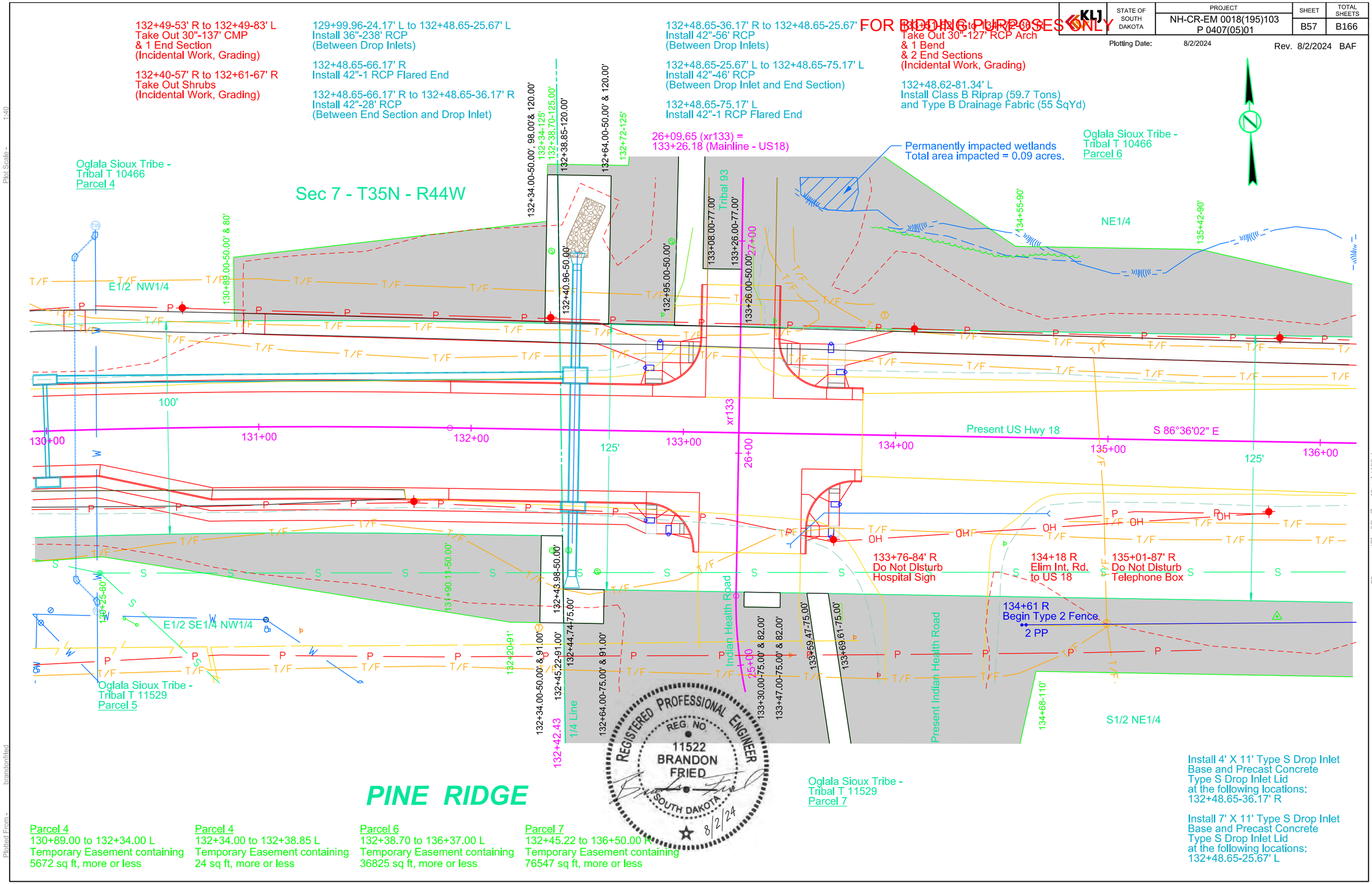

Install 4' X 11' Type S Drop Inlet
Base and Precast Concrete
Type S Drop Inlet Lid
at the following locations:
132+48.65-36.17' R

Install 7' X 11' Type S Drop Inlet
Base and Precast Concrete
Type S Drop Inlet Lid
at the following locations:
132+48.65-25.67' L

Parcel 4
130+89.00 to 132+34.00 L
Temporary Easement containing
5672 sq ft, more or less

Parcel 4
132+34.00 to 132+38.85 L
Temporary Easement containing
24 sq ft, more or less

Parcel 6
132+38.70 to 136+37.00 L
Temporary Easement containing
36825 sq ft, more or less

Parcel 7
132+45.22 to 136+50.00 R
Temporary Easement containing
76547 sq ft, more or less

Plot Scale - 1:40
Plotted From - brandonfried
File - ...\Plan&Profiles_40scale\130.dgn

KLJ	STATE OF SOUTH DAKOTA	PROJECT	SHEET	TOTAL SHEETS
		NH-CR-EM 0018(195)103 P 0407(05)01	B58	B166

Plotting Date: 8/2/2024 Rev. 8/2/2024 BAF

FOR BIDDING PURPOSES ONLY

REGISTERED PROFESSIONAL ENGINEER
REG. NO.
11522
BRANDON
FRIED
SOUTH DAKOTA
8/2/24

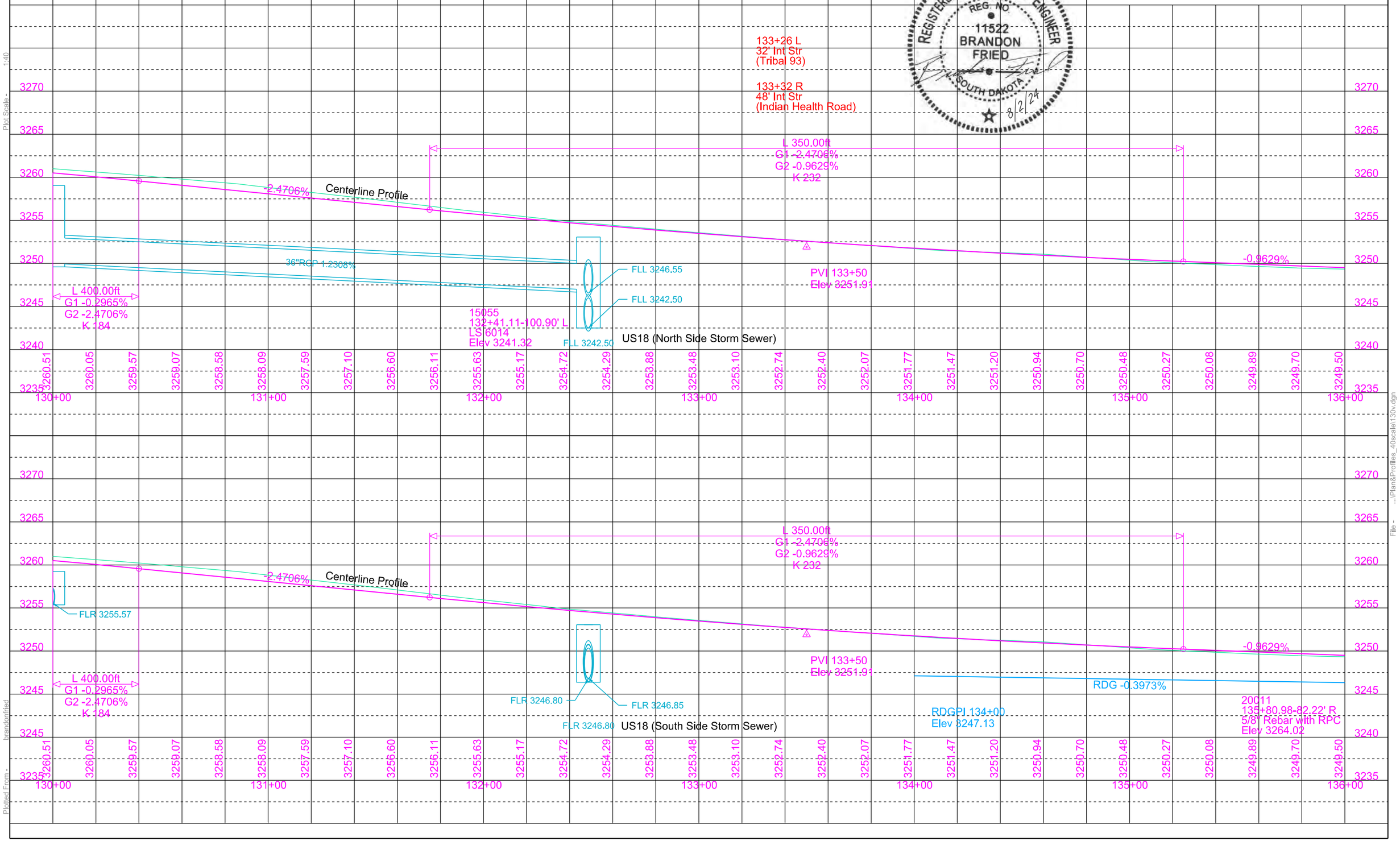

Plot Scale - 1:40

Plotted From - brandonfried

File - ...\Plan&Profiles_40scale\130v.dgn

KLJ	STATE OF SOUTH DAKOTA	PROJECT	SHEET	TOTAL SHEETS
		NH-CR-EM 0018(195)103 P 0407(05)01	B59	B166

FOR BIDDING PURPOSES ONLY

Plotting Date: 8/2/2024

Rev. 8/2/2024 BAF

136+79
Retain 18"-94' CMP
& 2 End Sections

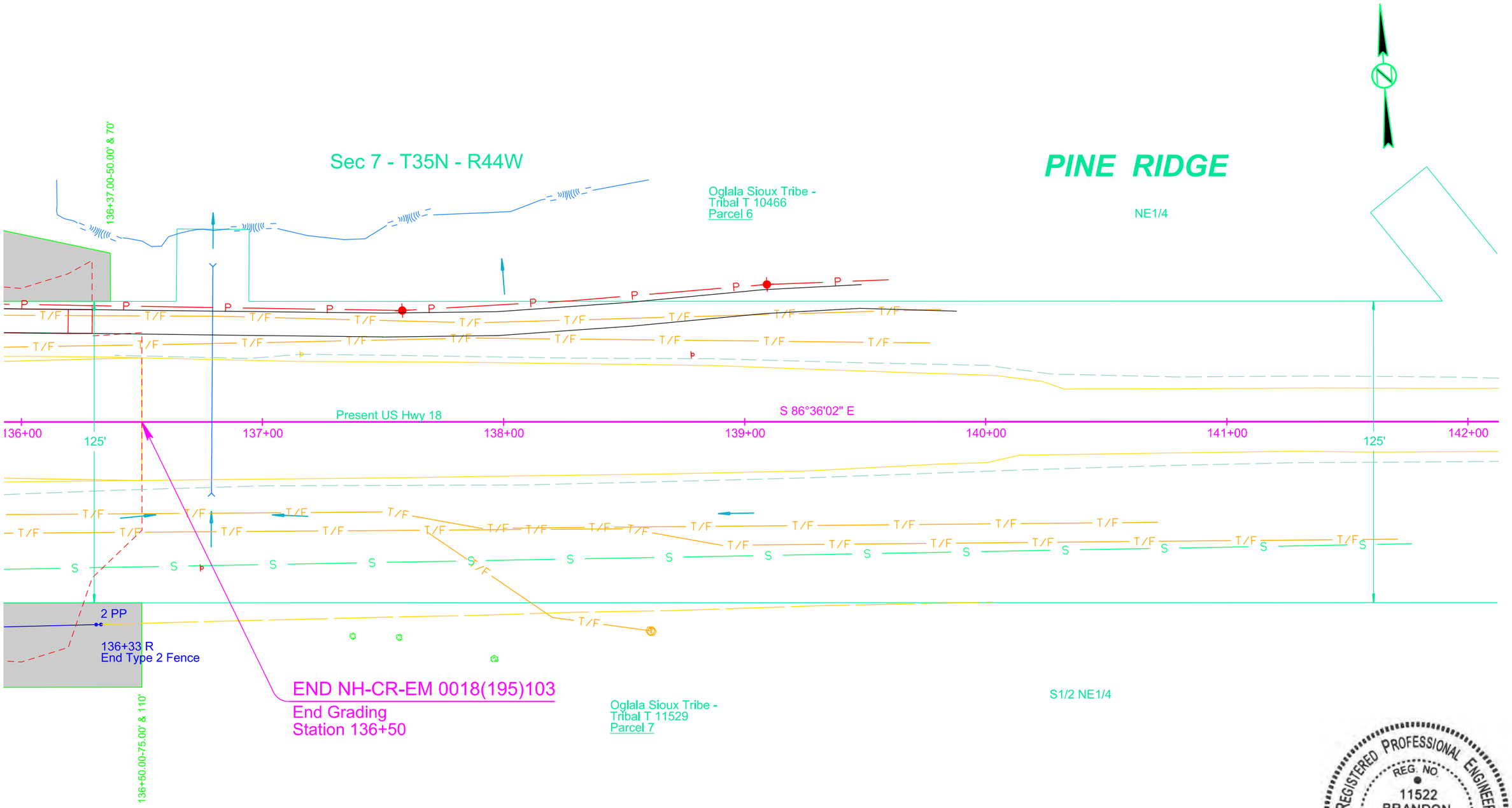

REGISTERED PROFESSIONAL ENGINEER
REG. NO.
11522
BRANDON
FRIED
SOUTH DAKOTA
8/2/24

Plot Scale - 1:40

Plotted From - brandonfried

File - ...\Plan&Profiles_40scale\136.dgn

KLJ	STATE OF SOUTH DAKOTA	PROJECT	SHEET	TOTAL SHEETS
		NH-CR-EM 0018(195)103 P 0407(05)01	B60	B166

FOR BIDDING PURPOSES ONLY

Plotting Date: 8/2/2024

Rev. 8/2/2024 BAF

REGISTERED PROFESSIONAL ENGINEER
REG. NO
11522
BRANDON
FRIED
SOUTH DAKOTA
8/2/24

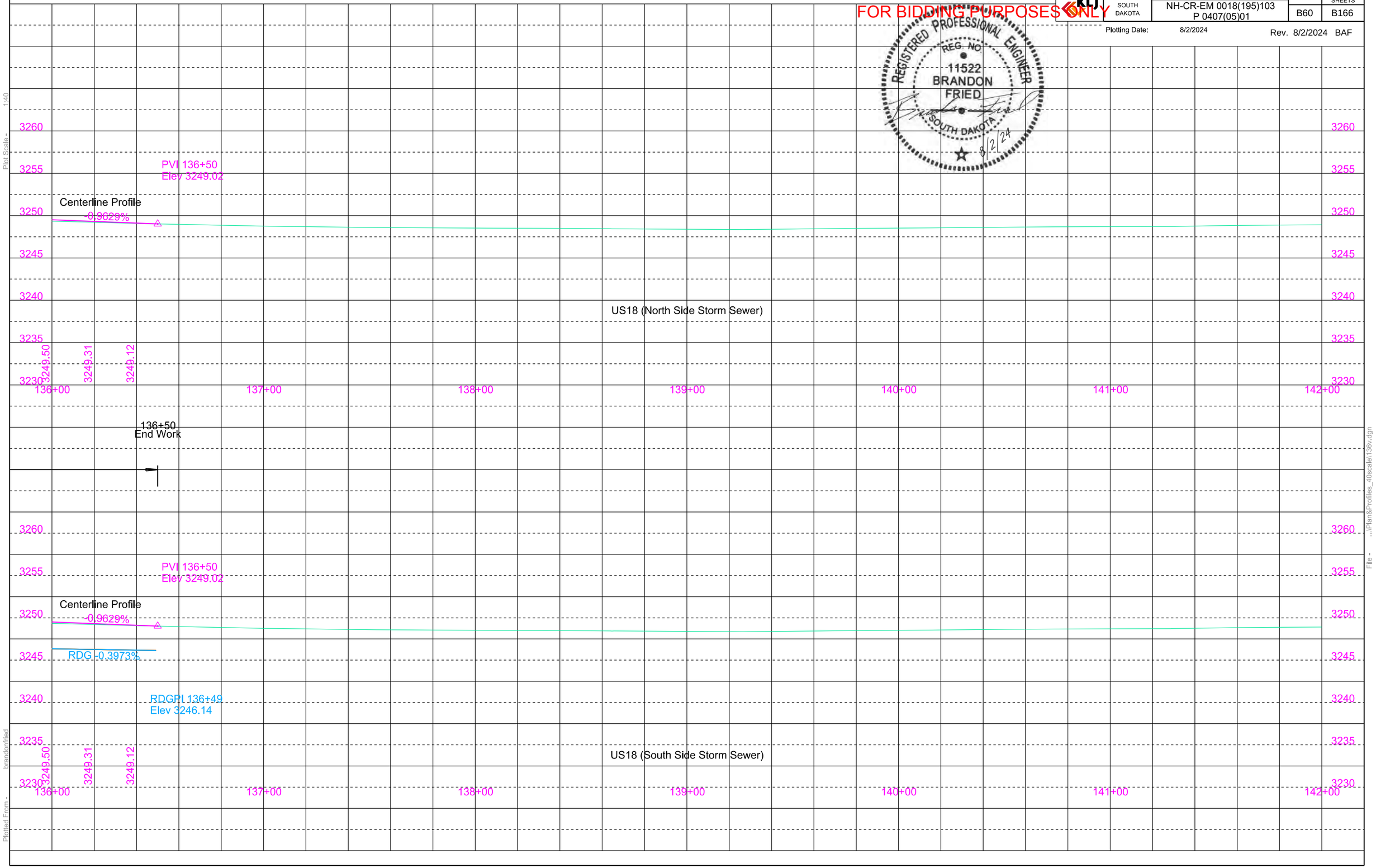

Plot Scale - 1:40

Plotted From - brandonfried

File - ...\Plan&Profiles_40scale\136v.dgn

FOR BIDDING PURPOSES ONLY

KLJ	STATE OF SOUTH DAKOTA	PROJECT	SHEET	TOTAL SHEETS
		NH-CR-EM 0018(195)103 P 0407(05)01	B61	B166

Plotting Date: 8/2/2024 Rev. 8/2/2024 BAF

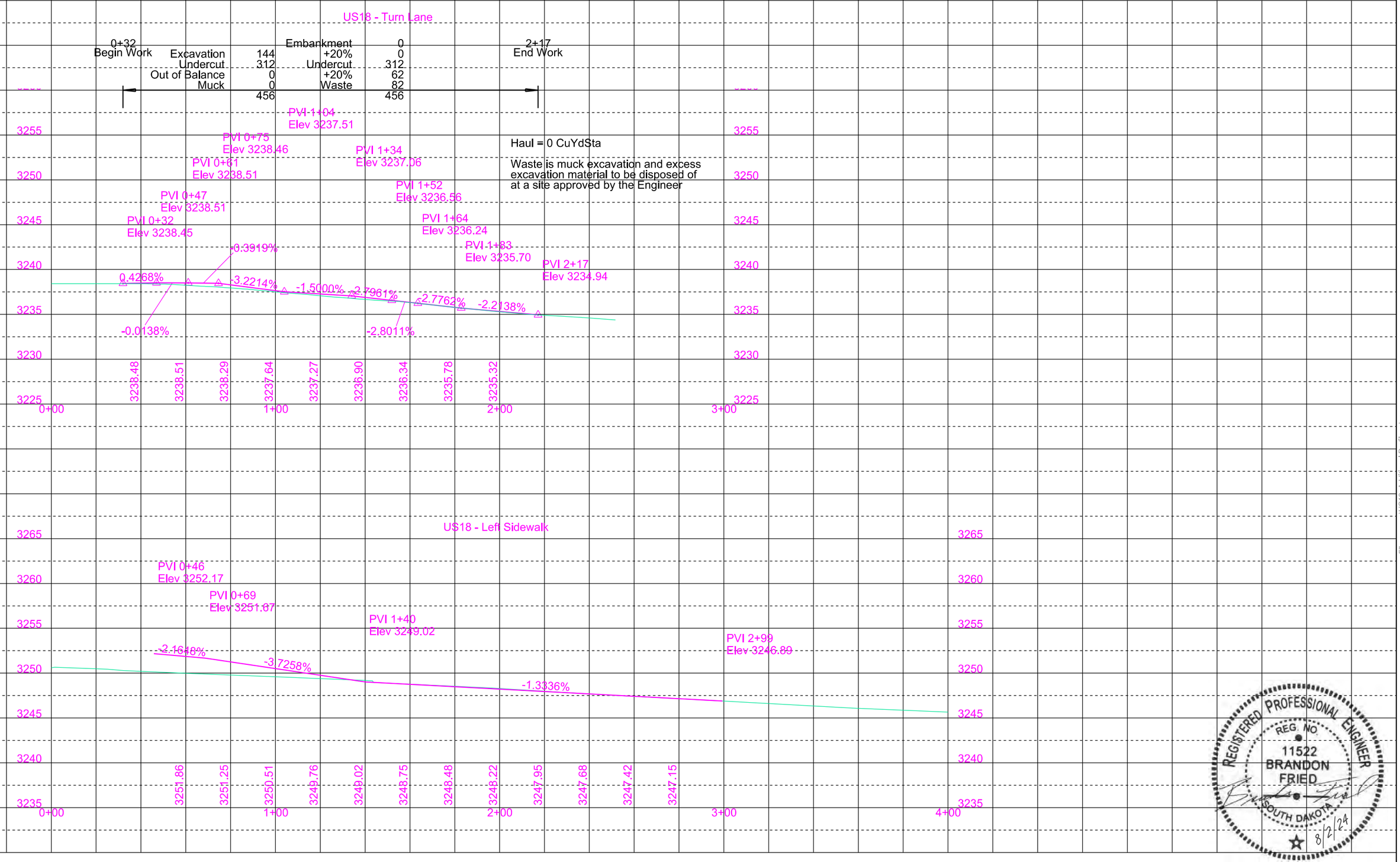

REGISTERED PROFESSIONAL ENGINEER
REG. NO.
11522
BRANDON
FRIED
SOUTH DAKOTA
8/2/24

Plot Scale - 1:40
Plotted From - brandonfried
File - ...\US18_Additional Profiles.dgn

FOR BIDDING PURPOSES ONLY

KLJ	STATE OF SOUTH DAKOTA	PROJECT	SHEET	TOTAL SHEETS
		NH-CR-EM 0018(195)103 P 0407(05)01	B62	B166

Plotting Date: 8/2/2024

Rev. 8/2/2024 BAF

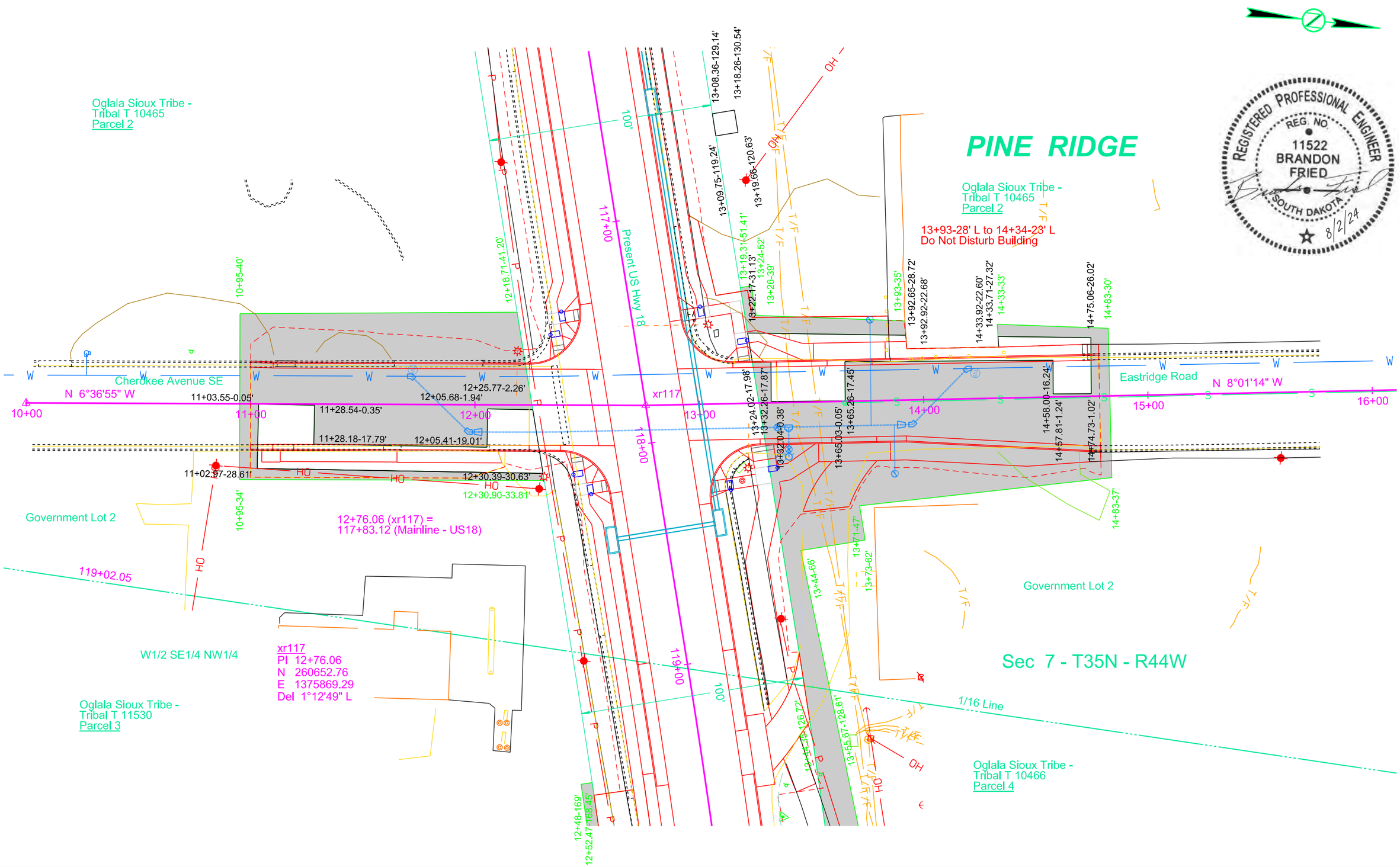

Plot Scale - 1:40

Plotted From - brandonfried

File - ...\xr117.dgn

FOR BIDDING PURPOSES ONLY

STATE OF SOUTH DAKOTA	PROJECT	SHEET	TOTAL SHEETS
KLJ	NH-CR-EM 0018(195)103 P 0407(05)01	B63	B166

Plotting Date: 8/2/2024 Rev. 8/2/2024 BAF

Excavation	225	Embankment	41	
Undercut	1,250	+20%	8	
Out of Balance	74	Undercut	1,250	
Muck	0	+20%	250	
	1,549	Waste	0	
			1,549	

11+00
Begin Work

14+78
End Work

xr117

Haul = 4,800 CuYdSta

Waste is muck excavation and excess excavation material to be disposed of at a site approved by the Engineer

13+67 L
20' Drive

13+69 R
20' Drive

11+39 R
40' Drive

3285
3280
3275
3270
3265
3260
3255
3250
3245
3240

PVI 11+00
Elev 3263.11

PVI 11+65
Elev 3262.40

PVI 12+56
Elev 3261.94

PVI 12+71
Elev 3262.11

PVI 12+76
Elev 3262.03

PVI 12+96
Elev 3261.71

PVI 13+27
Elev 3262.24

PVI 13+90
Elev 3263.20

PVI 14+78
Elev 3262.75

-1.0967%
-0.5000%
1.1980%
-1.6251%
-1.7223%
1.5000%
-1.4351%
-0.5000%

L 110.00ft
G1 1.5000%
G2 -0.5000%
K 55

3263.11
3262.89
3262.67
3262.45
3262.32
3262.22
3262.12
3262.02
3261.98
3261.97
3261.78
3262.13
3262.44
3262.69
3262.86
3262.96
3262.99
3262.94
3262.85

11+00
12+00
13+00
14+00
15+00
16+00

REGISTERED PROFESSIONAL ENGINEER
REG. NO
11522
BRANDON
FRIED
SOUTH DAKOTA
8/2/24

Plot Scale - 1:40
Plotted From - brandonfried
File - ...\xr117v.dgn

KLJ	STATE OF SOUTH DAKOTA	PROJECT	SHEET	TOTAL SHEETS
		NH-CR-EM 0018(195)103 P 0407(05)01	B64	B166

FOR BIDDING PURPOSES ONLY

Plotting Date: 8/2/2024

Rev. 8/2/2024 BAF

REGISTERED PROFESSIONAL ENGINEER
REG. NO.
11522
BRANDON
FRIED
SOUTH DAKOTA
8/2/24

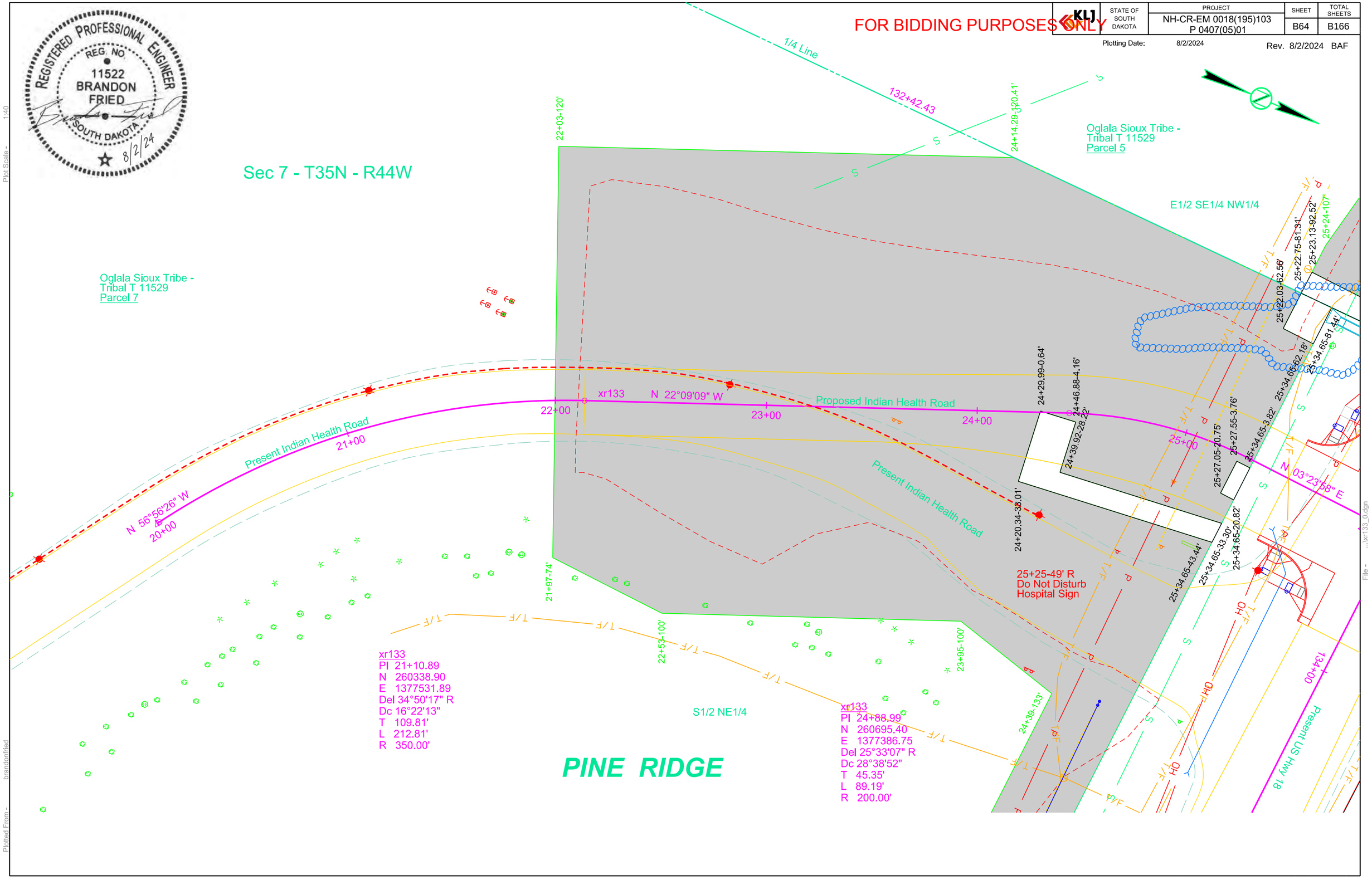

Plot Scale - 1:40

Plotted From - brandonfried

File - ...\xr133_0.dgn

STATE OF SOUTH DAKOTA	PROJECT	SHEET	TOTAL SHEETS
	NH-CR-EM 0018(195)103 P 0407(05)01	B65	B166

FOR BIDDING PURPOSES ONLY

Plotting Date: 8/2/2024

Rev. 8/2/2024 BAF

REGISTERED PROFESSIONAL ENGINEER
REG. NO
11522
BRANDON
FRIED
SOUTH DAKOTA
8/2/24

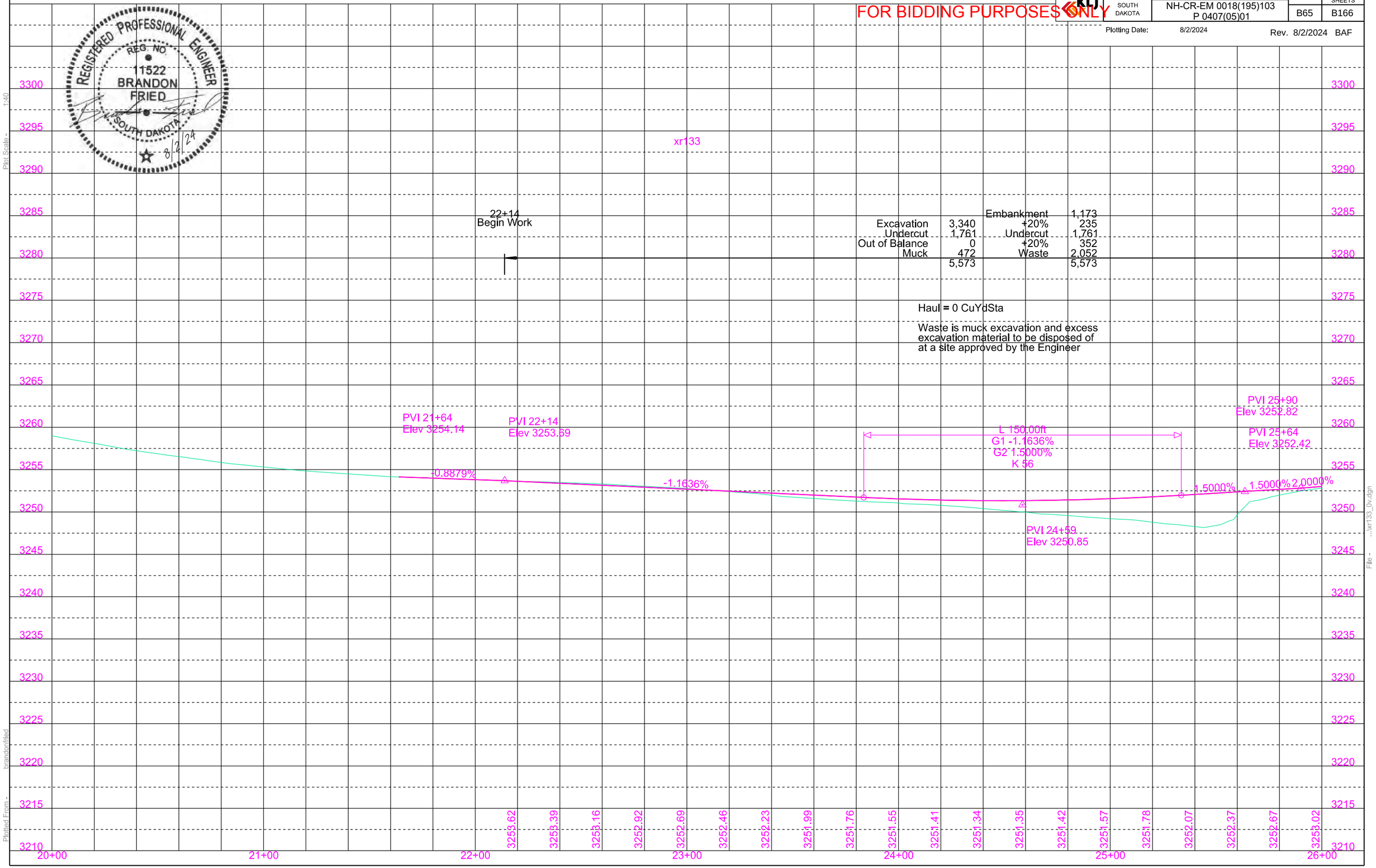

		Embankment	1,173
Excavation	3,340	+20%	235
Undercut	1,761	Undercut	1,761
Out of Balance	0	+20%	352
Muck	472	Waste	2,052
	5,573		5,573

Haul = 0 CuYdSta

Waste is muck excavation and excess excavation material to be disposed of at a site approved by the Engineer

Plot Scale - 1:40

Plotted From - brandonfried

File - ...\xr133_0v.dgn

FOR BIDDING PURPOSES ONLY

KLJ	STATE OF SOUTH DAKOTA	PROJECT	SHEET	TOTAL SHEETS
		NH-CR-EM 0018(195)103 P 0407(05)01	B66	B166

Plotting Date: 8/2/2024

Rev. 8/2/2024 BAF

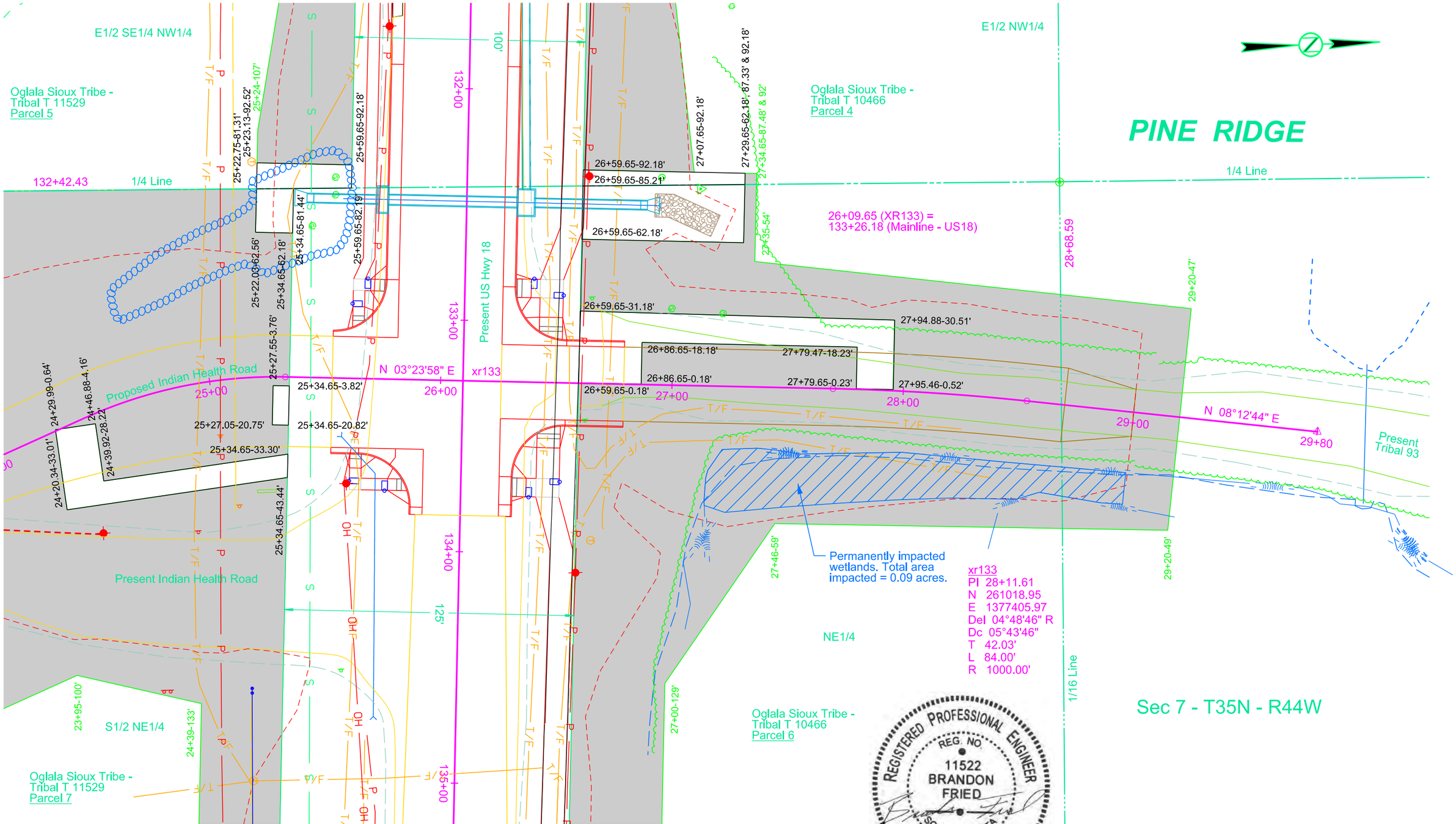

Plot Scale - 1:40

Plotted From - brandonfried

File - ...\xr133_6.dgn

KLJ	STATE OF SOUTH DAKOTA	PROJECT	SHEET	TOTAL SHEETS
		NH-CR-EM 0018(195)103 P 0407(05)01	B67	B166

FOR BIDDING PURPOSES ONLY

Plotting Date: 8/2/2024

Rev. 8/2/2024 BAF

REGISTERED PROFESSIONAL ENGINEER
REG. NO.
11522
BRANDON
FRIED
SOUTH DAKOTA
8/2/24

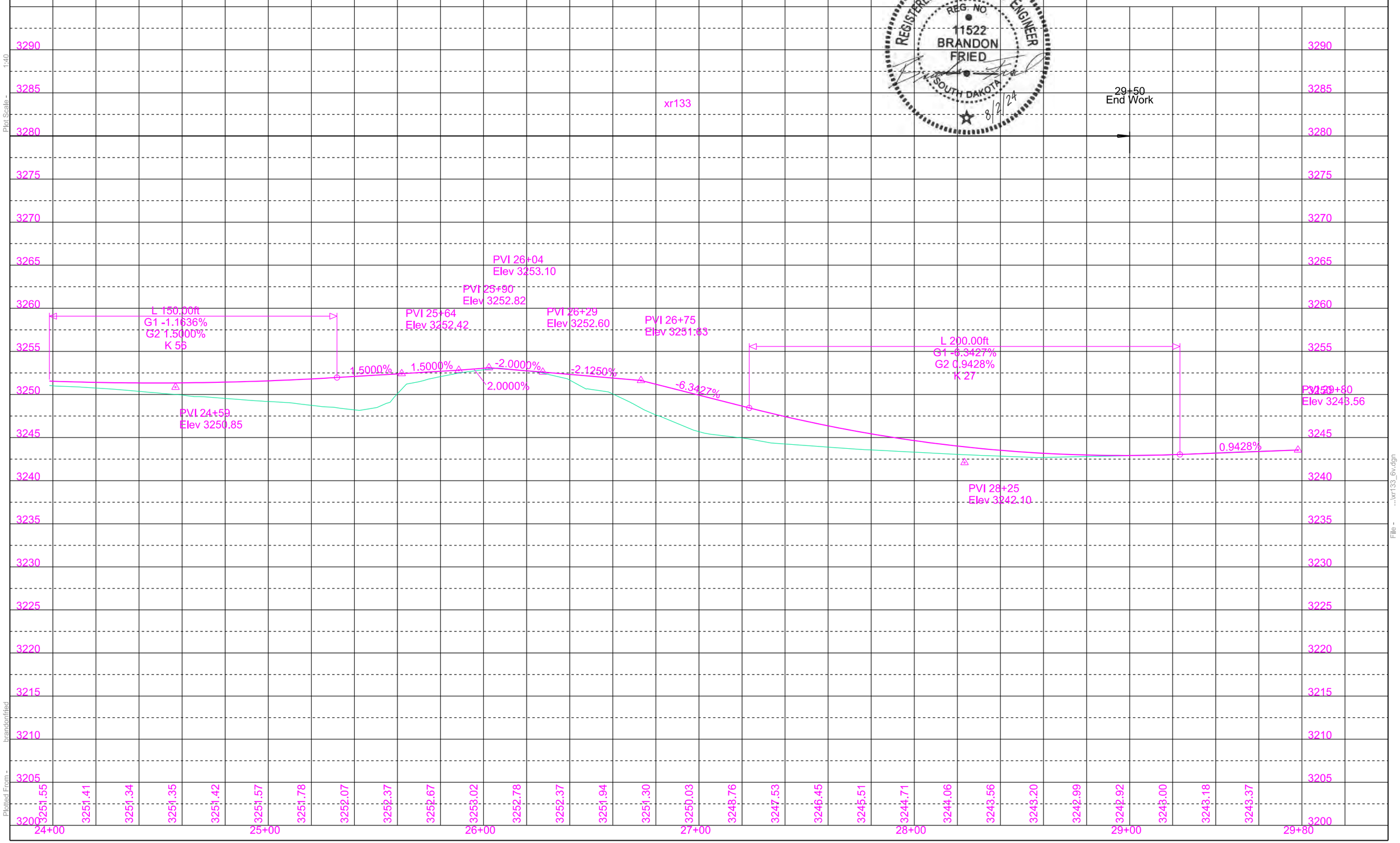

Plot Scale - 1:40

Plotted From - brandonfried

File - ...\xr133_6v.dgn

STATE OF SOUTH DAKOTA	PROJECT	SHEET	TOTAL SHEETS
	NH-CR-EM 0018(195)103 P 0407(05)01	B68	B166

Plotting Date: 8/2/2024 Rev. 8/2/2024 BAF

FOR BIDDING PURPOSES ONLY

REGISTERED PROFESSIONAL ENGINEER
REG. NO. 11522
BRANDON FRIED
SOUTH DAKOTA
8/2/24

Do Not Disturb Light Poles at the following locations: 203+63-24' R

202+15 L
Retain Drop Inlet

Oglala Sioux Tribe -
Tribal T 11259
Parcel 8

Government Lot 4

PINE RIDGE

BEGIN P 0407(05)01
Station 200+00

Cherry Hill Court

135'

125'

135'

125'

160'

Present SD Hwy 407

N 5°24'11" W

200+00

201+00

202+00

203+00

204+00

202+25-38' R
Do Not Disturb
Sign

202+80-26' R
Do Not Disturb
Sign

Dakota Avenue

202+17-60'
202+17.49-51.83'
202+17.55-41.83'

202+53.00-42.04' & 60'

Sec 12 - T35N - R45W

Lot 13

Lot 14

Government Lot 4

Oglala Sioux Tribe
(INFORMATION ONLY)

Lot 2

TRACT 25

BLOCK 22

BLOCK 22

Parcel 8
202+17.00 to 202+53.00 R
Temporary Easement containing
641 sq ft, more or less

Plot Scale - 1:40

Plotted From - brandonfried

File - ...\Plan&Profiles_40scale\200.dgn

STATE OF SOUTH DAKOTA	PROJECT	SHEET	TOTAL SHEETS
KLJ	NH-CR-EM 0018(195)103 P 0407(05)01	B69	B166

FOR BIDDING PURPOSES ONLY

Plotting Date: 8/2/2024

Rev. 8/2/2024 BAF

REGISTERED PROFESSIONAL ENGINEER
REG. NO.
11522
BRANDON
FRIED
SOUTH DAKOTA
8/2/24

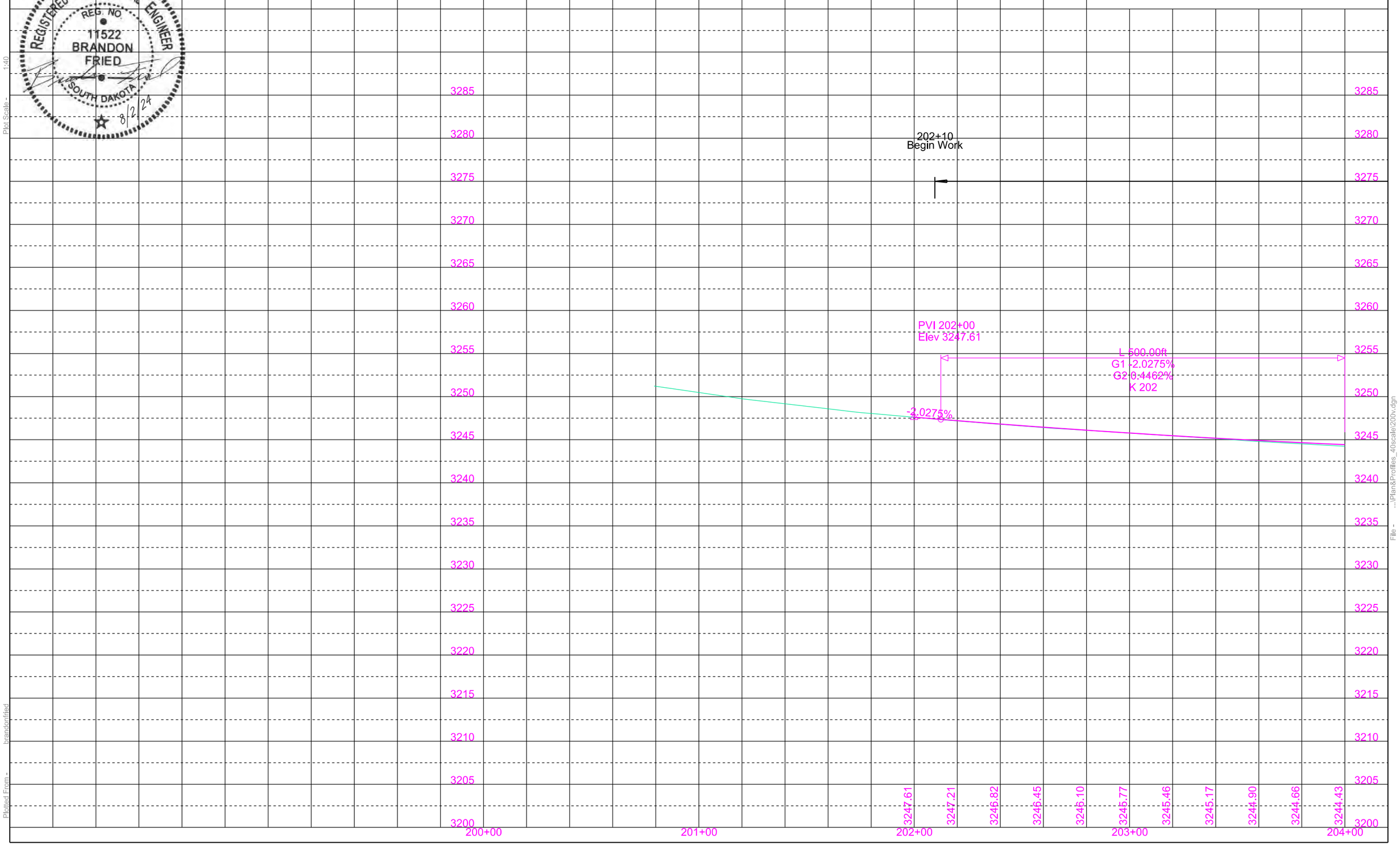

Plot Scale - 1:40

Plotted From - brandonfried

File - ...\Plan&Profiles_40scale\200v.dgn

STATE OF SOUTH DAKOTA	PROJECT	SHEET	TOTAL SHEETS
	NH-CR-EM 0018(195)103 P 0407(05)01	B70	B166

FOR BIDDING PURPOSES ONLY

Plotting Date: 8/2/2024

Rev. 8/2/2024 BAF

Do Not Disturb Light Poles
at the following locations:
205+96-24' R
208+88-27' R
209+67-54' L

Do Not Disturb Signs
at the following locations:
204+79-25' R
207+46-30' R
207+46-39' L
207+95-43' L
209+28-47' L

Do Not Disturb Power Poles
at the following locations:
204+84-78' L
205+63-69' L
206+94-53' L
207+42-47' L
207+67-45' L
207+91-42' L
209+21-41' L

206+11
Retain 24"-86' RCP

206+11 R
Retain Drop Inlet

206+12 L
Retain Drop Inlet

Adjust Manhole Frame and Lid
at the following locations:
208+60.01-24.78' R

208+59 L
Retain Drop Inlet

208+83 R
Retain Drop Inlet

209+94 L
Retain Drop Inlet

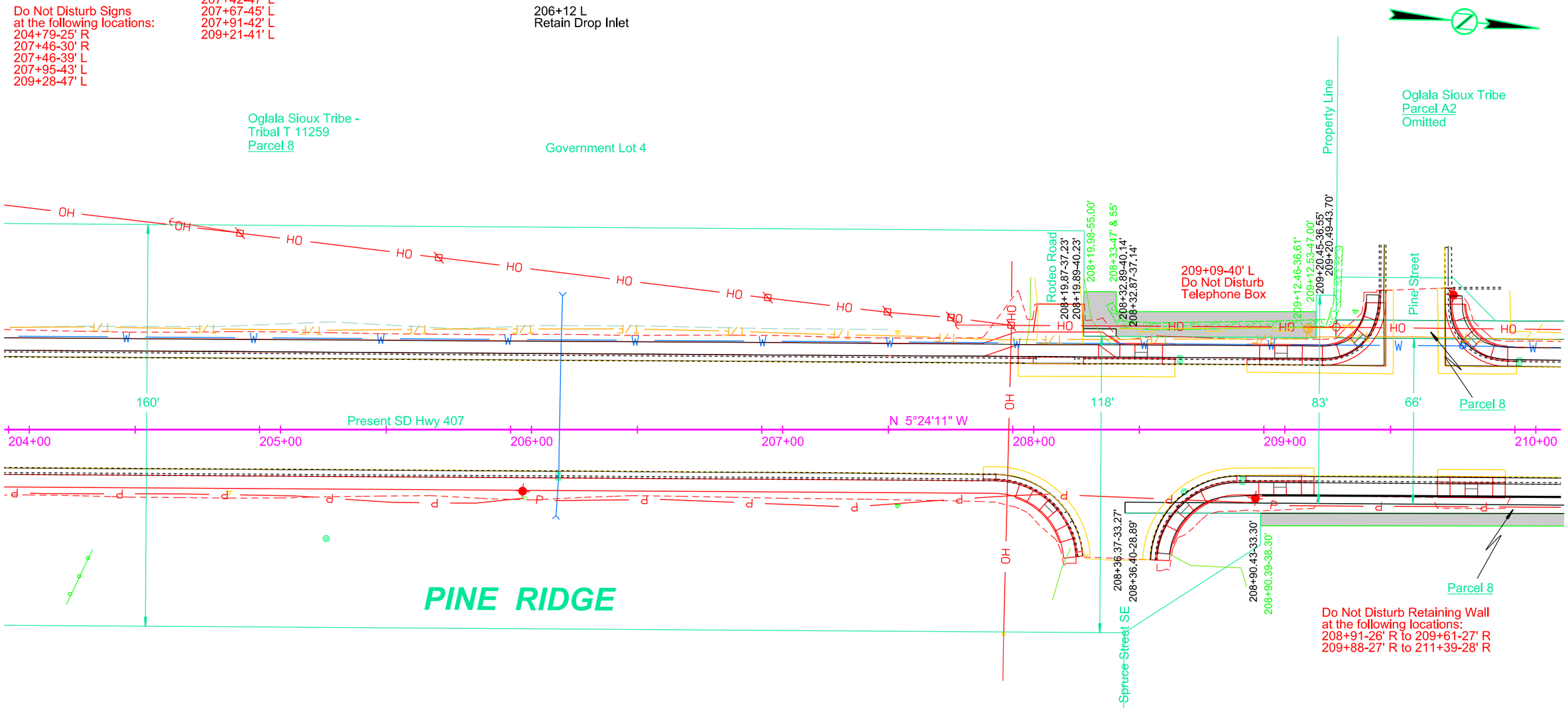

REGISTERED PROFESSIONAL ENGINEER
REG. NO.
11522
BRANDON
FRIED
SOUTH DAKOTA
8/2/24

Parcel 8
208+19.89 to 209+12.53 L
Temporary Easement containing
998 sq ft, more or less

Parcel A1
208+90.39 to 212+07.52 R
Temporary Easement containing
1585 sq ft, more or less

Parcel A2
Omitted

Plot Scale - 1:40
Plotted From - brandonfried
File - ...\Plan&Profiles_40scale\204.dgn

FOR BIDDING PURPOSES ONLY

KLJ	STATE OF SOUTH DAKOTA	PROJECT	SHEET	TOTAL SHEETS
		NH-CR-EM 0018(195)103 P 0407(05)01	B71	B166

Plotting Date: 8/2/2024 Rev. 8/2/2024 BAF

REGISTERED PROFESSIONAL ENGINEER
REG. NO.
11522
BRANDON
FRIED
SOUTH DAKOTA
8/2/24

Excavation	0	Embankment	157
Undercut	349	+20%	31
Borrow	258	Undercut	349
Muck	0	+20%	70
	607	Waste	0
			607

Haul = 100 CuYdSta

Waste is muck excavation and excess excavation material to be disposed of at a site approved by the Engineer

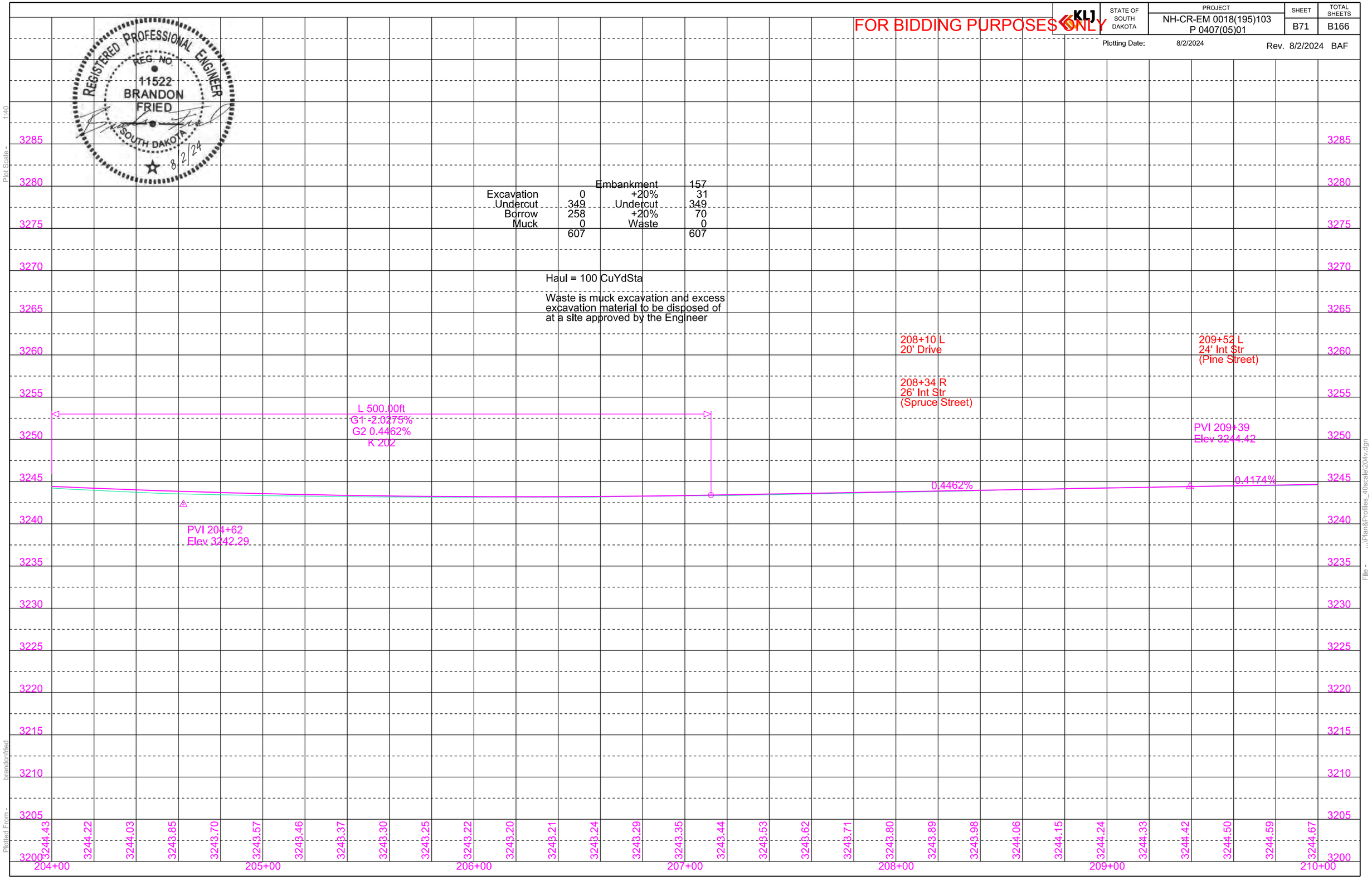

Plot Scale - 1:40
Plotted From - brandonfried
File - ...\Plan&Profiles_40scale\204v.dgn

STATE OF SOUTH DAKOTA	PROJECT	SHEET	TOTAL SHEETS
	NH-CR-EM 0018(195)103 P 0407(05)01	B72	B166

Plotting Date: 8/2/2024 Rev. 8/2/2024 BAF

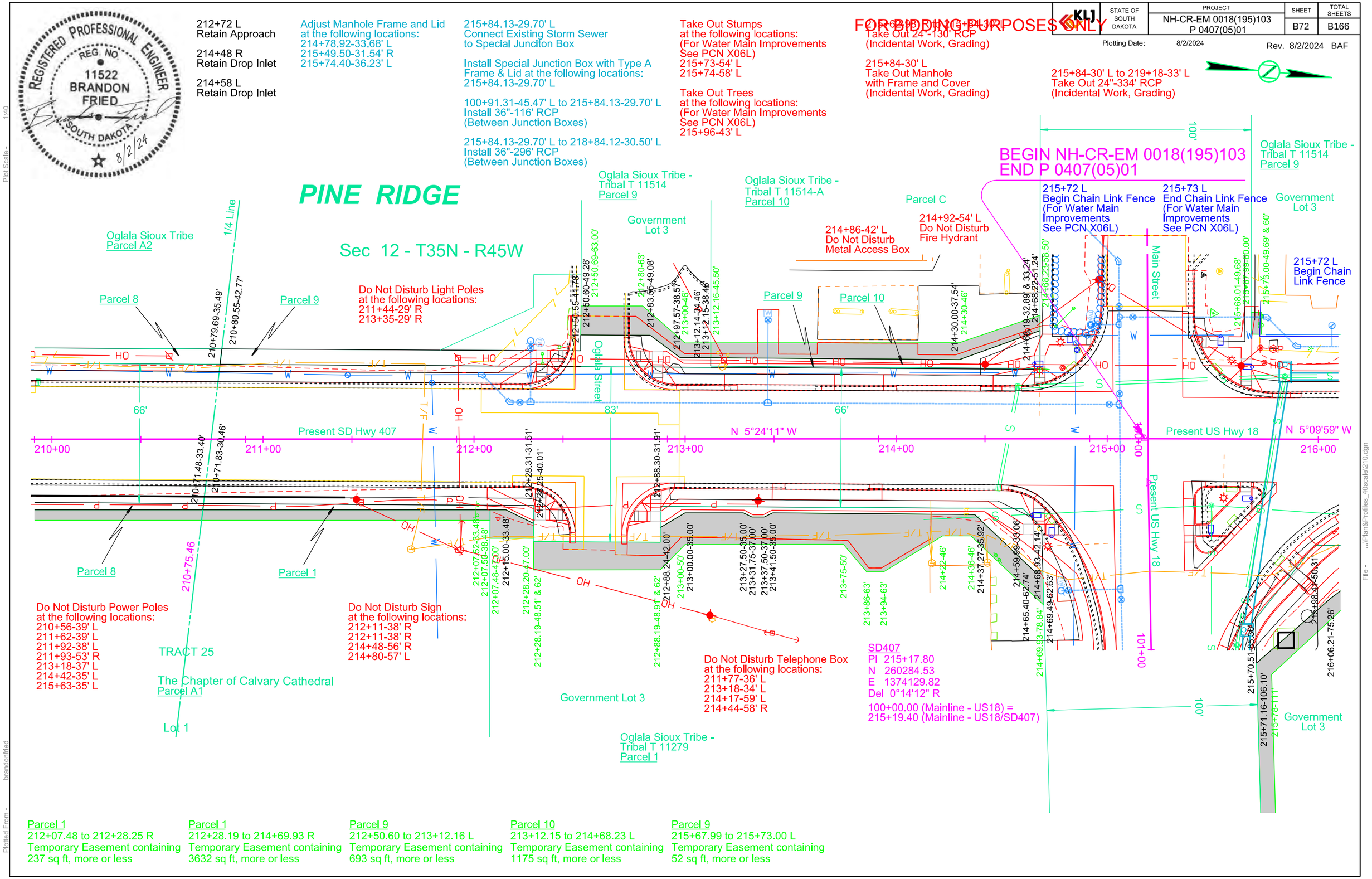

Parcel 1
212+07.48 to 212+28.25 R
Temporary Easement containing
237 sq ft, more or less

Parcel 1
212+28.19 to 214+69.93 R
Temporary Easement containing
3632 sq ft, more or less

Parcel 9
212+50.60 to 213+12.16 L
Temporary Easement containing
693 sq ft, more or less

Parcel 10
213+12.15 to 214+68.23 L
Temporary Easement containing
1175 sq ft, more or less

Parcel 9
215+67.99 to 215+73.00 L
Temporary Easement containing
52 sq ft, more or less

Plot Scale - 1:40
Plotted From - brandonfried
File - ...\Plan&Profiles_40scale\210.dgn

STATE OF SOUTH DAKOTA	PROJECT	SHEET	TOTAL SHEETS
KLJ	NH-CR-EM 0018(195)103 P 0407(05)01	B73	B166

FOR BIDDING PURPOSES ONLY

Plotting Date: 8/2/2024 Rev. 8/2/2024 BAF

REGISTERED PROFESSIONAL ENGINEER
REG. NO. 11522
BRANDON FRIED
SOUTH DAKOTA
8/2/24

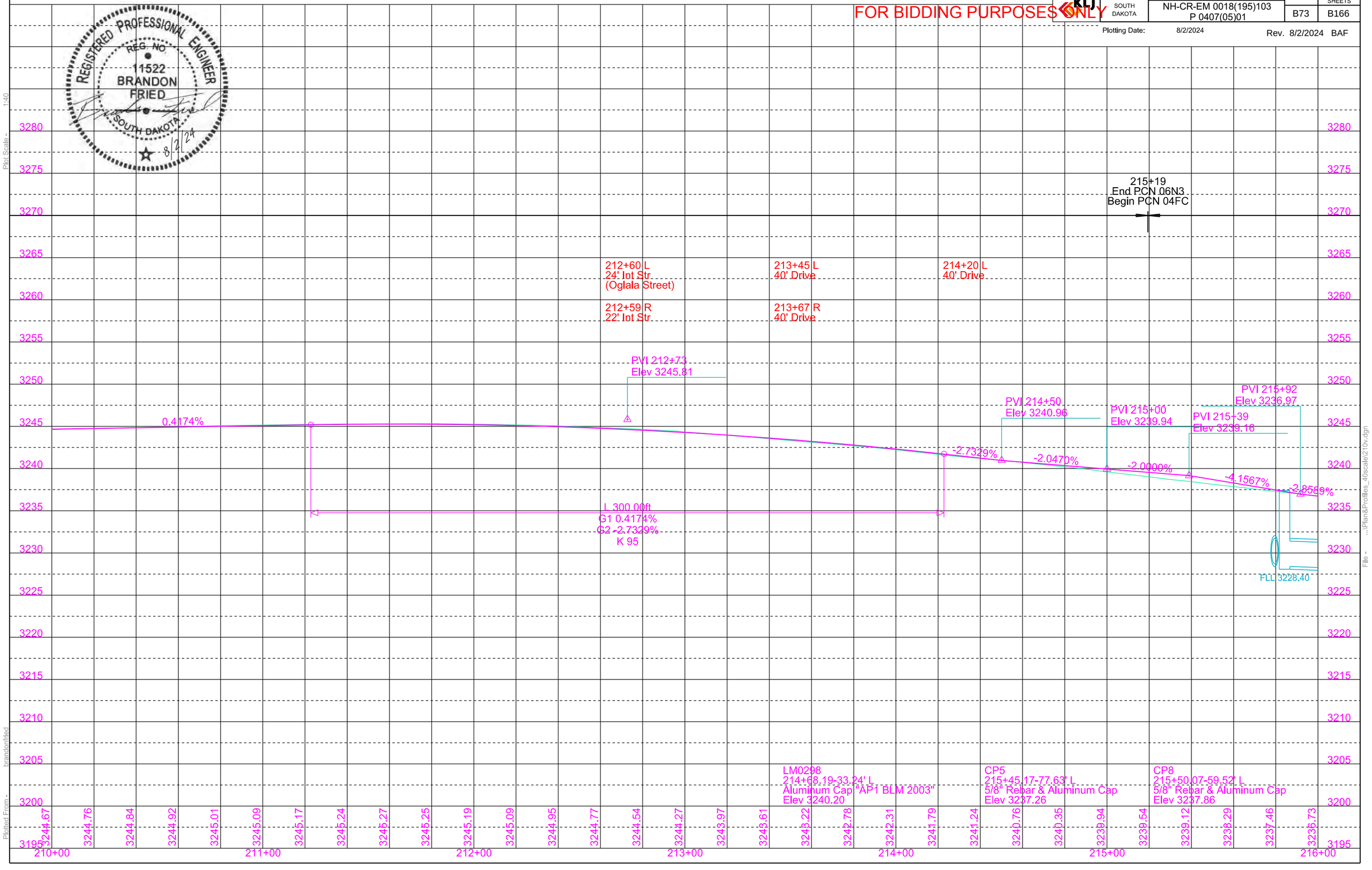

Plot Scale - 1:40
Plotted From - brandonfried
File - ...\Plan&Profiles_40scale\210v.dgn

STATE OF SOUTH DAKOTA	PROJECT	SHEET	TOTAL SHEETS
	NH-CR-EM 0018(195)103 P 0407(05)01	B74	B166

FOR BIDDING PURPOSES ONLY

Plotting Date: 8/2/2024

Rev. 8/2/2024 BAF

216+72 L
Retain Drop Inlet

216+72 R
Retain Drop Inlet

217+33-37' R to 217+62-37' R
Take Out Rock Wall
(Incidental Work, Grading)

219+65-36' R to 219+79-35' R
Take Out Shrubs
(Incidental Work, Grading)

219+18-33' L
Take Out Manhole
with Frame and Cover
(Incidental Work, Grading)

219+18-33' L to 222+40-35' L
Take Out 24"-322' RCP
(Incidental Work, Grading)

Take Out Trees
at the following locations:
(For Water Main Improvements
See PCN X06L):
216+80-47' L
217+68-44' L
217+79-50' L
217+93-49' L
218+06-50' L

Take Out Stumps
at the following locations:
(For Water Main Improvements
See PCN X06L):
216+42-45' L

Install Special Junction Box with Type A
Frame & Lid at the following locations:
218+84.12-30.50' L

Install 5'x5' Junction Box with Type A
Frame & Lid at the following locations:
221+84.12-31.30' L

218+84.12-30.50' L to 221+84.12-31.30' L
Install 36"-296' RCP
(Between Junction Boxes)

221+84.12-31.30' L to 224+44.06-32.00' L
Install 36"-254' RCP
(Between Junction Boxes)

219+26 L
Retain Drop Inlet

219+25 R
Retain Drop Inlet

Adjust Manhole Frame and Lid
at the following locations:
220+39.86-23.51' R

Install Type C Retaining Wall
at the following locations:
219+81.93-27.75' R to 219+93.66-27.73' R (4.0 SqFt)
219+96.49-27.72' R to 220+02.49-27.71' R (1.9 SqFt)

Sec 12 - T35N - R45W

PINE RIDGE

216+46 L
End Chain Link Fence

216+64 L
Begin Chain Link Fence

217+26 L
End Chain Link Fence

Do Not Disturb Sign
at the following locations:
218+45-42' L
218+69-42' L
220+87-47' R

217+35 L
Begin Chain Link Fence

218+45 L
End Chain Link Fence

217+16-40' L
Do Not Disturb
Fire Hydrant

219+44-42' L
Do Not Disturb
Telephone Box

Eagle Feather Street

Oglala Sioux Tribe -
Tribal T 11514
Parcel 9

Government Lot 3

220+57 L
Begin Chain Link Fence

221+43 L
End Chain Link Fence

221+76 L
Begin Chain Link Fence

216+42.00-49.71' & 55'
216+68.00-49.71' & 55'
216+42.50-49.77' & 55'
216+68.50-49.78' & 55'
219+39.00-49.80' & 68'
219+57.00-49.80' & 68'

100'

Present SD Hwy 18

N 5°09'59" W

216+00 217+00 218+00 219+00 220+00 221+00 222+00

216+47-42' R
Do Not Disturb Well

218+48-38' R
Begin Chain Link Fence

218+48-48' R
End Chain Link Fence

219+45-30' R
Do Not Disturb
Telephone Box

219+62-38' R to 220+29-38' R
Do Not Disturb Welded Wire Fence

Buffalo Berry Street NE

221+06 R
Begin Chain Link Fence

218+06 R
Begin Chain Link Fence

218+12-39' R
Corner Chain Link Fence

218+45-49' R
End Chain Link Fence

Government Lot 3

Oglala Sioux Tribe -
Tribal T 11279
Parcel 1

216+98.42-50.31'
216+06.21-75.26'
216+39.50-50.29'
216+44.00-50.29'
217+04.00-50.27' & 55'
217+36.00-50.26' & 55'
218+49.00-50.23' & 55'
218+79.00-50.22' & 55'

Do Not Disturb Power Poles
at the following locations:
216+93-38' L
218+29-38' L
219+45-28' R
219+46-41' L
220+33-38' L
221+16-39' L

Do Not Disturb Telephone Box
at the following locations:
218+40-38' R
219+44-42' L
219+45-30' R

Do Not Disturb Shrubs
at the following locations:
217+39-41' R to 218+10-40' R

Parcel 9
216+42.00 to 216+68.00 L
Temporary Easement containing
138 sq ft, more or less

Parcel 1
217+04.00 to 217+36.00 R
Temporary Easement containing
151 sq ft, more or less

Parcel 9
218+42.50 to 218+68.50 L
Temporary Easement containing
136 sq ft, more or less

Parcel 1
218+49.00 to 218+79.00 R
Temporary Easement containing
143 sq ft, more or less

Parcel 9
219+39.00 to 219+57.00 L
Temporary Easement containing
319 sq ft, more or less

REGISTERED PROFESSIONAL ENGINEER
REG. NO.
11522
BRANDON
FRIED
SOUTH DAKOTA
8/2/24

Plot Scale - 1:40

Plotted From - brandonfried

File - ...\Plan&Profiles_40scale\216.dgn

STATE OF SOUTH DAKOTA	PROJECT	SHEET	TOTAL SHEETS
	NH-CR-EM 0018(195)103 P 0407(05)01	B75	B166

FOR BIDDING PURPOSES ONLY

Plotting Date: 8/2/2024

Rev. 8/2/2024 BAF

REGISTERED PROFESSIONAL ENGINEER
REG. NO. 11522
BRANDON FRIED
SOUTH DAKOTA
8/2/24

Excavation	144	Embankment	235
Undercut	510	+20%	47
Borrow	240	Undercut	510
Muck	0	+20%	102
	894	Waste	0
			894

Haul = 200 CuYdSta

Waste is muck excavation and excess excavation material to be disposed of at a site approved by the Engineer

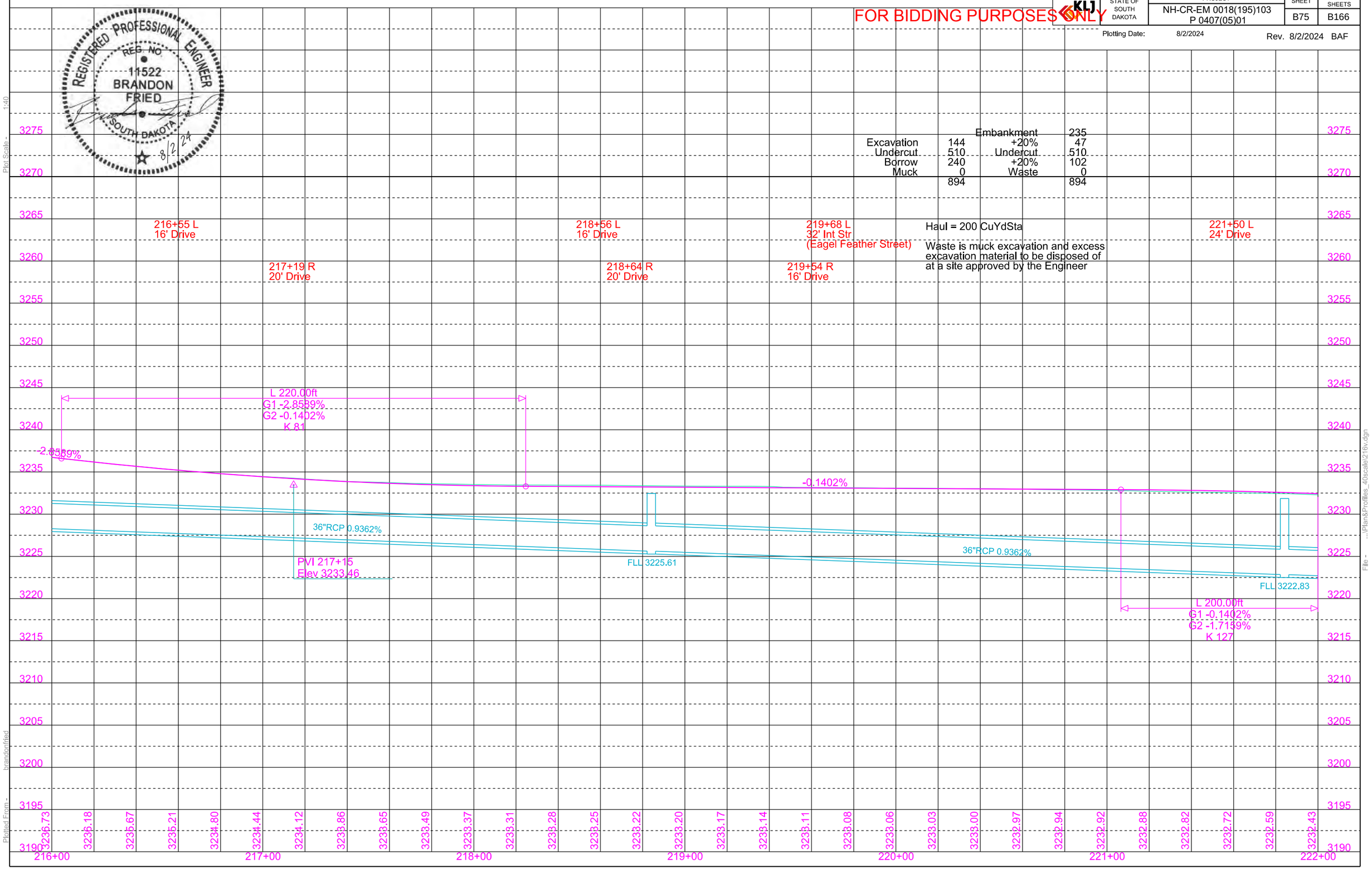

Plot Scale - 1:40

Plotted From - brandonfried

File - ...\Plan&Profiles_40scale\216v.dgn

STATE OF SOUTH DAKOTA	PROJECT	SHEET	TOTAL SHEETS
	NH-CR-EM 0018(195)103 P 0407(05)01	B76	B166

FOR BIDDING PURPOSES ONLY

Plotting Date: 8/2/2024

Rev. 8/2/2024 BAF

Remove Trees
at the following locations:
222+91-31' R (14")
223+07-30' R (12")
223+35-32' R (10")
224+47-42' R (6")
224+48-42' R (6")

222+60-34' R to 222+82-31' R
Take Out Shrubs
(Incidental Work, Grading)

221+90-33' R to 223+10-34' R
Take Out 120' Electric Fence
(Incidental Work, Grading)

222+05 L
Retain Drop Inlet

222+06 R
Retain Drop Inlet

225+35
Retain 24"-84' RCP
& 1 Flared End

225+81 R
Retain 30"-94' RCP
& 2 Sloped Ends

225+35 R
Retain Drop Inlet

226+15 L
Retain Drop Inlet

Install 5'x5' Junction Box with Type A
Frame & Lid at the following locations:
224+44.06-32.00' L

224+44.06-32.00' L to 225+02.35-78.24' L
Install 36"-72' RCP
(Between Junction Box & End Section)

225+02.35-78.24' L
Install 36"-1 RCP Flared End

225+08.73-83.30' L
Install Class C Riprap (76.0 Tons)
and Type B Drainage Fabric (61 SqYd)

222+40-35' L
Take Out Drop Inlet
& Drop Inlet Lid
(Incidental Work, Grading)

222+40-35' L to 224+42-37' L
Take Out 24"-200' RCP
(Incidental Work, Grading)

224+42-37' L
Take Out Manhole
with Frame and Cover
(Incidental Work, Grading)

224+42-37' L to 225+02-78' L
Take Out 24"-72' RCP
& 1 Flared End
(Incidental Work, Grading)

225+02-78' L
Take Out Gabions
(Incidental Work, Grading)

END NH-CR-EM 0018(195)103
Station 228+00

PINE RIDGE

Oglala Sioux Tribe -
Tribal T 11514
Parcel 9

222+26-49' L
Begin Chain Link Fence
(For Water Main
Improvements
See PCN X06L)

222+26-53' L
End Chain Link Fence
(For Water Main
Improvements
See PCN X06L)

Government Lot 3

224+39-43' L
Corner Chain
Link Fence

1/16 Line

224+08.49

224+99 L
Begin Chain
Link Fence

225+02-93' L
End Chain
Link Fence

224+96.57-94.65'

224+97-120'

225+22.78-115.52'

225+39.33-94.74'

225+48.57-94.76'

225+54.00-49.73'
& 120'

NE 1/4

225+48.48-49.76'

225+38-30' L
Do Not Disturb
Light Pole

Oglala Sioux Tribe -
Tribal T 11514
Parcel 9

145'

142'

184'

100'

100'

100'

Present SD Hwy 18

N 5°09'59" W

222+00

223+00

224+00

225+00

226+00

227+00

228+00

222+30 R
Begin Chain Link Fence

223+17 R
End Chain Link Fence

223+33 R
Begin Chain
Link Fence

224+14 R
End Chain
Link Fence

224+01-37' R
Do Not Disturb
Telephone Box

White Tail Deer Road

226+23-30' R
Do Not Disturb
Telephone Box

226+04-45' R
Do Not Disturb
Sign

222+11.50-50.12' & 55'

222+33.50-50.11' & 55'

Government Lot 3

223+15.00-50.09' & 55'

223+40.00-50.08' & 55'

223+93.00-50.06' & 56'

224+02.07-56.00'

224+02.76-50.06'

224+56-56'

NE1/4 NE1/4

224+98-75'

225+42.00-50.19' & 75'

Oglala Sioux Tribe -
Tribal T 11279
Parcel A3

222+16 R
End Chain Link Fence

Oglala Sioux Tribe -
Tribal T 11279
Parcel 1

Sec 12 - T35N - R45W

REGISTERED PROFESSIONAL ENGINEER
REG. NO.
11522
BRANDON
FRIED
SOUTH DAKOTA
8/2/24

Parcel 1
222+11.50 to 222+33.50 R
Temporary Easement containing
107 sq ft, more or less

Parcel 1
223+15.00 to 223+40.00 R
Temporary Easement containing
123 sq ft, more or less

Parcel 1
223+93.00 to 224+02.76 R
Temporary Easement containing
56 sq ft, more or less

Parcel A3
224+02.07 to 225+42.00 R
Temporary Easement containing
2075 sq ft, more or less

Parcel 9
224+96.57 to 225+54.00 L
Temporary Easement containing
1253 sq ft, more or less

Plot Scale - 1:40

Plotted From - brandonfried

File - ...\Plan&Profiles_40scale\222.dgn

STATE OF SOUTH DAKOTA	PROJECT	SHEET	TOTAL SHEETS
KLJ	NH-CR-EM 0018(195)103 P 0407(05)01	B77	B166

FOR BIDDING PURPOSES ONLY

Plotting Date: 8/2/2024 Rev. 8/2/2024 BAF

REGISTERED PROFESSIONAL ENGINEER
REG. NO. 11522
BRANDON FRIED
SOUTH DAKOTA
8/2/24

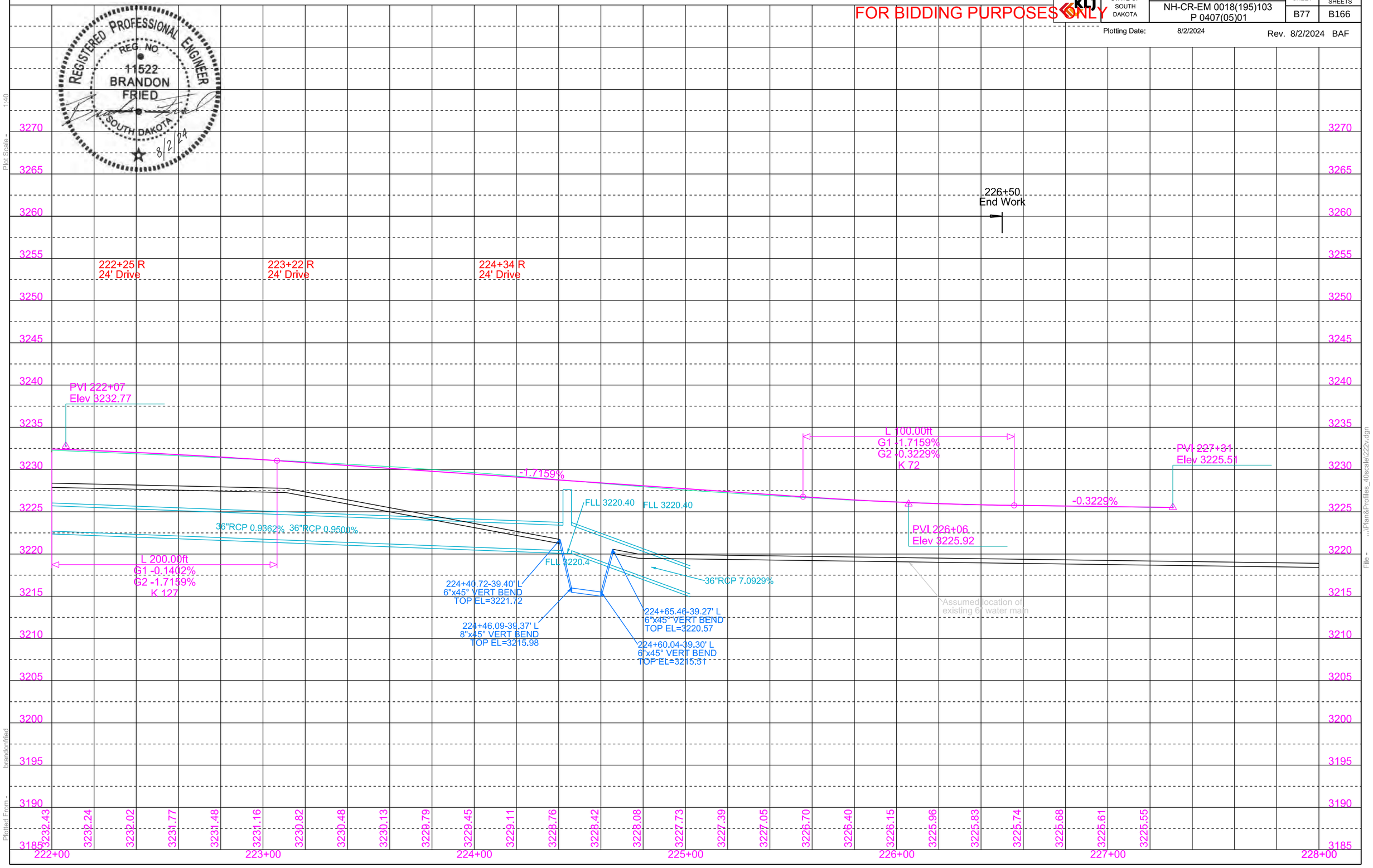

Plot Scale - 1:40

Plotted From - brandonfried

File - ...\Plan&Profiles_40scale\222v.dgn

PAVEMENT REMOVAL LAYOUT

FOR BIDDING PURPOSES ONLY

KLJ	STATE OF SOUTH DAKOTA	PROJECT	SHEET	TOTAL SHEETS
		NH-CR-EM 0018(195)103 P 0407(05)01	B78	B166

Plotting Date: 8/2/2024

Rev. 8/2/2024 BAF

Remove Concrete Pavement

Remove Concrete Driveway Pavement

Remove Asphalt Concrete Pavement

Remove Concrete Sidewalk

Remove Concrete Median Pavement

Remove Concrete Curb and/or Gutter

Remove Concrete Pavement
(Water Main - PCN X06L)

Remove Asphalt Concrete Pavement
(Water Main - PCN 0X6L)

Remove Concrete Sidewalk
(Water Main - PCN 0X6L)

Remove Concrete Curb and/or Gutter
(Water Main - PCN 0X6L)

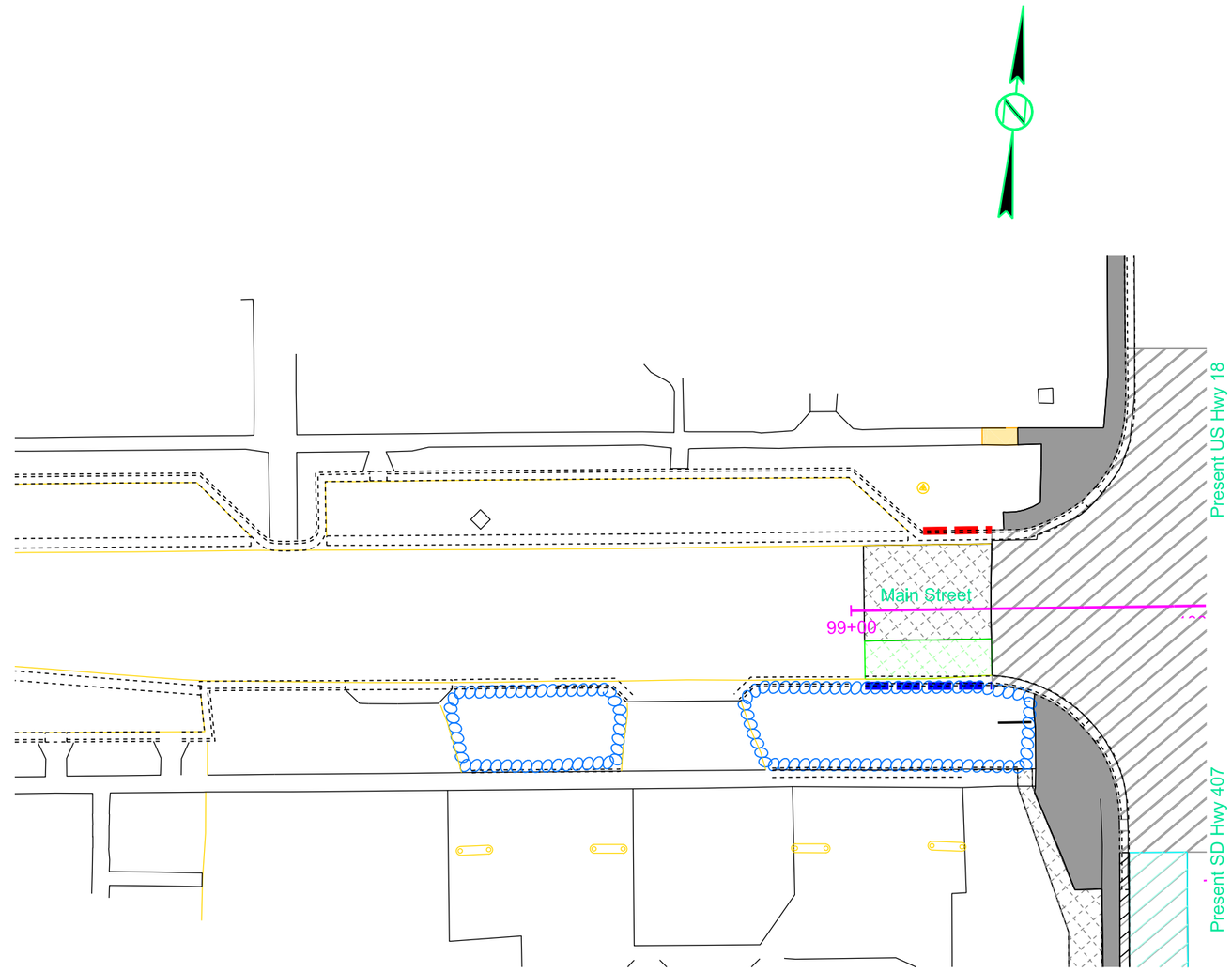

REGISTERED PROFESSIONAL ENGINEER
REG. NO.
11522
BRANDON
FRIED
SOUTH DAKOTA
8/2/24

Plot Scale - 1:40
Plotted From - brandonfried
File - ...\Removals_40scale\099pr.dgn

PAVEMENT REMOVAL LAYOUT

FOR BIDDING PURPOSES ONLY

KLJ	STATE OF SOUTH DAKOTA	PROJECT	SHEET	TOTAL SHEETS
		NH-CR-EM 0018(195)103 P 0407(05)01	B79	B166

Plotting Date: 8/2/2024

Rev. 8/2/2024 BAF

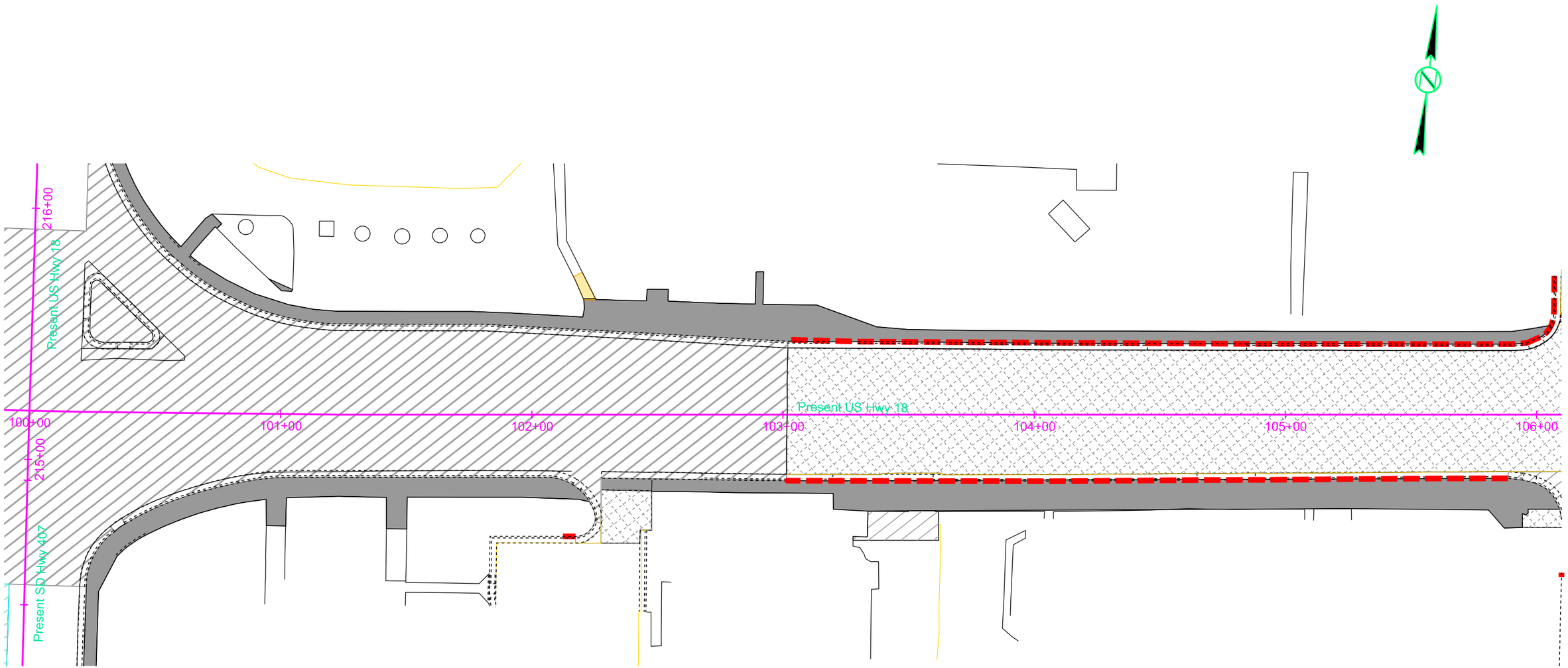

REGISTERED PROFESSIONAL ENGINEER
REG. NO.
11522
BRANDON
FRIED
SOUTH DAKOTA
8/2/24

Plot Scale - 1:40

Plotted From - brandonfried

File - ...\Removals_40scale\100pr.dgn

PAVEMENT REMOVAL LAYOUT

FOR BIDDING PURPOSES ONLY

KLJ	STATE OF SOUTH DAKOTA	PROJECT	SHEET	TOTAL SHEETS
		NH-CR-EM 0018(195)103 P 0407(05)01	B80	B166

Plotting Date: 8/2/2024

Rev. 8/2/2024 BAF

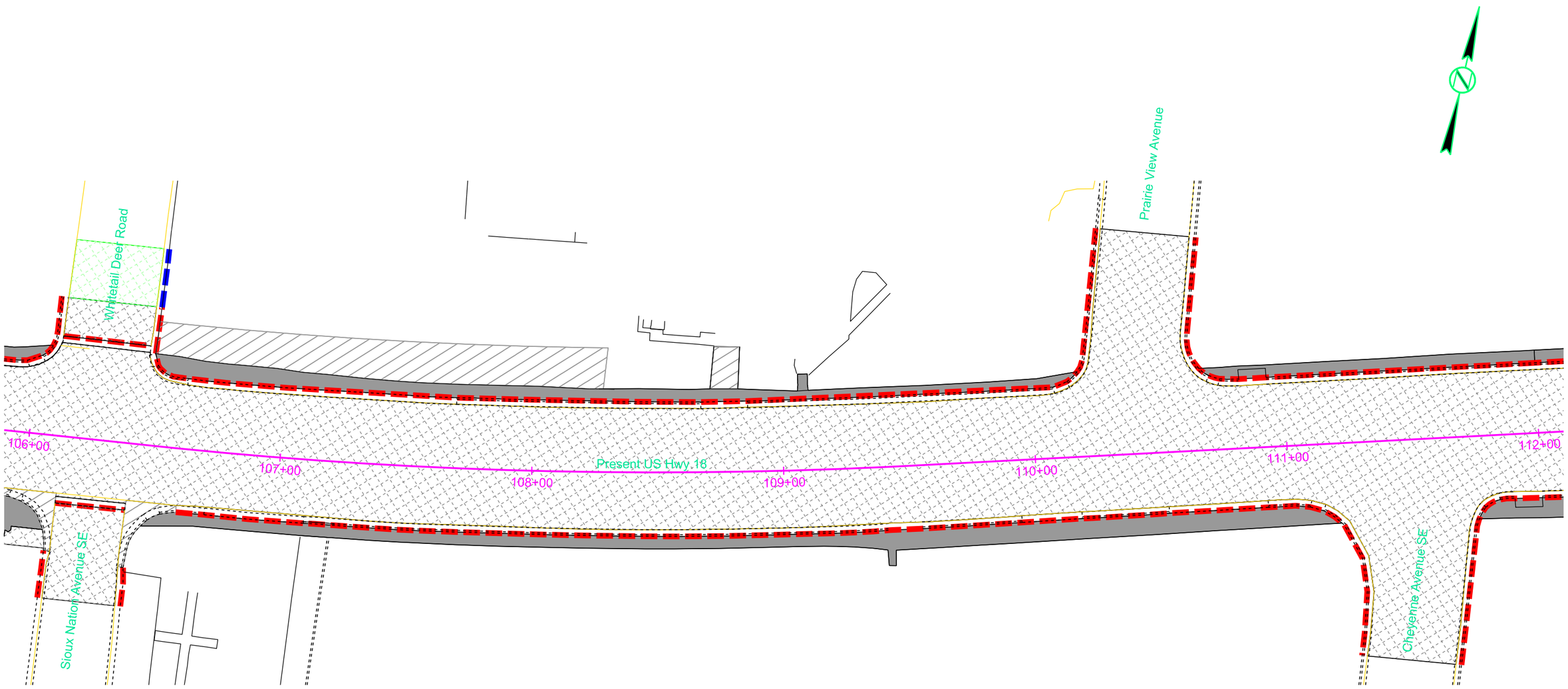

REGISTERED PROFESSIONAL ENGINEER
REG. NO.
11522
BRANDON
FRIED
SOUTH DAKOTA
8/2/24

Plot Scale - 1:40

Plotted From - brandonfried

File - ...\Removals_40scale\106pr.dgn

PAVEMENT REMOVAL LAYOUT

FOR BIDDING PURPOSES ONLY

KLJ	STATE OF SOUTH DAKOTA	PROJECT	SHEET	TOTAL SHEETS
		NH-CR-EM 0018(195)103 P 0407(05)01	B81	B166

Plotting Date: 8/2/2024

Rev. 8/2/2024 BAF

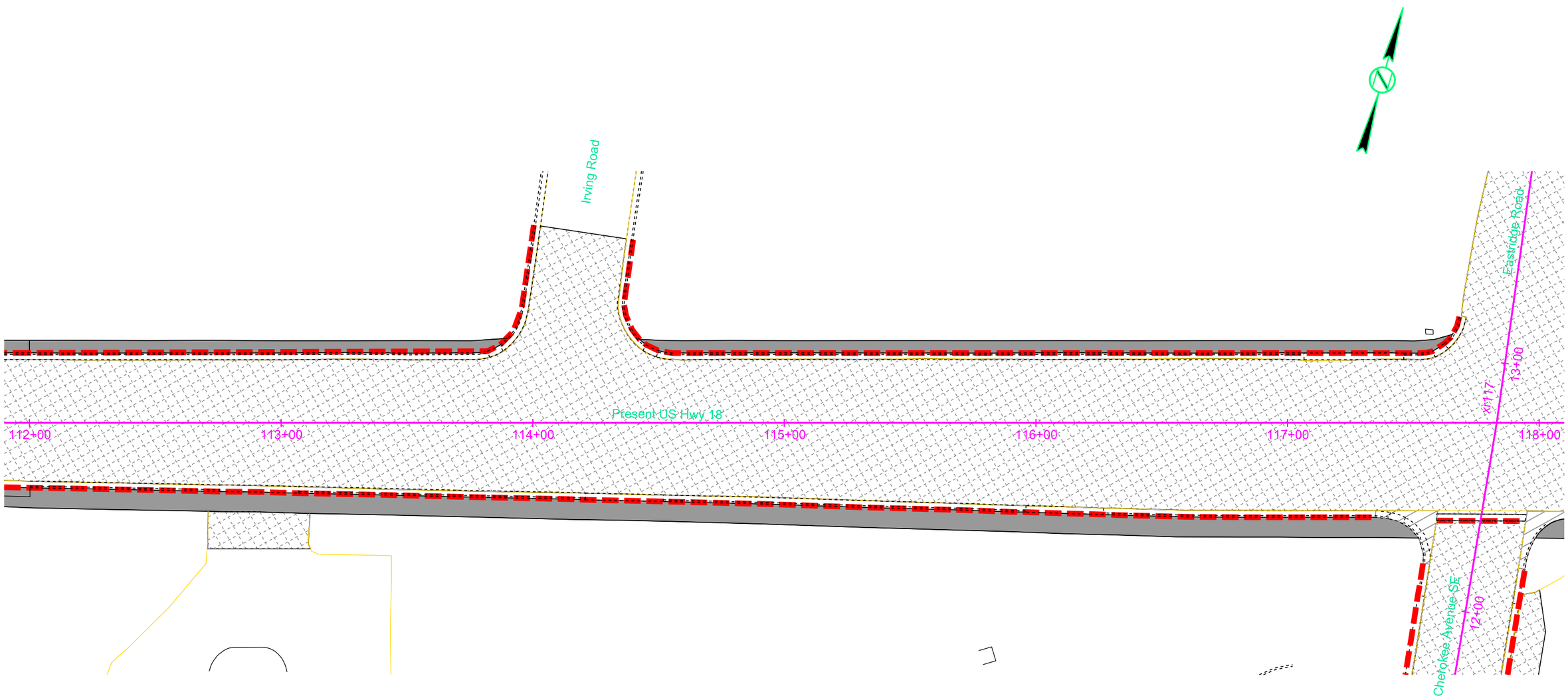

REGISTERED PROFESSIONAL ENGINEER
REG. NO.
11522
BRANDON
FRIED
SOUTH DAKOTA
8/2/24

Plot Scale - 1:40

Plotted From - brandonfried

File - ...\Removals_40scale\112pr.dgn

PAVEMENT REMOVAL LAYOUT

FOR BIDDING PURPOSES ONLY

KLJ	STATE OF SOUTH DAKOTA	PROJECT	SHEET	TOTAL SHEETS
		NH-CR-EM 0018(195)103 P 0407(05)01	B82	B166

Plotting Date: 8/2/2024

Rev. 8/2/2024 BAF

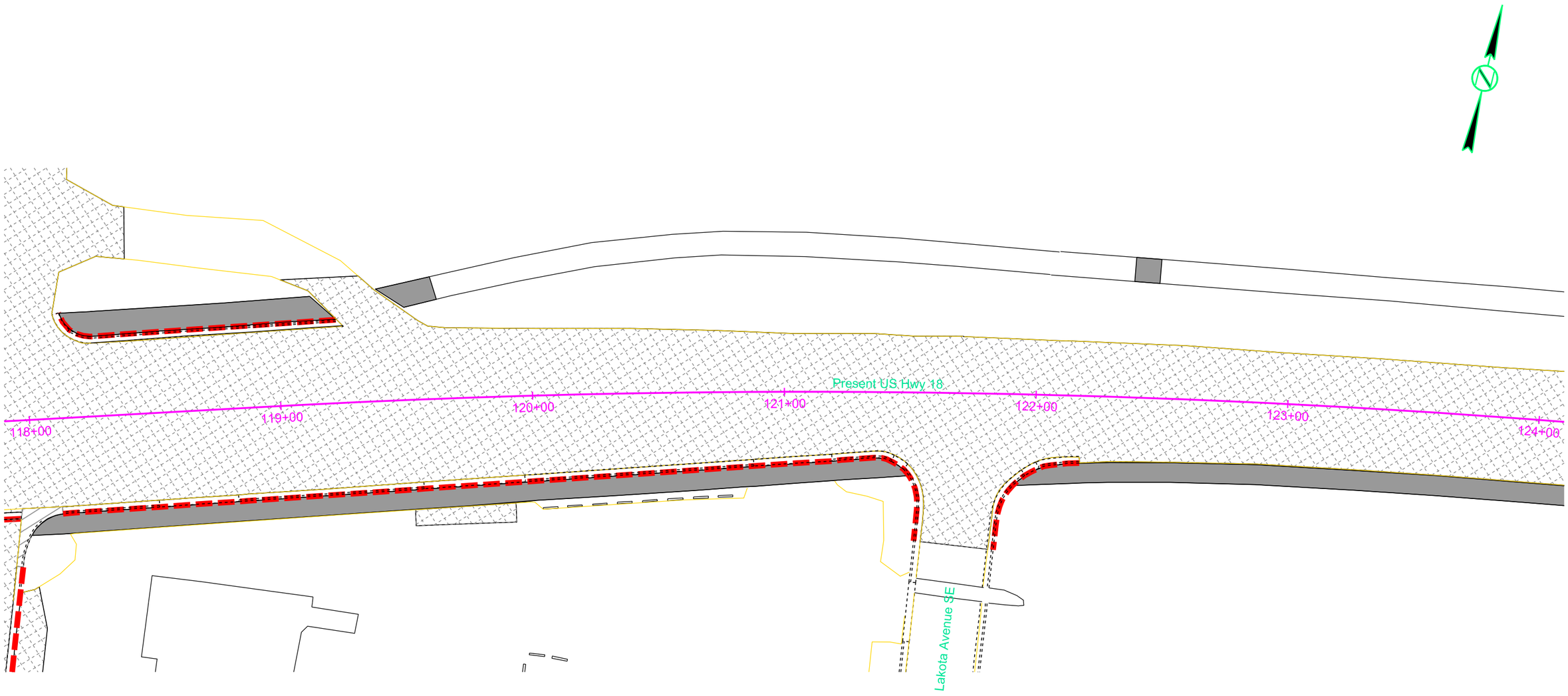

REGISTERED PROFESSIONAL ENGINEER
REG. NO.
11522
BRANDON
FRIED
SOUTH DAKOTA
8/2/24

Plot Scale - 1:40

Plotted From - brandonfried

File - ...\Removals_40scale\118pr.dgn

PAVEMENT REMOVAL LAYOUT

FOR BIDDING PURPOSES ONLY

KLJ	STATE OF SOUTH DAKOTA	PROJECT	SHEET	TOTAL SHEETS
		NH-CR-EM 0018(195)103 P 0407(05)01	B83	B166

Plotting Date: 8/2/2024

Rev. 8/2/2024 BAF

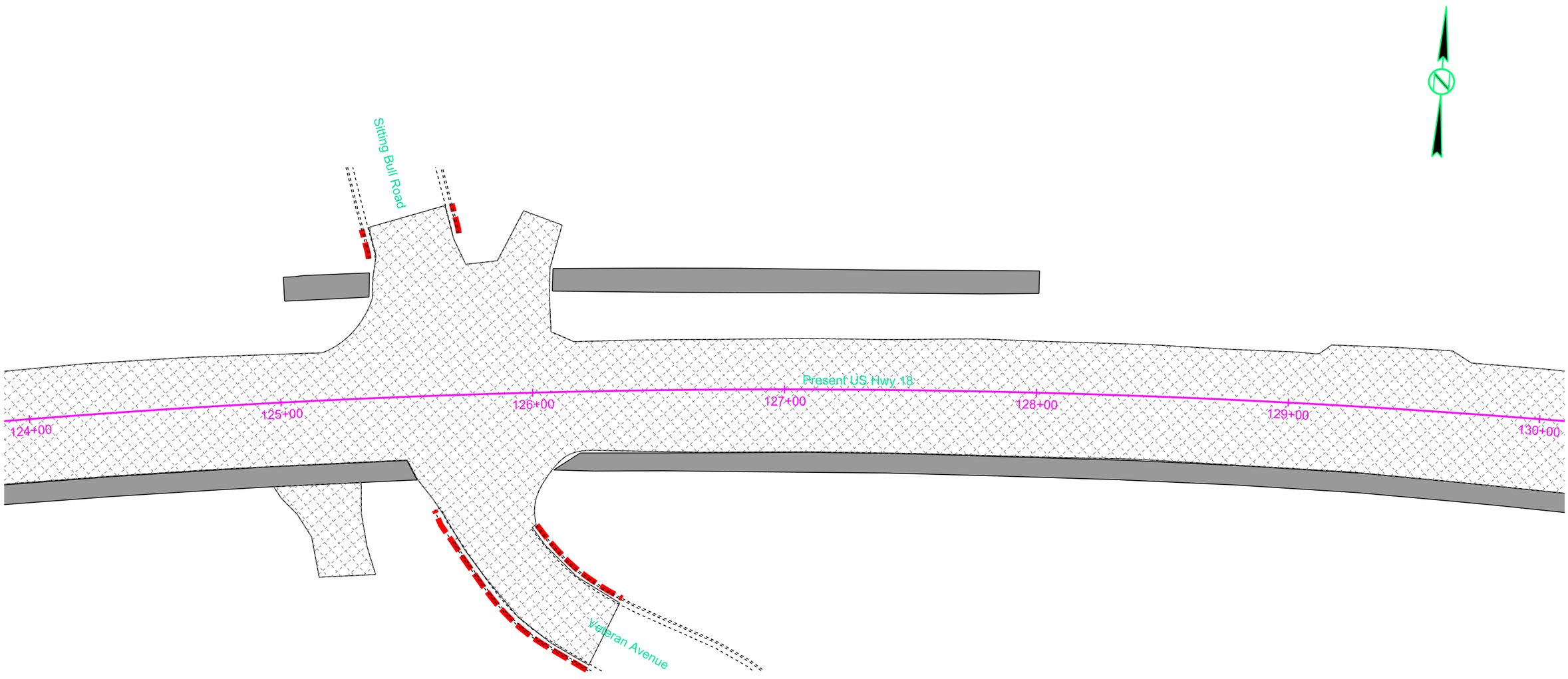

REGISTERED PROFESSIONAL ENGINEER
REG. NO.
11522
BRANDON
FRIED
SOUTH DAKOTA
8/2/24

Plot Scale - 1:40

Plotted From - brandonfried

File - ...\Removals_40scale\124pr.dgn

PAVEMENT REMOVAL LAYOUT

FOR BIDDING PURPOSES ONLY

KLJ	STATE OF SOUTH DAKOTA	PROJECT	SHEET	TOTAL SHEETS
		NH-CR-EM 0018(195)103 P 0407(05)01	B84	B166

Plotting Date: 8/2/2024

Rev. 8/2/2024 BAF

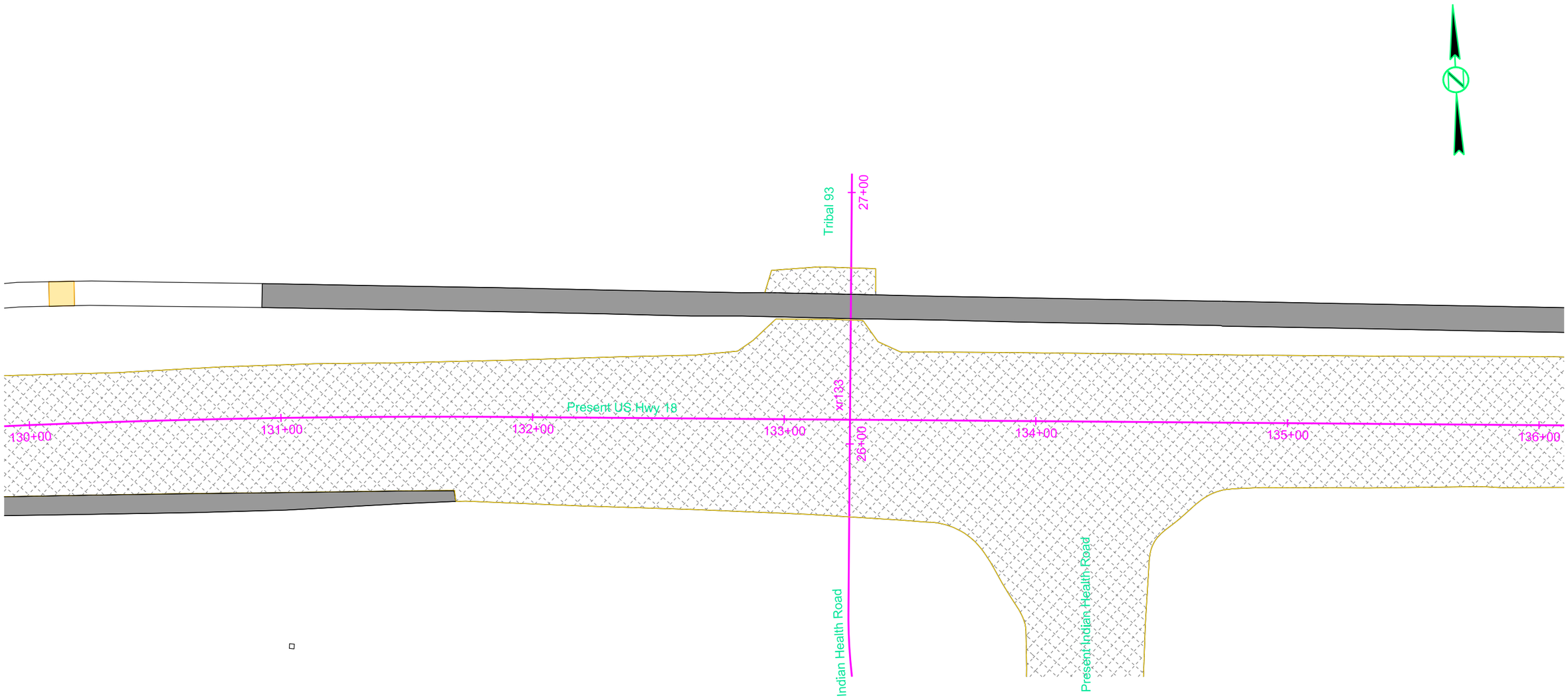

REGISTERED PROFESSIONAL ENGINEER
REG. NO.
11522
BRANDON
FRIED
SOUTH DAKOTA
8/2/24

Plot Scale - 1:40

Plotted From - brandonfried

File - ...\Removals_40scale130pr.dgn

PAVEMENT REMOVAL LAYOUT

FOR BIDDING PURPOSES ONLY

KLJ	STATE OF SOUTH DAKOTA	PROJECT	SHEET	TOTAL SHEETS
		NH-CR-EM 0018(195)103 P 0407(05)01	B85	B166

Plotting Date: 8/2/2024

Rev. 8/2/2024 BAF

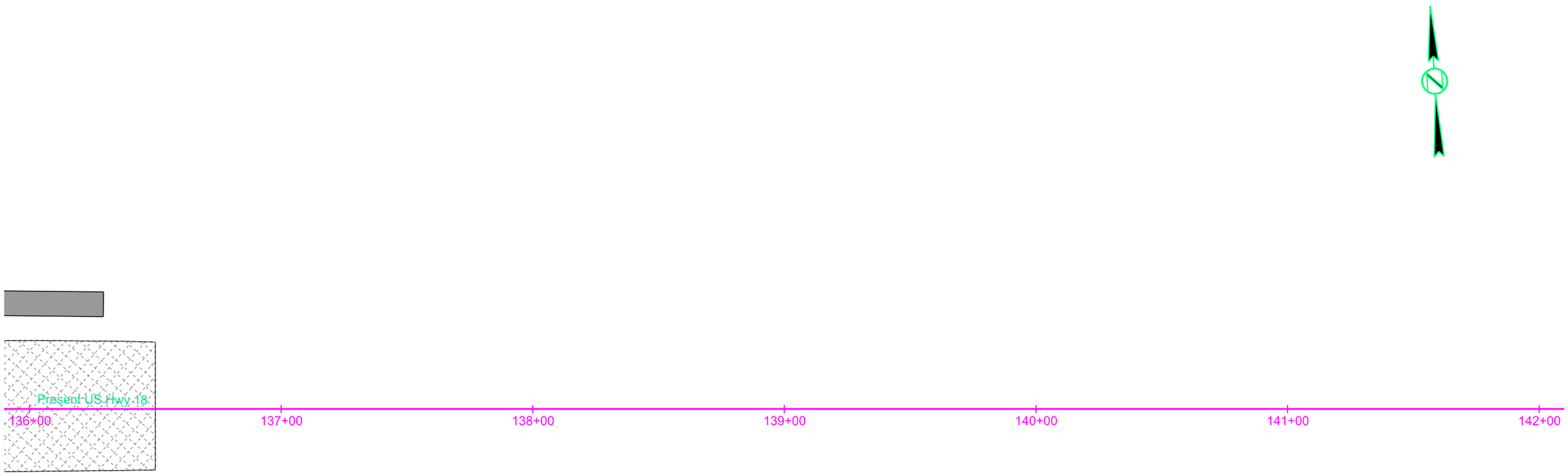

REGISTERED PROFESSIONAL ENGINEER
REG. NO.
11522
BRANDON
FRIED
SOUTH DAKOTA
8/2/24

Plot Scale - 1:40

Plotted From - brandonfried

File - ...\Removals_40scale\136pr.dgn

PAVEMENT REMOVAL LAYOUT

FOR BIDDING PURPOSES ONLY

KLJ	STATE OF SOUTH DAKOTA	PROJECT	SHEET	TOTAL SHEETS
		NH-CR-EM 0018(195)103 P 0407(05)01	B86	B166

Plotting Date: 8/2/2024

Rev. 8/2/2024 BAF

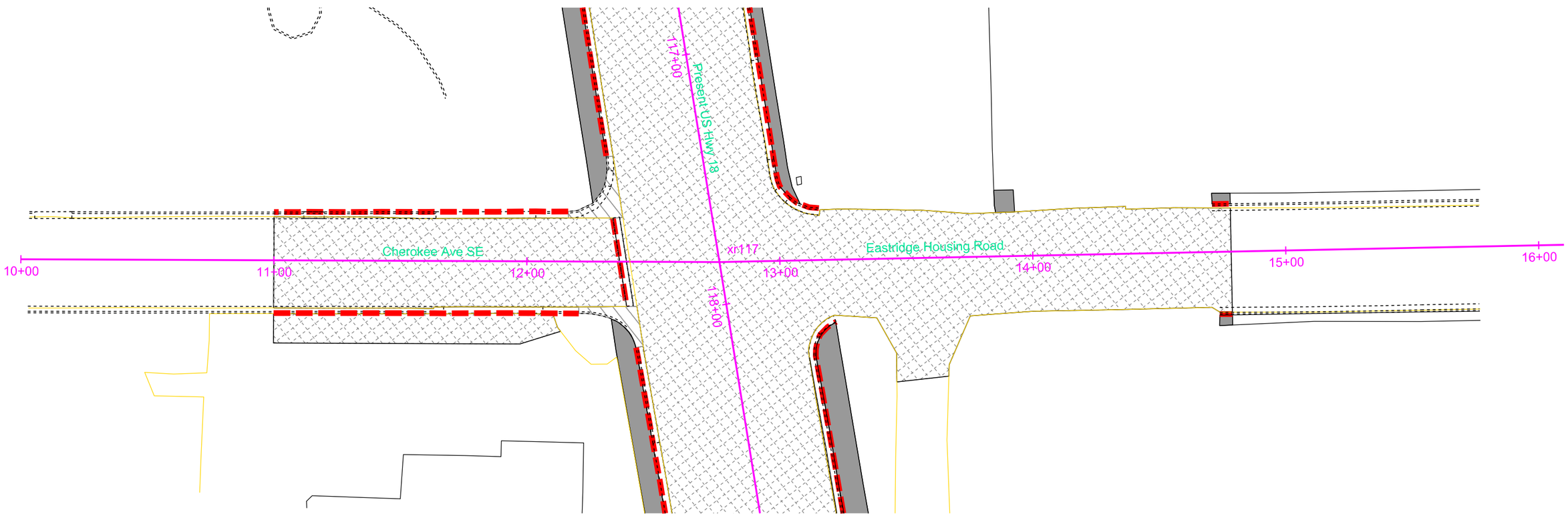

REGISTERED PROFESSIONAL ENGINEER
REG. NO.
11522
BRANDON
FRIED
SOUTH DAKOTA
8/2/24

Plot Scale - 1:40

Plotted From - brandonfried

File - ...\Removals_40scale\xr117pr.dgn

PAVEMENT REMOVAL LAYOUT

FOR BIDDING PURPOSES ONLY

KLJ	STATE OF SOUTH DAKOTA	PROJECT	SHEET	TOTAL SHEETS
		NH-CR-EM 0018(195)103 P 0407(05)01	B87	B166

Plotting Date: 8/2/2024

Rev. 8/2/2024 BAF

REGISTERED PROFESSIONAL ENGINEER
REG. NO.
11522
BRANDON
FRIED
SOUTH DAKOTA
8/2/24

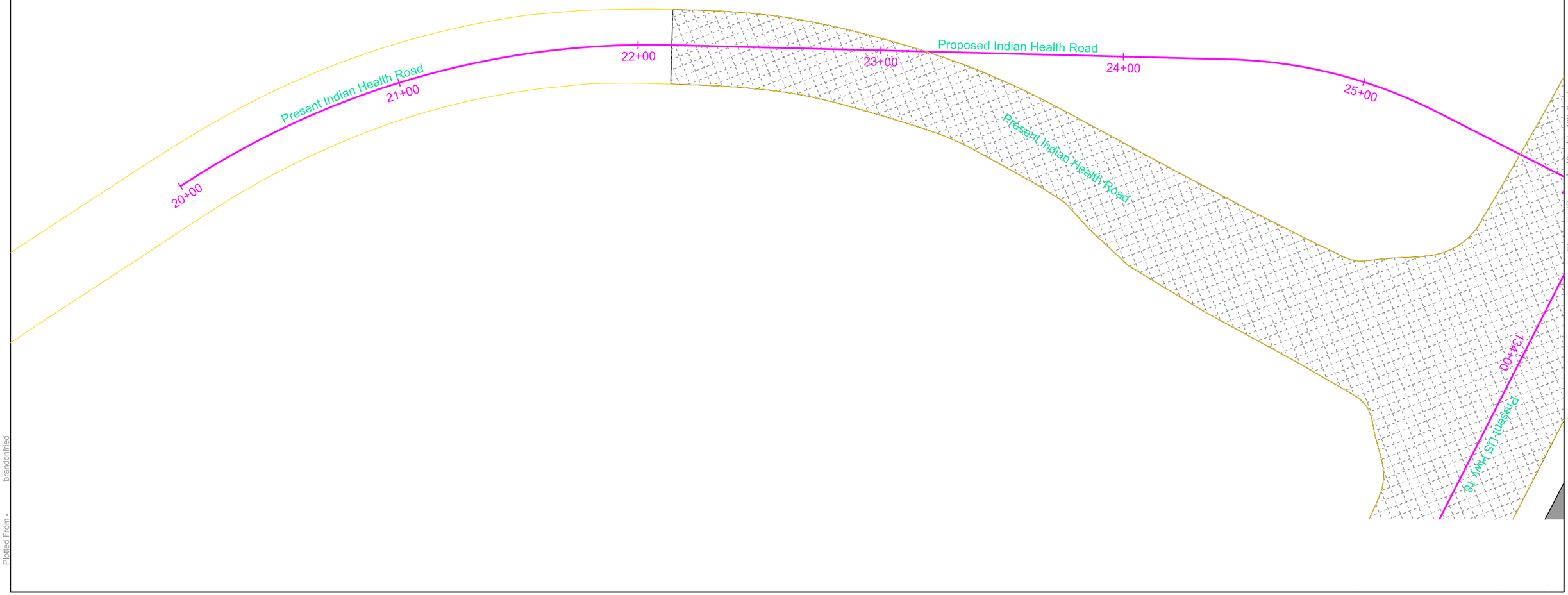

Plot Scale - 1:40

Plotted From - brandonfried

File - ...\Removals_40scale\xr133_0pr.dgn

PAVEMENT REMOVAL LAYOUT

FOR BIDDING PURPOSES ONLY

KLJ	STATE OF SOUTH DAKOTA	PROJECT	SHEET	TOTAL SHEETS
		NH-CR-EM 0018(195)103 P 0407(05)01	B88	B166

Plotting Date: 8/2/2024

Rev. 8/2/2024 BAF

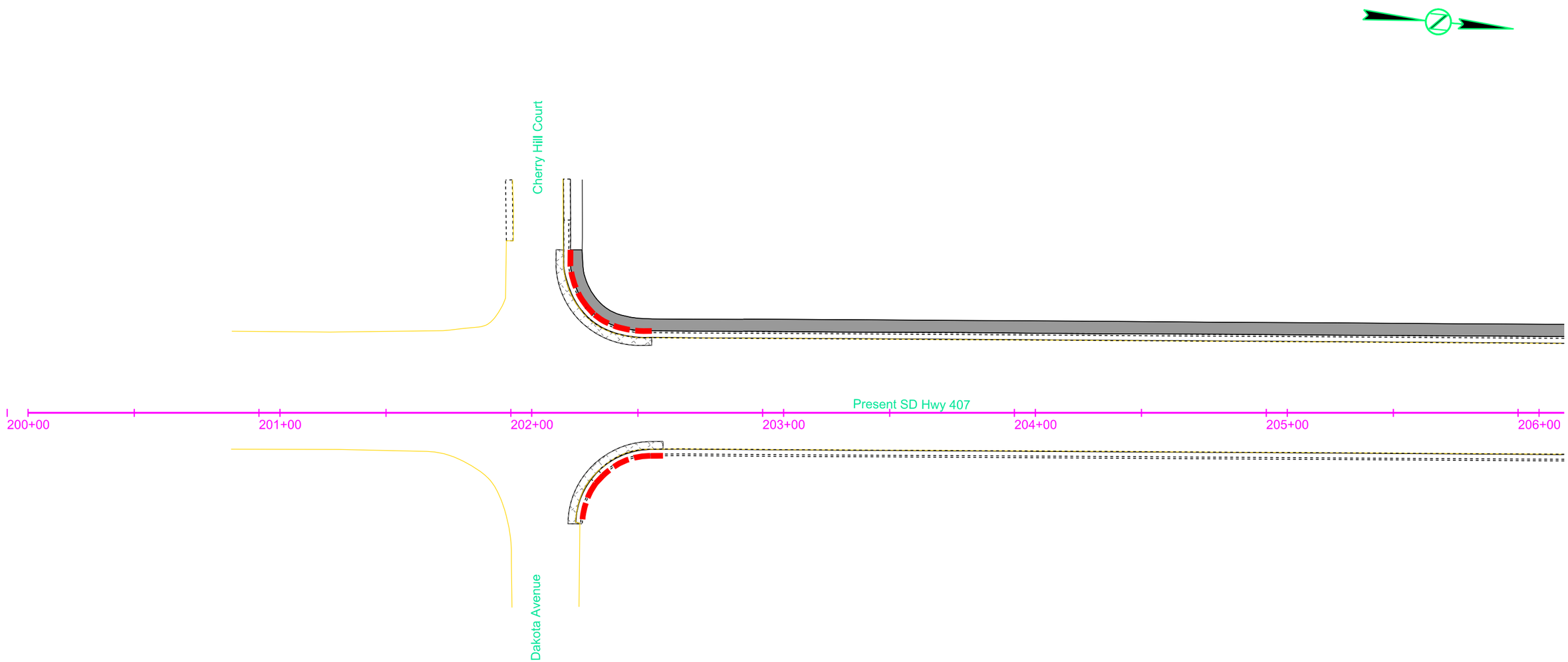

REGISTERED PROFESSIONAL ENGINEER
REG. NO.
11522
BRANDON
FRIED
SOUTH DAKOTA
8/2/24

Plot Scale - 1:40

Plotted From - brandonfried

File - ...\Removals_40scale\200pr.dgn

PAVEMENT REMOVAL LAYOUT

FOR BIDDING PURPOSES ONLY

KLJ	STATE OF SOUTH DAKOTA	PROJECT	SHEET	TOTAL SHEETS
		NH-CR-EM 0018(195)103 P 0407(05)01	B89	B166

Plotting Date: 8/2/2024

Rev. 8/2/2024 BAF

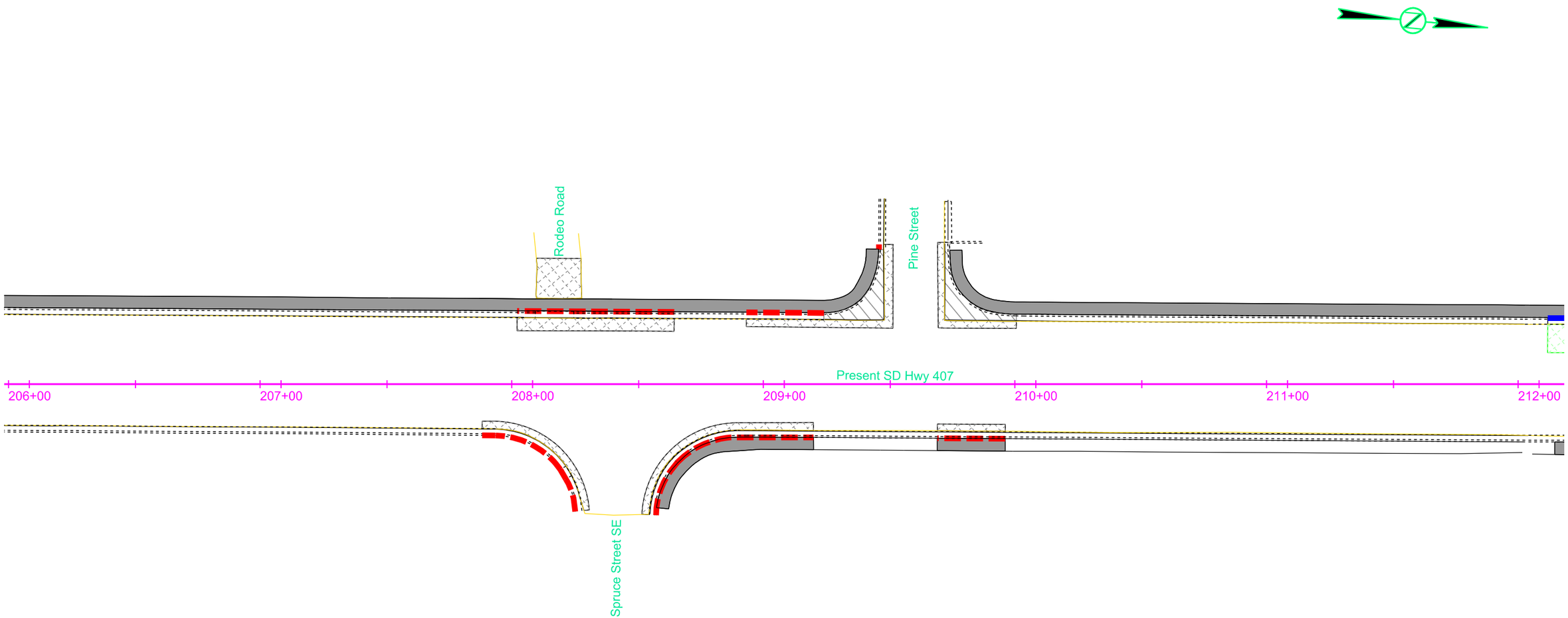

REGISTERED PROFESSIONAL ENGINEER
REG. NO.
11522
BRANDON
FRIED
SOUTH DAKOTA
8/2/24

Plot Scale - 1:40

Plotted From - brandonfried

File - ...\Removals_40scale\206pr.dgn

PAVEMENT REMOVAL LAYOUT

FOR BIDDING PURPOSES ONLY

KLJ	STATE OF SOUTH DAKOTA	PROJECT	SHEET	TOTAL SHEETS
		NH-CR-EM 0018(195)103 P 0407(05)01	B90	B166

Plotting Date: 8/2/2024

Rev. 8/2/2024 BAF

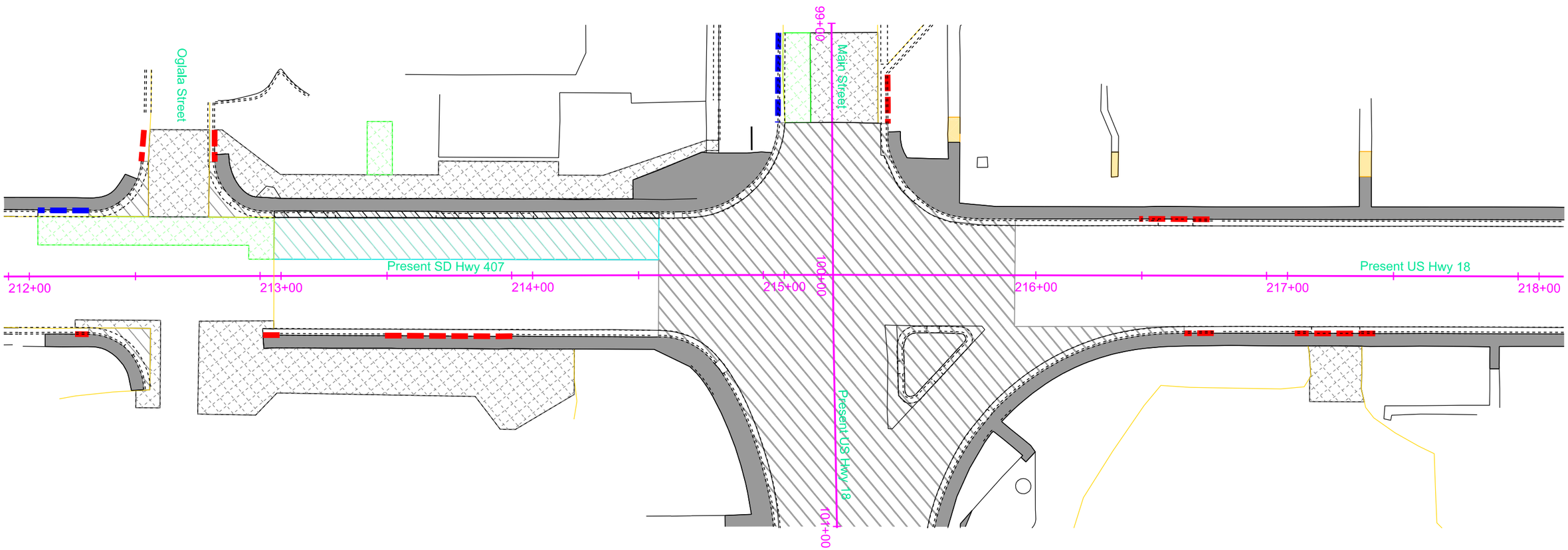

REGISTERED PROFESSIONAL ENGINEER
REG. NO.
11522
BRANDON
FRIED
SOUTH DAKOTA
8/2/24

Plot Scale - 1:40

Plotted From - brandonfried

File - ...\Removals_40scale\212pr.dgn

PAVEMENT REMOVAL LAYOUT

FOR BIDDING PURPOSES ONLY

KLJ	STATE OF SOUTH DAKOTA	PROJECT	SHEET	TOTAL SHEETS
		NH-CR-EM 0018(195)103 P 0407(05)01	B91	B166

Plotting Date: 8/2/2024

Rev. 8/2/2024 BAF

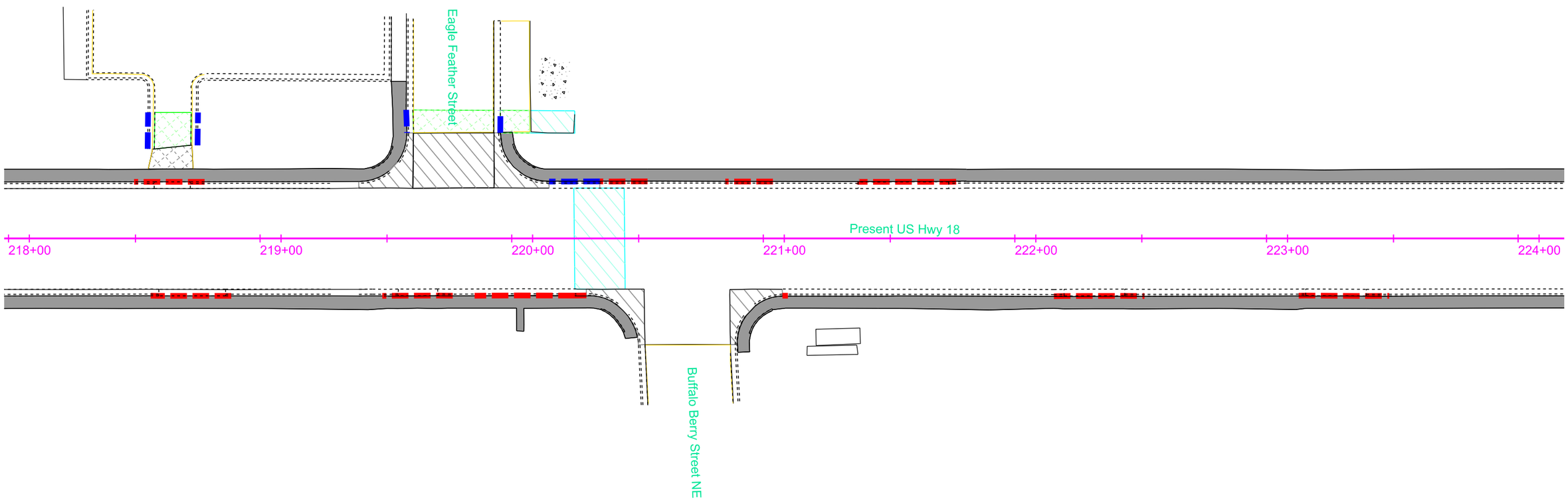

REGISTERED PROFESSIONAL ENGINEER
REG. NO.
11522
BRANDON
FRIED
SOUTH DAKOTA
8/2/24

Plot Scale - 1:40

Plotted From - brandonfried

File - ...\Removals_40scale\218pr.dgn

PAVEMENT REMOVAL LAYOUT

FOR BIDDING PURPOSES ONLY

KLJ	STATE OF SOUTH DAKOTA	PROJECT	SHEET	TOTAL SHEETS
		NH-CR-EM 0018(195)103 P 0407(05)01	B92	B166

Plotting Date: 8/2/2024

Rev. 8/2/2024 BAF

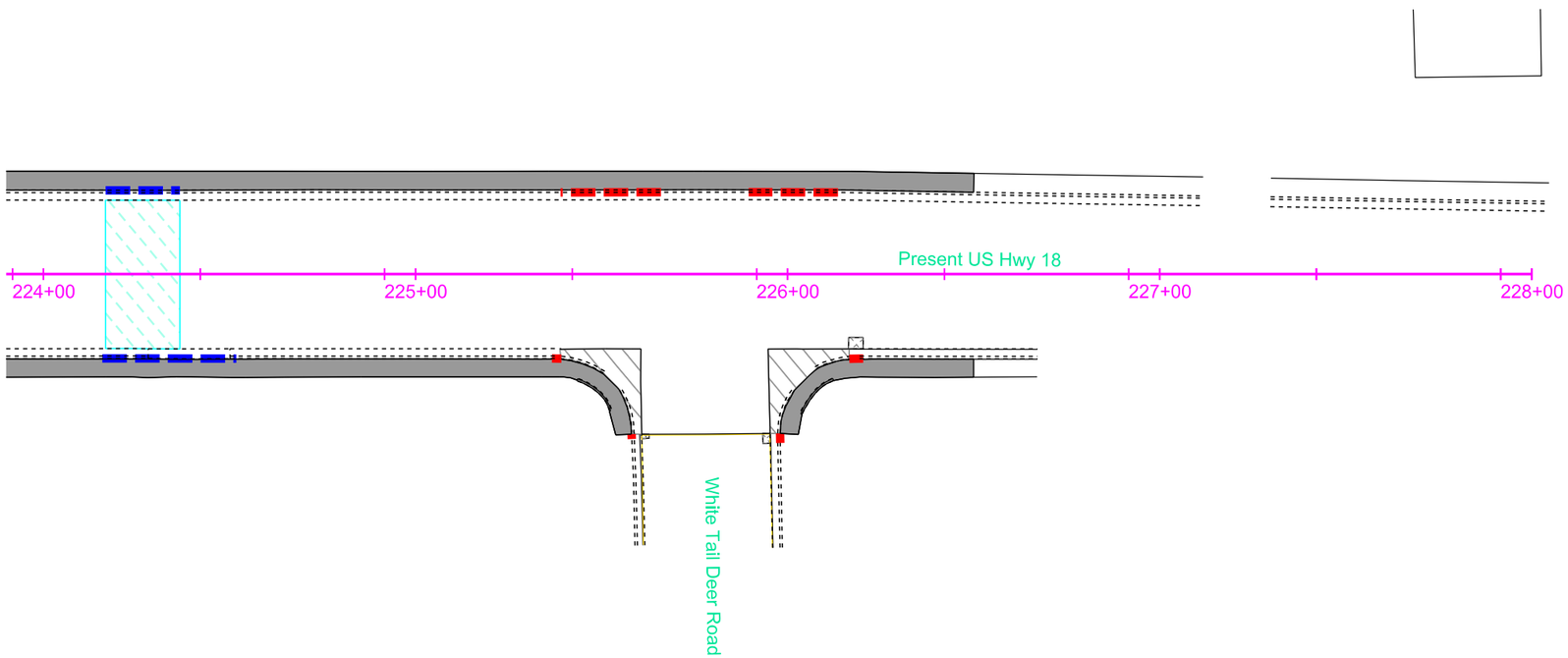

REGISTERED PROFESSIONAL ENGINEER
REG. NO.
11522
BRANDON
FRIED
SOUTH DAKOTA
8/2/24

Plot Scale - 1:40

Plotted From - brandonfried

File - ...\Removals_40scale\224pr.dgn

CURB AND GUTTER LAYOUT

FOR BIDDING PURPOSES ONLY

KLJ	STATE OF SOUTH DAKOTA	PROJECT	SHEET	TOTAL SHEETS
		NH-CR-EM 0018(195)103 P 0407(05)01	B93	B166

Plotting Date: 8/2/2024

Rev. 8/2/2024 BAF

Note: All curb and gutter shown on this sheet is Modified Type B68 and all gutter is Modified Type P8 except as noted.
See special detail sheet for PCC Fillet.
All Station / Offsets for number points are to the front of the gutter pan except as noted.
All Radii listed for both Fillets and C&G are measured to the Back of the Curb.
All sidewalk is 5' wide except as noted.

1 100+38.47-88.12' L
End Transition C & G
Begin 98.33' Rad C & G
TC Elev 3236.71

2 100+47.59-75.48' L
TC Elev 3237.21

3 100+53.91-68.62' L
End 98.33' Rad C & G
Begin Str C & G
TC Elev 3237.35

4 100+57.69-64.98' L
End Str C & G
Begin Type P8 Gutter
TC Elev 3237.43

5 100+61.14-61.45' L
End Type P8 Gutter
Begin Str C & G
TC Elev 3237.51

6 100+68.63-54.03' L
TC Elev 3237.66

7 100+78.10-44.66' L
End Str C & G
Begin 59.33' Rad C & G
TC Elev 3238.15

8 100+87.35-37.55' L
TC Elev 3238.55

9 100+98.10-32.08' L
TC Elev 3238.61

10 101+09.66-28.70' L
TC Elev 3238.62

11 101+23.15-27.50' L
End 59.33' Rad C & G
Begin Str C & G
TC Elev 3238.57

12 102+62.15-27.50' L
End Str C & G
Begin Str C&G
TC Elev 3238.07

13 103+87.45-16.50' L
End Str C & G
Begin Str C & G
TC Elev 3238.75

14 104+46.25-16.50' L
End Str C & G
Begin Type P Gutter
TC Elev 3239.30 (Theor)

15 104+70.25-16.50' L
End Type P Gutter
Begin Str C & G
TC Elev 3239.60 (Theor)

16 105+90.33-16.50' L
End Str C & G
Begin 17.33' Rad Fillet
TC Elev 3241.84 (Theor)

Inset A

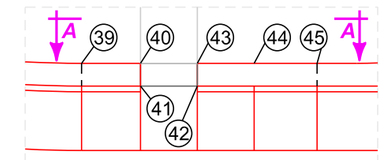

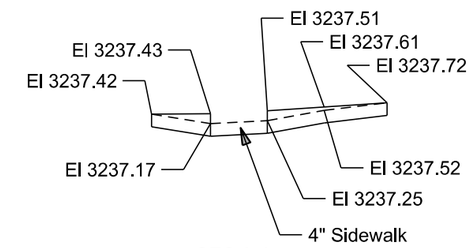

SEC A-A
(NOT TO SCALE)

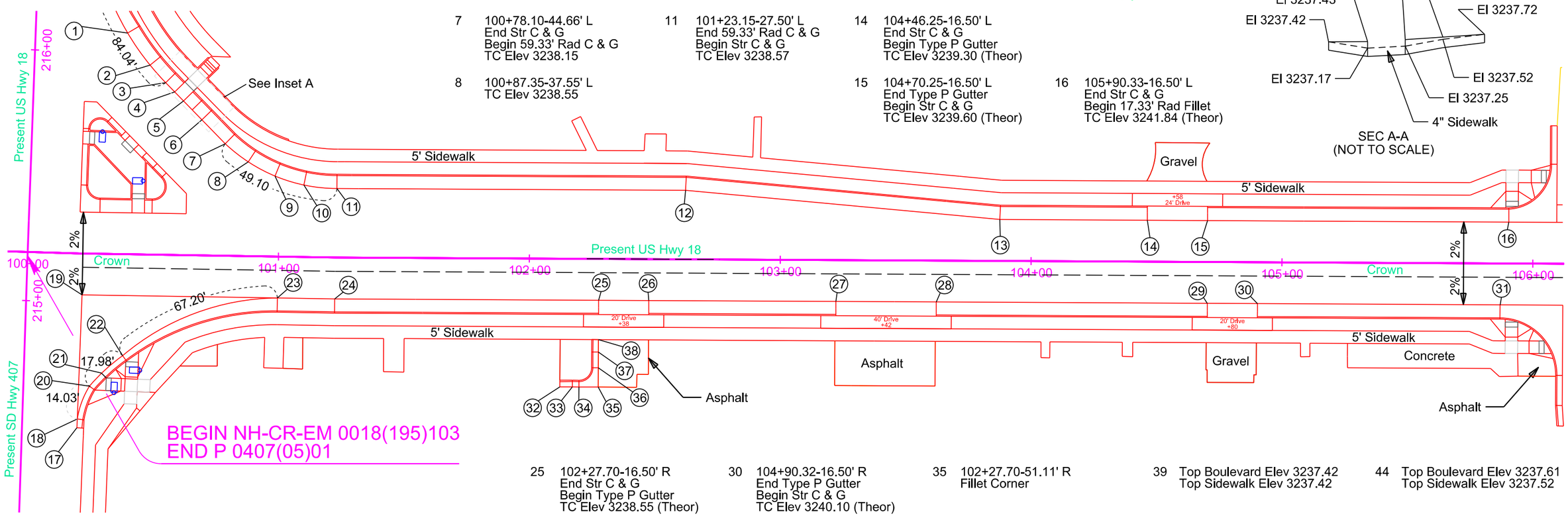

17 100+20.73-69.50' R
Begin Str Type B68 C & G
TC Elev 3240.78
(Match Existing)

18 100+20.87-65.99' R
End Str Type B68 C & G
Begin 32.50' Rad Type B68 C & G
TC Elev 3240.97

19 100+21.97-16.50' R
Fillet Corner

20 100+25.48-52.84' R
End 32.50' Rad Type B68 C & G
Begin 69.91' Rad Type B68 C & G
TC Elev 3240.67 (Theor)

21 100+30.26-47.58' R
TC Elev 3240.61 (Theor)

22 100+38.50-40.50' R
End 69.91' Rad Type B68 C & G
Begin 97.33' Rad Transition C & G
TC Elev 3240.59 (Theor)

23 101+00.53-16.50' R
End 97.33' Rad Transition C & G
Begin Str C & G
TC Elev 3239.13

24 101+23.73-16.50' R
End Str C & G
Begin Str C & G
TC Elev 3239.01

25 102+27.70-16.50' R
End Str C & G
Begin Type P Gutter
TC Elev 3238.55 (Theor)

26 102+47.70-16.50' R
End Type P Gutter
Begin Str C & G
TC Elev 3238.52 (Theor)

27 103+22.29-16.50' R
End Str C & G
Begin Type P Gutter
TC Elev 3238.61 (Theor)

28 103+62.29-16.50' R
End Type P Gutter
Begin Str C & G
TC Elev 3238.80 (Theor)

29 104+70.32-16.50' R
End Str C & G
Begin Type P Gutter
TC Elev 3239.92 (Theor)

30 104+90.32-16.50' R
End Type P Gutter
Begin Str C & G
TC Elev 3240.10 (Theor)

31 105+87.02-16.50' R
End Str C & G
Begin 22.33' Rad Fillet
TC Elev 3241.99

32 102+12.41-51.09' R
Begin Str Type B68 C & G
TC Elev 3239.59
(Match Existing)

33 102+17.41-51.10' R
TC Elev 3239.57

34 102+20.03-51.11' R
End Str Type B68 C & G
Begin 5.00' Rad Fillet
TC Elev 3239.51

35 102+27.70-51.11' R
Fillet Corner

36 102+27.70-43.44' R
End 5.00' Rad Fillet
Begin Str Type B68 C & G
TC Elev 3239.24

37 102+27.70-37.17' R
TC Elev 3239.16

38 102+27.70-32.17' R
End Str Type B68 C & G
TC Elev 3238.69
(Match Sidewalk)

39 Top Boulevard Elev 3237.42
Top Sidewalk Elev 3237.42

40 Top Boulevard Elev 3237.43
Top Sidewalk Elev 3237.17

41 Top Boulevard Elev 3237.43
Top Sidewalk Elev 3237.01

42 Top Boulevard Elev 3237.51
Top Sidewalk Elev 3237.09

43 Top Boulevard Elev 3237.51
Top Sidewalk Elev 3237.25

44 Top Boulevard Elev 3237.61
Top Sidewalk Elev 3237.52

45 Top Boulevard Elev 3237.72
Top Sidewalk Elev 3237.72

REGISTERED PROFESSIONAL ENGINEER
REG. NO
11522
BRANDON
FRIED
SOUTH DAKOTA
8/2/24

Plot Scale - 1:40
Plotted From - brandonfried
File - ...\Curb&Gutter_40scale\100cg.dgn

CURB AND GUTTER LAYOUT

FOR BIDDING PURPOSES ONLY

KLJ	STATE OF SOUTH DAKOTA	PROJECT	SHEET	TOTAL SHEETS
		NH-CR-EM 0018(195)103 P 0407(05)01	B94	B166

Plotting Date: 8/2/2024

Rev. 8/2/2024 BAF

Note: All curb and gutter shown on this sheet is Modified Type B68 and all gutter is Modified Type P8 except as noted.
See special detail sheet for PCC Fillet.
All Station / Offsets for number points are to the front of the gutter pan except as noted.
All Radii listed for both Fillets and C&G are measured to the Back of the Curb.
All sidewalk is 5' wide except as noted.

1 106+09.46-16.50' L
Begin Str Valley Gutter

2 106+06.64-37.23' L
TC Elev 3241.94 (Theor)

3 106+09.46-39.65' L
End 17.33' Rad Fillet
Begin Str Type B68 C & G
TC Elev 3241.94

4 106+09.46-55.00' L
End Str Type B68 C & G
TC Elev 3241.71
(Match Existing)

5 106+45.46-78.24' L
Begin Tapered Type P8 Gutter
TC Elev 3242.80
(Match Existing)

6 106+44.90-73.24' L
End Tapered Type P8 Gutter
Begin Str Type P8 Gutter
TC Elev 3243.08 (Theor)

7 106+44.35-55.00' L
End Str Type P8 Gutter
Begin Str Type B68 C & G
TC Elev 3243.14 (Theor)

8 106+44.35-50.00' L
TC Elev 3243.13 (Theor)

9 106+44.35-49.32' L
End Str Type P8 Gutter
Begin Str Type B68 C & G
TC Elev 3243.08 (Theor)

10 106+44.35-39.65' L
End Str Type B68 C & G
Begin 17.33' Rad Fillet
TC Elev 3243.26

11 106+47.17-37.23' L
TC Elev 3243.11 (Theor)

12 106+44.35-16.50' L
End Str Valley Gutter

13 106+62.97-16.50' L
End 17.33' Rad Fillet
Begin 1887.69' Rad C & G
TC Elev 3243.82

14 106+99.78-16.50' L
End 1887.69' Rad C & G
Begin 1887.69 Rad Type P Gutter
TC Elev 3244.94 (Theor)

15 107+70.45-16.50' L
End 1887.69' Rad Type P Gutter
Begin 1887.69' Rad C & G
TC Elev 3246.99 (Theor)

16 108+68.74-16.50' L
End 1887.69' Rad C & G
Begin 1887.69' Rad Type P Gutter
TC Elev 3248.84 (Theor)

17 108+84.90-16.50' L
End 1887.69' Rad Type P Gutter
Begin 1887.69' Rad C & G
TC Elev 3249.02 (Theor)

18 109+51.31-16.50' L
End 1887.69' Rad C & G
Begin Str C & G
TC Elev 3249.44

19 110+03.00-16.50' L
End Str C & G
Begin 17.33' Rad Fillet
TC Elev 3249.67

20 110+19.89-16.50' L
Fillet Corner

21 110+17.91-30.67' L
TC Elev 3249.15 (Theor)

22 110+22.80-36.64' L
End 17.33' Rad Fillet
Begin Str Type B68 C & G
TC Elev 3248.87

23 110+24.28-46.95' L
TC Elev 3248.40

24 110+29.07-80.09' L
End Str Type B68 C & G
Begin Str Type B68 C&G
TC Elev 3244.65

25 110+31.32-89.87' L
End Str Type B68 C & G
TC Elev 3243.49
(Match Existing)

26 110+65.58-84.92' L
Begin Str Type B68 C & G
TC Elev 3243.45
(Match Existing)

27 110+64.10-75.03' L
End Str Type B68 C & G
Begin Str Type B68 C & G
TC Elev 3244.65

28 110+59.31-41.89' L
End Str Type B68 C & G
Begin 17.33' Rad Fillet
TC Elev 3248.84

29 110+55.65-16.50' L
Fillet Corner

30 110+77.63-16.50' L
End 17.33' Rad Fillet
Begin Str C & G
TC Elev 3249.99

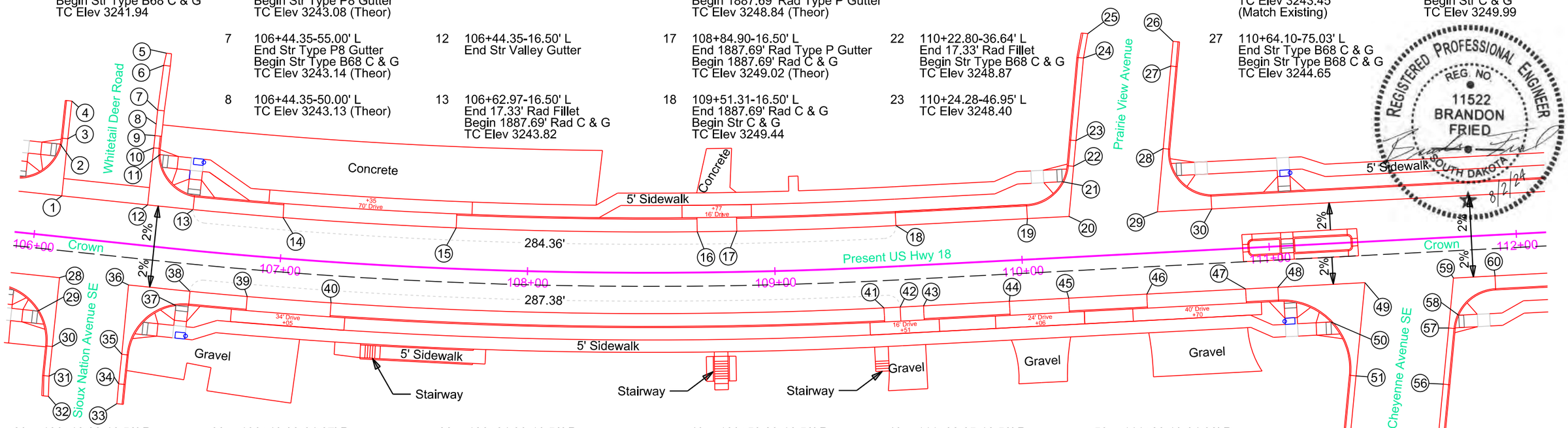

REGISTERED PROFESSIONAL ENGINEER
REG. NO.
11522
BRANDON
FRIED
SOUTH DAKOTA
8/2/24

28 106+12.02-16.50' R
Fillet Corner

29 106+04.67-30.83' R
TC Elev 3241.91 (Theor)

30 106+12.02-44.50' R
End 22.33' Rad Fillet
Begin Str Type B68 C & G
TC Elev 3241.68

31 106+12.02-56.50' R
End Str Type B68 C & G
Begin Str Type B68 C & G
TC Elev 3241.68

32 106+12.57-64.67' R
End Str Type B68 C & G
TC Elev 3241.75
(Match Existing)

33 106+40.38-64.67' R
Begin Str Type B68 C & G
TC Elev 3242.69
(Match Existing)

34 106+40.28-56.62' R
End Str Type B68 C & G
Begin Str Type B68 C & G
TC Elev 3242.53

35 106+40.28-44.64' R
End Str Type B68 C & C
Begin 22.33' Rad Fillet
TC Elev 3242.53

36 106+40.04-16.50' R
Fillet Corner

37 106+06.64-37.23' L
TC Elev 3244.03 (Theor)

38 106+64.90-16.50' R
End 22.33' Rad Fillet
Begin 1932.03' Rad C & G
TC Elev 3244.10

39 106+87.92-16.50' R
End 1932.03' Rad C & G
Begin 1932.03' Rad Type P Gutter
TC Elev 3244.80 (Theor)

40 107+21.64-16.50' R
End 1932.03' Rad Type P Gutter
Begin 1932.03' Rad C & G
TC Elev 3245.83 (Theor)

41 109+43.31-16.50' R
End 1932.03' Rad C & G
Begin 1932.03' Rad Type P Gutter
TC Elev 3049.63 (Theor)

42 109+50.33-16.50' R
End 1932.03' Rad Type P Gutter
Begin Str Type P Gutter
TC Elev 3249.66 (Theor)

43 109+59.23-16.50' R
End Str Type P Gutter
Begin Str C & G
TC Elev 3249.70 (Theor)

44 109+94.01-16.50' R
End Str C & G
Begin Str Type P Gutter
TC Elev 3249.85 (Theor)

45 110+18.00-16.50' R
End Str Type P Gutter
Begin Str C & G
TC Elev 3249.96 (Theor)

46 110+49.62-16.50' R
End Str C & G
Begin Str Type P Gutter
TC Elev 3250.09 (Theor)

47 110+89.62-16.50' R
End Str Type P Gutter
Begin Str C & G
TC Elev 3250.27 (Theor)

48 111+02.65-16.50' R
End Str C & G
Begin 27.33' Rad Fillet
TC Elev 3250.32

49 111+37.88-16.50' R
Fillet Corner

50 111+23.34-31.64' R
TC Elev 3250.09 (Theor)

51 111+32.32-53.91' R
End 27.33' Rad Fillet
Begin Str Type B68 C & G
TC Elev 3248.81

52 111+28.46-79.92' R
End Str Type B68 C & G
Begin Str Type B68 C & G
TC Elev 3248.15

53 111+28.10-84.92' R
End Str Type B68 C&G
TC Elev 3247.68
(Match Existing)

54 111+62.03-89.96' R
Begin Str Type B68 C & G
TC Elev 3247.57
(Match Existing)

55 111+63.52-85.13' R
End Str Type B68 C&G
Begin Str Type B68 C & G
TC Elev 3248.15

56 111+67.38-59.12' R
TC Elev 3248.81

57 111+70.74-36.56' R
End Str Type B68 C & G
Begin 17.33' Rad Fillet
TC Elev 3249.99

58 111+75.08-31.64' R
TC Elev 3250.20 (Theor)

59 111+73.72-16.50' R
Fillet Corner

60 111+90.52-16.50' R
End 17.33' Rad Fillet
Begin Str C & G
TC Elev 3250.70

Plot Scale - 1:40
Plotted From - brandonfried
File - ...\Curb&Gutter_40scale\106cg.dgn

CURB AND GUTTER LAYOUT

FOR BIDDING PURPOSES ONLY

KLJ	STATE OF SOUTH DAKOTA	PROJECT	SHEET	TOTAL SHEETS
		NH-CR-EM 0018(195)103 P 0407(05)01	B95	B166

Plotting Date: 8/2/2024

Rev. 8/2/2024 BAF

Note: All curb and gutter shown on this sheet is Type B68 and all gutter is Type P8 except as noted.
All Station / Offsets for number points are to the front of the gutter pan except as noted.
All Radii listed for both Fillets and C&G are measured to the Back of the Curb.

1 110+89.28-1.42' L
End Str C & G
Begin 1.33' Rad Fillet
TC Elev 3251.23

2 110+89.20-5.50' L
Fillet Corner

3 110+93.28-5.50' L
End 1.33' Rad Fillet
Beg Str C & G
TC Elev 3251.16

4 111+04.87-5.50' L
End Str C & G
Begin Str Type P Gutter
TC Elev 3251.19

5 111+09.87-5.50' L
End Str Type P Gutter
Begin Str C & G
TC Elev 3251.21

6 111+31.81-5.50' L
End Str C & G
Begin 1.33' Rad Fillet
TC Elev 3251.27

7 111+35.73-5.50' L
Fillet Corner

8 111+35.80-1.58' L
End 1.33' Rad Fillet
Begin Str C & G
TC Elev 3251.36

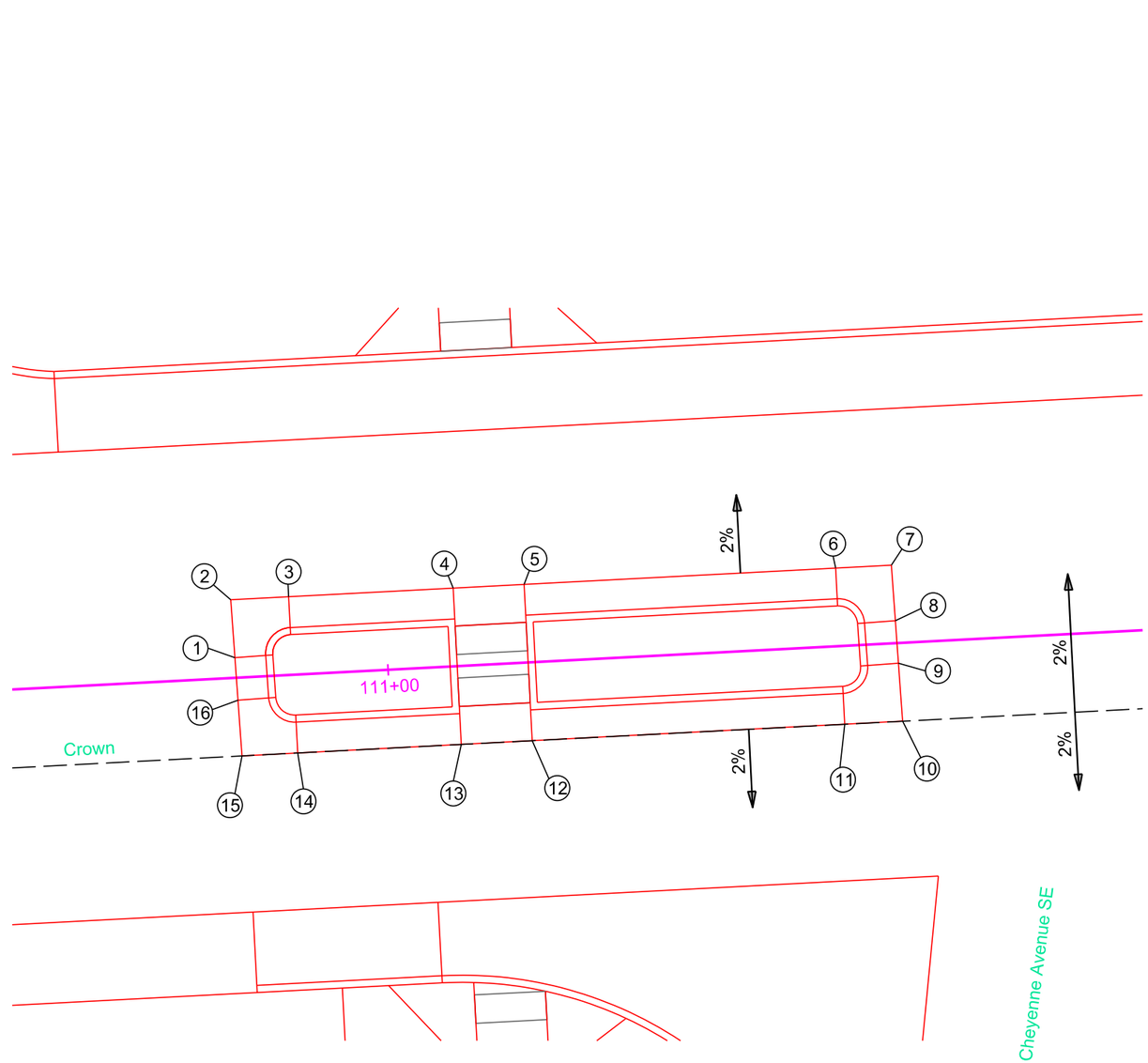

9 111+35.86-1.42' R
End Str C & G
Begin 1.33' Rad Fillet
TC Elev 3251.42

10 111+35.95-5.50' R
Fillet Corner

11 111+31.87-5.50' R
End 1.33' Rad FIllet
Begin Str C & G
TC Elev 3251.49

12 111+09.87-5.50' R
End Str C & G
Begin Str Type P Gutter
TC Elev 3251.43

13 111+04.87-5.50' R
End Str Type P Gutter
Begin Str C & G
TC Elev 3251.41

14 110+93.34-5.50' R
End Str C & G
Begin 1.33' Rad Fillet
TC Elev 3251.38

15 110+89.42-5.50' R
Fillet Corner

16 110+89.34-1.58' R
End 1.33' Rad Fillet
Begin Str C & G
TC Elev 3251.29

REGISTERED PROFESSIONAL ENGINEER
REG. NO.
11522
BRANDON
FRIED
SOUTH DAKOTA
8/2/24

Plot Scale - 1:10
Plotted From - brandonfried
File - ...\mediancg.dgn

CURB AND GUTTER LAYOUT

FOR BIDDING PURPOSES ONLY

KLJ	STATE OF SOUTH DAKOTA	PROJECT	SHEET	TOTAL SHEETS
		NH-CR-EM 0018(195)103 P 0407(05)01	B96	B166

Plotting Date: 8/2/2024

Rev. 8/2/2024 BAF

Note: All curb and gutter shown on this sheet is Modified Type B68 and all gutter is Modified Type P8 except as noted.
See special detail sheet for PCC Fillet.
All Station / Offsets for number points are to the front of the gutter pan except as noted.
All Radii listed for both Fillets and C&G are measured to the Back of the Curb.
All sidewalk is 5' wide except as noted.

1 113+68.61-16.50' L
End Str C & G
Begin 27.33' Rad Fillet
TC Elev 3251.88

2 113+94.02-16.50' L
Fillet Corner

3 113+87.41-29.67' L
TC Elev 3252.10 (Theor)

4 113+98.28-45.08' L
End 27.33' Rad Fillet
Begin Str Type B68 C & G
TC Elev 3252.25

5 113+99.51-53.31' L
TC Elev 3252.18

6 114+02.47-73.24' L
End Str Type B68 C & G
Begin Str Type B68 C & G
TC Elev 3250.15

7 114+03.09-78.20' L
End Str Type B68 C & G
TC Elev 3249.52
(Match Existing)

8 114+37.25-73.11' L
Begin Str Type B68 C & G
TC Elev 3249.98
(Match Existing)

9 114+36.94-68.10' L
End Str Type B68 C & G
Begin Str Type B68 C & G
TC Elev 3250.50

10 114+33.98-48.18' L
End Str Type B68 C & G
Begin 22.33' Rad Fillet
TC Elev 3253.18

11 114+29.26-16.50' L
Fillet Corner

12 114+58.70-16.50' L
End 22.33' Rad Fillet
Begin Str C & G
TC Elev 3253.76

13 117+47.96-16.50' L
End Str C & G
Begin 22.33' Rad Fillet
TC Elev 3261.14

14 117+69.27-16.50' L
Begin Str Valley Gutter

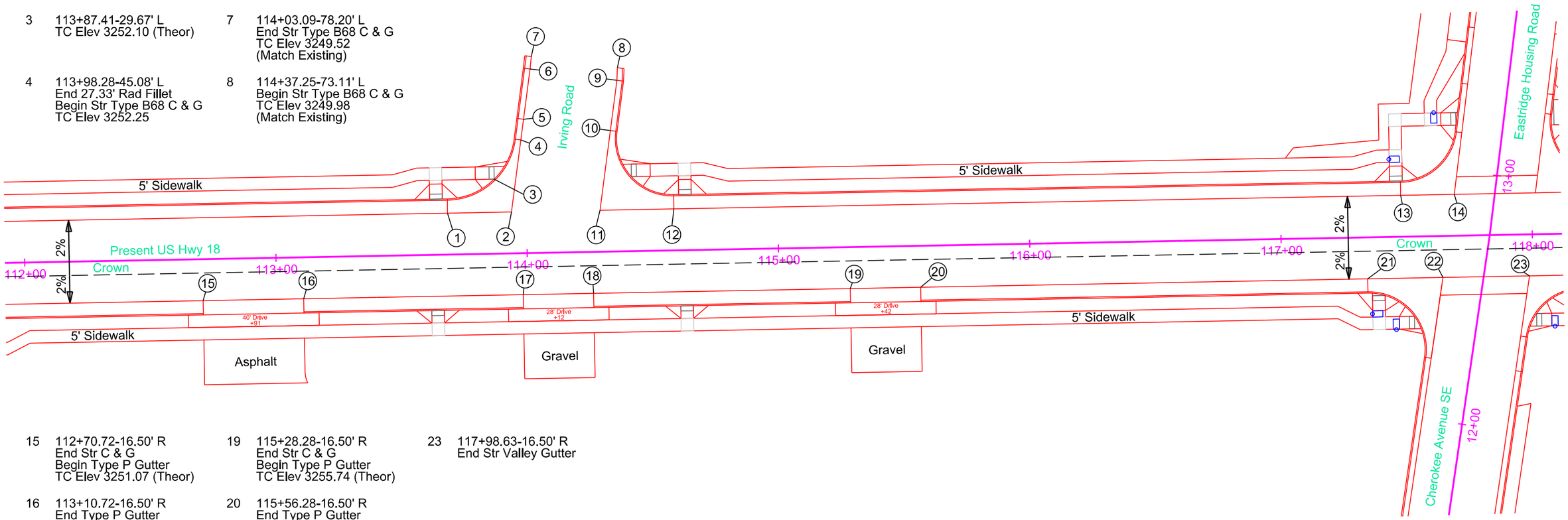

15 112+70.72-16.50' R
End Str C & G
Begin Type P Gutter
TC Elev 3251.07 (Theor)

16 113+10.72-16.50' R
End Type P Gutter
Begin Str C & G
TC Elev 3251.37 (Theor)

17 113+98.09-16.50' R
End Str C & G
Begin Type P Gutter
TC Elev 3252.62 (Theor)

18 114+26.09-16.50' R
End Type P Gutter
Begin Str C & G
TC Elev 3253.19 (Theor)

19 115+28.28-16.50' R
End Str C & G
Begin Type P Gutter
TC Elev 3255.74 (Theor)

20 115+56.28-16.50' R
End Type P Gutter
Begin Str C & G
TC Elev 3256.46 (Theor)

21 117+34.20-16.50' R
End Str C & G
Begin 22.33' Rad Fillet
TC Elev 3261.01 (Theor)

22 117+64.17-16.50' R
Begin Str Valley Gutter

23 117+98.63-16.50' R
End Str Valley Gutter

REGISTERED PROFESSIONAL ENGINEER
REG. NO.
11522
BRANDON
FRIED
SOUTH DAKOTA
8/2/24

Plot Scale - 1:40
Plotted From - brandonfried
File - ...\Curb&Gutter_40scale\1112cg.dgn

CURB AND GUTTER LAYOUT

FOR BIDDING PURPOSES ONLY

KLJ	STATE OF SOUTH DAKOTA	PROJECT	SHEET	TOTAL SHEETS
		NH-CR-EM 0018(195)103 P 0407(05)01	B97	B166

Plotting Date: 8/2/2024

Rev. 8/2/2024 BAF

Note: All curb and gutter shown on this sheet is Modified Type B68 and all gutter is Modified Type P8 except as noted.
See special detail sheet for PCC Fillet.
All Station / Offsets for number points are to the front of the gutter pan except as noted.
All Radii listed for both Fillets and C&G are measured to the Back of the Curb.
All sidewalk is 5' wide except as noted.

1 118+01.53-16.50' L
End Str Valley Gutter

2 118+30.76-16.50' L
End 22.33' Rad Fillet
Begin Str C & G
TC Elev 3263.16

3 118+97.64-16.50' L
End Str C & G
Begin 3841.89' Rad C & G
TC Elev 3264.45

4 119+32.72-16.50' L
End 3841.89' Rad C & G
Begin 3841.89' Rad Type P Gutter
TC Elev 3265.03 (Theor)

5 119+52.60-16.50' L
End 3841.89' Rad Type P Gutter
Begin 3841.89' Rad C & G
TC Elev 3265.31 (Theor)

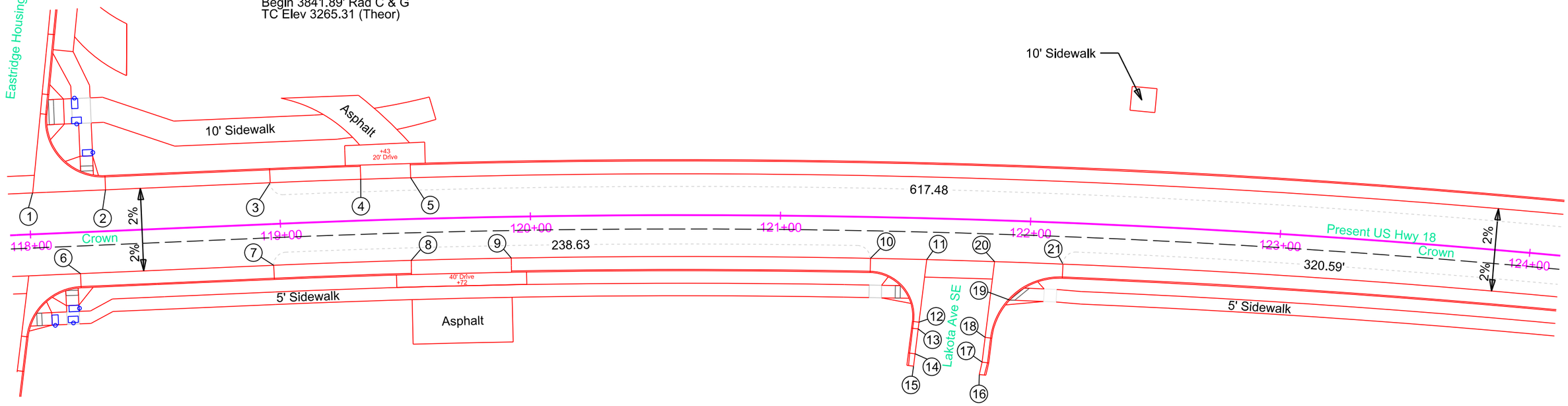

6 118+19.34-16.50' R
End 22.33' Rad Fillet
Begin Str C & G
TC Elev 3263.13

7 118+97.56-16.50' R
End Str C & G
Begin 3797.55' Rad C & G
TC Elev 3264.67

8 119+51.86-16.50' R
End 3797.55' Rad C & G
Begin 3797.55' Rad Type P Gutter
TC Elev 3265.52 (Theor)

9 119+92.06-16.50' R
End 3797.55' Rad Type P Gutter
Begin 3797.55' Rad C & G
TC Elev 3265.99 (Theor)

10 121+36.32-16.50' R
End 3797.55' Rad C & G
Begin 17.33' Rad Fillet
TC Elev 3266.76

11 121+58.94-16.50' R
Begin Str Valley Gutter

12 121+56.43-41.54' R
End 17.33' Radius Fillet
Begin Str Type B68 C & G
TC Elev 3267.03

13 121+56.15-44.26' R
TC Elev 3267.01

14 121+55.14-54.21' R
End Str Type B68 C & G
Begin Str Type B68 C & G
TC Elev 3266.81

15 121+54.65-59.19' R
End Str Type B68 C & G
TC Elev 3266.71
(Match Existing)

16 121+81.44-61.74' R
Begin Str Type B68 C & G
TC Elev 3266.24
(Match Existing)

17 121+82.42-56.81' R
End Str Type B68 C & G
Begin Str Type B68 C & G
TC Elev 3266.32

18 121+83.35-46.85' R
End Str C & G
Begin 27.33' Rad Fillet
TC Elev 3266.48

18 121+92.70-31.65' R
TC Elev 3266.75 (Thoer)

20 121+83.35-16.50' R
End Str Valley Gutter

21 122+13.64-16.50' R
End 27.33' Rad Fillet
Begin 3797.55' Rad C & G
TC Elev 3266.60

REGISTERED PROFESSIONAL ENGINEER
REG. NO.
11522
BRANDON
FRIED
SOUTH DAKOTA
8/2/24

Plot Scale - 1:40
Plotted From - brandonfried
File - ...\Curb&Gutter_40scale\118cg.dgn

CURB AND GUTTER LAYOUT

FOR BIDDING PURPOSES ONLY

KLJ	STATE OF SOUTH DAKOTA	PROJECT	SHEET	TOTAL SHEETS
		NH-CR-EM 0018(195)103 P 0407(05)01	B98	B166

Plotting Date: 8/2/2024

Rev. 8/2/2024 BAF

Note: All curb and gutter shown on this sheet is Modified Type B68 and all gutter is Modified Type P8 except as noted.
See special detail sheet for PCC Fillet.
All Station / Offsets for number points are to the front of the gutter pan except as noted.
All Radii listed for both Fillets and C&G are measured to the Back of the Curb.
All sidewalk is 5' wide except as noted.

1 125+11.48-16.50' L
End 3841.89' Rad C & G
Begin 27.33' Rad Fillet
TC Elev 3265.49

2 125+50.50-16.50' L
Fillet Corner

3 125+40.15-56.30' L
End 27.33' Rad Fillet
Begin Str Type B68 C & G
TC Elev 3264.01

4 125+38.47-62.85' L
End Str Type B68 C & G
Begin Str Type B68 C & G
TC Elev 3263.94

5 125+37.48-67.75' L
End Str Type B68 C & G
TC Elev 3263.70
(Match Existing)

6 125+67.94-75.35' L
Begin Str Type B68 C & G
TC Elev 3263.80
(Match Existing)

7 125+69.10-70.49' L
End Str Type B68 C & G
Begin Str Type B68 C & G
TC Elev 3263.94

8 125+70.20-65.61' L
End Str Type B68 C & G
Begin 57.33' Rad C & G
TC Elev 3263.94

9 125+86.82-39.73' L
TC Elev 3264.57 (Theor)

10 125+81.44-16.50' L
Fillet Corner

11 126+27.48-16.50' L
End 57.33' Rad Fillet
Begin 3839.22' Rad C & G
TC Elev 3265.15

12 127+29.78-16.50' L
End 3841.89' Rad C & G
Begin 3841.89' Rad Type P Gutter
TC Elev 3264.61 (Theor)

13 127+69.57-16.50' L
End 3841.89' Rad Type P Gutter
Begin 3841.89' Rad C & G
TC Elev 3264.27 (Theor)

14 129+23.57-16.50' L
End 3841.89' Rad C & G
Begin 3841.89' Rad Type P Gutter
TC Elev 3262.08 (Theor)

15 129+63.37-16.50' L
End 3841.89' Rad Type P Gutter
Begin 3841.89' Rad C & G
TC Elev 3261.31 (Theor)

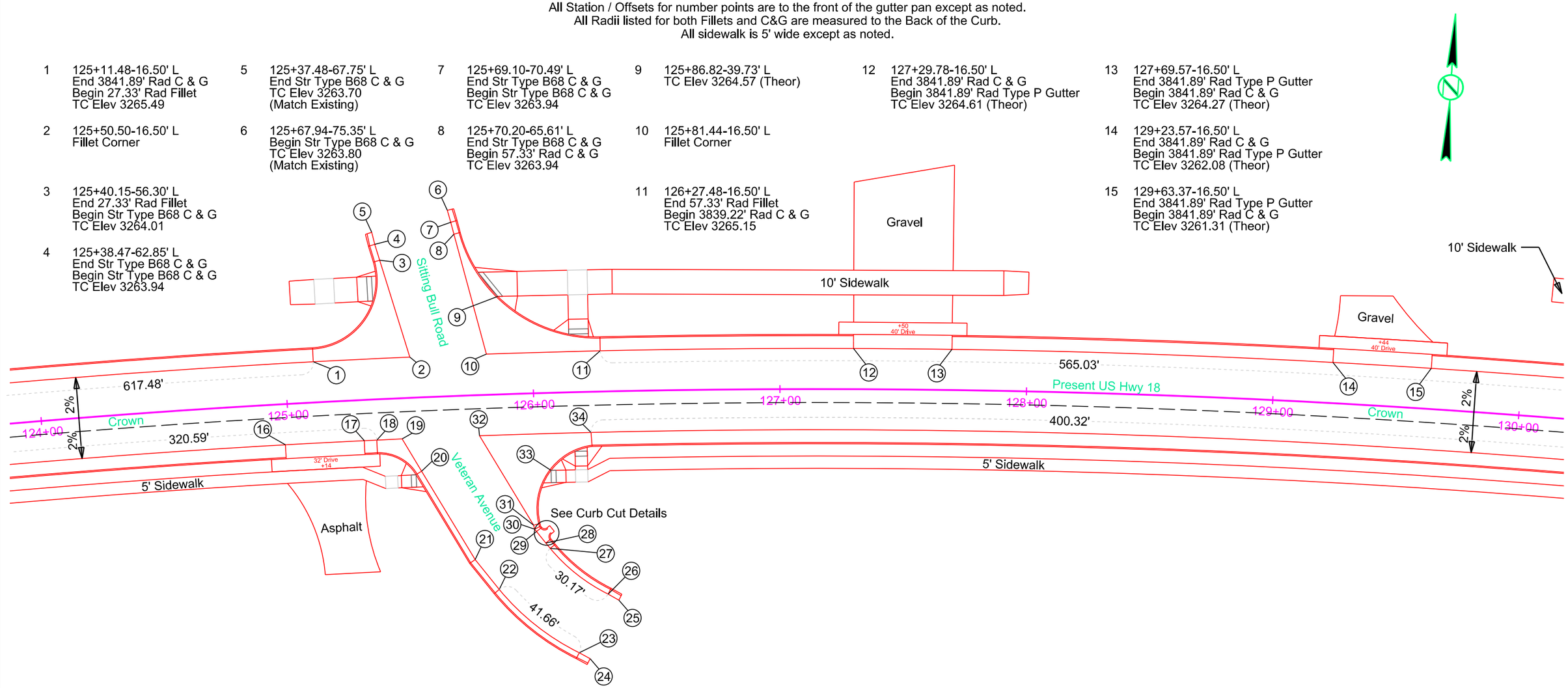

16 124+98.34-16.50' R
End 3797.55' Rad C & G
Begin 3797.55' Rad Type P Gutter
TC Elev 3265.75 (Theor)

17 125+30.51-16.50' R
End 3797.55' Rad Type P Gutter
Begin 3797.55' Rad C & G
TC Elev 3265.66 (Theor)

18 125+35.60-16.50' R
End 3797.55' Rad C & G
Begin 17.33' Rad Fillet
TC Elev 3265.64

19 125+47.93-16.50' R
Fillet Corner

20 125+53.32-29.92' R
End 17.33' Rad Fillet
Begin Str Type B68 C & G
TC Elev 3266.20

21 125+73.84-66.62' R
End Str Type B68 C & G
Begin Str Type B68 C & G
TC Elev 3266.45

22 125+83.40-79.10' R
End Str Type B68 C & G
Begin 101.25' Rad Type B68 C & G
TC Elev 3266.55

23 126+15.82-105.72' R
End 101.25' Rad Type B68 C & G
Begin Str Type B68 C & G
TC Elev 3266.80

24 126+20.29-108.21' R
End Str Type B68 C & G
TC Elev 3266.83
(Match Existing)

25 126+32.85-84.74' R
Begin Str Type B68 C & G
TC Elev 3266.97
(Match Existing)

26 126+28.43-82.20' R
End Str Type B68 C & G
Begin 69.36' Rad Type B68 C & G
TC Elev 3266.88

27 126+04.97-63.06' R
End 69.36' Rad Type B68 C & G
Begin Str C & G
TC Elev 3266.39

28 126+03.24-60.86' R
End Str Type B68 C & G
Begin 1.5' Rad Curb Cut
TC Elev 3266.34

29 125+99.55-56.08' R
End 1.5' Rad Curb Cut
Begin Str Type B68 C & G
TC Elev 3266.24

30 125+98.80-55.11' R
End Str Type B68 C & G
Begin Str Type B68 C & G
TC Elev 3266.23

31 125+98.44-53.48' R
End Str Type B68 C & G
Begin 25.40' Rad Fillet
TC Elev 3266.21

32 125+77.53-16.50' R
Fillet Corner

33 126+22.94-16.50' R
End 25.40' Rad Fillet
Begin 3797.55' Rad C & G
TC Elev 3266.10

34 126+22.94-16.50' R
End 25.40' Rad Fillet
Begin 3797.55' Rad C & G
TC Elev 3265.38

REGISTERED PROFESSIONAL ENGINEER
REG. NO.
11522
BRANDON
FRIED
SOUTH DAKOTA
8/2/24

Plot Scale - 1:40
Plotted From - brandonfried
File - ...\Curb&Gutter_40scale\124cg.dgn

CURB CUT DETAILS

FOR BIDDING PURPOSES ONLY

KLJ	STATE OF SOUTH DAKOTA	PROJECT	SHEET	TOTAL SHEETS
		NH-CR-EM 0018(195)103 P 0407(05)01	B99	B166

Plotting Date: 8/2/2024

Rev. 8/2/2024 BAF

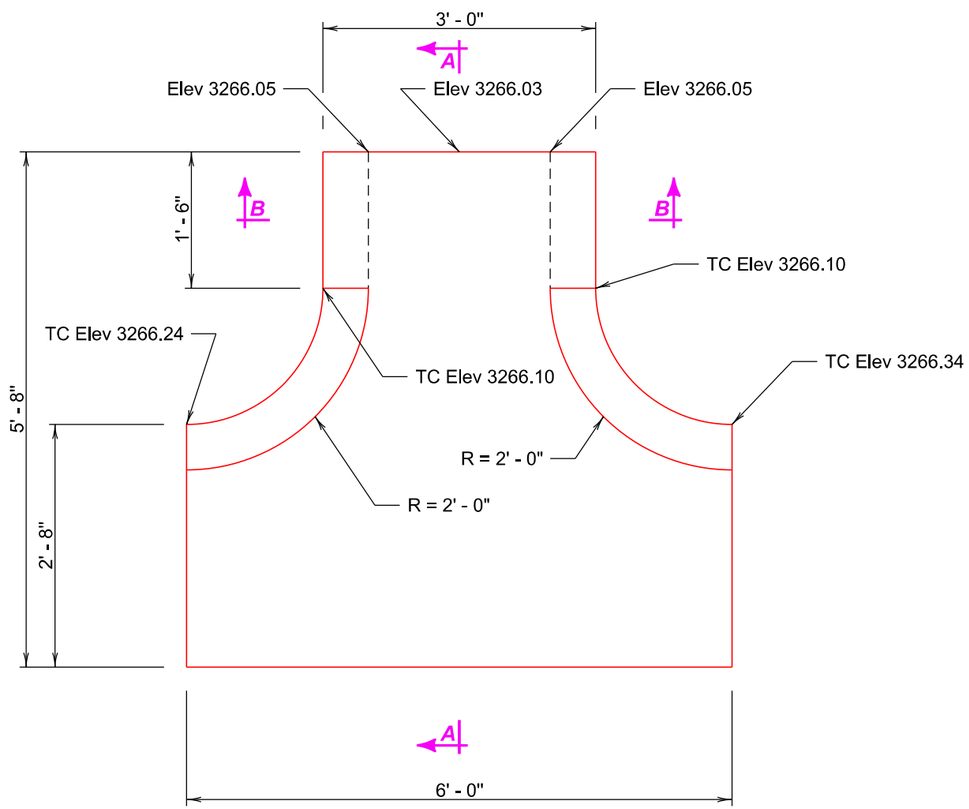

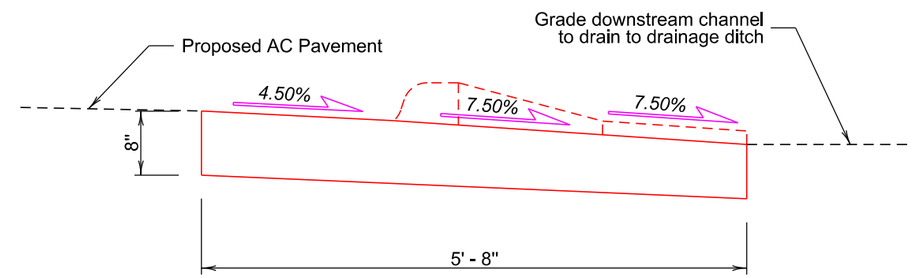

SECTION A-A

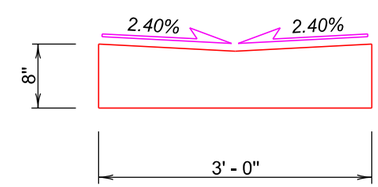

SECTION B-B

REGISTERED PROFESSIONAL ENGINEER
REG. NO.
11522
BRANDON
FRIED
SOUTH DAKOTA
8/2/24

Plot Scale - 1:40

Plotted From - brandonfried

File - ...\Details\cg.dgn

CURB AND GUTTER LAYOUT

FOR BIDDING PURPOSES ONLY

KLJ	STATE OF SOUTH DAKOTA	PROJECT	SHEET	TOTAL SHEETS
		NH-CR-EM 0018(195)103 P 0407(05)01	B100	B166

Plotting Date: 8/2/2024

Rev. 8/2/2024 BAF

Note: All curb and gutter shown on this sheet is Modified Type B68 and all gutter is Modified Type P8 except as noted.
See special detail sheet for PCC Fillet.
All Station / Offsets for number points are to the front of the gutter pan except as noted.
All Radii listed for both Fillets and C&G are measured to the Back of the Curb.
All sidewalk is 5' wide except as noted.

1 131+91.34-16.50' L
End 3841.89' Rad C & G
Begin Str C & G
TC Elev 3255.88

2 132+85.14-16.50' L
End Str & G
Begin 22.33' Rad Fillet
TC Elev 3253.79

3 132+89.64-22.63' L
TC Elev 3253.71 (Theor)

4 133+10.14-16.50' L
Fillet Corner

5 133+03.98-32.52' L
TC Elev 3252.63 (Theor)

6 133+10.14-44.50' L
End 22.33' Rad Fillet
Begin Str Type B68 C & G
TC Elev 3252.15

7 133+10.14-69.50' L
End Str Type B68 C & G
TC Elev 3251.43

8 133+42.14-69.50' L
Begin Str Type B68 C & G
TC Elev 3251.43

9 133.42.14-44.50' L
End Str Type B68 C & G
Begin 22.33' Rad Fillet
TC Elev 3252.15

10 133+48.31-32.50' L
TC Elev 3252.39 (Theor)

11 133+42.14-16.50' L
Fillet Corner

12 133+67.14-16.50' L
End 22.33' Rad Fillet
Begin Str C & G
TC Elev 3252.29

13 133+84.31-16.50' L
End Str C & G
TC Elev 3252.02

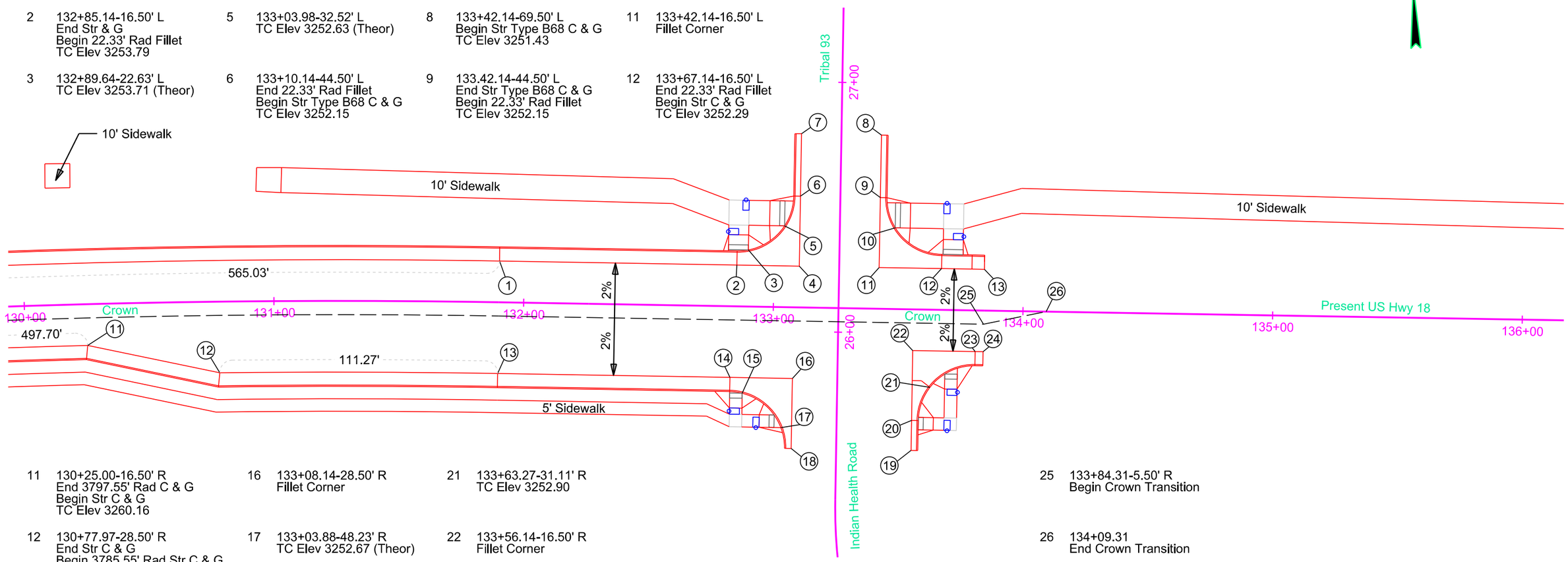

11 130+25.00-16.50' R
End 3797.55' Rad C & G
Begin Str C & G
TC Elev 3260.16

12 130+77.97-28.50' R
End Str C & G
Begin 3785.55' Rad Str C & G
TC Elev 3258.62

13 131+90.08-28.50' R
End 3785.55' Rad C & G
Begin Str C & G
TC Elev 3255.86

14 132+83.14-28.50' R
End Str C & G
Begin 22.33' Rad Fillet
TC Elev 3253.80

15 132+88.14-34.74' R
TC Elev 3253.73 (Theor)

16 133+08.14-28.50' R
Fillet Corner

17 133+03.88-48.23' R
TC Elev 3252.67 (Theor)

18 133+08.14-56.50' R
End 22.33' Rad Fillet
TC Elev 3252.31

19 133+56.14-56.50' R
Begin Str Type B68 C & G
TC Elev 3252.31

20 133+56.14-44.50' R
End Str Type B68 C & G
Begin 22.33' Rad Fillet
TC Elev 3252.37

21 133+63.27-31.11' R
TC Elev 3252.90

22 133+56.14-16.50' R
Fillet Corner

23 133+81.14-16.50' R
End 22.33' Rad Fillet
Begin Str C & G
TC Elev 3252.29

24 133+84.31-16.50' R
End Str C & G
TC Elev 3252.24

25 133+84.31-5.50' R
Begin Crown Transition

26 134+09.31
End Crown Transition

REGISTERED PROFESSIONAL ENGINEER
REG. NO.
11522
BRANDON
FRIED
SOUTH DAKOTA
8/2/24

Plot Scale - 1:40
Plotted From - brandonfried
File - ...\Curb&Gutter_40scale\130cg.dgn

CURB AND GUTTER LAYOUT

FOR BIDDING PURPOSES ONLY

KLJ	STATE OF SOUTH DAKOTA	PROJECT	SHEET	TOTAL SHEETS
		NH-CR-EM 0018(195)103 P 0407(05)01	B101	B166

Plotting Date: 8/2/2024

Rev. 8/2/2024 BAF

Note: All curb and gutter shown on this sheet is Type B66 and all gutter is Type P6 except as noted.
All sidewalk is 5' wide except as noted.

1 11+00.00-16.36' L
Begin Str C & G
TC Elev 3262.53
(Match Existing)

2 11+10.00-16.00' L
End Str C & G
Begin Str C & G
TC Elev 3263.08

3 12+24.23-16.00' L
End Str C & G
Begin 25' Rad Fillet
TC Elev 3262.18

4 13+15.29-16.00' L
End 25' Rad Fillet
Begin Str C & G
TC Elev 3262.09

5 13+34.71-16.00' L
TC Elev 3262.44

6 13+57.34-16.00' L
End Str C & G
Begin Str Type P Gutter
TC Elev 3262.74 (Theor)

7 13+77.34-16.00' L
End Str Type P Gutter
Begin Str C & G
TC Elev 3262.92 (Theor)

8 14+73.42-16.00' L
End Str C & G
Begin Str C & G
TC Elev 3262.86

9 14+78.42-16.24' L
End Str C & G
TC Elev 3262.57
(Match Existing)

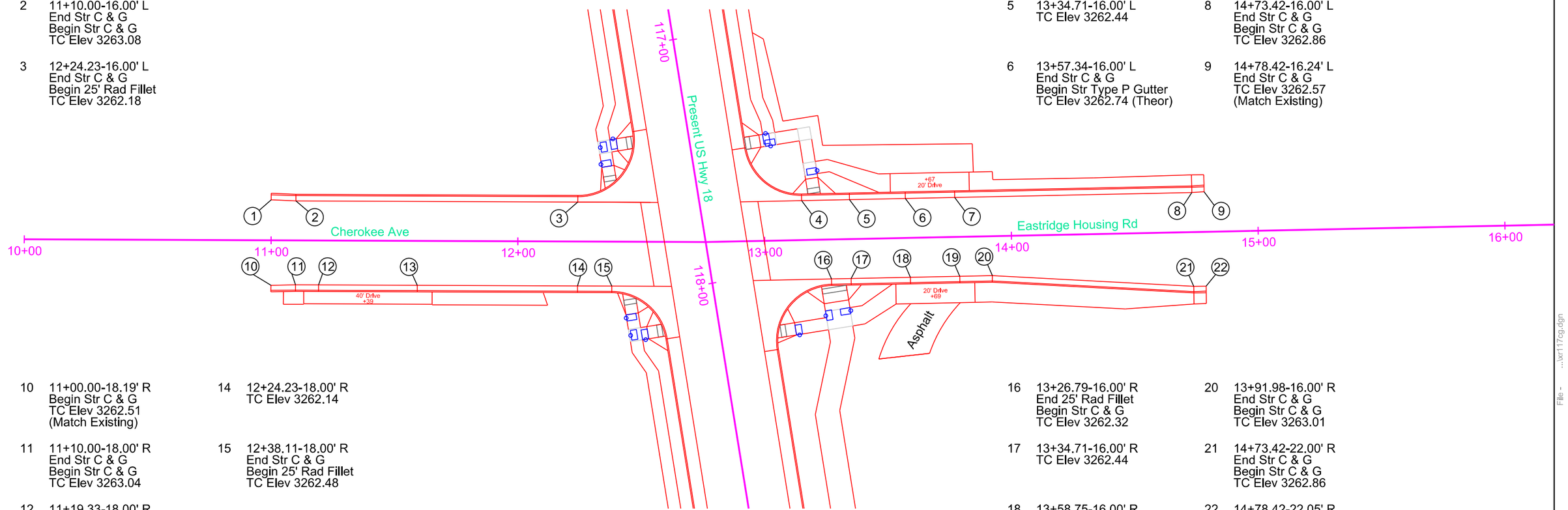

10 11+00.00-18.19' R
Begin Str C & G
TC Elev 3262.51
(Match Existing)

11 11+10.00-18.00' R
End Str C & G
Begin Str C & G
TC Elev 3263.04

12 11+19.33-18.00' R
End Str C & G
Begin Str Type P Gutter
TC Elev 3262.94 (Theor)

13 11+59.33-18.00' R
End Str P Type Gutter
Begin Str C & G
TC Elev 3262.50 (Theor)

14 12+24.23-18.00' R
TC Elev 3262.14

15 12+38.11-18.00' R
End Str C & G
Begin 25' Rad Fillet
TC Elev 3262.48

16 13+26.79-16.00' R
End 25' Rad Fillet
Begin Str C & G
TC Elev 3262.32

17 13+34.71-16.00' R
TC Elev 3262.44

18 13+58.75-16.00' R
End Str C & G
Begin Str Type P Gutter
TC Elev 3262.74 (Theor)

19 13+78.75-16.00' R
End Str Type P Gutter
Begin Str C & G
TC Elev 3262.93 (Theor)

20 13+91.98-16.00' R
End Str C & G
Begin Str C & G
TC Elev 3263.01

21 14+73.42-22.00' R
End Str C & G
Begin Str C & G
TC Elev 3262.86

22 14+78.42-22.05' R
End Str C & G
TC Elev 3262.67
(Match Existing)

REGISTERED PROFESSIONAL ENGINEER
REG. NO.
11522
BRANDON
FRIED
SOUTH DAKOTA
8/2/24

Plot Scale - 1:40
Plotted From - brandonfried
File - ...\xr117cg.dgn

CURB AND GUTTER LAYOUT

FOR BIDDING PURPOSES ONLY

KLJ	STATE OF SOUTH DAKOTA	PROJECT	SHEET	TOTAL SHEETS
		NH-CR-EM 0018(195)103 P 0407(05)01	B102	B166

Plotting Date: 8/2/2024

Rev. 8/2/2024 BAF

Note: All curb and gutter shown on this sheet is Type B68 and all gutter is Type P8 except as noted.
All Station / Offsets for number points are to the front of the gutter pan except as noted.
All Radii listed for both Fillets and C&G are measured to the Back of the Curb.
Not to Scale

1	100+21.60-60.60' L Fillet Corner TP Elev 3237.18
2	100+26.61-60.49' L FIllet Corner TP Elev 3237.23
3	100+32.73-54.41' L End 4.00' Rad Fillet Begin Str C & G TC Elev 3237.78
4	100+36.89-50.29' L TC Elev 3237.78
5	100+38.31-48.88' L End Str C & G Begin Type P Gutter TC Elev 3237.94 (Theor)
6	100+39.98-47.23' L TC Elev 3237.98 (Theor)
7	100+43.53-43.71' L TC Elev 3238.06 (Theor)
8	100+46.76-40.50' L End Type P Gutter Begin Str C & G TC Elev 3238.12 (Theor)
9	100+48.18-39.09' L TC Elev 3238.16
10	100+54.71-32.62' L End Str C & G Begin 5.00' Rad Fillet TC Elev 3238.38
11	100+62.92-24.48' L FIllet Corner TP Elev 3238.26
12	100+62.92-16.50' L FIllet Corner TP Elev 3238.74
13	100+49.31-16.50' L End 5.00' Rad Fillet Begin Str Modified Type B68 C & G TC Elev 3239.15
14	100+46.30-16.50' L End Str Modified Type B68 C & G Begin Modified Type P Gutter TC Elev 3239.16 (Theor)
15	100+41.30-16.50' L End Modified Type P Gutter Begin Str Modified Type B68 C & G TC Elev 3239.19 (Theor)
16	100+28.54-16.50' L End Str Modified Type B68 C & G Begin 5.00' Rad Fillet TC Elev 3239.25
17	100+20.45-16.50' L FIllet Corner TP Elev 3238.95
18	100+20.53-27.34' L End 5.00' Rad Fillet Begin Str C & G TC Elev 3238.96
19	100+21.23-43.70' L End Str C & G Begin Type P Gutter TC Elev 3238.28 (Theor)
20	100+21.34-48.70' L End Type P Gutter Begin Str C & G TC Elev 3238.07 (Theor)
21	100+21.37-49.83' L End Str C & G Begin 5.00' Rad Fillet TC Elev 3238.03
22	100+24.01-48.64' L TSW Elev 3237.65 TC Elev 3238.07
23	100+35.01-48.39' L TSW Elev 3237.69 TC Elev 3237.90
24	100+46.30-37.20' L TSW Elev 3238.03 TC Elev 3238.15
25	100+46.30-33.50' L TSW Elev 3238.31 TC Elev 3238.58
26	100+46.30-28.50' L TSW Elev 3238.38 TC Elev 3238.91
27	100+46.30-22.17' L TSW Elev 3238.74 TC Elev 3239.16
28	100+41.30-22.17' L TSW Elev 3238.77 TC Elev 3239.19
29	100+41.30-26.13' L TSW Elev 3238.42 TC Elev 3239.00
30	100+34.74-34.66' L TSW Elev 3238.05 TC Elev 3238.55
31	100+31.24-38.24' L TSW Elev 3237.98 TC Elev 3238.45
32	100+26.01-43.59' L TWS Elev 3237.87 TC Elev 3238.29
33	100+23.90-43.64' L TWS Elev 3237.86 TC Elev 3238.28

REGISTERED PROFESSIONAL ENGINEER
REG. NO.
11522
BRANDON
FRIED
SOUTH DAKOTA
8/2/24

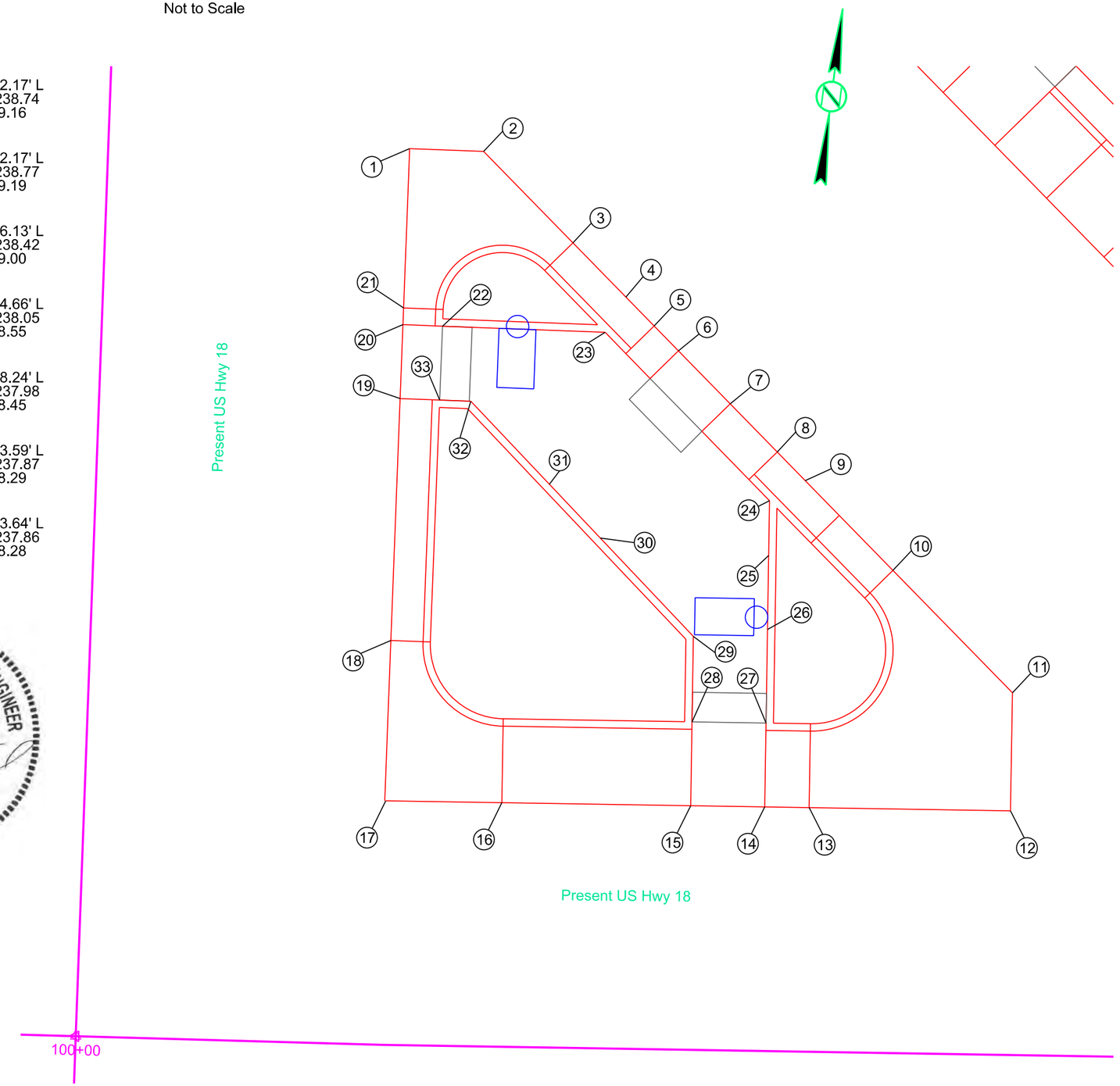

Plot Scale - 1:40
Plotted From - brandonfried
File - ...\lstandscg.dgn

CURB AND GUTTER LAYOUT

FOR BIDDING PURPOSES ONLY

KLJ	STATE OF SOUTH DAKOTA	PROJECT	SHEET	TOTAL SHEETS
		NH-CR-EM 0018(195)103 P 0407(05)01	B103	B166

Plotting Date: 8/2/2024

Rev. 8/2/2024 BAF

Note: All curb and gutter shown on this sheet is Type B68 and all gutter is Type P8 except as noted.
All sidewalk is 5' wide except as noted.

1 202+12.70-64.75' L
Begin Str C & G
TC Elev 3245.86
(Match Existing)

2 202+12.59-59.75' L
End Str C & G
Begin 30' Rad C & G
TC Elev 3246.06

3 202+32.41-31.59' L
TC Elev 3246.88 (Theor)

4 202+42.65-29.81' L
End 30' Rad C & G
Begin Str C & G
TC Elev 3246.71

5 202+47.65-29.86' L
End Str C & G
TC Elev 3246.54
(Match Existing)

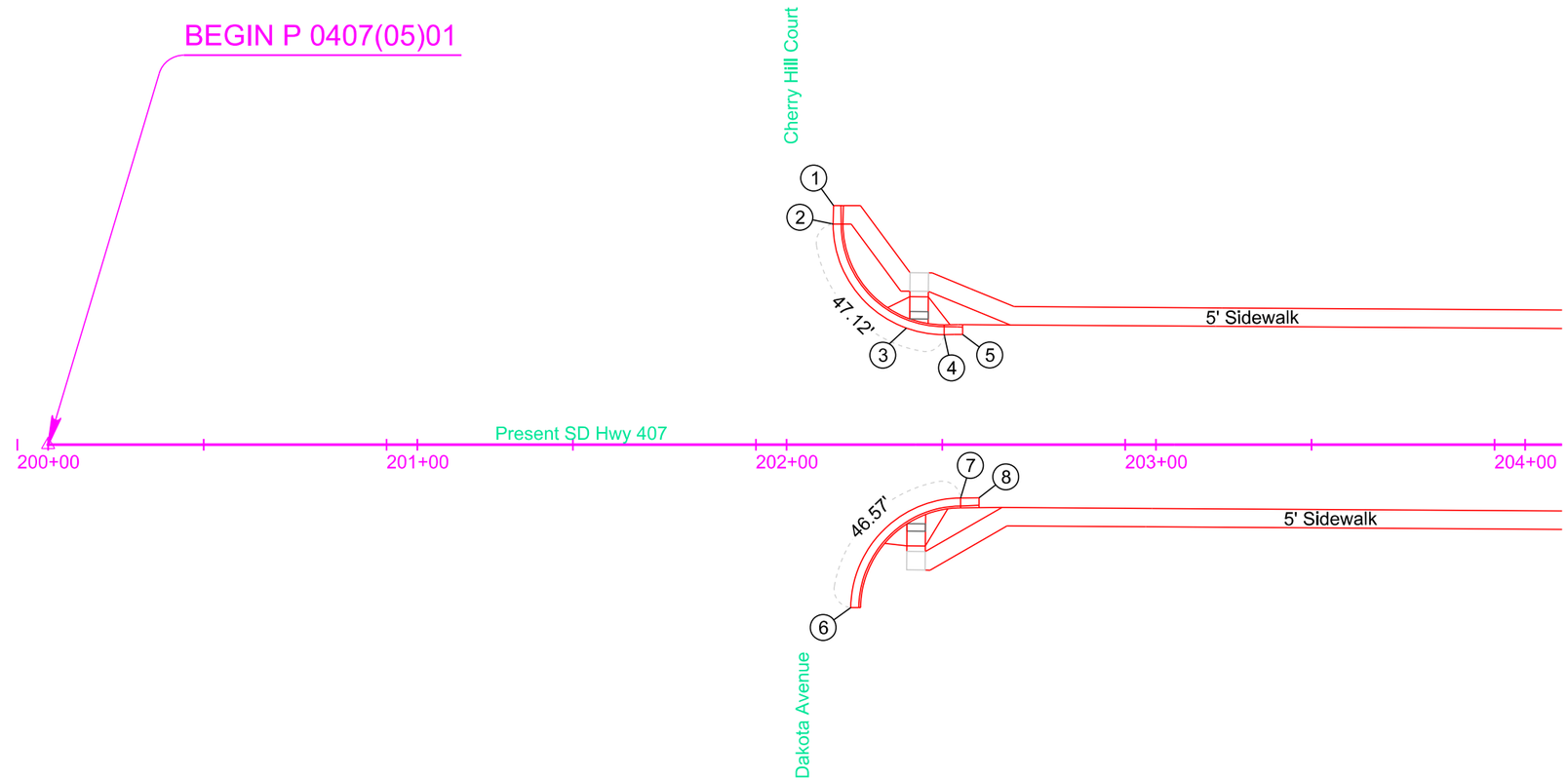

6 202+17.37-44.11' R
Begin 30' Rad C & G
TC Elev 3246.07

7 202+47.11-14.40' R
End 30' Rad C & G
Begin Str C & G
TC Elev 3246.59

8 202+52.11-14.37' R
End Str C & G
TC Elev 3246.44
(Match Existing)

REGISTERED PROFESSIONAL ENGINEER
REG. NO.
11522
BRANDON
FRIED
SOUTH DAKOTA
8/2/24

Plot Scale - 1:40
Plotted From - brandonfried
File - ...\Curb&Gutter_40scale\200cg.dgn

CURB AND GUTTER LAYOUT

FOR BIDDING PURPOSES ONLY

KLJ	STATE OF SOUTH DAKOTA	PROJECT	SHEET	TOTAL SHEETS
		NH-CR-EM 0018(195)103 P 0407(05)01	B104	B166

Plotting Date: 8/2/2024

Rev. 8/2/2024 BAF

Note: All curb and gutter shown on this sheet is Type B68 and all gutter is Type P8 except as noted.
All sidewalk is 5' wide except as noted.

1	207+93.82-26.44' L Begin Str C & G TC Elev 3243.49 (Match Existing)	5	208+40.27-26.15' L TC Elev 3243.83 (Thoer)	9	208+95.95-25.80' L TC Elev 3244.15 (Theor)	13	209+22.85-26.80' L TC Elev 3244.11	17	209+40.28-55.56' L End Str C & G TC Elev 3243.66 (Match Existing)	21	209+88.78-25.14' L End 25' Rad Fillet Begin Str C & G TC Elev 3244.23
2	207+99.82-26.25' L End Str C & G Begin Type P Gutter TC Elev 3243.59 (Theor)	6	208+45.27-26.12' L TC Elev 3243.91 (Theor)	10	209+00.95-25.77' L TC Elev 3244.22 (Theor)	14	209+30.49-30.78' L TC Elev 3244.09 (Theor)	18	209+63.91-56.35' L Begin Str C & G TC Elev 3243.76 (Match Existing)	22	209+92.29-25.12' L End Str C & G TC Elev 3244.24 (Match Existing)
3	208+19.82-26.19' L End Type P Gutter Begin Str C & G TC Elev 3243.71 (Theor)	7	208+56.27-26.05' L End Str C & G TC Elev 3243.77 (Match Existing)	11	209+14.94-25.62' L End Str C & G Begin 25' Rad Fillet TC Elev 3244.29	15	209+34.87-35.09' L TC Elev 3244.01 (Theor)	19	209+63.96-49.94' L End Str C & G Begin 25' Rad Fillet TC Elev 3243.88		
4	208+34.29-6.18' L TC Elev 3243.80	8	208+84.96-25.89' L Begin Str C & G TC Elev 3243.93 (Match Existing)	12	209+40.21-25.29' L Fillet Corner	16	209+40.27-50.56' L End 25' Rad Fillet Begin Str C & G TC Elev 3234.75	20	209+64.15-25.32' L Fillet Corner		

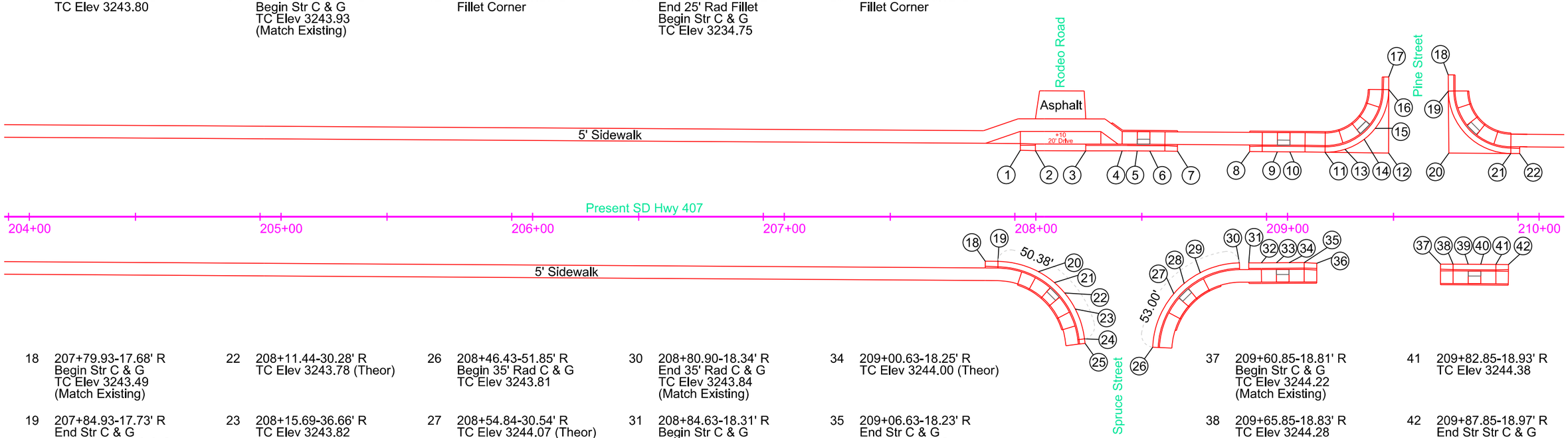

18	207+79.93-17.68' R Begin Str C & G TC Elev 3243.49 (Match Existing)	22	208+11.44-30.28' R TC Elev 3243.78 (Theor)	26	208+46.43-51.85' R Begin 35' Rad C & G TC Elev 3243.81	30	208+80.90-18.34' R End 35' Rad C & G TC Elev 3243.84 (Match Existing)	34	209+00.63-18.25' R TC Elev 3244.00 (Theor)	37	209+60.85-18.81' R Begin Str C & G TC Elev 3244.22 (Match Existing)	41	209+82.85-18.93' R TC Elev 3244.38
19	207+84.93-17.73' R End Str C & G Begin 35' Rad C & G TC Elev 3243.50	23	208+15.69-36.66' R TC Elev 3243.82	27	208+54.84-30.54' R TC Elev 3244.07 (Theor)	31	208+84.63-18.31' R Begin Str C & G TC Elev 3243.83 (Match Existing)	35	209+06.63-18.23' R End Str C & G Begin Str C & G TC Elev 3244.01	38	209+65.85-18.83' R TC Elev 3244.28	42	209+87.85-18.97' R End Str Str C & G TC Elev 3243.99 (Match Existing)
20	208+01.06-21.85' R TC Elev 3243.67	24	208+19.33-48.49' R End 35' Rad C & G Begin Str C & G TC Elev 3243.79	28	208+58.95-26.48' R TC Elev 3243.99 (Theor)	32	208+89.63-18.29' R TC Elev 3243.91	36	209+11.63-18.48' R End Str C & G TC Elev 3243.98 (Match Existing)	39	209+71.85-18.86' R TC Elev 3244.29 (Theor)		
21	208+07.39-26.17' R TC Elev 3243.70 (Theor)	25	208+19.55-50.29' R End Str C & G TC Elev 3243.81	29	208+65.33-22.24' R TC Elev 3243.96	33	208+95.63-18.27' R TC Elev 3243.92 (Theor)			40	209+76.85-18.89' R TC Elev 3244.37 (Theor)		

REGISTERED PROFESSIONAL ENGINEER
REG. NO.
11522
BRANDON
FRIED
SOUTH DAKOTA
8/2/24

Plot Scale - 1:40

Plotted From - brandonfried

File - ...\Curb&Gutter_40scale\204cg.dgn

CURB AND GUTTER LAYOUT

FOR BIDDING PURPOSES ONLY

KLJ	STATE OF SOUTH DAKOTA	PROJECT	SHEET	TOTAL SHEETS
		NH-CR-EM 0018(195)103 P 0407(05)01	B105	B166

Plotting Date: 8/2/2024

Rev. 8/2/2024 BAF

Note: All curb and gutter shown on this sheet is Type B68 and all gutter is Type P8 except as noted.
All sidewalk is 5' wide except as noted.

1 212+03.44-23.80' L
Begin Str C & G
TC Elev 3245.09
(Match Existing)

2 212+23.03-23.66' L
End Str C & G
Begin 25' Rad Fillet
TC Elev 3245.04

3 213+47.80-23.50' L
Fillet Corner

4 212+44.43-35.47' L
TC Elev 3244.87 (Theor)

5 212+48.19-48.27' L
End 25' Rad Fillet
Begin Str C & G
TC Elev 3244.53

6 212+48.35-58.26' L
End Str C & C
TC Elev 3244.11
(Match Existing)

7 212+71.05-58.12' L
Begin Str C & G
TC Elev 3244.00
(Match Existing)

8 212+71.07-48.13' L
End Str C & G
Begin 25' Rad Fillet
TC Elev 3244.19

9 212+74.61-35.36' L
TC Elev 3244.60 (Theor)

10 212+71.13-22.95' L
Fillet Corner

11 212++83.00-26.88' L
TC Elev 3244.68 (Theor)

12 212+95.96-23.19' L
End 25' Rad Fillet
Begin Str C & G
TC Elev 3244.34

13 213+01.38-23.16' L
End Str C & G
Begin Str C & G
TC Elev 3244.24

14 213+18.69-23.06' L
TC Elev 3243.90

15 213+24.69-23.06' L
End Str C & G
Begin Type P Gutter
TC Elev 3243.76 (Theor)

16 213+64.69-22.88' L
End Type P Gutter
Begin Str C & G
TC Elev 3242.84 (Theor)

17 213+70.69-22.85' L
TC Elev 3242.70

18 213+93.98-22.75' L
TC Elev 3242.20

19 213+99.98-22.72' L
End Str C & G
Begin Type P Gutter
TC Elev 3242.06 (Theor)

20 214+39.98-22.54' L
End Type P Gutter
Begin Str C & G
TC Elev 3241.13 (Theor)

21 214+45.97-22.51' L
TC Elev 3240.99

22 214+50.15-22.49' L
End Str C & G
Begin Str C & G
TC Elev 3240.89

23 214+56.38-22.51' L
End Str C & G
TC Elev 3240.71
(Match Existing)

24 214+59.43-22.52' L
Begin 40.00' Rad Fillet
TC Elev 3240.53
(Match Existing)

25 215+02.81-22.26' L
Fillet Corner

26 214+83.28-33.61' L
TC Elev 3240.38

27 215+02.66-62.68' L
End 40.00' Rad Fillet
Begin Str C & G
TC Elev 3238.92

28 215+00.41-91.21' L
End Str C & G
Begin Str C & G
TC Elev 3237.56

29 215+00.54-96.21' L
End Str C & G
TC Elev 3237.32
(Match Existing)

30 215+37.04-79.59' L
Begin Str C & G
TC Elev 3237.20
(Match Existing)

31 215+37.08-74.59' L
TC Elev 3237.57

32 215+35.40-62.88' L
TC Elev 3238.14

33 215+35.43-59.30' L
End Str C & G
Begin 40' Rad Fillet
TC Elev 3238.22

34 215+35.74-19.71' L
Fillet Corner

35 215+50.58-34.03' R
TC Elev 3238.68

36 215+78.36-19.64' L
End 40.00' Rad Fillet
Begin Str C & G
TC Elev 3237.53

37 215+86.80-19.62' L
TC Elev 3237.19

38 215+91.79-19.76' L
End Str C & G
TC Elev 3237.09
(Match Existing)

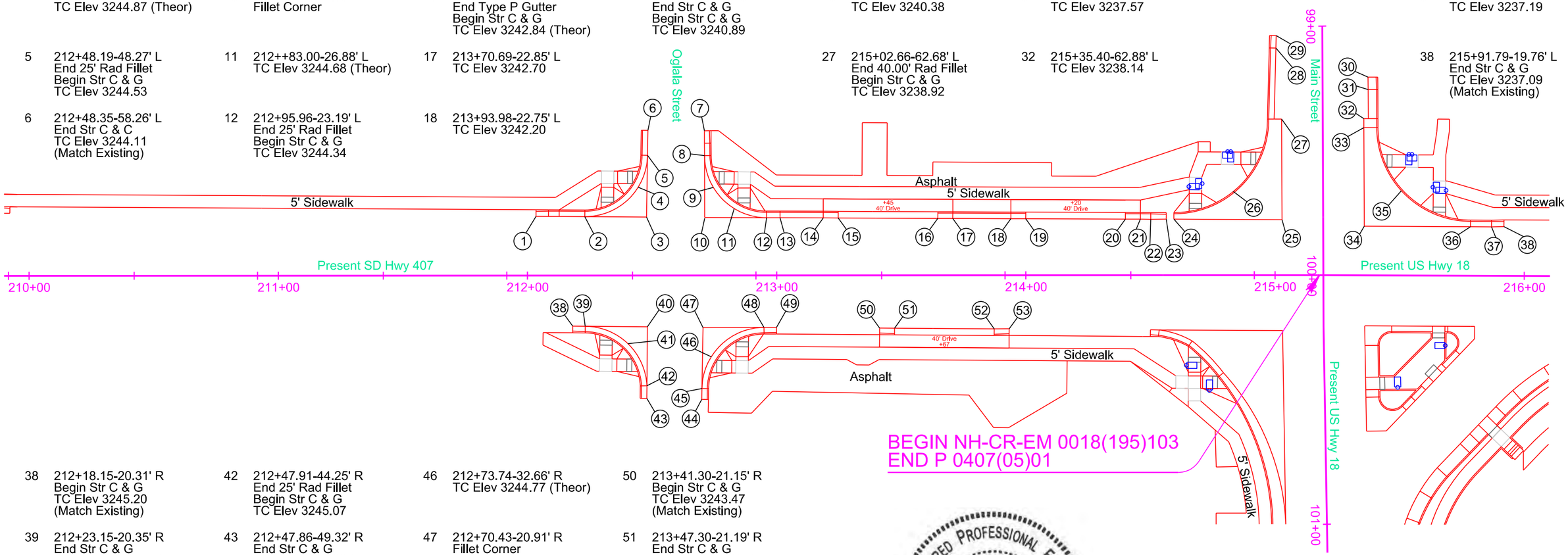

38 212+18.15-20.31' R
Begin Str C & G
TC Elev 3245.20
(Match Existing)

39 212+23.15-20.35' R
End Str C & G
Begin 25' Rad Fillet
TC Elev 3245.19

40 212+48.12-20.57' R
Fillet Corner

41 212+40.27-27.34' R
TC Elev 3244.95

42 212+47.91-44.25' R
End 25' Rad Fillet
Begin Str C & G
TC Elev 3245.07

43 212+47.86-49.32' R
End Str C & G
TC Elev 3245.08 (Theor)

44 212+69.90-49.73' R
Begin Str C & G
TC Elev 3244.85 (Theor)

45 212+69.98-45.53' R
End Str C & G
Begin 25' Rad Fillet
TC Elev 3244.83

46 212+73.74-32.66' R
TC Elev 3244.77 (Theor)

47 212+70.43-20.91' R
Fillet Corner

48 212+94.92-20.86' R
End 25' Rad Fillet
Begin Str C & G
TC Elev 3244.42

49 212+99.92-20.87' R
End Str C & G
TC Elev 3244.27
(Match Existing)

50 213+41.30-21.15' R
Begin Str C & G
TC Elev 3243.47
(Match Existing)

51 213+47.30-21.19' R
End Str C & G
Begin Type P Gutter
TC Elev 3243.30 (Theor)

52 213+87.30-21.47' R
End Type P Gutter
Begin Str C & G
TC Elev 3242.44 (Theor)

53 213+93.30-21.45' R
End Str C & G
TC Elev 3242.32
(Match Existing)

REGISTERED PROFESSIONAL ENGINEER
REG. NO
11522
BRANDON
FRIED
SOUTH DAKOTA
8/2/24

Plot Scale - 1:40
Plotted From - brandonfried
File - ...\Curb&Gutter_40scale\210cg.dgn

CURB AND GUTTER LAYOUT

FOR BIDDING PURPOSES ONLY

KLJ	STATE OF SOUTH DAKOTA	PROJECT	SHEET	TOTAL SHEETS
		NH-CR-EM 0018(195)103 P 0407(05)01	B106	B166

Plotting Date: 8/2/2024

Rev. 8/2/2024 BAF

Note: All curb and gutter shown on this sheet is Type B68 and all gutter is Type P8 except as noted.
All sidewalk is 5' wide except as noted.

1	216+40.99-19.86' L Begin Str C & G TC Elev 3235.61 (Match Existing)	6	218+47.61-19.88' L End Str C & G Begin Type P Gutter TC Elev 3233.36 (Theor)	11	218+64.32-50.10' L Begin Str C & G TC Elev 3234.05 (Match Existing)	15	219+52.22-20.02' L Fillet Corner	20	219+52.39-51.11' L End Str C & G TC Elev 3233.36 (Match Existing)	24	219+88.20-28.40' L TC Elev 3233.20 (Theor)	29	220+40.69-19.96' L TC Elev 3232.99	35	221+29.37-19.94' L Begin Str C & G TC Elev 3232.77 (Match Existing)		
2	216+46.99-19.77' L End Str C & G Begin Type P Gutter TC Elev 3235.49 (Theor)	7	218+63.61-19.89' L End Type P Gutter Begin Str C & G TC Elev 3233.33 (Theor)	12	218+64.12-32.56' L End Str C & G TC Elev 3233.47 (Theor)	17	219+48.57-28.30' L TC Elev 3233.33 (Theor)	21	219+84.53-50.93' L Begin Type P Gutter TC Elev 3233.29 (Match Existing)	25	219+84.40-20.01' L Fillet Corner	30	220+45.69-19.98' L End Str C & G TC Elev 3233.00 (Match Existing)	36	221+32.33-19.89' L TC Elev 3232.73		
3	216+62.99-19.78' L End Type P Gutter Begin Str C & G TC Elev 3235.15 (Theor)	8	218+69.61-19.87' L End Str C & G TC Elev 3233.35 (Match Existing)	13	219+30.60-19.97' L Begin Str C & G TC Elev 3233.22 (Match Existing)	18	219+52.33-39.87' L End 20' Rad Fillet Begin Str C & G TC Elev 3233.35	22	219+84.49-42.02' L End Type P Gutter Begin Str C & G TC Elev 3233.22 (Theor)	26	219+92.80-23.78' L TC Elev 3233.11 (Theor)	31	220+76.54-19.99' L Begin Str C & G TC Elev 3232.96 (Match Existing)	37	221+38.33-19.88' L End Str C & G Begin Type P Gutter TC Elev 3232.72 (Theor)		
4	216+68.99-19.77' L End Str C & G TC Elev 3235.07 (Match Existing)	9	218+49.64-32.55' L Begin Str C & G TC Elev 3233.51 (Theor)	14	219+32.38-19.98' L End Str C & G Begin 20' Rad Fillet TC Elev 3233.22	19	219+52.34-41.90' L TC Elev 3233.36	23	219+84.48-40.10' L End Str C & G Begin 20' Rad Fillet TC Elev 3233.22	27	220+04.49-20.02' L End 20' Rad Fillet Begin Str C & G TC Elev 3233.09	32	220+81.54-19.95' L TC Elev 3232.94	38	221+62.33-19.86' L End Type P Gutter Begin Str C & G TC Elev 3232.61 (Theor)		
5	218+41.61-19.87' L Begin Str C & G TC Elev 3233.40 (Match Existing)	10	218+49.83-50.10' L End Str C & G TC Elev 3234.14 (Match Existing)	15	219+43.96-23.70' L TC Elev 3233.24 (Theor)					28	220+31.69-19.97' L TC Elev 3233.01	33	220+90.54-19.94' L TC Elev 3232.94	39	221+68.33-19.93' L End Str C & G TC Elev 3232.39 (Match Existing)		
												34	220+95.54-19.96' L End Str C & G TC Elev 3232.96 (Match Existing)				

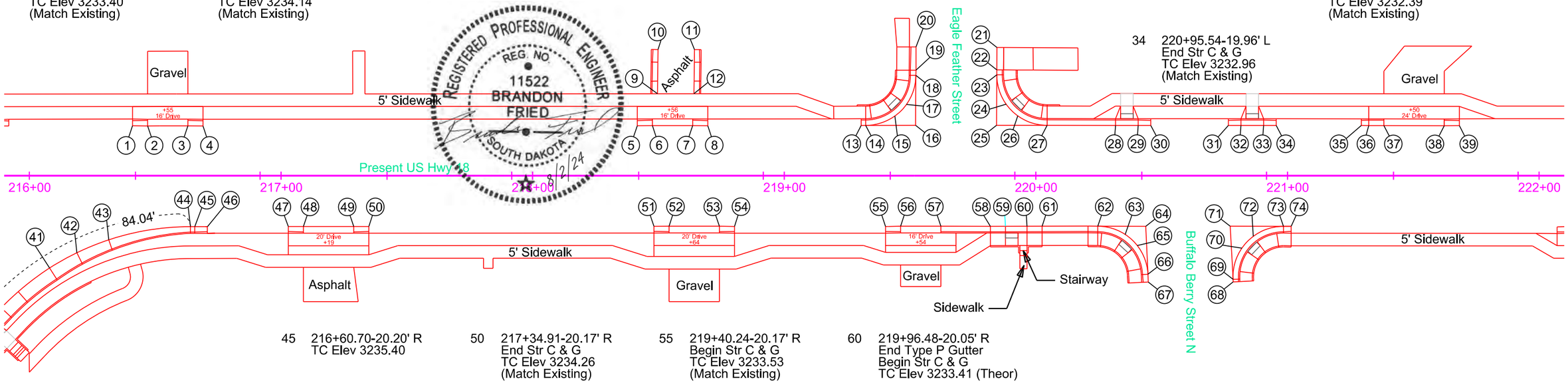

		45	216+60.70-20.20' R TC Elev 3235.40	50	217+34.91-20.17' R End Str C & G TC Elev 3234.26 (Match Existing)	55	219+40.24-20.17' R Begin Str C & G TC Elev 3233.53 (Match Existing)	60	219+96.48-20.05' R End Type P Gutter Begin Str C & G TC Elev 3233.41 (Theor)								
41	216+08.04-36.66' R End 98.33' Rad Modified Type B68 C&G Begin Transition C & G TC Elev 3236.71	46	216+70.75-20.19' R End Str C & G TC Elev 3235.40 (Match Existing)	51	218+48.21-20.12' R Begin Str C & G TC Elev 3233.58 (Match Existing)	56	219+46.24-20.03' R End Str C & G Begin Type P Gutter TC Elev 3233.48 (Theor)	61	220+02.48-20.04' R TC Elev 3233.38	65	220+40.32-27.73' R TC Elev 3233.47 (Theor)	69	220+78.38-41.18' R End Str C & G Begin 20' Rad Fillet TC Elev 3233.43	73	220+98.41-20.12' R End 20' Rad Fillet Begin Str C & G TC Elev 3233.16		
42	216+18.88-30.58' R TC Elev 3236.34	47	217+02.91-20.16' R Begin Str C & G TC Elev 3234.71 (Match Existing)	52	218+54.21-20.07' R End Str C & G Begin Type P Gutter TC Elev 3233.58 (Theor)	57	219+62.24-20.02' R End Type P Gutter Begin Str C & G TC Elev 3233.46 (Theor)	62	220+24.61-20.07' R End Str C & G Begin 20' Rad Fillet TC Elev 3233.36	66	220+44.55-39.13' R End 20' Rad Fillet Begin Str G & G TC Elev 3233.51	70	220+81.90-28.75' R TC Elev 3233.33 (Theor)	74	221+01.48-20.13' R End Str C & G TC Elev 3233.12 (Match Existing)		
43	216+31.57-25.45' R TC Elev 3236.01	48	217+08.91-20.14' R End Str C & G Begin Type P Gutter TC Elev 3234.59 (Theor)	53	218+74.21-20.06' R End Type P Gutter Begin Str C & G TC Elev 3233.55 (Theor)	58	219+81.91-20.08' R TC Elev 3233.43	63	220+35.52-23.33' R TC Elev 3233.39 (Theor)	67	220+44.69-42.22' R End Str C & G TC Elev 3233.48 (Match Existing)	71	220+77.26-20.07' R Fillet Corner				
44	216+63.98-20.20' R End 104.00' Rad C & G Begin Str C & G TC Elev 3235.34	49	217+28.91-20.15' R End Type P Gutter Begin Str C & G TC Elev 3234.28 (Theor)	54	218+80.21-20.16' R End Str C & G TC Elev 3233.38 (Match Existing)	59	219+87.91-20.07' R End Str C & G Begin Type P Gutter TC Elev 3233.42 (Theor)	64	220+43.66-20.11' R Fillet Corner	68	220+78.44-42.19' R Begin Str C & G TC Elev 3233.48 (Match Existing)	72	220+86.42-24.07' R TC Elev 3233.25 (Theor)				

REGISTERED PROFESSIONAL ENGINEER
REG. NO.
11522
BRANDON
FRIED
SOUTH DAKOTA
8/2/24

Plot Scale - 1:40

Plotted From - brandonfried

File - ...\Curb&Gutter_40scale\216cg.dgn

CURB AND GUTTER LAYOUT

FOR BIDDING PURPOSES ONLY

KLJ	STATE OF SOUTH DAKOTA	PROJECT	SHEET	TOTAL SHEETS
		NH-CR-EM 0018(195)103 P 0407(05)01	B107	B166

Plotting Date: 8/2/2024

Rev. 8/2/2024 BAF

Note: All curb and gutter shown on this sheet is Type B68 and all gutter is Type P8 except as noted.
All sidewalk is 5' wide except as noted.

1	225+38.96-20.00' L Begin Str C & G TC Elev 3226.92 (Match Existing)	5	225+89.55-20.02' L Begin Str C & G TC Elev 3226.28 (Match Existing)
2	225+43.96-19.98' L TC Elev 3226.84	6	225+94.55-19.98' L TC Elev 3226.23
3	225+60.96-19.98' L TC Elev 3226.58	7	226+11.55-19.98' L TC Elev 3226.09
4	225+65.96-20.01' L End Str C & G TC Elev 3226.57 (Match Existing)	8	226+13.55-19.99' L End Str C & G TC Elev 3226.01 (Match Existing)

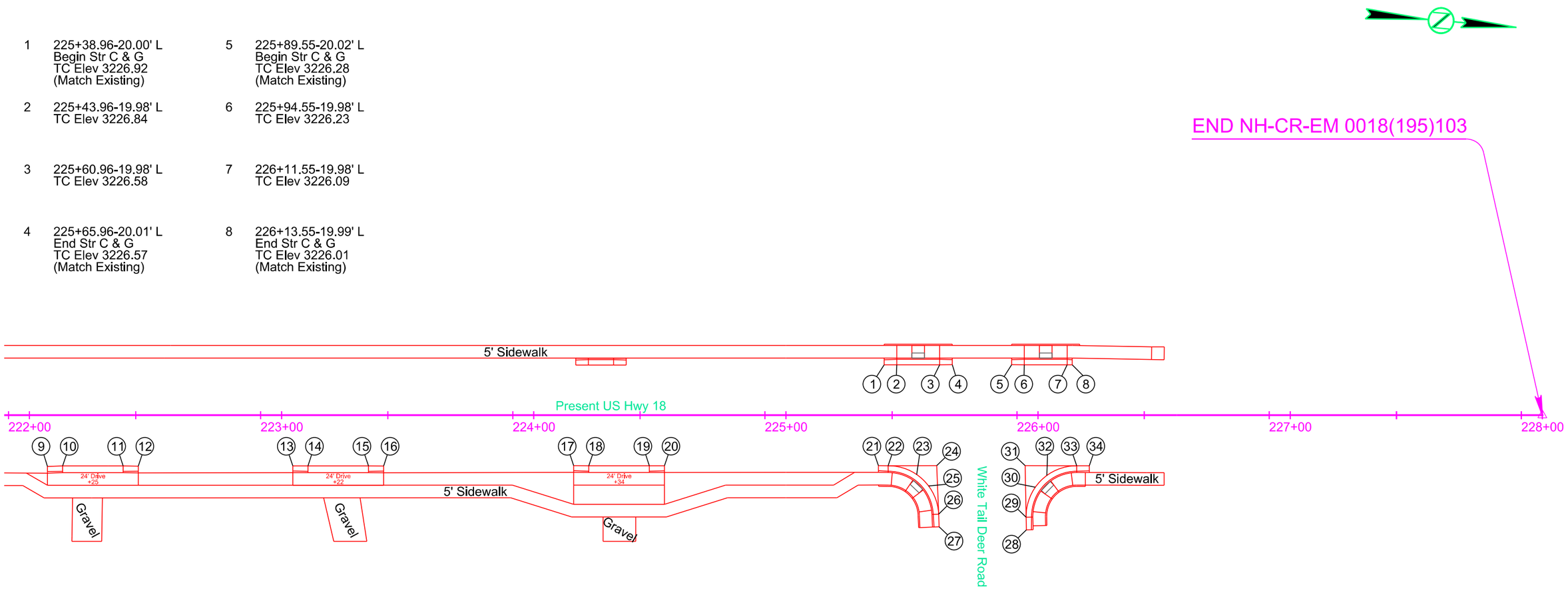

9	222+07.16-20.34' R Begin Str C & G TC Elev 3232.46 (Match Existing)	13	223+04.45-20.12' R Begin Str C & G TC Elev 3231.11 (Match Existing)	17	224+15.84-20.01' R Begin Str C & G TC Elev 3229.45 (Match Existing)	21	225+36.68-20.01' R Begin Str C & G TC Elev 3227.24 (Match Existing)	25	225+56.60-28.03' R TC Elev 3226.95 (Theor)	29	225+95.29-40.44' R End Str C & G Begin 20' Rad Fillet TC Elev 3225.62	33	226+15.33-20.04' R End 20' Rad Fillet Begin Str C & G TC Elev 3226.12
10	222+13.16-20.10' R End Str C & G Begin Type P Gutter TC Elev 3232.24 (Theor)	14	223+10.45-20.08' R End Str C & G Begin Type P Gutter TC Elev 3231.17 (Theor)	18	224+21.84-20.05' R End Str C & G Begin Type P Gutter TC Elev 3229.37 (Theor)	22	225+40.56-20.02' R End Str C & G Begin 20' Rad Fillet TC Elev 3227.13	26	225+60.58-39.20' R End 20' Rad Fillet Begin Str C & G TC Elev 3226.20	30	225+98.93-28.53' R TC Elev 3225.92 (Theor)	34	226+20.33-20.05' R End Str C & G TC Elev 3226.12 (Match Existing)
11	222+37.16-20.09' R End Type P Gutter Begin Str C & G TC Elev 3232.05 (Theor)	15	223+34.45-20.07' R End Type P Gutter Begin Str C & G TC Elev 3230.84 (Theor)	19	224+45.84-20.05' R End Type P Gutter Begin Str C & G TC Elev 3228.84 (Theor)	23	225+51.90-23.52' R TC Elev 3227.04 (Theor)	27	225+60.78-44.20' R End Str C & G TC Elev 3225.78 (Match Existing)	31	225+94.88-19.99' R Fillet Corner		
12	222+43.16-20.20' R End Str C & G TC Elev 3232.10 (Match Existing)	16	223+40.45-20.17' R End Str C & G TC Elev 3230.78 (Match Existing)	20	224+51.84-20.03' R End Str C & G TC Elev 3228.48 (Match Existing)	24	225+59.79-19.98' R Fillet Corner	28	225+95.39-45.44' R Begin Str C & G TC Elev 3225.59 (Match Existing)	32	226+03.49-23.89' R TC Elev 3226.00 (Theor)		

REGISTERED PROFESSIONAL ENGINEER
REG. NO.
11522
BRANDON
FRIED
SOUTH DAKOTA
8/2/24

Plot Scale - 1:40
Plotted From - brandonfried
File - ...\Curb&Gutter_40scale\2222cg.dgn

CURB RAMP LAYOUT

FOR BIDDING PURPOSES ONLY

KLJ	STATE OF SOUTH DAKOTA	PROJECT	SHEET	TOTAL SHEETS
		NH-CR-EM 0018(195)103 P 0407(05)01	B108	B166

Plotting Date: 8/2/2024

Rev. 8/2/2024 BAF

* Turning Space with 1.50% slope
\# Curb Ramp with 7.50% slope and 1.50% cross slope
++ Curb Ramp with 5.50% slope and 1.50% cross slope
\+ Curb Ramp with 5.00% slope and 1.50% cross slope
^ Curb Ramp with 4.50% slope and 1.50% cross slope
△ Curb Ramp with 1.50% slope and 1.50% cross slope
Concrete Boulevard

1 105+91.63-22.79'L
Center Type 2
Curb Ramp

2 106+05.20-34.73'L
Center Type 2
Curb Ramp

3 106+48.61-34.73'L
Center Type 2
Curb Ramp

4 106+62.62-22.67'L
Center Type 2
Curb Ramp

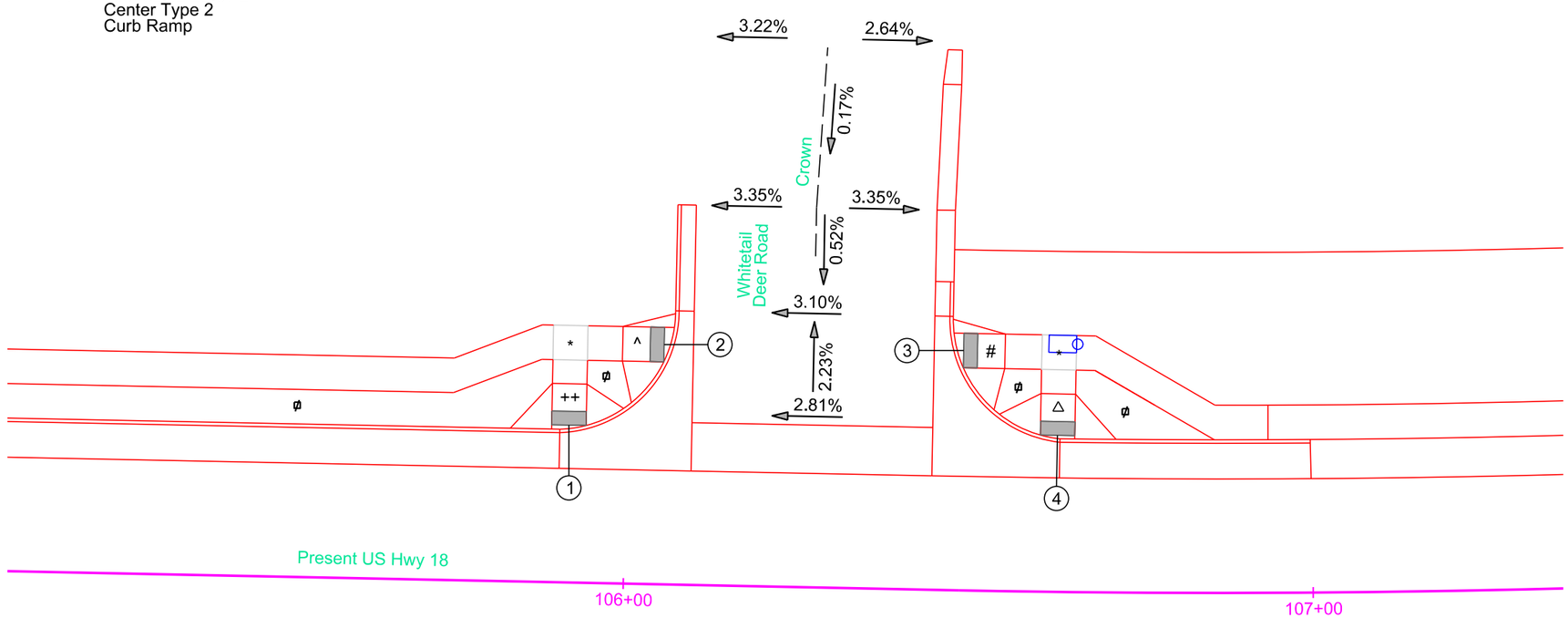

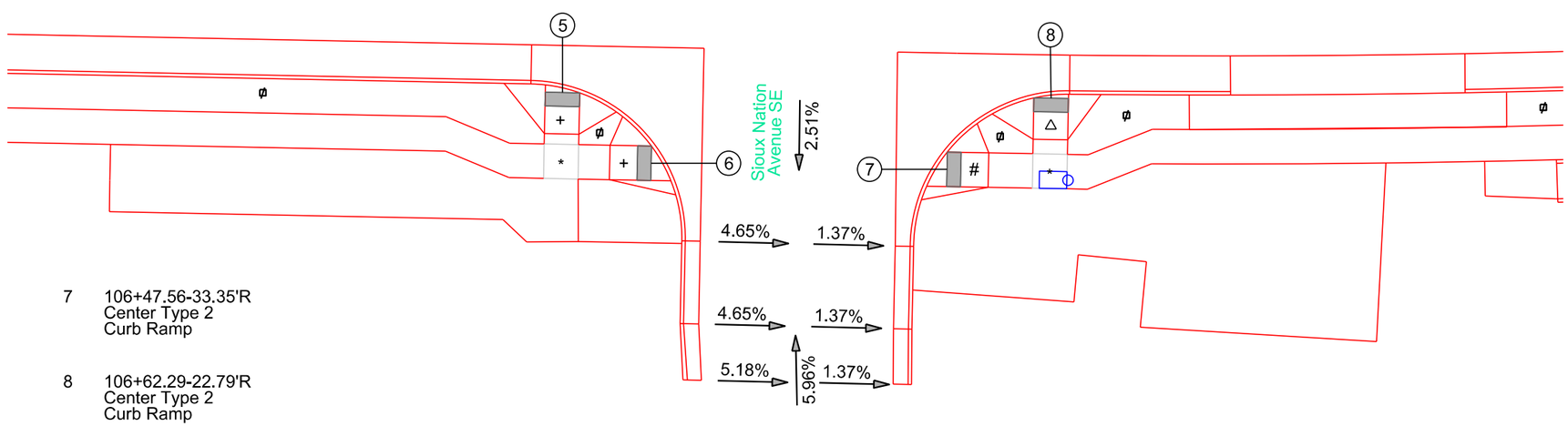

5 105+91.63-23.33'R
Center Type 2
Curb Ramp

6 106+04.67-33.33'R
Center Type 2
Curb Ramp

7 106+47.56-33.35'R
Center Type 2
Curb Ramp

8 106+62.29-22.79'R
Center Type 2
Curb Ramp

REGISTERED PROFESSIONAL ENGINEER
REG. NO.
11522
BRANDON
FRIED
SOUTH DAKOTA
8/2/24

Plot Scale - 1:20
Plotted From - brandonfried
File - ...\CurbRamps_20scale\106cr.dgn

CURB RAMP LAYOUT

FOR BIDDING PURPOSES ONLY

KLJ	STATE OF SOUTH DAKOTA	PROJECT	SHEET	TOTAL SHEETS
		NH-CR-EM 0018(195)103 P 0407(05)01	B109	B166

Plotting Date: 8/2/2024

Rev. 8/2/2024 BAF

* Turning Space with 1.50% slope
\# Curb Ramp with 7.50% slope and 1.50% cross slope
^ Curb Ramp with 4.50% slope and 1.50% cross slope
ϕ Concrete Boulevard

1 110+17.19-33.17'L
Center Type 2
Curb Ramp

2 110+64.21-33.17'L
Center Type 2
Curb Ramp

3 111+07.37-22.17'L
Center Type 2
Curb Ramp

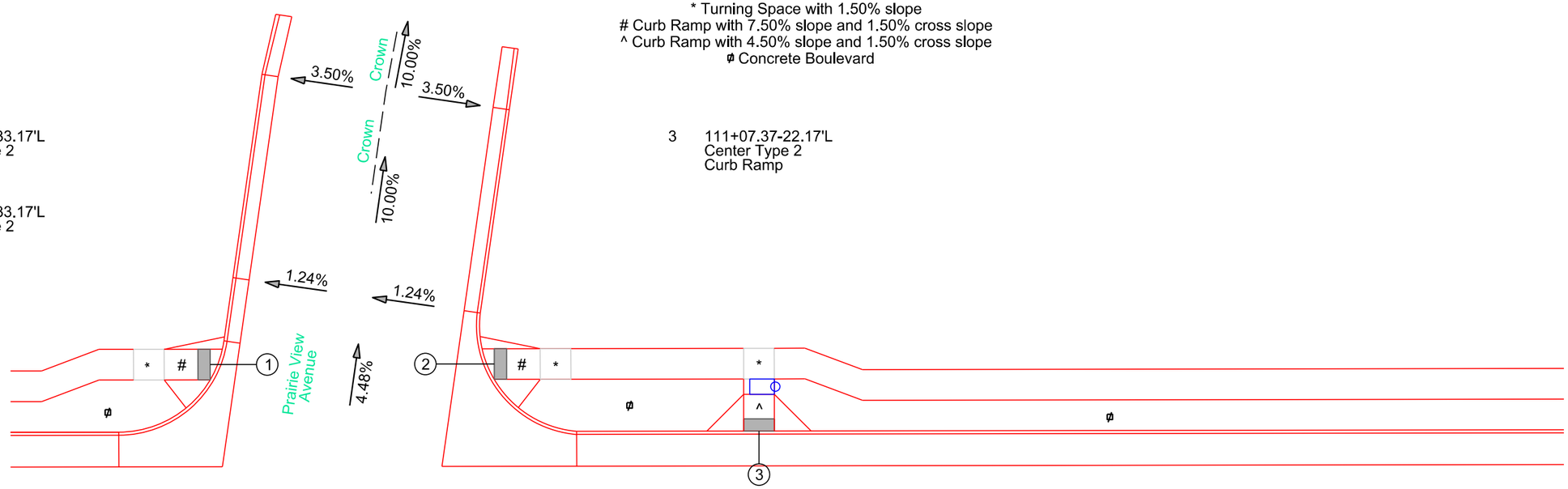

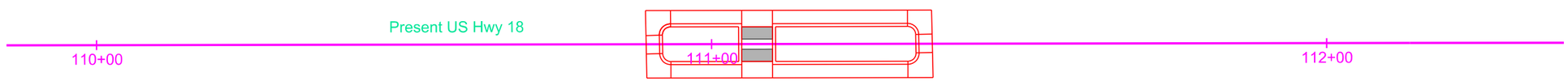

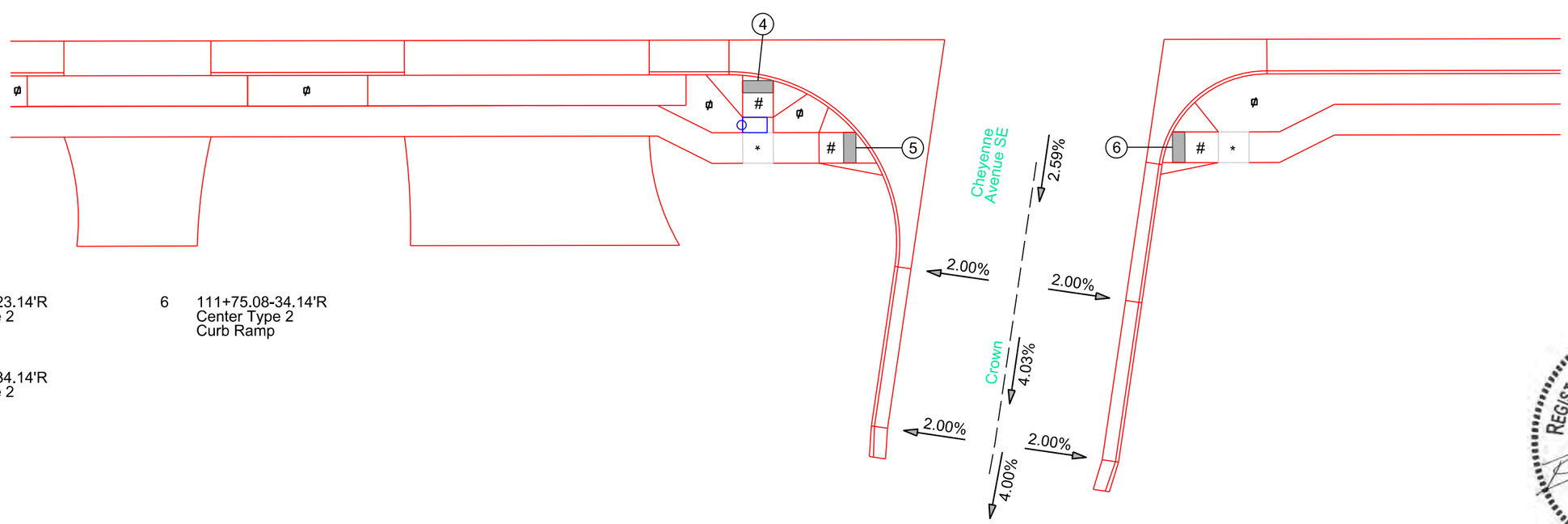

4 111+07.37-23.14'R
Center Type 2
Curb Ramp

5 111+23.34-34.14'R
Center Type 2
Curb Ramp

6 111+75.08-34.14'R
Center Type 2
Curb Ramp

REGISTERED PROFESSIONAL ENGINEER
REG. NO.
11522
BRANDON
FRIED
SOUTH DAKOTA
8/2/24

Plot Scale - 1:20

Plotted From - brandonfried

File - ...\CurbRamps_20scale\111cr.dgn

CURB RAMP LAYOUT

FOR BIDDING PURPOSES ONLY

KLJ	STATE OF SOUTH DAKOTA	PROJECT	SHEET	TOTAL SHEETS
		NH-CR-EM 0018(195)103 P 0407(05)01	B110	B166

Plotting Date: 8/2/2024

Rev. 8/2/2024 BAF

* Turning Space with 1.50% slope
\# Curb Ramp with 7.50% slope and 1.50% cross slope
△ Curb Ramp with 1.50% slope and 1.50% cross slope
ϕ Concrete Boulevard

1 113+64.11-22.17'L
Center Type 2
Curb Ramp

2 113+87.41-32.17'L
Center Type 2
Curb Ramp

3 114+42.01-32.17'L
Center Type 2
Curb Ramp

4 114+63.21-22.17'L
Center Type 2
Curb Ramp

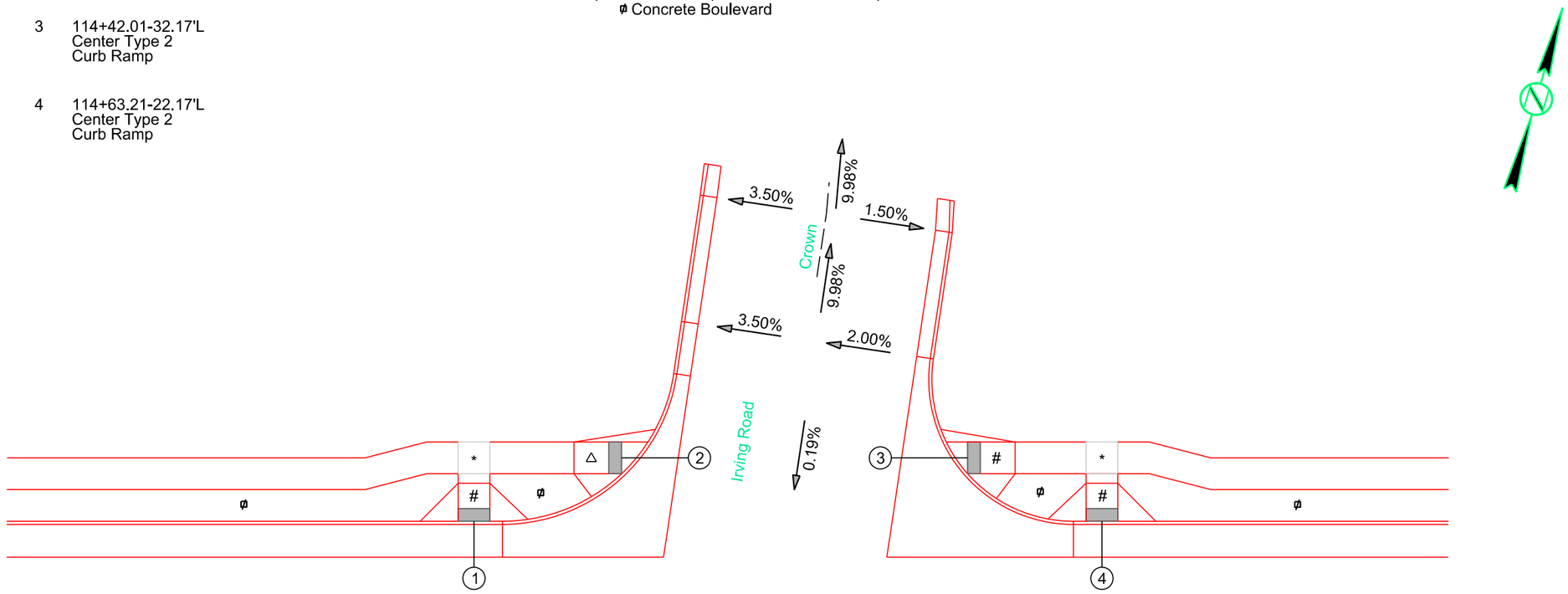

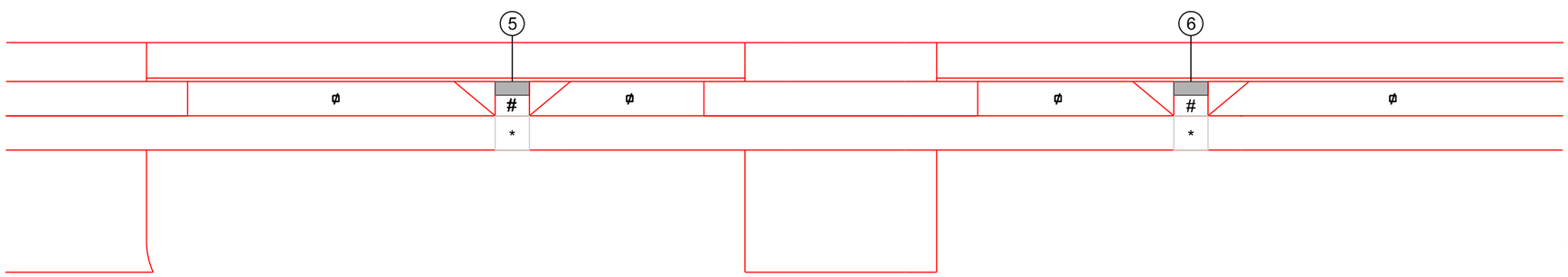

5 113+64.11-22.17'R
Center Type 2
Curb Ramp

6 114+63.21-22.17'R
Center Type 2
Curb Ramp

REGISTERED PROFESSIONAL ENGINEER
REG. NO.
11522
BRANDON
FRIED
SOUTH DAKOTA
8/2/24

Plot Scale - 1:20
Plotted From - brandonfried
File - ...\CurbRamps_20scale\114cr.dgn

CURB RAMP LAYOUT

FOR BIDDING PURPOSES ONLY

KLJ	STATE OF SOUTH DAKOTA	PROJECT	SHEET	TOTAL SHEETS
		NH-CR-EM 0018(195)103 P 0407(05)01	B111	B166

Plotting Date: 8/2/2024

Rev. 8/2/2024 BAF

* Turning Space with 1.50% slope
\# Curb Ramp with 7.50% slope and 1.50% cross slope
ø Curb Ramp with 6.00% slope and 1.50% cross slope
\+ Curb Ramp with 5.00% slope and 1.50% cross slope
△ Curb Ramp with 1.50% slope and 1.50% cross slope
ø Concrete Boulevard

1 117+46.19-22.18'L
Center Type 2
Curb Ramp

2 117+70.43-46.50'L
Center Type 2
Curb Ramp

3 118+09.46-48.45'L
Center Type 2
Curb Ramp

4 118+23.66-24.34'L
Center Type 2
Curb Ramp

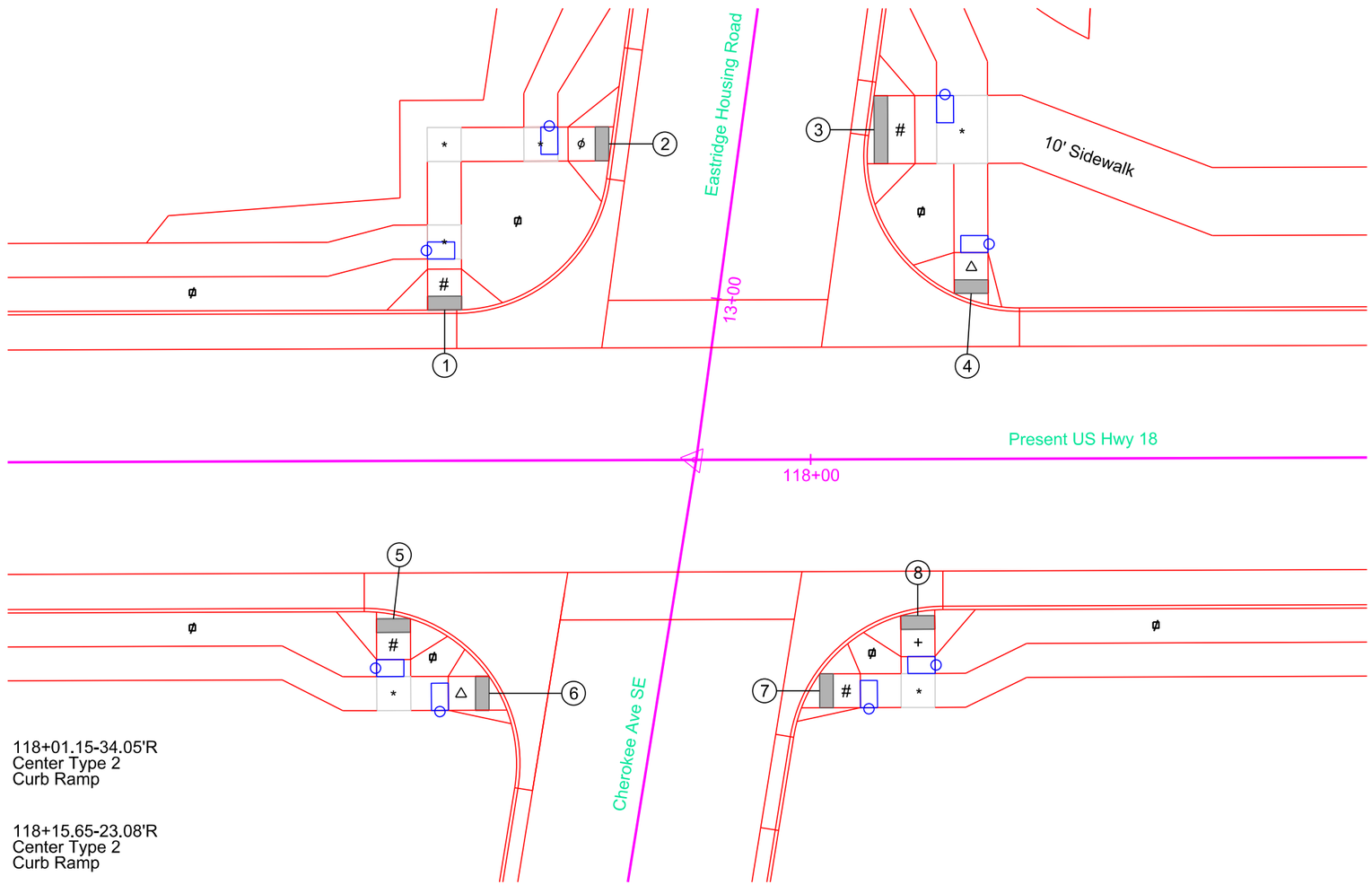

5 117+38.50-23.38'R
Center Type 2
Curb Ramp

6 117+52.52-34.23'R
Center Type 2
Curb Ramp

7 118+01.15-34.05'R
Center Type 2
Curb Ramp

8 118+15.65-23.08'R
Center Type 2
Curb Ramp

REGISTERED PROFESSIONAL ENGINEER
REG. NO.
11522
BRANDON
FRIED
SOUTH DAKOTA
8/2/24

Plot Scale - 1:20
Plotted From - brandonfried
File - ...\CurbRamps_20scale\118cr.dgn

CURB RAMP LAYOUT

FOR BIDDING PURPOSES ONLY

KLJ	STATE OF SOUTH DAKOTA	PROJECT	SHEET	TOTAL SHEETS
		NH-CR-EM 0018(195)103 P 0407(05)01	B112	B166

Plotting Date: 8/2/2024

Rev. 8/2/2024 BAF

* Turning Space with 1.50% slope
\# Curb Ramp with 7.50% slope and 1.50% cross slope
ϕ Curb Ramp with 3.00% slope and 1.50% cross slope
ϕ Concrete Boulevard

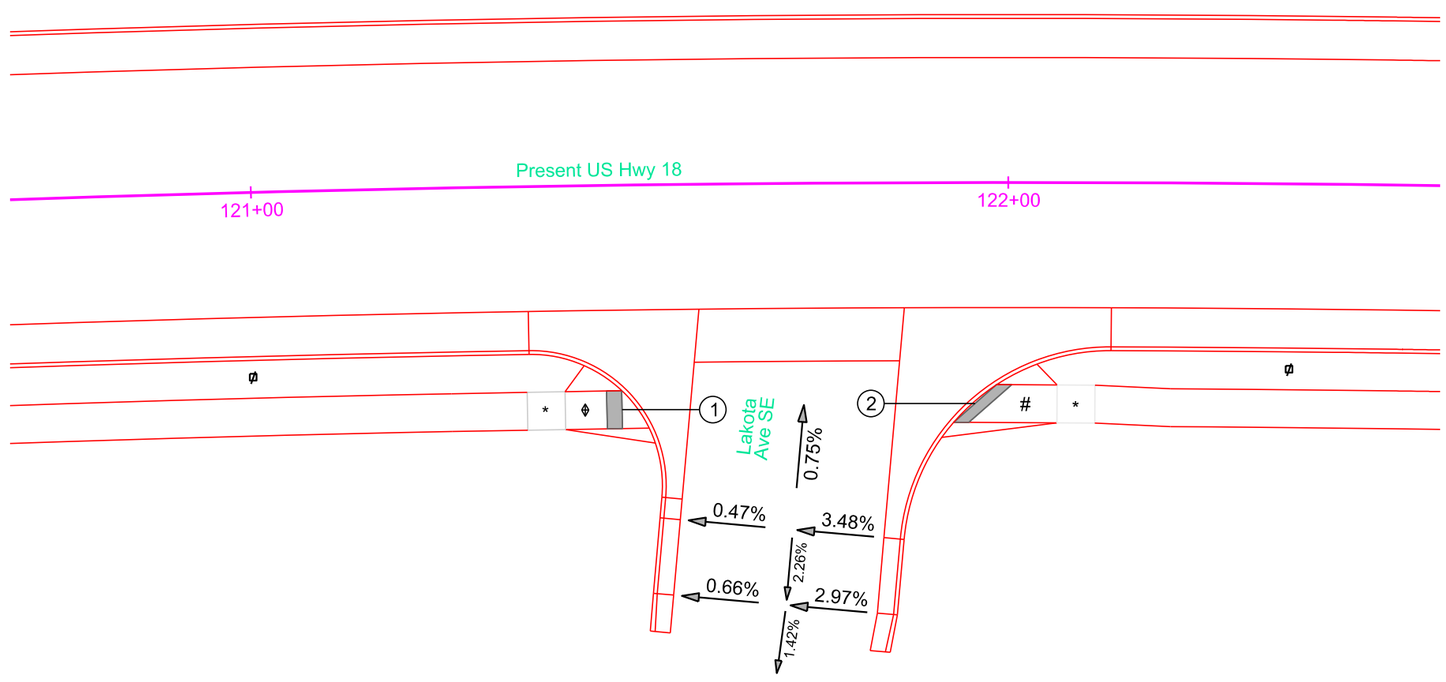

1 121+48.58-29.64'R
Center Type 2
Curb Ramp

2 121+95.56-29.17'R
Center Type 2
Curb Ramp

REGISTERED PROFESSIONAL ENGINEER
REG. NO.
11522
BRANDON
FRIED
SOUTH DAKOTA
8/2/24

Plot Scale - 1:20
Plotted From - brandonfried
File - ...\CurbRamps_20scale\122cr.dgn

CURB RAMP LAYOUT

FOR BIDDING PURPOSES ONLY

KLJ	STATE OF SOUTH DAKOTA	PROJECT	SHEET	TOTAL SHEETS
		NH-CR-EM 0018(195)103 P 0407(05)01	B113	B166

Plotting Date: 8/2/2024

Rev. 8/2/2024 BAF

* Turning Space with 1.50% slope
\# Curb Ramp with 7.50% slope and 1.50% cross slope
△ Curb Ramp with 1.50% slope and 1.50% cross slope
ϕ Concrete Boulevard

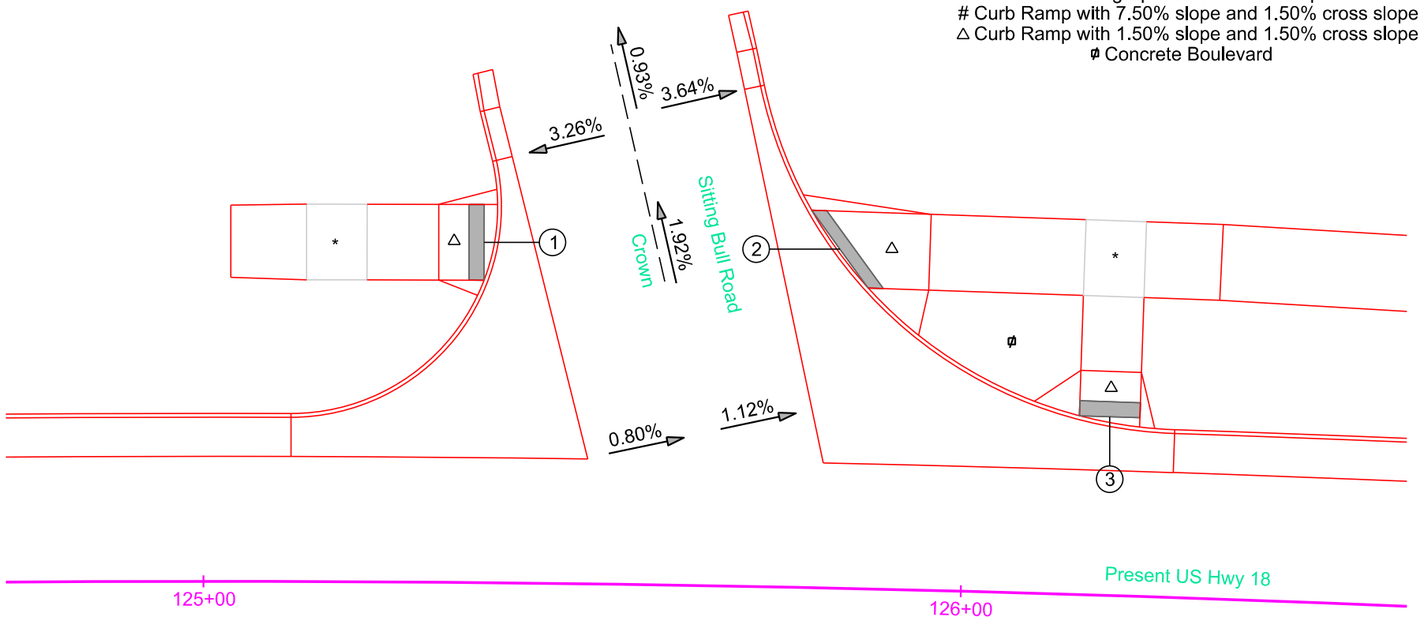

1 125+36.60-44.93'L
Center Type 2
Curb Ramp

2 125+83.03-44.78'L
Center Type 2
Curb Ramp

3 126+18.89-23.59'L
Center Type 2
Curb Ramp

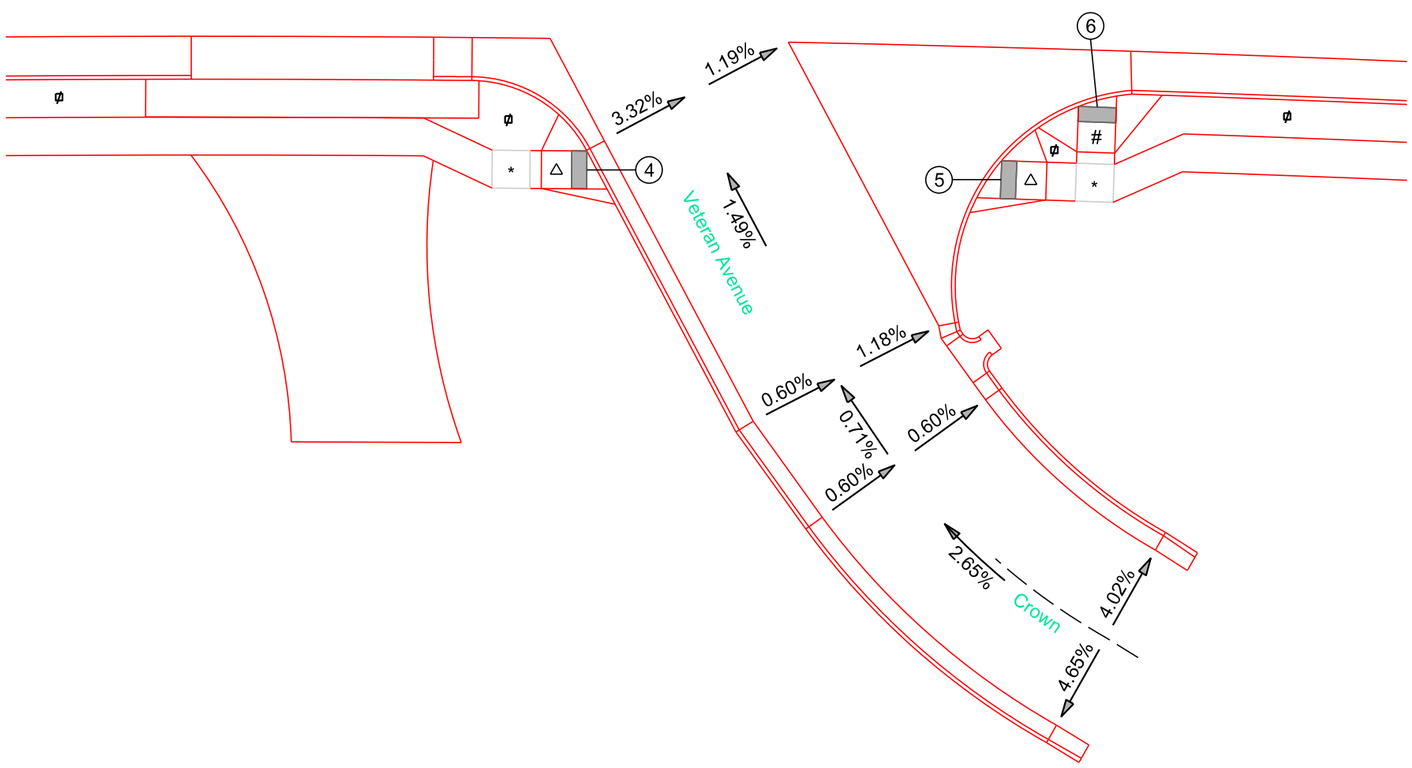

4 125+51.02-33.80'R
Center Type 2
Curb Ramp

5 126+06.22-33.95'R
Center Type 2
Curb Ramp

6 126+18.75-24.01'R
Center Type 2
Curb Ramp

REGISTERED PROFESSIONAL ENGINEER
REG. NO.
11522
BRANDON
FRIED
SOUTH DAKOTA
8/2/24

Plot Scale - 1:20
Plotted From - brandonfried
File - ...\CurbRamps_20scale\126cr.dgn

CURB RAMP LAYOUT

FOR BIDDING PURPOSES ONLY

KLJ	STATE OF SOUTH DAKOTA	PROJECT	SHEET	TOTAL SHEETS
		NH-CR-EM 0018(195)103 P 0407(05)01	B114	B166

Plotting Date: 8/2/2024

Rev. 8/2/2024 BAF

* Turning Space with 1.50% slope
\# Curb Ramp with 7.50% slope and 1.50% cross slope
^ Curb Ramp with 4.60% slope and 1.50% cross slope
^^ Curb Ramp with 4.25% slope and 1.50% cross slope
ϕ Curb Ramp with -3.50% slope and 1.50% cross slope
△ Curb Ramp with 1.50% slope and 1.50% cross slope
ø Concrete Boulevard

1 132+85.64-22.63'L
Center Type 2
Curb Ramp

2 133+03.98-37.52'L
Center Type 2
Curb Ramp

3 133+48.31-37.50'L
Center Type 2
Curb Ramp

4 133+71.64-22.17'L
Center Type 2
Curb Ramp

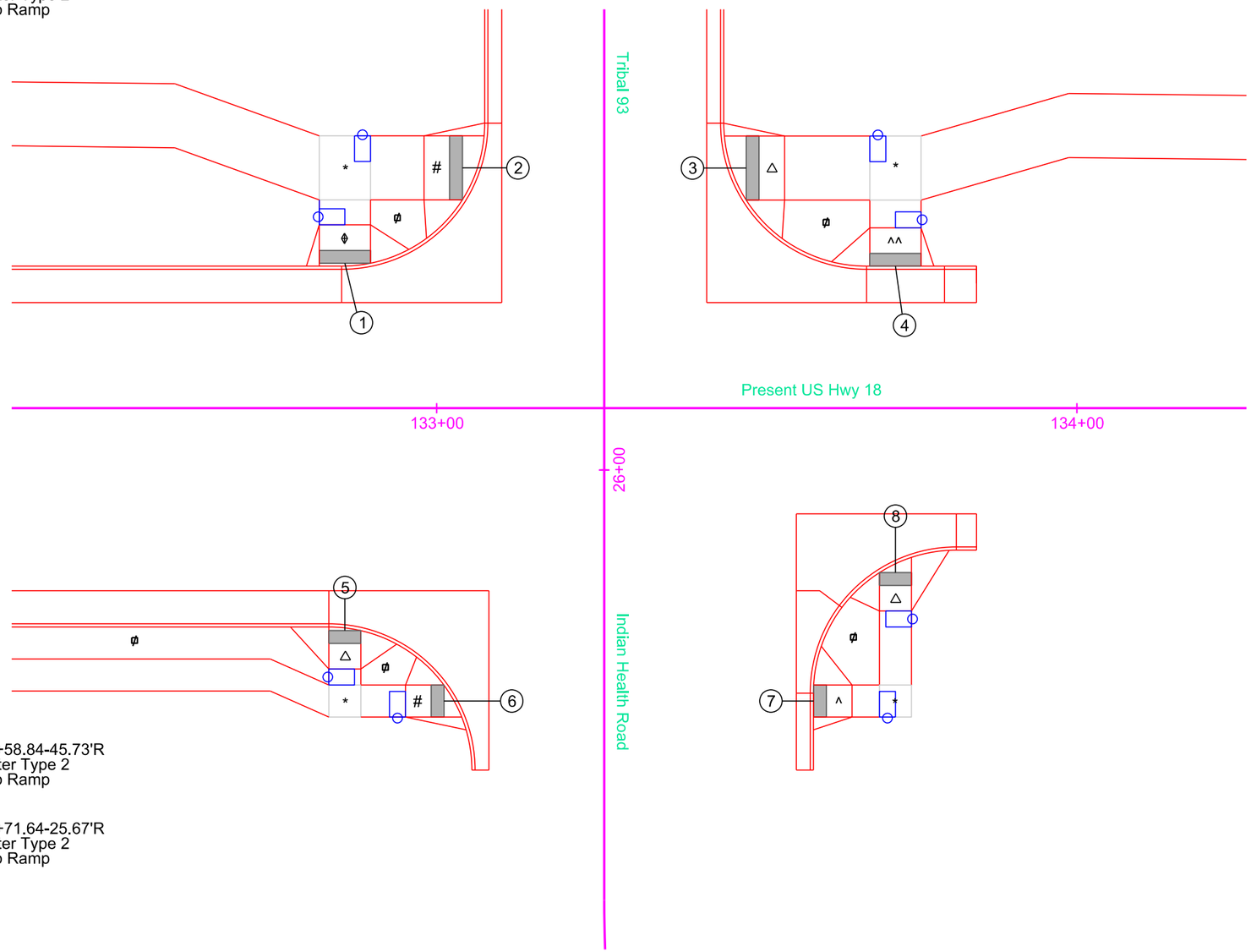

5 132+85.64-34.74'R
Center Type 2
Curb Ramp

6 133+01.09-45.73'R
Center Type 2
Curb Ramp

7 133+58.84-45.73'R
Center Type 2
Curb Ramp

8 133+71.64-25.67'R
Center Type 2
Curb Ramp

REGISTERED PROFESSIONAL ENGINEER
REG. NO.
11522
BRANDON
FRIED
SOUTH DAKOTA
8/2/24

Plot Scale - 1:20
Plotted From - brandonfried
File - ...\CurbRamps_20scale\134cr.dgn

CURB RAMP LAYOUT

FOR BIDDING PURPOSES ONLY

KLJ	STATE OF SOUTH DAKOTA	PROJECT	SHEET	TOTAL SHEETS
		NH-CR-EM 0018(195)103 P 0407(05)01	B115	B166

Plotting Date: 8/2/2024

Rev. 8/2/2024 BAF

* Turning Space with 1.50% slope
△ Curb Ramp with 1.50% slope and 1.50% cross slope
ϕ Concrete Boulevard

1 202+35.81-34.07'L
Center Type 2
Curb Ramp

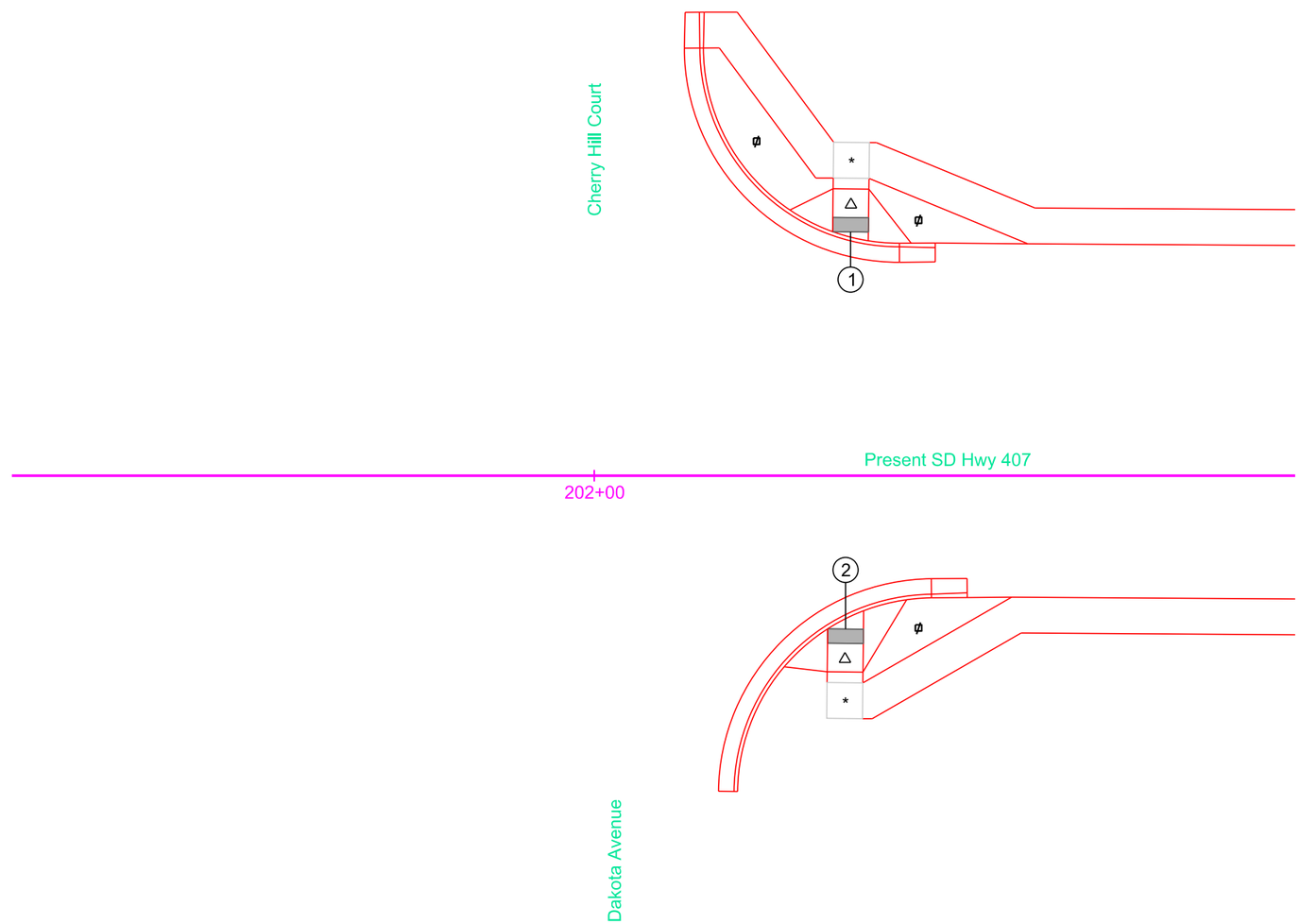

2 202+35.12-21.42'R
Center Type 2
Curb Ramp

REGISTERED PROFESSIONAL ENGINEER
REG. NO.
11522
BRANDON
FRIED
SOUTH DAKOTA
8/2/24

Plot Scale - 1:20
Plotted From - brandonfried
File - ...\CurbRamps_20scale\202cr.dgn

CURB RAMP LAYOUT

FOR BIDDING PURPOSES ONLY

KLJ	STATE OF SOUTH DAKOTA	PROJECT	SHEET	TOTAL SHEETS
		NH-CR-EM 0018(195)103 P 0407(05)01	B116	B166

Plotting Date: 8/2/2024

Rev. 8/2/2024 BAF

* Turning Space with 1.50% slope
\# Curb Ramp with 7.50% slope and 1.50% cross slope
\#\# Curb Ramp with 7.25% slope and 1.50% cross slope
\#\#\# Curb Ramp with 7.00% slope and 1.50% cross slope
ϕ Curb Ramp with 6.75% slope and 1.50% cross slope
ϕϕ Curb Ramp with 6.50% slope and 1.50% cross slope
ϕϕϕ Curb Ramp with 6.00% slope and 1.50% cross slope
\+ Curb Ramp with 5.50% slope and 1.50% cross slope
ϕ Concrete Boulevard

1 208+42.79-28.81'L
Center Type 2
Curb Ramp

2 208+98.48-28.45'L
Center Type 2
Curb Ramp

3 209+30.84-38.41'L
Center Type 2
Curb Ramp

4 209+73.27-34.44'L
Center Type 2
Curb Ramp

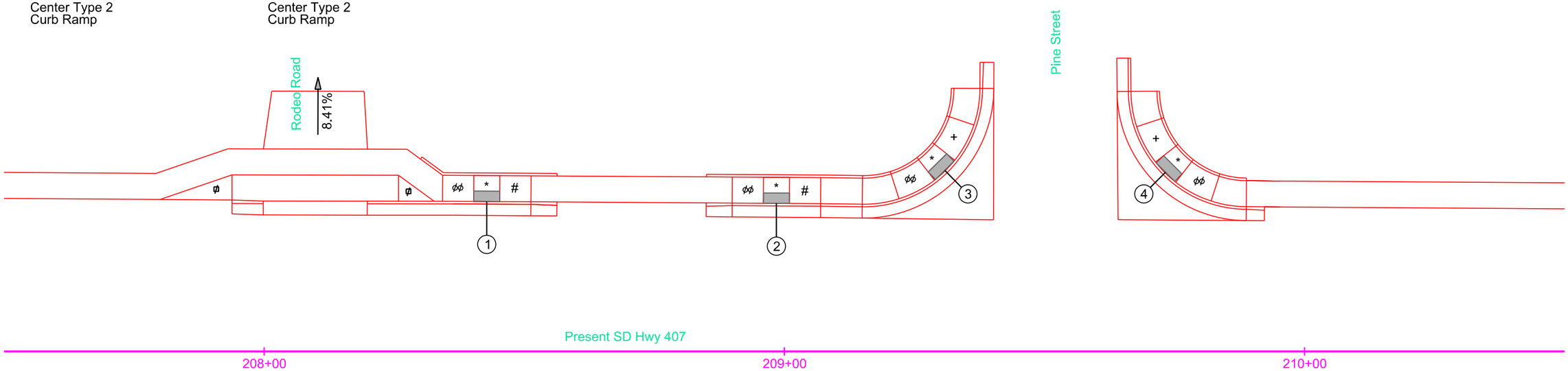

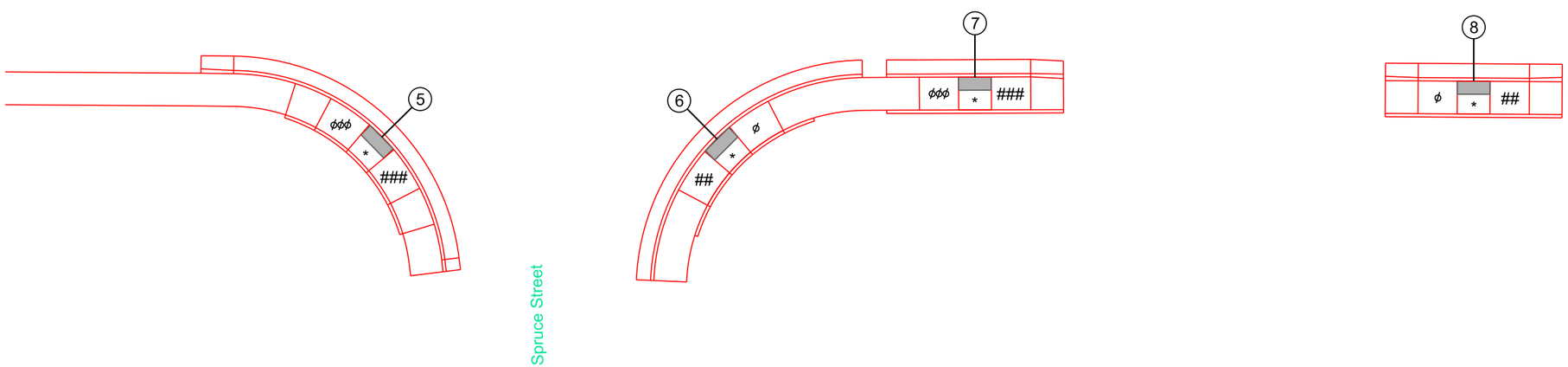

5 208.07+53-30.09'R
Center Type 2
Curb Ramp

6 208+58.75-30.39'R
Center Type 2
Curb Ramp

7 208+98.14-20.93'R
Center Type 2
Curb Ramp

8 209+74.33-21.55'R
Center Type 2
Curb Ramp

REGISTERED PROFESSIONAL ENGINEER
REG. NO.
11522
BRANDON
FRIED
SOUTH DAKOTA
8/2/24

Plot Scale - 1:20
Plotted From - brandonfried
File - ...\CurbRamps_20scale\209cr.dgn

CURB RAMP LAYOUT

FOR BIDDING PURPOSES ONLY

KLJ	STATE OF SOUTH DAKOTA	PROJECT	SHEET	TOTAL SHEETS
		NH-CR-EM 0018(195)103 P 0407(05)01	B117	B166

Plotting Date: 8/2/2024

Rev. 8/2/2024 BAF

* Turning Space with 1.50% slope
\+ Curb Ramp with 5.00% slope and 1.50% cross slope
⊕ Curb Ramp with 3.50% slope and 1.50% cross slope
⊕⊕ Curb Ramp with 3.00% slope and 1.50% cross slope
△ Curb Ramp with 1.50% slope and 1.50% cross slope
ϕ Concrete Boulevard

1 212+32.08-29.48'L
Center Type 2
Curb Ramp

2 212+42.19-39.38'L
Center Type 2
Curb Ramp

3 212+76.93-39.19'L
Center Type 2
Curb Ramp

4 212+86.88-29.08'L
Center Type 2
Curb Ramp

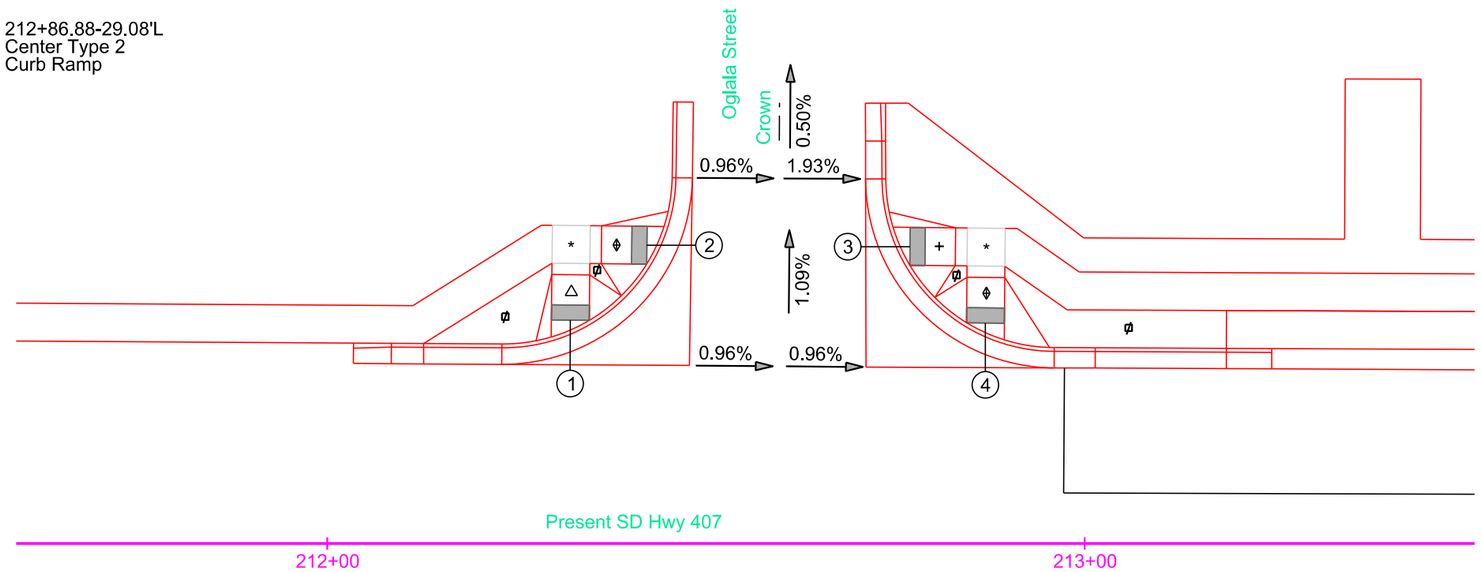

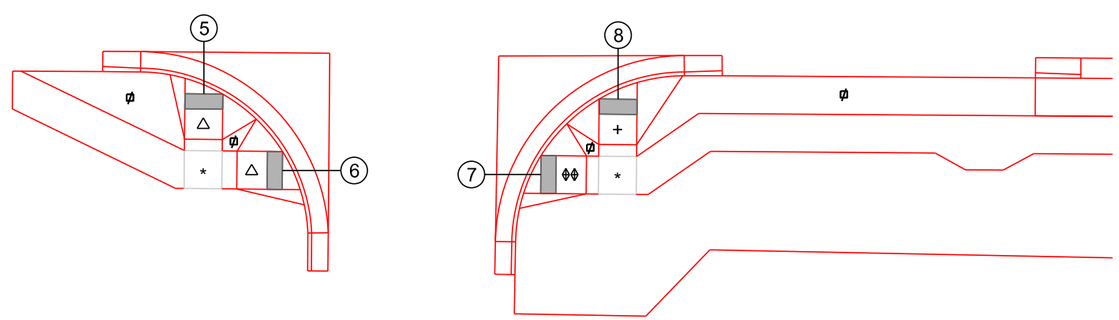

5 212+31.50-25.93'R
Center Type 2
Curb Ramp

6 212+41.86-36.04'R
Center Type 2
Curb Ramp

7 212+75.98-36.57'R
Center Type 2
Curb Ramp

8 212+86.19-26.61'R
Center Type 2
Curb Ramp

REGISTERED PROFESSIONAL ENGINEER
REG. NO.
11522
BRANDON
FRIED
SOUTH DAKOTA
8/2/24

Plot Scale - 1:20
Plotted From - brandonfried
File - ...\CurbRamps_20scale\212cr.dgn

CURB RAMP LAYOUT

FOR BIDDING PURPOSES ONLY

KLJ	STATE OF SOUTH DAKOTA	PROJECT	SHEET	TOTAL SHEETS
		NH-CR-EM 0018(195)103 P 0407(05)01	B118	B166

Plotting Date: 8/2/2024

Rev. 8/2/2024 BAF

* Turning Space with 1.50% slope
\# Curb Ramp with 7.50% slope and 1.50% cross slope
ø Curb Ramp with 6.00% slope and 1.50% cross slope
△ Curb Ramp with 1.50% slope and 1.50% cross slope
ϕ Concrete Boulevard

1	214+68.05-26.83'L Center Type 2 Curb Ramp	3	215+44.79-45.96'L Center Type 2 Curb Ramp
2	214+92.31-46.89'L Center Type 2 Curb Ramp	4	215+65.84-25.49'L Center Type 2 Curb Ramp

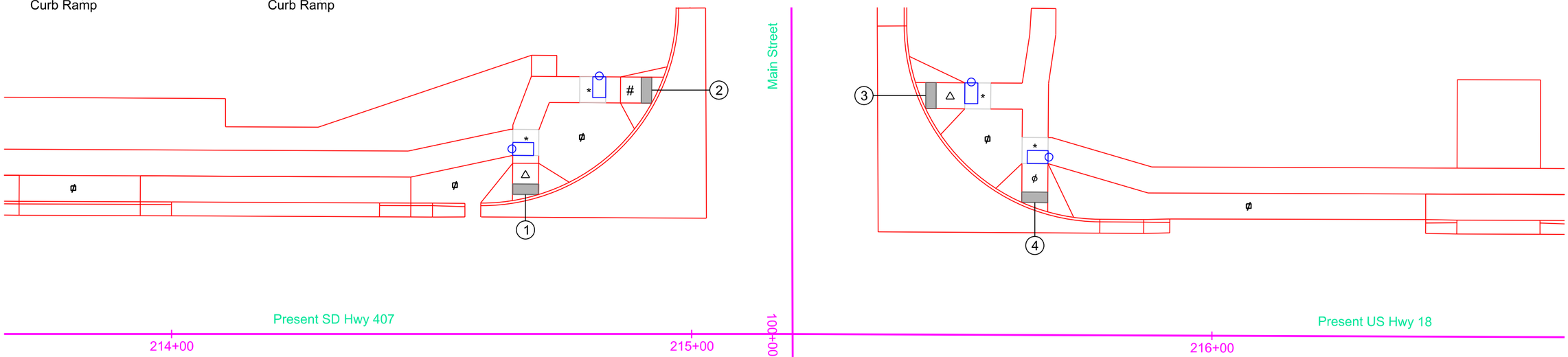

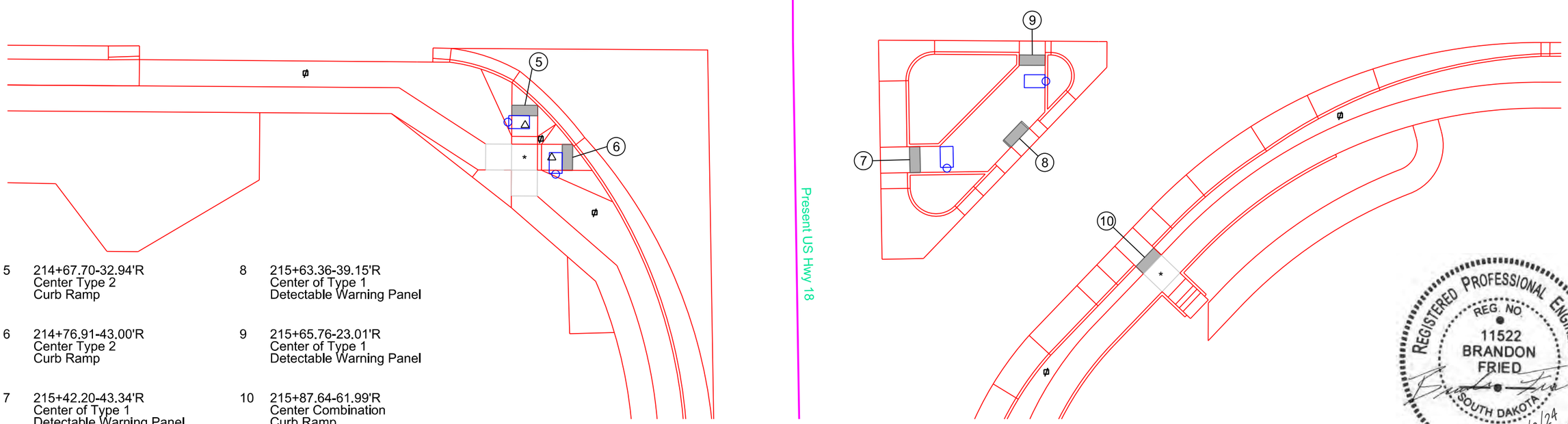

5	214+67.70-32.94'R Center Type 2 Curb Ramp	8	215+63.36-39.15'R Center of Type 1 Detectable Warning Panel
6	214+76.91-43.00'R Center Type 2 Curb Ramp	9	215+65.76-23.01'R Center of Type 1 Detectable Warning Panel
7	215+42.20-43.34'R Center of Type 1 Detectable Warning Panel	10	215+87.64-61.99'R Center Combination Curb Ramp

REGISTERED PROFESSIONAL ENGINEER
REG. NO.
11522
BRANDON
FRIED
SOUTH DAKOTA
8/2/24

Plot Scale - 1:20
Plotted From - brandonfried
File - ...\CurbRamps_20scale\213cr.dgn

CURB RAMP LAYOUT

FOR BIDDING PURPOSES ONLY

KLJ	STATE OF SOUTH DAKOTA	PROJECT	SHEET	TOTAL SHEETS
		NH-CR-EM 0018(195)103 P 0407(05)01	B119	B166

Plotting Date: 8/2/2024

Rev. 8/2/2024 BAF

* Turning Space with 1.50% slope
\# Curb Ramp with 7.50% slope and 1.50% cross slope
\#\# Curb Ramp with 7.00% slope and 1.50% cross slope
ϕ Curb Ramp with 6.75% slope and 1.50% cross slope
ϕϕ Curb Ramp with 6.25% slope and 1.50% cross slope
\+ Curb Ramp with 5.75% slope and 1.50% cross slope
\+\+ Curb Ramp with 5.00% slope and 1.50% cross slope
ϕ Concrete Boulevard

1 219+44.44-27.83'L
Center Type 2
Curb Ramp

2 219+92.33-27.91'L
Center Type 2
Curb Ramp

3 220+36.19-22.64'L
Center Type 2
Curb Ramp

4 220+86.04-22.62'L
Center Type 2
Curb Ramp

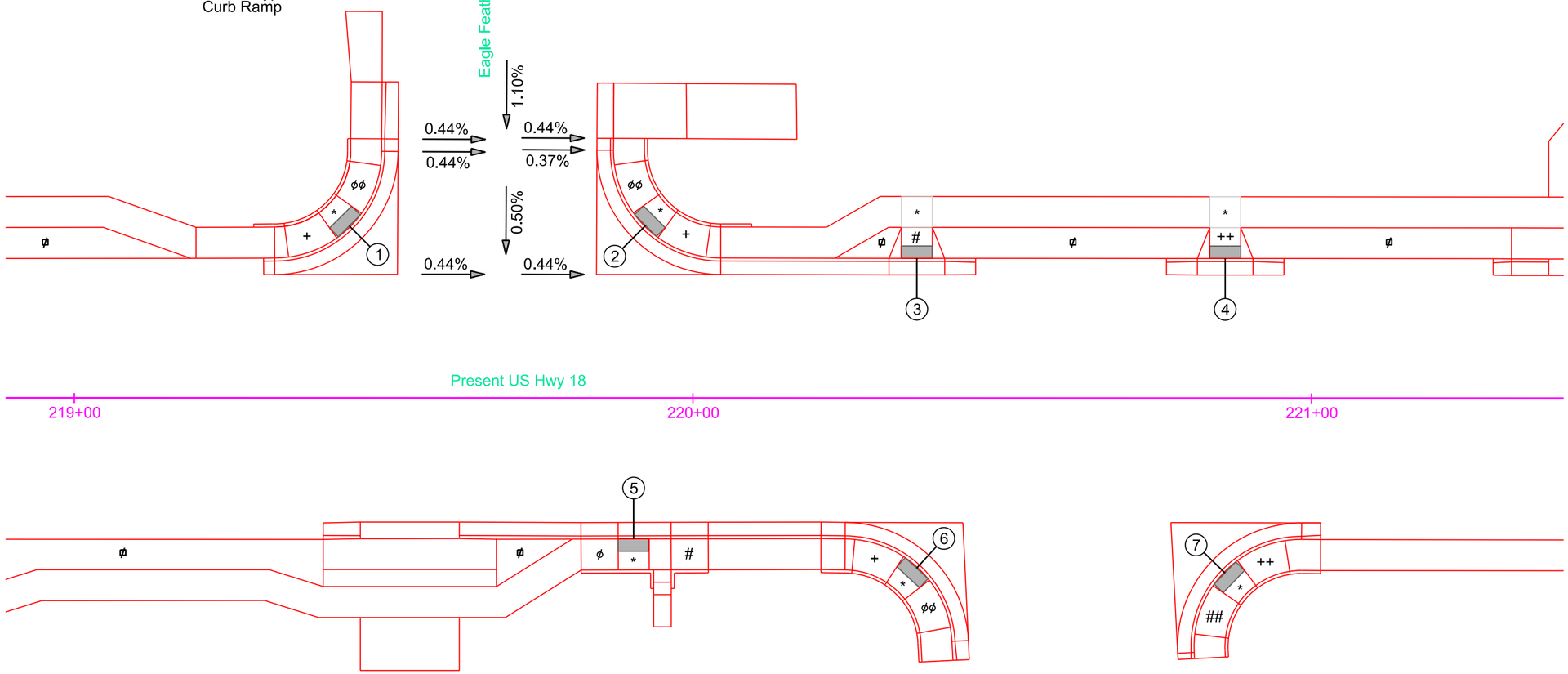

5 219+90.42-22.74'R
Center Type 2
Curb Ramp

6 220+36.17-27.43'R
Center Type 2
Curb Ramp

7 220+86.02-28.21'R
Center Type 2
Curb Ramp

REGISTERED PROFESSIONAL ENGINEER
REG. NO.
11522
BRANDON
FRIED
SOUTH DAKOTA
8/2/24

Plot Scale - 1:20
Plotted From - brandonfried
File - ...\CurbRamps_20scale\220cr.dgn

CURB RAMP LAYOUT

FOR BIDDING PURPOSES ONLY

KLJ	STATE OF SOUTH DAKOTA	PROJECT	SHEET	TOTAL SHEETS
		NH-CR-EM 0018(195)103 P 0407(05)01	B120	B166

Plotting Date: 8/2/2024

Rev. 8/2/2024 BAF

* Turning Space with 1.50% slope
\# Curb Ramp with 7.50% slope and 1.50% cross slope
\#\# Curb Ramp with 7.00% slope and 1.50% cross slope
ϕ Curb Ramp with 6.17% slope and 1.50% cross slope
\+ Curb Ramp with 5.50% slope and 1.50% cross slope
⊕ Curb Ramp with -3.00% slope and 1.50% cross slope
⧖ Curb Ramp with 2.00% slope and 1.50% cross slope
⌀ Concrete Boulevard

1 225+52.46-22.65'L
Center Type 2
Curb Ramp

2 226+03.05-22.65'L
Center Type 2
Curb Ramp

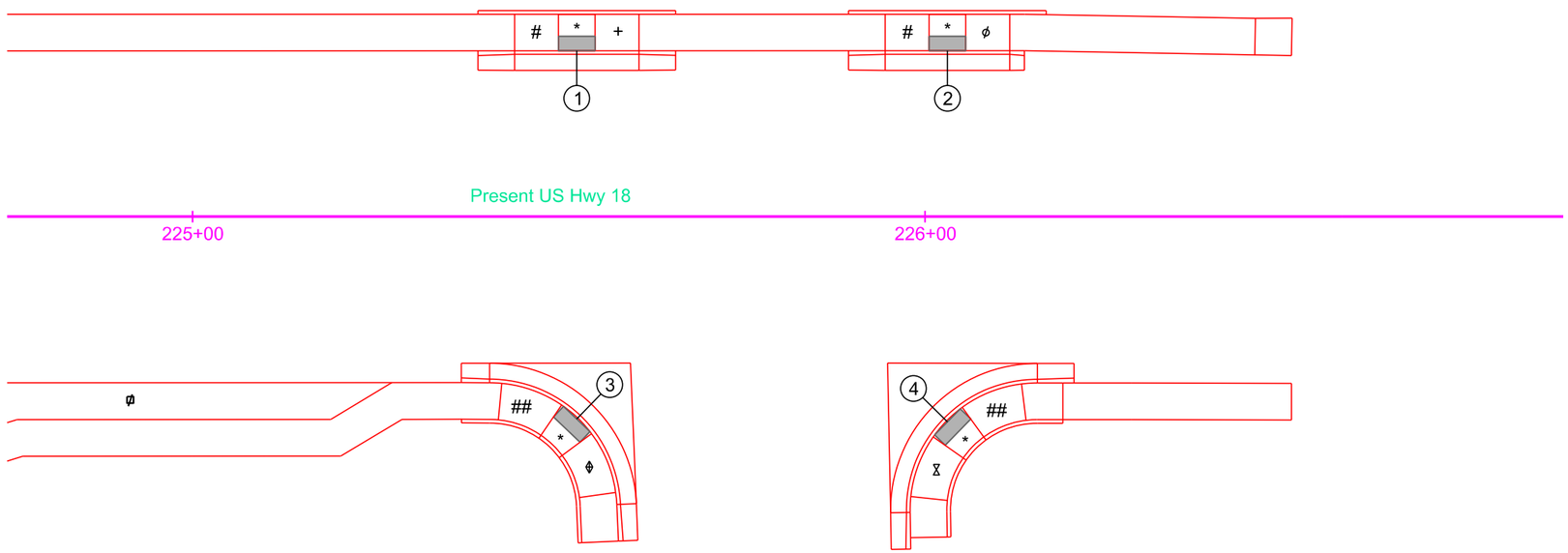

3 225+52.46-27.64'R
Center Type 2
Curb Ramp

4 226+03.05-28.02'R
Center Type 2
Curb Ramp

REGISTERED PROFESSIONAL ENGINEER
REG. NO.
11522
BRANDON
FRIED
SOUTH DAKOTA
8/2/24

Plot Scale - 1:20
Plotted From - brandonfried
File - ...\CurbRamps_20scale\226cr.dgn

FOR BIDDING PURPOSES ONLY

STATE OF SOUTH DAKOTA	PROJECT	SHEET NO.	TOTAL SHEETS
	NH-CR-EM 0018(195)103 P 0407(05)01	B121	B166

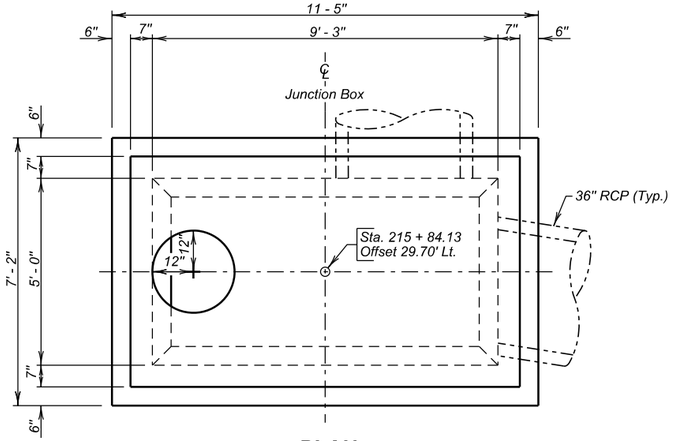

PLAN

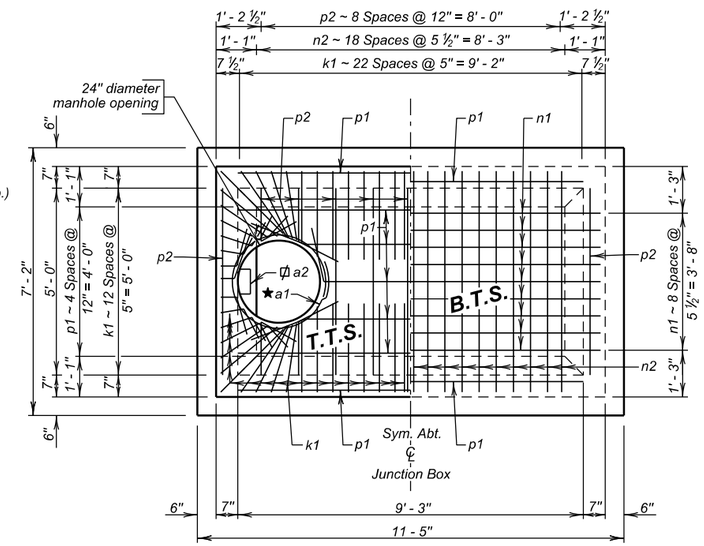

PLAN

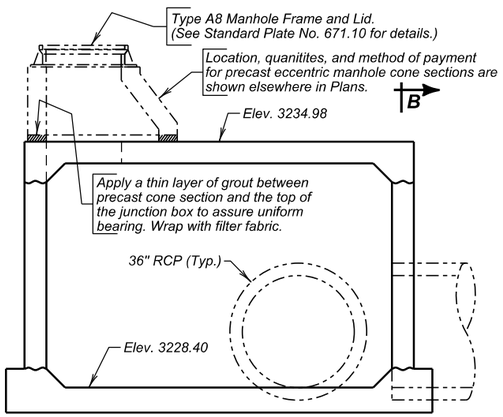

ELEVATION

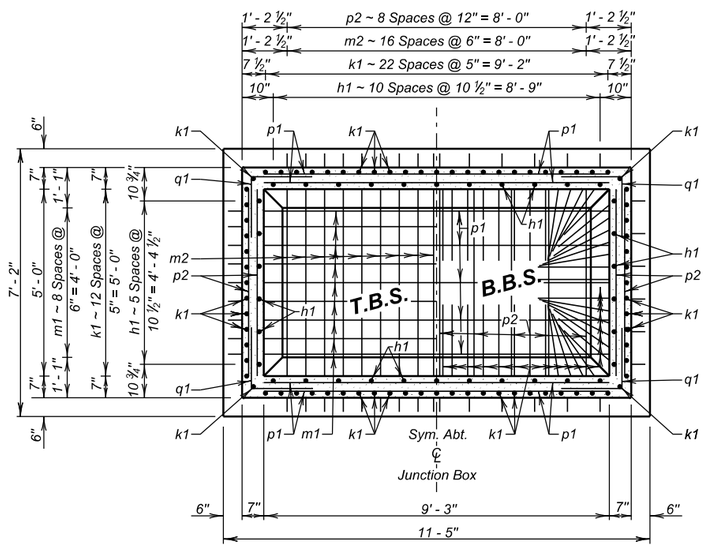

SECTION A - A

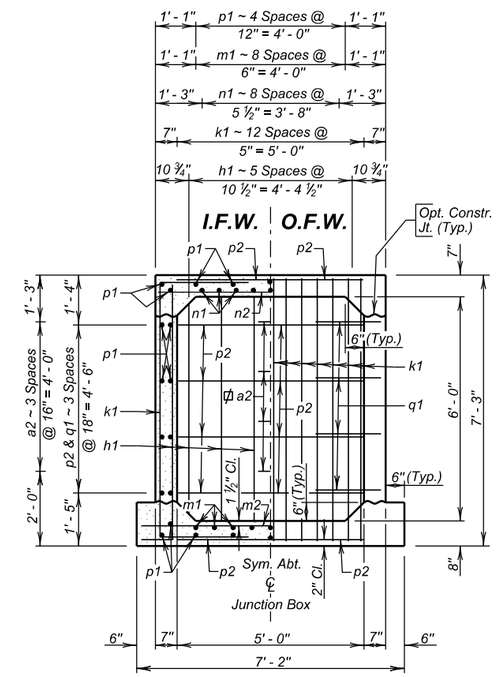

SECTION B - B

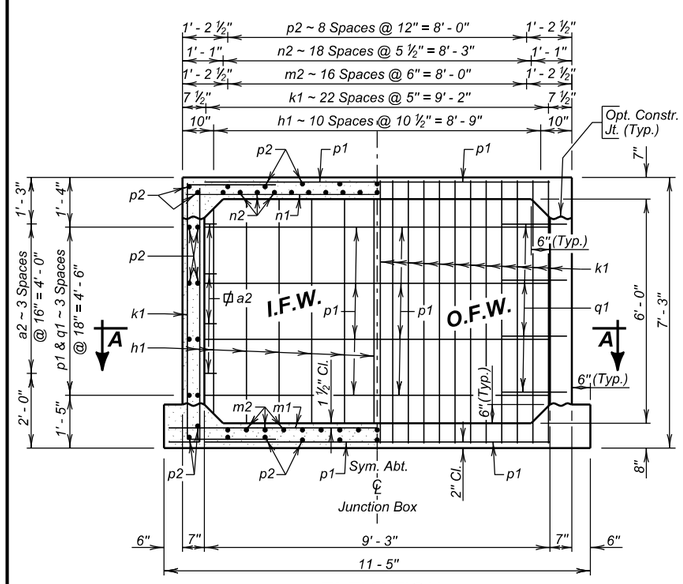

ELEVATION

PIPE DISPLACEMENT REDUCTIONS

R.C. Pipe Diameter (Inches)	Thickness of Pipe (Inches)	Class M6 Concrete (Cu. Yd.)
36" R.C.P.	4	0.23

LEGEND FOR PLACING RE-STEEL

- T.T.S. - Top of Top Slab
- B.T.S. - Bottom of Top Slab
- T.B.S. - Top of Bottom Slab
- B.B.S. - Bottom of Bottom Slab
- O.F.W. - Outside Face of Wall
- I.F.W. - Inside Face of Wall

REINFORCING SCHEDULE

	Mk.	No.	Size	Length	Type	Bending Details
★ ⌀	a1	1	6	9' - 0"	T3	
	a2	4	-	-----	-	
	h1	34	4	7' - 9"	17A	
	k1	76	4	11' - 9"	17	
	m1	9	6	11' - 0"	Str	
	m2	17	6	6' - 9"	Str	
	n1	9	5	10' - 0"	Str.	
	n2	19	5	5' - 9"	Str.	
	p1	34	4	10' - 0"	Str.	
	p2	42	4	5' - 9"	Str.	
	q1	16	4	3' - 6"	17A	

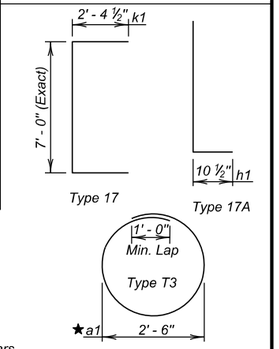

NOTES:
All dimensions are out to out of bars.
★ Locate in center of top slab with 3" clearance at the manhole opening.
⌀ Cast Iron Manhole Steps (R-1980-C) from Neenah Foundry or equivalent.

ESTIMATED QUANTITIES

	ITEM	UNIT	QUANTITY
	Class M6 Concrete	Cu. Yd.	6.6
✳	Reinforcing Steel	Lb.	1741
	Type A8 Manhole Frame and Lid	Each	1

SPECIFICATIONS

1. Design Specifications: AASHTO LRFD Bridge Design Specifications, 9th Edition.
2. Construction Specifications: South Dakota Standard Specifications for Roads and Bridges, 2015 Edition and required Provisions, Supplemental Specifications, and Special Provisions as included in the Proposal.

GENERAL NOTES

1. Design Live Load: HL-93. No construction loading in excess of legal load was considered.
2. The design of the Junction Box is based on a maximum fill over the Junction Box of 3 feet and a minimum fill over the Junction Box of 2 feet.
3. All concrete will be Class M6 conforming to Section 462.
4. Reinforcing steel will conform to ASTM A615 Grade 60. Cut and bend reinforcing steel as required to place pipe(s) through junction box wall.
5. Junction Box may be precast. If precast, submit a checked design (done by a South Dakota registered P.E.) and shop plans to the Office of Bridge Design for approval.
6. Use 1 inch clear cover on all reinforcing steel unless otherwise noted.
7. All exposed edges will be chamfered ¾ inch.
8. Junction Box shown may be modified by the addition or omission of connecting pipes as noted elsewhere in the plans. All pipes entering Junction Box must fit between the inside face of walls.
9. ✳ The cost of furnishing and installing the manhole steps will be incidental to the contract unit price per Lb. for "Reinforcing Steel".
10. Reduce total quantities of concrete by the amount of concrete displaced by the pipes. The total quantity of concrete will be computed to the nearest hundredth of a cubic yard. The total quantity of reinforcing steel will be computed to the nearest pound.

DETAILS

FOR

SPECIAL 9' - 3" X 5' JUNCTION BOX

STA. 215 + 84.13 - 29.70' LT. SEC. 12-T35N-R45W
PCN 04FC NH-CR 0018(195)103

OGLALA LAKOTA COUNTY
S. D. DEPT. OF TRANSPORTATION
JANUARY 2024

PLANS BY :
OFFICE OF BRIDGE DESIGN, SOUTH DAKOTA DEPARTMENT OF TRANSPORTATION

DESIGNED BY	CK. DES. BY	DRAFTED BY	
AU	AH	BT	Steve A Johnson BRIDGE ENGINEER
OGLA04FC	04FCTA02		

FOR BIDDING PURPOSES ONLY

STATE OF SOUTH DAKOTA	PROJECT	SHEET NO.	TOTAL SHEETS
	NH-CR-EM 0018(195)103 P 0407(05)01	B122	B166

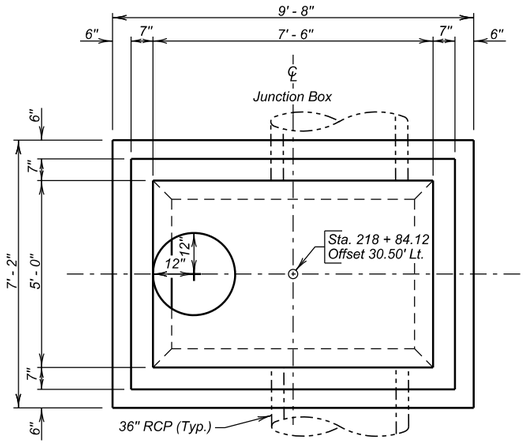

PLAN

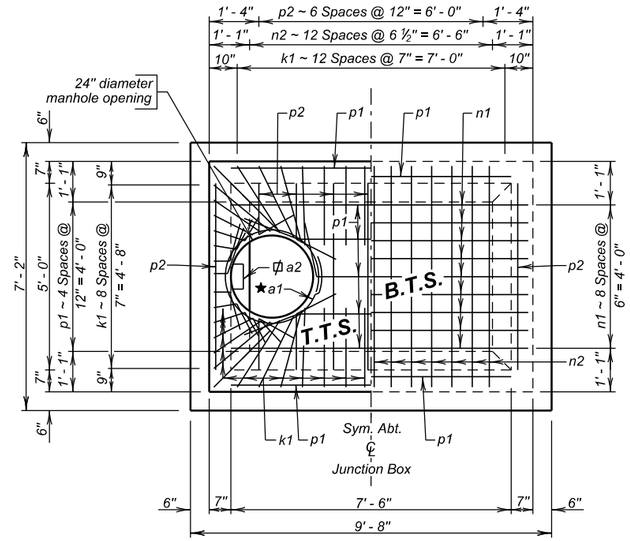

PLAN

PIPE DISPLACEMENT REDUCTIONS

R.C. Pipe Diameter (Inches)	Thickness of Pipe (Inches)	Class M6 Concrete (Cu. Yd.)
36" R.C.P.	4	0.23

REINFORCING SCHEDULE

	Mk.	No.	Size	Length	Type	Bending Details
★	a1	1	6	9' - 0"	T3	
⌀	a2	3	-	-----	-	
	h1	30	4	6' - 3"	17A	
	k1	48	4	10' - 0"	17	
	m1	9	5	9' - 3"	Str	
	m2	13	5	6' - 9"	Str	
	n1	9	5	8' - 3"	Str.	
	n2	13	5	5' - 9"	Str.	
	p1	30	4	8' - 3"	Str.	
	p2	34	4	5' - 9"	Str.	
	q1	12	4	3' - 6"	17A	

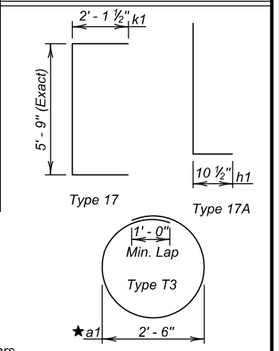

NOTES:
All dimensions are out to out of bars.
★ Locate in center of top slab with 3" clearance at the manhole opening.
⌀ Cast Iron Manhole Steps (R-1980-C) from Neenah Foundry or equivalent.

ESTIMATED QUANTITIES

	ITEM	UNIT	QUANTITY
	Class M6 Concrete	Cu. Yd.	5.0
✳	Reinforcing Steel	Lb.	1117
	Type A8 Manhole Frame and Lid	Each	1

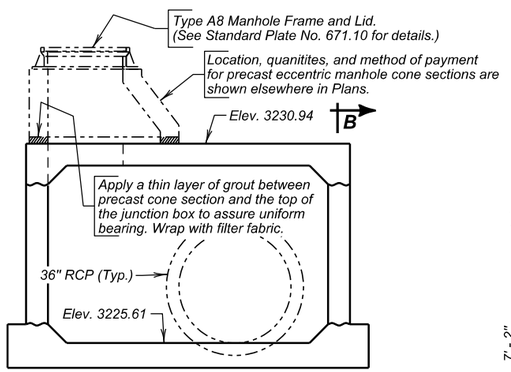

ELEVATION

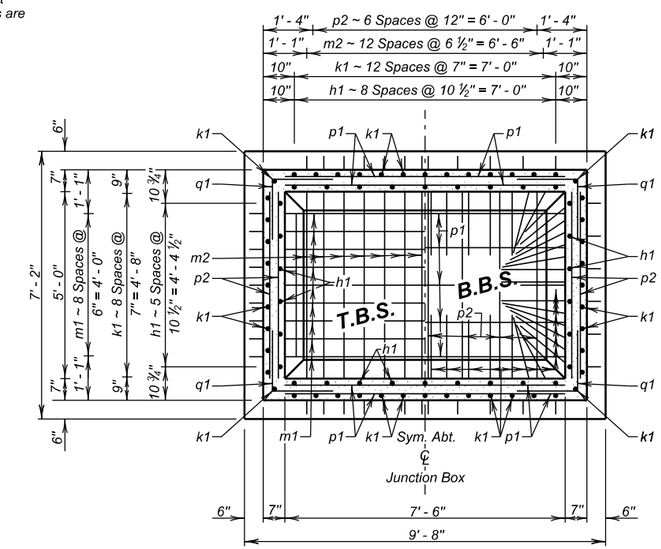

SECTION A - A

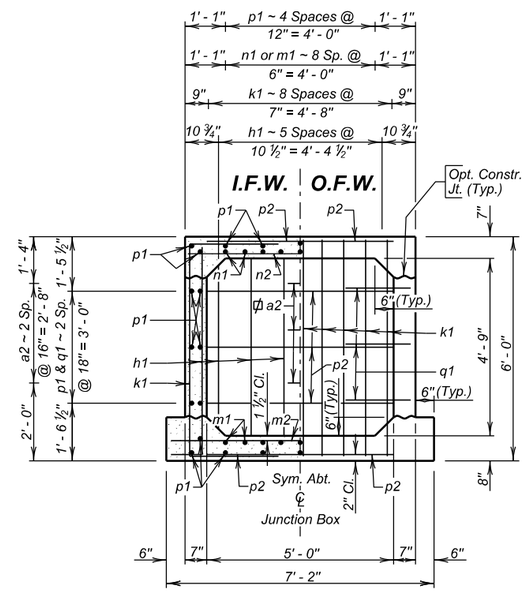

SECTION B - B

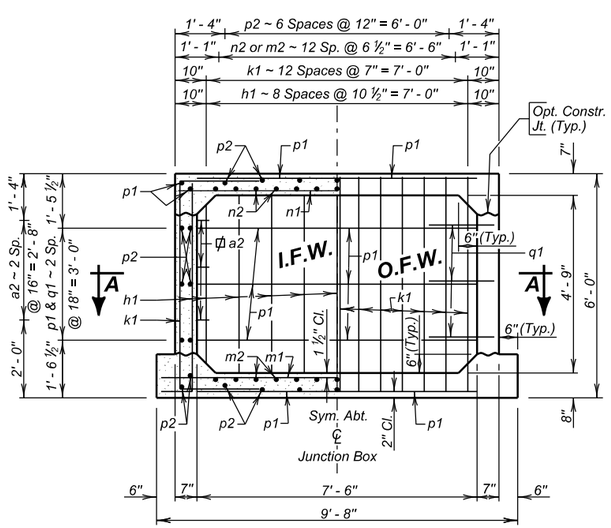

ELEVATION

LEGEND FOR PLACING RE-STEEL

T.T.S. - Top of Top Slab
B.T.S. - Bottom of Top Slab
T.B.S. - Top of Bottom Slab
B.B.S. - Bottom of Bottom Slab
O.F.W. - Outside Face of Wall
I.F.W. - Inside Face of Wall

SPECIFICATIONS

1. Design Specifications: AASHTO LRFD Bridge Design Specifications, 9th Edition.
2. Construction Specifications: South Dakota Standard Specifications for Roads and Bridges, 2015 Edition and required Provisions, Supplemental Specifications, and Special Provisions as included in the Proposal.

GENERAL NOTES

1. Design Live Load: HL-93. No construction loading in excess of legal load was considered.
2. The design of the Junction Box is based on a maximum fill over the Junction Box of 3 feet and a minimum fill over the Junction Box of 2 feet.
3. All concrete will be Class M6 conforming to Section 462.
4. Reinforcing steel will conform to ASTM A615 Grade 60. Cut and bend reinforcing steel as required to place pipe(s) through junction box wall.
5. Junction Box may be precast. If precast, submit a checked design (done by a South Dakota registered P.E.) and shop plans to the Office of Bridge Design for approval.
6. Use 1 inch clear cover on all reinforcing steel unless otherwise noted.
7. All exposed edges will be chamfered ¾ inch.
8. Junction Box shown may be modified by the addition or omission of connecting pipes as noted elsewhere in the plans. All pipes entering Junction Box must fit between the inside face of walls.
9. ✳ The cost of furnishing and installing the manhole steps will be incidental to the contract unit price per Lb. for "Reinforcing Steel".
10. Reduce total quantities of concrete by the amount of concrete displaced by the pipes. The total quantity of concrete will be computed to the nearest hundredth of a cubic yard. The total quantity of reinforcing steel will be computed to the nearest pound.

DETAILS

FOR

SPECIAL 7' - 6" X 5' JUNCTION BOX

STA. 218 + 84.12 - 30.50' LT. SEC. 12-T35N-R45W
PCN 04FC NH-CR 0018(195)103

OGLALA LAKOTA COUNTY
S. D. DEPT. OF TRANSPORTATION
JANUARY 2024

1 OF 1

PLANS BY :
OFFICE OF BRIDGE DESIGN, SOUTH DAKOTA DEPARTMENT OF TRANSPORTATION

DESIGNED BY	CK. DES. BY	DRAFTED BY	
AU	AH	BT	Steve A Johnson
OGLA04FC	04FCTA02		BRIDGE ENGINEER

JUNCTION BOX AND MANHOLE LAYOUT

FOR BIDDING PURPOSES ONLY

KLJ	STATE OF SOUTH DAKOTA	PROJECT	SHEET	TOTAL SHEETS
		NH-CR-EM 0018(195)103 P 0407(05)01	B123	B166

Plotting Date: 8/2/2024

Rev. 8/2/2024 BAF

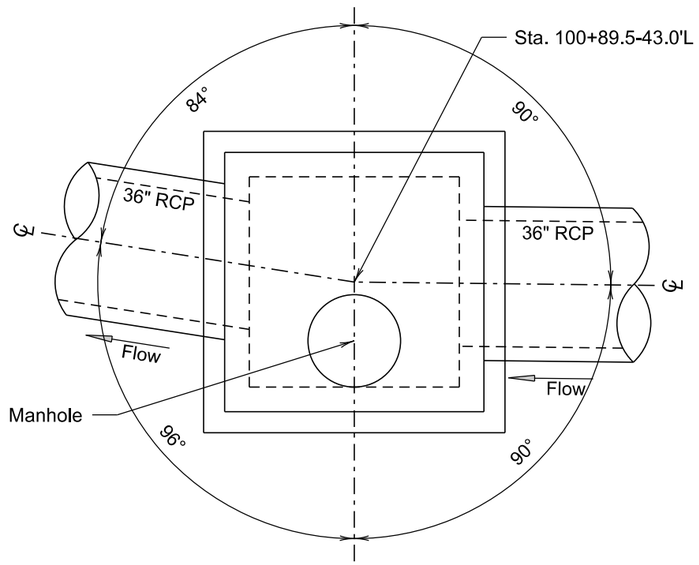

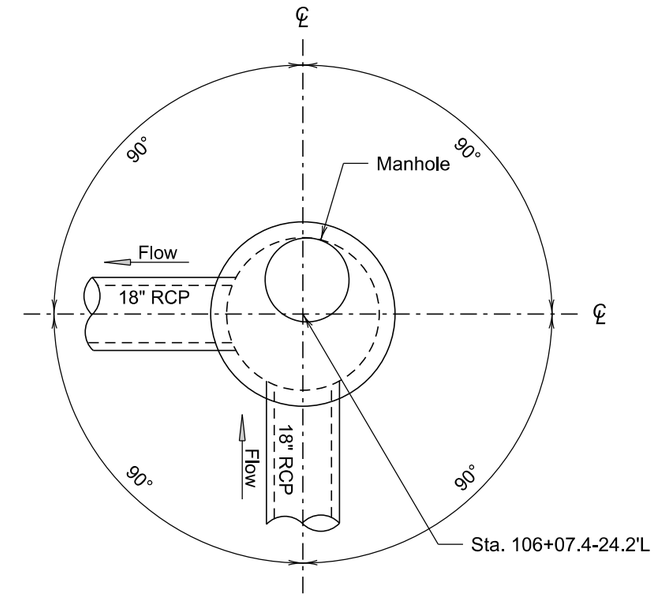

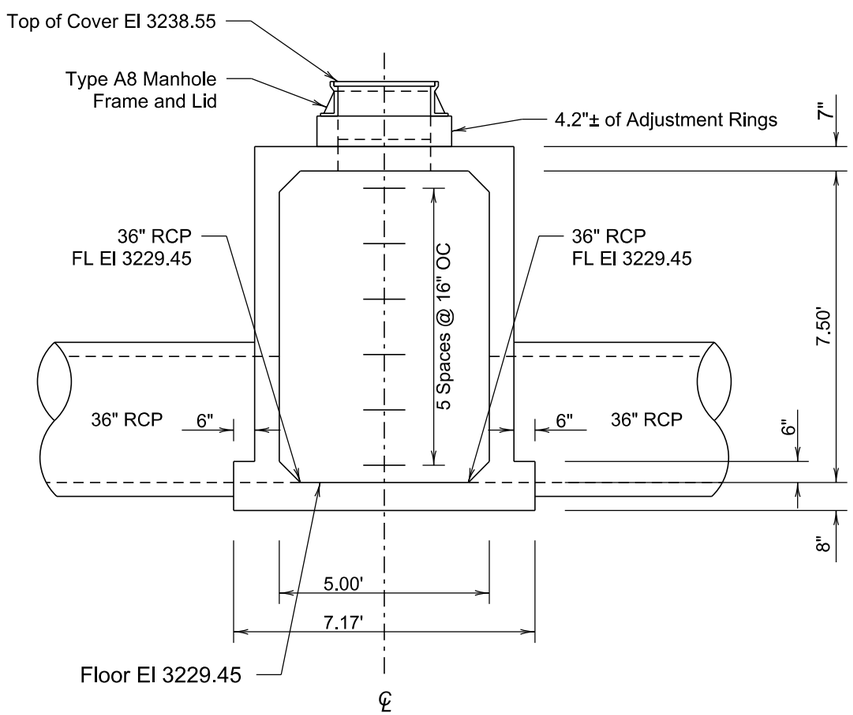

Sta. 100+91.3-45.5'L
5.0' x 5.0' Junction Box

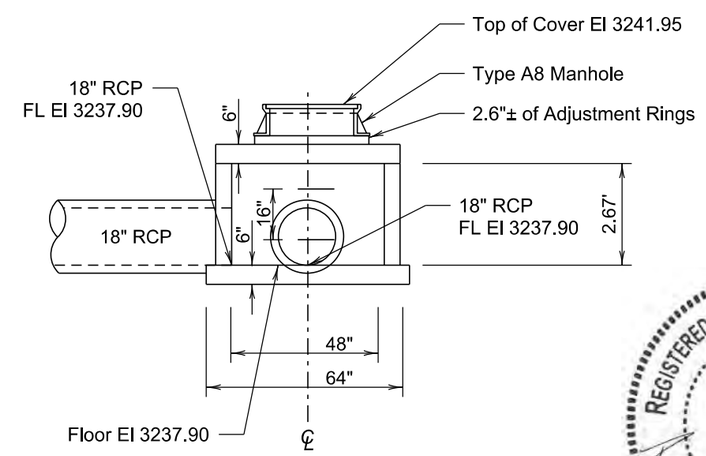

Sta. 106+07.4-24.2'R
48" Manhole

REGISTERED PROFESSIONAL ENGINEER
REG. NO.
11522
BRANDON
FRIED
SOUTH DAKOTA
8/2/24

Plot Scale - 1:10

Plotted From - brandonfried

File - ...\Sections\SectionB\Details.dgn

JUNCTION BOX AND MANHOLE LAYOUT

FOR BIDDING PURPOSES ONLY

KLJ	STATE OF SOUTH DAKOTA	PROJECT	SHEET	TOTAL SHEETS
		NH-CR-EM 0018(195)103 P 0407(05)01	B124	B166

Plotting Date: 8/2/2024

Rev. 8/2/2024 BAF

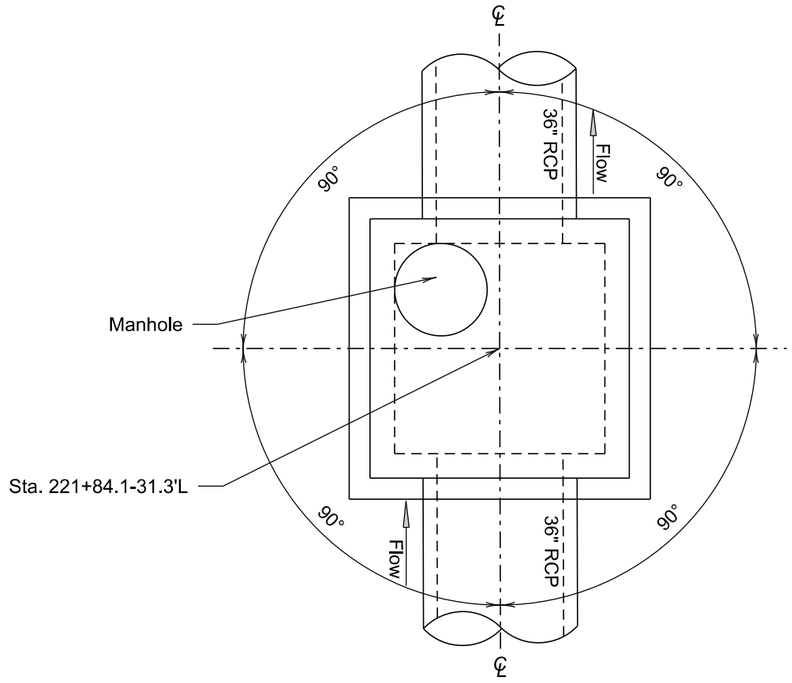

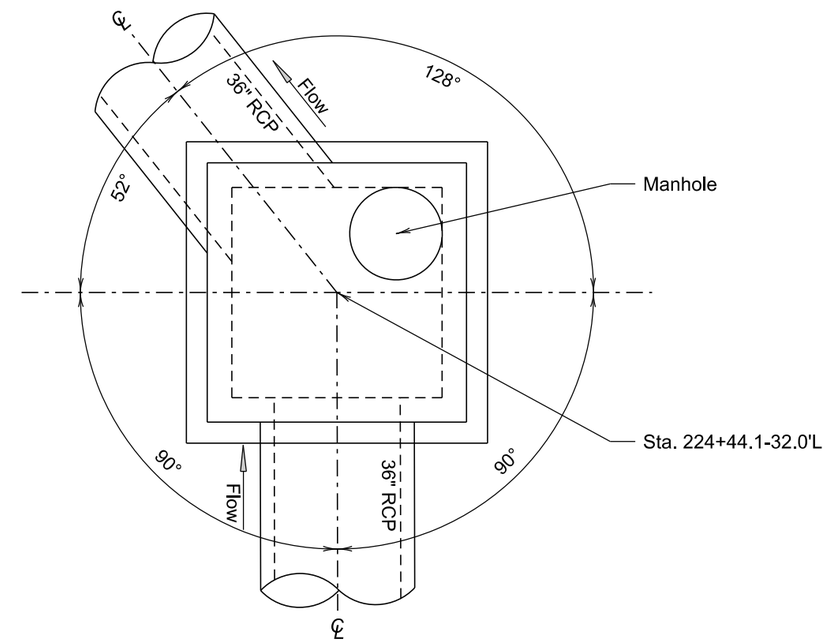

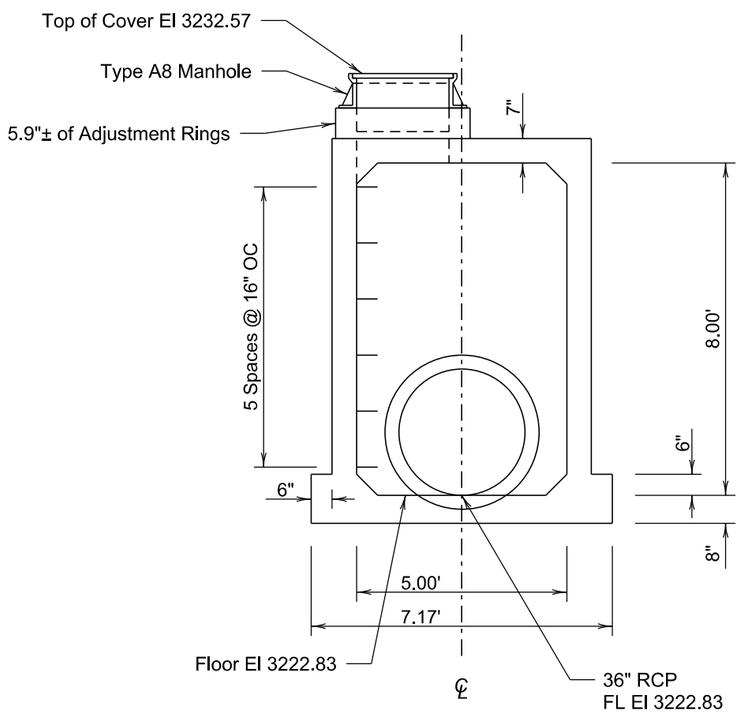

Sta. 221+84.1-31.3'L
5.0' x 5.0' Junction Box

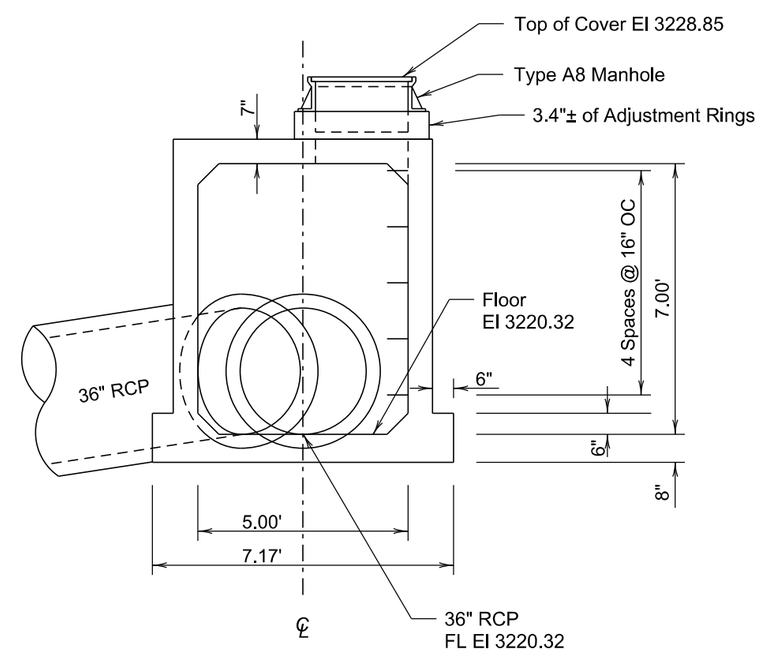

Sta. 224+44.1-32.0'L
5.0' x 5.0' Junction Box

REGISTERED PROFESSIONAL ENGINEER
REG. NO.
11522
BRANDON
FRIED
SOUTH DAKOTA
8/2/24

Plot Scale - 1:10

Plotted From - brandonfried

File - ...\Sections\SectionB\Details.dgn

STATE OF	PROJECT	SHEET NO.	TOTAL SHEETS
S.D.	NH-CR-EM 0018(195)103 P 0407(05)01	B125	B166

FOR BIDDING PURPOSES ONLY

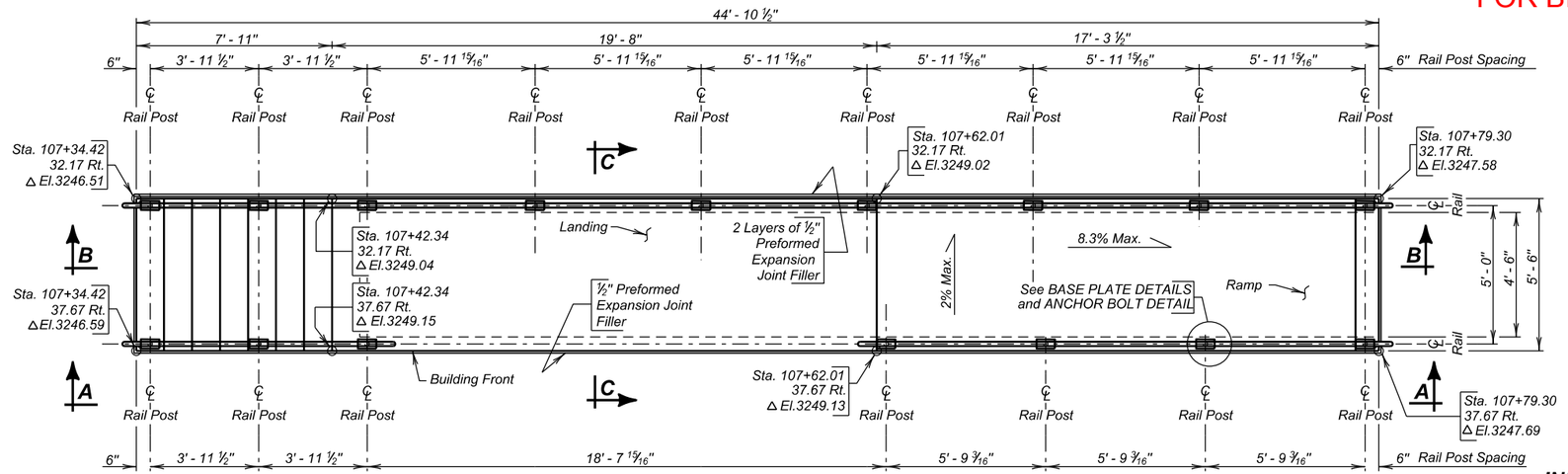

PLAN

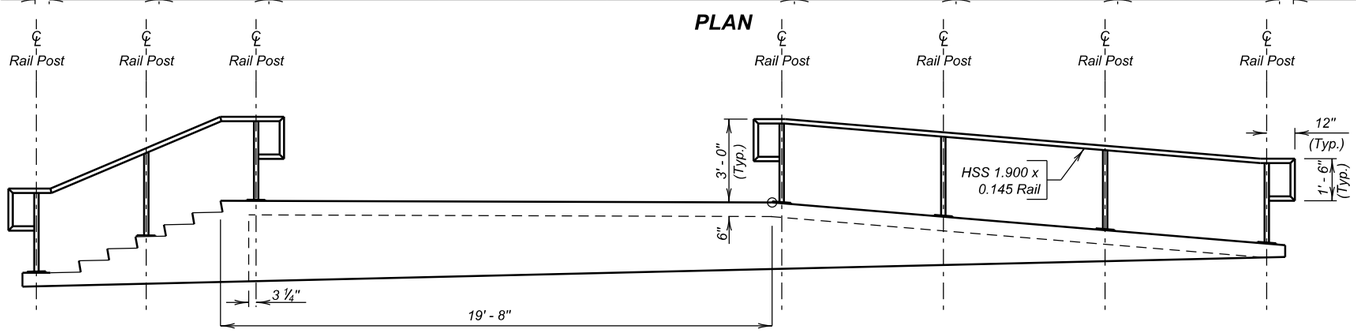

VIEW A - A

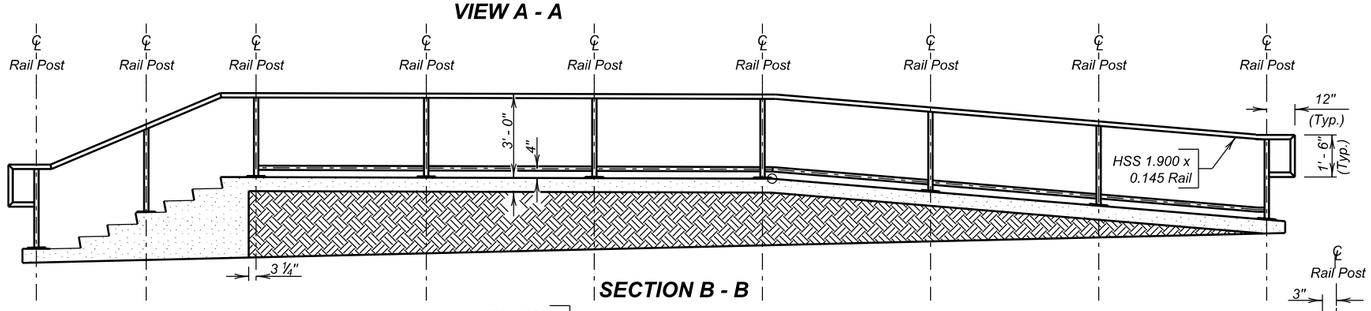

SECTION B - B

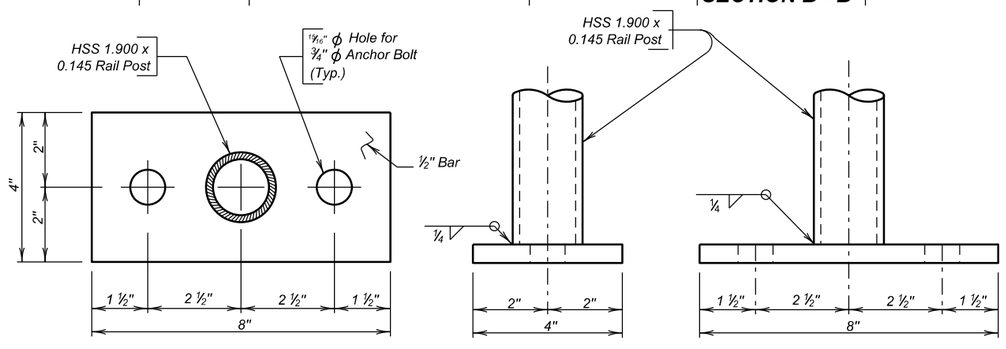

BASE PLATE DETAILS

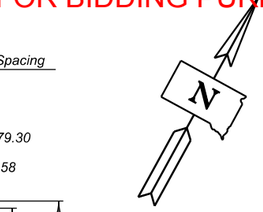

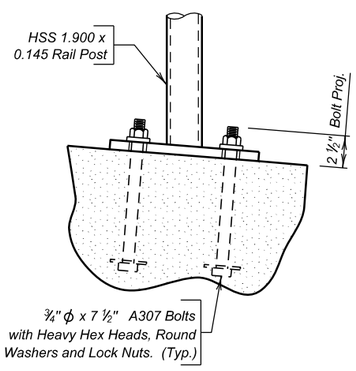

ANCHOR BOLT DETAIL

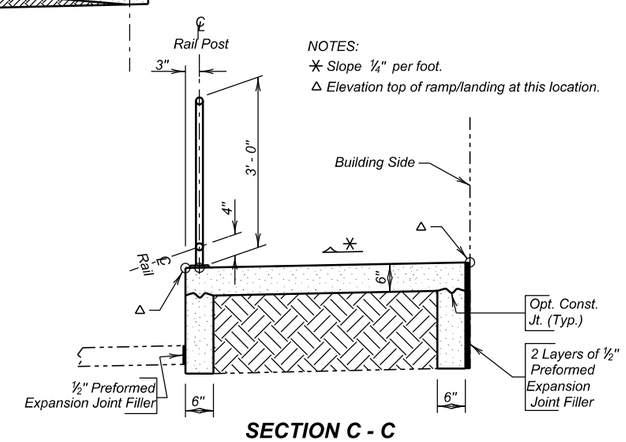

NOTES:
✳ Slope ¼" per foot.
△ Elevation top of ramp/landing at this location.

SECTION C - C

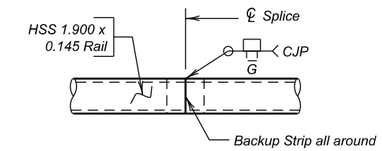

RAIL SPLICE DETAILS

ESTIMATED QUANTITIES

ITEM	UNIT	QUANTITY
Class M6 Concrete	Cu. Yd.	8.3
Epoxy Coated Reinforcing Steel	Lb.	491
Pipe Handrail	Ft.	74

INDEX OF SHEETS-

Sheet No. 1 - General Drawing & Quantities
Sheet No. 2 - Ramp Details

SPECIFICATIONS

South Dakota Standard Specifications for Roads and Bridges, Current Edition and required Provisions, Supplemental Specifications and Special Provisions as included in the Proposal.

GENERAL NOTES

☆ 1. The plans elevations and slopes shown to construct the ramp and landing are based on the existing doorway threshold elevation. The doorway threshold elevation will be field verified and if the field verified elevation is different than that shown in the plans adjust ramp and stairway elevations accordingly. If field elevations differ from plans elevations by more than one inch, contact the Bridge Construction Engineer before proceeding with construction.

2. All concrete will be Class M6 in accordance with Section 462.

3. All reinforcing steel will be epoxy coated and will conform to ASTM A615, Grade 60.

4. Use 2" clear cover on all reinforcing steel except as shown.

5. All concrete will be thoroughly tamped and spaded against forms to leave a smooth surface without honeycomb. All exposed edges will be chamfered ¾" except as shown.

6. Place concrete on undisturbed soil. If backfilling is necessary, compact with mechanical tampers to the satisfaction of the Engineer.

7. The concrete sidewalk will be constructed in accordance with Section 651.

8. Cost of the ½" Preformed Expansion Joint Filler will be incidental to the contract unit price per cubic yard for "Class M6 Concrete".

9. All costs for constructing ramps, stairways and pipe hand railing including labor, material equipment and incidentals necessary to complete the work will be included in the Class M6 concrete, Epoxy Coated Reinforcing Steel and Pipe Handrail bid items. Payment will be for plans quantities regardless of the quantity actually used.

SHOP PLANS

The fabricator will submit shop plans in accordance with the Specifications. Shop plan submittals will be sent to the Office of Bridge Design.

GENERAL DRAWING & QUANTITIES

FOR

ACCESS RAMP

IN PINE RIDGE
STA. 107 + 34.42 TO
STA. 107 + 79.30
PCN 04FC

SEC. 7-T35-R44W
NH-CR EM 0018(195)103

OGLALA LAKOTA
S. D. DEPT. OF TRANSPORTATION
MAY 2024

1 OF 2

PLANS BY :
OFFICE OF BRIDGE DESIGN, SOUTH DAKOTA DEPARTMENT OF TRANSPORTATION

DESIGNED BY	CK. DES. BY	DRAFTED BY	
PW	CRW	CRW	Steve A Johnson BRIDGE ENGINEER
OGLA04FC	04FCWA01		

STATE OF	PROJECT	SHEET NO.	TOTAL SHEETS
S.D.	NH-CR-EM 0018(195)103 P 0407(05)01	B126	B166

FOR BIDDING PURPOSES ONLY

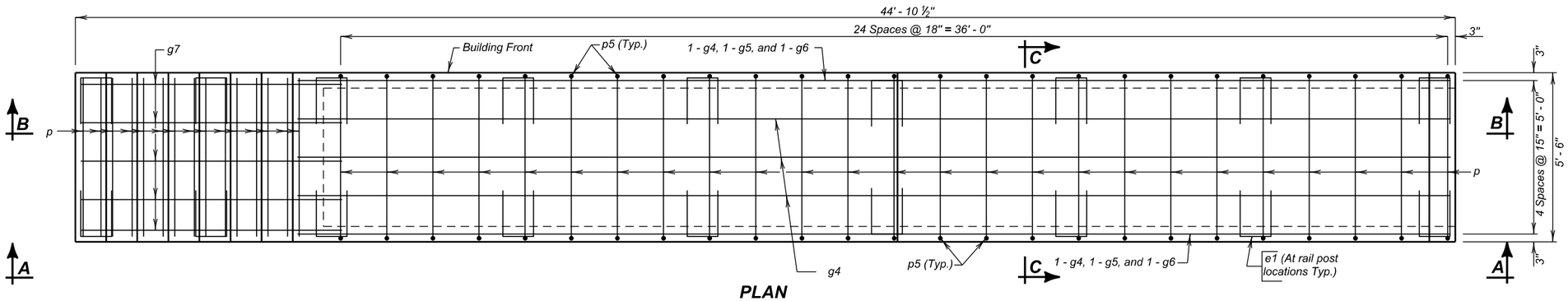

PLAN

(Railing not shown)

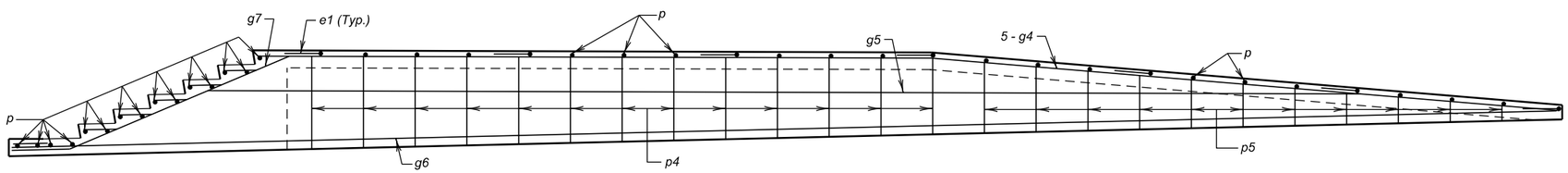

VIEW A - A

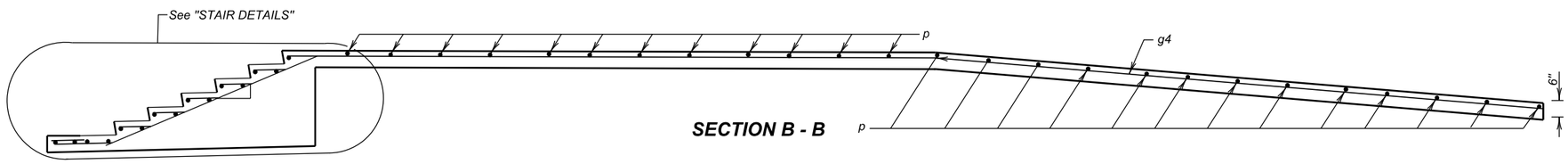

SECTION B - B

PIPE HANDRAIL

1. Pipe handrail will not be ordered until the ramps, landings and stairways are constructed and field measurements for in-place length and slope are taken.
2. All rail posts will be built vertical.
3. Steel pipe for railing and posts will conform to ASTM A500, Grade B. Railpost base plates will conform to ASTM A709, Grade 36.
4. The Contractor may use either cast in place anchor bolts or drilled and epoxied anchor rods for anchoring the pipe handrail. Anchor Bolts and nuts will conform to ASTM A307. Anchor rods will conform to ASTM 1554, Grade 36. Washers will be in accordance with ASTM F436. Hardware will be galvanized in accordance with ASTM F2329. Bolts will be hex head "Structural" type with heavy hex, lock nuts, and round washers.
5. All anchor bolts and rods will be tightened to a torque of 120 ft./lbs. (approximated without the use of a calibrated torque wrench).
6. Epoxy will be in accordance with ASTM C881 Type IV. Hole size will be as per the epoxy manufacturer's recommendations. Core bits will not be used to drill anchor rod holes.
7. All steel railing will be galvanized after shop welding in accordance with ASRM A123 and will be painted in accordance with Section 411 of the Specifications and the color will be an approved black (Federal Standard 595B Color 27038). The galvanized steel railing will be cleaned in accordance with ASTM D6386 before painting.
8. Welding and weld inspection will be done in accordance with AWS D1.1-(Current Year) Structural Welding Code - Steel.
9. The cost of structural steel, anchor bolts or anchor rods, painting, galvanizing, welding, weld inspection, and that which is incidental to the fabrication and installation of the Pipe Handrail will be incidental to the contract unit price per foot for "Pipe Handrail".
10. Alternate rail designs, including aluminum rail, may be submitted through proper channels to the Office of Bridge Design for approval.

REINFORCING SCHEDULE

	Mk.	No.	Size	Length	Type	Bending Details
	e1	16	4	4' - 0"	17	
✳	g4	5	4	37' - 6"	Str.	
	g5	2	4	33' - 3"	Str.	
	g6	2	4	43' - 8"	Str.	
	g7	5	4	8' - 6"	19	
	p	19	4	5' - 3"	Str.	
	p4	13	4	6' - 6"	17	
⌀	p5	23	4	4' - 6"	17A	

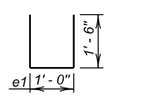

Type 17

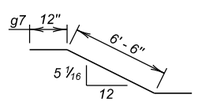

Type 19

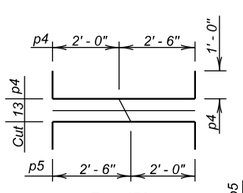

Type 17A

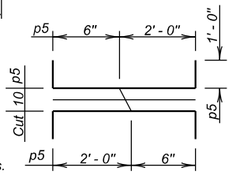

Type 17A

NOTES:

All dimensions are out to out of bars.

⌀ See cutting diagram.

✳ Bend in field as necessary to fit.

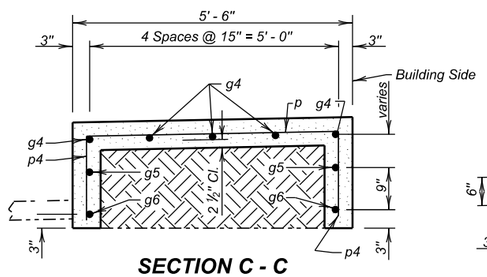

SECTION C - C

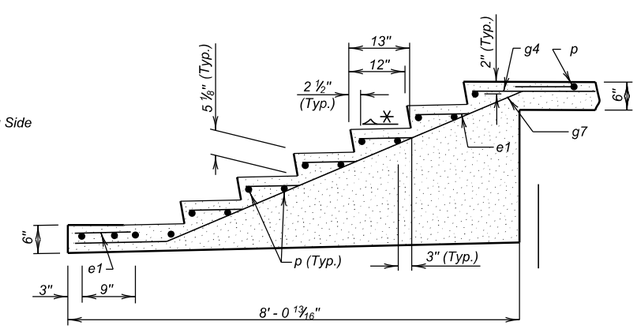

STAIR DETAILS

RAMP DETAILS

FOR

ACCESS RAMP

IN PINE RIDGE
STA. 107 + 34.42 TO
STA. 107 + 79.30
PCN 04FC

SEC. 7-T35-R44W
NH-CR EM 0018(195)103

OGLALA LAKOTA
S. D. DEPT. OF TRANSPORTATION
MAY 2024

2 OF 2

DESIGNED BY	CK. DES. BY	DRAFTED BY	
PW	CRW	CRW	Steve A Johnson
OGLA04FC	04FCWA01		BRIDGE ENGINEER

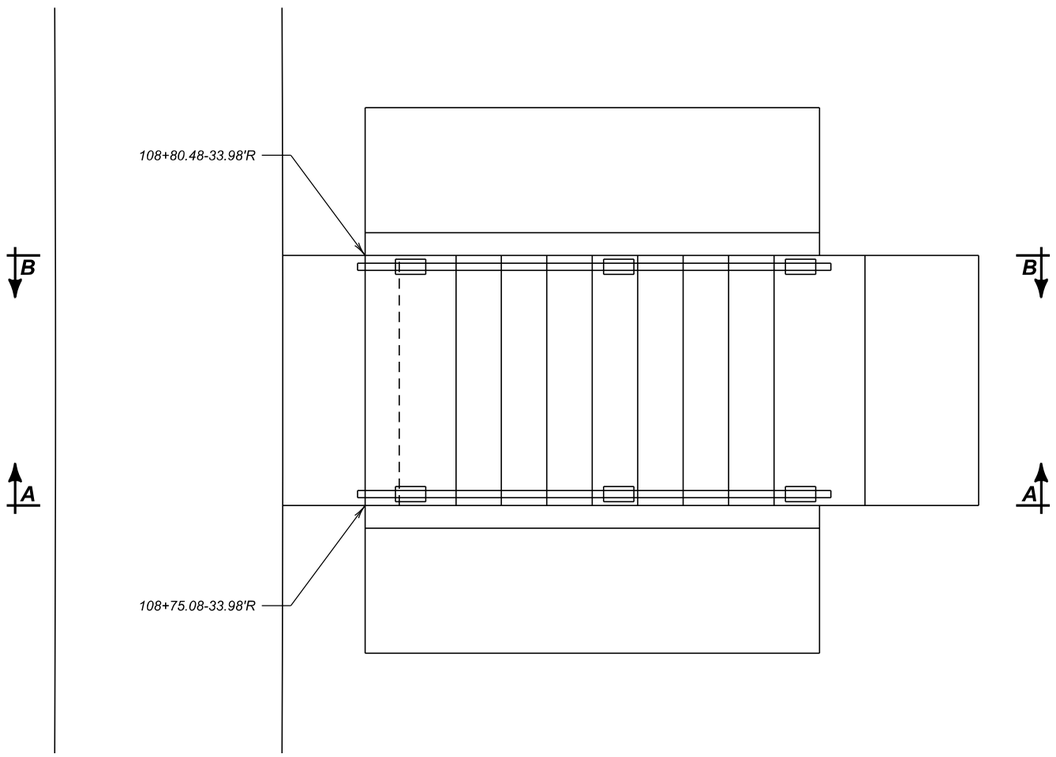

PLAN

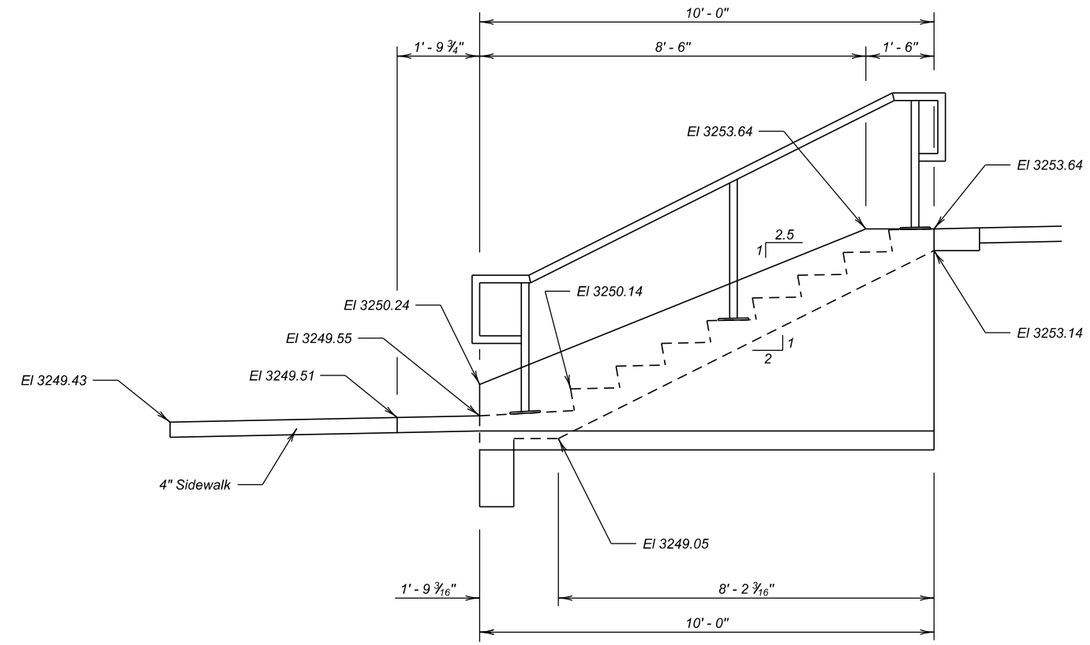

SEC A-A

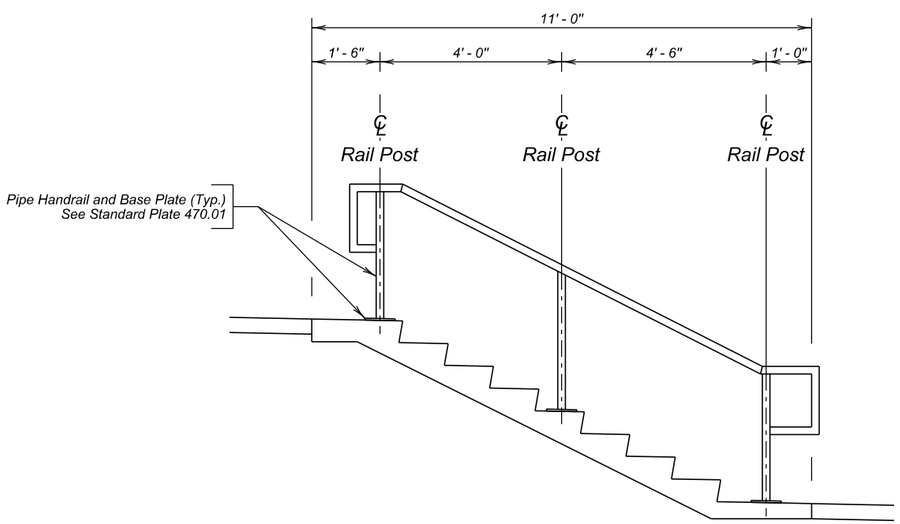

STAIRWAY HANDRAIL LAYOUT

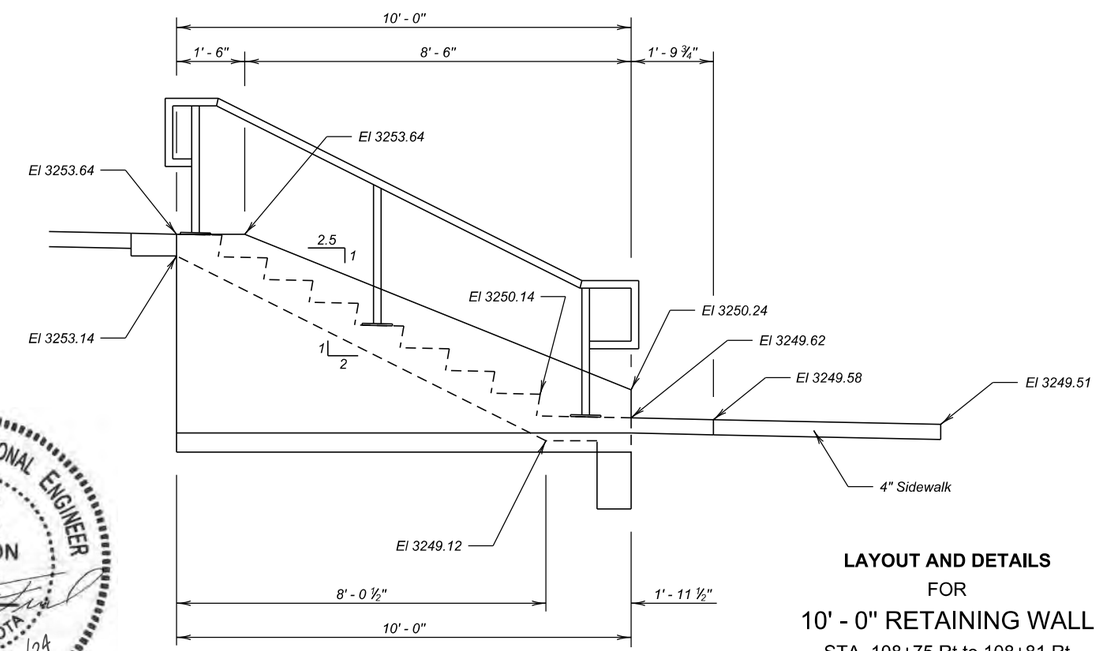

SEC B-B

REGISTERED PROFESSIONAL ENGINEER
REG. NO.
11522
BRANDON
FRIED
SOUTH DAKOTA
8/2/24

LAYOUT AND DETAILS
FOR
10' - 0" RETAINING WALL
STA. 108+75 Rt to 108+81 Rt

Plot Scale - 1:10
Plotted From - brandonfried
File - ...\Sections\SectionB\Details.dgn

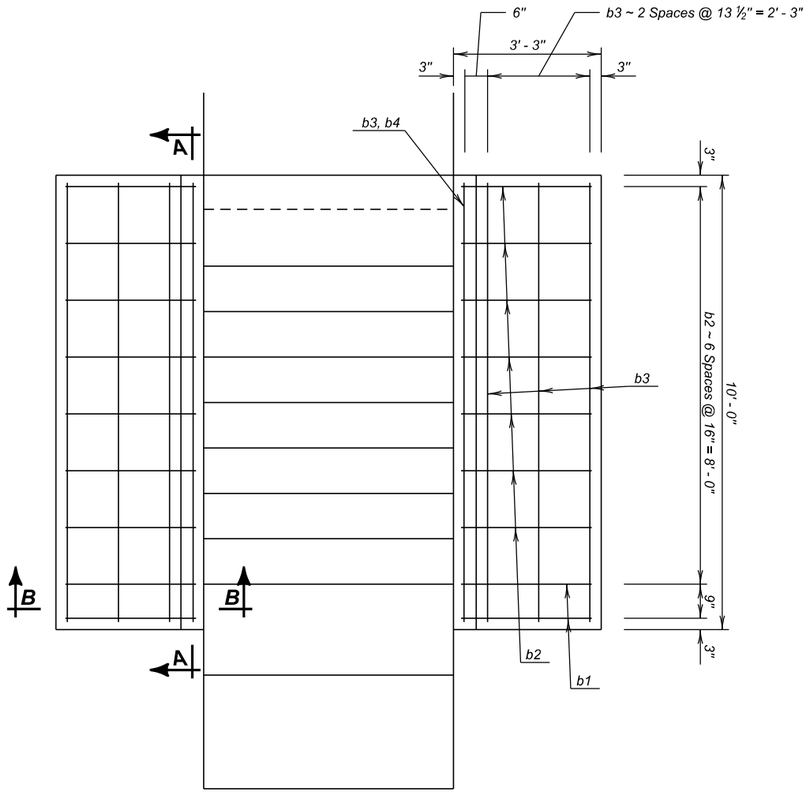

PLAN

REINFORCING SCHEDULE

Mk.	No.	Size	Length	Type
b1	4	4	7' - 4"	17A
b2	7	4	11' - 0"	17A
b3	10	4	9' - 8"	Str.
b4	2	4	8' - 9"	Str.
b5	2	4	9' - 0"	Str.

Bending Details

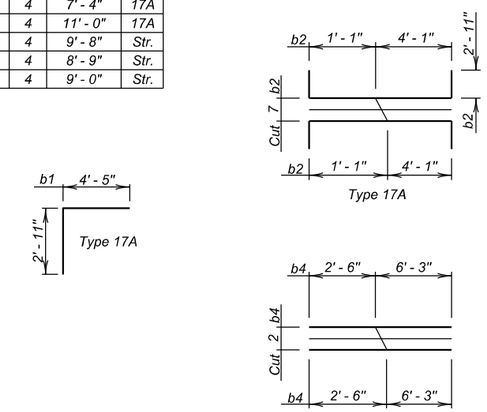

NOTES:
All dimensions are out to out of bars.

ESTIMATED QUANTITIES

ITEM	UNIT	QUANTITY
Class M6 Concrete	Cu. Yd.	2.0
Epoxy Coated Reinforcing Steel	Lb.	159
Structure Excavation, Retaining Wall	Cu. Yd.	1.0

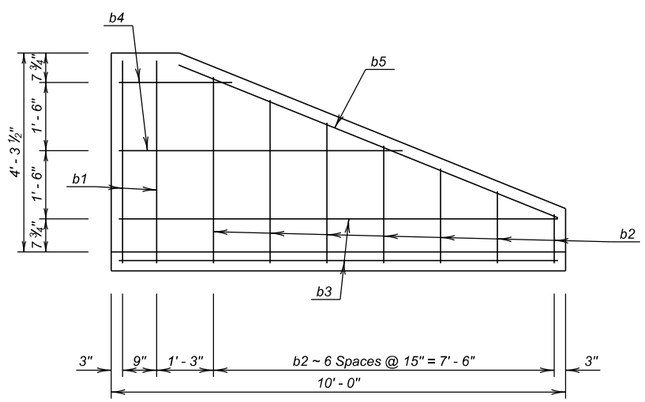

SEC A-A

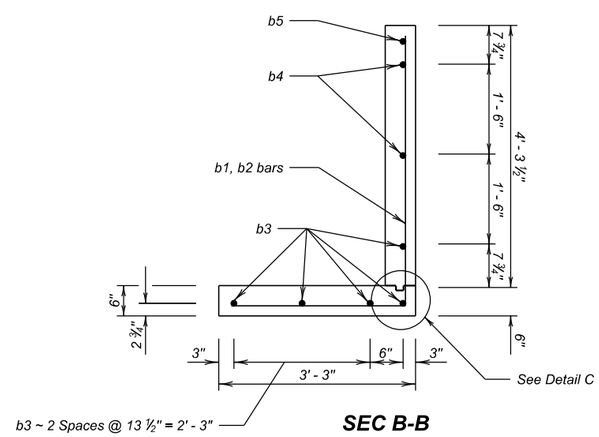

SEC B-B

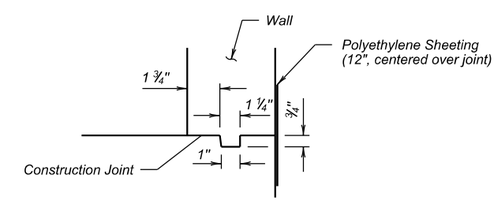

DETAIL C
(Section of keyway showing construction joint between wall and footing)

REINFORCEMENT DETAILS
FOR
10' - 0" RETAINING WALL
STA. 108+75 Rt to 108+81 Rt

Plot Scale - 1:10
Plotted From - brandonfried
File - ...\Sections\SectionB\Details.dgn

SPECIFICATIONS

South Dakota Standard Specifications for Roads and Bridges, Current Edition and required Provisions, Supplemental Specifications and Special Provisions as included in the Proposal.

GENERAL NOTES

1. *All concrete will be Class M6 and conform to Section 462 of the Specifications.*
2. *All concrete shall be thoroughly tamped and spaded agaist forms to leave a smooth surface without honeycomb.*
3. *A ¾ inch chamfer shall be provided on all exposed retaining wall edges.*
4. *All reinforcing steel will be epoxy coated and will conform to ASTM A615, Grade 60. The smooth bar may conform to ASTM A615, Grade 40. The epoxy coating will conform to ASTM A775..*
5. *Use 2 inch clear cover on all reinforcing steel except as shown.*
6. *For variable height walls, the top b1 bar will be placed parallel to the top of the wall*
7. *The exposed retaining wall surfaces will recieve a finish in accordance with 460.3 L of the Specificaitons.*
8. *In the areas where the retaining wall footing is to be placed, a 2-inch thickness of cushion material will be placed and compacted. The cushion material will conform to Section 651.2 C of the Specifications. All costs for excavation, furnishing and placing backfill and cushion material, labor, equipment will be incidental to the contract unit price per Cu. Yd for Structure Excavation, Retaining Wall.*
9. *Structure Excavation, Retaining Wall: This quantity of excavation is equal to the volume of concrete below the top of the footing.*
10. *Refer to Standard Plate 460.30 for construction of Concrete Stairway.*

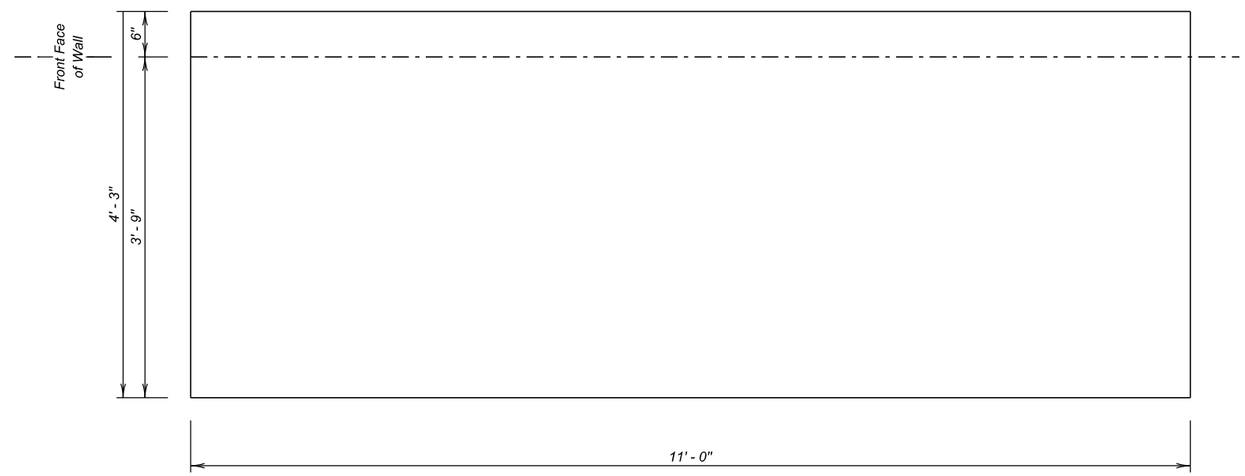

UNDERCUT LAYOUT

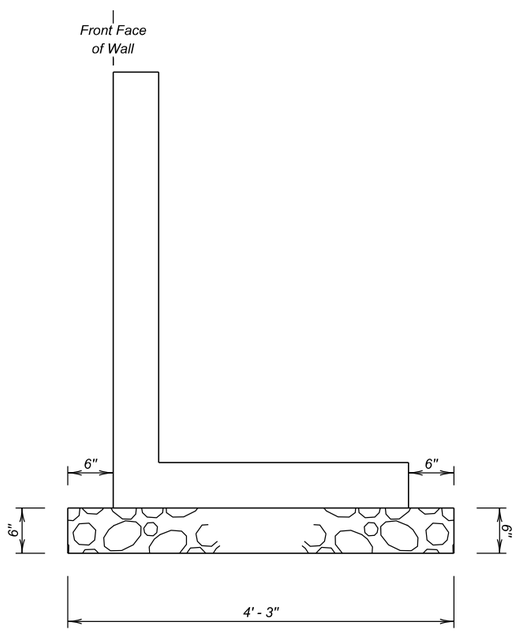

TYPCIAL SECTION

(Limits for Undercut)

ESTIMATED QUANTITIES

ITEM	UNIT	QUANTITY
¶ Footing Undercut	Cu. Yd.	1.6

¶ *For Payment Quantity is Based on Plan Shown Dimensions and Will Not be Measured Unless the Engineer Orders a Change.*

REGISTERED PROFESSIONAL ENGINEER
REG. NO.
11522
BRANDON
FRIED
SOUTH DAKOTA
8/2/24

NOTES AND UNDERCUT DETAILS

FOR

10' - 0" RETAINING WALL

STA. 108+75 Rt to 108+81 Rt

Plot Scale - 1:10
Plotted From - brandonfried
File - ...\Sections\SectionB\Details.dgn

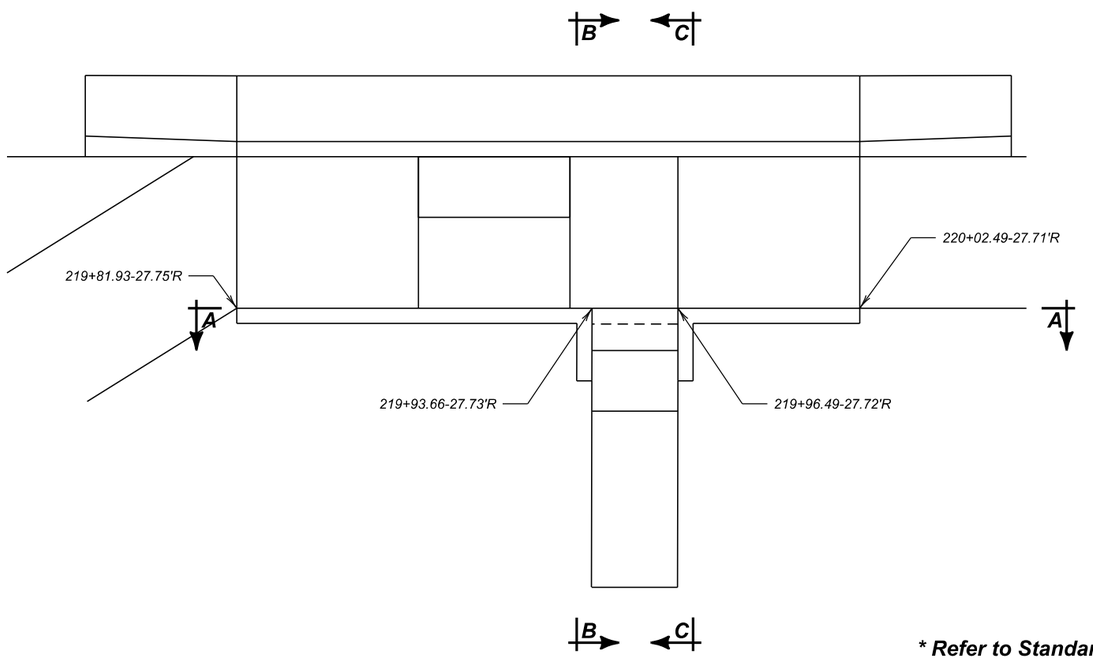

PLAN

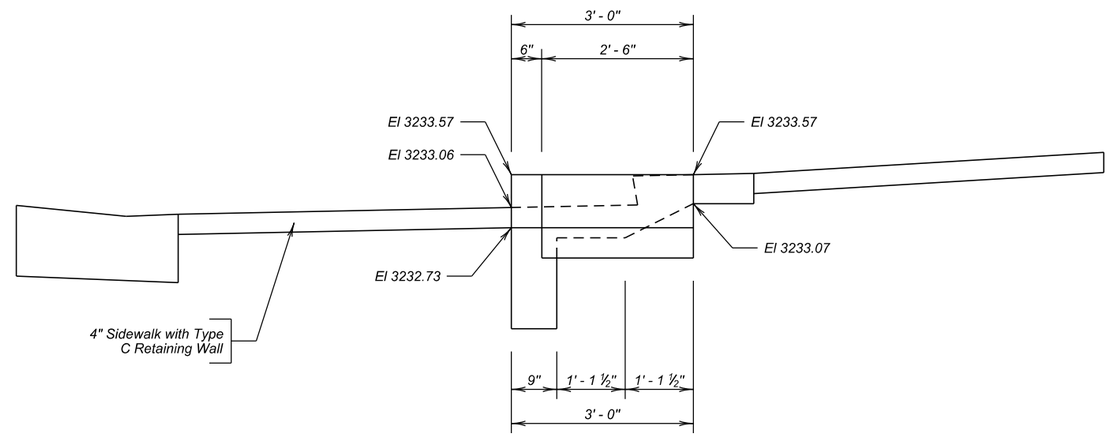

SEC A-A

**** Refer to Standard Plate 460.20 for further guidance***

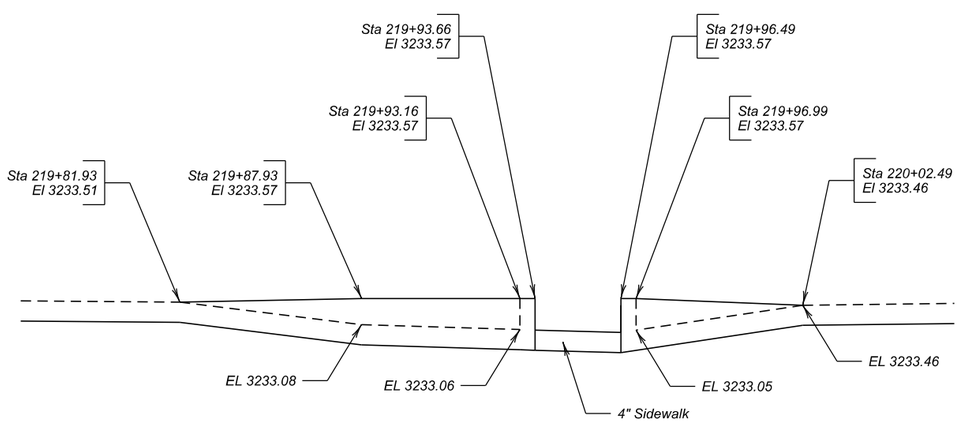

ELEVATION
SEC A-A
(NOT TO SCALE)

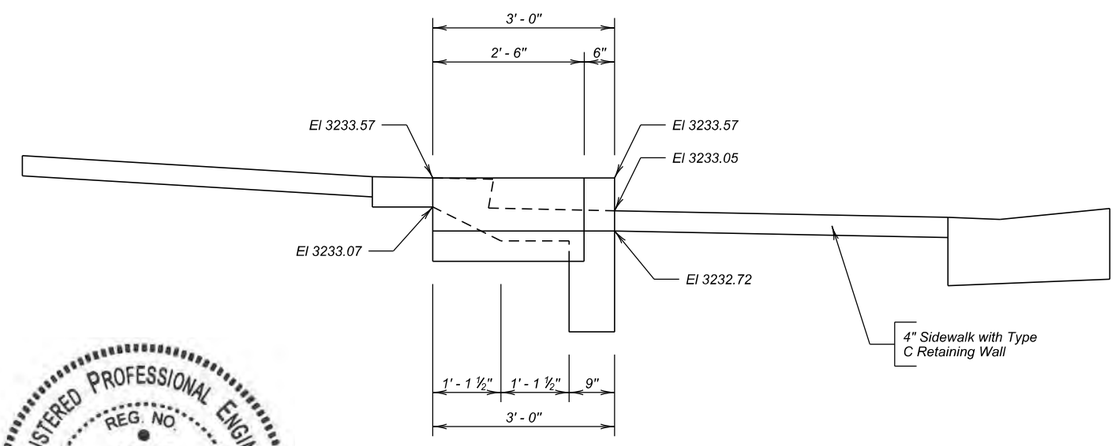

SEC B-B

LAYOUT AND DETAILS

FOR

2' - 6" CONCRETE STAIRWAY FOR
TYPE C CONCRETE RETAINING WALL

STA. 219+93 Rt to 219+97 Rt

Plot Scale - 1:10
Plotted From - brandonfried
File - ...\Sections\SectionB\Details.dgn

FOR BIDDING PURPOSES ONLY

KLJ	STATE OF SOUTH DAKOTA	PROJECT	SHEET	TOTAL SHEETS
		NH-CR-EM 0018(195)103 P 0407(05)01	B131	B166

Plotting Date: 8/2/2024

Rev. 8/2/2024 BAF

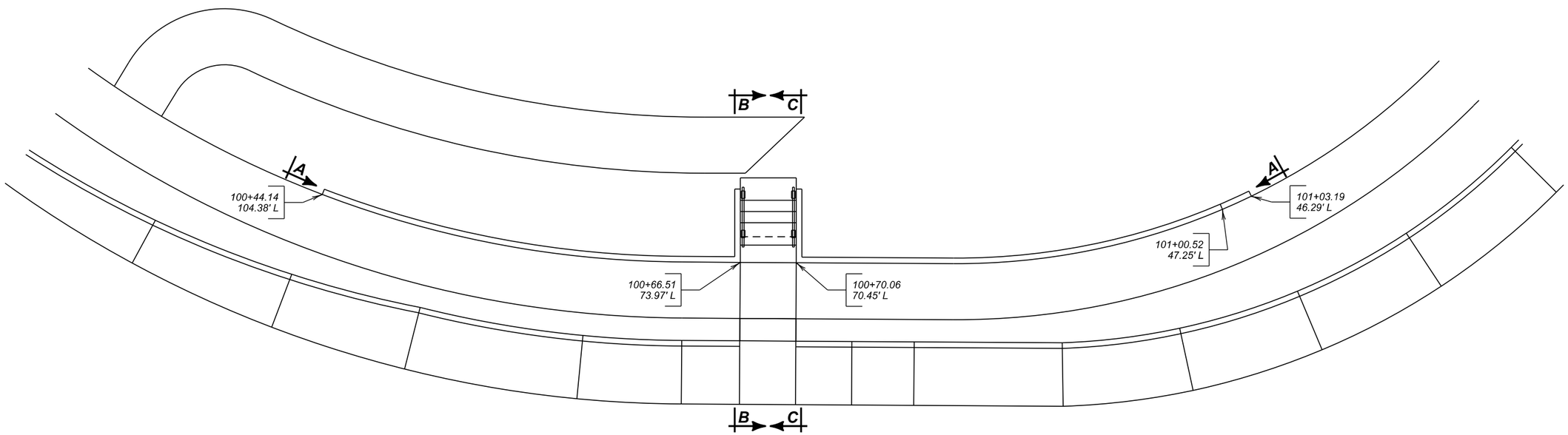

PLAN

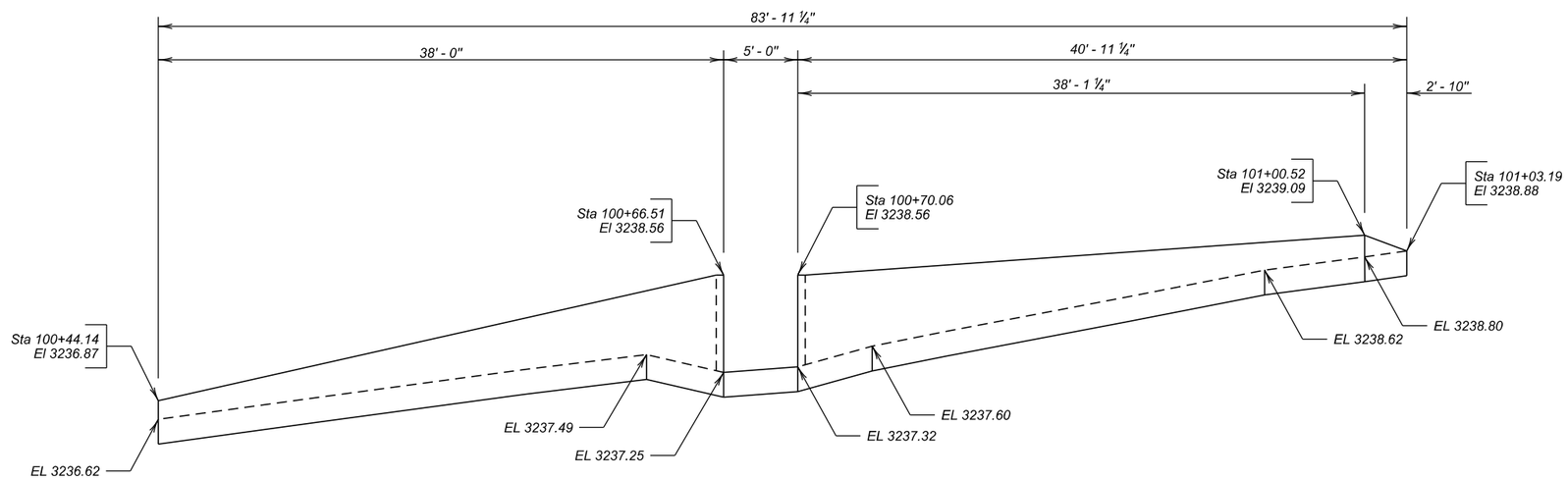

ELEVATION
SEC A-A
(NOT TO SCALE)

LAYOUT AND DETAILS

FOR

4' - 0" CONCRETE STAIRWAY FOR
TYPE C CONCRETE RETAINING WALL

STA. 100+44 Lt to 101+03 Lt

1 OF 2

Plot Scale - 1:10

Plotted From - brandonfried

File - ...\Sections\SectionB\Details.dgn

FOR BIDDING PURPOSES ONLY

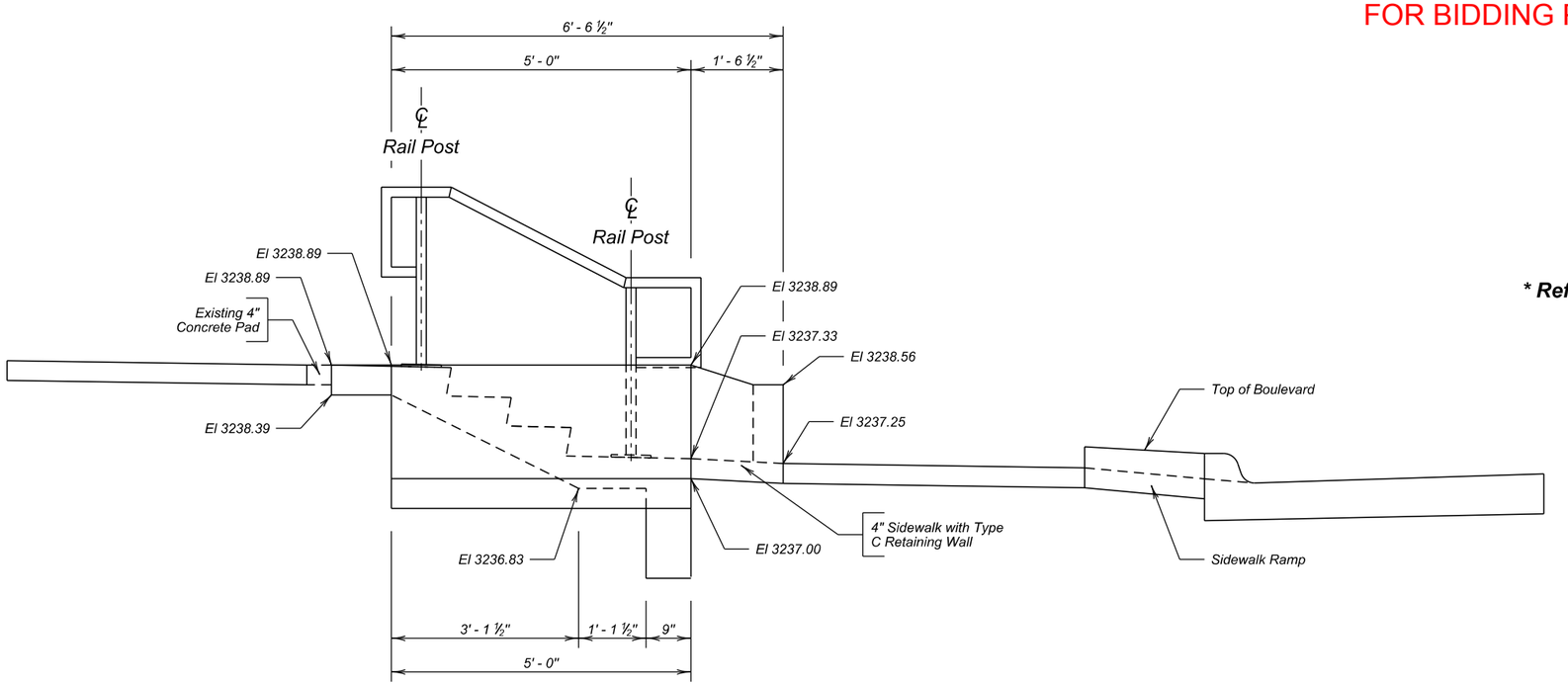

SEC B-B

*** Refer to Standard Plate 460.20 for further guidance**

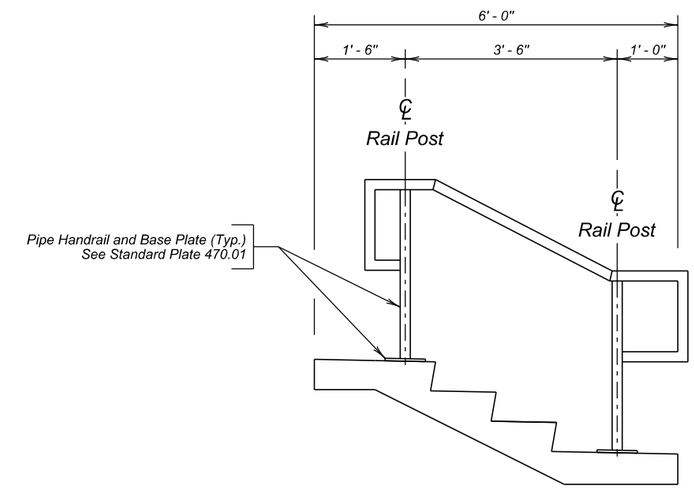

STAIRWAY HANDRAIL LAYOUT

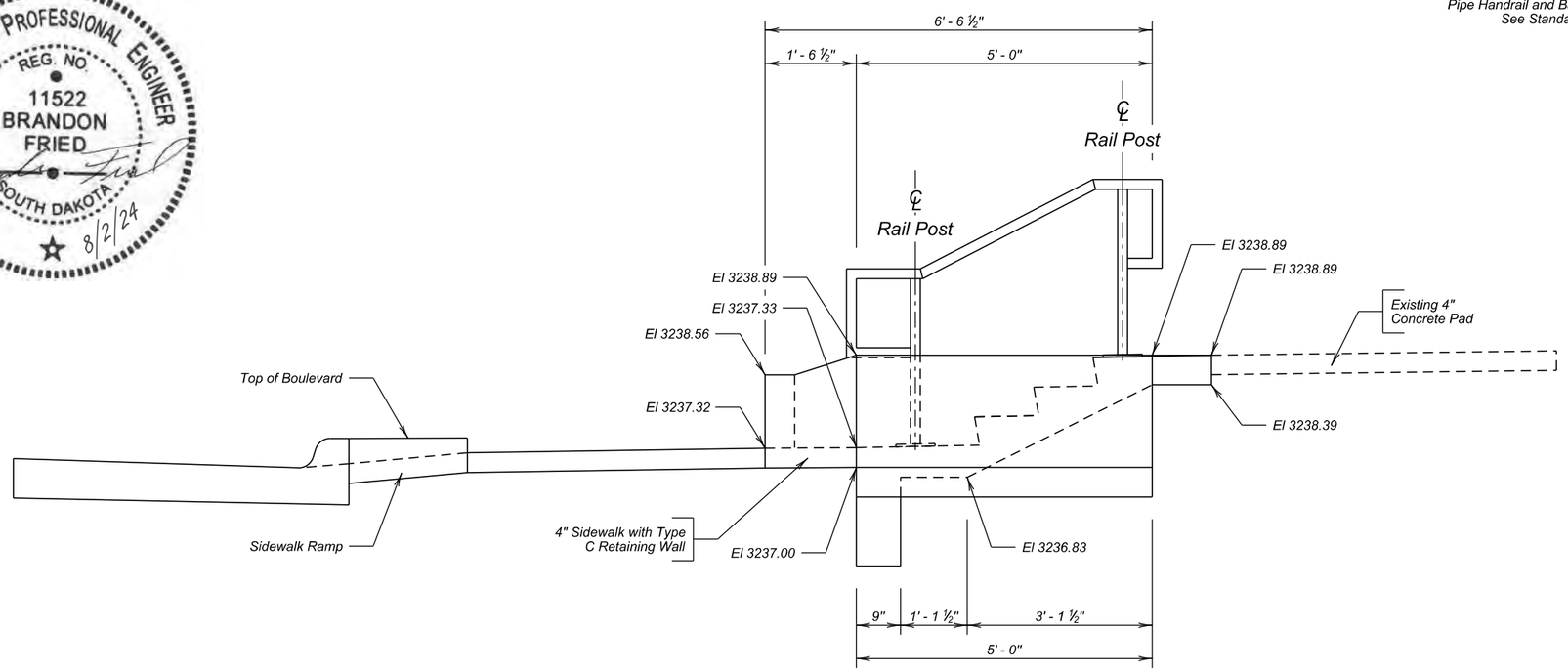

SEC C-C

LAYOUT AND DETAILS

FOR

4' - 0" CONCRETE STAIRWAY FOR TYPE C CONCRETE RETAINING WALL

STA. 100+44 Lt to 101+03 Lt

Plot Scale - 1:10
Plotted From - brandonfried
File - ...\Sections\SectionB\Details.dgn

FOR BIDDING PURPOSES ONLY

ADDITIONAL REINFORCEMENT FOR PCC FILLET WITH CURB AND GUTTER

ALL ADDITIONAL REINFORCEMENT WILL BE #4 REBAR WITH A MINIMUM OF 3" OF CLEAR COVER. SEE STANDARD PLATE 380.30 FOR ADDITIONAL GUIDANCE.

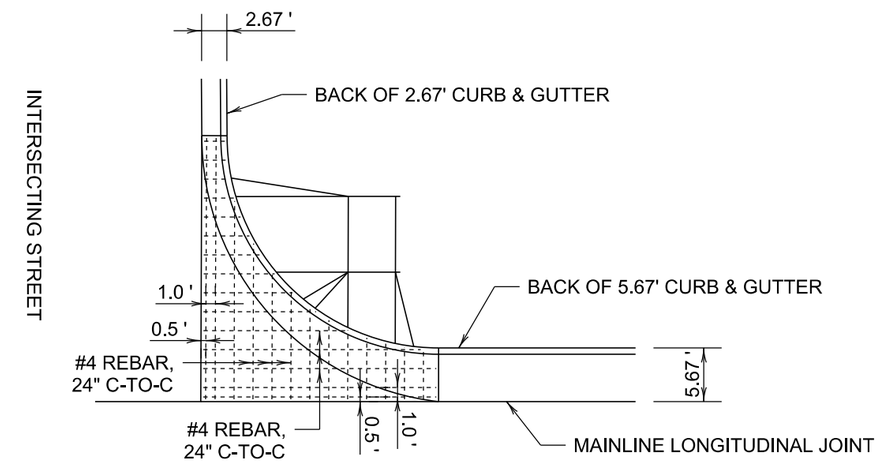

MAINLINE

Plot Scale - 1:10
Plotted From - brandonfried
File - ...\Sections\SectionB\Details.dgn

FOR BIDDING PURPOSES ONLY

STATE OF SOUTH DAKOTA
PROJECT
NH-CR-EM 0018(195)103
P 0407(05)01
SHEET
B134
TOTAL SHEETS
B166
Plotting Date: 8/2/2024
Rev. 8/2/2024 BAF
File - ...\SectionB\StandardPlates_B.dgn

FOR BIDDING PURPOSES ONLY

Plot Scale - 1:200
Plotted From - brandonfried
File - ...\Sections\StandardPlates_B.dgn

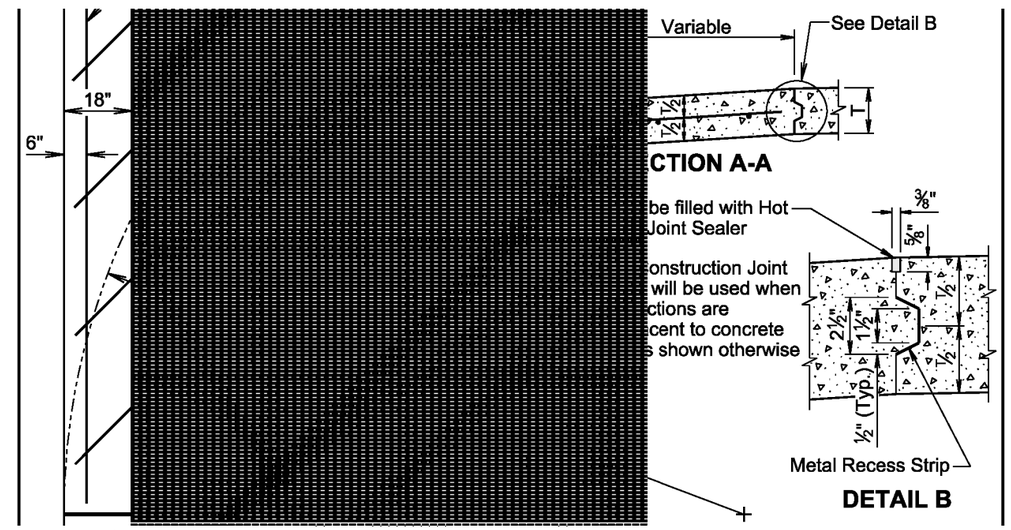

Plot Scale - 1:200
Plotted From - brandonfried
File - ...\SectionB\StandardPlates_B.dgn

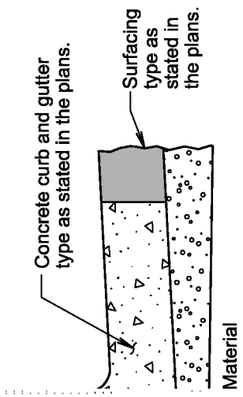

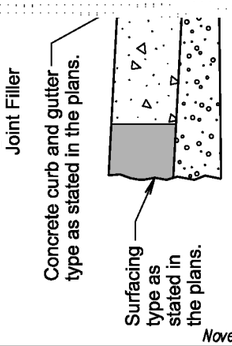

November 19, 2022

YPE
EMENT

PLATE NUMBER
380.36

Sheet 1 of 3

Plot Scale - 1:200
Plotted From - brandonfried
File - ...\Section8\StandardPlates_B.dgn

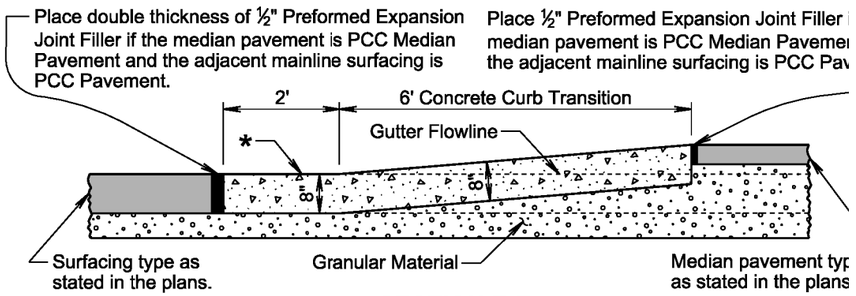

SECTION E-E

* The slope will be as shown on the standard plate for the corresponding curb and gutter typ on the typical sections, or on the cross sections. The slope will be modified when necessar at locations that would hold or pond water as determined by the Engineer.

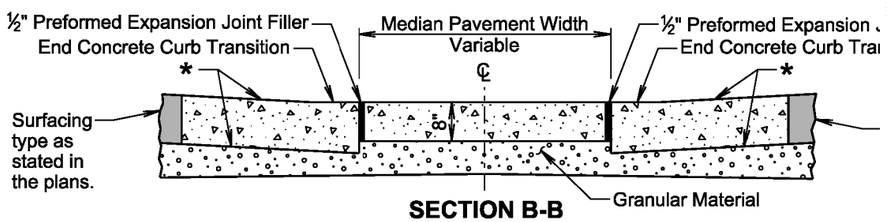

SECTION B-B

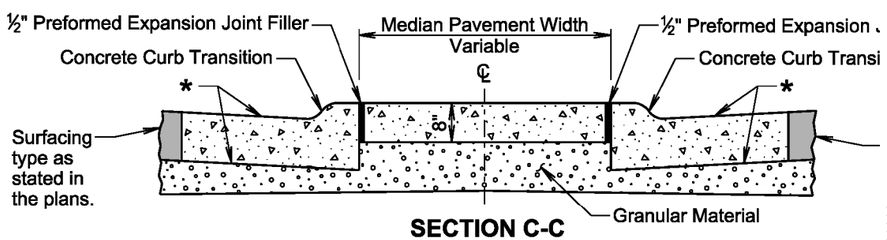

SECTION C-C

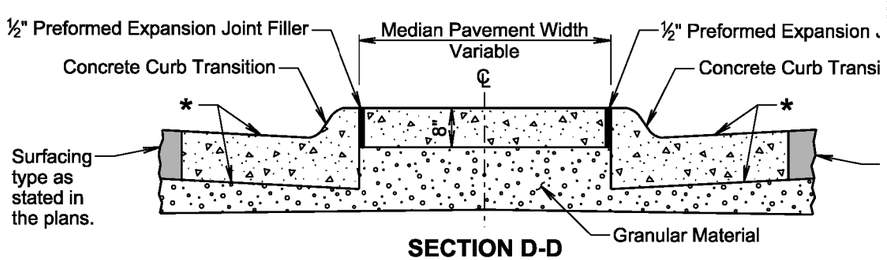

SECTION D-D

Published Date: 2025	SDDOT	BARRIER TYPE MEDIAN PAVEMENT	Novem PLAT 3 Shee

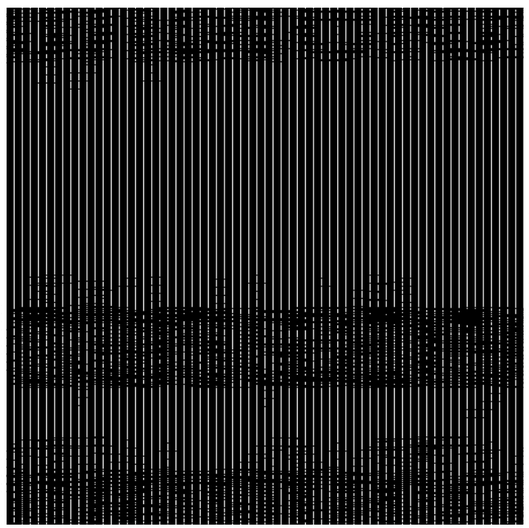

Plot Scale - 1:200
Plotted From - brandonfried
File - ...\SectionB\StandardPlates_B.dgn

** Width for 6" high curb is 6' (See standard plate 650.35)

*** Within these areas, the surface of the type A PCC approach pavement will be sloped transitionally as approved by the Engineer.

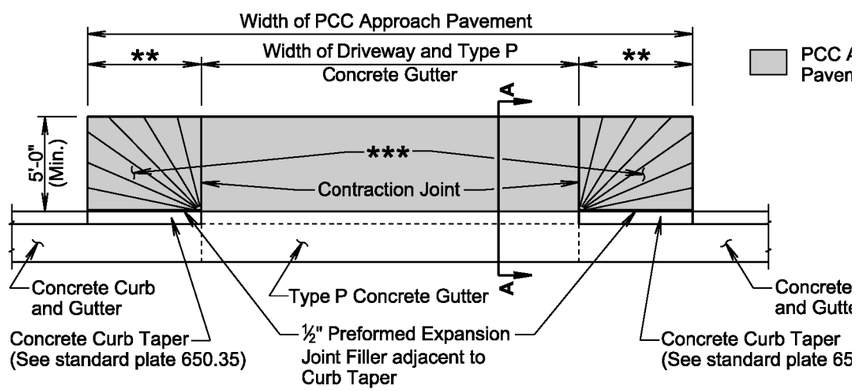

PLAN VIEW

GENERAL NOTES:

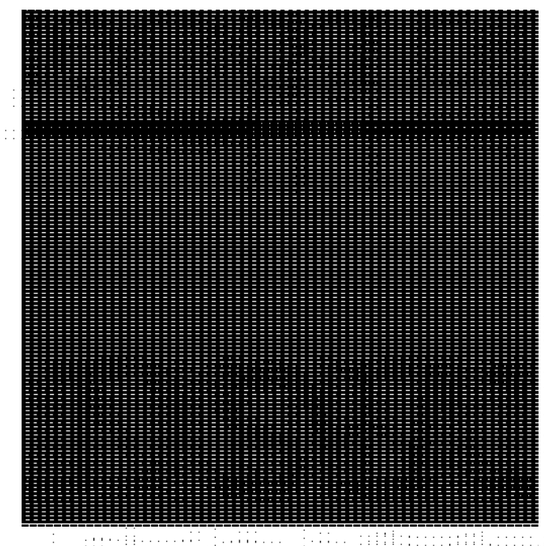

1	3	9½	43½	30	73½	48	3	1½
1	3¼	10½	49½	24	73½	54	3¼	1½
1	3½	12	54	19¾	73¾	60	3½	1½
1	4	15	63	34¾	97¾	72	4	1½
1	4½	21	63	36	98	78	4½	1½
1	5	24	72	26	98	84	5	1½
	5½	27	65	33¼	98¼	90	5½	1½
1	6	36	60	36	98	98	5	1½
1	6½	36	72	27	98	102	5½	1½
1	7	36	78	21	98	108	6	1½
1	7½	36	90	21	111	114	6½	1½
1	8	36	90½	21	111½	120	6½	1½
1	6½	41	87½	24	111½	132	6½	6

Ju

R. C. P. FLARED ENDS

PLAT
4

She

Plot Scale - 1:200
Plotted From - brandonfried
File - ...\SectionB\StandardPlates_B.dgn

FOR BIDDING PURPOSES ONLY

KLJ	STATE OF SOUTH DAKOTA	PROJECT	SHEET	TOTAL SHEETS
		NH-CR-EM 0018(195)103 P 0407(05)01	B141	B166

Plotting Date: 8/2/2024

Rev. 8/2/2024 BAF

Plot Scale - 1:200

Plotted From - brandonfried

File - ...\Section B\StandardPlates_B.dgn

Arch pipe transitions will be fabrica

All pipe transitions will be precast a
approved by the Engineer.

Published Date: 2025

SDDOT

Plot Scale - 1:200
Plotted From - brandonfried
...\Section B\StandardPlates_B.dgn

FOR BIDDING PURPOSES ONLY

KLJ	STATE OF SOUTH DAKOTA	PROJECT	SHEET	TOTAL SHEETS
		NH-CR-EM 0018(195)103 P 0407(05)01	B143	B166

Plotting Date: 8/2/2024 Rev. 8/2/2024 BAF

Plot Scale - 1:200
Plotted From - brandonfried
File: ...\SectionB\StandardPlates_B.dgn

Plot Scale - 1:200

Plotted From - brandonfried

File - ...\Sections\StandardPlates_B.dgn

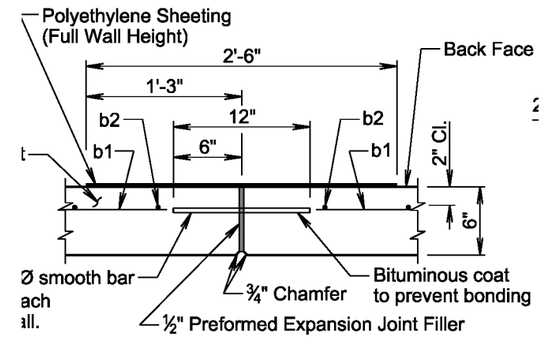

DETAIL A

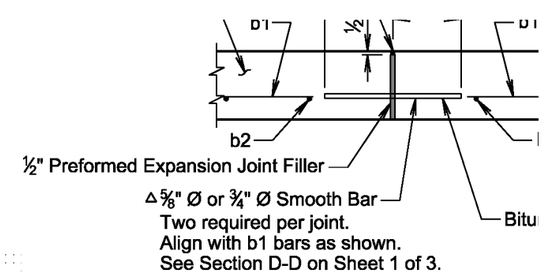

ELEVATION VIEW
(Expansion Joint for Footing)

ed Date: 2025	SDDOT	TYPE C CONCRETE RE

Plot Scale - 1:200
Plotted From - brandonfried
File - ...\SectionB\StandardPlates_B.dgn

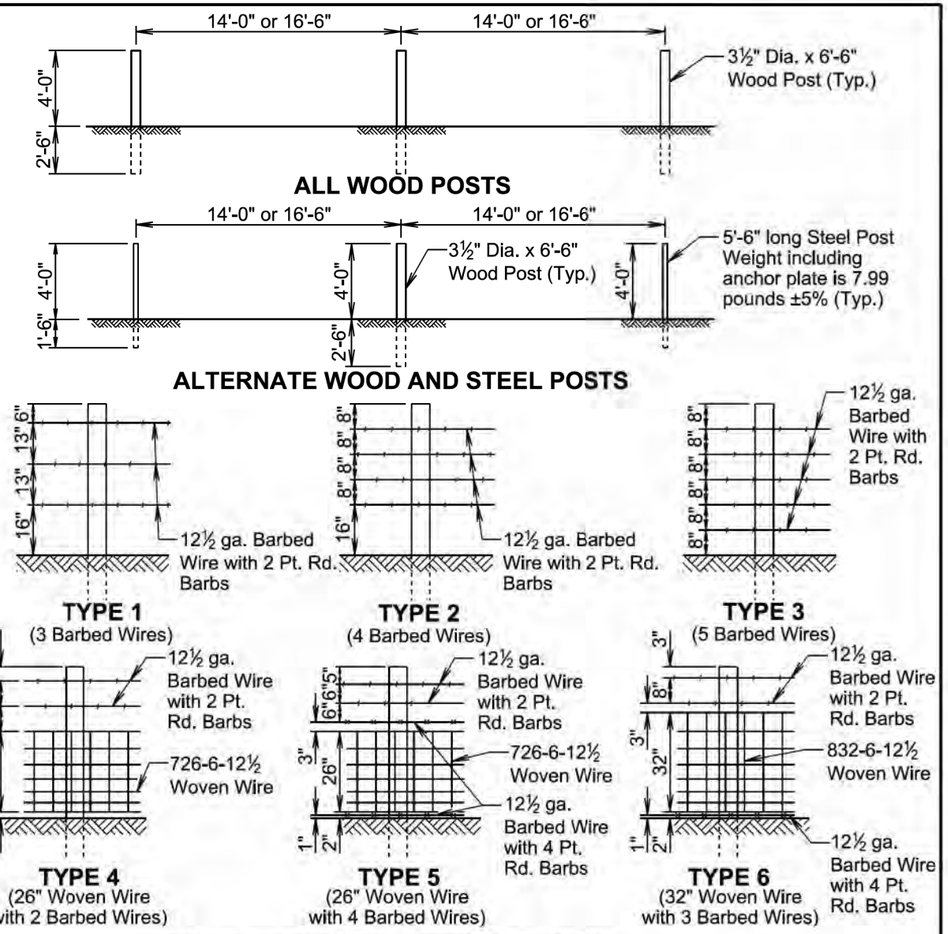

TYPE OF FENCE		LINE POST SPACING	BARBED WIRE		WOVEN WIRE
TYPE	DESCRIPTION		WIRE GAGE	NUMBER AND SHAPE OF BARBS	STYLE OR DESIGN NO.
1	3 Barbed Wires	16'-6"	12½	2 Point Round	—
2	4 Barbed Wires	16'-6"	12½	2 Point Round	—
3	5 Barbed Wires	16'-6"	12½	2 Point Round	—
4	26" Woven Wire with 2 Barbed Wires	14'-0"	12½	2 Point Round	726-6-12½
5	26" Woven Wire with 4 Barbed Wires	14'-0"	12½	2 wires with 2 Pt. Rd. 2 wires with 4 Pt. Rd.	726-6-12½
6	32" Woven Wire with 3 Barbed Wires	14'-0"	12½	2 wires with 2 Pt. Rd. 1 wire with 4 Pt. Rd.	832-6-12½

GENERAL NOTES:

Fence types designated on the plans that are followed by the letter S will have smooth (barbless) wires.

When type 5S or 6S is designated the bottom wire may be barbed, smooth, or left off.

All degrees of curvature stated for fence are at centerline of roadway.

June 26, 2019

Published Date: 2025

SDDOT

RIGHT-OF-WAY FENCE

PLATE NUMBER
620.01

Sheet 1 of 1

Plot Scale - 1:200
File - ...\Section8\StandardPlates_B.dgn

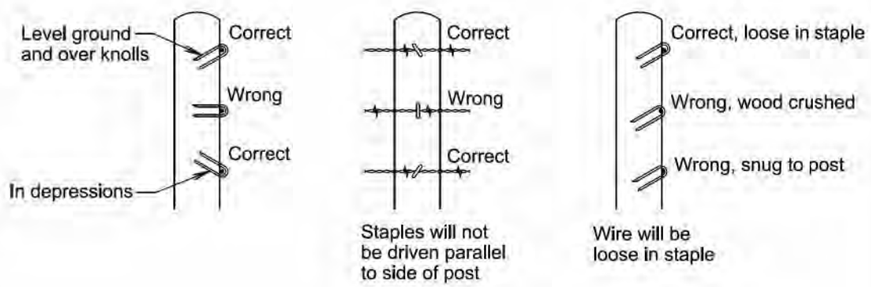

STAPLE INSTALLATION

GENERAL NOTES:

The Right-of-Way fence will consist of barbed wire or a combination of woven wire and barbed wire. The barbed wire and/or woven wire will be fastened to all wood posts or fastened to alternating wood and steel posts. Only wood posts will be used for brace panels. Gates will be of the type designated in the plans or as otherwise directed by the Engineer. Fence will be constructed conforming to the details on the standard plates and in the plans unless otherwise directed by the Engineer.

Right-of-Way fence on Interstate Projects will be constructed one foot within the Interstate Right-of-Way lines except at bridge openings, cattle passes, and as otherwise directed by the Engineer.

Right-of-Way fence other than on Interstate Projects will be constructed within one foot of the Right-of-Way on the Landowner's side except at bridge openings, cattle passes, and as otherwise directed by the Engineer.

Barbs will be fabricated from zinc coated 14 ga. wire. Two point barbs will be wrapped twice around one main strand at four-inch spacings and the four point barbs will be interlocked and wrapped around both main strands at five-inch spacings.

The gages of wire and wood post lengths and sizes are the minimum acceptable unless otherwise specified in the plans. The tolerances for steel posts will be as stated in AASHTO M281. Woven wire will conform to design and specifications of ASTM A116 and barbed wire will conform to ASTM A121.

June 26, 2019

Published Date: 2025	SDDOT	STAPLE INSTALLATION AND GENERAL RIGHT-OF-WAY FENCE NOTES	PLATE NUMBER 620.02
			Sheet 1 of 1

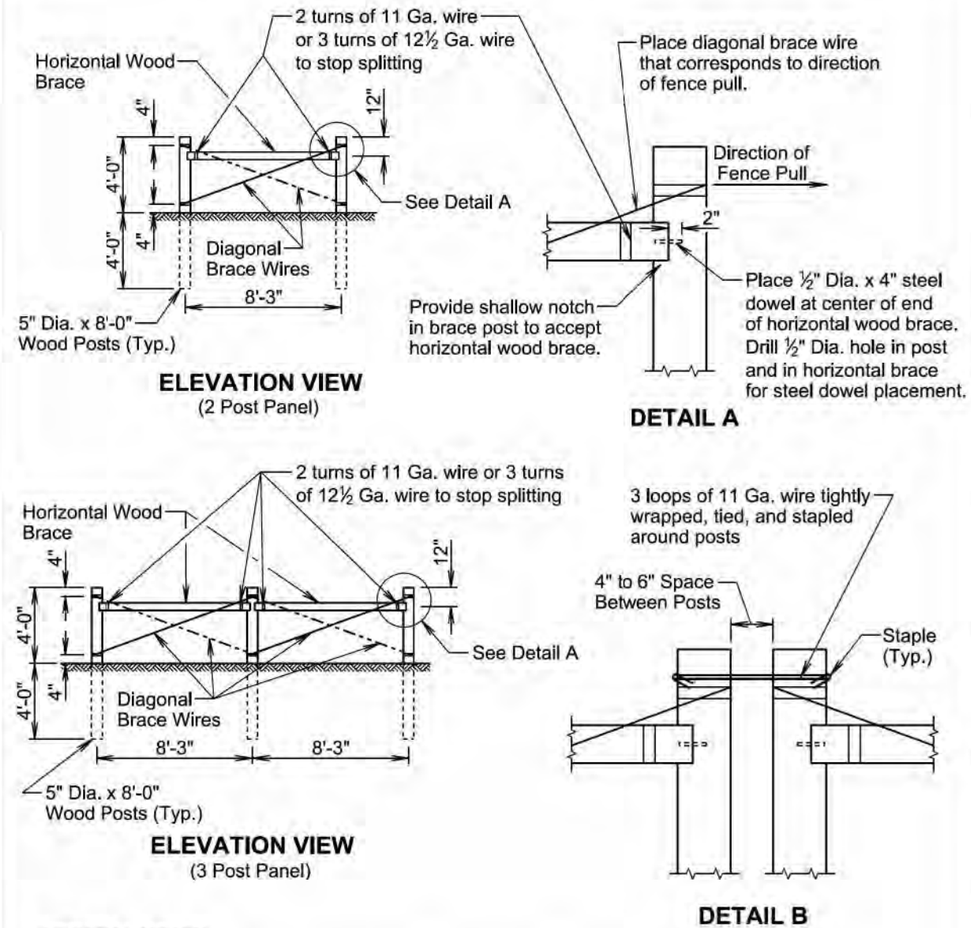

GENERAL NOTES:

Two Post Panels will be installed at least every 1320' between corners.

Two Post Panels will be installed at any sharp vertical angle crest points and as directed by the Engineer.

Horizontal wood braces will consist of 4" dia. x 8' wood posts or rough 4" x 4" x 8' timbers.

Diagonal brace wires will be fabricated with 4 strands of 9 Ga. galvanized wire twisted tight. The diagonal brace wires will be installed in accordance with the direction of the fence pull. Two diagonal brace wires are required if fence pull is in both directions.

March 31, 2024

Published Date: 2025	SDDOT	BRACE PANELS AND APPLICATIONS OF BRACE PANELS	PLATE NUMBER 620.03
			Sheet 1 of 3

Plot Scale - 1:200
Plotted From - brandonfried
File - ...\Section B\StandardPlates_B.dgn

SPACING OF 2 POST PANELS WITHIN CURVES	
RADIUS OF CURVE	SPACING OF 2 POST PANEL
Greater than 1800 Ft.	** 1320'
Less than 1800 Ft.	**At P.C., P.T., and at every 1320' between P.C. and P.T.

** Fence lengths greater than 1320' and less than 2640' place 2 Post Panel approximately at midpoint.

① See Detail B on Sheet 1 of 3.

GENERAL NOTE:

All radius of curvature stated for fence are at centerline of roadway.

If fence length is less than 600' to next corner use a 2 post panel.

* If fence length is greater than 600' to next corner use a 3 post panel.

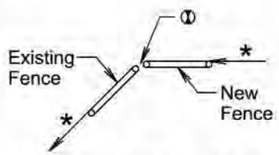

BEGIN OR END FENCE
(Where new fence ties into existing fence)

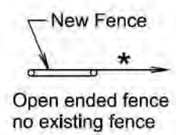

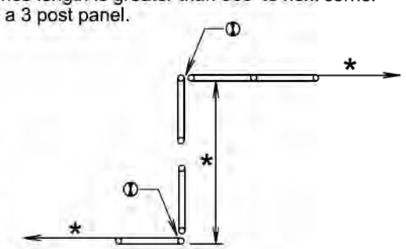

SHORT JOGS IN FENCE

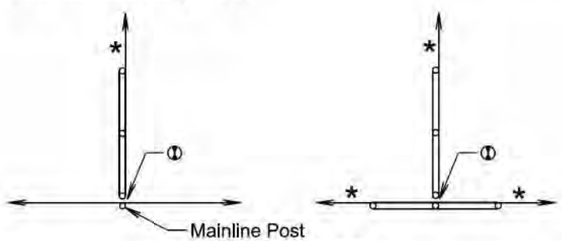

CROSS FENCE

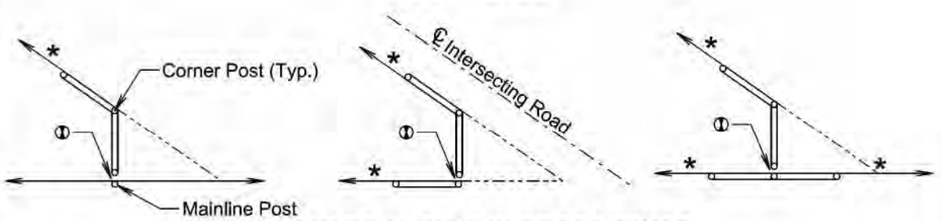

SHARP ANGLES IN CROSS FENCE

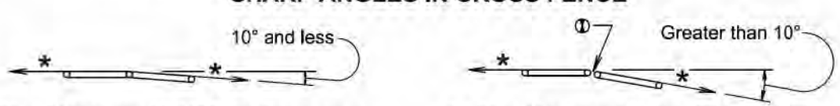

Additional fence panel is NOT required when an angle in the mainline fence is 10° and less.

Additional fence panel is required when an angle in the mainline fence is greater than 10°.

ANGLES IN MAINLINE FENCE

March 31, 2024

Published Date: 2025	SDDOT	BRACE PANELS AND APPLICATIONS OF BRACE PANELS	PLATE NUMBER 620.03
			Sheet 2 of 3

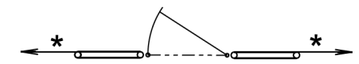

ENTRANCE
(Not on corner)

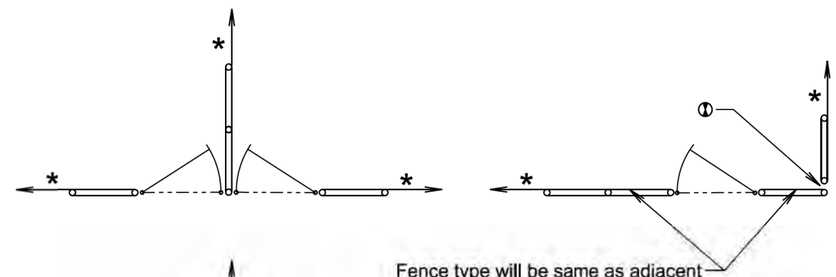

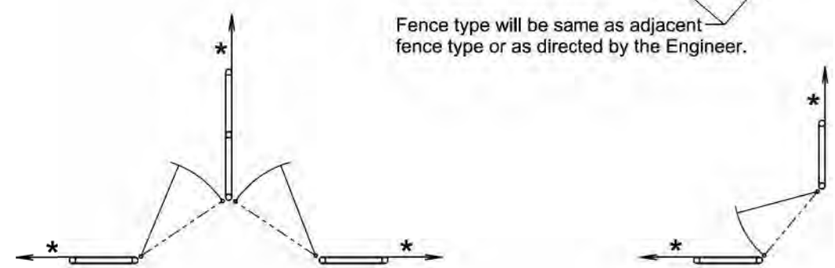

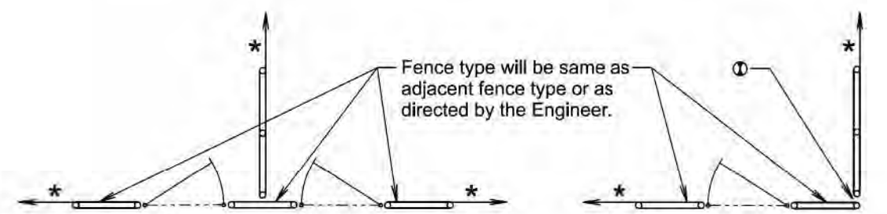

DOUBLE ENTRANCES **ENTRANCES AT CORNERS**

GATES

* If fence length is less than 600' to next corner use a 2 post panel.
If fence length is greater than 600' to next corner use a 3 post panel.

① See Detail B on Sheet 1 of 3.

March 31, 2024

Published Date: 2025	SDDOT	BRACE PANELS AND APPLICATIONS OF BRACE PANELS	PLATE NUMBER 620.03
			Sheet 3 of 3

Plot Scale - 1:200
Plotted From - brandonfried
File - ...\Section B\StandardPlates_B.dgn

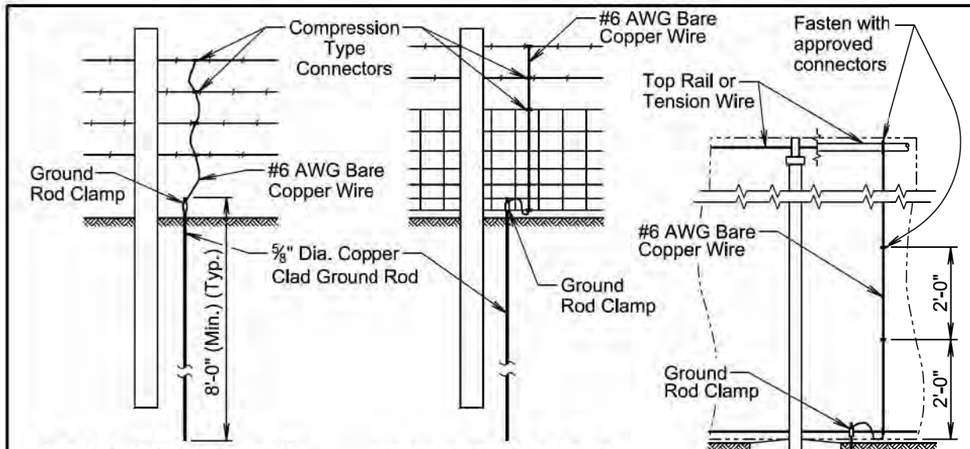

BARBED WIRE FENCE **WOVEN WIRE FENCE**

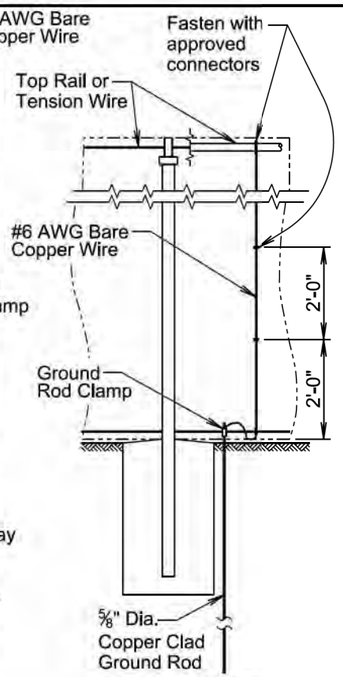

CHAIN LINK FENCE

GENERAL NOTES:

Details shown on this standard plate will apply to all types of Right-of-Way fence constructed with all wood posts or chain link fence.

Continuous fence in urban areas will be grounded at maximum intervals of 500 feet. Continuous fence in rural areas will be grounded at maximum intervals of 1000 feet. There will be a ground at a maximum of 100 feet from a gate in each adjacent section of fence.

Fence placed under a power line will be grounded with three grounds. One ground will be placed directly below the crossing and the other two will be placed 25 feet to 50 feet away, one on each side.

One ground will be placed directly below each telephone or cable crossing.

Ground rods will be located on the post side of the fence and will be as close as possible to the post and fence.

The cost of furnishing and placing all materials for grounding will be incidental to the contract unit price per foot for the respective Right-of-Way fence or chain link fence contract item.

The approximate quantites of materials per each installation of a ground are:

1 ground rod clamp.
1 ⅝" diameter x 8' long copper clad ground rod
1 #6 AWG bare copper wire; 7' long for Right-of-Way fence or 10' long for chain link fence.

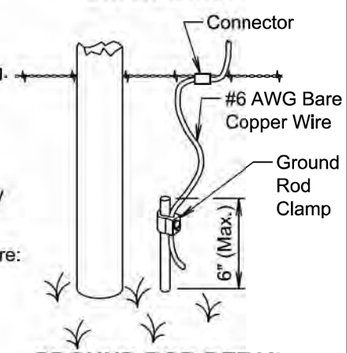

GROUND ROD DETAIL

Compression type or other type of connectors:
26" woven wire will have a total of two connectors, one secured to the top and one secured to the bottom.
32" woven wire will have a total of three connectors, one secured to the top, one secured to the middle, and one secured to the bottom.
One connector will be used for each strand of barbed wire.
A minimum of 3 connectors will be installed on chain link fence, the connectors will be placed vertically at every 2-foot increment and connectors will be placed on the top and bottom tension wires or top rail.

June 26, 2019

Published Date: 2025	SDDOT	FENCE GROUNDING	PLATE NUMBER 620.11 Sheet 1 of 1

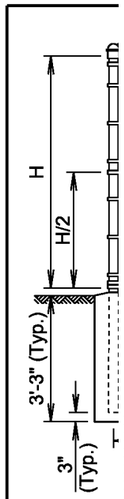

COMPO
Type Fabric
Siz
Weig (lb. /

GENERA

Specific
available
of the fer

Height of
60", 72",
Fabric he

Chain lin
rails, bra

Fence m
shown in
will be ei
prior to ir

Where fe
winter, us

A suitabl
position

Fence gr

Publish

Plot Scale - 1:200
Plotted From - brandonfried
File - ...\Section8\StandardPlates_21.dgn

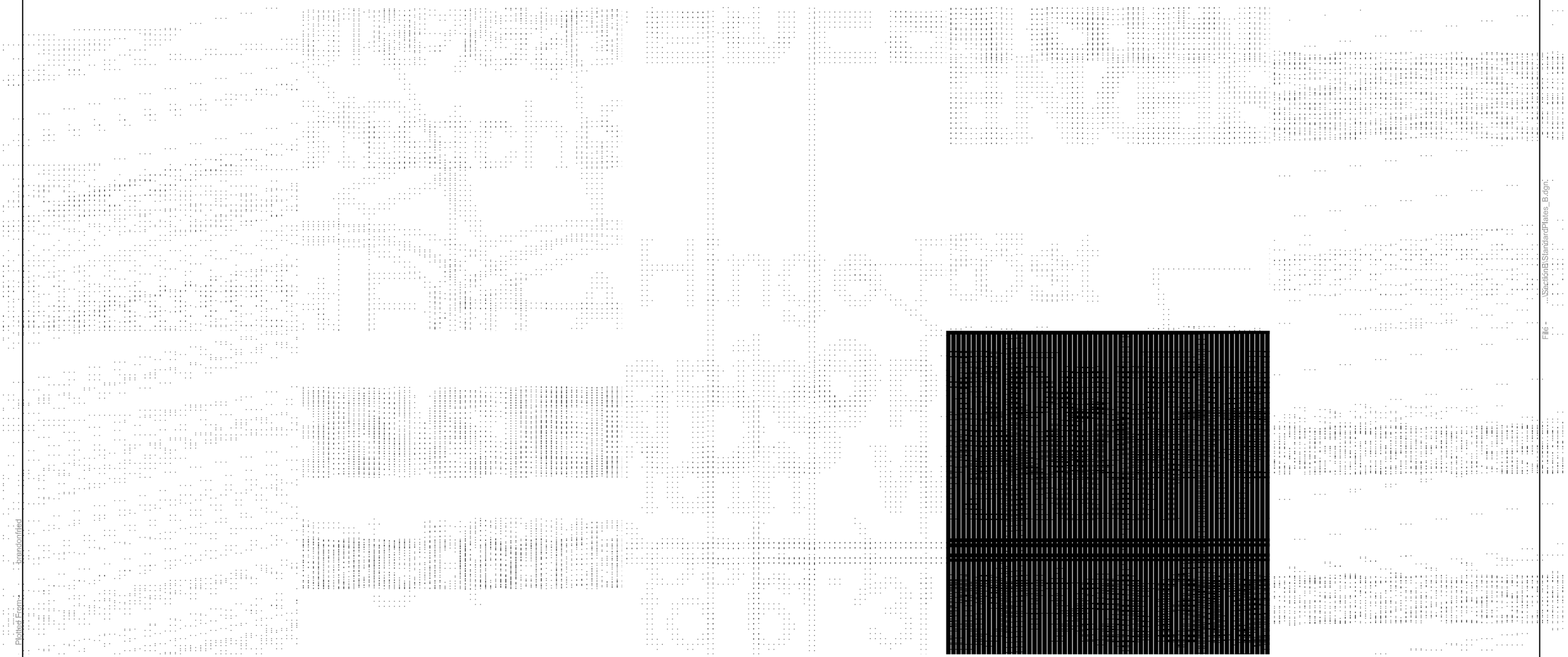

Plot Scale - 1:200

Plotted From - Transportified

File - ...\Sections\StandardPlates_B.dgn

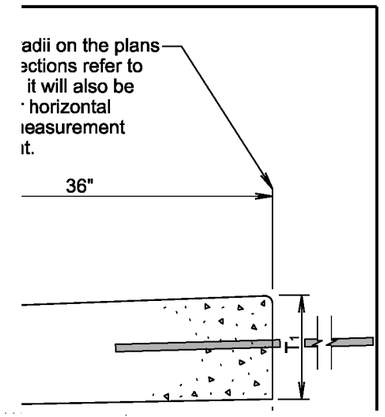

Plot Scale - 1:200
Plotted From - brandonfried
File - ...\SectionB\StandardPlates_B.dgn

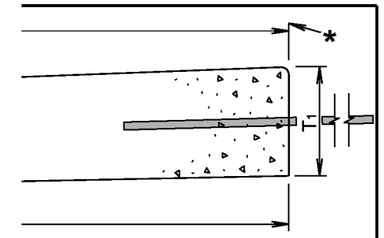

P CONCRETE MODIFIED GUTTER				
	T_1 (Inches)	T_2 (Inches)	Cu. Yd. Per Lin. Ft.	Lin. Ft. Per Cu. Yd.
	8	8⅜	0.134	7.4
	8½"	8⅞	0.143	6.9
P9	9	9⅜	0.152	6.6
P9.5	9½"	9⅞	0.160	6.2
P10	10	10⅜	0.169	5.9
P10.5	10½"	10⅞	0.178	5.6
			For full 68" width	

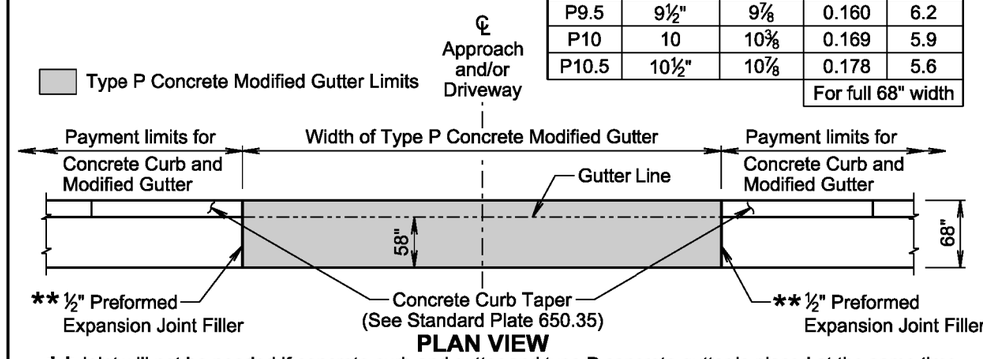

PLAN VIEW

** Joint will not be needed if concrete curb and gutter and type P concrete gutter is placed at the same time. If the ½" preformed expansion joint filler is provided, then the joint will be sealed in accordance with standard plate 650.90.

GENERAL NOTES:

The concrete for the type P concrete modified gutter will comply with the requirements of the specifications for class M6 concrete.

P11	11	11⅜	0.088	11.3
P11.5	11.5	11⅞	0.092	10.8
P12	12	12⅜	0.096	10.4

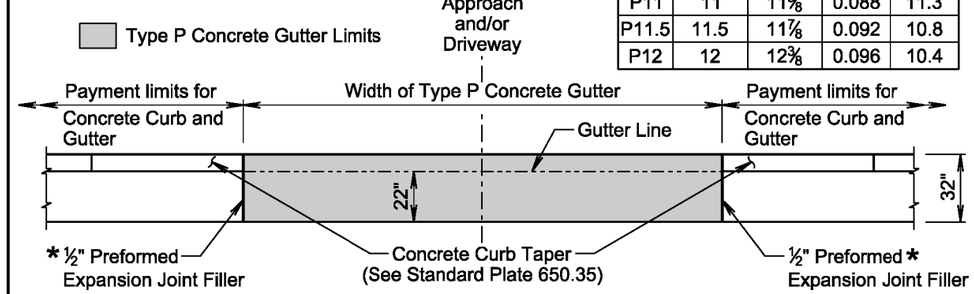

PLAN VIEW

* Joint will not be needed if concrete curb and gutter and type P concrete gutter is placed at the same time. If the ½" preformed expansion joint filler is provided, then the joint will be sealed in accordance with standard plate 650.90.

GENERAL NOTES:

The concrete for the type P concrete gutter will comply with the requirements of the specifications for class M6 concrete.

Plot Scale - 1:200
Plotted From - brandonfried
File - ...\SectionB\StandardPlates_B.dgn

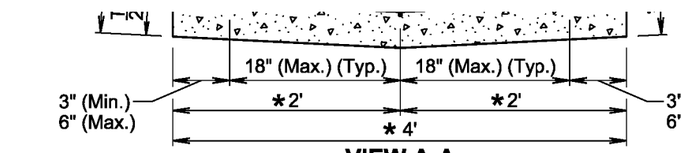

VIEW A-A
(Not to scale)

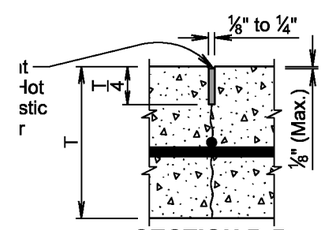

SECTION B-B
(Sawed Joint Filled with Hot Poured Elastic Joint Sealer)

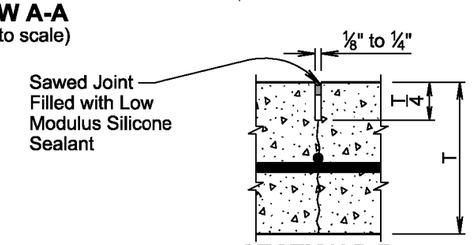

SECTION B-B
(Sawed Joint Filled with Low Modulus Silicone Sealant)

AL NOTES:

crete will comply with the specifications for class M6 concrete.

forcing steel will comply with the requirements of specification sections 480 and 1010.

Plot Scale - 1:200
Plotted From - brandonfried
...\Section B\StandardPlates_B.dgn

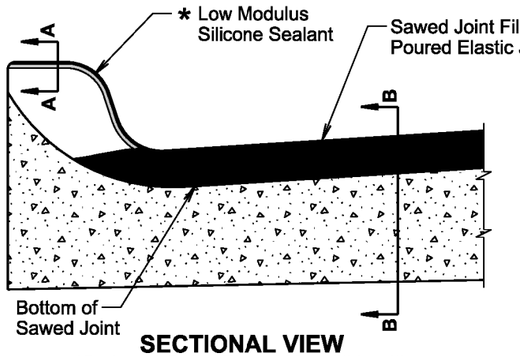

SECTIONAL VIEW
(Curb and Gutter Placed Monolithic with Adjacent Mainline PCC Pavement)

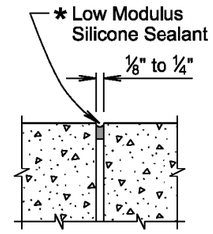

SECTION A-A

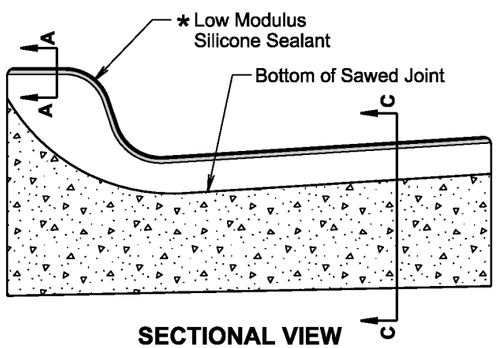

SECTIONAL VIEW
(Curb and Gutter not Placed Monolithic with Adjacent Mainline PCC Pavement or Mainline Surfacing is not PCC Pavement)

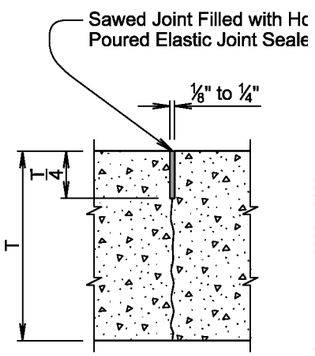

SECTION B-B

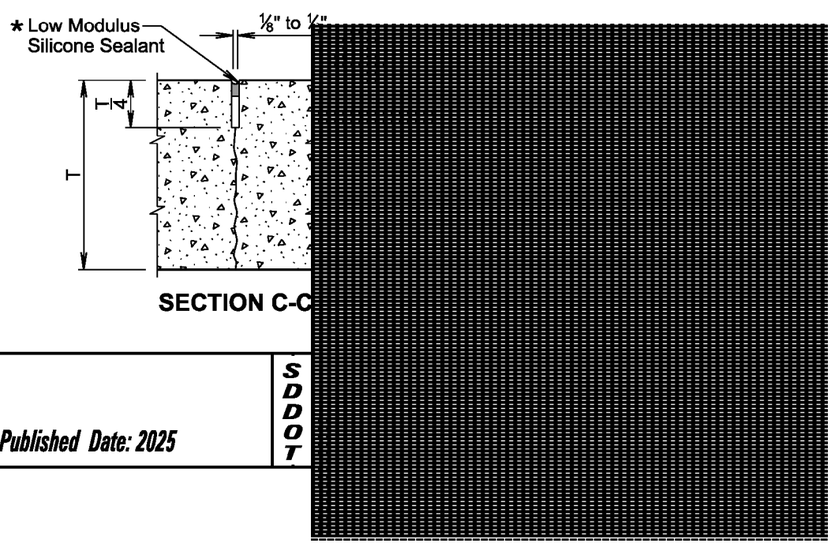

SECTION C-C

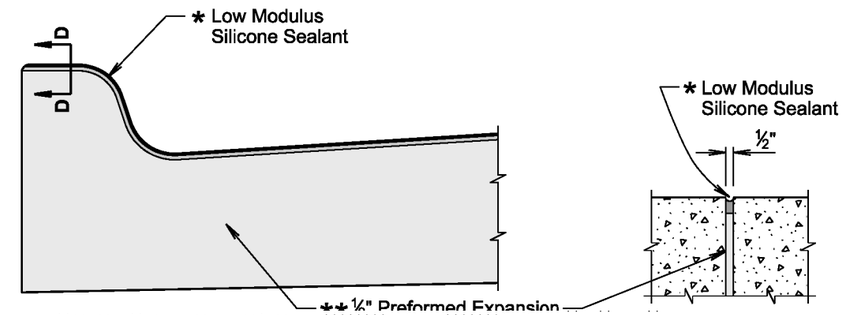

Published Date: 2025

SDDOT

Plot Scale - 1:200
Plotted From - brandonfried
File - ...\SectionB\StandardPlates_B.dgn

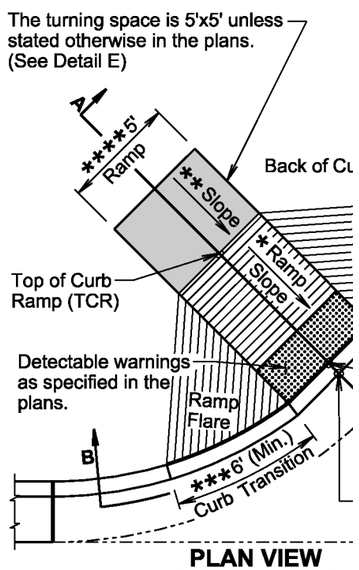

PLAN VIEW
(With 6'+ Curb Transitior

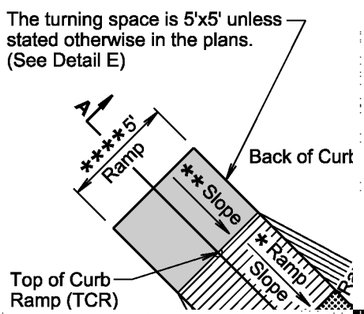

amp width is 5' unless stated otherwise in the plans.

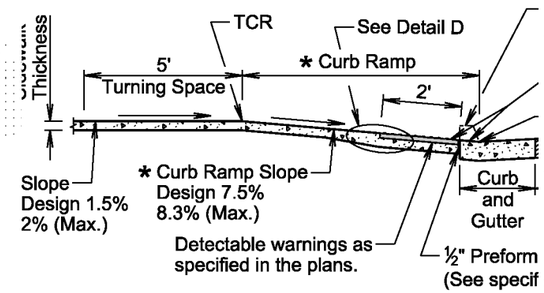

SECTION A-A

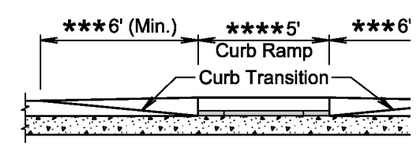

SECTIONAL VIEW B-B

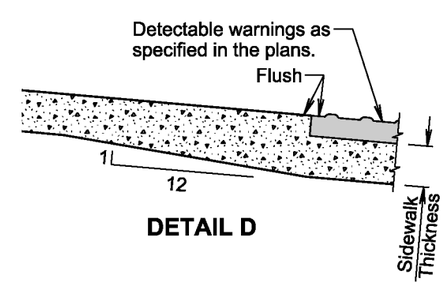

DETAIL D

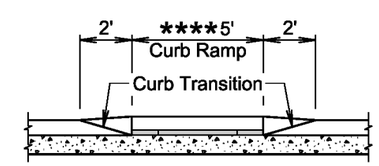

SECTIONAL VIEW C-C

February 14, 2020

ed Date: 2025	SDDOT	TYPE 1 CURB RAMP (PERPENDICULAR CURB RAMP)	PLATE NUMBER 651.01
			Sheet 2 of 3

FOR BIDDING PURPOSES ONLY

KLJ	STATE OF SOUTH DAKOTA	PROJECT	SHEET	TOTAL SHEETS
		NH-CR-EM 0018(195)103 P 0407(05)01	B156	B166

Plotting Date: 8/2/2024 Rev. 8/2/2024 BAF

Plot Scale - 1:200
Plotted From - brandonfried
\SectionB\StandardPlates_B.dgn

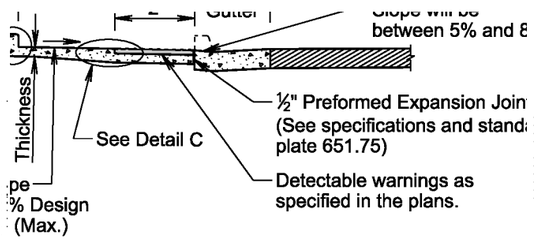

SECTION A-A

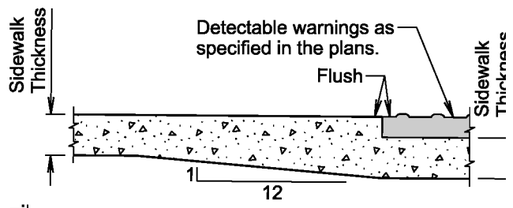

DETAIL C

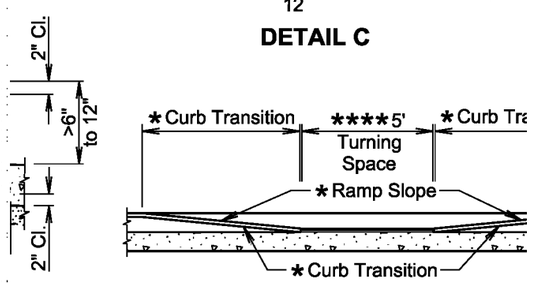

SECTIONAL VIEW B-B

TYPE 3 CURB RAMP (PARALLEL CURB RAMP)	PLAT 6 Shee

Plot Scale - 1:200
Plotted From - brandonfried
File - ...\SectionB\StandardPlates_B.dgn

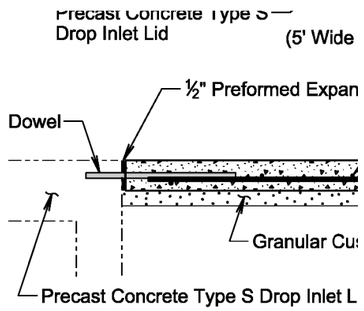

SECTIC

** 4", 5", or 6" as specified elsewhere i

* 1⅝" for 4" sidewalk, 2⅛" for 5" sidew
and 2⅝" for 6" sidewalk.

GENERAL NOTES:

The precast concrete Type S lids showr

Plot Scale - 1:200
Plotted From - brandonfried
File - ...\SectionB\StandardPlates_B.dgn

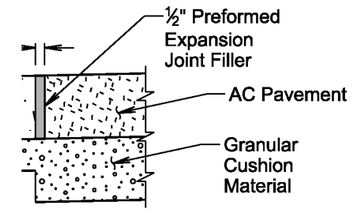

ATION VIEW
lewalk adjacent to
oncrete pavement)

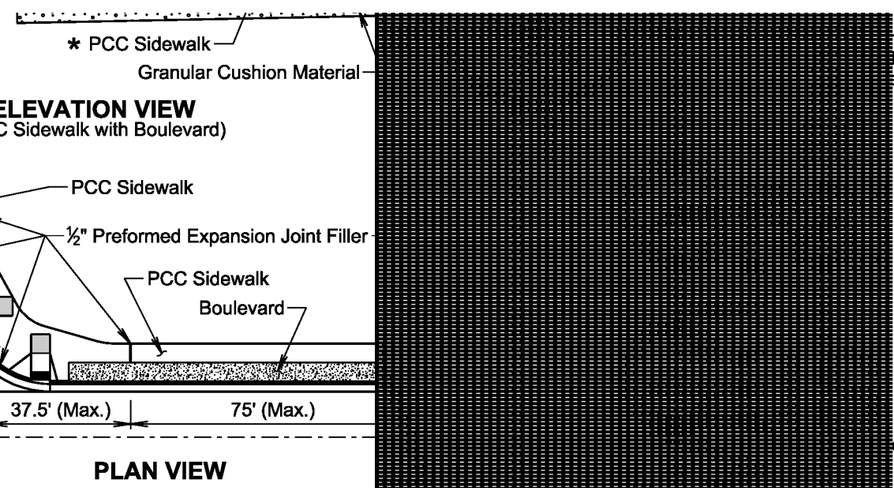

ELEVATION VIEW
(PCC Sidewalk with Boulevard)

PLAN VIEW

d in accordance with Section 651 of the Specifications.

ELEVATION VIEW
(PCC sidewalk adjacent to
earthen material, landscape rock,
or other compressible materials)

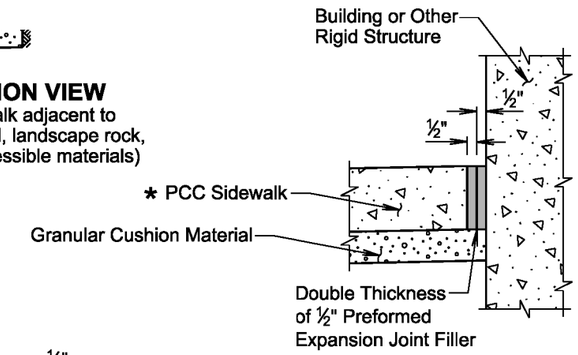

ELEVATION VIEW
(PCC sidewalk adjacent to
building or other rigid structure)

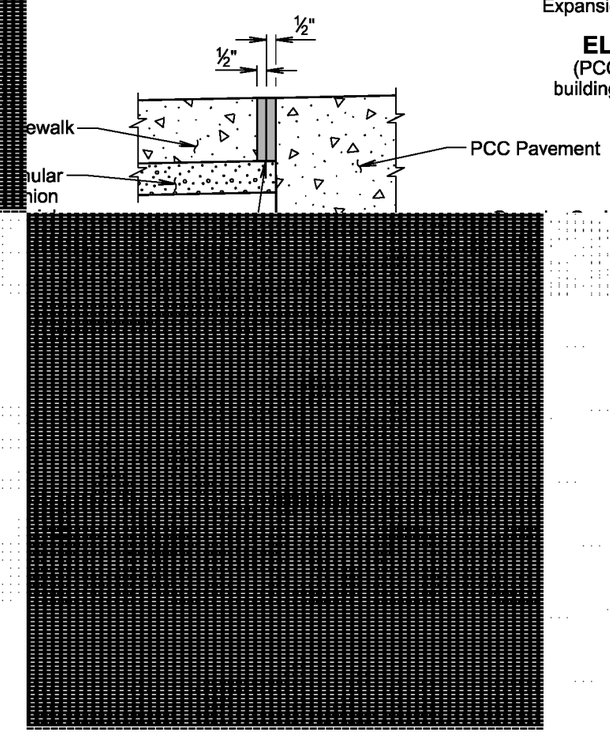

FOR BIDDING PURPOSES ONLY

KLJ	STATE OF SOUTH DAKOTA	PROJECT	SHEET	TOTAL SHEETS
		NH-CR-EM 0018(195)103 P 0407(05)01	B160	B166

Plotting Date: 8/2/2024 Rev. 8/2/2024 BAF

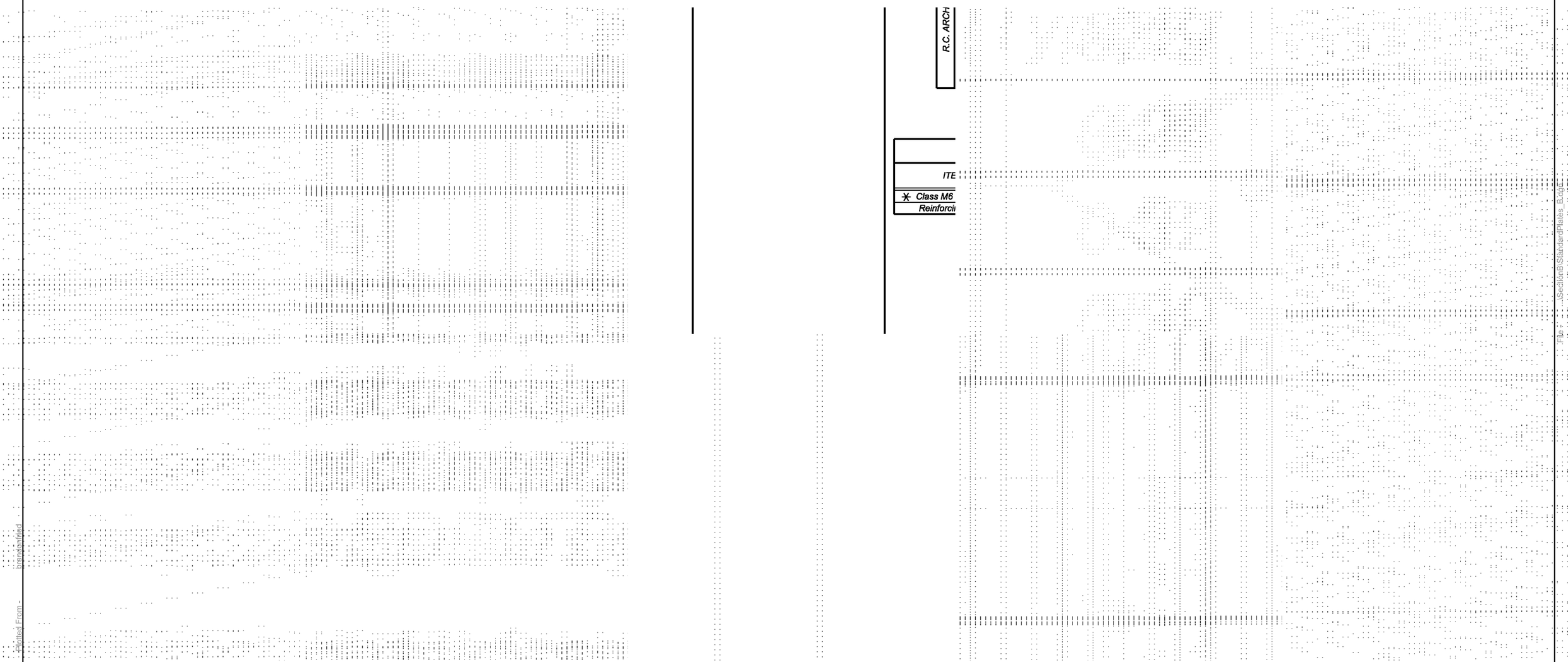

Plot Scale - 1:200
Plotted From - brandonfried
File - ...\SectionB\StandardPlates_B.dgn

FOR BIDDING PURPOSES ONLY

KLJ	STATE OF SOUTH DAKOTA	PROJECT	SHEET	TOTAL SHEETS
		NH-CR-EM 0018(195)103 P 0407(05)01	B161	B166

Plotting Date: 8/2/2024 Rev. 8/2/2024 BAF

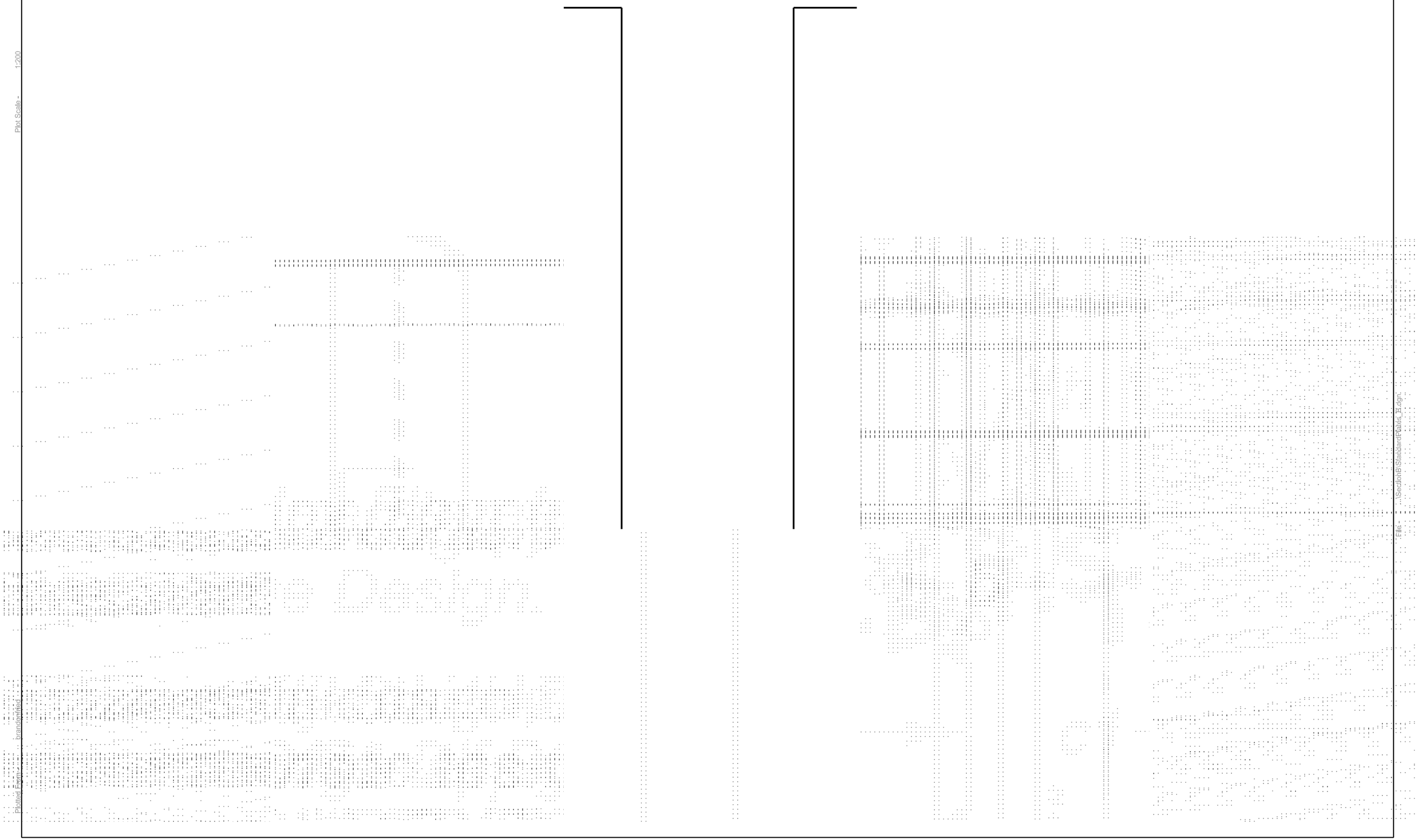

Plot Scale - 1:200
Plotted From - brandonfried
File - ...\SectionB\StandardPlates_B.dgn

FOR BIDDING PURPOSES ONLY

KLJ	STATE OF SOUTH DAKOTA	PROJECT	SHEET	TOTAL SHEETS
		NH-CR-EM 0018(195)103 P 0407(05)01	B162	B166

Plotting Date: 8/2/2024 Rev. 8/2/2024 BAF

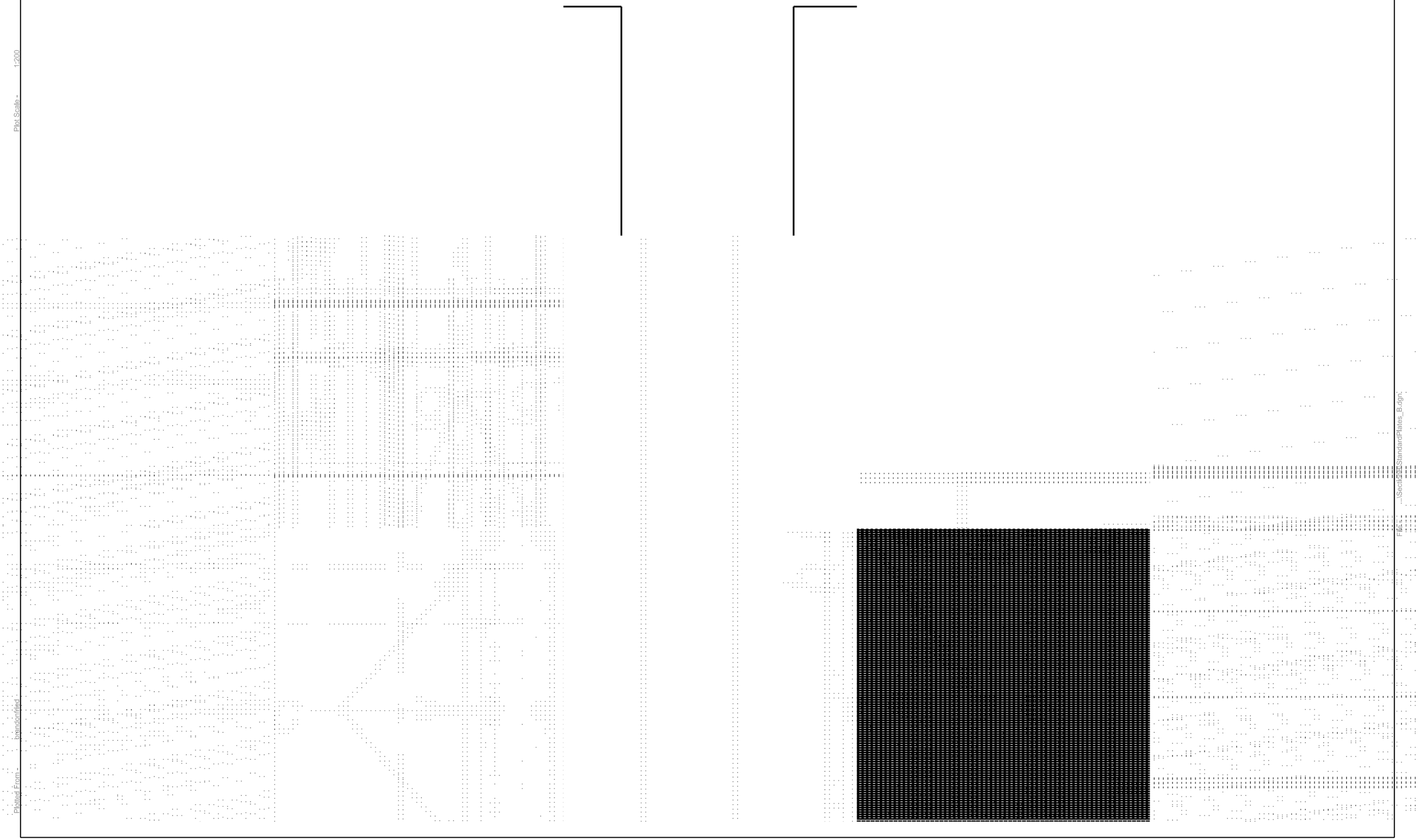

Plot Scale - 1:200
Plotted From - brandonfried
File: ...\Section\StandardPlates_B.dgn

FOR BIDDING PURPOSES ONLY

KLJ	STATE OF SOUTH DAKOTA	PROJECT	SHEET	TOTAL SHEETS
		NH-CR-EM 0018(195)103 P 0407(05)01	B163	B166

Plotting Date: 8/2/2024 Rev. 8/2/2024 BAF

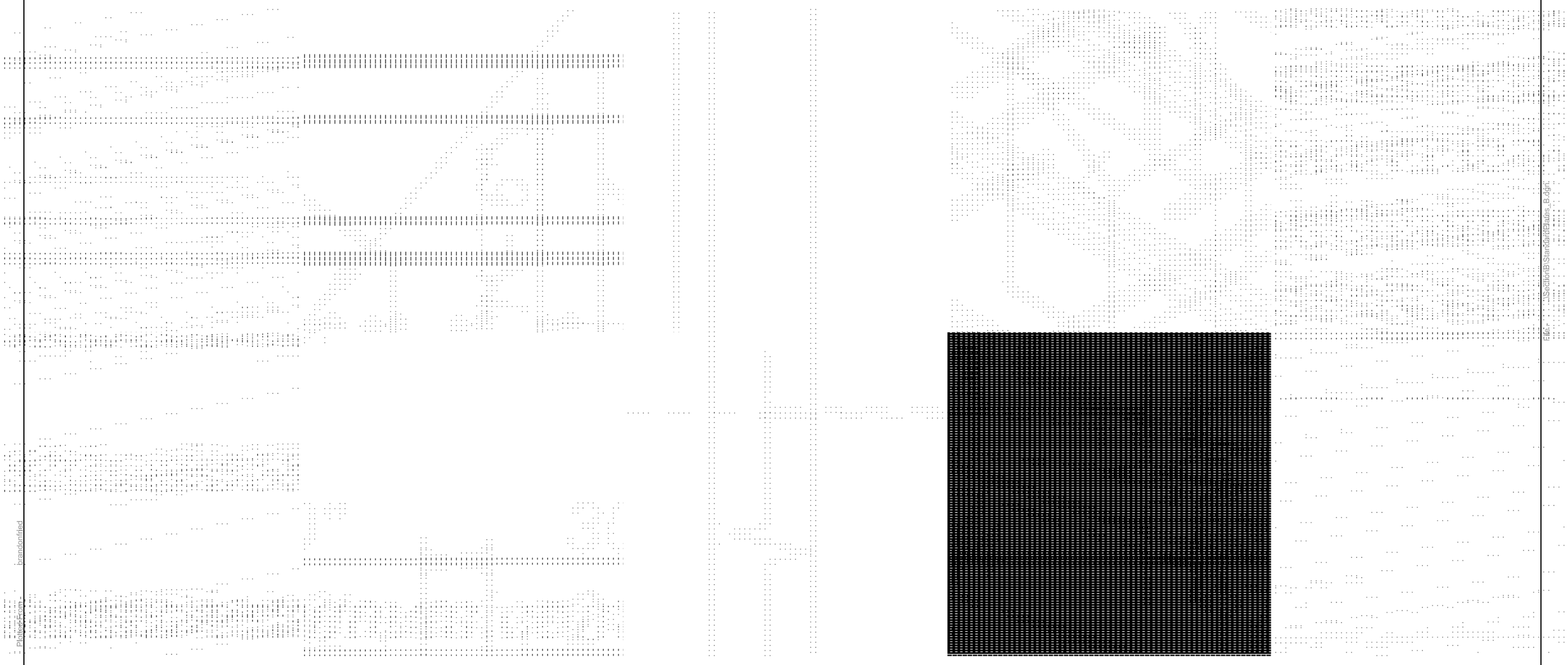

Plot Scale - 1:200
Plotted From - brandonfried
File - ...\SectionB\StandardPlates_B.dgn

FOR BIDDING PURPOSES ONLY

KLJ	STATE OF SOUTH DAKOTA	PROJECT	SHEET	TOTAL SHEETS
		NH-CR-EM 0018(195)103 P 0407(05)01	B164	B166

Plotting Date: 8/2/2024 Rev. 8/2/2024 BAF

Plot Scale - 1:200
Plotted From - brandonfried
File - ...\SectionB\StandardPlates_B.dgn

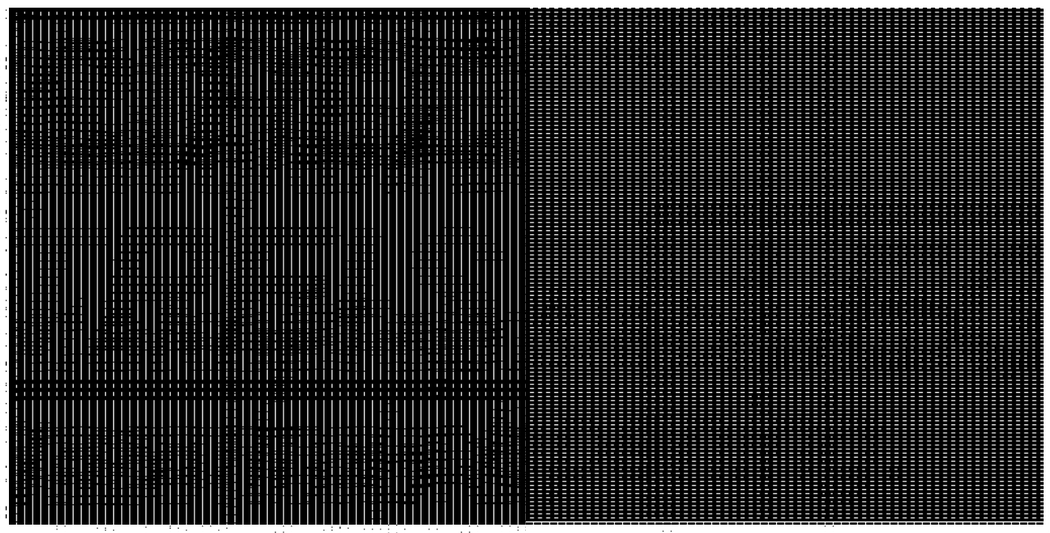

H	n1	16	5	5' - 9"	Str.
	p1	68	4	5' - 0"	Str.
	q1	16	4	3' - 6"	17A
H = 7' - 0"	a1	1	5	5' - 9"	T3
	▼ a2	7	–	———	—
	h9	28	4	5' - 9"	17A
	k9	48	4	11' - 6"	17
	m1	16	5	5' - 9"	Str.
	n1	18	5	5' - 0"	Str.
	p1	68	4	5' - 0"	Str.
	q1	16	4	3' - 6"	17A

Published Date: 2025

SDDOT

Plot Scale - 1:200
Plotted From - brandonfried
File - ...\Sections\StandardPlates_B.dgn

FOR BIDDING PURPOSES ONLY

KLJ	STATE OF SOUTH DAKOTA	PROJECT	SHEET	TOTAL SHEETS
		NH-CR-EM 0018(195)103 P 0407(05)01	B166	B166

Plotting Date: 8/2/2024 Rev. 8/2/2024 BAF

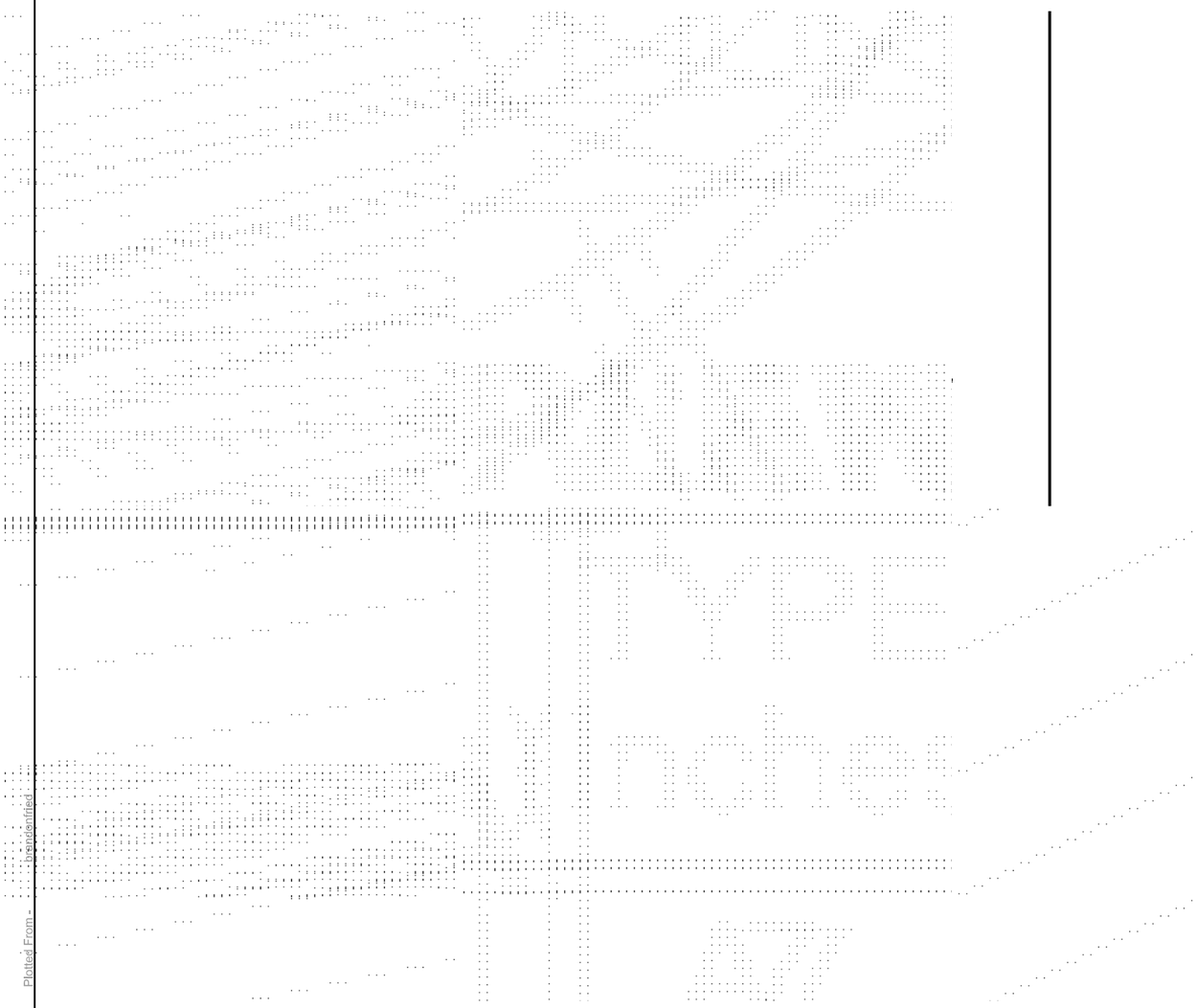

Plot Scale - 1:200
Plotted From - brandenfried
File - ...\SectionB\StandardPlates_B.dgn