April 9, 2021

Re: Project P 016A(08)59, PCN 04FU – US16A Keystone Wye Pre-Bid Meeting

To Whom It May Concern,

A pre-bid meeting for the Keystone Wye Bridge Rehabilitation project is being held on April 22nd, 2021 at 3:00 PM CST via Microsoft Teams. Interested contracting parties are invited to attend virtually via the Microsoft Teams Meeting Link provided below.

This meeting will include a presentation of the project covering topics such as the overall scope of work, design aspects, traffic control, and contract time. There will be an opportunity for contractors to present questions to Department staff, consultants, and project stakeholders.

Attendance is not a requirement, but all interested contracting parties are strongly encouraged to attend.

If attending the meeting you must join the meeting via the link provided. In order to reduce sound feedback please mute the microphone on your computer. Due to the meeting being virtual we are requesting that you please enter the name of your company followed by the individuals from your company attending the meeting into the chat feature of Microsoft Teams.

Join Pre-Bid Meeting
Date: April 22, 2021
Time: 3:00 – 4:30 (CST)
Video Conference ID: 118 401 985 2

Additional instructions regarding the meeting format will be provided at the beginning of the meeting.

Sincerely,

SD DOT

FOR BIDDING PURPOSES ONLY

STATE OF SOUTH DAKOTA	PROJECT	SHEET NO.	TOTAL SHEETS
	P016A(08)59	E1	E109

SECTION E: STRUCTURE PLANS

INDEX OF SHEETS -

Sheet E1	*Layout Map and Index*
Sheet E2	*Estimate of Structure Quantities*
Sheet E3 to E47	*Str. No. 52-308-411, 170' - 0" Timber Girder Bridge*
Sheet E48 to E109	*Str. No. 52-308-412, 290' - 0" Timber Arch Bridge*

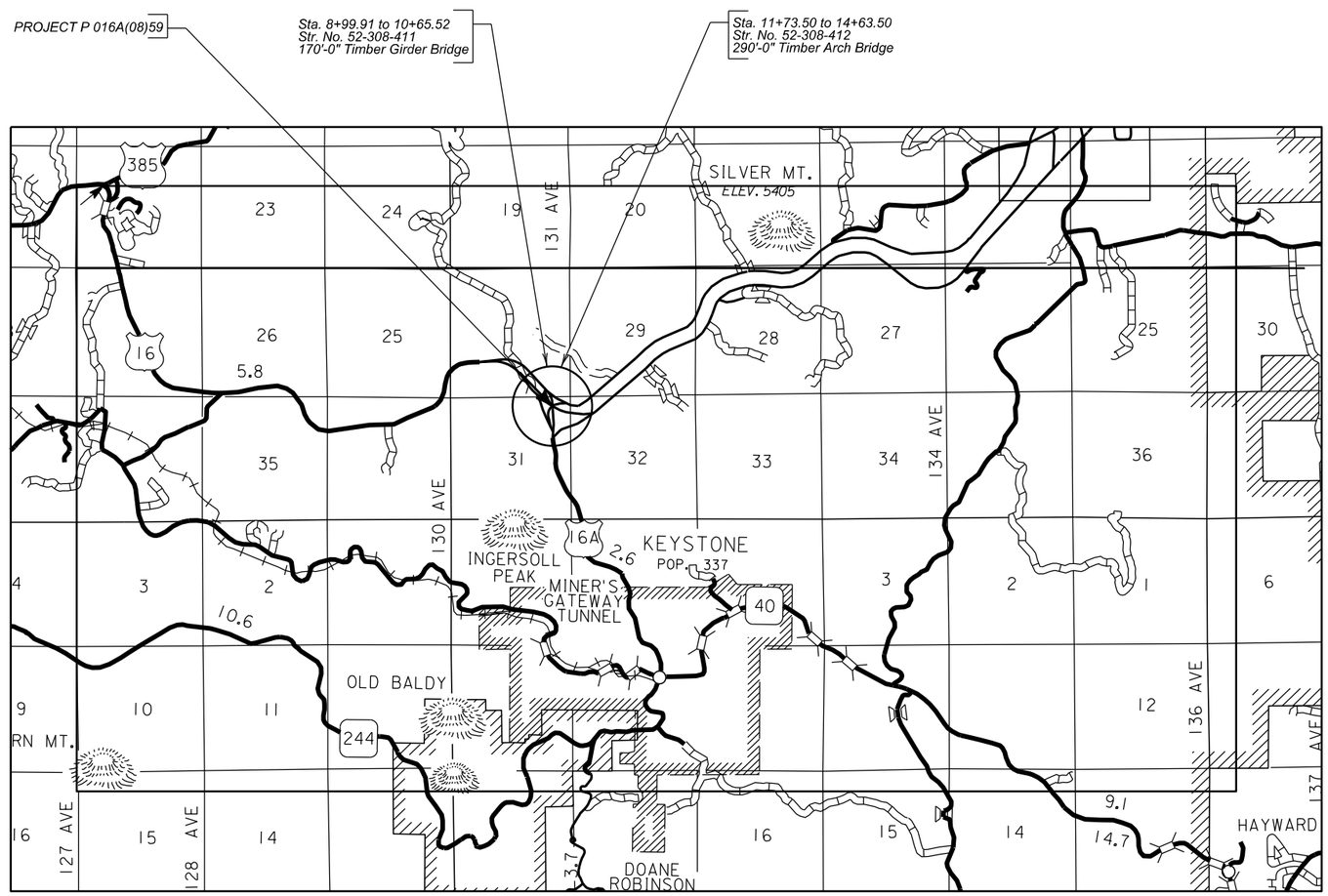

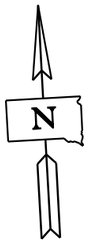

SECTION E: ESTIMATE OF STRUCTURE QUANTITIES

Structure No. - 52-308-411

ITEM NO.	DESCRIPTION	QUANTITY	UNIT
009E3310	Bridge Elevation Survey	Lump Sum	LS
110E0010	Remove Concrete Bridge Approach Slab	12.3	SqYd
110E0040	Remove Concrete Bridge Slab	535.2	SqYd
110E1010	Remove Asphalt Concrete Pavement	50.6	SqYd
110E1100	Remove Concrete Pavement	62.9	SqYd
320E1200	Asphalt Concrete Composite	127.6	Ton
410E2320	Compression Seal	56	Ft
412E0150	Repair Galvanized Coating	7	Each
412E1000	Clean Substructure Units	Lump Sum	LS
460E0150	Concrete Approach Slab for Bridge	125	SqYd
460E0160	Concrete Approach Sleeper Slab for Bridge	32	SqYd
460E0175	Concrete Substructure Repair Type I	1	SqFt
460E0176	Concrete Substructure Repair Type II	3	SqFt
460E0177	Concrete Substructure Repair Type III	6	SqFt
460E0190	Concrete Crack Injection/Sealing	42	In
460E0202	Concrete Protective Coating	1340	SqFt
460E0300	Breakout Structural Concrete	0.4	CuYd
460E0380	Install Dowel in Concrete	56	Each
470E8000	Timber Bridge Rail	340	Ft
480E5000	Galvanic Anode	10	Each
541E0100	High Strength Fiber Tension Reinforcement Retrofit	570	Ft
541E0110	Diffuse Timber	472.5	CuFt
541E1300	Transverse Laminated Timber Deck	522.2	SqYd
630E0010	Straight Class A Thrie Beam Guardrail with Wood Posts	75	Ft
900E2096	Test Galvanized Coating	7	Each

Structure No. - 52-308-412

ITEM NO.	DESCRIPTION	QUANTITY	UNIT
009E3310	Bridge Elevation Survey	Lump Sum	LS
110E0040	Remove Concrete Bridge Slab	906.7	SqYd
110E1100	Remove Concrete Pavement	125.7	SqYd
320E1200	Asphalt Concrete Composite	200.1	Ton
410E0380	Remove and Replace Steel Diaphragm	1	Each
410E2320	Compression Seal	56	Ft
410E2800	Bolt Replacement Type 1A	2	Each
412E0150	Repair Galvanized Coating	30	Each
412E1000	Clean Substructure Units	Lump Sum	LS
460E0150	Concrete Approach Slab for Bridge	125	SqYd
460E0160	Concrete Approach Sleeper Slab for Bridge	32	SqYd
460E0175	Concrete Substructure Repair Type I	2	SqFt
460E0176	Concrete Substructure Repair Type II	7.5	SqFt
460E0177	Concrete Substructure Repair Type III	12	SqFt
460E0190	Concrete Crack Injection/Sealing	90	In
460E0202	Concrete Protective Coating	1229	SqFt
460E0300	Breakout Structural Concrete	1.6	CuYd
470E8000	Timber Bridge Rail	580	Ft
480E5000	Galvanic Anode	10	Each
541E0110	Diffuse Timber	339.9	CuFt
541E1300	Transverse Laminated Timber Deck	895.5	SqYd
630E0010	Straight Class A Thrie Beam Guardrail with Wood Posts	75	Ft
900E2096	Test Galvanized Coating	30	Each

REGISTERED PROFESSIONAL ENGINEER
REG. NO.
13352
JAN O.
HANSEN
SOUTH DAKOTA
4/09/2021

STATE OF	PROJECT	SHEET NO.	TOTAL SHEETS
S.D.	P016A(08)59	E3	E109

FOR BIDDING PURPOSES ONLY

Revised: 4/6/2021 MNL

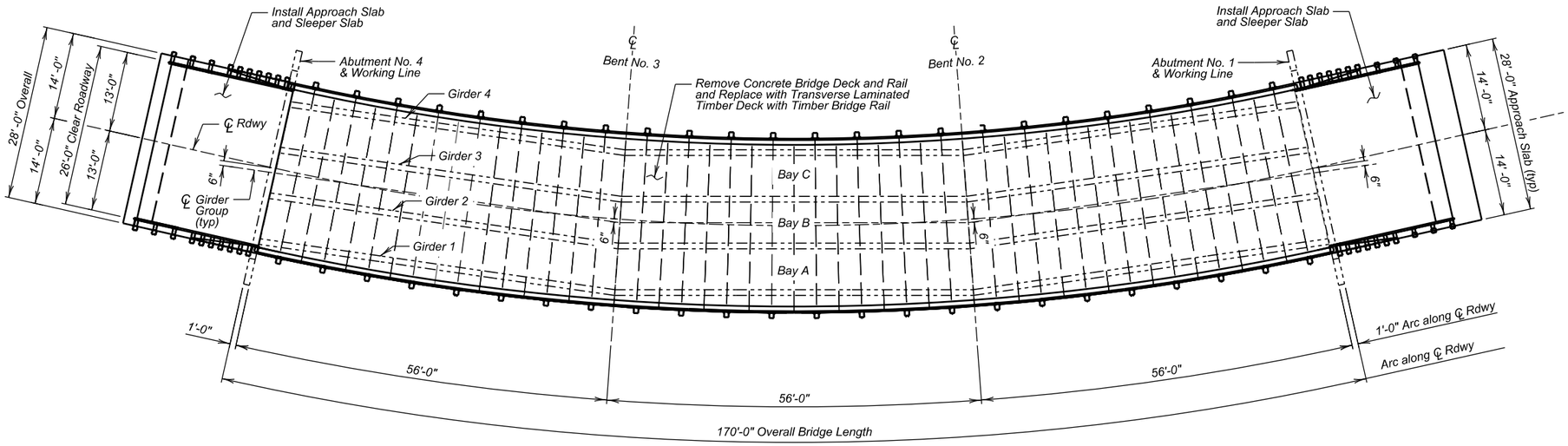

PLAN

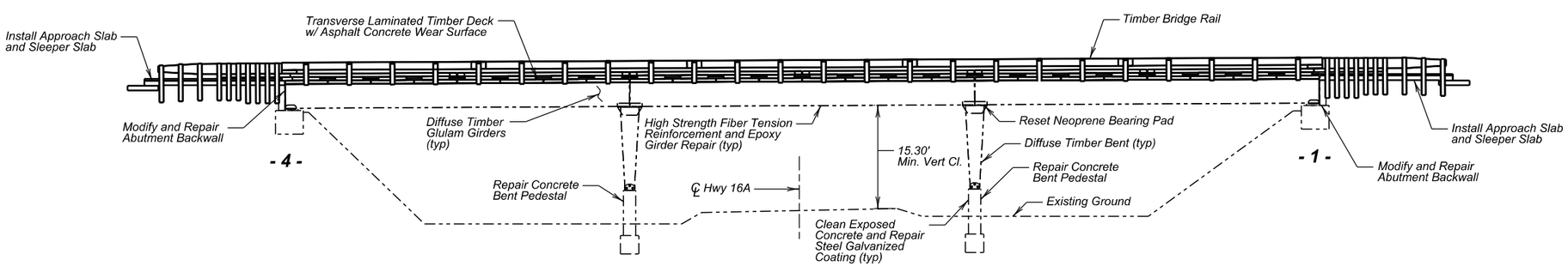

ELEVATION

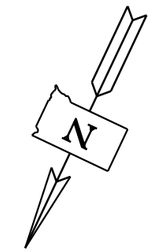

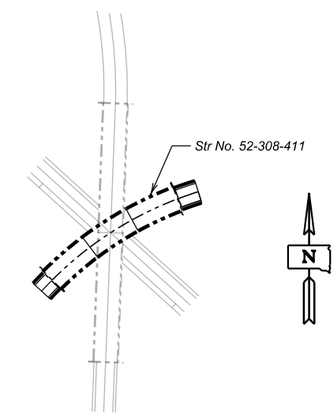

LAYOUT

-X201-
INDEX OF BRIDGE SHEETS

Sheet No. 1 - General Drawing
Sheet No. 2 - Estimate of Structure Quantities and Notes
Sheet No. 3 - Notes (Continued)
Sheet No. 4 - Notes (Continued)
Sheet No. 5 - Notes (Continued)
Sheet No. 6 - Notes (Continued)
Sheet No. 7 - Abutment Breakout Details
Sheet No. 8 - Concrete Repairs at Abutments No. 1 and No. 4
Sheet No. 9 - Concrete Repairs at Bents No. 2 and No. 3
Sheet No. 10 - Concrete Substructure Repair Type I
Sheet No. 11 - Concrete Substructure Repair Type II
Sheet No. 12 - Concrete Substructure Repair Type III
Sheet No. 13 - Concrete Repairs Type C2 and C3
Sheet No. 14 - Timber Diffuse Locations at Bents No. 2 and No. 3
Sheet No. 15 - Timber Girder and Column Diffuse Locations
Sheet No. 16 - Timber Repair Type T1 - Diffuse Timber Details
Sheet No. 17 - Timber Repair Type T1 - Diffuse Timber Details (Cont.)
Sheet No. 18 - High Strength Fiber Tension Reinforcement Retrofit Details
Sheet No. 19 - Steel Repair Type S1 - Test & Repair Galvanized Coating
Sheet No. 20 - Typical Deck Section
Sheet No. 21 - Deck Bracing Details
Sheet No. 22 - Deck Joint Details
Sheet No. 23 - Deck Panel Details
Sheet No. 24 - Erection Data and Deck Elevations
Sheet No. 25 - Timber Bridge Rail Details
Sheet No. 26 - Timber Bridge Rail Splice Details
Sheet No. 27 - Approach Slab Plan
Sheet No. 28 - Approach Slab Details
Sheet No. 29 - Approach Guardrail Assembly
Sheet No. 30 - Curb Transition Details
Sheet No. 31 - Curb Transition Details (Cont.)
Sheet No. 32- 45 - Original Construction Plans

REGISTERED PROFESSIONAL ENGINEER
REG. NO.
13352
JAN O.
HANSEN
SOUTH DAKOTA
4/09/2021

PLANS BY
Stantec

GENERAL DRAWING
FOR
170'-0" TIMBER GIRDER BRIDGE

26'-0" ROADWAY — 0 SKEW
OVER US 16A W — SEC. 31-TIS-R6E
STA. 8+99.91 TO 10+65.62 — P016A(08)59
STR. NO. 52-308-411 — HS-20
PCN 04FU

PENNINGTON COUNTY
S. D. DEPT. OF TRANSPORTATION
FEBRUARY 2020

DESIGNED BY	CK. DES. BY	DRAFTED BY	
ML	JH	JW	BRIDGE ENGINEER

ESTIMATE OF STRUCTURE QUANTITIES

ITEM NO.	DESCRIPTION	QUANTITY	UNIT	REMARKS
009E3310	Bridge Elevation Survey	Lump Sum	LS	See Sp. Prov.
110E0010	Remove Concrete Bridge Approach Slab	12.3	SqYd	
110E0040	Remove Concrete Bridge Slab	535.2	SqYd	
110E1010	Remove Asphalt Concrete Pavement	50.6	SqYd	
110E1100	Remove Concrete Pavement	62.9	SqYd	
320E1200	Asphalt Concrete Composite	127.6	Ton	
410E2320	Compression Seal	56	Ft	
412E0150	Repair Galvanized Coating	7	Each	See Sp. Prov.
412E1000	Clean Substructure Units	Lump Sum	LS	See Sp. Prov.
460E0150	Concrete Approach Slab for Bridge	125	SqYd	
460E0160	Concrete Approach Sleeper Slab for Bridge	32	SqYd	
460E0175	Concrete Substructure Repair Type I	1	SqFt	See Sp. Prov.
460E0176	Concrete Substructure Repair Type II	3	SqFt	See Sp. Prov.
460E0177	Concrete Substructure Repair Type III	6	SqFt	See Sp. Prov.
460E0190	Concrete Crack Injection/Sealing	42	In	
460E0202	Concrete Protective Coating	1340	SqFt	
460E0300	Breakout Structural Concrete	0.4	CuYd	See Sp. Prov.
460E0380	Install Dowel in Concrete	56	Each	
470E8000	Timber Bridge Rail	340	Ft	See Sp. Prov.
480E5000	Galvanic Anode	10	Each	
541E0100	High Strength Fiber Tension Reinforcement Retrofit	570	Ft	See Sp. Prov.
541E0110	Diffuse Timber	472.5	CuFt	See Sp. Prov.
541E1300	Transverse Laminated Timber Deck	522.2	SqYd	See Sp. Prov.
630E0010	Straight Class A Thrie Beam Guardrail with Wood Posts	75	Ft	
900E2096	Test Galvanized Coating	7	Each	See Sp. Prov.

SPECIFICATIONS FOR BRIDGE

1. Design Specifications of Timber Deck – AASHTO LRFD Bridge Design Specifications, 2014 Edition with 2015 and 2016 interims, and ANSI/AWC NDS-2012 National Design Specification for Wood Construction.

2. Design Specifications of Timber Girders - AASHTO Standard Specifications for Highway Bridges 17th Edition using Allowable Stress Design.

2. Construction Specifications: South Dakota Standard Specifications for Roads and Bridges, 2015 Edition and Required Provisions, Supplemental Specifications and Special Provisions as included in the Proposal.

DESIGN MATERIAL STRENGTHS

Concrete Class A45	f`c = 4,500 psi
Reinforcing Steel	fy = 60,000 psi
Structural Steel	fy = 36,000 psi
Glulam Timber	Coastal Douglas Fir L-2
	Fbo = 1.450 ksi
	Fvo = 0.230 ksi

DETAILS AND DIMENSIONS OF EXISTING BRIDGE

All details and dimensions of the existing glulam timber bridge, contained in these plans, are based on the original construction plans and shop plans. It is the Contractor's responsibility to inspect and verify the actual field conditions and any necessary as-built dimensions affecting the satisfactory completion of the work required for this project.

GENERAL CONSTRUCTION NOTES

1. All new reinforcing steel will conform to ASTM A615, Grade 60.

2. All lap splices shown are contact lap splices unless noted otherwise.

3. All exposed concrete edges or corners will be chamfered 3/4 inch except where noted otherwise in the plans. Match the existing chamfer if chamfer differs.

4. Request for construction joints or reinforcing steel splices at points other than those shown, must be submitted to the Engineer for prior approval. If additional splices are approved, no payment will be allowed for the added quantity of reinforcing steel.

5. Use 2 inch clear cover on all reinforcing steel except as shown otherwise.

6. The contractor will notify the engineer of any decayed wood areas discovered during installation of retrofit materials. Decay may be recognized as soft, spongy or punky wood, fruiting bodies in cracks or on the wood surface, or crumbly or checkered surface.

SHOP PLANS

The Contractor will submit shop plans in accordance with the Standard Specifications. Send shop plan submittals to:

Jan Hansen
Jan.Hansen@stantec.com
Stantec Consulting Services
733 S Marquette Avenue Suite 1000
Minneapolis, MN 55402

After review, corrections (if necessary) and approval by Stantec, the Office of Bridge Design will review the submittals, authorize fabrication, arrange for fabrication inspection, and distribute the shop drawings.

BRIDGE LAYOUT AND ORIENTATION

The original construction plans have been provided at the end of the Rehabilitation Plans. The Contractor is to be aware that the bridge recording layout has been revised to current practices and is opposite of shown in the original construction plans. This includes girder, abutment, bent, bracing, strut, and span numbering. The Contractor will record notes, as-built drawings, and maintenance manual according to the new recording layout as shown in the Rehabilitation Plans.

NOTICE - LEAD BASED PAINT

Be advised that the paint on the existing bridge railing may contain lead. Lead-based paint and related debris must be disposed of in accordance with all applicable federal, state, and local laws governing such disposal. All necessary measures and precautions will be taken to ensure worker safety for work involving lead particles. Removal of lead-based paint should occur before torch cutting, grinding, or other lead emitting tasks. The Contractor should plan their operations accordingly and inform their employees of the hazards of lead exposure.

BOLT TESTING

The certified mill test reports for all bolts used on the project will include the test results for all testing specified in Section 972.2 D of the Standard Specifications. Some of these tests are supplemental tests that must be requested at the time the bolts are ordered. It is the responsibility of the Contractor to notify the bolt supplier of these requirements.

CONSTRUCTION DEMOLITION AND STAGING

At least one week prior to the pre-demolition conference provide an approved Construction Demolition and Staging (CDS) plan for record purposes only. Contractor is responsible for the stability of the structures during the rehabilitation work and progressive stages of deck removal and replacement including the effects of unbalanced loadings and imposed lateral forces.

CONCRETE SUBSTRUCTURE REPAIR

1. Rapid Set Cementitious Patching Material will be used for patching of substructure units as indicated in plans (where repair depth is less than 2"). Patching material will conform to Section 390.2 B., Concrete Patch Material Type 1. Place Patching Materials in accordance with the Manufacturer's recommendations.

2. Class A45 Concrete will be used for patching of substructure units as indicated in plans (where repair depth is greater than or equal to 2"). Class A45 Concrete will be in accordance with Section 460 of the Standard Specifications.

BRIDGE ELEVATION SURVEY

1. The Contractor is responsible for taking all measurements necessary for proper fit of the new Transverse Laminated Timber Deck. This includes surveying the top of girders to size the new HDPE shims and measurements of the abutments to ensure proper fit of deck panels.

2. All costs, including labor, equipment, and other incidental items required to measure the existing structure will be paid for at the Lump Sum contract unit price for Bridge Elevation Survey.

CONCRETE PROTECTIVE COATING

All exposed concrete surfaces will be thoroughly cleaned and treated with Concrete Protective Coating in accordance with the Special Provision and the notes in these plans. All costs associated with cleaning and treatment of exposed concrete surfaces will be paid for at the contract unit price per square foot for Concrete Protective Coating.

REGISTERED PROFESSIONAL ENGINEER
REG. NO.
13352
JAN O.
HANSEN
SOUTH DAKOTA
4/09/2021

ESTIMATE OF STRUCTURE QUANTITIES & NOTES
FOR
170'-0" TIMBER GIRDER BRIDGE

26'-0" ROADWAY	0 SKEW
OVER US 16A W	SEC. 31-TIS-R6E
STA. 8+99.91 TO 10+65.62	P016A(08)59
STR. NO. 52-308-411	HS-20

PENNINGTON COUNTY
S. D. DEPT. OF TRANSPORTATION
FEBRUARY 2020

DESIGNED BY	CK. DES. BY	DRAFTED BY	
ML	JH	JW	BRIDGE ENGINEER

GALVANIC ANODE

1. The Contractor will furnish and place galvanic anodes in the concrete repair areas specified in this plan set.

2. The galvanic anodes will be supplied as one of the following:

   a) Galvashield XP2
   Vector Corrosion Technologies
   Phone: (507) 259-2481
   Website: www.vector-corrosion.com

   b) Sentinel Silver
   Euclid Chemical Company
   Phone: (800) 321-7628
   Website: www.euclidchemical.com

   c) Sika FerroGard 670
   Sika Corporation US
   Phone: (800) 933-7452
   Website: http://usa.sika.com

3. The anodes will be placed in accordance with manufacturer's recommendations and as approved by the Engineer. The anodes have not been shown on the drawings. The Contractor will provide shop drawings of the galvanic anode installation including locations of the individual anodes to the Office of Bridge Design.

4. The anodes will be placed with a minimum ¾" cover and will be set in embedding mortar per the manufacturer's recommendations. The anodes will be fully encased in the concrete repair material. Where adequate cover does not exist, a concrete pocket will be chipped out behind the anode to provide sufficient cover. The Contractor may need to chip around the reinforcing bar locally at the anode installation to make the electrical connection. The reinforcing steel at the connection location will be cleaned per the manufacturer's recommendations to provide sufficient electrical connection and mechanical bond.

5. The electrical continuity of the electrical connections and reinforcing steel will be confirmed per the manufacturer's recommendations.

6. The Contractor will provide manufacturer's product literature and installation instructions to the Engineer 10 days prior to installation.

7. All costs associated with placing anodes including labor, equipment, materials and incidentals will be included in the contract unit price per each for Galvanic Anode.

INSTALLING DOWELS IN CONCRETE

1. Install dowels as shown in the details for sheets Concrete Substructure Repair Type II, Concrete Substructure Repair Type III, and Approach Slab Details.

2. Holes drilled in the existing concrete will be true and normal or as shown in the plans. Drilling holes using a core drill will not be allowed. Care will be taken not to damage the existing reinforcing steel. It is likely that some of the existing reinforcing steel shown in the original construction plans may have been placed out of position during original construction. Therefore, prior to the start of drilling any holes in the concrete, an effort will be made by Department forces to mark on the concrete surface where practical any locations of the in-place reinforcing steel. Despite this precaution, the Contractor can still expect to encounter and have to drill through reinforcing steel or shift the dowel spacing as approved by the Engineer to miss the existing reinforcing steel. If the Contractor shifts the dowel spacing, the unused drill holes will be filled with the epoxy resin as approved by the Engineer.

3. The epoxy resin mixture will be of a type for bonding steel to hardened concrete and will conform to AASHTO M235 Type IV (Equivalent to ASTM C881, Type IV). Grade 1, 2 or 3 may be used for vertical dowels.

4. The diameter of the drilled holes will not be less than 1/8 inch greater, nor more than 3/8 inch greater than the diameter of the dowels or as per the Manufacturer's recommendations. The drilled holes will be blown out with compressed air using a device that will reach the back of the hole to ensure that all debris or loose material has been removed prior to epoxy injection. Use moisture and oil traps in the air compressor system to prevent contamination of the concrete surface.

5. Mix epoxy resin as recommended by the Manufacturer and apply by an injection method as approved by the Engineer. Beginning at the back of the drilled holes, fill the holes 1/3 to 1/2 full of epoxy, or as recommended by the Manufacturer, prior to insertion of the steel bar. Rotate the steel bar during installation to eliminate voids and ensure complete bonding of the bar. Insertion of the bars by the dipping or painting method will not be allowed.

6. No loads will be applied to the epoxy grouted dowel bars until the epoxy resin has had sufficient time to cure as specified by the epoxy resin manufacturer.

7. Dowel bars will be deformed bars conforming to ASTM A615 Grade 60.

8. All costs associated with installing dowels, including epoxy resin, dowels, equipment, and labor as shown in the Concrete Substructure Repair details will be included in the contract unit price per square foot for Concrete Substructure Repair Type II and Concrete Substructure Repair Type III.

INSTALLING DOWELS IN CONCRETE (CONTINUED)

9. All costs associated with installing dowels, including epoxy resin, dowels, equipment, and labor as shown in the Approach Slab Details will be included in the contract unit price per each for Install Dowel in Concrete.

CONCRETE BREAKOUT - ABUTMENTS

1. The existing abutment backwalls will be broken out to the limits shown on the plans. Breakout limits will be defined with a 3/4" deep sawcut (unless specified otherwise in these plans), where practical, as approved by the Engineer. Reinforcing steel that is exposed and is scheduled for use in the new construction will be cleaned and straightened to the satisfaction of the Engineer. Care will be taken not to damage the existing reinforcing steel that is to be reused in the new construction during concrete breakout. Any reinforcing steel that is damaged during concrete breakout will be replaced or repaired, as approved by the Engineer, by the Contractor at no cost to the Department.

2. All broken out concrete, discarded reinforcing bars will be disposed of by the Contractor in accordance with the Environmental Commitment notes.

3. The contract unit price per cubic yard for Breakout Structural Concrete will include breaking out concrete, cleaning, straightening existing reinforcing steel, and disposal of all broken out material.

REMOVAL OF CONCRETE BRIDGE APPROACH SLAB

1. The existing concrete approach and sleeper slabs adjacent to the structure will be completely removed by the Contractor.

2. The crushed concrete and reinforcing steel from the removal will be disposed of by the Contractor at an approved site. An appropriate site will be as described in the Environmental Commitment notes elsewhere in this set of plans.

3. All labor, tools, equipment and any incidentals necessary for removal and disposal of the existing approach and sleeper slabs will be paid for at the contract unit price per square yard for Remove Concrete Bridge Approach Slab.

REGISTERED PROFESSIONAL ENGINEER
REG. NO.
13352
JAN O.
HANSEN
SOUTH DAKOTA
4/09/2021

NOTES (CONTINUED)
FOR
170'-0" TIMBER GIRDER BRIDGE

26'-0" ROADWAY — 0 SKEW
OVER US 16A W — SEC. 31-TIS-R6E
STA. 8+99.91 TO 10+65.62 — P016A(08)59
STR. NO. 52-308-411 — HS-20

PENNINGTON COUNTY
S. D. DEPT. OF TRANSPORTATION
FEBRUARY 2020

DESIGNED BY	CK. DES. BY	DRAFTED BY	
ML	JH	JW	BRIDGE ENGINEER

REMOVAL OF CONCRETE BRIDGE SLAB

1. The existing Concrete Bridge Slab is connected to the Glulam Timber Girders with 5/8" diameter Spiral Dowels and Shear Connectors. The exact spacing of the Spiral Dowels and Shear Connectors is unknown. During removal of the existing Concrete Bridge Slab, carefully cut the Spiral Dowels and Shear Connectors flush with the top of Glulam Timber Girder. Do not remove the Dowels and Connectors from the Girders. See Original Construction Plans for additional information. Describe the Concrete Bridge Slab removal procedure in the CDS plan.

2. Take extra precautions not to damage the existing Glulam Timber Girders or other structural members to remain during the removal process. If structural members to remain are damaged in any way, immediately notify the Engineer before proceeding.

3. All costs for cutting the Spiral Dowels and Shear Connectors, removal and disposal of existing Bridge Rail and Curb, Bridge Deck, Overlay, and Joint materials will be paid for at the contract unit price per square yard for Remove Concrete Bridge Slab.

APPROACH SLABS

1. Excavation for placement of new approach slabs and sleeper slabs will be done with minimal disturbance to the underlying material.

2. Low spots in the area where the approach slabs will be located are to be filled and compacted with granular bridge end backfill material back to the original grade line. Granular Bridge End Backfill material will be in accordance with Section 882 of the Standard Specifications. All costs for this work will be incidental to the various contract bid items.

3. The top of approach slab elevations will be established during construction and will be subject to the approval of the Engineer. Care will be taken to provide a smooth transition from the bridge deck elevations to the new pavement elevations established in the field to prevent any dips or bumps in the areas of the bridge ends or ends of the new approach slabs. The maximum rate of grade transition through the approach slab will be 1/8 inch per 10 feet.

4. The use of a vibratory screed will be required during placement of Class A45 Concrete for the approach slabs. Concrete placement in front of the screed will be kept parallel to the screed.

5. The new approach slabs and sleeper slabs will have a surface finish in accordance with Section 460.3 L.4 of the Standard Specifications.

6. The Concrete Approach Slabs Adjacent to Bridge will be cured in accordance with Section 460.3 M of the Standard Specifications.

7. Concrete Approach Sleeper Slab for Bridge will be paid for at the contract unit price per square yard. This payment will be full compensation for furnishing, hauling, and placing all materials including concrete and reinforcing steel; for disposal of all surplus materials; for labor, tools, equipment; and for any incidentals necessary to complete this item of work.

APPROACH SLABS (CONTINUED)

8. Concrete Approach Slab for Bridge will be paid for at the contract unit price per square yard. This payment will be full compensation for all excavation; furnishing, hauling and placing all materials including concrete and reinforcing steel; for disposal of all excavated and surplus materials; for labor, tools, equipment; and for any incidentals necessary to complete this item of work.

MECHANICAL FASTENERS

All fasteners will be ASTM A307 Grade A, hot dipped galvanized in accordance with ASTM F2329 Standard Specification for Zinc Coating, Hot-Dip, Requirements for Application to Carbon and Alloy Steel Bolts, Screws, Washers, Nuts, and Special Threaded Fasteners. Permanently incorporated steel and iron products will conform to the Buy America provisions of Section 6.9 of the Standard Specifications.

1. **LAG SCREWS**

   a) All lag screws will conform to ANSI/ASME B18.2.1, Square and Hex Bolts and Screws-Inch Series.

   b) All lag screws used on this project are to be inner-thread. Lag screws are to be installed in two-stage, pre-drilled pilot holes consisting of a lead hole to accommodate the threaded portion of the screw and a counterbore to accommodate the shank. The lead hole will have a depth equal to the screw penetration to the thread shoulder (not including the tip) and a diameter equal to 75% of the root diameter. The counterbore will have a depth equal to the penetration of the shank and a diameter equal to the shank size.

   c) All lag screws will be installed by turning with a wrench, not driving with a hammer. Lubricant such as grease (petroleum based, not water based) will be used to facilitate insertion and prevent damage to the lag screw. Unless otherwise specified, lag screws are to be tightened only to snug-tight. There should be no slop in the connection, but the wood should not be deformed or crushed by the screw. For Fiber-Reinforced-Plastic Tensile Reinforcement installation, higher pressure is required, and lag screws must be torqued according to the Fiber-Reinforced-Plastic Tensile Reinforcement installation works schedule.

   d) The head of each lag screw will bear on a steel side plate or a flat washer.

2. **BOLTS**

   a) Bolts will conform to ANSI/ASME B18.2.1, Square and Hex Bolts and Screws-Inch Series. Where timber bolts are specified, utilize standard dome-head timber bolts.

   b) Bolts for timber connections will be tightened only to a snug-tight fit. Do not overtighten. Where lock washers are used, the washer should be flattened and the nut turned an additional 1/4 to 1/2 turn. Steel side plates, such as on jack-posts and hinge-connectors should not be bent into the wood.

MECHANICAL FASTENERS (CONTINUED)

   c) The maximum torque for bolted connections is 30 ft-lb; there is no minimum torque requirement.

3. **WASHERS**

   Washers will be standard cut washers with dimensions complying with ANSI/ASME B18.21.1 and hot-dipped galvanized in compliance with ASTM F2329. Where timber washers are specified, utilize standard malleable cast iron timber washers, cast in accordance with ASTM A47.

4. **FABRICATION OF NEW METAL BRACKETS**

   a) All new fabricated steel assemblies will be ASTM A36 steel. Shear cut plate wherever possible. All plate will be ±0.016 inch tolerance to all given dimensions.

   b) Fabricated parts will have hot-dipped galvanized coatings in accordance with ASTM A123 Standard Specification for Zinc (Hot-Dip Galvanized) Coatings on Iron and Steel Products.

COMPRESSION SEAL

1. The Contractor will furnish and place elastomeric compression seals at the locations indicated in the drawings.

2. The elastomeric compression seal will be supplied as the following:

   a) J-100
   D.S. Brown
   Phone: (419) 257-2200
   Website: www.dsbrown.com

   b) WA-162
   Watson Bowman Acme Corp.
   Phone: 716-691-7566
   Website: www.wbacorp.com

3. The Contractor may submit an alternative elastomeric compression seal product subject to approval by the Engineer.

REGISTERED PROFESSIONAL ENGINEER
REG. NO.
13352
JAN O.
HANSEN
SOUTH DAKOTA
4/09/2021

NOTES (CONTINUED)
FOR
170'-0" TIMBER GIRDER BRIDGE

26'-0" ROADWAY — 0 SKEW
OVER US 16A W — SEC. 31-TIS-R6E
STA. 8+99.91 TO 10+65.62 — P016A(08)59
STR. NO. 52-308-411 — HS-20

PENNINGTON COUNTY
S. D. DEPT. OF TRANSPORTATION
FEBRUARY 2020

DESIGNED BY	CK. DES. BY	DRAFTED BY	
ML	JH	JW	BRIDGE ENGINEER

TIMBER SPECIFICATIONS

Unless noted otherwise, glulam timber for Transverse Laminated Timber Deck and Timber Bridge Rail and backer boards for tensile reinforcement are to be Coastal Region Douglas Fir (CRDF), in grades and layup combinations specified on these drawings.

Deck and bridge rail elements are to be ANSI/AITC Combination 2 glulam. Backer boards for tensile reinforcing is to be ANSI/AITC Grade L1 laminating stock.

1. **PRESERVATIVE TREATMENT AND INCISING**

   a) All timber elements are to be incised and pressure preservative treated in accordance with AWPA Standards U1 and T1. All machining (e.g. cutting and drilling) is to be completed prior to preservative treatment.

   b) Timber is to be treated with pentachlorophenol in heavy oil solvent (hydrocarbon solvent Type-A) in accordance with AWPA U1 for use Category 4C. Retention will be minimum 0.60 pcf and to refusal.

   c) Incisions are to be minimum 1/16" wide x 5/8" long x 5/8" deep. Incisions are to be spaced at max. 6" o.c. parallel to grain, in rows at max 1" o.c. perpendicular to grain; adjacent rows are to be offset 3" parallel to grain.

   d) If field-cutting is anticipated, timber should be pre-drilled with treatment holes to increase depth of preservative penetration. Holes are to be 3/16" diameter, and spaced as specified above for incising. Treatment holes are to extend at least 5/8" beyond the anticipated cut depth.

2. **FIELD TREATMENT**

   a) All machining is to be completed prior to preservative treatment. Field drilling or cutting not shown on these plans is not allowed.

   b) All field-drilled holes and cut surfaces are to be treated with copper naphthenate field preservative in hydrocarbon solvent. End grain is to be coated with Anchorseal™ or approved equivalent wood sealer consisting of an aqueous emulsion of paraffin wax, with optional propylene glycol anti-freeze. Field treat and seal to saturation/refusal in accordance with the manufacturer's recommendations.

   c) Treat surfaces as soon as possible after drilling or cutting. Ensure surfaces are clean and free of sawdust or debris prior to treating.

   d) Store preservatives and sealers in conformance with the manufacturer's recommendations. The Contractor will take care to prevent spills of preservatives and sealers. Clean spills in accordance with the manufacturer's recommendations and to the satisfaction of the Engineer.

3. **DIFFUSER RODS**

   a) Diffuser rods are to consist of water-diffusible borate-salts, designed to diffuse through the timber when moisture content exceeds approximately 20%.

TIMBER SPECIFICATIONS (CONTINUED)

   b) Target concentration in the treated areas is approximately 4 in^3 of salt-rod per cubic foot of timber. Diffuser spacing parallel to grain must not exceed 12 inch o.c. and spacing perpendicular to grain must not exceed 6 inch o.c. Treatment will not spread through glue-lines, so it is important that diffuser rods are inserted in all laminations in glulam elements.

   c) Drill holes for diffuser rods approximately 1/16" larger than rod diameter. Plug holes with wood dowels treated with copper naphthenate.

ASPHALT CONCRETE COMPOSITE

Asphalt Concrete Composite used for the deck wear surface will be in accordance with Section 324 of the Standard Specifications, except as noted below.

1. The mineral aggregate for Asphalt Concrete Composite will be Class G, Type 2.

2. The Asphalt Binder used will be PG 64-34

3. Asphalt for tack SS-1h or CSS-1h will be applied prior to each lift of Asphalt Concrete Composite. Asphalt for tack will be applied at a rate of 0.09 gallons per square yard on the new timber deck and at a rate of 0.06 gallons per square yard on new asphalt concrete pavement. The Asphalt for tack will be applied for the full width of the bottom layer of Asphalt Concrete Composite. The Contractor will protect the new timber bridge rail from tack overspray. The Contractor must provide a containment system to prevent tack from spilling over the edge of the deck. Keep the deck clean and dry. The surface moisture content of the timber deck must be below 20% at the time of tack application.

4. Seal deck joints with cold applied bituminous joint tape as indicated in the Deck Joint Details prior to the application of the tack. Provide ends laps of at least 4 inches. Install the bituminous joint tape according the manufacturer's recommendations. The bituminous joint tape will be supplied as the following:

   a) Protecto Wrap M400
      Sunshine Supply Company
      Phone: (866) 379-7100
      Website: www.Sunshinesupply.com

   b) MEL-ROL
      W.R. Meadows
      Phone: (847) 214-2100
      Website: www.wrmeadows.com

4. The Contractor may submit an alternative bituminous joint tape product subject to approval by the Engineer.

5. Install the Asphalt Concrete Composite in two equal lifts for a total compacted depth of 4" at crown, tapering to 3" at the curb line as shown in the typical section. The compacted asphalt must be flush with the top of the glulam screed board to ensure proper drainage. Proper compaction will be achieved with a 12-ton maximum roller.

ASPHALT CONCRETE COMPOSITE (CONTINUED)

6. The minimum density requirement will be as prescribed in section 321.3 C of the Standard Specifications.

7. Sawcut and seal the Asphalt Concrete as shown in the details on sheet Deck Joint Details. Sawing will be performed after the asphalt concrete has cooled and no more than 36 hours after placement. Sawing will be made prior to any evidence of reflective cracking. Saw cuts will be made dry and will be accurately located by pins and string line subject to approval of the Engineer.

8. Prior to sealing, clean sawcuts with high-pressured air. The air compressor will produce a minimum of 125-CFM output and will be equipped with a 5/8" nozzle. The sealant will conform to the requirements for ASTM D6690 Type IV with the following modifications:

Penetration at 77° F	90-150
Bond at -20° F, Std. Specimen, 3 cycles, 200% extension	Passes
Resilience	30-60%
Material Weight (pounds per gallon)	9.00 to 10.00

9. Joint sealant material will be from the South Dakota Department of Transportation's approved products list for Sealants Approved for Asphalt Concrete over Long Jointed Concrete Pavement. The Approved Product List for sealant may be viewed at the following Internet Site:

   https://apps.sd.gov/HC60ApprovedProducts/main.aspx

   The sealant will be placed in accordance with the manufacturer's recommendations. The sealant will fit the joint such that after cooling, the level of the sealant will not be greater than 1/8" below the pavement surface. Care will be taken so that the joints will not be overfilled. Sealant will not be spread over the pavement surface. Blotting material such as toilet paper will be placed over the sealant material where traffic is allowed to cross a sealed area before track free status has been achieved.

10. All costs associated with providing and installing Asphalt for tack, bituminous joint tape, and cutting and sealing control joints will be included in the contract unit price for Asphalt Concrete Composite.

REGISTERED PROFESSIONAL ENGINEER
REG. NO.
13352
JAN O.
HANSEN
SOUTH DAKOTA
4/09/2021

NOTES (CONTINUED)
FOR
170'-0" TIMBER GIRDER BRIDGE

26'-0" ROADWAY — 0 SKEW
OVER US 16A W — SEC. 31-TIS-R6E
STA. 8+99.91 TO 10+65.62 — P016A(08)59
STR. NO. 52-308-411 — HS-20

PENNINGTON COUNTY
S. D. DEPT. OF TRANSPORTATION
FEBRUARY 2020

DESIGNED BY	CK. DES. BY	DRAFTED BY	
ML	JH	JW	BRIDGE ENGINEER

HIGH STRENGTH FIBER TENSION REINFORCEMENT RETROFIT

High strength fiber tension reinforcement will consist of Fiber Reinforced Plastic Panels pre-bonded to lumber backer boards. Materials and fabrication will comply with ICC ES Evaluation Report #6046, ANSI-117, and the following specifications. Production and installation will be qualified and monitored by a third-party quality assurance agency with ICC Evaluation Service Certification.

1. **FIBER REINFORCED PLASTIC (FRP)**

   Fiber-reinforced-plastic for tensile reinforcement will be manufactured in accordance with ICC ES Evaluation Report #6046. Reinforcing material will be Aramid Reinforced Panel (ARP) or Glass-Aramid Reinforced Panel (GARP) consisting a minimum of 70% fiber by volume. Design panel thickness and minimum material properties for each type of reinforcement is shown below:

Reinforcement Type	ST_{rt} (ksi)	MOE_{rt} (ksi)	MOE_{rc} (ksi)	Panel Thickness
ARP	143	11,600	--	0.07”
GARP	35	8,000	8,000	0.05”

2. **LUMBER**

   a) Lumber for backer boards will be Coast Region Douglas Fir (CRDF) L1 grade laminating stock (ANSI/AITC Combination 5). Backer will be in continuous lengths; splices will be structural finger joints complying with tension-zone strength requirements. Ultimate tensile capacity will be minimum 5200 psi (5th percentile lower exclusion limit, 75% confidence interval). Manufacturer will comply with ANSI-190 and ANSI-117.

   b) Lumber will be incised and pressure treated according to preservative treatment specifications in these drawings. Machining and gluing will be completed prior to preservative treatment.

3. **FRP ASSEMBLY**

   a) FRP will be bonded to lumber backer with structural epoxy adhesive complying with the specifications in these drawings.

   b) Lumber is to be planed to remove surface defects prior, and fiber panel is to be cross-sanded prior to gluing. Epoxy is to be spread on both surfaces. Lumber and FRP are to be clamped together with a minimum pressure of 130 psi to ensure a proper glue-line.

   c) Quality control samples will be collected from the glue-line of each element. Bond line testing will be conducted by a third-party quality assurance agency, including the following tests:
   - ANSI T110 - Cyclic Delamination
   - ANSI T107 - Wet and Dry Shear

   d) Results will be provided to the EOR and SDDOT for review. The Engineer will provide a response to the Contractor within 14 business days after receiving the results and analysis submittal.

HIGH STRENGTH FIBER TENSION REINFORCEMENT RETROFIT (CONTINUED)

   e) Retrofits will be cut to length, countersinks and pilot holes for lag screws will be drilled after the glue has cured and prior to preservative treatment.

4. **INSTALLATION**

   a) Tensile retrofits are to be installed on the bottom face of the girders, where indicated on the drawings.

   b) In Span 2, the bottom of girders exhibit impact damage from an over-height vehicle. Impact damage will be repaired using a gap filling, structural epoxy for use in repairing structural timber members. Complete impact damage repairs prior to installation of reinforcement. Install the epoxy according the manufacturer's recommendations. See sheet High Strength Fiber Tension Reinforcement Retrofit Details for Epoxy Injection at Impact Damage Locations repairs. All costs for repairing impact damage will be paid for at the contract unit price per linear foot for High Strength Fiber Tension Reinforcement.

   c) Tensile retrofits are to be bonded to the girders using structural epoxy adhesive according to the specifications in these drawings. Required clamping pressure is to be achieved using lag screws. Initial torqueing of lag screws will be 125 ft-lb. Screws will be periodically re-torqued until all screws reach min. 225 ft-lb. See sheet High Strength Fiber Tension Reinforcement Retrofit Details for additional installation procedures.

EPOXY ADHESIVE SPECIFICATIONS

1. Glued timber members and fiber reinforcements are to be bonded with a two-part, structural epoxy adhesive designed for use on timber in wet-service conditions. Epoxy adhesives are to be mixed and applied in accordance with manufacture's specifications.

2. Surfaces must be clean and free of surface residues (e.g. solvents from preservative treating) prior to gluing. Plane timber surfaces flat to accommodate epoxy adhesive. Avoid scoring or gouging; undulation is acceptable on a maximum 12 inch cycle. Sanding, grinding, or other abrasive methods of removing the existing coatings or wood are not permitted.

3. The epoxy will be uniformly applied to both mating surfaces. Elements are to be clamped or screwed together during gluing, with adequate pressure to ensure a proper glue-line thickness. Target thickness of epoxy glue-lines is 0.001 inch to 0.004 inch, with a maximum thickness of 0.010 inch. Some glue squeeze-out is expected at all edges; periodically re-tighten clamps or screws as needed to maintain pressure until epoxy is cured.

4. The contractor will take measures to ensure that the epoxy does not begin to gel before the surfaces have been joined and proper clamping pressure is achieved.

STANDARD REPAIR CALLOUT DESIGNATION

Repairs to concrete and timber members will be designated using the following callout:

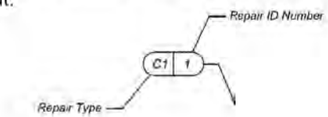

ABBREVIATIONS

ASD – Allowable Stress Design
ASME – American Society for Mechanical Engineers
ANSI – American National Standards Institute
B.F. – Back Face
Cl. – Clear
C.J. – Construction Joint
El. – Elevation
EOR – Engineer of Record
Fbo – Design Bending Stress for Lumber
f'c – Compressive Strength of Concrete
F.F. – Front Face
Ft. – Foot
FRP – Fiber Reinforced Plastic
Fvo – Design Shear Stress Parallel to Grain for Lumber
Fy – Yield Strength of Steel
ICC ES – International Code Council Evaluation Service
In – Inch
kip – 1000 Pounds
ksi – 1000 Pounds Per Square Inch
LRFD – Load Factor and Resistance Design
MOE_{rc} – Modulus of Elasticity of FRP in Compression
MOE_{rt} – Modulus of Elasticity of FRP in Tension
O.C. – On Center
S.F. – Square Feet
ST_{rt} – Axial Tensile Stress in FRP Reinforcement Panel in Tension Zone
Typ – Typical

REGISTERED PROFESSIONAL ENGINEER
REG. NO.
13352
JAN O.
HANSEN
SOUTH DAKOTA
4/09/2021

NOTES (CONTINUED)
FOR
170'-0" TIMBER GIRDER BRIDGE

26'-0" ROADWAY — 0 SKEW
OVER US 16A W — SEC. 31-TIS-R6E
STA. 8+99.91 TO 10+65.62 — P016A(08)59
STR. NO. 52-308-411 — HS-20

PENNINGTON COUNTY
S. D. DEPT. OF TRANSPORTATION
FEBRUARY 2020

DESIGNED BY	CK. DES. BY	DRAFTED BY	
ML	JH	JW	BRIDGE ENGINEER

NOTES

1. Cut Spiral Dowels and Shear Connectors flush with top of Timber Girders. Describe in the CDS submittal how the concrete deck will be carefully removed around the dowels to not damage the tops of the timber girders.
2. Exact spacing, number, and locations of Spiral Dowels and Shear Connectors is unknown. See Original Construction Plans for additional details.
3. All dimensions are approximate and based on existing plans.

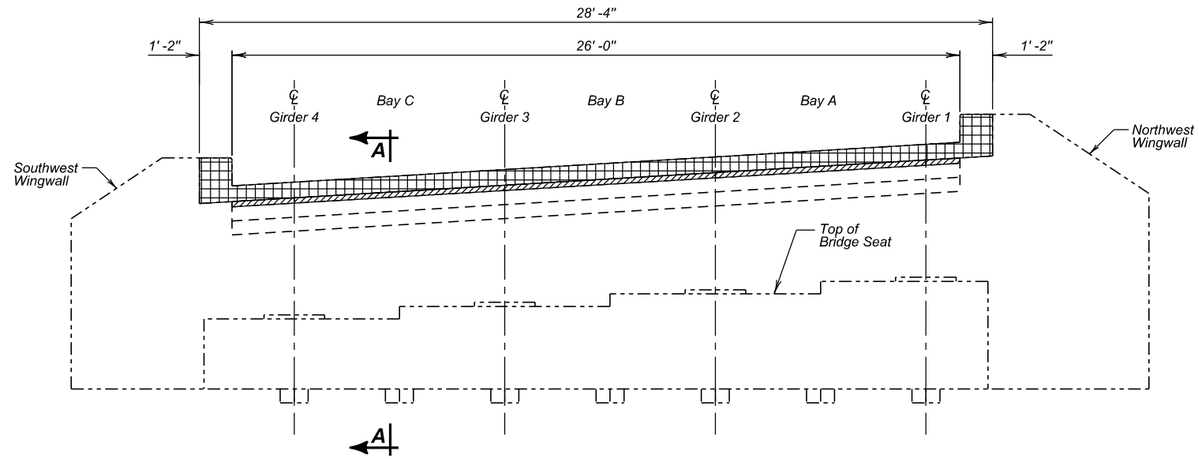

ELEVATION - ABUTMENT NO. 1

LEGEND:

Shaded area indicates limits of Remove Concrete Bridge Slab

Shaded area indicates limits of Breakout Structural Concrete

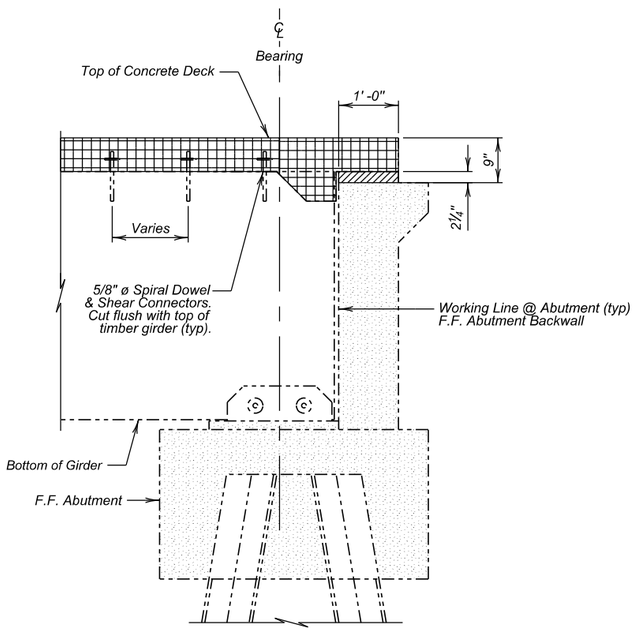

SECTION A-A

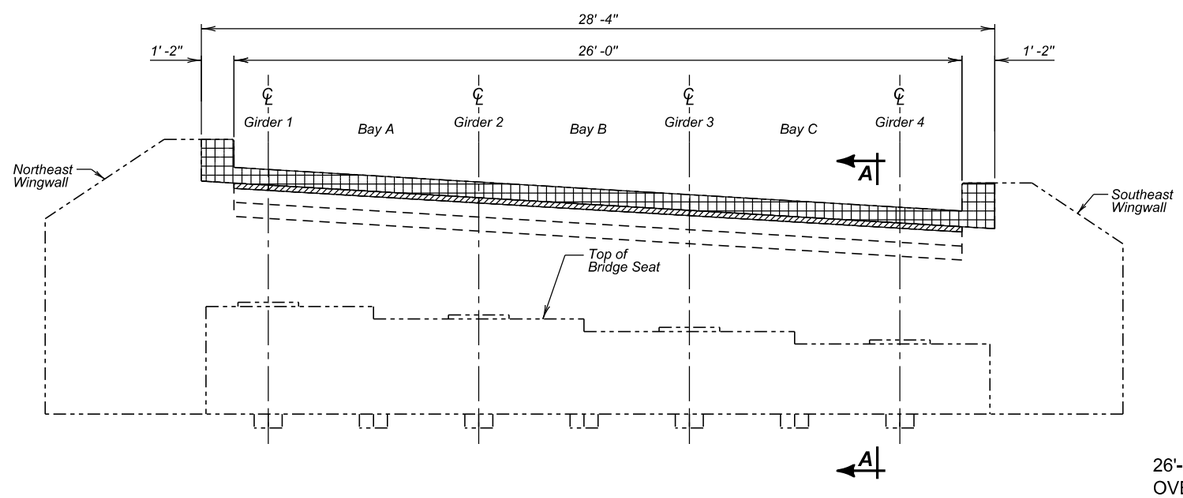

ELEVATION - ABUTMENT NO. 4

REGISTERED PROFESSIONAL ENGINEER
REG. NO. 13352
JAN O. HANSEN
SOUTH DAKOTA
4/09/2021

ABUTMENT BREAKOUT DETAILS
FOR
170'-0" TIMBER GIRDER BRIDGE

26'-0" ROADWAY — 0 SKEW
OVER US 16A W — SEC. 31-TIS-R6E
STA. 8+99.91 TO 10+65.62 — P016A(08)59
STR. NO. 52-308-411 — HS-20

PENNINGTON COUNTY
S. D. DEPT. OF TRANSPORTATION
FEBRUARY 2020

DESIGNED BY	CK. DES. BY	DRAFTED BY	
ML	JH	JW	BRIDGE ENGINEER

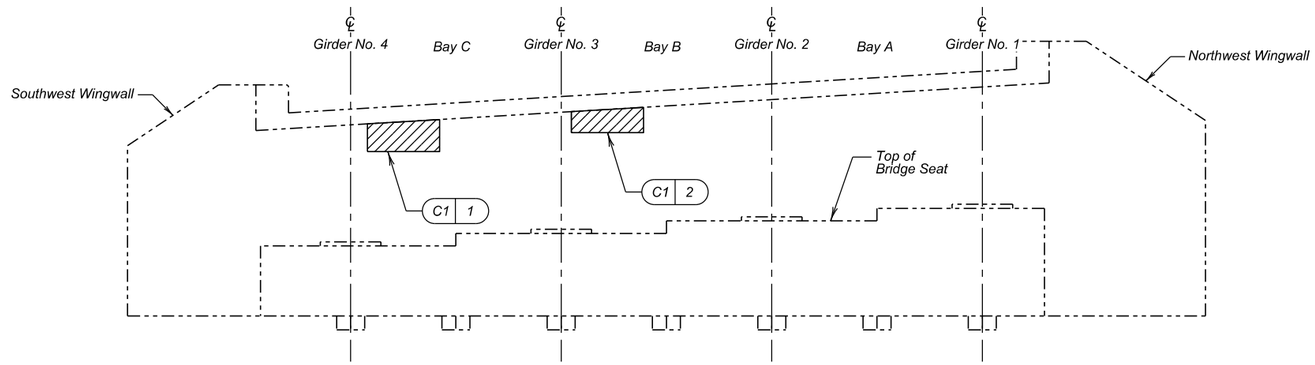

ELEVATION - ABUTMENT NO. 1

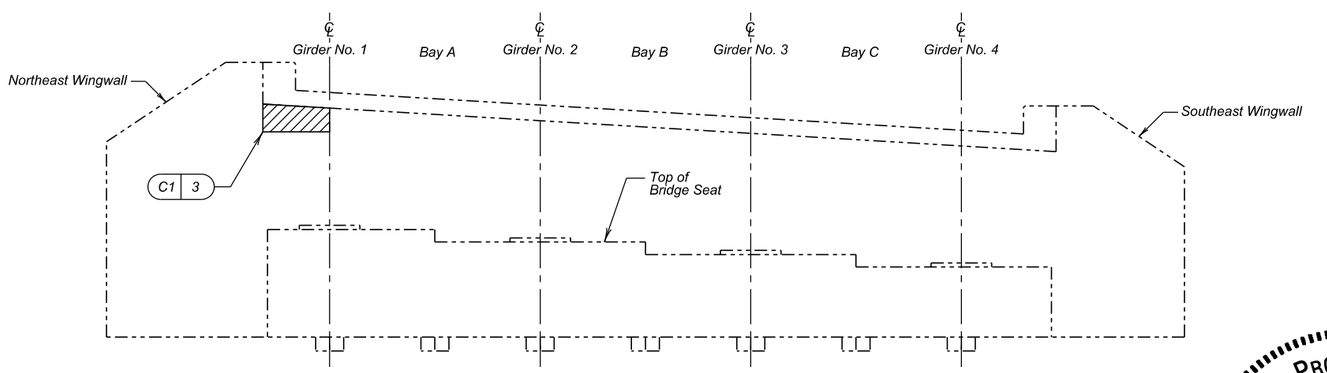

ELEVATION - ABUTMENT NO. 4

LEGEND:

Shaded area indicates Concrete Repair Type C1 - Concrete Substructure Repair

NOTE

See CONCRETE SUBSTRUCTURE REPAIR TYPE II and CONCRETE SUBSTRUCTURE REPAIR TYPE III details.

REPAIR TYPE C1 - CONCRETE SUBSTRUCTURE REPAIR				
ID	Estimated Defects	Unit	Type	Location
1	3.0	SF	III	Abutment 1
2	3.0	SF	III	Abutment 1
3	3.0	SF	II	Abutment 4

REGISTERED PROFESSIONAL ENGINEER
REG. NO.
13352
JAN O.
HANSEN
SOUTH DAKOTA
4/09/2021

CONCRETE REPAIRS AT ABUTMENTS NO. 1 AND NO. 4
FOR
170'-0" TIMBER GIRDER BRIDGE

26'-0" ROADWAY — 0 SKEW
OVER US 16A W — SEC. 31-TIS-R6E
STA. 8+99.91 TO 10+65.62 — P016A(08)59
STR. NO. 52-308-411 — HS-20

PENNINGTON COUNTY
S. D. DEPT. OF TRANSPORTATION
FEBRUARY 2020

DESIGNED BY	CK. DES. BY	DRAFTED BY	
ML	JH	JW	BRIDGE ENGINEER

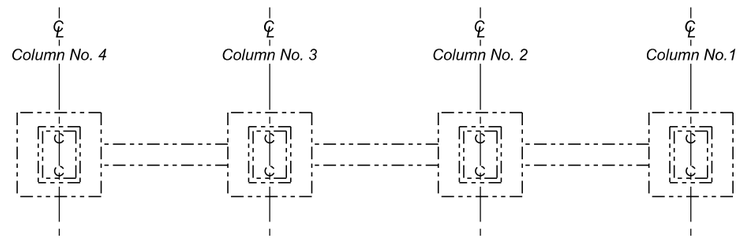

PLAN - BENT NO. 2

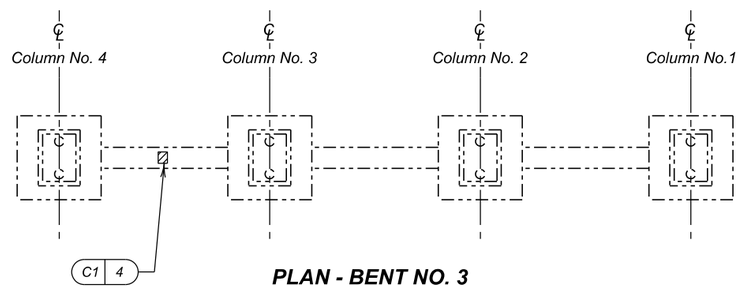

PLAN - BENT NO. 3

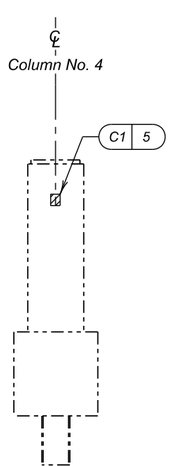

VIEW A-A

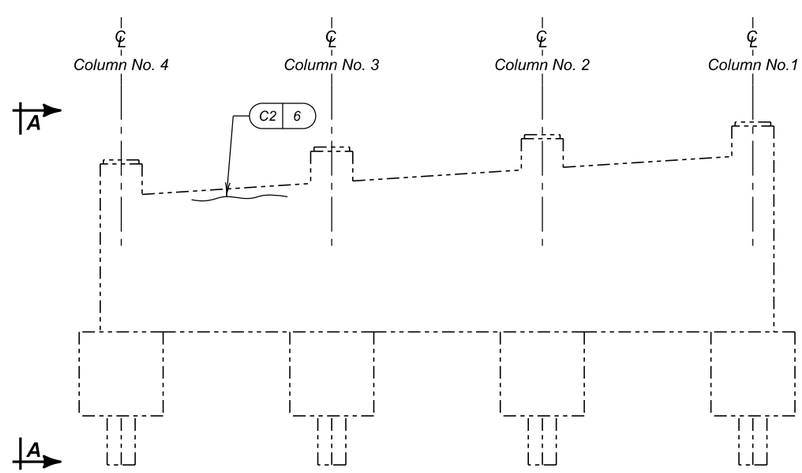

ELEVATION - BENT NO. 3

LEGEND:

Shaded area indicates Concrete Repair Type C1 - Concrete Substructure Repair

Concrete Repair Type C2 - Concrete Crack Injection/Sealing

NOTE

See CONCRETE SUBSTRUCTURE REPAIR and CONCRETE CRACK INJECTION/SEALING details.

REPAIR TYPE C1 - CONCRETE SUBSTRUCTURE REPAIR				
ID	Estimated Defects	Unit	Type	Location
4	0.5	SF	I	Bent 3
5	0.5	SF	I	Bent 3

REPAIR TYPE C2 - CONCRETE CRACK INJECTION/SEALING			
ID	Estimated Defects	Unit	Location
6	42	In	Bent 3

REGISTERED PROFESSIONAL ENGINEER
REG. NO.
13352
JAN O.
HANSEN
SOUTH DAKOTA
4/09/2021

CONCRETE REPAIRS AT BENTS NO. 2 AND NO. 3
FOR
170'-0" TIMBER GIRDER BRIDGE

26'-0" ROADWAY — 0 SKEW
OVER US 16A W — SEC. 31-TIS-R6E
STA. 8+99.91 TO 10+65.62 — P016A(08)59
STR. NO. 52-308-411 — HS-20

PENNINGTON COUNTY
S. D. DEPT. OF TRANSPORTATION
FEBRUARY 2020

DESIGNED BY	CK. DES. BY	DRAFTED BY	
ML	JH	JW	BRIDGE ENGINEER

FOR BIDDING PURPOSES ONLY

STATE OF	PROJECT	SHEET NO.	TOTAL SHEETS
S.D.	P016A(08)59	E12	E109

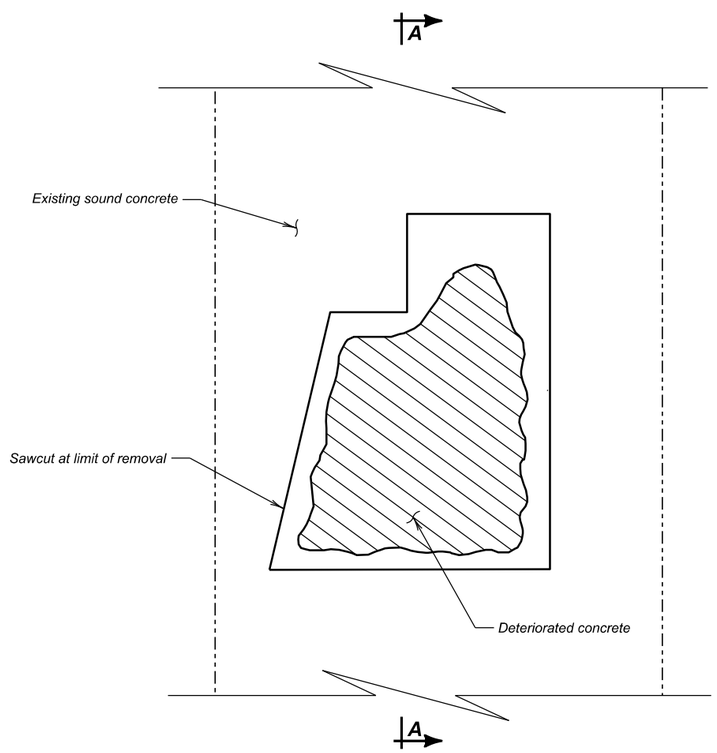

ELEVATION VIEW

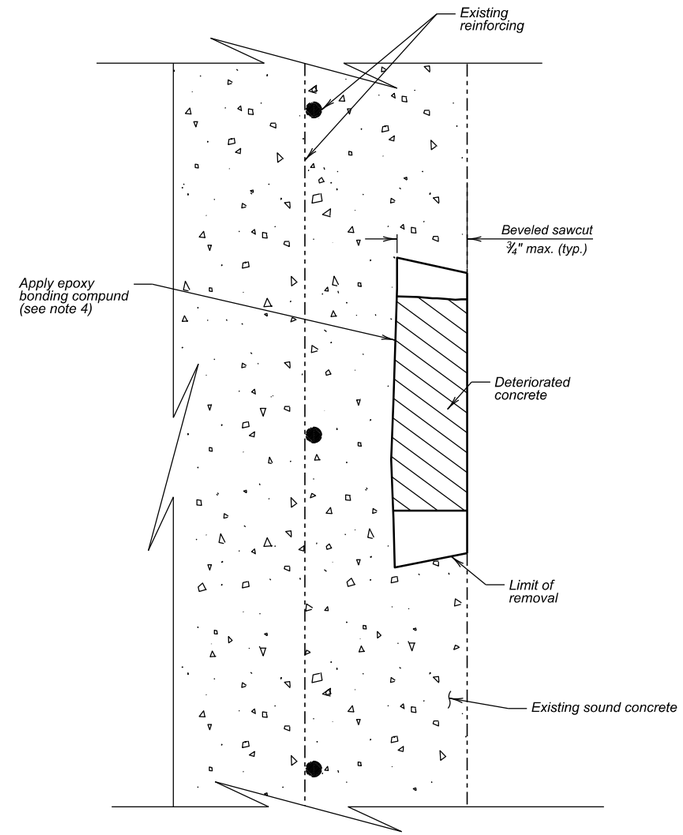

SECTION A-A

NOTES

1. *The Engineer will determine the extent of the repair areas.*
2. *Square off deteriorated concrete to sound concrete with a sawcut of ¾" maximum.*
3. *Remove all loose and delaminated concrete to provide a sound bond between existing concrete and patching material.*
4. *Maintain all chamfers. Sandblast and then air-blast all repair areas with oil-free compressed air to protect against any contaminant detrimental to the bond of the new material. Apply bonding compound to the repair area in accordance with manufacturer's recommendations.*
5. *Clean existing reinforcing, if exposed, by sandblasting meeting the requirements of SSPC-SP10, and apply epoxy paint.*
6. *Place Rapid Set Cementitious Patching Material while the bonding compound is still tacky in accordance with the manufacturer's recommendations.*
7. *The cost of concrete removal, epoxy bonding agent, and patching material will be paid for at the contract unit price per square foot for Concrete Substructure Repair Type I.*
8. *Repair any concrete damaged during the operations to the satisfaction of the Engineer at no additional cost to the Department.*

CONCRETE SUBSTRUCTURE REPAIR TYPE I

SUBSTRUCTURE REPAIR USING RAPID SET CEMENTITIOUS PATCHING MATERIAL
(DEPTH OF SPALL IS LESS THAN OR EQUAL TO ¾")

REGISTERED PROFESSIONAL ENGINEER
REG. NO.
13352
JAN O.
HANSEN
SOUTH DAKOTA
4/09/2021

CONCRETE SUBSTRUCTURE REPAIR TYPE I
FOR
170'-0" TIMBER GIRDER BRIDGE

26'-0" ROADWAY — 0 SKEW
OVER US 16A W — SEC. 31-TIS-R6E
STA. 8+99.91 TO 10+65.62 — P016A(08)59
STR. NO. 52-308-411 — HS-20

PENNINGTON COUNTY
S. D. DEPT. OF TRANSPORTATION
FEBRUARY 2020

DESIGNED BY	CK. DES. BY	DRAFTED BY	
ML	JH	JW	BRIDGE ENGINEER

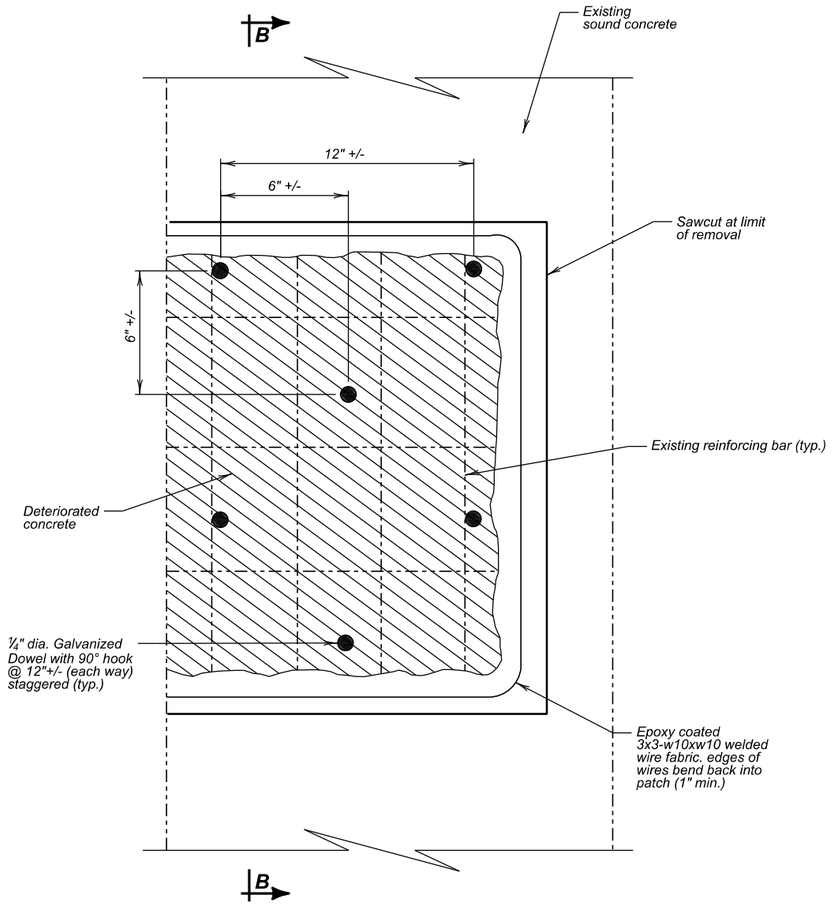

ELEVATION VIEW

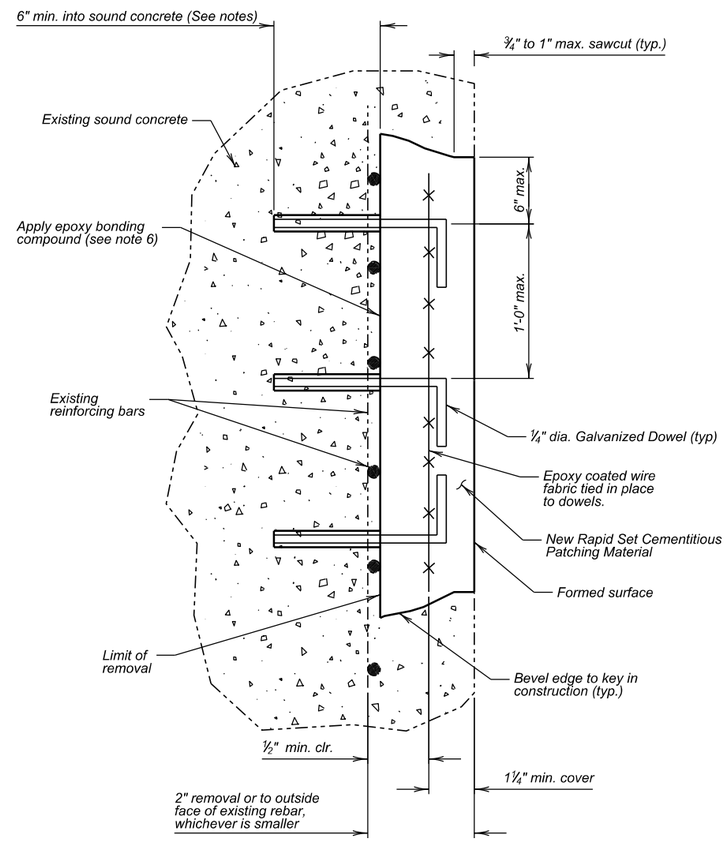

SECTION B-B

NOTES

1. *The Engineer will determine the extent of the repair areas.*
2. *Square off deteriorated concrete to sound concrete with a sawcut of ¾" minimum to 1" maximum but not to the depth of the reinforcing steel. Back bevel edge beyond sawcut.*
3. *Use hand tools to remove all loose and delaminated concrete to provide a sound bond between existing concrete and new concrete. Pneumatic hammers with impact ratings of 30 ft/lb or less may be used if required.*
4. *Clean existing concrete meeting the requirements of SSPC-SP13, prior to placing the epoxy bonding compound. Clean existing reinforcing, if exposed, by sandblasting meeting the requirements of SSPC-SP10, and apply epoxy paint.*
5. *Apply an epoxy bonding compound between the existing and the new Rapid Set Cementitious Patching Material according to the manufacturer's recommendations.*
6. *Alternate wire fabric may be substituted for 3x3-w10xw10, provided wire spacing does not exceed 4" and an equivalent steel area is provided.*
7. *The cost of concrete removal, epoxy bonding compound, dowels, epoxy coated wire fabric, holes for anchors, and Rapid Set Cementitious Patching Material will be paid at the contract unit price per square foot for Concrete Substructure Repair Type II.*
8. *Repair any concrete damaged during the operations to the satisfaction of the Engineer at no additional cost to the Department.*

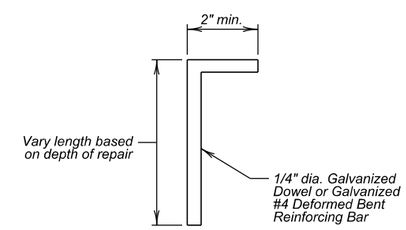

DOWEL OR BENT "L" BAR DETAIL

CONCRETE SUBSTRUCTURE REPAIR TYPE II

SUBSTRUCTURE REPAIR USING CLASS A45 CONCRETE
(DEPTH OF SPALL IS GREATER THAN ¾" AND LESS THAN OR EQUAL TO 2")

REGISTERED PROFESSIONAL ENGINEER
REG. NO. 13352
JAN O. HANSEN
SOUTH DAKOTA
4/09/2021

CONCRETE SUBSTRUCTURE REPAIR TYPE II
FOR
170'-0" TIMBER GIRDER BRIDGE

26'-0" ROADWAY — 0 SKEW
OVER US 16A W — SEC. 31-TIS-R6E
STA. 8+99.91 TO 10+65.62 — P016A(08)59
STR. NO. 52-308-411 — HS-20

PENNINGTON COUNTY
S. D. DEPT. OF TRANSPORTATION
FEBRUARY 2020

DESIGNED BY	CK. DES. BY	DRAFTED BY	
ML	JH	JW	BRIDGE ENGINEER

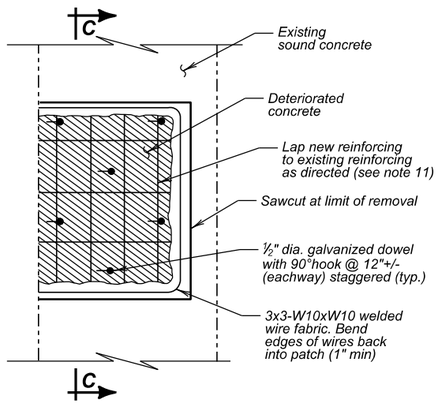

ELEVATION VIEW

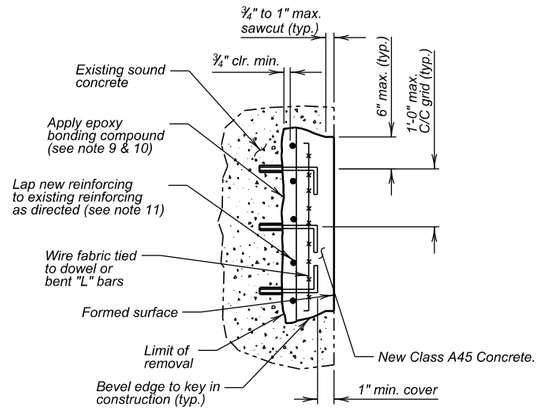

SECTION C-C
NEW REINFORCING

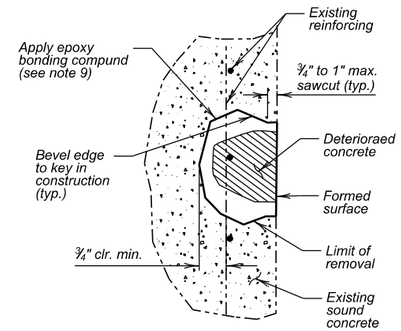

SECTION C-C
EXISTING REINFORCING

NOTES

1. *The Engineer will determine the extent of the repair areas, and need for new reinforcing bars.*
2. *Square off deteriorated concrete to sound concrete with a sawcut of ¾" minimum to 1" maximum but not to the depth of the reinforcing steel. Back bevel edge beyond sawcut.*
3. *Use hand tools to remove all loose and delaminated concrete to provide a sound bond between existing concrete and new concrete. Pneumatic hammers with impact ratings of 30 ft/lb or less may be used if required.*
4. *If deteriorated concrete extends beyond the rear face of primary reinforcing, remove the concrete to at least ¾" behind all reinforcing, or until all unsound concrete has been removed, whichever is greater.*
5. *Use dowels or bent bars only when least dimension of deteriorated concrete is greater than 2'-0" and new reinforcing cannot adequately be developed by lapping with existing reinforcing.*
6. *A galvanized #4 deformed reinforcing bent bar may replace the ½" dia. dowel with hook.*
7. *Install zinc anodes per the standard anode details. Anodes are required for all patches of 5 SF or greater where existing reinforcement is exposed.*
8. *Clean existing concrete meeting the requirements of SSPC-SP13, prior to placing the epoxy bonding compound. Clean existing reinforcing, if exposed, by sandblasting meeting the requirements of SSPC-SP10.*
9. *Apply an epoxy bonding compound between the existing and the new Class A45 Concrete.*
10. *Lap new reinforcing, as directed, to the existing reinforcing, a minimum of 18".*
11. *New reinforcing bars shall be uncoated (black).*
12. *Alternate wire fabric may be substituted for 3x3-w10xw10, provided wire spacing does not exceed 4" and an equivalent steel area is provided. New reinforcing bars may be omitted if wire fabric steel area exceeds existing reinforcing.*
13. *The cost of concrete removal, epoxy,½" dia. bars, reinforcement, wire fabric, Class A45 Concrete, dowel holes will be paid for at the contract unit price per square foot for Concrete Substructure Repair Type III.*
14. *Repair any concrete damaged during the operations to the satisfaction of the Engineer at no additional cost to the Department.*

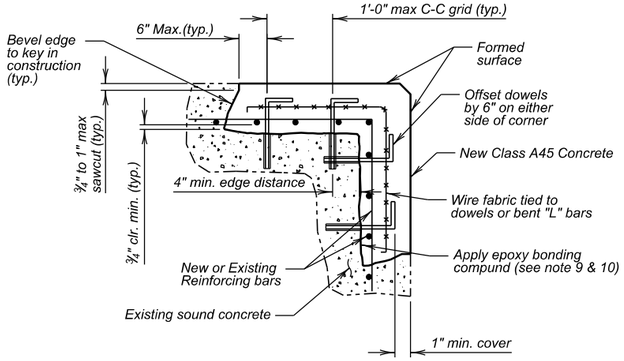

CORNER REPAIR DETAIL

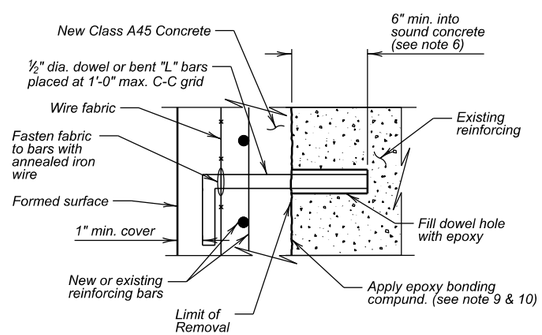

TYPICAL "L" BAR INSTALLATION DETAIL

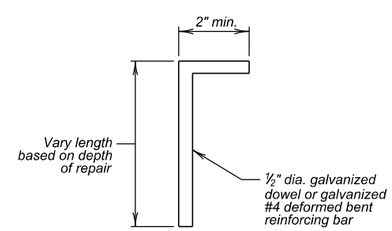

DOWEL OR BENT "L" BAR DETAIL

CONCRETE SUBSTRUCTURE REPAIR TYPE III

SUBSTRUCTURE REPAIR USING CLASS A45 CONCRETE
(DEPTH OF SPALL IS GREATER THAN 2")

REGISTERED PROFESSIONAL ENGINEER
REG. NO.
13352
JAN O.
HANSEN
SOUTH DAKOTA
4/09/2021

CONCRETE SUBSTRUCTURE REPAIR TYPE III
FOR
170'-0" TIMBER GIRDER BRIDGE

26'-0" ROADWAY — 0 SKEW
OVER US 16A W — SEC. 31-TIS-R6E
STA. 8+99.91 TO 10+65.62 — P016A(08)59
STR. NO. 52-308-411 — HS-20

PENNINGTON COUNTY
S. D. DEPT. OF TRANSPORTATION
FEBRUARY 2020

DESIGNED BY	CK. DES. BY	DRAFTED BY	
ML	JH	JW	BRIDGE ENGINEER

TYPICAL CRACK

CONCRETE REPAIR C3 - CONCRETE PROTECTIVE COATING

1. *Perform all substructure repairs prior to placing Concrete Protective Coating.*
2. *Perform bridge cleaning prior to applying Concrete Protective Coating.*
3. *Concrete Protective Coating is to be applied to all exposed surfaces of all substructure units.*
4. *Color of Concrete Protective Coating shall be AMS-STD-595A color 37925 "Insignia White".*
5. *Refer to the Special Provisions for additional information.*

CONCRETE REPAIR C2 - CONCRETE CRACK INJECTION/SEALING

1. *Cracks greater than $\frac{1}{16}$" in width shall be repaired using epoxy injection as indicated in the plans.*
2. *Thoroughly clean the surfaces of the crack repair area.*
3. *Glue injection ports in place along the crack at spacings as recommended by the manufacturer.*
4. *Seal the crack surface and areas surrounding the injection ports.*
5. *Do not inject the cracked area until after the surface sealer has hardened. Inject epoxy using means as recommended by the manufacturer.*
6. *Start injection on the lowest point on the crack. Move to the next higher port and continue until the crack is completely filled.*
7. *Remove the injection ports after the epoxy has achieved an initial cure.*
8. *Refer to the Special Provisions for additional information.*

REGISTERED PROFESSIONAL ENGINEER
REG. NO.
13352
JAN O.
HANSEN
SOUTH DAKOTA
4/09/2021

CONCRETE REPAIRS TYPE C2 & C3
FOR
170'-0" TIMBER GIRDER BRIDGE

26'-0" ROADWAY — 0 SKEW
OVER US 16A W — SEC. 31-TIS-R6E
STA. 8+99.91 TO 10+65.62 — P016A(08)59
STR. NO. 52-308-411 — HS-20

PENNINGTON COUNTY
S. D. DEPT. OF TRANSPORTATION
FEBRUARY 2020

DESIGNED BY	CK. DES. BY	DRAFTED BY	
ML	JH	JW	BRIDGE ENGINEER

FOR BIDDING PURPOSES ONLY

Revised: 4/6/2021 MNL

NOTES

1. See TIMBER REPAIR TYPE T1 - DIFFUSE TIMBER DETAILS.
2. Diffuse lengths are measured along centerline of the member.
3. Reset Neoprene Bearing Pads at the locations shown. Remove the connection bolts through the girder and wrench up girder through the bolt hole enough to reposition the bearing pad. Re-install and tighten the bolts. The costs associated with Resetting Bearing Pads will be included in the contract unit price per Square Yard for Transverse Laminated Timber Deck.

LEGEND:

Shaded area indicates Repair Type T1 - Diffuse Timber

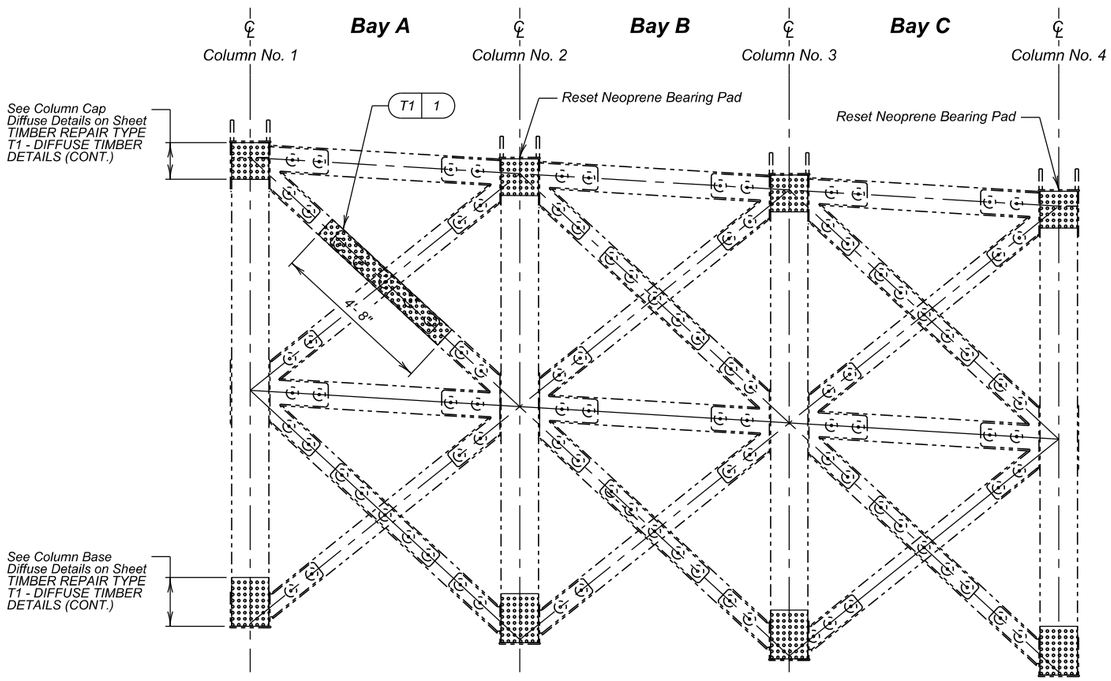

ELEVATION - BENT NO. 2

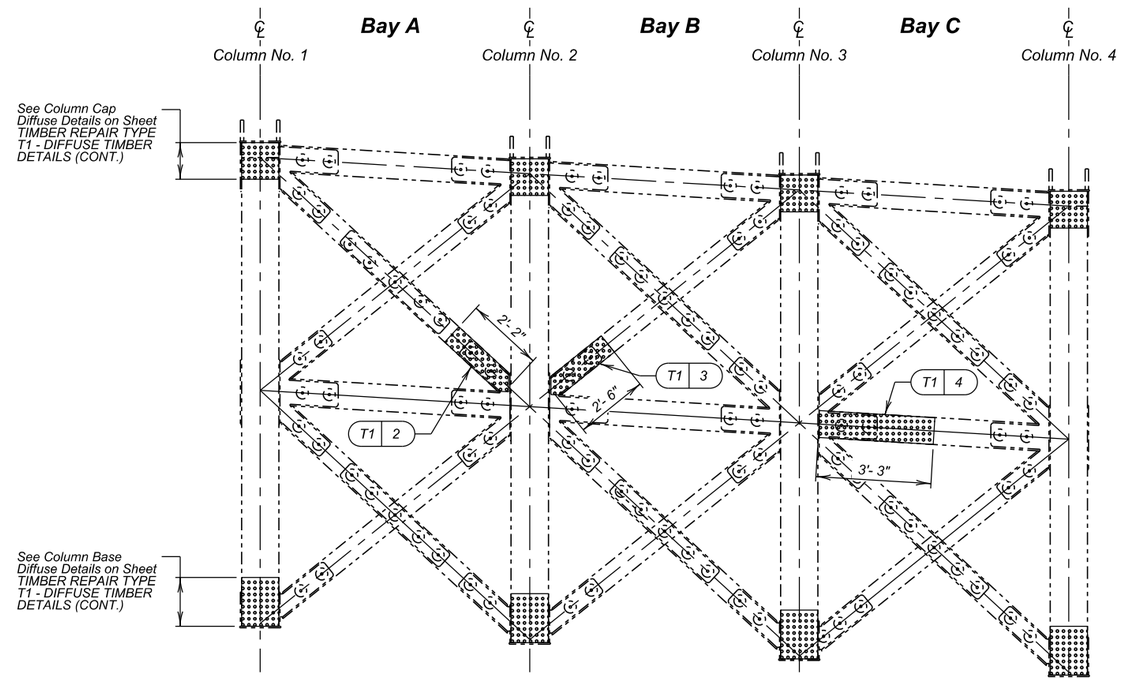

ELEVATION - BENT NO. 3

REPAIR TYPE T1 - DIFFUSE TIMBER						
			Member Size			Volume
ID	Location	Member	Width	Depth	Diffuse Length	CuFt
1	Bent 2	Diagonal	7"	4⅞"	4'-8"	1.2
2	Bent 3	Diagonal	7"	4⅞"	2'-2"	0.6
3	Bent 3	Diagonal	7"	4⅞"	2'-6"	0.6
4	Bent 3	Diagonal	9"	4⅞"	3'-3"	0.8

REGISTERED PROFESSIONAL ENGINEER
REG. NO.
13352
JAN O.
HANSEN
SOUTH DAKOTA
4/09/2021

TIMBER DIFFUSE LOCATIONS AT BENTS NO. 2 AND NO. 3
FOR
170'-0" TIMBER GIRDER BRIDGE

26'-0" ROADWAY — 0 SKEW
OVER US 16A W — SEC. 31-TIS-R6E
STA. 8+99.91 TO 10+65.62 — P016A(08)59
STR. NO. 52-308-411 — HS-20

PENNINGTON COUNTY
S. D. DEPT. OF TRANSPORTATION
FEBRUARY 2020

DESIGNED BY	CK. DES. BY	DRAFTED BY	
ML	JH	JW	BRIDGE ENGINEER

FOR BIDDING PURPOSES ONLY

REPAIR TYPE T1 - DIFFUSE TIMBER						
			Member Size			Volume
ID	Location	Member	Width	Depth	Diffuse Length	CuFt
5	Span 1	Girder 2	11"	47⅞"	18'-8"	67.3
6	Span 1	Girder 3	11"	47⅞"	37'-0"	133.2

REPAIR TYPE T1 - DIFFUSE TIMBER							
			Member Size			Volume/Location	Total
ID	Location	No. of Locations	Width	Depth	Diffuse Length	CuFt	CuFt
7	Girder Ends	24	11"	47⅞"	2'-6"	9.0	216.0
8	Column Cap	8	12½"	36"	1'-0"	3.2	25.6
9	Column Base	8	12½"	21"	1'-10"	3.4	27.2

LEGEND:

Shaded area indicates Repair Type T1 - Diffuse Timber

Arrow indicates side of member to install diffuser rods

NOTES

1. See sheet TIMBER REPAIR TYPE T1 - DIFFUSE TIMBER DETAILS.
2. Diffuse lengths are measured along centerline of the member.
3. Diffuse all Girder Ends, Column Caps, and Column Bases per details on sheet TIMBER REPAIR TYPE T1 - DIFFUSE TIMBER DETAILS (CONT.).

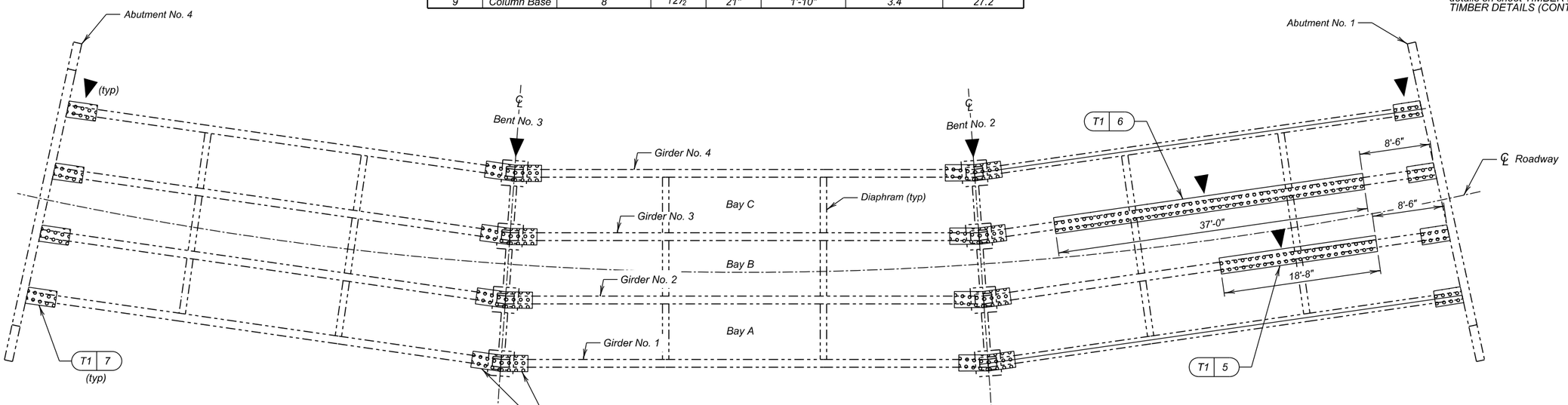

PLAN

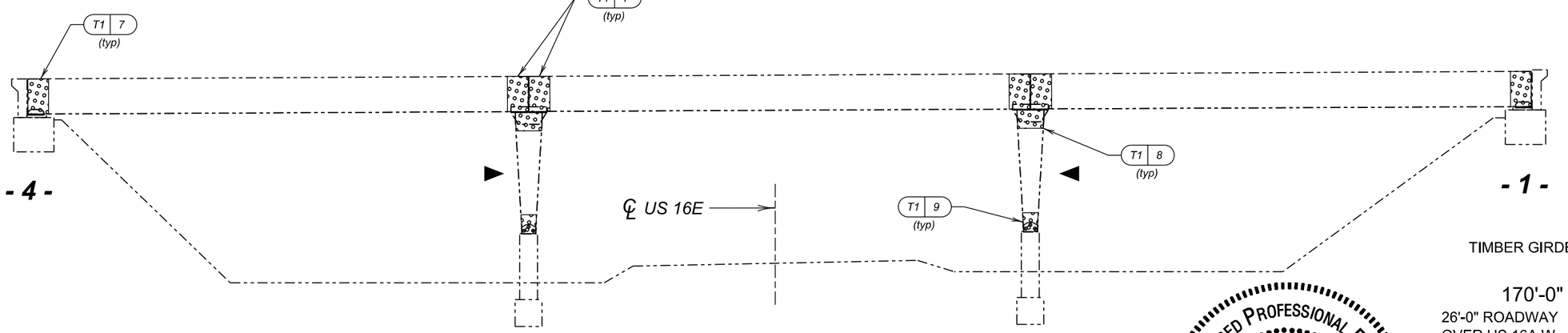

ELEVATION

REGISTERED PROFESSIONAL ENGINEER
REG. NO.
13352
JAN O.
HANSEN
SOUTH DAKOTA
4/09/2021

TIMBER GIRDER AND COLUMN DIFFUSE LOCATIONS
FOR
170'-0" TIMBER GIRDER BRIDGE

26'-0" ROADWAY — 0 SKEW
OVER US 16A W — SEC. 31-TIS-R6E
STA. 8+99.91 TO 10+65.62 — P016A(08)59
STR. NO. 52-308-411 — HS-20

PENNINGTON COUNTY
S. D. DEPT. OF TRANSPORTATION
FEBRUARY 2020

DESIGNED BY	CK. DES. BY	DRAFTED BY	
ML	JH	JW	BRIDGE ENGINEER

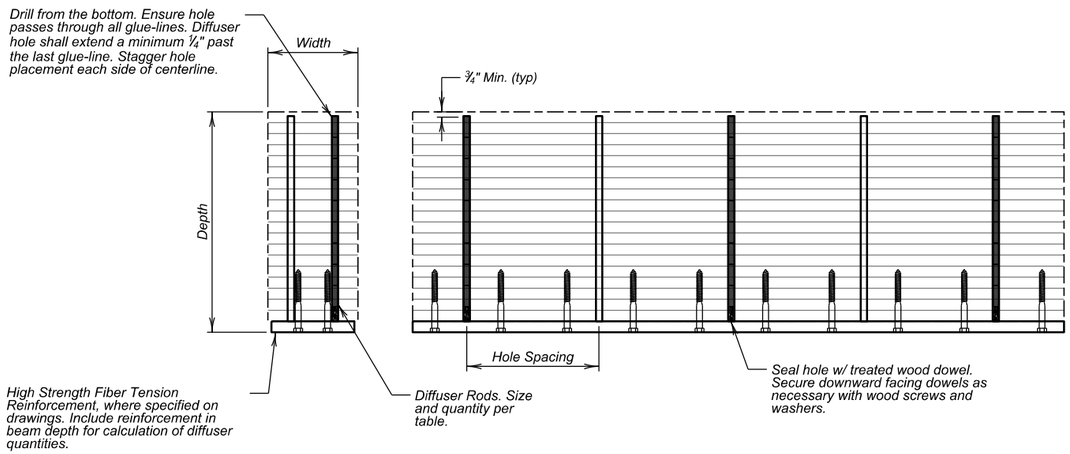

GLULAM BEAM DIFFUSING -
ORIENTATION A: PERPENDICULAR TO GLUE LINES

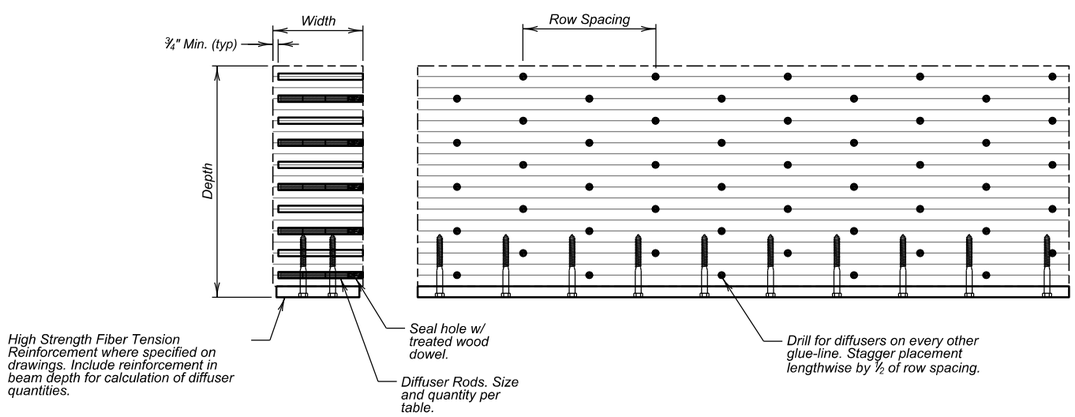

GLULAM BEAM DIFFUSING -
ORIENTATION B: PARALLEL TO GLUE LINES

GLULAM BEAM DIFFUSER SPACING
PERPENDICULAR TO GLUE LINES

ELEMENT WIDTH	ELEMENT DEPTH	3/4" x 3" DIFFUSERS		1/2" x 4" DIFFUSERS		1/2" x 5" DIFFUSERS	
		RODS PER HOLE	HOLE SPACING	RODS PER HOLE	HOLE SPACING	RODS PER HOLE	HOLE SPACING
5.125	12	3	18	2	10	1.5	10
5.125	15	4	18	3	12	2.5	12
5.125	18	5	18	3.5	12	3	12
5.125	21	6	18	4.5	14	3.5	12
5.125	24	7	18	5	12	4	12
5.125	27	8	18	6	14	4.5	12
5.125	30	9	18	6.5	14	5.5	14
6.75	12	3	18	2	8	1.5	6
6.75	15	4	18	3	10	2.5	10
6.75	18	5	18	3.5	8	3	10
6.75	21	6	18	4.5	10	3.5	10
6.75	24	7	18	5	10	4	10
6.75	27	8	18	6	10	4.5	10
6.75	30	9	18	6.5	10	5.5	10
8.75	12	3	18	2	6	1.5	6
8.75	15	4	18	3	6	2.5	8
8.75	18	5	18	3.5	6	3	8
8.75	21	6	18	4.5	8	3.5	8
8.75	24	7	18	5	8	4	8
8.75	27	8	18	6	8	4.5	8
8.75	30	9	18	6.5	8	5.5	8
10.75	12	3	16	2	4	1.5	4
10.75	15	4	18	3	6	2.5	6
10.75	18	5	18	3.5	6	3	6
10.75	21	6	18	4.5	6	3.5	6
10.75	24	7	18	5	6	4	6
10.75	27	8	18	6	6	4.5	6
10.75	30	9	18	6.5	6	5.5	6
12.25	12	3	14	2	4	1.5	4
12.25	15	4	16	3	4	2.5	4
12.25	18	5	16	3.5	4	3	4
12.25	21	6	16	4.5	4	3.5	4
12.25	24	7	18	5	4	4	4
12.25	27	8	18	6	6	4.5	4
12.25	30	9	18	6.5	6	5.5	6
14.25	12	3	12	2	2	1.5	2
14.25	15	4	14	3	4	2.5	4
14.25	18	5	14	3.5	4	3	4
14.25	21	6	14	4.5	4	3.5	4
14.25	24	7	14	5	4	4	4
14.25	27	8	14	6	4	4.5	4
14.25	30	9	16	6.5	4	5.5	4

GLULAM BEAM DIFFUSER SPACING
PARALLEL TO GLUE LINES

ELEMENT WIDTH	3/4" x 3" DIFFUSERS		1/2" x 4" DIFFUSERS		1/2" x 5" DIFFUSERS	
	RODS PER HOLE	ROW SPACING	RODS PER HOLE	ROW SPACING	RODS PER HOLE	ROW SPACING
5.125	0.5	18	0.5	10	0.5	12
6.75	1	18	1	16	0.5	10
8.75	1.5	18	1.5	18	1	16
10.75	2.5	18	2	18	1.5	18
12.25	3	18	2	18	1.5	16
14.25	3.5	18	2.5	18	2	18

NOTES

1. *Install diffuser rods according to Orientation A whenever possible. If physical conflicts prevent installation according to Orientation A, notify the Engineer prior to proceeding with Orientation B.*
2. *Diffuser spacing parallel to grain should not exceed 18 in o.c. and spacing perpendicular to grain should not exceed 8 in o.c. treatment will not spread through glue-lines, so it is important that diffuser rods are inserted in all laminations.*
3. *Contractor will take care not to completely drill through the entire width or height of the member. If the Contractor drills through the entire width or height, notify the Engineer and install a treated wood dowel on both sides at no additional cost.*

REGISTERED PROFESSIONAL ENGINEER
REG. NO.
13352
JAN O.
HANSEN
SOUTH DAKOTA
4/09/2021

TIMBER REPAIR TYPE T1 - DIFFUSE TIMBER DETAILS
FOR
170'-0" TIMBER GIRDER BRIDGE

26'-0" ROADWAY — 0 SKEW
OVER US 16A W — SEC. 31-TIS-R6E
STA. 8+99.91 TO 10+65.62 — P016A(08)59
STR. NO. 52-308-411 — HS-20

PENNINGTON COUNTY
S. D. DEPT. OF TRANSPORTATION
FEBRUARY 2020

DESIGNED BY	CK. DES. BY	DRAFTED BY	
ML	JH	JW	BRIDGE ENGINEER

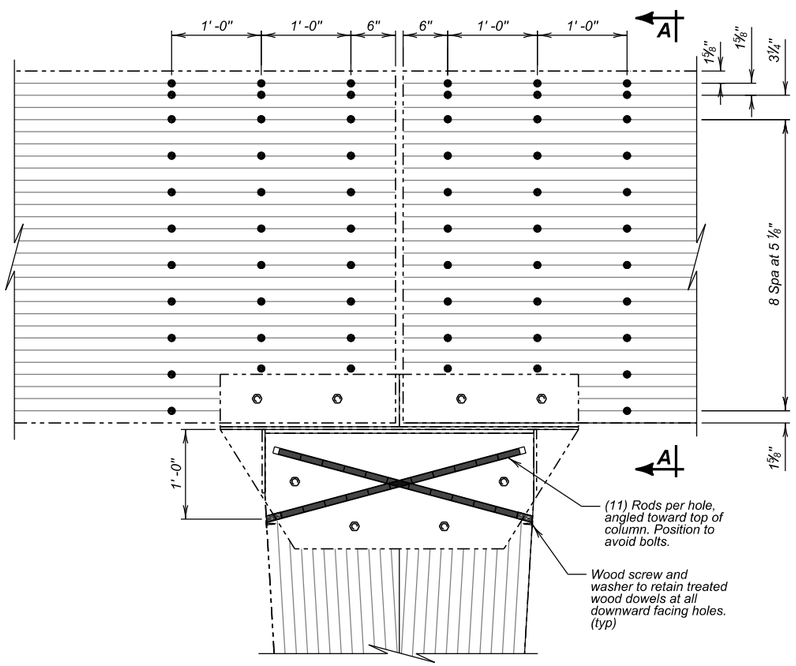

DIFFUSE AT GIRDER ENDS AND COLUMN CAP

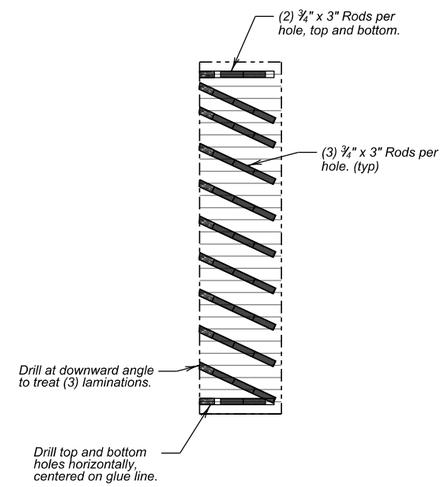

SECTION A-A

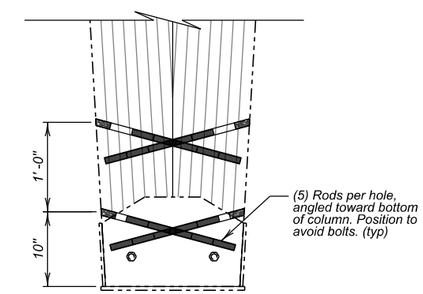

DIFFUSE AT COLUMN BASE

REGISTERED PROFESSIONAL ENGINEER
REG. NO.
13352
JAN O.
HANSEN
SOUTH DAKOTA
4/09/2021

TIMBER REPAIR TYPE T1 -
DIFFUSE TIMBER DETAILS (CONT.)

FOR

170'-0" TIMBER GIRDER BRIDGE

26'-0" ROADWAY — 0 SKEW
OVER US 16A W — SEC. 31-TIS-R6E
STA. 8+99.91 TO 10+65.62 — P016A(08)59
STR. NO. 52-308-411 — HS-20

PENNINGTON COUNTY
S. D. DEPT. OF TRANSPORTATION
FEBRUARY 2020

DESIGNED BY	CK. DES. BY	DRAFTED BY	
ML	JH	JW	BRIDGE ENGINEER

FOR BIDDING PURPOSES ONLY

Revised: 4/6/2021 MNL

TYPICAL GIRDER DAMAGE

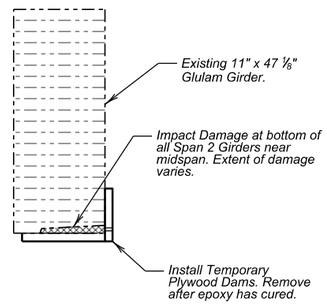

SECTION B-B

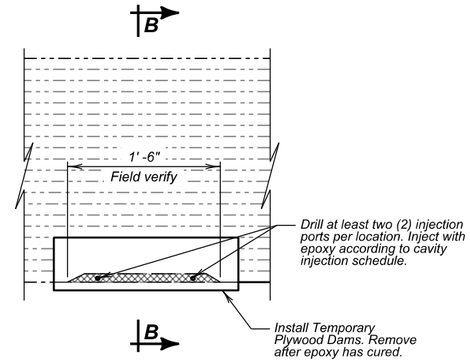

EPOXY INJECTION AT IMPACT DAMAGE LOCATIONS

EPOXY INJECTION WORKS SCHEDULE:

1. *Carefully cut and remove all splinters and other loose fibers from damaged locations with minimal impacts to surrounding sound timber. Prepare the surface for epoxy as specified by the manufacturer's recommendations.*
2. *Install Temporary Plywood Dams across each Impact Damage cavity. Drill at least two (2) access ports per cavity, at maximum 8" O.C. Size ports so injection nozzle will seal tightly against hole to ensure pressure build up.*
3. *Starting from large end of cavity and working toward small end, inject cavity with Gap-Filling Structural Epoxy using pressurized pneumatic gun.*
4. *When epoxy begins to flow out of next hole, plug first hole with bung to maintain pressure and continue to next hole.*
5. *On last hole, inject until nozzle has back flow. Hold shoulder tight against girder to maintain pressure and ensure epoxy flows into cracks.*
6. *Remove temporary plywood dams after epoxy has cured according to manufacturer's recommendations.*
6. *Provide touch-up planing to the cured epoxy to be flush with the girder to allow for proper bonding of the reinforced fiber panels. No gouges or scores are acceptable.*

TENSION RETROFIT WORKS SCHEDULE

1. *Complete Epoxy Injection at Impact Damage Locations work and allow epoxy to cure according to the manufacturer's recommendations prior to beginning Tension Retrofit work.*
2. *Tension retrofit installation shall be qualified and monitored by a third party quality assurance agency with ICC Evaluation Service certification.*
3. *Confirm access requirements.*
4. *Finish plane the glue surface of the girder. Planing quality shall be monitored by qualified technician. Avoid unnecessary scour.*
5. *Locate, organize, and count installation materials required. Ensure extra screws and washers are available if needed during installation.*
6. *Check equipment and tools. Have drill motor and bits on stand-by in the event new holes are required to replace "spun-out" lag screws. Ensure fluid levels. Turn on and test equipment prior to mixing epoxy.*
7. *Place a small amount of oil-based lubricant on threads of lag bolts. Do not get lubricant on glue surfaces. Do not use water based lubricant.*
8. *Dry place reinforcement in position on girder and use as template to drill pilot holes working from the center out. Test lag screw torque and use the maximum torque attainable in the dry fit before gluing. The target is 225 ft-lbs or greater. If the torque value that the wood can hold is less than 148 ft-lbs call the Engineer for direction on how to proceed. Blow debris from pilot holes with compressed air.*

   Note: Do not add preservative treatment or sealer to pilot holes to prevent contamination of the retrofit bond.
9. *Provide touch-up planing on girder as required, and sand the reinforcing fiber panel prior to application of adhesive. The reinforcing fiber panels shall be cross sanded at 45 degrees (60 degrees maximum) to the long axis using 60 grit sandpaper. No gouges or scores are acceptable. Hand sand small shiny patches with sanding block and 60 grit sand paper in cross direction.*
10. *Stage work station away from moisture and potential contaminants. If raining, extreme care shall be taken to ensure epoxy does not receive moisure.*
11. *Check moisture content readings on glue surfaces to receive epoxy. Do not proceed with retrofit if surface moisture content is above 20%.*
12. *Use structural epoxy adhesive mixed in accordance with manufacturer's specifications.*
13. *Spread mixed epoxy on both glue faces (reinforcing fiber and existing timber). Squeeze out should be no larger than a ¼" bead and no smaller than ⅛".*
14. *Place reinforcement in place. Drive the center lag screw first to touching washer. Do not use impact guns to torque screw.*
15. *Continue driving remaining screws working from the center out, unless otherwise specified.*
16. *Torque lag screws using torque wrench to 175 ft-lbs. Start torquing screws at the center of the reinforcement and work toward each end. Return to the starting point and re-torque to 225 ft-lbs. Re-torque all screws every 15 minutes until all screws click without turning. All screws must be torqued in every pass; if any screw turns freely, another pass must be made, retorquing all screws.*

REGISTERED PROFESSIONAL ENGINEER
REG. NO.
13352
JAN O.
HANSEN
SOUTH DAKOTA
4/09/2021

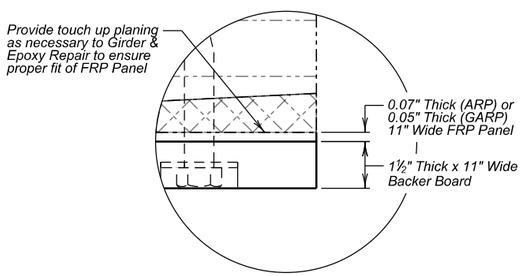

DETAIL A

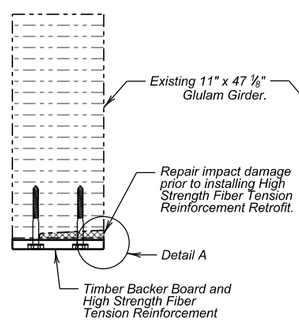

SECTION A-A

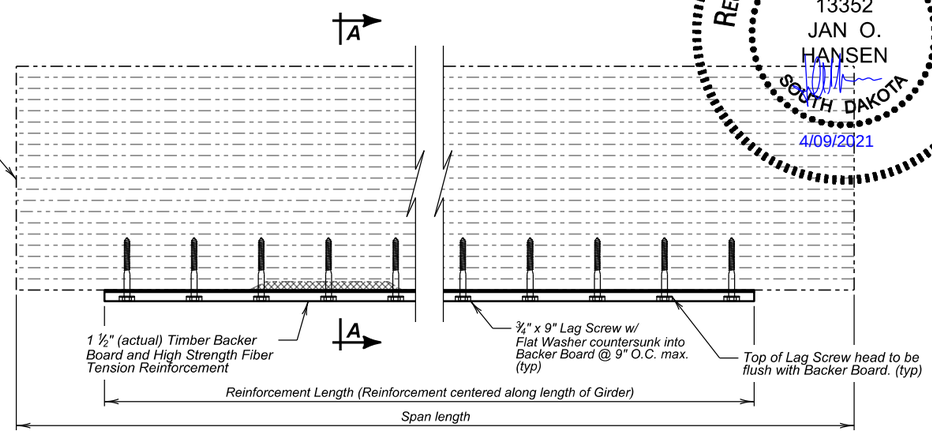

GIRDER ELEVATION

HIGH STRENGTH FIBER TENSION REINFORCEMENT RETROFIT			
Span	Girder	Girder Length	Reinforcement Length
1	1	57 '-7⅞"	49' -0"
	2	56' -6¾"	48' -0"
	3	55' -5⅞"	47' -0"
	4	54' -5"	46' -0"
2	1	57' -7⅞"	49' -0"
	2	56' -6¾"	48' -0"
	3	55' -5⅞"	47' -0"
	4	54' -5"	46' -0"
3	1	57' -7⅞"	49' -0"
	2	56' -6¾"	48' -0"
	3	55' -5⅞"	47' -0"
	4	54' -5"	46' -0"

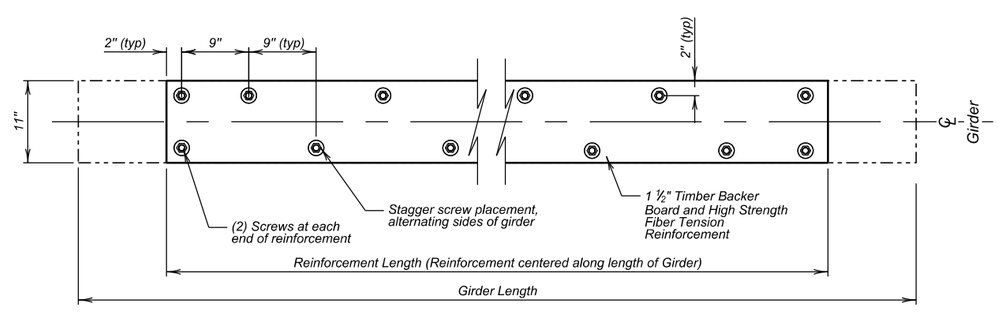

GIRDER UNDERSIDE PLAN

HIGH STRENGTH FIBER TENSION REINFORCEMENT RETROFIT DETAILS

FOR

170'-0" TIMBER GIRDER BRIDGE

26'-0" ROADWAY — 0 SKEW
OVER US 16A W — SEC. 31-TIS-R6E
STA. 8+99.91 TO 10+65.62 — P016A(08)59
STR. NO. 52-308-411 — HS-20

PENNINGTON COUNTY
S. D. DEPT. OF TRANSPORTATION
FEBRUARY 2020

DESIGNED BY	CK. DES. BY	DRAFTED BY	
ML	JH	JW	BRIDGE ENGINEER

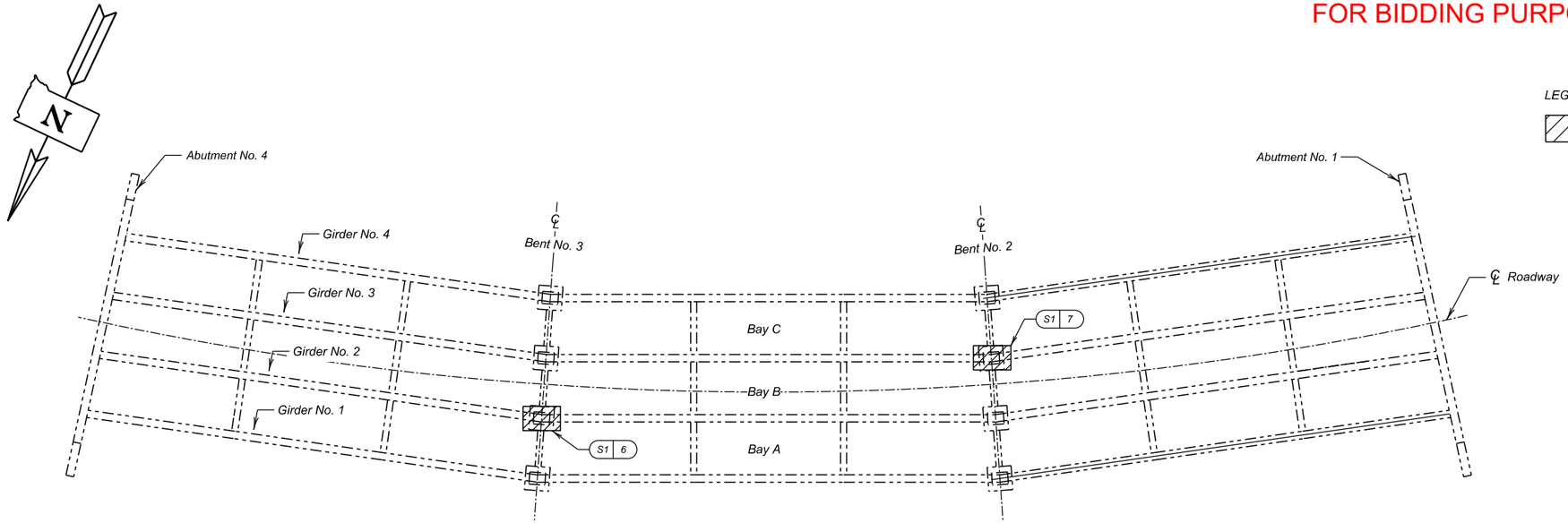

PLAN

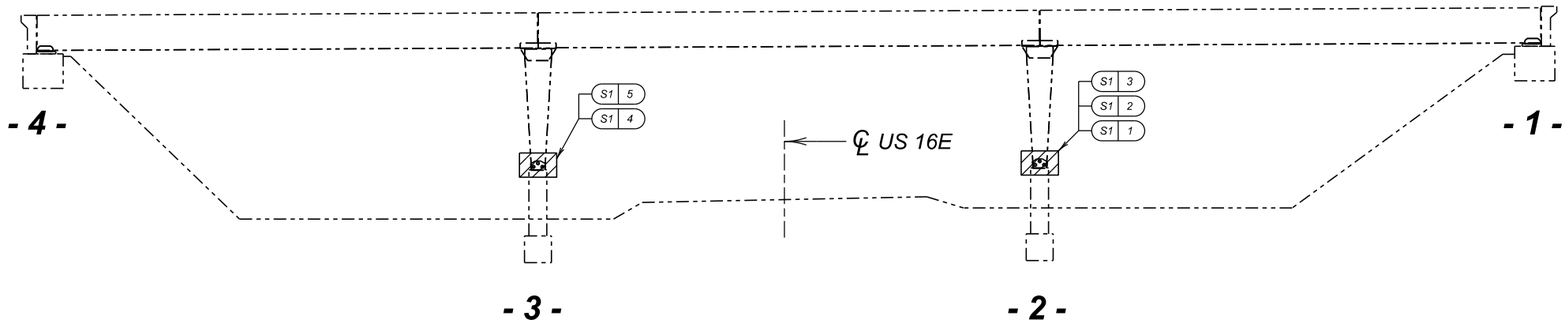

ELEVATION

LEGEND:

Shaded area indicates Steel Repair Type S1 - Test and Repair Galvanized Coating

NOTES

1. Brown staining forms when free iron in the intermetallic layers reacts with moisture in the environment and oxidizes, discoloring the surrounding zinc coating. To distinguish between red rust and brown staining, test suspect areas, as determined in advance by the Engineer, with a magnetic thickness gauge.

   If the gauge reading shows a coating thickness, it is brown staining and is simply an aesthetic concern, repair is not necessary. Remove the stained area by brushing with a nylon bristle brush.

2. If the gauge shows a reduced coating thickness, repair the area in accordance with the Special Provision.

3. Protect timber surfaces from damage and discoloration due to cleaning, surface preparation, and repairs.

4. If additional locations of suspected galvanized coating failure are found, notify the Engineer before beginning work.

5. See Special Provision for additional information.

TYPICAL SUSPECTED GALVANIZED COATING FAILURE

REPAIR TYPE S1 - TEST AND REPAIR GALVANIZED COATING			
ID	Estimated Defects	Unit	Location
1	1	EA	Pedestal 1, Bent 2
2	1	EA	Pedestal 2, Bent 2
3	1	EA	Pedestal 4, Bent 2
4	1	EA	Pedestal 1, Bent 3
5	1	EA	Pedestal 4, Bent 3
6	1	EA	Girder 2 Shoe at Bent 3
7	1	EA	Girder 3 Shoe at Bent 2

REGISTERED PROFESSIONAL ENGINEER
REG. NO. 13352
JAN O. HANSEN
SOUTH DAKOTA
4/09/2021

STEEL REPAIR TYPE S1 -
TEST & REPAIR GALVANIZED COATING
FOR

170'-0" TIMBER GIRDER BRIDGE

26'-0" ROADWAY — 0 SKEW
OVER US 16A W — SEC. 31-TIS-R6E
STA. 8+99.91 TO 10+65.62 — P016A(08)59
STR. NO. 52-308-411 — HS-20

PENNINGTON COUNTY
S. D. DEPT. OF TRANSPORTATION
FEBRUARY 2020

DESIGNED BY	CK. DES. BY	DRAFTED BY	
ML	JH	JW	BRIDGE ENGINEER

FOR BIDDING PURPOSES ONLY

Revised: 4/6/2021 MNL

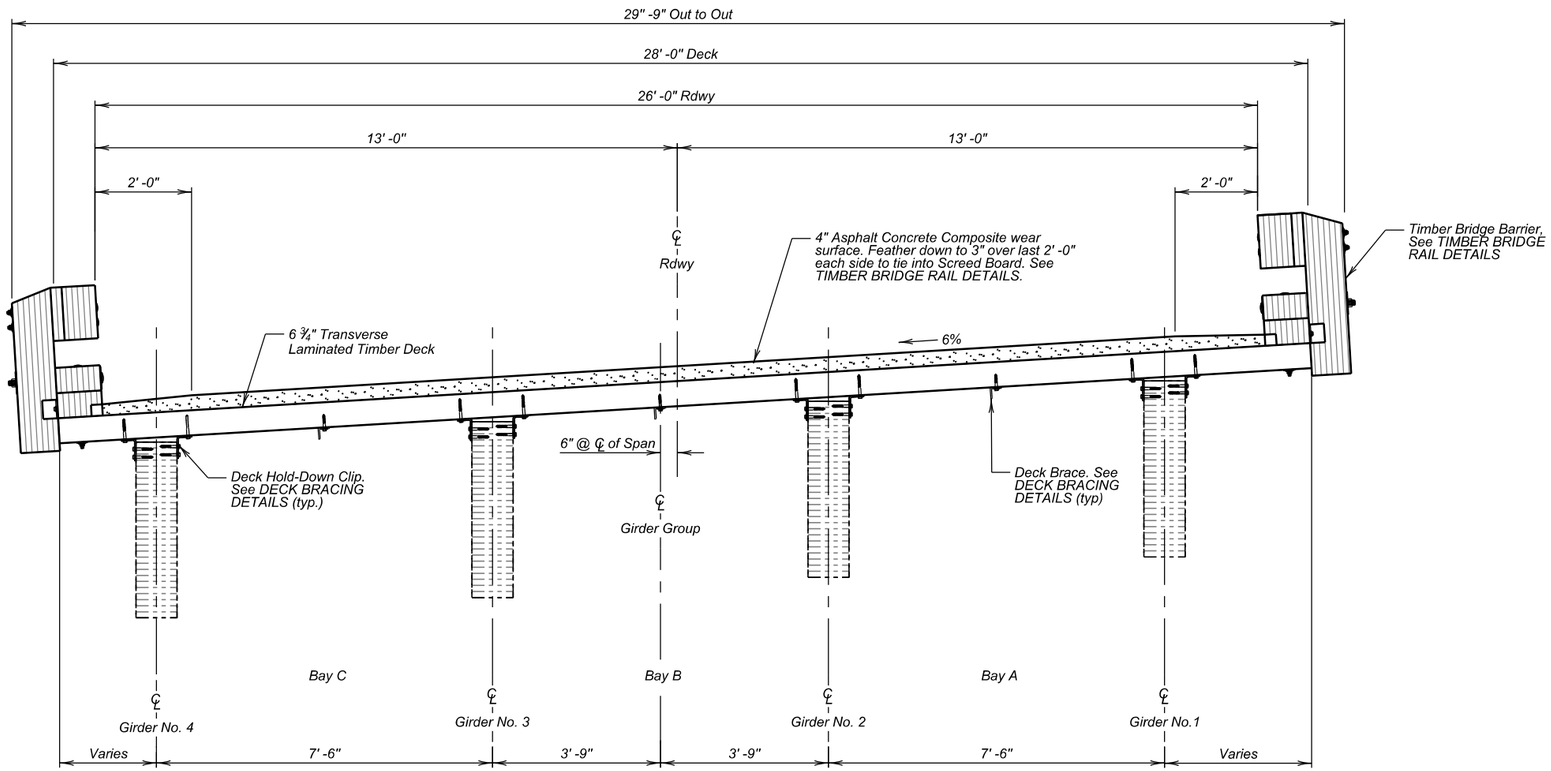

TYPICAL SECTION

REGISTERED PROFESSIONAL ENGINEER
REG. NO.
13352
JAN O.
HANSEN
SOUTH DAKOTA
4/09/2021

TYPICAL DECK SECTION
FOR
170'-0" TIMBER GIRDER BRIDGE

26'-0" ROADWAY — 0 SKEW
OVER US 16A W — SEC. 31-TIS-R6E
STA. 8+99.91 TO 10+65.62 — P016A(08)59
STR. NO. 52-308-411 — HS-20

PENNINGTON COUNTY
S. D. DEPT. OF TRANSPORTATION
FEBRUARY 2020

DESIGNED BY	CK. DES. BY	DRAFTED BY	
ML	JH	JW	BRIDGE ENGINEER

FOR BIDDING PURPOSES ONLY

Revised: 4/6/2021 MNL

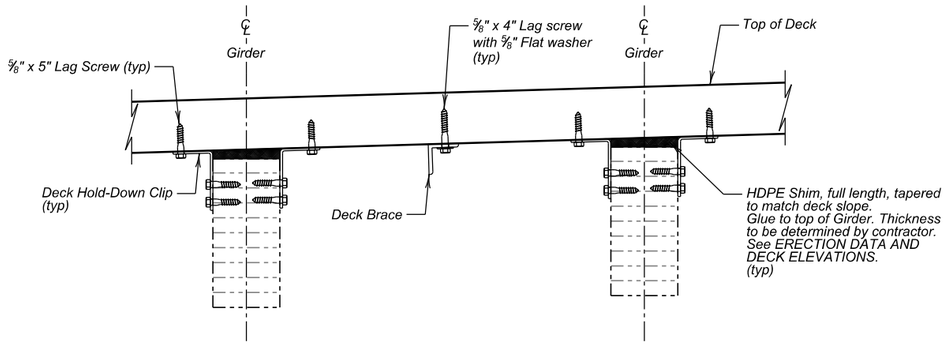

SECTION A-A

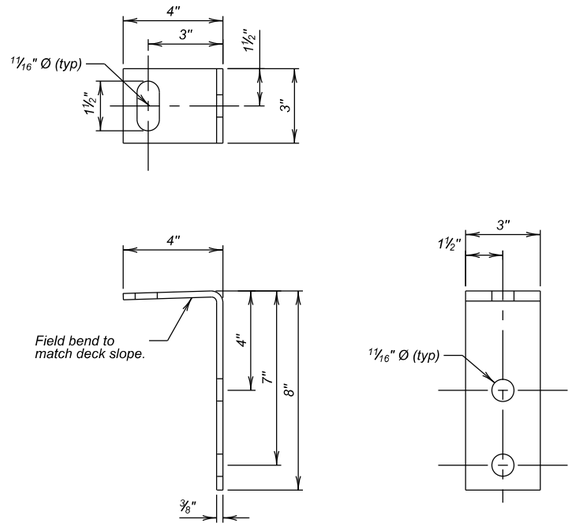

DECK HOLD-DOWN CLIP DETAIL

NOTES

1. Field drilling or cutting not shown on these plans is not allowed without engineering approval. Treat all field drilled or cut surfaces with approved preservative treatment.
2. Deck Brace may be formed with bent plate, or fabricated with steel plates and welded with full penetration welds.
3. The cost of furnishing and installing Deck Hold-Down Clips and Deck Braces will be paid for at the contract unit price per square yard for Transverse Laminated Timber Deck.

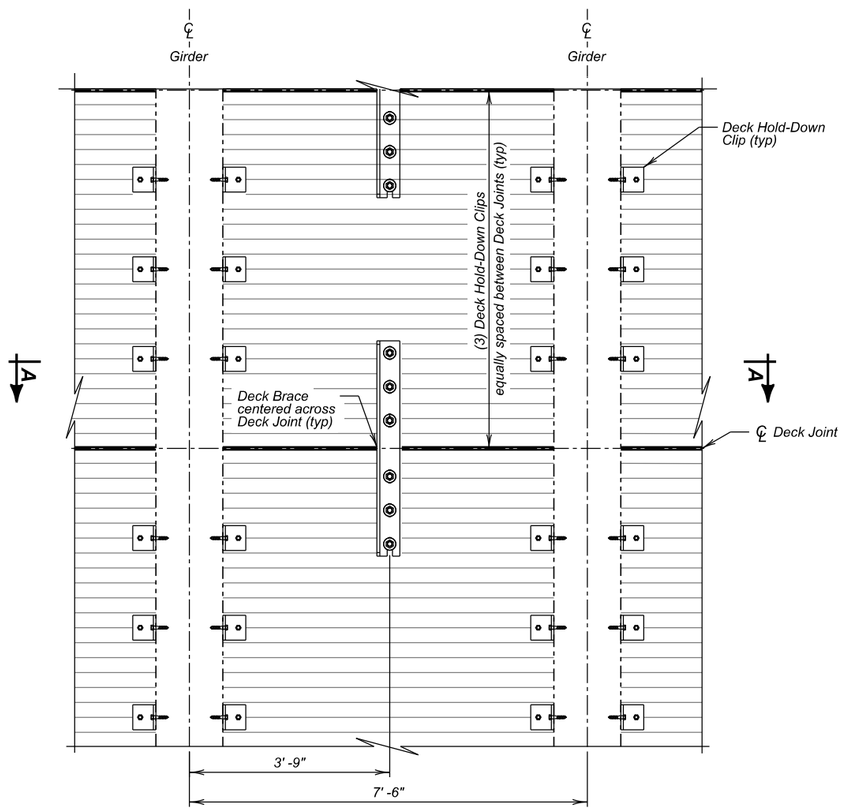

PLAN (LOOKING UP)

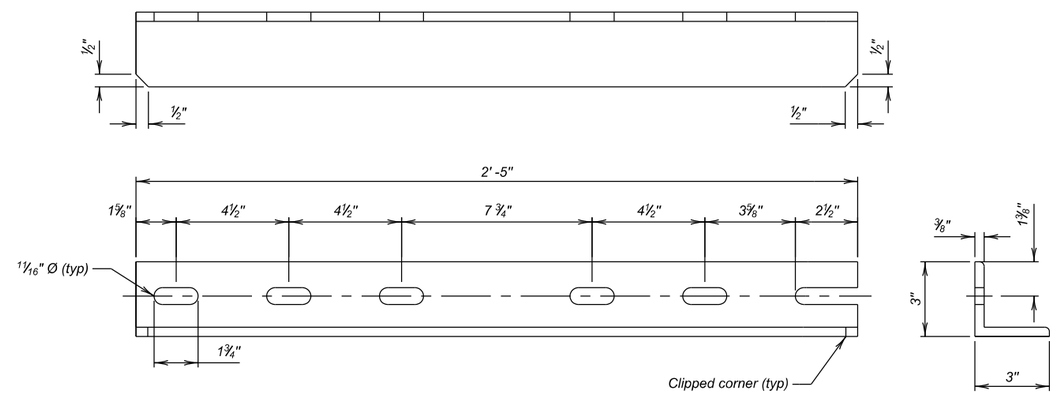

DECK BRACE DETAIL

REGISTERED PROFESSIONAL ENGINEER
REG. NO.
13352
JAN O.
HANSEN
SOUTH DAKOTA
4/09/2021

DECK BRACING DETAILS
FOR
170'-0" TIMBER GIRDER BRIDGE

26'-0" ROADWAY — 0 SKEW
OVER US 16A W — SEC. 31-TIS-R6E
STA. 8+99.91 TO 10+65.62 — P016A(08)59
STR. NO. 52-308-411 — HS-20

PENNINGTON COUNTY
S. D. DEPT. OF TRANSPORTATION
FEBRUARY 2020

DESIGNED BY	CK. DES. BY	DRAFTED BY	
ML	JH	JW	BRIDGE ENGINEER

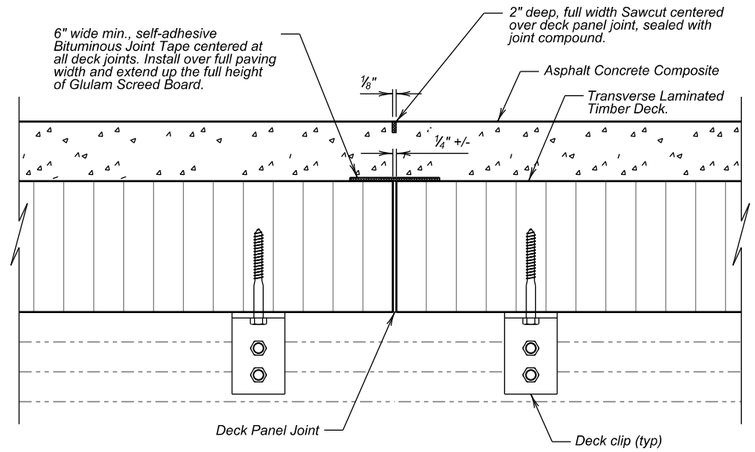

TYPICAL DECK JOINT

NOTE

1. Install the bituminous joint tape, including laps if necessary, according to the manufacturer's recommendations.
2. Cost of bituminous joint tape, sawcut, and sealing of bituminous joints is incidental to the bid item Asphalt Concrete Composite. No additional payment will be made.

COMPRESSION SEAL	
Location	Length ft
Abutment No. 1	28
Abutment No. 4	28

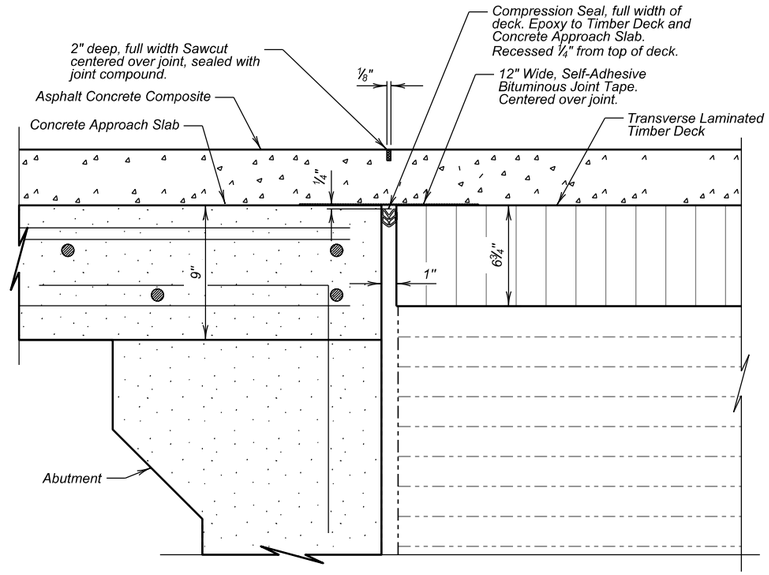

DECK JOINT AT APPROACH SLAB

REGISTERED PROFESSIONAL ENGINEER
REG. NO.
13352
JAN O.
HANSEN
SOUTH DAKOTA
4/09/2021

DECK JOINT DETAILS
FOR
170'-0" TIMBER GIRDER BRIDGE

26'-0" ROADWAY — 0 SKEW
OVER US 16A W — SEC. 31-TIS-R6E
STA. 8+99.91 TO 10+65.62 — P016A(08)59
STR. NO. 52-308-411 — HS-20

PENNINGTON COUNTY
S. D. DEPT. OF TRANSPORTATION
FEBRUARY 2020

DESIGNED BY	CK. DES. BY	DRAFTED BY	
ML	JH	JW	BRIDGE ENGINEER

NOTES

1. *The Contractor is responsible for collecting all data necessary to ensure proper fit of deck panels to existing structure prior to fabrication of deck panels.*
2. *Provide preservative treatment holes using the layout shown. The Contractor may provide an alternative layout subject to approval by the Engineer. See Preservative Treatment and Incising specifications for additional information.*

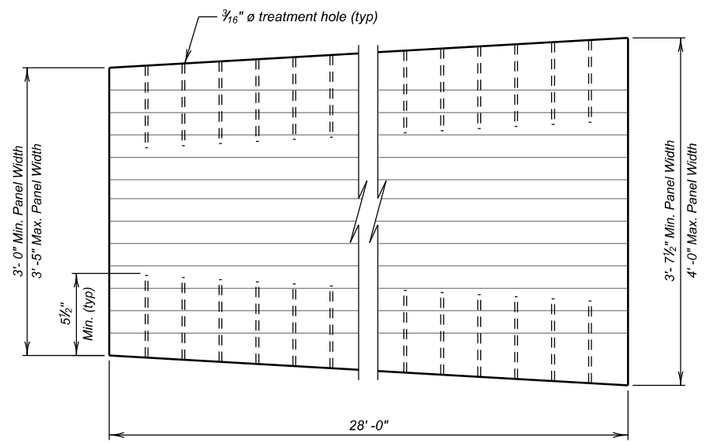

TAPERED DECK PANEL PLAN

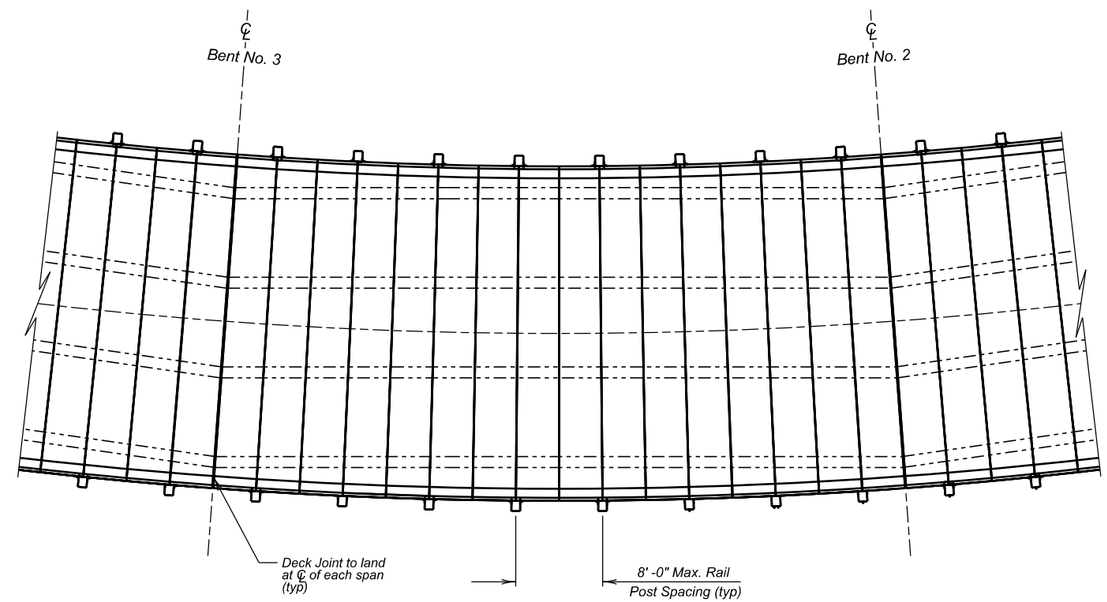

DECK PANEL PLAN

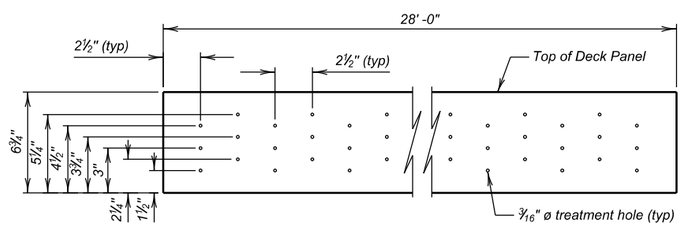

TAPERED DECK PANEL TREATMENT HOLE LAYOUT ELEVATION

REGISTERED PROFESSIONAL ENGINEER
REG. NO.
13352
JAN O.
HANSEN
SOUTH DAKOTA
4/09/2021

DECK PANEL DETAILS
FOR
170'-0" TIMBER GIRDER BRIDGE

26'-0" ROADWAY — 0 SKEW
OVER US 16A W — SEC. 31-TIS-R6E
STA. 8+99.91 TO 10+65.62 — P016A(08)59
STR. NO. 52-308-411 — HS-20

PENNINGTON COUNTY
S. D. DEPT. OF TRANSPORTATION
FEBRUARY 2020

DESIGNED BY	CK. DES. BY	DRAFTED BY	
ML	JH	JW	BRIDGE ENGINEER

TABLE OF TIMBER DECK ELEVATIONS AND SHIM CALCULATIONS

		CL Bearing Abut 4	0.25 Span	0.5 Span	0.75 Span	CL Bearing Bent 3	0.25 Span	0.5 Span	0.75 Span	CL Bearing Bent 2	0.25 Span	0.5 Span	0.75 Span	CL Bearing Abut 1
	Station	09+00.91	09+14.55	09+28.20	09+41.84	09+55.48	09+69.12	09+82.77	09+96.41	10+10.05	10+23.69	10+37.34	10+50.98	10+64.62
Girder 1	**Elev. "M"**	5014.61	5014.69	5014.77	5014.84	5014.91	5014.98	5015.06	5015.14	5015.21	5015.27	5015.33	5015.40	5015.47
	Elev. "G"	5014.01	5014.09	5014.17	5014.24	5014.31	5014.38	5014.46	5014.54	5014.61	5014.67	5014.73	5014.80	5014.87
	(-) Elev. 'N"													
	(=) deflection													
	AD (adjusted deflection)													
	M-N+AD = d													
	(-) 0.5625 (deck)													
	(=) h													
Girder 2	**Elev. "M"**	5014.19	5014.24	5014.32	5014.39	5014.47	5014.54	5014.62	5014.70	5014.78	5014.83	5014.90	5014.97	5015.04
	Elev. "G"	5013.59	5013.64	5013.72	5013.79	5013.87	5013.94	5014.02	5014.10	5014.18	5014.23	5014.30	5014.37	5014.44
	(-) Elev. 'N"													
	(=) deflection													
	AD (adjusted deflection)													
	M-N+AD = d													
	(-) 0.5625 (deck)													
	(=) h													
Girder 3	**Elev. "M"**	5013.73	5013.80	5013.87	5013.94	5014.00	5014.07	5014.15	5014.23	5014.31	5014.37	5014.44	5014.51	5014.58
	Elev. "G"	5013.13	5013.20	5013.27	5013.34	5013.40	5013.47	5013.55	5013.63	5013.71	5013.77	5013.84	5013.91	5013.98
	(-) Elev. 'N"													
	(=) deflection													
	AD (adjusted deflection)													
	M-N+AD = d													
	(-) 0.5625 (deck)													
	(=) h													
Girder 4	**Elev. "M"**	5013.28	5013.35	5013.42	5013.48	5013.56	5013.63	5013.71	5013.79	5013.86	5013.93	5013.99	5014.07	5014.13
	Elev. "G"	5012.68	5012.75	5012.82	5012.88	5012.96	5013.03	5013.11	5013.19	5013.26	5013.33	5013.39	5013.47	5013.53
	(-) Elev. 'N"													
	(=) deflection													
	AD (adjusted deflection)													
	M-N+AD = d													
	(-) 0.5625 (deck)													
	(=) h													

NOTES

1. *This table contains the necessary information to size HDPE shims. All calculations can be carried out in the space provided. The HDPE shims are to provide uniform bearing between the deck and the top of the existing girders. Variations between top of girder field elevations and both proposed cross slope of 6% and longitudinal gradient are expected.*
2. *Elevation "M" is the theoretical top of Timber Deck after placement of asphalt.*
3. *Elevation "G" is a field measured elevation taken on top of the girders at points listed. This elevation was taken with the existing concrete deck and overlay in place.*
4. *Elevation "N" is a field measured elevation taken by the Contractor on top of girders at points shown. This elevation must be taken after removal of existing concrete deck is complete, but prior to placing the new Timber Deck panels.*
5. *Girders must not be supported by construction shoring while elevations are taken.*
6. *If computations indicate that dimension "h" will be less than 7/16" or exceed 2", communicate with the Engineer before fabrication of HDPE shims.*
7. *All costs including labor and equipment necessary to survey girder elevations to size HDPE shims and coordinate with Engineer and Fabricator to be included in the contract unit price for Bridge Elevation Survey.*

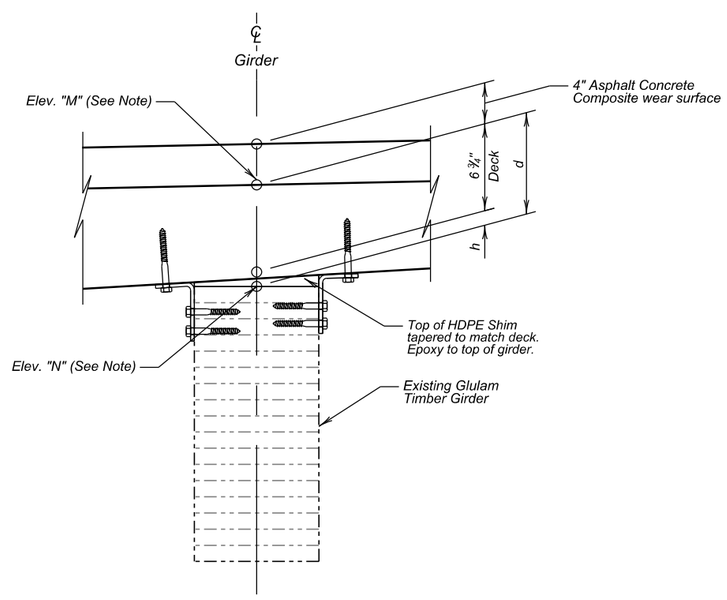

REGISTERED PROFESSIONAL ENGINEER
REG. NO.
13352
JAN O.
HANSEN
SOUTH DAKOTA
4/09/2021

ERECTION DATA AND DECK ELEVATIONS
FOR
170'-0" TIMBER GIRDER BRIDGE

26'-0" ROADWAY — 0 SKEW
OVER US 16A W — SEC. 31-TIS-R6E
STA. 8+99.91 TO 10+65.62 — P016A(08)59
STR. NO. 52-308-411 — HS-20

PENNINGTON COUNTY
S. D. DEPT. OF TRANSPORTATION
FEBRUARY 2020

DESIGNED BY	CK. DES. BY	DRAFTED BY	
ML	JH	JW	BRIDGE ENGINEER

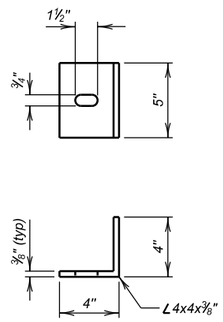

POST BRACE

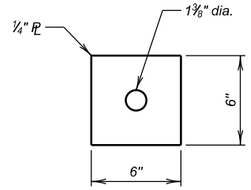

PLATE WASHER

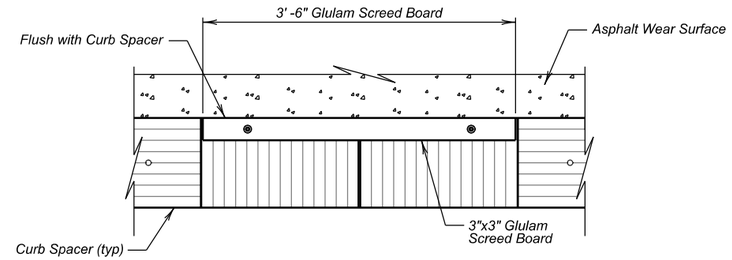

SECTION B-B

NOTE

Cost of Glulam Screed Board is incidental to the bid item Timber Bridge Rail. No additional payment will be made.

	TIMBER BRIDGE RAIL SPLICE
	PARTS FOR FABRICATION:
	ITEM
1	6" x 6" x ¼" Plate Washer
2	4" x 4" x ⅜" x 5" Long - Post Brace
	ITEM
3	1 ¼" x 25" Timber Bolt (No Lugs)
4	¾" x 24" Timber Bolt
5	¾" x 22" or 24" Timber Bolt
6	⅝" x 6" Lag Screw
7	1 ¼" Hex Nut
8	¾" Hex Nut
9	⅝" Flat Washer
10	¾" Maleable Iron Washer
11	Shear Plate - 4" dia. for ¾" Bolt
12	#10 x ¾" Wood Screw
19	⅝" Dia. x 10" Long Bolt
	TIMBER:
	ITEM
13	Rail Post - (GLB 8 ¾" x 10 ½" x 3'-5 ¾")
14	Curb Spacer - (GLB 6 ¾" x 1'-0" x 4'-6")
15	Post Spacer - (GLB 1'-2 ¼" x 3" x 8 ¾")
16	Rail - (GLB 1'-2 ¼" x 9")
17	Curb - (GLB 6 ¾" x 1'-0")
18	Screed Board (GLB 3" x 3" x 3' -6")

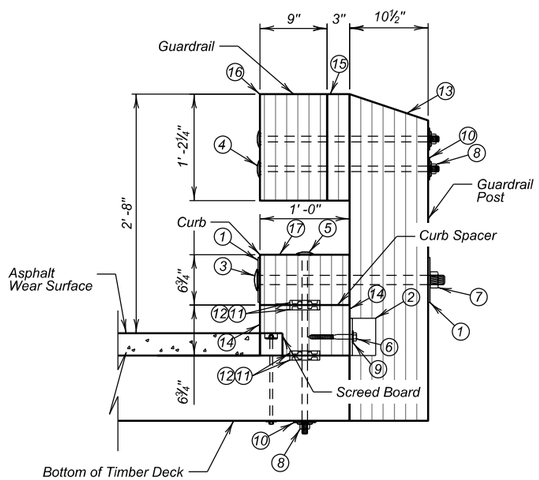

SECTION A-A

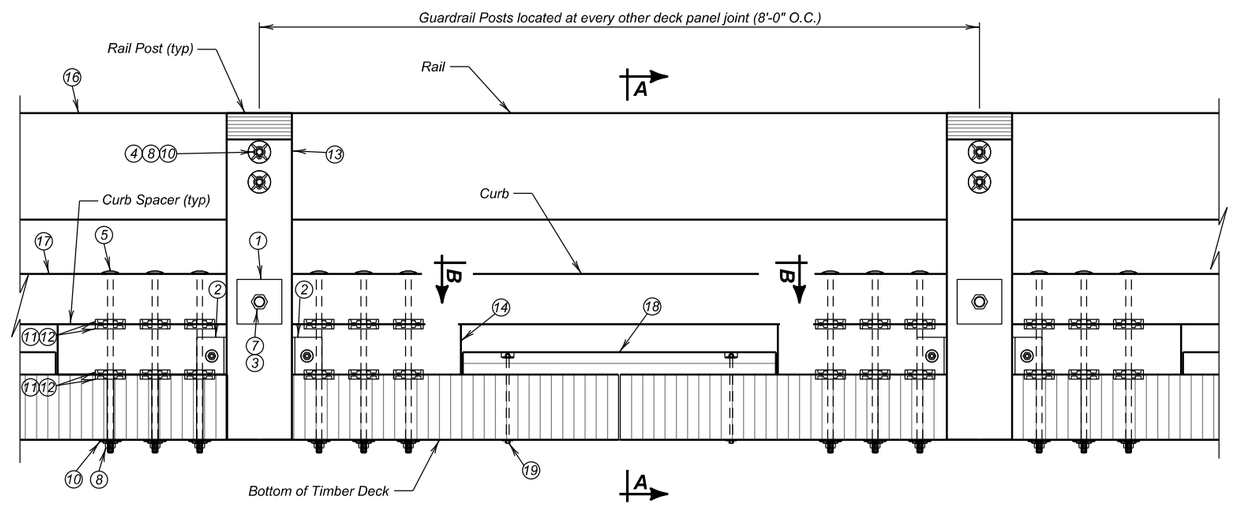

ELEVATION - TIMBER BRIDGE RAIL

REGISTERED PROFESSIONAL ENGINEER
REG. NO.
13352
JAN O.
HANSEN
SOUTH DAKOTA
4/09/2021

TIMBER BRIDGE RAIL DETAILS
FOR
170'-0" TIMBER GIRDER BRIDGE

26'-0" ROADWAY — 0 SKEW
OVER US 16A W — SEC. 31-TIS-R6E
STA. 8+99.91 TO 10+65.62 — P016A(08)59
STR. NO. 52-308-411 — HS-20

PENNINGTON COUNTY
S. D. DEPT. OF TRANSPORTATION
FEBRUARY 2020

DESIGNED BY	CK. DES. BY	DRAFTED BY	
ML	JH	JW	BRIDGE ENGINEER

FOR BIDDING PURPOSES ONLY

STATE OF	PROJECT	SHEET NO.	TOTAL SHEETS
S.D.	P016A(08)59	E28	E109

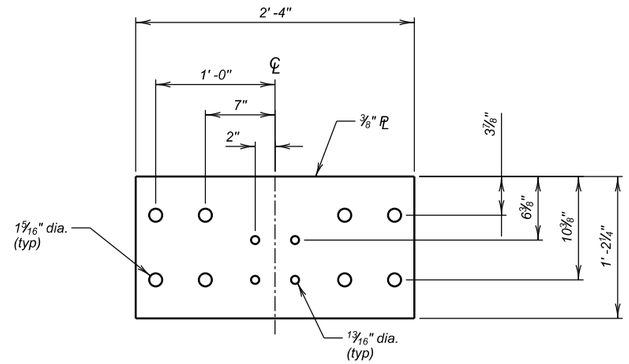

RAIL SPLICE PLATE

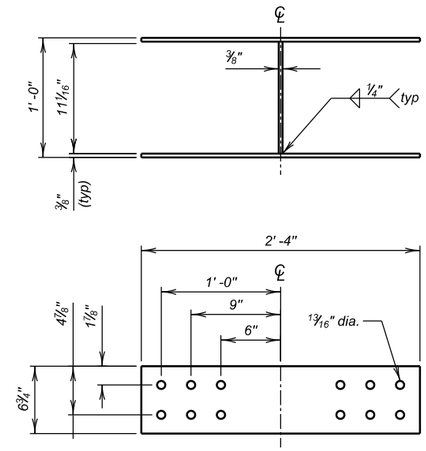

CURB SPLICE BRACKET

	TIMBER BRIDGE RAIL SPLICE
	PARTS FOR FABRICATION:
	ITEM
1	*Rail Splice Plate (14 1/4"X28"X3/8" PL)*
	FASTENERS:
	ITEM
2	*1-1/4" x 12" Timber Bolt (No Lugs)*
3	*3/4" x 24" Timber Bolt (No Lugs)*
	3/4" x 24" Timber Bolt
4	*1-1/4" Hex Nut*
5	*3/4" Hex Nut*
6	*3/4" Maleable Iron Washer*
	CURB SPLICE
	PARTS FOR FABRICATION:
	ITEM
7	*Curb Splice Bracket*
	FASTENERS:
	ITEM
8	*3/4" x 14" Timber Bolt (No Lugs)*
9	*3/4" Hex Nut*
10	*3/4" Lock Washer*

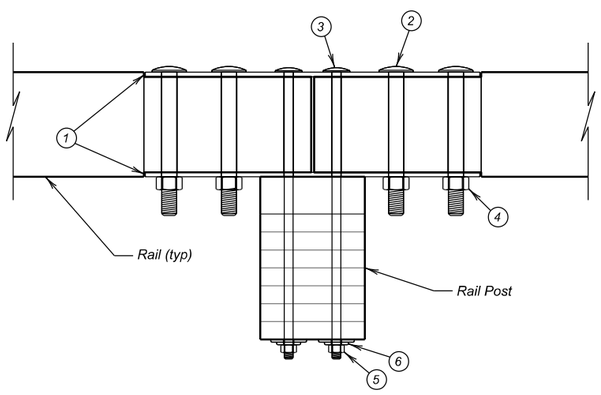

PLAN - RAIL SPLICE

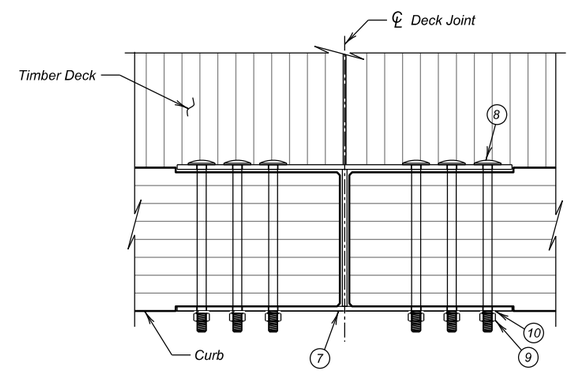

PLAN - CURB SPLICE

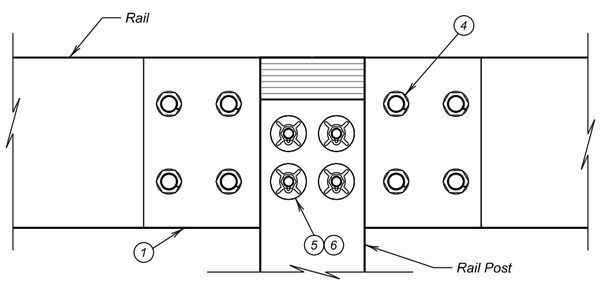

ELEVATION - RAIL SPLICE

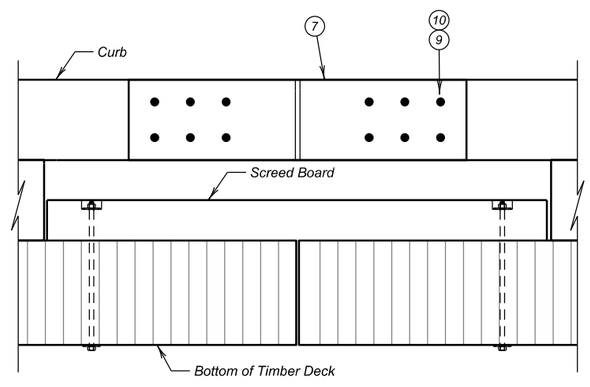

ELEVATION - CURB SPLICE

TIMBER BRIDGE RAIL SPLICE DETAILS
FOR
170'-0" TIMBER GIRDER BRIDGE

26'-0" ROADWAY — 0 SKEW
OVER US 16A W — SEC. 31-TIS-R6E
STA. 8+99.91 TO 10+65.62 — P016A(08)59
STR. NO. 52-308-411 — HS-20

PENNINGTON COUNTY
S. D. DEPT. OF TRANSPORTATION
FEBRUARY 2020

DESIGNED BY	CK. DES. BY	DRAFTED BY	
ML	JH	JW	BRIDGE ENGINEER

FOR BIDDING PURPOSES ONLY

Revised: 4/6/2021 MNL

* Elevations may need to be adjusted for a smooth ride from the final bridge deck elevations to final pavement elevations. Elevations will be taken and adjusted in the field during construction.

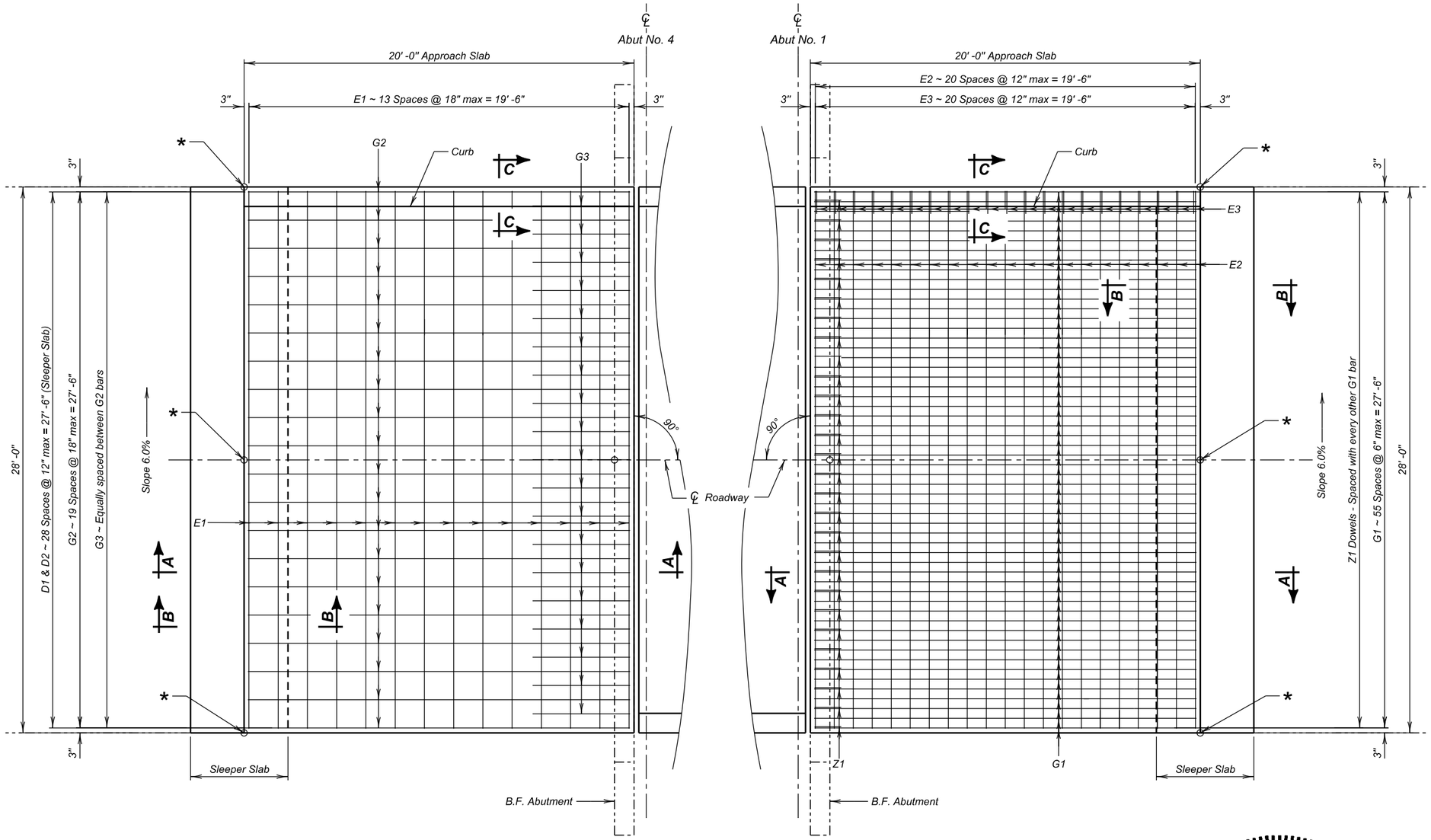

PLAN - AT ABUTMENT NO. 4

(Top Steel)

(Similar at Abutment No. 1)

PLAN - AT ABUTMENT NO. 1

(Bottom Steel)

(Similar at Abutment No. 4)

REINFORCING SCHEDULE

(For Two Approach Slabs and Two Sleeper Slabs)

Mk.	No.	Size	Length	Type
Sleeper Slabs				
C1	24	5	27' - 6"	Str.
D1	116	4	5' - 6"	2
D2	29	4	6' - 11"	T2
Approach Slabs				
E1	42	4	27' - 6"	Str.
E2	42	6	27' - 6"	Str.
E3	42	4	3' - 0"	38
G1	112	8	19' - 6"	Str.
G2	42	4	19' - 6"	Str.
G3	38	4	5' - 0"	Str.
Z1*	42	4	2' - 9"	10

Bending Details

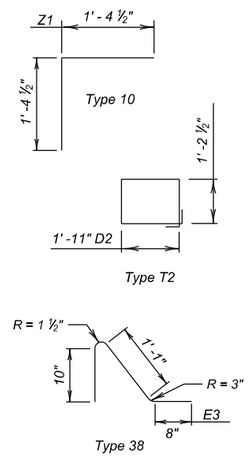

NOTES:
All Bars to be Epoxy Coated.
All dimensions are out to out of bars.
*Install Dowel in Concrete

ESTIMATED QUANTITIES

(For Two Approach Slabs and Two Sleeper Slabs)

ITEM	UNIT	QUANTITY
Concrete Approach Slab for Bridge	Sq. Yd.	125
Concrete Approach Sleeper Slab for Bridge	Sq. Yd.	32
Install Dowel in Concrete	Each	56

1. 32.3 Cu. Yds. Concrete in Approach Slab.
2. 8884 Lbs. Epoxy Coated Re-Steel in Approach Slab.
3. 8.0 Cu. Yds. Concrete in Sleeper Slab.
4. 1383 Lbs. Epoxy Coated Re-Steel in Sleeper Slab.

Items 1 thru 4 are approximate quantities contained in the above bid items and are for information only.

REGISTERED PROFESSIONAL ENGINEER
REG. NO. 13352
JAN O. HANSEN
SOUTH DAKOTA
4/09/2021

APPROACH SLAB PLAN
FOR
170'-0" TIMBER GIRDER BRIDGE

26'-0" ROADWAY — 0 SKEW
OVER US 16A W — SEC. 31-TIS-R6E
STA. 8+99.91 TO 10+65.62 — P016A(08)59
STR. NO. 52-308-411 — HS-20

PENNINGTON COUNTY
S. D. DEPT. OF TRANSPORTATION
FEBRUARY 2020

DESIGNED BY	CK. DES. BY	DRAFTED BY	
ML	JH	JW	BRIDGE ENGINEER

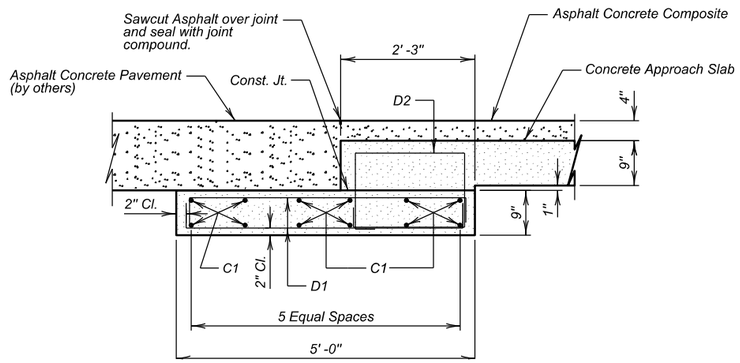

SECTION B-B
SLEEPER SLAB AT ABUTMENT

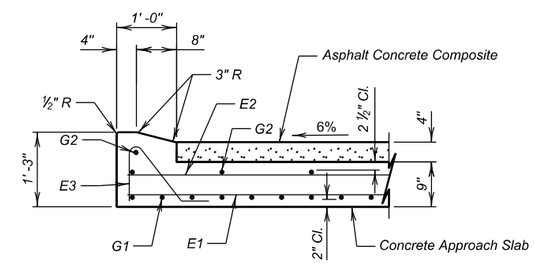

SECTION C-C
CURB DETAIL

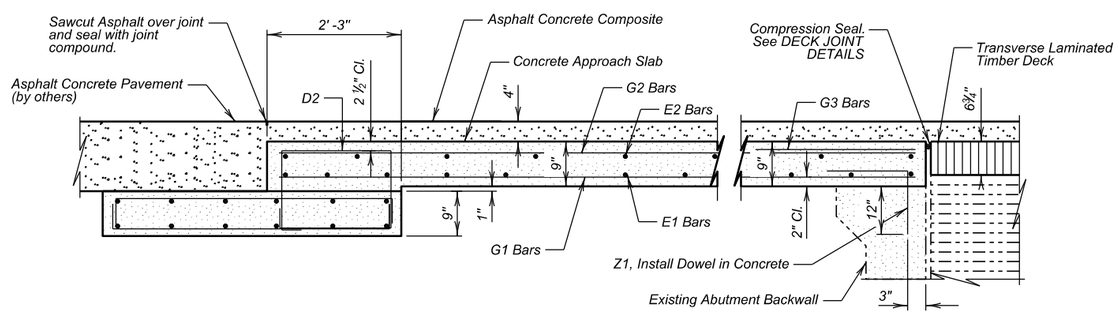

SECTION A-A
APPROACH SLAB AT ABUTMENT

REGISTERED PROFESSIONAL ENGINEER
REG. NO.
13352
JAN O.
HANSEN
SOUTH DAKOTA
4/09/2021

APPROACH SLAB DETAILS
FOR
170'-0" TIMBER GIRDER BRIDGE

26'-0" ROADWAY — 0 SKEW
OVER US 16A W — SEC. 31-TIS-R6E
STA. 8+99.91 TO 10+65.62 — P016A(08)59
STR. NO. 52-308-411 — HS-20

PENNINGTON COUNTY
S. D. DEPT. OF TRANSPORTATION
FEBRUARY 2020

DESIGNED BY	CK. DES. BY	DRAFTED BY	
ML	JH	JW	BRIDGE ENGINEER

STATE OF	PROJECT	SHEET NO.	TOTAL SHEETS
S.D.	P016A(08)59	E31	E109

FOR BIDDING PURPOSES ONLY

Revised: 4/6/2021 MNL

NOTE

Field drilling or cutting not shown on these plans is not allowed without engineering approval. All field drilled holes or cut surfaces require Triple CN Treatment then sealing with Anchor Seal.

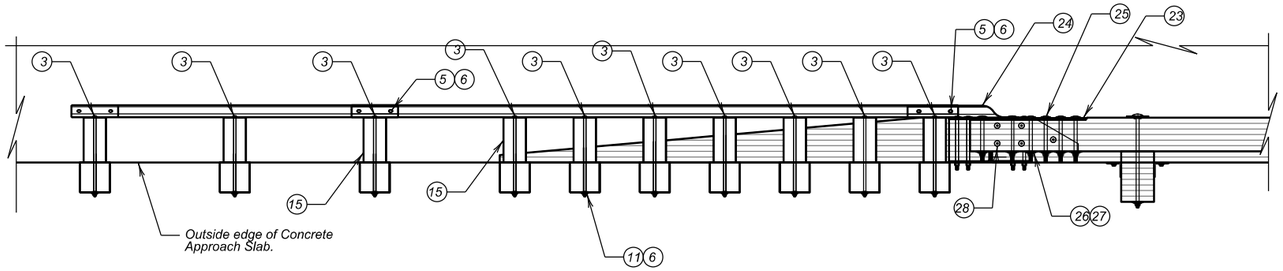

RAIL PLAN

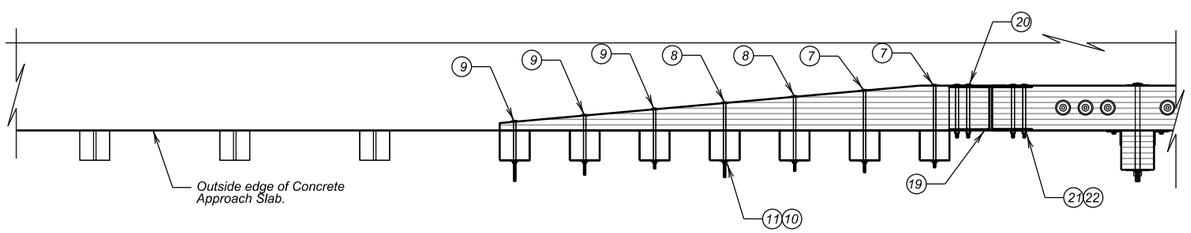

CURB PLAN

	GUARD RAIL TRANSITION
	PARTS FOR FABRICATION:
	ITEM
1	Thrie-Beam Rail - 10GA x 13'-6½"
2	Thrie Beam to W-Beam Transition - 12GA x 7'-3½"
	ITEM
3	⅝" x 22" Guard Rail Bolt (Button Head)
5	⅝" x 2" Guard Rail Bolt (Button Head)
6	⅝" Guard Rail Nut (Heavy Hex)
7	⅝" x 22" Timber Bolt
8	⅝" x 20" Timber Bolt
9	⅝" x 16" Timber Bolt
10	⅝" Hex Nut
11	⅝" Flat Washer
	TIMBER:
	ITEM
12	Curb Transition Block (GLB 1'-0¼" x 7½" x 10'-11⅛")
13	Post (DF 8" x 8" x 6'-6")
14	Post (DF 8" x 8" x 6'-0")
15	Post Spacer (DF 6" x 1'-0" x 1'-8")

	CURB TRANSITION SPLICE
	PARTS FOR FABRICATION:
	ITEM
19	Curb Transition Splice Bracket
	ITEM
20	¾" x 14" Timber Bolt (No Lugs)
21	¾" Hex Nut
22	¾" Lock Washer
	RAIL TRANSITION SPLICE
	PARTS FOR FABRICATION:
	ITEM
23	Rail Transition Splice Plate
24	Thrie-Beam Terminal - 10GA
	ITEM
25	⅞" x 12" Timber Bolt (No Lugs)
26	⅞" Hex Nut
27	⅞" Maleable Iron Washer
28	½" x 22" Timber Bolt
29	½" Hex Nut
30	½" Maleable Iron Washer
	TIMBER:
	ITEM
32	Rail Transition Block (GLB 8¾" x 7½" x 2'-5")

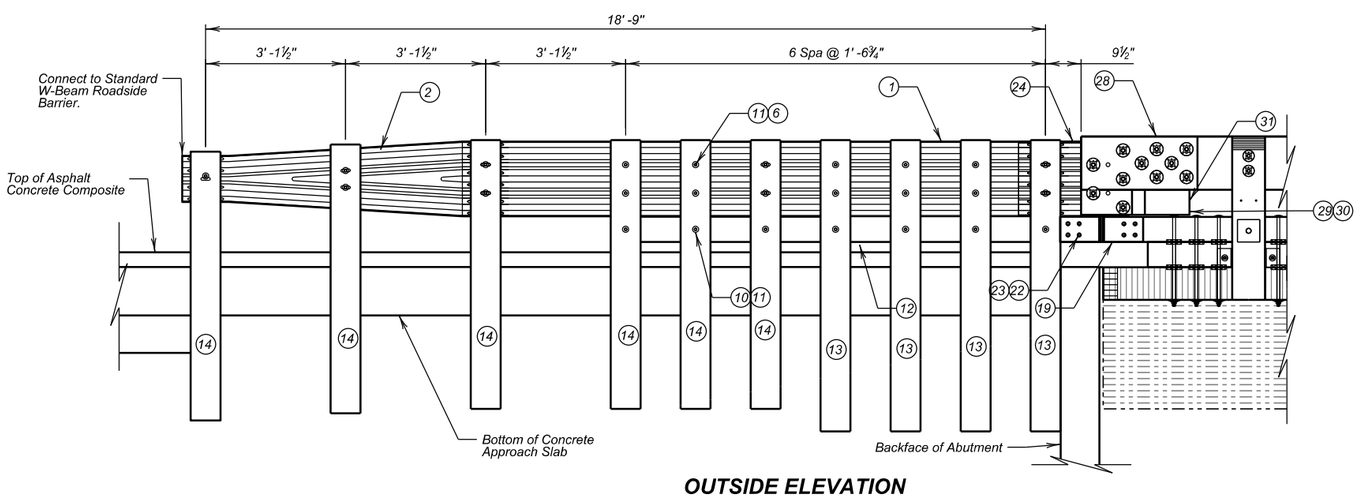

OUTSIDE ELEVATION

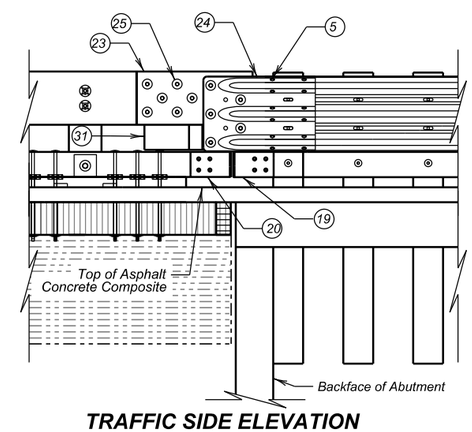

TRAFFIC SIDE ELEVATION

REGISTERED PROFESSIONAL ENGINEER
REG. NO. 13352
JAN O. HANSEN
SOUTH DAKOTA
4/09/2021

APPROACH GUARDRAIL ASSEMBLY
FOR
170'-0" TIMBER GIRDER BRIDGE

26'-0" ROADWAY — 0 SKEW
OVER US 16A W — SEC. 31-TIS-R6E
STA. 8+99.91 TO 10+65.62 — P016A(08)59
STR. NO. 52-308-411 — HS-20

PENNINGTON COUNTY
S. D. DEPT. OF TRANSPORTATION
FEBRUARY 2020

DESIGNED BY	CK. DES. BY	DRAFTED BY	
ML	JH	JW	BRIDGE ENGINEER

STATE OF	PROJECT	SHEET NO.	TOTAL SHEETS
S.D.	P016A(08)59	E32	E109

FOR BIDDING PURPOSES ONLY

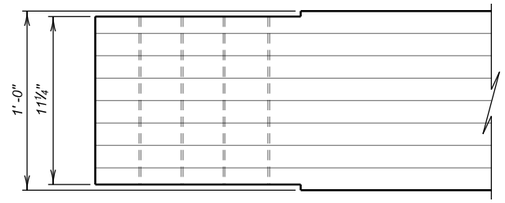

CURB END AT TRANSITION PLAN

NOTE:

All treatment holes and Bolt Locations may be adjusted +/- 1½" from their anticipated location.

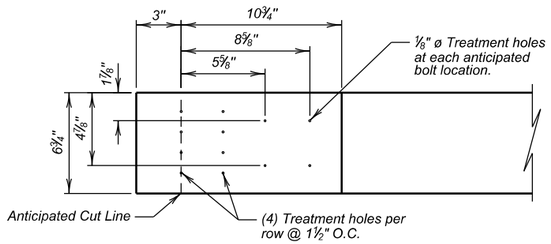

CURB END AT TRANSITION ELEVATION

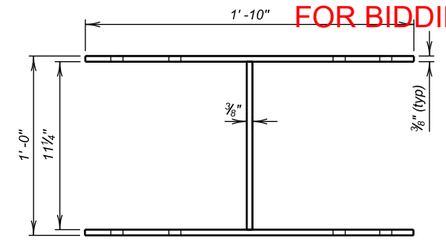

CURB TRANSITION SPLICE BRACKET PLAN

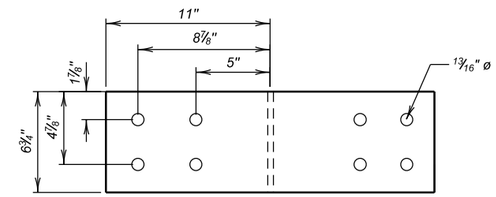

CURB TRANSITION SPLICE BRACKET ELEVATION

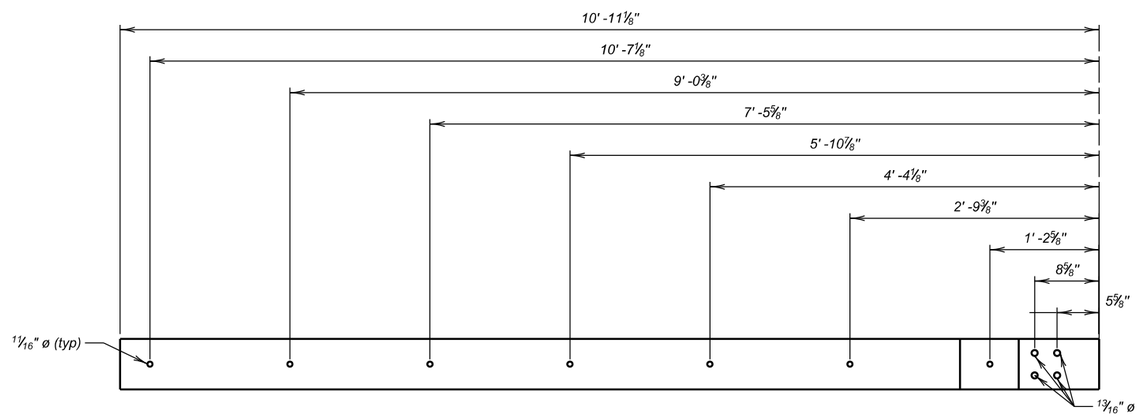

CURB TRANSITION ELEVATION

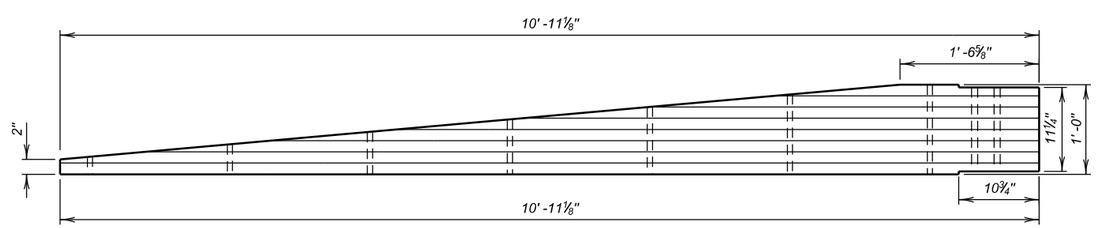

CURB TRANSITION PLAN

REGISTERED PROFESSIONAL ENGINEER
REG. NO. 13352
JAN O. HANSEN
SOUTH DAKOTA
4/09/2021

CURB TRANSITION DETAILS
FOR
170'-0" TIMBER GIRDER BRIDGE

26'-0" ROADWAY — 0 SKEW
OVER US 16A W — SEC. 31-TIS-R6E
STA. 8+99.91 TO 10+65.62 — P016A(08)59
STR. NO. 52-308-411 — HS-20

PENNINGTON COUNTY
S. D. DEPT. OF TRANSPORTATION
FEBRUARY 2020

DESIGNED BY	CK. DES. BY	DRAFTED BY	
ML	JH	JW	BRIDGE ENGINEER

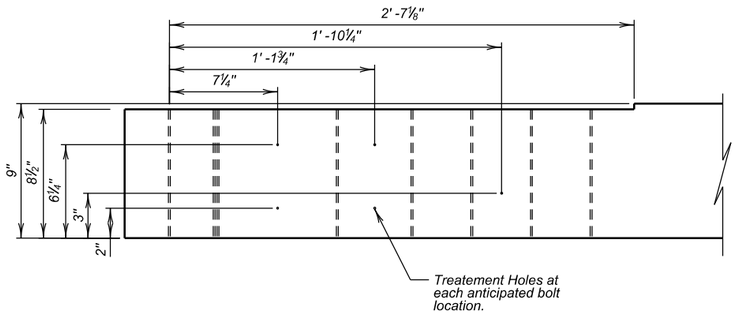

NOTE:

All treatment holes and Bolt Locations may be adjusted +/- 1½" from their anticipated location.

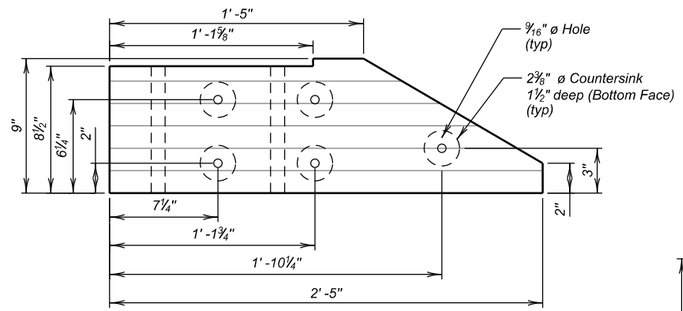

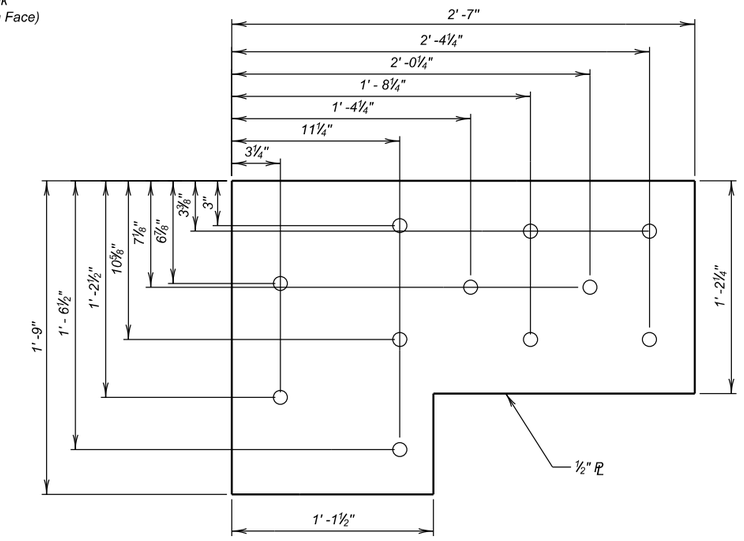

RAIL TRANSITION SPLICE PLATE

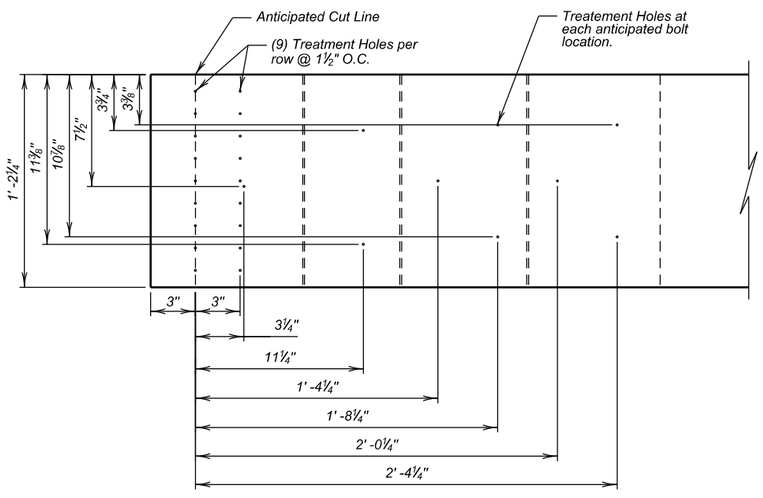

GUARDRAIL END AT TRANSITION

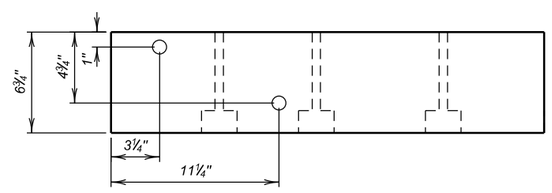

RAIL TRANSITION BLOCK

REGISTERED PROFESSIONAL ENGINEER
REG. NO.
13352
JAN O.
HANSEN
SOUTH DAKOTA
4/09/2021

CURB TRANSITION DETAILS (CONT.)
FOR
170'-0" TIMBER GIRDER BRIDGE

26'-0" ROADWAY — 0 SKEW
OVER US 16A W — SEC. 31-TIS-R6E
STA. 8+99.91 TO 10+65.62 — P016A(08)59
STR. NO. 52-308-411 — HS-20

PENNINGTON COUNTY
S. D. DEPT. OF TRANSPORTATION
FEBRUARY 2020

DESIGNED BY	CK. DES. BY	DRAFTED BY	
ML	JH	JW	BRIDGE ENGINEER

FOR BIDDING PURPOSES ONLY

Revised: 8/4/2020 MNL

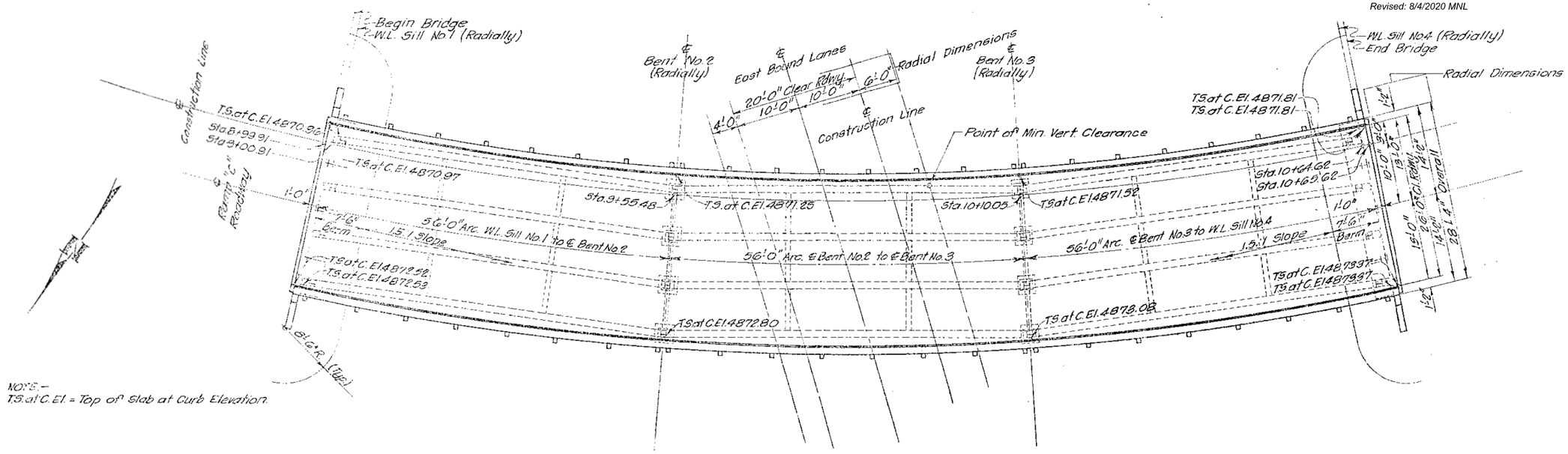

NOTE:–
T.S. at C.El. = Top of Slab at Curb Elevation.

PLAN

Ramp "C" Curve Data:

P.C.C. Sta.9+34.27
P.I. Sta 13+16.24 = 277.41' Rt. of Sta. 14+07.83 (Keystone Survey)
P.C.C. Sta.15+34.27
Δ 90°00' Lt.
D. 15°00'
T. 381.97'
L. 600.00'
R. 381.97'

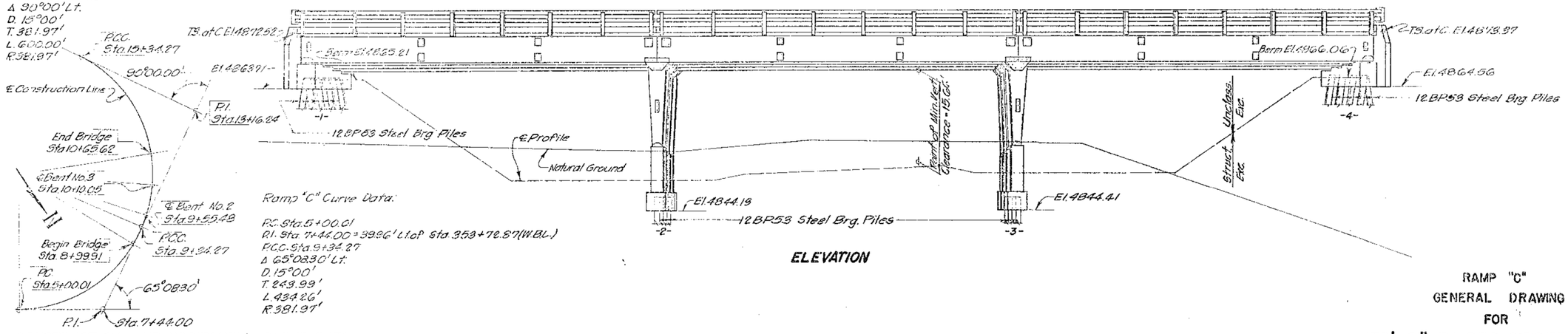

ELEVATION

CONSTRUCTION LINE HORIZONTAL CURVE DATA

P.I. Sta. 11+60.00 at Construction Line
Elev. 4871.89 (Subgrade at Construction Line)
V.C. 200'

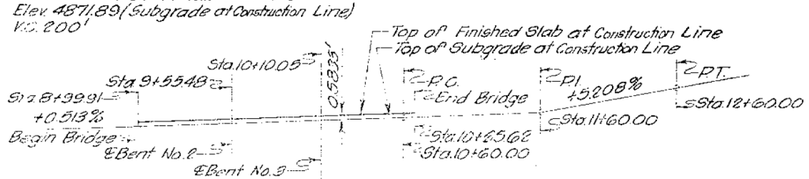

VERTICAL CURVE DATA

RAMP "C"
GENERAL DRAWING
FOR
170'-0" TIMBER GIRDER BRIDGE
26'-0" ROADWAY
OVER E.B.L.-U.S. NO. 16 SEC. 31-T1S-R6E
STA. 8+99.91 TO 10+65.62 FO17-1(9)
PENNINGTON COUNTY
SOUTH DAKOTA HS20-44
DEPARTMENT OF HIGHWAYS

ORIGINAL CONSTRUCTION PLANS

FOR BIDDING PURPOSES ONLY

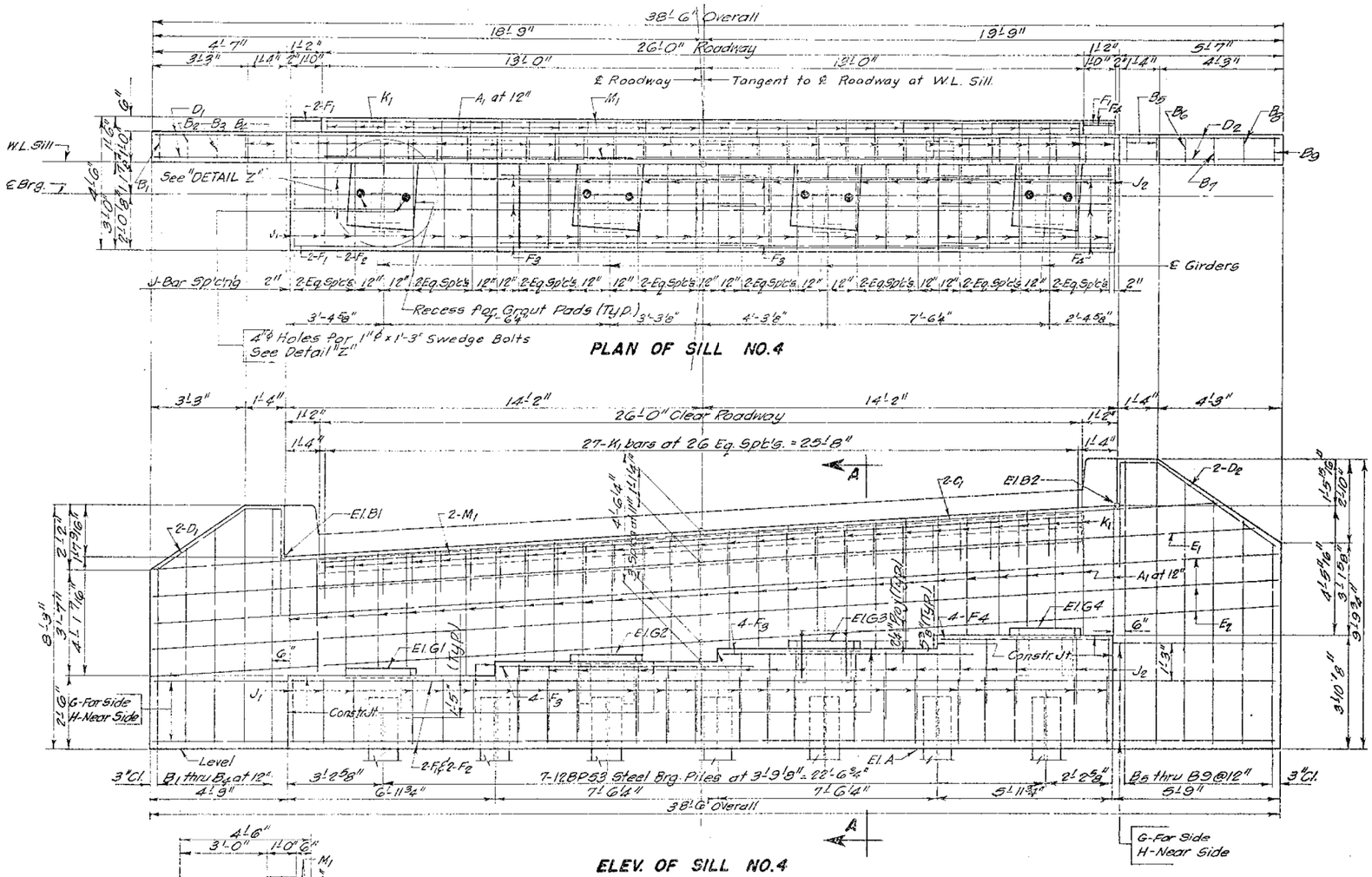

*REINFORCING SCHEDULE

Mk	No.	Size	Length	Type	Bending Details
A1	29	4	11'-0"	S10	
B1	1	4	14'-0"	T1	
B2	1	4	15'-3"	T1	
B3	1	4	16'-6"	T1	
B4	2	4	18'-0"	T1	
B5	2	4	21'-0"	T1	
B6	1	4	19'-6"	T1	
B7	1	4	18'-3"	T1	
B8	1	4	17'-0"	T1	
B9	1	4	15'-6"	T1	
C1	2	6	36'-3"	Str	
D1	2	5	8'-3"	16A	
D2	2	5	9'-3"	16A	
E1	2	4	37'-3"	Str	
E2	6	4	38'-3"	Str	
F1	4	11	27'-6"	Str	
F2	4	8	27'-6"	Str	
F3	8	4	8'-9"	Str	
F4	4	4	5'-6"	Str	
G	5	11	9'-0"	Str	
H	5	4	9'-0"	Str	
J1	23	4	13'-6"	T1	
J2	17	4	8'-9"	2	
K1	27	4	31'-6"	12	
M1	2	4	25'-6"	Str	

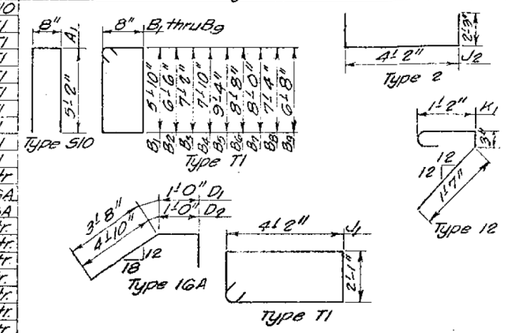

NOTE - All dimensions are out to out of bars.

* For One Sill

ESTIMATED QUANTITIES

ITEM	UNIT	Sill No. 1	Sill No. 4
*Class "A" Concrete	Cu. Yds.	22.9	22.9
Reinforcing Steel	Lbs.	2,300	2,300
Structure Excavation	Cu. Yds.	18	19
12BP53 Steel Brg. Piles	No.	7	7

*Includes 0.2 Cu. Yds. for grout pads.
#See Layout for length of 12BP53 Steel Bearing Piles

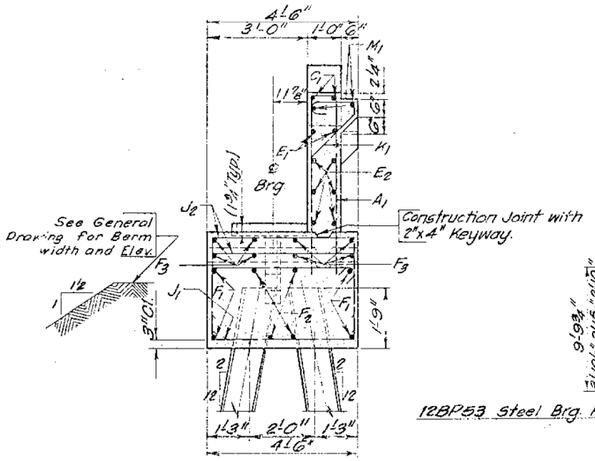

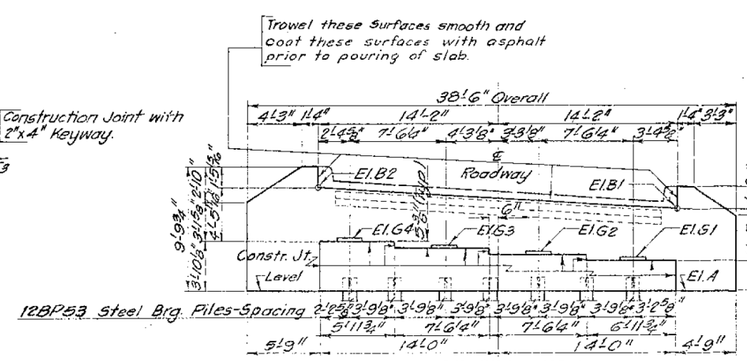

ELEVATIONS

Elevation	A	B1	B2	G1	G2	G3	G4
Sill No. 1	4863.71	4870.33	4872.03	4866.46	4866.914	4867.306	4867.817
Sill No. 4	4864.56	4871.17	4872.87	4867.305	4867.756	4868.207	4868.658

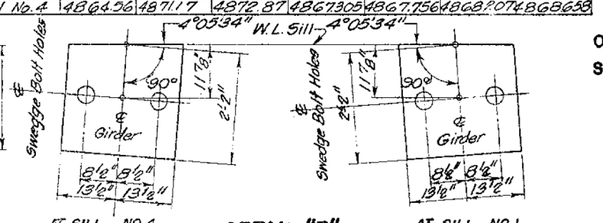

RAMP "C"
SILL DETAILS
FOR
170'-0" TIMBER GIRDER BRIDGE
26'-0" ROADWAY

OVER E.B.L.-U.S. NO.16 — SEC. 31-T19-R6E
STA. 8+99.91 TO 10+65.62 — F017-1(9)
PENNINGTON COUNTY
SOUTH DAKOTA — HS 20-44
DEPARTMENT OF HIGHWAYS
AUGUST 1966

ORIGINAL CONSTRUCTION PLANS

FOR BIDDING PURPOSES ONLY

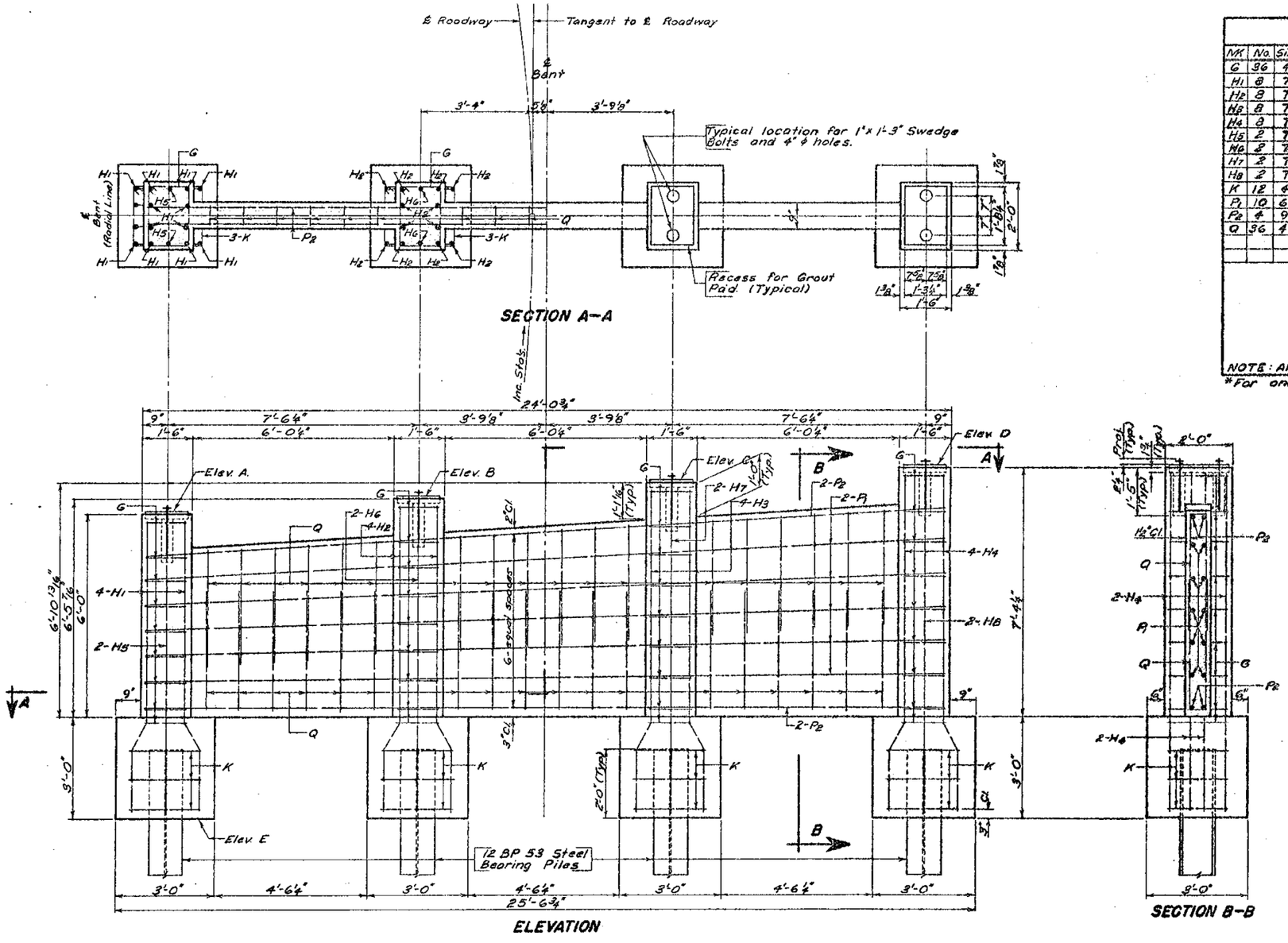

*REINFORCING SCHEDULE

MK	No.	Size	Length	Type
G	36	4	6'-6"	T1
H1	8	7	8'-9"	19
H2	8	7	9'-3"	19
H3	8	7	9'-6"	19
H4	8	7	10'-0"	19
H5	2	7	8'-6"	Str.
H6	2	7	9'-0"	Str.
H7	2	7	9'-8"	Str.
H8	2	7	9'-9"	Str.
K	12	4	8'-3"	T1
P1	10	6	28'-9"	Str.
P2	4	9	28'-9"	Str.
Q	36	4	7'-6"	S10

Bending Details

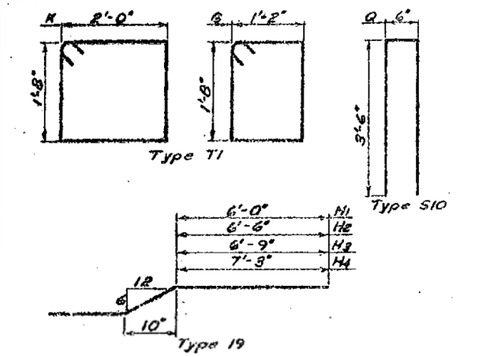

NOTE: All dimensions are out to out of bars.

*For one Bent Pedestal.

*ESTIMATED QUANTITIES

ITEM	UNIT	QUANTITY
Class "A" Concrete	Cu. Yds.	8.2
Reinforcing Steel	Lbs.	1046
12 BP53 Steel Bearing Piles	No.	4
Structure Excavation (See Layout)		

*Quantities for one Bent Pedestal.
Includes .01 Cu. Yds. for grout.
#See Layout for length of 12BP53 Steel Bearing Piles.

TABLE OF ELEVATIONS

Location	Elev. A	Elev. B	Elev. C	Elev. D	Elev. E
Bent No. 2	4853.212	4853.663	4854.114	4854.566	4844.13
Bent No. 3	4853.492	4853.943	4854.394	4854.845	4844.41

RAMP "C"
BENT PEDESTALS
FOR
170'-0" TIMBER GIRDER BRIDGE
26'-0" ROADWAY
OVER E.B.L.-U.S. NO. 16 SEC. 31-T1S-R6E
STA. 8+99.91 TO 10+65.62 F017-1(9)
PENNINGTON COUNTY
SOUTH DAKOTA HS 20-44
DEPARTMENT OF HIGHWAYS
AUGUST 1966

ORIGINAL CONSTRUCTION PLANS

FOR BIDDING PURPOSES ONLY

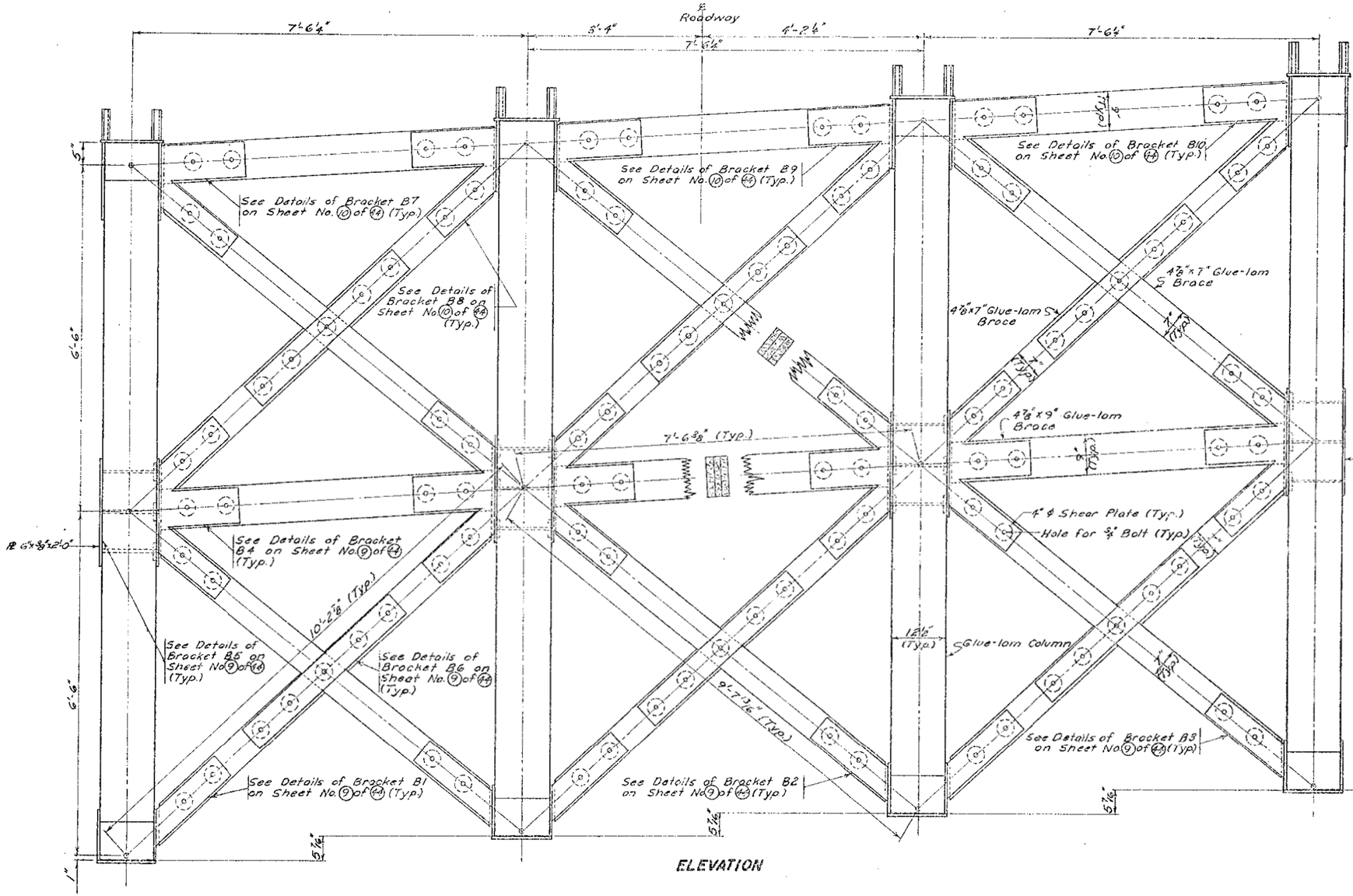

BENT "G"

DETAILS OF BENT

FOR

170'-0" TIMBER GIRDER BRIDGE

26'-0" ROADWAY

OVER E.B.L.-U.S. NO. 16 SEC. 31-T1S-R6E

STA. 6+99.91 TO 10+65.62 F017-1(9)

PENNINGTON COUNTY

SOUTH DAKOTA HS 20-44

DEPARTMENT OF HIGHWAYS

AUGUST 1963

ORIGINAL CONSTRUCTION PLANS

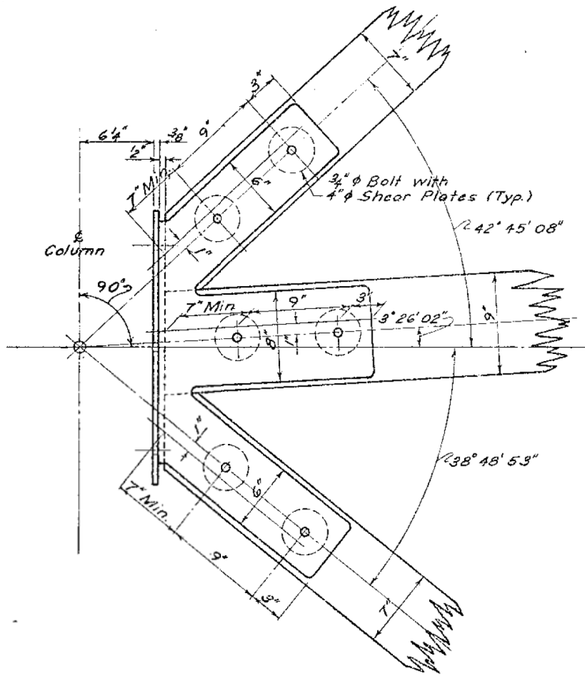

DETAILS OF BRACKET B4

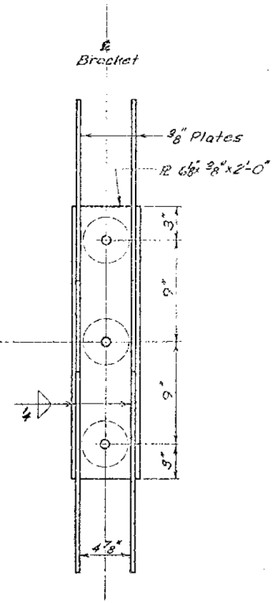

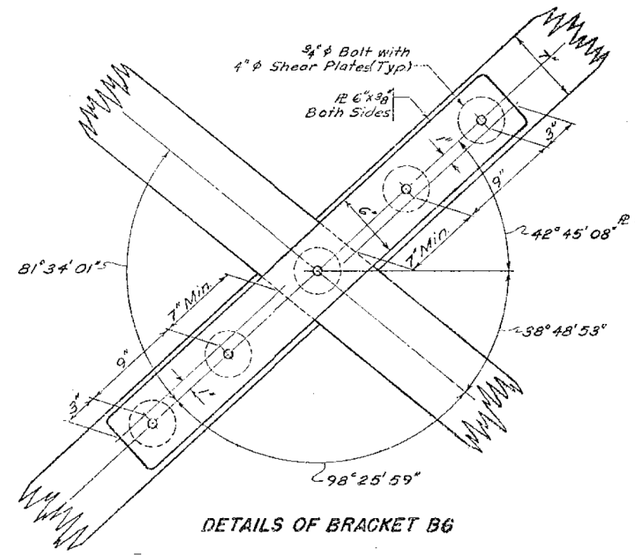

DETAILS OF BRACKET B6

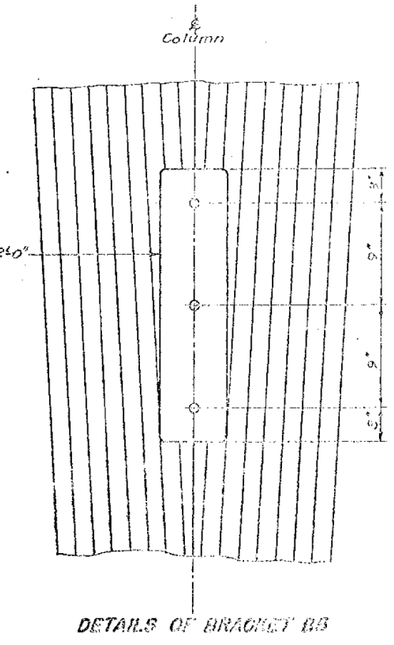

DETAILS OF BRACKET B3

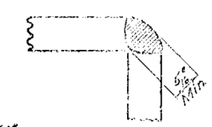

DETAIL "A"

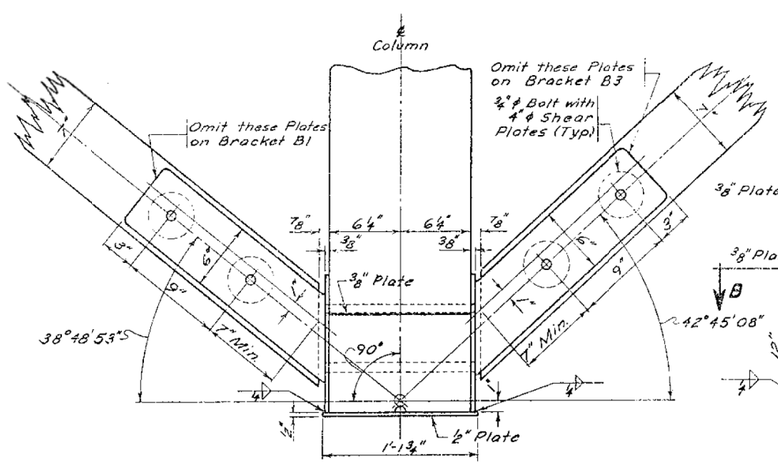

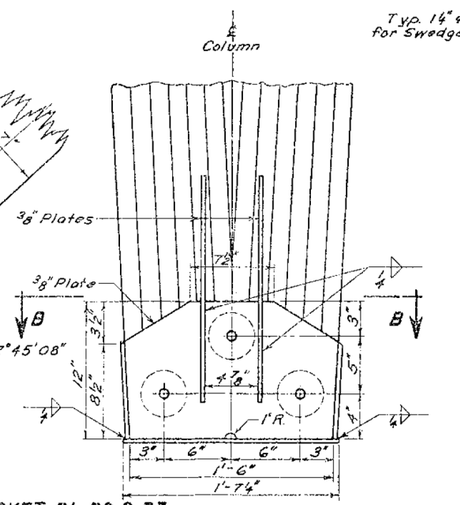

DETAILS OF BRACKET B1, B2 & B3

NOTE: Brackets B1 and B3 are identical to Bracket B2, except as shown.

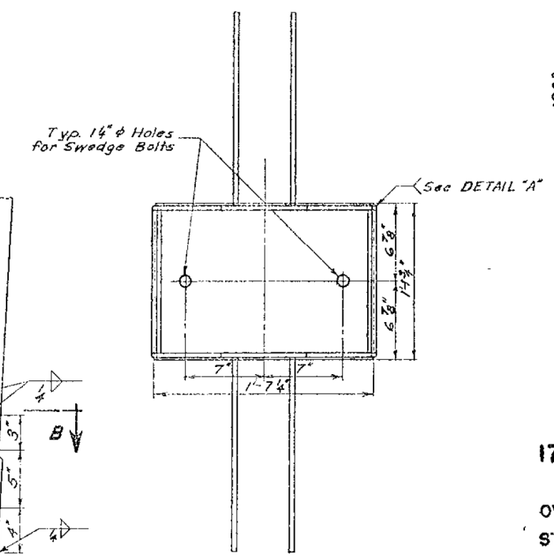

VIEW B-B

RAMP "G"

DETAILS OF BENT CONNECTIONS

FOR

170'-0" TIMBER GIRDER BRIDGE

26'-0" ROADWAY

OVER E.B.L.-U.S. NO.16 SEC. 31-T1S-R6E

STA. 8+99.91 TO 10+65.62 F017-1(9)

PENNINGTON COUNTY

SOUTH DAKOTA HS 20-44

DEPARTMENT OF HIGHWAYS

AUGUST 1966

ORIGINAL CONSTRUCTION PLANS

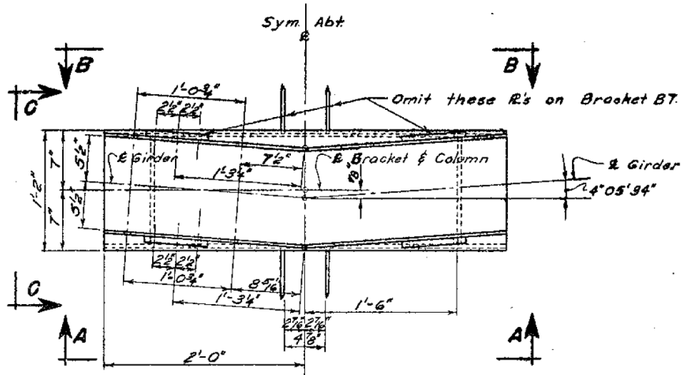

PLAN VIEW OF BRACKET B9
(2 Required)

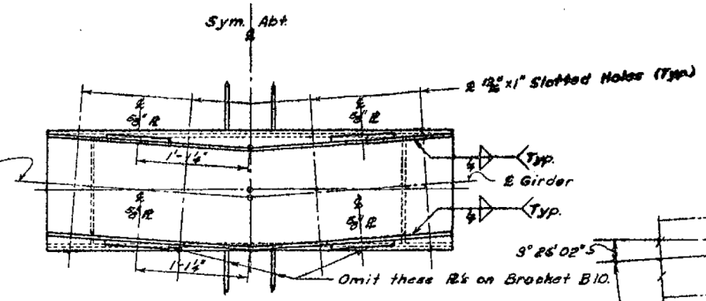

PLAN VIEW OF BRACKET B8

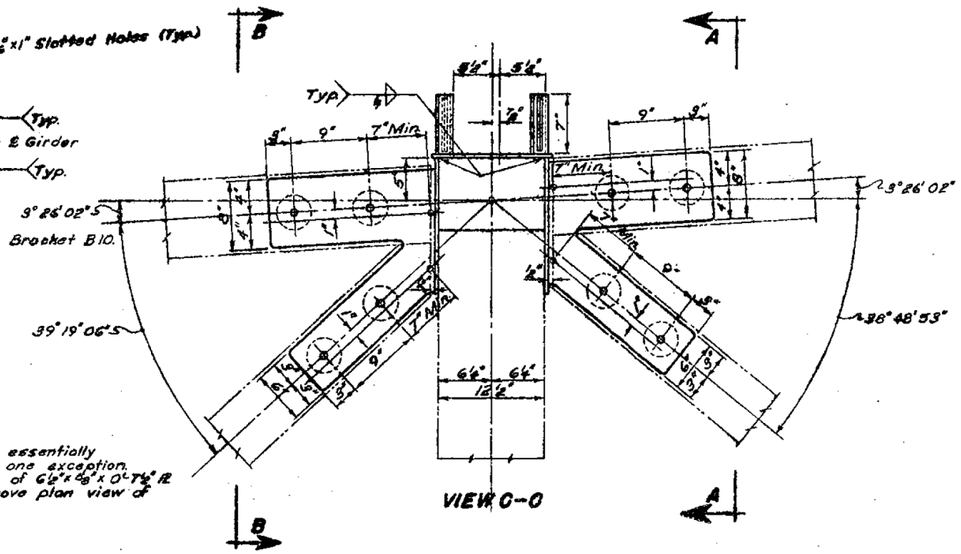

VIEW C-C

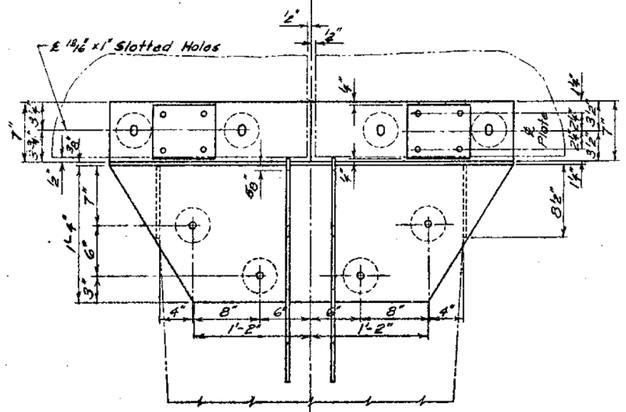

VIEW A-A

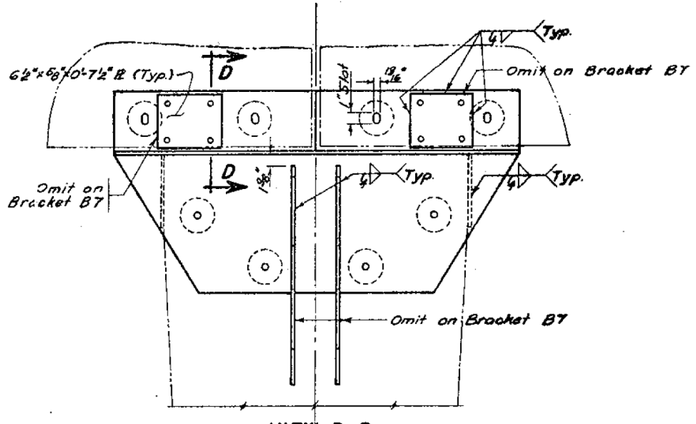

VIEW B-B

BRACKET NOTES—

BRACKET B8 (2 Required):
The details and dimensions for Bracket B8 are essentially the same as shown for Bracket B9 with only one exception. The distance from the ℄ of Bracket to center of 6½"x⅝"x 0'-7½" ℞ changes from 1'-3¼" to 1'-1¼" as shown in the above plan view of Bracket B8.

BRACKET B7 (2 Required):
Refer to detail for Bracket B9. Omit the four plates indicated and use the dimensions for Bracket B9.

BRACKET B10 (2 Required):
Refer to detail for Bracket B8. Omit the four plates indicated and use the dimensions for Bracket B8.

NOTE: All ℞'s are ⅜", except as shown.

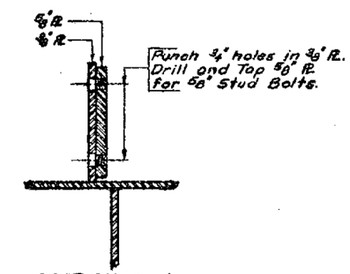

SECTION D-D

RAMP "C"
DETAILS OF COLUMN TO BEAM CONNECTION
FOR
170'-0" TIMBER GIRDER BRIDGE
26'-0" ROADWAY
OVER E.B.L.-U.S. NO.16 SEC.31-T1S-R6E
STA.8+99.91 TO 10+65.62 F017-1(9)
PENNINGTON COUNTY
SOUTH DAKOTA HS 20-44
DEPARTMENT OF HIGHWAYS
AUGUST 1966

ORIGINAL CONSTRUCTION PLANS

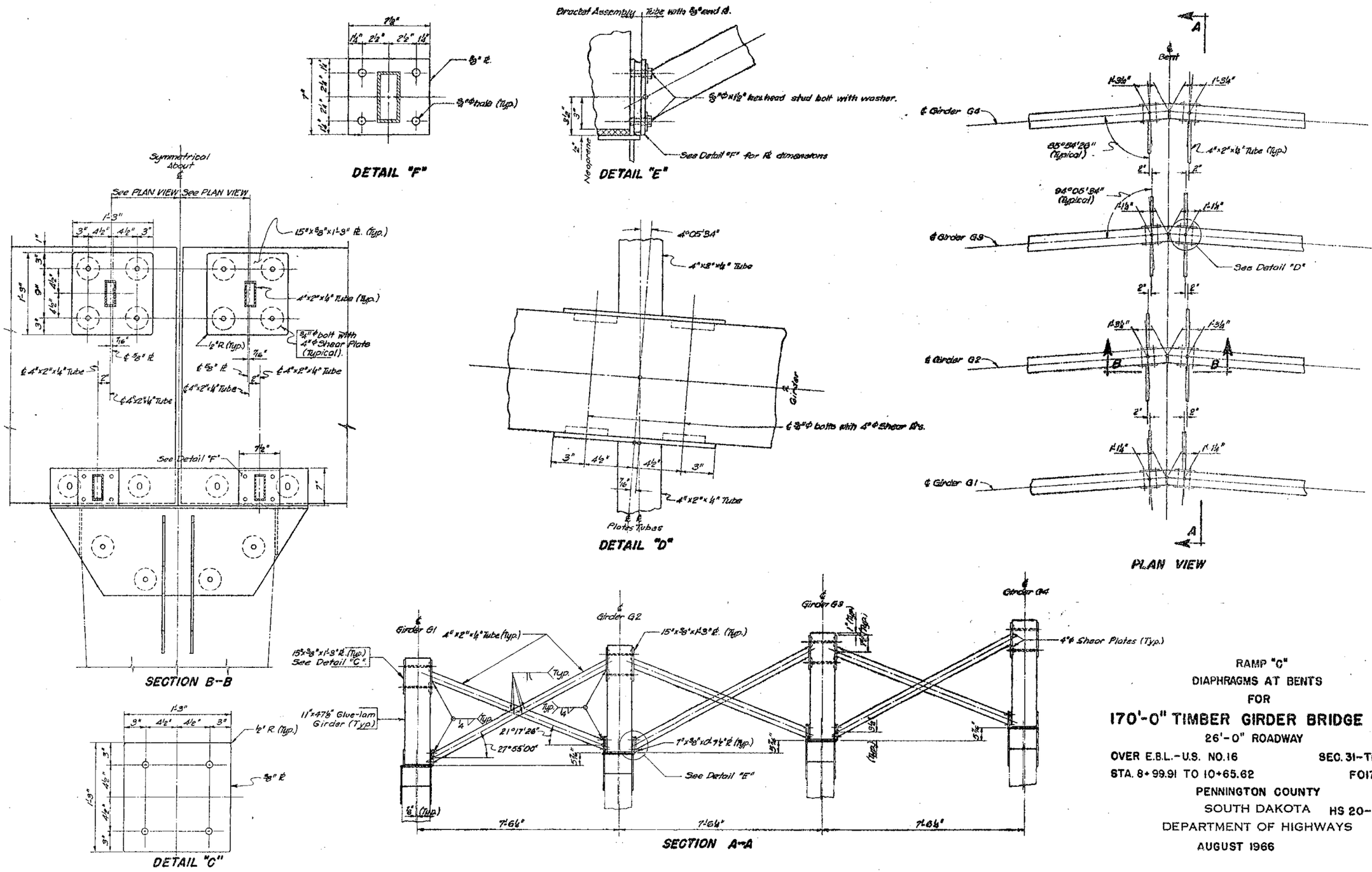

RAMP "C"
DIAPHRAGMS AT BENTS
FOR
170'-0" TIMBER GIRDER BRIDGE
26'-0" ROADWAY
OVER E.B.L.-U.S. NO.16 SEC. 31-T1S-R6E
STA. 8+99.91 TO 10+65.62 F017-1(9)
PENNINGTON COUNTY
SOUTH DAKOTA HS 20-44
DEPARTMENT OF HIGHWAYS
AUGUST 1966

ORIGINAL CONSTRUCTION PLANS

FOR BIDDING PURPOSES ONLY

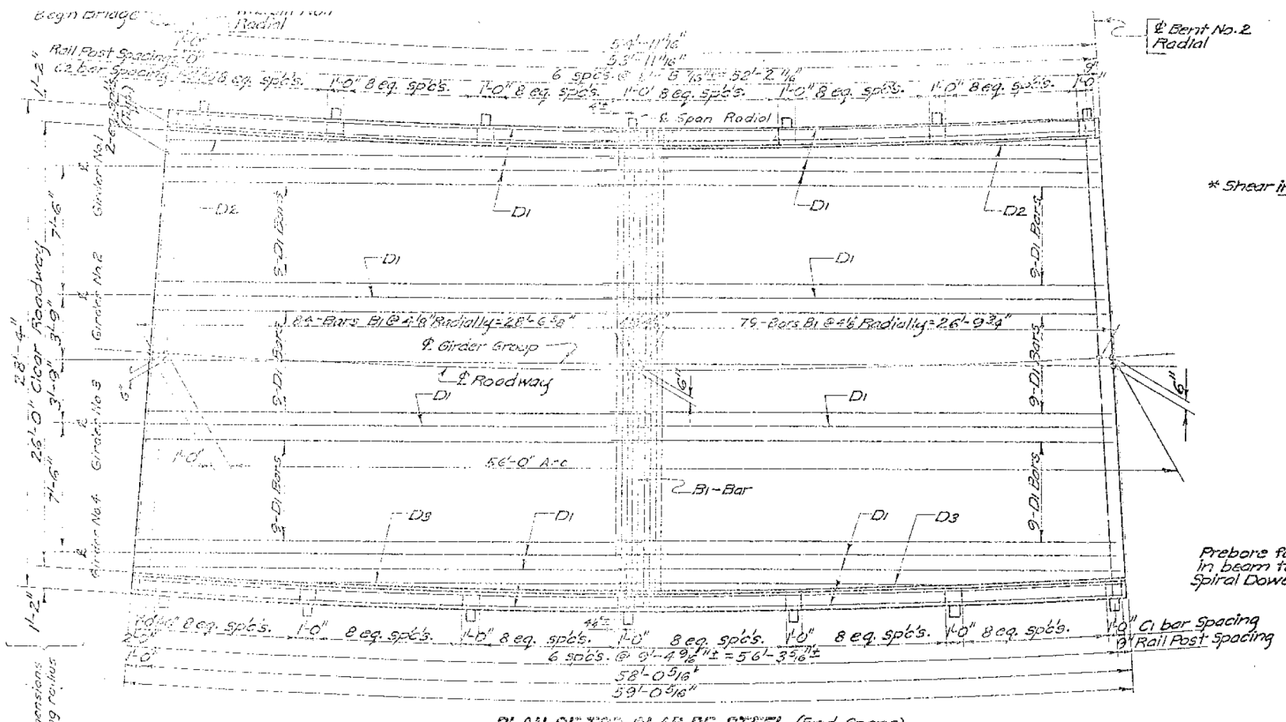

PLAN OF TOP SLAB RE-STEEL (End Spans)

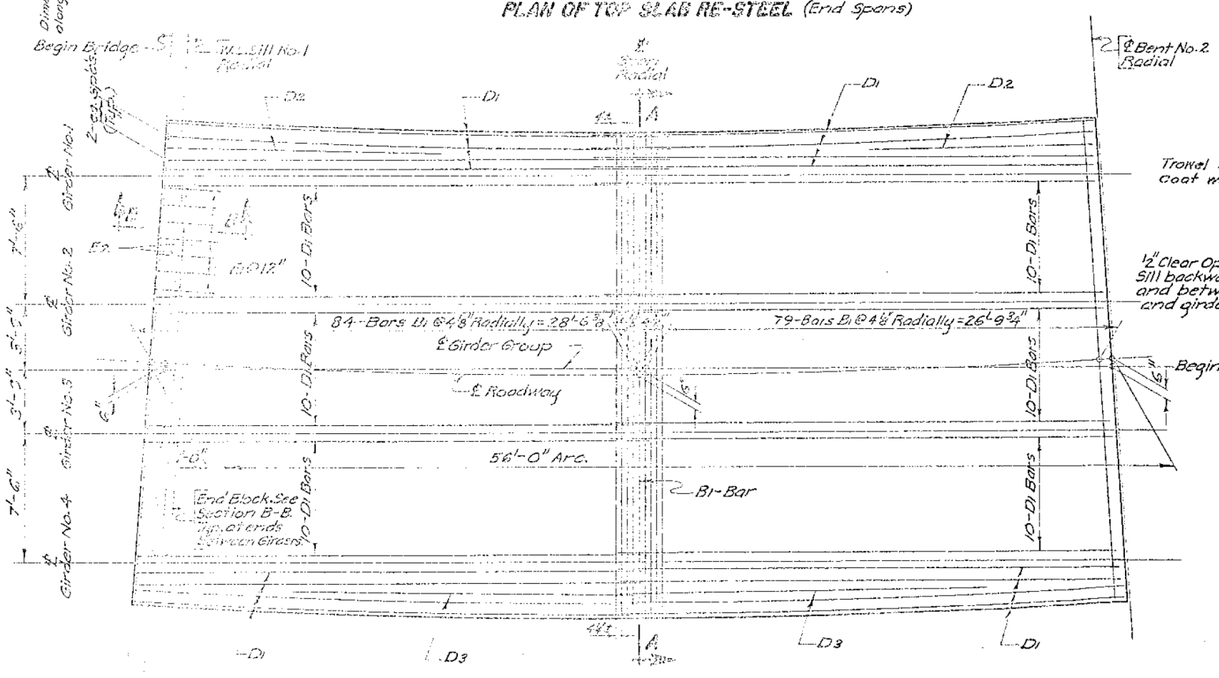

PLAN OF BOTTOM SLAB RE-STEEL (End Spans)

Length of Beam from ℄ Brg. to ℄ Brg = L										
L/10	L/10	L/10	L/10	L/10	L/10	L/10	L/10	L/10	L/10	
* Shear in Lbs/in	1465	1440	1300	1150	1000	1000	1150	1300	1440	1465

SHEAR DEVELOPMENT DIAGRAM

*NOTE: Shear in Lbs./in that must be developed by Shear Connectors. (Maximum Spacing 2'-0") Place Spiral Dowels equally between Shear developers. See General Notes for Shear Connector Requirements.

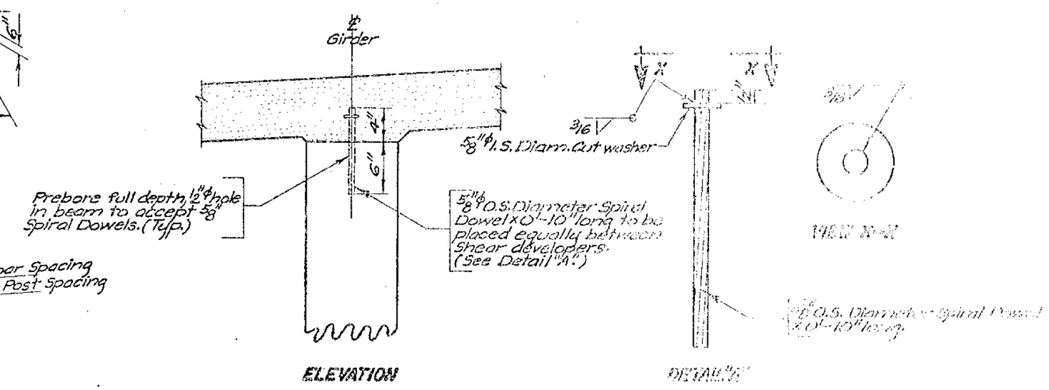

ELEVATION

DETAIL "A"

SPIRAL DOWEL DETAILS

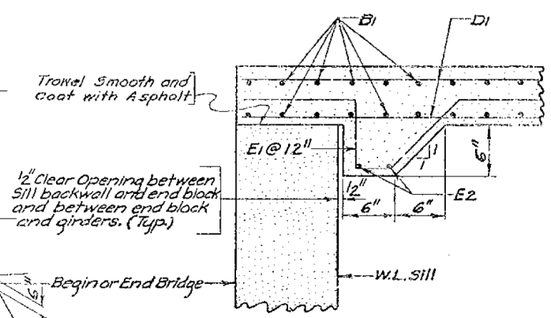

SECTION B-B

PLAN "B"

SLAB DETAILS - END SPAN

FOR

170'-0" TIMBER GIRDER BRIDGE

26'-0" ROADWAY

OVER E.B.L. - U.S. NO. 16 SEC. 31-T16-R6E

STA. 8499.91 TO 10365.62 P017-1(9)

PENNINGTON COUNTY

SOUTH DAKOTA H3 26-14

DEPARTMENT OF HIGHWAYS

AUGUST 1956

ORIGINAL CONSTRUCTION PLANS

FOR BIDDING PURPOSES ONLY

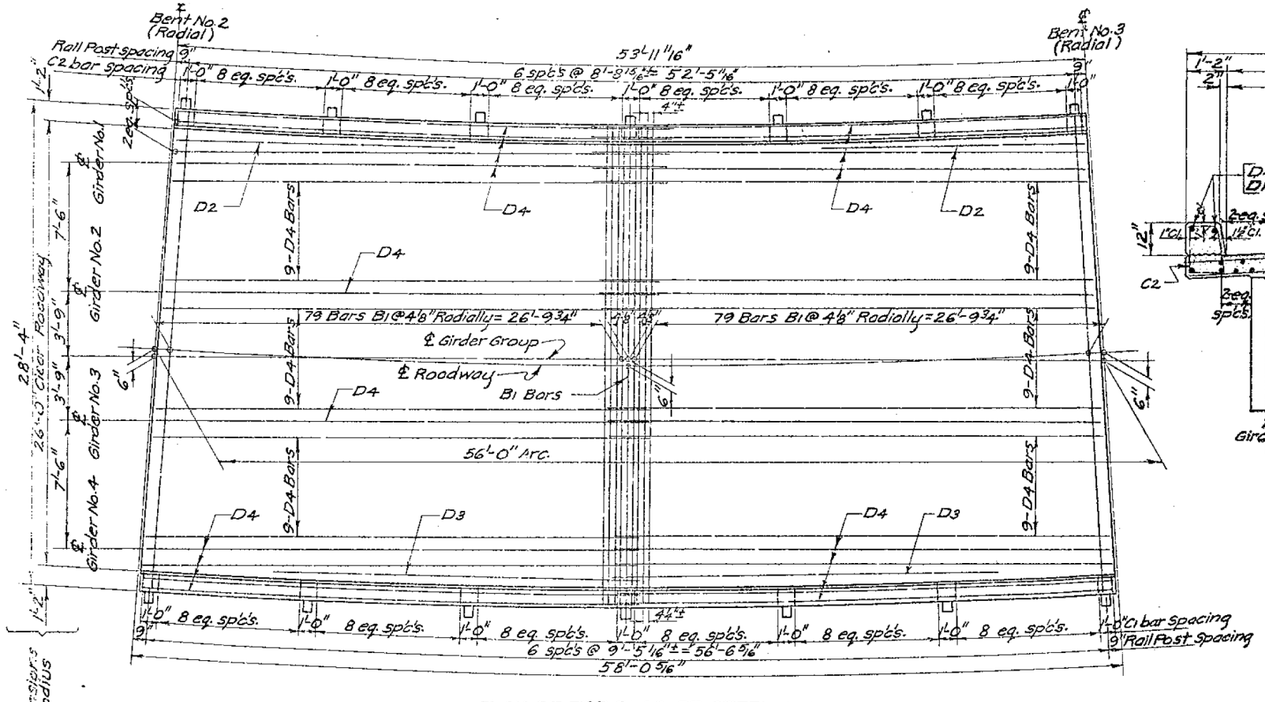

PLAN OF TOP SLAB RE-STEEL (Interior Span)

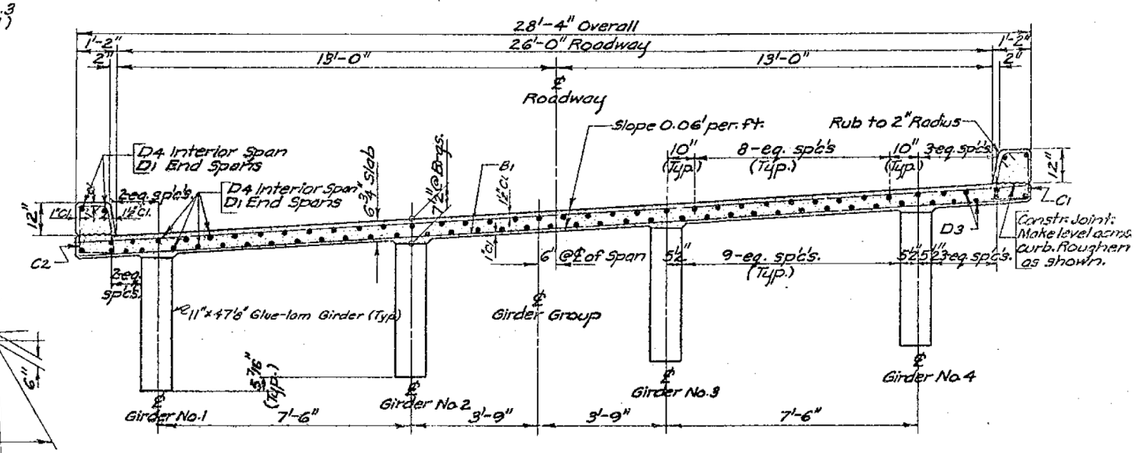

SECTION A--A
(Note; Splices not shown for Re-steel)

REINFORCING SCHEDULE

	Mk.	No.	Size	Length	Type
℄ END SPAN	B1	328	5	28'-0"	Str.
	C1	57	4	5'-6"	T1
	C2	57	4	5'-9"	T1
	D1	158	5	30'-0"	Str.
	D2	4	5	15'-6"	Str.
	D3	4	5	22'-0"	Str.
	E1	21	4	4'-9"	6A
	E2	6	4	6'-9"	Str.
INTERIOR SPAN	B1	318	5	28'-0"	Str.
	C1	56	4	5'-6"	T1
	C2	56	4	5'-9"	T1
	D2	4	5	15'-6"	Str.
	D3	4	5	22'-0"	Str.
	D4	158	5	29'-6"	Str.

Bending Details

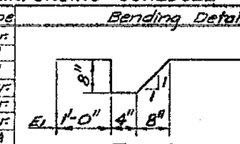

Type 6A

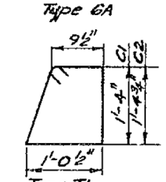

Type T1

NOTE: All dimensions are out to out of bars.

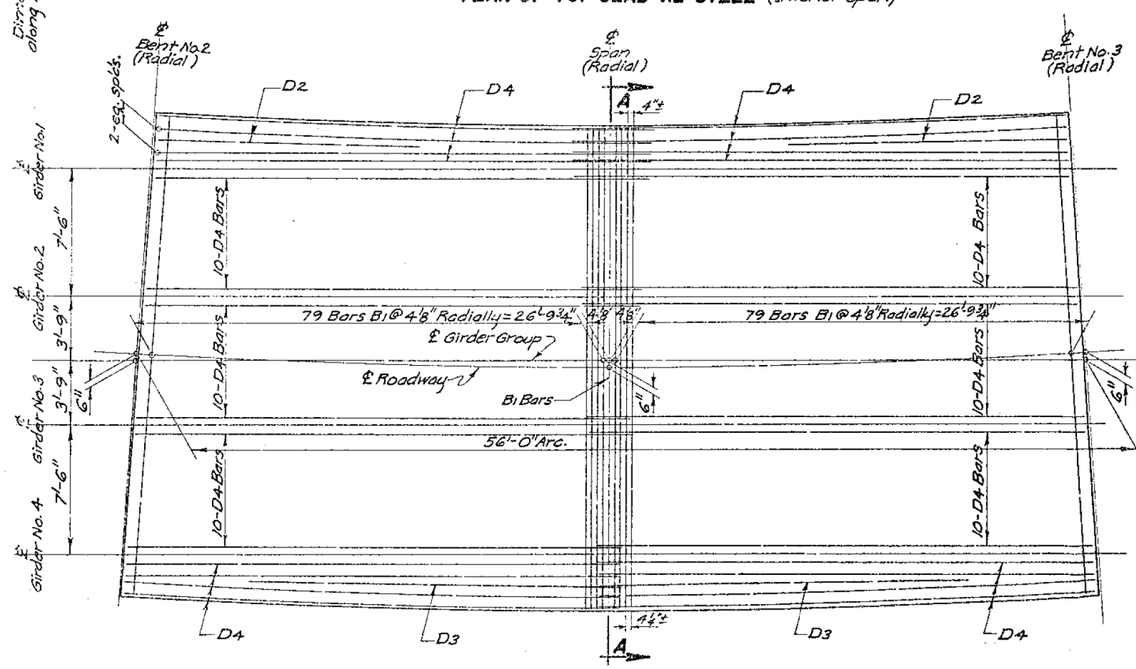

PLAN OF BOTTOM SLAB RE-STEEL (Interior Span)

ESTIMATED QUANTITIES

ITEM	UNIT	QUANTITY INTERIOR UNIT	QUANTITY *END UNITS
Class "A" Concrete	Cu. Yds.	37.6	77.4
Reinforcing Steel	Lbs.	14,725	30,400
Type RT-2 Steel Railing	Lin. Ft.	112.0	228.0

*For two End Spans.

RAMP "C"
SLAB DETAILS—INTERIOR SPAN
FOR
170'-0" TIMBER GIRDER BRIDGE
26'-0" ROADWAY
OVER E.B.L.-U.S. NO.16 SEC. 31-T1S-R6E
STA. 8+99.91 TO 10+65.62 F017-1(9)
PENNINGTON COUNTY
SOUTH DAKOTA HS 20-44
DEPARTMENT OF HIGHWAYS
AUGUST 1966

ORIGINAL CONSTRUCTION PLANS

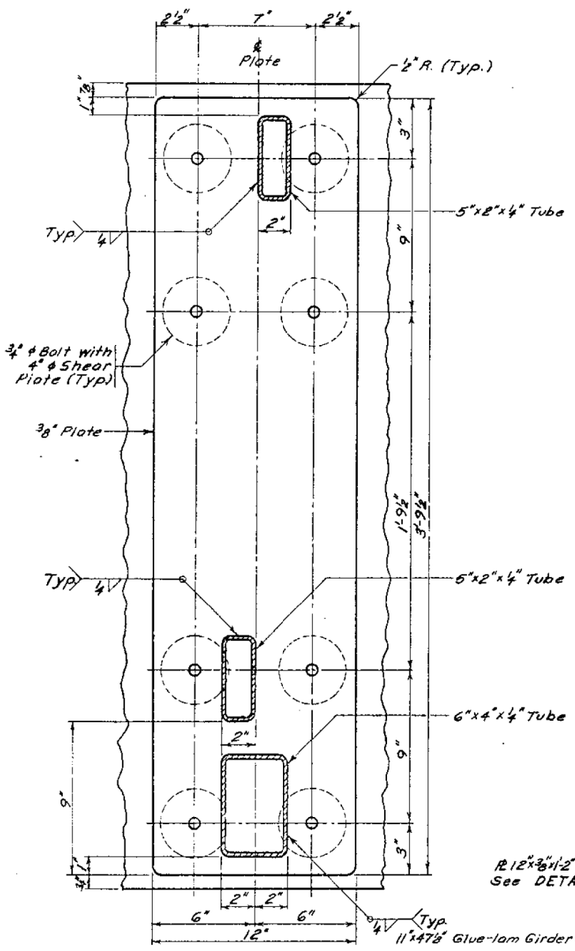

SECTION A–A

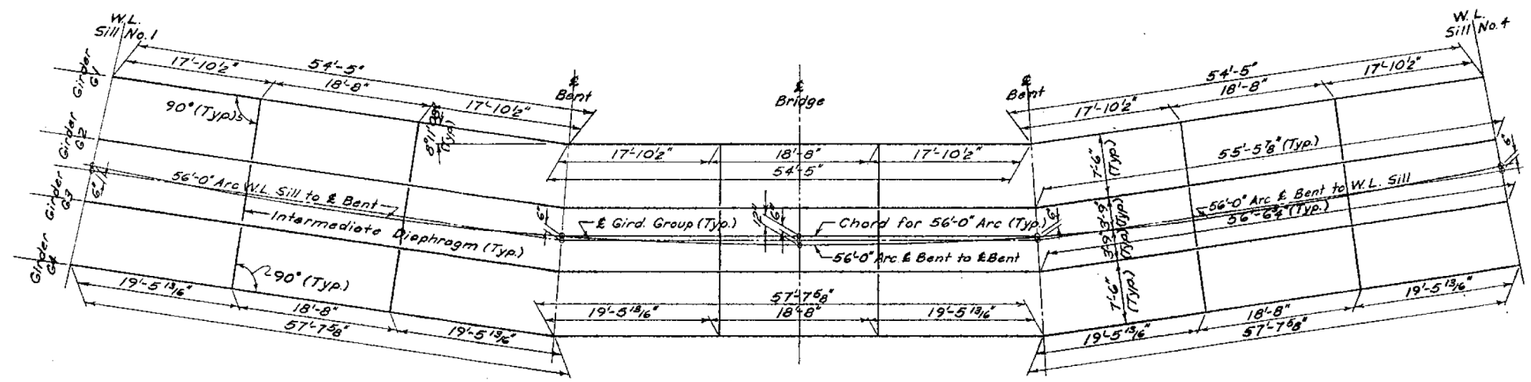

GIRDER & INTERMEDIATE DIAPHRAGM LAYOUT

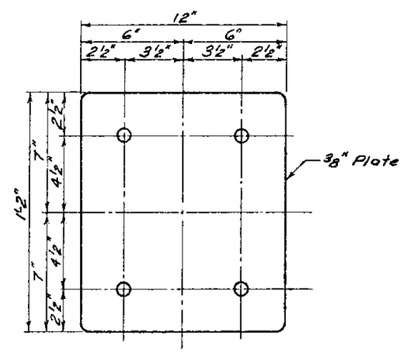

DETAIL "B"

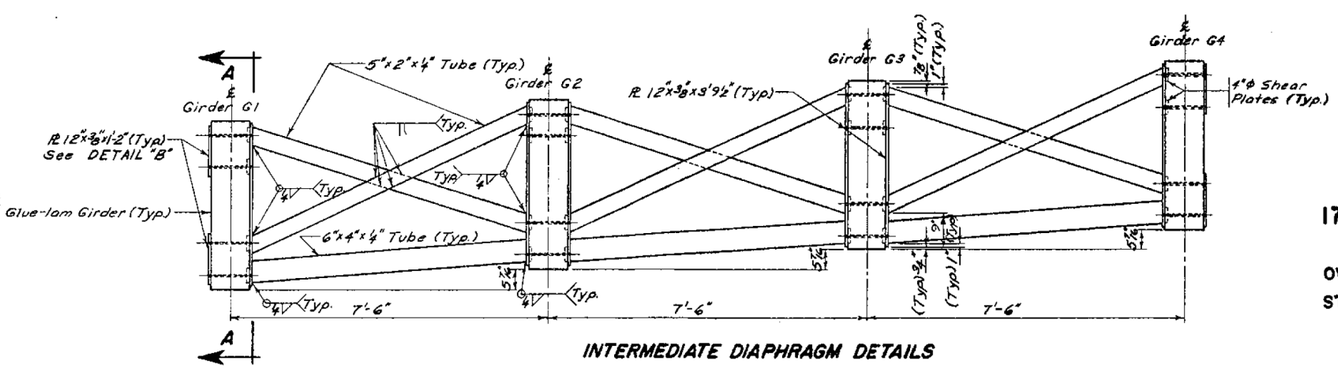

INTERMEDIATE DIAPHRAGM DETAILS

RAMP "C"

GIRDER LAYOUT AND DIAPHRAGM DETAILS

FOR

170'-0" TIMBER GIRDER BRIDGE

26'-0" ROADWAY

OVER E.B.L.-U.S. NO.16 SEC. 31-T1S-R6E

STA. 8+99.91 TO 10+65.62 F017-1(9)

PENNINGTON COUNTY

SOUTH DAKOTA HS 20-44

DEPARTMENT OF HIGHWAYS

AUGUST 1966

ORIGINAL CONSTRUCTION PLANS

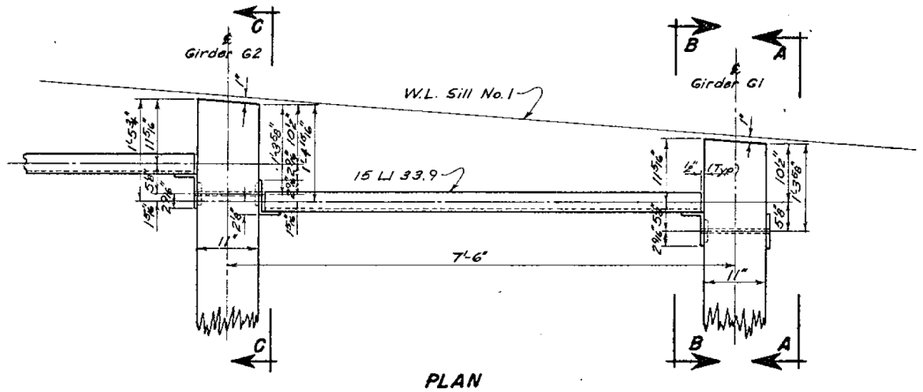

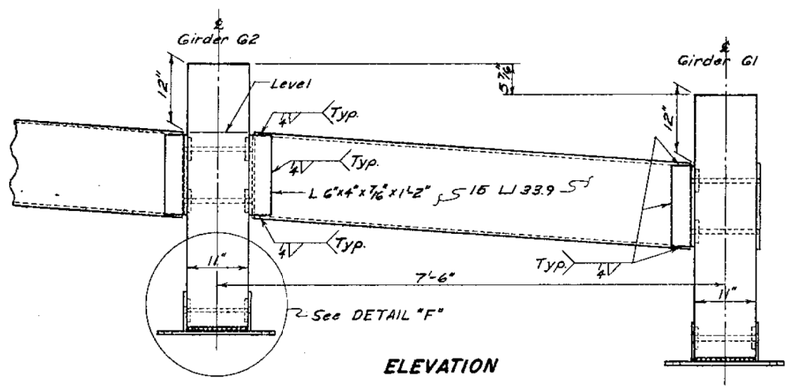

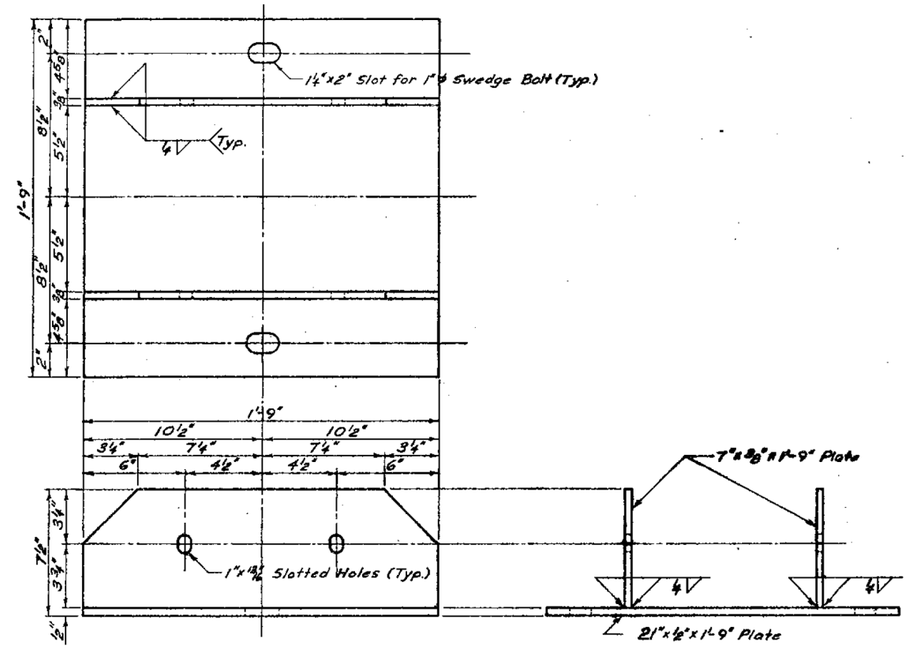

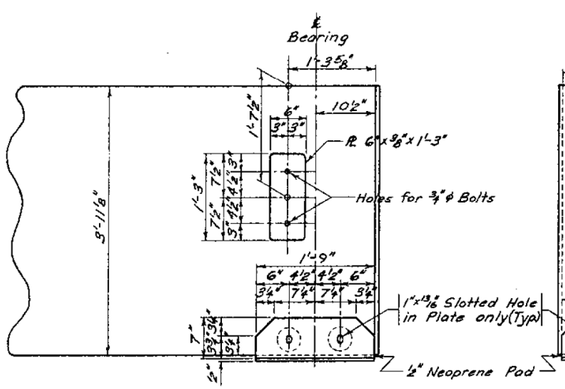

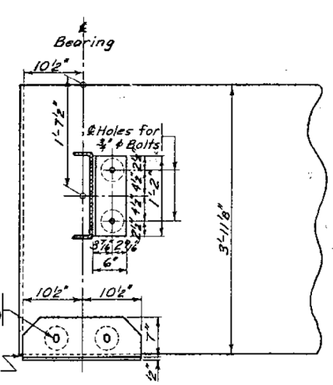

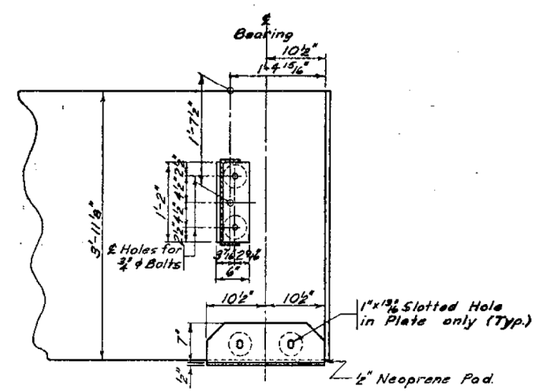

RAMP "C"

DETAILS OF SHOES AND END DIAPHRAGMS

FOR

170'-0" TIMBER GIRDER BRIDGE

26'-0" ROADWAY

OVER E.B.L.-U.S. NO.16 SEC.31-T1S-R6E

STA. 8+99.91 TO 10+65.62 F017-1(9)

PENNINGTON COUNTY

SOUTH DAKOTA HS 20-44

DEPARTMENT OF HIGHWAYS

AUGUST 1966

ORIGINAL CONSTRUCTION PLANS

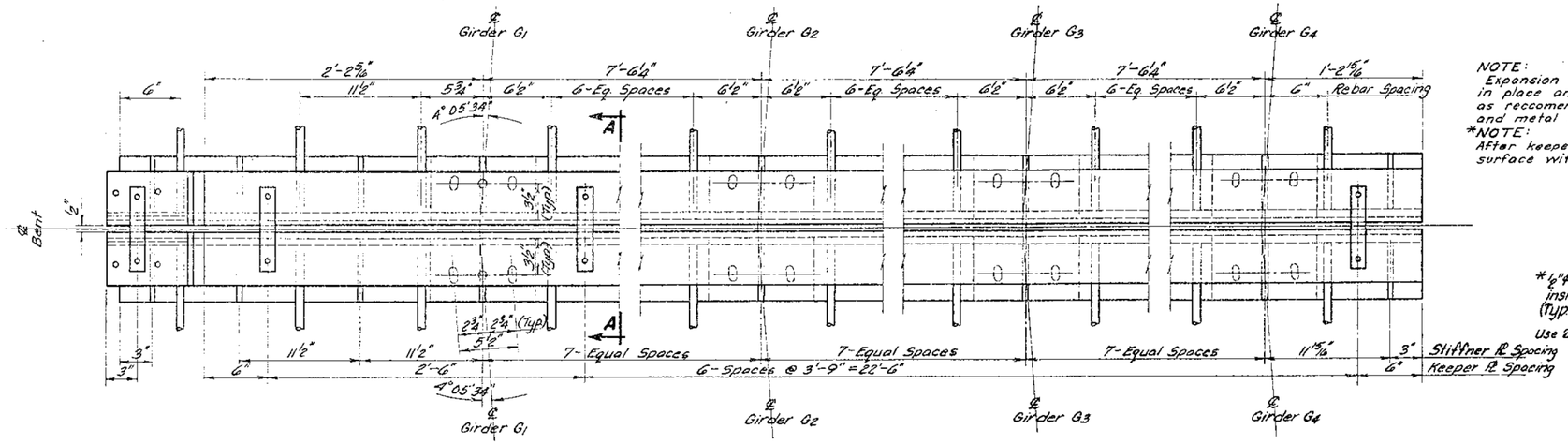

PLAN OF EXPANSION DEVICE AT BENTS NO. 2 & 3

NOTE:
Expansion devices shall be shop assembled, after galvanizing, with seals in place and proper gap setting held by keeper plates. Use adhesive, as reccomended by the seal manufacturer, between the neoprene seal and metal surfaces.

*NOTE:
After keeper plates are removed pack exposed holes on roadway surface with lead wool.

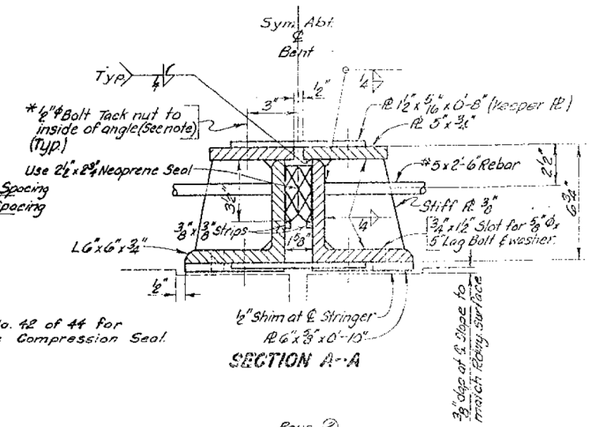

SECTION A-A

NOTE: See Sheet No. 42 of 44 for details of Neoprene Compression Seal.

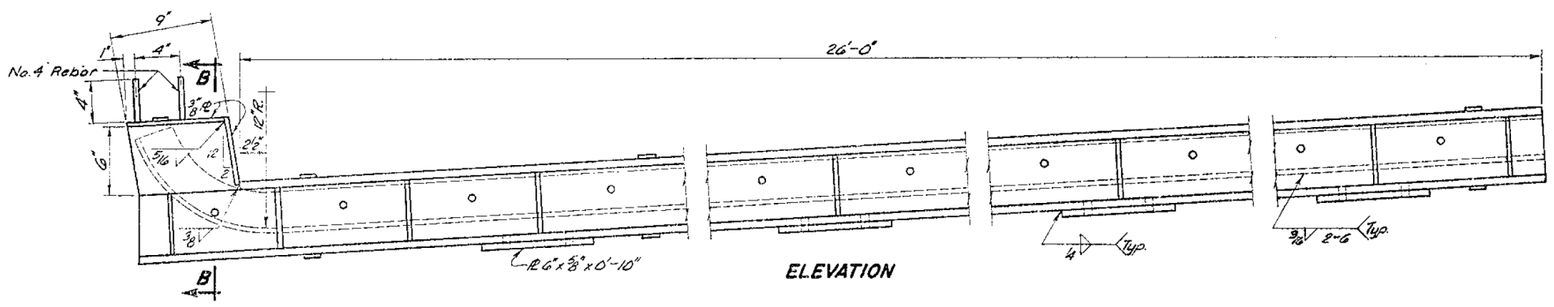

ELEVATION

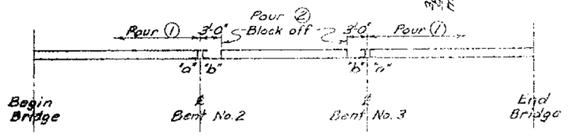

PROCEDURE FOR POURING SLAB AND ATTACHING EXPANSION DEVICES

Step 1: Pour end spans beginning at Bents and finishing at Sills as indicated. Before beginning these pours the expansion device shall be set in correct position and lag bolted to girders at point "a". Point "b" must be left free to move and keeper plates must be in place.

Step 2: Pour interior span, except for the blocked off portions indicated.

Step 3: Lag bolt expansion devices to Girders at points "b" and fill in blocked off portions of slab. After this concrete has attained a compressive strength of approximately 500 p.s.i., remove keeper plates. Do not leave keeper plates attached longer than necessary, as concrete shrinkage and temperature change may damage the slab at the joints. No heavy loads will be allowed in any span until keeper plates have been removed.

Cover or plug ends of neoprene compression seal to prevent filling with concrete during pouring operations.

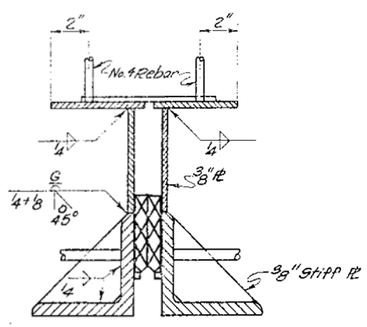

SECTION B-B

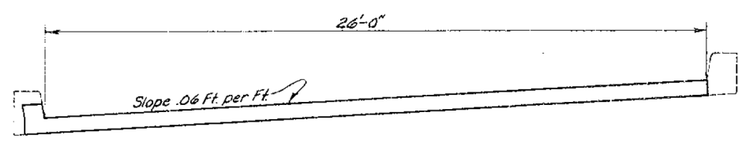

TYPICAL SECTION AT JOINT

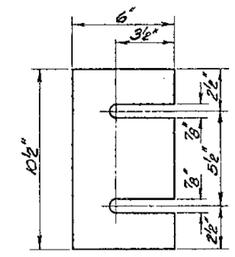

SHIM

NOTE:- Provide:
8 - 1/4" Thick
8 - 1/8" Thick — One Device
16 - 1/16" Thick

RAMP "C"
EXPANSION DEVICE
FOR
170'-0" TIMBER GIRDER BRIDGE
26'-0" ROADWAY

OVER E.B.L.-U.S. NO. 16 — SEC. 31-T1S-R6E
STA. 8+99.91 TO 10+65.62 — F017-1 (9)
PENNINGTON COUNTY
SOUTH DAKOTA — HS 20-44
DEPARTMENT OF HIGHWAYS
AUGUST 1966

ORIGINAL CONSTRUCTION PLANS

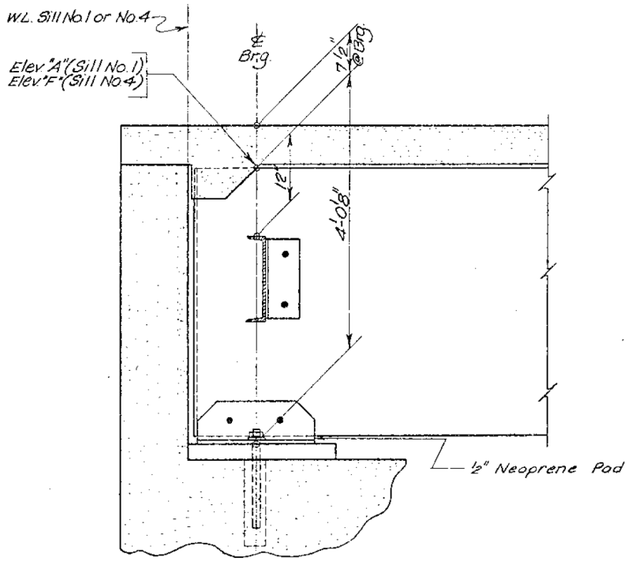

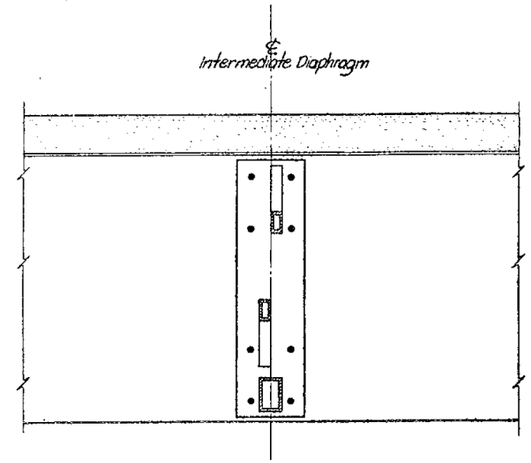

LONGITUDINAL SECTION NEAR CENTERLINE ROADWAY

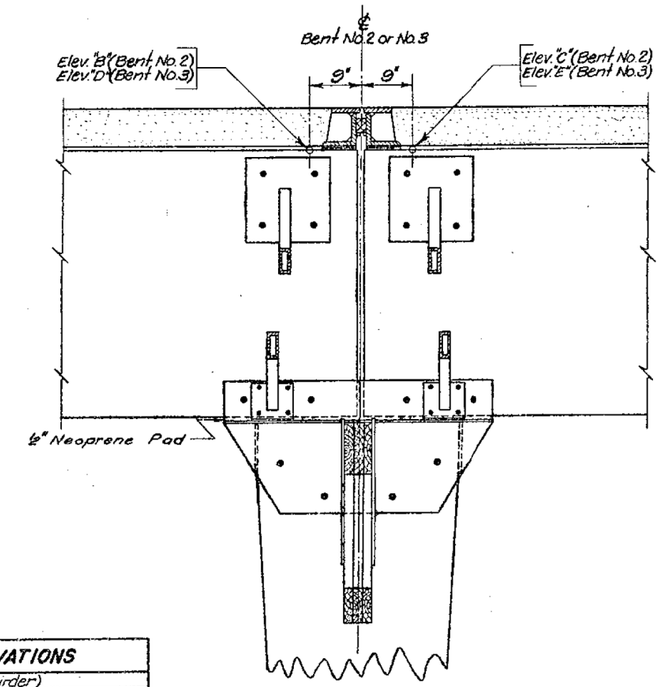

TABLE OF SLAB FORM ELEVATIONS AND COMPUTATIONS

		W.L. Sill #1	¼	½	¾	℄ Bent #2	¼	½	¾	℄ Bent #3	¼	½	¾	W.L. Sill #4
Girder-G1	Elev "P"	4871.098	4871.192	4871.275	4871.332	4871.378	4871.472	4871.559	4871.612	4871.658	4871.752	4871.839	4871.892	4871.940
	(-) Elev "Q"													
	(=) d													
	(-) 0.563'													
	(=) h													
Girder-G2	Elev "P"	4871.550	4871.653	4871.740	4871.793	4871.828	4871.933	4872.019	4872.073	4872.109	4872.213	4872.299	4872.353	4872.391
	(-) Elev "Q"													
	(=) d													
	(-) 0.563'													
	(=) h													
Girder-G3	Elev "P"	4872.001	4872.108	4872.195	4872.248	4872.281	4872.388	4872.474	4872.528	4872.560	4872.668	4872.754	4872.808	4872.843
	(-) Elev "Q"													
	(=) d													
	(-) 0.563'													
	(=) h													
Girder-G4	Elev "P"	4872.452	4872.564	4872.650	4872.704	4872.732	4872.844	4872.930	4872.984	4873.012	4873.124	4873.209	4873.264	4873.294
	(-) Elev "Q"													
	(=) d													
	(-) 0.563'													
	(=) h													

GIRDER ERECTION ELEVATIONS

Girder No.	Elevation (Top of Girder) "A"	"B"	"C"	"D"	"E"	"F"
G1	4870.479	4870.749	4870.757	4871.029	4871.037	4871.310
G2	4870.930	4871.201	4871.208	4871.480	4871.488	4871.761
G3	4871.381	4871.652	4871.659	4871.932	4871.939	4872.213
G4	4871.832	4872.103	4872.110	4872.383	4872.390	4872.664

All girders shall be fabricated with a camber of 1⅝" at ℄ of girder span.

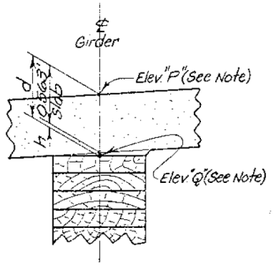

NOTE—
This table contains the necessary information to determine the depth of concrete, in feet, over the girders at the points shown. All calculations can be carried in the spaces provided. Elevation "P" is the elevation of the slab form before any concrete has been poured. This elevation includes correction for deflection due to all DL above girders. Elevation "Q" is a field measured elevation taken on top of girders at the points shown. This elevation must be taken after girder erection is completed, but prior to placing any of the concrete. Girders shall not be supported by construction shoring while elevations are taken. If computations indicate that the dimension "h" will exceed 1" or if the slab thickness over ℄ Stringer will be less than 6¾", communicate with the Bridge Section before setting any slab forms.

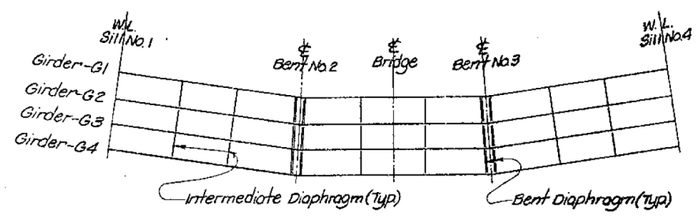

GIRDER LAYOUT

RAMP "C"
GIRDER LAYOUT AND ERECTION DATA
FOR
170'-0" TIMBER GIRDER BRIDGE
26'-0" ROADWAY
OVER E.B.L.-U.S. NO.16 SEC. 31-T1S-R6E
STA. 8+99.91 TO 10+65.62 F017-1(9)
PENNINGTON COUNTY
SOUTH DAKOTA HS 20-44
DEPARTMENT OF HIGHWAYS
AUGUST 1966

ORIGINAL CONSTRUCTION PLANS

FOR BIDDING PURPOSES ONLY

GENERAL NOTES.—
Notes shown on Sheet No. 44 of 44 shall also apply to this Railing.

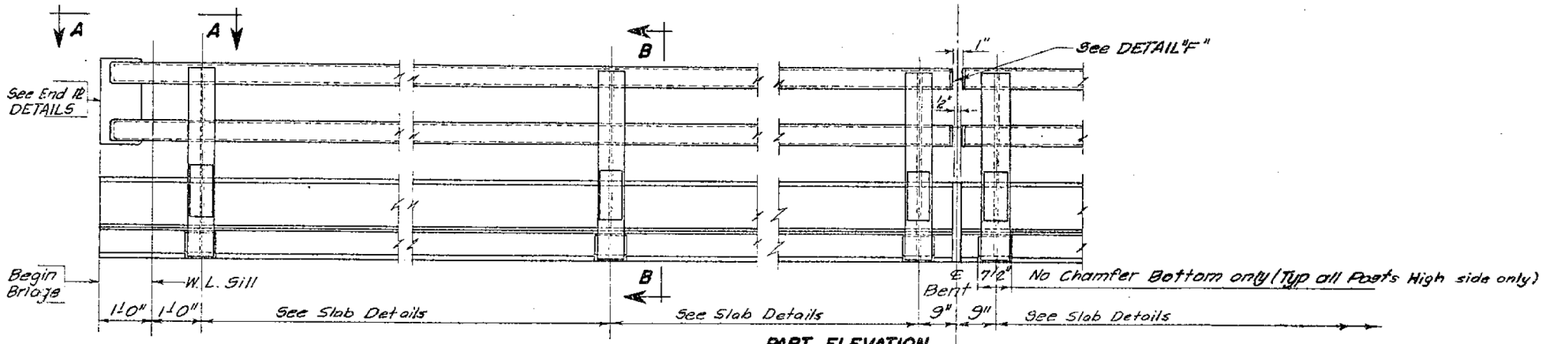

PART ELEVATION

NOTE.—Tube rails to run continuous over each span. Splices to be butt welded and ground smooth as shown.

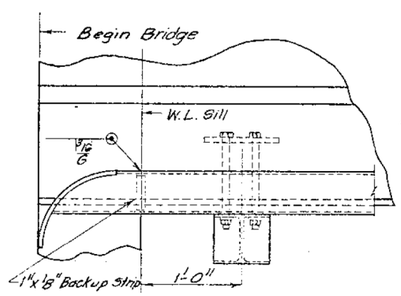

VIEW A-A

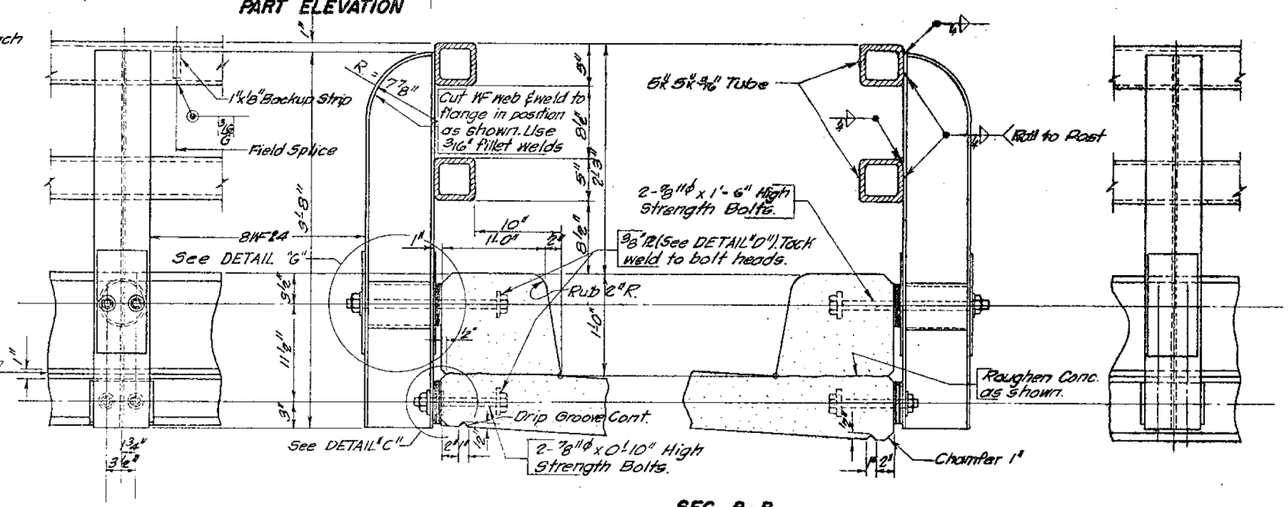

SEC. B-B
(Curb Reinforcing Not Shown.)

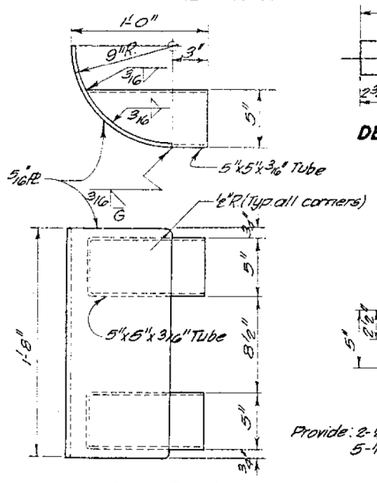

END PLATE DETAILS

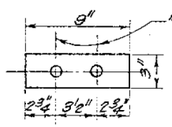

DETAIL "D"

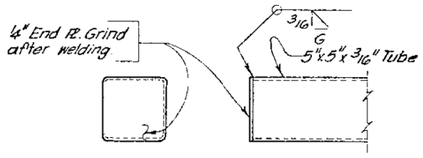

DETAIL "F"
(Typical at all Bents)

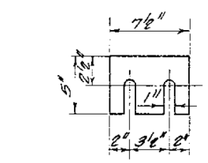

Provide: 2-1/2" thick, 3-1/8" thick and 5-1/16" thick at each Post.

DETAIL "E"

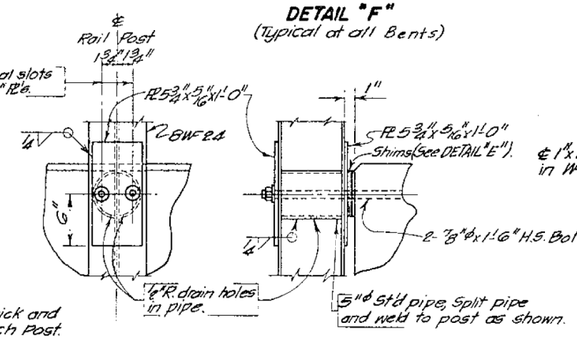

DETAIL "G"

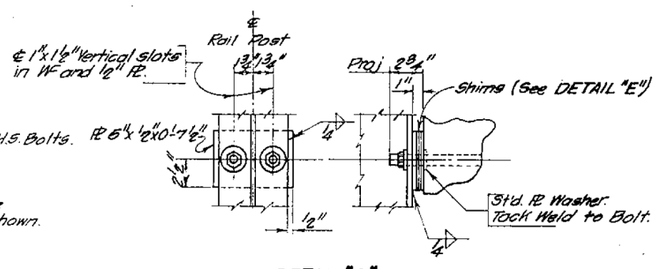

DETAIL "C"

RAMP "C"
TYPE RT-2 STEEL RAILING AND CURB DETAILS
FOR
170'-0" TIMBER GIRDER BRIDGE
26'-0" ROADWAY
OVER E.B.L.-U.S. NO.16 SEC. 31-T1S-R6E
STA. 8+99.91 TO 10+65.62 F017-1(9)
PENNINGTON COUNTY
SOUTH DAKOTA
DEPARTMENT OF HIGHWAYS
AUGUST 1966

ORIGINAL CONSTRUCTION PLANS

FOR BIDDING PURPOSES ONLY

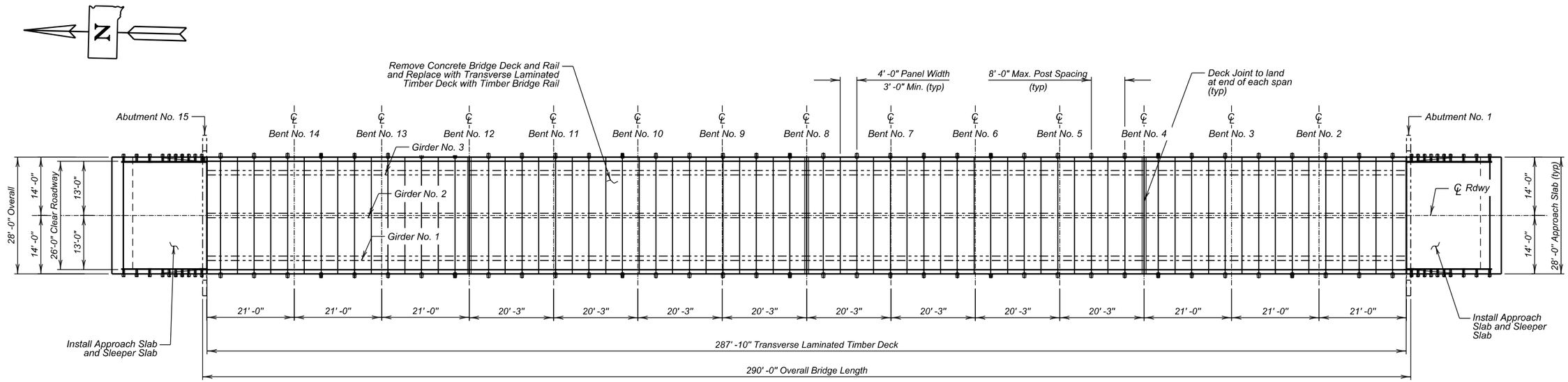

PLAN

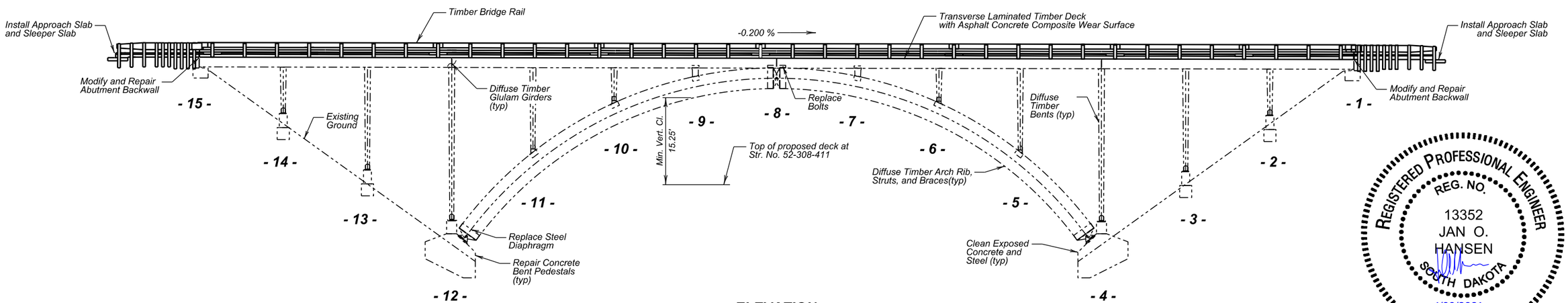

ELEVATION

REGISTERED PROFESSIONAL ENGINEER
REG. NO.
13352
JAN O.
HANSEN
SOUTH DAKOTA
4/09/2021

- X204 -

INDEX OF BRIDGE SHEETS

Sheet No. 1 - General Drawing
Sheet No. 2 - Estimate of Structure Quantities and Notes
Sheet No. 3 - Notes (Continued)
Sheet No. 4 - Notes (Continued)
Sheet No. 5 - Notes (Continued)
Sheet No. 6 - Abutment Breakout Details
Sheet No. 7 - Concrete Repairs at Abutments No. 1 And No. 15
Sheet No. 8 - Concrete Repairs at Bent No. 12
Sheet No. 9 - Concrete Repairs at Bent No. 4
Sheet No. 10 - Concrete Substructure Repair Type I
Sheet No. 11 - Concrete Substructure Repair Type II
Sheet No. 12 - Concrete Substructure Repair Type III
Sheet No. 13 - Concrete Repairs Type C2 and C3
Sheet No. 14 - Timber Diffuse Locations at Bents No. 4, 12, 5 and 11
Sheet No. 15 - Timber Diffuse Locations at Bents No. 6, 7 and 9
Sheet No. 16 - Timber Diffuse Locations at Bent No. 14
Sheet No. 17 - Timber Diffuse Locations at Intermediate Strut Frames
Sheet No. 18 - Timber Diffuse Locations at Girders, Arches, and Columns
Sheet No. 19 - Timber Diffuse Locations at Arch Rib Struts and Braces
Sheet No. 20 - Timber Repair Type T1 - Diffuse Timber Details
Sheet No. 21 - Timber Repair Type T1 - Diffuse Timber Details (Cont.)
Sheet No. 22 - Steel Repairs at Crown Hinge
Sheet No. 23 - Steel Repairs at Bent No. 12
Sheet No. 24 - Steel Repair Type S1 - Test & Repair Galvanized Coating
Sheet No. 25 - Typical Deck Section
Sheet No. 26 - Deck Bracing Details
Sheet No. 27 - Deck Joint Details
Sheet No. 28 - Deck Panel Details
Sheet No. 29 - Erection Data and Deck Elevations
Sheet No. 30 - Timber Bridge Rail Details
Sheet No. 31 - Timber Bridge Rail Splice Details
Sheet No. 32 - Approach Slab Plan
Sheet No. 33 - Approach Slab Details
Sheet No. 34 - Approach Guardrail Assembly
Sheet No. 35 - Curb Transition Details
Sheet No. 36 - Curb Transition Details (Cont.)
Sheet No. 37 - 62 - Original Construction Plans

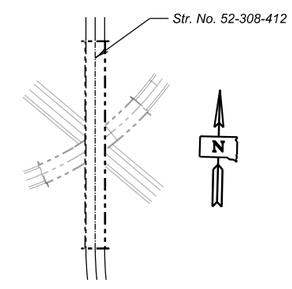

LAYOUT

GENERAL DRAWING
FOR
290'-0" TIMBER ARCH BRIDGE

26'-0" ROADWAY — 0 SKEW
OVER US 16A W — SEC. 31-TIS-R6E
STA. 11+73.50 TO 14+63.50 — P016A(08)59
STR. NO. 52-308-412 — HS-20
PCN 04FU

PENNINGTON COUNTY
S. D. DEPT. OF TRANSPORTATION
FEBRUARY 2020

- X204 -

PLANS BY Stantec

DESIGNED BY	CK. DES. BY	DRAFTED BY	
ML	JH	JW	BRIDGE ENGINEER

ESTIMATE OF STRUCTURE QUANTITIES

ITEM NO.	DESCRIPTION	QUANTITY	UNIT	REMARKS
009E3310	Bridge Elevation Survey	Lump Sum	LS	See Sp. Prov.
110E0040	Remove Concrete Bridge Slab	906.7	SqYd	
110E1100	Remove Concrete Pavement	125.7	SqYd	
320E1200	Asphalt Concrete Composite	200.1	Ton	
410E0380	Remove and Replace Steel Diaphragm	1	Each	See Sp. Prov.
410E2320	Compression Seal	56	Ft	
410E2800	Bolt Replacement Type 1A	2	Each	
412E0150	Repair Galvanized Coating	30	Each	See Sp. Prov.
412E1000	Clean Substructure Units	Lump Sum	LS	See Sp. Prov.
460E0150	Concrete Approach Slab for Bridge	125	SqYd	
460E0160	Concrete Approach Sleeper Slab for Bridge	32	SqYd	
460E0175	Concrete Substructure Repair Type I	2	SqFt	See Sp. Prov.
460E0176	Concrete Substructure Repair Type II	7.5	SqFt	See Sp. Prov.
460E0177	Concrete Substructure Repair Type III	12	SqFt	See Sp. Prov.
460E0190	Concrete Crack Injection/Sealing	90	In	See Sp. Prov.
460E0202	Concrete Protective Coating	1229	SqFt	See Sp. Prov.
460E0300	Breakout Structural Concrete	1.6	CuYd	See Sp. Prov.
470E8000	Timber Bridge Rail	580	Ft	See Sp. Prov.
480E5000	Galvanic Anode	10	Each	
541E0110	Diffuse Timber	339.9	CuFt	See Sp. Prov.
541E1300	Transverse Laminated Timber Deck	895.5	SqYd	See Sp. Prov.
630E0010	Straight Class A Thrie Beam Guardrail with Wood Posts	75	Ft	
900E2096	Test Galvanized Coating	30	Each	See Sp. Prov.

SPECIFICATIONS FOR BRIDGE

1. Design Specifications of Timber Deck – AASHTO LRFD Bridge Design Specifications, 2014 Edition with 2015 and 2016 interims, and ANSI/AWC NDS-2012 National Design Specification for Wood Construction.

2. Design Specifications of Timber Girders - AASHTO Standard Specifications for Highway Bridges 17th Edition using Allowable Stress Design.

2. Construction Specifications: South Dakota Standard Specifications for Roads and Bridges, 2015 Edition and Required Provisions, Supplemental Specifications and Special Provisions as included in the Proposal.

DESIGN MATERIAL STRENGTHS

Concrete Class A45	f`c = 4,500 psi
Reinforcing Steel	fy = 60,000 psi
Structural Steel (ASTM A36)	fy = 36,000 psi
Structural Steel (ASTM A500)	fy = 46,000 psi
Glulam Timber	Coastal Douglas Fir L-2
	Fbo = 1.450 ksi
	Fvo = 0.230 ksi

DETAILS AND DIMENSIONS OF EXISTING BRIDGE

All details and dimensions of the existing glulam timber bridge, contained in these plans, are based on the original construction plans and shop plans. It is the Contractor's responsibility to inspect and verify the actual field conditions and any necessary as-built dimensions affecting the satisfactory completion of the work required for this project.

GENERAL CONSTRUCTION NOTES

1. All new reinforcing steel will conform to ASTM A615, Grade 60.

2. All lap splices shown are contact lap splices unless noted otherwise.

3. All exposed concrete edges or corners will be chamfered 3/4 inch except where noted otherwise in the plans. Match the existing chamfer if chamfer differs.

4. Request for construction joints or reinforcing steel splices at points other than those shown, must be submitted to the Engineer for prior approval. If additional splices are approved, no payment will be allowed for the added quantity of reinforcing steel.

5. Use 2 inch clear cover on all reinforcing steel except as shown otherwise.

6. The contractor will notify the engineer of any decayed wood areas discovered during installation of retrofit materials. Decay may be recognized as soft, spongy or punky wood, fruiting bodies in cracks or on the wood surface, or crumbly or checkered surface.

SHOP PLANS

The Contractor will submit shop plans in accordance with the Standard Specifications. Send shop plan submittals to:

Jan Hansen
Jan.Hansen@stantec.com
Stantec Consulting Services
733 S Marquette Avenue Suite 1000
Minneapolis, MN 55402

After review, corrections (if necessary) and approval by Stantec, the Office of Bridge Design will review the submittals, authorize fabrication, arrange for fabrication inspection, and distribute the shop drawings.

BRIDGE LAYOUT AND ORIENTATION

The original construction plans have been provided at the end of the Rehabilitation Plans. The Contractor is to be aware that the bridge recording layout has been revised to current practices and is opposite of shown in the original construction plans. This includes girder, abutment, bent, bracing, strut, and span numbering. The Contractor will record notes, as-built drawings, and maintenance manual according to the new recording layout as shown in the Rehabilitation Plans.

NOTICE - LEAD BASED PAINT

Be advised that the paint on the existing bridge railing may contain lead. Lead-based paint and related debris must be disposed of in accordance with all applicable federal, state, and local laws governing such disposal. All necessary measures and precautions will be taken to ensure worker safety for work involving lead particles. Removal of lead-based paint should occur before torch cutting, grinding, or other lead emitting tasks. The Contractor should plan their operations accordingly and inform their employees of the hazards of lead exposure.

BOLT TESTING

The certified mill test reports for all bolts used on the project will include the test results for all testing specified in Section 972.2 D of the Standard Specifications. Some of these tests are supplemental tests that must be requested at the time the bolts are ordered. It is the responsibility of the Contractor to notify the bolt supplier of these requirements.

CONSTRUCTION DEMOLITION AND STAGING

At least one week prior to the pre-demolition conference provide an approved Construction Demolition and Staging (CDS) plan for record purposes only. Contractor is responsible for the stability of the structures during the rehabilitation work and progressive stages of deck removal and replacement including the effects of unbalanced loadings and imposed lateral forces.

CONCRETE SUBSTRUCTURE REPAIR

1. Rapid Set Cementitious Patching Material will be used for patching of substructure units as indicated in plans (where repair depth is less than 2"). Patching material will conform to Section 390.2 B., Concrete Patch Material Type 1. Place Patching Materials in accordance with the Manufacturer's recommendations.

2. Class A45 Concrete will be used for patching of substructure units as indicated in plans (where repair depth is greater than or equal to 2"). Class A45 Concrete will be in accordance with Section 460 of the Standard Specifications.

BRIDGE ELEVATION SURVEY

1. The Contractor is responsible for taking all measurements necessary for proper fit of the new Transverse Laminated Timber Deck. This includes surveying the top of girders to size the new HDPE shims and measurements of the abutments to ensure proper fit of deck panels.

2. All costs, including labor, equipment, and other incidental items required to measure the existing structure will be paid for at the Lump Sum contract unit price for Bridge Elevation Survey.

CONCRETE PROTECTIVE COATING

All exposed concrete surfaces will be thoroughly cleaned and treated with Concrete Protective Coating in accordance with the Special Provision and the notes in these plans. All costs associated with cleaning and treatment of exposed concrete surfaces will be paid for at the contract unit price per square foot for Concrete Protective Coating.

REGISTERED PROFESSIONAL ENGINEER
REG. NO.
13352
JAN O.
HANSEN
SOUTH DAKOTA
4/09/2021

ESTIMATE OF STRUCTURE QUANTITIES & NOTES
FOR
290'-0" TIMBER ARCH BRIDGE

26'-0" ROADWAY — 0 SKEW
OVER US 16A W — SEC. 31-TIS-R6E
STA. 11+73.50 TO 14+63.50 — P016A(08)59
STR. NO. 52-308-412 — HS-20

PENNINGTON COUNTY
S. D. DEPT. OF TRANSPORTATION
FEBRUARY 2020

DESIGNED BY	CK. DES. BY	DRAFTED BY	
ML	JH	JW	BRIDGE ENGINEER

GALVANIC ANODE

1. The Contractor will furnish and place galvanic anodes in the concrete repair areas specified in this plan set.

2. The galvanic anodes will be supplied as one of the following:

   a) Galvashield XP2
   Vector Corrosion Technologies
   65114 140th Ave.
   Wabasha, MN 55981
   Phone: (507) 259-2481
   Website: www.vector-corrosion.com

   b) Sentinel Silver
   Euclid Chemical Company
   19218 Redwood Road
   Cleveland, OH 44110
   Phone: (800) 321-7628
   Website: www.euclidchemical.com

   c) Sika FerroGard 670
   Sika Corporation US
   201 Polito Avenue
   Lyndhurst, NJ 07071
   Phone: (800) 933-7452
   Website: http://usa.sika.com

3. The anodes will be placed in accordance with manufacturer's recommendations and as approved by the Engineer. The anodes have not been shown on the drawings. The Contractor will provide shop drawings of the galvanic anode installation including locations of the individual anodes to the Office of Bridge Design.

4. The anodes will be placed with a minimum ¾" cover and will be set in embedding mortar per the manufacturer's recommendations. The anodes will be fully encased in the concrete repair material. Where adequate cover does not exist, a concrete pocket will be chipped out behind the anode to provide sufficient cover. The Contractor may need to chip around the reinforcing bar locally at the anode installation to make the electrical connection. The reinforcing steel at the connection location will be cleaned per the manufacturer's recommendations to provide sufficient electrical connection and mechanical bond.

5. The electrical continuity of the electrical connections and reinforcing steel will be confirmed per the manufacturer's recommendations.

6. The Contractor will provide manufacturer's product literature and installation instructions to the Engineer 10 days prior to installation.

7. All costs associated with placing anodes including labor, equipment, materials, and incidentals will be included in the contract unit price per each for Galvanic Anode.

CONCRETE BREAKOUT - ABUTMENTS

1. The existing abutment backwalls will be broken out to the limits shown on the plans. Breakout limits will be defined with a 3/4" deep sawcut (unless specified otherwise in these plans), where practical, as approved by the Engineer. Reinforcing steel that is exposed and is scheduled for use in the new construction will be cleaned and straightened to the satisfaction of the Engineer. Care will be taken not to damage the existing reinforcing steel that is to be reused in the new construction during concrete breakout. Any reinforcing steel that is damaged during concrete breakout will be replaced or repaired, as approved by the Engineer, by the Contractor at no cost to the Department.

2. All broken out concrete, discarded reinforcing bars will be disposed of by the Contractor in accordance with the Environmental Commitment notes.

3. The contract unit price per cubic yard for Breakout Structural Concrete will include breaking out concrete, cleaning, straightening existing reinforcing steel, and disposal of all broken out material.

REMOVAL OF CONCRETE BRIDGE APPROACH SLAB

1. The existing concrete approach and sleeper slabs adjacent to the structure will be completely removed by the Contractor.

2. The crushed concrete and reinforcing steel from the removal will be disposed of by the Contractor at an approved site. An appropriate site will be as described in the Environmental Commitment notes elsewhere in this set of plans.

All labor, tools, equipment, and any incidentals necessary for removal and disposal of the existing approach and sleeper slabs will be paid for at the contract unit price per square yard for Remove Concrete Bridge Approach Slab.

REMOVAL OF CONCRETE BRIDGE SLAB

1. The existing Concrete Bridge Slab is connected to the Glulam Timber Girders with 5/8" diameter Spiral Dowels. During removal of the existing Concrete Bridge Slab, carefully cut the Spiral Dowels flush with the top of Glulam Timber Girder. Do not remove the Dowels from the Girders. See Original Construction Plans for additional information. Describe the Concrete Bridge Slab removal procedure in the CDS plan.

2. Take extra precautions not to damage the existing Glulam Timber Girders or other structural members to remain during the removal process. If structural members to remain are damaged in any way, immediately notify the Engineer before proceeding.

3. All costs for cutting the Spiral Dowels, removal and disposal of existing Bridge Rail and Curb, Bridge Deck, Overlay, and Joint materials will be paid for at the contract unit price per square yard for Remove Concrete Bridge Slab.

APPROACH SLABS

1. Excavation for placement of new approach slabs and sleeper slabs will be done with minimal disturbance to the underlying material.

2. Low spots in the area where the approach slabs will be located are to be filled and compacted with granular bridge end backfill material back to the original grade line. Granular Bridge End Backfill material will be in accordance with Section 882 of the Standard Specifications. All costs for this work will be incidental to the various contract bid items.

3. The top of approach slab elevations will be established during construction and will be subject to the approval of the Engineer. Care will be taken to provide a smooth transition from the bridge deck elevations to the new pavement elevations established in the field to prevent any dips or bumps in the areas of the bridge ends or ends of the new approach slabs. The maximum rate of grade transition through the approach slab will be 1/8 inch per 10 feet.

4. The use of a vibratory screed will be required during placement of Class A45 Concrete for the approach slabs. Concrete placement in front of the screed will be kept parallel to the screed.

5. The new approach slabs and sleeper slabs will have a surface finish in accordance with Section 460.3 L.4 of the Standard Specifications.

6. The Concrete Approach Slabs Adjacent to Bridge will be cured in accordance with Section 460.3 M of the Standard Specifications.

7. Concrete Approach Sleeper Slab for Bridge will be paid for at the contract unit price per square yard. This payment will be full compensation for furnishing, hauling, and placing all materials including concrete and reinforcing steel; for disposal of all surplus materials; for labor, tools, equipment; and for any incidentals necessary to complete this item of work.

8. Concrete Approach Slab for Bridge will be paid for at the contract unit price per square yard. This payment will be full compensation for all excavation; furnishing, hauling and placing all materials including concrete and reinforcing steel; for disposal of all excavated and surplus materials; for labor, tools, equipment; and for any incidentals necessary to complete this item of work.

REGISTERED PROFESSIONAL ENGINEER
REG. NO.
13352
JAN O.
HANSEN
SOUTH DAKOTA
4/09/2021

NOTES (CONTINUED)
FOR
290'-0" TIMBER ARCH BRIDGE

26'-0" ROADWAY — 0 SKEW
OVER US 16A W — SEC. 31-TIS-R6E
STA. 11+73.50 TO 14+63.50 — P016A(08)59
STR. NO. 52-308-412 — HS-20

PENNINGTON COUNTY
S. D. DEPT. OF TRANSPORTATION
FEBRUARY 2020

DESIGNED BY	CK. DES. BY	DRAFTED BY	
ML	JH	JW	BRIDGE ENGINEER

MECHANICAL FASTENERS

All fasteners will be ASTM A307 Grade A, hot dipped galvanized in accordance with ASTM F2329 Standard Specification for Zinc Coating, Hot-Dip, Requirements for Application to Carbon and Alloy Steel Bolts, Screws, Washers, Nuts, and Special Threaded Fasteners. Permanently incorporated steel and iron products will conform to the Buy America provisions of Section 6.9 of the Standard Specifications.

1. **LAG SCREWS**

   a) All lag screws will conform to ANSI/ASME B18.2.1, Square and Hex Bolts and Screws-Inch Series.

   b) All lag screws used on this project are to be inner-thread. Lag screws are to be installed in two-stage, pre-drilled pilot holes consisting of a lead hole to accommodate the threaded portion of the screw and a counterbore to accommodate the shank. The lead hole will have a depth equal to the screw penetration to the thread shoulder (not including the tip) and a diameter equal to 75% of the root diameter. The counterbore will have a depth equal to the penetration of the shank and a diameter equal to the shank size.

   c) All lag screws will be installed by turning with a wrench, not driving with a hammer. Lubricant such as grease (petroleum based, not water based) will be used to facilitate insertion and prevent damage to the lag screw. Unless otherwise specified, lag screws are to be tightened only to snug-tight. There should be no slop in the connection, but the wood should not be deformed or crushed by the screw. For Fiber-Reinforced-Plastic Tensile Reinforcement installation, higher pressure is required, and lag screws must be torqued according to the Fiber-Reinforced-Plastic Tensile Reinforcement installation works schedule.

   d) The head of each lag screw will bear on a steel side plate or a flat washer.

2. **BOLTS**

   a) Bolts will conform to ANSI/ASME B18.2.1, Square and Hex Bolts and Screws-Inch Series. Where timber bolts are specified, utilize standard dome-head timber bolts.

   b) Bolts for timber connections will be tightened only to a snug-tight fit. Do not overtighten. Where lock washers are used, the washer should be flattened and the nut turned an additional 1/4 to 1/2 turn. Steel side plates, such as on jack-posts and hinge-connectors should not be bent into the wood.

   c) The maximum torque for bolted connections is 30 ft-lb; there is no minimum torque requirement.

3. **WASHERS**

   Washers will be standard cut washers with dimensions complying with ANSI/ASME B18.21.1 and hot-dipped galvanized in compliance with ASTM F2329. Where timber washers are specified, utilize standard malleable cast iron timber washers, cast in accordance with ASTM A47.

MECHANICAL FASTENERS (CONTINUED)

4. **FABRICATION OF NEW METAL BRACKETS**

   a) All new fabricated steel assemblies will be ASTM A36 steel. Shear cut plate wherever possible. All plate will be ±0.016 inch tolerance to all given dimensions.

   b) Fabricated parts will have hot-dipped galvanized coatings in accordance with ASTM A123 Standard Specification for Zinc (Hot-Dip Galvanized) Coatings on Iron and Steel Products.

COMPRESSION SEAL

1. The Contractor will furnish and place elastomeric compression seals at the locations indicated in the drawings.

2. The elastomeric compression seal will be supplied as the following:

   a) J-100
   D.S. Brown
   Phone: (419) 257-2200
   Website: www.dsbrown.com

   b) WA-162
   Watson Bowman Acme Corp.
   Phone: 716-691-7566
   Website: www.wbacorp.com

3. The Contractor may submit an alternative elastomeric compression seal product subject to approval by the Engineer.

TIMBER SPECIFICATIONS

Unless noted otherwise, glulam timber for Transverse Laminated Timber Deck and Timber Bridge Rail and backer boards for tensile reinforcement are to be Coastal Region Douglas Fir (CRDF), in grades and layup combinations specified on these drawings.

Deck and bridge rail elements are to be ANSI/AITC Combination 2 glulam. Backer boards for tensile reinforcing is to be ANSI/AITC Grade L1 laminating stock.

1. **PRESERVATIVE TREATMENT AND INCISING**

   a) All timber elements are to be incised and pressure preservative treated in accordance with AWPA Standards U1 and T1. All machining (e.g. cutting and drilling) is to be completed prior to preservative treatment.

   b) Timber is to be treated with pentachlorophenol in heavy oil solvent (hydrocarbon solvent Type-A) in accordance with AWPA U1 for use Category 4C. Retention will be minimum 0.60 pcf and to refusal.

   c) Incisions are to be minimum 1/16" wide x 5/8" long x 5/8" deep. Incisions are to be spaced at max. 6" o.c. parallel to grain, in rows at max 1" o.c. perpendicular to grain; adjacent rows are to be offset 3" parallel to grain.

TIMBER SPECIFICATIONS (CONTINUED)

   d) If field-cutting is anticipated, timber should be pre-drilled with treatment holes to increase depth of preservative penetration. Holes are to be 3/16" diameter and spaced as specified above for incising. Treatment holes are to extend at least 5/8" beyond the anticipated cut depth.

2. **FIELD TREATMENT**

   a) All machining is to be completed prior to preservative treatment. Field drilling or cutting not shown on these plans is not allowed.

   b) All field-drilled holes and cut surfaces are to be treated with copper naphthenate field preservative in hydrocarbon solvent. End grain is to be coated with Anchorseal™ or approved equivalent wood sealer consisting of an aqueous emulsion of paraffin wax, with optional propylene glycol anti-freeze. Field treat and seal to saturation/refusal in accordance with the manufacturer's recommendations.

   c) Treat surfaces as soon as possible after drilling or cutting. Ensure surfaces are clean and free of sawdust or debris prior to treating.

   d) Store preservatives and sealers in conformance with the manufacturer's recommendations. The Contractor will take care to prevent spills of preservatives and sealers. Clean spills in accordance with the manufacturer's recommendations and to the satisfaction of the Engineer.

3. **DIFFUSER RODS**

   a) Diffuser rods are to consist of water-diffusible borate-salts, designed to diffuse through the timber when moisture content exceeds approximately 20%.

   b) Target concentration in the treated areas is approximately 4 in^3 of salt-rod per cubic foot of timber. Diffuser spacing parallel to grain must not exceed 12 inch o.c. and spacing perpendicular to grain must not exceed 6 inch o.c. Treatment will not spread through glue-lines, so it is important that diffuser rods are inserted in all laminations in glulam elements.

   c) Drill holes for diffuser rods approximately 1/16" larger than rod diameter. Plug holes with wood dowels treated with copper naphthenate.

REGISTERED PROFESSIONAL ENGINEER
REG. NO. 13352
JAN O. HANSEN
SOUTH DAKOTA
4/09/2021

NOTES (CONTINUED)
FOR
290'-0" TIMBER ARCH BRIDGE

26'-0" ROADWAY — 0 SKEW
OVER US 16A W — SEC. 31-TIS-R6E
STA. 11+73.50 TO 14+63.50 — P016A(08)59
STR. NO. 52-308-412 — HS-20

PENNINGTON COUNTY
S. D. DEPT. OF TRANSPORTATION
FEBRUARY 2020

DESIGNED BY	CK. DES. BY	DRAFTED BY	
ML	JH	JW	BRIDGE ENGINEER

ASPHALT CONCRETE COMPOSITE

Asphalt Concrete Composite used for the deck wear surface will be in accordance with Section 324 of the Standard Specifications, except as noted below.

1. The mineral aggregate for Asphalt Concrete Composite will be Class G, Type 2.

2. The Asphalt Binder used will be PG 64-34

3. Asphalt for tack SS-1h or CSS-1h will be applied prior to each lift of Asphalt Concrete Composite. Asphalt for tack will be applied at a rate of 0.09 gallons per square yard on the new timber deck and at a rate of 0.06 gallons per square yard on new asphalt concrete pavement. The Asphalt for tack will be applied for the full width of the bottom layer of Asphalt Concrete Composite. The Contractor will protect the new timber bridge rail from tack overspray. The Contractor must provide a containment system to prevent tack from spilling over the edge of the deck. Keep the deck clean and dry. The surface moisture content of the timber deck must be below 20% at the time of tack application.

4. Seal deck joints with cold applied bituminous joint tape as indicated in the Deck Joint Details prior to the application of the tack. Provide ends laps of at least 4 inches. Install the bituminous joint tape according the manufacturer's recommendations. The bituminous joint tape will be supplied as the following:

   c) Protecto Wrap M400
      Sunshine Supply Company
      Phone: (866) 379-7100
      Website: www.Sunshinesupply.com

   d) MEL-ROL
      W.R. Meadows
      Phone: (847) 214-2100
      Website: www.wrmeadows.com

5. The Contractor may submit an alternative bituminous joint tape product subject to approval by the Engineer.

6. Install the Asphalt Concrete Composite in two equal lifts for a total compacted depth of 4" at crown, tapering to 3" at the curb line as shown in the typical section. The compacted asphalt must be flush with the top of the glulam screed board to ensure proper drainage. Proper compaction will be achieved with a 12-ton maximum roller.

7. The minimum density requirement will be as prescribed in section 321.3 C of the Standard Specifications.

8. Sawcut and seal the Asphalt Concrete as shown in the details on sheet Deck Joint Details. Sawing will be performed after the asphalt concrete has cooled and no more than 36 hours after placement. Sawing will be made prior to any evidence of reflective cracking. Saw cuts will be made dry and will be accurately located by pins and string line subject to approval of the Engineer.

ASPHALT CONCRETE COMPOSITE (CONTINUED)

9. Prior to sealing, clean sawcuts with high-pressured air. The air compressor will produce a minimum of 125-CFM output and will be equipped with a 5/8" nozzle. The sealant will conform to the requirements for ASTM D6690 Type IV with the following modifications:

Penetration at 77° F	90-150
Bond at -20° F, Std. Specimen, 3 cycles, 200% extension	Passes
Resilience	30-60%
Material Weight (pounds per gallon)	9.00 to 10.00

10. Joint sealant material will be from the South Dakota Department of Transportation's approved products list for Sealants Approved for Asphalt Concrete over Long Jointed Concrete Pavement. The Approved Product List for sealant may be viewed at the following Internet Site:

    https://apps.sd.gov/HC60ApprovedProducts/main.aspx

    The sealant will be placed in accordance with the manufacturer's recommendations. The sealant will fit the joint such that after cooling, the level of the sealant will not be greater than 1/8" below the pavement surface. Care will be taken so that the joints will not be overfilled. Sealant will not be spread over the pavement surface. Blotting material such as toilet paper will be placed over the sealant material where traffic is allowed to cross a sealed area before track free status has been achieved.

11. All costs associated with providing and installing Asphalt for tack, bituminous joint tape, and cutting and sealing control joints will be included in the contract unit price for Asphalt Concrete Composite.

REMOVE AND REPLACE STEEL DIAPHRAGM

1. All structural steel tubing is to be in conformance with ASTM A500, Grade B.

2. Steel connection plates are to be in conformance with Section 970.2

3. All structural steel to be hot dip galvanized in accordance with Section 970.4.

4. The removal and disposal of existing steel diaphragm, including bolts and connections, and installation of new steel diaphragm specified will be included in the contract unit price per each.

STANDARD REPAIR CALLOUT DESIGNATION

Repairs to the concrete and timber members will be designated callouts as following defined:

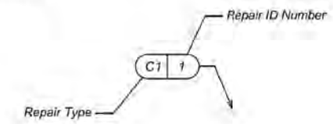

ABBREVIATIONS

ASD – Allowable Stress Design
ASME – American Society for Mechanical Engineers
ANSI – American National Standards Institute
B.F. – Back Face
Cl. – Clear
C.J. – Construction Joint
El. – Elevation
EOR – Engineer of Record
Fbo – Design Bending Stress for Lumber
f'c – Compressive Strength of Concrete
F.F. – Front Face
Ft. – Foot
FRP – Fiber Reinforced Plastic
Fvo – Design Shear Stress Parallel to Grain for Lumber
Fy – Yield Strength of Steel
ICC ES – International Code Council Evaluation Service
In – Inch
kip – 1000 Pounds
ksi – 1000 Pounds Per Square Inch
LRFD – Load Factor and Resistance Design
MOE_{rc} – Modulus of Elasticity of FRP in Compression
MOE_{rt} – Modulus of Elasticity of FRP in Tension
O.C. – On Center
S.F. – Square Feet
ST_{rt} – Axial Tensile Stress in FRP Reinforcement Panel in Tension Zone
Typ – Typical

REGISTERED PROFESSIONAL ENGINEER
REG. NO.
13352
JAN O.
HANSEN
SOUTH DAKOTA
4/09/2021

NOTES (CONTINUED)
FOR
290'-0" TIMBER ARCH BRIDGE

26'-0" ROADWAY — 0 SKEW
OVER US 16A W — SEC. 31-TIS-R6E
STA. 11+73.50 TO 14+63.50 — P016A(08)59
STR. NO. 52-308-412 — HS-20

PENNINGTON COUNTY
S. D. DEPT. OF TRANSPORTATION
FEBRUARY 2020

DESIGNED BY	CK. DES. BY	DRAFTED BY	
ML	JH	JW	BRIDGE ENGINEER

FOR BIDDING PURPOSES ONLY

Revised: 4/6/2021 MNL

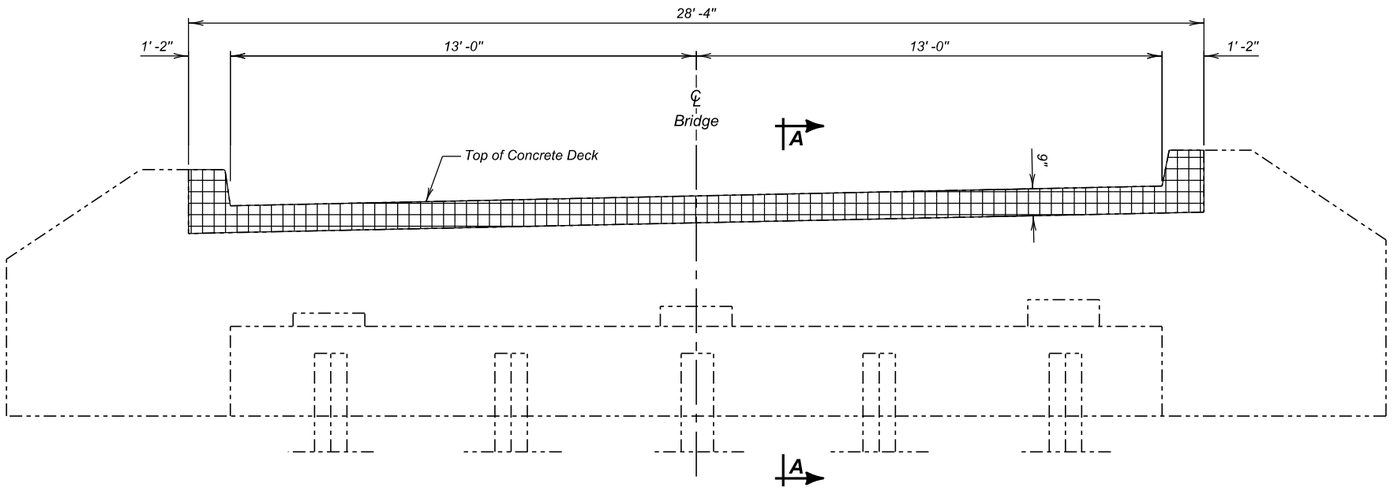

ELEVATION - ABUTMENT NO. 15

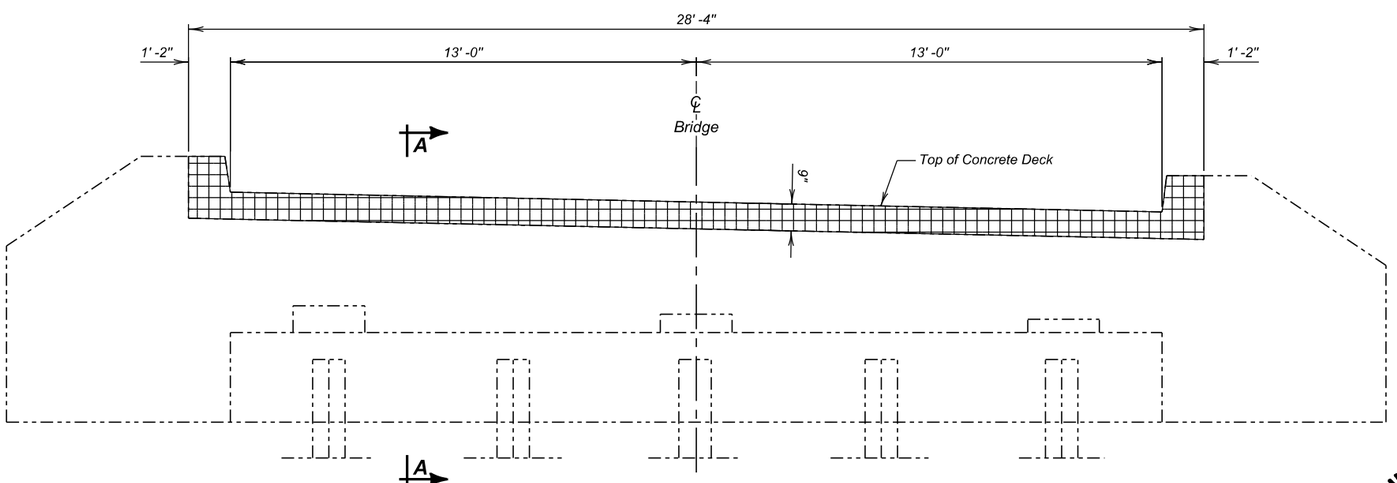

ELEVATION - ABUTMENT NO. 1

LEGEND:

Shaded area indicates limits of Remove Concrete Bridge Slab

Shaded area indicates limits of Breakout Structural Concrete

NOTES

1. *Cut Spiral Dowels flush with top of Timber Girders. Describe in the CDS submittal how the concrete deck will be carefully removed around the dowels to not damage the tops of the timber girders.*
2. *See Original Construction Plans for additional details for spacing, number, and locations of Spiral Dowels.*
3. *All dimensions are approximate and based on existing plans.*

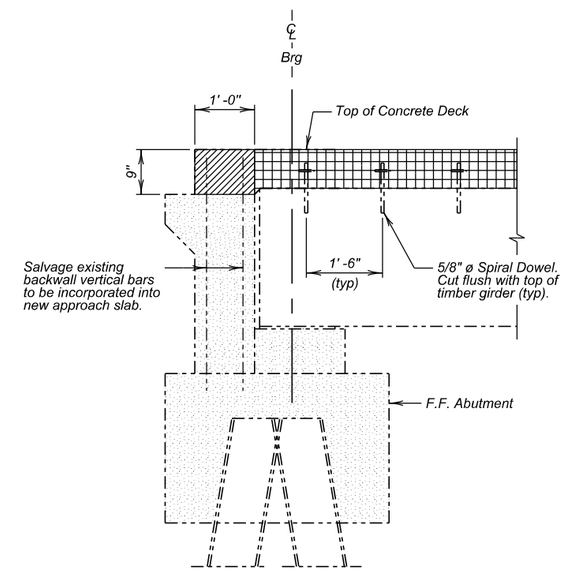

SECTION A-A

REGISTERED PROFESSIONAL ENGINEER
REG. NO.
13352
JAN O.
HANSEN
SOUTH DAKOTA
4/09/2021

ABUTMENT BREAKOUT DETAILS
FOR
290'-0" TIMBER ARCH BRIDGE

26'-0" ROADWAY — 0 SKEW
OVER US 16A W — SEC. 31-TIS-R6E
STA. 11+73.50 TO 14+63.50 — P016A(08)59
STR. NO. 52-308-412 — HS-20

PENNINGTON COUNTY
S. D. DEPT. OF TRANSPORTATION
FEBRUARY 2020

DESIGNED BY	CK. DES. BY	DRAFTED BY	
ML	JH	JW	BRIDGE ENGINEER

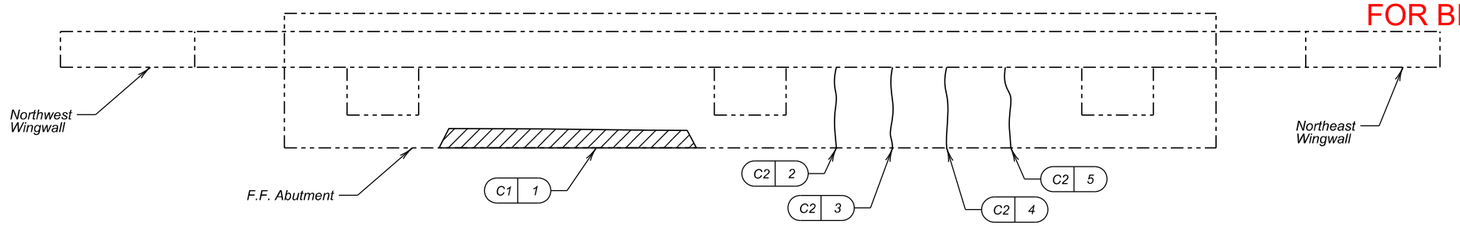

PLAN - ABUTMENT NO. 15

LEGEND:

Shaded area indicates Concrete Repair Type C1 - Concrete Substructure Repair

Concrete Repair Type C2 - Concrete Crack Injection/Sealing

NOTE

See details on sheet CONCRETE SUBSTRUCTURE REPAIR TYPE III.

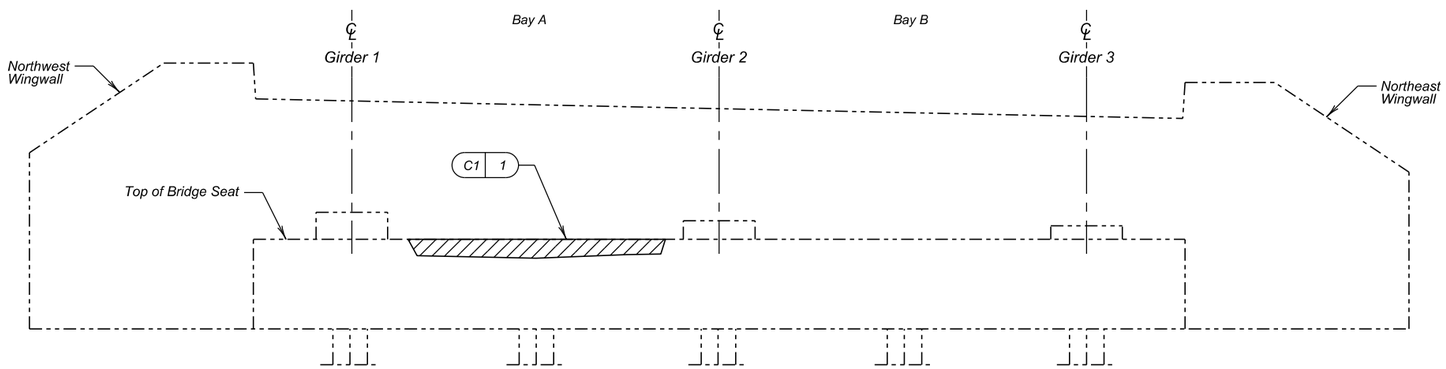

ELEVATION - ABUTMENT NO. 15

REPAIR TYPE C1 - CONCRETE SUBSTRUCTURE REPAIR				
ID	Estimated Defects	Unit	Type	Location
1	6.0	SF	III	Abutment 15

REPAIR TYPE C2 - CONCRETE CRACK INJECTION/SEALING			
ID	Estimated Defects	Unit	Location
2	90	In	Abutment 1

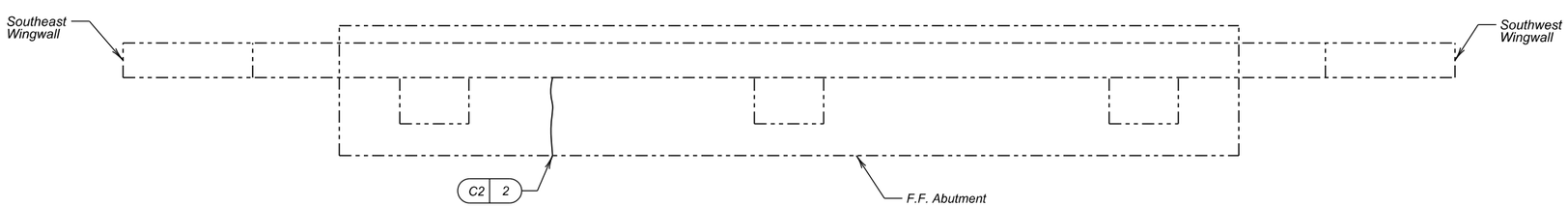

PLAN - ABUTMENT NO. 1

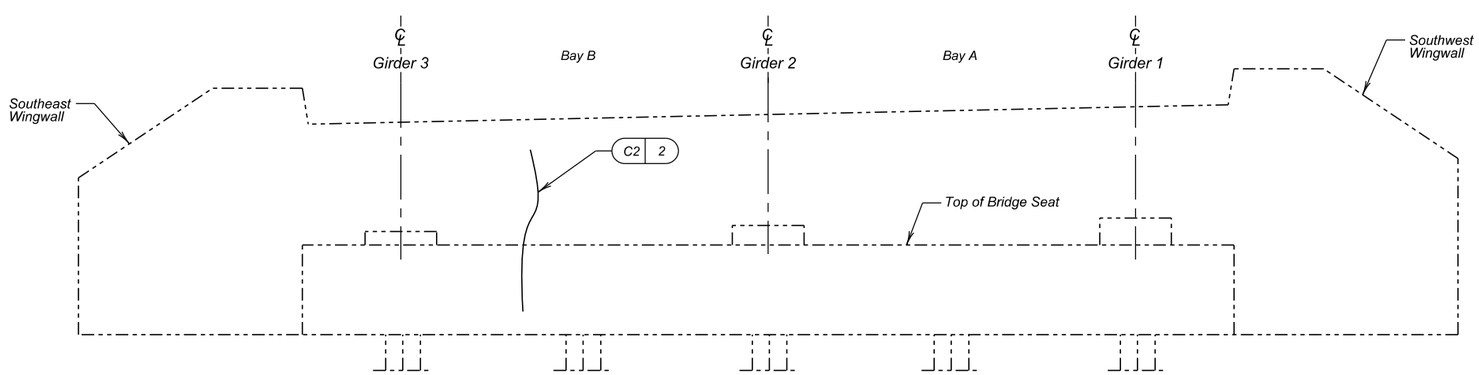

ELEVATION - ABUTMENT NO. 1

CONCRETE REPAIRS AT ABUTMENTS NO. 1 AND NO. 15
FOR
290'-0" TIMBER ARCH BRIDGE

26'-0" ROADWAY — 0 SKEW
OVER US 16A W — SEC. 31-TIS-R6E
STA. 11+73.50 TO 14+63.50 — P016A(08)59
STR. NO. 52-308-412 — HS-20

PENNINGTON COUNTY
S. D. DEPT. OF TRANSPORTATION
FEBRUARY 2020

DESIGNED BY	CK. DES. BY	DRAFTED BY	
ML	JH	JW	BRIDGE ENGINEER

LEGEND:

Shaded area indicates Concrete Repair Type C1 - Concrete Substructure Repair

NOTES

See repair details on sheets CONCRETE SUBSTRUCTURE REPAIR TYPE I and CONCRETE SUBSTRUCTURE REPAIR TYPE III.

REPAIR TYPE C1 - CONCRETE SUBSTRUCTURE REPAIR				
ID	Estimated Defects	Unit	Type	Location
3	6.0	SF	III	Abutment 12
4	0.5	SF	I	Abutment 12
5	0.5	SF	I	Abutment 12
6	0.5	SF	I	Abutment 12

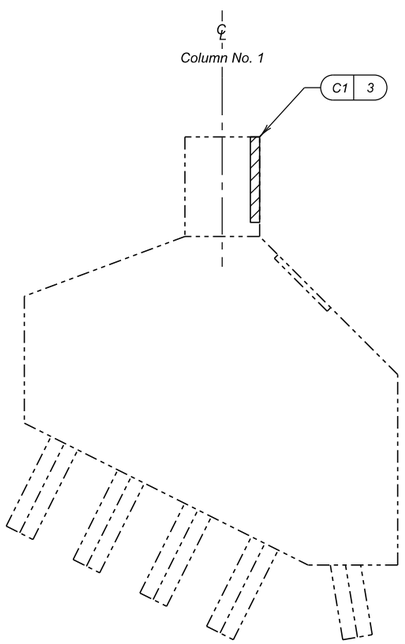

VIEW A-A

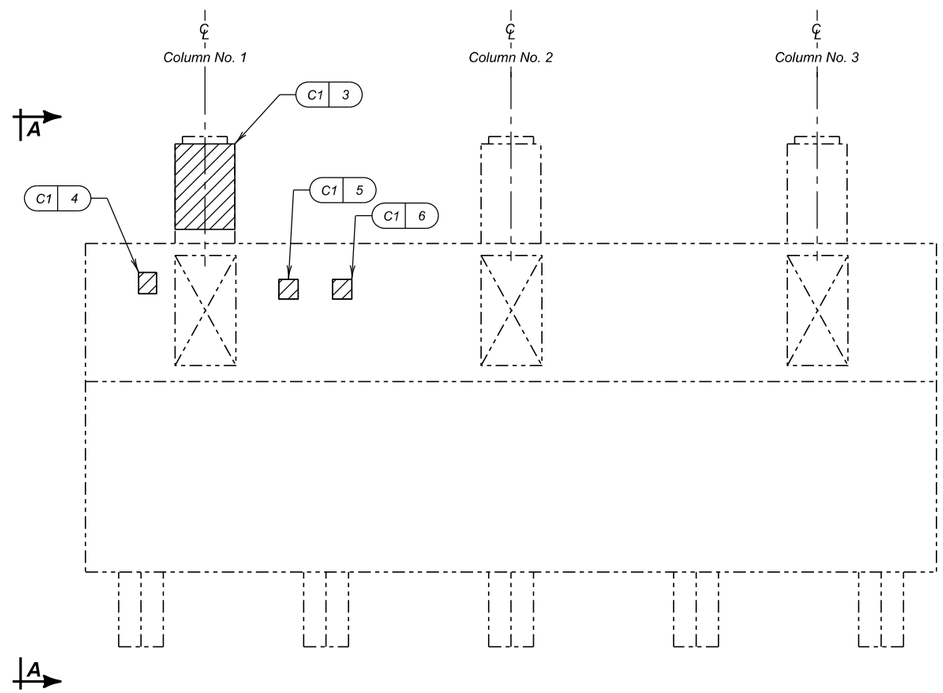

ELEVATION - BENT NO. 12

REGISTERED PROFESSIONAL ENGINEER
REG. NO.
13352
JAN O.
HANSEN
SOUTH DAKOTA
4/09/2021

CONCRETE REPAIRS AT BENT NO. 12
FOR
290'-0" TIMBER ARCH BRIDGE

26'-0" ROADWAY — 0 SKEW
OVER US 16A W — SEC. 31-TIS-R6E
STA. 11+73.50 TO 14+63.50 — P016A(08)59
STR. NO. 52-308-412 — HS-20

PENNINGTON COUNTY
S. D. DEPT. OF TRANSPORTATION
FEBRUARY 2020

DESIGNED BY	CK. DES. BY	DRAFTED BY	
ML	JH	JW	BRIDGE ENGINEER

LEGEND:

Shaded area indicates Concrete Repair Type C1 - Concrete Substructure Repair

NOTE

See repair details on sheets CONCRETE SUBSTRUCTURE REPAIR TYPE I and CONCRETE SUBSTRUCTURE REPAIR TYPE II

REPAIR TYPE C1 - CONCRETE SUBSTRUCTURE REPAIR				
ID	Estimated Defects	Unit	Type	Location
7	7.5	SF	II	Abutment 4
8	0.5	SF	I	Abutment 4

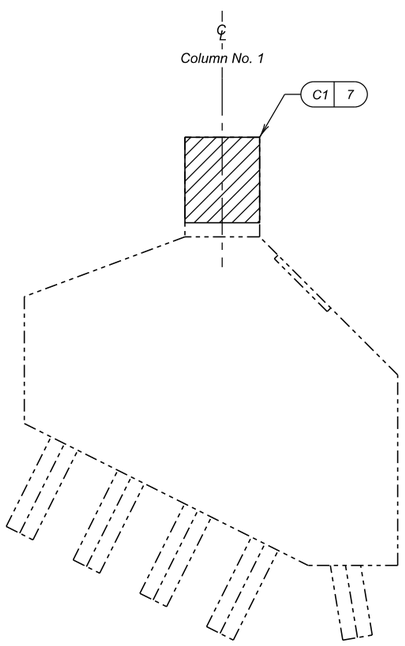

SECTION A-A

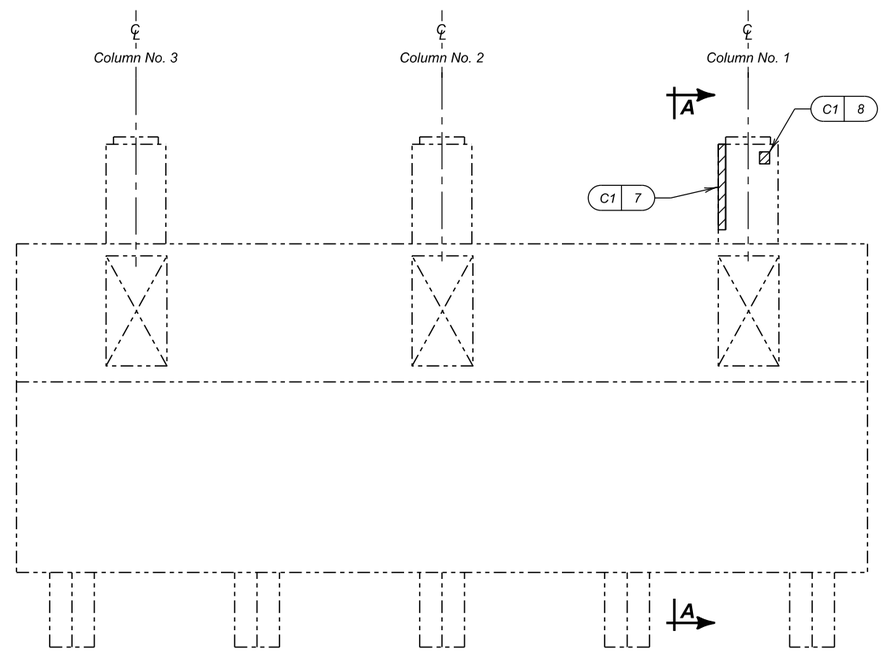

ELEVATION - BENT NO. 4

REGISTERED PROFESSIONAL ENGINEER
REG. NO.
13352
JAN O.
HANSEN
SOUTH DAKOTA
4/09/2021

CONCRETE REPAIRS AT BENT NO. 4
FOR
290'-0" TIMBER ARCH BRIDGE

26'-0" ROADWAY — 0 SKEW
OVER US 16A W — SEC. 31-TIS-R6E
STA. 11+73.50 TO 14+63.50 — P016A(08)59
STR. NO. 52-308-412 — HS-20

PENNINGTON COUNTY
S. D. DEPT. OF TRANSPORTATION
FEBRUARY 2020

DESIGNED BY	CK. DES. BY	DRAFTED BY	
ML	JH	JW	BRIDGE ENGINEER

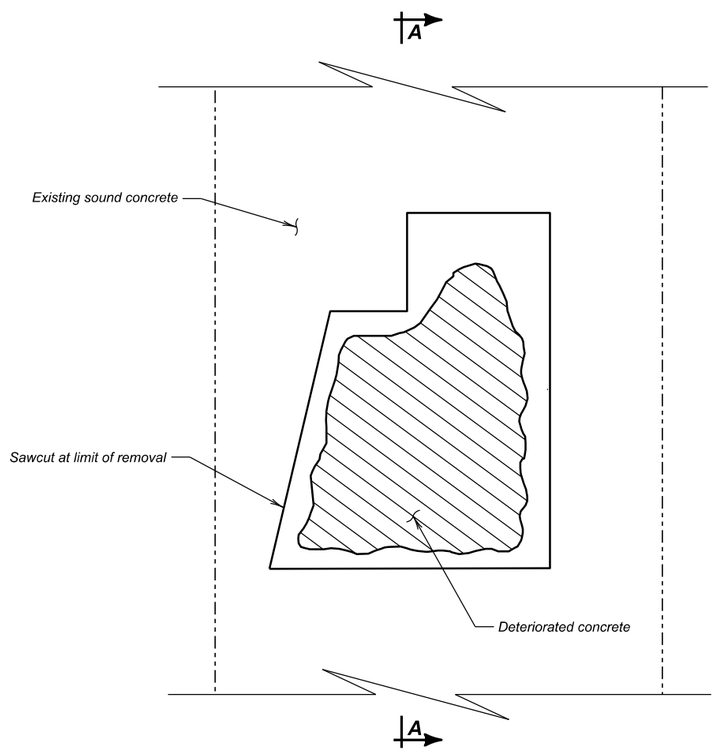

ELEVATION VIEW

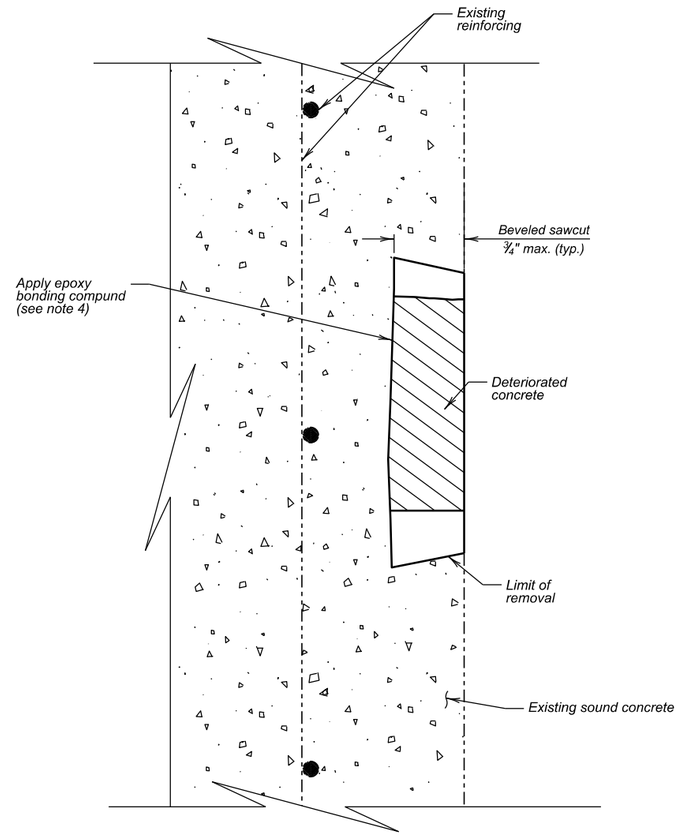

SECTION A-A

NOTES

1. The Engineer will determine the extent of the repair areas.
2. Square off deteriorated concrete to sound concrete with a sawcut of ¾" maximum.
3. Remove all loose and delaminated concrete to provide a sound bond between existing concrete and patching material.
4. Maintain all chamfers. Sandblast and then air-blast all repair areas with oil-free compressed air to protect against any contaminant detrimental to the bond of the new material. Apply bonding compound to the repair area in accordance with manufacturer's recommendations.
5. Clean existing reinforcing, if exposed, by sandblasting meeting the requirements of SSPC-SP10, and apply epoxy paint.
6. Place Rapid Set Cementitious Patching Material while the bonding compound is still tacky in accordance with the manufacturer's recommendations.
7. The cost of concrete removal, epoxy bonding agent, and patching material will be paid for at the contract unit price per square foot for Concrete Substructure Repair Type I.
8. Repair any concrete damaged during the operations to the satisfaction of the Engineer at no additional cost to the Department.

CONCRETE SUBSTRUCTURE REPAIR TYPE I

SUBSTRUCTURE REPAIR USING RAPID SET CEMENTITIOUS PATCHING MATERIAL
(DEPTH OF SPALL IS LESS THAN OR EQUAL TO ¾")

REGISTERED PROFESSIONAL ENGINEER
REG. NO.
13352
JAN O.
HANSEN
SOUTH DAKOTA
4/09/2021

CONCRETE SUBSTRUCTURE REPAIR TYPE I
FOR
290'-0" TIMBER ARCH BRIDGE

26'-0" ROADWAY — 0 SKEW
OVER US 16A W — SEC. 31-TIS-R6E
STA. 11+73.50 TO 14+63.50 — P016A(08)59
STR. NO. 52-308-412 — HS-20

PENNINGTON COUNTY
S. D. DEPT. OF TRANSPORTATION
FEBRUARY 2020

DESIGNED BY	CK. DES. BY	DRAFTED BY	
ML	JH	JW	BRIDGE ENGINEER

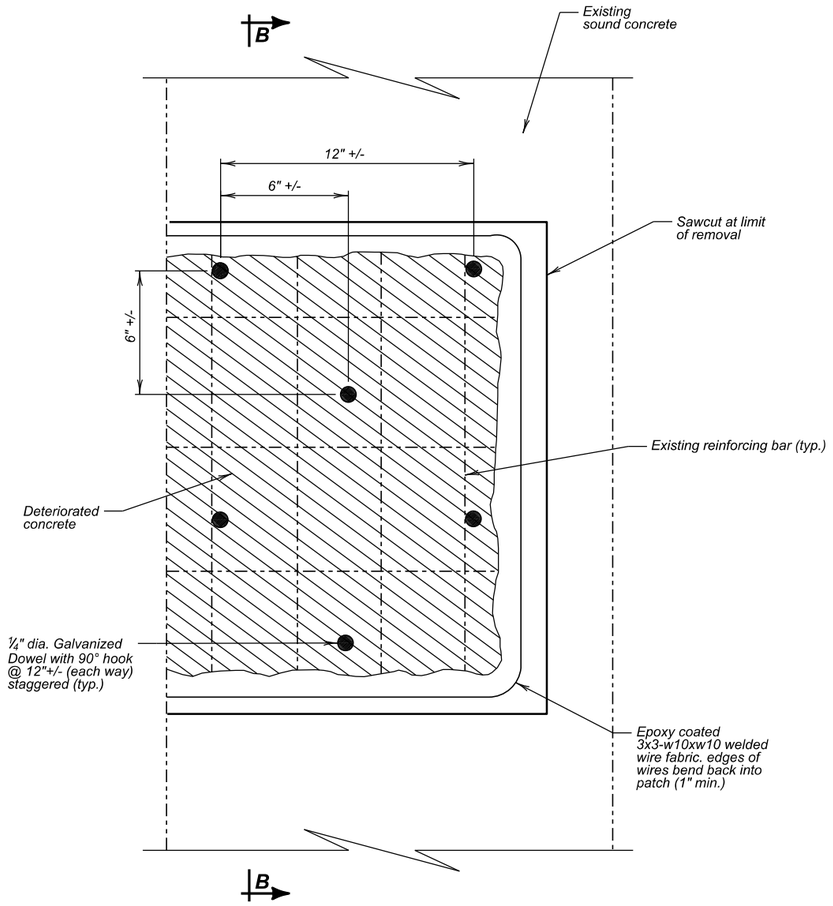

ELEVATION VIEW

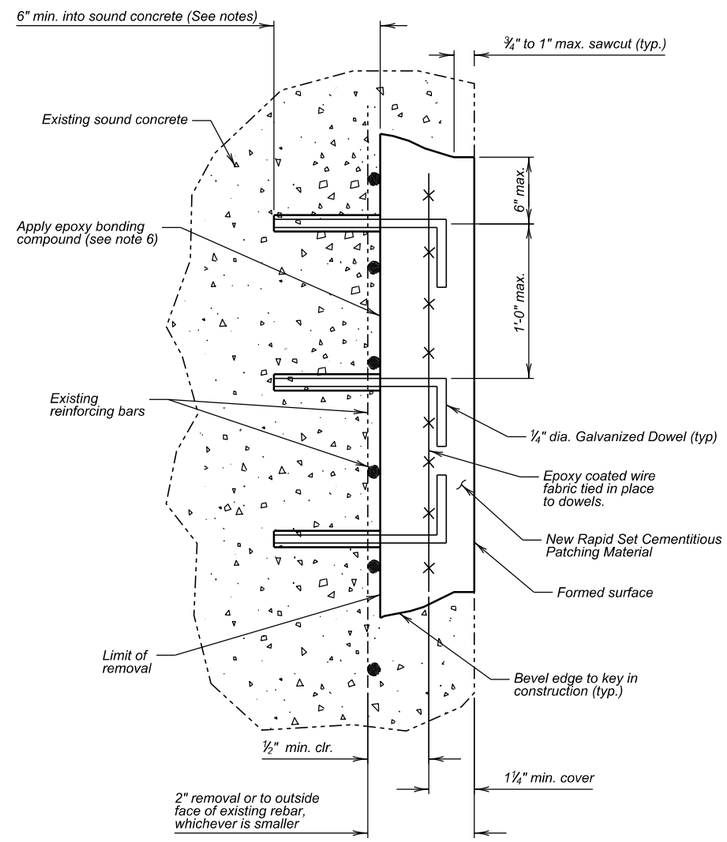

SECTION B-B

NOTES

1. *The Engineer will determine the extent of the repair areas.*
2. *Square off deteriorated concrete to sound concrete with a sawcut of ¾" minimum to 1" maximum but not to the depth of the reinforcing steel. Back bevel edge beyond sawcut.*
3. *Use hand tools to remove all loose and delaminated concrete to provide a sound bond between existing concrete and new concrete. Pneumatic hammers with impact ratings of 30 ft/lb or less may be used if required.*
4. *Clean existing concrete meeting the requirements of SSPC-SP13, prior to placing the epoxy bonding compound. Clean existing reinforcing, if exposed, by sandblasting meeting the requirements of SSPC-SP10, and apply epoxy paint.*
5. *Apply an epoxy bonding compound between the existing and the new Rapid Set Cementitious Patching Material according to the manufacturer's recommendations.*
6. *Alternate wire fabric may be substituted for 3x3-w10xw10, provided wire spacing does not exceed 4" and an equivalent steel area is provided.*
7. *The cost of concrete removal, epoxy bonding compound, dowels, epoxy coated wire fabric, holes for anchors, and Rapid Set Cementitious Patching Material will be paid at the contract unit price per square foot for Concrete Substructure Repair Type II.*
8. *Repair any concrete damaged during the operations to the satisfaction of the Engineer at no additional cost to the Department.*

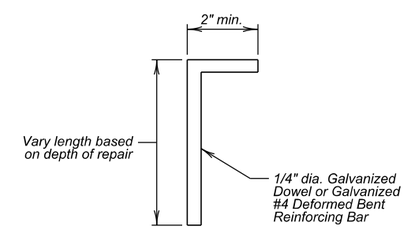

DOWEL OR BENT "L" BAR DETAIL

CONCRETE SUBSTRUCTURE REPAIR TYPE II

SUBSTRUCTURE REPAIR USING CLASS A45 CONCRETE
(DEPTH OF SPALL IS GREATER THAN ¾" AND LESS THAN OR EQUAL TO 2")

REGISTERED PROFESSIONAL ENGINEER
REG. NO. 13352
JAN O. HANSEN
SOUTH DAKOTA
4/09/2021

CONCRETE SUBSTRUCTURE REPAIR TYPE II
FOR
290'-0" TIMBER ARCH BRIDGE

26'-0" ROADWAY — 0 SKEW
OVER US 16A W — SEC. 31-TIS-R6E
STA. 11+73.50 TO 14+63.50 — P016A(08)59
STR. NO. 52-308-412 — HS-20

PENNINGTON COUNTY
S. D. DEPT. OF TRANSPORTATION
FEBRUARY 2020

DESIGNED BY	CK. DES. BY	DRAFTED BY	
ML	JH	JW	BRIDGE ENGINEER

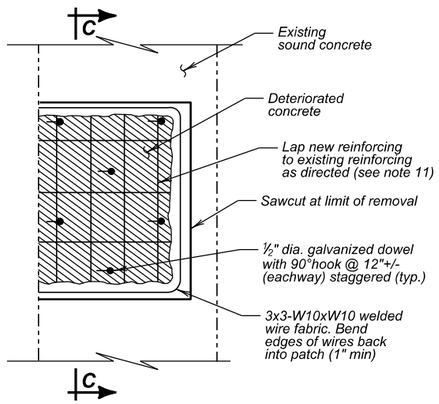

ELEVATION VIEW

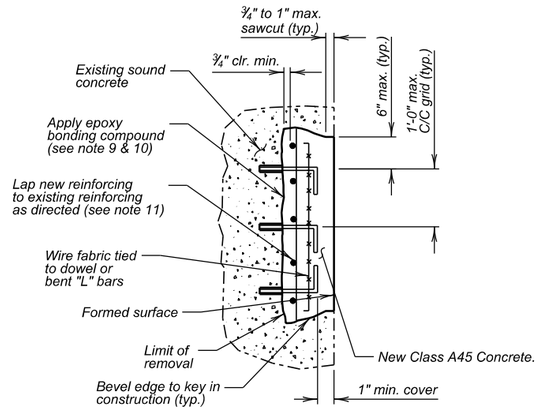

SECTION C-C
NEW REINFORCING

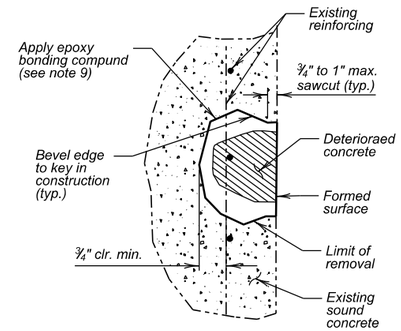

SECTION C-C
EXISTING REINFORCING

NOTES

1. *The Engineer will determine the extent of the repair areas, and need for new reinforcing bars.*
2. *Square off deteriorated concrete to sound concrete with a sawcut of ¾" minimum to 1" maximum but not to the depth of the reinforcing steel. Back bevel edge beyond sawcut.*
3. *Use hand tools to remove all loose and delaminated concrete to provide a sound bond between existing concrete and new concrete. Pneumatic hammers with impact ratings of 30 ft/lb or less may be used if required.*
4. *If deteriorated concrete extends beyond the rear face of primary reinforcing, remove the concrete to at least ¾" behind all reinforcing, or until all unsound concrete has been removed, whichever is greater.*
5. *Use dowels or bent bars only when least dimension of deteriorated concrete is greater than 2'-0" and new reinforcing cannot adequately be developed by lapping with existing reinforcing.*
6. *A galvanized #4 deformed reinforcing bent bar may replace the ½" dia. dowel with hook.*
7. *Install zinc anodes per the standard anode details. Anodes are required for all patches of 5 SF or greater where existing reinforcement is exposed.*
8. *Clean existing concrete meeting the requirements of SSPC-SP13, prior to placing the epoxy bonding compound. Clean existing reinforcing, if exposed, by sandblasting meeting the requirements of SSPC-SP10.*
9. *Apply an epoxy bonding compound between the existing and the new Class A45 Concrete.*
10. *Lap new reinforcing, as directed, to the existing reinforcing, a minimum of 18".*
11. *New reinforcing bars shall be uncoated (black).*
12. *Alternate wire fabric may be substituted for 3x3-w10xw10, provided wire spacing does not exceed 4" and an equivalent steel area is provided. New reinforcing bars may be omitted if wire fabric steel area exceeds existing reinforcing.*
13. *The cost of concrete removal, epoxy,½" dia. bars, reinforcement, wire fabric, Class A45 Concrete, dowel holes will be paid for at the contract unit price per square foot for Concrete Substructure Repair Type III.*
14. *Repair any concrete damaged during the operations to the satisfaction of the Engineer at no additional cost to the Department.*

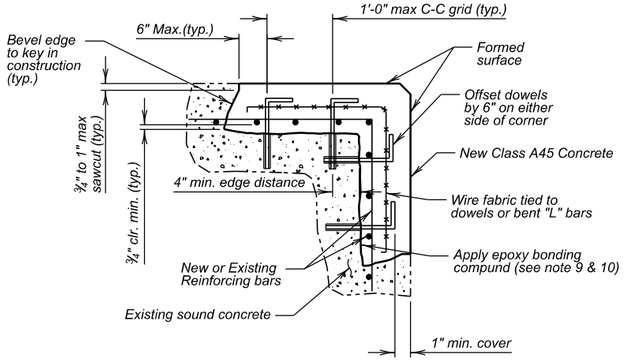

CORNER REPAIR DETAIL

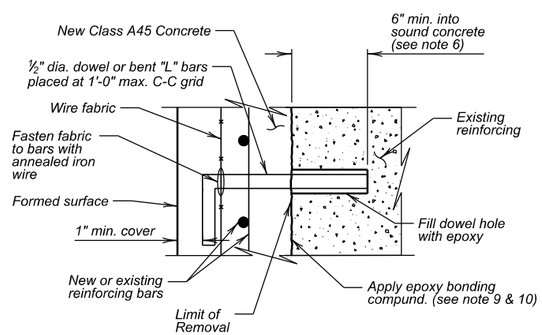

TYPICAL "L" BAR INSTALLATION DETAIL

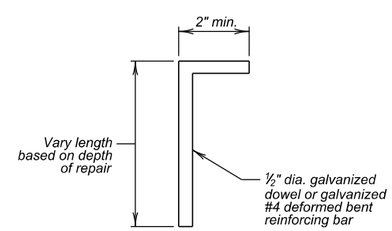

DOWEL OR BENT "L" BAR DETAIL

CONCRETE SUBSTRUCTURE REPAIR TYPE III

SUBSTRUCTURE REPAIR USING CLASS A45 CONCRETE
(DEPTH OF SPALL IS GREATER THAN 2")

REGISTERED PROFESSIONAL ENGINEER
REG. NO.
13352
JAN O.
HANSEN
SOUTH DAKOTA
4/09/2021

CONCRETE SUBSTRUCTURE REPAIR TYPE III
FOR
290'-0" TIMBER ARCH BRIDGE

26'-0" ROADWAY — 0 SKEW
OVER US 16A W — SEC. 31-TIS-R6E
STA. 11+73.50 TO 14+63.50 — P016A(08)59
STR. NO. 52-308-412 — HS-20

PENNINGTON COUNTY
S. D. DEPT. OF TRANSPORTATION
FEBRUARY 2020

DESIGNED BY	CK. DES. BY	DRAFTED BY	
ML	JH	JW	BRIDGE ENGINEER

TYPICAL CRACK

CONCRETE REPAIR C3 - CONCRETE PROTECTIVE COATING

1. *Perform all substructure repairs prior to placing Concrete Protective Coating.*
2. *Perform bridge cleaning prior to applying Concrete Protective Coating.*
3. *Concrete Protective Coating is to be applied to all exposed surfaces of all substructure units.*
4. *Color of Concrete Protective Coating shall be AMS-STD-595A color 37925 "Insignia White".*
5. *Refer to the Special Provisions for additional information.*

CONCRETE REPAIR C2 - CONCRETE CRACK INJECTION/SEALING

1. *Cracks greater than $\frac{1}{16}$" in width shall be repaired using epoxy injection as indicated in the plans.*
2. *Thoroughly clean the surfaces of the crack repair area.*
3. *Glue injection ports in place along the crack at spacings as recommended by the manufacturer.*
4. *Seal the crack surface and areas surrounding the injection ports.*
5. *Do not inject the cracked area until after the surface sealer has hardened. Inject epoxy using means as recommended by the manufacturer.*
6. *Start injection on the lowest point on the crack. Move to the next higher port and continue until the crack is completely filled.*
7. *Remove the injection ports after the epoxy has achieved an initial cure.*
8. *Refer to the Special Provisions for additional information.*

REGISTERED PROFESSIONAL ENGINEER
REG. NO.
13352
JAN O.
HANSEN
SOUTH DAKOTA
4/09/2021

CONCRETE REPAIRS TYPE C2 & C3
FOR
290'-0" TIMBER ARCH BRIDGE

26'-0" ROADWAY — 0 SKEW
OVER US 16A W — SEC. 31-TIS-R6E
STA. 11+73.50 TO 14+63.50 — P016A(08)59
STR. NO. 52-308-412 — HS-20

PENNINGTON COUNTY
S. D. DEPT. OF TRANSPORTATION
FEBRUARY 2020

DESIGNED BY	CK. DES. BY	DRAFTED BY	
ML	JH	JW	BRIDGE ENGINEER

FOR BIDDING PURPOSES ONLY

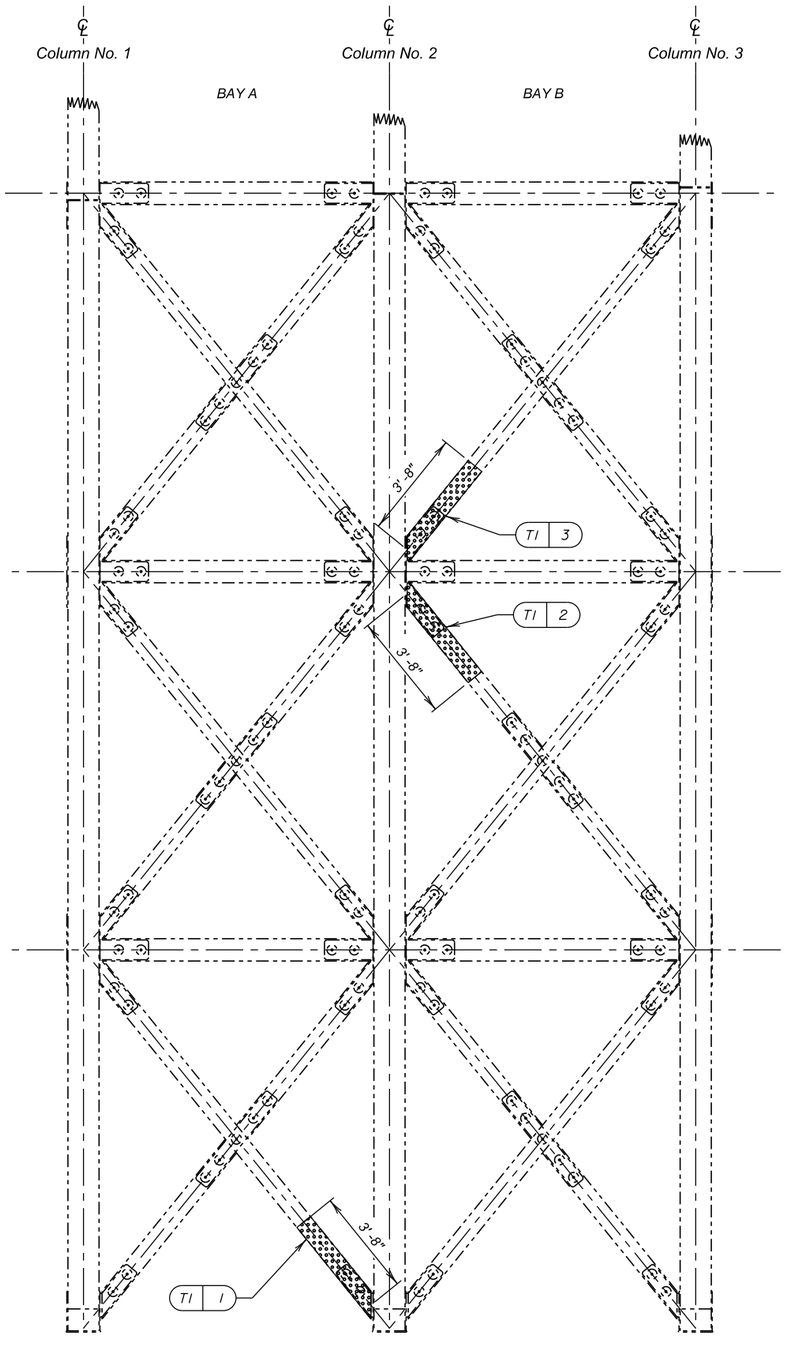

ELEVATION - BENT NO. 4 & 12

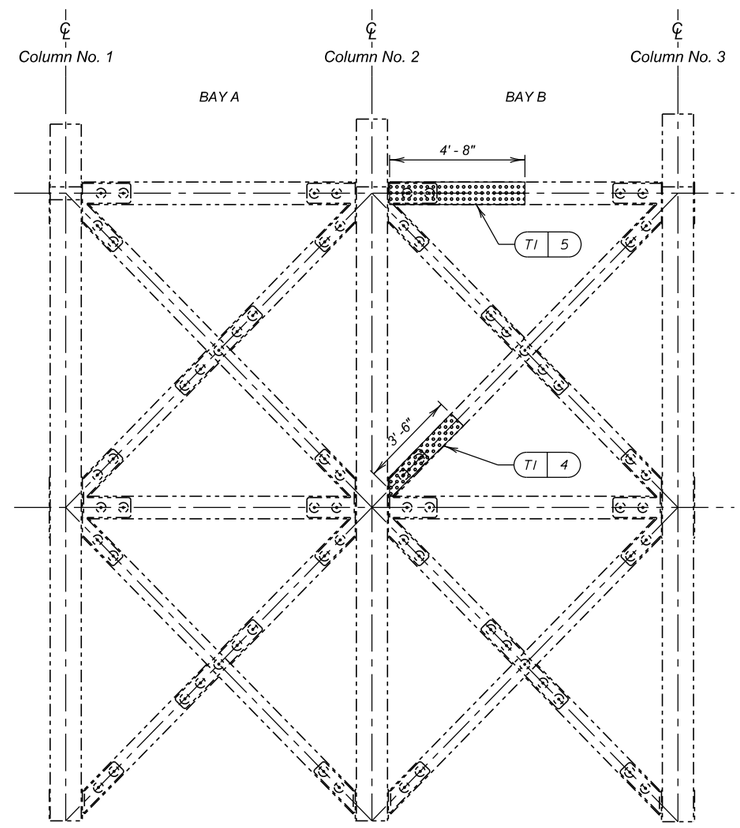

ELEVATION - BENT NO. 5 & 11

LEGEND:

Shaded area indicates Repair Type T1 - Diffuse Timber

NOTES

1. *See sheet Timber Repair Type T1 - Diffuse Timber Details for timber diffuse details.*
2. *Diffuser lengths are measured along centerline of the member.*

REPAIR TYPE T1 - DIFFUSE TIMBER						
			Member Size			Volume
ID	Location	Member	Width	Depth	Diffuse Length	CuFt
1	Bent 4	Diagonal	7"	4 7/8"	3'-8"	0.9
2	Bent 4	Diagonal	7"	4 7/8"	3'-8"	0.9
3	Bent 12	Diagonal	7"	4 7/8"	3'-8"	0.9
4	Bent 11	Diagonal	7"	4 7/8"	3'-6"	0.9
5	Bent 5	Top Brace	9"	4 7/8"	4'-8"	1.5

TIMBER DIFFUSE LOCATIONS AT
BENTS NO. 4, NO. 12, NO. 5 AND NO. 11
FOR

290'-0" TIMBER ARCH BRIDGE

26'-0" ROADWAY — 0 SKEW
OVER US 16A W — SEC. 31-TIS-R6E
STA. 11+73.50 TO 14+63.50 — P016A(08)59
STR. NO. 52-308-412 — HS-20

PENNINGTON COUNTY
S. D. DEPT. OF TRANSPORTATION
FEBRUARY 2020

DESIGNED BY	CK. DES. BY	DRAFTED BY	
ML	JH	JW	BRIDGE ENGINEER

REPAIR TYPE T1 - DIFFUSE TIMBER						
			Member Size			Volume
ID	Location	Member	Width	Depth	Diffuse Length	CuFt
6	Bent 6	Diagonal	7"	6½"	2'-10"	0.9
7	Bent 6	Column 3	12½"	Varies*	4'-6"	5.3
8	Bent 7	Top Brace	7"	4⅞"	4'-6"	1.1
9	Bent 9	Top Brace	7"	4⅞"	4'-6"	1.1

LEGEND:

Shaded area indicates Repair Type T1 - Diffuse Timber

NOTES

1. *See sheet Timber Repair Type T1 - Diffuse Timber Details for timber diffuse details.*
2. *Diffuser length is measured along centerline of the member.*

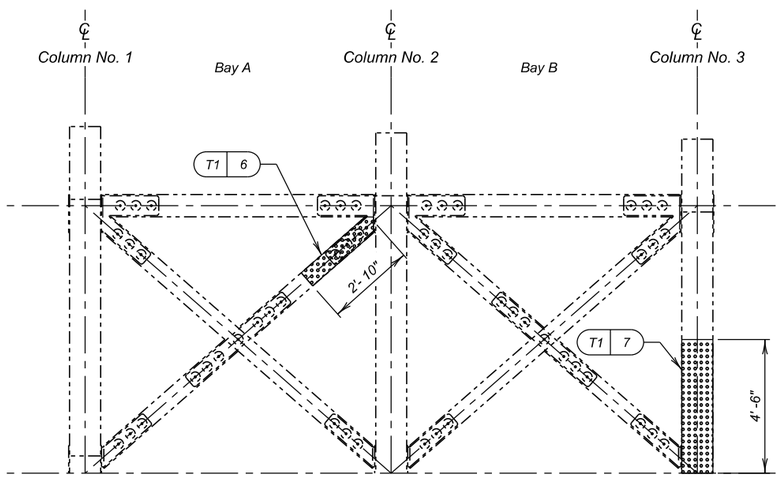

ELEVATION - BENT NO. 6

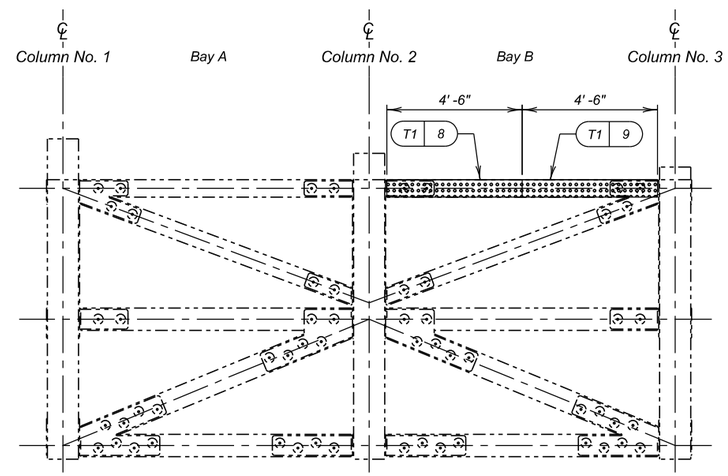

ELEVATION - BENT NO. 7 & 9

REGISTERED PROFESSIONAL ENGINEER
REG. NO.
13352
JAN O.
HANSEN
SOUTH DAKOTA
4/09/2021

TIMBER DIFFUSE LOCATIONS AT
BENTS NO. 6, NO. 7 AND NO. 9
FOR

290'-0" TIMBER ARCH BRIDGE

26'-0" ROADWAY — 0 SKEW
OVER US 16A W — SEC. 31-TIS-R6E
STA. 11+73.50 TO 14+63.50 — P016A(08)59
STR. NO. 52-308-412 — HS-20

PENNINGTON COUNTY
S. D. DEPT. OF TRANSPORTATION
FEBRUARY 2020

DESIGNED BY	CK. DES. BY	DRAFTED BY	
ML	JH	JW	BRIDGE ENGINEER

LEGEND:

Shaded area indicates Repair Type T1 - Diffuse Timber

NOTES

1. *See sheet Timber Repair Type T1 - Diffuse Timber Details for timber diffuse details.*
2. *Diffuser length is measured along centerline of the member.*

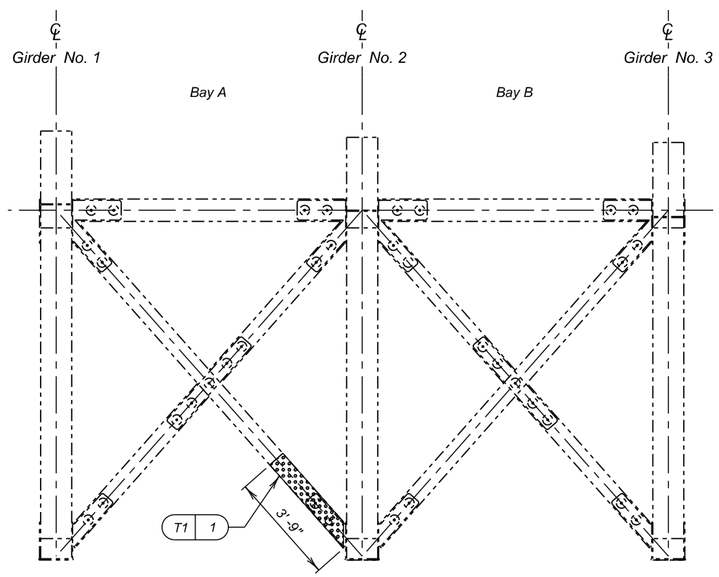

ELEVATION - BENT NO. 14

REPAIR TYPE T1 - DIFFUSE TIMBER						
			Member Size			Volume
ID	Location	Member	Width	Depth	Diffuse Length	CuFt
10	Bent 14	Diagonal	7"	4⅞"	3'-9"	0.9

REGISTERED PROFESSIONAL ENGINEER
REG. NO.
13352
JAN O.
HANSEN
SOUTH DAKOTA
4/09/2021

TIMBER DIFFUSE LOCATIONS AT BENT NO. 14
FOR
290'-0" TIMBER ARCH BRIDGE

26'-0" ROADWAY — 0 SKEW
OVER US 16A W — SEC. 31-TIS-R6E
STA. 11+73.50 TO 14+63.50 — P016A(08)59
STR. NO. 52-308-412 — HS-20

PENNINGTON COUNTY
S. D. DEPT. OF TRANSPORTATION
FEBRUARY 2020

DESIGNED BY	CK. DES. BY	DRAFTED BY	
ML	JH	JW	BRIDGE ENGINEER

REPAIR TYPE T1 - DIFFUSE TIMBER						
			Member Size			Volume
ID	Location	Member	Width	Depth	Diffuse Length	CuFt
15	Span 5	Top Brace	7"	4⅞"	4'-6"	1.1

LEGEND:

Shaded area indicates Repair Type T1 - Diffuse Timber

NOTE

See sheet Timber Repair Type T1 - Diffuse Timber Details for timber diffuse details.

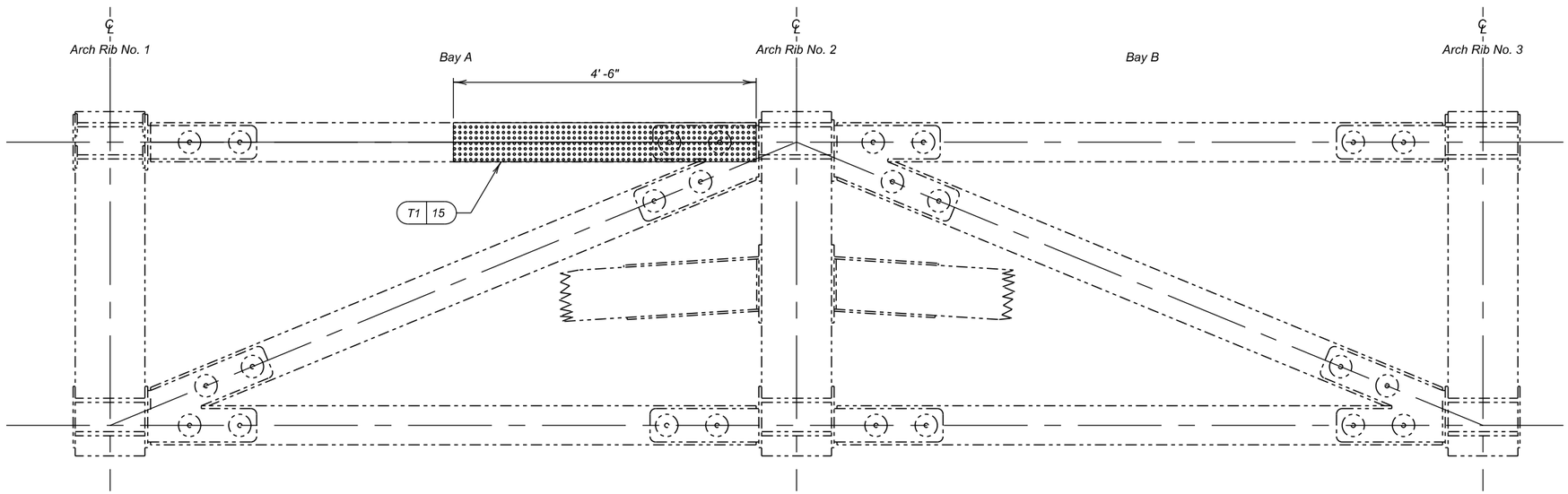

ELEVATION - INTERMEDIATE STRUT FRAME: MIDSPAN 5

REGISTERED PROFESSIONAL ENGINEER
REG. NO.
13352
JAN O.
HANSEN
SOUTH DAKOTA
4/09/2021

TIMBER DIFFUSE LOCATIONS AT
INTERMEDIATE STRUT FRAMES
FOR

290'-0" TIMBER ARCH BRIDGE

26'-0" ROADWAY — 0 SKEW
OVER US 16A W — SEC. 31-TIS-R6E
STA. 11+73.50 TO 14+63.50 — P016A(08)59
STR. NO. 52-308-412 — HS-20

PENNINGTON COUNTY
S. D. DEPT. OF TRANSPORTATION
FEBRUARY 2020

DESIGNED BY	CK. DES. BY	DRAFTED BY	
ML	JH	JW	BRIDGE ENGINEER

FOR BIDDING PURPOSES ONLY

LEGEND:

Shaded area indicates Repair Type T1 - Diffuse Timber

Arrow indicates side of member to install diffuser rods

NOTES

1. *See sheet TIMBER REPAIR TYPE T1 - DIFFUSE TIMBER DETAILS (CONT.) for Girder End, Arch Rib, Column Cap and Column Base Diffuse Details.*
2. *Typical all Girder Ends, Arch Ribs, Column Caps, and Column Bases.*

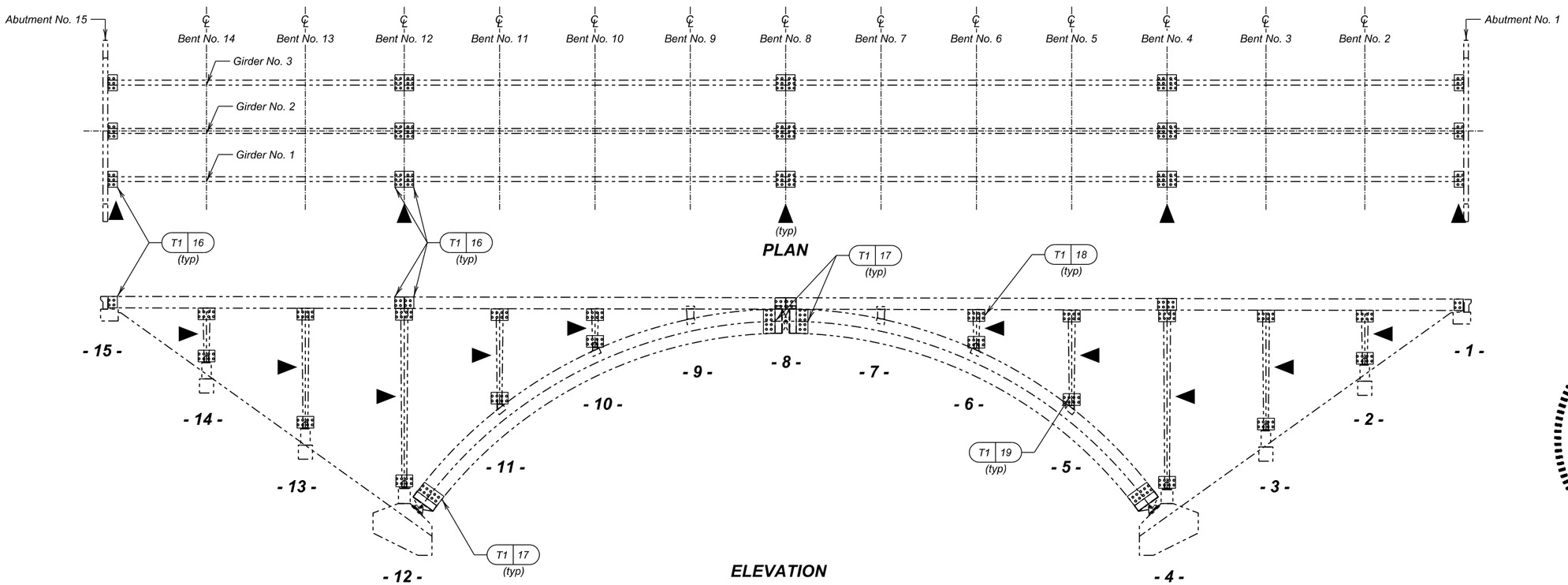

REPAIR TYPE T1 - DIFFUSE TIMBER							
			Member Size			Volume/Location	Total
ID	Location	No. of Locations	Width	Depth	Diffuse Length	CuFt	CuFt
16	Girder Ends	24	12½"	29¼"	2'-6"	6.4	153.6
17	Arch Rib Ends	12	12½"	61¾"	0'-6"	2.7	32.4
18	Column Cap	30	12½"	18"	1'-3"	2.0	60.0
19	Column Base	30	12½"	12"	2'-0"	2.1	63.0

REGISTERED PROFESSIONAL ENGINEER
REG. NO. 13352
JAN O. HANSEN
SOUTH DAKOTA
4/09/2021

DIFFUSE LOCATIONS AT GIRDERS, ARCHES, AND COLUMNS
FOR
290'-0" TIMBER ARCH BRIDGE

26'-0" ROADWAY — 0 SKEW
OVER US 16A W — SEC. 31-TIS-R6E
STA. 11+73.50 TO 14+63.50 — P016A(08)59
STR. NO. 52-308-412 — HS-20
PCN 04FU

PENNINGTON COUNTY
S. D. DEPT. OF TRANSPORTATION
FEBRUARY 2020

DESIGNED BY	CK. DES. BY	DRAFTED BY	
ML	JH	JW	BRIDGE ENGINEER

REPAIR TYPE T1 - DIFFUSE TIMBER						
			Member Size			Volume
ID	Location	Member	Width	Depth	Diffuse Length	CuFt
11	Span 11	Diagonal	9"	8⅛"	8'-3"	4.2
12	Span 9	Diagonal	9"	6½"	7'-4"	3.0
13	Span 5	Diagonal	9"	8⅛"	7'-10"	4.0
14	Span 4	Diagonal	9"	8⅛"	8'-3"	4.2

LEGEND:

Shaded area indicates Repair Type T1 - Diffuse Timber

NOTES

1. *See sheet Timber Repair Type T1 - Diffuse Timber Details for timber diffuse details.*
2. *Diffuse lengths are measured along centerline of the member.*

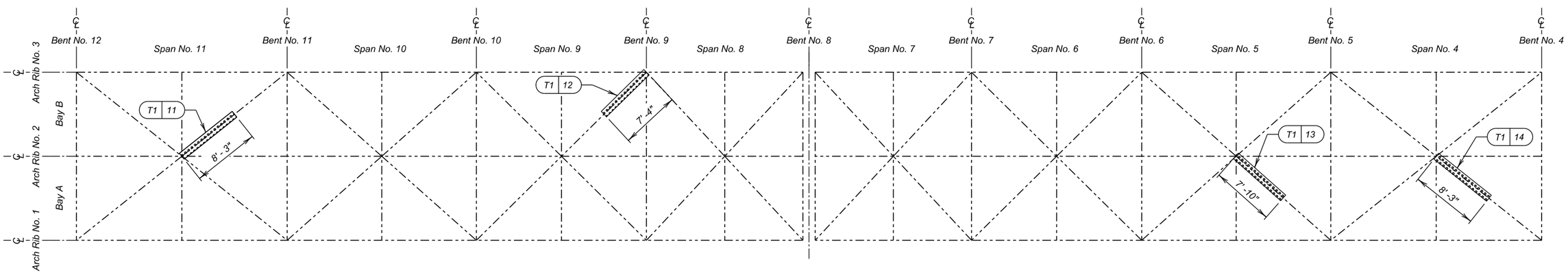

PLAN - ARCH RIB STRUTS AND BRACES

REGISTERED PROFESSIONAL ENGINEER
REG. NO.
13352
JAN O.
HANSEN
SOUTH DAKOTA
4/09/2021

TIMBER DIFFUSE LOCATIONS AT
ARCH RIB STRUTS AND BRACES
FOR

290'-0" TIMBER ARCH BRIDGE

26'-0" ROADWAY — 0 SKEW
OVER US 16A W — SEC. 31-TIS-R6E
STA. 11+73.50 TO 14+63.50 — P016A(08)59
STR. NO. 52-308-412 — HS-20

PENNINGTON COUNTY
S. D. DEPT. OF TRANSPORTATION
FEBRUARY 2020

DESIGNED BY	CK. DES. BY	DRAFTED BY	
ML	JH	JW	BRIDGE ENGINEER

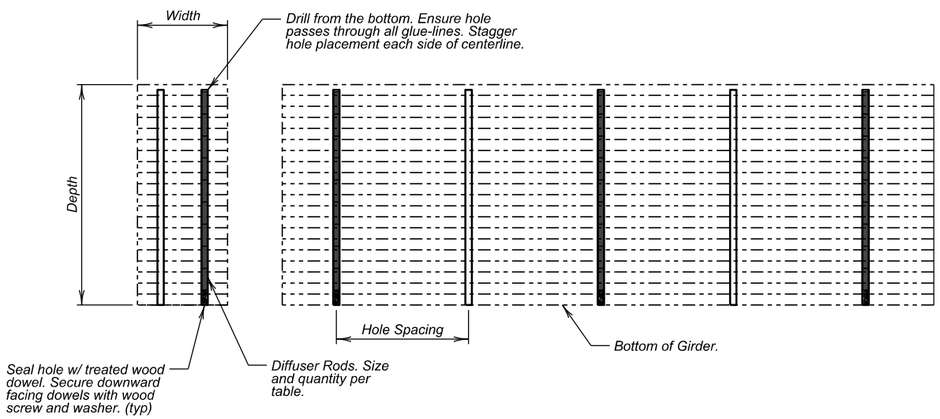

GLULAM BEAM DIFFUSING -
ORIENTATION A: PERPENDICULAR TO GLUE LINES

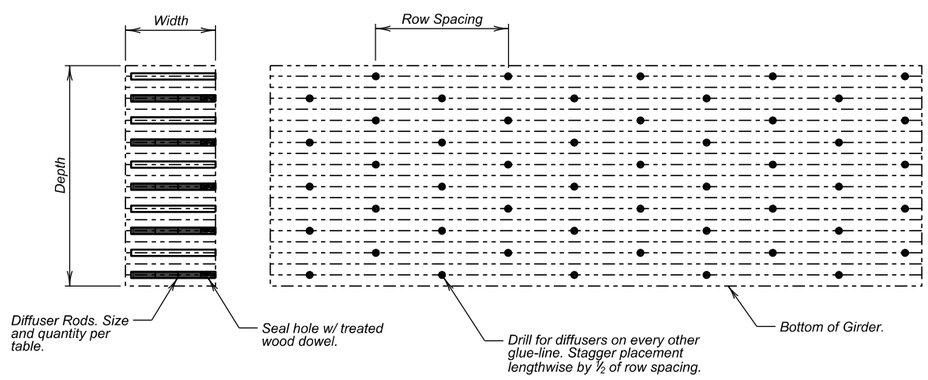

GLULAM BEAM DIFFUSING -
ORIENTATION B: PARALLEL TO GLUE LINES

GLULAM BEAM DIFFUSER SPACING
PERPENDICULAR TO GLUE LINES

ELEMENT WIDTH	ELEMENT DEPTH	3/4" x 3" DIFFUSERS		1/2" x 4" DIFFUSERS		1/2" x 5" DIFFUSERS	
		RODS PER HOLE	HOLE SPACING	RODS PER HOLE	HOLE SPACING	RODS PER HOLE	HOLE SPACING
5.125	12	3	18	2	10	1.5	10
5.125	15	4	18	3	12	2.5	12
5.125	18	5	18	3.5	12	3	12
5.125	21	6	18	4.5	14	3.5	12
5.125	24	7	18	5	12	4	12
5.125	27	8	18	6	14	4.5	12
5.125	30	9	18	6.5	14	5.5	14
6.75	12	3	18	2	8	1.5	6
6.75	15	4	18	3	10	2.5	10
6.75	18	5	18	3.5	8	3	10
6.75	21	6	18	4.5	10	3.5	10
6.75	24	7	18	5	10	4	10
6.75	27	8	18	6	10	4.5	10
6.75	30	9	18	6.5	10	5.5	10
8.75	12	3	18	2	6	1.5	6
8.75	15	4	18	3	6	2.5	8
8.75	18	5	18	3.5	6	3	8
8.75	21	6	18	4.5	8	3.5	8
8.75	24	7	18	5	8	4	8
8.75	27	8	18	6	8	4.5	8
8.75	30	9	18	6.5	8	5.5	8
10.75	12	3	16	2	4	1.5	4
10.75	15	4	18	3	6	2.5	6
10.75	18	5	18	3.5	6	3	6
10.75	21	6	18	4.5	6	3.5	6
10.75	24	7	18	5	6	4	6
10.75	27	8	18	6	6	4.5	6
10.75	30	9	18	6.5	6	5.5	6
12.25	12	3	14	2	4	1.5	4
12.25	15	4	16	3	4	2.5	4
12.25	18	5	16	3.5	4	3	4
12.25	21	6	16	4.5	4	3.5	4
12.25	24	7	18	5	4	4	4
12.25	27	8	18	6	6	4.5	4
12.25	30	9	18	6.5	6	5.5	6
14.25	12	3	12	2	2	1.5	2
14.25	15	4	14	3	4	2.5	4
14.25	18	5	14	3.5	4	3	4
14.25	21	6	14	4.5	4	3.5	4
14.25	24	7	14	5	4	4	4
14.25	27	8	14	6	4	4.5	4
14.25	30	9	16	6.5	4	5.5	4

GLULAM BEAM DIFFUSER SPACING
PARALLEL TO GLUE LINES

ELEMENT WIDTH	3/4" x 3" DIFFUSERS		1/2" x 4" DIFFUSERS		1/2" x 5" DIFFUSERS	
	RODS PER HOLE	ROW SPACING	RODS PER HOLE	ROW SPACING	RODS PER HOLE	ROW SPACING
5.125	0.5	18	0.5	10	0.5	12
6.75	1	18	1	16	0.5	10
8.75	1.5	18	1.5	18	1	16
10.75	2.5	18	2	18	1.5	18
12.25	3	18	2	18	1.5	16
14.25	3.5	18	2.5	18	2	18

NOTES

1. *Install diffuser rods according to Orientation A whenever possible. If physical conflicts prevent installation according to Orientation A, notify the Engineer prior to proceeding with Orientation B.*
2. *Diffuser spacing parallel to grain should not exceed 18 in o.c. and spacing perpendicular to grain should not exceed 8 in o.c. treatment will not spread through glue-lines, so it is important that diffuser rods are inserted in all laminations.*
3. *Contractor will take care not to completely drill through the entire width or height of the member. If the Contractor drills through the entire width or height, notify the Engineer and install a treated wood dowel on both sides at no additional cost.*

REGISTERED PROFESSIONAL ENGINEER
REG. NO.
13352
JAN O.
HANSEN
SOUTH DAKOTA
4/09/2021

TIMBER REPAIR TYPE T1 - DIFFUSE TIMBER DETAILS
FOR
290'-0" TIMBER ARCH BRIDGE

26'-0" ROADWAY — 0 SKEW
OVER US 16A W — SEC. 31-TIS-R6E
STA. 11+73.50 TO 14+63.50 — P016A(08)59
STR. NO. 52-308-412 — HS-20

PENNINGTON COUNTY
S. D. DEPT. OF TRANSPORTATION
FEBRUARY 2020

DESIGNED BY	CK. DES. BY	DRAFTED BY	
ML	JH	JW	BRIDGE ENGINEER

NOTE

Repair details apply to all Timber Girders, Arch Ribs, and Bent Columns.

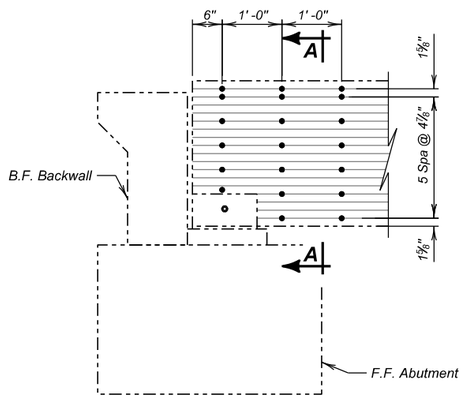

GIRDER END AT ABUTMENT

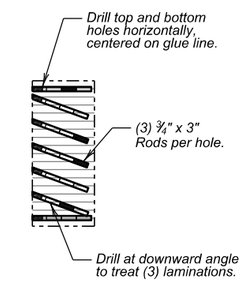

SECTION A-A

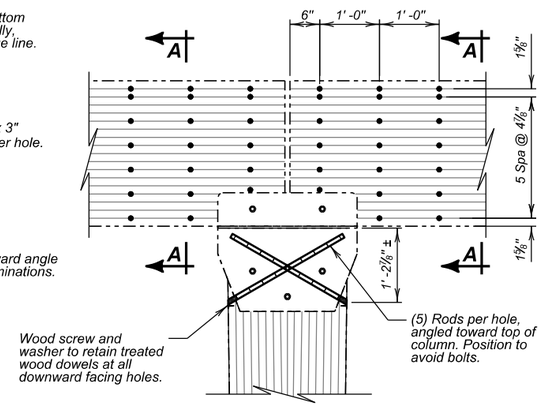

GIRDER END AND COLUMN CAP

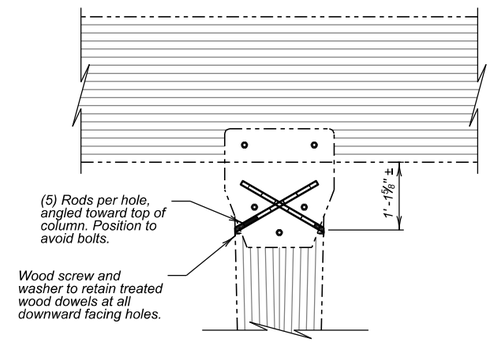

COLUMN CAP

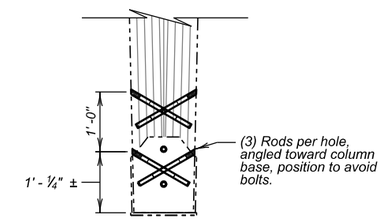

COLUMN BASE

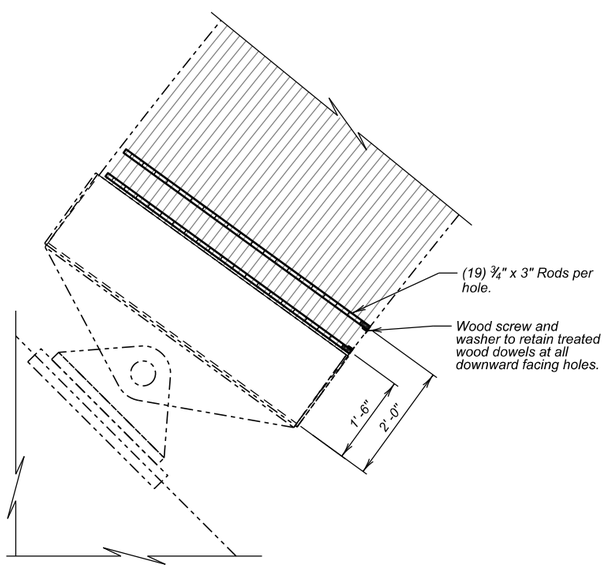

ARCH HINGE AT BASE

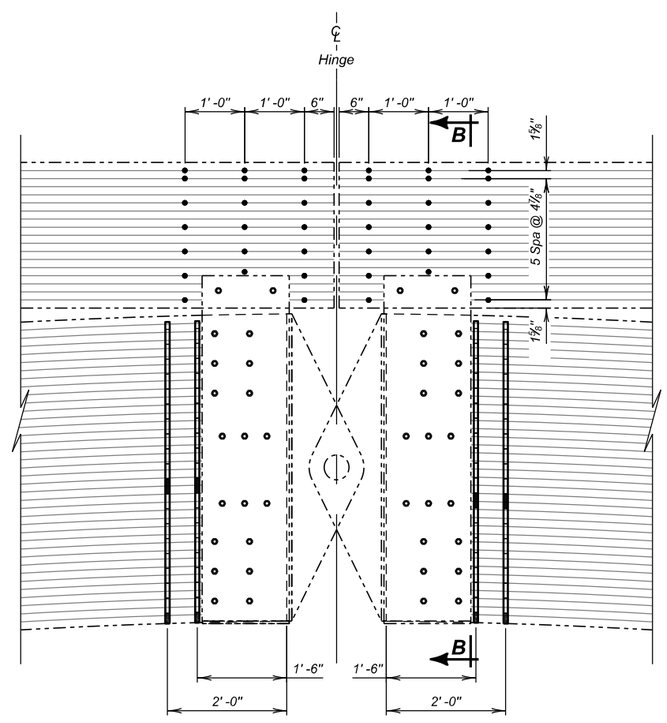

ARCH HINGE AT CENTER

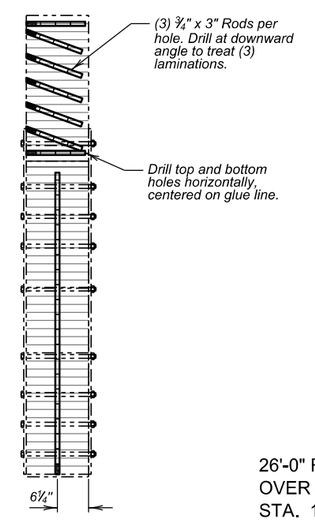

SECTION B-B

REGISTERED PROFESSIONAL ENGINEER
REG. NO.
13352
JAN O.
HANSEN
SOUTH DAKOTA
4/09/2021

TIMBER REPAIR TYPE T1 -
DIFFUSE TIMBER DETAILS (CONT.)

FOR

290'-0" TIMBER ARCH BRIDGE

26'-0" ROADWAY — 0 SKEW
OVER US 16A W — SEC. 31-TIS-R6E
STA. 11+73.50 TO 14+63.50 — P016A(08)59
STR. NO. 52-308-412 — HS-20

PENNINGTON COUNTY
S. D. DEPT. OF TRANSPORTATION
FEBRUARY 2020

DESIGNED BY	CK. DES. BY	DRAFTED BY	
ML	JH	JW	BRIDGE ENGINEER

NOTES

1. *Replace missing ¾" dia. bolts, nuts and washers as indicated conforming to ASTM F3125, Grade A325, Type 1.*
2. *If other bolts are found missing or damaged, inform the Engineer before replacing.*
3. *Item No. 410E2800, Bolt Replacement Type 1A, to cover all costs associated with the bolt replacement work.*

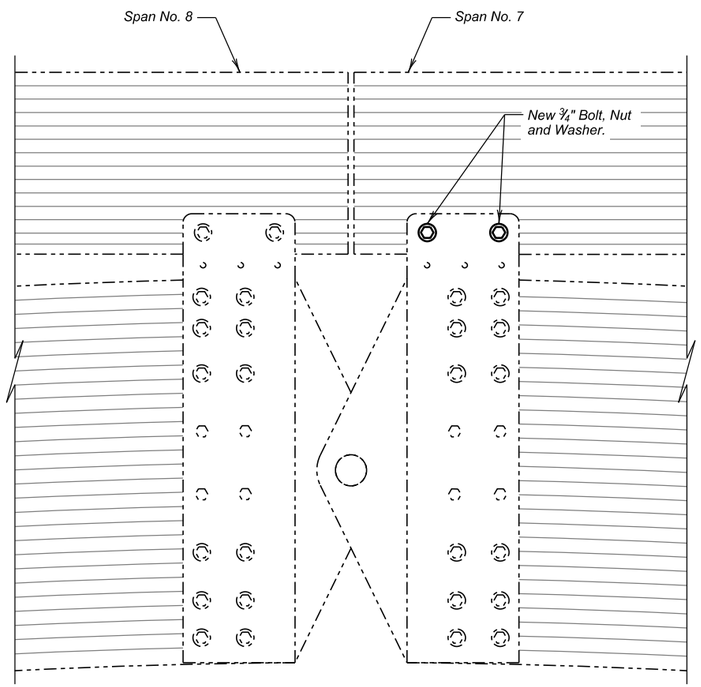

ELEVATION - CROWN HINGE AT ARCH RIB NO. 2

REGISTERED PROFESSIONAL ENGINEER
REG. NO.
13352
JAN O.
HANSEN
SOUTH DAKOTA
4/09/2021

STEEL REPAIRS AT CROWN HINGE
FOR
290'-0" TIMBER ARCH BRIDGE

26'-0" ROADWAY — 0 SKEW
OVER US 16A W — SEC. 31-TIS-R6E
STA. 11+73.50 TO 14+63.50 — P016A(08)59
STR. NO. 52-308-412 — HS-20

PENNINGTON COUNTY
S. D. DEPT. OF TRANSPORTATION
FEBRUARY 2020

DESIGNED BY	CK. DES. BY	DRAFTED BY	
ML	JH	JW	BRIDGE ENGINEER

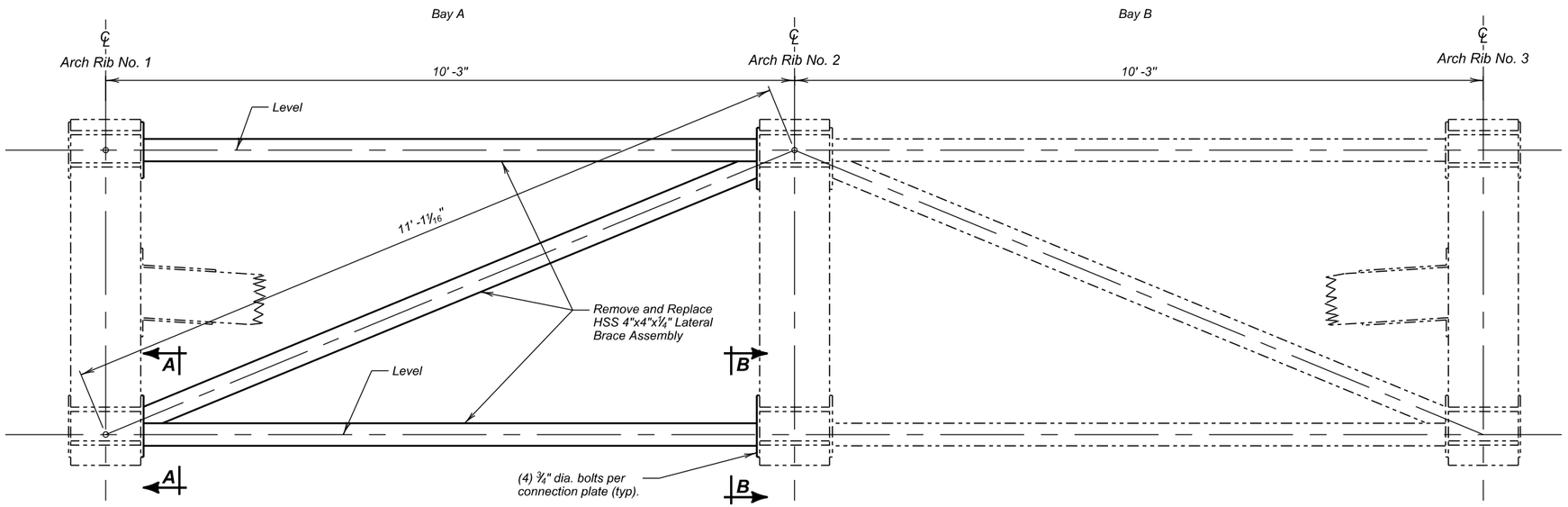

ELEVATION - STRUT FRAME AT BENT NO. 12

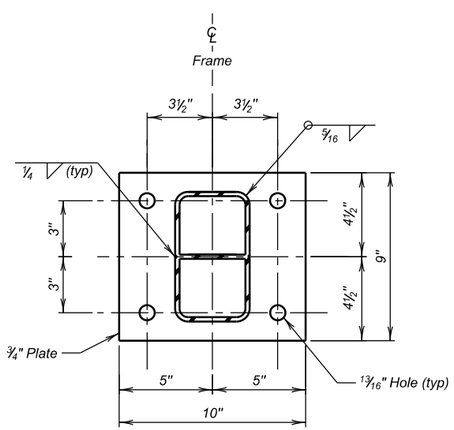

SECTION A-A

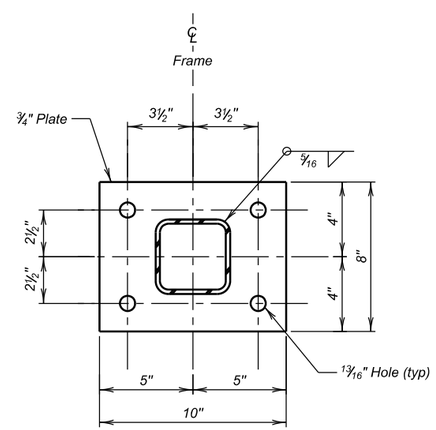

SECTION B-B

REGISTERED PROFESSIONAL ENGINEER
REG. NO.
13352
JAN O.
HANSEN
SOUTH DAKOTA
4/09/2021

STEEL REPAIRS AT BENT NO. 12
FOR
290'-0" TIMBER ARCH BRIDGE

26'-0" ROADWAY — 0 SKEW
OVER US 16A W — SEC. 31-TIS-R6E
STA. 11+73.50 TO 14+63.50 — P016A(08)59
STR. NO. 52-308-412 — HS-20

PENNINGTON COUNTY
S. D. DEPT. OF TRANSPORTATION
FEBRUARY 2020

DESIGNED BY	CK. DES. BY	DRAFTED BY	
ML	JH	JW	BRIDGE ENGINEER

FOR BIDDING PURPOSES ONLY

LEGEND:

Shaded area indicates Steel Repair Type S1 - Test and Repair Galvanized Coating

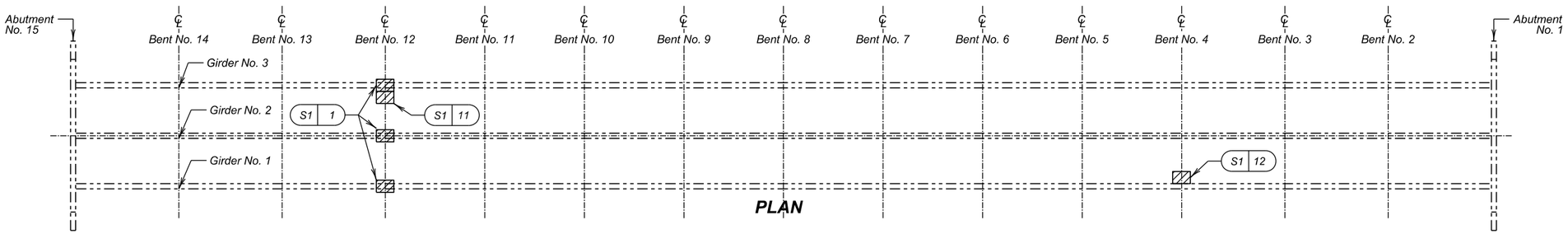

PLAN

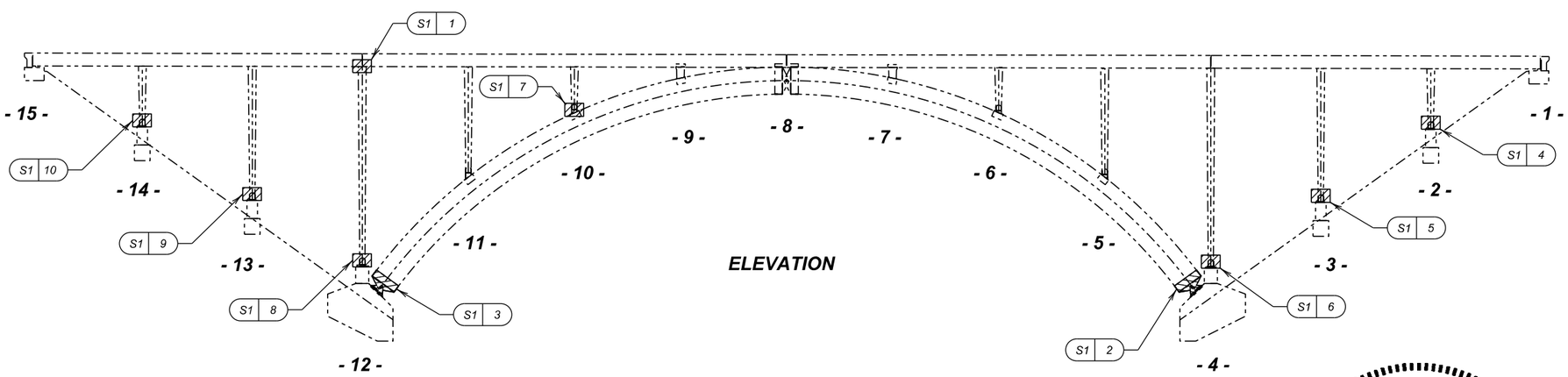

ELEVATION

NOTES

1. Brown staining forms when free iron in the intermetallic layers reacts with moisture in the environment and oxidizes, discoloring the surrounding zinc coating. To distinguish between red rust and brown staining, test suspect areas, as determined in advance by the Engineer, with a magnetic thickness gauge.

   If the gauge reading shows a coating thickness, it is brown staining and simply an aesthetic concern, repair is not necessary. Remove the stained area by brushing with a nylon bristle brush.

2. If the gauge shows a reduced coating thickness, repair the area in accordance with the Special Provisions.
3. Protect timber surfaces from damage and discoloration due to cleaning, surface preparation, and repairs.
4. If additional locations of suspected galvanized coating failure are found, notify the Engineer before beginning work.
5. See Special Provision for additional information.

TYPICAL SUSPECTED GALVANIZED COATING FAILURE

REPAIR TYPE S1 - TEST AND REPAIR GALVANIZED COATING			
ID	Estimated Defects	Unit	Location
1	3	EA	Girder Shoes at Bent 12
2	3	EA	Arch Girder Shoes at Bent 4
3	3	EA	Arch Girder Shoes at Bent 12
4	3	EA	Bent 2 Pedestals
5	3	EA	Bent 3 Pedestals
6	3	EA	Bent 4 Pedestals
7	1	EA	Bent 10 Shoe at Girder 3
8	3	EA	Bent 12 Pedestals
9	3	EA	Bent 13 Pedestals
10	3	EA	Bent 14 Pedestals
11	1	EA	Cross Bracing Bracket at Bent 12, Girder 3
12	1	EA	Cross Bracing Bracket at Bent 4, Girder 1

REGISTERED PROFESSIONAL ENGINEER
REG. NO.
13352
JAN O.
HANSEN
SOUTH DAKOTA
4/09/2021

STEEL REPAIR TYPE S1 -
TEST & REPAIR GALVANIZED COATING
FOR

290'-0" TIMBER ARCH BRIDGE

26'-0" ROADWAY — 0 SKEW
OVER US 16A W — SEC. 31-TIS-R6E
STA. 11+73.50 TO 14+63.50 — P016A(08)59
STR. NO. 52-308-412 — HS-20

PENNINGTON COUNTY
S. D. DEPT. OF TRANSPORTATION
FEBRUARY 2020

DESIGNED BY	CK. DES. BY	DRAFTED BY	
ML	JH	JW	BRIDGE ENGINEER

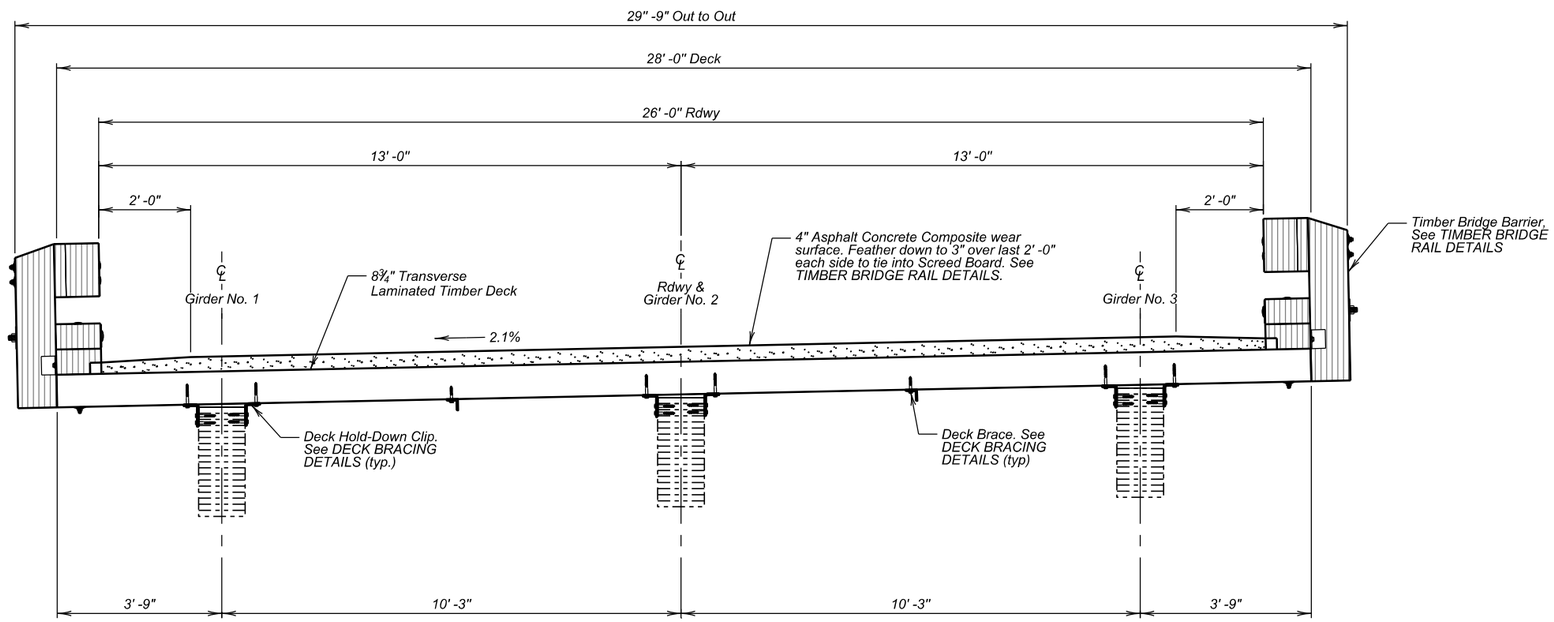

TYPICAL SECTION

REGISTERED PROFESSIONAL ENGINEER
REG. NO.
13352
JAN O.
HANSEN
SOUTH DAKOTA
4/09/2021

TYPICAL DECK SECTION
FOR
290'-0" TIMBER ARCH BRIDGE

26'-0" ROADWAY — 0 SKEW
OVER US 16A W — SEC. 31-TIS-R6E
STA. 11+73.50 TO 14+63.50 — P016A(08)59
STR. NO. 52-308-412 — HS-20

PENNINGTON COUNTY
S. D. DEPT. OF TRANSPORTATION
FEBRUARY 2020

DESIGNED BY	CK. DES. BY	DRAFTED BY	
ML	JH	JW	BRIDGE ENGINEER

FOR BIDDING PURPOSES ONLY

Revised: 4/6/2021 MNL

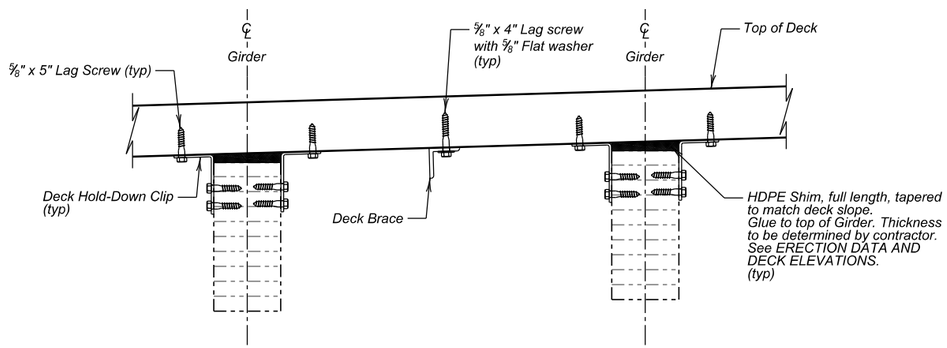

SECTION A-A

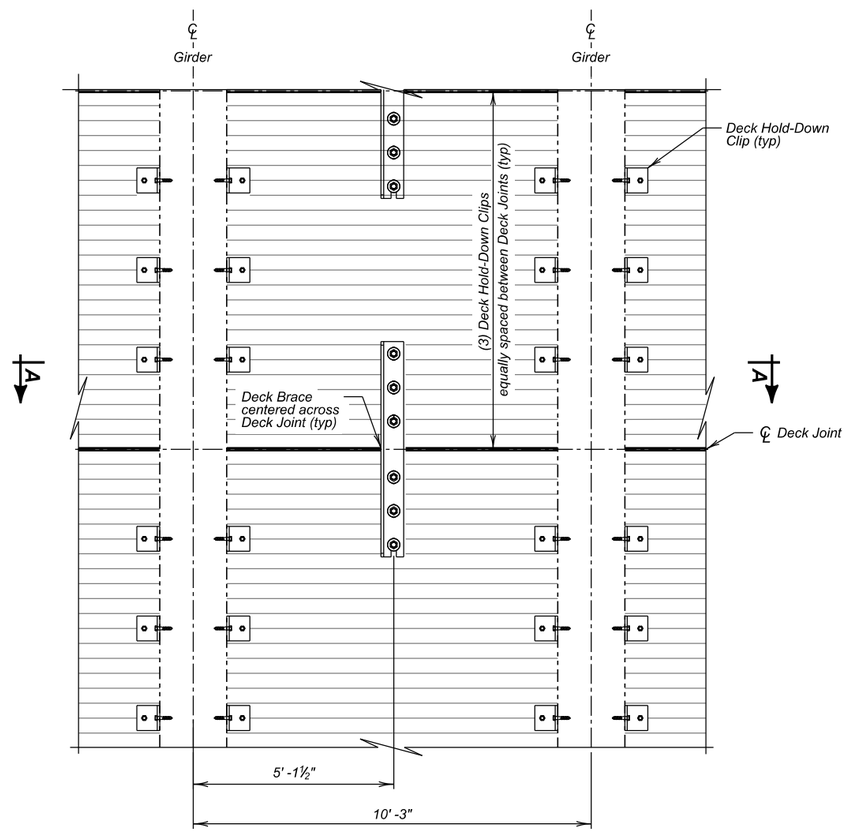

PLAN (LOOKING UP)

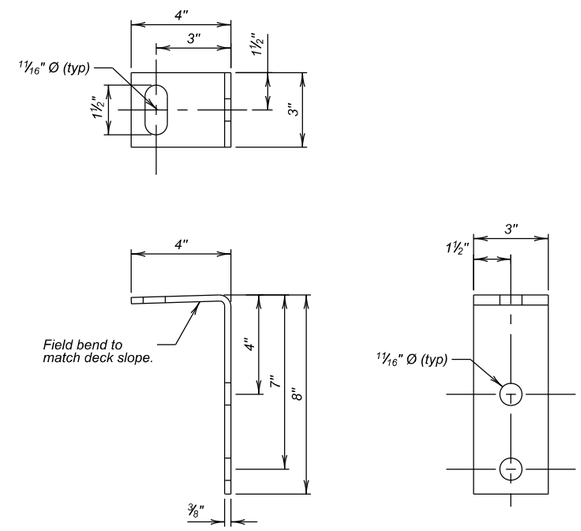

DECK HOLD-DOWN CLIP DETAIL

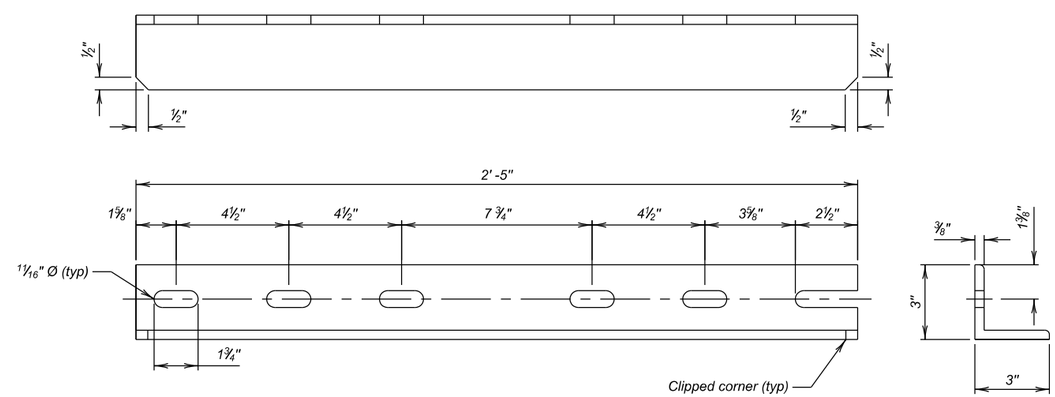

DECK BRACE DETAIL

NOTES

1. *Field drilling or cutting not shown on these plans is not allowed without engineering approval. Treat all field drilled or cut surfaces with approved preservative treatment.*
2. *Deck Brace may be formed with bent plate, or fabricated with steel plates and welded with full penetration welds.*
3. *The cost of furnishing and installing Deck Hold-Down Clips and Deck Braces will be paid for at the contract unit price per square yard for Transverse Laminated Timber Deck.*

REGISTERED PROFESSIONAL ENGINEER
REG. NO. 13352
JAN O. HANSEN
SOUTH DAKOTA
4/09/2021

DECK BRACING DETAILS
FOR
290'-0" TIMBER ARCH BRIDGE

26'-0" ROADWAY — 0 SKEW
OVER US 16A W — SEC. 31-TIS-R6E
STA. 11+73.50 TO 14+63.50 — P016A(08)59
STR. NO. 52-308-412 — HS-20

PENNINGTON COUNTY
S. D. DEPT. OF TRANSPORTATION
FEBRUARY 2020

DESIGNED BY	CK. DES. BY	DRAFTED BY	
ML	JH	JW	BRIDGE ENGINEER

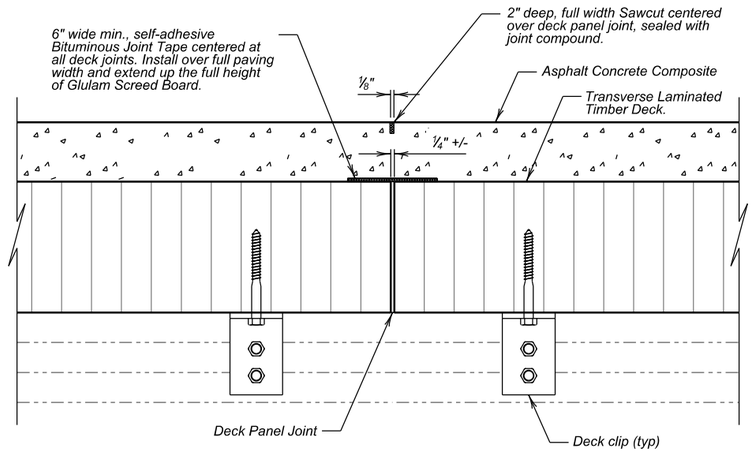

TYPICAL DECK JOINT

NOTE

1. *Install the bituminous joint tape according to the manufacturer's recommendations. Provide end laps of at least 4 inches.*
2. *Cost of bituminous joint tape, sawcut, and sealing of bituminous joints is incidental to the bid item Asphalt Concrete Composite. No additional payment will be made.*

COMPRESSION SEAL	
Location	Length ft
Abut. No. 1	28
Abut No. 15	28

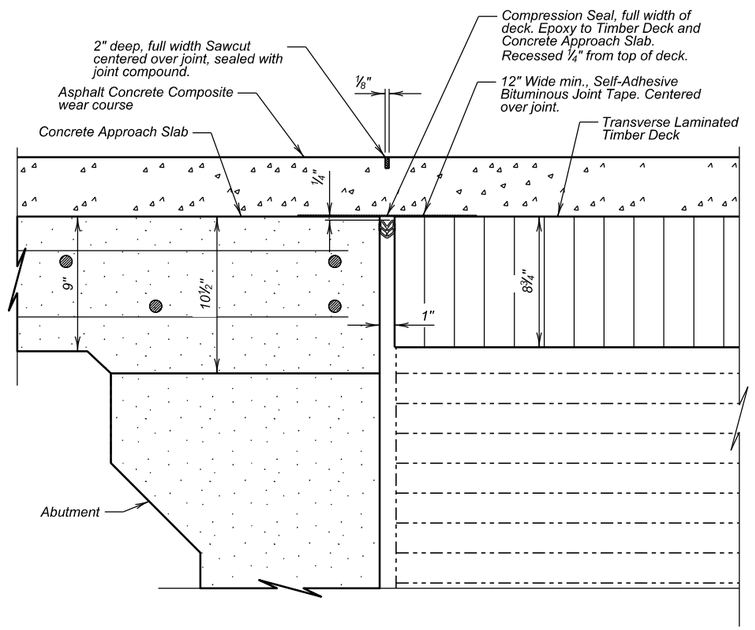

DECK JOINT AT APPROACH SLAB

REGISTERED PROFESSIONAL ENGINEER
REG. NO.
13352
JAN O.
HANSEN
SOUTH DAKOTA
4/09/2021

DECK JOINT DETAILS
FOR
290'-0" TIMBER ARCH BRIDGE

26'-0" ROADWAY — 0 SKEW
OVER US 16A W — SEC. 31-TIS-R6E
STA. 11+73.50 TO 14+63.50 — P016A(08)59
STR. NO. 52-308-412 — HS-20

PENNINGTON COUNTY
S. D. DEPT. OF TRANSPORTATION
FEBRUARY 2020

DESIGNED BY	CK. DES. BY	DRAFTED BY	
ML	JH	JW	BRIDGE ENGINEER

FOR BIDDING PURPOSES ONLY

Revised: 4/6/2021 MNL

NOTES

1. The Contractor is responsible for collecting all data necessary to ensure proper fit of deck panels to existing structure prior to fabrication of deck panels.
2. Provide preservative treatment holes using the layout shown. The Contractor may provide an alternative layout subject to approval by the Engineer. See Preservative Treatment and Incising specifications for additional information.

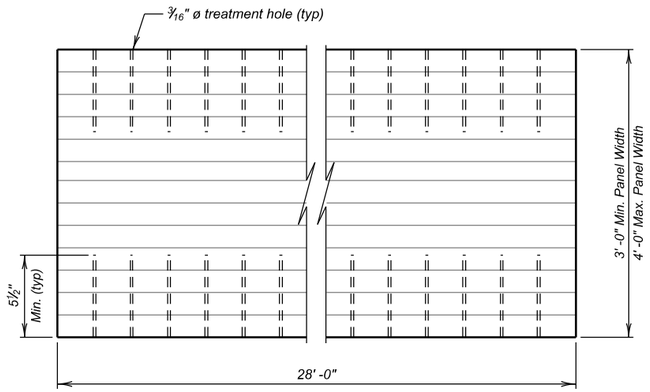

DECK PANEL PLAN

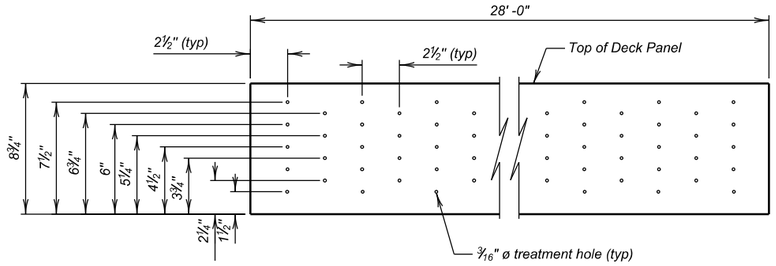

DECK PANEL TREATMENT HOLE LAYOUT ELEVATION

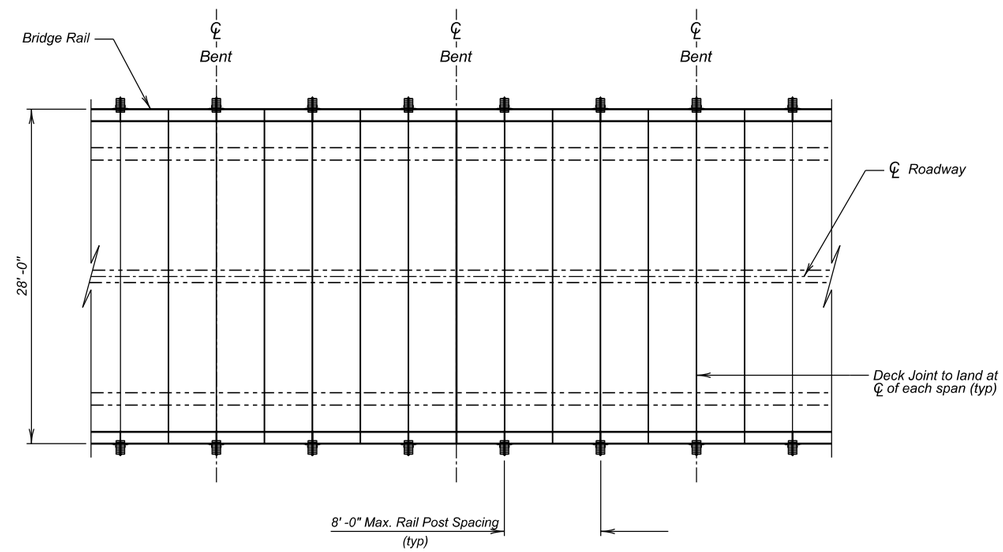

DECK PLAN

REGISTERED PROFESSIONAL ENGINEER
REG. NO.
13352
JAN O.
HANSEN
SOUTH DAKOTA
4/09/2021

DECK PANEL DETAILS
FOR
290'-0" TIMBER ARCH BRIDGE

26'-0" ROADWAY — 0 SKEW
OVER US 16A W — SEC. 31-TIS-R6E
STA. 11+73.50 TO 14+63.50 — P016A(08)59
STR. NO. 52-308-412 — HS-20

PENNINGTON COUNTY
S. D. DEPT. OF TRANSPORTATION
FEBRUARY 2020

DESIGNED BY	CK. DES. BY	DRAFTED BY	
ML	JH	JW	BRIDGE ENGINEER

Revised: 8/4/2020 MNL

TABLE OF TIMBER DECK ELEVATIONS AND SHIM CALCULATIONS

		CL Bearing Abut 15	0.5 Span	CL Bearing Bent 14	0.5 Span	CL Bearing Bent 13	0.5 Span	CL Bent 12	0.5 Span	CL Bearing Bent 11	0.5 Span	CL Bearing Bent 10	0.5 Span	CL Bearing Bent 9	0.5 Span	CL Bent 8	0.5 Span
	Station	11+74.50	11+85.00	11+95.50	12+06.00	12+16.50	12+27.00	12+37.50	12+47.63	12+57.75	12+67.88	12+78.00	12+88.13	12+98.25	13+08.38	13+18.50	13+28.63
Girder 1	Elev. "M"	5041.86	5041.84	5041.82	5041.79	5041.77	5041.75	5041.73	5041.71	5041.69	5041.67	5041.65	5041.63	5041.61	5041.59	5041.57	5041.55
	Elev. "G"	5041.06	5041.03	5041.01	5040.98	5040.95	5040.96	5040.95	5040.95	5040.93	5040.91	5040.90	5040.85	5040.82	5040.78	5040.76	5040.74
	(-) Elev. 'N"																
	(=) deflection																
	AD (adjusted deflection)																
	M-N+AD = d																
	(-) 0.7291 (deck)																
	(=) h																
Girder 2	Elev. "M"	5042.07	5042.05	5042.03	5042.01	5041.99	5041.97	5041.95	5041.93	5041.91	5041.89	5041.87	5041.85	5041.82	5041.80	5041.78	5041.76
	Elev. "G"	5041.21	5041.20	5041.19	5041.18	5041.18	5041.17	5041.17	5041.16	5041.15	5041.13	5041.11	5041.06	5041.03	5040.99	5040.97	5040.95
	(-) Elev. 'N"																
	(=) deflection																
	AD (adjusted deflection)																
	M-N+AD = d																
	(-) 0.7291 (deck)																
	(=) h																
Girder 3	Elev. "M"	5042.29	5042.27	5042.25	5042.22	5042.20	5042.18	5042.16	5042.14	5042.12	5042.10	5042.08	5042.06	5042.04	5042.02	5042.00	5041.98
	Elev. "G"	5041.36	5041.36	5041.37	5041.38	5041.38	5041.39	5041.39	5041.38	5041.36	5041.34	5041.33	5041.28	5041.24	5041.22	5041.20	5041.18
	(-) Elev. 'N"																
	(=) deflection																
	AD (adjusted deflection)																
	M-N+AD = d																
	(-) 0.7291 (deck)																
	(=) h																

TABLE OF TIMBER DECK ELEVATIONS AND SHIM CALCULATIONS

		CL Bearing Bent 7	0.5 Span	CL Bearing Bent 6	0.5 Span	CL Bearing Bent 5	0.5 Span	CL Bent 4	0.5 Span	CL Bearing Bent 3	0.5 Span	CL Bearing Bent 2	0.5 Span	CL Bearing Abut 1
	Station	13+38.75	13+48.88	13+59.00	13+69.13	13+79.25	13+89.38	13+99.50	14+10.00	14+20.50	14+31.00	14+41.50	14+52.00	14+62.50
Girder 1	Elev. "M"	5041.53	5041.51	5041.49	5041.47	5041.45	5041.43	5041.41	5041.39	5041.37	5041.34	5041.32	5041.30	5041.28
	Elev. "G"	5040.72	5040.72	5040.71	5040.71	5040.67	5040.65	5040.63	5040.59	5040.57	5040.50	5040.43	5040.36	5040.30
	(-) Elev. 'N"													
	(=) deflection													
	AD (adjusted deflection)													
	M-N+AD = d													
	(-) 0.7291													
	(=) h (inches)													
Girder 2	Elev. "M"	5041.74	5041.72	5041.70	5041.68	5041.66	5041.64	5041.62	5041.60	5041.58	5041.56	5041.54	5041.52	5041.50
	Elev. "G"	5040.92	5040.91	5040.89	5040.89	5040.87	5040.87	5040.84	5040.82	5040.78	5040.76	5040.72	5040.63	5040.56
	(-) Elev. 'N"													
	(=) deflection													
	AD (adjusted deflection)													
	M-N+AD = d													
	(-) 0.7291													
	(=) h (inches)													
Girder 3	Elev. "M"	5041.96	5041.94	5041.92	5041.90	5041.88	5041.86	5041.84	5041.82	5041.80	5041.77	5041.75	5041.73	5041.71
	Elev. "G"	5041.15	5041.13	5041.12	5041.11	5041.10	5041.08	5041.08	5041.03	5041.01	5040.96	5040.92	5040.86	5040.79
	(-) Elev. 'N"													
	(=) deflection													
	AD (adjusted deflection)													
	M-N+AD = d													
	(-) 0.7291													
	(=) h (inches)													

NOTES

1. This table contains the necessary information to size HDPE shims. All calculations can be carried out in the space provided. The HDPE shims are to provide uniform bearing between the deck and the top of the existing girders. Variations between top of girder field elevations and both proposed cross slope of ¼" per ft, and longitudinal gradient of -0.2% are expected.
2. Elevation "M" is the theoretical top of Timber Deck after placement of asphalt.
3. Elevation "G" is a field measured elevation taken on top of the girders at points listed. This elevation was taken with the existing concrete deck and overlay in place.
4. Elevation "N" is a field measured elevation taken by the Contractor on top of girders at points shown. This elevation must be taken after removal of existing concrete deck is complete, but prior to placing the new Timber Deck panels.
5. Girders must not be supported by construction shoring while elevations are taken.
6. If computations indicate that dimension "h" will be less than ¼" or exceed 2", communicate with the Engineer before fabrication of HDPE shims.
7. All costs including labor and equipment necessary to survey girder elevations to size HDPE shims and coordinate with Engineer and Fabricator to be included in the contract unit price for Bridge Elevation Survey.

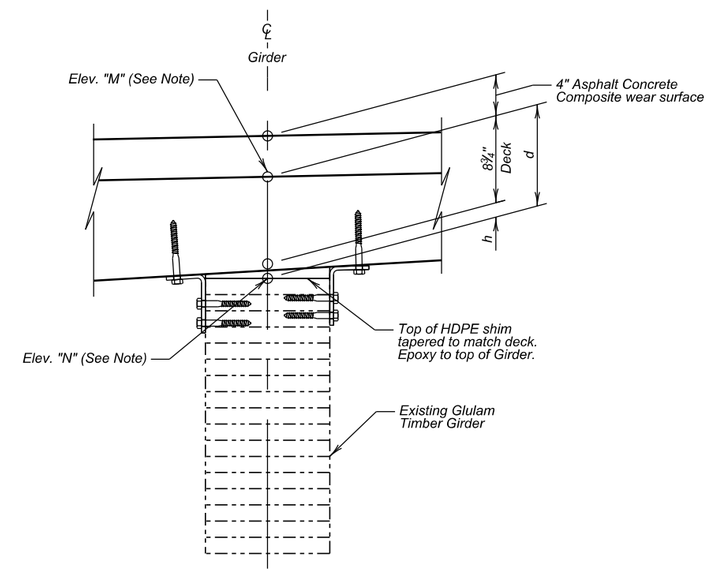

REGISTERED PROFESSIONAL ENGINEER
REG. NO.
13352
JAN O.
HANSEN
SOUTH DAKOTA
4/09/2021

ERECTION DATA AND DECK ELEVATIONS
FOR
290'-0" TIMBER ARCH BRIDGE

26'-0" ROADWAY — 0 SKEW
OVER US 16A W — SEC. 31-TIS-R6E
STA. 11+73.50 TO 14+63.50 — P016A(08)59
STR. NO. 52-308-412 — HS-20

PENNINGTON COUNTY
S. D. DEPT. OF TRANSPORTATION
FEBRUARY 2020

DESIGNED BY	CK. DES. BY	DRAFTED BY	
ML	JH	JW	BRIDGE ENGINEER

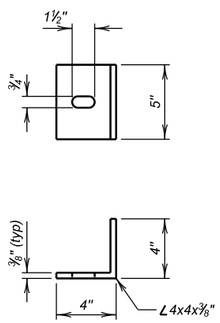

POST BRACE

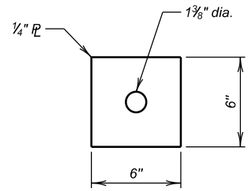

PLATE WASHER

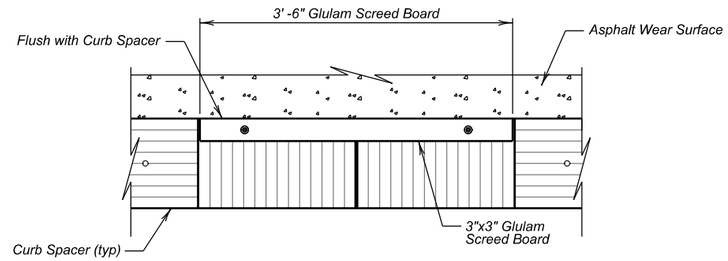

SECTION B-B

NOTE

Cost of Glulam Screed Board is incidental to the bid item Timber Bridge Rail. No additional payment will be made.

	TIMBER BRIDGE RAIL SPLICE
	PARTS FOR FABRICATION:
	ITEM
1	*6" x 6" x¼" Plate Washer*
2	*4 x 4 x ⅜ x 5" Long - Post Brace*
	ITEM
3	*1-¼" x 25" Timber Bolt (No Lugs)*
4	*¾" x 24" Timber Bolt*
5	*¾" x 22" or 24" Timber Bolt*
6	*⅝" x 6" Lag Screw*
7	*1-¼" Hex Nut*
8	*¾" Hex Nut*
9	*⅝" Flat Washer*
10	*¾" Maleable Iron Washer*
11	*Shear Plate - 4" dia. for ¾" Bolt*
12	*#10 x ¾" Wood Screw*
19	*⅝" Dia. x 12" Long Bolt*
	TIMBER:
	ITEM
13	*Rail Post - (GLB 8¾" x 10½" x 3'-5¾")*
14	*Curb Spacer - (GLB 6¾" x 1'-0" x 4'-6")*
15	*Post Spacer - (GLB 1'-2¼" x 3" x 8¾")*
16	*Rail - (GLB 1'-2¼" x 9")*
17	*Curb - (GLB 6¾" x 1'-0")*
18	*Screed Board (GLB 3" x 3" x 3' -6")*

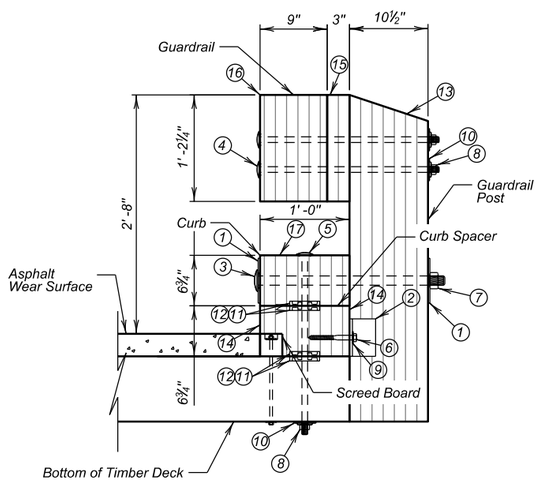

SECTION A-A

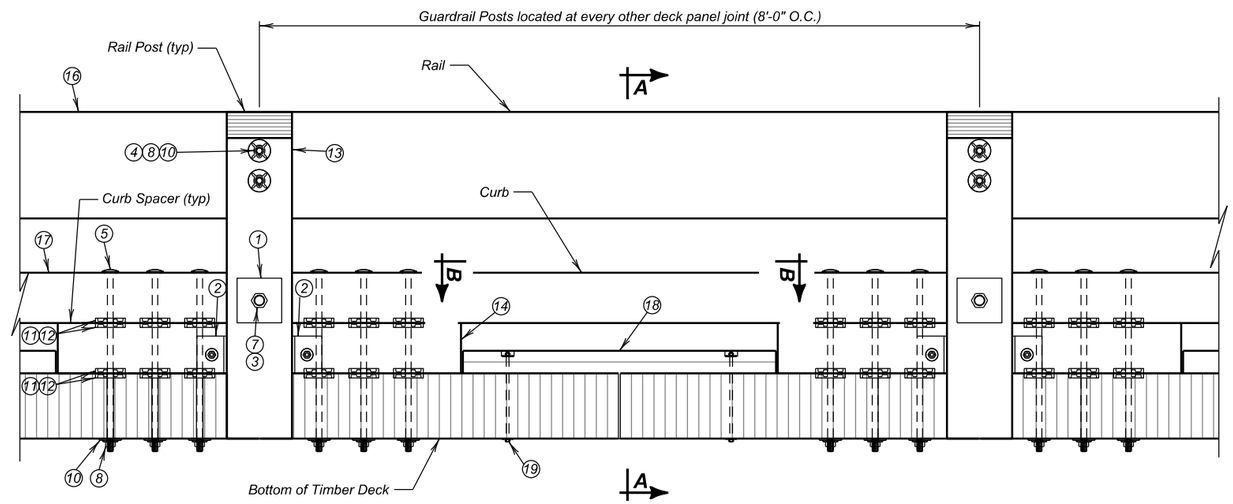

ELEVATION - TIMBER BRIDGE RAIL

REGISTERED PROFESSIONAL ENGINEER
REG. NO.
13352
JAN O.
HANSEN
SOUTH DAKOTA
4/09/2021

TIMBER BRIDGE RAIL DETAILS
FOR
290'-0" TIMBER ARCH BRIDGE

26'-0" ROADWAY — 0 SKEW
OVER US 16A W — SEC. 31-TIS-R6E
STA. 11+73.50 TO 14+63.50 — P016A(08)59
STR. NO. 52-308-412 — HS-20

PENNINGTON COUNTY
S. D. DEPT. OF TRANSPORTATION
FEBRUARY 2020

DESIGNED BY	CK. DES. BY	DRAFTED BY	
ML	JH	JW	BRIDGE ENGINEER

FOR BIDDING PURPOSES ONLY

STATE OF	PROJECT	SHEET NO.	TOTAL SHEETS
S.D.	P016A(08)59	E78	E109

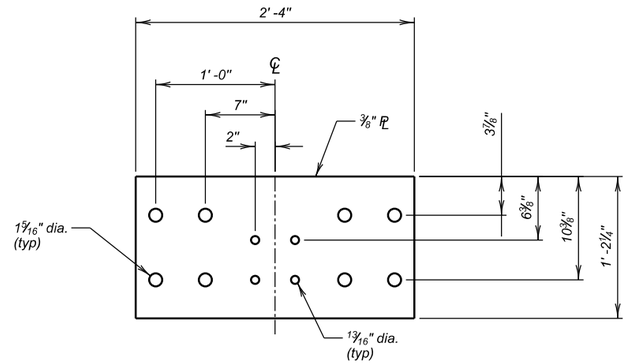

RAIL SPLICE PLATE

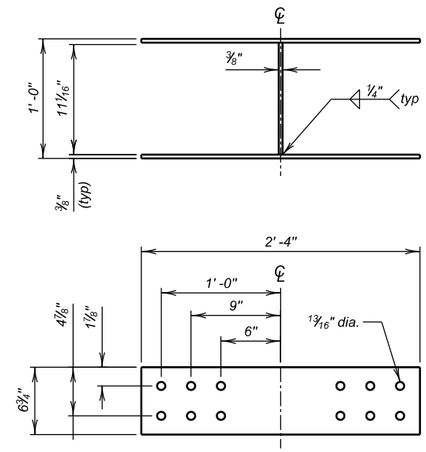

CURB SPLICE BRACKET

	TIMBER BRIDGE RAIL SPLICE
	PARTS FOR FABRICATION:
	ITEM
1	Rail Splice Plate (14 1/4"X28"X3/8" PL)
	FASTENERS:
	ITEM
2	1-1/4" x 12" Timber Bolt (No Lugs)
3	3/4" x 24" Timber Bolt (No Lugs)
	3/4" x 24" Timber Bolt
4	1-1/4" Hex Nut
5	3/4" Hex Nut
6	3/4" Maleable Iron Washer
	CURB SPLICE
	PARTS FOR FABRICATION:
	ITEM
7	Curb Splice Bracket
	FASTENERS:
	ITEM
8	3/4" x 14" Timber Bolt (No Lugs)
9	3/4" Hex Nut
10	3/4" Lock Washer

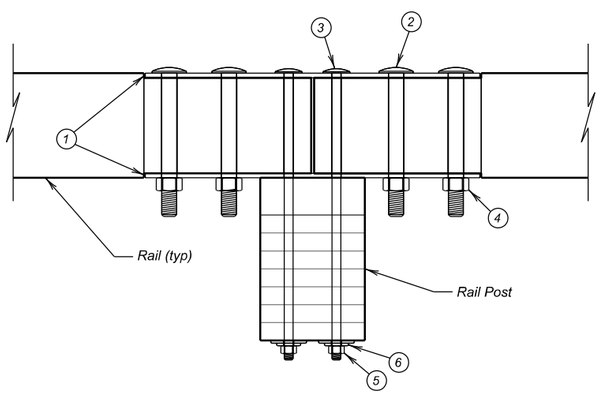

PLAN - RAIL SPLICE

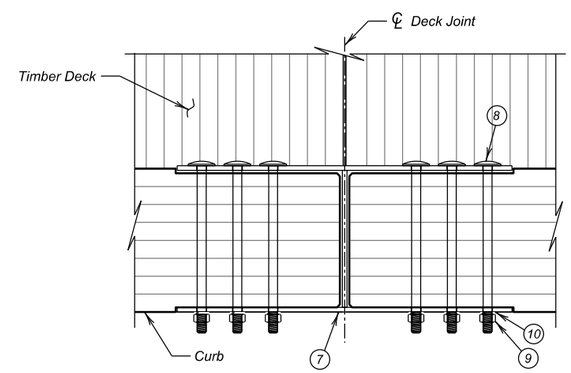

PLAN - CURB SPLICE

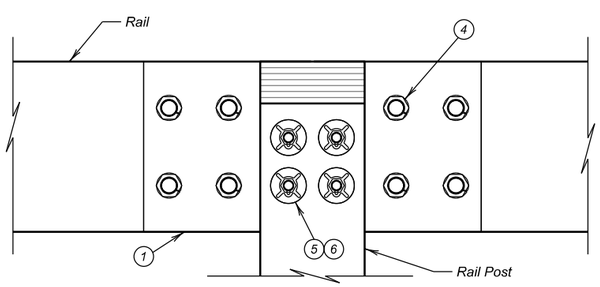

ELEVATION - RAIL SPLICE

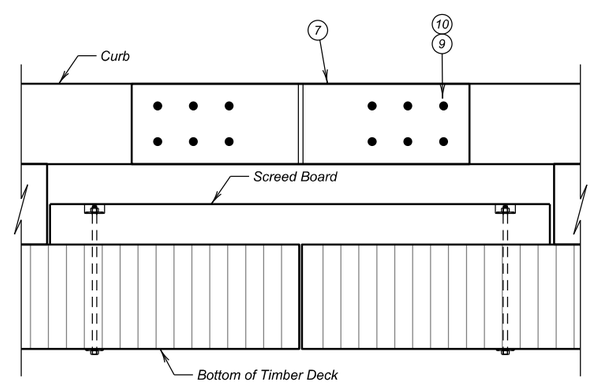

ELEVATION - CURB SPLICE

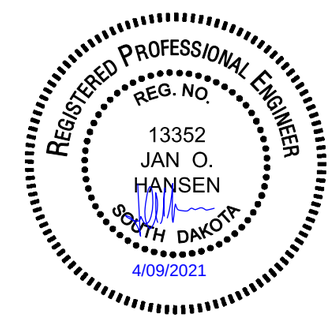

TIMBER BRIDGE RAIL SPLICE DETAILS
FOR
290'-0" TIMBER ARCH BRIDGE

26'-0" ROADWAY — 0 SKEW
OVER US 16A W — SEC. 31-TIS-R6E
STA. 11+73.50 TO 14+63.50 — P016A(08)59
STR. NO. 52-308-412 — HS-20

PENNINGTON COUNTY
S. D. DEPT. OF TRANSPORTATION
FEBRUARY 2020

DESIGNED BY	CK. DES. BY	DRAFTED BY	
ML	JH	JW	BRIDGE ENGINEER

STATE OF	PROJECT	SHEET NO.	TOTAL SHEETS
S.D.	P016A(08)59	E79	E109

FOR BIDDING PURPOSES ONLY

Revised: 4/6/2021 MNL

* *Elevations may need to be adjusted for a smooth ride from the final bridge deck elevations to final pavement elevations. Elevations will be taken and adjusted in the field during construction.*

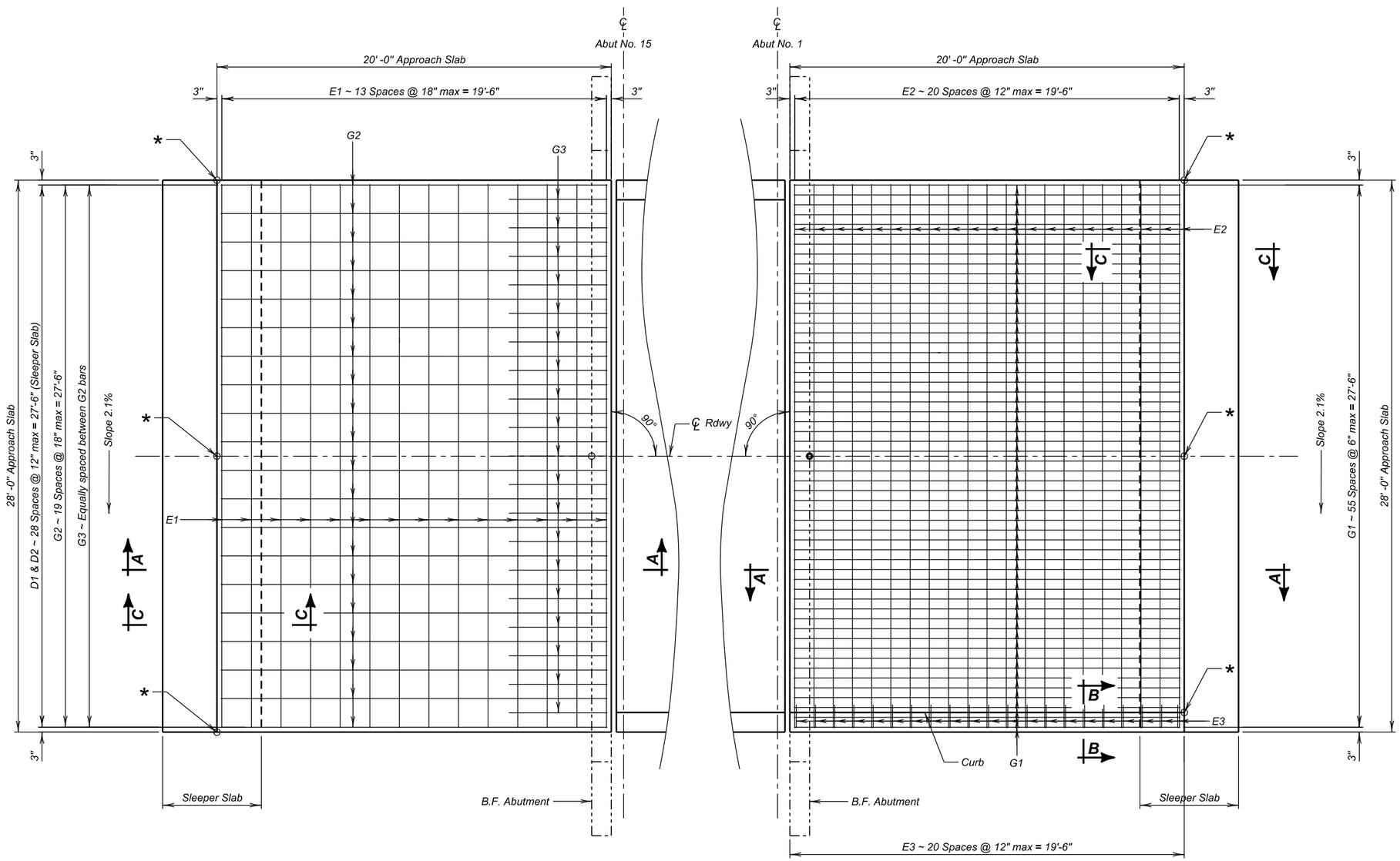

PLAN - AT ABUTMENT NO. 15

(Top Steel)

(Similar at Abutment No. 1)

PLAN - AT ABUTMENT NO. 1

(Bottom Steel)

(Similar at Abutment No. 15)

REINFORCING SCHEDULE

(For Two Approach Slabs and Two Sleeper Slabs)

Mk.	No.	Size	Length	Type	Bending Details
Sleeper Slabs					
C1	24	5	27' - 6"	Str.	
D1	116	4	5' - 6"	2	
D2	58	4	6' - 11"	T2	
Approach Slabs					
E1	28	4	27' - 6"	Str.	
E2	42	6	27' - 6"	Str.	
E3	21	4	3' - 0"	38	
G1	112	8	19' - 6"	Str.	
G2	40	4	19' - 6"	Str.	
G3	38	4	5' - 0"	Str.	

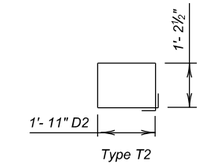

NOTES:

All Bars to be Epoxy Coated.

All dimensions are out to out of bars.

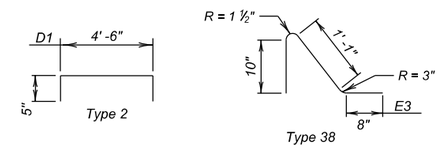

ESTIMATED QUANTITIES

(For Two Approach Slabs and Two Sleeper Slabs)

ITEM	UNIT	QUANTITY
Concrete Approach Slab for Bridge	Sq. Yd.	125
Concrete Approach Sleeper Slab for Bridge	Sq. Yd.	32

1. 33.1 Cu. Yds. Concrete in Approach Slab.
2. 8771 Lbs. Epoxy Coated Re-Steel in Approach Slab.
3. 8.0 Cu. Yds. Concrete in Sleeper Slab.
4. 1383 Lbs. Epoxy Coated Re-Steel in Sleeper Slab.

Items 1 thru 4 are approximate quantities contained in the above bid items and are for information only.

REGISTERED PROFESSIONAL ENGINEER
REG. NO. 13352
JAN O. HANSEN
SOUTH DAKOTA
4/09/2021

APPROACH SLAB PLAN

FOR

290'-0" TIMBER ARCH BRIDGE

26'-0" ROADWAY — 0 SKEW

OVER US 16A W — SEC. 31-TIS-R6E

STA. 11+73.50 TO 14+63.50 — P016A(08)59

STR. NO. 52-308-412 — HS-20

PENNINGTON COUNTY

S. D. DEPT. OF TRANSPORTATION

FEBRUARY 2020

DESIGNED BY	CK. DES. BY	DRAFTED BY	
ML	JH	JW	BRIDGE ENGINEER

FOR BIDDING PURPOSES ONLY

STATE OF	PROJECT	SHEET NO.	TOTAL SHEETS
S.D.	P016A(08)59	E80	E109

Revised: 4/6/2021 MNL

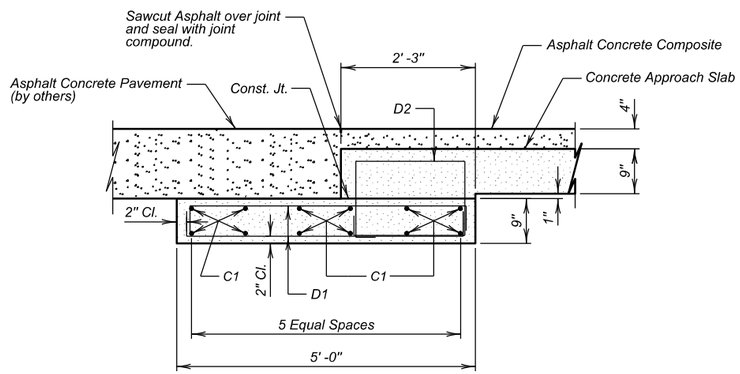

SECTION C-C

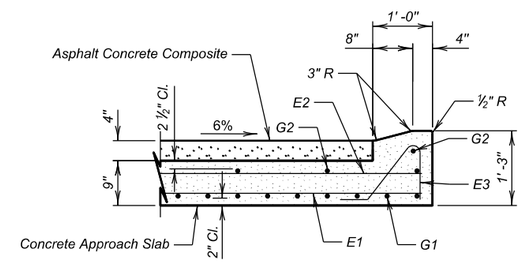

SECTION B-B

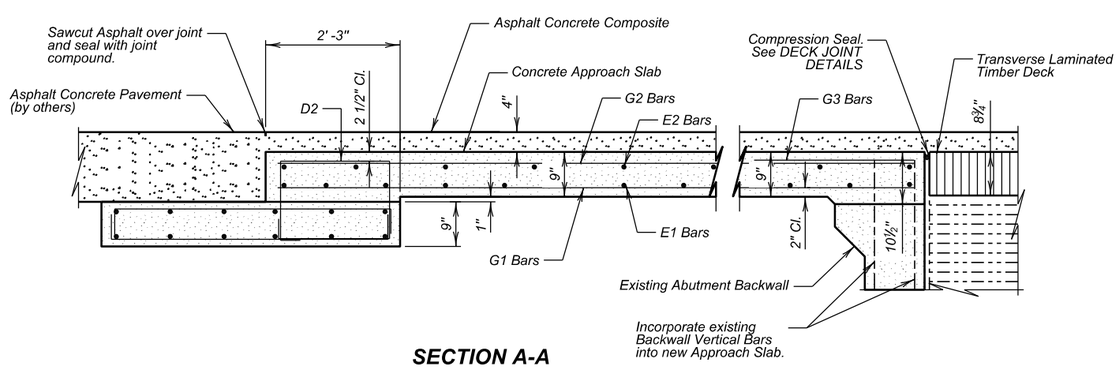

SECTION A-A

APPROACH SLAB DETAILS

FOR

290'-0" TIMBER ARCH BRIDGE

26'-0" ROADWAY — 0 SKEW
OVER US 16A W — SEC. 31-TIS-R6E
STA. 11+73.50 TO 14+63.50 — P016A(08)59
STR. NO. 52-308-412 — HS-20

PENNINGTON COUNTY
S. D. DEPT. OF TRANSPORTATION
FEBRUARY 2020

DESIGNED BY	CK. DES. BY	DRAFTED BY	
ML	JH	JW	BRIDGE ENGINEER

STATE OF	PROJECT	SHEET NO.	TOTAL SHEETS
S.D.	P016A(08)59	E81	E109

FOR BIDDING PURPOSES ONLY

Revised: 4/6/2021 MNL

NOTE

Field drilling or cutting not shown on these plans is not allowed without engineering approval. All field drilled holes or cut surfaces require Triple CN Treatment then sealing with Anchor Seal.

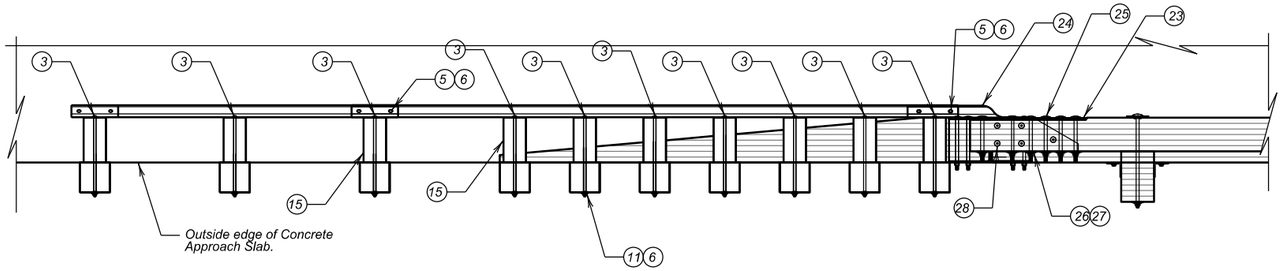

RAIL PLAN

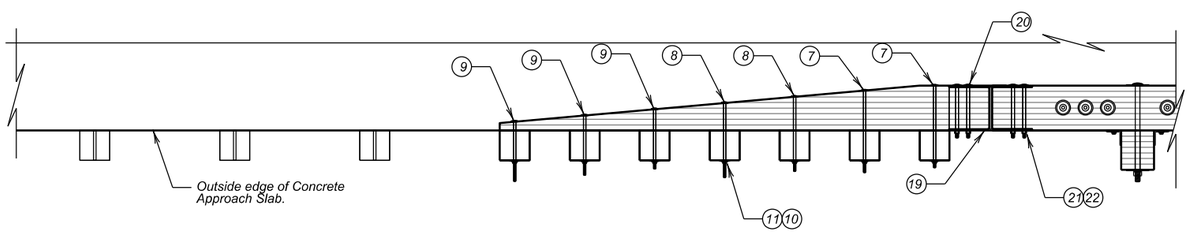

CURB PLAN

	GUARD RAIL TRANSITION
	PARTS FOR FABRICATION:
	ITEM
1	Thrie-Beam Rail - 10GA x 13'-6½"
2	Thrie Beam to W-Beam Transition - 12GA x 7'-3½"
	ITEM
3	⅝" x 22" Guard Rail Bolt (Button Head)
5	⅝" x 2" Guard Rail Bolt (Button Head)
6	⅝" Guard Rail Nut (Heavy Hex)
7	⅝" x 22" Timber Bolt
8	⅝" x 20" Timber Bolt
9	⅝" x 16" Timber Bolt
10	⅝" Hex Nut
11	⅝" Flat Washer
	TIMBER:
	ITEM
12	Curb Transition Block (GLB 1'-0¼" x 7½" x 10'-11⅛")
13	Post (DF 8" x 8" x 6'-6")
14	Post (DF 8" x 8" x 6'-0")
15	Post Spacer (DF 6" x 1'-0" x 1'-8")

	CURB TRANSITION SPLICE
	PARTS FOR FABRICATION:
	ITEM
19	Curb Transition Splice Bracket
	ITEM
20	¾" x 14" Timber Bolt (No Lugs)
21	¾" Hex Nut
22	¾" Lock Washer
	RAIL TRANSITION SPLICE
	PARTS FOR FABRICATION:
	ITEM
23	Rail Transition Splice Plate
24	Thrie-Beam Terminal - 10GA
	ITEM
25	⅞" x 12" Timber Bolt (No Lugs)
26	⅞" Hex Nut
27	⅞" Maleable Iron Washer
28	½" x 22" Timber Bolt
29	½" Hex Nut
30	½" Maleable Iron Washer
	TIMBER:
	ITEM
32	Rail Transition Block (GLB 8¾" x 7½" x 2'-5")

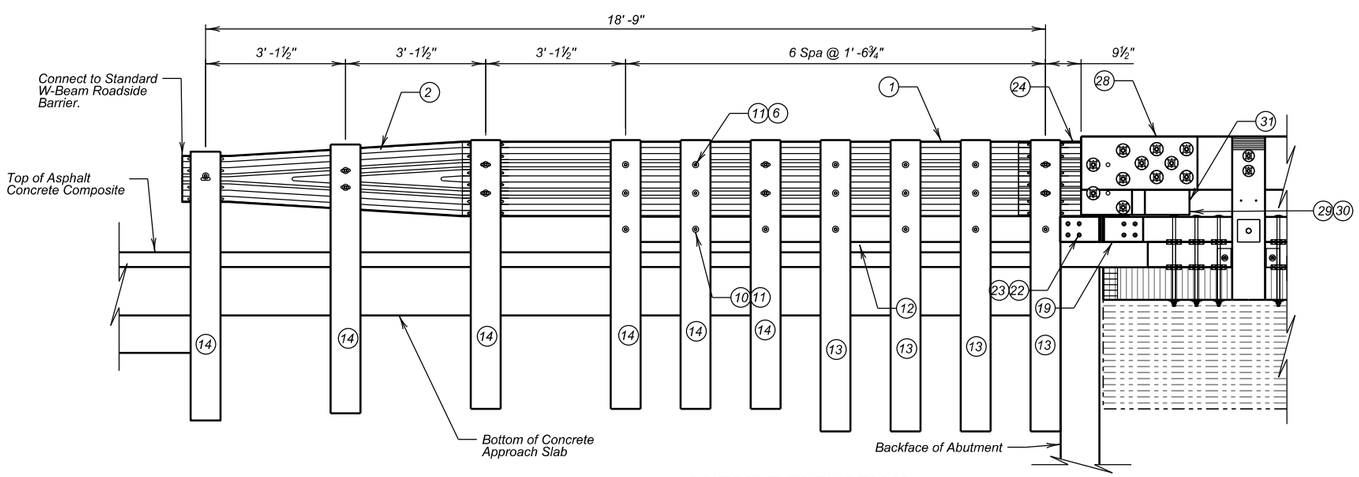

OUTSIDE ELEVATION

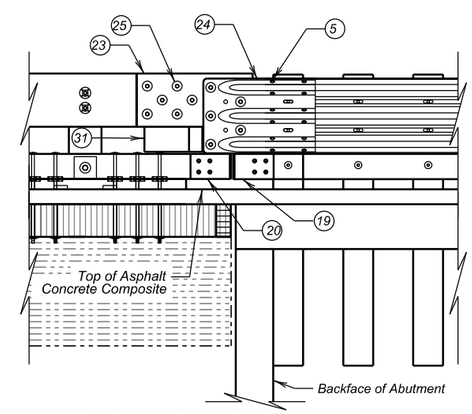

TRAFFIC SIDE ELEVATION

REGISTERED PROFESSIONAL ENGINEER
REG. NO.
13352
JAN O.
HANSEN
SOUTH DAKOTA
4/09/2021

APPROACH GUARDRAIL ASSEMBLY
FOR
290'-0" TIMBER ARCH BRIDGE

26'-0" ROADWAY — 0 SKEW
OVER US 16A W — SEC. 31-TIS-R6E
STA. 11+73.50 TO 14+63.50 — P016A(08)59
STR. NO. 52-308-412 — HS-20

PENNINGTON COUNTY
S. D. DEPT. OF TRANSPORTATION
FEBRUARY 2020

DESIGNED BY	CK. DES. BY	DRAFTED BY	
ML	JH	JW	BRIDGE ENGINEER

STATE OF	PROJECT	SHEET NO.	TOTAL SHEETS
S.D.	P016A(08)59	E82	E109

FOR BIDDING PURPOSES ONLY

CURB END AT TRANSITION PLAN

NOTE:

All treatment holes and Bolt Locations may be adjusted +/- 1½" from their anticipated location.

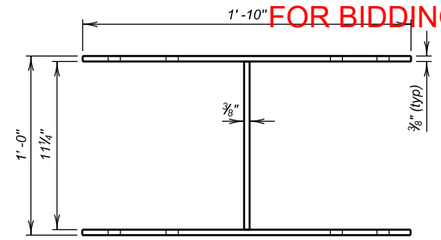

CURB TRANSITION SPLICE BRACKET PLAN

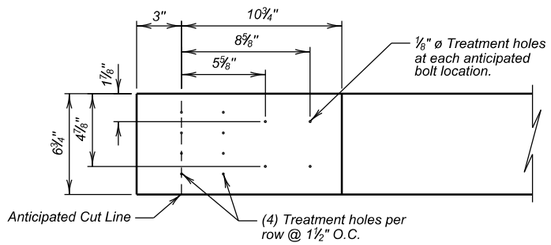

CURB END AT TRANSITION ELEVATION

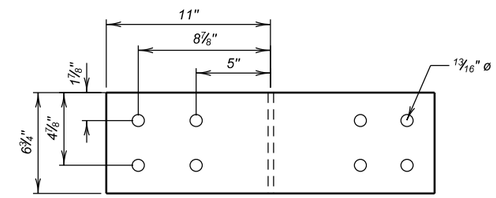

CURB TRANSITION SPLICE BRACKET ELEVATION

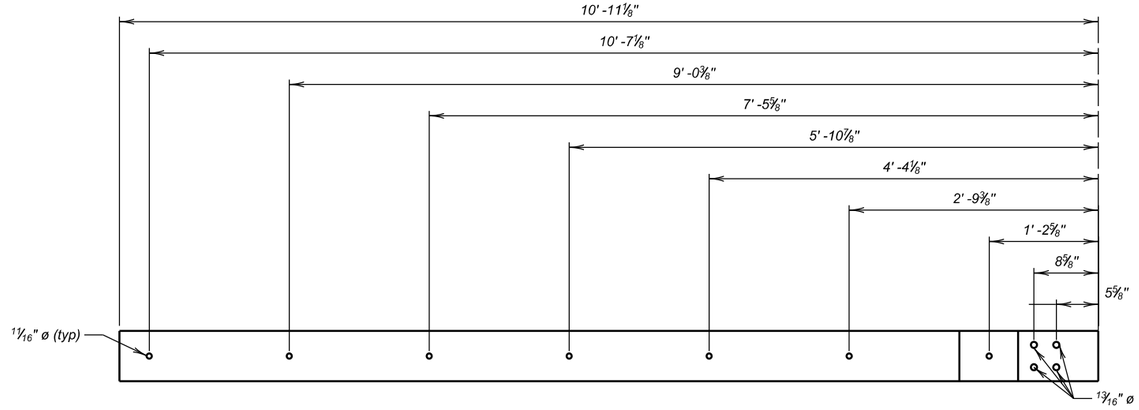

CURB TRANSITION ELEVATION

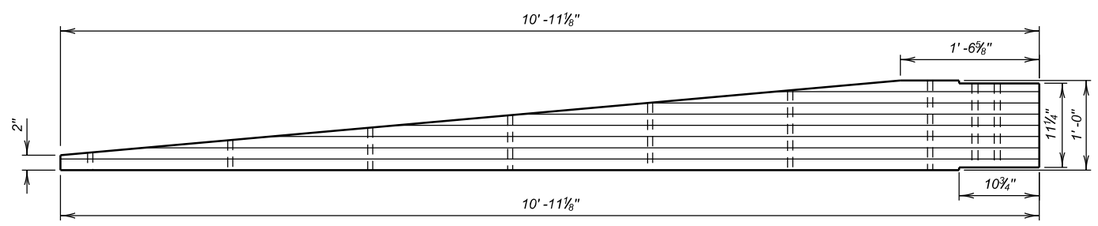

CURB TRANSITION PLAN

REGISTERED PROFESSIONAL ENGINEER
REG. NO.
13352
JAN O.
HANSEN
SOUTH DAKOTA
4/09/2021

CURB TRANSITION DETAILS
FOR
290'-0" TIMBER ARCH BRIDGE

26'-0" ROADWAY — 0 SKEW
OVER US 16A W — SEC. 31-TIS-R6E
STA. 11+73.50 TO 14+63.50 — P016A(08)59
STR. NO. 52-308-412 — HS-20

PENNINGTON COUNTY
S. D. DEPT. OF TRANSPORTATION
FEBRUARY 2020

DESIGNED BY	CK. DES. BY	DRAFTED BY	
ML	JH	JW	BRIDGE ENGINEER

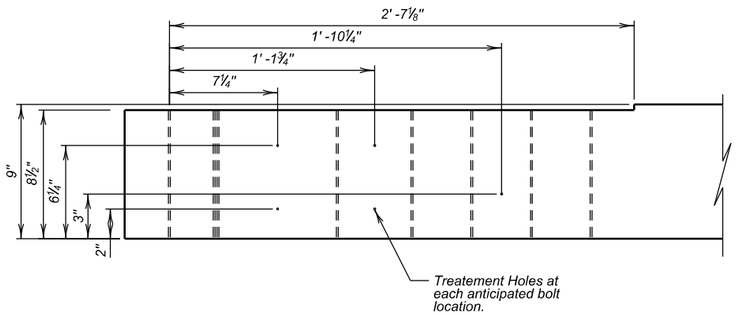

NOTE:

All treatment holes and Bolt Locations may be adjusted +/- 1½" from their anticipated location.

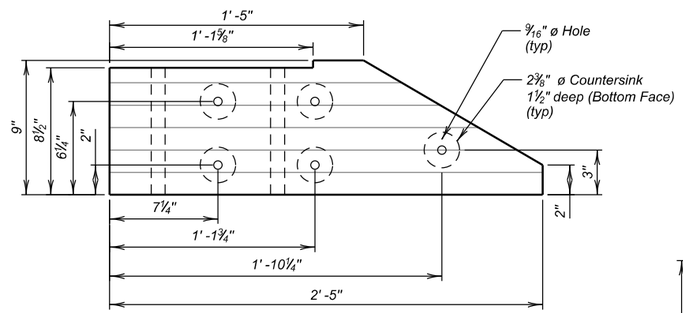

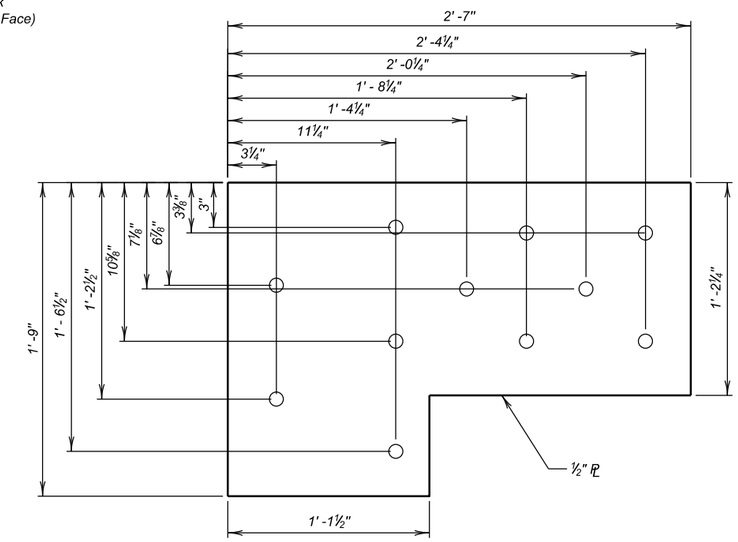

RAIL TRANSITION SPLICE PLATE

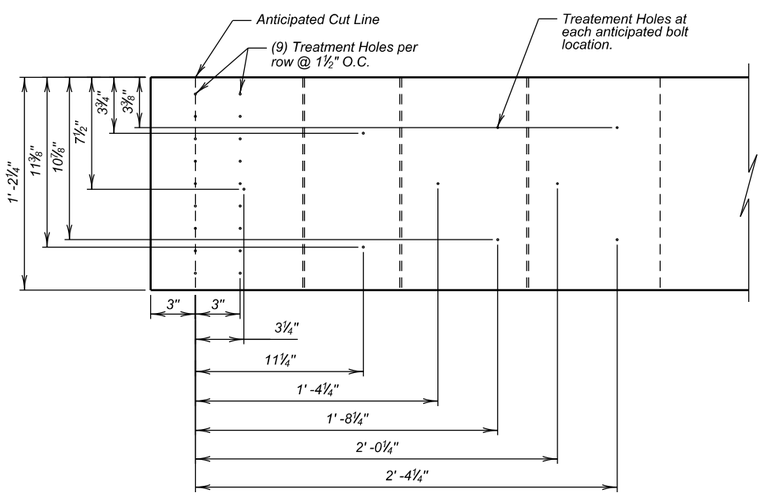

GUARDRAIL END AT TRANSITION

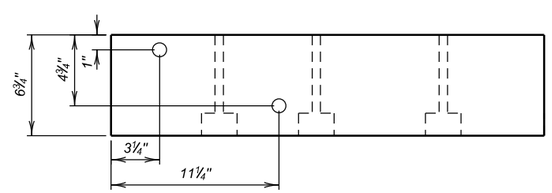

RAIL TRANSITION BLOCK

REGISTERED PROFESSIONAL ENGINEER
REG. NO.
13352
JAN O.
HANSEN
SOUTH DAKOTA
4/09/2021

CURB TRANSITION DETAILS (CONT.)
FOR
290'-0" TIMBER ARCH BRIDGE

26'-0" ROADWAY — 0 SKEW
OVER US 16A W — SEC. 31-TIS-R6E
STA. 11+73.50 TO 14+63.50 — P016A(08)59
STR. NO. 52-308-412 — HS-20

PENNINGTON COUNTY
S. D. DEPT. OF TRANSPORTATION
FEBRUARY 2020

DESIGNED BY	CK. DES. BY	DRAFTED BY	
ML	JH	JW	BRIDGE ENGINEER

FOR BIDDING PURPOSES ONLY

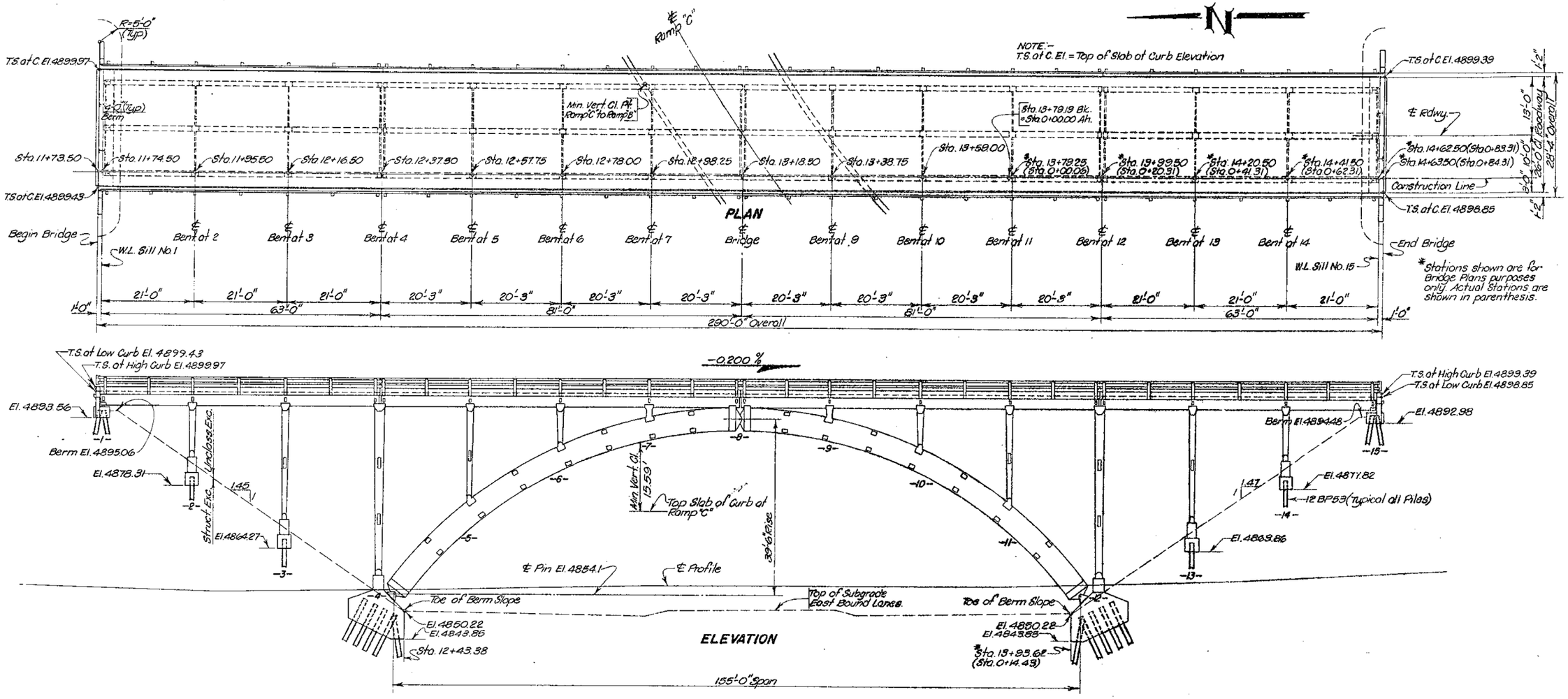

RAMP "B"
GENERAL DRAWING
FOR

290'-0" TIMBER ARCH BRIDGE

26'-0" ROADWAY
OVER RAMP "C" & E.B.L.-U.S. NO. 16 SEC. 31-T1S-R6E
STA. 11+73.50 TO 14+63.50 F017-1(9)
PENNINGTON COUNTY
SOUTH DAKOTA HS20-44
DEPARTMENT OF HIGHWAYS
AUGUST 1966

ORIGINAL CONSTRUCTION PLANS

FOR BIDDING PURPOSES ONLY

Revised: 8/4/2020 MNL

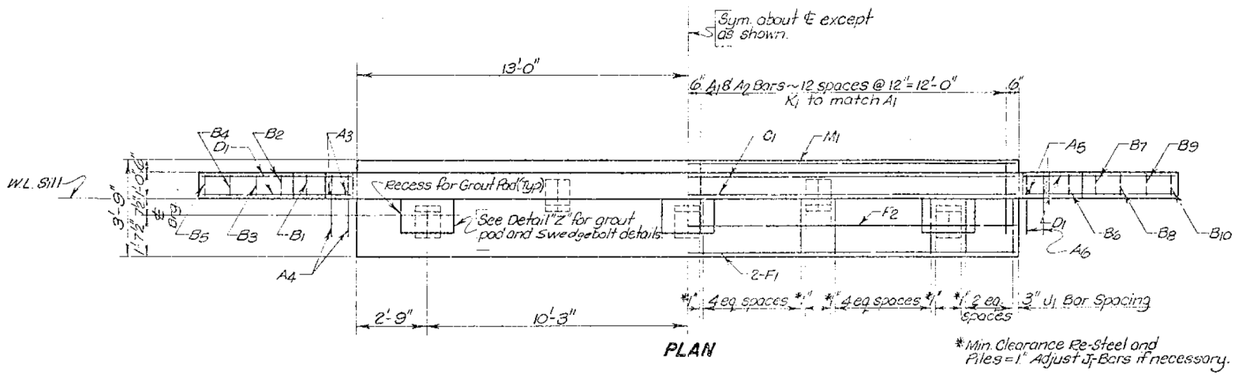

PLAN

* Min. Clearance Re-Steel and Piles = 1" Adjust U1-Bars if necessary.

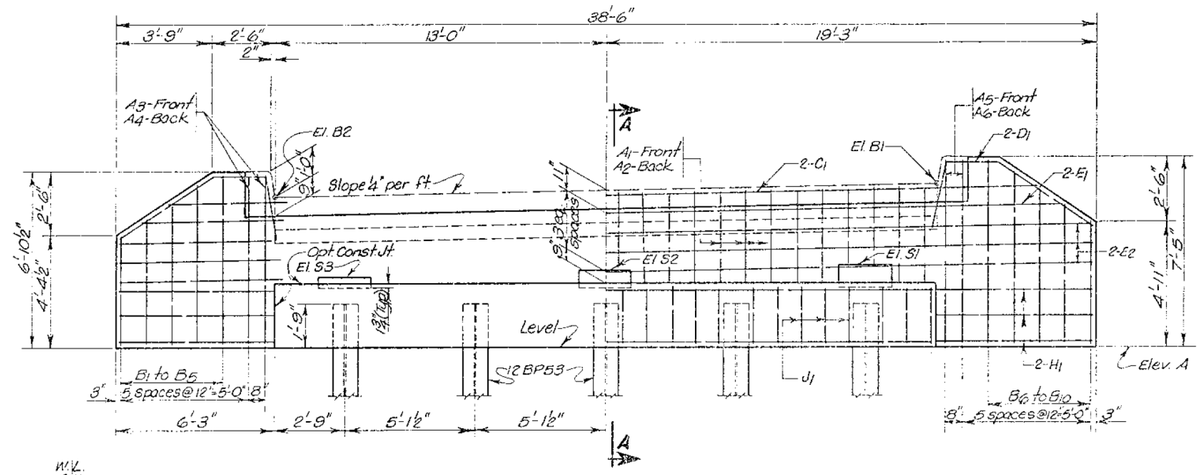

ELEVATION – SILL NO. 1

REINFORCING SCHEDULE

Mk	No	Size	Length	Type
A1	26	4	5'-3"	Str.
A2	26	4	7'-6"	2
A3	2	4	6'-6"	Str.
A4	2	4	8'-9"	2
A5	2	4	7'-0"	Str.
A6	2	4	9'-3"	2
B1	1	4	15'-0"	T1
B2	1	4	14'-6"	T1
B3	1	4	13'-0"	T1
B4	1	4	11'-9"	T1
B5	1	4	10'-6"	T1
B6	1	4	16'-3"	T1
B7	1	4	15'-3"	T1
B8	1	4	14'-0"	T1
B9	1	4	12'-6"	T1
B10	1	4	11'-6"	T1
C1	2	6	33'-6"	Str.
D1	4	5	8'-9"	16A
E1	2	4	36'-0"	Str.
E2	6	4	38'-0"	Str.
F1	4	11	25'-6"	Str.
F2	2	8	25'-6"	Str.
H1	12	8	9'-0"	Str.
U1	26	4	11'-8"	T1
K1	26	4	3'-6"	12
M1	1	4	25'-9"	Str.

Bending Details

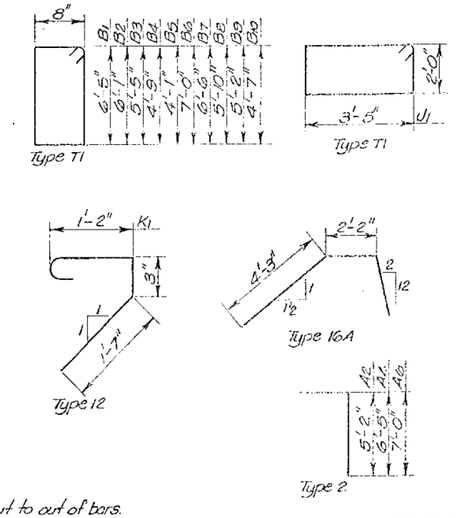

NOTE:-All dimensions are out to out of bars.

* For one Sill

ESTIMATED QUANTITIES

ITEM	UNIT	Sill No. 1	Sill No. 15
Class "A" Concrete	Cu. Yds.	151	151
Reinforcing Steel	Lbs.	1840	1640
Structure Excavation	Cu. Yds.	14	14
12 BP53 Steel Bearing Piles	No.	5	5

* Includes 0.2 Cu. Yds. for Grout Pads.
# See Layout for Length of 12 BP53 Steel Bearing Piles.

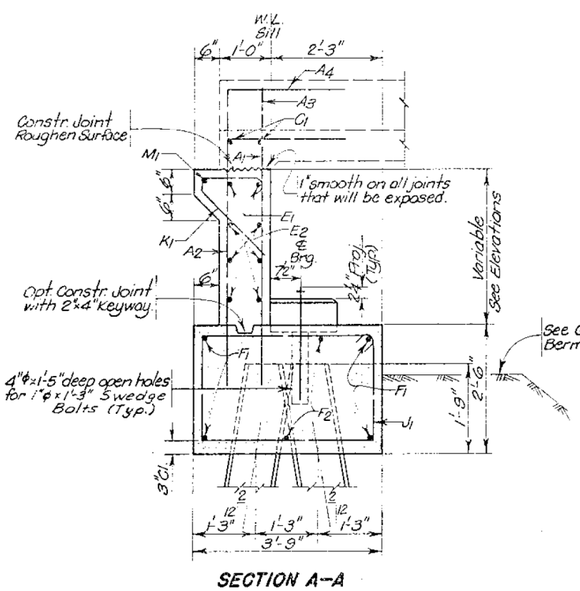

SECTION A–A

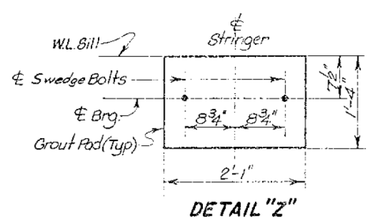

DETAIL "Z"

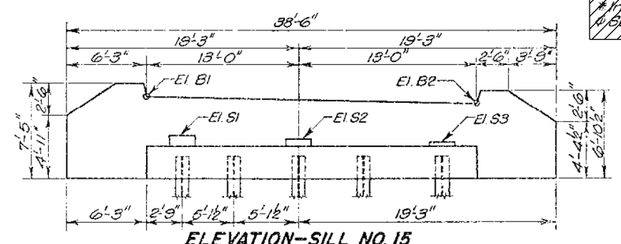

ELEVATION – SILL NO. 15
(Re-Steel see on Elevation Sill No. 1)

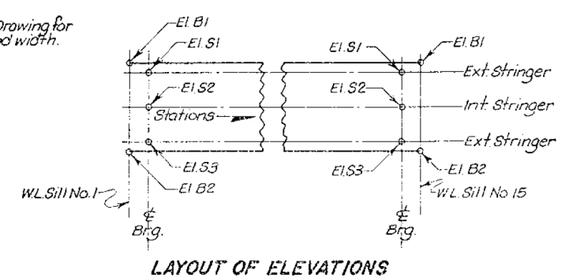

LAYOUT OF ELEVATIONS

ELEVATIONS

Pt	Sill No. 1	Sill No. 15
A	4893.56	4892.98
S1	4896.820	4896.246
S2	4896.607	4896.033
S3	4896.394	4895.820
B1	4899.97	4899.40
B2	4899.43	4898.86

RAMP "B"
DETAILS OF SILLS NO. 1 & 15
FOR
290'-0" TIMBER ARCH BRIDGE
26'-0" ROADWAY
OVER RAMP "C" & E.B.L.-U.S. NO.16 SEC. 31-T1S-R6E
STA. 11+73.50 TO 14+63.50 F017-1(9)
PENNINGTON COUNTY
SOUTH DAKOTA HS 20-44
DEPARTMENT OF HIGHWAYS
AUGUST 1966

ORIGINAL CONSTRUCTION PLANS

FOR BIDDING PURPOSES ONLY

Revised: 8/4/2020 MNL

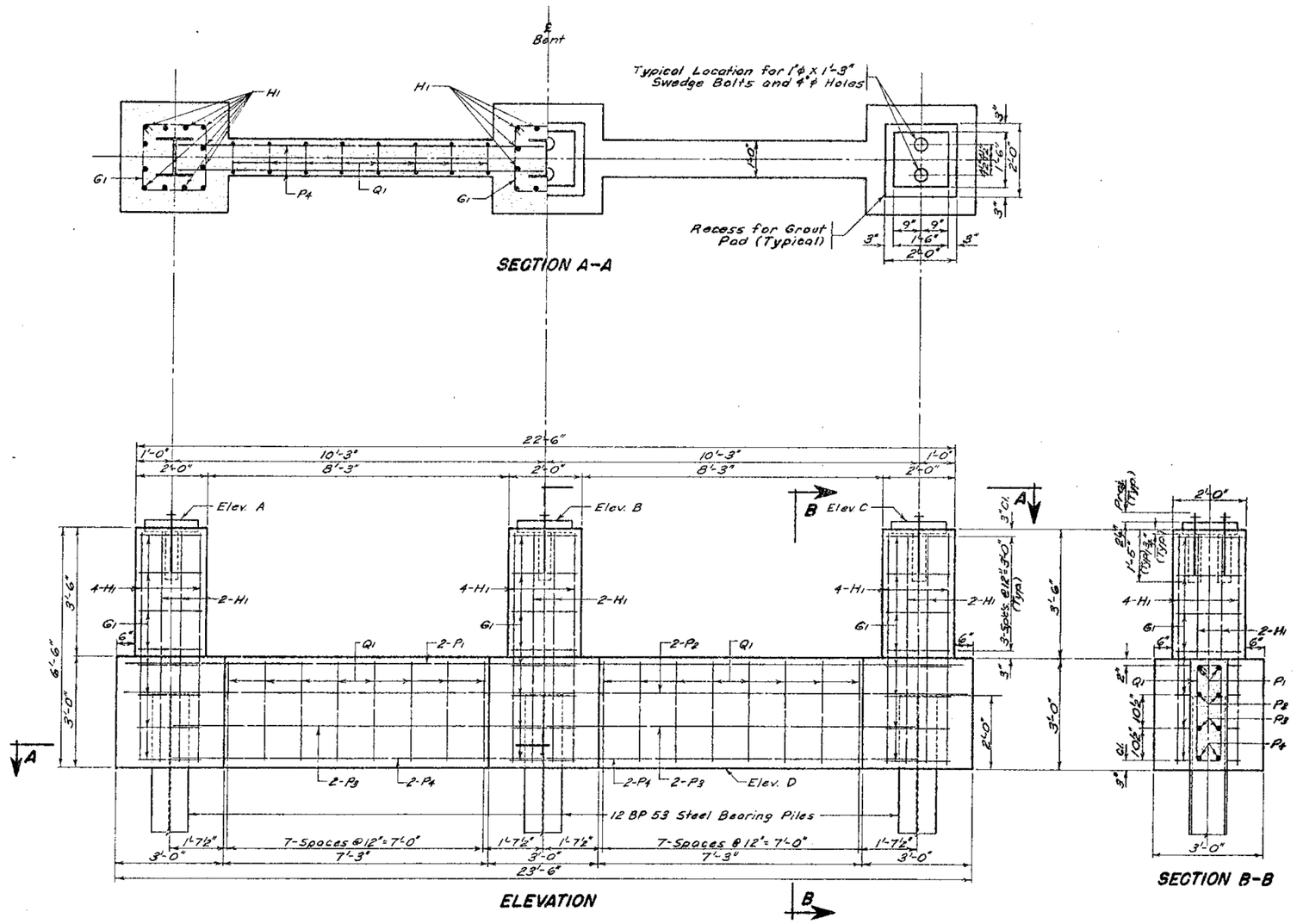

*REINFORCING SCHEDULE

Mk	No.	Size	Length	Type
G1	24	4	7'-6"	T1
H1	96	7	6'-0"	Str.
P1	2	9	23'-0"	Str.
P2	2	6	23'-0"	Str.
P3	4	6	10'-0"	Str.
P4	4	9	10'-0"	Str.
Q1	16	4	7'-6"	T1

Bending Details

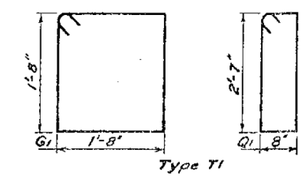

NOTE: All dimensions are out to out of bars.
*For one bent pedestal.

ESTIMATED QUANTITIES

ITEM	UNIT	QUANTITY
Class "A" Concrete	Cu. Yds.	*6.3
Reinforcing Steel	Lbs.	1068
#12BP53 Steel Bearing Piles	No.	3
Structure Excavation (See Layout Sheet)		

*Quantities for one bent pedestal
*Includes 0.1 cu. yds. for grout pads.
#See Layout Sheet for length of 12 BP53 Steel Bearing Piles

TABLE OF ELEVATIONS

Location	Elev. A	Elev. B	Elev. C	Elev. D
Bent At 2	4884.895	4884.895	4884.895	4878.31
Bent At 3	4870.853	4870.853	4870.853	4864.27
Bent At 13	4870.445	4870.445	4870.445	4863.86
Bent At 14	4884.403	4884.403	4884.403	4877.82

RAMP "B"
DETAILS OF BENT PEDESTALS AT 2,3,13 & 14
FOR

290'-0" TIMBER ARCH BRIDGE

26'-0" ROADWAY
OVER RAMP "C" & E.B.L.-U.S. NO.16 SEC. 31-T1S-R6E
STA. 11+73.50 TO 14+63.50 F017-1(9)
PENNINGTON COUNTY
SOUTH DAKOTA HS 20-44
DEPARTMENT OF HIGHWAYS
AUGUST 1966

ORIGINAL CONSTRUCTION PLANS

FOR BIDDING PURPOSES ONLY

Revised: 8/4/2020 MNL

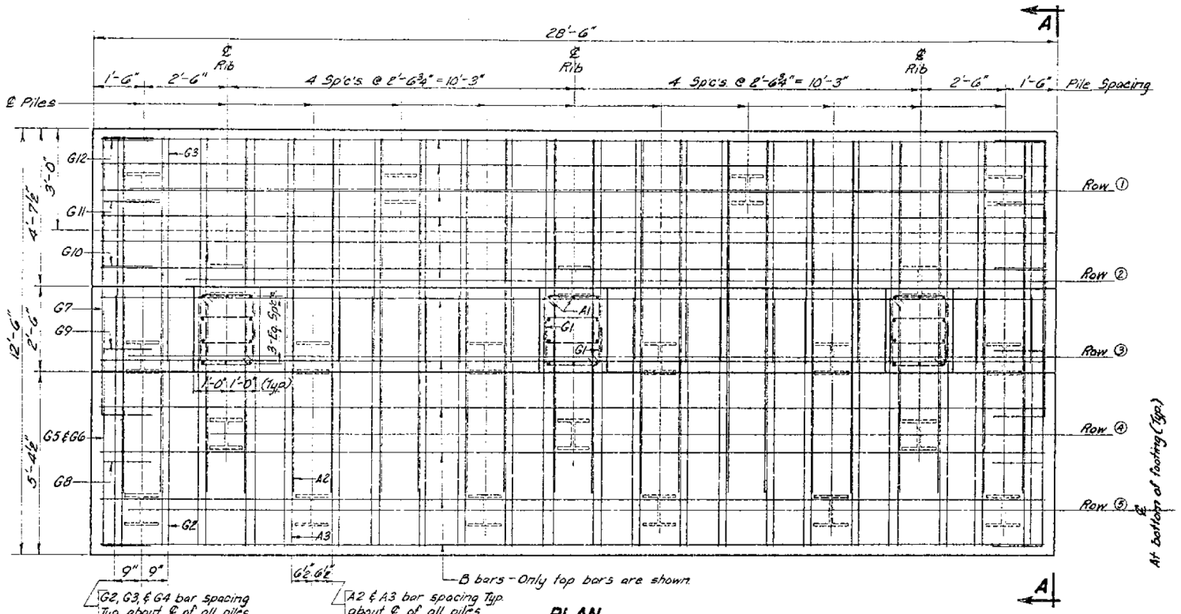

Note: - Bars G5 thru G12 are at ends only.

PLAN

(Grout Pads and Anchor Bolts not shown.)

REINFORCING SCHEDULE

(For One Abutment)

Mk.	No.	Size	Length	Type	Bending Details
A1	30	8	4'-6"	Str.	
A2	22	8	11'-9"	Str.	
A3	22	8	13'-6"	Str.	
B	39	8	28'-0"	Str.	
G1	24	5	6'-9"	T1	
G2	22	8	14'-9"	16A	
G3	22	8	17'-0"	16A	
G4	22	8	12'-9"	19A	
G5	2	6	16'-6"	2	
G6	2	6	16'-3"	2	
G7	2	6	11'-9"	2	
G8	2	6	8'-6"	2	
G9	2	6	10'-9"	2	
G10	2	6	11'-3"	2	
G11	2	6	10'-6"	2	
G12	2	6	9'-6"	2	

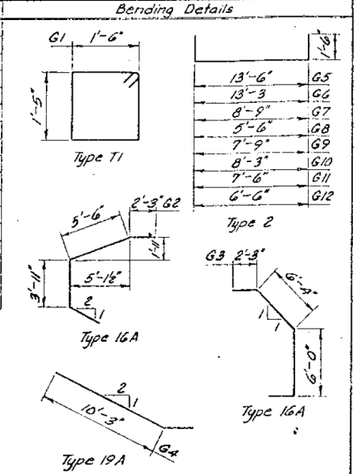

Note: - All dimensions are out to out.

ESTIMATED QUANTITIES

ITEM	UNIT	Abutment At 4	Abutment At 12
* Class "A" Concrete	Cu. Yds.	106.4	106.3
Reinforcing Steel	Lbs.	7990	7990
Structure Excavation	Cu. Yds.	195	152
* Steel Bearing Piles (12BP53)	No.	22	22

* Includes 2 Cu. Yds. for Grout.

* See Layout for Lengths of 12 BP53 Steel Bearing Piles.

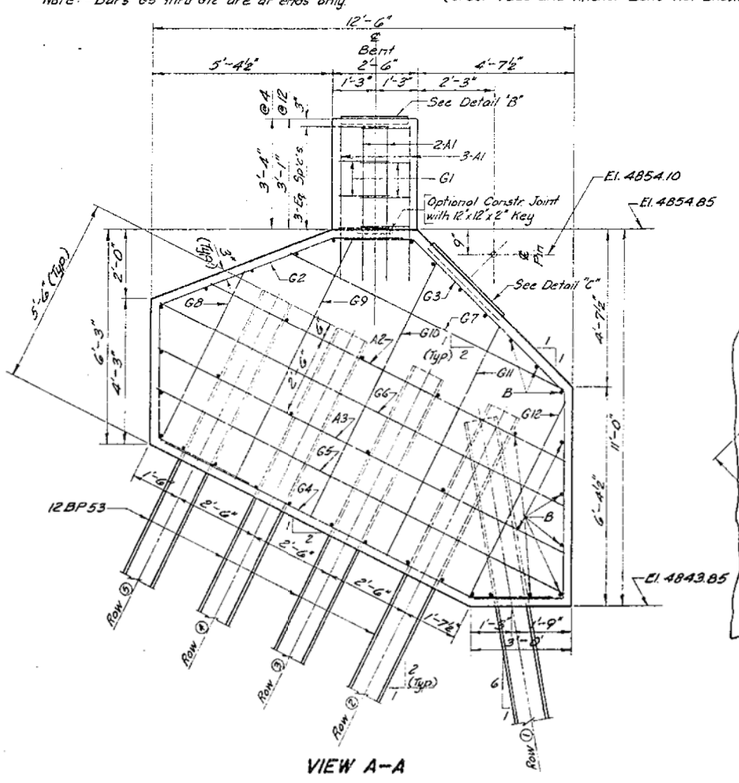

VIEW A-A

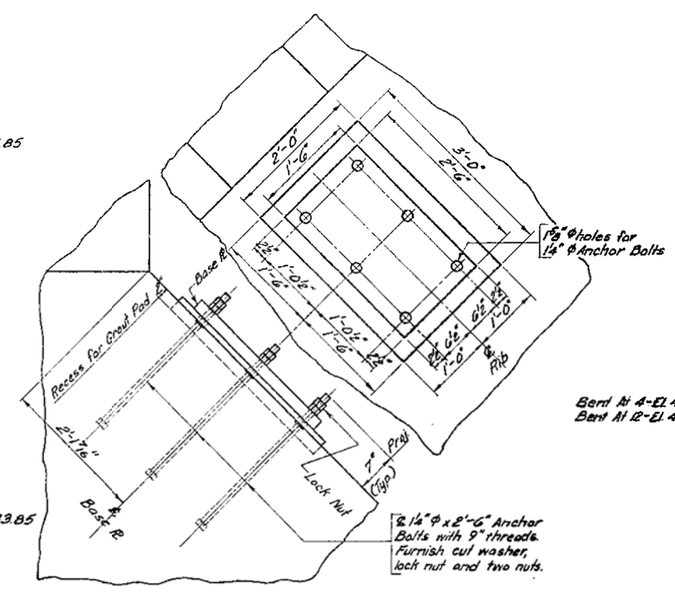

DETAIL "C"

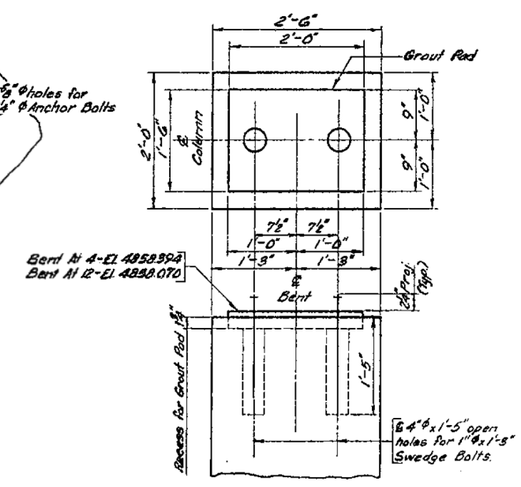

DETAIL "B"

RAMP "B"

DETAILS OF ABUTMENTS AT 4 AND 12

FOR

290'-0" TIMBER ARCH BRIDGE

26'-0" ROADWAY

OVER RAMP "C" & E.B.L.-U.S. NO. 16 SEC. 31-T1S-R6E

STA. 11+73.50 TO 14+63.50 F017-1(9)

PENNINGTON COUNTY

SOUTH DAKOTA HS20-44

DEPARTMENT OF HIGHWAYS

AUGUST 1966

ORIGINAL CONSTRUCTION PLANS

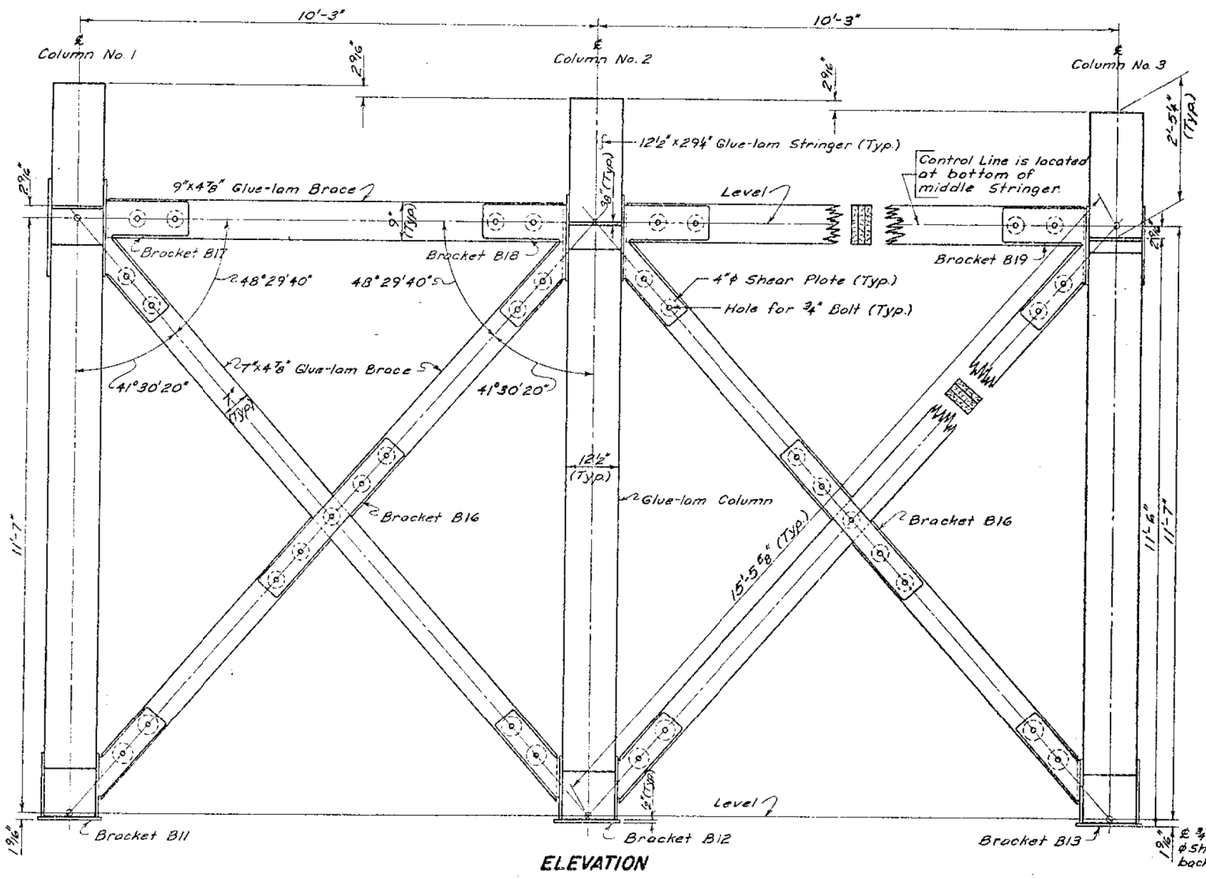

RAMP "B"
DETAILS OF BENTS AT 2 & 14
FOR

290'-0" TIMBER ARCH BRIDGE

26'-0" ROADWAY

OVER RAMP "C" & E.B.L.-U.S. NO.16 SEC. 31-T1S-R6E
STA. 11+73.50 TO 14+63.50 F017-1(9)
PENNINGTON COUNTY
SOUTH DAKOTA HS20-44
DEPARTMENT OF HIGHWAYS
AUGUST 1966

ORIGINAL CONSTRUCTION PLANS

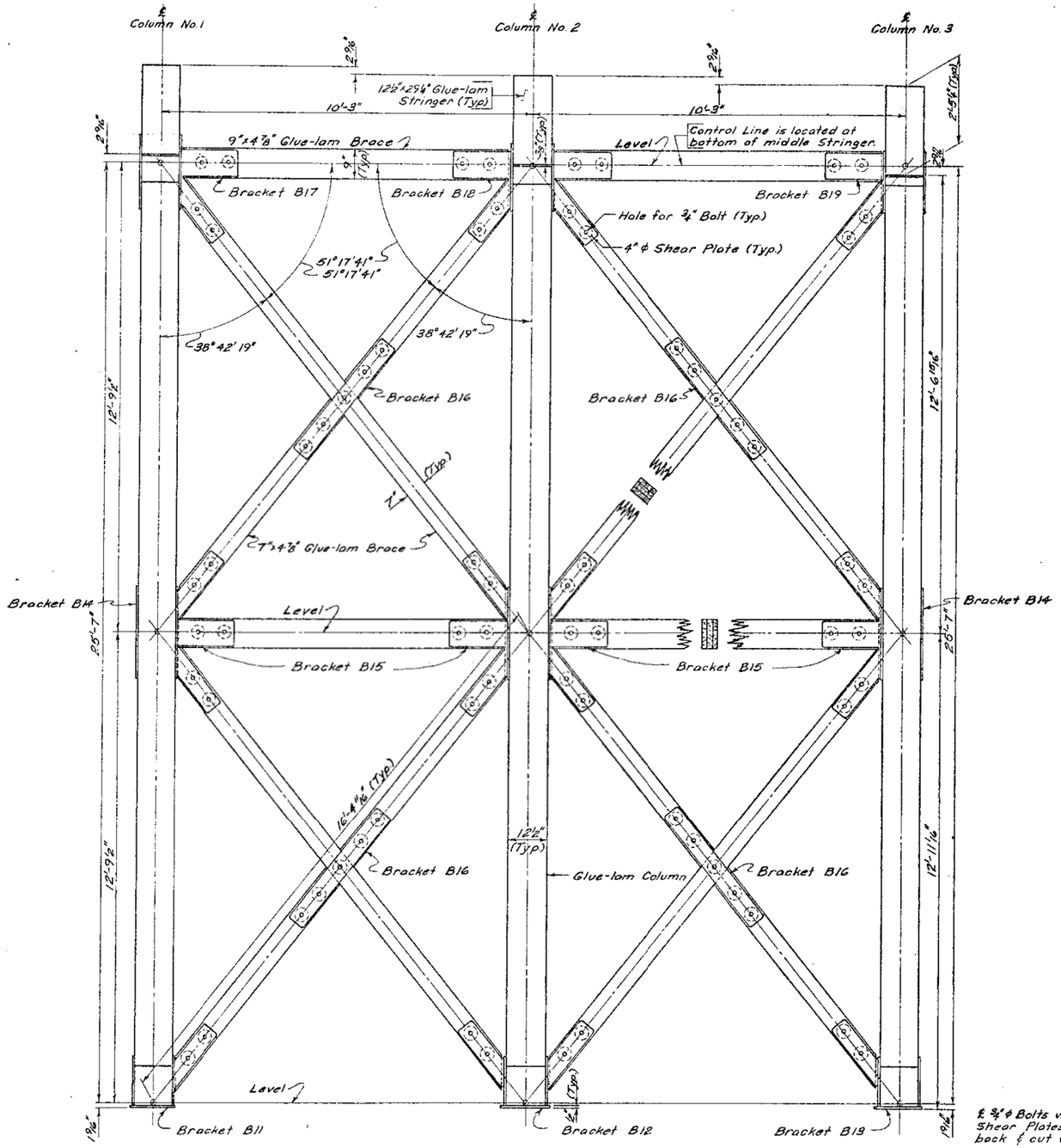

ELEVATION

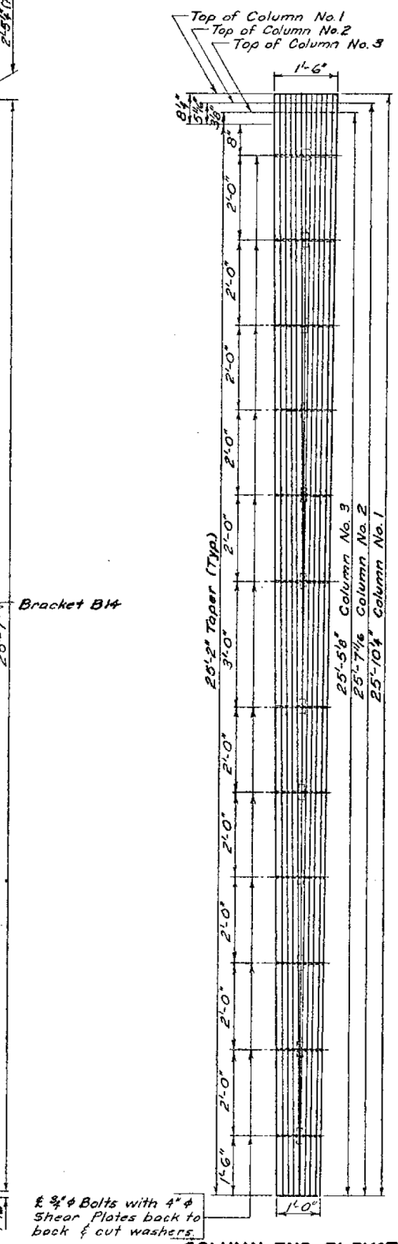

COLUMN END ELEVATION

RAMP "B"
DETAILS OF BENTS AT 3 & 13
FOR

290'-0" TIMBER ARCH BRIDGE

26'-0" ROADWAY
OVER RAMP "C" & E.B.L.-U.S. NO.16 SEC. 31-T1S-R6E
STA. 11+73.50 TO 14+63.50 F017-1(9)
PENNINGTON COUNTY
SOUTH DAKOTA HS 20-44
DEPARTMENT OF HIGHWAYS
AUGUST 1966

ORIGINAL CONSTRUCTION PLANS

FOR BIDDING PURPOSES ONLY

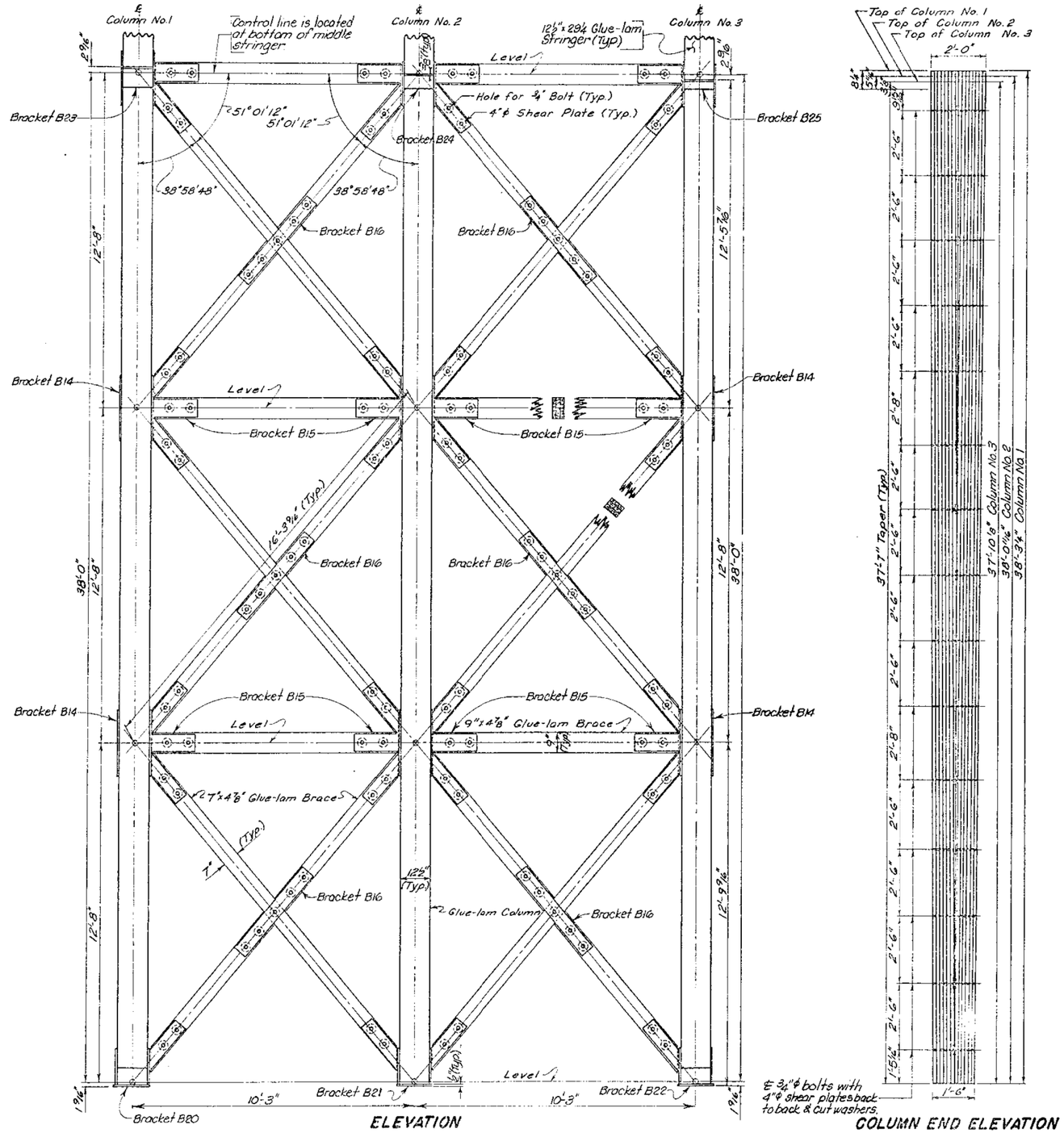

RAMP "B"

DETAILS OF BENTS AT 4 & 12

FOR

290'-0" TIMBER ARCH BRIDGE

26'-0" ROADWAY

OVER RAMP "C" & E.B.L.-U.S. NO.16 SEC. 31-T1S-R6E

STA. 11+73.50 TO 14+63.50 F017-1(9)

PENNINGTON COUNTY

SOUTH DAKOTA HS20-44

DEPARTMENT OF HIGHWAYS

AUGUST 1966

ORIGINAL CONSTRUCTION PLANS

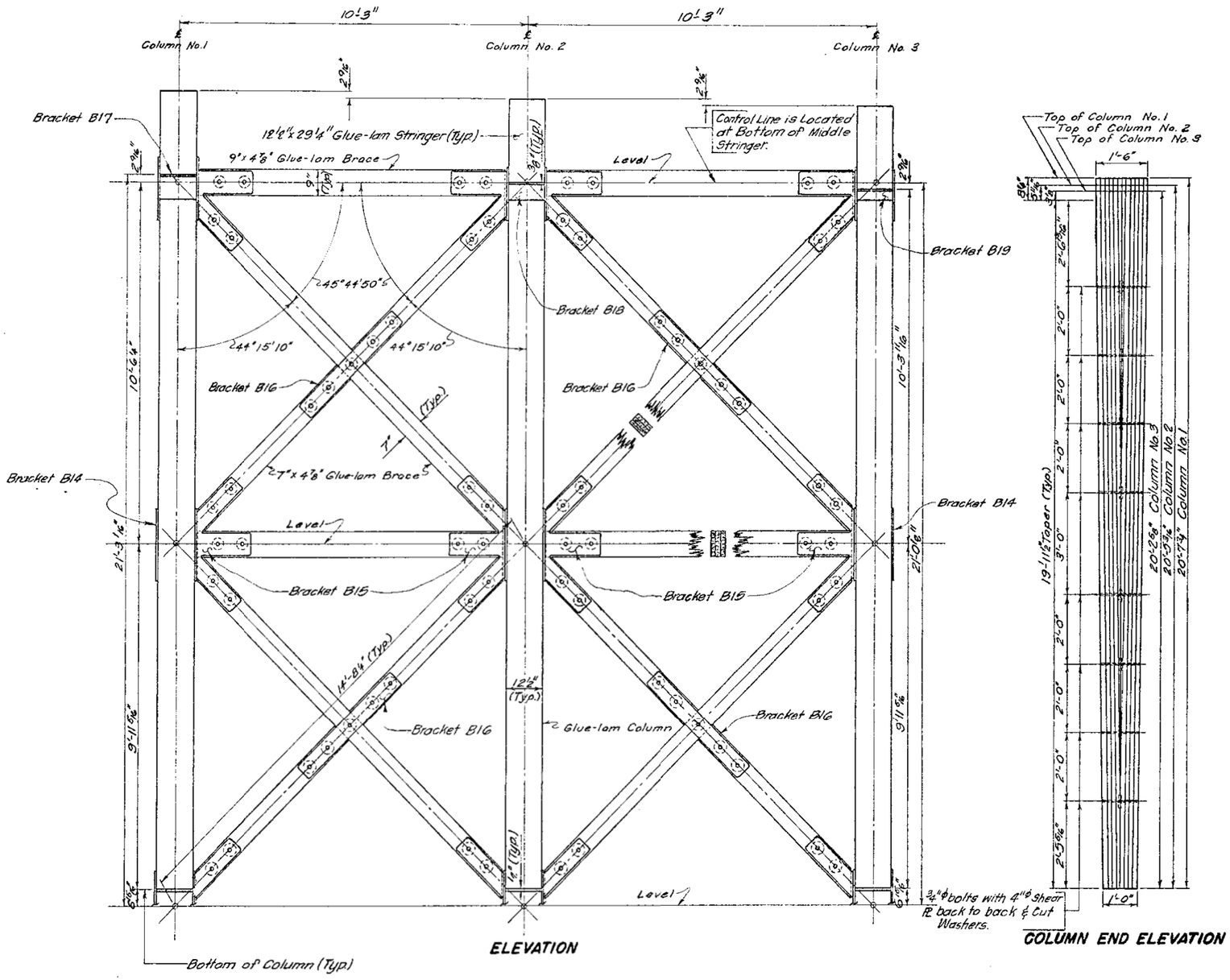

NOTE.- For Details of Column to Rib Connection See Sheet No. 88

RAMP "B"
DETAILS OF BENTS AT S 311
FOR
290'-0" TIMBER ARCH BRIDGE
26'-0" ROADWAY
OVER RAMP "C" & E.B.L.-U.S. NO.16 SEC. 31-T1S-R6E
STA. 11+73.50 TO 14+63.50 F017-1(9)
PENNINGTON COUNTY
SOUTH DAKOTA HS 20-44
DEPARTMENT OF HIGHWAYS
AUGUST 1966

ORIGINAL CONSTRUCTION PLANS

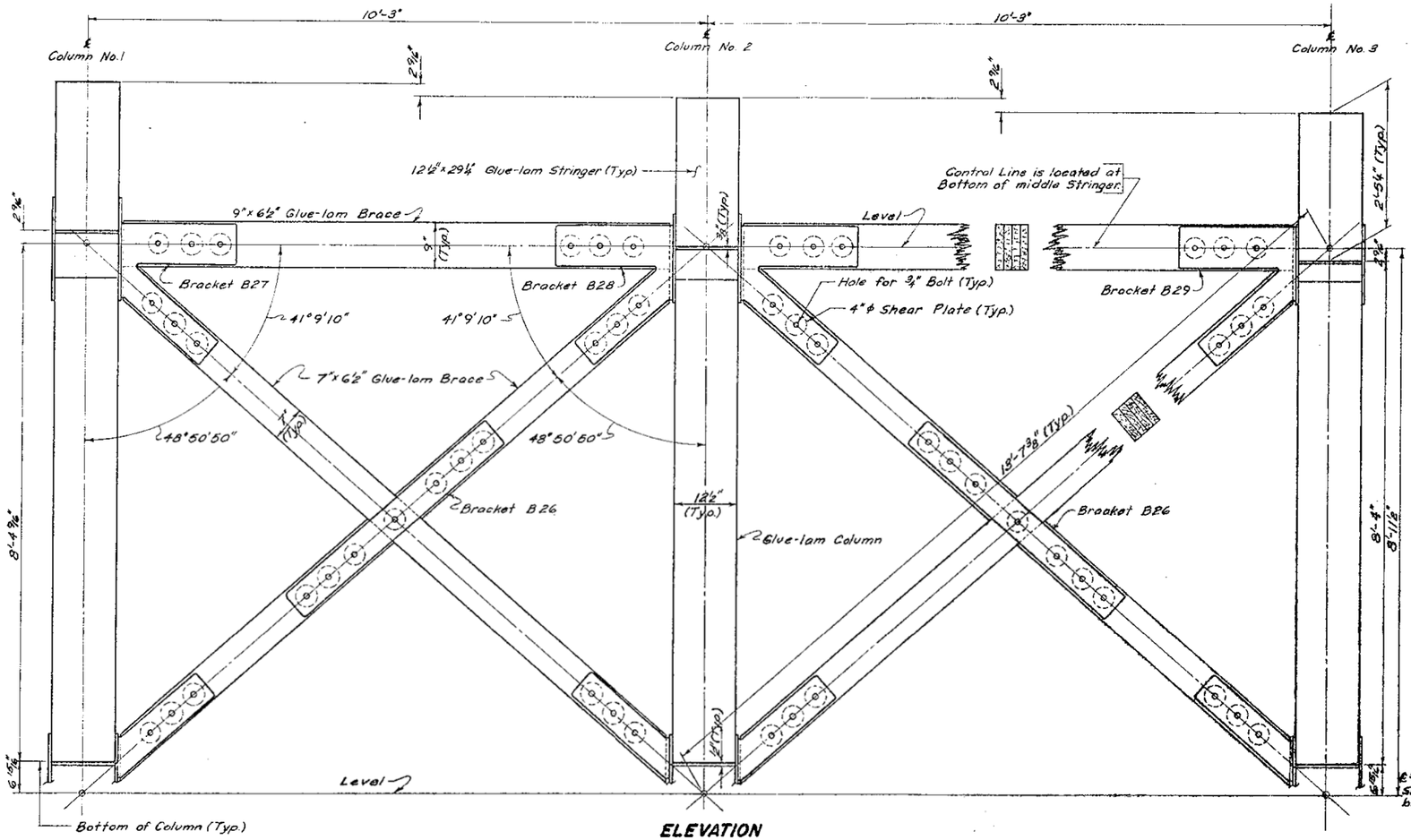

ELEVATION

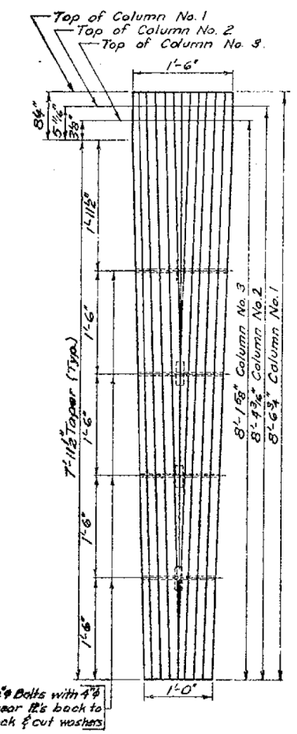

COLUMN END ELEVATION

NOTE: For Column to Rib Connections see Sheet No. 39.

RAMP "B"
DETAILS OF BENTS AT 6 & 10
FOR

290'-0" TIMBER ARCH BRIDGE

26'-0" ROADWAY

OVER RAMP "C" & E.B.L.-U.S. NO. 16 SEC. 31-T1S-R6E
STA. 11+73.50 TO 14+63.50 F017-1(9)
PENNINGTON COUNTY
SOUTH DAKOTA HS20-44
DEPARTMENT OF HIGHWAYS
AUGUST 1966

ORIGINAL CONSTRUCTION PLANS

FOR BIDDING PURPOSES ONLY

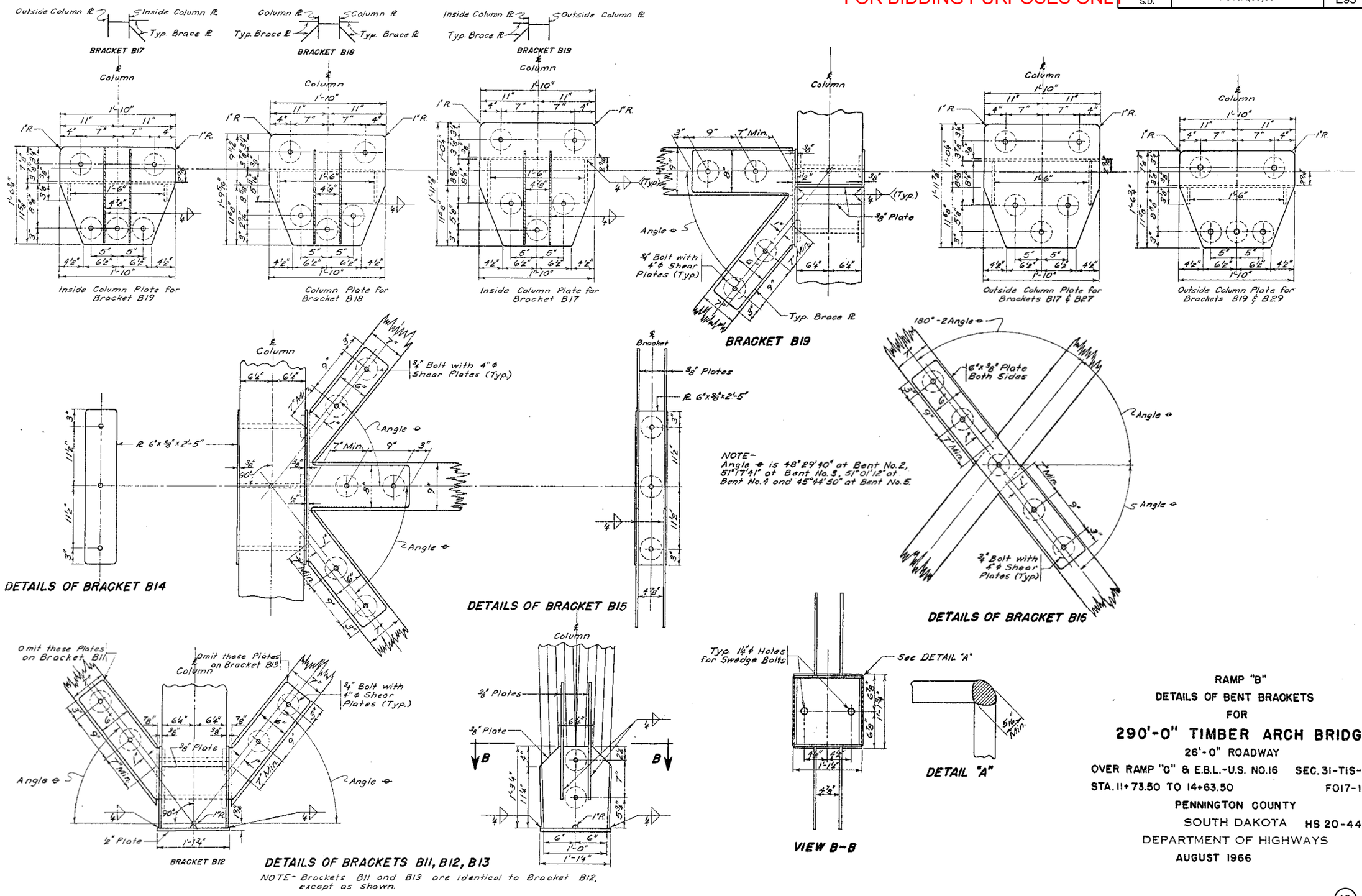

RAMP "B"
DETAILS OF BENT BRACKETS
FOR

290'-0" TIMBER ARCH BRIDGE

26'-0" ROADWAY
OVER RAMP "C" & E.B.L.-U.S. NO.16 SEC. 31-T1S-R6E
STA. 11+73.50 TO 14+63.50 F017-1(9)
PENNINGTON COUNTY
SOUTH DAKOTA HS 20-44
DEPARTMENT OF HIGHWAYS
AUGUST 1966

ORIGINAL CONSTRUCTION PLANS

FOR BIDDING PURPOSES ONLY

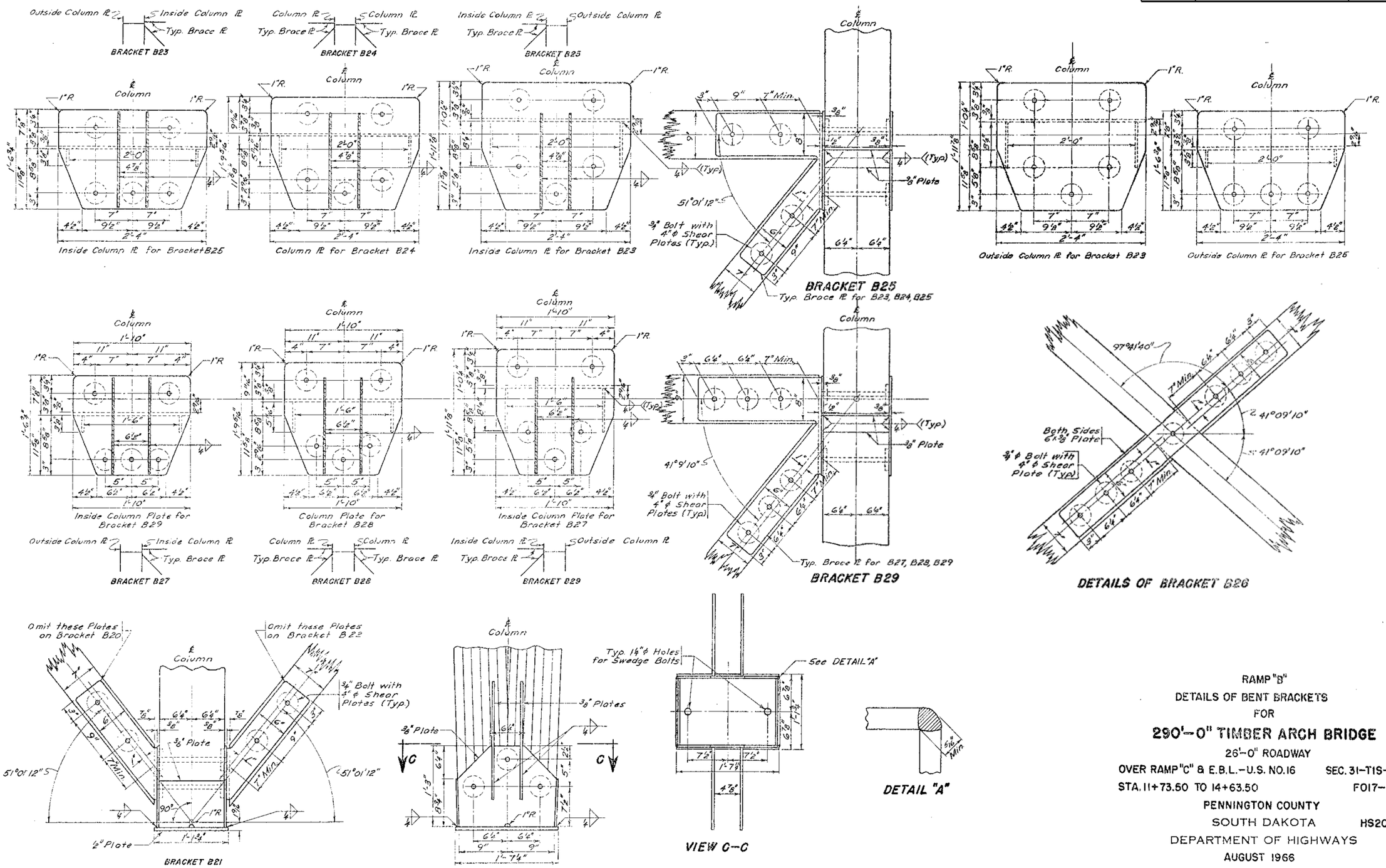

RAMP "B"
DETAILS OF BENT BRACKETS
FOR

290'-0" TIMBER ARCH BRIDGE

26'-0" ROADWAY

OVER RAMP "C" & E.B.L.-U.S. NO. 16 — SEC. 31-T1S-R6E

STA. 11+73.50 TO 14+63.50 — F017-1(9)

PENNINGTON COUNTY

SOUTH DAKOTA — HS20-44

DEPARTMENT OF HIGHWAYS

AUGUST 1966

ORIGINAL CONSTRUCTION PLANS

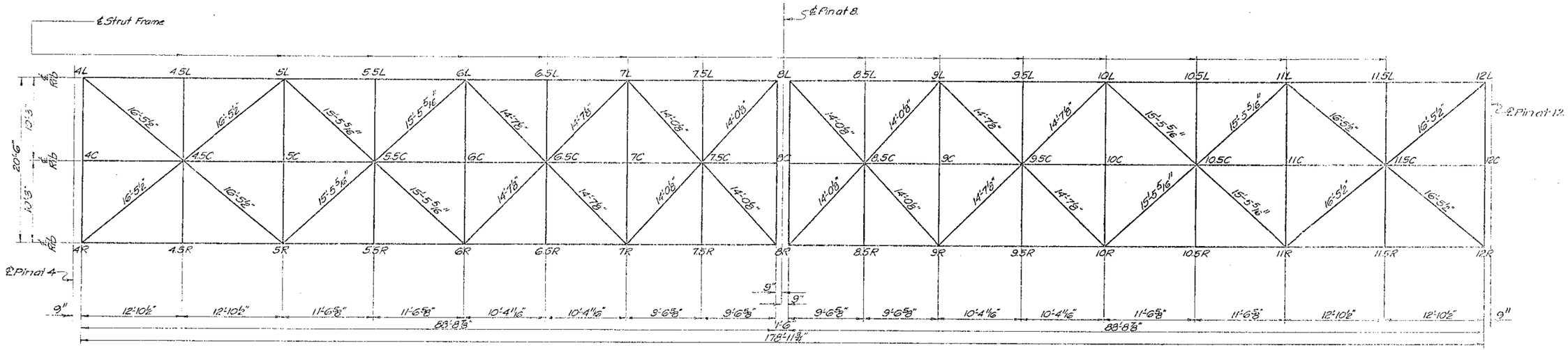

DEVELOPED PLAN OF RIB, STRUTS, AND BRACES

(All dimensions are ℄ of member to ℄ of member)

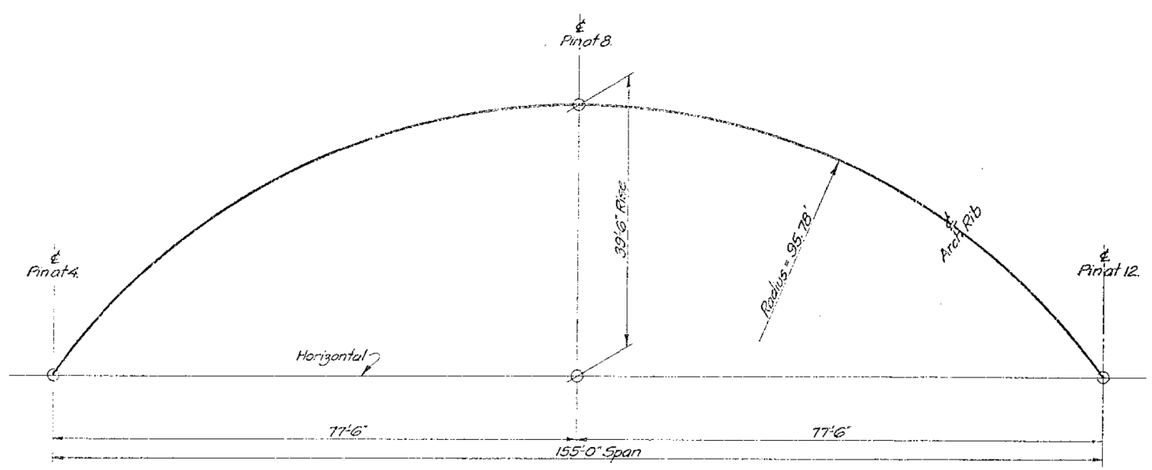

DIAGRAM OF ARCH RIB

RAMP "B"
DETAILS OF ARCH RIB
FOR
290'-0" TIMBER ARCH BRIDGE
26'-0" ROADWAY
OVER RAMP "C" & E.B.L.-U.S. NO.16 SEC. 31-T1S-R6E
STA. 11+73.50 TO 14+63.50 F017-1(9)
PENNINGTON COUNTY
SOUTH DAKOTA HS 20-44
DEPARTMENT OF HIGHWAYS
AUGUST 1966

ORIGINAL CONSTRUCTION PLANS

FOR BIDDING PURPOSES ONLY

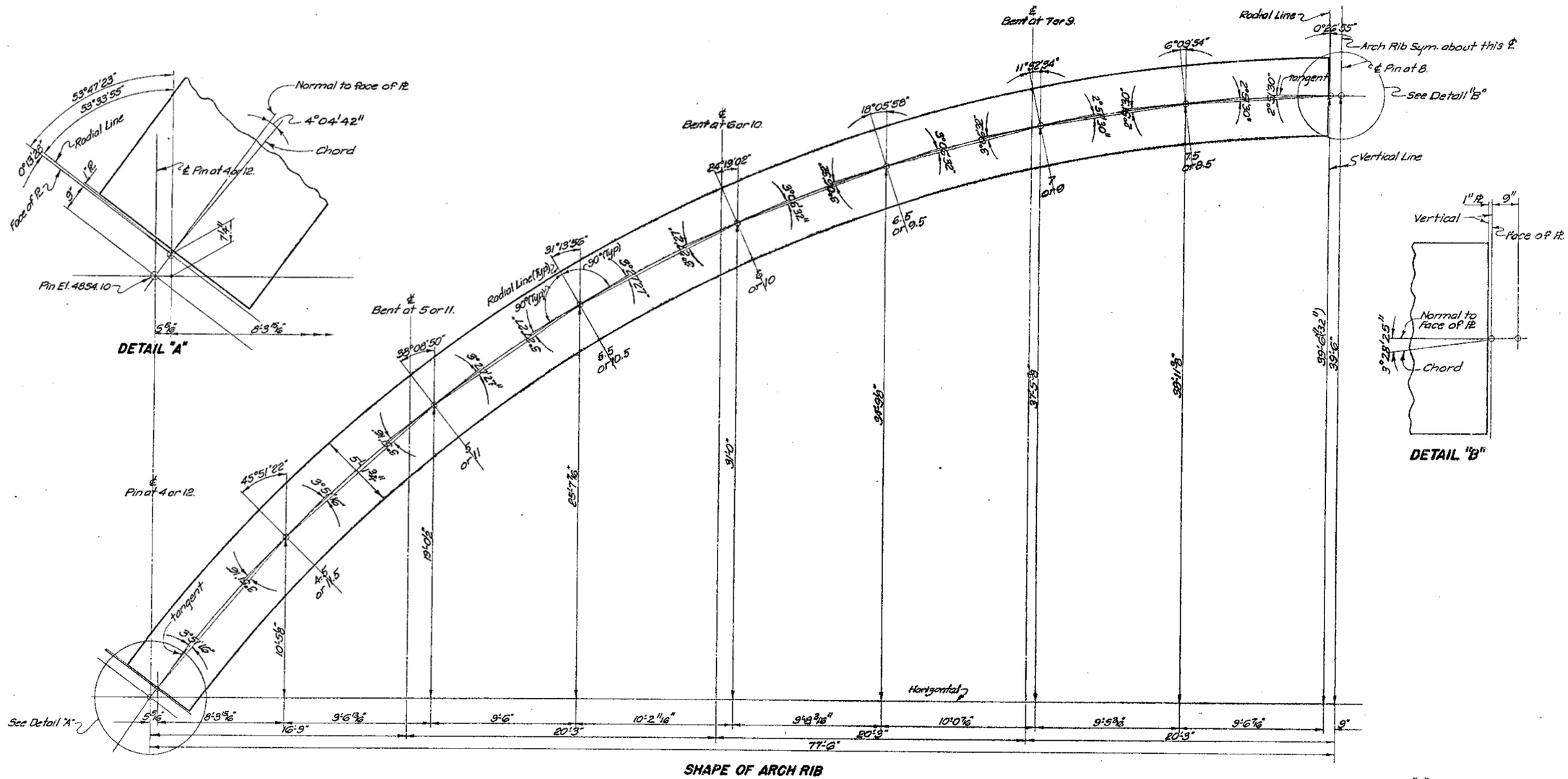

RAMP "B"
DETAILS OF ARCH RIB
FOR
290'-0" TIMBER ARCH BRIDGE
26'-0" ROADWAY
OVER RAMP "C" & E.B.L.-U.S. NO.16 SEC. 31-T1S-R6E
STA.11+73.50 TO 14+63.50 F017-1(9)
PENNINGTON COUNTY
SOUTH DAKOTA HS20-44
DEPARTMENT OF HIGHWAYS
AUGUST 1966

ORIGINAL CONSTRUCTION PLANS

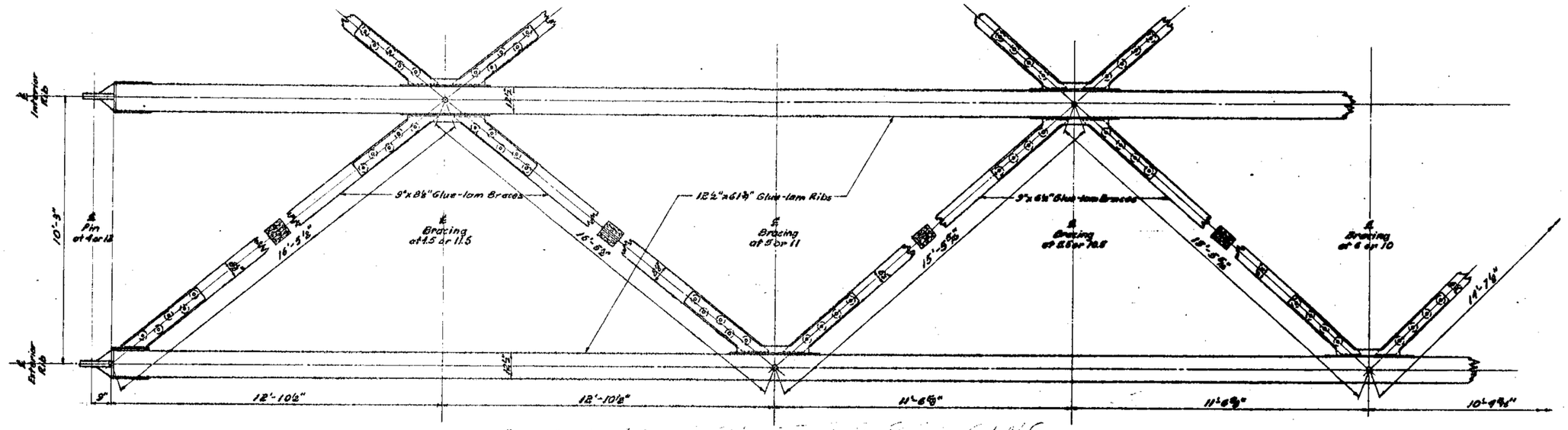

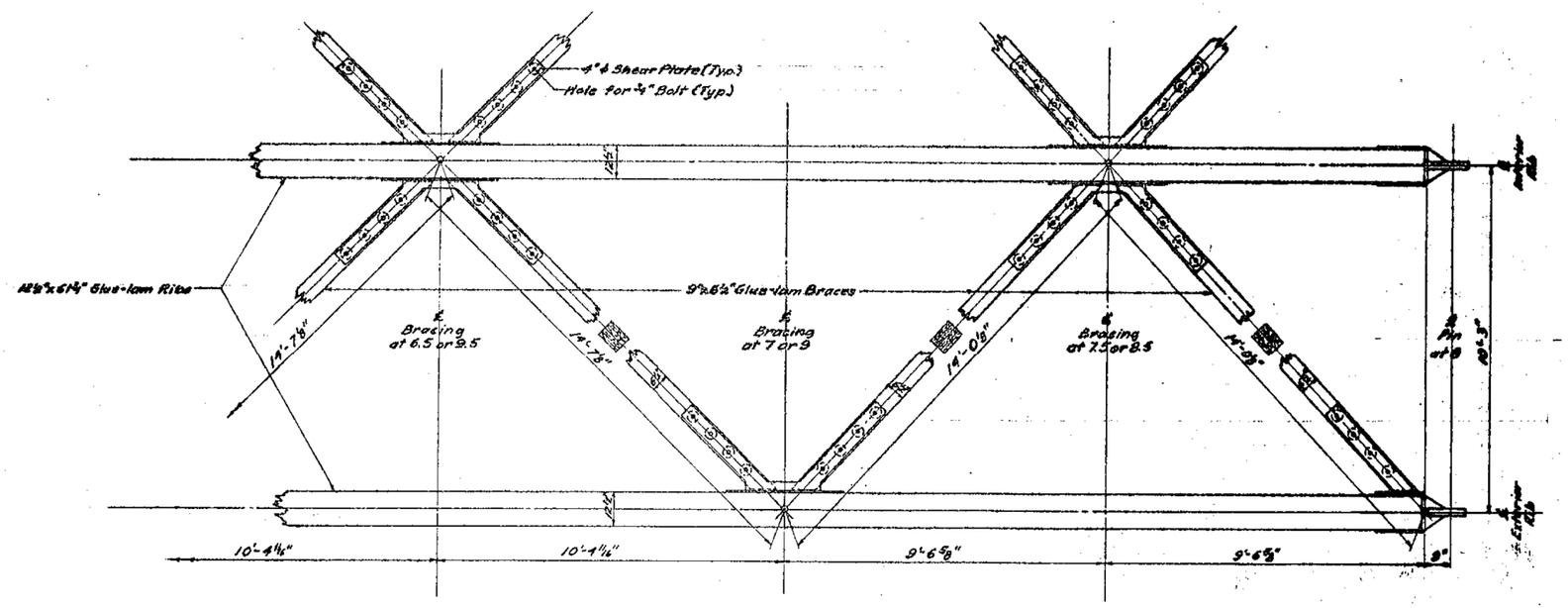

DEVELOPED PLAN OF LONGITUDINAL RIB BRACING

RAMP "B"
DEVELOPED PLAN OF LONGITUDINAL RIB BRACING
FOR
290'-0" TIMBER ARCH BRIDGE
26'-0" ROADWAY
OVER RAMP "C" & E.B.L.-U.S. NO.16 SEC. 31-T1S-R6E
STA. 11+73.50 TO 14+63.50 F017-1(9)
PENNINGTON COUNTY
SOUTH DAKOTA HS 20-44
DEPARTMENT OF HIGHWAYS
AUGUST 1966

ORIGINAL CONSTRUCTION PLANS

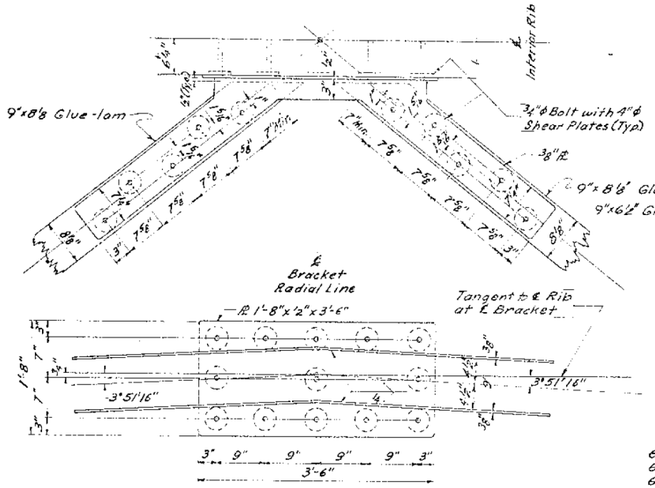

DETAILS OF BRACKET AT 4.5C & 11.5C

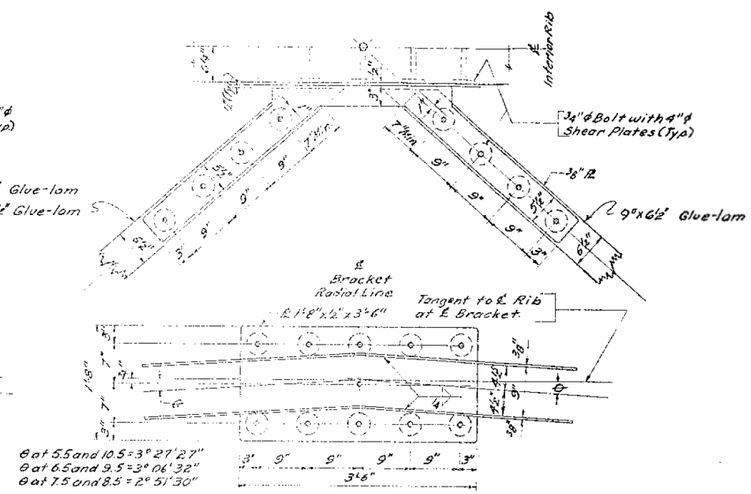

DETAILS OF BRACKET AT 5.5C, 6.5C, 7.5C, 8.5C, 9.5C, & 10.5C

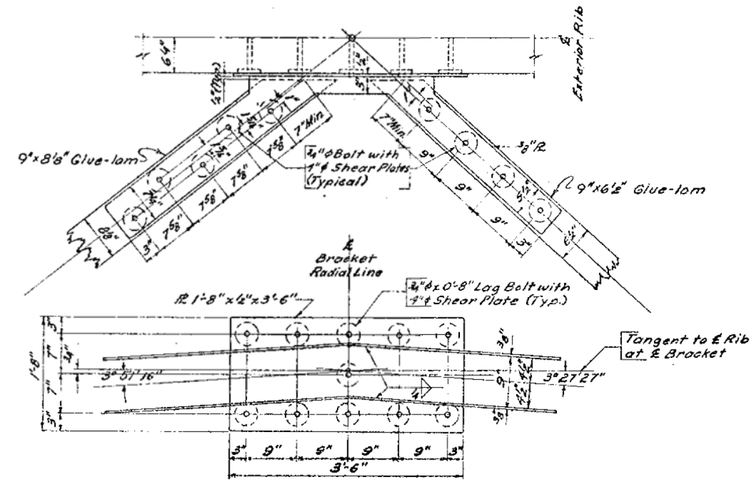

DETAILS OF BRACKET AT 5L AND 11R
BRACKET AT 5R AND 11L SIMILAR BY MIRROR IMAGE

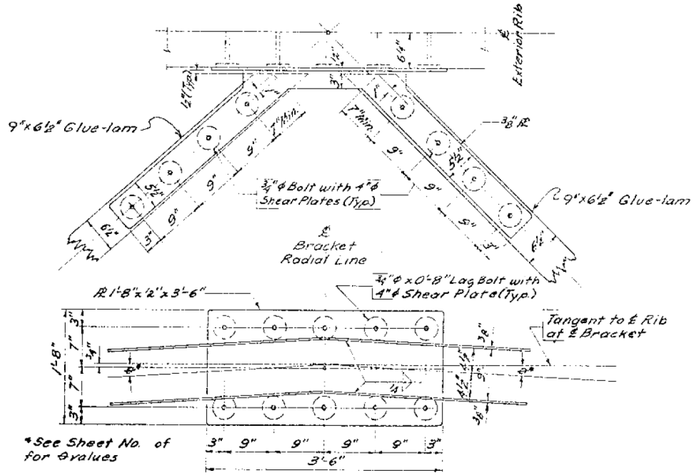

DETAILS OF BRACKET AT 6L, 6R, 7L, 7R, 9L, 9R, 10L & 10R

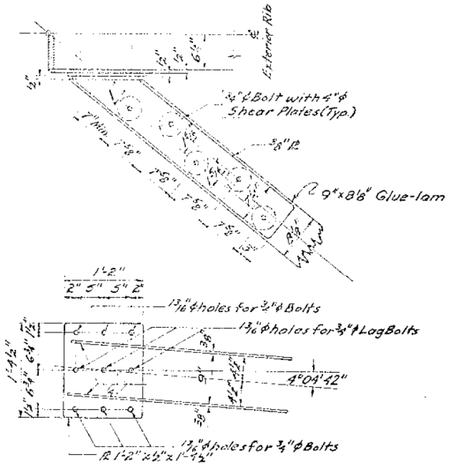

DETAILS OF BRACKET AT 4L & 12R
BRACKET AT 4R & 12L SIMILAR BY MIRROR IMAGE

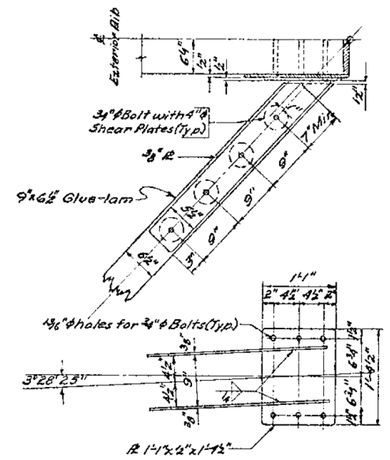

DETAILS OF BRACKET AT 8

(Two Brackets as shown above are required, and in addition two Brackets are required which are Similar by Mirror Image.)

RAMP "B"

DETAILS OF BRACKETS FOR LONGITUDINAL RIB BRACING

FOR

290'-0" TIMBER ARCH BRIDGE

26'-0" ROADWAY

OVER RAMP "C" & E.B.L.-U.S. NO.16 SEC. 31-T1S-R6E

STA. 11+73.50 TO 14+63.50 F017-1(9)

PENNINGTON COUNTY

SOUTH DAKOTA HS 20-44

DEPARTMENT OF HIGHWAYS

AUGUST 1966

ORIGINAL CONSTRUCTION PLANS

FOR BIDDING PURPOSES ONLY

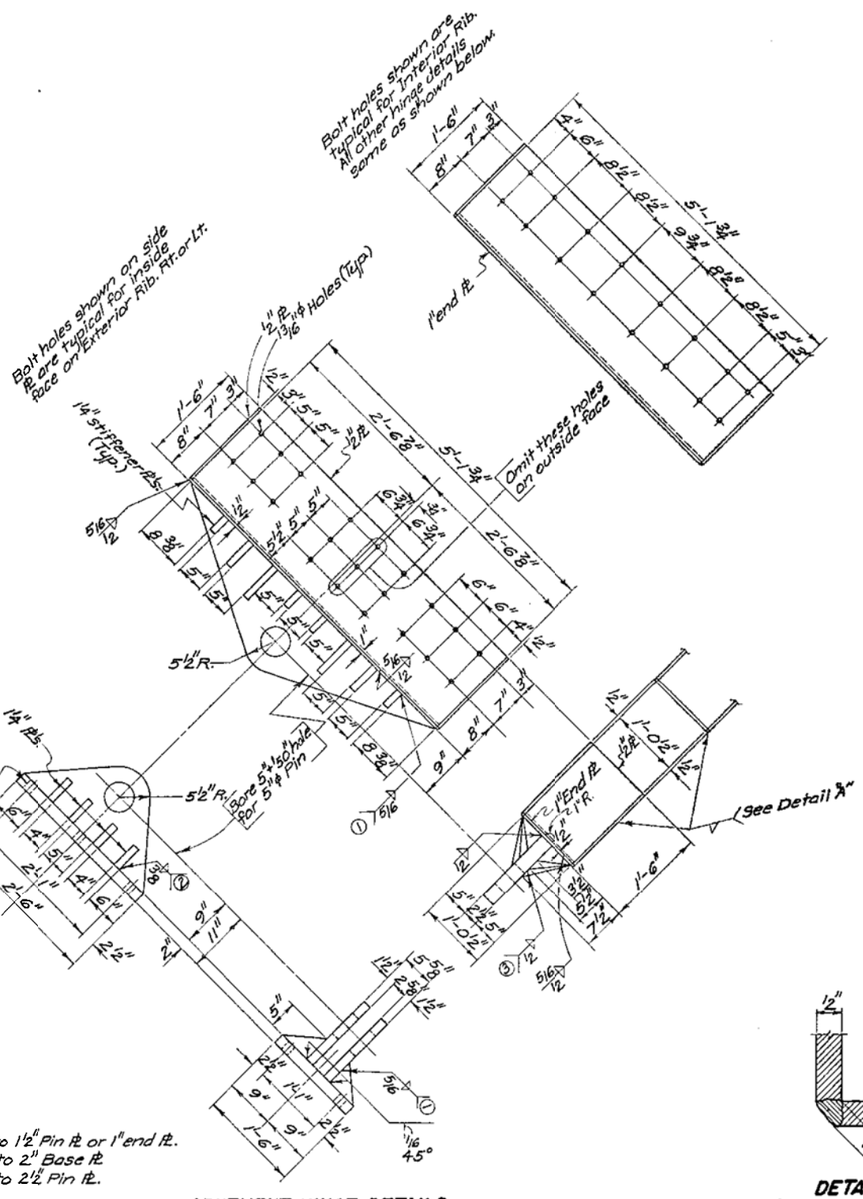

WELD NOTES—

① Typical stiffener ℞ to 1 1/2" Pin ℞ or 1" end ℞.
② Typical stiffener ℞ to 2" Base ℞
③ Typical stiffener ℞ to 2 1/2" Pin ℞.

ABUTMENT HINGE DETAILS

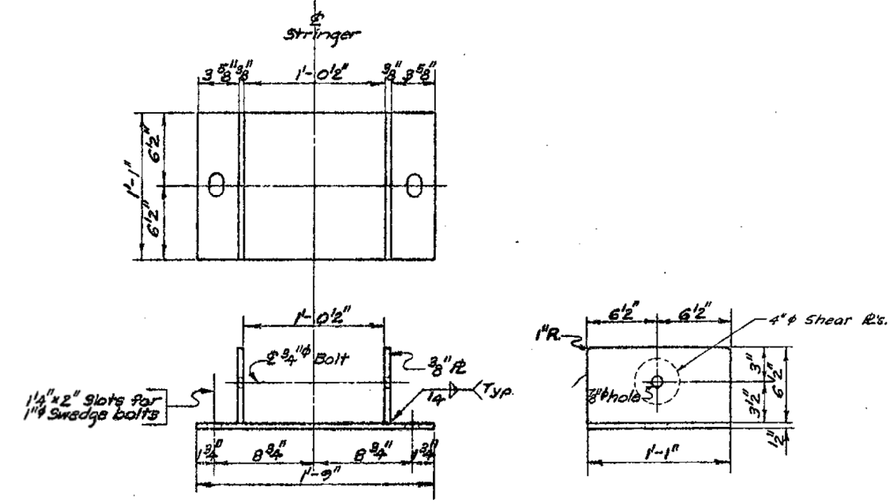

FIXED SHOE DETAILS FOR SILLS NO. 1 AND NO. 15

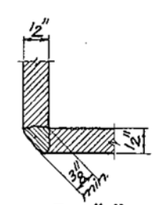

DETAIL "A"
(Typical Corner Weld)

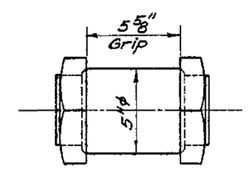

5" ϕ PIN DETAIL

RAMP "B"
DETAILS OF ABUTMENT HINGE AND SILL SHOE
FOR

290'-0" TIMBER ARCH BRIDGE

26'-0" ROADWAY
OVER RAMP "C" & E.B.L.-U.S. NO.16 SEC. 31-T1S-R6E
STA. 11+73.50 TO 14+63.50 F017-1(9)
PENNINGTON COUNTY
SOUTH DAKOTA HS 20-44
DEPARTMENT OF HIGHWAYS
AUGUST 1966

ORIGINAL CONSTRUCTION PLANS

FOR BIDDING PURPOSES ONLY

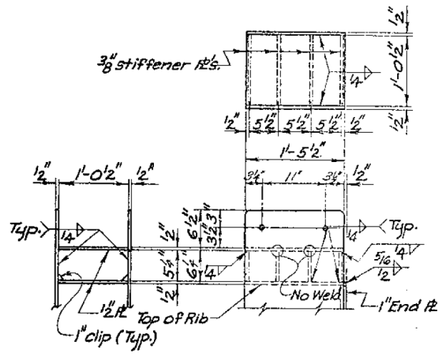

STRINGER SUPPORT FOR EXTERIOR RIB (LT.)
ALL OTHER HINGE DETAILS SAME AS SHOWN FOR EXT. RIB (RT.)

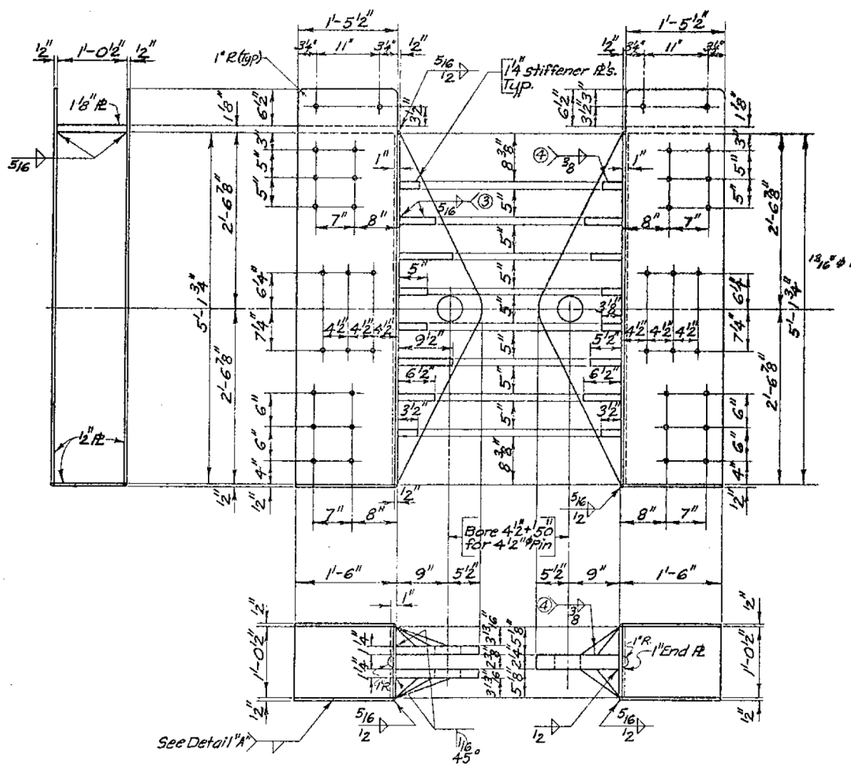

BOLT HOLES FOR EXT. RIB (RT. & LT.)
STRINGER SUPPORT FOR EXT. RIB (RT.)

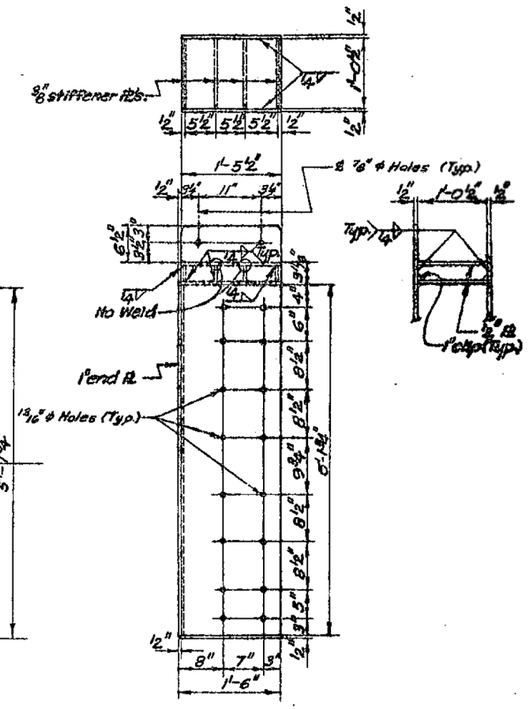

BOLT HOLES AND STRINGER SUPPORT FOR INTERIOR RIB. ALL OTHER HINGE DETAILS SAME AS SHOWN FOR EXT. RIB.

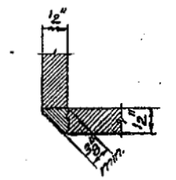

DETAIL "A"
Typical Corner Weld

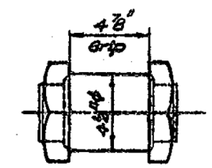

4 1/2" ϕ PIN DETAIL

CROWN HINGE DETAILS

WELD NOTES—
③ Typical stiffener Pl. to 1'4" Pin Pl. or 1" end Pl.
④ Typical stiffener Pl. to 2'4" Pin Pl.

RAMP "B"
DETAILS OF CROWN HINGE
FOR
290'-0" TIMBER ARCH BRIDGE
26'-0" ROADWAY
OVER RAMP "C" & E.B.L.-U.S. NO.16 SEC. 31-T1S-R6E
STA. 11+73.50 TO 14+63.50 F017-1(9)
PENNINGTON COUNTY
SOUTH DAKOTA HS 20-44
DEPARTMENT OF HIGHWAYS
AUGUST 1966

ORIGINAL CONSTRUCTION PLANS

FOR BIDDING PURPOSES ONLY

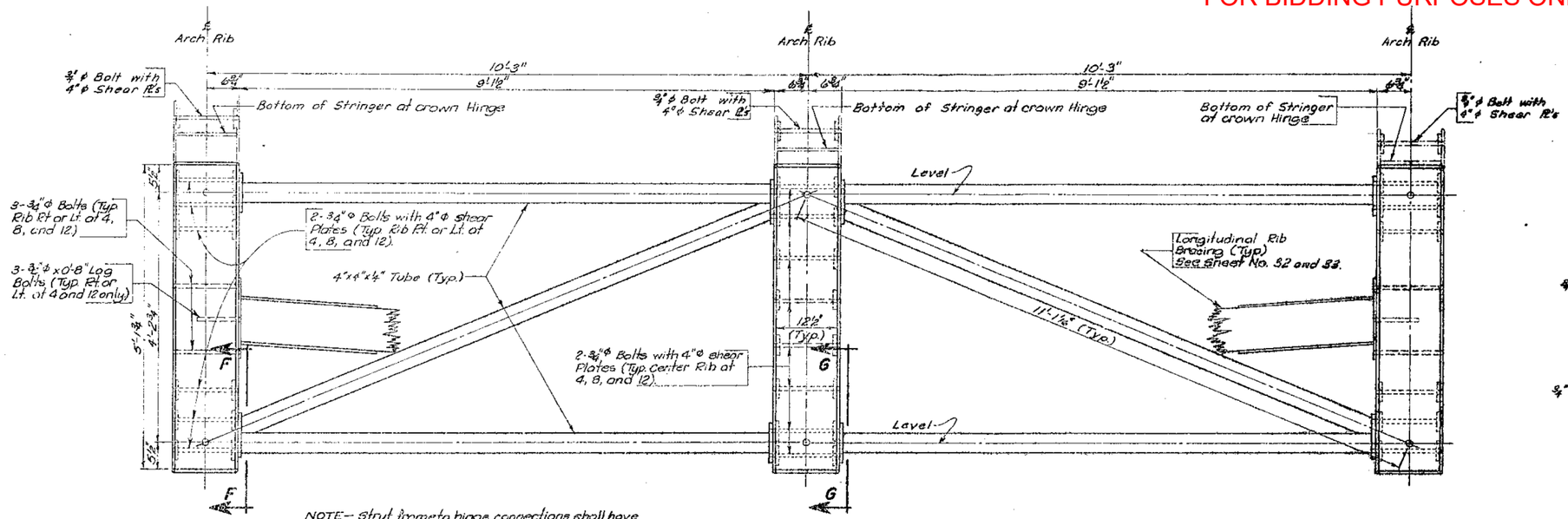

NOTE– Strut frame to hinge connections shall have high tensile strength bolts. All other bolts shall be standard.

SECTION E–E

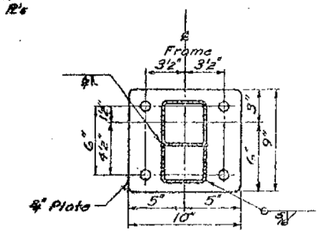

SECTION F–F

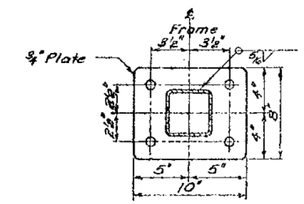

SECTION G–G

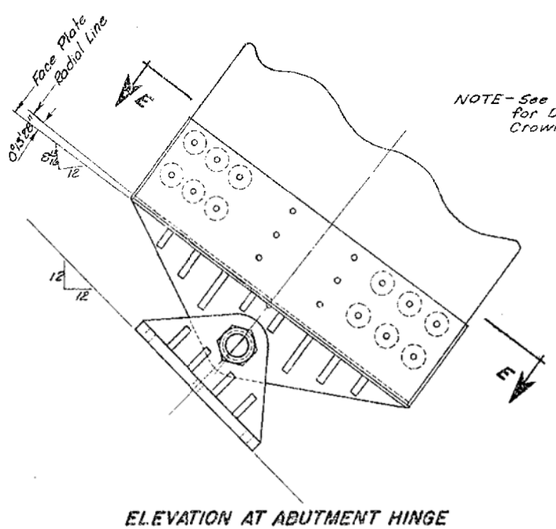

NOTE– See Sheets Nos 34 of 44 and 35 of 44 for Details of Abutment Hinge and Crown Hinge.

ELEVATION AT ABUTMENT HINGE

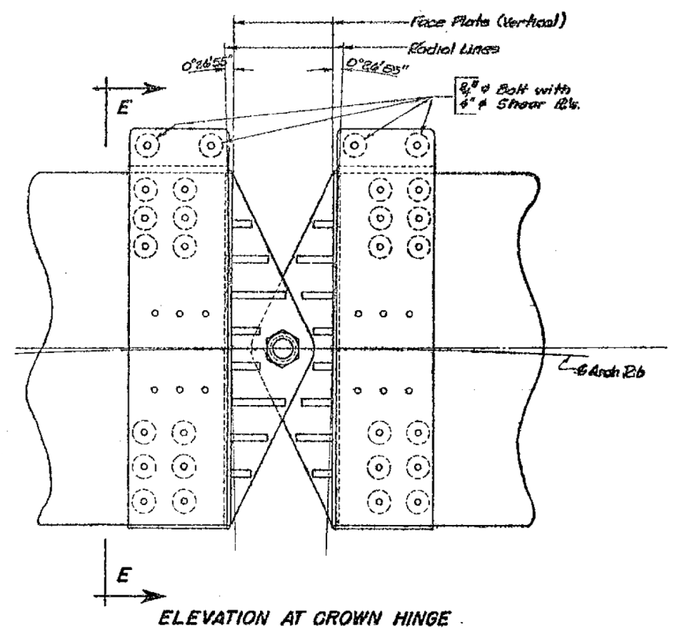

ELEVATION AT CROWN HINGE

RAMP "B"

DETAILS OF STRUT FRAME AT HINGES

FOR

290'-0" TIMBER ARCH BRIDGE

26'-0" ROADWAY

OVER RAMP "C" & E.B.L.-U.S. NO.16 SEC. 31-T1S-R6E

STA. 11+73.50 TO 14+63.50 F017-1(9)

PENNINGTON COUNTY

SOUTH DAKOTA HS 20-44

DEPARTMENT OF HIGHWAYS

AUGUST 1966

ORIGINAL CONSTRUCTION PLANS

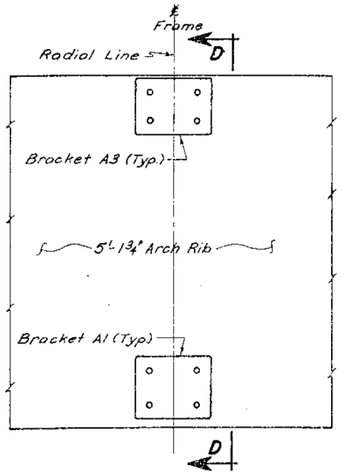

ELEVATION OF ARCH RIB
(Typical at 4.5, 5.5, 6.5, 7.5, 8.5, 9.5, 10.5 & 11.5)

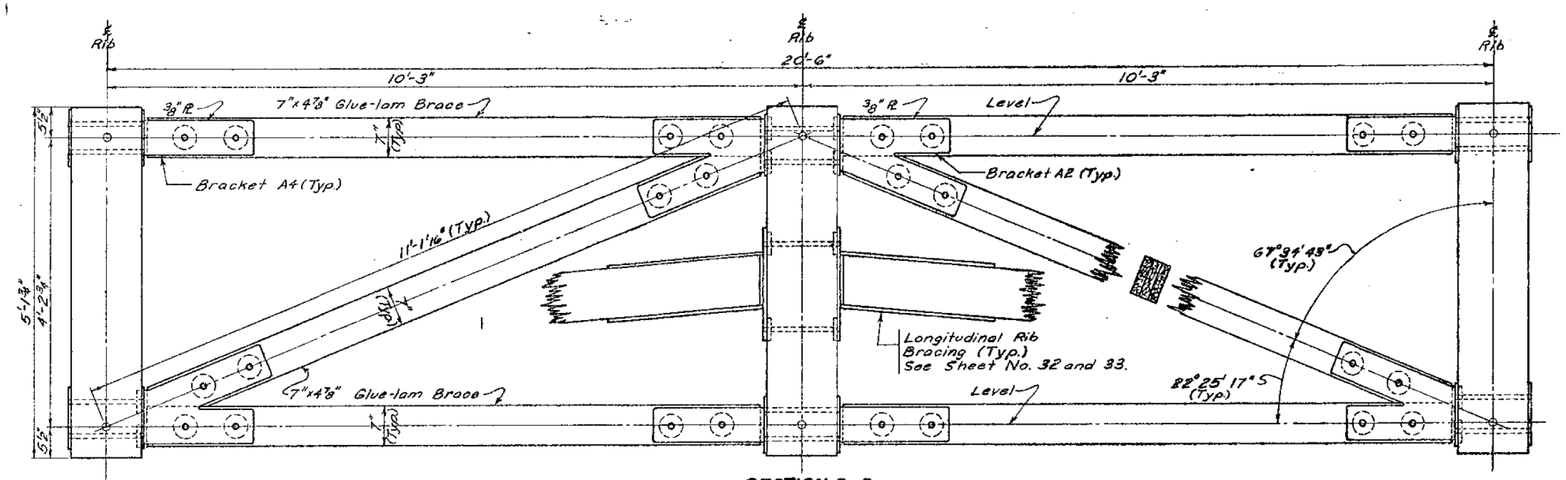

SECTION D-D
(Typical Elevation of Strut Frames at 4.5, 5.5, 6.5, 7.5, 8.5, 9.5, 10.5 & 11.5)

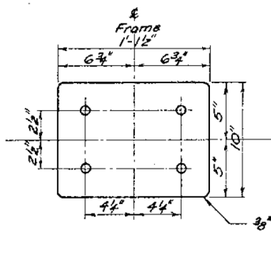

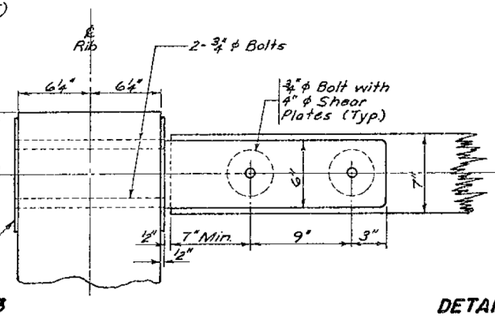

DETAILS OF BRACKET A3

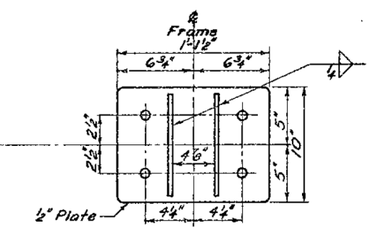

DETAILS OF BRACKET A4

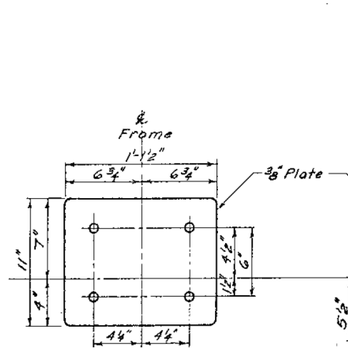

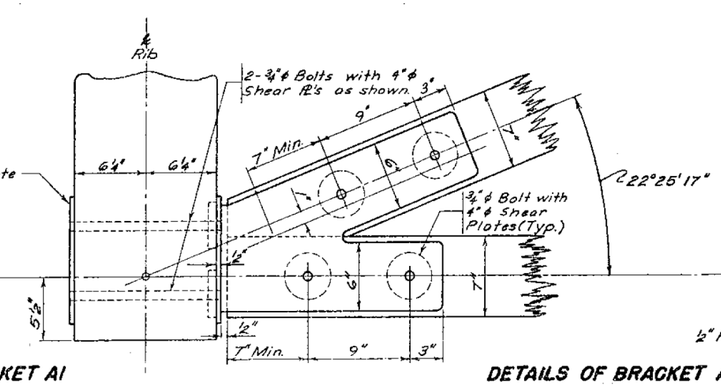

DETAILS OF BRACKET A1

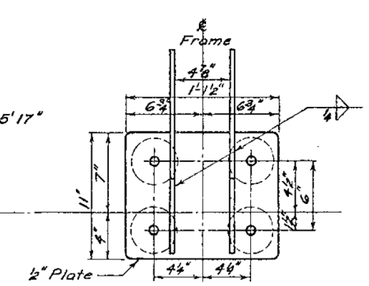

DETAILS OF BRACKET A2

RAMP "B"
DETAILS OF INTERMEDIATE STRUT FRAMES
FOR
290'-0" TIMBER ARCH BRIDGE
26'-0" ROADWAY
OVER RAMP "C" & E.B.L.-U.S. NO. 16 SEC. 31-T1S-R6E
STA. 11+73.50 TO 14+63.50 F017-1(9)
PENNINGTON COUNTY
SOUTH DAKOTA HS20-44
DEPARTMENT OF HIGHWAYS
AUGUST 1966

ORIGINAL CONSTRUCTION PLANS

STATE OF	PROJECT	SHEET NO.	TOTAL SHEETS
S.D.	P016A(08)59	E103	E109

FOR BIDDING PURPOSES ONLY

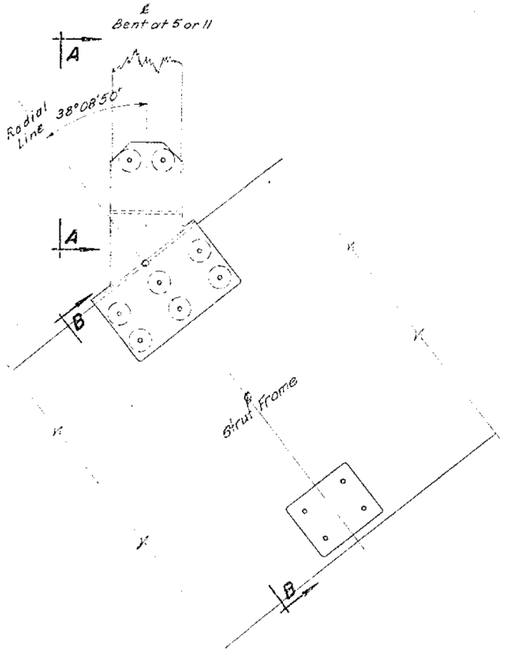

ELEVATION OF ARCH RIB AT 5 & 11

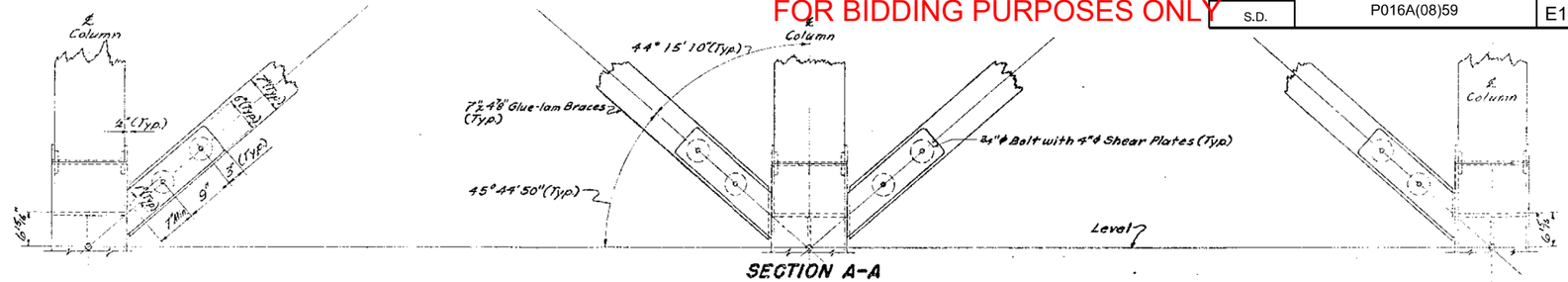

SECTION A-A

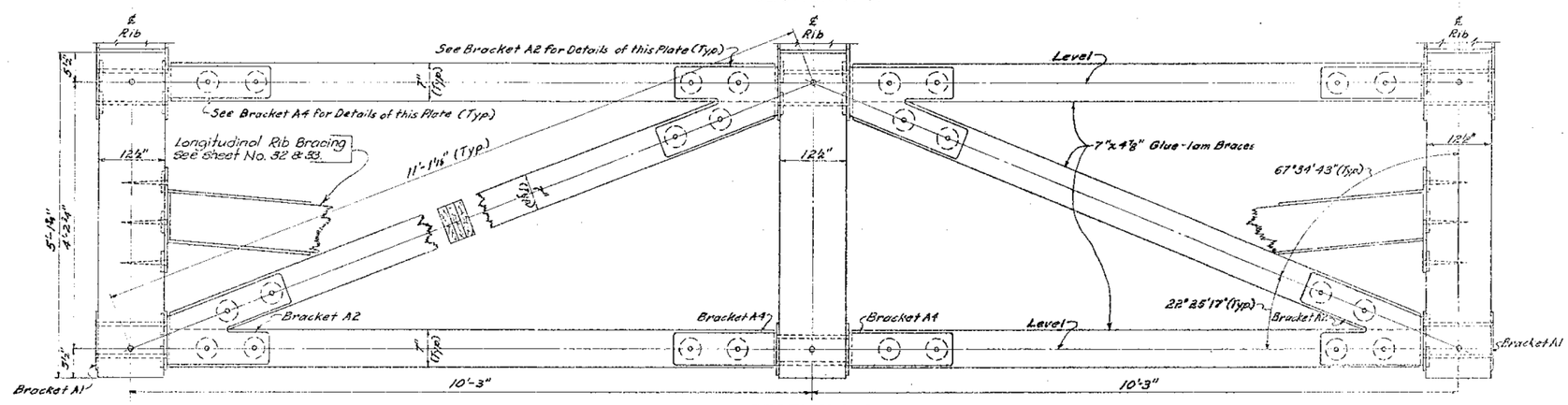

SECTION B-B

See Sheet No. 37 of 44 for details of Brackets A1, A2 & A4.

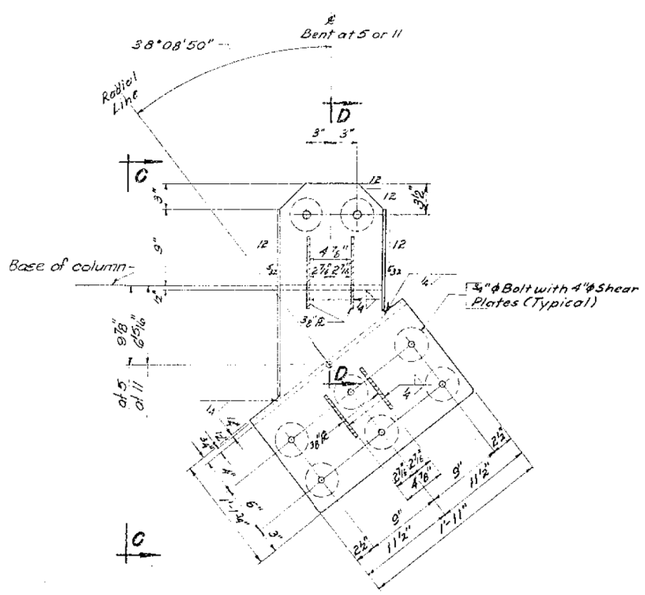

DETAILS OF COLUMN TO RIB CONNECTION AT 5 & 11

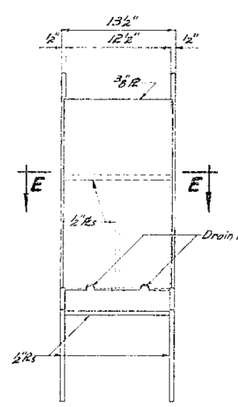

VIEW C-C

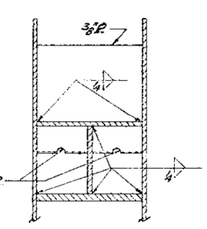

SECTION D-D

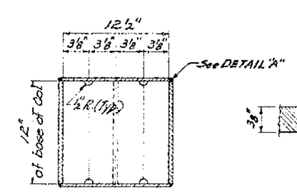

SECTION E-E

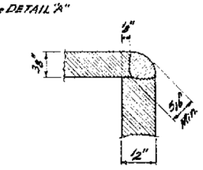

DETAIL "A"

RAMP "B"

DETAILS OF COLUMN TO RIB CONNECTION AND STRUT FRAME AT 5 & 11

FOR

290'-0" TIMBER ARCH BRIDGE

26'-0" ROADWAY

OVER RAMP "C" & E.B.L.-U.S. NO.16 SEC. 31-T1S-R6E

STA. 11+73.50 TO 14+63.50 F017-1(9)

PENNINGTON COUNTY

SOUTH DAKOTA HS20-44

DEPARTMENT OF HIGHWAYS

AUGUST 1966

ORIGINAL CONSTRUCTION PLANS

FOR BIDDING PURPOSES ONLY

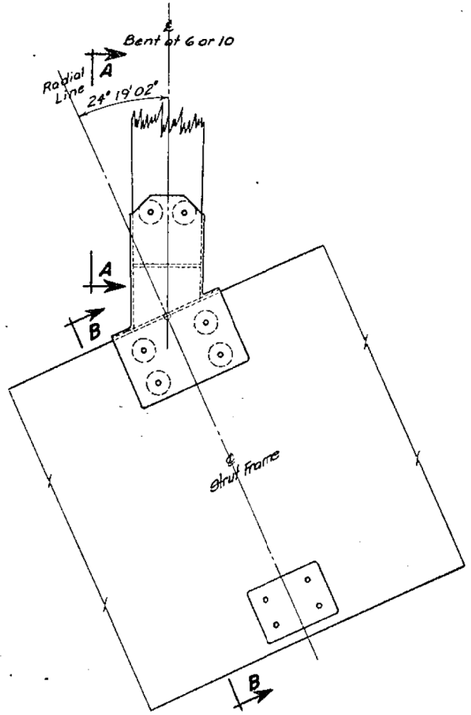

ELEVATION OF ARCH RIB AT 6 & 10

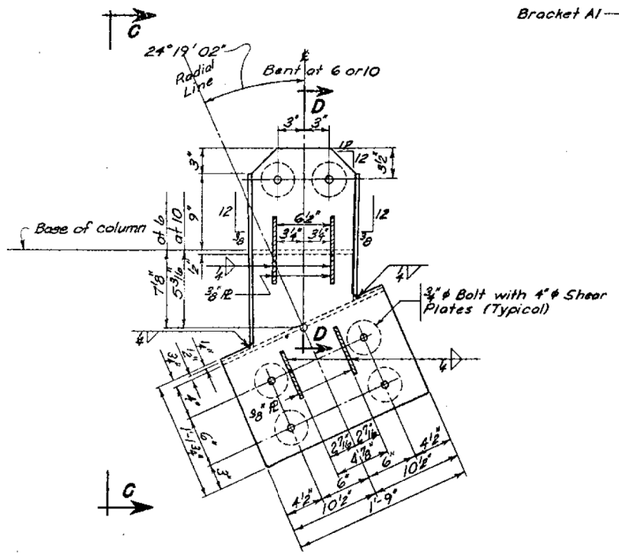

DETAILS OF COLUMN TO RIB CONNECTION AT 6 & 10

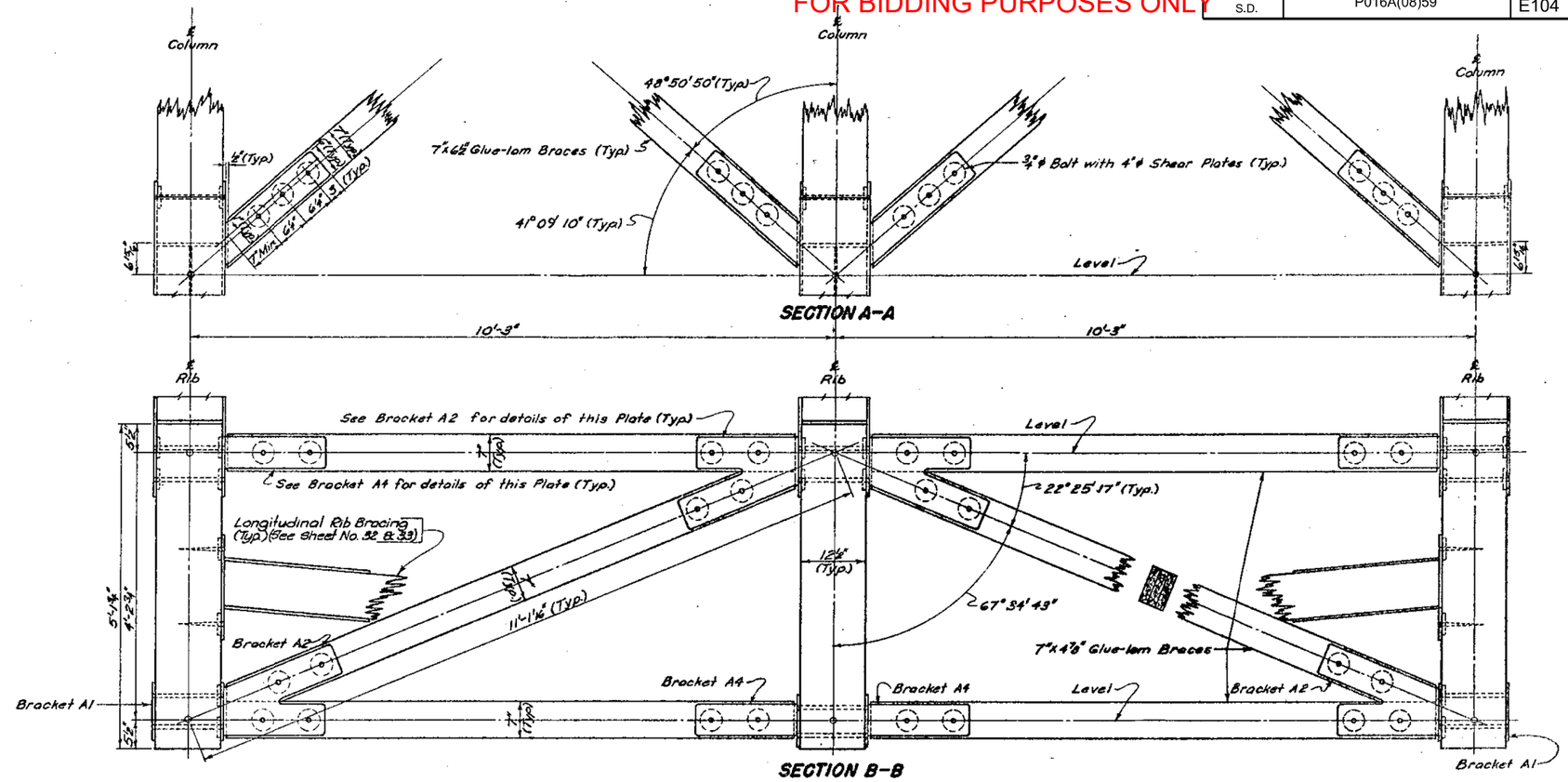

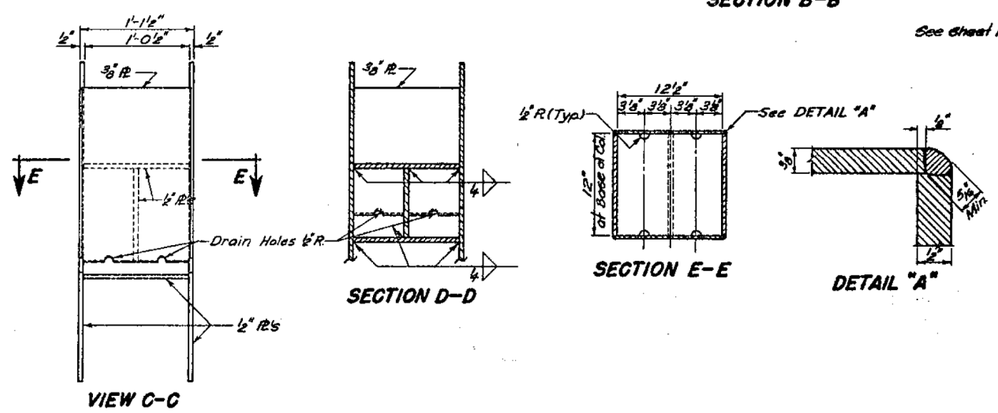

RAMP "B"

DETAILS OF COLUMN TO RIB CONNECTION AND STRUT FRAME AT 6 & 10

FOR

290'-0" TIMBER ARCH BRIDGE

26'-0" ROADWAY

OVER RAMP "C" & E.B.L.-U.S. NO. 16 SEC. 31-T1S-R6E

STA. 11+73.50 TO 14+63.50 F017-1(9)

PENNINGTON COUNTY

SOUTH DAKOTA HS 20-44

DEPARTMENT OF HIGHWAYS

AUGUST 1966

ORIGINAL CONSTRUCTION PLANS

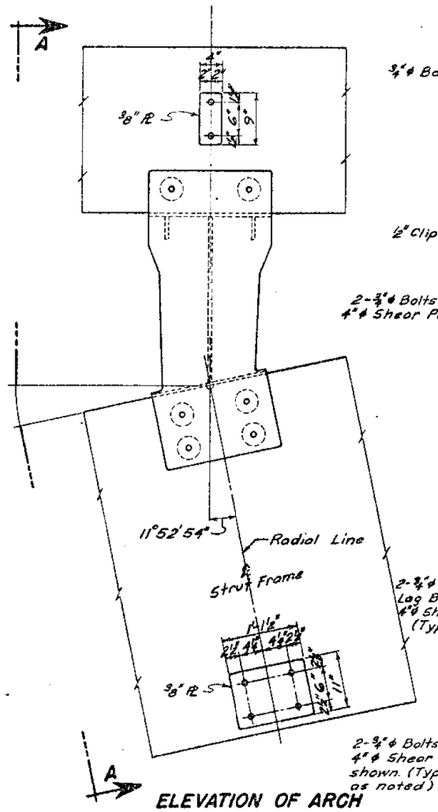

ELEVATION OF ARCH RIB AT 7

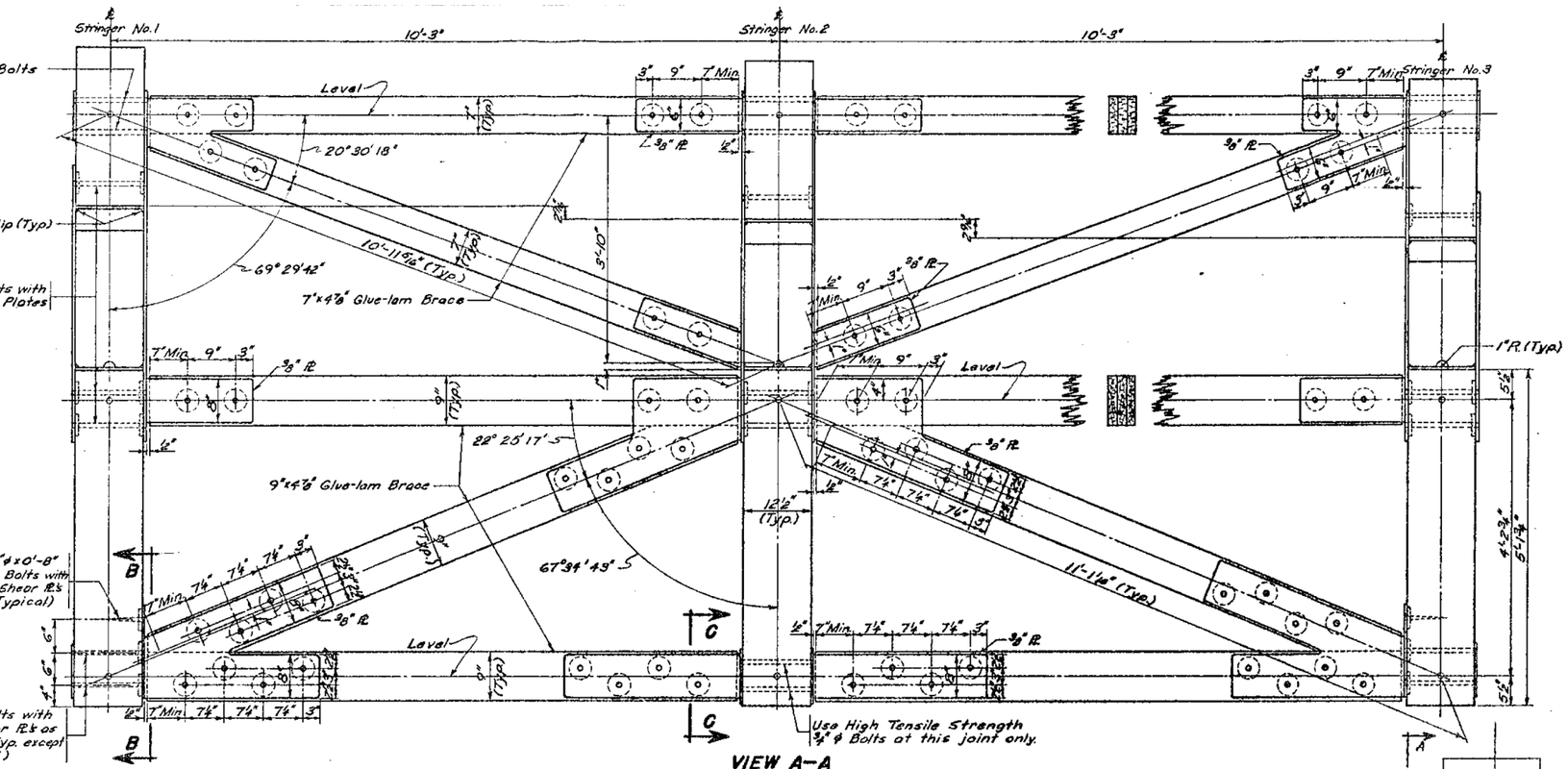

VIEW A–A

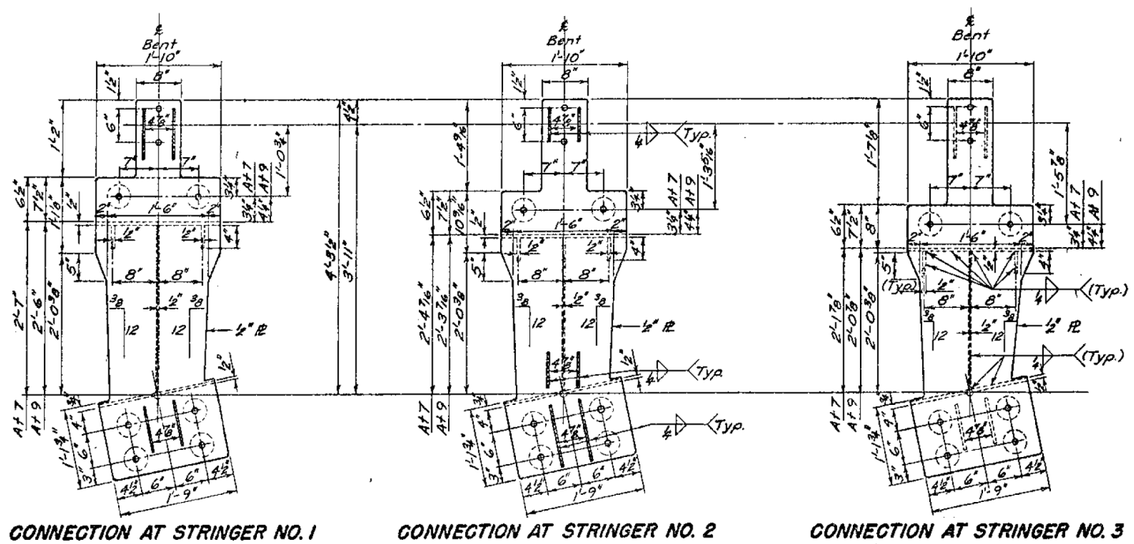

CONNECTION AT STRINGER NO. 1 CONNECTION AT STRINGER NO. 2 CONNECTION AT STRINGER NO. 3

DETAILS OF ARCH RIB TO STRINGER CONNECTIONS

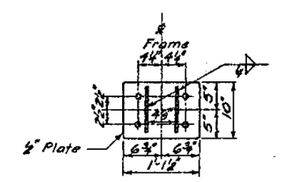

SECTION C–C

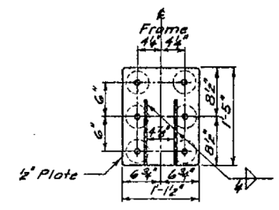

SECTION B–B

NOTE—

The details shown on this sheet are for Rib to Stringer Connections at 7. Details for Rib to Stringer Connections at 9 are similar. Differences are noted by double dimensions shown and sketch at right.

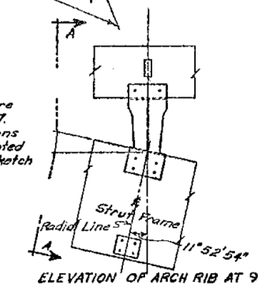

ELEVATION OF ARCH RIB AT 9

RAMP "B"

DETAILS OF RIB TO STRINGER CONNECTIONS AND STRUT FRAME AT 7 & 9

FOR

290'-0" TIMBER ARCH BRIDGE

26'-0" ROADWAY

OVER RAMP "C" & E.B.L.-U.S. NO. 16 SEC. 31-T1S-R6E

STA. 11+73.50 TO 14+63.50 F017-1(9)

PENNINGTON COUNTY

SOUTH DAKOTA HS 20-44

DEPARTMENT OF HIGHWAYS

AUGUST 1966

FOR BIDDING PURPOSES ONLY

Revised: 8/4/2020 MNL

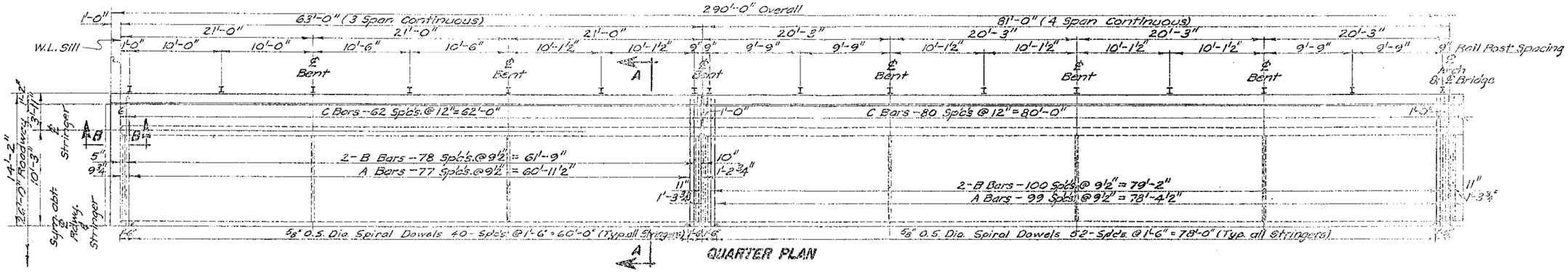

QUARTER PLAN

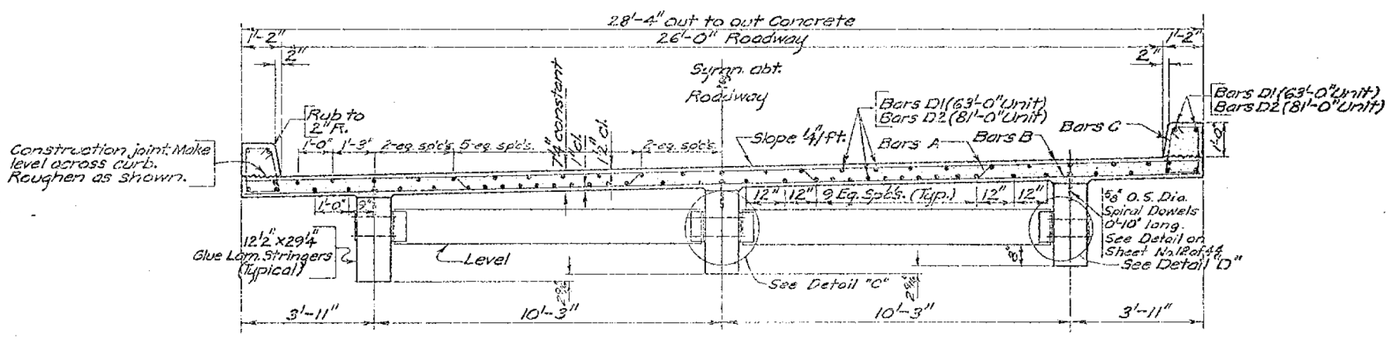

SECTION A-A

REINFORCING SCHEDULE

Mk.	No.	Size	Length	Type	Bending Details
A	356	6	28'-9"	15	
B	720	5	26'-0"	Str.	
C	576	4	5'-3"	T1	
D1	260	5	32'-9"	Str.	
D2	390	5	28'-0"	Str.	

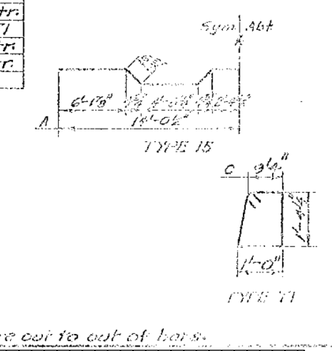

NOTE: All dimensions are out to out of bars.

ESTIMATED QUANTITIES

ITEM	UNIT	QUANTITY
Class "A" Concrete	Cu. Yds.	507.4
Reinforcing Steel	Lbs.	46,800
Type RT-2 Steel Railing	Lin. Ft.	236

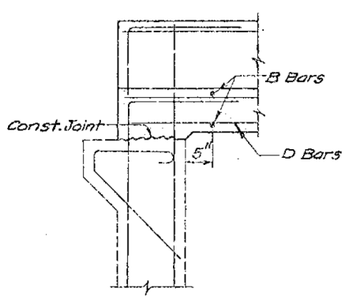

SECTION B-B

Re-steel shown that is not in Reinforcing schedule will be placed with Sill.

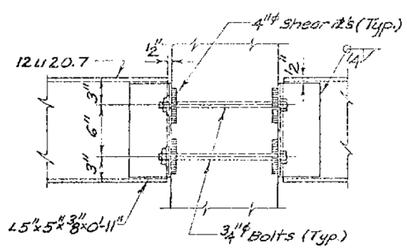

DETAIL "C"

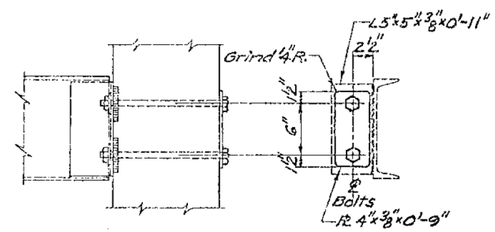

DETAIL "D"

NOTE:- See "Longitudinal Section Sht No. 12 of 44 for Location of channel diaphragms.

RAMP "B"
SLAB DETAILS
FOR

290'-0" TIMBER ARCH BRIDGE

26'-0" ROADWAY

OVER RAMP "C" & E.B.L.-U.S. NO. 16 SEC. 31-T19-R6E

STA. 11+73.50 TO 14+63.50 F017-1 (9)

PENNINGTON COUNTY

SOUTH DAKOTA HS 20-44

DEPARTMENT OF HIGHWAYS

AUGUST 1966

ORIGINAL CONSTRUCTION PLANS

FOR BIDDING PURPOSES ONLY

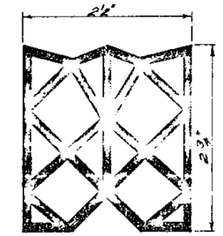

NEOPRENE COMPRESSION JOINT SEALER:
Compression seal shall be as specified in the Special Provisions.
Seal shall be approximately the size and shape indicated in the sketch. It shall be suitable for installing in a gap width of 1⅜" and be able to function properly with a minimum gap of 1⅜" and a maximum gap of 2".

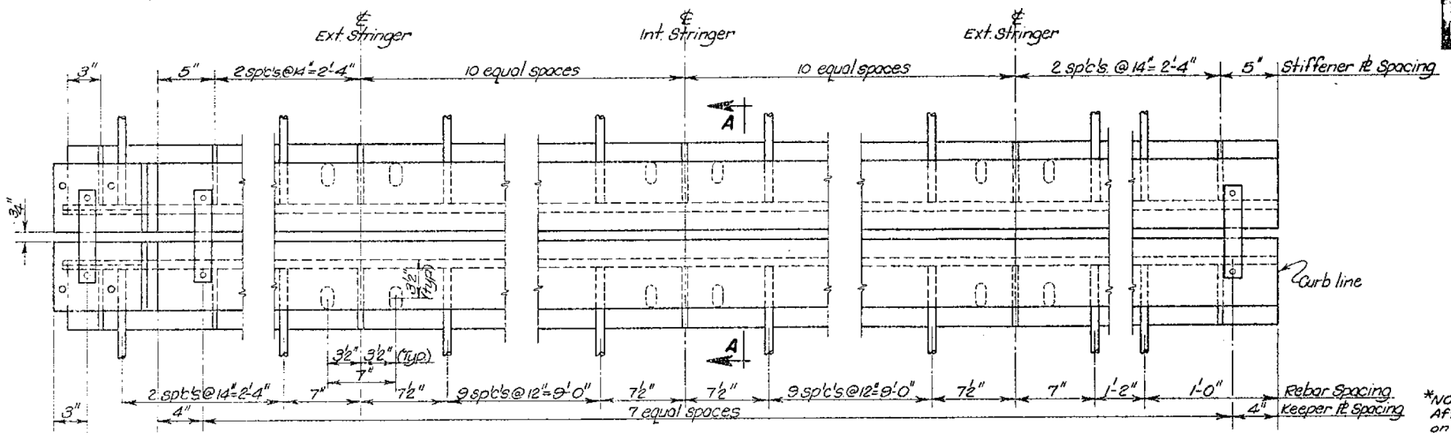

PLAN OF EXPANSION DEVICE AT BENTS NO. 4 & 12 AND AT ℄ ARCH

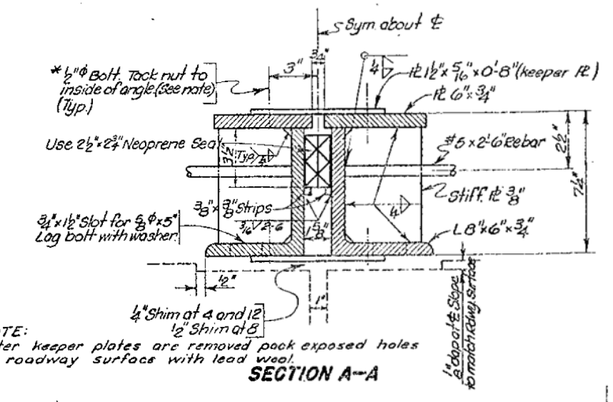

*NOTE:
After keeper plates are removed pack exposed holes on roadway surface with lead wool.

SECTION A–A

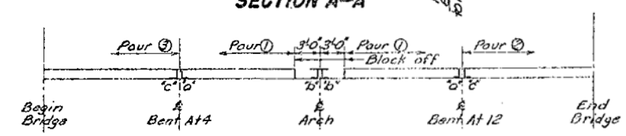

PROCEDURE FOR POURING SLAB AND ATTACHING EXPANSION DEVICES

Step 1: Block off the sections indicated at ℄ Arch and lag bolt expansion devices to stringers at points "a". Points "b" and "c" shall not be bolted and all keeper plates must be in place. Place the concrete in sections marked Pour ①, beginning at the arch center. The pours shall progress at equal rates on each side of the arch to ℄ Bents at 4 and 12.

Step 2: Lag bolt the expansion device to stringers at point "c" in Pour ②. Place Pour ②, beginning at the expansion device and finishing at the Sill. After the concrete in Pour ② has attained a compressive strength of approximately 500 p.s.i., remove keeper plates. Do not leave keeper plates attached longer than necessary, as concrete shrinkage and temperature change may damage the slab at the joints. No heavy loads will be allowed on the Pour ① or ② sections until these keeper plates have been removed.

Step 3: Place Pour ③, using same procedure as outlined in Step 2.

Step 4: Lag bolt expansion device to stringers at points "b" and fill in the blocked off portions. After this concrete has attained a compressive strength of approximately 500 p.s.i., remove keeper plates.

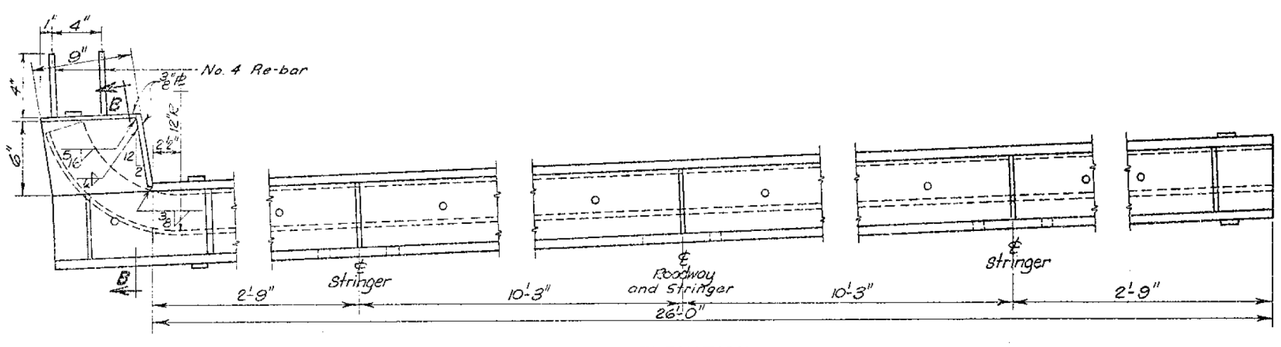

ELEVATION

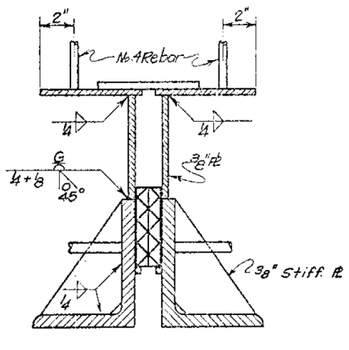

SECTION B–B

Cover or plug ends of neoprene compression seal to prevent filling with concrete during pouring operations

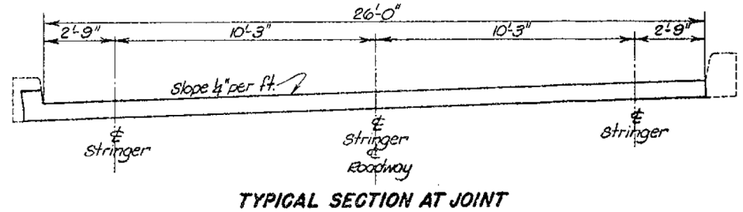

TYPICAL SECTION AT JOINT

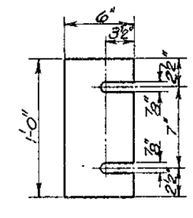

SHIM
Provide: 6-¼" thick
32-⅛" thick
48-1/16" thick

RAMP "B"
DETAILS OF EXPANSION DEVICE
FOR
290'-0" TIMBER ARCH BRIDGE
26'-0" ROADWAY
OVER RAMP "C" & E.B.L.-U.S. NO.16 SEC. 31-T1S-R6E
STA. 11+73.50 TO 14+63.50 F017-1(9)
PENNINGTON COUNTY
SOUTH DAKOTA HS 20-44
DEPARTMENT OF HIGHWAYS
AUGUST 1966

ORIGINAL CONSTRUCTION PLANS

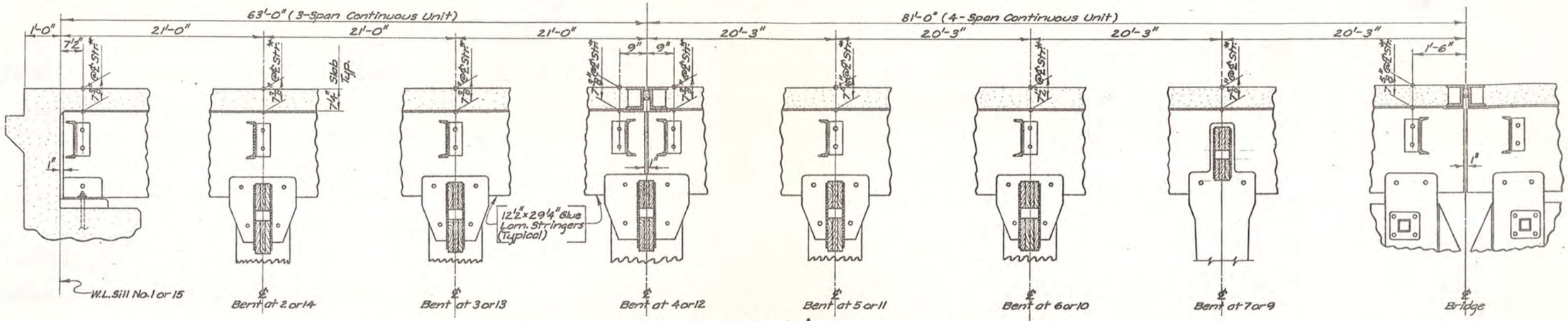

LONGITUDINAL SECTION NEAR ℄ ROADWAY

*Dimensions shown are Theoretical. Actual Dimensions are to be computed below.

TABLE OF SLAB FORM ELEVATIONS AND COMPUTATIONS

		W.L. Sill No. 1	℄ Bent at 2	℄ Bent at 3	℄ Bent at 4	℄ Bent at 5	℄ Bent at 6	℄ Bent at 7	℄ Bridge	℄ Bent at 9	℄ Bent at 10	℄ Bent at 11	℄ Bent at 12	℄ Bent at 13	℄ Bent at 14	W.L. Sill No. 15
Stringer S1	Elev. "P"	4899.916	4899.874	4899.832	4899.790	4899.726	4899.698	4899.702	4899.716	4899.621	4899.536	4899.482	4899.466	4899.424	4899.382	4899.340
	(−) Elev. Q															
	(=) d															
	(−) 0.604															
	(=) h															
Stringer S2	Elev. "P"	4899.703	4899.661	4899.619	4899.577	4899.512	4899.484	4899.488	4899.503	4899.407	4899.322	4899.269	4899.253	4899.211	4899.169	4899.127
	(−) Elev. Q															
	(=) d															
	(−) 0.604															
	(=) h															
Stringer S3	Elev. "P"	4899.489	4899.447	4899.405	4899.363	4899.298	4899.271	4899.275	4899.289	4899.194	4899.109	4899.055	4899.039	4898.997	4898.955	4898.913
	(−) Elev. Q															
	(=) d															
	(−) 0.604															
	(=) h															

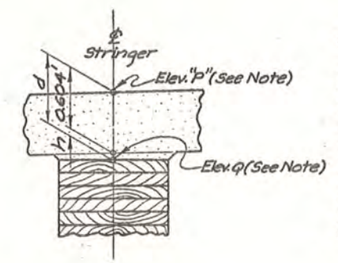

NOTE—
This table contains the necessary information to determine the depth of concrete, in feet, over the stringers at the points shown. All calculations can be carried in the spaces provided. Elev. "P" is the elevation of the top of slab form before any concrete has been poured. This elevation includes correction for deflection due to all D.L. above the stringer where applicable. Elev. "Q" is a field measured elevation taken on top of stringers at the points shown. This elevation must be taken after stringer erection is completed, but prior to placing any of the concrete. Stringers or Arch Ribs shall not be supported by construction shoring while elevations are taken.

NOTE—
If the computations indicate that the dimension "h" will exceed ½" or if the slab thickness over ℄ stringer will be less than 7¾", communicate with the Bridge Section before setting any slab forms.
It can be expected that the stringers will have to be pulled down to their proper position at Bents 5, 6, 7, 9, 10 & 11. the force necessary to bring them to position may be from 2000 to 3000 lbs.

STRINGER ERECTION ELEVATIONS

Stringer No.	Elevation (Top of Stringer)															
	W.L. Sill No. 1	℄ Bent at 2	℄ Bent at 3	℄ Bent at 4	℄ Bent at 5	℄ Bent at 6	℄ Bent at 7	℄ Bridge	℄ Bent at 9	℄ Bent at 10	℄ Bent at 11	℄ Bent at 12	℄ Bent at 13	℄ Bent at 14	W.L. Sill No. 15
S1 (Lt.)	4899.302	4899.260	4899.218	4899.176	4899.116	4899.073	4899.067	4899.081	4898.986	4898.911	4898.863	4898.852	4898.810	4898.768	4898.726
S2 (℄)	4899.088	4899.046	4899.004	4898.962	4898.902	4898.859	4898.853	4898.867	4898.772	4898.697	4898.659	4898.638	4898.596	4898.554	4898.512
S3 (Rt.)	4898.875	4898.832	4898.790	4898.748	4898.689	4898.646	4898.639	4898.654	4898.558	4898.484	4898.446	4898.424	4898.382	4898.340	4898.298

RAMP "B"
LONGITUDINAL SECTION AND ERECTION DATA
FOR
290'-0" TIMBER ARCH BRIDGE
26'-0" ROADWAY
OVER RAMP "C" & E.B.L.—U.S. NO. 16 SEC. 31-T1S-R6E
STA. 11+73.50 TO 14+63.50 F017-1(9)
PENNINGTON COUNTY
SOUTH DAKOTA HS20-44
DEPARTMENT OF HIGHWAYS
AUGUST 1966

ORIGINAL CONSTRUCTION PLANS

FOR BIDDING PURPOSES ONLY

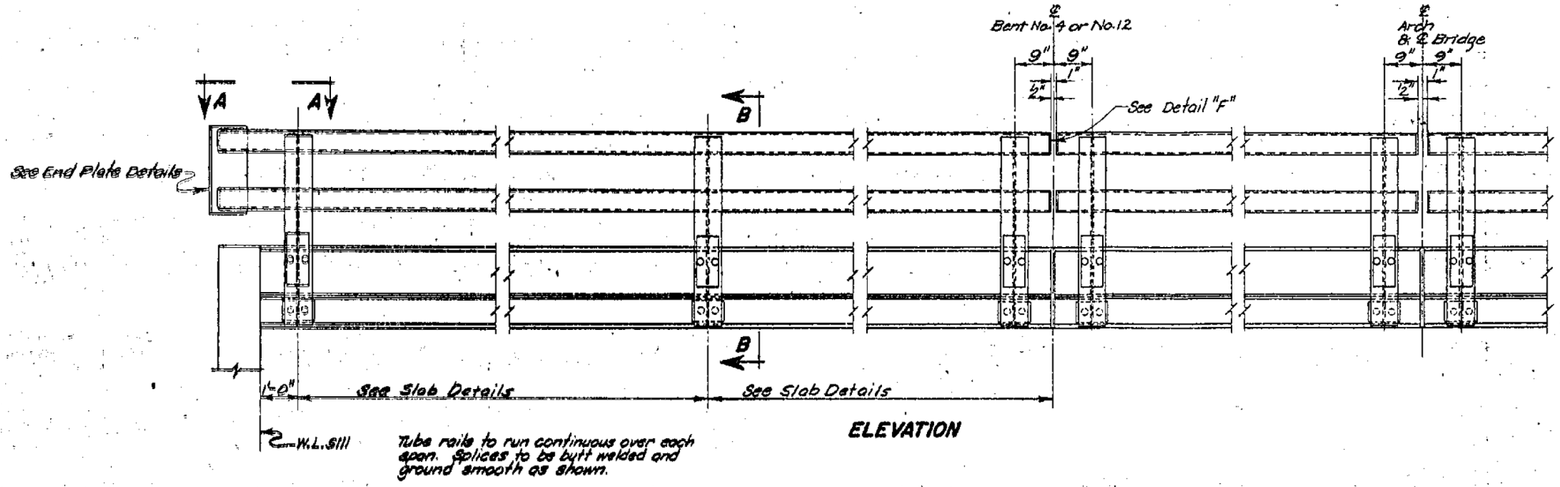

ELEVATION

GENERAL NOTES —

1. For payment the length of each rail shall be the out to out length of the structure.
2. All rail posts shall be built vertical.
3. See Superstructure Drawing for rail post spacing.
4. All structural steel parts for railing shall conform to A.S.T.M. Specification A36. Tube shall conform to A.S.T.M. Specifications A500 or A501.
5. Railing shall be painted with one shop coat of Red Lead Paint (A.A.S.H.O. Designation M72 Type I) or Red Lead Iron Oxide Paint (A.A.S.H.O. Designation M72 Type III) and two field coats of Aluminum Paint (A.A.S.H.O. Designation M69).
6. Cost of end plates shall be included in the unit price bid for railing.
7. High strength anchor bolts and nuts shall conform to A.S.T.M. specification A325. Nuts for anchor bolts shall be an approved locking type. All anchor bolt assemblies shall be galvanized. All anchor bolts shall be tightened by applying a torque equal to the full effort of a man on the end of a three foot wrench. (Minimum 70 lb. pull.)
8. Cost of welding, cost of painting and cost of galvanized anchor bolt assemblies shall be included in the unit price bid for railing.

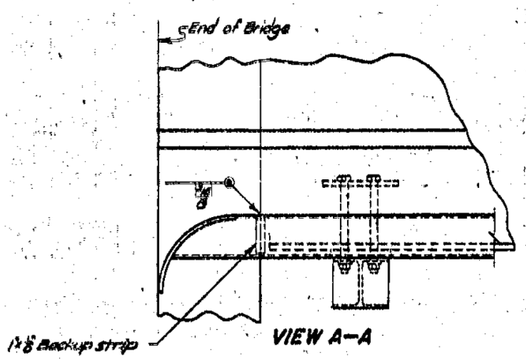

VIEW A–A

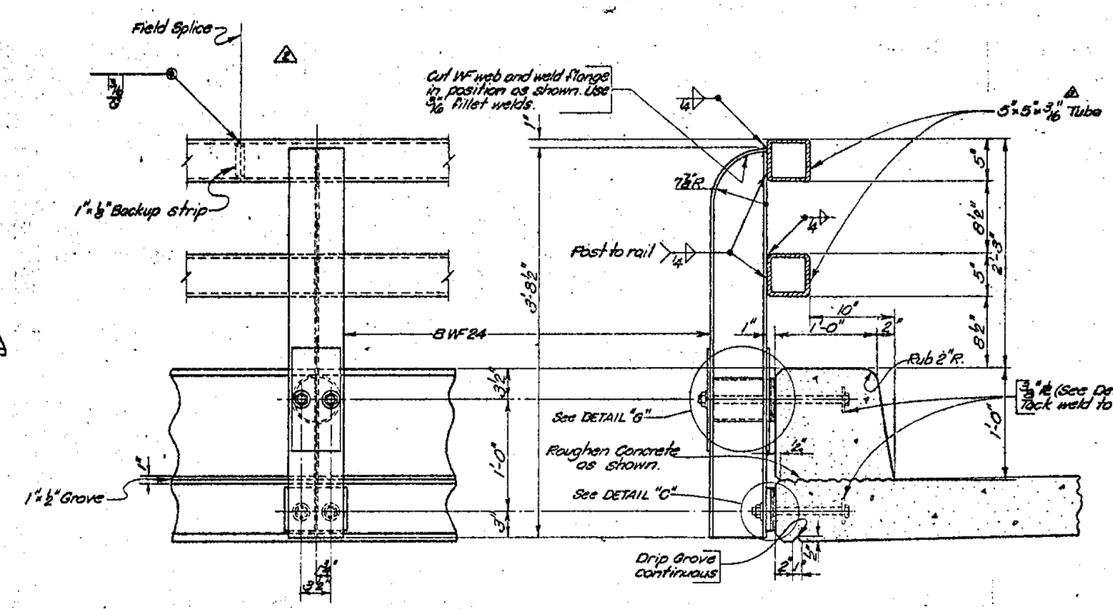

SECTION B–B
(Curb reinforcing not shown)

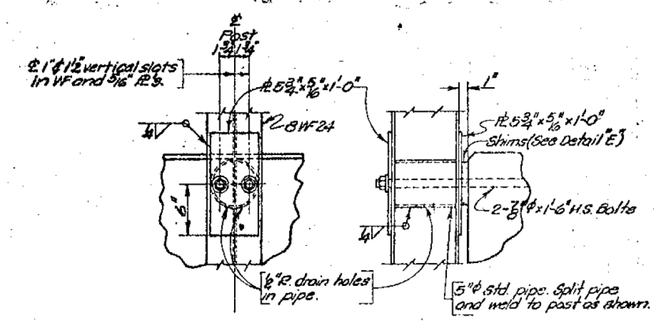

DETAIL "G"

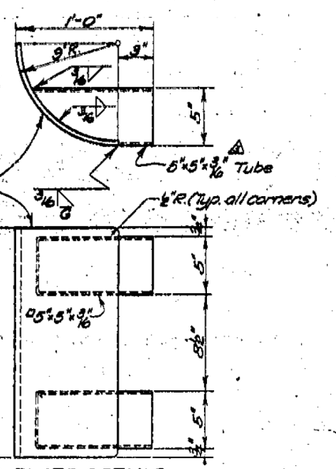

END PLATE DETAILS

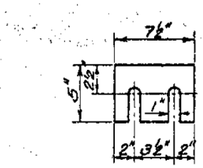

Provide: 2-¼" thick, 3-⅛" thick and 5-1/16" thick at each Post.

DETAIL "E"

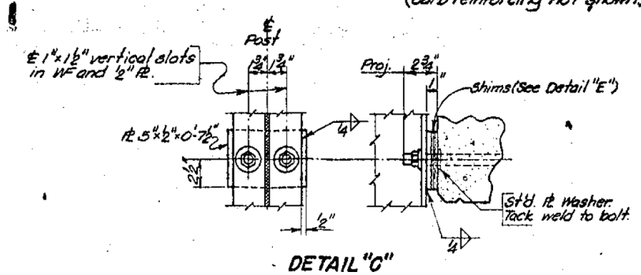

DETAIL "C"

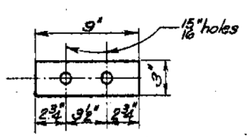

DETAIL "D"

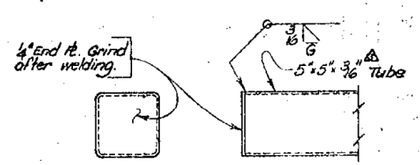

DETAIL "F"

RAMP "B"

TYPE RT–2 STEEL RAILING AND CURB DETAILS

FOR

290'–0" TIMBER ARCH BRIDGE

26'–0" ROADWAY

OVER RAMP "C" & E.B.L.–U.S. NO. 16 — SEC. 31–T1S–R6E

STA. 11+73.50 TO 14+63.50 — F017–1(9)

PENNINGTON COUNTY

SOUTH DAKOTA

DEPARTMENT OF HIGHWAYS

AUGUST 1966

Rev. 6-2-66 M.E.R.
Rev. 5-13-66 GA
Rev. 1-28-66 GA

ORIGINAL CONSTRUCTION PLANS