SECTION S: PERMANENT SIGNING PLANS

FOR BIDDING PURPOSES ONLY

STATE OF SOUTH DAKOTA	PROJECT	SHEET	TOTAL SHEETS
	IM 2292(98)9 P 1200(04) IM 2292(112)6	S1	S78

FILE: ...\S01 - Cover Sheet.dgn
PLOTTING DATE: 10-05-2022
REV DATE: 10/5/2022
INITIAL: JLK

INDEX OF SHEETS

S1	General Layout with Index
S2 TO S5	Estimate with General Notes
S6 TO S15	Permanent Sign Installation Table
S16	Sign Summary
S17 TO S20	Interstate 229 Plan Sheets
S21 TO S33	Benson Road Plan Sheets
S34 TO S35	Lewis Avenue Plan Sheets
S36	Hall Avenue Plan Sheets
S37 TO S38	Delineator Layouts
S39 TO S46	Sign Details
S47 TO S56	Details for Overhead Sign Supports
S57 TO S60	Details for Special Sign Supports
S61 TO S64	Erection Details for Breakaway Sign Supports
S65	Sign Bridge Footing Details
S66 TO S78	Standard Plates

END IM 2292(98)9
Station 2044+98.30

END P 1200(04) (BENSON RD.)
BEGIN IM 2292(98)9 (I-229)
BENSON ROAD
Station 27+75

END P 1200(04)
BENSON ROAD
Station 81+30.00

BEGIN P 1200(04)
BENSON ROAD
Station 6+77.17

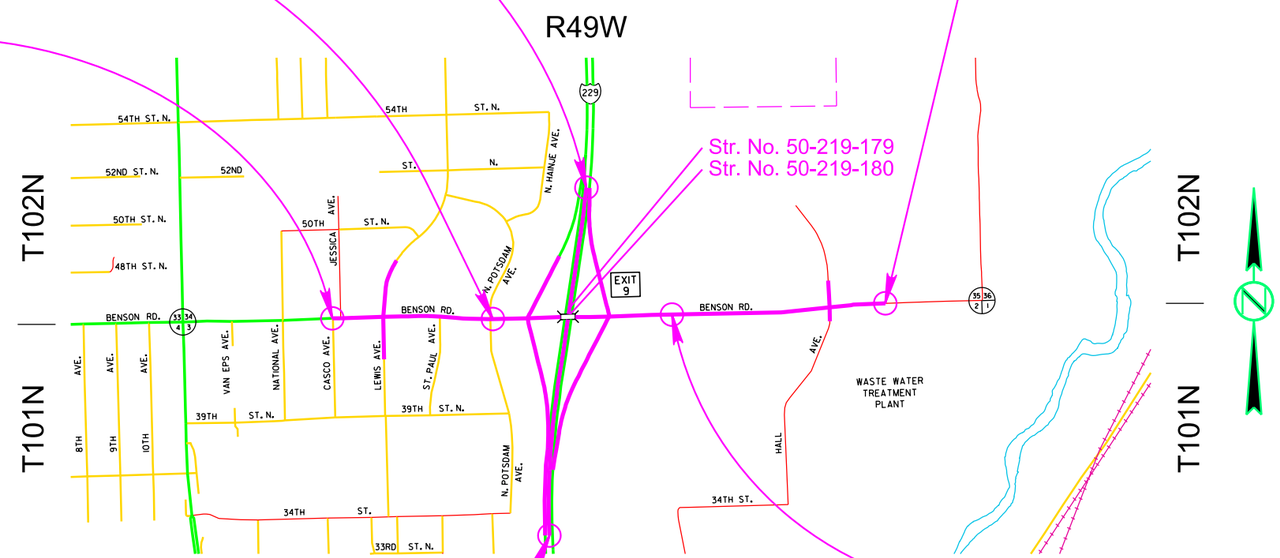

Str. No. 50-219-179
Str. No. 50-219-180

BEGIN IM 2292(98)9
Station 2002+00.00

END IM 2292(98)9 (I-229)
BEGIN P 1200(04) (BENSON RD.)
BENSON ROAD
Station 51+39

END IM 2292(112)6
6th Street
Station 8+94.60

INSET A

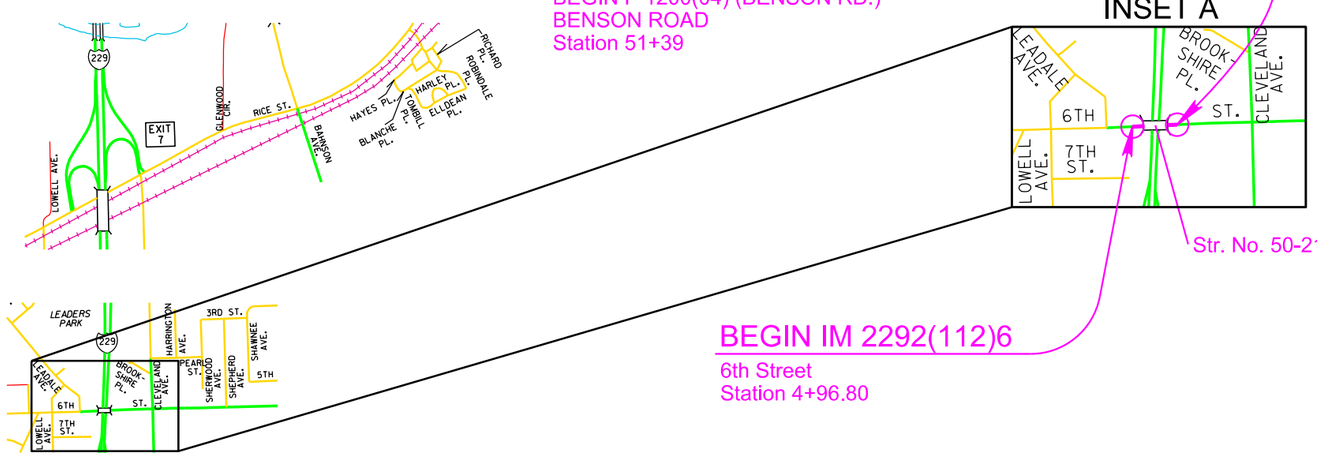

Str. No. 50-219-205

BEGIN IM 2292(112)6
6th Street
Station 4+96.80

REGISTERED PROFESSIONAL ENGINEER
REG. NO. 8324
LANCE R. MCQUEEN
SOUTH DAKOTA
10-5-22

HDR

Plot Scale - 1:2000
Plotted From - ASATTLER
File - ...\S01 - Cover Sheet.dgn

FOR BIDDING PURPOSES ONLY

SECTION S ESTIMATE OF QUANTITIES

Bid Item Number	Item	Quantity				Unit
		PCN 06MM Benson Rd	PCN 04XK I-229	PCN 08QM 6th Street	Total	
110E0100	Remove Concrete Footing(s)	-	Lump Sum	-	Lump Sum	LS
110E0120	Remove Sign Bridge	-	1	-	1	Each
110E0130	Remove Traffic Sign	-	25	-	25	Each
110E0135	Remove Delineator	29	78	-	107	Each
110E0140	Remove Extruded Panel Sign	-	3	-	3	Each
110E5020	* Salvage Traffic Sign	17	-	-	17	Each
110E7150	Remove Sign for Reset	16	5	-	21	Each
632E0014	1.75' Diameter Breakaway Support Concrete Footing	-	28.0	-	28.0	Ft
632E0064	3' Diameter Fixed Support Concrete Footing	-	25.0	-	25.0	Ft
632E0072	4' Diameter Fixed Support Concrete Footing	-	105.0	-	105.0	Ft
632E1235	W6x20 Steel Post	-	65.9	-	65.9	Ft
632E1320	2.0"x2.0" Perforated Tube Post	666.4	897.8	-	1,564.2	Ft
632E2000	4"x4" Amber Delineator with 1.12 Lb/Ft Post	-	8	-	8	Each
632E2008	4" Tubular Amber Delineator with 1.12 Lb/Ft Post	-	20	-	20	Each
632E2024	4"x8" White Delineator with 1.12 Lb/Ft Post	-	70	-	70	Each
632E2028	4" Tubular White Delineator with 1.12 Lb/Ft Post	-	18	-	18	Each
632E2220	Guardrail Delineator	-	38	-	38	Each
632E2510	Type 2 Object Marker Back to Back	10	17	-	27	Each
632E3115	Extruded Aluminum Sign, Nonremovable Copy Super/Very High Intensity	-	783.8	-	783.8	SqFt
632E3203	Flat Aluminum Sign, Nonremovable Copy High Intensity	311.3	342.0	-	653.3	SqFt
632E3205	Flat Aluminum Sign, Nonremovable Copy Super/Very High Intensity	201.1	647.0	-	848.1	SqFt
632E3500	Reset Sign	16	5	-	21	Each
632E5010	Double Beam Sign Bridge	-	3	-	3	Each
632E5020	Overhead Cantilever Sign Support	-	1	-	1	Each
632E5055	Mast Arm Sign Support	-	2	-	2	Each
* Denotes Non-Participating						

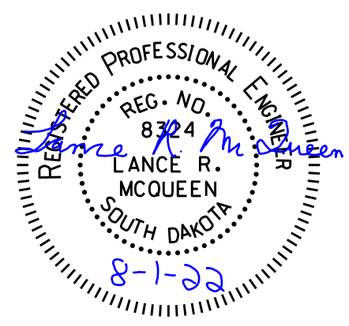

GENERAL PERMANENT SIGNING

New sign installations will be staked in the field by the Contractor and checked by the Engineer. The Contractor will give the Engineer a minimum of one week to check staked locations prior to signpost installation. Lateral offset of signs will be as shown in the plans or as directed by the Engineer.

The Contractor will be responsible for contacting South Dakota One Call to locate the utilities at the staked sign installation locations.

Aluminum U-Channel stiffeners will be used on all signs 36 inches or greater in width and will conform to ASTM B221 Alloy 6063-T6 or 6061-T6. The U-Channel will be 2 inches in width and free of holes. The U-Channel stiffeners will also be used to connect various signs together so that an entire sign assembly can be erected on a single installation. Stiffeners may be fastened to signs by use of 1/4-inch diameter drive rivets. Refer to the Breakaway Sign Supports diagram for typical sign and stiffener details.

The Contractor will use 3/8-inch diameter rust proof machine sign bolts, flat metal washers, neoprene washers (against the sign sheeting), lock washers, and nuts to fasten the sign to the channel aluminum and posts. A minimum of two bolts will extend through each post.

When signs are mounted in an assembly, they will be 1-2 inches apart vertically and horizontally.

The height of the post will not exceed the minimum height needed by more than 0.5 feet. Any portion that extends above the sign will be cut off. No separate payment will be made for cutting the post or for that length cut off.

Prior to ordering signs, the Contractor will verify dimensions, background, border, and legend of the signs.

Prior to use, the Contractor will provide documentation for the sign support devices showing they meet the applicable NCHRP 350 or MASH requirements.

NEW PERMANENT SIGNING

All signs will be manufactured in accordance with the sheeting manufacturer's recommendations utilizing a matched component system, including inks, electronic cuttable films, and protective overlay films.

All Flat Aluminum Signs, Nonremovable Copy High Intensity will have sheeting in conformance with the requirements of ASTM D4956 Type IV. All Flat Aluminum Signs, Nonremovable Copy Super/Very High Intensity will have sheeting in conformance with the requirements of ASTM D4956 Type XI.

All costs associated with furnishing and installing the new permanent signs, and with furnishing and installing stiffeners and hardware will be incidental to the contract unit price per square foot for "Flat Aluminum Sign, Nonremovable Copy High Intensity" or "Flat Aluminum Sign, Nonremovable Copy Super/Very High Intensity".

SALVAGE TRAFFIC SIGN

All signs listed for salvage to City of Sioux Falls in the Permanent Sign Installation Table will have the existing posts, bases, and signs dismantled and delivered to the City of Sioux Falls. The existing City signs will be transported to:

1100 East Chambers Street
Sioux Falls, SD 57104
Contact: Heath Hoftiezer #(605) 367-8634

The Contractor will notify the Engineer two days prior to time of delivery to the City of Sioux Falls so correct placement for storage and inventory of materials can be made upon receipt. All bolts, nuts, and washers will be placed in individual 5-gallon pails. Wooden posts will be stockpiled separately from steel posts. All signs listed for removal will be handled with care so that the signs are not damaged during removal or transport. The Contractor will replace and pay for any salvaged signs damaged in their care.

All costs for labor and equipment necessary to remove, dismantle, and deliver signs to the City of Sioux Falls will be incidental to the contract unit price per each for Salvage Traffic Sign. The quantity of signs to be salvaged is shown in the Permanent Sign Installation Table. The plans quantity is shown as per assembly. Payment for salvaging signs will be paid per assembly at the contract unit price per each for “Salvage Traffic Sign”.

REMOVE TRAFFIC SIGN

Existing signs that are shown as being removed in the Permanent Sign Installation Table will become the property of the Contractor. Existing signposts and bases will be removed in their entirety. All existing signs, posts, and/or hardware removed will not be reused. Holes remaining from the removal of wood posts will be backfilled and compacted with material placed in layers not to exceed 6 inches in depth.

All costs associated with the removal of existing signs, posts, hardware, and backfilled holes will be incidental to the contract unit price per each for “Remove Traffic Sign”. Quantities will be per assembly at the contract unit price per each.

REMOVE SIGN FOR RESET AND RESET SIGN

Signs that are scheduled for reset will be dismantled and reassembled to the extent needed by the Contractor to properly reset the sign. Signs will be handled with care so that the existing signs, posts, and bases are not damaged during the relocation process. The Contractor will replace and pay for any reset signs damaged in their care. The Contractor will remove and dispose of any existing posts for all reset signs that require use of new posts as shown in the Permanent Sign Installation Table.

All costs for removing, dismantling, and disposing of any existing posts will be incidental to the contract unit price per each for Remove Sign for Reset. All costs for resetting the existing signs will be incidental to the contract unit price per each for Reset Sign. All quantities for Remove Sign for Reset and Reset Sign will be per assembly at the contract unit price per each.

SQUARE TUBE ANCHOR SLEEVE

The Contractor will furnish and install new 2.5” x 2.5” x 18”, 12 Gauge square tube anchor sleeve or equivalent components as approved by the Engineer. A 2.25” x 2.25” x 4’, 12 Gauge perforated tube post will be used as the anchor post for installation with the square tube anchor sleeve.

DIGITALLY PRINTED SIGNS

Digitally printed signs will be allowed on this project. If the Contractor elects to provide digitally printed signs, such signs will adhere to the following specifications.

PROTECTIVE OVERLAY FILM

Permanent traffic signs printed with digital ink systems will be fabricated with a full sign protective overlay film designed to provide a smooth surface needed for retroreflectivity, and to protect the sign from fading and UV degradation. The overlaminate will comply with the retroreflective sheeting manufacturer’s recommendations to ensure proper adhesion and transparency and will also meet the reflective film durability as identified in Table 1.

Table 1: Retroreflective Film Minimum Durability Requirements

ASTM D4956 Type	Full Sign Replacement Term (years)	Sheeting Replacement Term (years)
I	0	7
III	7	10
IV	7	10
VIII	7	10
IX	7	12
XI	7	12

FABRICATION

Retroreflective sheeting will be applied to a properly cleaned and prepared aluminum sign blank in accordance with the retroreflective sheeting manufacturer’s recommendations. Sign legend will be applied using digital print technologies and systems in accordance with the retroreflective sheeting manufacturer’s recommendations and the requirements of these plans.

Finished signs will be free of ragged edges and will be supplied clean and free of scratches, grease, oil, lubricants or other contaminants. Minor blemishes (dirt speck, dust, etc.) may settle on the fresh ink surface or become entrapped between the sheeting surface and transparent overlay film due to static charge within the sign shop environment. Any blemish will be minor and not interfere with the communication of the sign message to the motorist. The blemish will not be visible to the naked eye when viewed from 30 feet or greater.

After application of the retroreflective sheeting, sign blanks will be stacked and packaged face to face, back to back, and protected in accordance with the sheeting manufacturer’s recommendations. Finished signs will be securely packaged to prevent damage during transit or storage according to the sheeting manufacturer’s recommendations.

TRAFFIC SIGN PERFORMANCE WARRANTY PROVISIONS

Based on the ASTM Type of sheeting specified, traffic control signs will be warranted for the duration shown in Table 1. Full product terms and conditions are as established by each sheeting manufacturer and may contain certain limitations based on sheeting and ink colors, and geographic exposure of the sign. A copy of the warranty document with complete details of terms and conditions will be supplied if requested by the Engineer.

CERTIFIED DIGITAL SIGN FABRICATOR

Sign fabricators using digital imaging methods to produce regulated traffic signs will be certified by the reflective sheeting manufacturer whose materials are used to produce the delivered signs.

DATE TAGGING SIGNS WITH PERTINENT INFORMATION

All digitally printed signs are required to be date-tagged with the following 2 components:

1. Date tags on the back of signs

   Tags will have the following information and be fabricated with material and printing system that are as durable as the warranted sign.
   - Name of Sign Fabricator
   - Date the sign was fabricated (month and year)
   - Process that was used for sign fabrication (digitally printed)
   - Supplier of sheeting that was used for fabricating the sign.
2. Border date

   The month and year (mm/yyyy) of sign fabrication will be printed in the border of the sign in 3/8” sans serif font. Border date will be printed with the same warranted printed system as the sign face. The date should be printed in the locations indicated below.

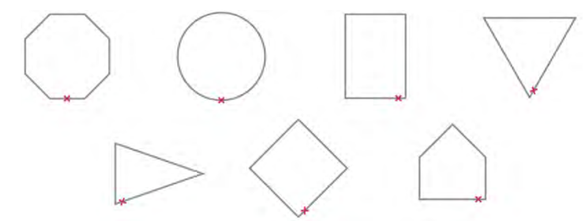

SIGNPOST INSTALLATION IN CONCRETE

On concrete surfaces, a core will be drilled out (for installation in existing concrete) or a block out will be used (for installation in new concrete) for sign installation. The core or block out diameter will be sized accordingly depending on post size. Concrete surrounding the core or block out will not be cracked or damaged.

All costs associated with installation in concrete will be incidental to the sign installation.

REGISTERED PROFESSIONAL ENGINEER
REG. NO. 8324
LANCE R. MCQUEEN
SOUTH DAKOTA
8-1-22

FOR BIDDING PURPOSES ONLY

MILEAGE REFERENCE MARKERS

Mileage Reference Markers (MRMs) are not to be disturbed. If an MRM is attached to a sign listed for replacement it will be salvaged and reattached to the new sign in the same location. Payment for this work will be incidental to the various signing contract items.

TYPE 2 OBJECT MARKER

Cost for yellow 8"x 24" Type 2 Object Marker with 2.0 lb/ft post will be incidental to the contract unit price per each for Type 2 Object Marker.

SIGNPOST INSTALLATION IN CONCRETE

On concrete surfaces, a core will be drilled out (for installation in existing concrete) or a block out will be used (for installation in new concrete) for sign installation. The core or block out diameter will be sized accordingly depending on post size. Concrete surrounding the core or block out will not be cracked or damaged.

All costs associated with installation in concrete will be incidental to the sign installation.

OVERHEAD AND POLE MOUNTED SIGNS

The Contractor will install the new overhead signs with new connection hardware and mast arm mounting hardware. Signs that are mounted on luminaire, utility, and signal poles and on signal mast arms will be attached with high strength stainless steel bands or galvanized pole clamps. Signs will be attached as recommended by the manufacturer. All sign mounting hardware will be stainless steel or galvanized steel.

Pole mounted signs will be mounted a minimum of 7 ft above the ground. Mounting heights are measured to the bottom of the signs.

All costs for pole and mast arm sign mounting hardware will be incidental to the contract unit price per square foot for “Flat Aluminum Sign, Nonremovable Copy High Intensity” or “Flat Aluminum Sign, Nonremovable Copy Super/Very High Intensity”.

MAST ARM SIGN SUPPORTS

Mast arm sign supports will conform to the specifications for overhead cantilever sign supports. Mast arms will be capable of rotating 90 degrees.

REMOVE CONCRETE FOOTING

Concrete footings that are to be removed will be removed by the Contractor to a minimum of 2’ below the ground surface. Restoration of the disturbed area will be to the satisfaction of the Engineer.

All costs for removing the concrete footings will be incidental to the contract lump sum price for Remove Concrete Footing(s).

CONCRETE FOOTINGS

New concrete footings will be installed a minimum of 10 ft from old footings greater than 4 ft in depth that have been completely removed, or 5 ft from old footings 4 ft or less in depth that have been completely removed or have been broken down approximately 1 ft below ground level. The Contractor may adjust new footing locations to comply with the indicated minimum distances if lateral plan offset is maintained, with the approval of the Engineer.

Extreme care should be used to make certain that the footings are constructed in accordance with the plan sheets, and the finished ground line at all footings are per the details shown on the plan sheets.

Disturbed areas outside the grading project limits will be seeded to the satisfaction of the Engineer. The cost of seeding outside the grading project limits will be incidental to the contract unit price per foot for the various Concrete Footing items.

SUBSURFACE

Concrete will not be dropped through standing water. If water is present in the excavation, it will be removed prior to concrete placement or the concrete will be tremied. If caving occurs during dewatering the concrete will be placed through a thremie or by means of a casing.

SOILS INFORMATION

Sign Bridge and Cantilever Sign Footings will be constructed in accordance with Section 465 of the Specifications, Drilled Shaft Construction except sections 465.3.A, 465.3.H, 465.3.I, 465.3.J and 465.3.K will not be required.

Permanent sign footings will be installed in soils varying from clay sand to newly placed fill.

Footing locations that contain sand and/or gravel or have high water tables are potential candidates for caving soils. If caving soils are encountered during excavation it may be necessary to use temporary casing to complete the excavation and concrete placement. The Contractor will be prepared to utilize the Temporary Casing Construction Method.

Location	Subsurface Soils	Groundwater Depth as of May 2021
West of intersection of Benson Rd and Ramps C & D (SBF1-2)	0’-24’: Fill over brown silt clay with sand	Dry
East of intersection of Benson Rd and Ramps A & B (SBF3-4)	0’-24’: Fill over brown silt clay with sand	Dry
South end of Ramp B, exiting I-229 NB onto Benson Rd (CSF1)	0’-24’: Fill over brown silt clay	14.2 ft
North end of Ramp B, exiting I-229 NB onto Benson Rd (CSF2; GS1)	0’-24’: Fill over brown silt clay with sand	Dry
South end of Ramp D, exiting I-229 SB onto Benson Rd (CSF3; GS2)	0’-24’: Fill over brown silt clay with sand	Dry

REMOVE SIGN BRIDGE

The existing cantilever sign on Ramp B @ Sta. 403+23 Rt will be removed. A photo of this cantilever sign is shown below.

All costs for removal of the existing cantilever sign will be included in the contract unit price per each for “Remove Sign Bridge”.

All costs for removal of the pole footing must be incidental to the contract unit price per each for “Remove Concrete Footing(s)”. The footing will be removed by the Contractor to a minimum of 2’ below the ground surface. Restoration of the disturbed area will be to the satisfaction of the Engineer.

SIGN BRIDGE

The double beam sign bridge design will be in accordance with Section 982 of the Specifications.

Costs for double beam sign bridges will be included in the contract unit price per each for Double Beam Sign Bridge.

TABLE OF REMOVE AND INSTALL SIGN STRUCTURES

Station	Offset	Remove Sign Bridge (Each)	Remove Concrete Footing(s) (Each)**	Double Beam Sign Bridge (Each)	Cantilever Sign Support (Each)	Mast Arm Sign Support (Each)
BENSON ROAD EASTBOUND						
27+57	Overhead			1		
BENSON ROAD WESTBOUND						
51+13	Overhead			1		
I-220 NORTHBOUND						
2030+10	Overhead			1		
RAMP B						
400+00	Overhead				1	
403+23	Overhead	1	1			
417+95	Overhead					1
RAMP D						
606+28	Overhead					1
IM 2292(98)9 - PCN 04XK Total		**1**	**1**	**3**	**1**	**2**

**Incidental to the contract lump sum price "Remove Concrete Footing(s)".

FOR BIDDING PURPOSES ONLY

BREAKAWAY SIGN SUPPORT TABLE

STATION	SIGN DESCRIPTION	SITE LOCATION	POST SIZE	FOOTING DIMENSIONS		STUB POST LENGTH	LONGITUDINAL STEEL QUANTITIES		SPIRAL STEEL QUANTITIES*	
				DIA.	DEPTH		QTY-SIZE	LENGTH	DIA.	LENGTH
419+24	Guide Sign	Ramp B	W6 x 20	1' - 9"	7' - 0"	2' - 3"	8 - #6 Bars	6' - 8"	1' - 5"	42' - 3"
604+14	Guide Sign	Ramp D	W6 x 20	1' - 9"	7' - 0"	2' - 3"	8 - #6 Bars	6' - 8"	1' - 5"	42' - 3"

* Spiral steel is size #3

OVERHEAD SIGN SUPPORT FOOTINGS TABLE

SIGN NUMBER	SIGN DESCRIPTION	SITE LOCATION	STATION	OFFSET	SUPPORT DESCRIPTION	FOOTING DIMENSIONS		LONGITUDINAL STEEL QUANTITIES			SPIRAL STEEL QUANTITIES*		
						DIA.	DEPTH	NO.	SIZE	DEPTH	DIA.	SIZE	LENGTH
SBF1	I-229 North Up Arrow,	Benson Road EB	29+57	6.25' L	Double Beam Sign Bridge	4' - 0"	13' - 0"	19	#9 Bars	12' - 6"	3' - 8"	#3 Bars	177' - 6"
SBF2	I-229 South Right Arrow			60.83' R	Double Beam Sign Bridge	4' - 0"	14' - 0"	19	#9 Bars	13' - 6"	3' - 8"	#3 Bars	189' - 0"
SBF3	I-229 South Up Arrow,	Benson Road WB	50+27	41.67' L	Double Beam Sign Bridge	4' - 0"	12' - 0"	19	#9 Bars	11' - 6"	3' - 8"	#3 Bars	166' - 1"
SBF4	I-229 North Right Arrow			7.33' R	Double Beam Sign Bridge	4' - 0"	12' - 0"	19	#9 Bars	11' - 6"	3' - 8"	#3 Bars	166' - 1"
SBF5	I-90 West 1 1/4 Miles, Exit 10B,	I-229 NB	2030+10	4.00' R	Double Beam Sign Bridge	4' - 0"	16' - 0"	19	#9 Bars	15' - 6"	3' - 8"	#3 Bars	211' - 11"
SBF6	I-90 East 1 Mile, Exit 10A			86.00' R	Double Beam Sign Bridge	4' - 0"	17' - 0"	19	#9 Bars	16' - 6"	3' - 8"	#3 Bars	223' - 5"
CSF1	Benson Rd Exit Only Arrows, Exit 9, Airport Sign	Ramp B	400+00	32.00' R	Cantilever Sign Support	4' - 0"	21' - 0"	19	#9 Bars	20' - 6"	3' - 8"	#3 Bars	269' - 3"
CSF2	Left Only / Left Only / Left Only / Right Only	Ramp B	417+95	42+00' R	Mast Arm Support	3' - 0"	14' - 0"	14	#8 Bars	13' - 6"	2' - 8"	#3 Bars	137' - 6"
CSF3	Left Only / Right Only	Ramp D	606+28	42+00' L	Mast Arm Support	3' - 0"	11' - 0"	14	#8 Bars	10' - 6"	2' - 8"	#3 Bars	112' - 6"

* Spiral steel is size #3

REGISTERED PROFESSIONAL ENGINEER
REG. NO. 8324
LANCE R. MCQUEEN
SOUTH DAKOTA
Lance R. McQueen
8-1-22

HDR

Permanent Sign Installation Table

Alignment		Sign and Delineator Install Data								Sign and Delineator Remove/Reset Data						Post Data				Footing Data			
Station	Offset	Sign Description	Sign Code	Sign Width (in)	Sign Height (in)	Sign Area HI (IV) (SqFt)	Sign Area VHI (XI) (SqFt)	Extruded Aluminum Sign, Nonremovable Copy Super/Very High Intensity (XI) (SqFt)	Type 2 Object Marker Back to Back (Each)	Salvage Traffic Sign (City) (Each)	Remove Traffic Sign (Each)	Remove Extruded Panel Sign (Each)	Remove Sign for Reset (Each)	Reset Sign (Each)	Remove Delineator (Each)	use Street Light (SL), use Power Pole (PP), use Mast Arm (MA), use 1 Post (1P), use 2 Posts (2P), or use 3 Posts (3P)	(F)ixed Base, Breakaway (S)lip Base, (A)nchor Stub Post OR (D)irect Drive	2.0"x2.0" Perforated Tube Post Height (Ft)	Post Sizes and Quantities (Ft) W6x20	Remove Concrete Footings* (Each)	1'-9" Dia. Break-away (Ft)	3' Dia. Fixed (Ft)	4' Dia. Fixed (Ft)
P 1200(04) - PCN 06MM																							
BENSON ROAD, Lt Side																							
10+85	Lt	Speed Limit 40 MPH (proposed)	R2-1	30"	36"	7.5										2P	A	24.0					
	Lt	No Parking (proposed)	R8-3	30"	30"	6.3																	
11+46	Lt	Speed Limit 40 MPH (existing)	Existing							1													
	Lt	No Parking (existing)	Existing																				
13+95	Lt	Right Lane Must Turn Right (proposed)	R3-7R	36"	36"	9.0										1P	A	10.4					
17+11	Lt	Right Lane Must Turn Right (proposed)	R3-7R	36"	36"	9.0										1P	A	10.5					
	Lt	Ahead (proposed)	W16-9P	24"	12"		2.0									1P							
18+52	Lt	No Parking (proposed)	R8-3	30"	30"	6.3										1P	A	9.9					
20+04	Lt	One Way Right (proposed)	R6-1R	54"	18"	6.8										2P	A	24.0					
	Lt	Stop (existing)	Existing										1	1		2P							
20+40	Lt	Private Property (existing)	Existing										1	1		1P	A	9.9					
20+60	Lt	Blank Sign (existing)	Existing										1	1		1P	A	10.4					
22+94	Lt	No Texting While Driving It's The Law (existing)	Existing										1	1		1P	A	10.4					
23+31	Lt	No Parking (existing)	Existing							1													
23+88	Lt	No Parking (proposed)	R8-3	30"	30"	6.3										1P	A	9.9					
27+09	Lt	Right Turn Yield to U Turn (proposed)	Special	30"	30"	6.3										1P	A	9.9					
27+12	Lt	One Way Right (proposed)	R6-1R	54"	18"	6.8										2P	A	27.4					
	Lt	Stop (existing)	Existing										1	1		2P							
	Lt	Benson Rd 2400E (existing)	Existing													2P							
	Lt	Potsdam Av 3800N (existing)	Existing													2P							
53+31	Lt	No Parking (proposed)	R8-3	30"	30"	6.3										1P	A	9.9					
54+62	Lt	4x8 White Delineator (existing)	Existing												1								
56+64	Lt	4x8 White Delineator (existing)	Existing												1								
58+61	Lt	4x8 White Delineator (existing)	Existing												1								
60+47	Lt	Type 2 Object Marker, Yellow (proposed)	OM2-2V	6"	12"				1								D						
60+61	Lt	4x8 White Delineator (existing)	Existing												1								
62+62	Lt	4x8 White Delineator (existing)	Existing												1								
64+64	Lt	4x8 White Delineator (existing)	Existing												1								
66+69	Lt	4x8 White Delineator (existing)	Existing												1								
67+02	Lt	Speed Limit 40 MPH (proposed)	R2-1	30"	36"	7.5										2P	A	24.0					
	Lt	No Parking (proposed)	R8-3	30"	30"	6.3										2P							
68+61	Lt	4x8 White Delineator (existing)	Existing												1								
70+22	Lt	Speed Limit 40 MPH (existing)	Existing							1						2P	A	24.0					
70+63	Lt	4x8 White Delineator (existing)	Existing												1								
71+73	Lt	Type 2 Object Marker, Yellow (proposed)	OM2-2V	6"	12"				1								D						
71+82	Lt	4x8 White Delineator (existing)	Existing												1								
72+64	Lt	4x8 White Delineator (existing)	Existing												1								
73+02	Lt	Type 2 Object Marker, Yellow (proposed)	OM2-2V	6"	12"				1								D						
74+24	Lt	4x8 White Delineator (existing)	Existing												1								
76+27	Lt	4x8 White Delineator (existing)	Existing												1								
77+21	Lt	Type 2 Object Marker, Yellow (proposed)	OM2-2V	6"	12"				1								D						
78+21	Lt	Type 2 Object Marker, Yellow (proposed)	OM2-2V	6"	12"				1								D						
78+27	Lt	4x8 White Delineator (existing)	Existing												1								
79+14	Lt	Type 2 Object Marker, Yellow (proposed)	OM2-2V	6"	12"				1								D						
79+16	Lt	Type 2 Object Marker, Yellow (proposed)	OM2-2V	6"	12"				1								D						
79+66	Lt	4x8 White Delineator (existing)	Existing												1								

* The Remove Concrete Footing per each quantity shown in this table is for informational purposes only. All costs for removal of the concrete footings will be incidental to the contract lump sum price for "Remove Concrete Footing(s)".

REGISTERED PROFESSIONAL ENGINEER
REG. NO. 8324
LANCE R. MCQUEEN
SOUTH DAKOTA
Lance R. McQueen
8-1-22

HDR

FOR BIDDING PURPOSES ONLY

STATE OF SOUTH DAKOTA	PROJECT	SHEET	TOTAL SHEETS
	IM 2292(98)9 P 1200(04) IM 2292(112)6	S7	S78

Plotting Date: 7/28/2022

Permanent Sign Installation Table

Alignment		Sign and Delineator Install Data								Sign and Delineator Remove/Reset Data						Post Data				Footing Data			
Station	Offset	Sign Description	Sign Code	Sign Width (in)	Sign Height (in)	Sign Area HI (IV) (SqFt)	Sign Area VHI (XI) (SqFt)	Extruded Aluminum Sign, Nonremovable Copy Super/Very High Intensity (XI) (SqFt)	Type 2 Object Marker Back to Back (Each)	Salvage Traffic Sign (City) (Each)	Remove Traffic Sign (Each)	Remove Extruded Panel Sign (Each)	Remove Sign for Reset (Each)	Reset Sign (Each)	Remove Delineator (Each)	use Street Light (SL), use Power Pole (PP), use Mast Arm (MA), use 1 Post (1P), use 2 Posts (2P), or use 3 Posts (3P)	(F)ixed Base, Breakaway (S)lip Base, (A)nchor Stub Post OR (D)irect Drive	2.0"x2.0" Perforated Tube Post Height (Ft)	Post Sizes and Quantities (Ft) W6x20	Remove Concrete Footings* (Each)	1'-9" Dia. Break-away (Ft)	3' Dia. Fixed (Ft)	4' Dia. Fixed (Ft)
P 1200(04) - PCN 06MM																							
BENSON ROAD, Median																							
14+26	Median	Keep Right (proposed)	R4-7	24"	30"	5.0										SL							
	Median	Do Not Enter (proposed)	R5-1	36"	36"		9.0									SL							
14+35	Median	U-Turn Permitted (proposed)	Special	24"	30"	5.0										1P	A	9.9					
15+64	Median	One Way Right (proposed)	R6-1R	54"	18"	6.8										SL							
17+90	Median	One Way Right (proposed)	R6-1R	54"	18"	6.8										2P	A	17.8					
19+21	Median	Do Not Enter (proposed)	R5-1	36"	36"		9.0									SL							
20+10	Median	One Way Right (proposed)	R6-1R	54"	18"	6.8										2P	A	17.8					
20+86	Median	One Way Right (proposed)	R6-1R	54"	18"	6.8										2P	A	17.8					
21+03	Median	Do Not Enter (proposed)	R5-1	36"	36"		9.0									SL							
24+55	Median	One Way Right (proposed)	R6-1R	54"	18"	6.8										SL							
26+49	Median	U-Turn Permitted (proposed)	Special	24"	30"	5.0										1P	A	9.9					
26+73	Median	One Way Right (proposed)	R6-1R	54"	18"	6.8										2P	A	17.8					
26+78	Median	Do Not Enter (proposed)	R5-1	36"	36"		9.0									1P	A	10.4					
27+13	Median	Do Not Enter (proposed)	R5-1	36"	36"		9.0									2P	A	20.8					
	Median	One Way Right (proposed)	R6-1R	54"	18"	6.8										2P							
27+49	Median	Do Not Enter (proposed)	R5-1	36"	36"		9.0									SL							
	Median	One Way Right (proposed)	R6-1R	54"	18"	6.8										SL							
52+27	Median	No U Turn (proposed)	R3-4	36"	36"	9.0										1P	A	10.4					
52+34	Median	One Way Right (proposed)	R6-1R	54"	18"	6.8										2P	A	17.8					
52+54	Median	Do Not Enter (proposed)	R5-1	36"	36"		9.0									SL							
53+17	Median	One Way Right (proposed)	R6-1R	54"	18"	6.8										2P	A	17.8					
54+42	Median	Do Not Enter (proposed)	R5-1	36"	36"		9.0									SL							
58+28	Median	U-Turn Permitted (proposed)	Special	24"	30"	5.0										1P	A	9.9					
58+42	Median	Do Not Enter (proposed)	R5-1	36"	36"		9.0									SL							
58+57	Median	Keep Right (proposed)	R4-7	24"	30"	5.0										1P	A	9.9					
60+34	Median	Keep Right (proposed)	R4-7	24"	30"	5.0										SL							
	Median	No U Turn (proposed)	R3-4	36"	36"	9.0										SL							
71+39	Median	No U Turn (proposed)	R3-4	36"	36"	9.0										1P	A	10.4					
71+47	Median	Do Not Enter (proposed)	R5-1	36"	36"		9.0									SL							
	Median	Keep Right (proposed)	R4-7	24"	30"	5.0										SL							
73+22	Median	Keep Right (proposed)	R4-7	24"	30"	5.0										SL							
	Median	Do Not Enter (proposed)	R5-1	36"	36"		9.0									SL							
73+27	Median	No U Turn (proposed)	R3-4	36"	36"	9.0										1P	A	10.4					

* The Remove Concrete Footing per each quantity shown in this table is for informational purposes only. All costs for removal of the concrete footings will be incidental to the contract lump sum price for "Remove Concrete Footing(s)".

REGISTERED PROFESSIONAL ENGINEER
REG. NO. 8324
LANCE R. MCQUEEN
SOUTH DAKOTA
8-1-22

FOR BIDDING PURPOSES ONLY

STATE OF SOUTH DAKOTA	PROJECT	SHEET	TOTAL SHEETS
	IM 2292(98)9 P 1200(04) IM 2292(112)6	S8	S78

Plotting Date: 7/28/2022

Permanent Sign Installation Table

Alignment		Sign and Delineator Install Data								Sign and Delineator Remove/Reset Data						Post Data				Footing Data			
Station	Offset	Sign Description	Sign Code	Sign Width (in)	Sign Height (in)	Sign Area HI (IV) (SqFt)	Sign Area VHI (XI) (SqFt)	Extruded Aluminum Sign, Nonremovable Copy Super/Very High Intensity (XI) (SqFt)	Type 2 Object Marker Back to Back (Each)	Salvage Traffic Sign (City) (Each)	Remove Traffic Sign (Each)	Remove Extruded Panel Sign (Each)	Remove Sign for Reset (Each)	Reset Sign (Each)	Remove Delineator (Each)	use Street Light (SL), use Power Pole (PP), use Mast Arm (MA), use 1 Post (1P), use 2 Posts (2P), or use 3 Posts (3P)	(F)ixed Base, Breakaway (S)lip Base, (A)nchor Stub Post OR (D)irect Drive	2.0"x2.0" Perforated Tube Post Height (Ft)	Post Sizes and Quantities (Ft) W6x20	Remove Concrete Footings* (Each)	1'-9" Dia. Break-away (Ft)	3' Dia. Fixed (Ft)	4' Dia. Fixed (Ft)
P 1200(04) - PCN 06MM																							
BENSON ROAD, Rt Side																							
6+92	Rt	Benson Rd 1800E (existing)	Existing										1	1		1P	A	12.1					
	Rt	Casco Av 3700N (existing)	Existing													1P							
	Rt	Stop (existing)	Existing													1P							
7+27	Rt	No Parking (existing)	Existing							1													
9+79	Rt	No Parking (proposed)	R8-3	30"	30"	6.3										SL							
12+24	Rt	No Parking (existing)	Existing							1													
15+13	Rt	Speed Limit 40 MPH (existing)	Existing							1													
	Rt	No Parking (existing)	Existing																				
16+02	Rt	Speed Limit 40 MPH (proposed)	R2-1	30"	36"	7.5										2P	A	24.0					
	Rt	No Parking (proposed)	R8-3	30"	30"	6.3																	
18+24	Rt	No Parking (existing)	Existing							1													
21+13	Rt	One Way Right (proposed)	R6-1R	54"	18"	6.8										2P	A	27.4					
	Rt	Stop (existing)	Existing										1	1		2P							
	Rt	Benson Rd 2200E (existing)	Existing													2P							
	Rt	St Paul Av 3700N (existing)	Existing													2P							
21+22	Rt	No Parking (existing)	Existing							1													
23+37	Rt	Speed Limit 40 MPH (proposed)	R2-1	30"	36"	7.5										2P	A	24.0					
	Rt	No Parking (proposed)	R8-3	30"	30"	6.3																	
24+24	Rt	No Parking (existing)	Existing							1													
25+72	Rt	Speed Limit 40 MPH (existing)	Existing							1													
27+70	Rt	One Way Right (proposed)	R6-1R	54"	18"	6.8										2P	A	27.4					
	Rt	Stop (existing)	Existing										1	1		2P							
	Rt	Benson Rd 2500E (existing)	Existing													2P							
	Rt	Potsdam Av 3700N (existing)	Existing													2P							
27+78	Rt	Right Turn Yield to U Turn (proposed)	Special	30"	30"	6.3										1P	A	9.9					
51+49	Rt	No Texting While Driving It's The Law (existing)	Existing										1	1		1P	A	9.9					
52+51	Rt	Sioux Falls Humane Society Up Arrow (existing)	Existing										1	1		1P	A	9.9					
54+62	Rt	4x8 White Delineator (existing)	Existing												1								
56+58	Rt	4x8 White Delineator (existing)	Existing												1								
58+28	Rt	Type 2 Object Marker, Yellow (proposed)	OM2-2V	6"	12"				1								D						
58+59	Rt	4x8 White Delineator (existing)	Existing												1								
59+87	Rt	Stop (proposed)	R1-1	36"	36"		9.0									1P	A	12.1					
	Rt	Benson Rd 3500E (proposed)	Special	36"	9"		2.3									1P							
	Rt	Sorin Av 3700N (proposed)	Special	30"	9"		1.9									1P							
60+57	Rt	4x8 White Delineator (existing)	Existing												1								
62+58	Rt	4x8 White Delineator (existing)	Existing												1								
64+66	Rt	4x8 White Delineator (existing)	Existing												1								
65+35	Rt	Type 2 Object Marker, Yellow (proposed)	OM2-2V	6"	12"				1								D						
66+64	Rt	4x8 White Delineator (existing)	Existing												1								
68+65	Rt	4x8 White Delineator (existing)	Existing												1								
70+64	Rt	4x8 White Delineator (existing)	Existing												1								
71+83	Rt	4x8 White Delineator (existing)	Existing												1								
72+66	Rt	4x8 White Delineator (existing)	Existing												1								
74+00	Rt	Speed Limit 40 MPH (proposed)	R2-1	30"	36"	7.5										1P	A	10.4					
74+26	Rt	Speed Limit 40 MPH (existing)	Existing							1													
74+26	Rt	4x8 White Delineator (existing)	Existing												1								
75+00	Rt	Lane Ends Right 36" (proposed)	W4-2R	36"	36"		9.0									1P	A	11.6					
76+26	Rt	4x8 White Delineator (existing)	Existing												1								
78+12	Rt	4x8 White Delineator (existing)	Existing												1								
79+66	Rt	Pavement Ends (existing)	Existing										1	1		1P	A	11.6					

* The Remove Concrete Footing per each quantity shown in this table is for informational purposes only. All costs for removal of the concrete footings will be incidental to the contract lump sum price for "Remove Concrete Footing(s)".

REGISTERED PROFESSIONAL ENGINEER
REG. NO. 8324
LANCE R. MCQUEEN
SOUTH DAKOTA

Lance R. McQueen
8-1-22

HDR

FOR BIDDING PURPOSES ONLY

STATE OF SOUTH DAKOTA	PROJECT	SHEET	TOTAL SHEETS
	IM 2292(98)9 P 1200(04) IM 2292(112)6	S9	S78

Plotting Date: 7/28/2022

Permanent Sign Installation Table

Alignment		Sign and Delineator Install Data								Sign and Delineator Remove/Reset Data						Post Data					Footing Data			
Station	Offset	Sign Description	Sign Code	Sign Width (in)	Sign Height (in)	Sign Area HI (IV) (SqFt)	Sign Area VHI (XI) (SqFt)	Extruded Aluminum Sign, Nonremovable Copy Super/Very High Intensity (XI) (SqFt)	Type 2 Object Marker Back to Back (Each)	Salvage Traffic Sign (City) (Each)	Remove Traffic Sign (Each)	Remove Extruded Panel Sign (Each)	Remove Sign for Reset (Each)	Reset Sign (Each)	Remove Delineator (Each)	use Street Light (SL), use Power Pole (PP), use Mast Arm (MA), use 1 Post (1P), use 2 Posts (2P), or use 3 Posts (3P)	(F)ixed Base, Breakaway (S)lip Base, (A)nchor Stub Post OR (D)irect Drive	2.0"x2.0" Perforated Tube Post Height (Ft)	Post Sizes and Quantities (Ft) W6x20		Remove Concrete Footings* (Each)	1'-9" Dia. Break-away (Ft)	3' Dia. Fixed (Ft)	4' Dia. Fixed (Ft)
P 1200(04) - PCN 06MM																								
LEWIS AVENUE																								
104+38	Lt	No Parking This Side of Street (existing)	Existing										1	1		SL								
105+46	Lt	No Parking This Side of Street (existing)	Existing							1														
105+49	Lt	Secondary Truck Route (existing)	Existing										1	1		SL								
106+54	Rt	Right Turn Yield to U Turn (proposed)	Special	30"	30"	6.3										1P	A	9.9						
108+02	Lt	Right Lane Must Turn Right (proposed)	R3-7R	36"	36"	9.0										1P	A	10.4						
104+00	Rt	No Parking Beyond This Point (existing)	Existing										1	1		1P	A	9.9						
HALL AVENUE																								
201+80	Lt	Speed Limit 30 MPH (proposed)	R2-1	30"	36"	7.5										SL								
	Lt	Secondary Truck Route (existing)	Existing										1	1		SL								
202+40	Lt	Speed Limit 30 MPH (existing)	Existing							1														
204+34	Lt	Stop (proposed)	R1-1	36"	36"		9.0									1P	A	10.4						
202+89	Rt	Benson Rd 3800E (existing)	Existing										1	1		1P	A	12.1						
	Rt	Hall Av 3700N (existing)	Existing													1P								
	Rt	Stop (existing)	Existing													1P								
205+05	Rt	Type 2 Object Marker, Yellow (proposed)	OM2-2V	6"	12"				1								D							
LEWIS AVENUE AND BENSON ROAD, Mast Arm																								
NW Corner		Lewis Avenue 3800N (proposed)	Special	60"	18"		7.5									MA								
		Left Turn Only (proposed)	R3-5L	30"	36"		7.5									MA								
		Lewis Avenue 3800N (existing)	Existing							1														
SW Corner		Benson Road 1900E (proposed)	Special	66"	18"		8.3									MA								
		Left Turn Only (proposed)	R3-5L	30"	36"		7.5									MA								
		Left Turn Only (proposed)	R3-5L	30"	36"		7.5									MA								
		Benson Rd 1900E (existing)	Existing							1														
NE Corner		Benson Road 2000E (proposed)	Special	66"	18"		8.3									MA								
		Left Turn Only (proposed)	R3-5L	30"	36"		7.5									MA								
		Benson Rd 2000E (existing)	Existing							1														
SE Corner		Lewis Avenue 3700N (proposed)	Special	60"	18"		7.5									MA								
		Left Turn Only (proposed)	R3-5L	30"	36"		7.5									MA								
		Lewis Avenue 3700N (existing)	Existing							1														
P 1200(04) - PCN 06MM Total						**311.3**	**201.1**	**0.0**	**10**	**17**	**0**	**0**	**16**	**16**	**29**			**666.4**	**0.0**	**0**	**0.0**	**0.0**	**0.0**

* The Remove Concrete Footing per each quantity shown in this table is for informational purposes only. All costs for removal of the concrete footings will be incidental to the contract lump sum price for "Remove Concrete Footing(s)".

REGISTERED PROFESSIONAL ENGINEER
REG. NO. 8324
LANCE R. MCQUEEN
SOUTH DAKOTA
Lance R. McQueen
8-1-22
HDR

FOR BIDDING PURPOSES ONLY

STATE OF SOUTH DAKOTA	PROJECT	SHEET	TOTAL SHEETS
	IM 2292(98)9 P 1200(04) IM 2292(112)6	S10	S78

Plotting Date: 7/28/2022

Permanent Sign Installation Table

Alignment		Sign and Delineator Install Data								Sign and Delineator Remove/Reset Data						Post Data				Footing Data			
Station	Offset	Sign Description	Sign Code	Sign Width (in)	Sign Height (in)	Sign Area HI (IV) (SqFt)	Sign Area VHI (XI) (SqFt)	Extruded Aluminum Sign, Nonremovable Copy Super/Very High Intensity (XI) (SqFt)	Type 2 Object Marker Back to Back (Each)	Salvage Traffic Sign (City) (Each)	Remove Traffic Sign (Each)	Remove Extruded Panel Sign (Each)	Remove Sign for Reset (Each)	Reset Sign (Each)	Remove Delineator (Each)	use Street Light (SL), use Power Pole (PP), use Mast Arm (MA), use 1 Post (1P), use 2 Posts (2P), or use 3 Posts (3P)	(F)ixed Base, Breakaway (S)lip Base, (A)nchor Stub Post OR (D)irect Drive	2.0"x2.0" Perforated Tube Post Height (Ft)	Post Sizes and Quantities (Ft) W6x20	Remove Concrete Footings* (Each)	1'-9" Dia. Break-away (Ft)	3' Dia. Fixed (Ft)	4' Dia. Fixed (Ft)
IM 2292(98)9 - PCN 04XK																							
I-229 AND BENSON ROAD INTERCHANGE - BENSON ROAD, Lt																							
28+36	Lt	Household Hazadrdous Waste Facility (existing)	Existing										1	1		1P	A	10.4					
29+71	Lt	Primary (proposed)	Special	24"	12"	2.0										2P	A	27.8					
	Lt	Truck Route (proposed)	R14-1	24"	18"	3.0										2P							
	Lt	Up Arrow (proposed)	M6-3	30"	21"	4.4										2P							
	Lt	Speed Limit 40 MPH (proposed)	R2-1	30"	36"	7.5										2P							
30+18	Lt	Primary (existing)	Existing								1												
	Lt	Truck Route (existing)	Existing																				
	Lt	Up Arrow (existing)	Existing																				
	Lt	Speed Limit 40 MPH (existing)	Existing																				
32+07	Lt	One Way Left (proposed)	R6-1L	54"	18"	6.8										2P	A	17.8					
32+34	Lt	One Way Right (existing)	Existing								1												
	Lt	Do Not Enter (existing)	Existing																				
	Lt	Stop (existing)	Existing																				
32+76	Lt	4x8 White Delineator (existing)	Existing												1								
32+97	Lt	One Way Right (existing)	Existing								1												
	Lt	Do Not Enter (existing)	Existing																				
	Lt	Stop (existing)	Existing																				
33+10	Lt	4x8 Yellow Delineator (existing)	Existing												1								
33+10	Lt	Yield Here to Peds Left (proposed)	R1-5L	36"	36"		9.0									1P	A	10.4					
	Lt	Do Not Enter (proposed)	R5-1	36"	36"		9.0									1P							
33+15	Lt	4x8 White Delineator (existing)	Existing												1								
33+25	Lt	4x8 Yellow Delineator (existing)	Existing												1								
33+23	Lt	Yield Here to Peds Right (proposed)	R1-5R	36"	36"		9.0									1P	A	10.4					
	Lt	Do Not Enter (proposed)	R5-1	36"	36"		9.0									1P							
33+75	Lt	Cardinal Direction South (existing)	Existing								1												
	Lt	I-229 Route Sign (existing)	Existing																				
	Lt	Left Arrow (existing)	Existing																				
33+84	Lt	Cardinal Direction West (proposed)	M3-4	36"	18"	4.5										2P	A	22.6					
	Lt	Benson Rd (proposed)	Special	72"	18"		9.0									2P							
	Lt	Up Right Arrow (proposed)	M6-2R	30"	21"	4.4										2P							
34+44	Lt	Cardinal Direction East (proposed)	M3-2	36"	18"	4.5										2P	A	22.6					
	Lt	Benson Rd (proposed)	Special	72"	18"		9.0									2P							
	Lt	Up Left Arrow (proposed)	M6-2L	30"	21"	4.4										2P							
34+63	Lt	Do Not Enter (proposed)	R5-1	36"	36"		9.0									1P	A	10.4					
		Yield (proposed)	R1-2	36"	36"		9.0									1P							
34+90	Lt	Do Not Enter (proposed)	R5-1	36"	36"		9.0									1P	A	10.4					
		Yield (proposed)	R1-2	36"	36"		9.0									1P							
35+36	Lt	One Way Right (proposed)	R6-1R	54"	18"	6.8										2P	A	17.8					
42+09	Lt	Cardinal Direction North (proposed)	M3-1	36"	18"	4.5										2P	A	25.6					
	Lt	I-229 Route Sign (proposed)	M1-1	45"	36"	11.3										2P							
	Lt	Up Left Arrow (proposed)	M6-2L	30"	21"	4.4										2P							
42+12	Lt	Cardinal Direction East (proposed)	M3-2	36"	18"	4.5										2P	A	22.6					
	Lt	Benson Rd (proposed)	Special	72"	18"		9.0									2P							
	Lt	Up Right Arrow (proposed)	M6-2R	30"	21"	4.4										2P							
42+31	Lt	Slippery When Wet (existing)	Existing								1												
	Lt	When Icy or Wet (existing)	Existing																				
42+33	Lt	Do Not Enter (proposed)	R5-1	36"	36"		9.0									1P	A	10.4					
42+50	Lt	Tubular Delineator (existing)	Existing												1								
42+76	Lt	Tubular Delineator (existing)	Existing												1								
42+76	Lt	4x8 Yellow Delineator (existing)	Existing												1								
43+11	Lt	4x8 White Delineator (existing)	Existing												1								
43+38	Lt	Do Not Enter (proposed)	R5-1	36"	36"		9.0									1P	A	10.4					
43+45	Lt	4x8 White Delineator (existing)	Existing												1								

* The Remove Concrete Footing per each quantity shown in this table is for informational purposes only. All costs for removal of the concrete footings will be incidental to the contract lump sum price for "Remove Concrete Footing(s)".

REGISTERED PROFESSIONAL ENGINEER
REG. NO. 8374
LANCE R. MCQUEEN
SOUTH DAKOTA
8-1-22

HDR

Permanent Sign Installation Table

Alignment		Sign and Delineator Install Data								Sign and Delineator Remove/Reset Data						Post Data				Footing Data			
Station	Offset	Sign Description	Sign Code	Sign Width (in)	Sign Height (in)	Sign Area HI (IV) (SqFt)	Sign Area VHI (XI) (SqFt)	Extruded Aluminum Sign, Nonremovable Copy Super/Very High Intensity (XI) (SqFt)	Type 2 Object Marker Back to Back (Each)	Salvage Traffic Sign (City) (Each)	Remove Traffic Sign (Each)	Remove Extruded Panel Sign (Each)	Remove Sign for Reset (Each)	Reset Sign (Each)	Remove Delineator (Each)	use Street Light (SL), use Power Pole (PP), use Mast Arm (MA), use 1 Post (1P), use 2 Posts (2P), or use 3 Posts (3P)	(F)ixed Base, Breakaway (S)lip Base, (A)nchor Stub Post OR (D)irect Drive	2.0"x2.0" Perforated Tube Post Height (Ft)	Post Sizes and Quantities (Ft) W6x20	Remove Concrete Footings* (Each)	1'-9" Dia. Break-away (Ft)	3' Dia. Fixed (Ft)	4' Dia. Fixed (Ft)
IM 2292(98)9 - PCN 04XK																							
I-229 AND BENSON ROAD INTERCHANGE - BENSON ROAD, Lt (cont'd)																							
43+45	Lt	Airport (existing)	Existing								1												
	Lt	Left Arrow (existing)	Existing																				
43+49	Lt	Yield Here to Peds Right (proposed)	R1-5R	36"	36"		9.0									1P	A	10.4					
43+59	Lt	Cardinal Direction North (proposed)	M3-1	36"	18"	4.5										2P	A	25.6					
	Lt	I-229 Route Sign (proposed)	M1-1	45"	36"	11.3										2P							
	Lt	Right Arrow (proposed)	M6-1R	30"	21"	4.4										2P							
43+84	Lt	Yield Here to Peds Left (proposed)	R1-5L	36"	36"		9.0									1P	A	10.4					
43+92	Lt	4x8 White Delineator (existing)	Existing												1								
44+93	Lt	Cardinal Direction North (existing)	Existing								1												
	Lt	I-229 Route Sign (existing)	Existing																				
	Lt	Right Arrow (existing)	Existing																				
46+35	Lt	No Parking (existing)	Existing								1												
48+80	Lt	4x8 White Delineator (existing)	Existing												1								
49+97	Lt	4x8 White Delineator (existing)	Existing												1								
50+27	Lt	Reverse Curve 3 Lanes (proposed)	W1-4cL	36"	36"		9.0									MA							
	Lt	Ahead (proposed)	W16-9P	24"	12"		2.0									MA							
	Lt	Advisory Speed 25MPH (proposed)	W13-1P	24"	24"		4.0									MA							
50+80	Lt	4x8 White Delineator (existing)	Existing												1								
51+00	Lt	JCT (existing)	Existing								1												
	Lt	I-229 Route Sign (existing)	Existing																				
I-229 AND BENSON ROAD INTERCHANGE - BENSON ROAD, Median																							
28+01	Median	Do Not Enter (proposed)	R5-1	36"	36"		9.0									1P	A	10.4					
28+14	Median	One Way Right (proposed)	R6-1R	54"	18"	6.8										2P	A	17.8					
28+30	Median	U-Turn Permitted (proposed)	Special	24"	30"	5.0										1P	A	9.9					
29+57	Median	Reverse Curve 2 Lanes (proposed)	W1-4bL	36"	36"		9.0									MA							
	Median	Advisory Speed 25MPH (proposed)	W13-1P	24"	24"		4.0									MA							
31+97	Median	Airport (proposed)	I-5	30"	30"	6.3										1P	A	10.7					
	Median	Right Arrow (proposed)	M6-1R	30"	21"	4.4										1P							
32+13	Median	One Way Right (proposed)	R6-1R	54"	18"	6.8										2P	A	17.8					
32+17	Median	Do Not Enter (proposed)	R5-1	36"	36"		9.0									1P	A	10.4					
32+46	Median	Keep Right (proposed)	R4-7	24"	30"	5.0										1P	A	9.9					
33+91	Median	Keep Left (proposed)	R4-8	24"	30"	5.0										1P	A	9.9					
34+19	Median	Do Not Enter (proposed)	R5-1	36"	36"		9.0									1P	A	10.4					
35+56	Median	One Way Left (proposed)	R6-1L	54"	18"	6.8										2P	A	17.8					
39+56	Median	Airport (proposed)	I-5	30"	30"	6.3										1P	A	10.7					
	Median	Left Arrow (proposed)	M6-1L	30"	21"	4.4										1P							
40+04	Median	One Way Left (proposed)	R6-1L	54"	18"	6.8										2P	A	17.8					
42+14	Median	Do Not Enter (proposed)	R5-1	36"	36"		9.0									SL							
42+39	Median	Keep Left (proposed)	R4-8	24"	30"	5.0										1P	A	9.9					
43+88	Median	Keep Right (proposed)	R4-7	24"	30"	5.0										SL							
	Median	Do Not Enter (proposed)	R5-1	36"	36"		9.0									SL							
44+52	Median	One Way Right (proposed)	R6-1R	54"	18"	6.8										2P	A	17.8					
50+27	Median	Reverse Curve 3 Lanes (proposed)	W1-4cL	36"	36"		9.0									MA							
	Median	Ahead (proposed)	W16-9P	24"	12"		2.0									MA							
	Median	Advisory Speed 25MPH (proposed)	W13-1P	24"	24"		4.0									MA							

* The Remove Concrete Footing per each quantity shown in this table is for informational purposes only. All costs for removal of the concrete footings will be incidental to the contract lump sum price for "Remove Concrete Footing(s)".

REGISTERED PROFESSIONAL ENGINEER
REG. NO. 8324
LANCE R. MCQUEEN
SOUTH DAKOTA

Lance R. McQueen
8-1-22

HDR

Permanent Sign Installation Table

Alignment		Sign and Delineator Install Data								Sign and Delineator Remove/Reset Data						Post Data				Footing Data			
Station	Offset	Sign Description	Sign Code	Sign Width (in)	Sign Height (in)	Sign Area HI (IV) (SqFt)	Sign Area VHI (XI) (SqFt)	Extruded Aluminum Sign, Nonremovable Copy Super/Very High Intensity (XI) (SqFt)	Type 2 Object Marker Back to Back (Each)	Salvage Traffic Sign (City) (Each)	Remove Traffic Sign (Each)	Remove Extruded Panel Sign (Each)	Remove Sign for Reset (Each)	Reset Sign (Each)	Remove Delineator (Each)	use Street Light (SL), use Power Pole (PP), use Mast Arm (MA), use 1 Post (1P), use 2 Posts (2P), or use 3 Posts (3P)	(F)ixed Base, Breakaway (S)lip Base, (A)nchor Stub Post OR (D)irect Drive	2.0"x2.0" Perforated Tube Post Height (Ft)	Post Sizes and Quantities (Ft) W6x20	Remove Concrete Footings* (Each)	1'-9" Dia. Break-away (Ft)	3' Dia. Fixed (Ft)	4' Dia. Fixed (Ft)
IM 2292(98)9 - PCN 04XK																							
I-229 AND BENSON ROAD INTERCHANGE - BENSON ROAD, Rt Side																							
28+51	Rt	Right Lane Must Turn Right (proposed)	R3-7R	36"	36"	9.0										1P	A	10.5					
	Rt	Ahead (proposed)	W16-9P	24"	12"		2.0																
29+57	Rt	Reverse Curve 2 Lanes (proposed)	W1-4bL	36"	36"		9.0									MA							
	Rt	Advisory Speed 25MPH (proposed)	W13-1P	24"	24"		4.0									MA							
29+57	Rt	Slippery When Wet (existing)	Existing								1												
	Rt	When Icy or Wet (existing)	Existing																				
30+75	Rt	Cardinal Direction South (existing)	Existing								1												
	Rt	I-229 Route Sign (existing)	Existing																				
	Rt	Right Arrow (existing)	Existing																				
30+95	Rt	Right Lane Must Turn Right (proposed)	R3-7R	36"	36"	9.0										1P	A	10.4					
31+42	Rt	4x8 White Delineator (existing)	Existing												1								
31+73	Rt	Airport (existing)	Existing								1												
	Rt	Right Arrow (existing)	Existing																				
32+16	Rt	Cardinal Direction South (proposed)	M3-3	36"	18"	4.5										2P	A	25.6					
	Rt	I-229 Route Sign (proposed)	M1-1	45"	36"	11.3										2P							
	Rt	Right Arrow (proposed)	M6-1R	30"	21"	4.4										2P							
32+18	Rt	4x8 White Delineator (existing)	Existing												1								
32+35	Rt	4x8 White Delineator (existing)	Existing												1								
32+74	Rt	4x8 Yellow Delineator (existing)	Existing												1								
32+76	Rt	Do Not Enter (proposed)	R5-1	36"	36"		9.0									1P	A	10.4					
32+80	Rt	4x8 Yellow Delineator (existing)	Existing												1								
32+89	Rt	Sioux Falls Humane Society Left Arrow (existing)	Existing								1												
33+04	Rt	4x8 Yellow Delineator (existing)	Existing												1								
34+04	Rt	Do Not Enter (proposed)	R5-1	36"	36"		9.0									1P	A	10.4					
34+73	Rt	Cardinal Direction West (proposed)	M3-4	36"	18"	4.5										2P	A	22.6					
	Rt	Benson Rd (proposed)	Special	72"	18"		9.0									2P							
	Rt	Up Right Arrow (proposed)	M6-2R	30"	21"	4.4										2P							
34+77	Rt	Cardinal Direction South (proposed)	M3-3	36"	18"	4.5										2P	A	25.6					
	Rt	I-229 Route Sign (proposed)	M1-1	45"	36"	11.3										2P							
	Rt	Up Left Arrow (proposed)	M6-2L	30"	21"	4.4										2P							
40+11	Rt	One Way Right (proposed)	R6-1R	54"	18"	6.8										2P	A	17.8					
40+60	Rt	Do Not Enter (proposed)	R5-1	36"	36"		9.0									1P	A	10.4					
41+05	Rt	Do Not Enter (proposed)	R5-1	36"	36"		9.0									1P	A	10.4					
41+66	Rt	Cardinal Direction North (existing)	Existing								1												
	Rt	I-229 Route Sign (existing)	Existing																				
	Rt	Left Arrow (existing)	Existing																				
42+46	Rt	One Way Right (existing)	Existing								1												
	Rt	One Way Left (existing)	Existing																				
	Rt	Do Not Enter (existing)	Existing																				
43+09	Rt	One Way Right (existing)	Existing								1												
	Rt	One Way Left (existing)	Existing																				
	Rt	Do Not Enter (existing)	Existing																				
43+55	Rt	Yield Here to Peds Right (proposed)	R1-5R	36"	36"		9.0									1P	A	10.4					
	Rt	Do Not Enter (proposed)	R5-1	36"	36"		9.0									1P							
43+70	Rt	Yield Here to Peds Left (proposed)	R1-5L	36"	36"		9.0									1P	A	10.4					
	Rt	Do Not Enter (proposed)	R5-1	36"	36"		9.0									1P							
44+50	Rt	One Way Left (proposed)	R6-1L	54"	18"	6.8										2P	A	17.8					
45+23	Rt	Lane Ends Right (existing)	Existing								1												
	Rt	No Parking (existing)	Existing																				
48+08	Rt	Primary (proposed)	Special	24"	12"	2.0										2P	A	27.8					
	Rt	Truck Route (proposed)	R14-1	24"	18"	3.0										2P							
	Rt	Up Arrow (proposed)	M6-3	30"	21"	4.4										2P							
	Rt	Speed Limit 40 MPH (proposed)	R2-1	30"	36"	7.5										2P							

* The Remove Concrete Footing per each quantity shown in this table is for informational purposes only. All costs for removal of the concrete footings will be incidental to the contract lump sum price for "Remove Concrete Footing(s)".

REGISTERED PROFESSIONAL ENGINEER
REG. NO. 8324
LANCE R. MCQUEEN
SOUTH DAKOTA
8-1-22

HDR

FOR BIDDING PURPOSES ONLY

STATE OF SOUTH DAKOTA	PROJECT	SHEET	TOTAL SHEETS
	IM 2292(98)9 P 1200(04) IM 2292(112)6	S13	S78

Plotting Date: 7/28/2022

Permanent Sign Installation Table

Alignment		Sign and Delineator Install Data								Sign and Delineator Remove/Reset Data						Post Data					Footing Data			
Station	Offset	Sign Description	Sign Code	Sign Width (in)	Sign Height (in)	Sign Area HI (IV) (SqFt)	Sign Area VHI (XI) (SqFt)	Extruded Aluminum Sign, Nonremovable Copy Super/Very High Intensity (XI) (SqFt)	Type 2 Object Marker Back to Back (Each)	Salvage Traffic Sign (City) (Each)	Remove Traffic Sign (Each)	Remove Extruded Panel Sign (Each)	Remove Sign for Reset (Each)	Reset Sign (Each)	Remove Delineator (Each)	use Street Light (SL), use Power Pole (PP), use Mast Arm (MA), use 1 Post (1P), use 2 Posts (2P), or use 3 Posts (3P)	(F)ixed Base, Breakaway (S)lip Base, (A)nchor Stub Post OR (D)irect Drive	2.0"x2.0" Perforated Tube Post Height (Ft)	Post Sizes and Quantities (Ft) W6x20	Remove Concrete Footings* (Each)	1'-9" Dia. Break-away (Ft)	3' Dia. Fixed (Ft)	4' Dia. Fixed (Ft)
IM 2292(98)9 - PCN 04XK																								
I-229 AND BENSON ROAD INTERCHANGE - BENSON ROAD, Rt Side (cont'd)																								
48+91	Rt	4x8 White Delineator (existing)	Existing												1									
48+94	Rt	Primary (existing)	Existing								1													
	Rt	Truck Route (existing)	Existing																					
	Rt	Up Arrow (existing)	Existing																					
	Rt	Speed Limit 40 MPH (existing)	Existing																					
49+69	Rt	4x8 White Delineator (existing)	Existing												1									
50+23	Rt	No Parking (proposed)	R8-3	30"	30"	6.3										1P	A	9.9						
50+73	Rt	4x8 White Delineator (existing)	Existing												1									
I-229 SOUTHBOUND OFF-RAMP (RAMP D)																								
602+42	Rt	Type 2 Object Marker, Yellow (proposed)	OM2-2V	6"	12"				1								D							
602+76	Lt	4x8 White Delineator (existing)	Existing												1									
603+19	Lt	Wrong Way (proposed)	R5-1a	42"	30"		8.8									1P	S	12.3						
603+19	Rt	Wrong Way (proposed)	R5-1a	42"	30"		8.8									1P	S	12.5						
603+63	Rt	Wrong Way (existing)	Existing								1													
604+14	Lt	Guide Sign (existing)	Existing	120"	84"								1	1		2P	S		32.7	2	14.0			
604+21	Lt	4x8 White Delineator (existing)	Existing												1									
607+12	Lt	4x8 White Delineator (existing)	Existing												1									
607+19	Lt	Airport (proposed)	I-5	30"	30"	6.3										SL								
	Lt	Right Arrow (proposed)	M6-1R	30"	21"	4.4										SL								
I-229 SOUTHBOUND ON-RAMP (RAMP C)																								
500+09	Lt	4x4 White Delineator (existing)	Existing												1									
500+52	Lt	Type 2 Object Marker, Yellow (existing)	Existing												1									
504+11	Lt	Speed Limit 65 MPH (existing)	Existing	48"	60"								1	1		2P	S	29.0						
504+49	Lt	4x4 White Delineator (existing)	Existing												1									
505+03	Lt	Mile 9 (D10-1) (Existing)	Existing	12"	24"								1	1		2P	S	7.7						
509+10	Lt	Cardinal Direction South (existing)	Existing								1													
	Lt	I-229 Route Sign (existing)	Existing																					
509+17	Lt	Cardinal Direction South (proposed)	M3-3	36"	18"	4.5										SL								
	Lt	I-229 Route Sign (proposed)	M1-1	45"	36"	11.3										SL								
509+69	Lt	4x4 White Delineator (existing)	Existing												1									
510+90	Lt	Lane Ends Right 48" (proposed)	W4-2R	48"	48"		16.0									SL								
514+32	Lt	4x4 White Delineator (existing)	Existing												1									
515+94	Rt	Type 2 Object Marker, Yellow (existing)	Existing												1									
516+35	Lt	4x4 White Delineator (existing)	Existing												1									
516+84	Rt	Added Lane (proposed)	W4-3	48"	48"		16.0									2P	S	25.4						
516+93	Rt	Added Lane (existing)	Existing								1													
517+54	Rt	4x4 Yellow Delineator (existing)													1									
517+70	Lt	4x4 White Delineator (existing)													1									
518+75	Rt	4x4 Yellow Delineator (existing)													1									
518+83	Lt	4x4 White Delineator (existing)													1									
519+53	Rt	4x4 Yellow Delineator (existing)													1									
520+83	Lt	4x4 White Delineator (existing)													1									
521+00	Lt	4x4 Yellow Delineator (existing)													1									
522+36	Lt	4x4 White Delineator (existing)													1									
523+96	Lt	4x4 White Delineator (existing)													1									
525+60	Rt	Lane Ends Left 48" (proposed)	W4-2L	48"	48"		16.0									2P	S	28.2						
525+27	Lt	4x4 White Delineator (existing)													1									
526+64	Lt	4x4 White Delineator (existing)													1									
527+36	Rt	Type 2 Object Marker, Yellow (proposed)	OM2-2V	6"	12"				1								D							

* The Remove Concrete Footing per each quantity shown in this table is for informational purposes only. All costs for removal of the concrete footings will be incidental to the contract lump sum price for "Remove Concrete Footing(s)".

REGISTERED PROFESSIONAL ENGINEER
REG. NO. 8324
LANCE R. MCQUEEN
SOUTH DAKOTA

Lance R. McQueen
8-1-22

HDR

FOR BIDDING PURPOSES ONLY

STATE OF SOUTH DAKOTA	PROJECT	SHEET	TOTAL SHEETS
	IM 2292(98)9 P 1200(04) IM 2292(112)6	S14	S78

Plotting Date: 7/28/2022

Permanent Sign Installation Table

Alignment		Sign and Delineator Install Data								Sign and Delineator Remove/Reset Data						Post Data				Footing Data			
Station	Offset	Sign Description	Sign Code	Sign Width (in)	Sign Height (in)	Sign Area HI (IV) (SqFt)	Sign Area VHI (XI) (SqFt)	Extruded Aluminum Sign, Nonremovable Copy Super/Very High Intensity (XI) (SqFt)	Type 2 Object Marker Back to Back (Each)	Salvage Traffic Sign (City) (Each)	Remove Traffic Sign (Each)	Remove Extruded Panel Sign (Each)	Remove Sign for Reset (Each)	Reset Sign (Each)	Remove Delineator (Each)	use Street Light (SL), use Power Pole (PP), use Mast Arm (MA), use 1 Post (1P), use 2 Posts (2P), or use 3 Posts (3P)	(F)ixed Base, Breakaway (S)lip Base, (A)nchor Stub Post OR (D)irect Drive	2.0"x2.0" Perforated Tube Post Height (Ft)	Post Sizes and Quantities (Ft) W6x20	Remove Concrete Footings* (Each)	1'-9" Dia. Break-away (Ft)	3' Dia. Fixed (Ft)	4' Dia. Fixed (Ft)
IM 2292(98)9 - PCN 04XK																							
I-229 NORTHBOUND OFF-RAMP (RAMP B)																							
400+80	Rt	Type 2 Object Marker, Yellow (existing)	Existing												1								
401+05	Rt	4x8 White Delineator (existing)	Existing												1								
401+64	Rt	4x8 White Delineator (existing)	Existing												1								
401+06	Rt	4x8 White Delineator (existing)	Existing												1								
402+24	Rt	4x8 White Delineator (existing)	Existing												1								
402+63	Rt	4x8 White Delineator (existing)	Existing												1								
403+24	Rt	4x8 White Delineator (existing)	Existing												1								
403+73	Rt	Type 2 Object Marker, Yellow (existing)	Existing												1								
405+29	Rt	4x8 White Delineator (existing)	Existing												1								
407+67	Rt	4x8 White Delineator (existing)	Existing												1								
409+55	Rt	4x8 White Delineator (existing)	Existing												1								
410+78	Rt	4x8 White Delineator (existing)	Existing												1								
413+88	Rt	4x8 White Delineator (existing)	Existing												1								
415+36	Rt	4x8 White Delineator (existing)	Existing												1								
415+83	Rt	Airport (proposed)	I-5	30"	30"	6.3										SL							
	Rt	Left Arrow (proposed)	M6-1L	30"	21"	4.4										SL							
416+81	Rt	4x8 White Delineator (existing)	Existing												1								
418+31	Rt	4x8 White Delineator (existing)	Existing												1								
419+24	Rt	Guide Sign (existing)	Existing	120"	84"								1	1			S		33.2	2	14.0		
419+74	Rt	4x8 White Delineator (existing)	Existing												1								
419+77	Lt	Type 2 Object Marker, Yellow (proposed)	OM2-2V	6"	12"				1								D						
419+77	Rt	Type 2 Object Marker, Yellow (proposed)	OM2-2V	6"	12"				1								D						
420+49	Lt	Wrong Way (existing)	Existing								1												
421+00	Lt	Wrong Way (proposed)	R5-1a	42"	30"		8.8									1P	S	12.4					
421+00	Rt	Wrong Way (proposed)	R5-1a	42"	30"		8.8									1P	S	12.4					
421+53	Rt	4x8 White Delineator (existing)	Existing												1								
I-229 NORTHBOUND OFF-RAMP (RAMP F)																							
801+59	Lt	Cardinal Direction West (proposed)	M3-4	36"	18"	4.5										2P	A	22.6					
	Lt	Benson Rd (proposed)	Special	72"	18"		9.0									2P							
	Lt	Up Left Arrow (proposed)	M6-2L	30"	21"	4.4										2P							
801+59	Lt	Cardinal Direction East (proposed)	M3-2	36"	18"	4.5										2P	A	22.6					
	Lt	Benson Rd (proposed)	Special	72"	18"		9.0									2P							
	Lt	Up Right Arrow (proposed)	M6-2R	30"	21"	4.4										2P							
801+89	Lt	4x8 White Delineator (existing)	Existing												1								
802+95	Lt	4x8 Yellow Delineator (existing)	Existing												1								
802+95	Lt	4x8 White Delineator (existing)	Existing												1								
I-229 NORTHBOUND ON-RAMP (RAMP A)																							
302+10	Rt	4x8 White Delineator (existing)	Existing												1								
302+69	Rt	Type 2 Object Marker, Yellow (proposed)	OM2-2V	6"	12"				1								D						
303+66	Rt	4x8 White Delineator (existing)	Existing												1								
305+59	Rt	4x8 White Delineator (existing)	Existing												1								
306+80	Rt	Lane Ends Right 48" (proposed)	W4-2R	48"	48"		16.0									SL							
307+62	Rt	4x8 White Delineator (existing)	Existing												1								
309+21	Lt	4x8 Yellow Delineator (existing)	Existing												1								
309+52	Rt	4x8 White Delineator (existing)	Existing												1								
311+14	Lt	4x8 Yellow Delineator (existing)	Existing												1								
311+26	Rt	4x8 White Delineator (existing)	Existing												1								
312+33	Lt	Added Lane (proposed)	W4-3	48"	48"		16.0									2P	S	25.1					
313+07	Lt	4x8 Yellow Delineator (existing)	Existing												1								
313+27	Rt	4x8 White Delineator (existing)	Existing												1								
I-229 NORTHBOUND MAINLINE																							
2028+35	Rt	Type 2 Object Marker, Yellow (existing)	Existing												1								
2030+67	Lt	Type 2 Object Marker, Yellow (existing)	Existing												1								
2031+96	Rt	Type 2 Object Marker, Yellow (existing)	Existing												1								
2034+31	Lt	Type 2 Object Marker, Yellow (existing)	Existing												1								

* The Remove Concrete Footing per each quantity shown in this table is for informational purposes only. All costs for removal of the concrete footings will be incidental to the contract lump sum price for "Remove Concrete Footing(s)".

REGISTERED PROFESSIONAL ENGINEER
REG. NO. 8324
LANCE R. MCQUEEN
SOUTH DAKOTA
8-1-22

HDR

Permanent Sign Installation Table

Alignment		Sign and Delineator Install Data								Sign and Delineator Remove/Reset Data						Post Data				Footing Data			
Station	Offset	Sign Description	Sign Code	Sign Width (in)	Sign Height (in)	Sign Area HI (IV) (SqFt)	Sign Area VHI (XI) (SqFt)	Extruded Aluminum Sign, Nonremovable Copy Super/Very High Intensity (XI) (SqFt)	Type 2 Object Marker Back to Back (Each)	Salvage Traffic Sign (City) (Each)	Remove Traffic Sign (Each)	Remove Extruded Panel Sign (Each)	Remove Sign for Reset (Each)	Reset Sign (Each)	Remove Delineator (Each)	use Street Light (SL), use Power Pole (PP), use Mast Arm (MA), use 1 Post (1P), use 2 Posts (2P), or use 3 Posts (3P)	(F)ixed Base, Breakaway (S)lip Base, (A)nchor Stub Post OR (D)irect Drive	2.0"x2.0" Perforated Tube Post Height (Ft)	Post Sizes and Quantities (Ft) W6x20	Remove Concrete Footings* (Each)	1'-9" Dia. Break-away (Ft)	3' Dia. Fixed (Ft)	4' Dia. Fixed (Ft)
IM 2292(98)9 - PCN 04XK																							
I-229 AND BENSON ROAD INTERCHANGE, Overhead																							
EB Benson Rd																							
29+57	Rt	I-229 North Up Arrow (proposed)	Special	150"	102"			106.3								MA							27.0
		I-229 South Right Arrow (proposed)	Special	150"	96"			100.0								MA							
WB Benson Rd																							
50+27	Lt	I-229 South Up Arrow (proposed)	Special	150"	102"			106.3								MA							24.0
		I-229 North Right Arrow (proposed)	Special	150"	96"			100.0								MA							
NB I-229																							
2030+10	Rt	I-90 West 1 1/4 Miles (proposed)	Special	132"	90"			82.5								MA							33.0
		I-90 East 1 Mile (proposed)	Special	132"	90"			82.5								MA							
		Exit 10B (proposed)	Special	114"	30"			23.8								MA							
		Exit 10A (proposed)	Special	114"	30"			23.8								MA							
2031+05	Rt	I-90 West 1 1/4 Miles, Exit 10B (existing)	Existing									1											
		I-90 East 1 Mile, Exit 10A (existing)	Existing									1											
Ramp B																							
400+00	Rt	Benson Rd Exit Only Arrow (proposed)	Special	216"	90"			135.0								MA							21.0
		Exit 9 (proposed)	Special	114"	30"			23.8								MA							
		Airport (proposed)	I-5	30"	30"	6.3										MA							
403+23	Rt	Benson Rd Exit Only Arrow (existing)	Existing									1								1			
		Exit 9 (existing)	Existing																				
		Airport (existing)	Existing																				
417+95	Rt	Left Turn Only (proposed)	R3-5L	30"	36"		7.5									MA							
		Left Turn Only (proposed)	R3-5L	30"	36"		7.5									MA						14.0	
		Left Turn Only (proposed)	R3-5L	30"	36"		7.5									MA							
		Right Turn Only (proposed)	R3-5R	30"	36"		7.5									MA							
Ramp D																							
606+28	Lt	Left Turn Only (proposed)	R3-5L	30"	36"		7.5									MA						11.0	
		Right Turn Only (proposed)	R3-5R	30"	36"		7.5									MA							
I-229 AND BENSON ROAD INTERCHANGE, WEST RAMPS, Mast Arm																							
EB Ramp		Benson Road 2600E (proposed)	Special	66"	18"		8.3									MA							
		No Turn On Red (proposed)	R10-11a	36"	48"		12.0									MA							
		Right Turn Only (proposed)	R3-5R	30"	36"		7.5									MA							
		Right Turn Only (proposed)	R3-5R	30"	36"		7.5									MA							
WB Benson Rd		No Left Turn (proposed)	R3-2	36"	36"		9.0									MA							
		No Right Turn or U Turn (proposed)	R3-18R	36"	36"		9.0									MA							
EB Benson Rd		No Left Turn or U Turn (proposed)	R3-18L	36"	36"		9.0									MA							
		No Right Turn (proposed)	R3-1	36"	36"		9.0									MA							
I-229 AND BENSON ROAD INTERCHANGE, EAST RAMPS, Mast Arm																							
WB Ramp		Benson Road 2800E (proposed)	Special	66"	18"		8.3									MA							
		No Turn On Red (proposed)	R10-11a	36"	48"		12.0									MA							
		Left Turn Only (proposed)	R3-5L	30"	36"		7.5									MA							
		Left Turn Only (proposed)	R3-5L	30"	36"		7.5									MA							
		Left Turn Only (proposed)	R3-5L	30"	36"		7.5									MA							
		Benson Rd 2800E (existing)	Existing								1												
WB Benson Rd		No Left Turn or U Turn (proposed)	R3-18L	36"	36"		9.0									MA							
		No Right Turn (proposed)	R3-1	36"	36"		9.0									MA							
		I-229 Mast Arm Sign (existing)	Existing								1												
EB Benson Rd		No Left Turn (proposed)	R3-2	36"	36"		9.0									MA							
		No Right Turn or U Turn (proposed)	R3-18R	36"	36"		9.0									MA							
		I-229 Mast Arm Sign (existing)	Existing								1												
		IM 2292(98)9 - PCN 04XK Total				**342.0**	**647.0**	**783.8**	**5**	**0**	**25**	**3**	**5**	**5**	**78**			**897.8**	**65.9**	**5**	**28.0**	**25.0**	**105.0**

* The Remove Concrete Footing per each quantity shown in this table is for informational purposes only. All costs for removal of the concrete footings will be incidental to the contract lump sum price for "Remove Concrete Footing(s)".

REGISTERED PROFESSIONAL ENGINEER
REG. NO. 8324
LANCE R. MCQUEEN
SOUTH DAKOTA

Lance R. McQueen
8-1-22

HDR

Permanent Signing Details

FOR BIDDING PURPOSES ONLY

STATE OF SOUTH DAKOTA	PROJECT	SHEET	TOTAL SHEETS
	IM 2292(98)9 P 1200(04) IM 2292(112)6	S16	S78

FILE: ...\Section S\Sign Summary
PLOTTING DATE: 07-28-2022

REV DATE:
INITIAL:

REGISTERED PROFESSIONAL ENGINEER
REG. NO. 8324
LANCE R. MCQUEEN
SOUTH DAKOTA
Lance R. McQueen
8-1-22

LEGEND

(HI) HIGH INTENSITY (TYPE IV SHEETING PER ASTM D4956)
(FLAT ALUMINUM SIGN, NON-REMOVABLE COPY HIGH INTENSITY)

(VHI) SUPER/VERY HIGH INTENSITY (TYPE XI SHEETING PER ASTM D4956)
(FLAT ALUMINUM SIGN, NON-REMOVABLE COPY SUPER/VERY HIGH INTENSITY)

(EVHI) EXTRUDED SUPER/VERY HIGH INTENSITY (TYPE XI SHEETING PER ASTM D4956)
(EXTRUDED ALUMINUM SIGN, NONREMOVABLE COPY SUPER/VERY HIGH INTENSITY)

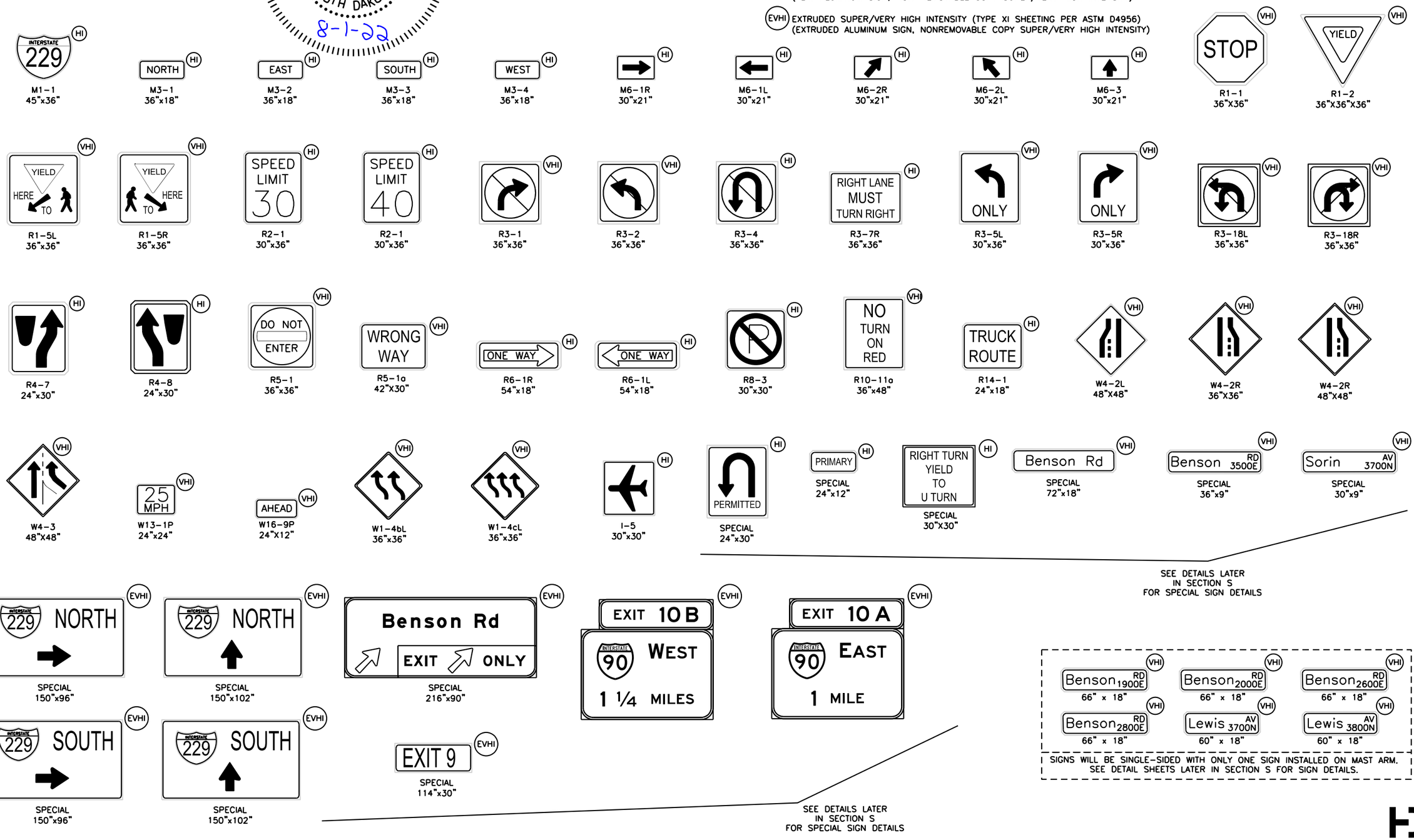

HDR

Plot Scale - 1:2000
Plotted From - ZHWANG
File - ...\Section S\Sign Summary

Permanent Signing Plan - I-229

FOR BIDDING PURPOSES ONLY

STATE OF SOUTH DAKOTA	PROJECT	SHEET	TOTAL SHEETS
	IM 2292(98)9 P 1200(04) IM 2292(112)6	S17	S78

FILE: ...\I-229 - south end.dgn
PLOTTING DATE: 07-28-2022

REV DATE:
INITIAL:

SCALE IN FEET
0 50 100

REGISTERED PROFESSIONAL ENGINEER
REG. NO. 8324
LANCE R. MCQUEEN
SOUTH DAKOTA
Lance R. McQueen
8-1-22

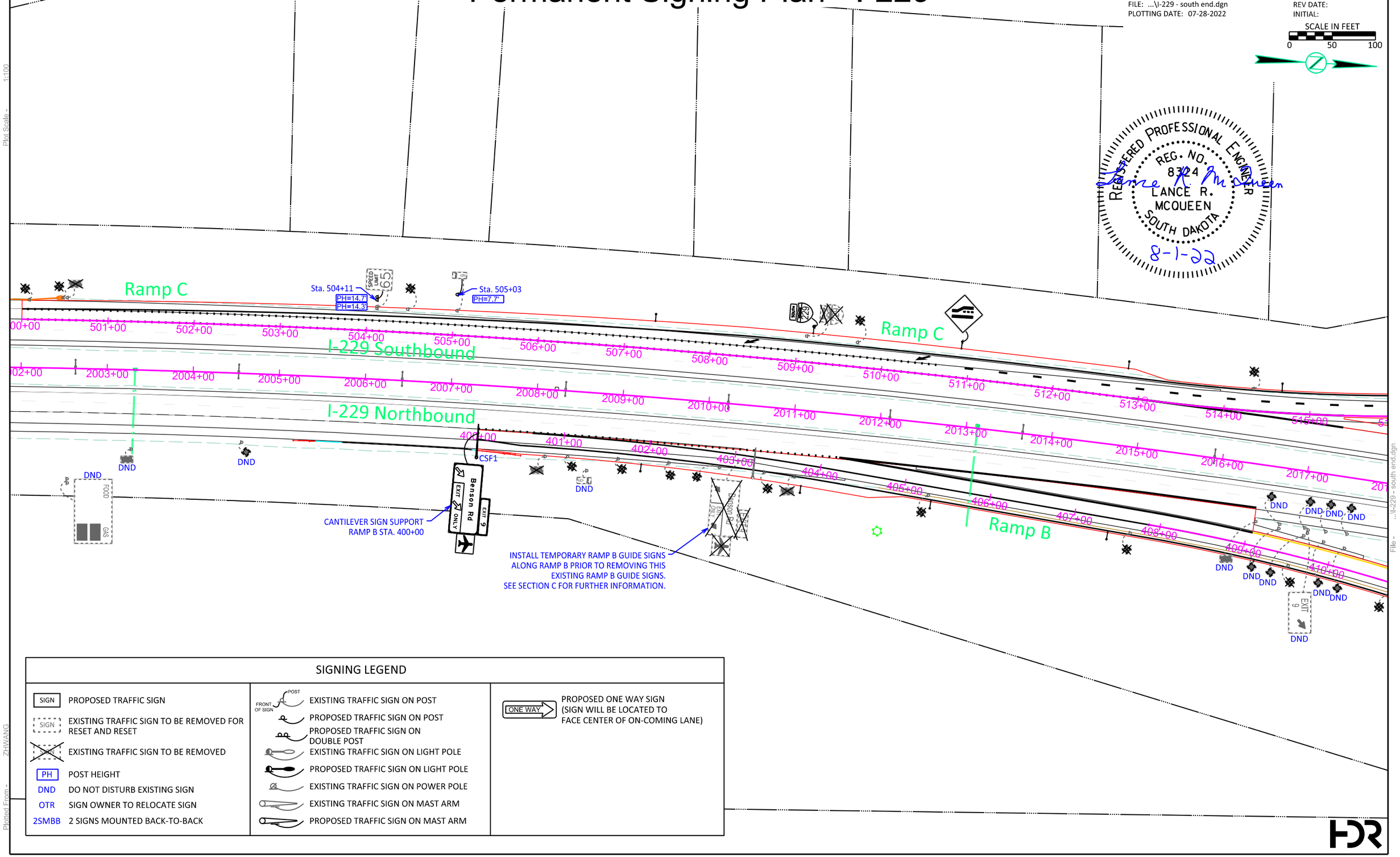

SIGNING LEGEND

SIGN	PROPOSED TRAFFIC SIGN
SIGN	EXISTING TRAFFIC SIGN TO BE REMOVED FOR RESET AND RESET
	EXISTING TRAFFIC SIGN TO BE REMOVED
PH	POST HEIGHT
DND	DO NOT DISTURB EXISTING SIGN
OTR	SIGN OWNER TO RELOCATE SIGN
2SMBB	2 SIGNS MOUNTED BACK-TO-BACK
POST, FRONT OF SIGN	EXISTING TRAFFIC SIGN ON POST
	PROPOSED TRAFFIC SIGN ON POST
	PROPOSED TRAFFIC SIGN ON DOUBLE POST
	EXISTING TRAFFIC SIGN ON LIGHT POLE
	PROPOSED TRAFFIC SIGN ON LIGHT POLE
	EXISTING TRAFFIC SIGN ON POWER POLE
	EXISTING TRAFFIC SIGN ON MAST ARM
	PROPOSED TRAFFIC SIGN ON MAST ARM
ONE WAY	PROPOSED ONE WAY SIGN (SIGN WILL BE LOCATED TO FACE CENTER OF ON-COMING LANE)

Plot Scale - 1:100
Plotted From - ZHWANG
File - ...\I-229 - south end.dgn

Permanent Signing Plan - I-229

FOR BIDDING PURPOSES ONLY

STATE OF SOUTH DAKOTA	PROJECT	SHEET	TOTAL SHEETS
	IM 2292(98)9 P 1200(04) IM 2292(112)6	S18	S78

FILE: ...\I-229 - Benson Road.dgn
PLOTTING DATE: 07-28-2022

REV DATE:
INITIAL:

SCALE IN FEET
0 50 100

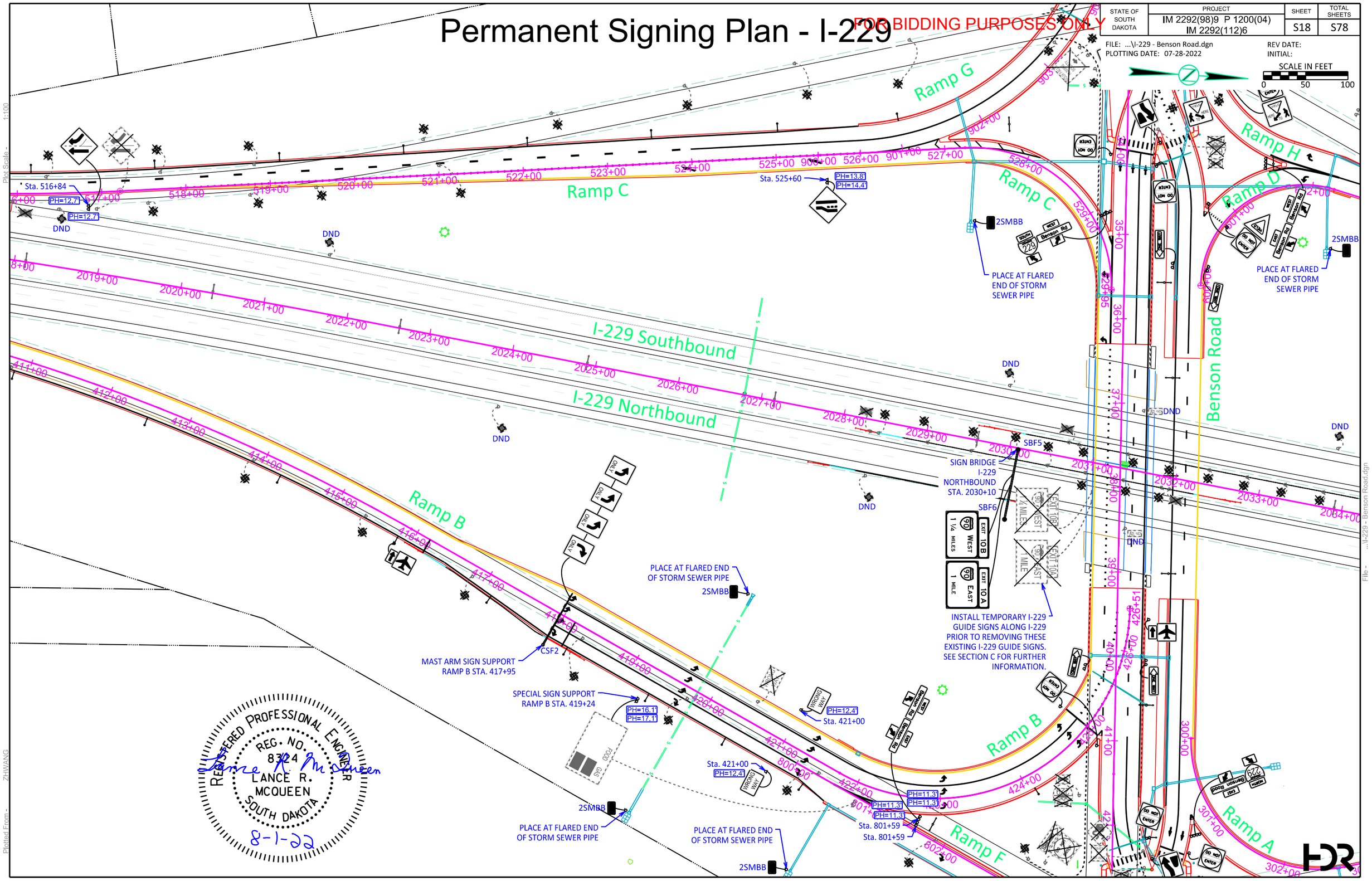

Permanent Signing Plan - I-229

FOR BIDDING PURPOSES ONLY

STATE OF SOUTH DAKOTA	PROJECT	SHEET	TOTAL SHEETS
	IM 2292(98)9 P 1200(04) IM 2292(112)6	S19	S78

FILE: ...\I-229 - north end.dgn
PLOTTING DATE: 07-28-2022

REV DATE:
INITIAL:

SCALE IN FEET
0 50 100

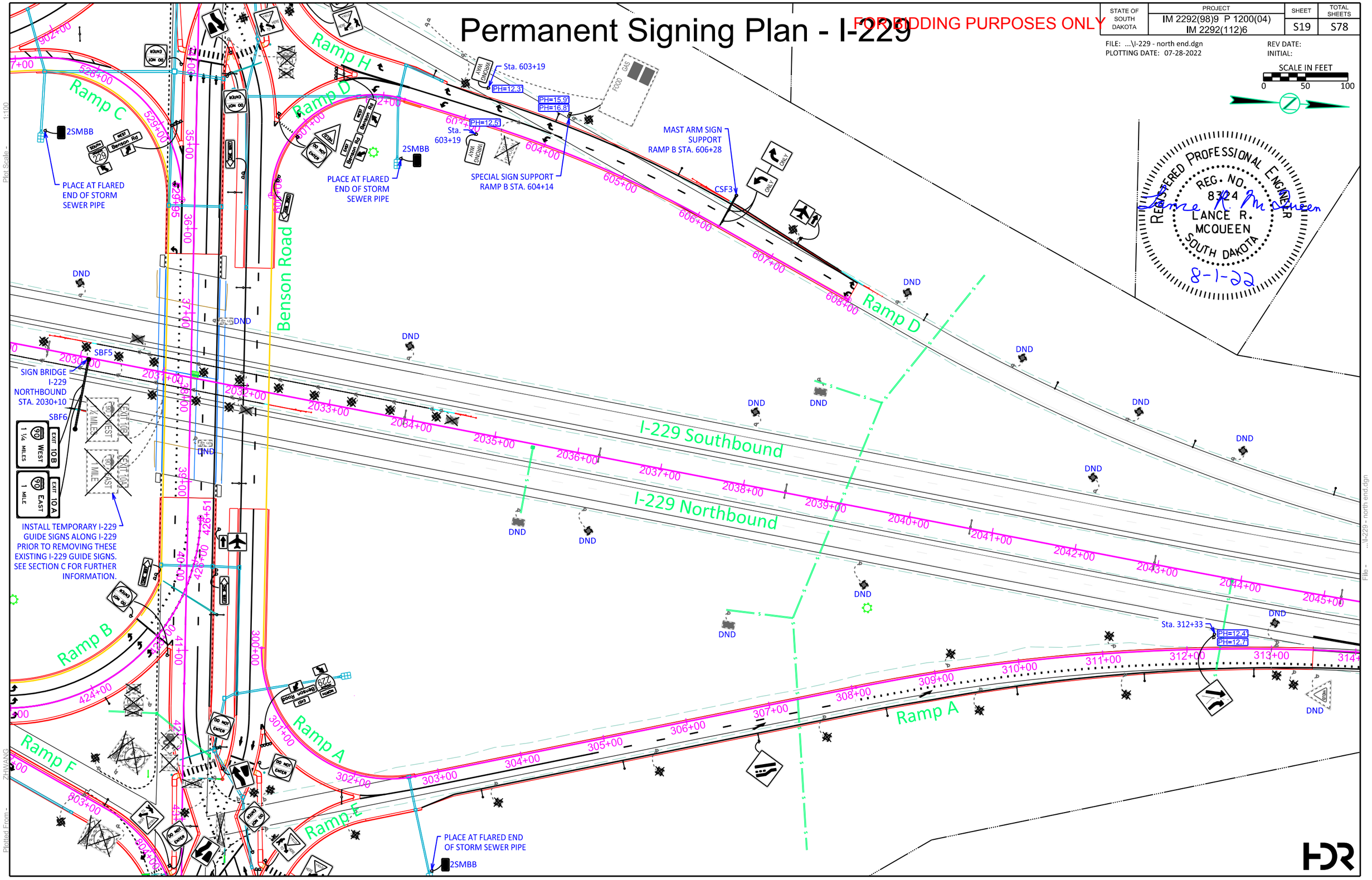

Permanent Signing Plan - I-229

FOR BIDDING PURPOSES ONLY

STATE OF SOUTH DAKOTA	PROJECT	SHEET	TOTAL SHEETS
	IM 2292(98)9 P 1200(04) IM 2292(112)6	S20	S78

FILE: ...\Section S\I-229 - north end
PLOTTING DATE: 07-28-2022

REV DATE:
INITIAL:

SCALE IN FEET
0 50 100

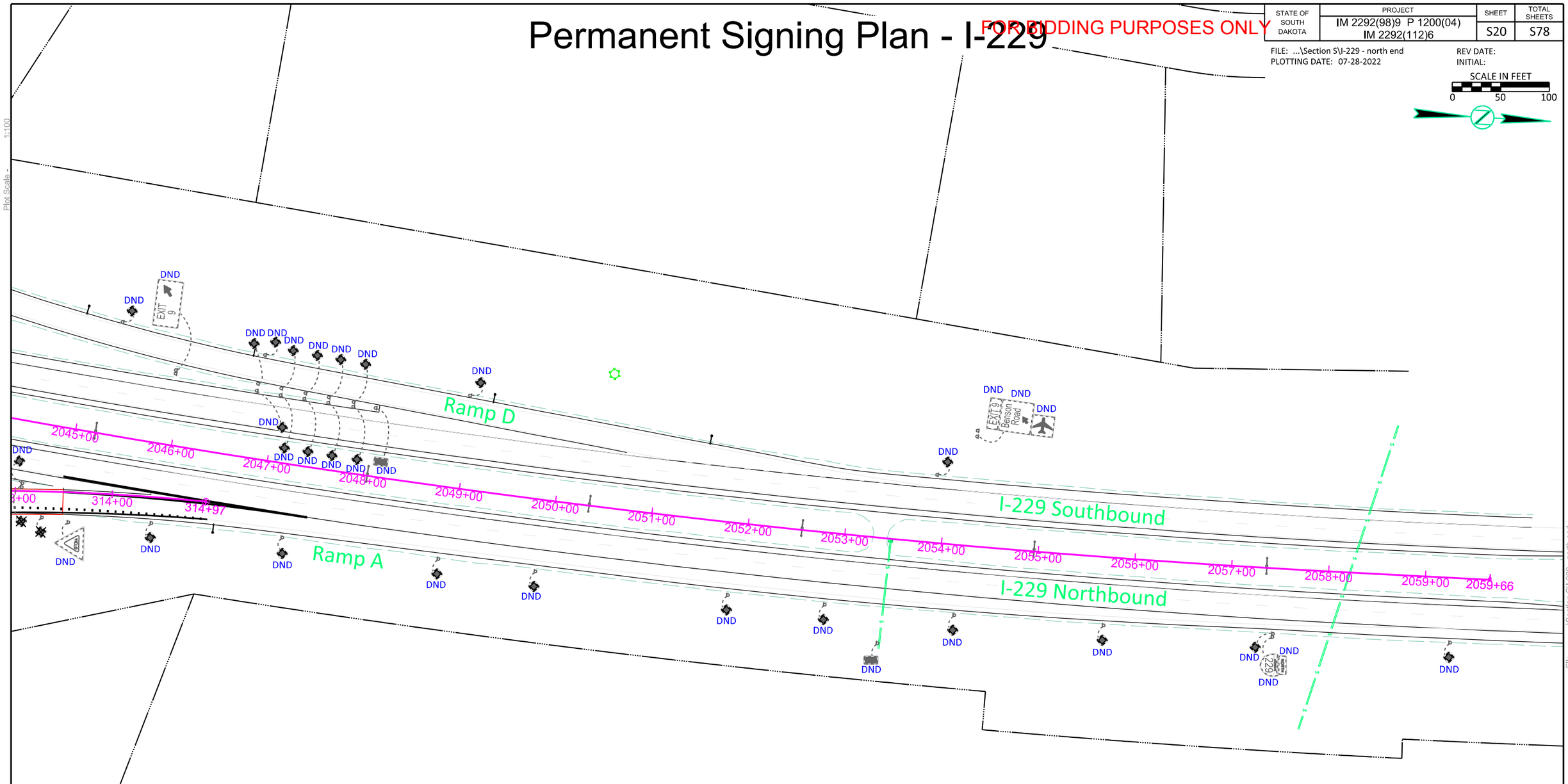

SIGNING LEGEND

SIGN — PROPOSED TRAFFIC SIGN	POST / FRONT OF SIGN — EXISTING TRAFFIC SIGN ON POST	ONE WAY — PROPOSED ONE WAY SIGN (SIGN WILL BE LOCATED TO FACE CENTER OF ON-COMING LANE)
SIGN — EXISTING TRAFFIC SIGN TO BE REMOVED FOR RESET AND RESET	PROPOSED TRAFFIC SIGN ON POST	
EXISTING TRAFFIC SIGN TO BE REMOVED	PROPOSED TRAFFIC SIGN ON DOUBLE POST	
PH — POST HEIGHT	EXISTING TRAFFIC SIGN ON LIGHT POLE	
DND — DO NOT DISTURB EXISTING SIGN	PROPOSED TRAFFIC SIGN ON LIGHT POLE	
OTR — SIGN OWNER TO RELOCATE SIGN	EXISTING TRAFFIC SIGN ON POWER POLE	
2SMBB — 2 SIGNS MOUNTED BACK-TO-BACK	EXISTING TRAFFIC SIGN ON MAST ARM	
	PROPOSED TRAFFIC SIGN ON MAST ARM	

REGISTERED PROFESSIONAL ENGINEER
REG. NO. 8324
LANCE R. MCQUEEN
SOUTH DAKOTA
Lance R. McQueen
8-1-22

HDR

Plot Scale - 1:100
Plotted From - ZHWANG
File - ...\Section S\I-229 - north end

Permanent Signing Plan - Benson Road

FOR BIDDING PURPOSES ONLY

STATE OF SOUTH DAKOTA	PROJECT	SHEET	TOTAL SHEETS
	IM 2292(98)9 P 1200(04) IM 2292(112)6	S21	S78

FILE: ...\Section S\Benson Rd - west end
PLOTTING DATE: 07-28-2022

REV DATE:
INITIAL:

SCALE IN FEET
0 20 40

REGISTERED PROFESSIONAL ENGINEER
REG. NO. 8324
LANCE R. MCQUEEN
SOUTH DAKOTA
Lance R. McQueen
8-1-22

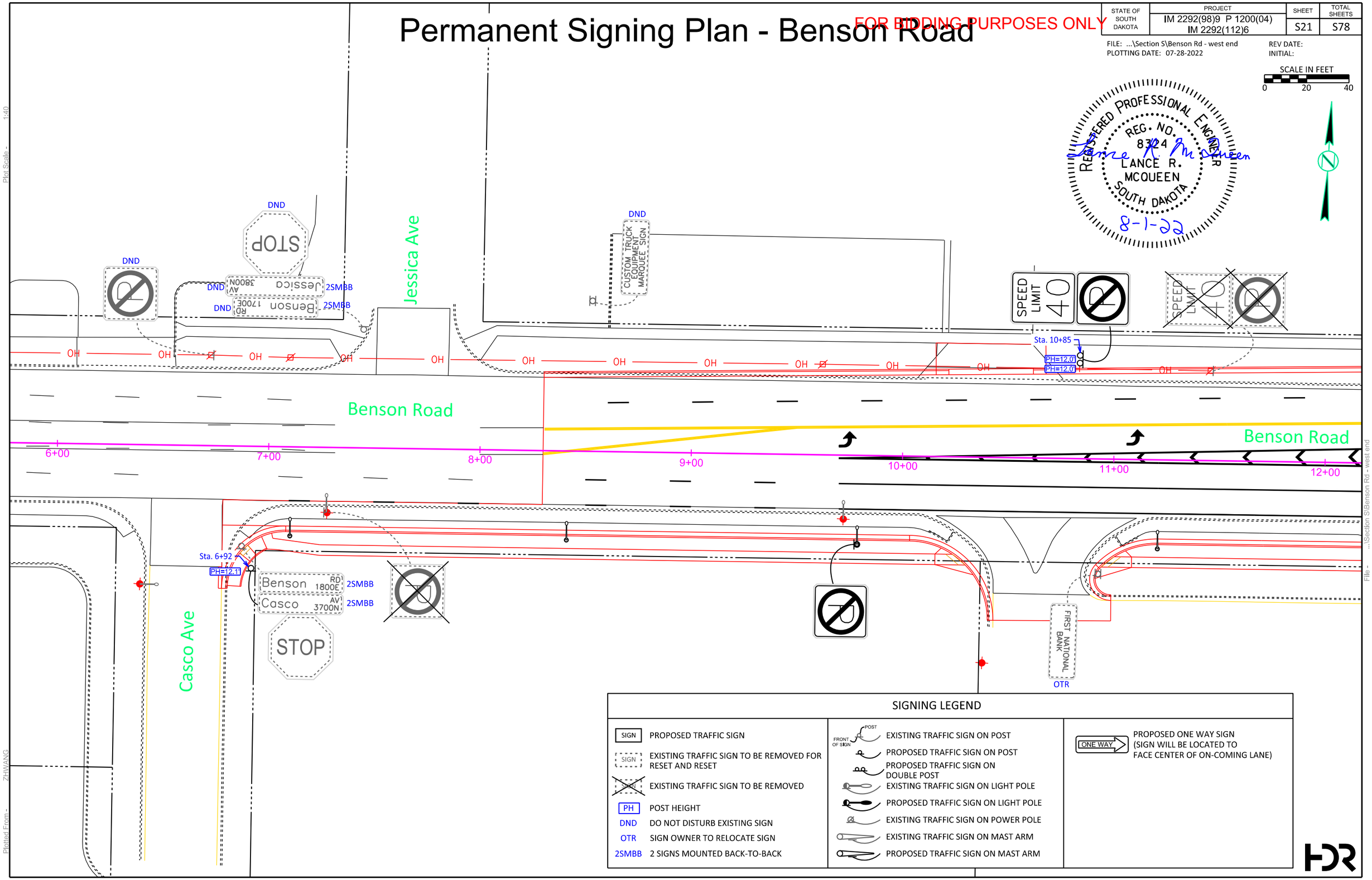

SIGNING LEGEND

SIGN	PROPOSED TRAFFIC SIGN
SIGN	EXISTING TRAFFIC SIGN TO BE REMOVED FOR RESET AND RESET
SIGN	EXISTING TRAFFIC SIGN TO BE REMOVED
PH	POST HEIGHT
DND	DO NOT DISTURB EXISTING SIGN
OTR	SIGN OWNER TO RELOCATE SIGN
2SMBB	2 SIGNS MOUNTED BACK-TO-BACK
POST / FRONT OF SIGN	EXISTING TRAFFIC SIGN ON POST
	PROPOSED TRAFFIC SIGN ON POST
	PROPOSED TRAFFIC SIGN ON DOUBLE POST
	EXISTING TRAFFIC SIGN ON LIGHT POLE
	PROPOSED TRAFFIC SIGN ON LIGHT POLE
	EXISTING TRAFFIC SIGN ON POWER POLE
	EXISTING TRAFFIC SIGN ON MAST ARM
	PROPOSED TRAFFIC SIGN ON MAST ARM
ONE WAY	PROPOSED ONE WAY SIGN (SIGN WILL BE LOCATED TO FACE CENTER OF ON-COMING LANE)

HDR

Plot Scale - 1:40
Plotted From - ZHWANG
File - ...\Section S\Benson Rd - west end

Permanent Signing Plan - Benson Road

FOR BIDDING PURPOSES ONLY

STATE OF SOUTH DAKOTA	PROJECT	SHEET	TOTAL SHEETS
	IM 2292(98)9 P 1200(04) IM 2292(112)6	S22	S78

FILE: ...\Benson Rd - Lewis Ave
PLOTTING DATE: 07-28-2022

REV DATE:
INITIAL:

SCALE IN FEET
0 20 40

REGISTERED PROFESSIONAL ENGINEER
REG. NO. 8324
LANCE R. MCQUEEN
SOUTH DAKOTA
Lance R. McQueen
8-1-22

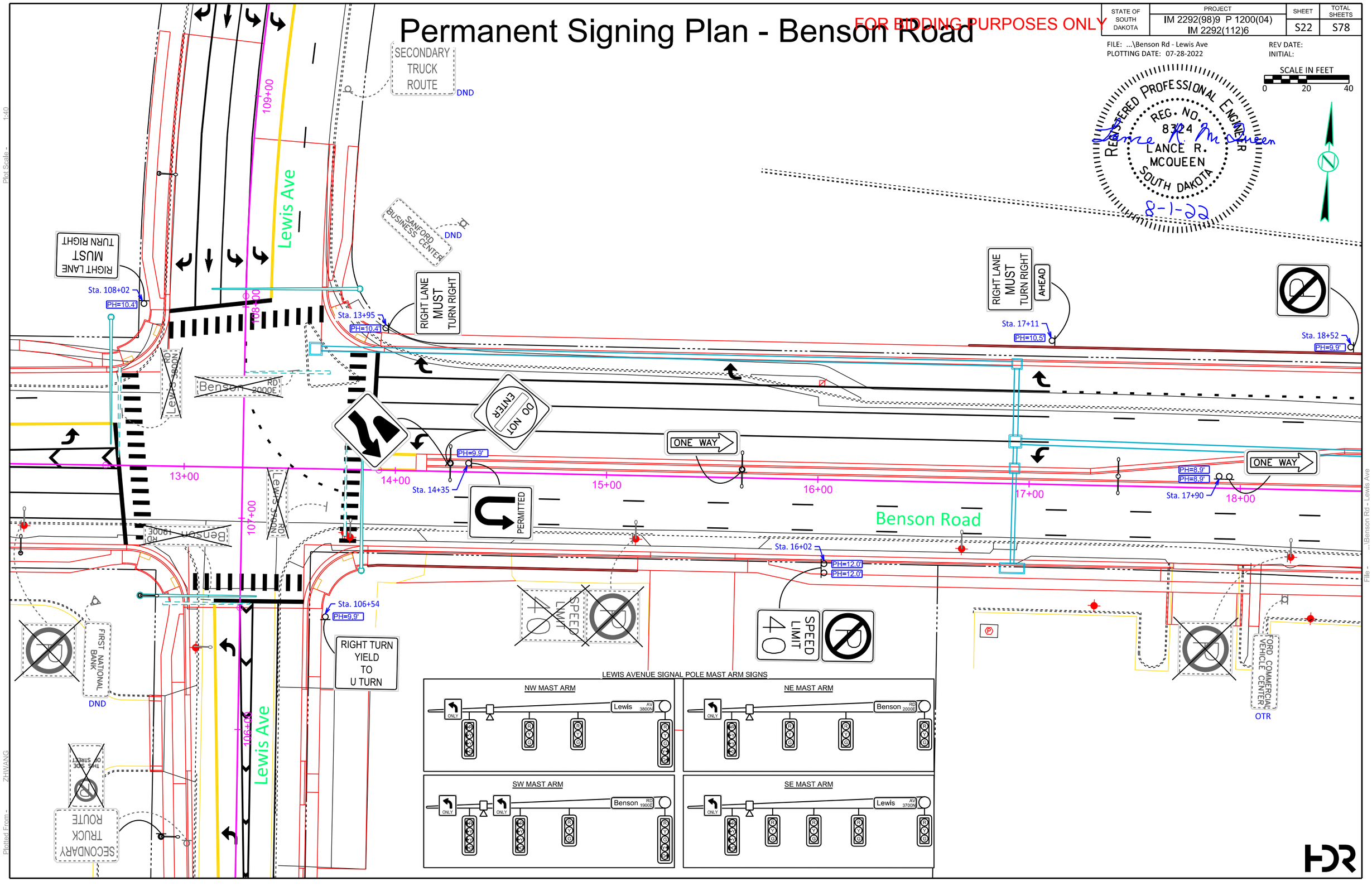

Plot Scale - 1:40
Plotted From - ZHWANG
File - ...\Benson Rd - Lewis Ave

Permanent Signing Plan - Benson Road

FOR BIDDING PURPOSES ONLY

STATE OF SOUTH DAKOTA	PROJECT	SHEET	TOTAL SHEETS
	IM 2292(98)9 P 1200(04) IM 2292(112)6	S23	S78

FILE: ...\Benson Rd- St Paul Ave
PLOTTING DATE: 07-28-2022

REV DATE:
INITIAL:

SCALE IN FEET
0 20 40

REGISTERED PROFESSIONAL ENGINEER
REG. NO. 8324
LANCE R. MCQUEEN
SOUTH DAKOTA
Lance R. McQueen
8-1-22

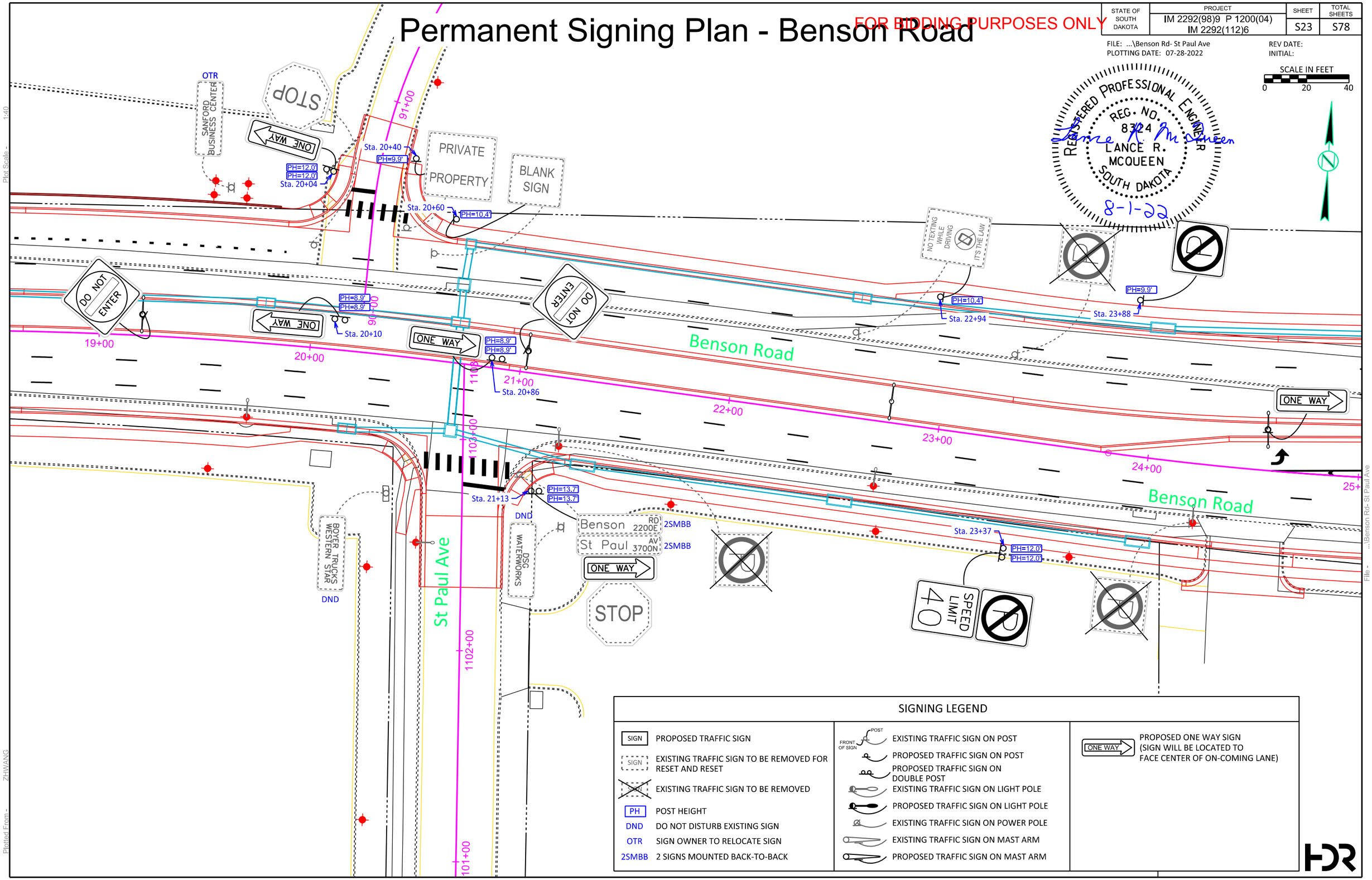

SIGNING LEGEND

SIGN	PROPOSED TRAFFIC SIGN
SIGN	EXISTING TRAFFIC SIGN TO BE REMOVED FOR RESET AND RESET
SIGN	EXISTING TRAFFIC SIGN TO BE REMOVED
PH	POST HEIGHT
DND	DO NOT DISTURB EXISTING SIGN
OTR	SIGN OWNER TO RELOCATE SIGN
2SMBB	2 SIGNS MOUNTED BACK-TO-BACK
POST / FRONT OF SIGN	EXISTING TRAFFIC SIGN ON POST
	PROPOSED TRAFFIC SIGN ON POST
	PROPOSED TRAFFIC SIGN ON DOUBLE POST
	EXISTING TRAFFIC SIGN ON LIGHT POLE
	PROPOSED TRAFFIC SIGN ON LIGHT POLE
	EXISTING TRAFFIC SIGN ON POWER POLE
	EXISTING TRAFFIC SIGN ON MAST ARM
	PROPOSED TRAFFIC SIGN ON MAST ARM
ONE WAY	PROPOSED ONE WAY SIGN (SIGN WILL BE LOCATED TO FACE CENTER OF ON-COMING LANE)

HDR

Plot Scale - 1:40
Plotted From - ZHWANG
File - ...\Benson Rd- St Paul Ave

Permanent Signing Plan - Benson Road

FOR BIDDING PURPOSES ONLY

STATE OF SOUTH DAKOTA	PROJECT	SHEET	TOTAL SHEETS
	IM 2292(98)9 P 1200(04) IM 2292(112)6	S24	S78

FILE: ...\Benson Rd - Potsdam Ave
PLOTTING DATE: 07-28-2022

REV DATE:
INITIAL:

SCALE IN FEET
0 20 40

REGISTERED PROFESSIONAL ENGINEER
REG. NO. 8324
LANCE R. MCQUEEN
SOUTH DAKOTA
8-1-22

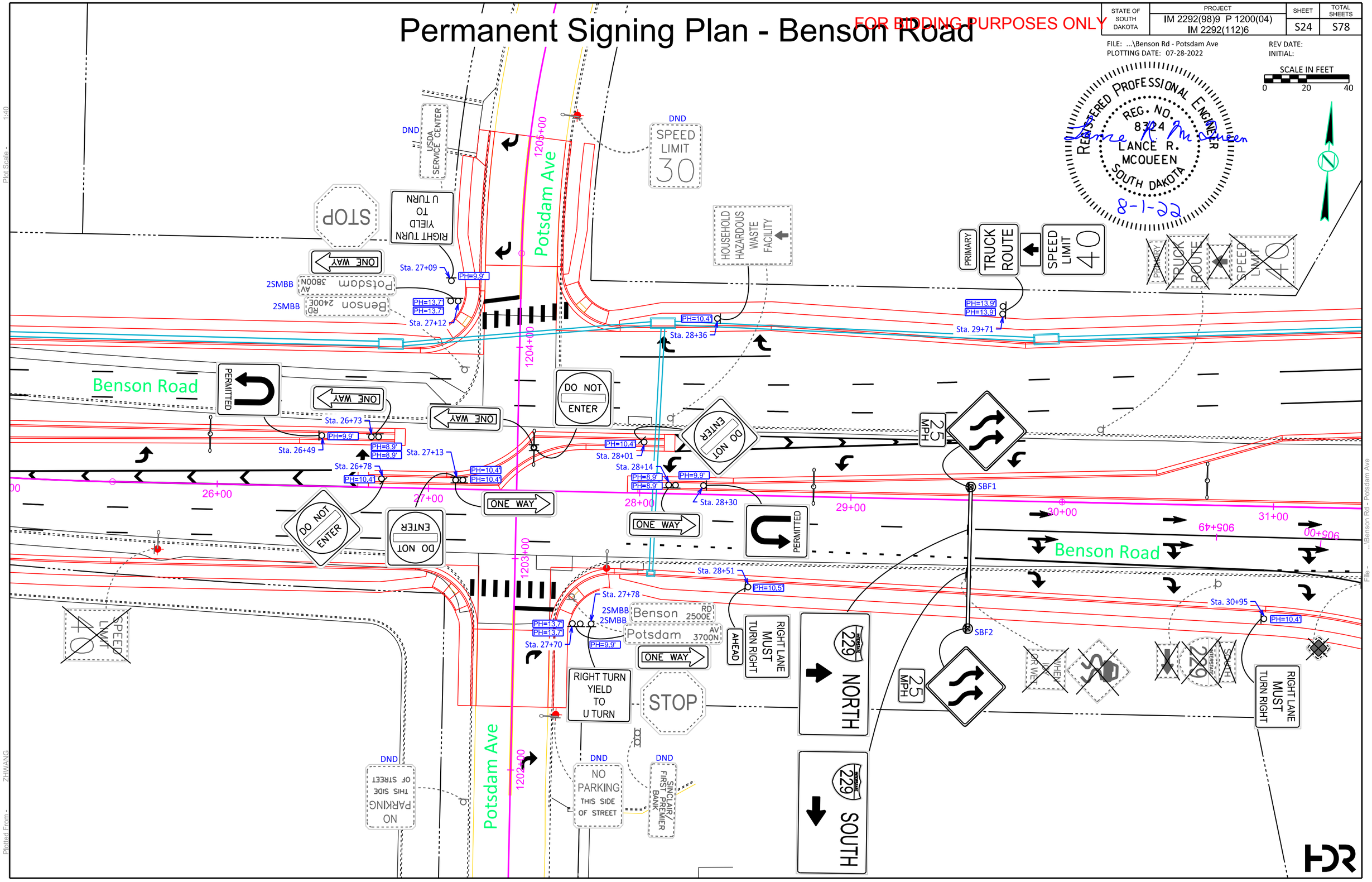

Permanent Signing Plan - Benson Road

FOR BIDDING PURPOSES ONLY

STATE OF SOUTH DAKOTA	PROJECT	SHEET	TOTAL SHEETS
	IM 2292(98)9 P 1200(04) IM 2292(112)6	S25	S78

FILE: ...\Benson Rd - west ramps
PLOTTING DATE: 07-28-2022

REV DATE:
INITIAL:

SCALE IN FEET
0 20 40

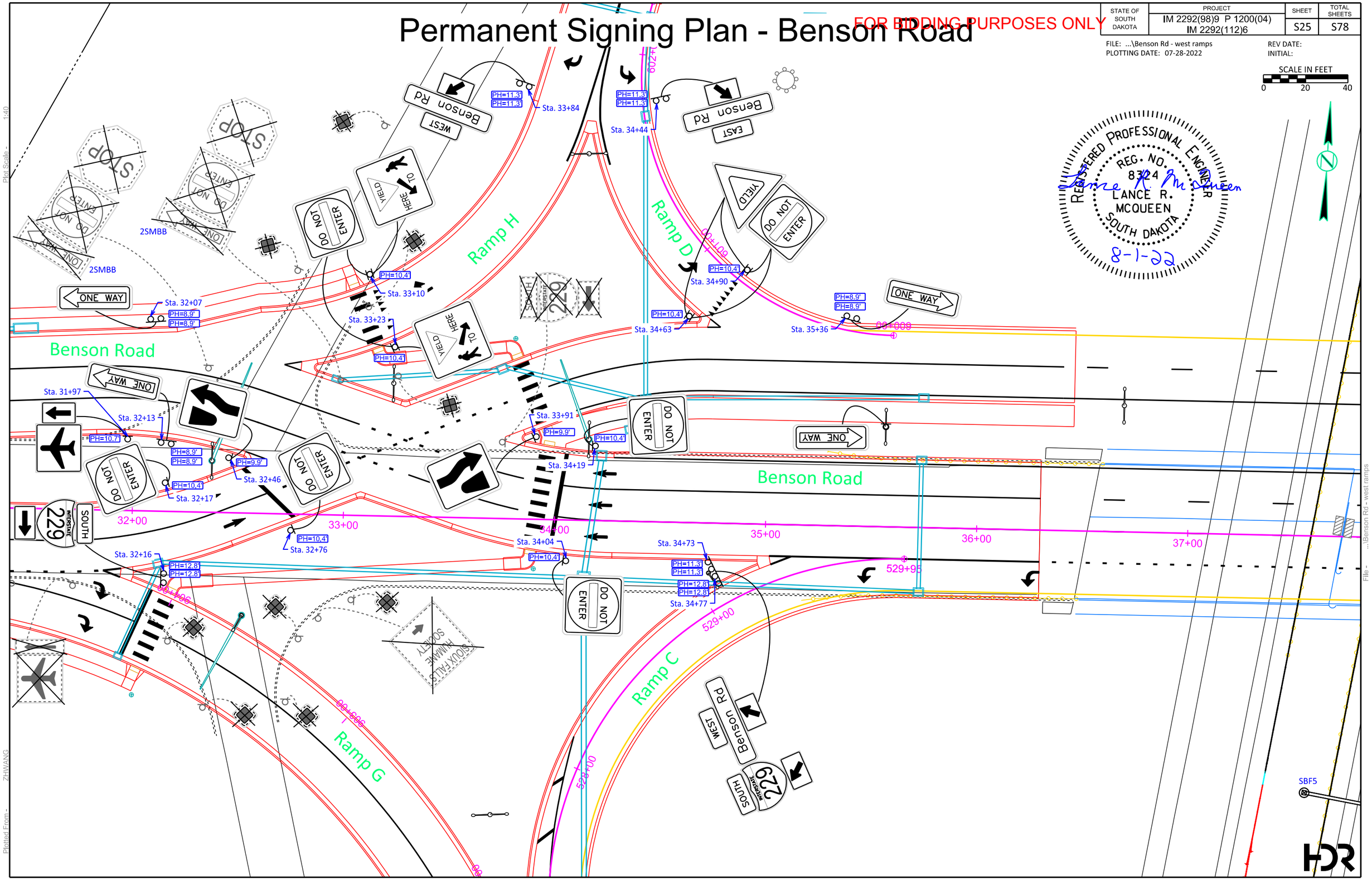

REGISTERED PROFESSIONAL ENGINEER
REG. NO. 8324
LANCE R. MCQUEEN
SOUTH DAKOTA
Lance R. McQueen
8-1-22

Plot Scale - 1:40
Plotted From - ZHWANG
File - ...\Benson Rd - west ramps

Permanent Signing Plan - Benson Road

FOR BIDDING PURPOSES ONLY

STATE OF SOUTH DAKOTA	PROJECT	SHEET	TOTAL SHEETS
	IM 2292(98)9 P 1200(04) IM 2292(112)6	S26	S78

FILE: ...\Benson Rd - east ramps
PLOTTING DATE: 07-28-2022

REV DATE:
INITIAL:

SCALE IN FEET
0 20 40

SIGNING LEGEND

SIGN	PROPOSED TRAFFIC SIGN
SIGN	EXISTING TRAFFIC SIGN TO BE REMOVED FOR RESET AND RESET
SIGN	EXISTING TRAFFIC SIGN TO BE REMOVED
PH	POST HEIGHT
DND	DO NOT DISTURB EXISTING SIGN
OTR	SIGN OWNER TO RELOCATE SIGN
2SMBB	2 SIGNS MOUNTED BACK-TO-BACK
POST / FRONT OF SIGN	EXISTING TRAFFIC SIGN ON POST
	PROPOSED TRAFFIC SIGN ON POST
	PROPOSED TRAFFIC SIGN ON DOUBLE POST
	EXISTING TRAFFIC SIGN ON LIGHT POLE
	PROPOSED TRAFFIC SIGN ON LIGHT POLE
	EXISTING TRAFFIC SIGN ON POWER POLE
	EXISTING TRAFFIC SIGN ON MAST ARM
	PROPOSED TRAFFIC SIGN ON MAST ARM
ONE WAY	PROPOSED ONE WAY SIGN (SIGN WILL BE LOCATED TO FACE CENTER OF ON-COMING LANE)

REGISTERED PROFESSIONAL ENGINEER
REG. NO. 8324
LANCE R. MCQUEEN
SOUTH DAKOTA
Lance R. McQueen
8-1-22

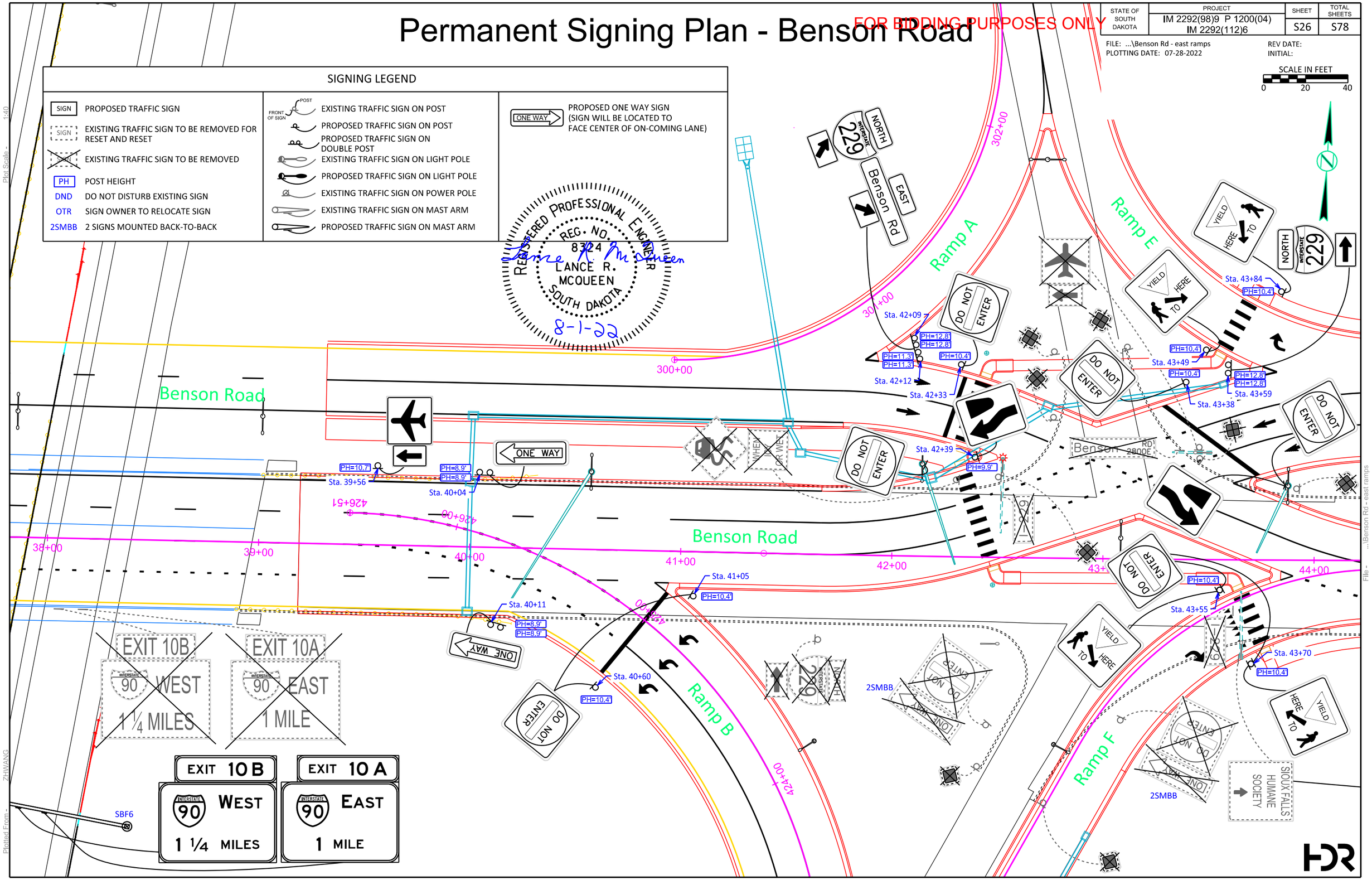

Plot Scale - 1:40
Plotted From - ZHWANG
File - ...\Benson Rd - east ramps

Permanent Signing Plan - Benson Road
Overall View @ I-229 Interchange

FOR BIDDING PURPOSES ONLY

STATE OF SOUTH DAKOTA	PROJECT	SHEET	TOTAL SHEETS
	IM 2292(98)9 P 1200(04) IM 2292(112)6	S27	S78

FILE: ...\Benson Rd - I-229 100 scale
PLOTTING DATE: 07-28-2022

REV DATE:
INITIAL:

SCALE IN FEET
0 50 100

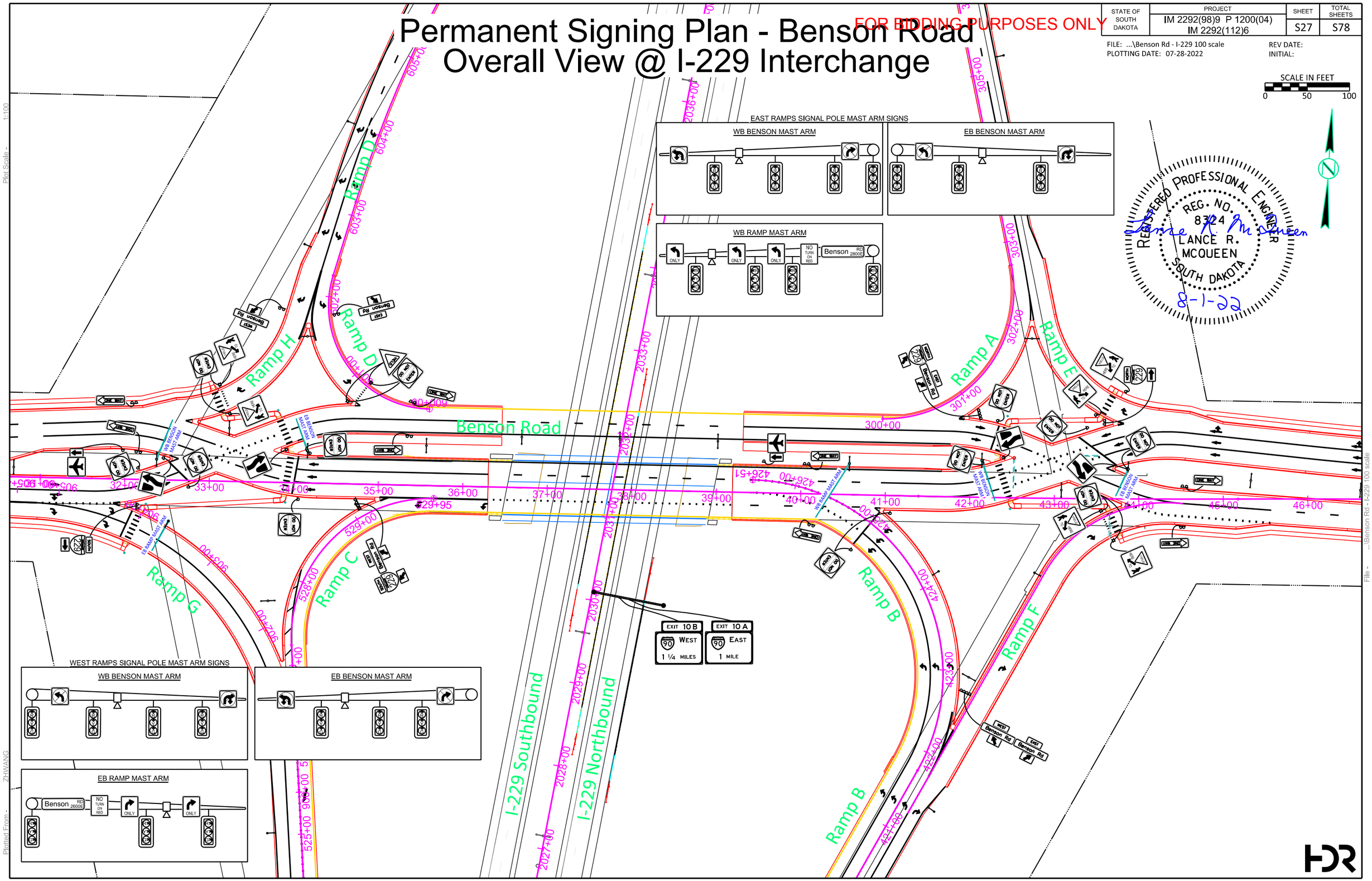

Plot Scale - 1:100
Plotted From - ZHWANG
File - ...\Benson Rd - I-229 100 scale

Permanent Signing Plan - Benson Road

FOR BIDDING PURPOSES ONLY

STATE OF SOUTH DAKOTA	PROJECT	SHEET	TOTAL SHEETS
	IM 2292(98)9 P 1200(04) IM 2292(112)6	S28	S78

FILE: ...\Sheet_Files\Section S\Benson
PLOTTING DATE: 07-28-2022

REV DATE:
INITIAL:

SCALE IN FEET
0 20 40

SIGNING LEGEND

SIGN — PROPOSED TRAFFIC SIGN	POST / FRONT OF SIGN — EXISTING TRAFFIC SIGN ON POST	ONE WAY — PROPOSED ONE WAY SIGN (SIGN WILL BE LOCATED TO FACE CENTER OF ON-COMING LANE)
SIGN — EXISTING TRAFFIC SIGN TO BE REMOVED FOR RESET AND RESET	PROPOSED TRAFFIC SIGN ON POST	
SIGN — EXISTING TRAFFIC SIGN TO BE REMOVED	PROPOSED TRAFFIC SIGN ON DOUBLE POST	
PH — POST HEIGHT	EXISTING TRAFFIC SIGN ON LIGHT POLE	
DND — DO NOT DISTURB EXISTING SIGN	PROPOSED TRAFFIC SIGN ON LIGHT POLE	
OTR — SIGN OWNER TO RELOCATE SIGN	EXISTING TRAFFIC SIGN ON POWER POLE	
2SMBB — 2 SIGNS MOUNTED BACK-TO-BACK	EXISTING TRAFFIC SIGN ON MAST ARM	
	PROPOSED TRAFFIC SIGN ON MAST ARM	

REGISTERED PROFESSIONAL ENGINEER
REG. NO. 8324
LANCE R. MCQUEEN
SOUTH DAKOTA
Lance R. McQueen
8-1-22

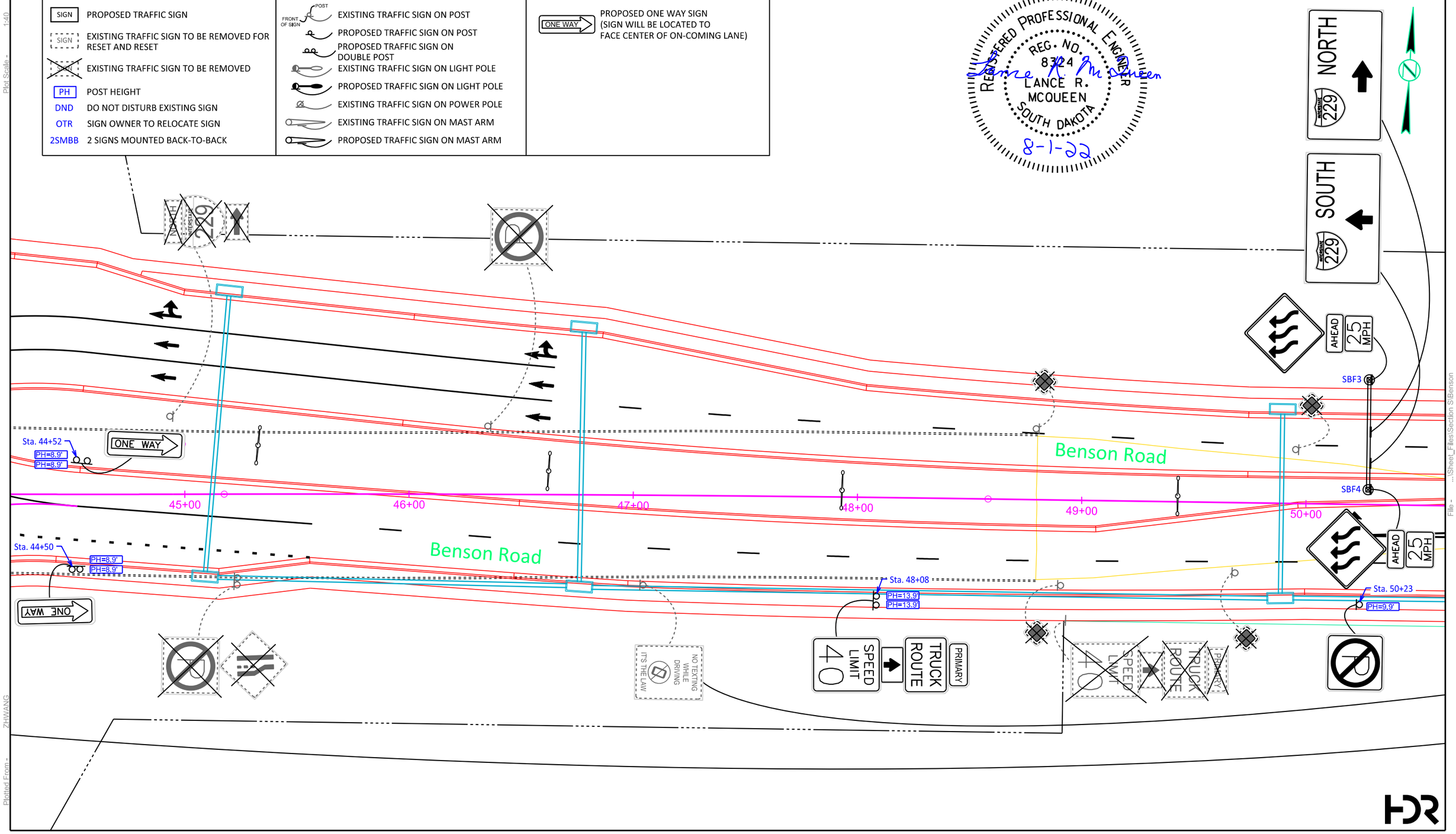

Plot Scale - 1:40
Plotted From - ZHWANG
File - ...\Sheet_Files\Section S\Benson

Permanent Signing Plan - Benson Road

FOR BIDDING PURPOSES ONLY

STATE OF SOUTH DAKOTA	PROJECT	SHEET	TOTAL SHEETS
	IM 2292(98)9 P 1200(04) IM 2292(112)6	S29	S78

FILE: ...\Sheet_Files\Section S\Benson
PLOTTING DATE: 07-28-2022

REV DATE:
INITIAL:

SCALE IN FEET
0 20 40

SIGNING LEGEND

SIGN PROPOSED TRAFFIC SIGN	EXISTING TRAFFIC SIGN ON POST	ONE WAY PROPOSED ONE WAY SIGN (SIGN WILL BE LOCATED TO FACE CENTER OF ON-COMING LANE)
SIGN EXISTING TRAFFIC SIGN TO BE REMOVED FOR RESET AND RESET	PROPOSED TRAFFIC SIGN ON POST	
SIGN EXISTING TRAFFIC SIGN TO BE REMOVED	PROPOSED TRAFFIC SIGN ON DOUBLE POST	
PH POST HEIGHT	EXISTING TRAFFIC SIGN ON LIGHT POLE	
DND DO NOT DISTURB EXISTING SIGN	PROPOSED TRAFFIC SIGN ON LIGHT POLE	
OTR SIGN OWNER TO RELOCATE SIGN	EXISTING TRAFFIC SIGN ON POWER POLE	
2SMBB 2 SIGNS MOUNTED BACK-TO-BACK	EXISTING TRAFFIC SIGN ON MAST ARM	
	PROPOSED TRAFFIC SIGN ON MAST ARM	

REGISTERED PROFESSIONAL ENGINEER
REG. NO. 8324
LANCE R. MCQUEEN
SOUTH DAKOTA
Lance R. McQueen
8-1-22

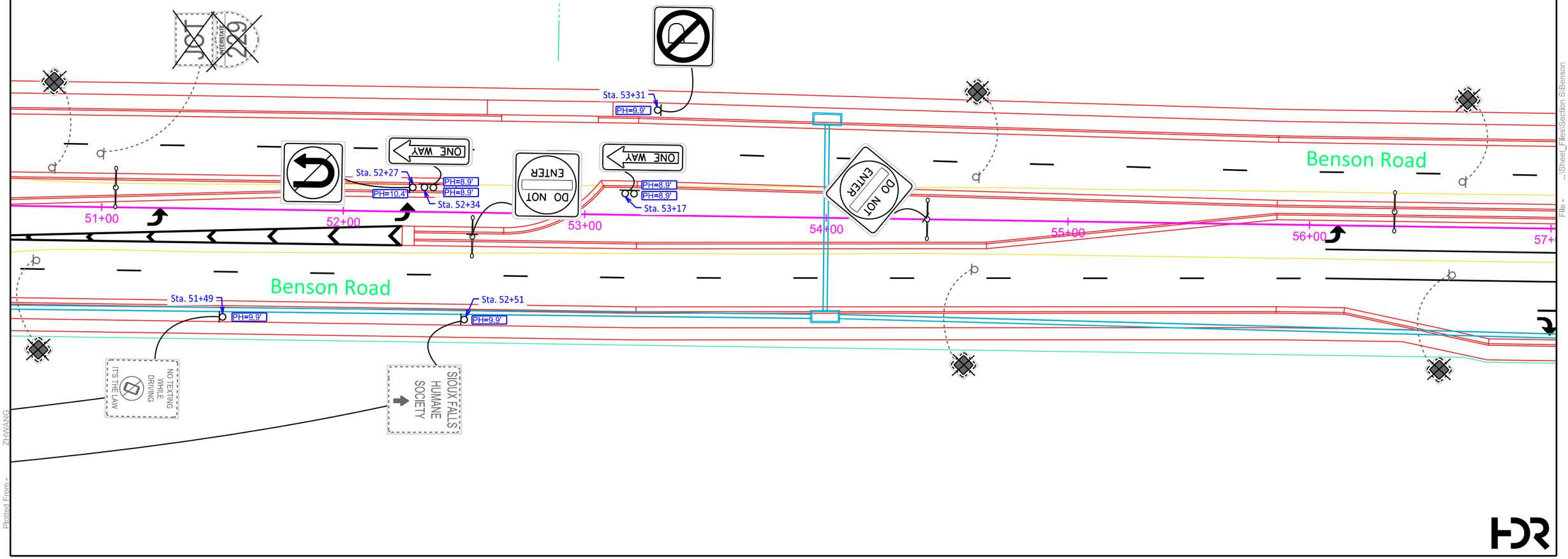

HDR

Plot Scale - 1:40
Plotted From - ZHIWANG
File - ...\Sheet_Files\Section S\Benson

Permanent Signing Plan - Benson Road

FOR BIDDING PURPOSES ONLY

STATE OF SOUTH DAKOTA	PROJECT	SHEET	TOTAL SHEETS
	IM 2292(98)9 P 1200(04) IM 2292(112)6	S30	S78

FILE: ...\Sheet_Files\Section S\Benson
PLOTTING DATE: 07-28-2022

REV DATE:
INITIAL:

SCALE IN FEET
0 20 40

SIGNING LEGEND

SIGN	PROPOSED TRAFFIC SIGN
SIGN	EXISTING TRAFFIC SIGN TO BE REMOVED FOR RESET AND RESET
SIGN	EXISTING TRAFFIC SIGN TO BE REMOVED
PH	POST HEIGHT
DND	DO NOT DISTURB EXISTING SIGN
OTR	SIGN OWNER TO RELOCATE SIGN
2SMBB	2 SIGNS MOUNTED BACK-TO-BACK
POST / FRONT OF SIGN	EXISTING TRAFFIC SIGN ON POST
	PROPOSED TRAFFIC SIGN ON POST
	PROPOSED TRAFFIC SIGN ON DOUBLE POST
	EXISTING TRAFFIC SIGN ON LIGHT POLE
	PROPOSED TRAFFIC SIGN ON LIGHT POLE
	EXISTING TRAFFIC SIGN ON POWER POLE
	EXISTING TRAFFIC SIGN ON MAST ARM
	PROPOSED TRAFFIC SIGN ON MAST ARM
ONE WAY	PROPOSED ONE WAY SIGN (SIGN WILL BE LOCATED TO FACE CENTER OF ON-COMING LANE)

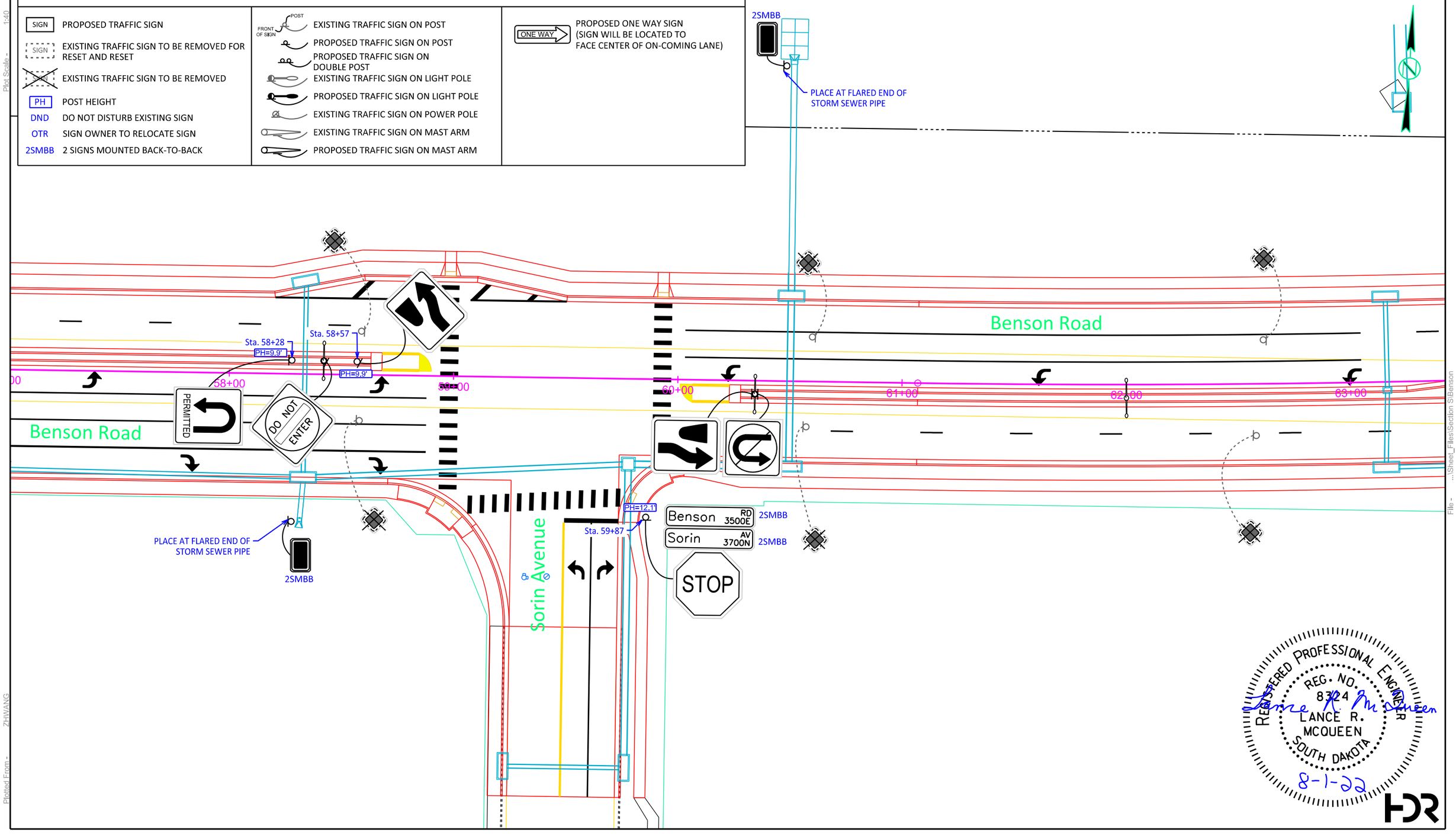

REGISTERED PROFESSIONAL ENGINEER
REG. NO. 8324
LANCE R. MCQUEEN
SOUTH DAKOTA
Lance R. McQueen
8-1-22

HDR

Plot Scale - 1:40
Plotted From - ZHWANG
File - ...\Sheet_Files\Section S\Benson

Permanent Signing Plan - Benson Road

FOR BIDDING PURPOSES ONLY

STATE OF SOUTH DAKOTA	PROJECT	SHEET	TOTAL SHEETS
	IM 2292(98)9 P 1200(04) IM 2292(112)6	S31	S78

FILE: ...\Sheet_Files\Section S\Benson
PLOTTING DATE: 07-28-2022

REV DATE:
INITIAL:

SCALE IN FEET
0 20 40

SIGNING LEGEND

SIGN — PROPOSED TRAFFIC SIGN	POST / FRONT OF SIGN — EXISTING TRAFFIC SIGN ON POST	ONE WAY — PROPOSED ONE WAY SIGN (SIGN WILL BE LOCATED TO FACE CENTER OF ON-COMING LANE)
SIGN — EXISTING TRAFFIC SIGN TO BE REMOVED FOR RESET AND RESET	PROPOSED TRAFFIC SIGN ON POST	
SIGN — EXISTING TRAFFIC SIGN TO BE REMOVED	PROPOSED TRAFFIC SIGN ON DOUBLE POST	
PH — POST HEIGHT	EXISTING TRAFFIC SIGN ON LIGHT POLE	
DND — DO NOT DISTURB EXISTING SIGN	PROPOSED TRAFFIC SIGN ON LIGHT POLE	
OTR — SIGN OWNER TO RELOCATE SIGN	EXISTING TRAFFIC SIGN ON POWER POLE	
2SMBB — 2 SIGNS MOUNTED BACK-TO-BACK	EXISTING TRAFFIC SIGN ON MAST ARM	
	PROPOSED TRAFFIC SIGN ON MAST ARM	

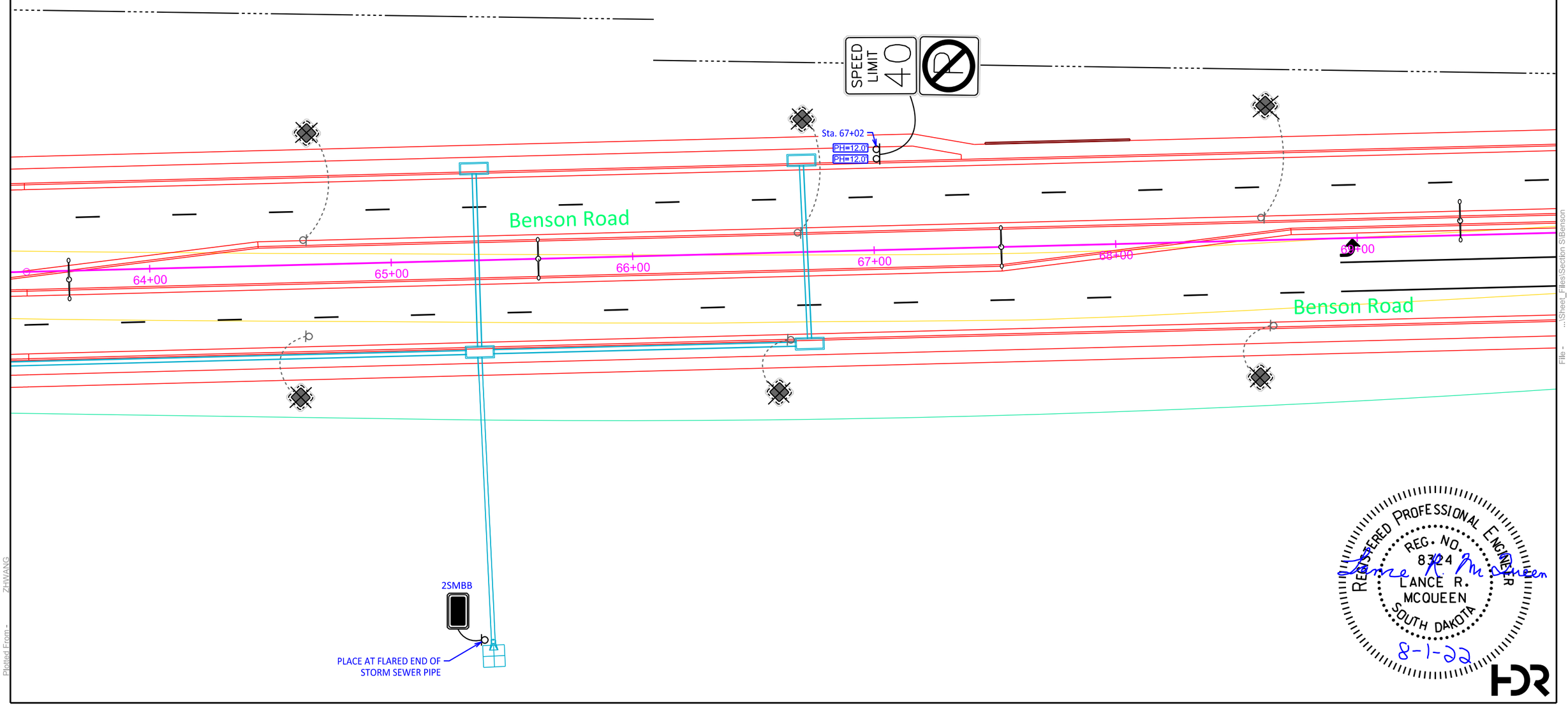

REGISTERED PROFESSIONAL ENGINEER
REG. NO. 8324
LANCE R. MCQUEEN
SOUTH DAKOTA
Lance R. McQueen
8-1-22

HDR

Plot Scale - 1:40
Plotted From - ZHWANG
File - ...\Sheet_Files\Section S\Benson

Permanent Signing Plan - Benson Road

FOR BIDDING PURPOSES ONLY

STATE OF SOUTH DAKOTA	PROJECT	SHEET	TOTAL SHEETS
	IM 2292(98)9 P 1200(04) IM 2292(112)6	S32	S78

FILE: ...\Section S\Benson Rd - Hall Ave
PLOTTING DATE: 07-28-2022

REV DATE:
INITIAL:

SCALE IN FEET
0 20 40

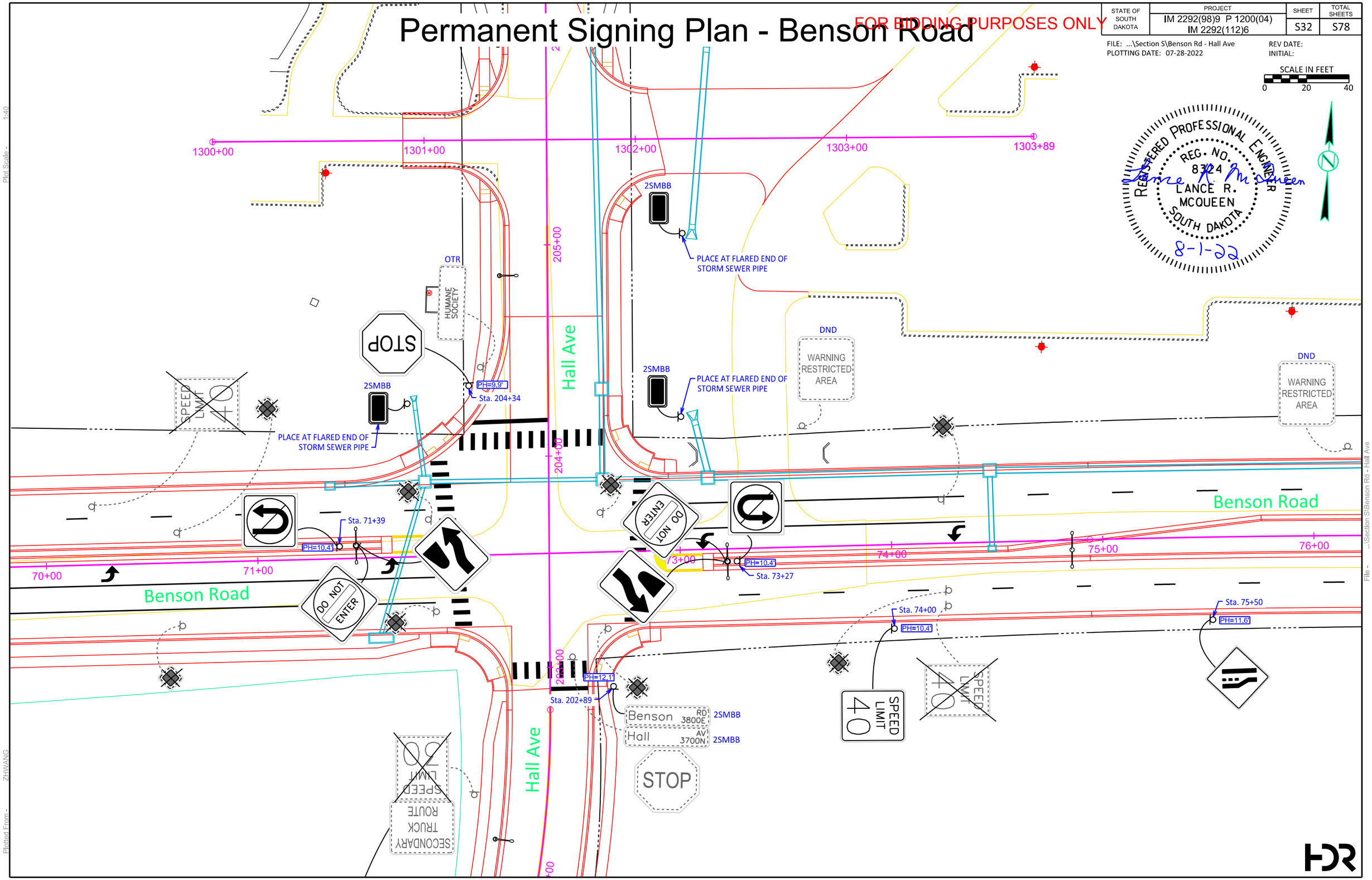

REGISTERED PROFESSIONAL ENGINEER
REG. NO. 8324
LANCE R. MCQUEEN
SOUTH DAKOTA
Lance R. McQueen
8-1-22

HDR

Plot Scale - 1:40
Plotted From - ZHWANG
File - ...\Section S\Benson Rd - Hall Ave

Permanent Signing Plan - Benson Road

FOR BIDDING PURPOSES ONLY

STATE OF SOUTH DAKOTA	PROJECT	SHEET	TOTAL SHEETS
	IM 2292(98)9 P 1200(04) IM 2292(112)6	S33	S78

FILE: ...\Section S\Benson Rd - east end
PLOTTING DATE: 07-28-2022

REV DATE:
INITIAL:

SCALE IN FEET
0 20 40

REGISTERED PROFESSIONAL ENGINEER
REG. NO. 8324
LANCE R. MCQUEEN
SOUTH DAKOTA
Lance R. McQueen
8-1-22

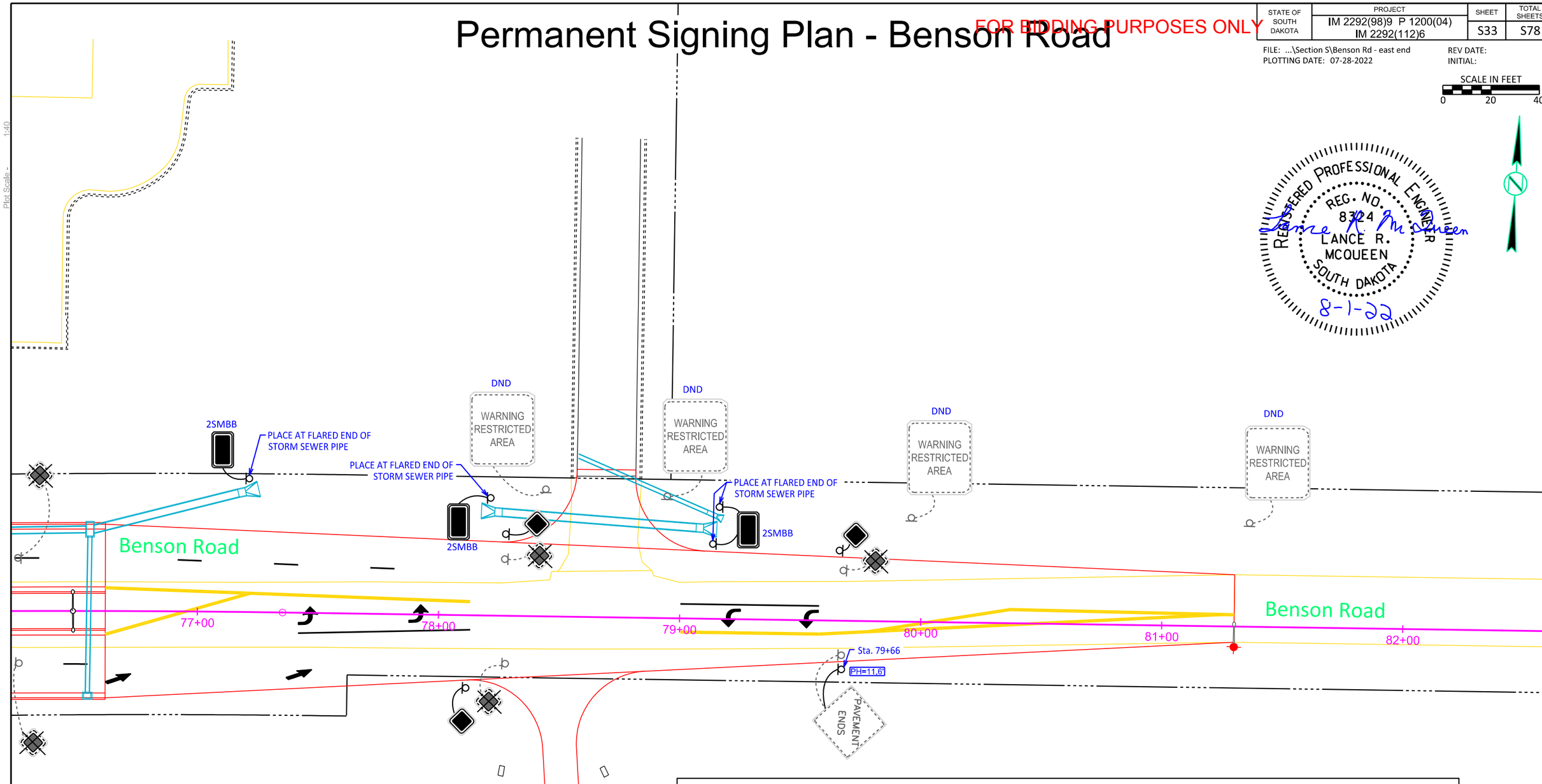

SIGNING LEGEND

SIGN	PROPOSED TRAFFIC SIGN
SIGN	EXISTING TRAFFIC SIGN TO BE REMOVED FOR RESET AND RESET
SIGN	EXISTING TRAFFIC SIGN TO BE REMOVED
PH	POST HEIGHT
DND	DO NOT DISTURB EXISTING SIGN
OTR	SIGN OWNER TO RELOCATE SIGN
2SMBB	2 SIGNS MOUNTED BACK-TO-BACK
POST / FRONT OF SIGN	EXISTING TRAFFIC SIGN ON POST
	PROPOSED TRAFFIC SIGN ON POST
	PROPOSED TRAFFIC SIGN ON DOUBLE POST
	EXISTING TRAFFIC SIGN ON LIGHT POLE
	PROPOSED TRAFFIC SIGN ON LIGHT POLE
	EXISTING TRAFFIC SIGN ON POWER POLE
	EXISTING TRAFFIC SIGN ON MAST ARM
	PROPOSED TRAFFIC SIGN ON MAST ARM
ONE WAY	PROPOSED ONE WAY SIGN (SIGN WILL BE LOCATED TO FACE CENTER OF ON-COMING LANE)

HDR

Plot Scale - 1:40
Plotted From - ZHWANG
File - ...\Section S\Benson Rd - east end

Permanent Signing Plan - Lewis Ave

FOR BIDDING PURPOSES ONLY

STATE OF SOUTH DAKOTA	PROJECT	SHEET	TOTAL SHEETS
	IM 2292(98)9 P 1200(04) IM 2292(112)6	S34	S78

FILE: ...\Lewis Ave - south end
PLOTTING DATE: 07-28-2022

REV DATE:
INITIAL:

SCALE IN FEET
0 20 40

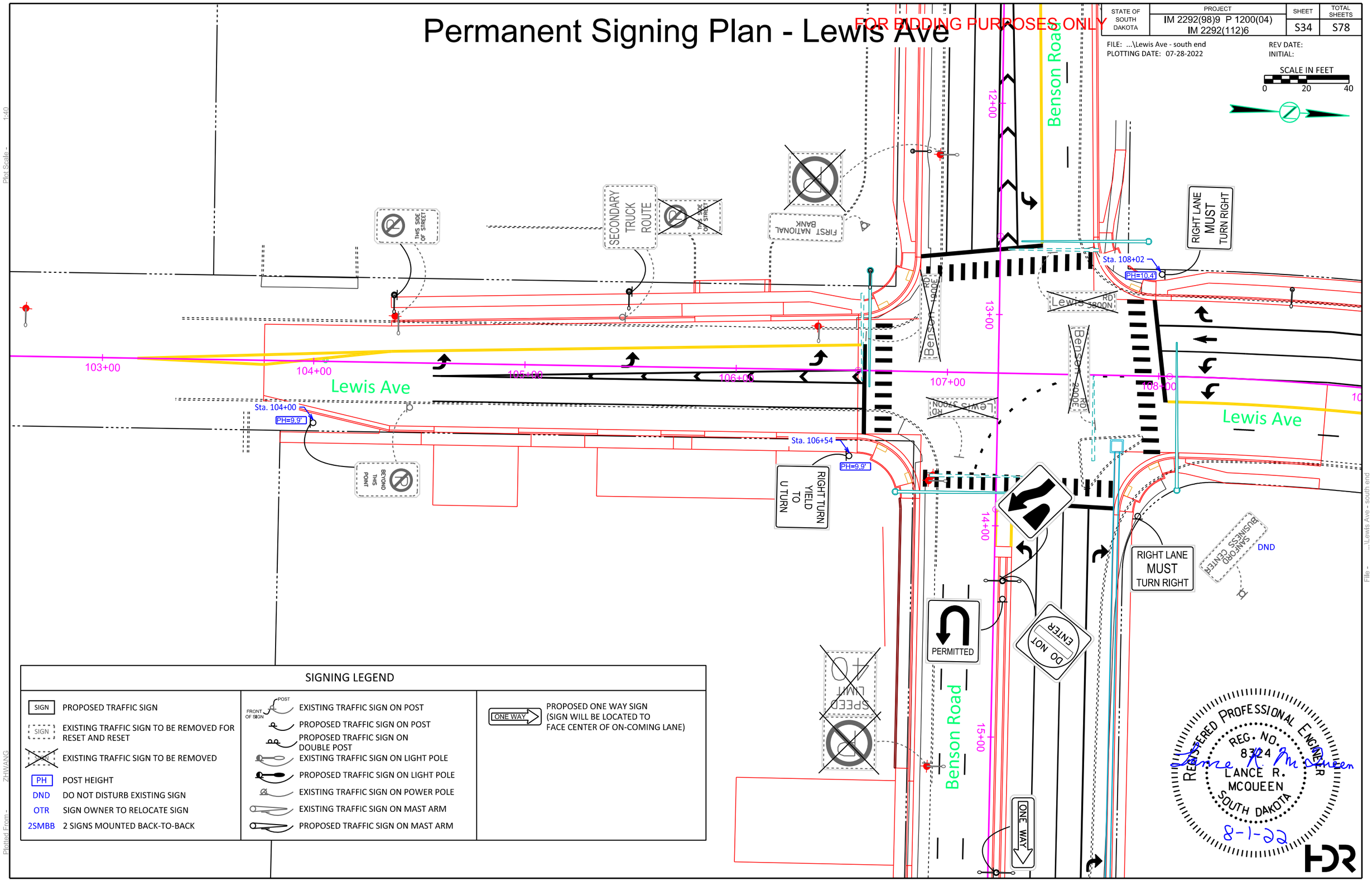

SIGNING LEGEND

SIGN	PROPOSED TRAFFIC SIGN
SIGN	EXISTING TRAFFIC SIGN TO BE REMOVED FOR RESET AND RESET
	EXISTING TRAFFIC SIGN TO BE REMOVED
PH	POST HEIGHT
DND	DO NOT DISTURB EXISTING SIGN
OTR	SIGN OWNER TO RELOCATE SIGN
2SMBB	2 SIGNS MOUNTED BACK-TO-BACK
POST / FRONT OF SIGN	EXISTING TRAFFIC SIGN ON POST
	PROPOSED TRAFFIC SIGN ON POST
	PROPOSED TRAFFIC SIGN ON DOUBLE POST
	EXISTING TRAFFIC SIGN ON LIGHT POLE
	PROPOSED TRAFFIC SIGN ON LIGHT POLE
	EXISTING TRAFFIC SIGN ON POWER POLE
	EXISTING TRAFFIC SIGN ON MAST ARM
	PROPOSED TRAFFIC SIGN ON MAST ARM
ONE WAY	PROPOSED ONE WAY SIGN (SIGN WILL BE LOCATED TO FACE CENTER OF ON-COMING LANE)

Plot Scale - 1:40
Plotted From - ZHWANG
File - ...\Lewis Ave - south end

Permanent Signing Plan - Lewis Ave

FOR BIDDING PURPOSES ONLY

STATE OF SOUTH DAKOTA	PROJECT	SHEET	TOTAL SHEETS
	IM 2292(98)9 P 1200(04) IM 2292(112)6	S35	S78

FILE: ...\Lewis Ave - north end
PLOTTING DATE: 07-28-2022

REV DATE:
INITIAL:

SCALE IN FEET
0 20 40

REGISTERED PROFESSIONAL ENGINEER
REG. NO. 8324
LANCE R. MCQUEEN
SOUTH DAKOTA
Lance R. McQueen
8-1-22

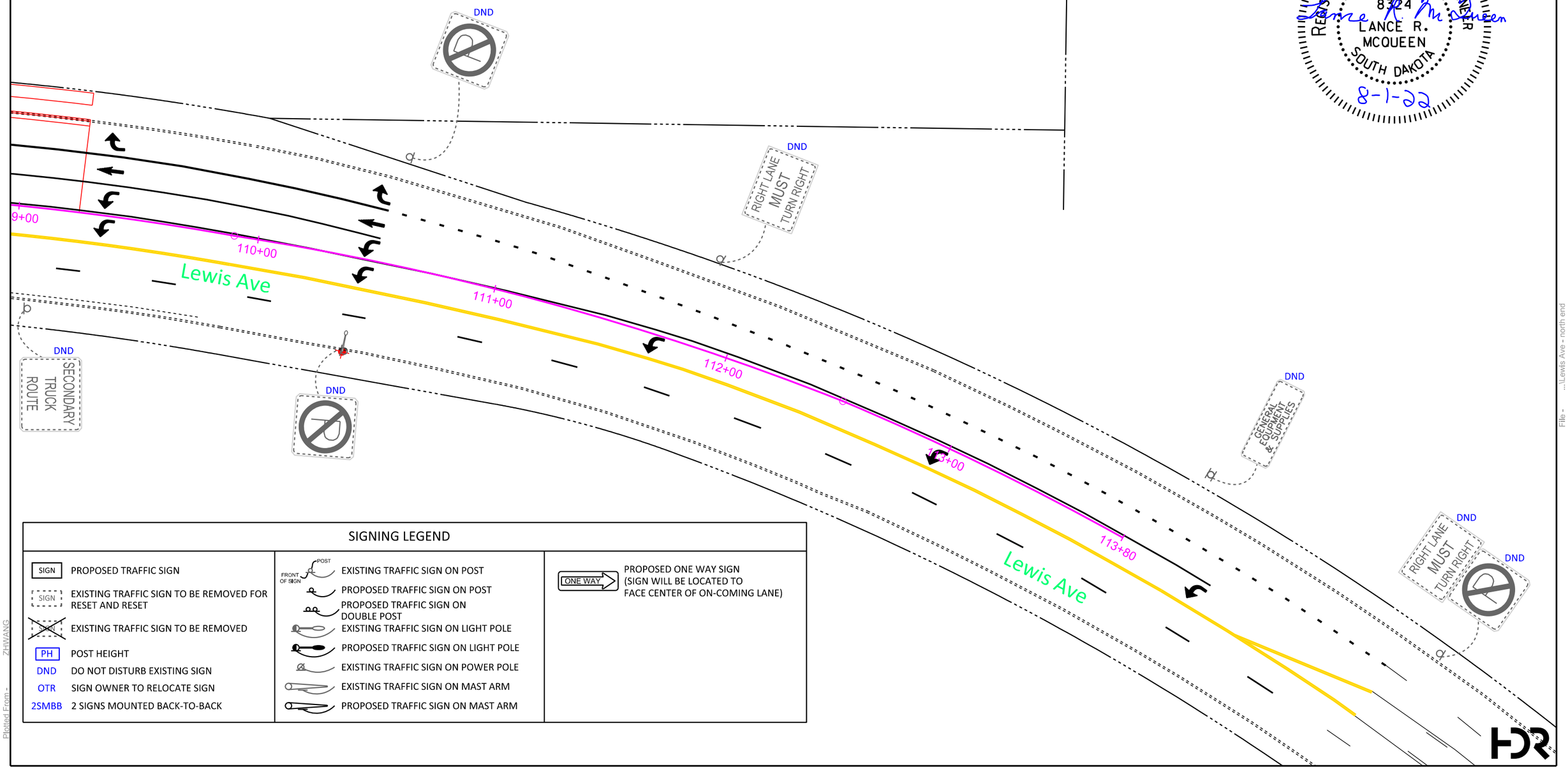

SIGNING LEGEND

SIGN	PROPOSED TRAFFIC SIGN
SIGN	EXISTING TRAFFIC SIGN TO BE REMOVED FOR RESET AND RESET
SIGN	EXISTING TRAFFIC SIGN TO BE REMOVED
PH	POST HEIGHT
DND	DO NOT DISTURB EXISTING SIGN
OTR	SIGN OWNER TO RELOCATE SIGN
2SMBB	2 SIGNS MOUNTED BACK-TO-BACK
POST / FRONT OF SIGN	EXISTING TRAFFIC SIGN ON POST
	PROPOSED TRAFFIC SIGN ON POST
	PROPOSED TRAFFIC SIGN ON DOUBLE POST
	EXISTING TRAFFIC SIGN ON LIGHT POLE
	PROPOSED TRAFFIC SIGN ON LIGHT POLE
	EXISTING TRAFFIC SIGN ON POWER POLE
	EXISTING TRAFFIC SIGN ON MAST ARM
	PROPOSED TRAFFIC SIGN ON MAST ARM
ONE WAY	PROPOSED ONE WAY SIGN (SIGN WILL BE LOCATED TO FACE CENTER OF ON-COMING LANE)

Plot Scale - 1:40
Plotted From - ZHWANG
File - ...\Lewis Ave - north end

Permanent Signing Plan - Hall Ave

FOR BIDDING PURPOSES ONLY

STATE OF SOUTH DAKOTA	PROJECT	SHEET	TOTAL SHEETS
	IM 2292(98)9 P 1200(04) IM 2292(112)6	S36	S78

FILE: ...\Sheet_Files\Section S\Hall Ave
PLOTTING DATE: 07-28-2022

REV DATE:
INITIAL:

SCALE IN FEET
0 20 40

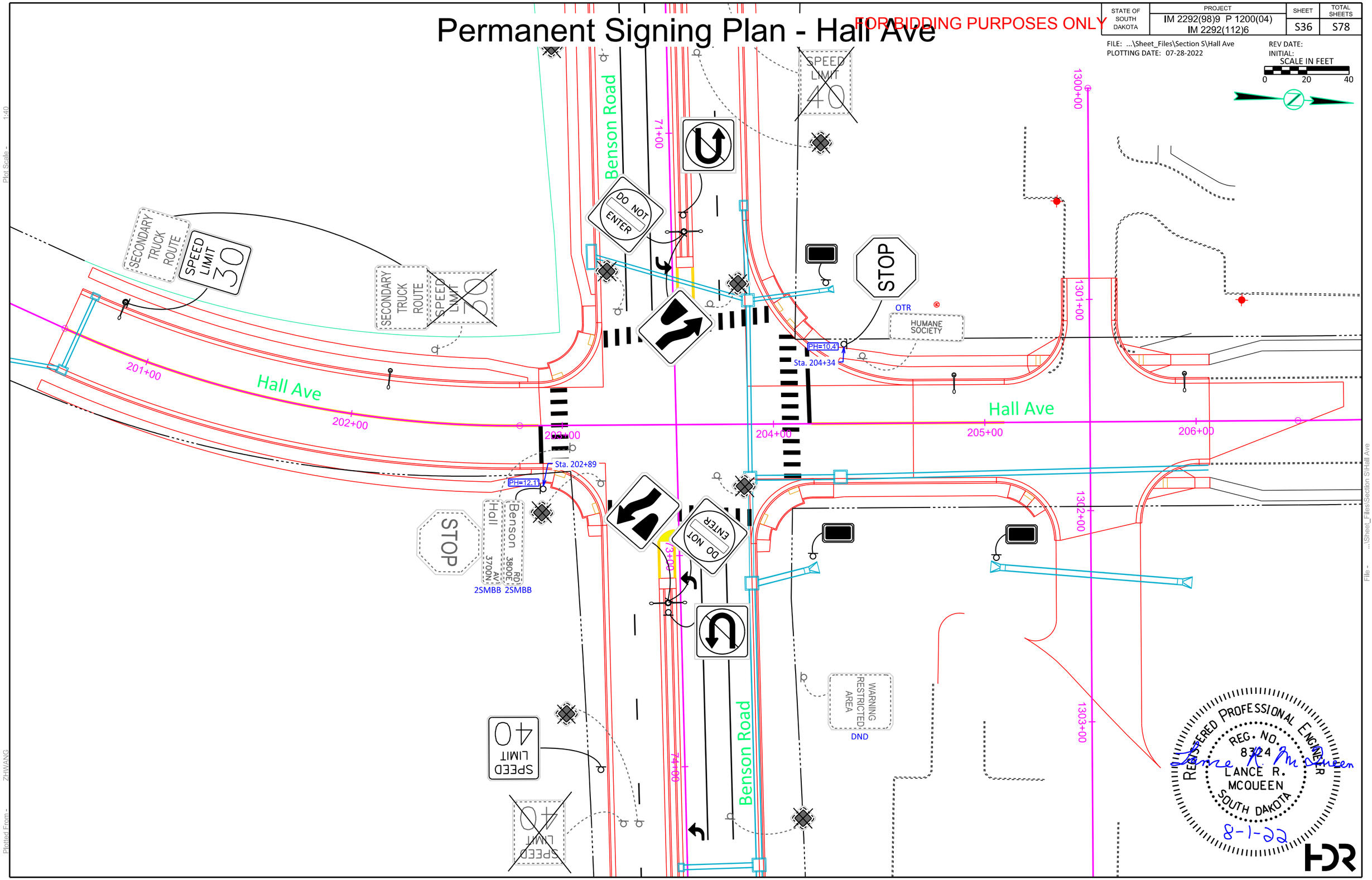

Plot Scale - 1:40
Plotted From - ZHWANG
File - ...\Sheet_Files\Section S\Hall Ave

Delineator Layout - I-229

FOR BIDDING PURPOSES ONLY

STATE OF SOUTH DAKOTA	PROJECT	SHEET	TOTAL SHEETS
	IM 2292(98)9 P 1200(04) IM 2292(112)6	S37	S78

FILE: ...\Section S\Delineator - south
PLOTTING DATE: 07-28-2022

REV DATE:
INITIAL:

SCALE IN FEET
0 100 200

LEGEND

- ◇ 4" X 4" WHITE DELINEATOR
- ◆ 4" X 4" AMBER DELINEATOR
- ▯ 4" X 8" WHITE DELINEATOR
- ▮ 4" X 8" AMBER DELINEATOR
- ○ 4" DIA. X 6" WHITE TUBULAR DELINEATOR
- ● 4" DIA. X 6" AMBER TUBULAR DELINEATOR

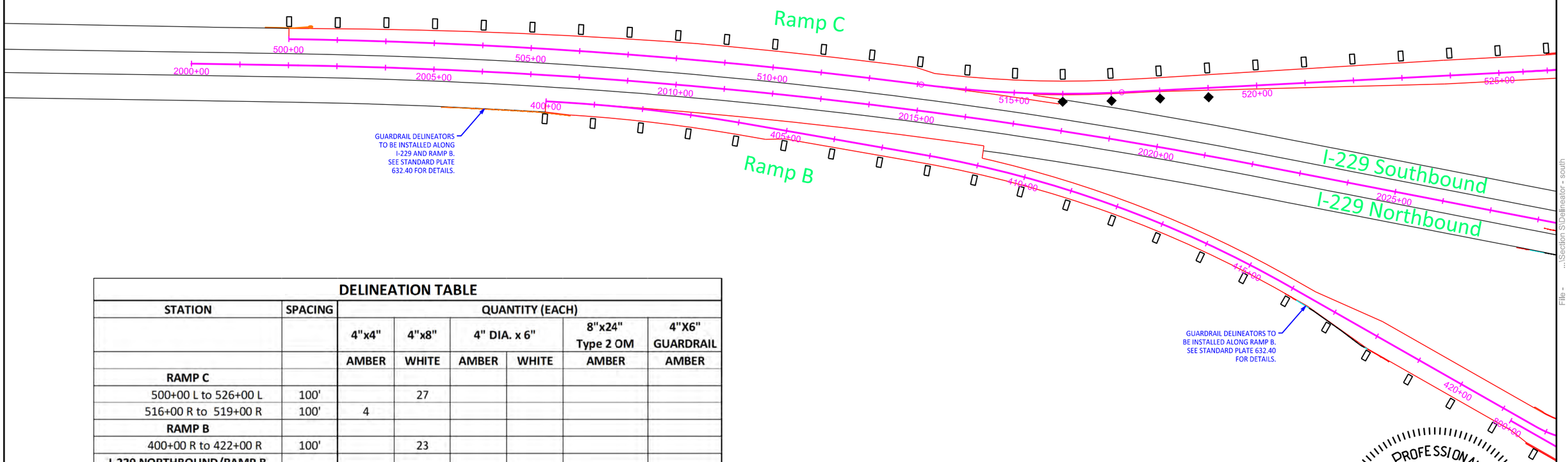

DELINEATION TABLE

STATION	SPACING	QUANTITY (EACH)					
		4"x4"	4"x8"	4" DIA. x 6"		8"x24" Type 2 OM	4"X6" GUARDRAIL
		AMBER	WHITE	AMBER	WHITE	AMBER	AMBER
RAMP C							
500+00 L to 526+00 L	100'		27				
516+00 R to 519+00 R	100'	4					
RAMP B							
400+00 R to 422+00 R	100'		23				
I-229 NORTHBOUND/RAMP B GUARDRAIL							
2005+45 R to 2007+61 R	50'					2	5
RAMP B GUARDRAIL							
416+18 R to 418+15 R	50'					2	4
SUBTOTALS		**4**	**50**	**0**	**0**	**4**	**9**

REGISTERED PROFESSIONAL ENGINEER
REG. NO. 8324
LANCE R. MCQUEEN
SOUTH DAKOTA
Lance R. McQueen
8-1-22

HDR

Plot Scale - 1:200
Plotted From - ZHWANG
File - ...\Section S\Delineator - south

Delineator Layout - I-229

FOR BIDDING PURPOSES ONLY

STATE OF SOUTH DAKOTA	PROJECT	SHEET	TOTAL SHEETS
	IM 2292(98)9 P 1200(04) IM 2292(112)6	S38	S78

FILE: ...\Section S\Delineator - north
PLOTTING DATE: 07-28-2022

REV DATE:
INITIAL:

SCALE IN FEET
0 100 200

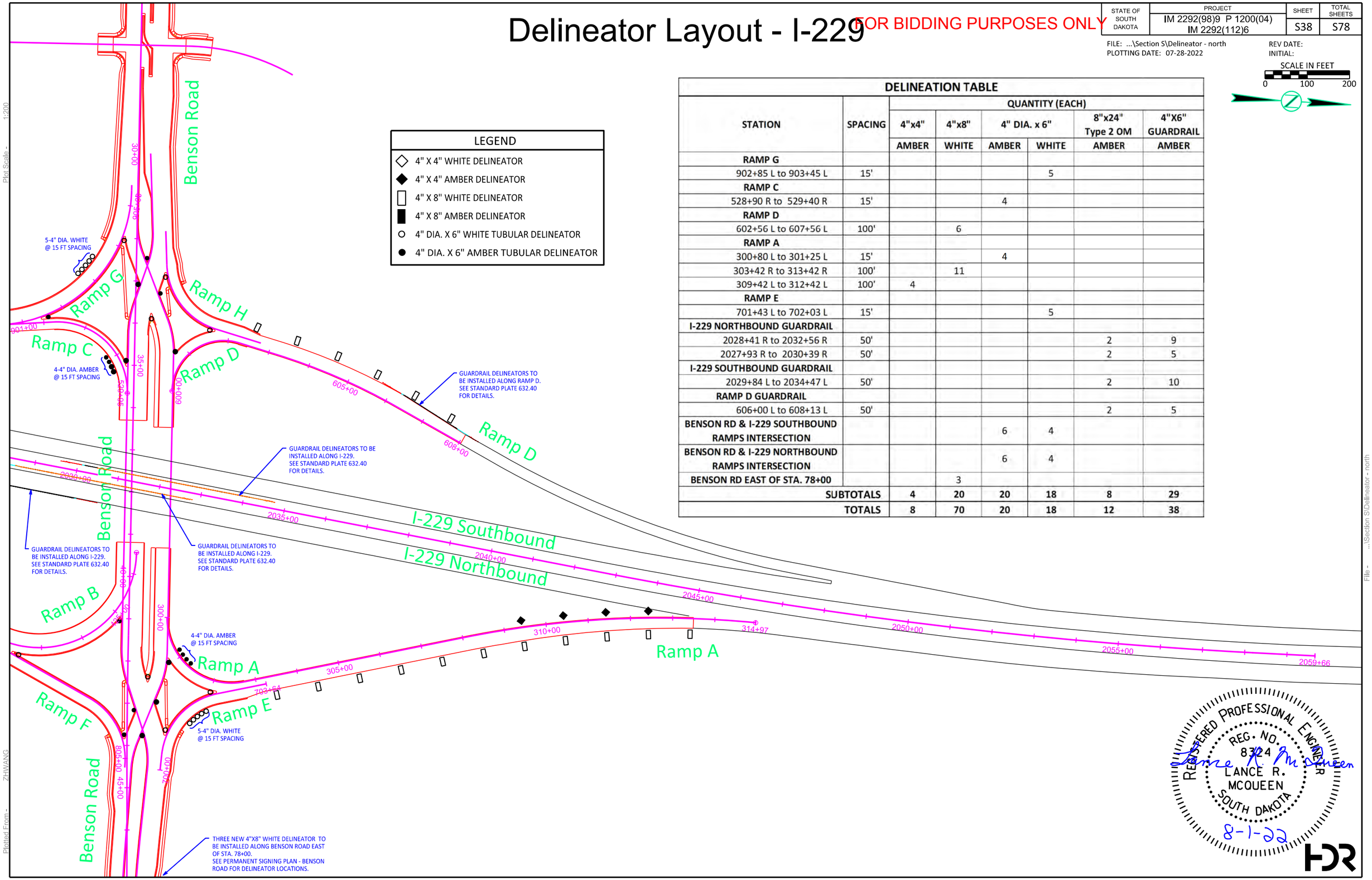

DELINEATION TABLE

STATION	SPACING	QUANTITY (EACH) 4"x4" AMBER	4"x8" WHITE	4" DIA. x 6" AMBER	4" DIA. x 6" WHITE	8"x24" Type 2 OM AMBER	4"X6" GUARDRAIL AMBER
RAMP G							
902+85 L to 903+45 L	15'				5		
RAMP C							
528+90 R to 529+40 R	15'			4			
RAMP D							
602+56 L to 607+56 L	100'		6				
RAMP A							
300+80 L to 301+25 L	15'			4			
303+42 R to 313+42 R	100'		11				
309+42 L to 312+42 L	100'	4					
RAMP E							
701+43 L to 702+03 L	15'				5		
I-229 NORTHBOUND GUARDRAIL							
2028+41 R to 2032+56 R	50'					2	9
2027+93 R to 2030+39 R	50'					2	5
I-229 SOUTHBOUND GUARDRAIL							
2029+84 L to 2034+47 L	50'					2	10
RAMP D GUARDRAIL							
606+00 L to 608+13 L	50'					2	5
BENSON RD & I-229 SOUTHBOUND RAMPS INTERSECTION				6	4		
BENSON RD & I-229 NORTHBOUND RAMPS INTERSECTION				6	4		
BENSON RD EAST OF STA. 78+00			3				
SUBTOTALS		**4**	**20**	**20**	**18**	**8**	**29**
TOTALS		**8**	**70**	**20**	**18**	**12**	**38**

REGISTERED PROFESSIONAL ENGINEER
REG. NO. 8324
LANCE R. MCQUEEN
SOUTH DAKOTA
Lance R. McQueen
8-1-22

HDR

Plot Scale - 1:200
Plotted From - ZHWANG
File - ...\Section S\Delineator - north

Permanent Signing Details

FOR BIDDING PURPOSES ONLY

STATE OF SOUTH DAKOTA	PROJECT	SHEET	TOTAL SHEETS
	IM 2292(98)9 P 1200(04) IM 2292(112)6	S39	S78

FILE: ...\Section S\Sign Details 1
PLOTTING DATE: 07-28-2022

REV DATE:
INITIAL:

1.5" Radius, 0.6" Border, 0.4" Indent, Black on White;
"PERMITTED" C 80% spacing;

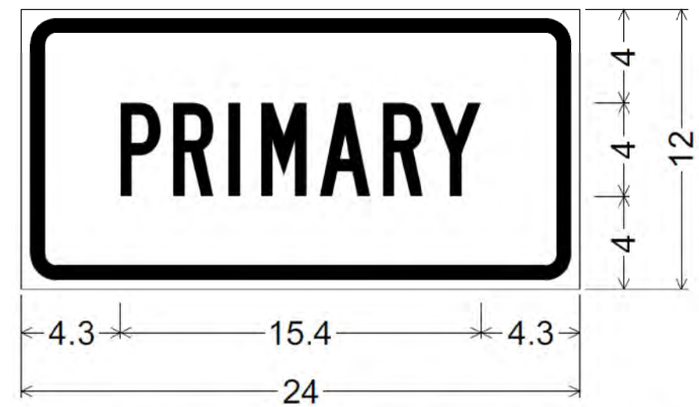

1.5" Radius, 0.6" Border, 0.4" Indent, Black on White;
"PRIMARY", B 2K;

Table of letter and object lefts

P	R	I	M	A	R	Y
4.3	6.5	8.9	10.3	12.8	15.5	17.6

REGISTERED PROFESSIONAL ENGINEER
REG. NO. 8324
LANCE R. MCQUEEN
SOUTH DAKOTA
Lance R. McQueen
8-1-22

HDR

Plot Scale - 1:40
Plotted From - ZHWANG
File - ...\Section S\Sign Details 1

Permanent Signing Details

FOR BIDDING PURPOSES ONLY

STATE OF SOUTH DAKOTA	PROJECT	SHEET	TOTAL SHEETS
	IM 2292(98)9 P 1200(04) IM 2292(112)6	S40	S78

FILE: ...\Section S\Sign Details 2
PLOTTING DATE: 07-28-2022
REV DATE:
INITIAL:

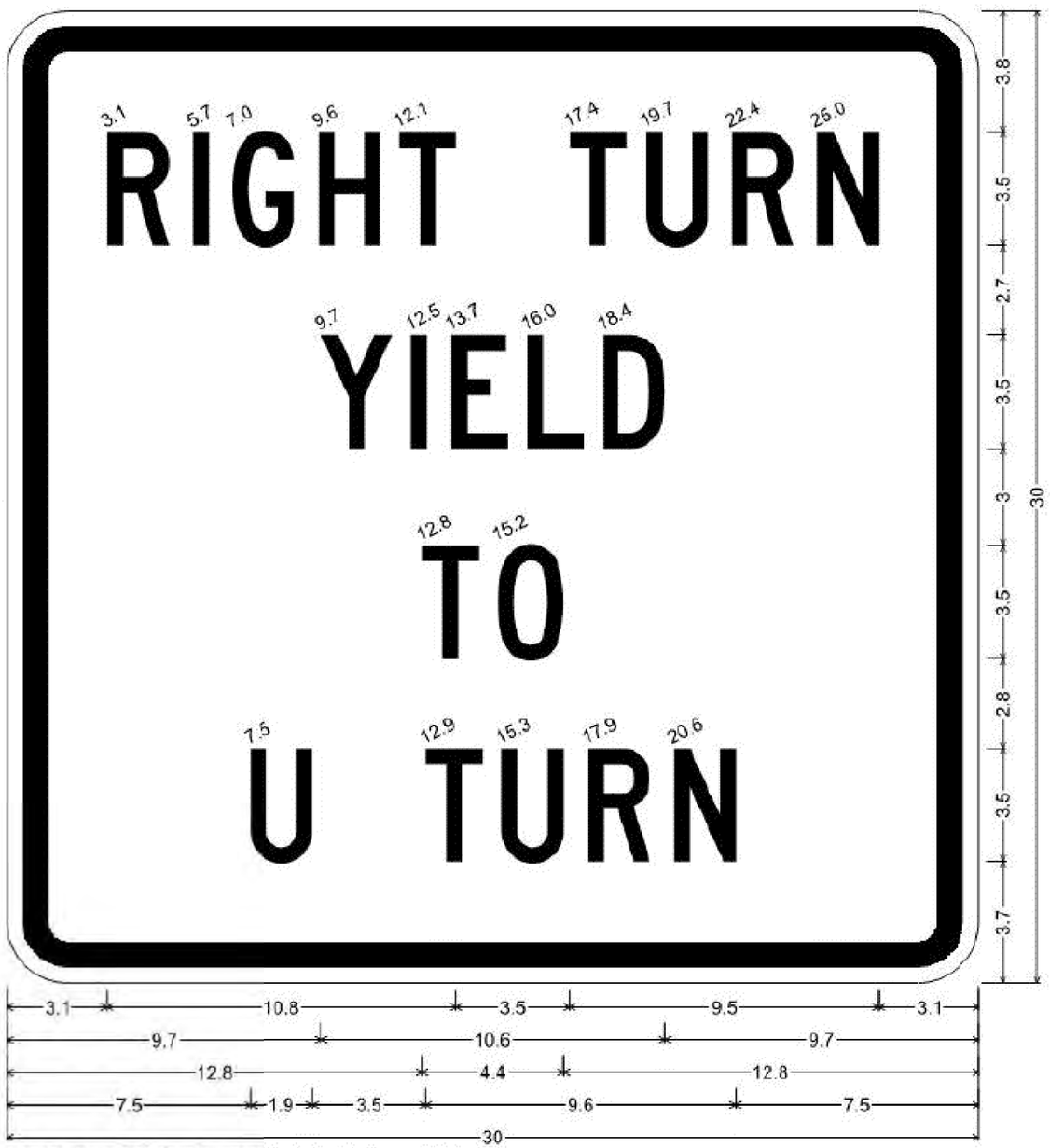

1.9" Radius, 0.8" Border, 0.5" Indent, Black on White;
"RIGHT TURN" C; "YIELD" C; "TO" C; "U TURN" C;

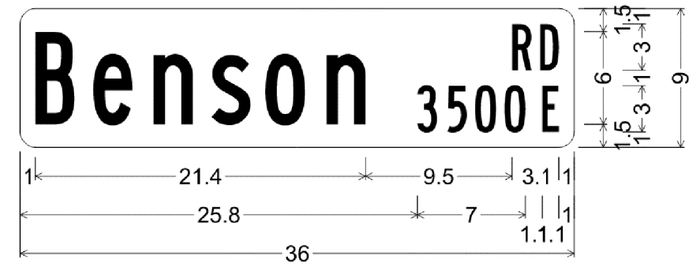

1.0" Radius, No border, White on Green;
"Benson", B; "RD", B; "3500", B specified length;
"E", B;
Table of letter and object lefts

B	e	n	s	o	n	R	D
1.0	4.8	8.7	12.4	15.9	19.9	31.9	33.7

3	5	0	0	E
25.8	27.7	29.5	31.4	33.9

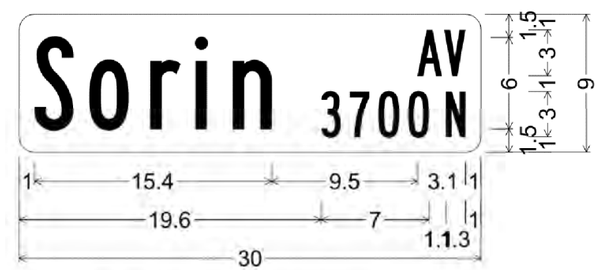

1.0" Radius, No border, White on Green;
"Sorin", B; "AV", B;
"3700", B specified length; "N", B;
Table of letter and object lefts

S	o	r	i	n	A	V
1.0	4.5	8.5	11.5	13.9	25.9	27.6

3	7	0	0	N
19.6	21.5	23.3	25.3	27.7

REGISTERED PROFESSIONAL ENGINEER
REG. NO. 8324
LANCE R. MCQUEEN
SOUTH DAKOTA

Lance R. McQueen
8-1-22

HDR

Plot Scale - 1:40
Plotted From - ZHWANG
File - ...\Section S\Sign Details 2

Permanent Signing Details

FOR BIDDING PURPOSES ONLY

STATE OF SOUTH DAKOTA	PROJECT	SHEET	TOTAL SHEETS
	IM 2292(98)9 P 1200(04) IM 2292(112)6	S41	S78

FILE: ...\Section S\Sign Details 3
PLOTTING DATE: 07-28-2022

REV DATE:
INITIAL:

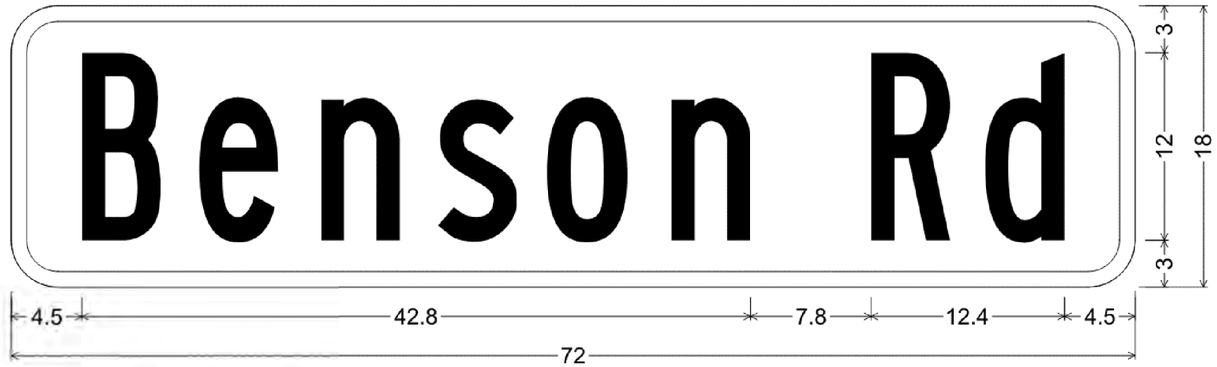

3.0" Radius, 1.0" Border, White on Green;
"Benson Rd", B;
Table of letter and object lefts

B	e	n	s	o	n	R	d
4.5	12.0	19.8	27.4	34.3	42.3	55.1	62.4

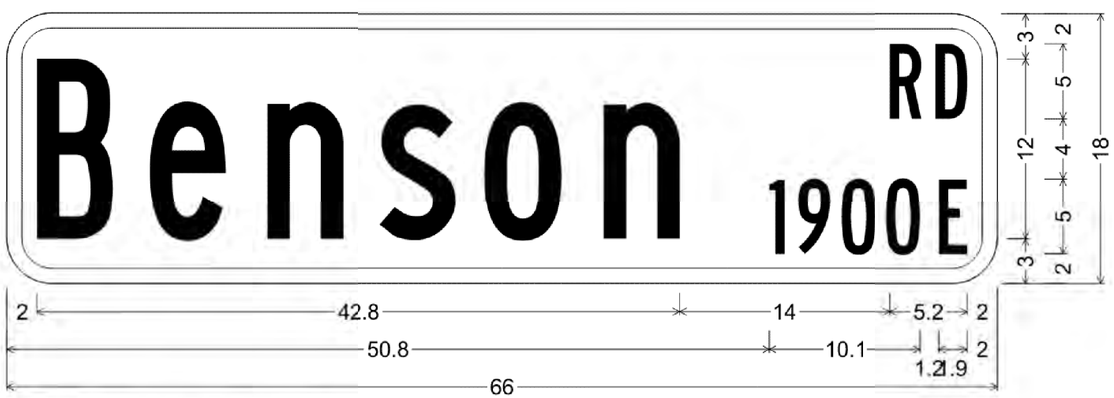

3.0" Radius, 1.0" Border, White on Green;
"Benson", B; "RD", B; "1900 E", B;
Table of letter and object lefts

B	e	n	s	o	n	R	D
2.0	9.5	17.3	24.8	31.8	39.7	58.8	61.9

1	9	0	0	E
50.8	52.7	55.6	58.6	62.1

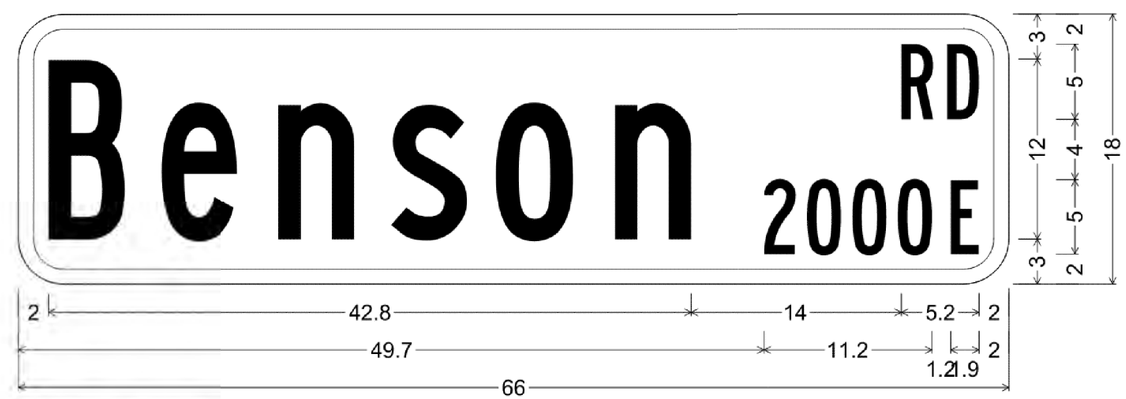

3.0" Radius, 1.0" Border, White on Green;
"Benson", B; "RD", B; "2000 E", B;
Table of letter and object lefts

B	e	n	s	o	n	R	D
2.0	9.5	17.3	24.8	31.8	39.7	58.8	61.9

2	0	0	0	E
49.7	52.6	55.6	58.6	62.1

REGISTERED PROFESSIONAL ENGINEER
REG. NO. 8324
LANCE R. MCQUEEN
SOUTH DAKOTA
Lance R. McQueen
8-1-22

HDR

Plot Scale - 1:40
Plotted From - ZHWANG
File - ...\Section S\Sign Details 3

Permanent Signing Details

FOR BIDDING PURPOSES ONLY

STATE OF SOUTH DAKOTA	PROJECT	SHEET	TOTAL SHEETS
	IM 2292(98)9 P 1200(04) IM 2292(112)6	S42	S78

FILE: ...\Section S\Sign Details 4
PLOTTING DATE: 07-28-2022

REV DATE:
INITIAL:

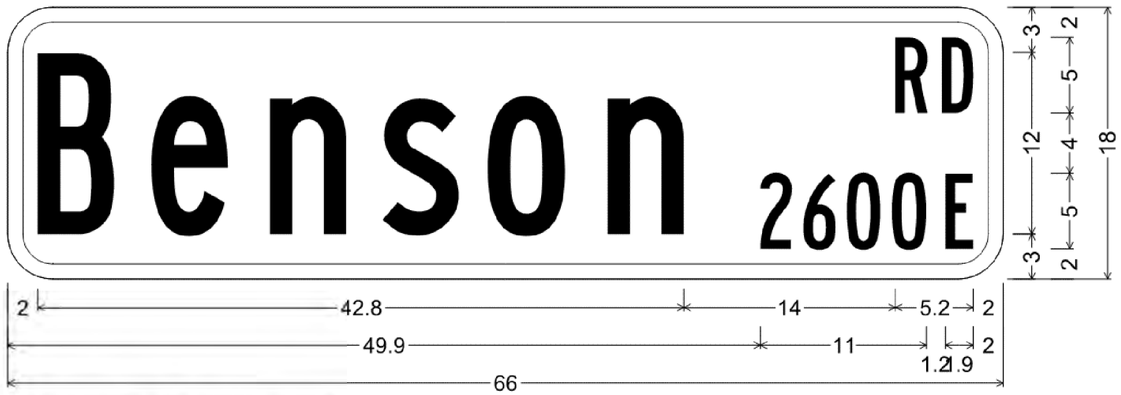

3.0" Radius, 1.0" Border, White on Green;
"Benson", B; "RD", B; "2600 E", B;
Table of letter and object lefts

B	e	n	s	o	n	R	D
2.0	9.5	17.3	24.8	31.8	39.7	58.8	61.9

2	6	0	0	E
49.9	52.7	55.6	58.6	62.1

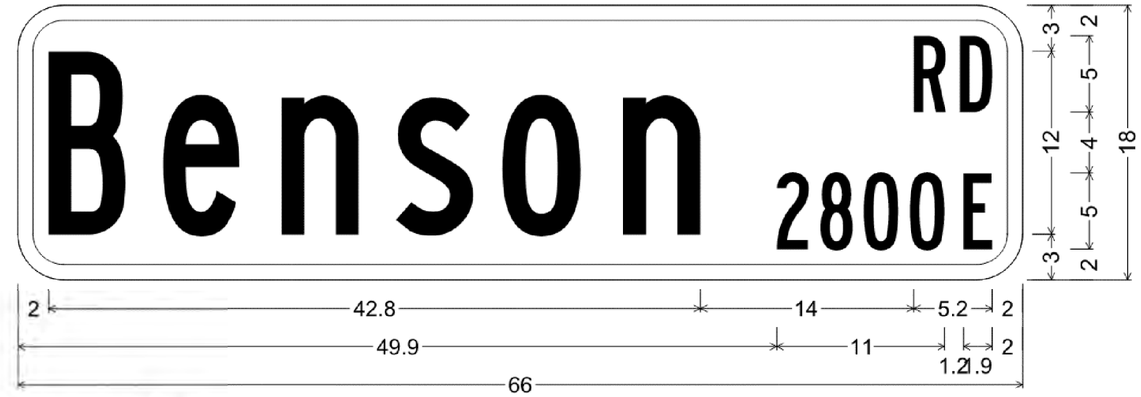

3.0" Radius, 1.0" Border, White on Green;
"Benson", B; "RD", B; "2800 E", B;
Table of letter and object lefts

B	e	n	s	o	n	R	D
2.0	9.5	17.3	24.8	31.8	39.7	58.8	61.9

2	8	0	0	E
49.9	52.7	55.6	58.6	62.1

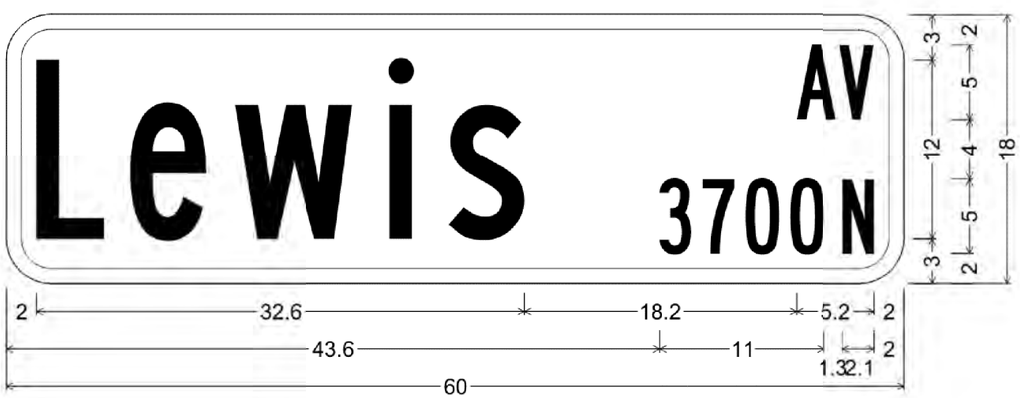

3.0" Radius, 1.0" Border, White on Green;
"Lewis", B; "AV", B; "3700 N", B;
Table of letter and object lefts

L	e	w	i	s	A	V
2.0	8.3	15.2	25.6	29.5	52.8	55.7

3	7	0	0	N
43.6	46.5	49.4	52.4	55.9

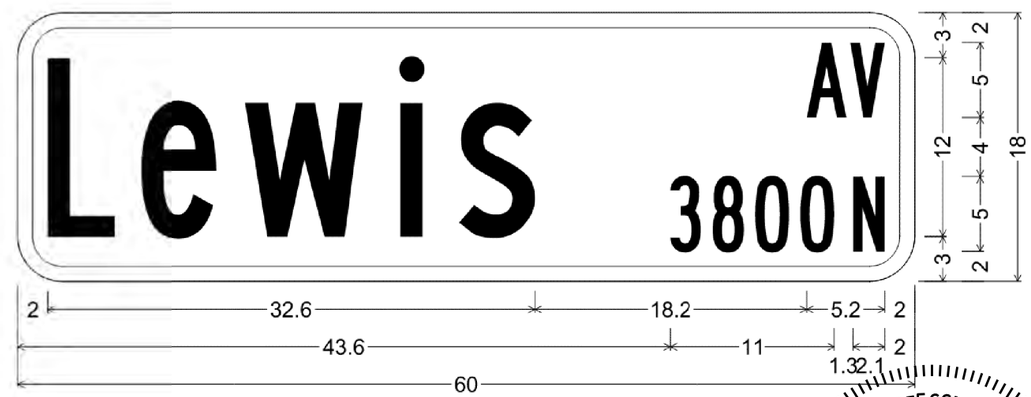

3.0" Radius, 1.0" Border, White on Green;
"Lewis", B; "AV", B; "3800 N", B;
Table of letter and object lefts

L	e	w	i	s	A	V
2.0	8.3	15.2	25.6	29.5	52.8	55.7

3	8	0	0	N
43.6	46.5	49.4	52.4	55.9

REGISTERED PROFESSIONAL ENGINEER
REG. NO. 8324
LANCE R. MCQUEEN
SOUTH DAKOTA

Lance R. McQueen
8-1-22

HDR

Plot Scale - 1:40
Plotted From - ZHWANG
File - ...\Section S\Sign Details 4

Permanent Signing Details

FOR BIDDING PURPOSES ONLY

STATE OF SOUTH DAKOTA	PROJECT	SHEET	TOTAL SHEETS
	IM 2292(98)9 P 1200(04) IM 2292(112)6	S43	S78

FILE: ...\Section S\Sign Details 5
PLOTTING DATE: 07-28-2022

REV DATE:
INITIAL:

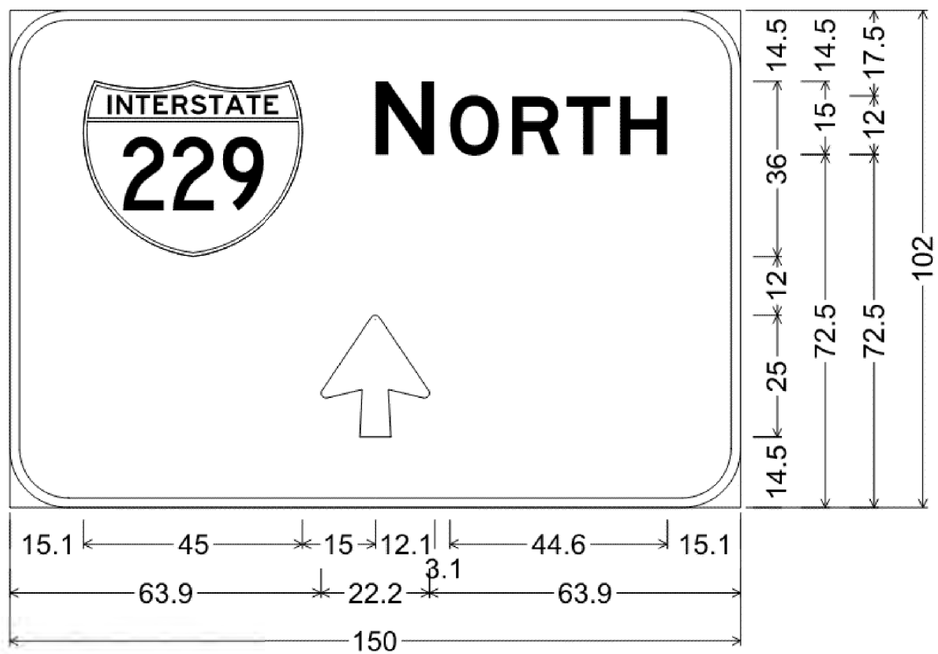

12.0" Radius, 2.0" Border, White on Green;
"NORTH", E 2K; Arrow Custom - 25.0" 90°;
Table of letter and object lefts

229	N	O	R	T	H
15.1	75.1	90.3	103.1	114.2	125.2

63.9

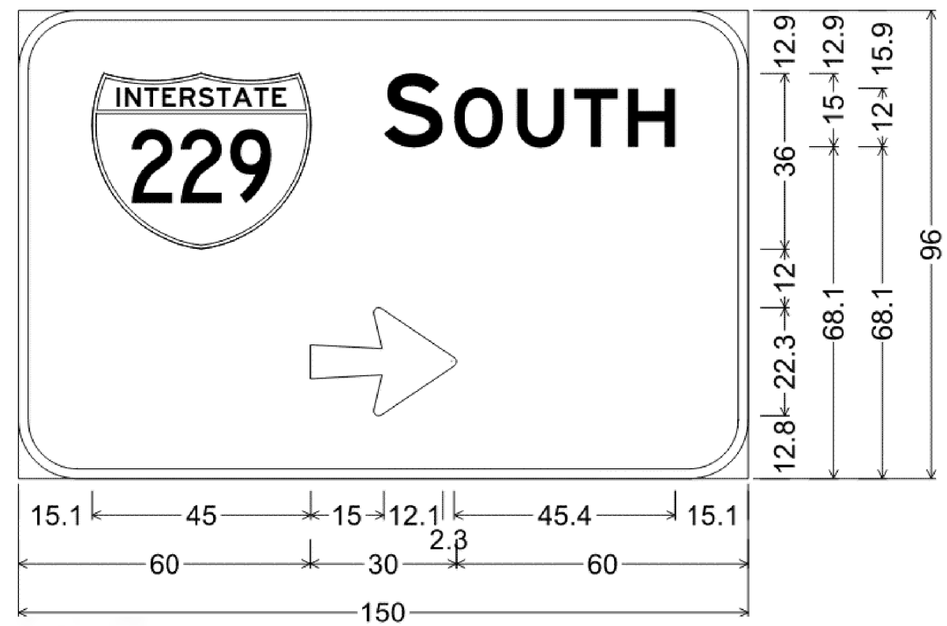

12.0" Radius, 2.0" Border, White on Green;
"SOUTH", E 2K; Arrow Custom - 30.0" 0°;
Table of letter and object lefts

229	S	O	U	T	H
15.1	75.1	89.5	102.4	114.1	125.2

60.0

REGISTERED PROFESSIONAL ENGINEER
REG. NO. 8324
LANCE R. MCQUEEN
SOUTH DAKOTA
Lance R. McQueen
8-1-22

HDR

Plot Scale - 1:40
Plotted From - ZHWANG
File - ...\Section S\Sign Details 5

Permanent Signing Details

FOR BIDDING PURPOSES ONLY

STATE OF SOUTH DAKOTA	PROJECT	SHEET	TOTAL SHEETS
	IM 2292(98)9 P 1200(04) IM 2292(112)6	S44	S78

FILE: ...\Section S\Sign Details 6
PLOTTING DATE: 07-28-2022

REV DATE:
INITIAL:

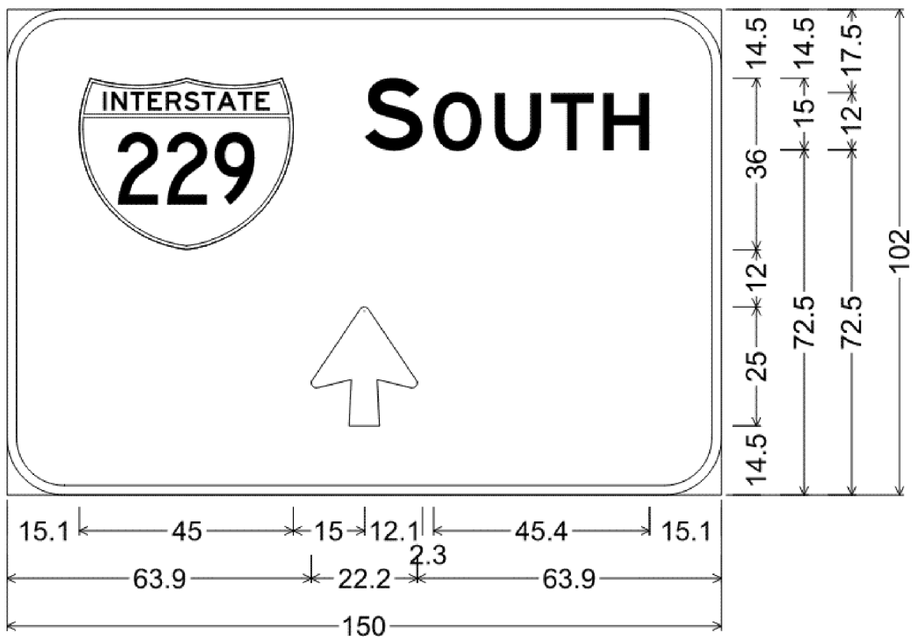

12.0" Radius, 2.0" Border, White on Green;
"SOUTH", E 2K; Arrow Custom - 25.0" 90°;
Table of letter and object lefts

229	S	O	U	T	H
15.1	75.1	89.5	102.4	114.1	125.2

⇧
63.9

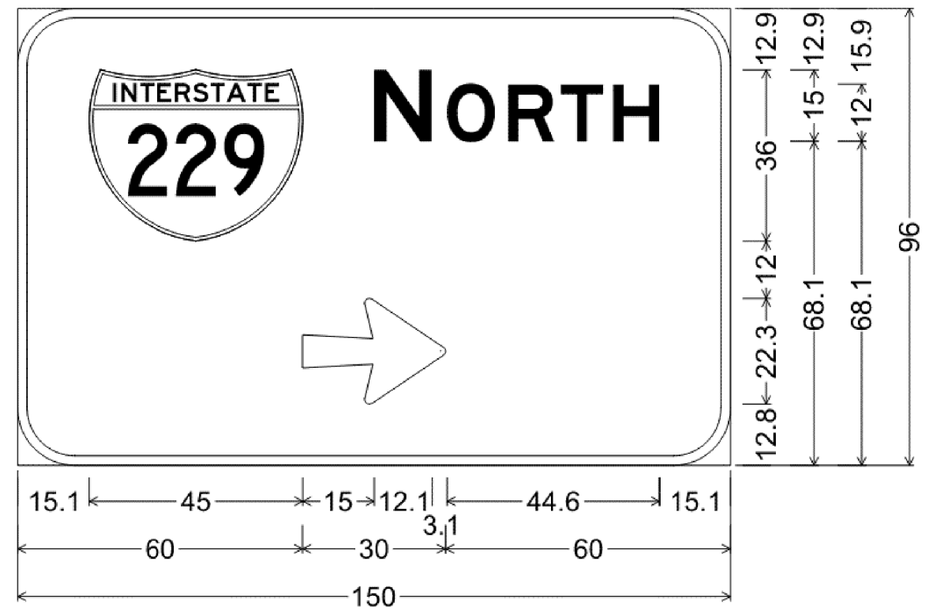

12.0" Radius, 2.0" Border, White on Green;
"NORTH", E 2K; Arrow Custom - 30.0" 0°;
Table of letter and object lefts

229	N	O	R	T	H
15.1	75.1	90.3	103.1	114.2	125.2

⇨
60.0

REGISTERED PROFESSIONAL ENGINEER
REG. NO. 8324
LANCE R. MCQUEEN
SOUTH DAKOTA
Lance R. McQueen
8-1-22

HDR

Plot Scale - 1:40
Plotted From - ZHWANG
File - ...\Section S\Sign Details 6

Permanent Signing Details

FOR BIDDING PURPOSES ONLY

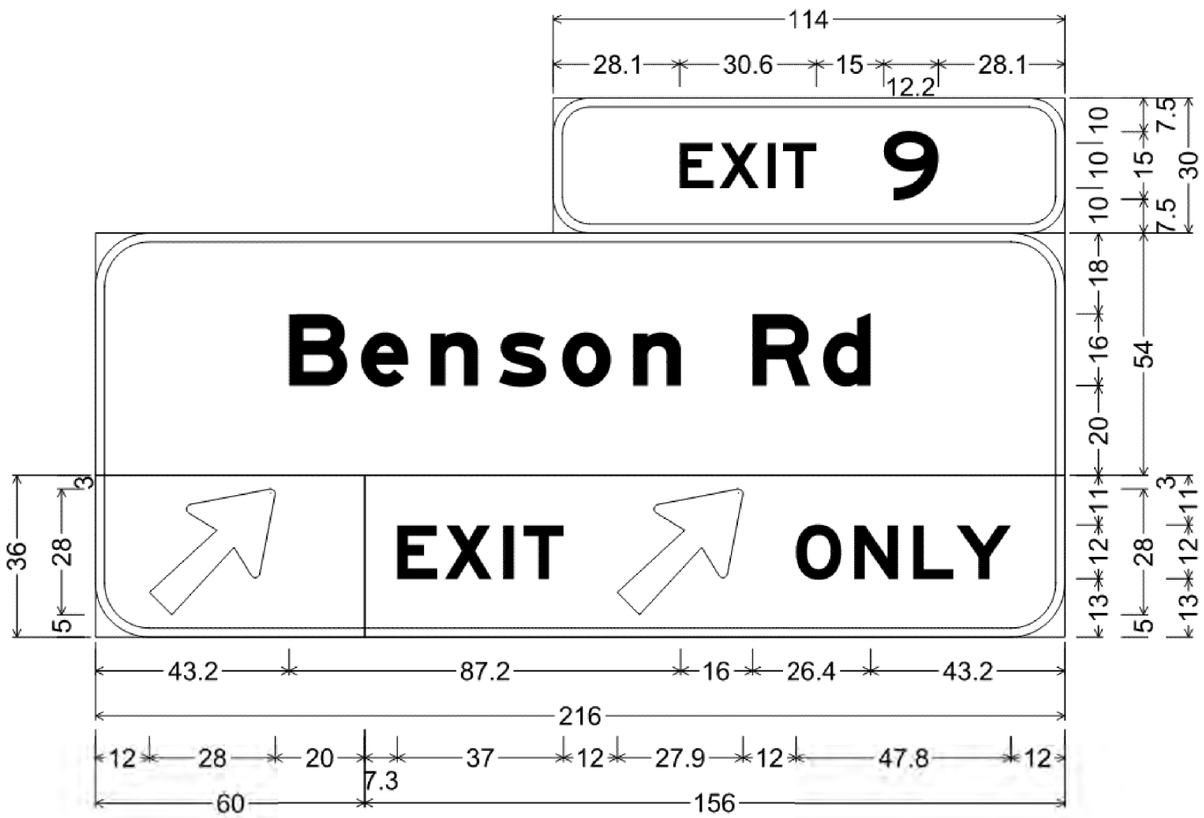

8.0" Radius, 2.0" Border, White on Green;
"EXIT", E 2K; "9", E 2K;

12.0" Radius, 2.0" Border, White on Green;
"Benson Rd", E Mod 2K;

12.0" Radius, 2.0" Border, White on Green;
Arrow Custom - 35.6" 45°;

12.0" Radius, 2.0" Border, Black on Fluorescent yellow;
"EXIT", E Mod 2K; Arrow Custom - 35.6" 45°; "ONLY", E Mod 2K;
Table of letter and object lefts

E	X	I	T	9
28.1	37.0	47.7	51.2	73.7

B	e	n	s	o	n	R	d
43.2	59.2	74.7	89.9	104.0	119.8	146.4	162.2

⇗
12.0

E	X	I	T	⇗	O	N	L	Y
7.3	17.9	30.8	35.4	56.3	96.2	109.2	122.3	131.9

REGISTERED PROFESSIONAL ENGINEER
REG. NO. 8324
LANCE R. MCQUEEN
SOUTH DAKOTA
Lance R. McQueen
8-1-22

HDR

Plot Scale - 1:40
Plotted From - ZHWANG
File - ...\Section S\Sign Details 7

Permanent Signing Details

FOR BIDDING PURPOSES ONLY

STATE OF SOUTH DAKOTA	PROJECT	SHEET	TOTAL SHEETS
	IM 2292(98)9 P 1200(04) IM 2292(112)6	S46	S78

FILE: ...\Section S\Sign Details 8
PLOTTING DATE: 07-28-2022

REV DATE:
INITIAL:

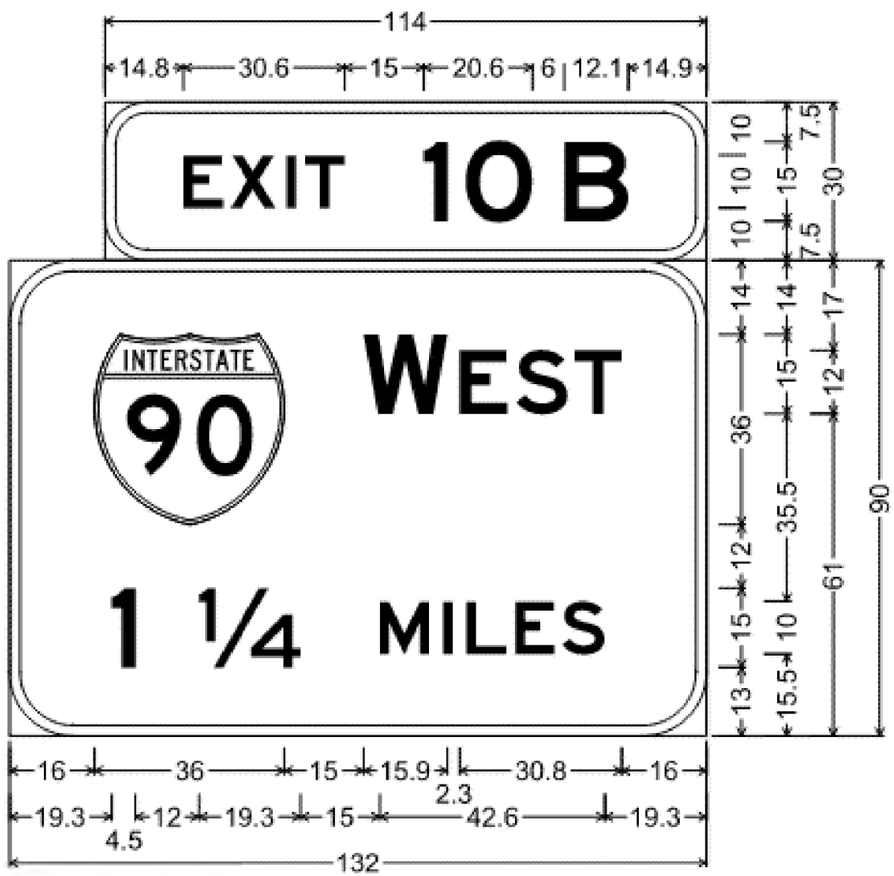

8.0" Radius, 2.0" Border, White on Green;
"EXIT", E 2K; "10 B", E 2K;

12.0" Radius, 2.0" Border, White on Green;
"WEST", E 2K; "1", E 2K; "¼", E 2K;
"MILES", E 2K;
Table of letter and object lefts

E 14.8	X 23.7	I 34.4	T 37.9	1 60.4	O 68.4	B 87.0
90 16.0	W 67.0	E 85.2	S 95.9	T 107.0		
1 19.3	¼ 35.8	M 70.1	I 82.1	L 86.5	E 95.7	S 104.6

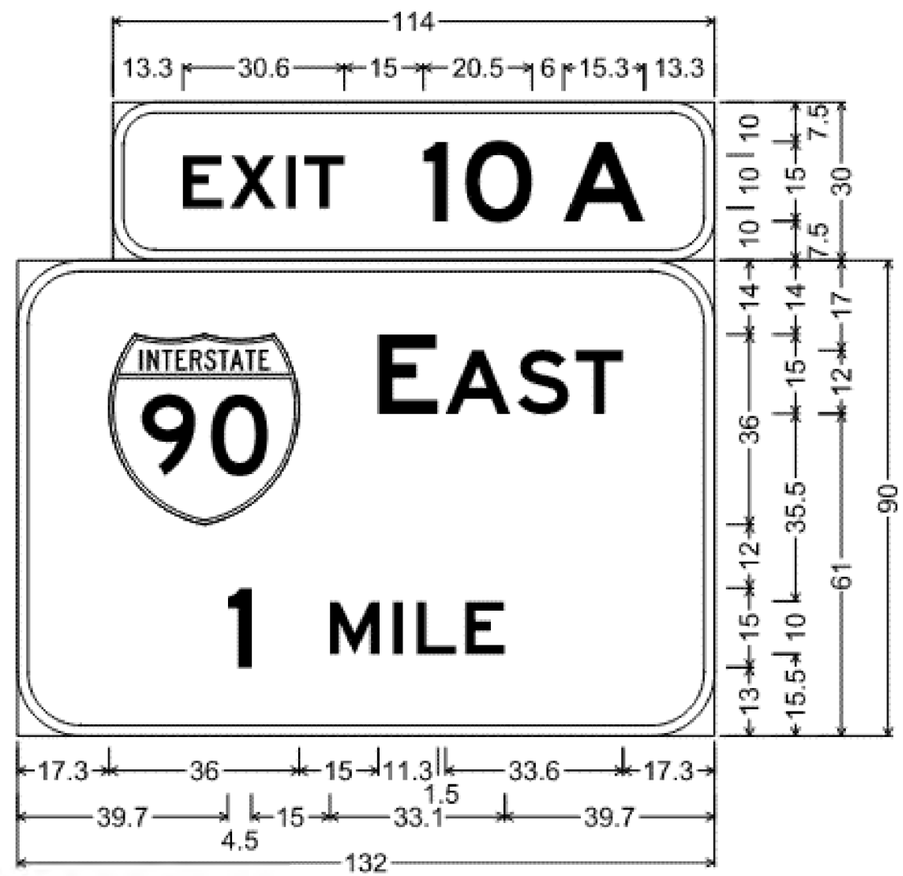

8.0" Radius, 2.0" Border, White on Green;
"EXIT", E 2K; "10 A", E 2K;

12.0" Radius, 2.0" Border, White on Green;
"EAST", E 2K; "1", E 2K; "MILE", E 2K;
Table of letter and object lefts

E 13.3	X 22.2	I 32.9	T 36.4	1 58.9	O 66.8	A 85.4
90 17.3	E 68.3	A 81.1	S 94.6	T 105.7		
1 39.7	M 59.2	I 71.2	L 75.6	E 84.8		

REGISTERED PROFESSIONAL ENGINEER
REG. NO. 8324
LANCE R. MCQUEEN
SOUTH DAKOTA
Lance R. McQueen
8-1-22

HDR

Plot Scale - 1:40
Plotted From - ZHWANG
File - ...\Section S\Sign Details 8

STATE OF SOUTH DAKOTA	PROJECT	SHEET	TOTAL SHEETS
	IM 2292(98)9 P 1200(04) IM 2292(112)6	S47	S78

FILE: ...\Section S\Sign Support 1
PLOTTING DATE: 07-28-2022

REV DATE:
INITIAL:

OVERHEAD SIGN SUPPORTS

FOR BIDDING PURPOSES ONLY

DOUBLE BEAM SIGN BRIDGE
Benson Road EB - Sta. 29+57
(LOOKING EAST)

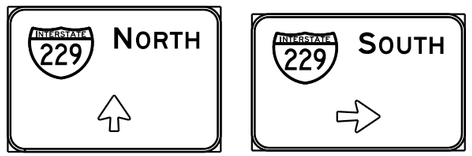

Ⓐ Signs to be installed on double beam type bracket assemblies by the Contractor under this contract.

Ⓑ Double Beam type sign mounting bracket assemblies.

Ⓒ Web members.

Ⓓ Beam.

REGISTERED PROFESSIONAL ENGINEER
REG. NO. 8324
LANCE R. MCQUEEN
SOUTH DAKOTA
Lance R. McQueen
8-1-22

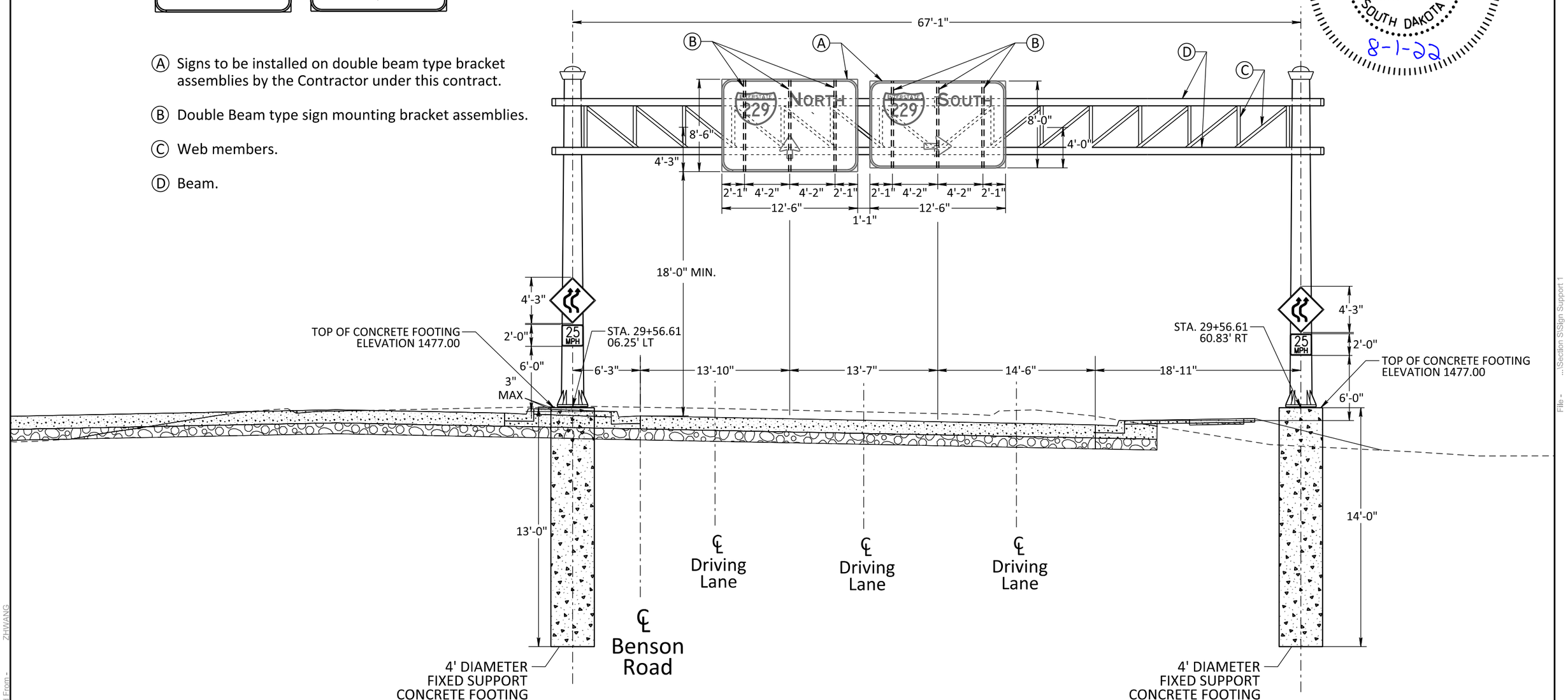

HDR

Plot Scale - 1:40
Plotted From - ZHWANG
File - ...\Section S\Sign Support 1

STATE OF SOUTH DAKOTA	PROJECT	SHEET	TOTAL SHEETS
	IM 2292(98)9 P 1200(04) IM 2292(112)6	S48	S78

FILE: ...\Section S\Sign Support 2
PLOTTING DATE: 07-28-2022

REV DATE:
INITIAL:

OVERHEAD SIGN SUPPORTS

FOR BIDDING PURPOSES ONLY

DOUBLE BEAM SIGN BRIDGE
Benson Road WB - Sta. 50+27
(LOOKING WEST)

REGISTERED PROFESSIONAL ENGINEER
REG. NO. 8324
LANCE R. MCQUEEN
SOUTH DAKOTA
Lance R. McQueen
8-1-22

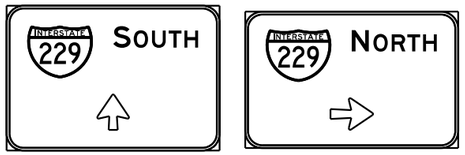

Ⓐ Signs to be installed on double beam type bracket assemblies by the Contractor under this contract.

Ⓑ Double Beam type sign mounting bracket assemblies.

Ⓒ Web members.

Ⓓ Beam.

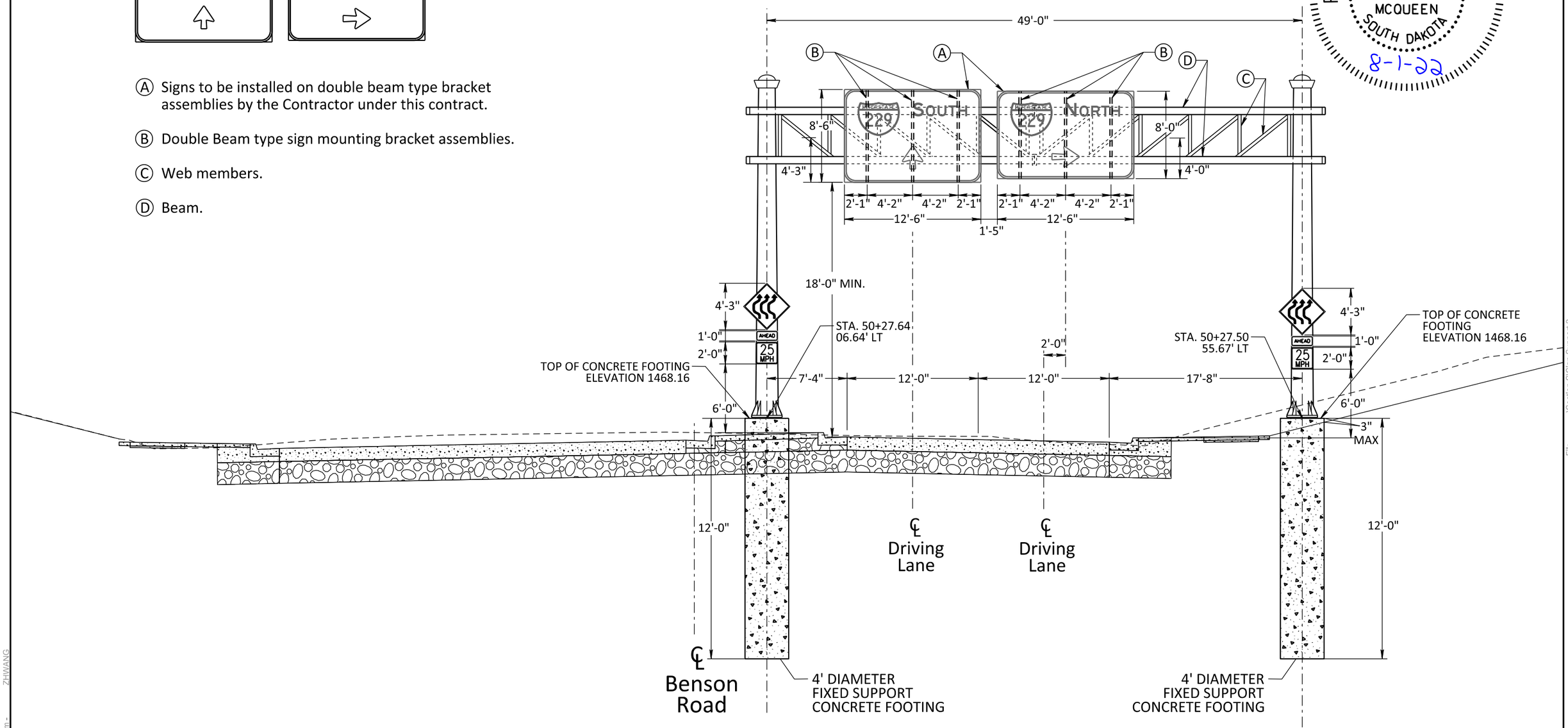

HDR

Plot Scale - 1:40
Plotted From - ZHWANG
File - ...\Section S\Sign Support 2

STATE OF SOUTH DAKOTA	PROJECT	SHEET	TOTAL SHEETS
	IM 2292(98)9 P 1200(04) IM 2292(112)6	S49	S78

FILE: ...\Section S\Sign Support 3
PLOTTING DATE: 07-28-2022

REV DATE:
INITIAL:

OVERHEAD SIGN SUPPORTS

FOR BIDDING PURPOSES ONLY

DOUBLE BEAM SIGN BRIDGE
CROSS SECTION VIEW

REGISTERED PROFESSIONAL ENGINEER
REG. NO. 8324
LANCE R. MCQUEEN
SOUTH DAKOTA
Lance R. McQueen
8-1-22

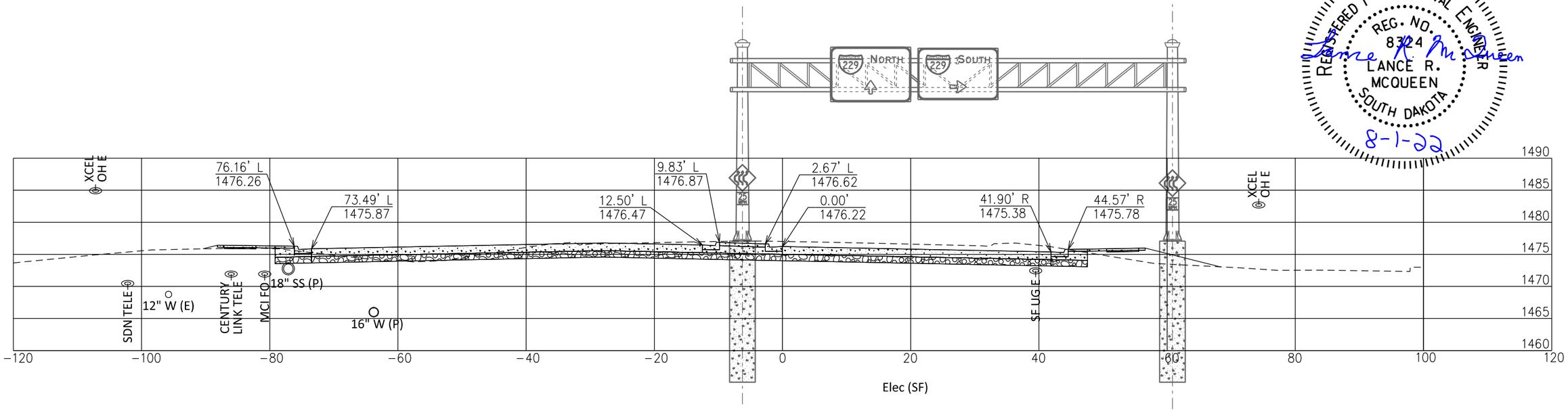

Benson Road EB - Sta. 29+57
(LOOKING EAST)

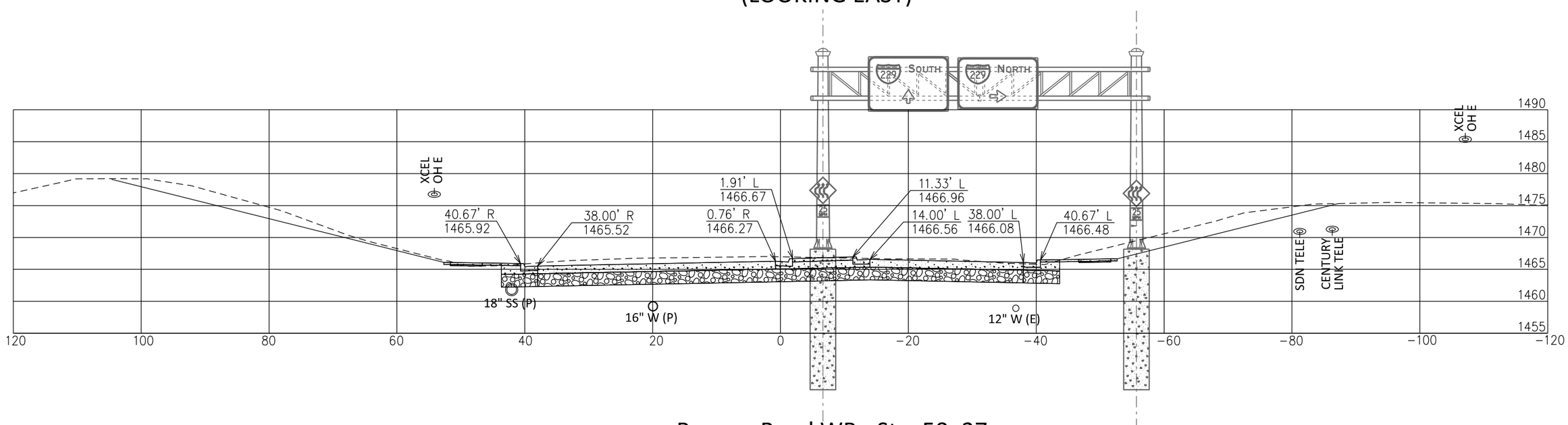

Benson Road WB - Sta. 50+27
(LOOKING WEST)

HDR

Plot Scale - 1:40
Plotted From - ZHWANG
File - ...\Section S\Sign Support 3

STATE OF SOUTH DAKOTA	PROJECT	SHEET	TOTAL SHEETS
	IM 2292(98)9 P 1200(04) IM 2292(112)6	S50	S78

FILE: ...\Section S\Sign Support 4
PLOTTING DATE: 07-28-2022

REV DATE:
INITIAL:

OVERHEAD SIGN SUPPORTS

FOR BIDDING PURPOSES ONLY

DOUBLE BEAM SIGN BRIDGE
I-229 NB - Sta. 2030+10
(LOOKING NORTH)

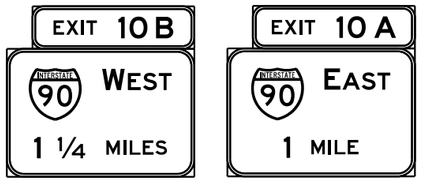

Ⓐ Signs to be installed on double beam type bracket assemblies by the Contractor under this contract.

Ⓑ Double Beam type sign mounting bracket assemblies.

Ⓒ Web members.

Ⓓ Beam.

Ⓔ S3x5.7 sign mounting beams for E1-5 Exit Panel Sign.

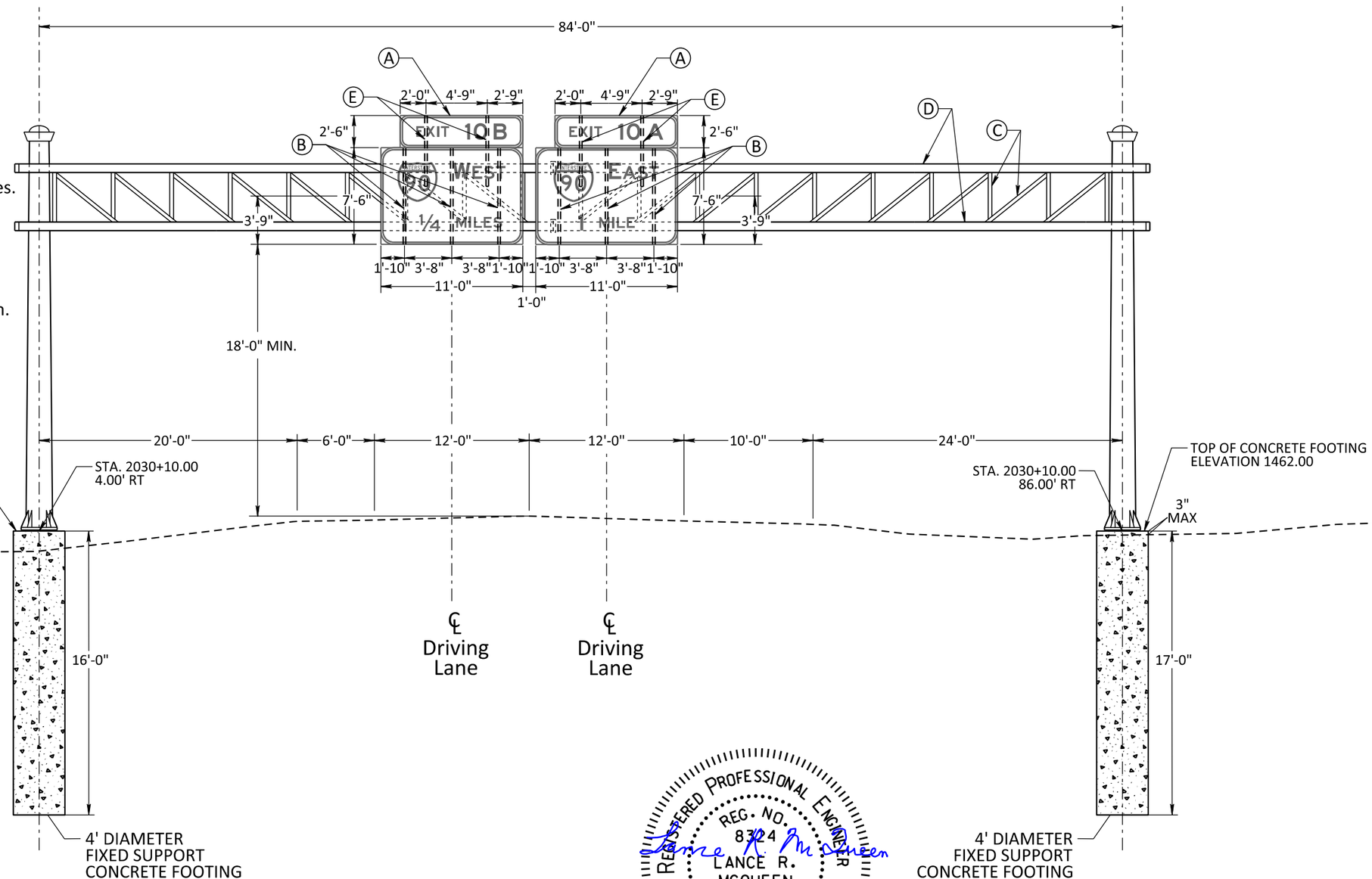

REGISTERED PROFESSIONAL ENGINEER
REG. NO. 8324
LANCE R. MCQUEEN
SOUTH DAKOTA
Lance R. McQueen
8-1-22

HDR

Plot Scale - 1:40
Plotted From - ZHWANG
File - ...\Section S\Sign Support 4

STATE OF SOUTH DAKOTA	PROJECT	SHEET	TOTAL SHEETS
	IM 2292(98)9 P 1200(04) IM 2292(112)6	S51	S78

FILE: ...\Section S\Sign Support 5
PLOTTING DATE: 07-28-2022

REV DATE:
INITIAL:

OVERHEAD SIGN SUPPORTS

FOR BIDDING PURPOSES ONLY

DOUBLE BEAM SIGN BRIDGE
CROSS SECTION VIEW

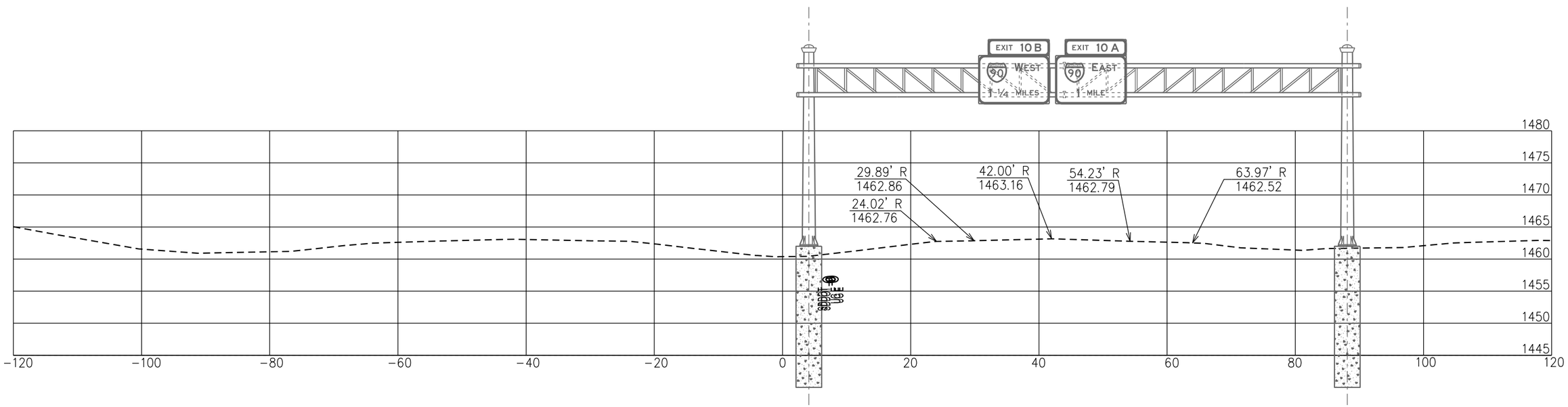

I-229 NB - Sta. 2030+10
(LOOKING NORTH)

REGISTERED PROFESSIONAL ENGINEER
REG. NO. 8324
LANCE R. MCQUEEN
SOUTH DAKOTA
Lance R. McQueen
8-1-22

HDR

Plot Scale - 1:40
Plotted From - ZHWANG
File - ...\Section S\Sign Support 5

STATE OF SOUTH DAKOTA	PROJECT	SHEET	TOTAL SHEETS
	IM 2292(98)9 P 1200(04) IM 2292(112)6	S52	S78

FILE: ...\Section S\Sign Support 6
PLOTTING DATE: 07-28-2022

REV DATE:
INITIAL:

OVERHEAD SIGN SUPPORTS

FOR BIDDING PURPOSES ONLY

CANTILEVER SIGN SUPPORT

I-229 Northbound Exit 9 Ramp B - Sta. 400+00
(LOOKING NORTH)

Ⓐ Signs to be installed on double beam type bracket assemblies by the Contractor under this contract.

Ⓑ Double Beam type sign mounting bracket assemblies.

Ⓒ Web members.

Ⓓ Beam.

Ⓔ S3x5.7 sign mounting beams for E1-5 Exit Panel Sign.

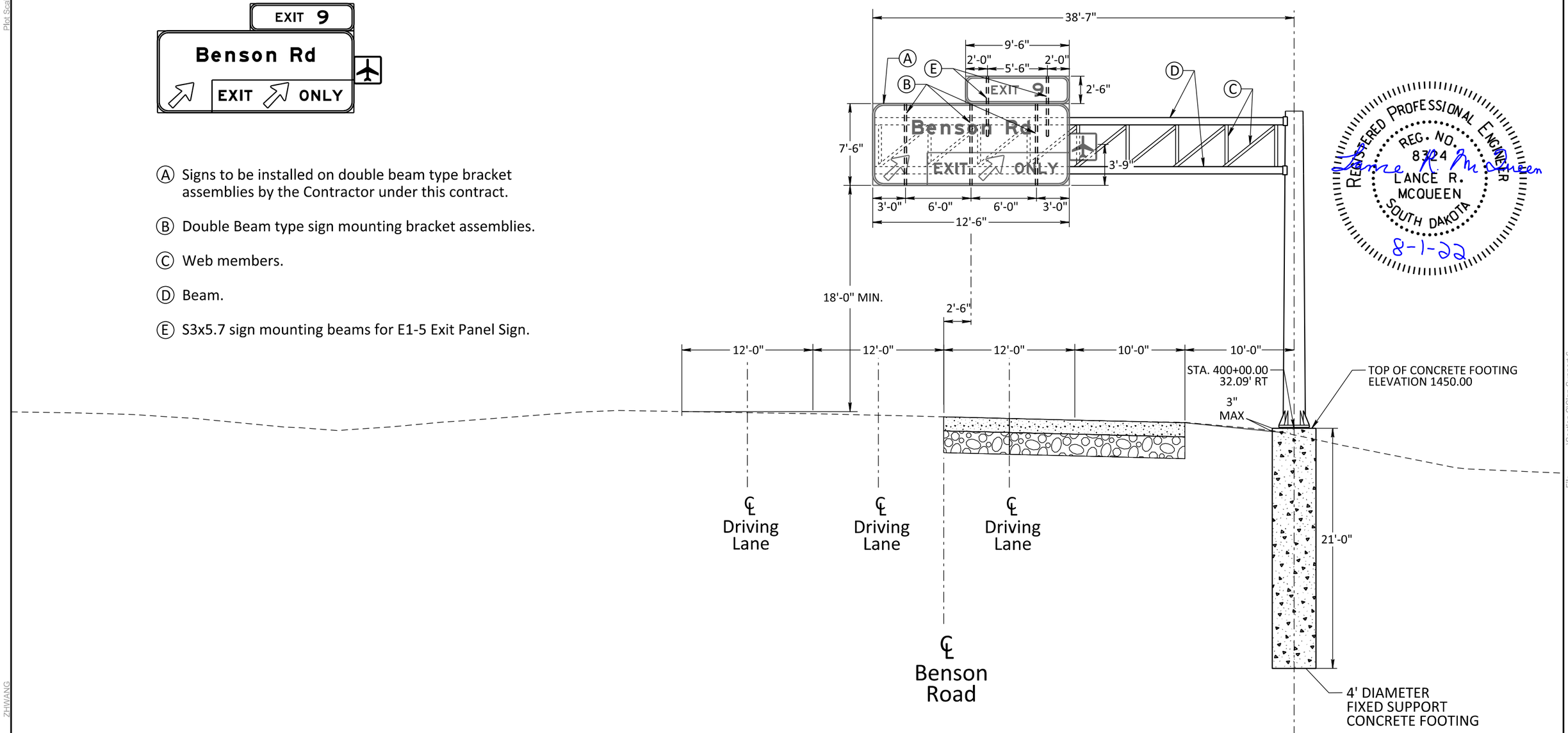

REGISTERED PROFESSIONAL ENGINEER
REG. NO. 8324
LANCE R. MCQUEEN
SOUTH DAKOTA
Lance R. McQueen
8-1-22

HDR

Plot Scale - 1:40
Plotted From - ZHWANG
File - ...\Section S\Sign Support 6

STATE OF SOUTH DAKOTA	PROJECT	SHEET	TOTAL SHEETS
	IM 2292(98)9 P 1200(04) IM 2292(112)6	S53	S78

FILE: ...\Section S\Sign Support 7
PLOTTING DATE: 07-28-2022

REV DATE:
INITIAL:

OVERHEAD SIGN SUPPORTS

FOR BIDDING PURPOSES ONLY

CANTILEVER SIGN SUPPORT
CROSS SECTION VIEW

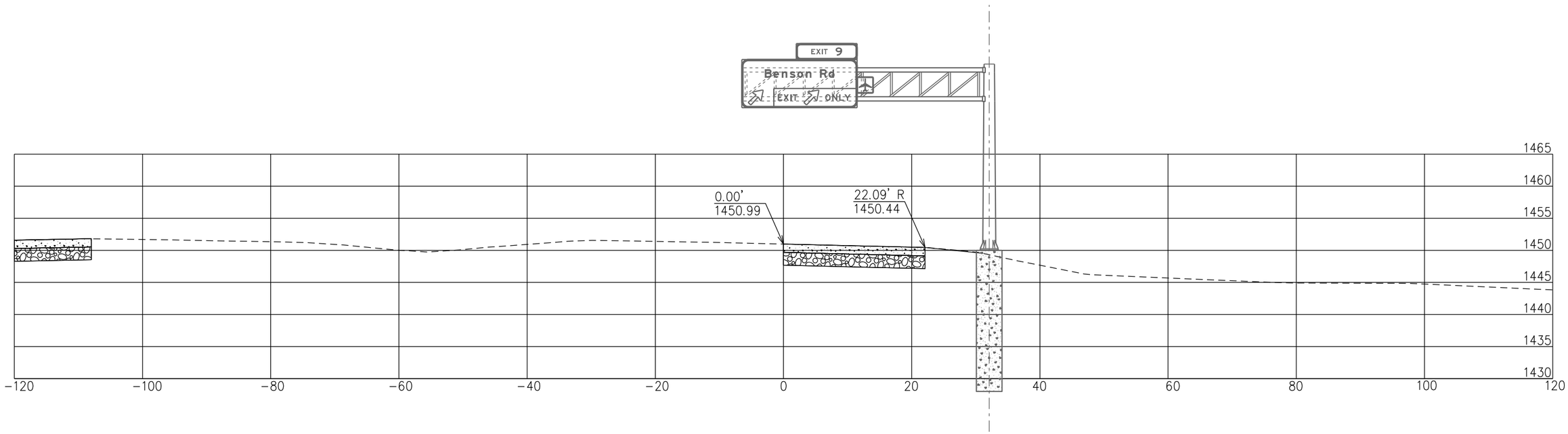

I-229 Northbound Exit 9 Ramp B - Sta. 400+00
(LOOKING NORTH)

REGISTERED PROFESSIONAL ENGINEER
REG. NO. 8324
LANCE R. MCQUEEN
SOUTH DAKOTA

Lance R. McQueen
8-1-22

HDR

Plot Scale - 1:40
Plotted From - ZHWANG
File - ...\Section S\Sign Support 7

STATE OF SOUTH DAKOTA	PROJECT	SHEET	TOTAL SHEETS
	IM 2292(98)9 P 1200(04) IM 2292(112)6	S54	S78

FILE: ...\Section S\Sign Support 8
PLOTTING DATE: 07-28-2022

REV DATE:
INITIAL:

OVERHEAD SIGN SUPPORTS

FOR BIDDING PURPOSES ONLY

MAST ARM SIGN SUPPORT

I-229 Northbound Exit 9 Ramp B - Sta. 417+95
(LOOKING NORTH)

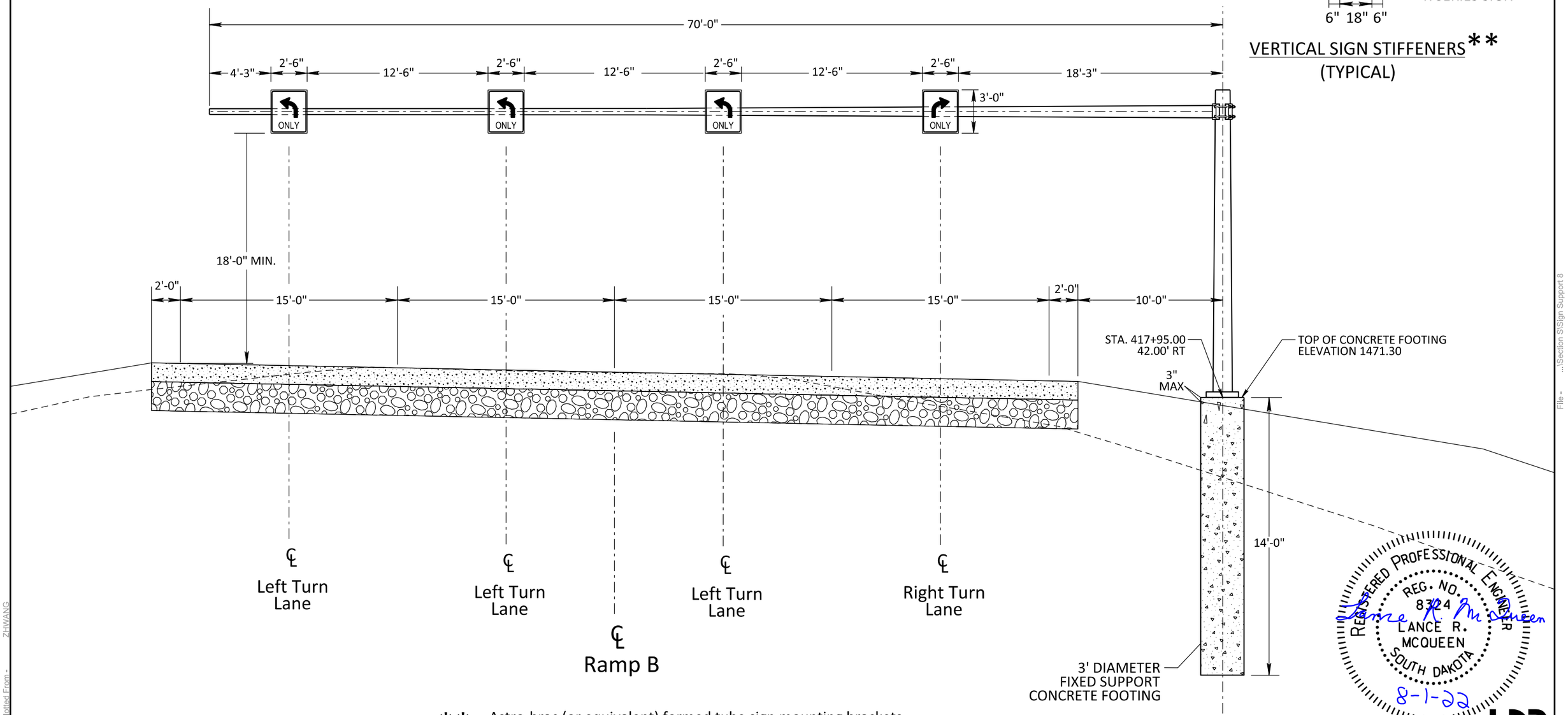

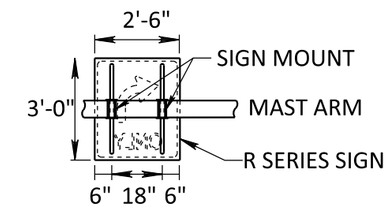

VERTICAL SIGN STIFFENERS**
(TYPICAL)

REGISTERED PROFESSIONAL ENGINEER
REG. NO. 8324
LANCE R. MCQUEEN
SOUTH DAKOTA
Lance R. McQueen
8-1-22

** - Astro-brac (or equivalent) formed tube sign mounting brackets.

HDR

Plot Scale - 1:40
Plotted From - ZHWANG
File - ...\Section S\Sign Support 8

STATE OF SOUTH DAKOTA	PROJECT	SHEET	TOTAL SHEETS
	IM 2292(98)9 P 1200(04) IM 2292(112)6	S55	S78

FILE: ...\Section S\Sign Support 9
PLOTTING DATE: 07-28-2022

REV DATE:
INITIAL:

OVERHEAD SIGN SUPPORTS

FOR BIDDING PURPOSES ONLY

MAST ARM SIGN SUPPORT

I-229 Southbound Exit 9 Ramp D - Sta. 606+28
(LOOKING SOUTH)

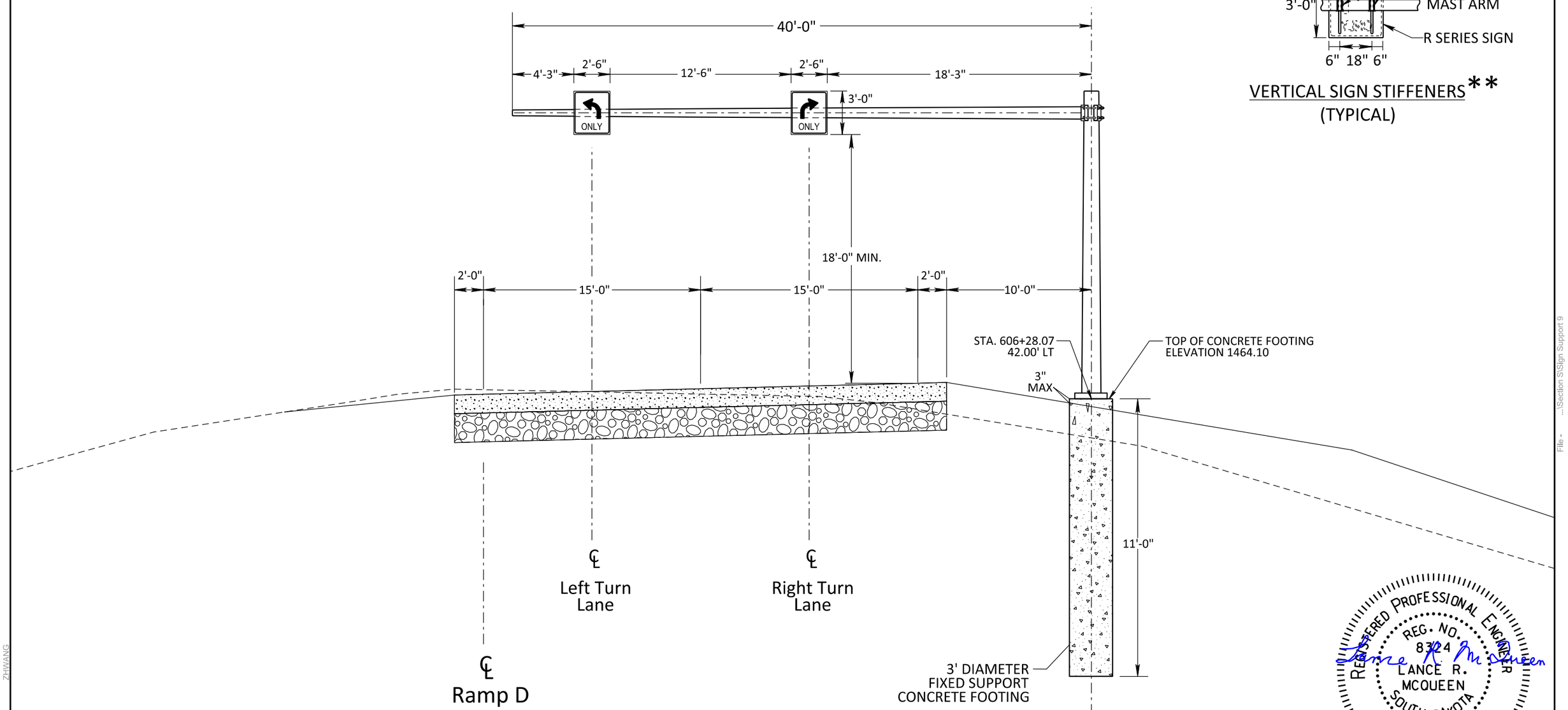

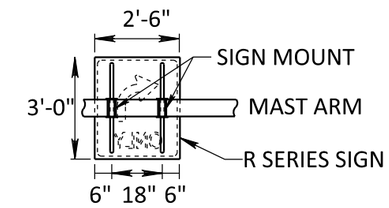

VERTICAL SIGN STIFFENERS**
(TYPICAL)

REGISTERED PROFESSIONAL ENGINEER
REG. NO. 8324
LANCE R. MCQUEEN
SOUTH DAKOTA
Lance R. McQueen
8-1-22

** - Astro-brac (or equivalent) formed tube sign mounting brackets.

HDR

Plot Scale - 1:40
Plotted From - ZHWANG
File - ...\Section S\Sign Support 9

STATE OF SOUTH DAKOTA	PROJECT	SHEET	TOTAL SHEETS
	IM 2292(98)9 P 1200(04) IM 2292(112)6	S56	S78

FILE: ...\Section S\Sign Support 10
PLOTTING DATE: 07-28-2022

REV DATE:
INITIAL:

OVERHEAD SIGN SUPPORTS

FOR BIDDING PURPOSES ONLY

MAST ARM SIGN SUPPORT
CROSS SECTION VIEW

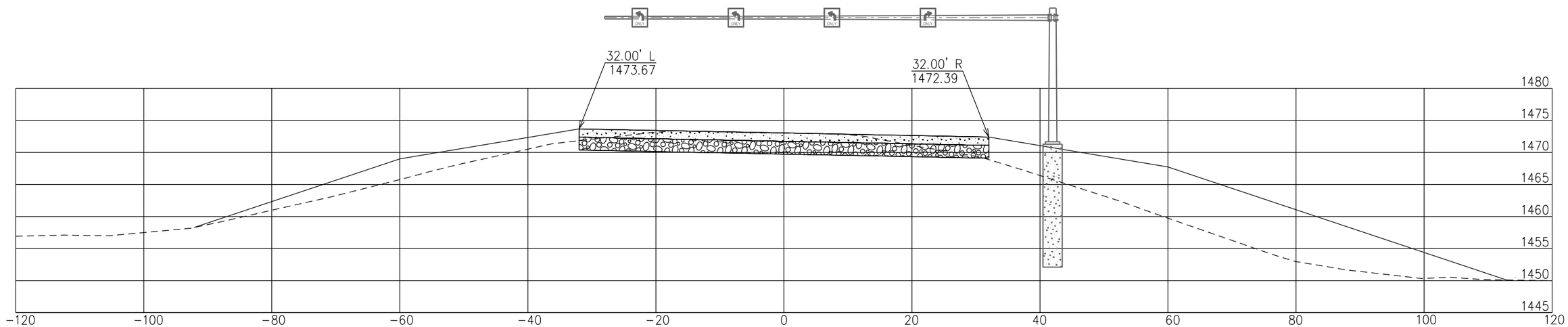

I-229 Northbound Exit 9 Ramp B - Sta. 417+95
(LOOKING NORTH)

REGISTERED PROFESSIONAL ENGINEER
REG. NO. 8324
LANCE R. MCQUEEN
SOUTH DAKOTA
Lance R. McQueen
8-1-22

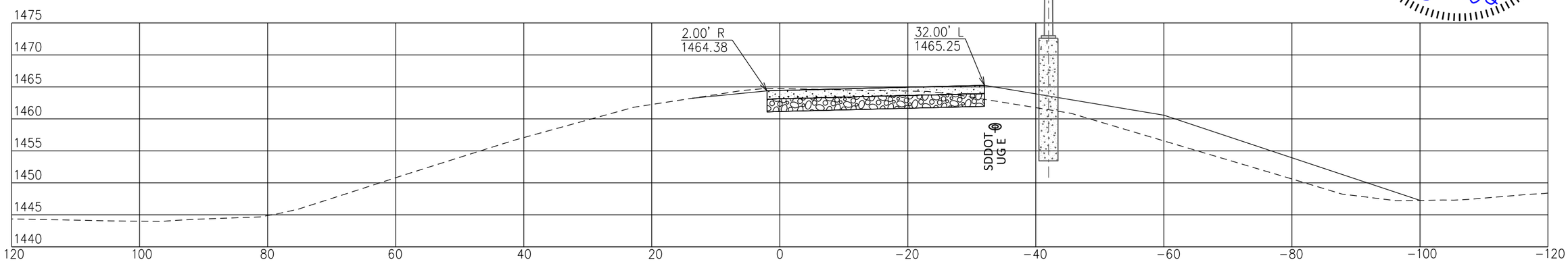

I-229 Southbound Exit 9 Ramp D - Sta. 606+28
(LOOKING SOUTH)

HDR

Plot Scale - 1:40
Plotted From - ZHWANG
File - ...\Section S\Sign Support 10

SPECIAL SIGN SUPPORT DETAILS

FOR BIDDING PURPOSES ONLY

STATE OF SOUTH DAKOTA	PROJECT	SHEET	TOTAL SHEETS
	IM 2292(98)9 P 1200(04) IM 2292(112)6	S57	S78

FILE: ...\Section S\Sign Support 11
PLOTTING DATE: 07-28-2022

REV DATE:
INITIAL:

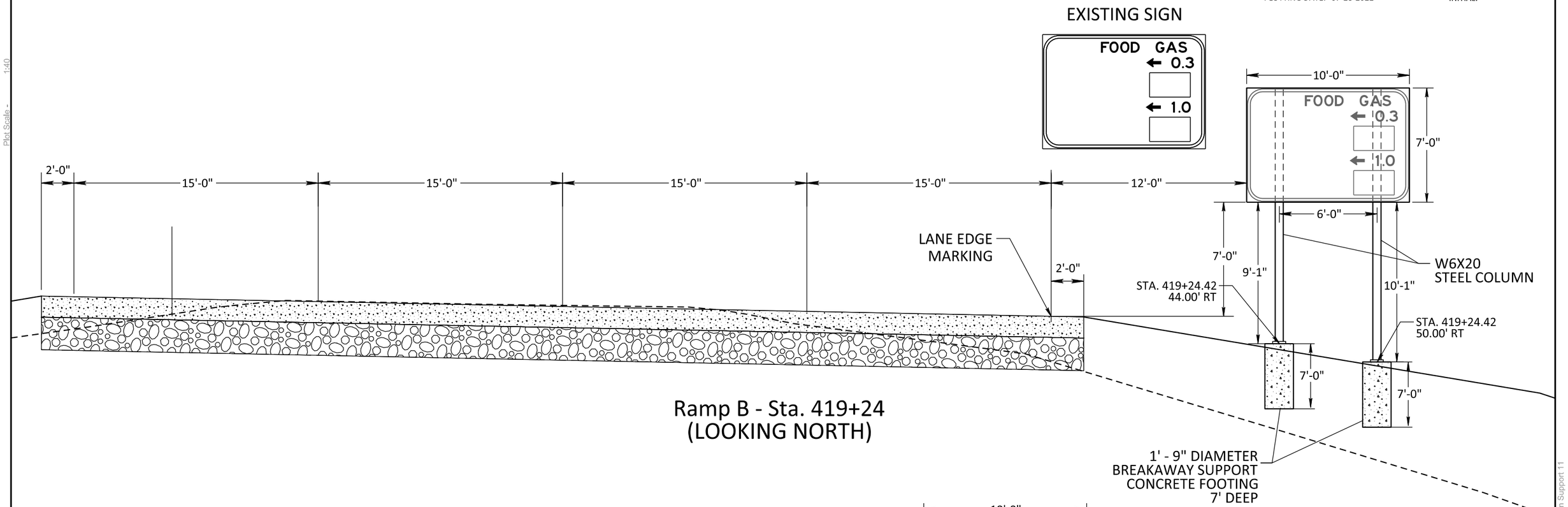

Ramp B - Sta. 419+24
(LOOKING NORTH)

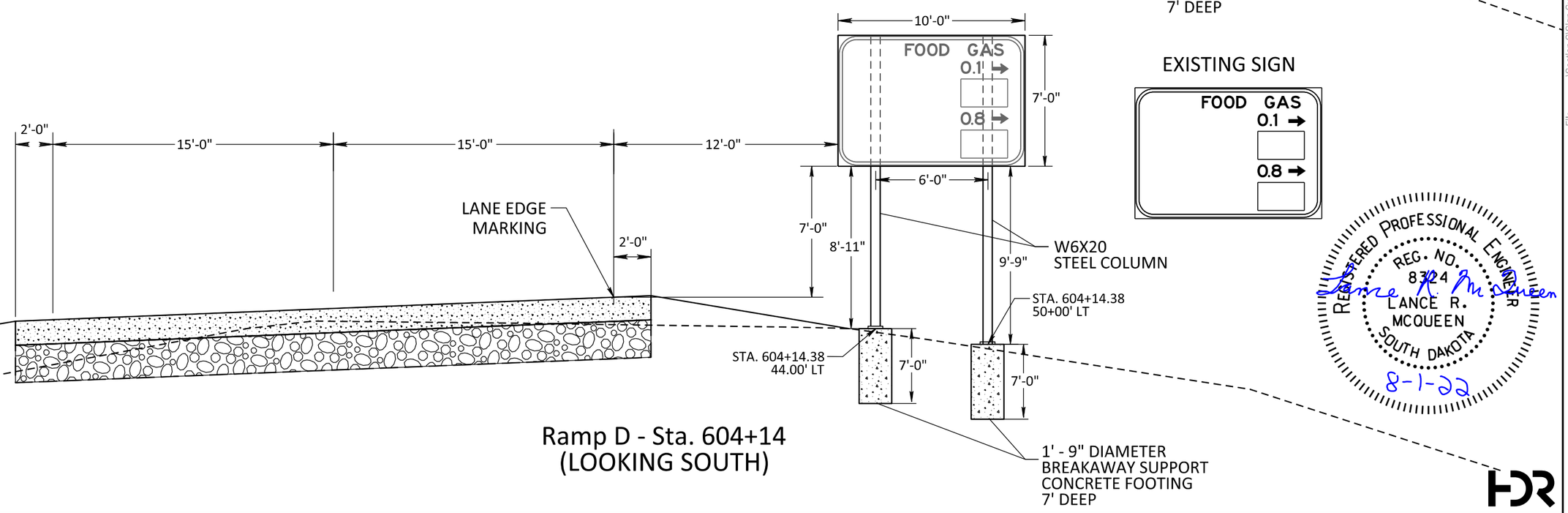

Ramp D - Sta. 604+14
(LOOKING SOUTH)

REGISTERED PROFESSIONAL ENGINEER
REG. NO. 8324
LANCE R. MCQUEEN
SOUTH DAKOTA
8-1-22

HDR

Plot Scale - 1:40
Plotted From - ZHWANG
File - ...\Section S\Sign Support 11

SPECIAL SIGN SUPPORT DETAILS

FOR BIDDING PURPOSES ONLY

STATE OF SOUTH DAKOTA	PROJECT	SHEET	TOTAL SHEETS
	IM 2292(98)9 P 1200(04) IM 2292(112)6	S58	S78

FILE: ...\Section S\Sign Support 12
PLOTTING DATE: 07-28-2022

REV DATE:
INITIAL:

SPECIAL SIGN SUPPORT
CROSS SECTION VIEW

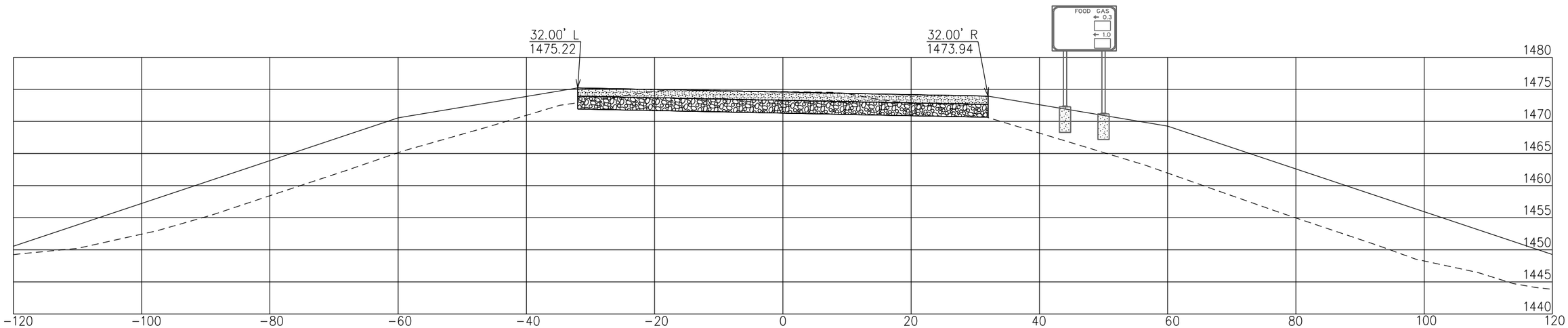

Ramp B - Sta. 419+24
(LOOKING NORTH)

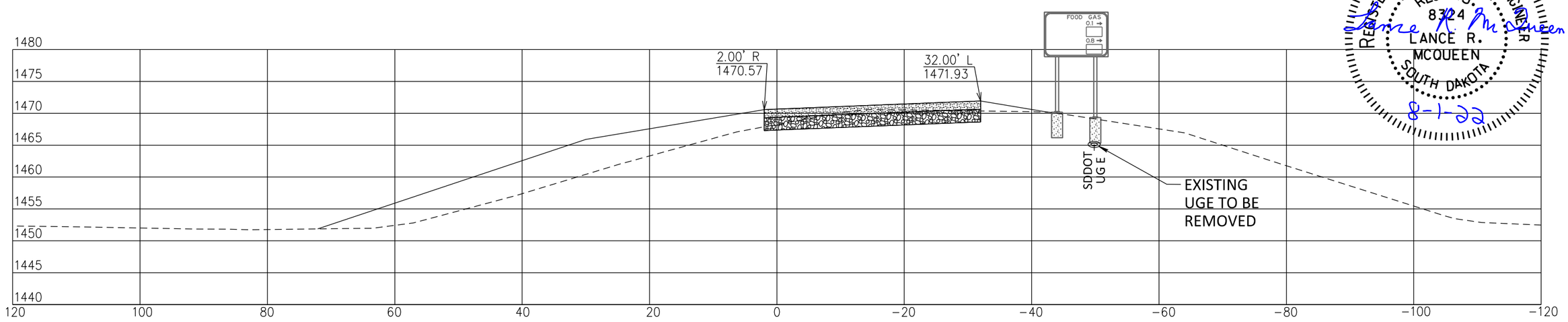

Ramp D - Sta. 604+14
(LOOKING SOUTH)

REGISTERED PROFESSIONAL ENGINEER
REG. NO. 8324
LANCE R. MCQUEEN
SOUTH DAKOTA
8-1-22

HDR

Plot Scale - 1:40
Plotted From - ZHWANG
File - ...\Section S\Sign Support 12

FOR BIDDING PURPOSES ONLY

SPECIAL SIGN SUPPORT DETAILS

POST-MOUNTED FREEWAY RAMP SIGN (TYPICAL)

RAMP SIGNING

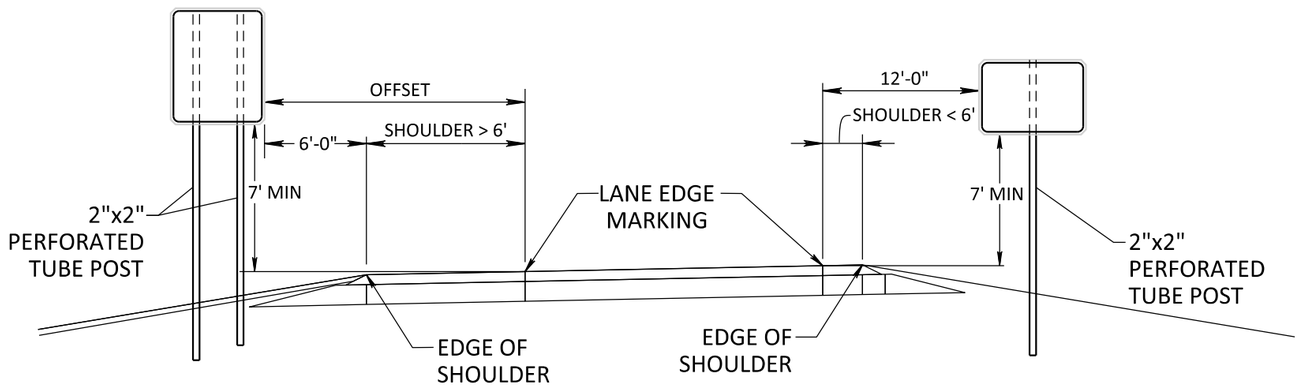

MERGE / ADDED LANE SIGN INSTALLATION

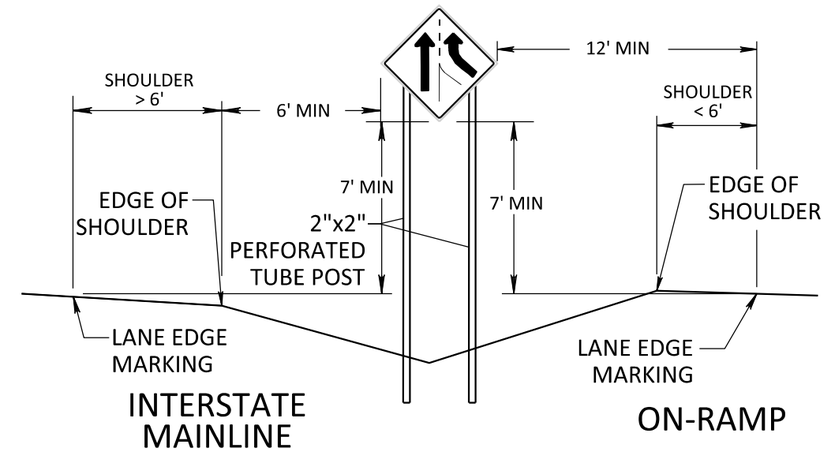

OFF- RAMP WRONG WAY SIGNING

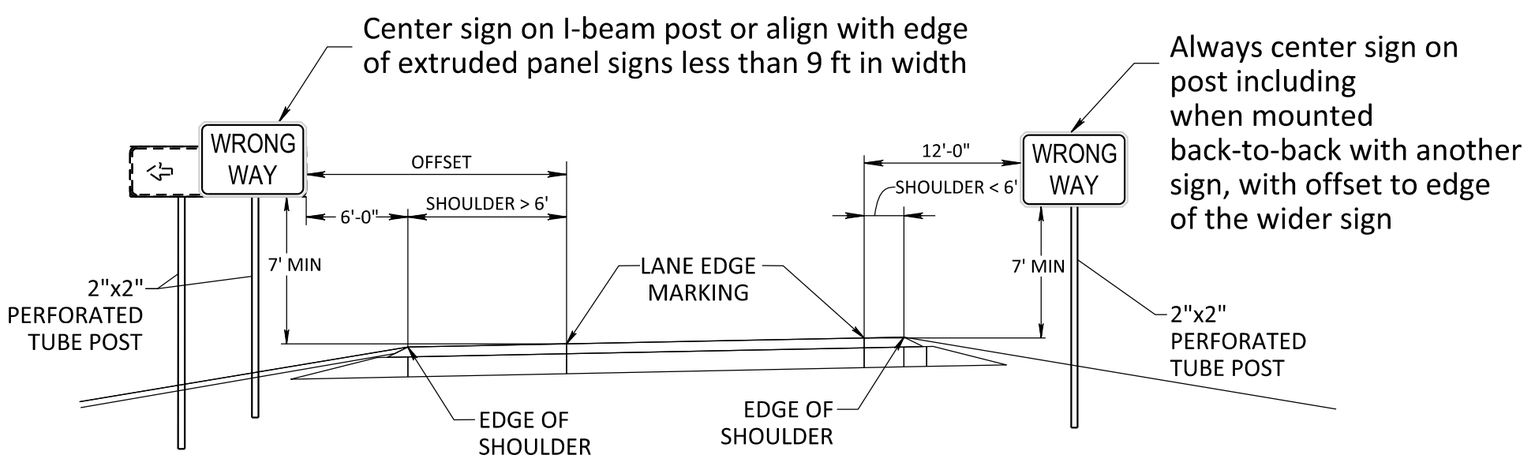

REGISTERED PROFESSIONAL ENGINEER
REG. NO. 8324
LANCE R. MCQUEEN
SOUTH DAKOTA
Lance R. McQueen
8-1-22

HDR

Plot Scale - 1:40
Plotted From - ZHWANG
File - ...\Section S\Sign Support 13

STATE OF SOUTH DAKOTA	PROJECT	SHEET	TOTAL SHEETS
	IM 2292(98)9 P 1200(04) IM 2292(112)6	S60	S78

FILE: ...\Section S\Sign Support 14
PLOTTING DATE: 07-28-2022

REV DATE:
INITIAL:

SPECIAL SIGN SUPPORT DETAILS

FOR BIDDING PURPOSES ONLY

POST-MOUNTED ARTERIAL SIGN (TYPICAL)

TYPICAL TWO-POST SIGN (NO SIDEWALK)

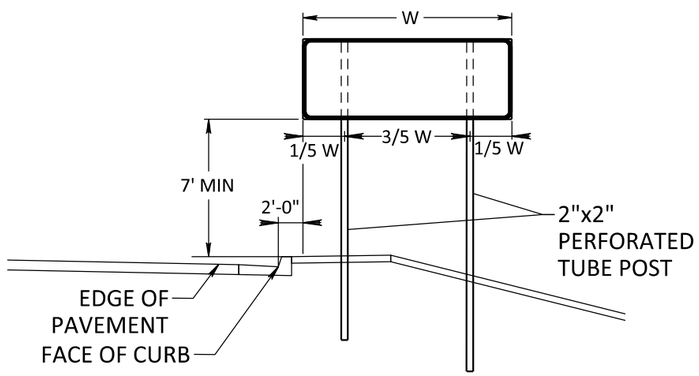

TYPICAL SINGLE POST SIGN (NO SIDEWALK)

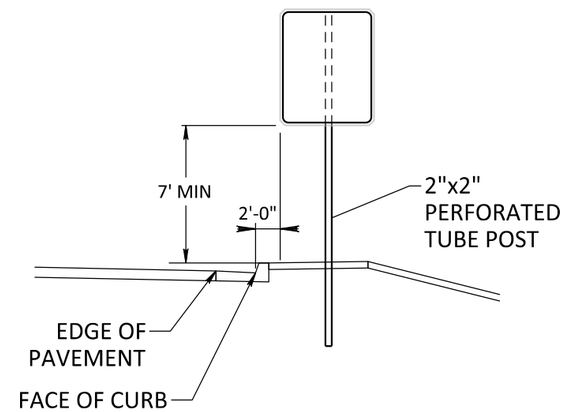

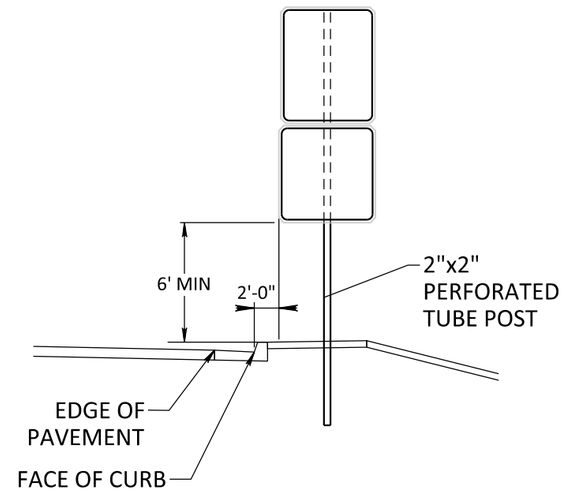

TYPICAL TWO-POST SIGN (WITH SIDEWALK)

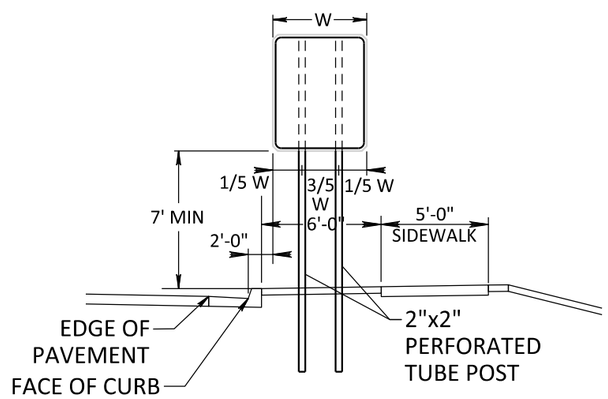

REGISTERED PROFESSIONAL ENGINEER
REG. NO. 8324
LANCE R. MCQUEEN
SOUTH DAKOTA
Lance R. McQueen
8-1-22

TYPICAL SINGLE POST SIGN (WITH SIDEWALK)

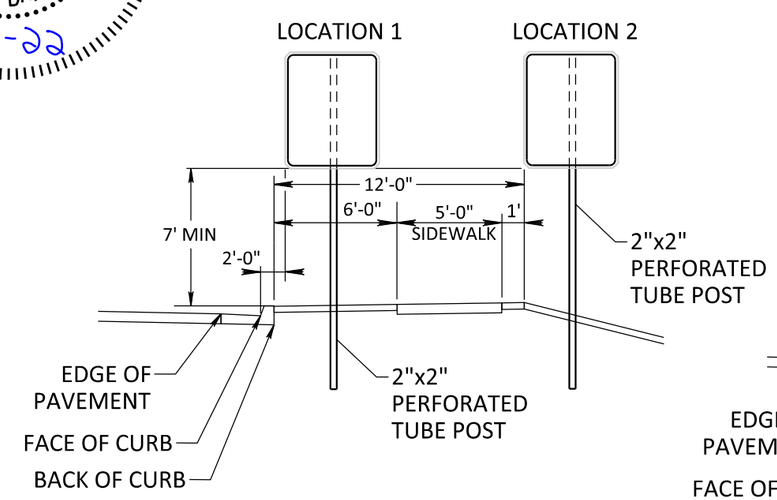

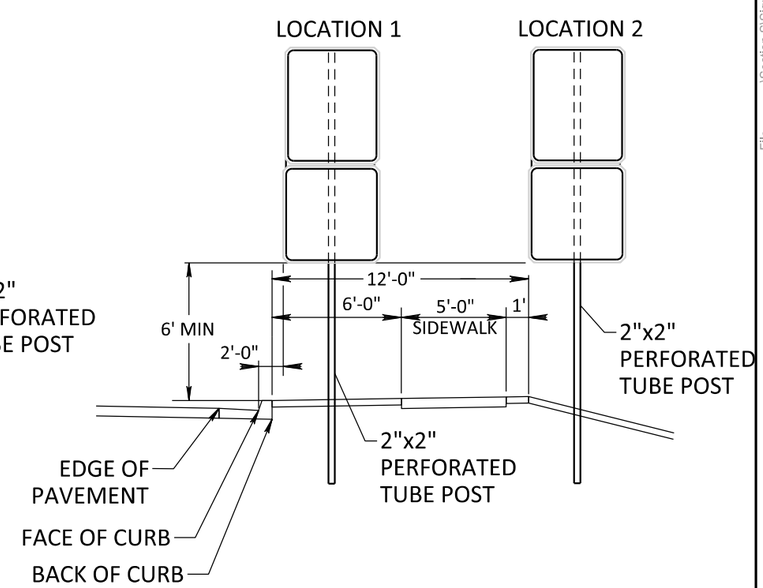

TYPICAL TWO-POST SIGN (WITH SIDEWALK)

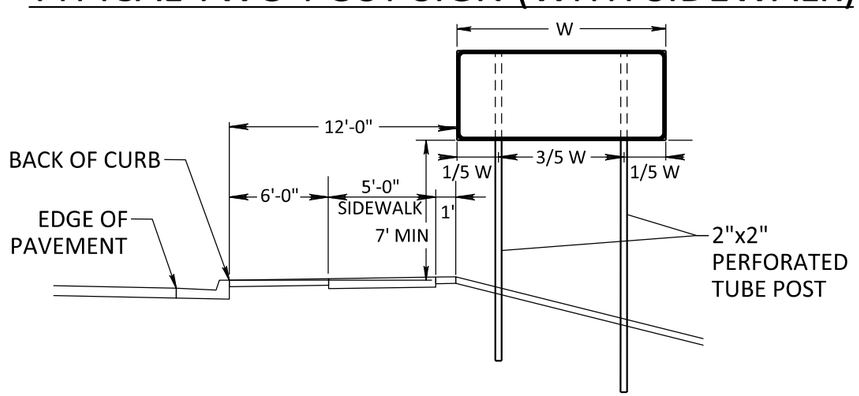

Plot Scale - 1:40
Plotted From - ZHWANG
File - ...\Section S\Sign Support 14

△ Mounting height as recommended by latest edition of AASHTO ROADSIDE DESIGN GUIDE.

★ NOTE:
Flanged Posts will have a maximum depth of 5" and a maximum flange width of 4". Pipe posts will have a maximum outside diameter of 5".

ⓓ Clear distance as recommended by latest edition of MANUAL ON UNIFORM TRAFFIC CONTROL DEVICES.

ø See Erection Details for SHEET ALUMINUM SIGNS for flat sheet sign face installation details and stiffener requirements.

NOTE:
N = Number of Stiffeners to be used
H = Vertical dimension of sign

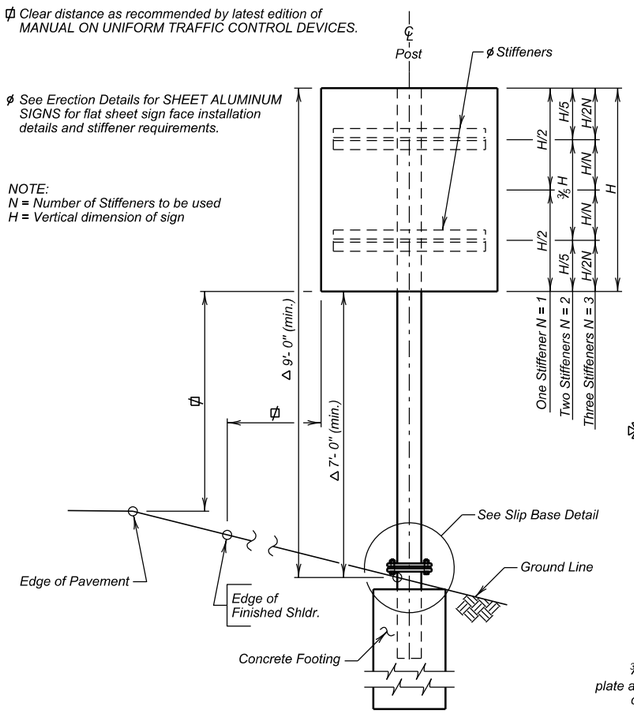

ELEVATION

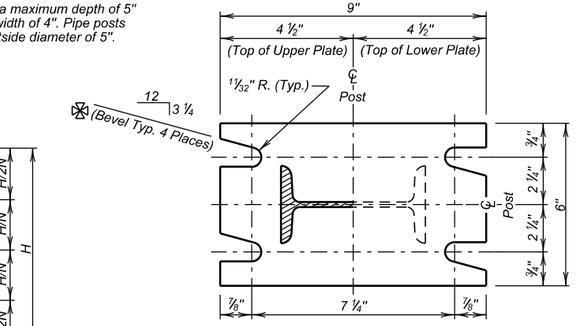

SEC. C - C
★ (Flanged Post)

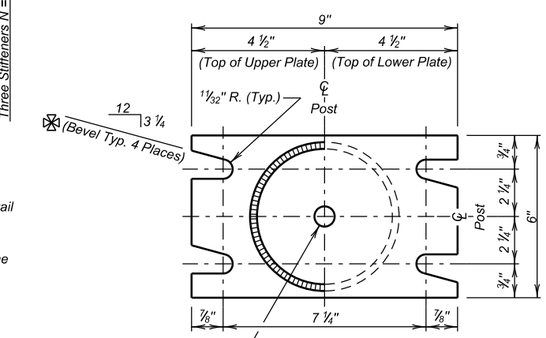

SEC. C - C
★ (Pipe Post)

3/4" ø drain hole in post base plate and stub base plate to allow drainage during galvanizing

NOTE:
Above Bevel is for sign on right shoulder. Plate Bevels are opposite hand for sign on left shoulder.

TRAFFIC DIRECTION

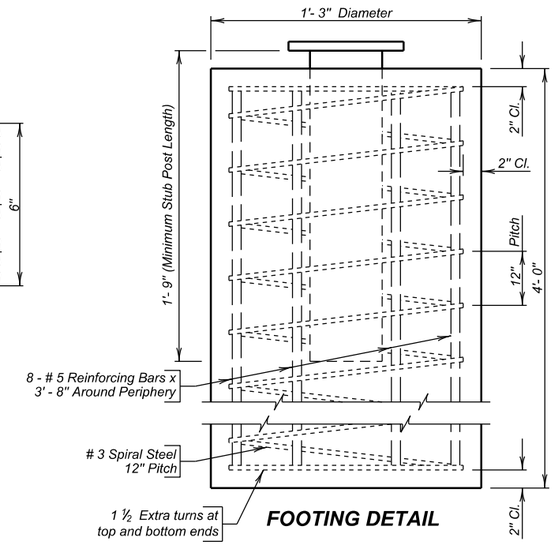

FOOTING DETAIL

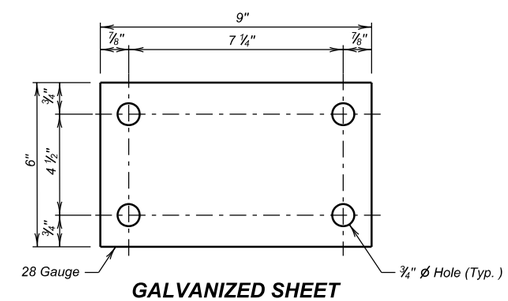

GALVANIZED SHEET METAL DIAPHRAGM

NOTE:
Diaphragm need not be regalvanized after cutting to size and drilling of holes.

NOTES

1. Design Specification: AASHTO Standard Specifications for Structural Supports for Highway Signs, Luminaires and Traffic Signals, 2001 Edition with 2003 Interims.
2. Concrete Footings will be Class M6 - fc = 4000 p. s. i.
3. Structural Steel, except Pipe Posts, will comform to ASTM A36. Pipe Posts will conform to ASTM A53 Grade B or ASTM A501 and will be standard weight posts (Schedule No. 40).
4. All Reinforcing Steel, except spirals, will conform to ASTM 615 Grade 60.
5. Spiral Reinforcing Steel may be fabricated from cold drawn wire ASTM A82, or hot rolled plain or deformed bars conforming to the strength requirements of ASTM A615, Grade 60.
6. All Bolts and Nuts will conform to ASTM F3125 Grade A325. Washers will comfrom to ASTM F436. All hardware will be galvanized in accordance with ASTM F2329.
7. All steel including Posts and Post Stubs will be galvanized in accordance with ASTM A123.
8. All Bolt Holes will be drilled. All plate cuts will preferably be saw cuts. However, Flame Cutting will be permitted providing all edges are ground smooth (metal projecting beyond the plane of the plate face will NOT be allowed).
9. All welding and weld inspection will be in accordance with the latest edition of AWS D 1.5 Structural Welding Code.

PROCEDURE FOR ASSEMBLING SLIP BASE

1. Place galvanized Sheet Metal Diaphragms on top of the lower slip plate.
2. Connect main post to Stub Post with clean unlubricated bolts and nuts with one Hardened Washer on each bolt between slip plates.
3. Plumb post by adding shims between slip plates.
4. Tighten bolts to a practical maximum, using a 12" - 15" wrench in order to bed surfaces and clean threads. DO NOT TIGHTEN TO PROOF LOAD.
5. Loosen all bolts and retighten in increments, using a systematic order, until each bolt has been tightened to a torque not exceeding 345 in-lb. DO NOT OVERTIGHTEN. Check torque on each bolt after entire sign has been erected.

SHOP PLANS

The fabricator will submit shop plans in accordance with the Specifications or in Adobe PDF format. Shop plan submittals will be sent to the Office of Bridge Design. Include design and check design, if applicable, with initial submittal.

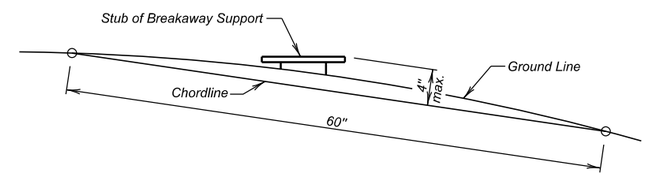

BREAKAWAY SUPPORT STUB CLEARANCE DIAGRAM

NOTE:
The stub post and lower slip plate will NOT extend more than 4" max. above the chordline within a 60" chord.

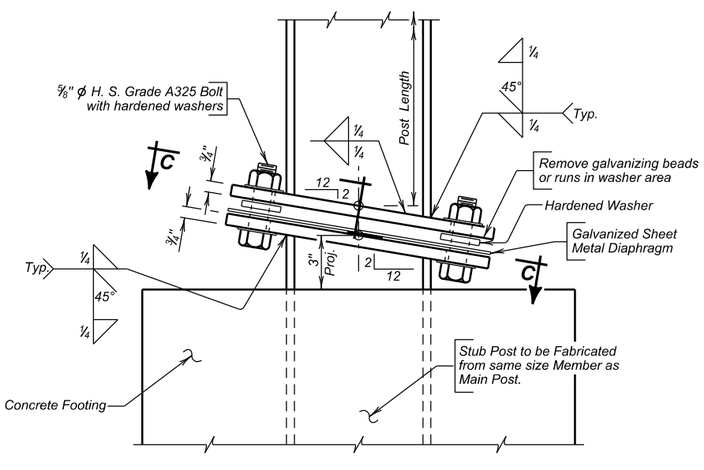

SLIP BASE DETAIL

TRAFFIC DIRECTION

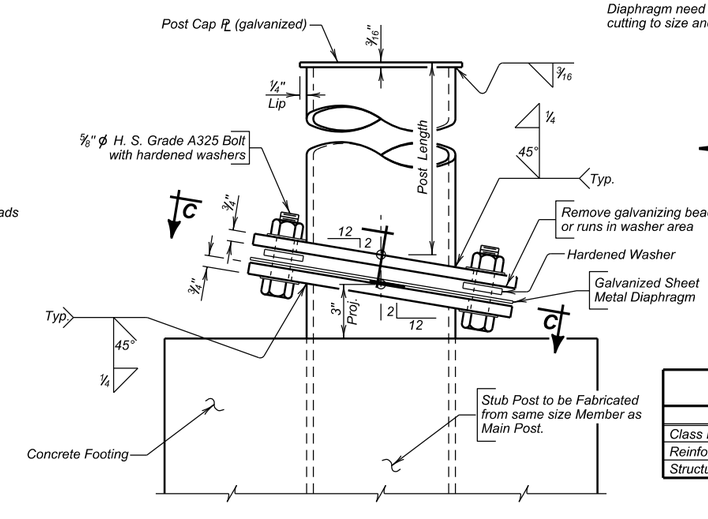

SLIP BASE DETAIL

ESTIMATED QUANTITIES (For informational purposes only)		
ITEM	UNIT	QUANTITY
Class M6 Concrete	Cu. Yd.	0.182
Reinforcing Steel	Lb.	41
Structure Excavation	Cu. Yd.	0.182

ERECTION DETAILS
FOR
SINGLE POST BREAKAWAY SIGN SUPPORTS
(FLANGED AND PIPE POSTS)
S. D. DEPT. OF TRANSPORTATION
DECEMBER 2016

DESIGNED BY	DRAWN BY	CHECKED BY	
RH/DM	RH/TB/MDG	RH/DM/PW	Steve A Johnson BRIDGE ENGINEER
CNTYPCNX	PCNXDSPG	BSTDBS1	

HDR

Plot Scale - 1:40
Plotted From - ZHWANG
File - ...\Section S\Detail Sheet 1

SITE LOCATION	POST SIZE	FOOTING DIMENSIONS		STUB POST LENGTH	LONGITUDINAL STEEL QUANTITIES			# SPIRAL STEEL QUANTITIES	
		DIA.	DEPTH		NO.	SIZE	LENGTH	DIA.	LENGTH
SEE SHEET S5									

⧖ # Spirals - Use 12" pitch and 1 ½ extra turns at each end. Use 1 ½ turns for lap at splice as required, or weld as approved by the Office of Bridge Design, Spirals may be smooth bars, Bar length shown does not include Splices. Dimensions are out to out of bars.

NOTE:
The above is a Site Specific data entry table and the inserted information is the responsibility of the Region Traffic Engineer.

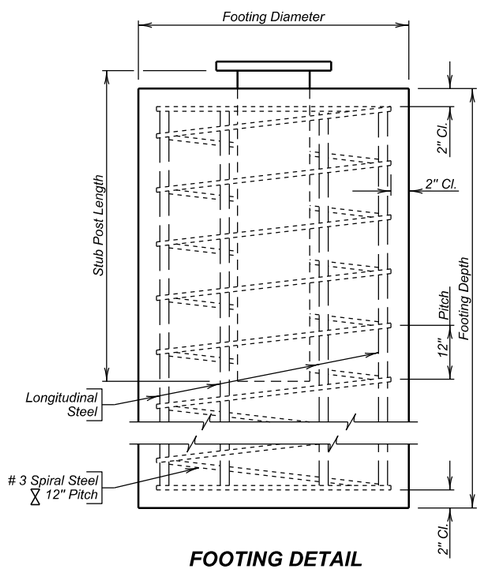

FOOTING DETAIL

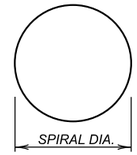

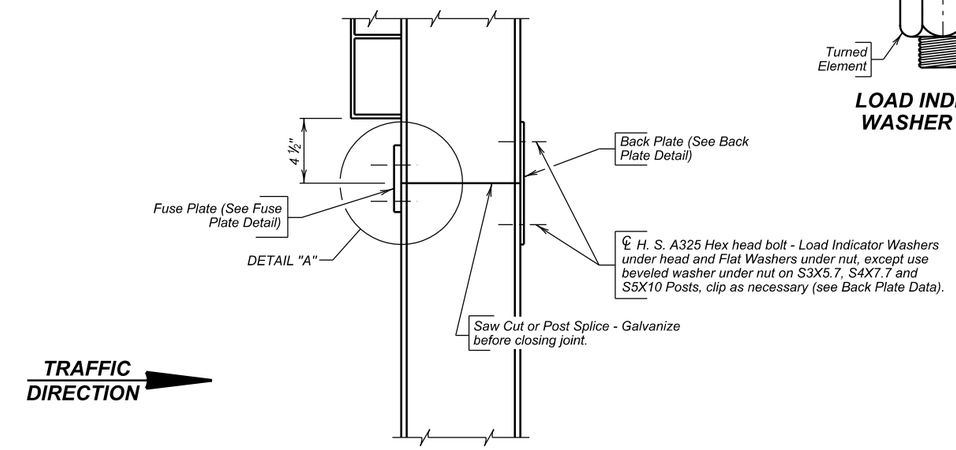

FUSE & BACK PLATE INSTALLATION

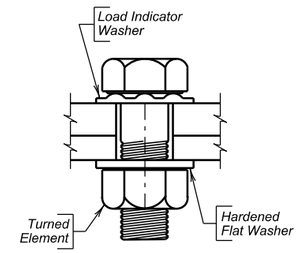

LOAD INDICATOR WASHER DETAIL

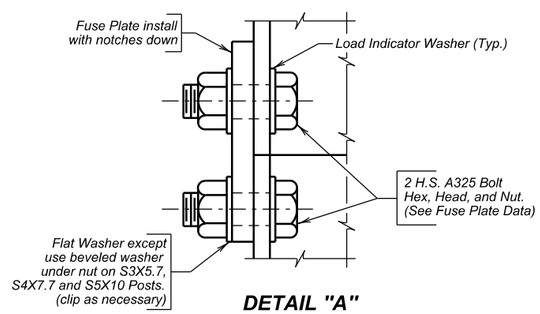

DETAIL "A"

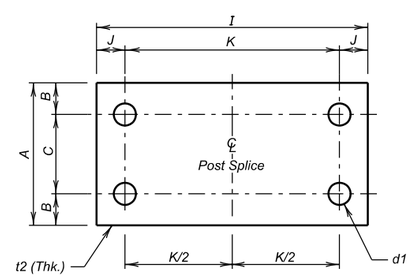

BACK PLATE DETAIL

NOTES

1. Design Specification: AASHTO Standard Specifications for Structural Supports for Highway Signs, Luminaires and Traffic Signals, 2001 Edition with 2003 Interims.
2. Concrete Footings will be Class M6 - fc = 4000 p. s. i.
3. Structural Steel will comform to ASTM A36.
4. All Reinforcing Steel, except spirals, will conform to ASTM 615 Grade 60.
5. Spiral Reinforcing Steel may be fabricated from cold drawn wire ASTM A1064, or hot rolled plain or deformed bars conforming to the strength requirements of ASTM A615, Grade 60.
6. All Bolts and Nuts will conform to ASTM A325 except that ½" diameter bolts may conform to either ASTM A325 or ASTM A449. Washers will conform to ASTM F436. All hardware will be galvanized in accordance with ASTM F2329.
7. All structural steel including Posts and Post Stubs will be galvanized in accordance with ASTM A123.
8. All Bolt Holes will be drilled. All plate cuts will preferably be saw cuts. However, Flame Cutting will be permitted providing all edges are ground smooth (metal projecting beyond the plane of the plate face will NOT be allowed).
9. All welding and weld inspection will be in accordance with the latest edition of AWS D 1.5 Structural Welding Code.

PROCEDURE FOR ASSEMBLING SLIP BASE

1. Place galvanized Sheet Metal Diaphrams on top of the lower slip plate.
2. Connect main post to Stub Post with clean unlubricated bolts and nuts with one Hardened Washer on each bolt between slip plates.
3. Plumb post by adding shims between slip plates.
4. Tighten bolts to a practical maximum, using a 12" - 15" wrench in order to bed surfaces and clean threads. DO NOT TIGHTEN TO PROOF LOAD.
5. Loosen all bolts and retighten in increments, using a systematic order, until each bolt has been tightened to the specified torque corresponding to the post size used (See Slip Base Plate Data). Tighten bolts only to the torque specified. DO NOT OVERTIGHTEN. Check torque on each bolt after entire sign has been erected.

ASSEMBLY OF FRICTION FUSE PLATES, BACK PLATES AND STIFFENERS

High strength bolts will be tightened so as to obtain a residual tension by the use of load indicator washers.

SHOP PLANS

The fabricator will submit shop plans in accordance with the Specifications or in Adobe PDF format. Shop plan submittals will be sent to the Office of Bridge Design. Include design and check design, if applicable, with initial submittal.

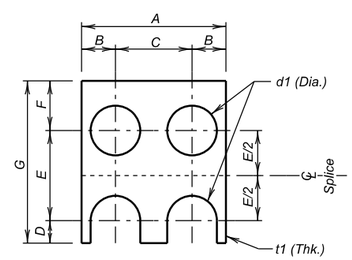

FUSE PLATE DETAIL

TABLE 1 - FUSE PLATE DATA

Post Size	A	B	C	D	E	F	G	d1	t1	Bolt Size
S3X5.7	2 5/8"	9/16"	1 1/2"	1/2"	1 1/2"	1 1/8"	3 1/8"	5/8" ø	1/4"	1/2" ø
S4X7.7	2 5/8"	9/16"	1 1/2"	1/2"	1 1/2"	1 1/8"	3 1/8"	5/8" ø	1/4"	1/2" ø
S5X10	3"	11/16"	1 5/8"	5/8"	2 1/4"	1 1/8"	4"	3/4" ø	3/8"	5/8" ø
W6X12	4"	15/16"	2 1/8"	5/8"	2 1/2"	1 3/8"	4 1/2"	3/4" ø	3/8"	5/8" ø
W6X15	6"	1 3/8"	3 1/4"	5/8"	2 1/2"	1 3/8"	4 1/2"	3/4" ø	3/8"	5/8" ø
W6X20	6"	1 3/8"	3 1/4"	5/8"	2 1/2"	1 3/8"	4 1/2"	3/4" ø	3/8"	5/8" ø
W8X18	5 1/4"	1 5/16"	2 5/8"	3/4"	2 1/2"	1 3/8"	4 5/8"	7/8" ø	1/2"	3/4" ø
W8X21	5 1/4"	1 5/16"	2 5/8"	3/4"	2 1/2"	1 3/8"	4 5/8"	7/8" ø	1/2"	3/4" ø
W8X24	6 1/2"	1 1/2"	3 1/2"	7/8"	3"	1 3/8"	5 1/2"	1"Ø	9/16"	7/8" ø
W8X28	6 1/2"	1 9/16"	3 3/8"	7/8"	3"	1 3/4"	5 5/8"	1"Ø	1/2"	7/8" ø
W8X31	8"	1 5/8"	4 3/4"	1"	3 1/2"	2"	6 1/2"	1 1/8" ø	5/8"	1" Ø
W10X33	8"	1 7/8"	4 1/4"	1 1/8"	4 1/2"	2 1/4"	7 7/8"	1 1/4" ø	3/4"	1 1/8" Ø

TABLE 5 - BACK PLATE DATA

Post Size	A	B	C	J	K	I	d1	t2	Bolt Size
S3X5.7	2 5/8"	9/16"	1 1/2"	1 1/4"	4 1/2"	7"	5/8" ø	1/4"	1/2" ø
S4X7.7	2 5/8"	9/16"	1 1/2"	1 1/4"	4 1/2"	7"	5/8" ø	1/4"	1/2" ø
S5X10	3"	11/16"	1 5/8"	1 1/4"	4 3/4"	7 1/4"	3/4" ø	1/4"	5/8" ø
W6X12	4"	15/16"	2 1/8"	1 1/4"	4 3/4"	7 1/4"	3/4" ø	1/4"	5/8" ø
W6X15	6"	1 3/8"	3 1/4"	1 1/4"	5 1/4"	7 3/4"	3/4" ø	1/4"	5/8" ø
W6X20	6"	1 3/8"	3 1/4"	1 1/4"	5 1/4"	7 3/4"	3/4" ø	1/4"	5/8" ø
W8X18	5 1/4"	1 5/16"	2 5/8"	1 3/8"	5 3/4"	8 1/2"	7/8" ø	1/4"	3/4" ø
W8X21	5 1/4"	1 5/16"	2 5/8"	1 3/8"	5 3/4"	8 1/2"	7/8" ø	1/4"	3/4" ø
W8X24	6 1/2"	1 1/2"	3 1/2"	1 5/8"	6"	9 1/4"	1"Ø	5/16"	7/8" ø
W8X28	6 1/2"	1 9/16"	3 3/8"	1 3/4"	6"	9 1/2"	1"Ø	3/8"	7/8" ø
W8X31	8"	1 5/8"	4 3/4"	2"	6 1/2"	10 1/2"	1 1/8" ø	3/8"	1" Ø
W10X33	8"	1 7/8"	4 1/4"	2 1/2"	7"	1'- 0"	1 1/4" ø	7/16"	1 1/8" Ø

ERECTION DETAILS
FOR
TWO-POST ONE-DIRECTION
BREAKAWAY SIGN SUPPORTS
S. D. DEPT. OF TRANSPORTATION
DECEMBER 2016

DESIGNED BY	DRAWN BY	CHECKED BY	
RH/DM	TB/MDG	RH/DM/PW	Steve A Johnson BRIDGE ENGINEER
CNTYPCNX	PCNXDSPG	BSTDBS2A	

HDR

Plot Scale - 1:40
Plotted From - ZHWANG
File - ...\Section S\Detail Sheet 2

△ Mounting height as recommended by latest edition of AASHTO ROADSIDE DESIGN GUIDE.

ϕ Clear distance as recommended by latest edition of MANUAL ON UNIFORM TRAFFIC CONTROL DEVICES.

NOTE:
N = Number of Stiffeners to be used
H = Vertical dimension of sign
L = Horizontal dimension of Main Sign

NOTE:
Sign face details shown are those for extruded aluminum panels.
See Erection Details for SHEET ALUMINUM SIGNS for mounting flat sheet sign face.

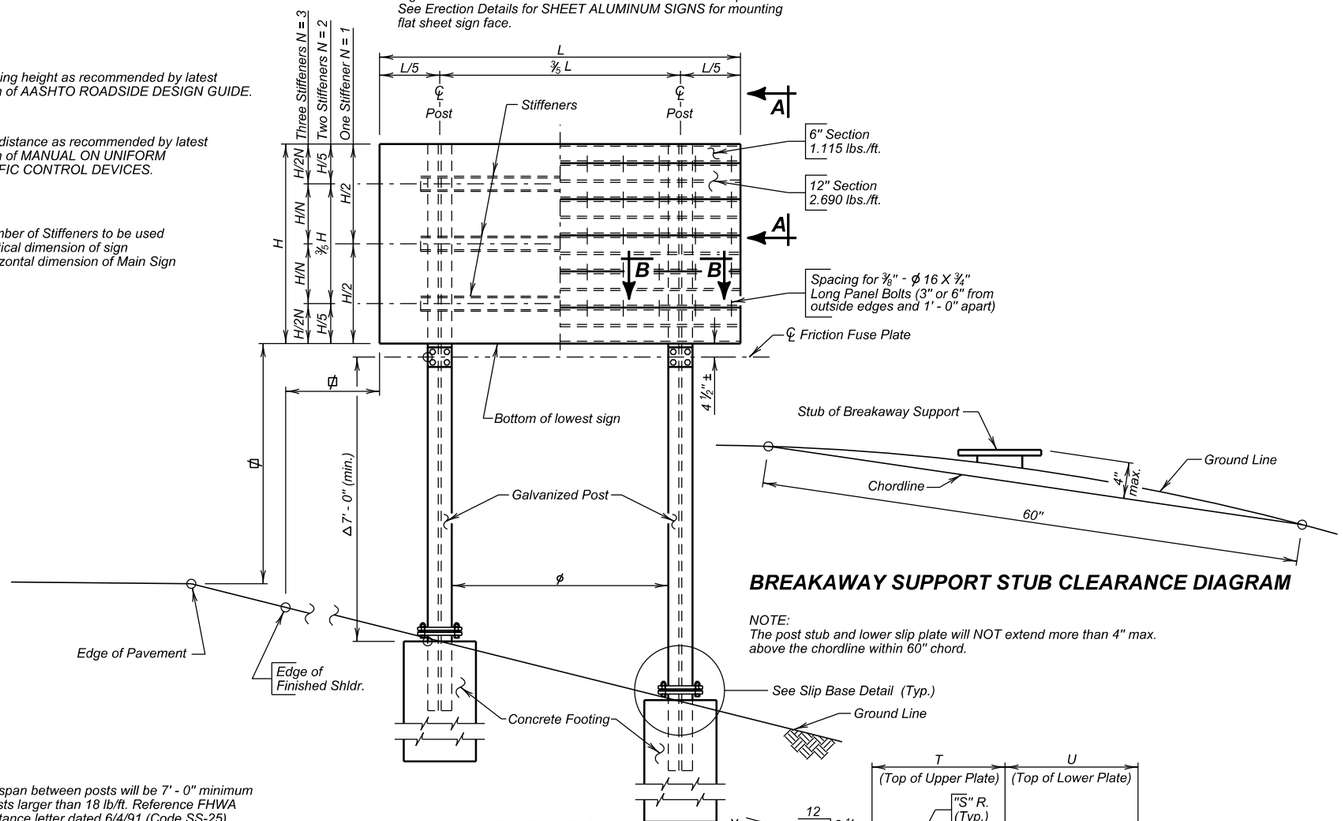

ϕ Clear span between posts will be 7' - 0" minimum for posts larger than 18 lb/ft. Reference FHWA acceptance letter dated 6/4/91 (Code SS-25).

ELEVATION

BREAKAWAY SUPPORT STUB CLEARANCE DIAGRAM

NOTE:
The post stub and lower slip plate will NOT extend more than 4" max. above the chordline within 60" chord.

STIFFENER DATA							
Post	Stiffener	a	b	c	d	Bolt (A325)	Plate Thk.
S3X5.7 thru W8X24	C3X5	10 1/2"	5"	1 1/4"	8"	5/8" ϕ	5/16"
W8X24 thru W10X45	C5X6.7	13 1/2"	6"	1 1/2"	10 1/2"	7/8" ϕ	3/8"

STIFFENER NOTES

1. Stiffeners must always be used on Two Post Breakaway signs regardless of type of sign face employed.
2. Number of stiffeners used, N, will be as follows:
   if H < = 2' - 0" then N = 1
   if 2' - 0" < H < = 8' - 0" then N = 2
   if 8' - 0" < H < = 15' - 0" then N = 3

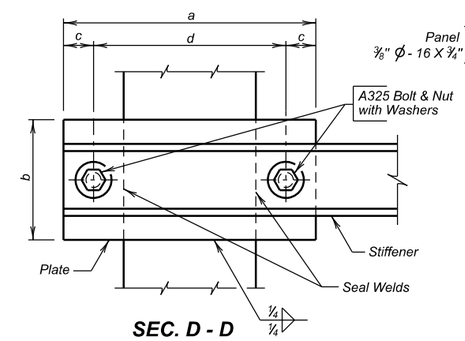

SEC. D - D

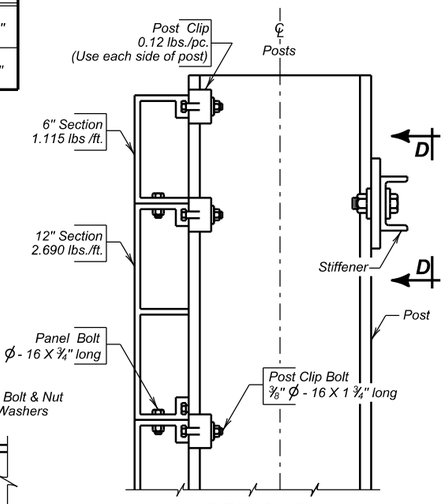

SEC. A - A

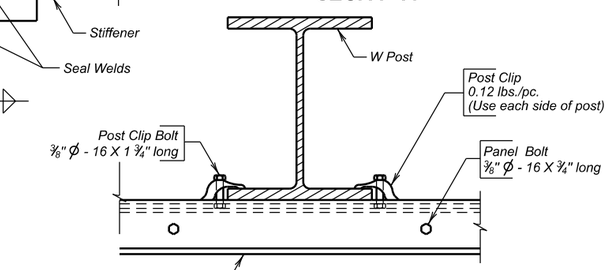

SEC. B - B

(Stiffener not shown)

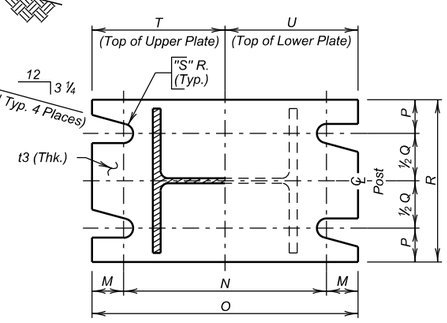

SEC. C - C

✳ NOTE:
Above Bevel is for Sign on Right Shoulder. Plate Bevels are Opposite hand for Sign on Left Shoulder.

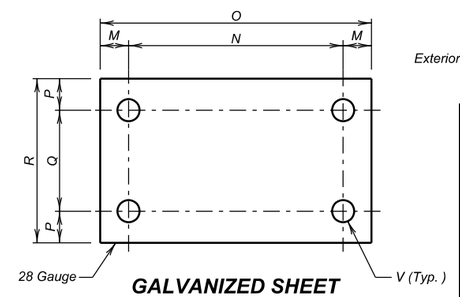

GALVANIZED SHEET METAL DIAPHRAGM

TABLE 3 - SHEET METAL DIAPHRAGM DATA							
Post Size	M	N	O	P	Q	R	V
S3X5.7	3/4"	6"	7 1/2"	3/4"	1 1/2"	3"	5/8"
S4X7.7	3/4"	6"	7 1/2"	3/4"	1 1/2"	3"	5/8"
S5X10	7/8"	7 1/4"	9"	3/4"	2"	3 1/2"	3/4"
W6X12	7/8"	8 1/4"	10"	7/8"	2 3/4"	4 1/2"	7/8"
W6X15	1 1/8"	8 1/2"	10 3/4"	1 1/4"	4"	6 1/2"	7/8"
W6X20	1 1/8"	10"	1'- 0 1/4"	1 1/4"	4"	6 1/2"	7/8"
W8X18	1 1/8"	10 1/2"	1' - 0 3/4"	1 1/4"	3 1/2"	6"	7/8"
W8X21	1 1/4"	11 1/4"	1' - 1 3/4"	1 1/4"	3 1/2"	6"	1"
W8X24	1 1/2"	11"	1' - 2"	1 5/8"	4 1/4"	7 1/2"	1"
W8X28	1 5/8"	11 1/4"	1' - 2 1/2"	1 5/8"	4 1/4"	7 1/2"	1 1/8"
W8X31	1 3/4"	11 1/4"	1' - 2 3/4"	1 7/8"	5 1/4"	9"	1 1/8"
W10X33	1 3/4"	1' - 2"	1' - 5 1/2"	1 7/8"	5 1/4"	9"	1 1/8"

NOTE:
Diaphragm need not be regalvanized after cutting to size and drilling of holes.

TRAFFIC DIRECTION

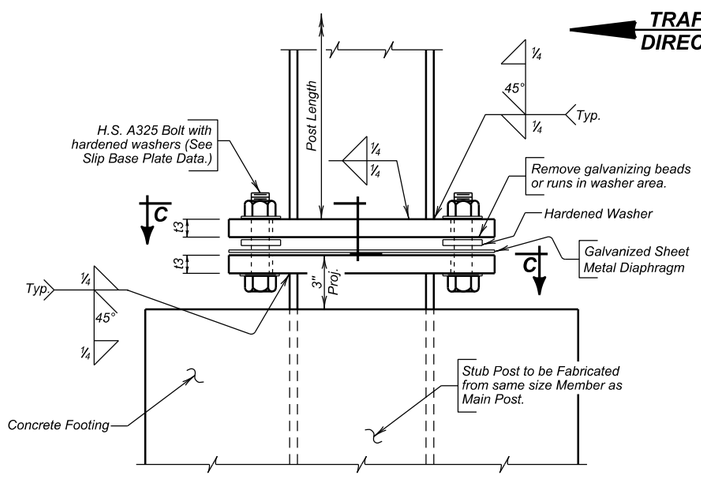

SLIP BASE DETAIL

TABLE 4 - SLIP BASE PLATE DATA											
Post Size	M	N	O	P	Q	R	S	T	U	t3	Bolt Size	Bolt Torque
S3X5.7	3/4"	6"	7 1/2"	3/4"	1 1/2"	3"	9/32"	3 3/4"	3 3/4"	5/8"	1/2" ϕ	142" - #
S4X7.7	3/4"	6"	7 1/2"	3/4"	1 1/2"	3"	9/32"	3 3/4"	3 3/4"	5/8"	1/2" ϕ	142" - #
S5X10	7/8"	7 1/4"	9"	3/4"	2"	3 1/2"	11/32"	4 1/2"	4 1/2"	7/8"	5/8" ϕ	345" - #
W6X12	7/8"	8 1/4"	10"	7/8"	2 3/4"	4 1/2"	11/32"	5"	5"	7/8"	5/8" ϕ	345" - #
W6X15	1 1/8"	8 1/2"	10 3/4"	1 1/4"	4"	6 1/2"	13/32"	5 3/8"	5 3/8"	1"	3/4" ϕ	554" - #
W6X20	1 1/8"	10"	1' - 0 1/4"	1 1/4"	4"	6 1/2"	13/32"	6 1/8"	6 1/8"	1"	3/4" ϕ	554" - #
W8X18	1 1/8"	10 1/2"	1' - 0 3/4"	1 1/4"	3 1/2"	6"	13/32"	6 3/8"	6 3/8"	1"	3/4" ϕ	554" - #
W8X21	1 1/4"	11 1/4"	1' - 1 3/4"	1 1/4"	3 1/2"	6"	15/32"	6 7/8"	6 7/8"	1"	7/8" ϕ	645" - #
W8X24	1 1/2"	11"	1' - 2"	1 5/8"	4 1/4"	7 1/2"	15/32"	7"	7"	1"	7/8" ϕ	645" - #
W8X28	1 5/8"	11 1/4"	1' - 2 1/2"	1 5/8"	4 1/4"	7 1/2"	17/32"	7 1/4"	7 1/4"	1 1/8"	1" ϕ	735" - #
W8X31	1 3/4"	11 1/4"	1' - 2 3/4"	1 7/8"	5 1/4"	9"	17/32"	7 3/8"	7 3/8"	1 1/8"	1" ϕ	735" - #
W10X33	1 3/4"	1' - 2"	1' - 5 1/2"	1 7/8"	5 1/4"	9"	17/32"	8 3/4"	8 3/4"	1 1/4"	1" ϕ	735" - #

ERECTION DETAILS
FOR
TWO-POST ONE-DIRECTION BREAKAWAY SIGN SUPPORTS

S. D. DEPT. OF TRANSPORTATION
DECEMBER 2016

DESIGNED BY	DRAWN BY	CHECKED BY	
RH/DM	TB/MDG	RH/DM/PW	Steve A Johnson BRIDGE ENGINEER
CNTYPCNX	PCNXDSPG	BSTDBS2B	

HDR

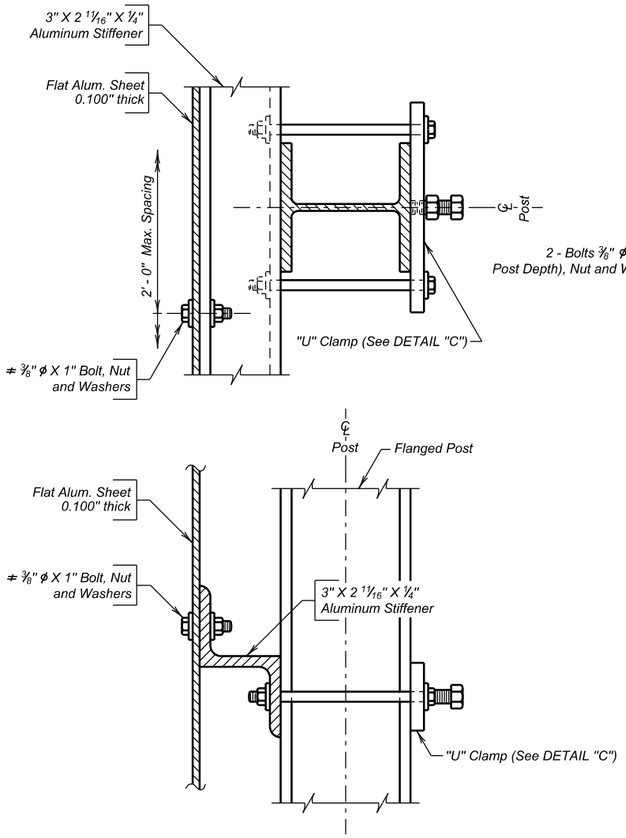

DETAILS FOR MOUNTING SHEET ALUMINUM SIGNS ON STEEL FLANGED POSTS

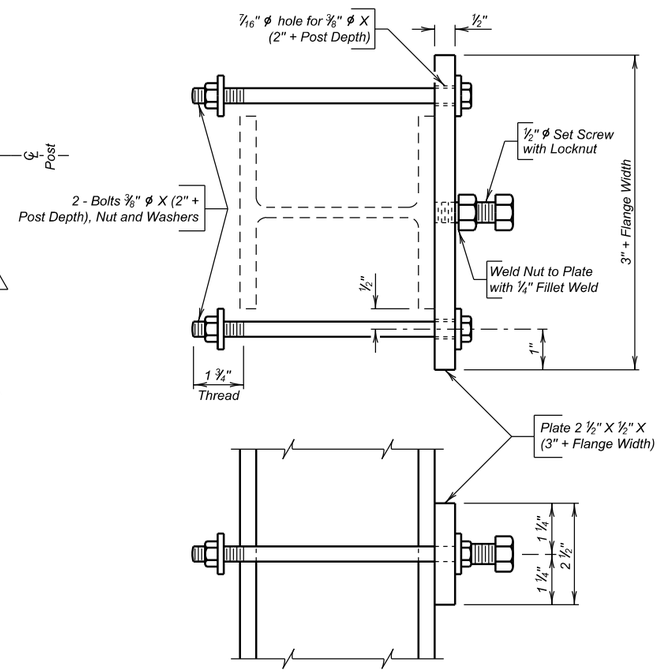

DETAIL "C"

≠ A plastic washer, as recommended by the sheeting manufacturer, will be installed between the sign face and the metal washer shown.

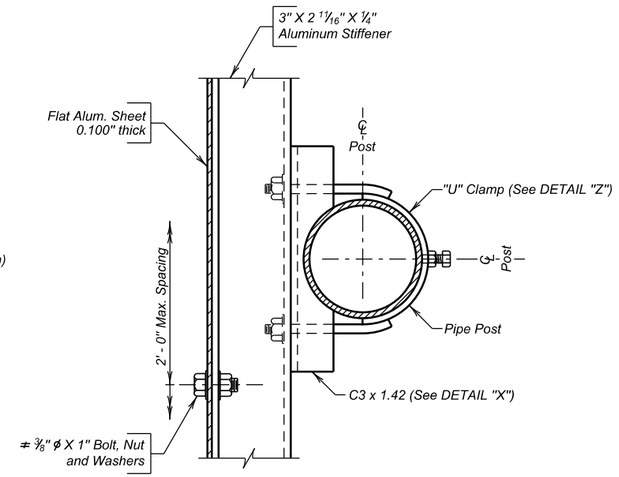

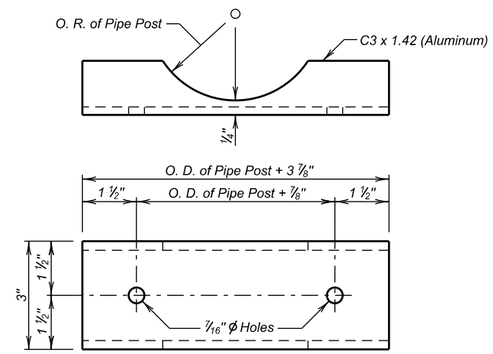

DETAIL "X"

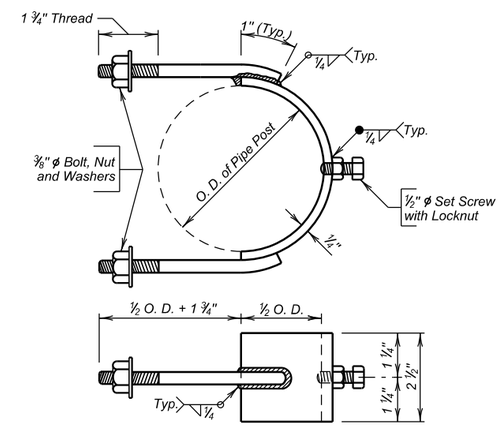

DETAIL "Z"

STIFFENER NOTES

1. Stiffeners must always be used on multiple post breakaway signs regardless of type of sign face employed.
2. ϕ Number of stiffeners used, N, will be as follows:
   If H < = 2' - 0" then N = 1
   if 2' - 0" < H < = 8' - 0" then N = 2
   if 8' - 0" < H < = 15' - 0" then N = 3
   where H equals the vertical dimension of the sign panel of sign cluster.
3. All stiffener Bolts and Nuts will conform to ASTM A307. Washers will conform to ASTM F436. All hardware will be galvanized in accordance with ASTM F2329.

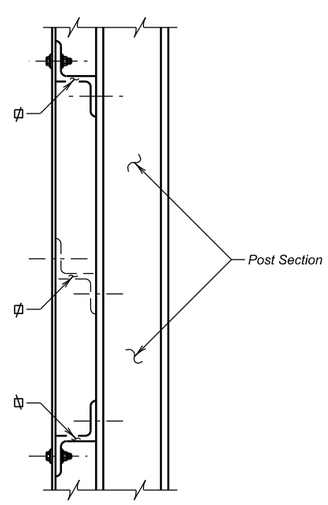

POSITIONING OF TOP AND BOTTOM STIFFENERS

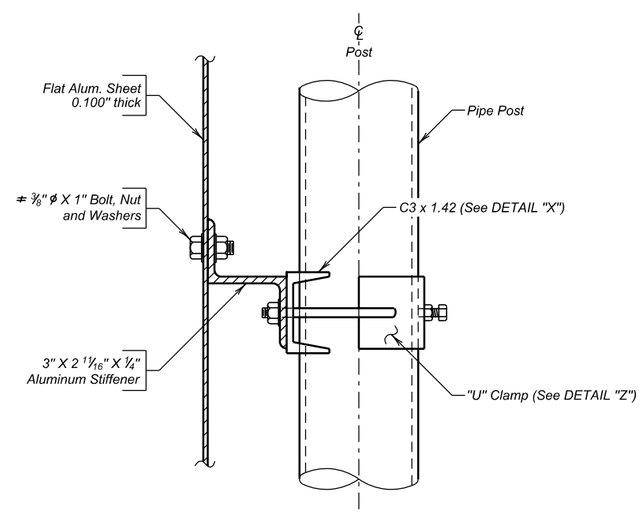

DETAILS FOR MOUNTING SHEET ALUMINUM SIGNS ON STEEL PIPE POSTS

ERECTION DETAILS
FOR
SHEET ALUMINUM SIGNS
(ON FLANGED AND PIPE POSTS)
S. D. DEPT. OF TRANSPORTATION
DECEMBER 2016

DESIGNED BY	DRAWN BY	CHECKED BY	
RH/DM	RH/TB/MDG	RH/DM/PW	Steve A Johnson BRIDGE ENGINEER
CNTYPCNX	PCNXDSPG	BSTDSAS1	

HDR

Plot Scale - 1:40
Plotted From - ZHWANG
File - ...\Section S\Detail Sheet 4

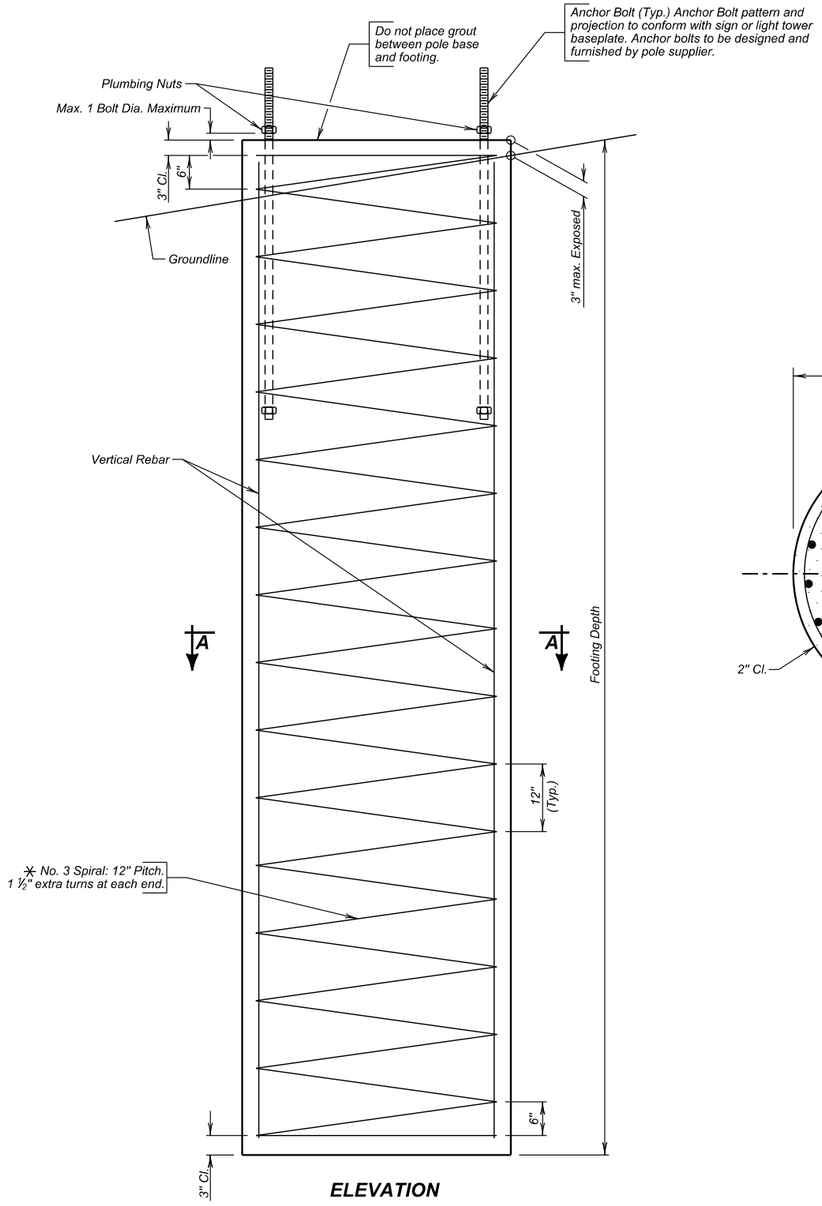

ELEVATION

✳ Circular Ties may be used in lieu of Spiral Ties. The ties will be spaced 12" apart except for the top two which will be spaced 6" apart. The ties will be lapped 20" which will be staggered around the cage.

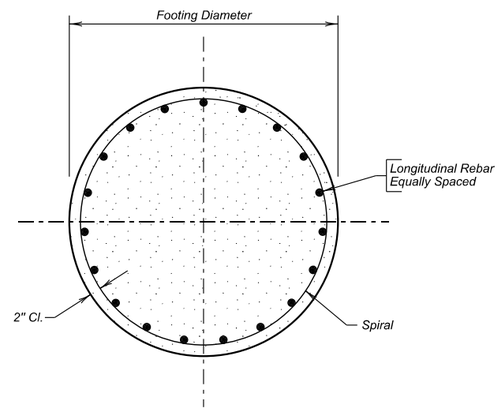

SECTION A - A
(less Anchor Bolts)

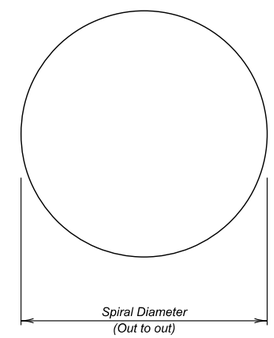

SIGN NUMBER	ALIGNMENT	SITE LOCATION	OFFSET	SUPPORT DESCRIPTION	FOOTING DIMENSIONS		LONGITUDINAL STEEL			Ø SPIRAL STEEL		CONCRETE QUANTITY
					DIA.	DEPTH	NO.	SIZE	LENGTH	DIA.	LENGTH	CU. YD.
SBF1	Benson Rd. EB	Sta. 29 + 57.00	6.25' L	Sign Bridge	4' - 0"	13' - 0"	19	9	12' - 6"	3' - 8"	177' - 6"	6.1
SBF2	Benson Rd. EB	Sta. 29 + 57.00	60.83' R	Sign Bridge	4' - 0"	14' - 0"	19	9	13' - 6"	3' - 8"	189' - 0"	6.5
SBF3	Benson Rd. WB	Sta. 50 + 27.00	41.67' L	Sign Bridge	4' - 0"	12' - 0"	19	9	11' - 6"	3' - 8"	166' - 1"	5.6
SBF4	Benson Rd. WB	Sta. 50 + 27.00	7.33' R	Sign Bridge	4' - 0"	12' - 0"	19	9	11' - 6"	3' - 8"	166' - 1"	5.6
SBF5	I-229 NB	Sta. 2030 + 10.00	4.00' R	Sign Bridge	4' - 0"	16' - 0"	19	9	15' - 6"	3' - 8"	211' - 11"	7.4
SBF6	I-229 NB	Sta. 2030 + 10.00	86.00' R	Sign Bridge	4' - 0"	17' - 0"	19	9	16' - 6"	3' - 8"	223' - 5"	7.9
CSF1	Ramp B	Sta. 400 + 00.00	32.00' R	Cantilever Sign	4' - 0"	21' - 0"	19	9	20' - 6"	3' - 8"	269' - 3"	9.8

Ø All spiral reinforcing steel will be #3 bars.

SPECIFICATIONS-

1. Design Specifications: AASHTO Standard Specifications for Highway Bridges, 2012 Edition and AASHTO Standard Specifications for Structural Supports for Highway Signs, Luminaries and Traffic Signals, 2013 Edition with 2015 & 2022 Interims.
2. Construction Specifications: South Dakota Standard Specifications for Roads and Bridges, 2015 Edition and required Provisions, Supplemental Specifications and/or Special Provisions as included in the Proposal.

GENERAL NOTES-

1. Sign Bridge and Cantilever Sign Footings will be drilled shafts constructed in conformance with Section 465 of the Specifications, except sections 465.3 A, 465.3 B, 465.3 H, 465.3 I, 464.3 J and 465.3 K will not be required.
2. All exposed edges will be chamfered ¾".
3. All reinforcing steel will conform to ASTM A615 Grade 60.
4. All concrete will be Class A45, Drilled Shaft. The four hour slump test required in Section 465.2.A will be wavied.
5. Unit Stresses: Concrete f' c = 1800 psi
   Reinforcing Steel f' s = 24000 psi
6. Payment for 4' Diameter Fixed Support Concrete Footing will be full compensation for all Drilled Shaft Excavation; Class A45 Concrete, Drilled Shaft; Reinforcing Steel; disposal of all excavated material and surplus materials; and for labor, tools equipment and any incidentals necessary to complete this item of work.
7. Permanent sign footings will be installed in varying soils from clay to newly placed fill.
8. Footing locations that contain sand and/or gravel or have high water tables are potential candidates for caving soils. If caving soils are encountered during excavation it may be necessary to use temporary casing to complete the excavation and concrete placement. The Contractor will be prepared to utilize the Temporary Casing Construction Method.
9. Subsurface soils at the sign bridge and cantilever sign footing locations consist of the following:

Location	Subsurface Soils	Groundwater Depth as of May 2021
West of intersection of Benson Rd and Ramps C & D (SBF1-2)	0'-24': Fill over brown silt clay with sand	Dry
East of intersection of Benson Rd and Ramps A & B (SBF3-4)	0'-24': Fill over brown silt clay with sand	Dry
I-229 NB (SBF5-6)	0'-10': Fill over brown sandy clay overlying sand and gravel	Dry
South end of Ramp B, exiting I-229 NB onto Benson Rd (CSF1)	0'-24': Fill over brown silt clay	14.2 ft.

ESTIMATED QUANTITIES

ITEM	UNIT	QUANTITY
4' Diameter Fixed Support Concrete Footing	Ft.	105

1. 48.9 Cu. Yds. Class A45 Concrete, Drilled Shaft in Sign Footings.
2. 46426 Lbs. Re-Steel in Sign Footings.
3. 48.9 Cu. Yds. Drilled Shaft Excavation for Sign Footings.

Items 1 thru 3 are approximate quantities contained in the above bid items and are for information only.

DETAILS
FOR
SIGN FOOTINGS
IM 2292(98)9 & P1200(04)
PCN 04XK
MINNEHAHA COUNTY
S. D. DEPT. OF TRANSPORTATION
MAY 2022

PLANS BY :
OFFICE OF BRIDGE DESIGN, SOUTH DAKOTA DEPARTMENT OF TRANSPORTATION

DESIGNED BY	CK. DES. BY	DRAFTED BY	
PW	BB	BT	Steve A Johnson BRIDGE ENGINEER
MINN04XK	04XKTA01		

HDR

Plot Scale - 1:40
Plotted From - ZHWANG
File - ...\Section S\Detail Sheet 5

2" SQUARE STEEL PERFORATED TUBE POST WINGED SLEEVE ANCHOR BASE DETAILS (Typical)

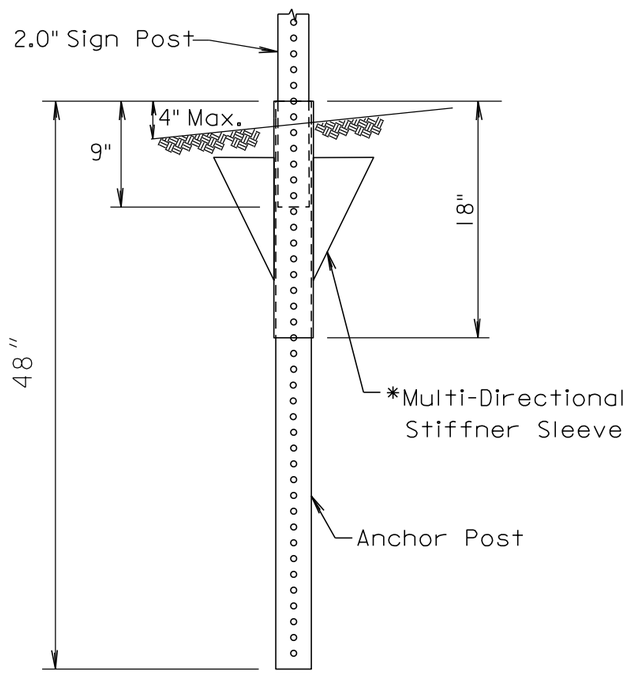

* 18" Multi-directional Sleeve w/4 Blades, or Equivalent. Manufacturer Recommended Dimensions and Installation.

POST SIZE	
Sign Post	2"
Anchor Post	2¼"
Stiffener Sleeve	2½"

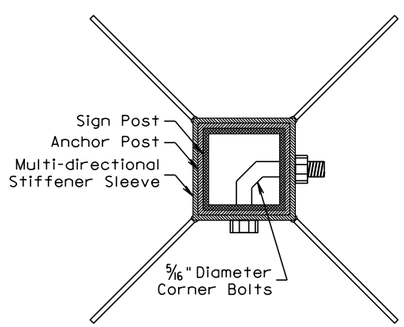

TOP VIEW

2 1/2" SQUARE STEEL PERFORATED TUBE POST WINGED BREAKAWAY ANCHOR DETAILS FOR SOIL INSTALLATIONS (Typical)

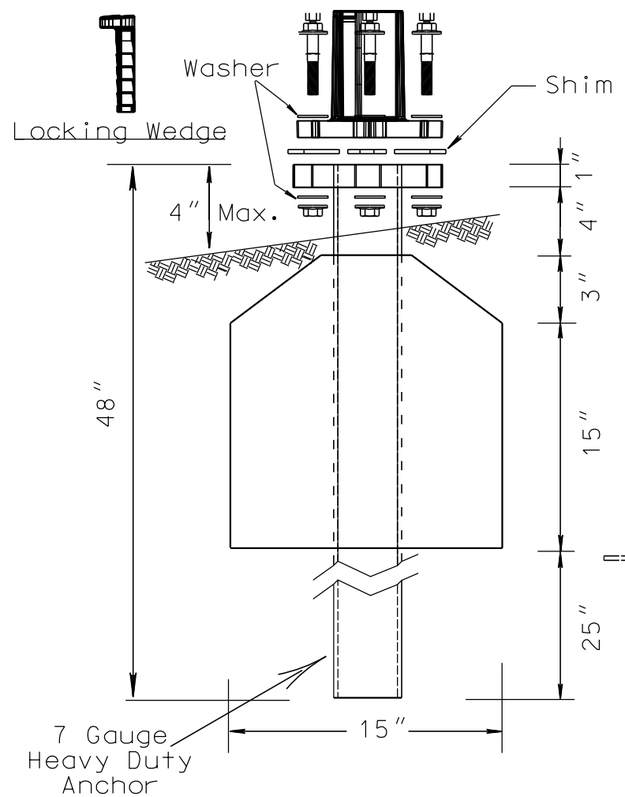

TOP POST RECEIVER for 2-½" SQUARE POST

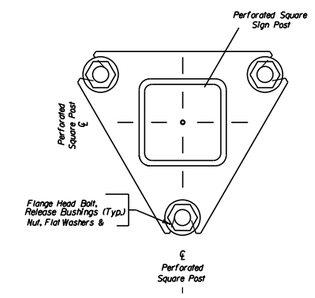

WINGED BOTTOM SOIL STUB

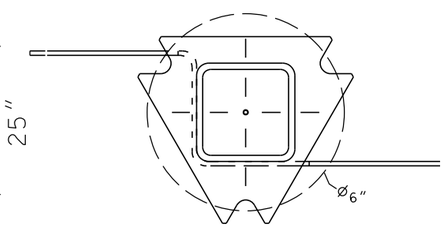

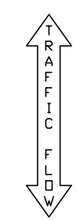

GENERAL NOTES-

1. The manufacturer must provide certification that the breakaway system furnished will develop the full shear and bending yield strength of the sign post section being spliced.
2. All posts must be galvanized in accordance with ASTM A653, Des. G-90.
3. All hardware must be galvanized in accordance with ASTM A153.

Plot Scale - 1:40
Plotted From - ZHWANG
File - ...\Section S\Detail Sheet 6

Roadside Signs

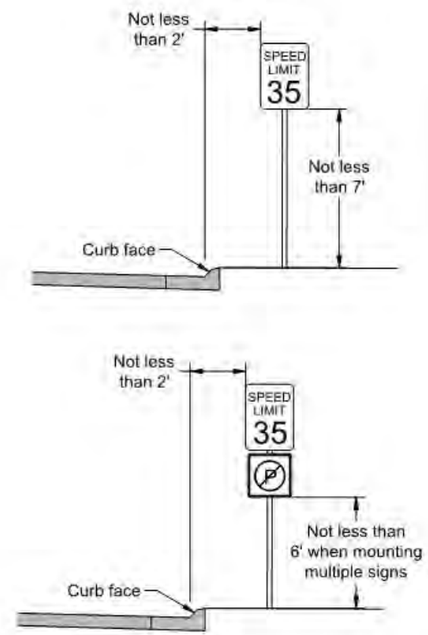

Street Light/Wooden Power Pole Mount

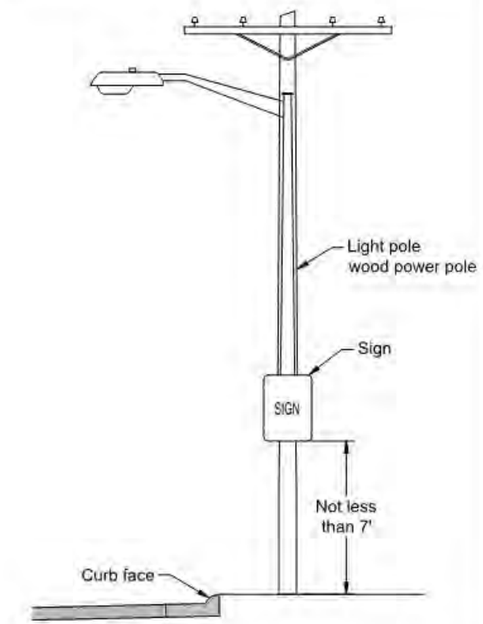

Median Signs

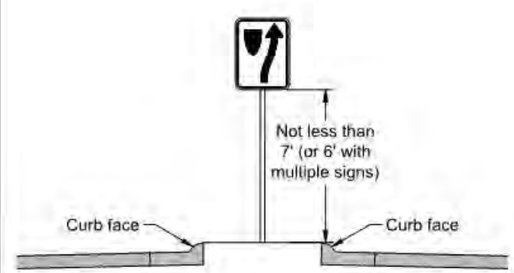

Stop/Street Name Signs

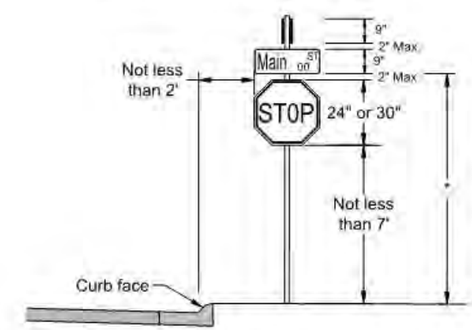

* 10' When street name signs are mounted alone on post.

Note: All R7 & R8 series signs with arrows shall be installed at a 45 degree angle to the street.

Revised: November 2017

CITY OF SIOUX FALLS PUBLIC WORKS Providing a Better Quality of Life for You!	Heights and Lateral Locations of Signs for Typical Urban Installation	Specification Reference No. 632	Plate Number 632.10

Perforated Tube Post
(Telespar Post)

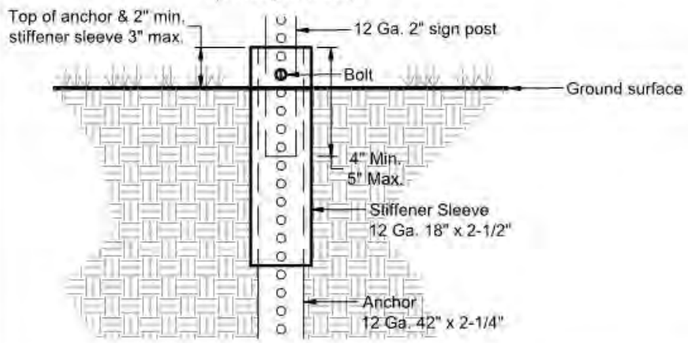

Notes

Bolts and washers used for mounting traffic signs shall be stainless steel. Flat washers shall be Mil.Spec. MS813

Nuts used for mounting traffic signs shall be a Nyloc (self-locking) type

Signs shall be mounted using a plastic / nylon washer placed between the sign face and the metallic flat washer.

Lag screws used to mount traffic signs to wooden power poles shall be galvanized or stainless steel.

All hardware required for mounting the signs shall be incidental to the cost of installing the signs

Flanged Channel Post
(U-Post)

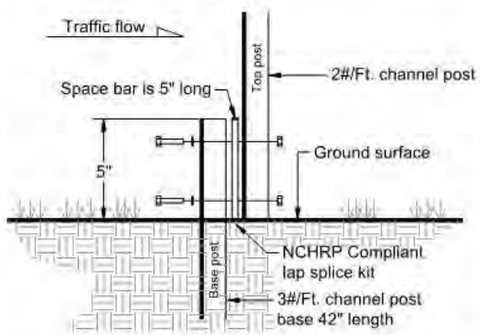

Sign Saver Plate
3"x3" punched ribbed aluminum

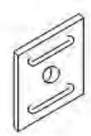

To be used when mounting signs on channel post

Sign Mounting on Wooden Power Pole

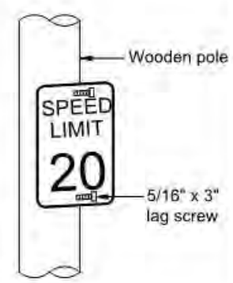

Stainless Steel Band Mounting System
To be used when mounting signs on metallic and fiberglass poles

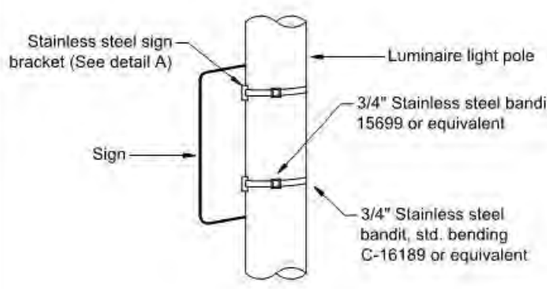

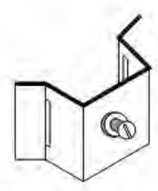

Bandit DO-21 or equivalent.

Detail A

Page 1 of 2
Revised: November 2013

CITY OF SIOUX FALLS PUBLIC WORKS Providing a Better Quality of Life for You!	Sign Mount Specifications	Specification Reference No. 632	Plate Number 632.20

Mast Arm Sign Mountings
Astro Sign-Brac Band Mount

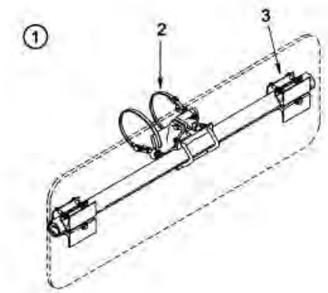

ITEM	DESCRIPTION	PART NO.
1	ASTRO SIGN-BRAC, Stellar Series Band Mount for Overhead Street Name Signs	AS-0128
2	CLAMP KIT, Stellar Series Band Mount	AS-3004
3	SIGN CLAMP, 4" w/ AB-5010 Hardware Kit	AB-0502

Notes:
1. All assemblies are supplied standard with stainless fasteners and natural aluminum alodine coating. Stainless upgrade to include stainless steel clamp screws.
2. Suggested maximum sign face of 16 sq. ft. per bracket.
3. Please specify options when ordering.

OPTIONS
CTC DIMENSIONS (see charts)
BAND LENGTH: 29", 36", 42", 48", or 58"
STAINLESS UPGRADE
PAINT

SIGNS 1'-6" to 3'-0" LONG

SIGN LENGTH	TUBE LENGTH	CTC A
1'-6"	16"	12"
2'-0"	22"	18"
2'-6"	28"	24"
3'-0"	34"	30"

Maximum sign height: 48"

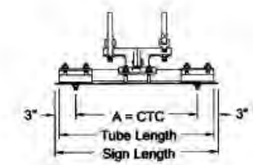

SIGNS 3'-6" to 8'-0" LONG

SIGN LENGTH	TUBE LENGTH	CTC A	B
3'-6"	40"	36"	12"
4'-0"	46"	42"	14"
4'-6"	52"	48"	16"
5'-0"	58"	54"	18"
5'6"	64"	60"	20"
6'-0"	70"	66"	22"
6'-6"	76"	72"	24"
7'-0"	82"	78"	26"
7'6"	88"	84"	28"
8'-0"	94"	90"	30"

Maximum sign height: 24"

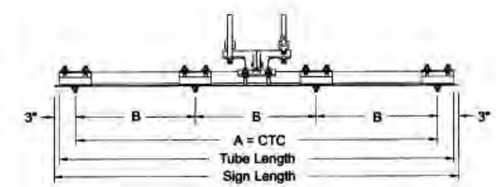

SIGNS 8' to 10' LONG

SIGN LENGTH	TUBE LENGTH	CTC A	B	C
8'-6"	100"	96"	19"	20"
9'-0"	106"	102"	20"	22"
9'-6"	112"	108"	21"	24"
10'-0"	118"	114"	22"	26"

Maximum sign height: 16"

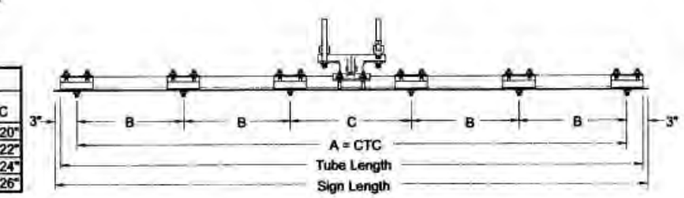

Page 2 of 2
Revised: July 2008

CITY OF SIOUX FALLS PUBLIC WORKS Providing a Better Quality of Life for You!	Sign Mount Specifications	Specification Reference No. 632	Plate Number 632.20

HDR

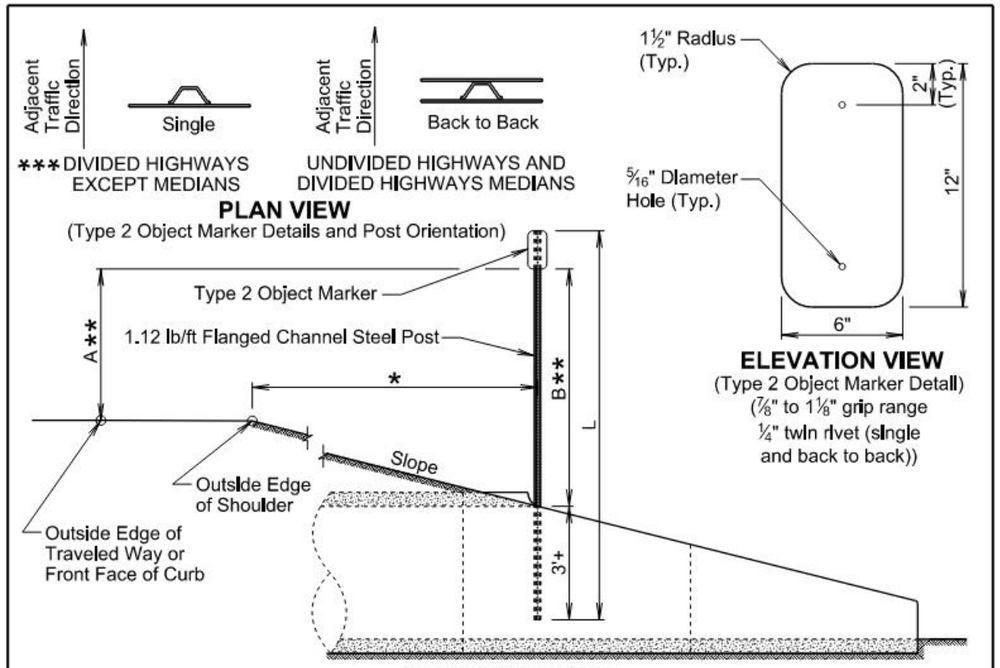

ELEVATION VIEW
(Pipe culvert shown for illustrative purpose.)

TYPE 2 OBJECT MARKER POST LENGTHS										
OFFSET (*)		1'	2'	3'	4'	5'	6'	7'	8'	Greater Than 8'
		POST LENGTH (L)								
SLOPE	3:1	8'-6"	8'-9"	9'-3"	9'-6"	9'-9"	10'-3"	10'-6"	10'-9"	8'-0"
	4:1	8'-6"	8'-9"	9'-0"	9'-3"	9'-9"	9'-9"	10'-0"	10'-3"	8'-0"
	5:1	8'-3"	8'-6"	8'-9"	9'-0"	9'-3"	9'-3"	9'-6"	9'-9"	8'-0"
	6:1	8'-3"	8'-6"	8'-9"	8'-9"	9'-0"	9'-3"	9'-3"	9'-6"	8'-0"

GENERAL NOTES:

*** The type 2 object marker may be installed back to back when specified in the plans.

Post Length L was calculated based on a shoulder width of 6 feet at a crosslope of 4 percent and L was rounded up to the nearest 3 inches.

** Dimension A is 4 feet when the Offset * is 8 feet and less. Dimension B is 4 feet when Offset * is greater than 8 feet.

The type 2 object marker and the 1.12 lb/ft flanged channel steel post will be in conformance with Specifications Section 982.2 J.

Payment for the type 2 object marker will be in conformance with Specification Section 632.5 B.

December 23, 2019

Published Date: 3rd Qtr. 2022	SDDOT	TYPE 2 OBJECT MARKER (DIRECT DRIVE)	PLATE NUMBER 632.01 Sheet 1 of 1

HDR

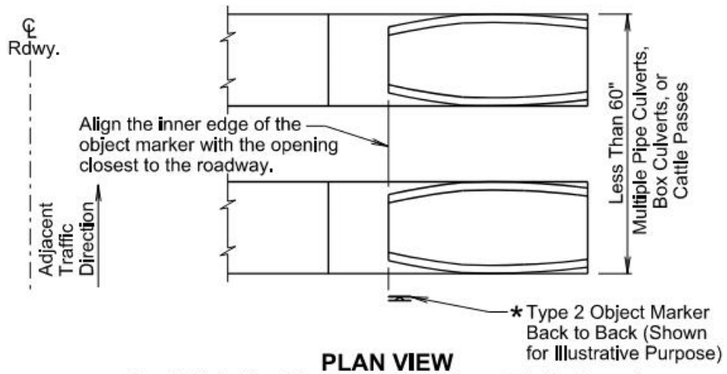

PLAN VIEW
(For Multiple Pipe Culverts, Box Culverts, and Cattle Passes)
(Pipe culverts shown for illustrative purpose.)
(Embankment is not shown.)

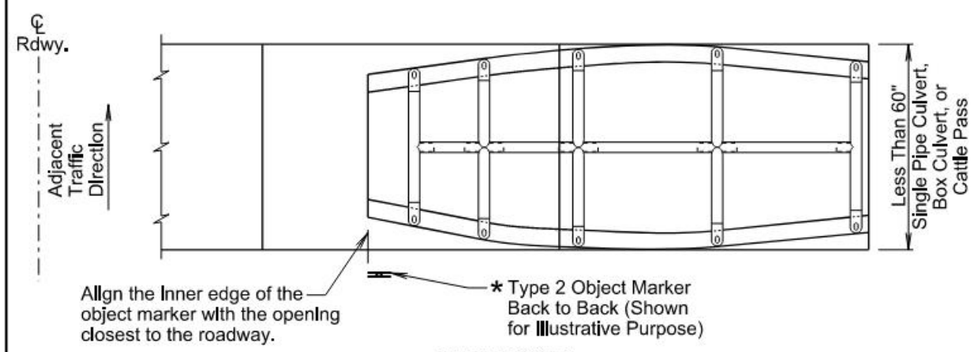

PLAN VIEW
(For Single Pipe Culvert, Box Culvert, and Cattle Pass)
(Pipe culvert shown for illustrative purpose.)
(Embankment is not shown.)

GENERAL NOTES:

This standard plate will be used in conjunction with standard plate 632.01.

* The type 2 object markers will be installed at the locations shown above. The type 2 object markers, single faced or back to back, will be as specified in the plans.

December 23, 2019

Published Date: 3rd Qtr. 2022	SDDOT	TYPE 2 OBJECT MARKER AT PIPE CULVERTS, BOX CULVERTS, AND CATTLE PASSES (Less than 60" Overall Width)	PLATE NUMBER 632.03 Sheet 1 of 1

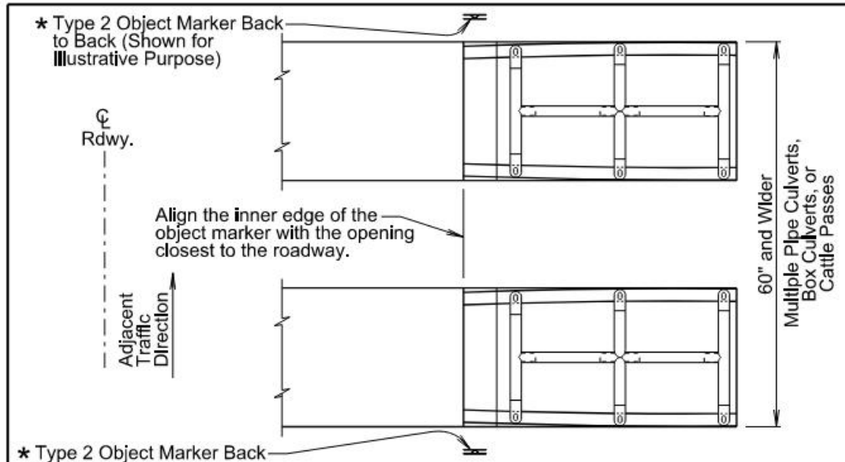

PLAN VIEW
(For Multiple Pipe Culverts, Box Culverts, and Cattle Passes)
(Pipe culverts shown for illustrative purpose.)
(Embankment is not shown.)

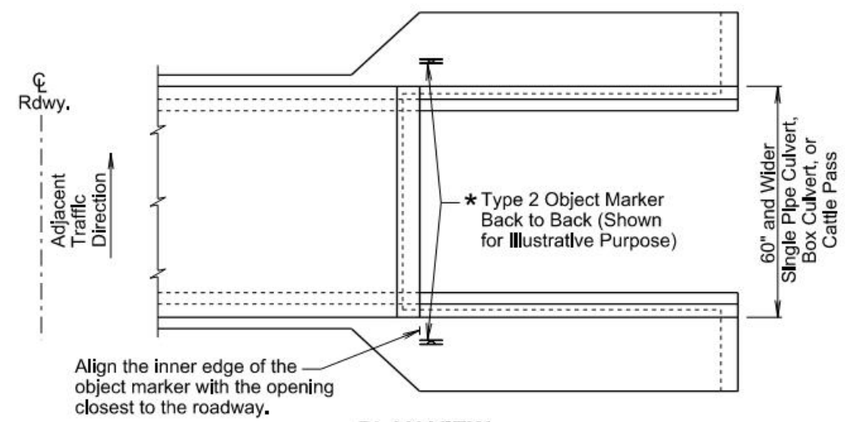

PLAN VIEW
(For Single Pipe Culvert, Box Culvert, and Cattle Pass)
(Box culvert shown for illustrative purpose.)
(Embankment is not shown.)

GENERAL NOTES:

This standard plate will be used in conjunction with standard plate 632.01.

* The type 2 object markers will be installed at the locations shown above. The type 2 object markers, single faced or back to back, will be as specified in the plans.

December 23, 2019

Published Date: 3rd Qtr. 2022	SDDOT	TYPE 2 OBJECT MARKER AT PIPE CULVERTS, BOX CULVERTS, AND CATTLE PASSES (60" and Greater Overall Width)	PLATE NUMBER 632.04 Sheet 1 of 1

HDR

FOR BIDDING PURPOSES ONLY

STATE OF SOUTH DAKOTA	PROJECT	SHEET	TOTAL SHEETS
	IM 2292(98)9 P 1200(04) IM 2292(112)6	S71	S78

Plotting Date: 7/28/2022

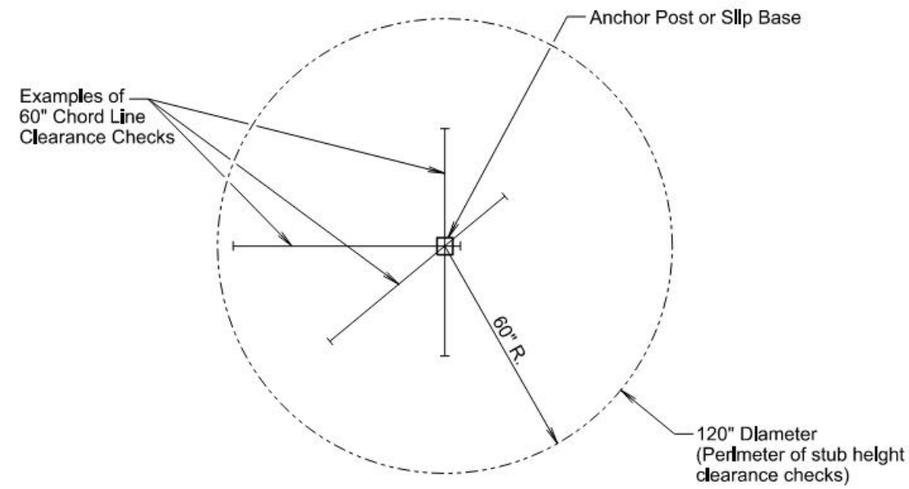

PLAN VIEW
(Examples of stub height clearance checks)

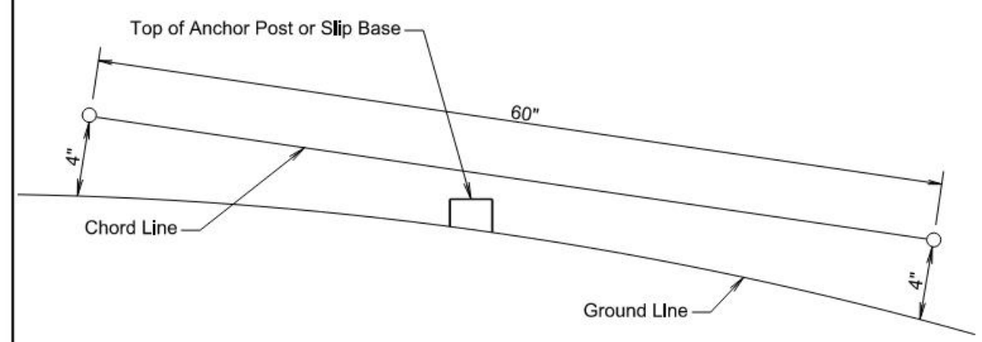

ELEVATION VIEW

GENERAL NOTES:

The top of anchor posts and slip bases WILL NOT extend above a 60" chord line within a 120" diameter circle around the post with ends 4" above the ground.

At locations where there is curb and gutter adjacent to the breakaway sign support, the stub height will be a maximum of 4" above the ground line at the localized area adjacent to the breakaway support stub.

January 22, 2021

Published Date: 3rd Qtr. 2022	SDDOT	BREAKAWAY SUPPORT STUB CLEARANCE	PLATE NUMBER 632.18 Sheet 1 of 1

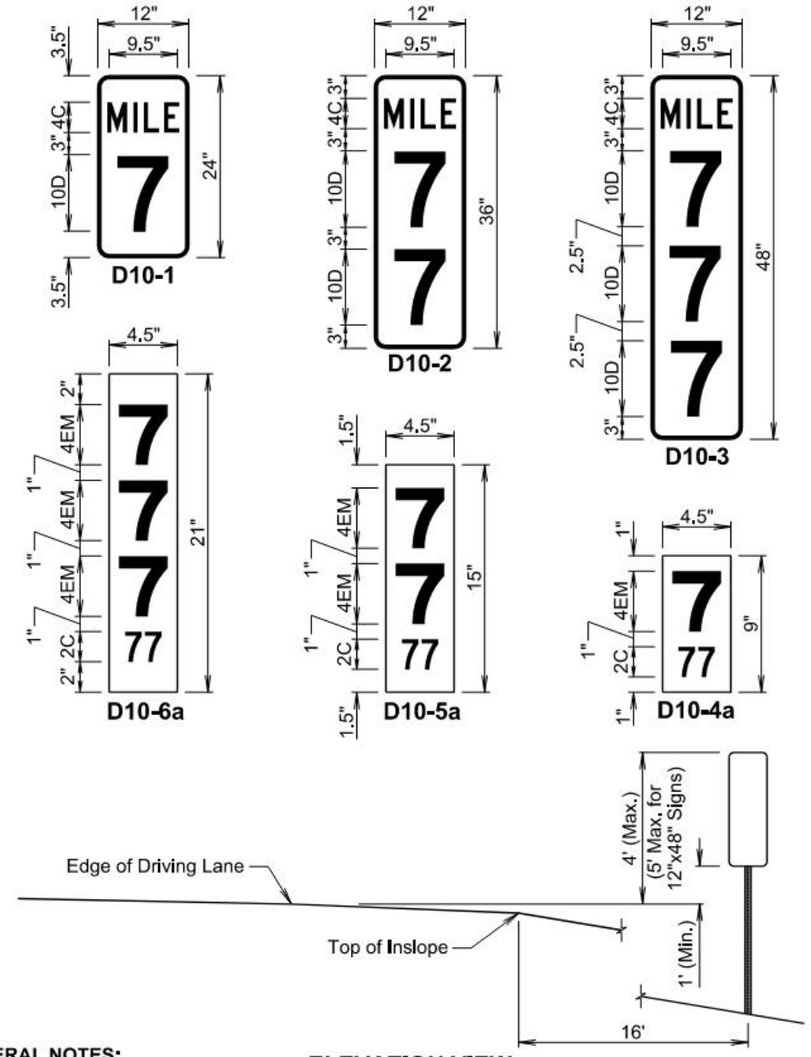

ELEVATION VIEW

GENERAL NOTES:

Background will be high intensity green.

Legend and border will be high intensity white.

Signs 12 inches wide will have rounded corners (Radius = 1.5 inches) with 0.5 inch wide border.

Signs 4.5 inches wide will have squared corners with no border.

Sign locations will be staked by the Engineer.

December 23, 2019

Published Date: 3rd Qtr. 2022

SDDOT

INTERSTATE MILEAGE REFERENCE MARKERS

PLATE NUMBER 632.31

Sheet 1 of 1

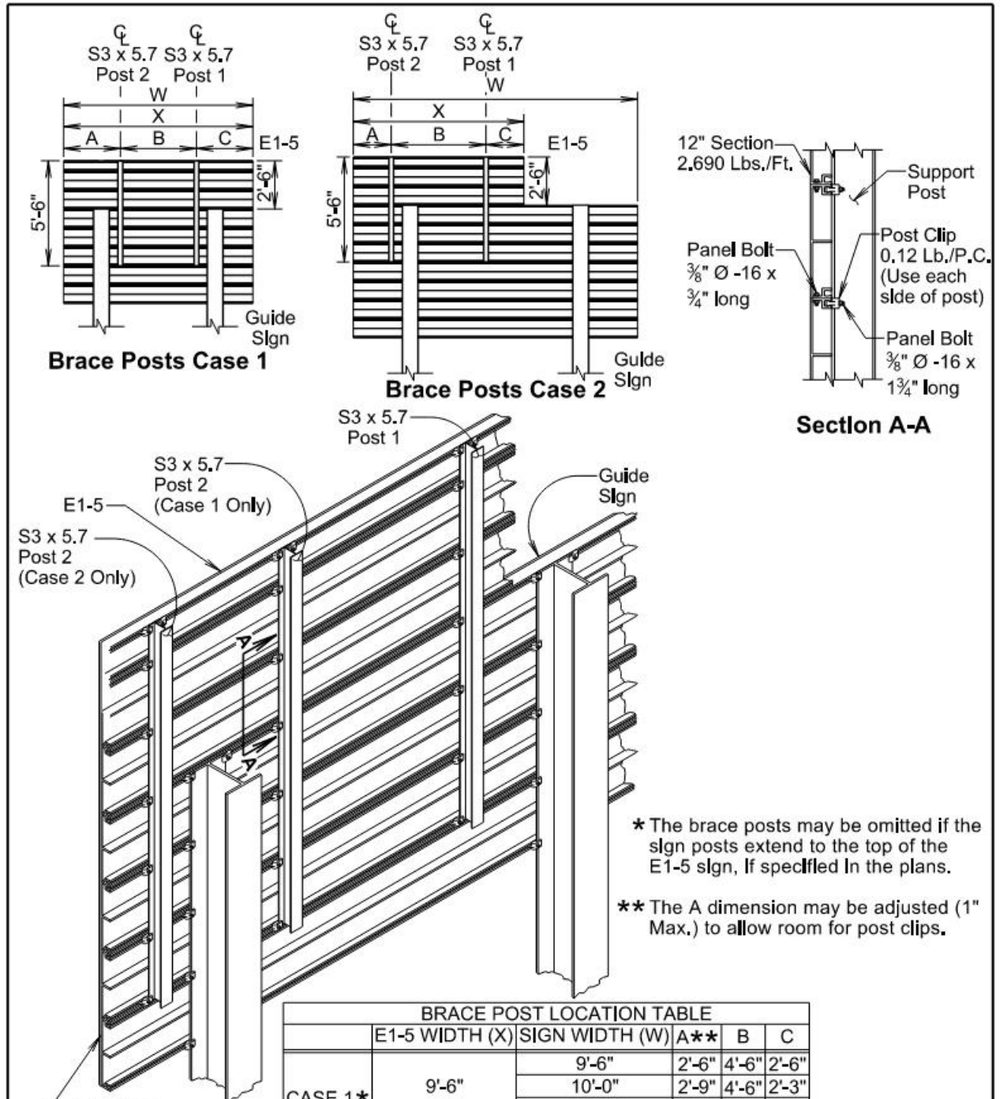

* The brace posts may be omitted if the sign posts extend to the top of the E1-5 sign, if specified in the plans.

** The A dimension may be adjusted (1" Max.) to allow room for post clips.

BRACE POST LOCATION TABLE

	E1-5 WIDTH (X)	SIGN WIDTH (W)	A**	B	C
CASE 1*	9'-6"	9'-6"	2'-6"	4'-6"	2'-6"
		10'-0"	2'-9"	4'-6"	2'-3"
		11'-0"	2'-9"	4'-9"	2'-0"
	11'-0"	11'-0"	2'-9"	5'-6"	2'-9"
CASE 2	9'-6"	12'-0 to 13'-0"	1'-9"	5'-9"	2'-0"
		14'-0" and up	2'-0"	5'-6"	2'-0"
		12'-0"	1'-9"	7'-0"	2'-3"
	11'-0"	13'-0" and up	2'-0"	7'-0"	2'-0"

November 19, 2020

Published Date: 3rd Qtr. 2022

SDDOT

ERECTING E1-5P EXIT NUMBER PLAQUES ABOVE GUIDE SIGNS

PLATE NUMBER 632.35

Sheet 1 of 1

HDR

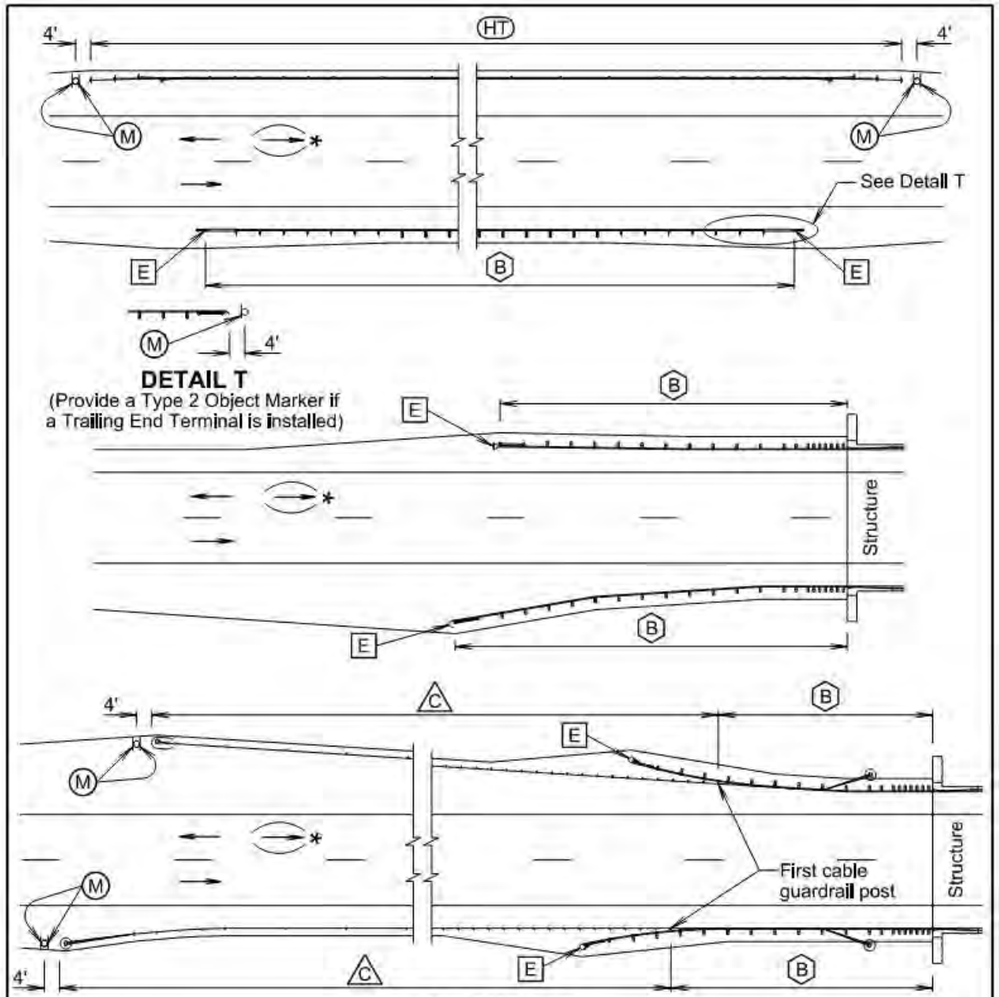

PLAN VIEW
(Typical Guardrail Layouts)

- (B) Steel Beam Guardrail Delineation
- [E] Guardrail End Terminal Object Marker
- (C) 3 Cable Guardrail (Low Tension) Delineation
- (HT) High Tension Cable Guardrail Delineation
- (M) Type 2 Object Marker

* For two-way traffic, install delineation at the opposite end of structure the same as shown. Back-to-back delineation is required for two-way traffic, single-sided delineation for one-way traffic.

December 23, 2019

Published Date: 3rd Qtr. 2022	SDDOT	DELINEATION OF GUARDRAIL	PLATE NUMBER 632.40
			Sheet 1 of 4

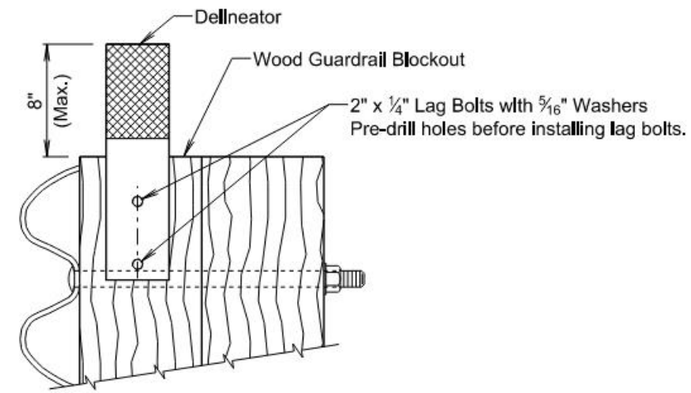

(B) STEEL BEAM GUARDRAIL DELINEATION

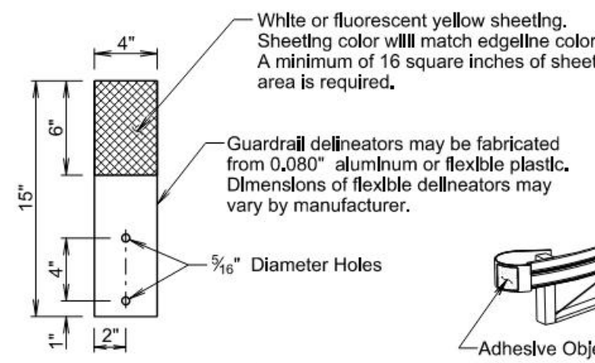

DELINEATOR
(For Steel Beam Guardrail)

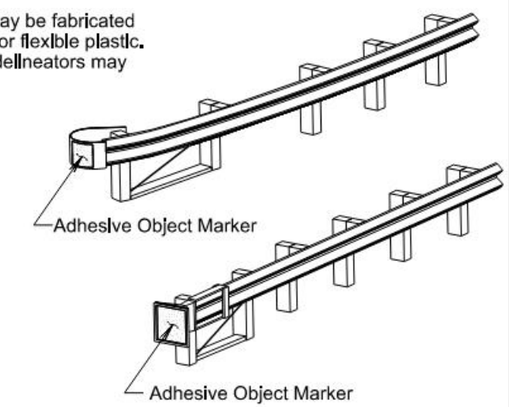

[E] GUARDRAIL END TERMINAL OBJECT MARKER

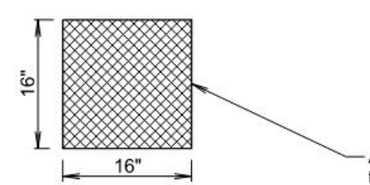

ADHESIVE OBJECT MARKER

Adhesive object marker dimensions may vary due to shape of terminal end. A minimum of 256 square inches of object marker sheeting area is required. The sheeting will be fluorescent yellow.

December 23, 2019

Published Date: 3rd Qtr. 2022	SDDOT	DELINEATION OF GUARDRAIL	PLATE NUMBER 632.40
			Sheet 2 of 4

HDR

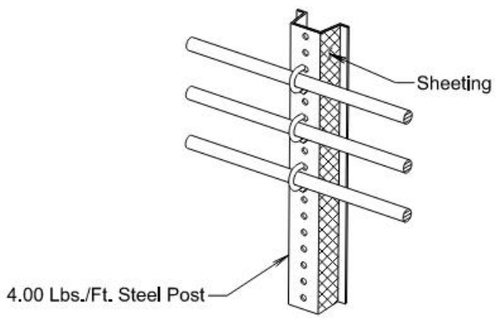

(C) 3 CABLE GUARDRAIL (LOW TENSION) DELINEATION

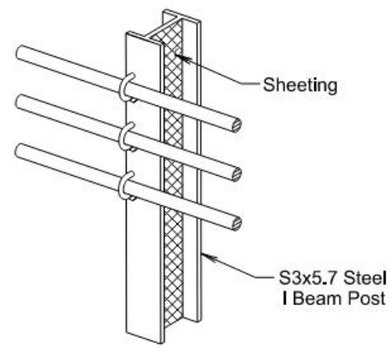

(C) 3 CABLE GUARDRAIL (LOW TENSION) DELINEATION

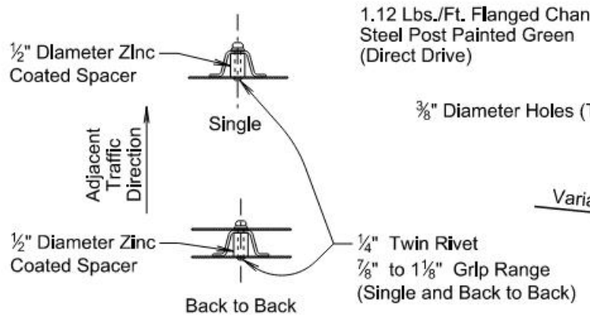

PLAN VIEW
(Type 2 Object Marker Details and Post Orientation)

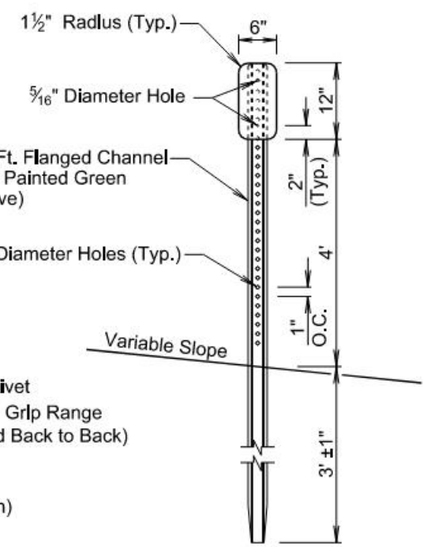

ELEVATION VIEW
(M) (Type 2 Object Marker)
(For Marking 3 Cable Guardrail (Low Tension) Anchor, High Tension Cable Guardrail Anchor, and Trailing End Terminal)

December 23, 2019

Published Date: 3rd Qtr. 2022	SDDOT	DELINEATION OF GUARDRAIL	PLATE NUMBER 632.40
			Sheet 3 of 4

GENERAL NOTES:

The delineation of high tension cable guardrail will be reflective sheeting placed back to back on every other post cap or cable spacer. The sheeting will be type XI in conformance with ASTM D4956. The color of the reflective sheeting shall be the same as the nearest pavement marking.

The delineators for steel beam guardrail and sheeting on 3 cable guardrail (low tension) posts will be covered with a minimum of 16 square inches of reflective sheeting. The reflective sheeting will be type XI in conformance with ASTM D4956. Along two-way roadways the sheeting will be on both sides of the delineators and guardrail posts and will be white in color. For one-way roadways the sheeting will only be required on the side facing traffic and the color will be the same as the nearest pavement marking, yellow on the left side of the roadway and white on the right side.

When steel beam guardrail is attached to a bridge the first delineator will be attached to the post nearest the bridge.

At bridges with guardrail less than 200 feet in length, a minimum of 4 delineators will be placed in addition to the end terminal yellow object marker. The spacing between the delineators will be approximately one third of the length of the guardrail.

At bridges with guardrail 200 feet and greater in length, including bridges that have steel beam guardrail transitioning to 3 cable guardrail (low tension), the delineators will be placed at a spacing of approximately 50 feet. Delineation will extend throughout the length of the guardrail system.

Steel beam guardrail that is not attached to a bridge and is less than 200 feet in length, a minimum of 4 delineators will be placed in addition to the end terminal yellow object markers. The spacing between the delineators will be approximately one third of the length of the guardrail.

Steel beam guardrail that is not attached to a bridge and is 200 feet and greater in length, including steel beam guardrail transitioning to 3 cable guardrail (low tension), the delineators will be placed at a spacing of approximately 50 feet. Delineation will extend throughout the length of the guardrail system.

All costs for furnishing and installing single or back to back guardrail delineation on 3 cable guardrail and steel beam guardrail will be included in the contract unit price per each for "Guardrail Delineator".

All costs for furnishing and installing the reflective sheeting on the cable spacers or post caps for the high tension cable guardrail will be incidental to the respective high tension cable guardrail contract item.

An adhesive object marker will be placed on the end of the W beam guardrail or MGS end terminal. The adhesive object marker dimensions may vary due to the shape of the terminal end. A minimum of 256 square inches of object marker reflective sheeting area is required. The reflective sheeting will be fluorescent yellow type XI sheeting in conformance with ASTM D4956. All costs for furnishing and installing the adhesive object marker will be incidental to various contract items.

A type 2 object marker will be placed adjacent to the 3 cable guardrail (low tension) anchor, high tension cable guardrail anchor, and trailing end terminal at the location noted on sheet 1 of this standard plate. The type 2 object marker (6" x 12") will have fluorescent yellow type XI sheeting in conformance with ASTM D4956. All costs for furnishing and installing the type 2 object marker including the steel post, 6" x 12" reflective panel, and hardware will be included in the contract unit price per each for "Type 2 Object Marker" for single-sided and "Type 2 Object Marker Back to Back" for back to back type 2 object markers.

December 23, 2019

Published Date: 3rd Qtr. 2022	SDDOT	DELINEATION OF GUARDRAIL	PLATE NUMBER 632.40
			Sheet 4 of 4

HDR

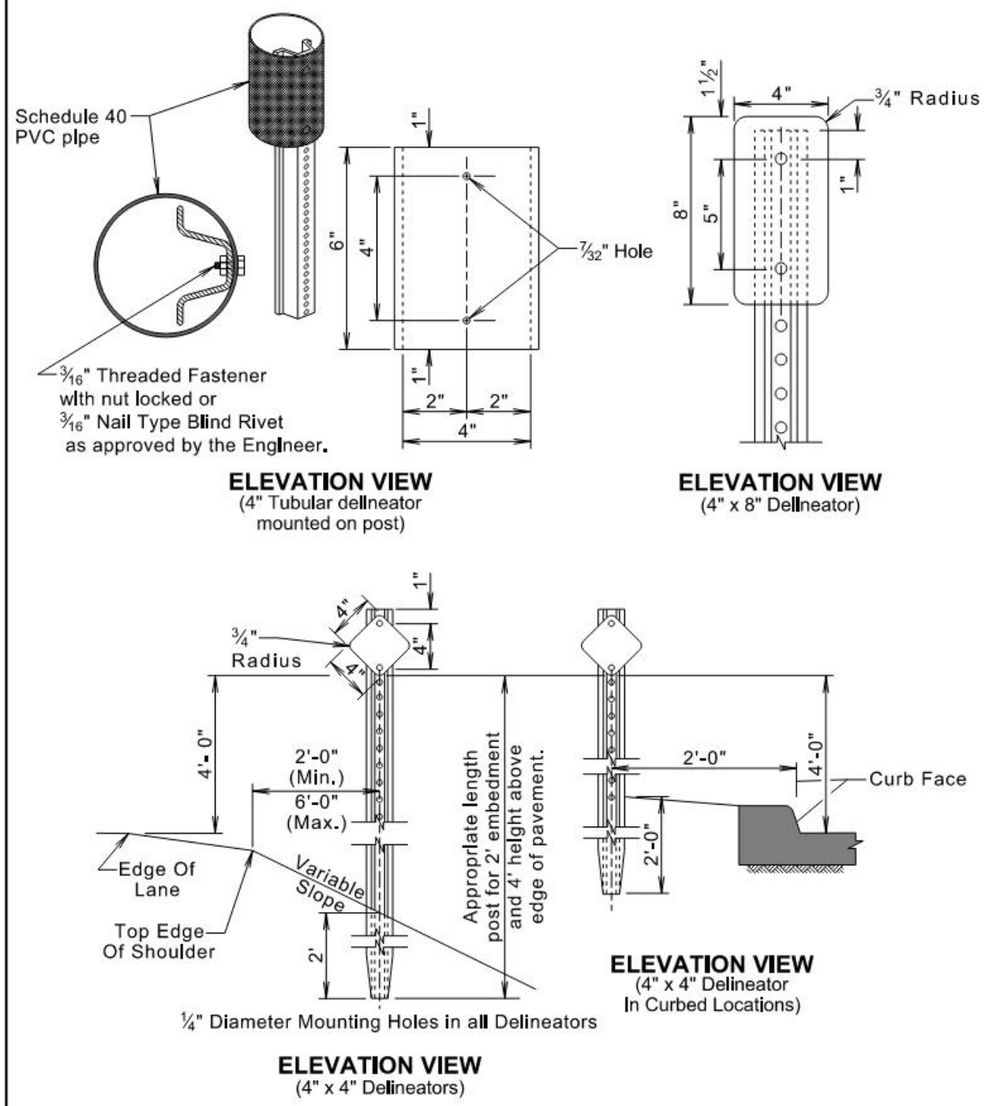

November 19, 2020

Published Date: 3rd Qtr. 2022	SDDOT	DELINEATOR INSTALLATION DETAIL	PLATE NUMBER 632.42 Sheet 1 of 1

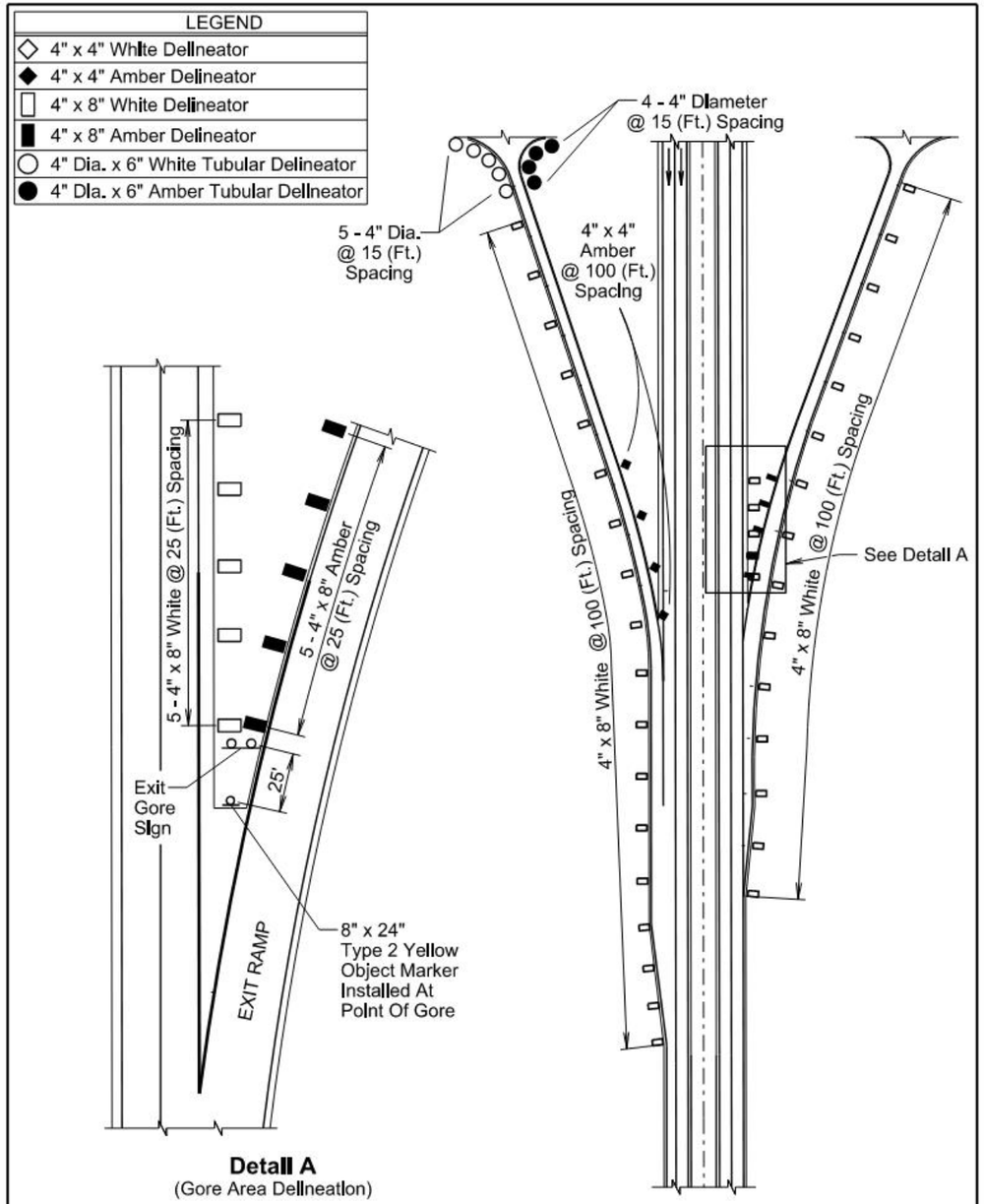

November 19, 2020

Published Date: 3rd Qtr. 2022	SDDOT	DELINEATORS AT RAMPS AND GORE AREAS	PLATE NUMBER 632.48 Sheet 1 of 1

HDR

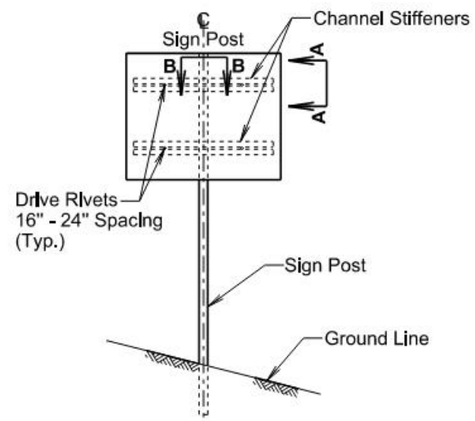

ELEVATION VIEW
(One post breakaway sign supports.)

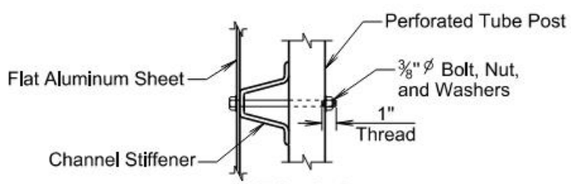

SEC. A-A

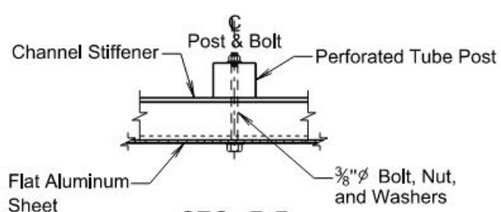

SEC. B-B
(Typical sign and stiffener details.)

ø A plastic washer, as recommended by the sheeting manufacturer, will be installed between the sign face and the metal washer shown.

November 19, 2020

Published Date: 3rd Qtr. 2022	SDDOT	SIGN STIFFENER DETAILS	PLATE NUMBER 632.60
			Sheet 1 of 2

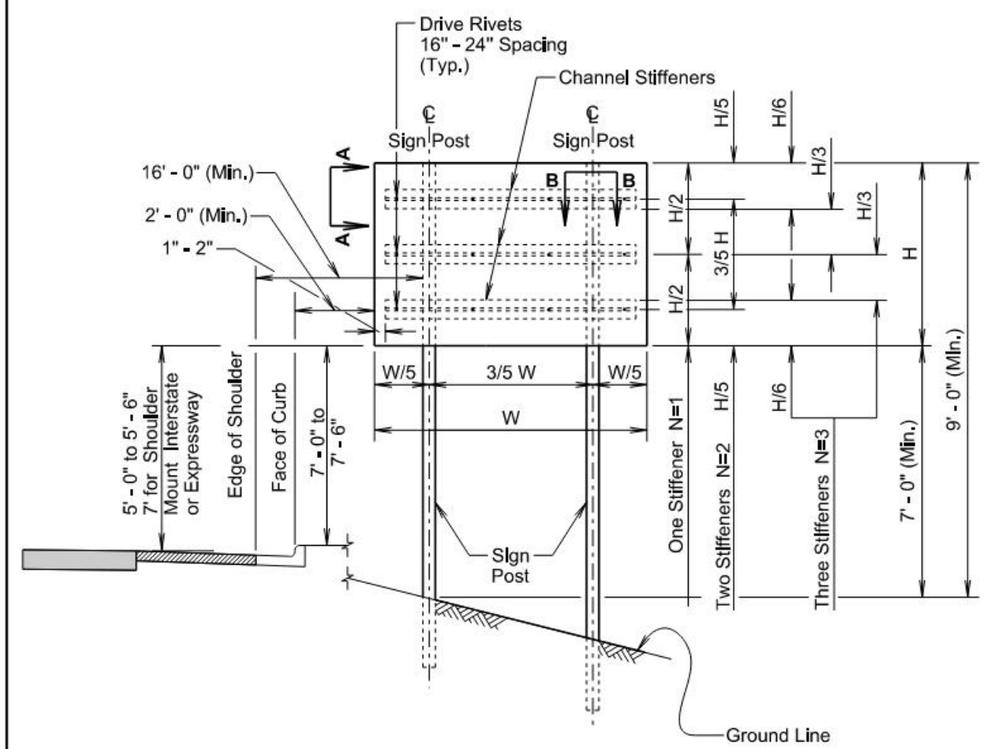

TWO POST BREAKAWAY SIGN SUPPORTS

GENERAL NOTES:

The number of stiffeners used (N) will be as follows:
If H < = 2' - 0" then N = 1
if 2' - 0" < H < = 8' - 0" then N = 2
if 8' - 0" < H < = 15' - 0" then N = 3
where H is the vertical dimension of the sign.

A minimum of two bolts will be required to fasten the sign to each post.

November 19, 2020

Published Date: 3rd Qtr. 2022	SDDOT	SIGN STIFFENER DETAILS	PLATE NUMBER 632.60
			Sheet 2 of 2

HDR

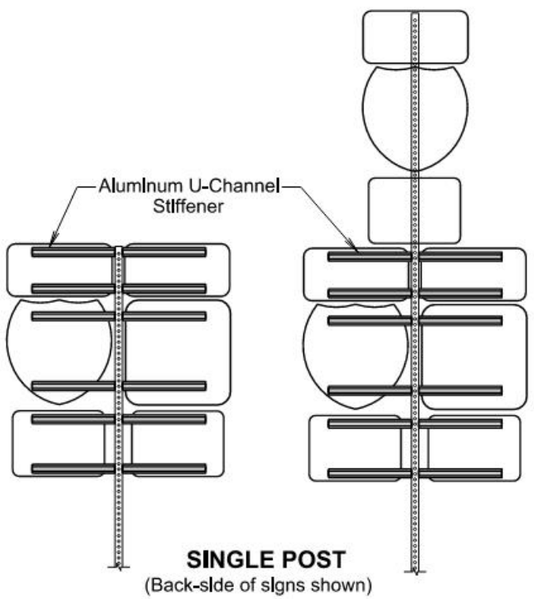

SINGLE POST
(Back-side of signs shown)

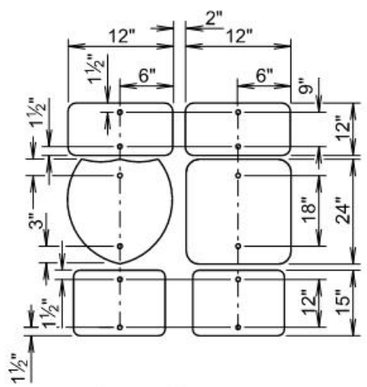

TYPICAL ROUTE MARKER BOLT HOLE LOCATIONS

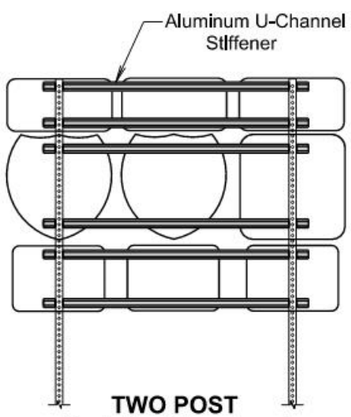

TWO POST
(Back-side of signs shown)

November 19, 2020

Published Date: 3rd Qtr. 2022	SDDOT	MULTIPLE ROUTE MARKER SIGN STIFFENER INSTALLATION DETAILS	PLATE NUMBER 632.62
			Sheet 1 of 1

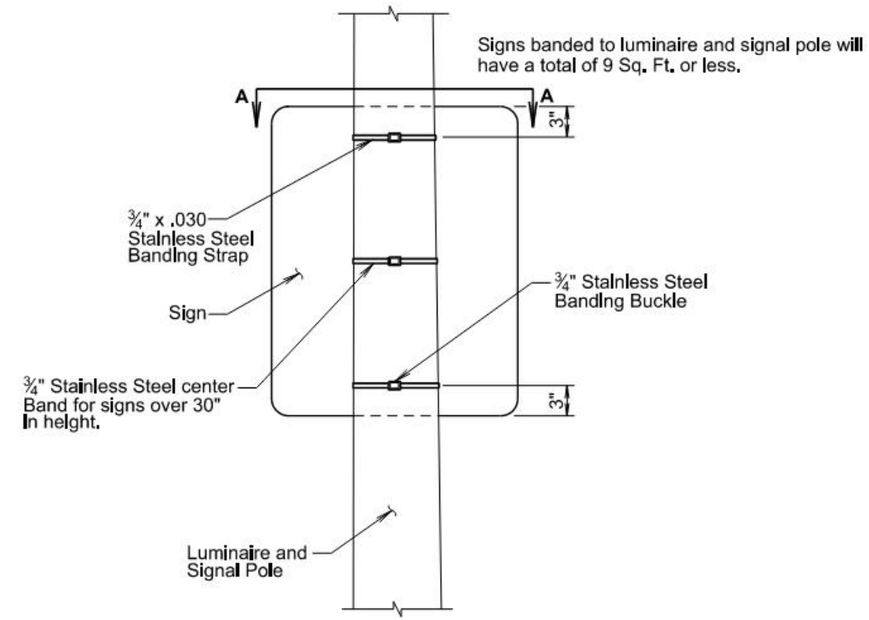

Back View

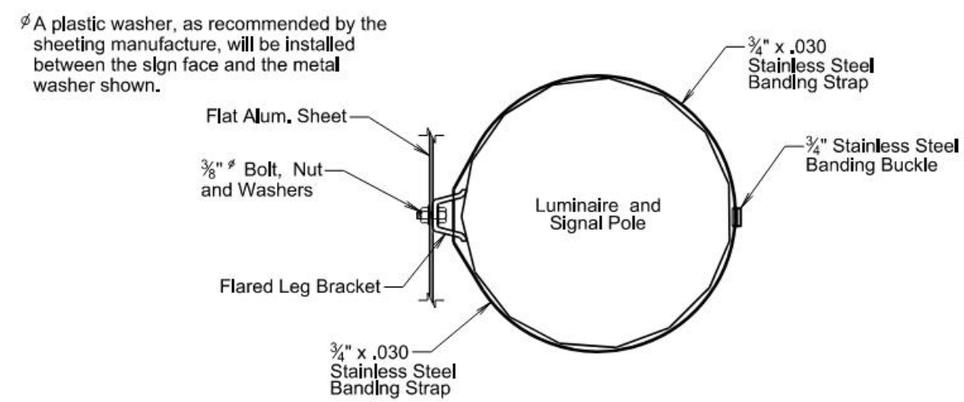

View A - A

November 19, 2020

Published Date: 3rd Qtr. 2022	SDDOT	BANDING SIGN TO LUMINAIRE AND SIGNAL POLE	PLATE NUMBER 632.80
			Sheet 1 of 1

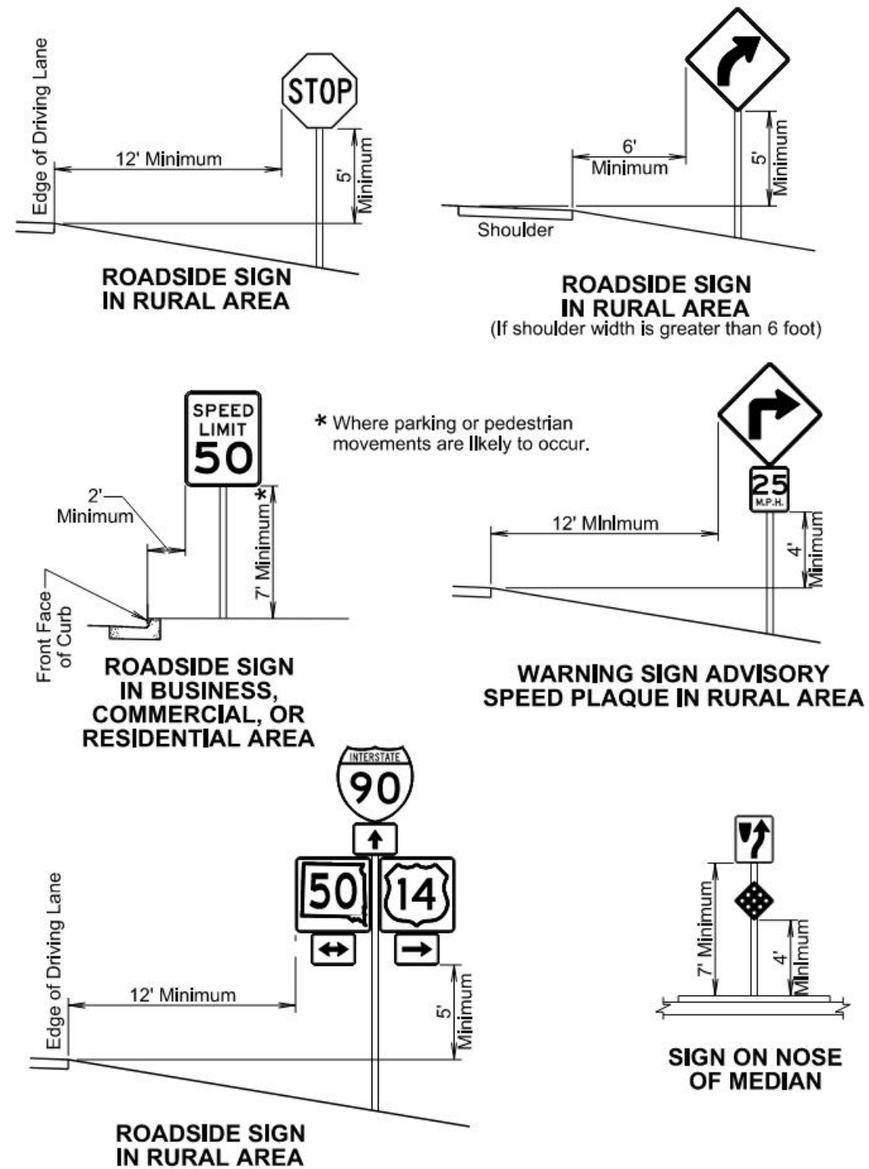

November 19, 2020

Published Date: 3rd Qtr. 2022	SDDOT	OFFSETS FOR SIGN INSTALLATION	PLATE NUMBER 632.90 Sheet 1 of 1

FOR BIDDING PURPOSES ONLY