SECTION X: CROSS SECTIONS

STATE OF SOUTH DAKOTA	PROJECT	SHEET	TOTAL SHEETS
	P-PH-B-PT 0010(124)296	X1	X169

Plotting Date: 08/23/2023

INDEX OF SHEETS

X1	General Layout with Index
X2-X3	Soil Legend
X4-X157	Mainline Cross Sections
X158-X169	Diversion Cross Sections

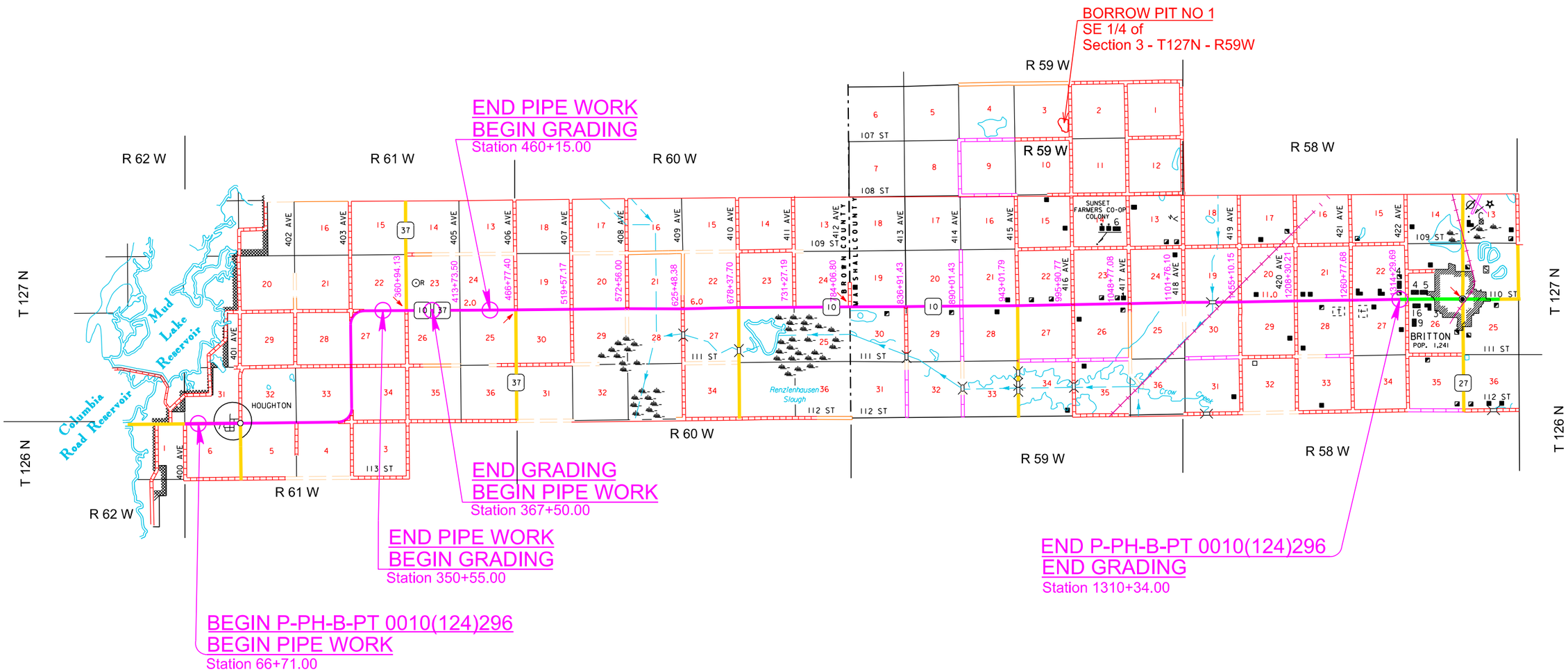

Plot Scale - 1:200

Plotted From - TRPR17189

File - U:\rd\prj\brwn05F4\Titlex.dgn

Soil Legend

1	Clay Silt	6	Silty Sand
2	Silt Clay	7	Sandy Silt
3	Clay	8	Sand
4	Sandy Clay	9	Silt
5	Clay Sand	10	Gravel

The soils information presented is representative of the material encountered at the specific bore hole location.

The Geotechnical Engineering Activity has on file all of the boring logs for this project. These logs and additional results of laboratory tests, if any, are available for review at the Central Office in Pierre.

Water levels encountered in the borings when drilled in June 2020 are annotated on the cross-sections.

▽ Water Level ⊖ Caved Hole

Plotting Date: 07-28-2020

STATE OF SOUTH DAKOTA	PROJECT	SHEET NO.	TOTAL SHEETS
	P-PH-B-PT 0010(124)296	X2	X169

Hole Number	1	1	1
Station	355+00	355+00	355+00
Offset	11.2'LT	11.2'LT	11.2'LT
Depth, ft	1.6-3.2	3.2-6.0	6.0-8.0
Moisture Depth, ft	2.5	4.5	7.0
Moisture, %	18.3	19.6	24.9
Dry Loose Wt, lbs/cuft	76.0	73.3	70.5
% Passing 3/8	100.0	100.0	100.0
% Passing #4	99.9	99.8	100.0
% Passing #10	99.2	98.8	99.7
% Passing #40	96.0	93.8	98.9
% Passing #200	48.6	55.4	34.0
% Sand	50.5	43.4	65.7
% Silt	30.4	30.3	19.6
% Clay	18.3	25.1	14.4
Liquid Limit	23	24	0
Plastic Limit	0	14	0
Plasticity Index	NP	10	NP
Soil Color	Charcoal	Tan	Charcoal
Textural Class.	Silty Sand	Clay Sand	Silty Sand
AASHTO Class.	A-4 (3)	A-4 (4)	A-2-4 (0)

Hole Number	2	2
Station	466+00	466+00
Offset	9.4'RT	9.4'RT
Depth, ft	1.5-4.0	4.0-8.0
Moisture Depth, ft	2.8	5.0
Moisture, %	8.0	19.3
Dry Loose Wt, lbs/cuft	72.0	79.5
% Passing 3/8	100.0	100.0
% Passing #4	100.0	99.7
% Passing #10	99.8	99.1
% Passing #40	98.9	97.5
% Passing #200	82.4	21.0
% Sand	17.4	78.1
% Silt	66.0	12.1
% Clay	16.4	8.9
Liquid Limit	0	0
Plastic Limit	0	0
Plasticity Index	NP	NP
Soil Color	Charcoal	Charcoal
Textural Class.	Sandy Silt	Silty Sand
AASHTO Class.	A-3 (8)	A-2-4 (0)

Hole Number	3	3
Station	636+00	636+00
Offset	10.0'RT	10.0'RT
Depth, ft	1.4-4.5	4.5-8.0
Moisture Depth, ft	4.0	5.5
Moisture, %	28.3	29.7
Dry Loose Wt, lbs/cuft	74.0	82.6
% Passing 3/8	100.0	98.5
% Passing #4	99.9	98.2
% Passing #10	99.3	96.2
% Passing #40	95.6	90.5
% Passing #200	80.5	25.3
% Sand	18.8	70.9
% Silt	59.6	14.8
% Clay	20.8	10.6
Liquid Limit	30	0
Plastic Limit	0	0
Plasticity Index	NP	NP
Soil Color	Charcoal	Brown
Textural Class.	Clay Silt	Silty Sand
AASHTO Class.	A-4 (8)	A-2-4 (0)

Hole Number	4	4
Station	687+00	687+00
Offset	8.2'LT	8.2'LT
Depth, ft	1.4-5.0	5.0-8.0
Moisture Depth, ft	3.5	6.0
Moisture, %	24.2	27.8
Dry Loose Wt, lbs/cuft	70.9	70.1
% Passing 3/8	100.0	100.0
% Passing #4	99.9	100.0
% Passing #10	99.4	99.7
% Passing #40	96.5	98.8
% Passing #200	83.9	88.8
% Sand	15.6	11.0
% Silt	63.0	69.8
% Clay	20.9	19.0
Liquid Limit	30	0
Plastic Limit	20	0
Plasticity Index	10	NP
Soil Color	Charcoal	Tan
Textural Class.	Clay Silt	Sandy Silt
AASHTO Class.	A-4 (8)	A-3 (8)

Hole Number	5
Station	699+00
Offset	45'RT
Depth, ft	0-5.0
Moisture Depth, ft	2.5
Moisture, %	33.3
Dry Loose Wt, lbs/cuft	67.9
% Passing 3/8	100.0
% Passing #4	100.0
% Passing #10	100.0
% Passing #40	99.6
% Passing #200	98.0
% Sand	1.9
% Silt	83.0
% Clay	15.0
Liquid Limit	0
Plastic Limit	0
Plasticity Index	NP
Soil Color	Tan
Textural Class.	Silt
AASHTO Class.	A-3 (8)

Hole Number	6	6
Station	718+00	718+00
Offset	7.8'LT	7.8'LT
Depth, ft	1.3-5.0	5.0-10.0
Moisture Depth, ft	4.0	6.0
Moisture, %	27.7	30.5
Dry Loose Wt, lbs/cuft	72.5	63.6
% Passing 3/8	100.0	100.0
% Passing #4	99.0	100.0
% Passing #10	98.9	99.9
% Passing #40	95.4	99.4
% Passing #200	88.3	96.6
% Sand	10.6	3.3
% Silt	61.6	67.6
% Clay	26.7	29.0
Liquid Limit	37	37
Plastic Limit	21	24
Plasticity Index	15	13
Soil Color	Charcoal	Tan
Textural Class.	Clay Silt	Clay Silt
AASHTO Class.	A-6 (10)	A-6 (9)

Hole Number	7	7
Station	819+00	819+00
Offset	9.2'RT	9.2'RT
Depth, ft	1.7-5.0	5.0-10.0
Moisture Depth, ft	2.8	5.5
Moisture, %	18.2	18.8
Dry Loose Wt, lbs/cuft	79.8	71.0
% Passing 3/8	100.0	100.0
% Passing #4	99.0	100.0
% Passing #10	96.4	99.3
% Passing #40	87.9	97.2
% Passing #200	69.9	88.9
% Sand	26.5	10.4
% Silt	51.5	70.1
% Clay	18.3	18.9
Liquid Limit	29	30
Plastic Limit	20	0
Plasticity Index	9	NP
Soil Color	Charcoal	Tan
Textural Class.	Sandy Silt	Sandy Silt
AASHTO Class.	A-4 (7)	A-4 (8)

Hole Number	8	8	8
Station	844+00	844+00	844+00
Offset	8.6'RT	8.6'RT	8.6'RT
Depth, ft	1.3-5.0	5.0-7.5	7.5-10.0
Moisture Depth, ft	2.5	6.0	8.0
Moisture, %	17.0	21.2	27.3
Dry Loose Wt, lbs/cuft	78.1	78.2	73.3
% Passing 3/8	99.8	100.0	100.0
% Passing #4	99.7	99.9	100.0
% Passing #10	98.6	99.7	99.9
% Passing #40	91.8	99.2	99.1
% Passing #200	35.2	24.5	58.7
% Sand	63.4	75.2	41.2
% Silt	21.4	13.5	39.7
% Clay	13.8	11.0	19.0
Liquid Limit	0	0	0
Plastic Limit	0	0	0
Plasticity Index	NP	NP	NP
Soil Color	Charcoal	Tan	Tan
Textural Class.	Silty Sand	Silty Sand	Sandy Silt
AASHTO Class.	A-2-4 (0)	A-2-4 (0)	A-3 (5)

Hole Number	9	9
Station	899+00	899+00
Offset	8.4'RT	8.4'RT
Depth, ft	1.4-5.0	5.0-10.0
Moisture Depth, ft	2.5	6.0
Moisture, %	18.0	29.8
Dry Loose Wt, lbs/cuft	84.7	72.0
% Passing 3/8	99.6	100.0
% Passing #4	98.3	100.0
% Passing #10	93.3	99.8
% Passing #40	80.5	99.1
% Passing #200	40.9	83.3
% Sand	52.4	16.5
% Silt	26.9	70.3
% Clay	14.0	13.0
Liquid Limit	0	25
Plastic Limit	0	0
Plasticity Index	NP	NP
Soil Color	Charcoal	Tan
Textural Class.	Silty Sand	Sandy Silt
AASHTO Class.	A-4 (1)	A-4 (8)

Hole Number	10	10
Station	909+00	909+00
Offset	6.6'RT	6.6'RT
Depth, ft	1.4-4.5	4.5-8.0
Moisture Depth, ft	2.6	6.0
Moisture, %	21.4	31.2
Dry Loose Wt, lbs/cuft	84.6	69.2
% Passing 3/8	98.8	100.0
% Passing #4	96.5	99.9
% Passing #10	92.0	99.5
% Passing #40	81.9	98.1
% Passing #200	41.3	82.0
% Sand	50.8	17.5
% Silt	29.3	61.7
% Clay	12.0	20.3
Liquid Limit	0	0
Plastic Limit	0	0
Plasticity Index	NP	NP
Soil Color	Charcoal	Tan
Textural Class.	Silty Sand	Clay Silt
AASHTO Class.	A-4 (1)	A-3 (8)

Hole Number	11
Station	999+00
Offset	54'LT
Depth, ft	0-8.0
Moisture Depth, ft	3.0
Moisture, %	35.9
Dry Loose Wt, lbs/cuft	60.2
% Passing 3/8	100.0
% Passing #4	100.0
% Passing #10	100.0
% Passing #40	99.3
% Passing #200	95.5
% Sand	4.4
% Silt	55.1
% Clay	40.4
Liquid Limit	43
Plastic Limit	27
Plasticity Index	15
Soil Color	Tan
Textural Class.	Silt Clay
AASHTO Class.	A-7-6 (11)

Hole Number	12	12
Station	1014+00	1014+00
Offset	9.4'LT	9.4'LT
Depth, ft	1.5-5.0	5.0-8.0
Moisture Depth, ft	2.5	5.5
Moisture, %	31.3	35.4
Dry Loose Wt, lbs/cuft	65.7	67.3
% Passing 3/8	100.0	100.0
% Passing #4	99.6	99.6
% Passing #10	98.8	99.3
% Passing #40	93.8	96.6
% Passing #200	87.4	88.3
% Sand	11.4	10.9
% Silt	57.3	56.2
% Clay	30.0	32.2
Liquid Limit	36	34
Plastic Limit	25	21
Plasticity Index	12	12
Soil Color	Tan	Tan
Textural Class.	Clay Silt	Silt Clay
AASHTO Class.	A-6 (9)	A-6 (9)

Hole Number	13	13
Station	1058+00	1058+00
Offset	80'RT	80'RT
Depth, ft	0-5.0	5.0-10.0
Moisture Depth, ft	2.4	6.0
Moisture, %	32.4	36.8
Dry Loose Wt, lbs/cuft	66.9	62.4
% Passing 3/8	99.6	100.0
% Passing #4	99.6	99.9
% Passing #10	99.6	99.9
% Passing #40	98.2	99.4
% Passing #200	94.3	98.0
% Sand	5.3	1.9
% Silt	71.0	75.7
% Clay	23.3	22.4
Liquid Limit	35	36
Plastic Limit	0	0
Plasticity Index	NP	NP
Soil Color	Tan	Tan
Textural Class.	Clay Silt	Clay Silt
AASHTO Class.	A-4 (8)	A-4 (8)

Hole Number	14	14
Station	1070+00	1070+00
Offset	70'LT	70'LT
Depth, ft	0-5.5	5.5-10.0
Moisture Depth, ft	4.0	6.0
Moisture, %	23.8	20.7
Dry Loose Wt, lbs/cuft	64.5	68.3
% Passing 3/8	100.0	100.0
% Passing #4	100.0	100.0
% Passing #10	99.9	99.9
% Passing #40	99.6	99.7
% Passing #200	98.8	98.9
% Sand	1.1	1.0
% Silt	74.4	77.5
% Clay	24.4	21.4
Liquid Limit	36	32
Plastic Limit	26	0
Plasticity Index	9	NP
Soil Color	Tan	Tan
Textural Class.	Clay Silt	Clay Silt
AASHTO Class.	A-4 (8)	A-4 (8)

Plotting Date: 07-28-2020

STATE OF SOUTH DAKOTA	PROJECT	SHEET NO.	TOTAL SHEETS
	P-PH-B-PT 0010(124)296	X3	X169

Hole Number	15	15
Station	1204+00	1204+00
Offset	7.8'RT	7.8'RT
Depth, ft	1.4-7.5	4.5-8.0
Moisture Depth, ft	2.5	5.5
Moisture, %	19.2	24.9
Dry Loose Wt, lbs/cuft	82.0	74.2
% Passing 3/8	99.7	100.0
% Passing #4	98.1	99.8
% Passing #10	95.9	99.3
% Passing #40	82.1	97.1
% Passing #200	59.6	68.4
% Sand	36.3	30.9
% Silt	42.9	50.1
% Clay	16.7	18.3
Liquid Limit	0	0
Plastic Limit	0	0
Plasticity Index	NP	NP
Soil Color	Charcoal	Tan
Textural Class.	Sandy Silt	Sandy Silt
AASHTO Class.	A-3 (5)	A-3 (7)

Hole Number	16	16
Station	1211+00	1211+00
Offset	8.7'LT	8.7'LT
Depth, ft	1.5-5.0	5.0-10.0
Moisture Depth, ft	2.5	6.0
Moisture, %	19.5	26.5
Dry Loose Wt, lbs/cuft	79.0	74.0
% Passing 3/8	97.1	99.8
% Passing #4	96.0	99.8
% Passing #10	94.2	99.5
% Passing #40	87.3	98.1
% Passing #200	69.4	72.4
% Sand	24.8	27.1
% Silt	48.3	54.1
% Clay	21.1	18.3
Liquid Limit	31	0
Plastic Limit	18	0
Plasticity Index	12	NP
Soil Color	Charcoal	Tan
Textural Class.	Clay Silt	Sandy Silt
AASHTO Class.	A-6 (8)	A-3 (7)

Hole Number	17
Station	1229+00
Offset	60'RT
Depth, ft	0-8.0
Moisture Depth, ft	2.6
Moisture, %	33.2
Dry Loose Wt, lbs/cuft	69.2
% Passing 3/8	100.0
% Passing #4	100.0
% Passing #10	100.0
% Passing #40	99.9
% Passing #200	96.1
% Sand	3.9
% Silt	71.7
% Clay	24.4
Liquid Limit	31
Plastic Limit	23
Plasticity Index	8
Soil Color	Tan
Textural Class.	Clay Silt
AASHTO Class.	A-4 (8)

Hole Number	18	18
Station	1249+00	1249+00
Offset	7.4'RT	7.4'RT
Depth, ft	1.6-4.5	4.5-10.0
Moisture Depth, ft	2.8	5.0
Moisture, %	26.8	37.5
Dry Loose Wt, lbs/cuft	75.0	65.4
% Passing 3/8	100.0	100.0
% Passing #4	99.8	100.0
% Passing #10	99.8	99.5
% Passing #40	93.0	97.3
% Passing #200	76.0	91.0
% Sand	22.7	8.5
% Silt	52.9	50.8
% Clay	23.1	40.2
Liquid Limit	0	43
Plastic Limit	0	24
Plasticity Index	NP	19
Soil Color	Charcoal	Tan
Textural Class.	Clay Silt	Silt Clay
AASHTO Class.	A-3 (8)	A-7-6 (12)

Hole Number	19
Station	1272+00
Offset	7.4'RT
Depth, ft	1.9-10.0
Moisture Depth, ft	2.8
Moisture, %	12.4
Dry Loose Wt, lbs/cuft	84.9
% Passing 3/8	96.1
% Passing #4	94.1
% Passing #10	91.8
% Passing #40	82.8
% Passing #200	50.2
% Sand	41.7
% Silt	40.6
% Clay	9.6
Liquid Limit	0
Plastic Limit	0
Plasticity Index	NP
Soil Color	Light Brown
Textural Class.	Silty Sand
AASHTO Class.	A-4 (3)

Hole Number	20	20
Station	1284+00	1284+00
Offset	8.8'RT	8.8'RT
Depth, ft	1.5-5.0	5.0-10.0
Moisture Depth, ft	3.4	6.0
Moisture, %	23.6	34.4
Dry Loose Wt, lbs/cuft	78.8	67.5
% Passing 3/8	98.5	100.0
% Passing #4	97.4	99.9
% Passing #10	95.4	99.3
% Passing #40	83.3	93.9
% Passing #200	71.8	82.4
% Sand	23.7	16.9
% Silt	48.5	54.2
% Clay	23.3	28.2
Liquid Limit	37	40
Plastic Limit	20	24
Plasticity Index	17	17
Soil Color	Charcoal	Tan
Textural Class.	Clay Silt	Clay Silt
AASHTO Class.	A-6 (10)	A-6 (11)

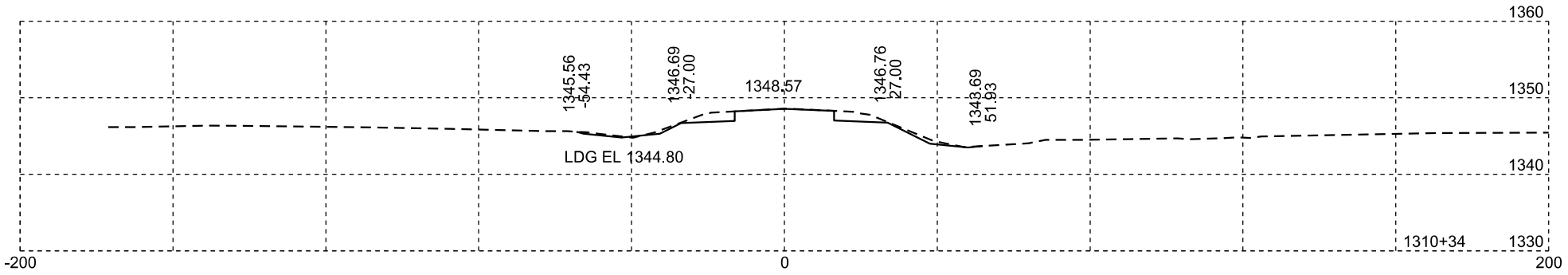

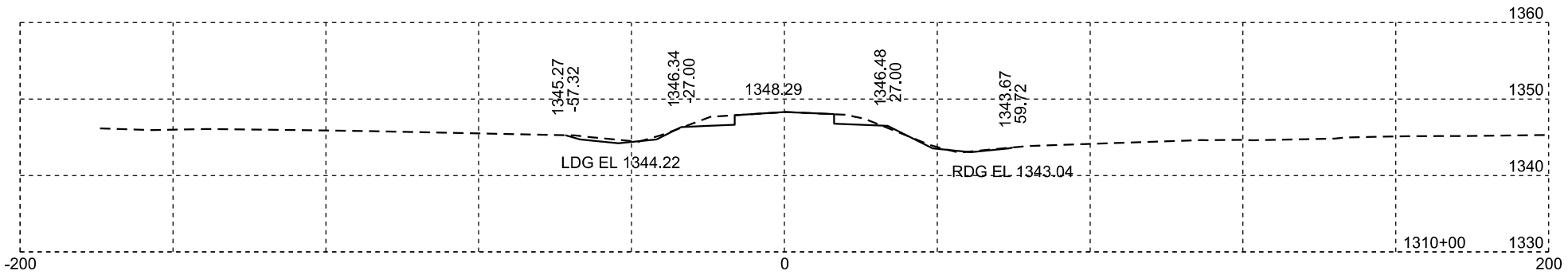

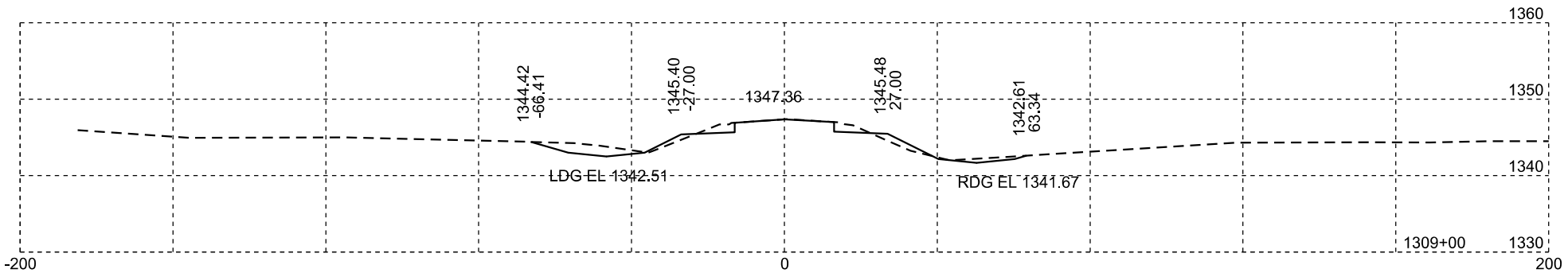

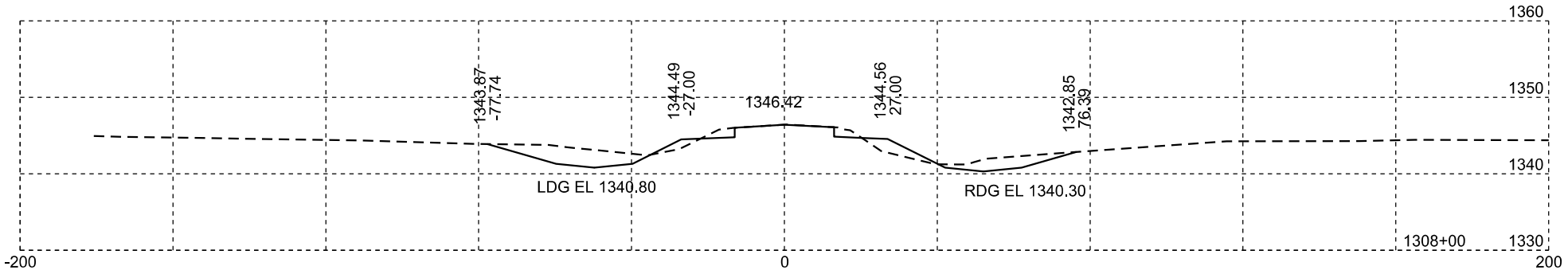

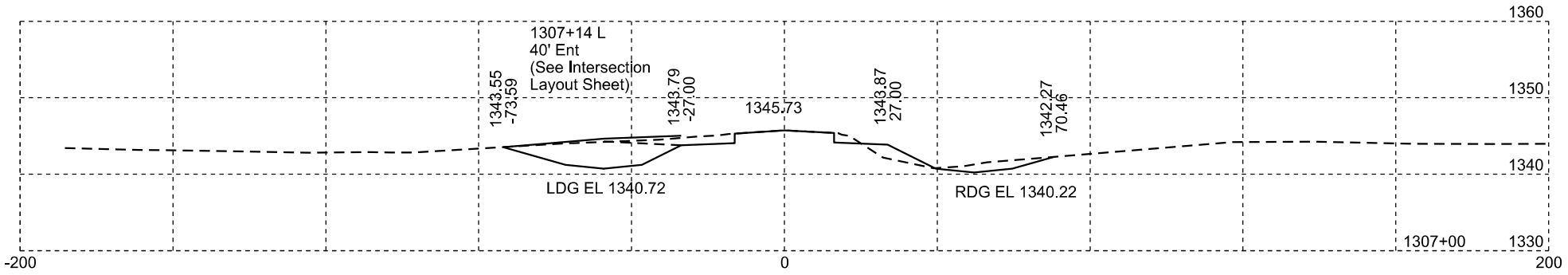

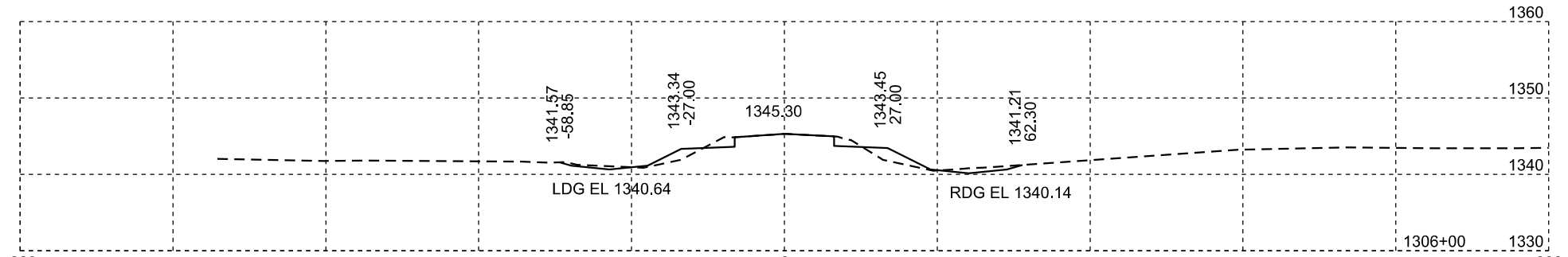

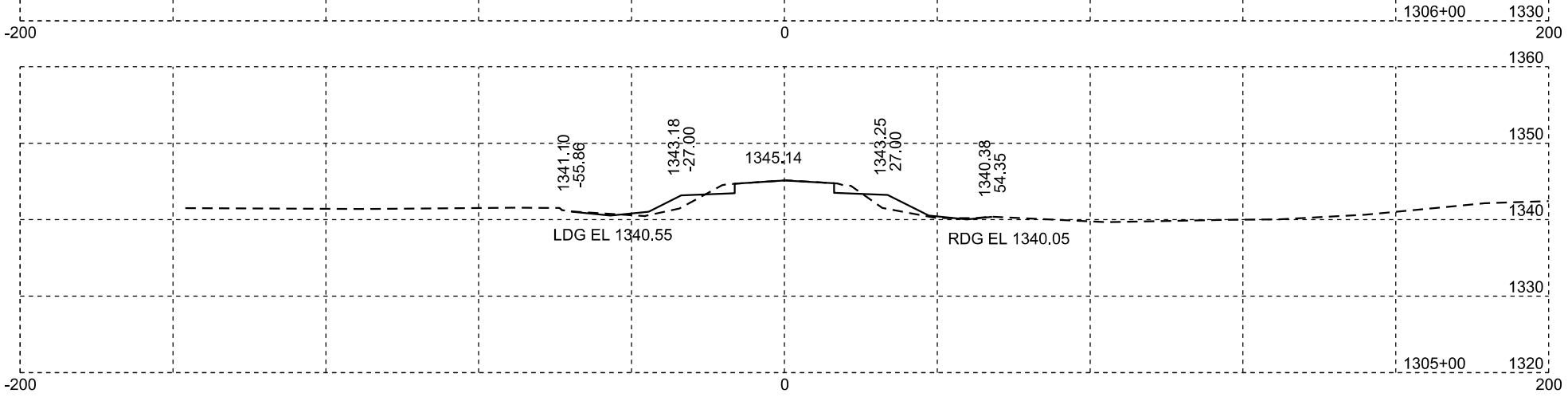

Plotting Date: 01/19/2024

STATE OF SOUTH DAKOTA	PROJECT	SHEET NO.	TOTAL SHEETS
	P-PH-B-PT 0010(124)296	X4	X169

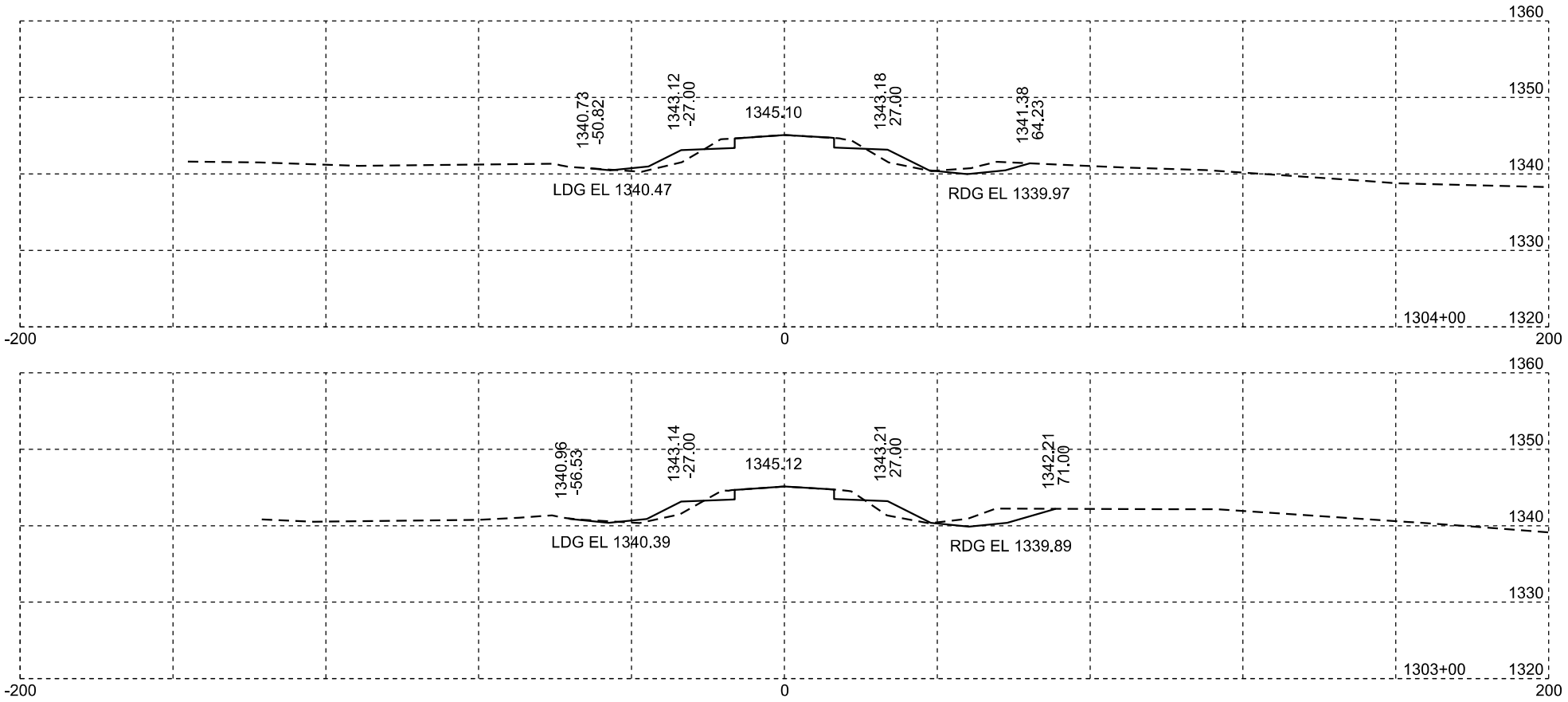

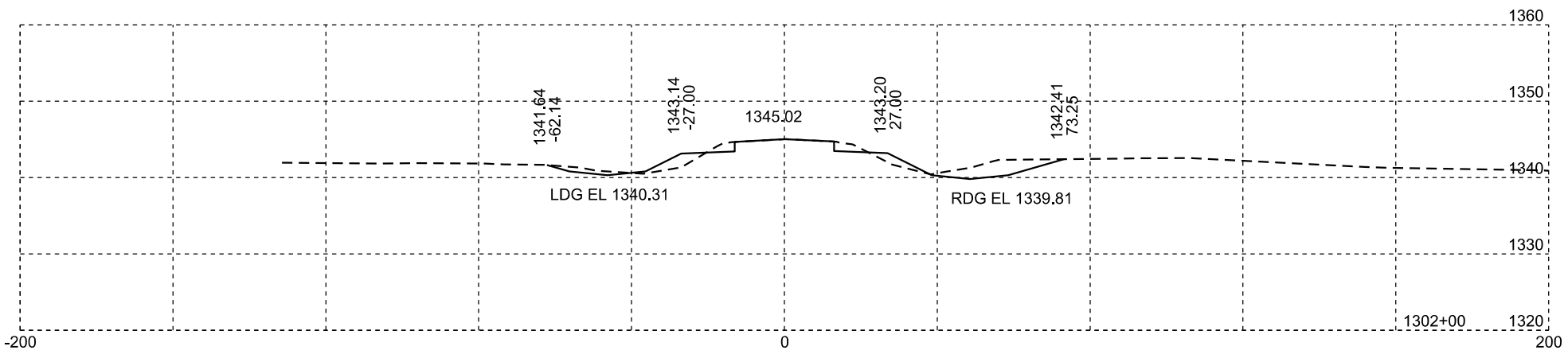

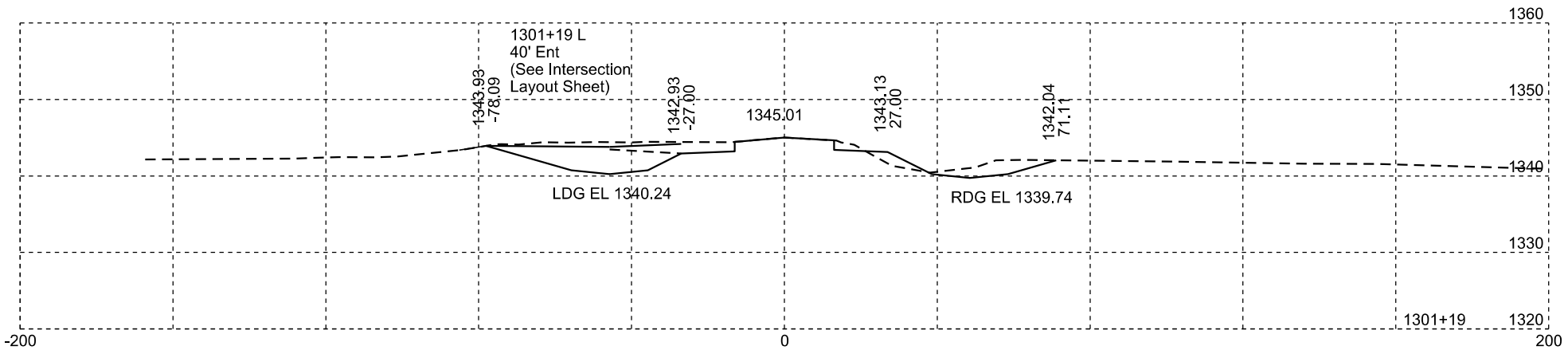

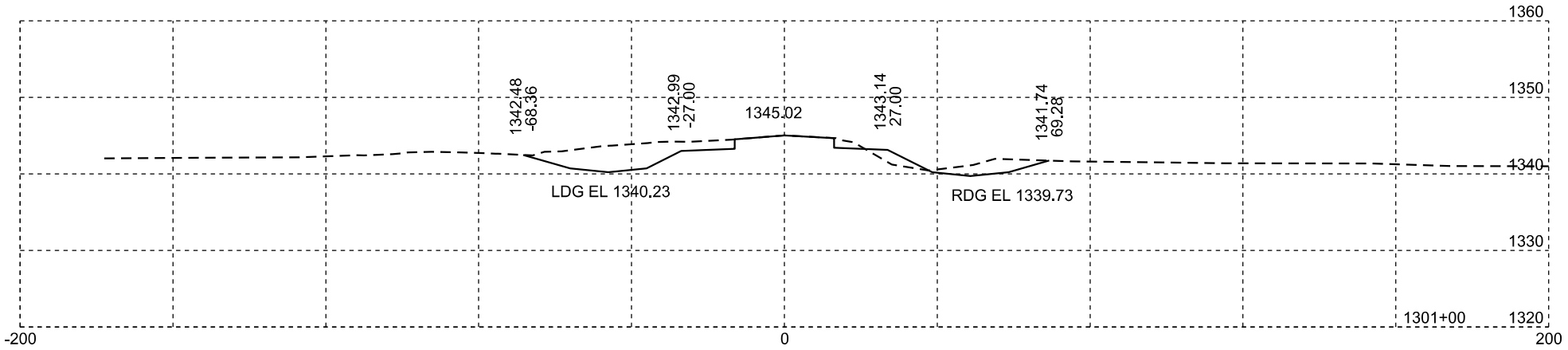

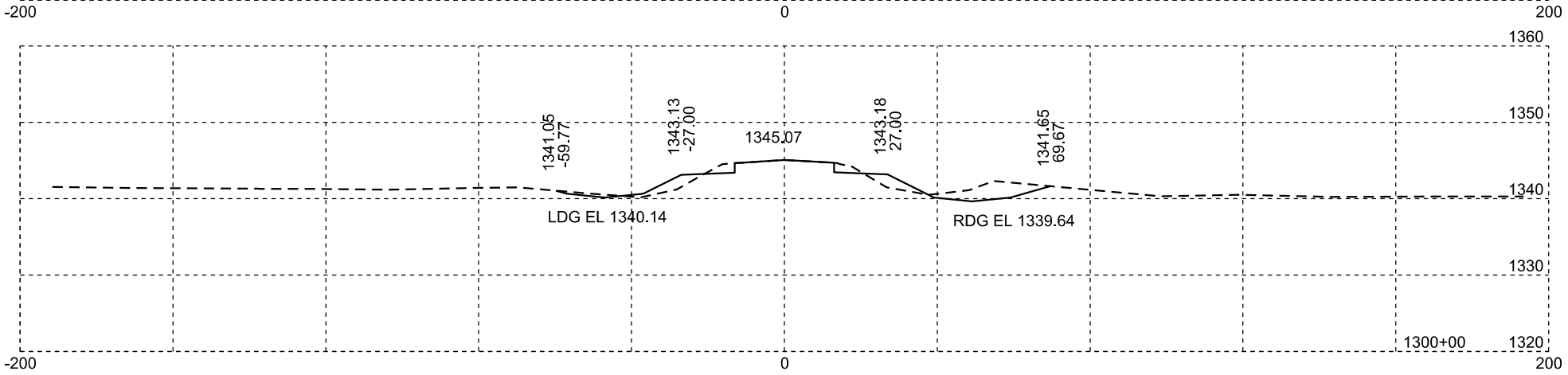

Plotting Date: 01/19/2024

STATE OF SOUTH DAKOTA	PROJECT	SHEET NO.	TOTAL SHEETS
	P-PH-B-PT 0010(124)296	X5	X169

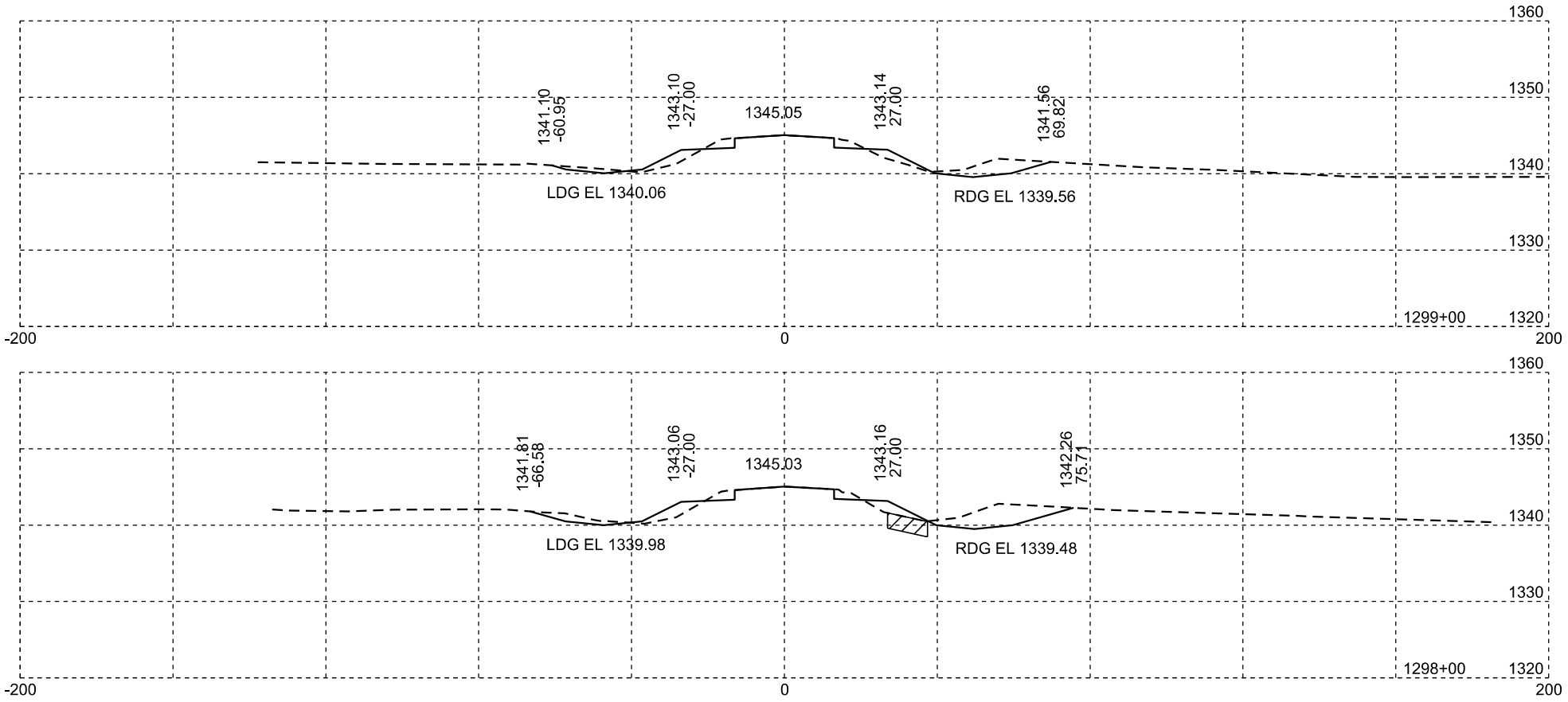

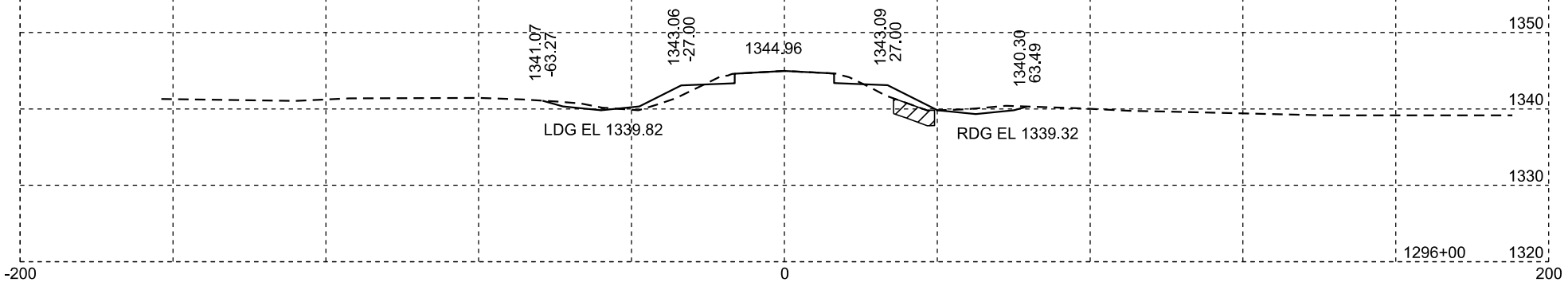

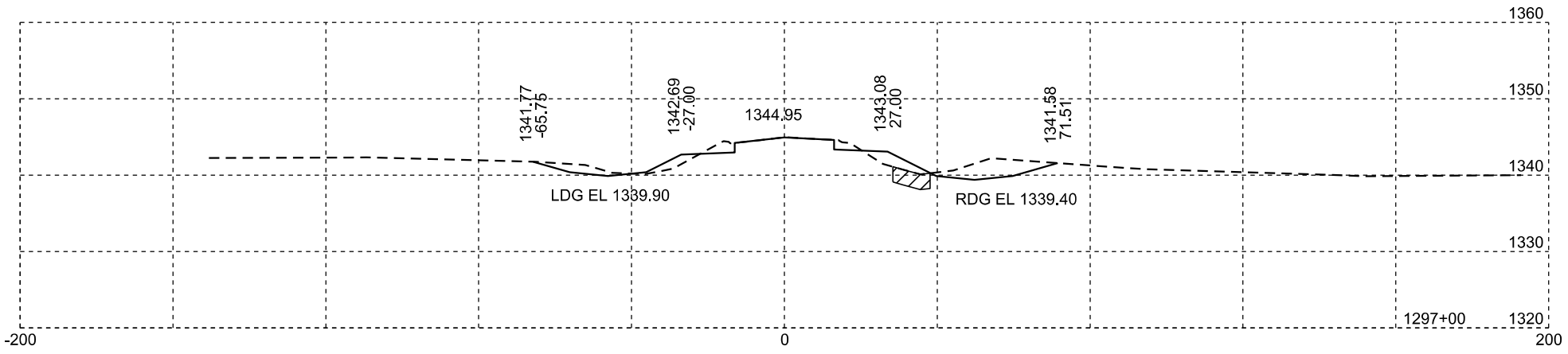

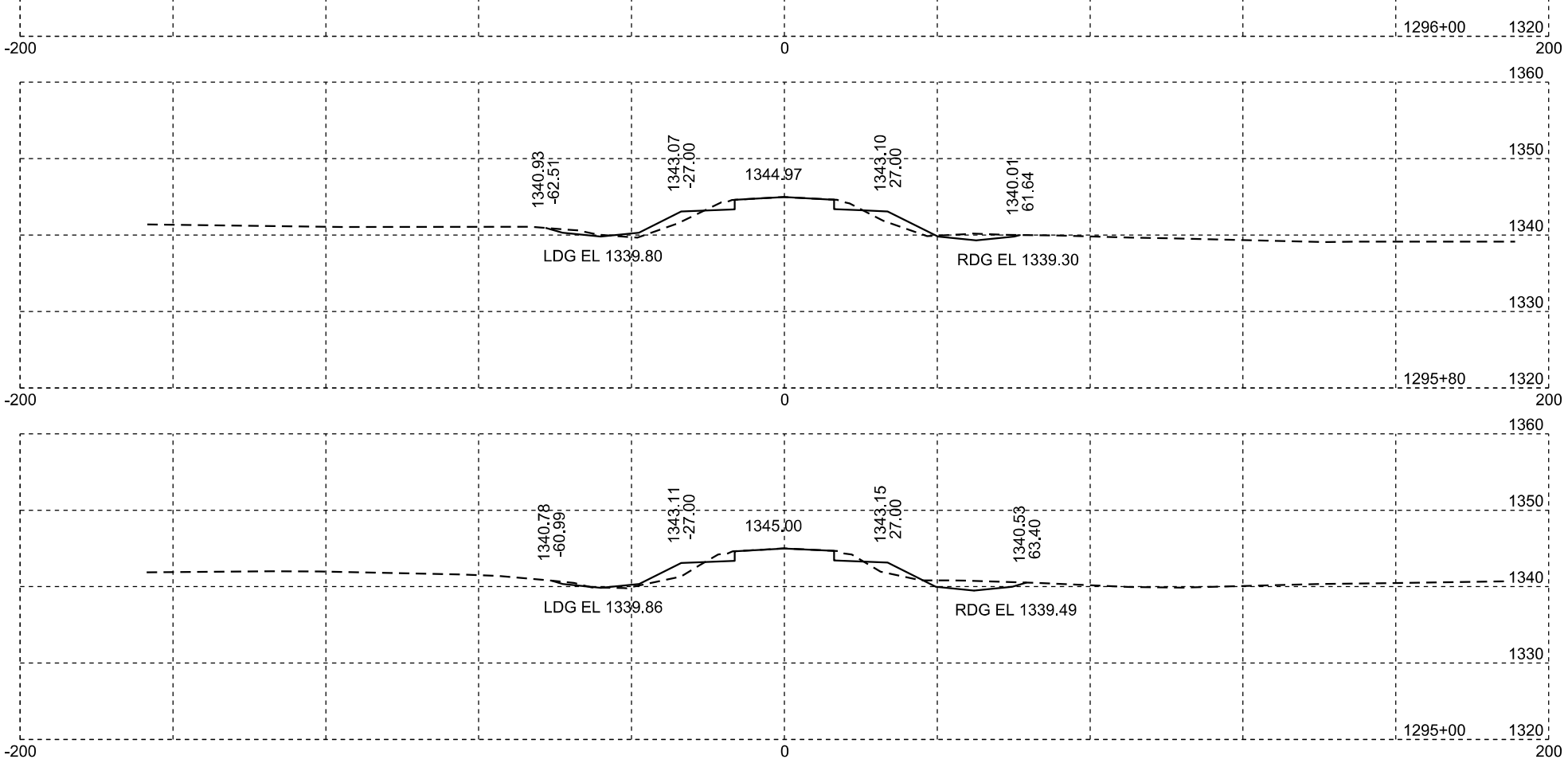

Unstable

Plotting Date: 01/19/2024

STATE OF SOUTH DAKOTA	PROJECT	SHEET NO.	TOTAL SHEETS
	P-PH-B-PT 0010(124)296	X6	X169

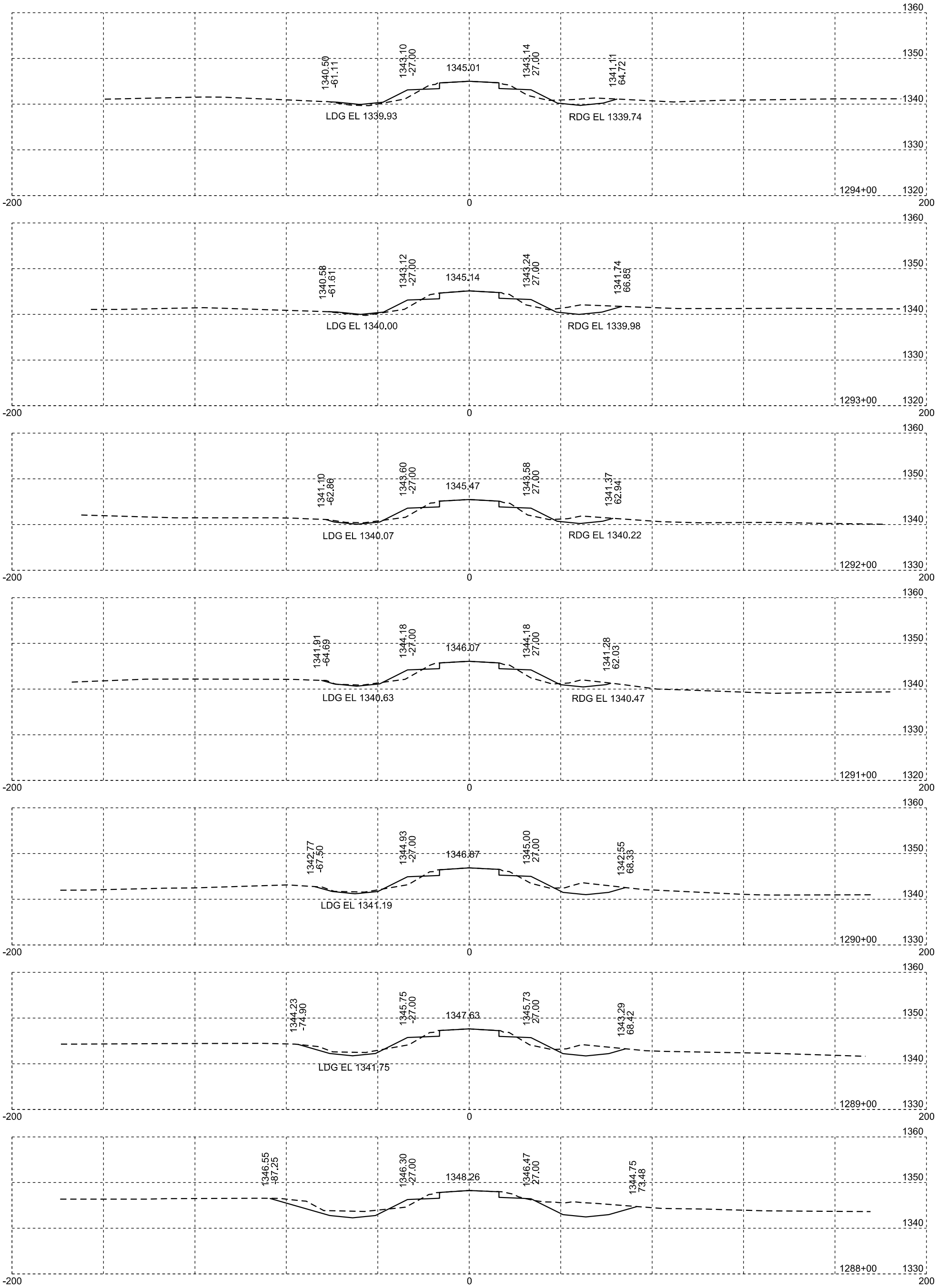

Plotting Date: 01/19/2024

STATE OF SOUTH DAKOTA	PROJECT	SHEET NO.	TOTAL SHEETS
	P-PH-B-PT 0010(124)296	X7	X169

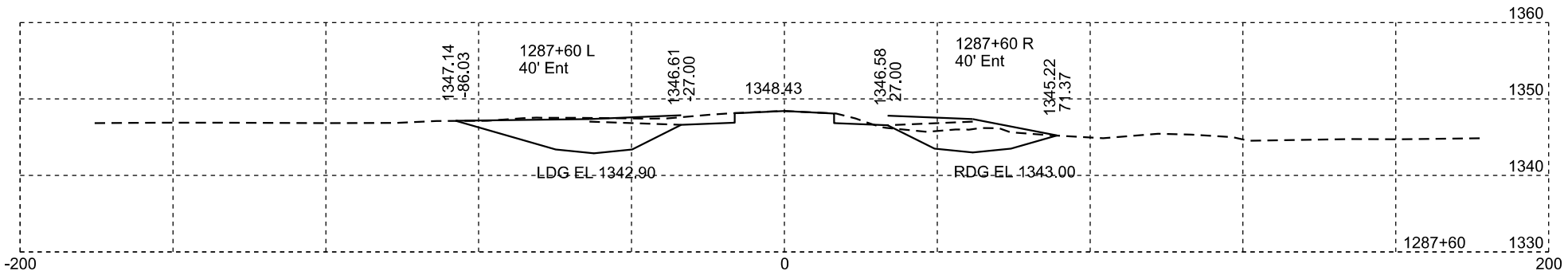

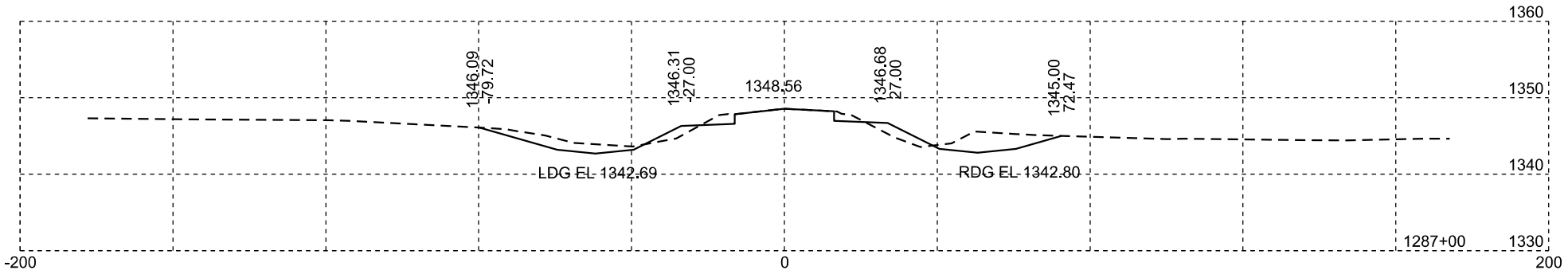

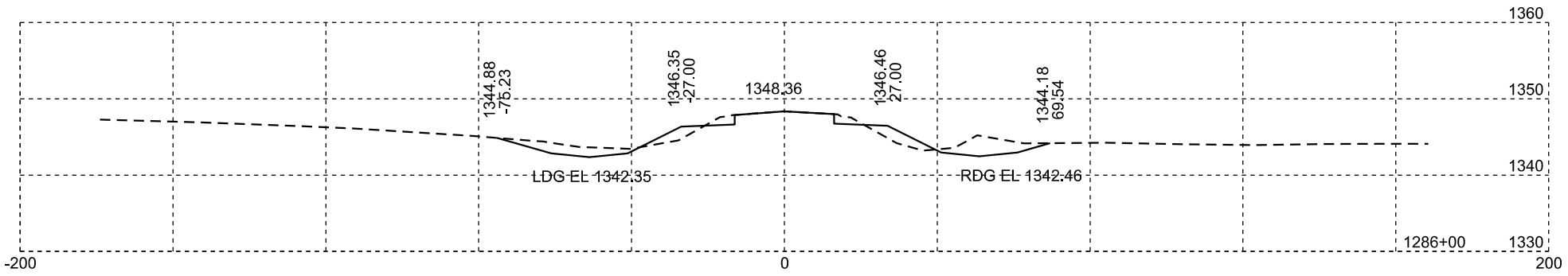

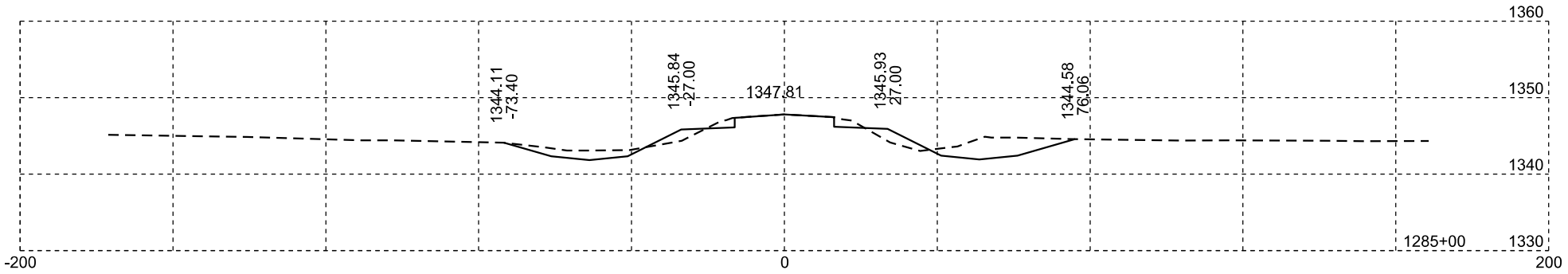

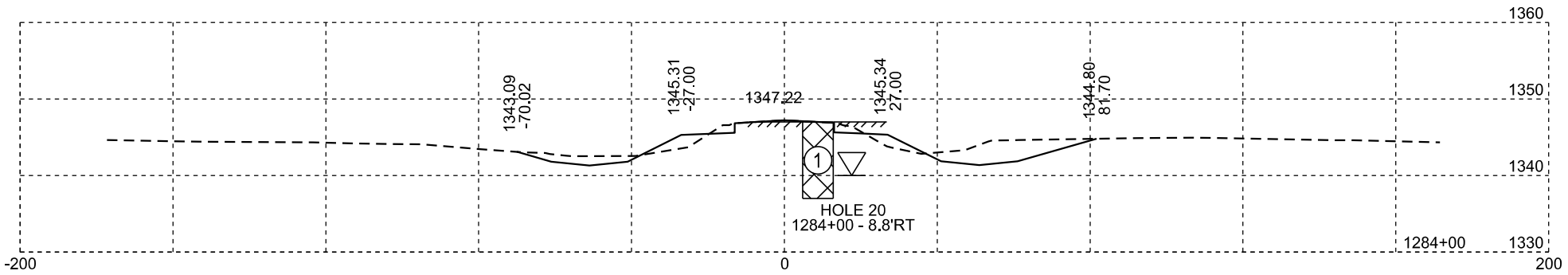

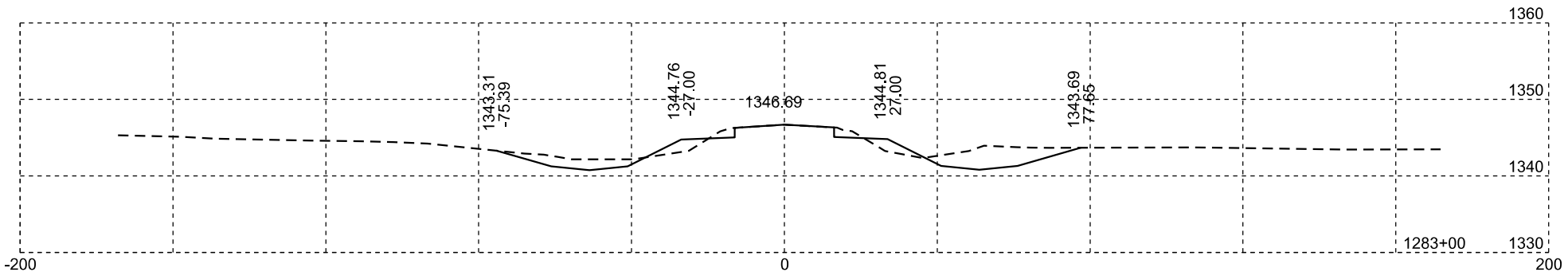

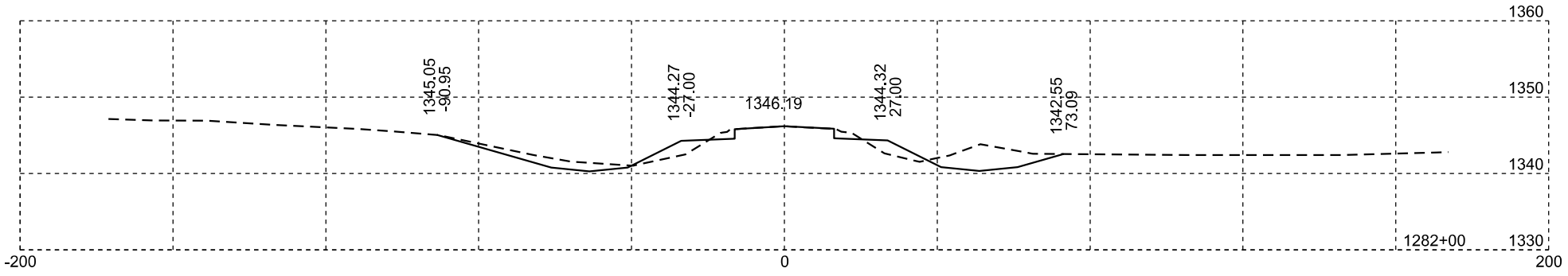

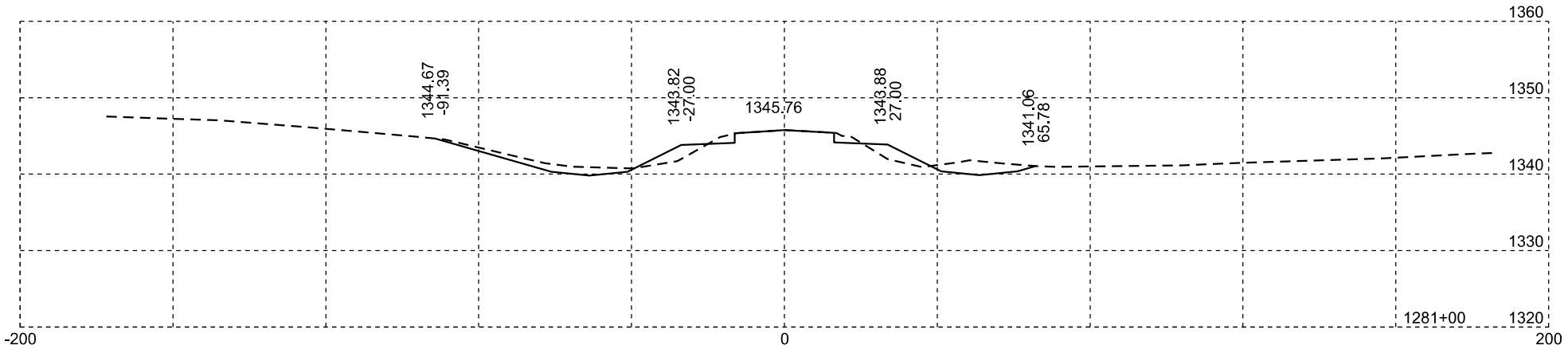

Plotting Date: 01/19/2024

STATE OF SOUTH DAKOTA	PROJECT	SHEET NO.	TOTAL SHEETS
	P-PH-B-PT 0010(124)296	X8	X169

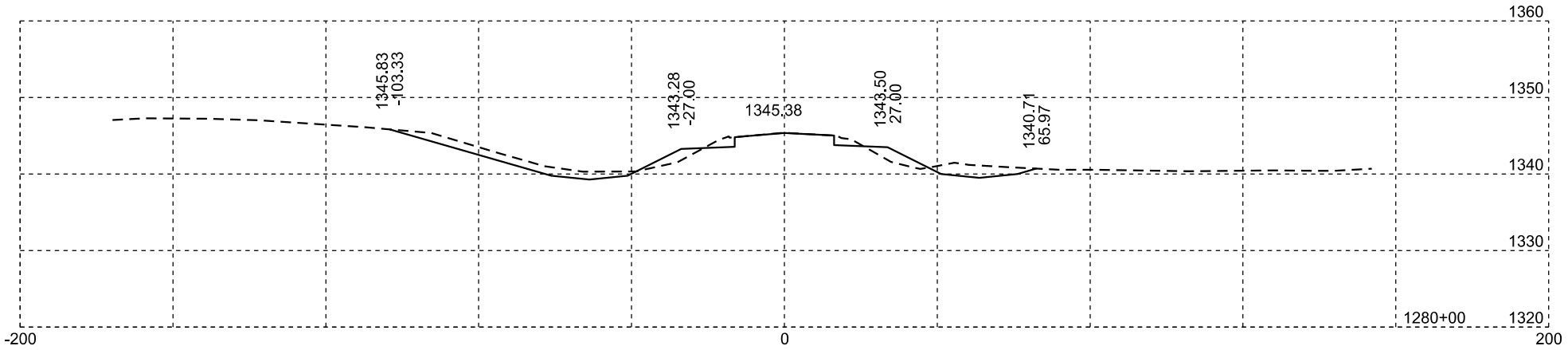

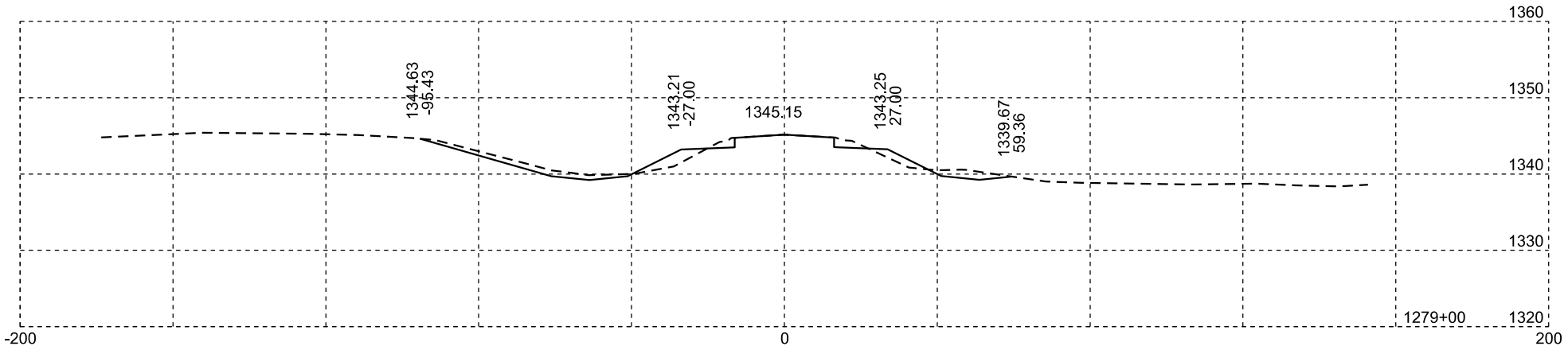

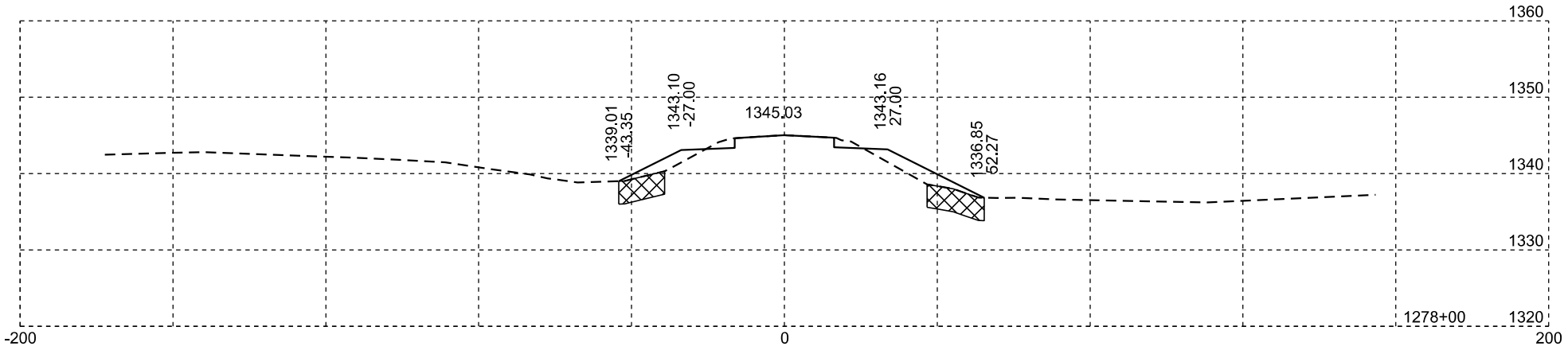

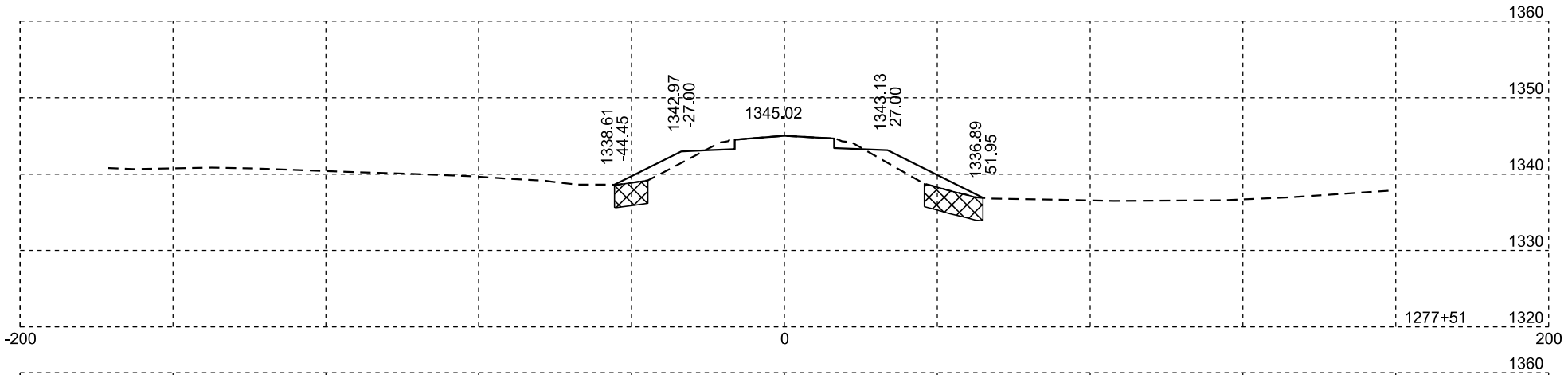

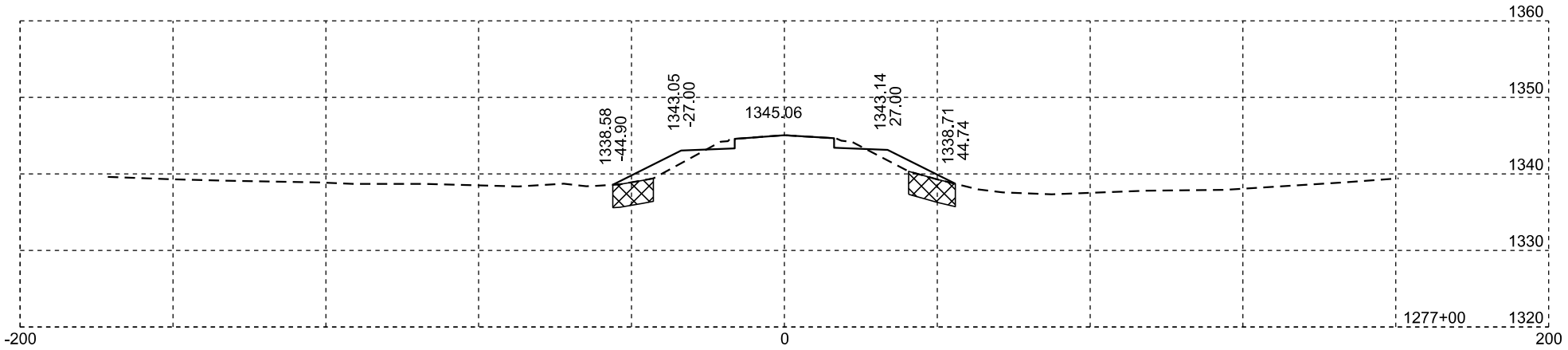

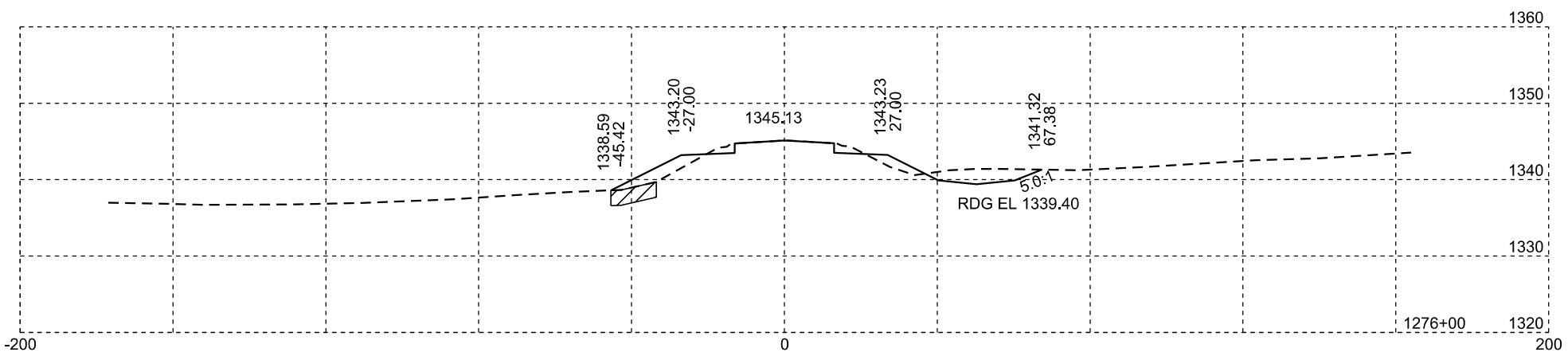

Unstable
Muck

Plotting Date: 01/19/2024

STATE OF SOUTH DAKOTA	PROJECT	SHEET NO.	TOTAL SHEETS
	P-PH-B-PT 0010(124)296	X9	X169

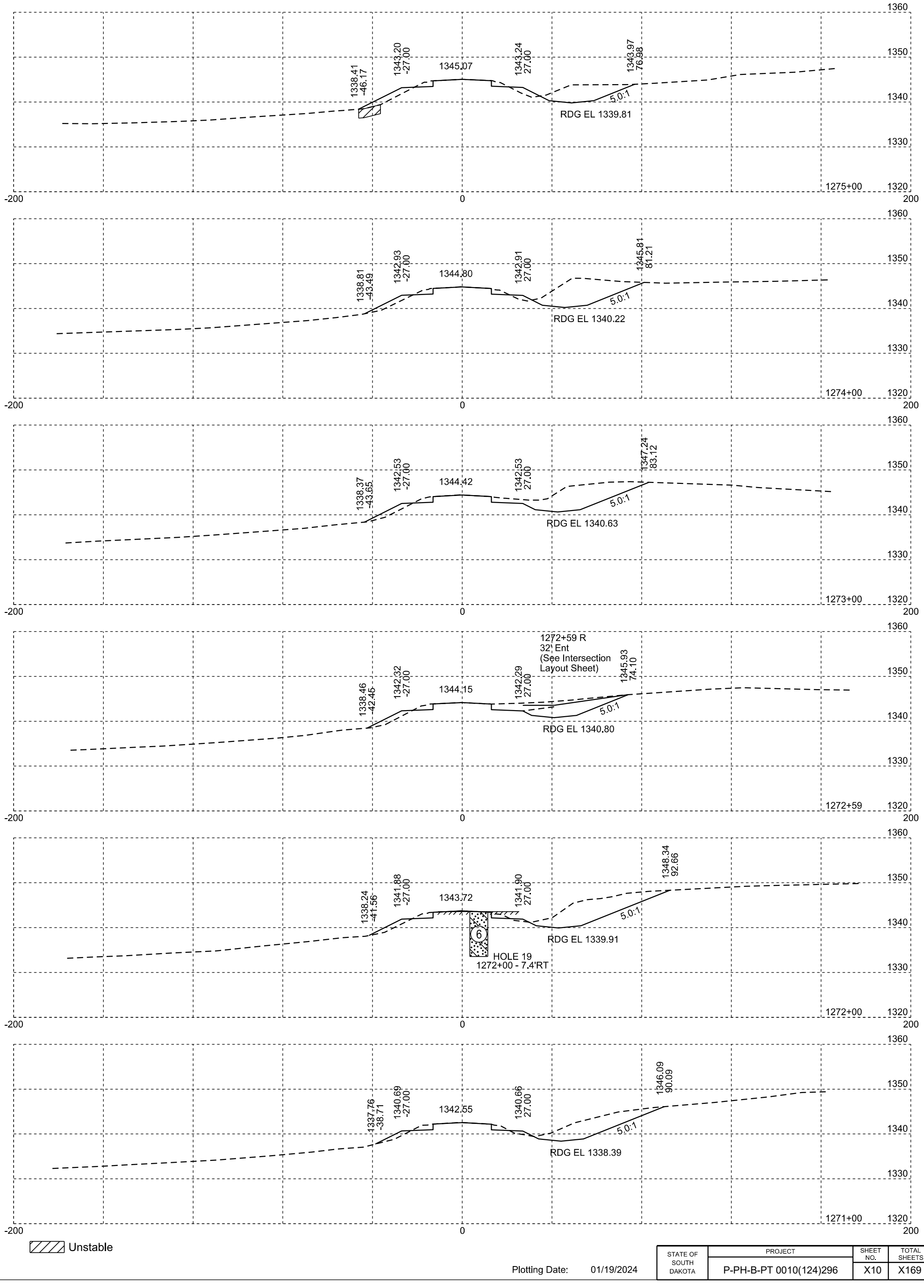

Plotting Date: 01/19/2024

STATE OF SOUTH DAKOTA	PROJECT	SHEET NO.	TOTAL SHEETS
	P-PH-B-PT 0010(124)296	X10	X169

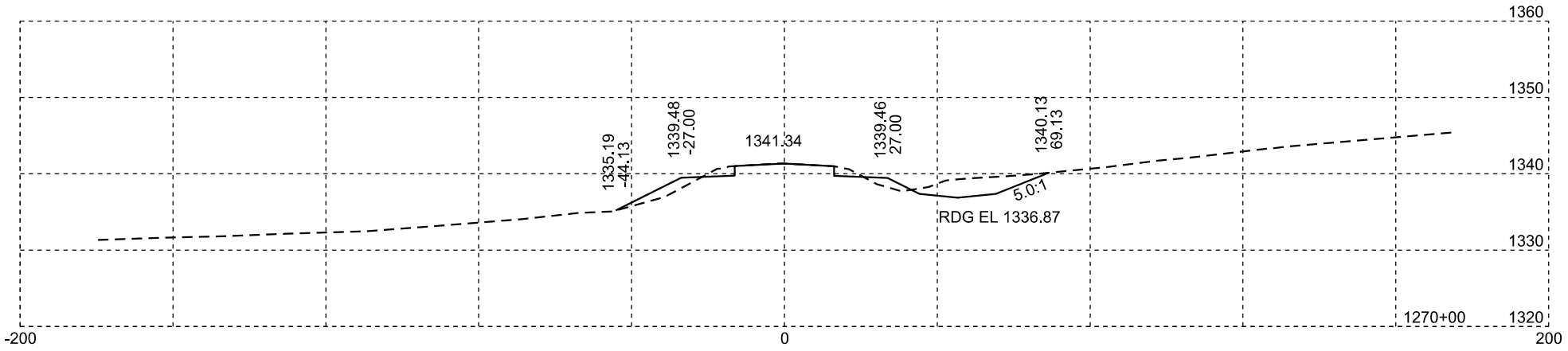

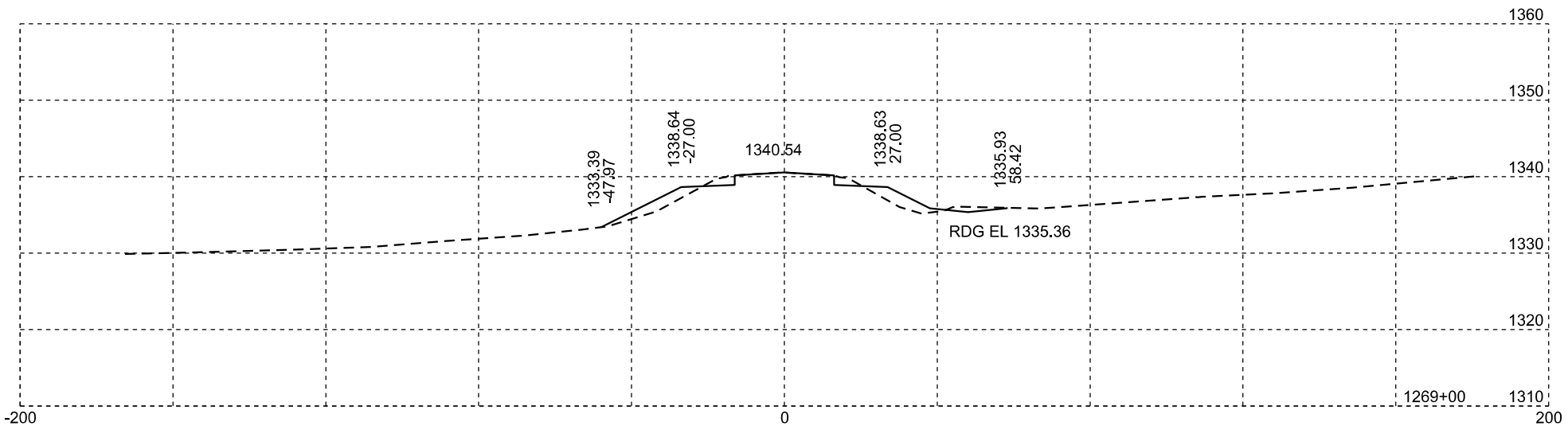

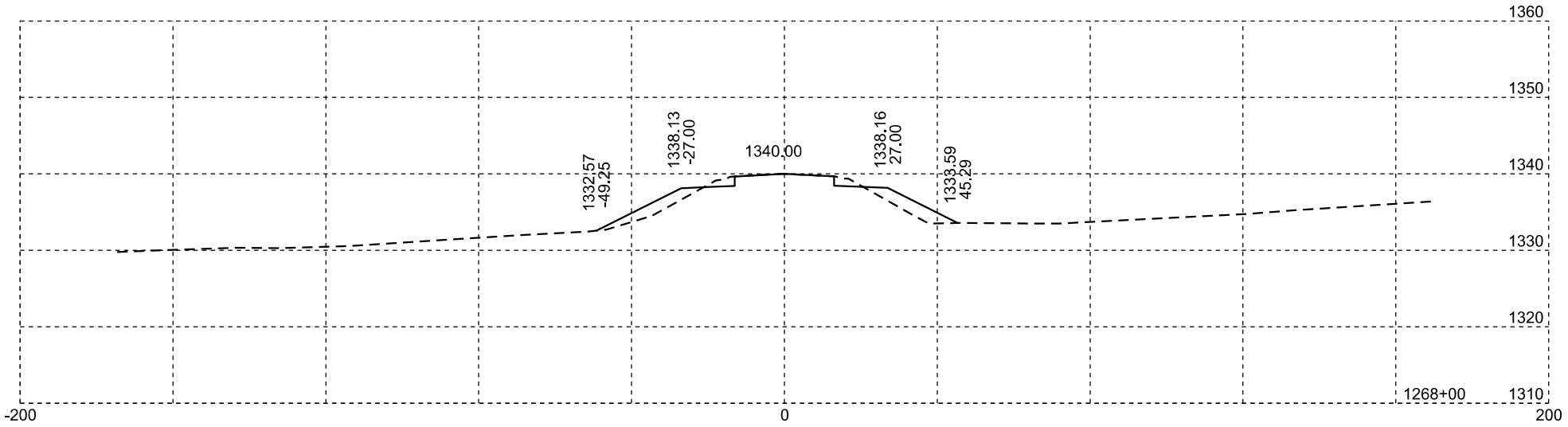

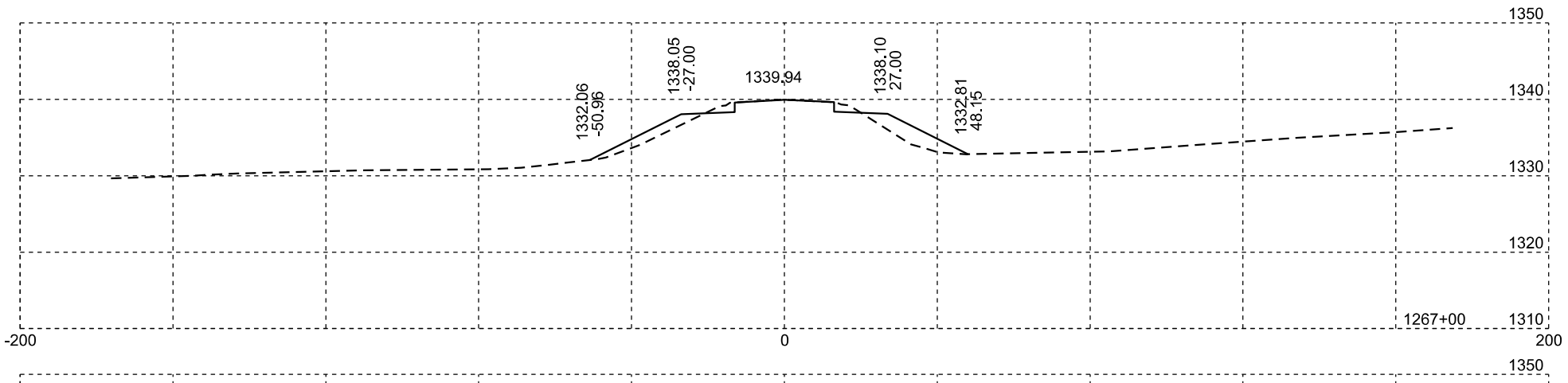

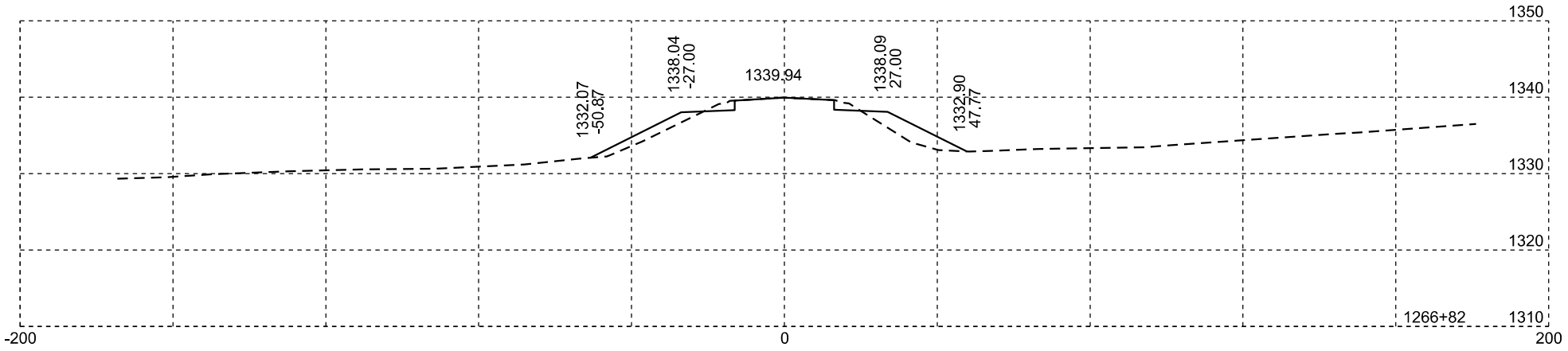

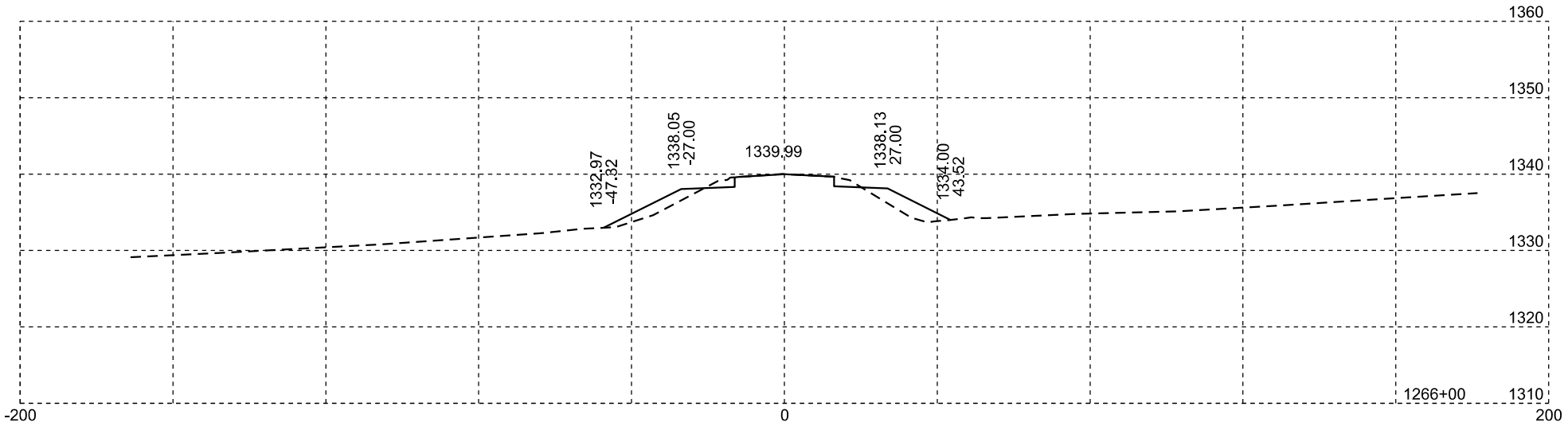

Plotting Date: 01/19/2024

STATE OF SOUTH DAKOTA	PROJECT	SHEET NO.	TOTAL SHEETS
	P-PH-B-PT 0010(124)296	X11	X169

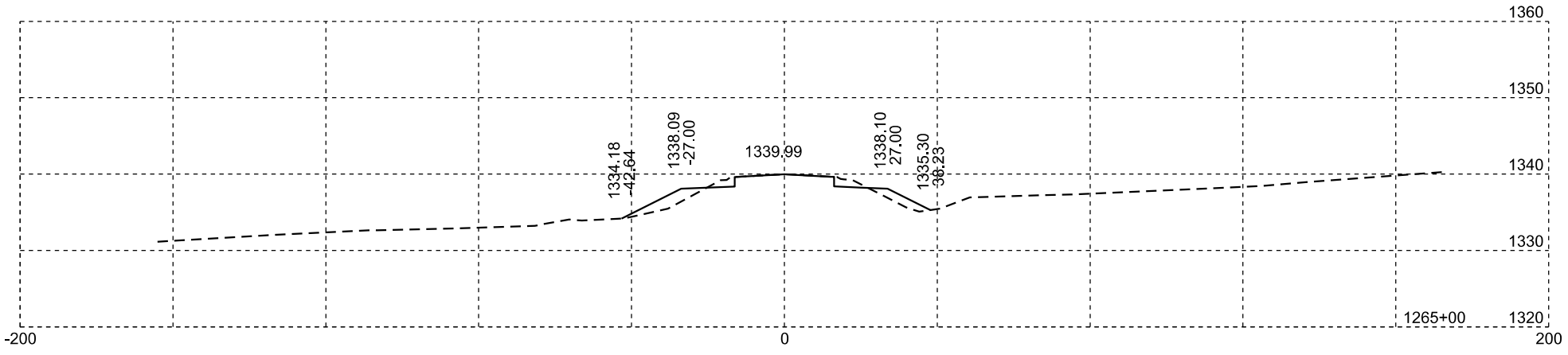

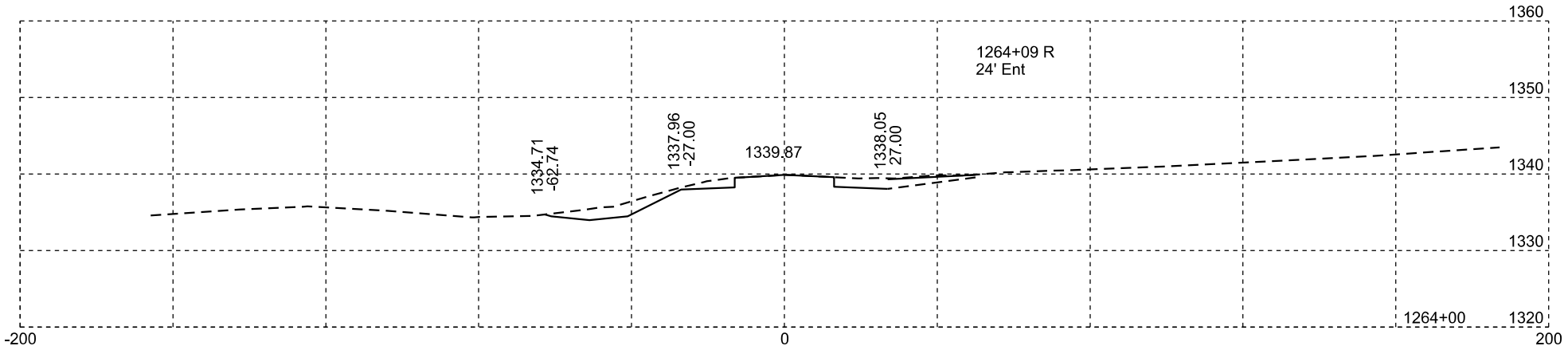

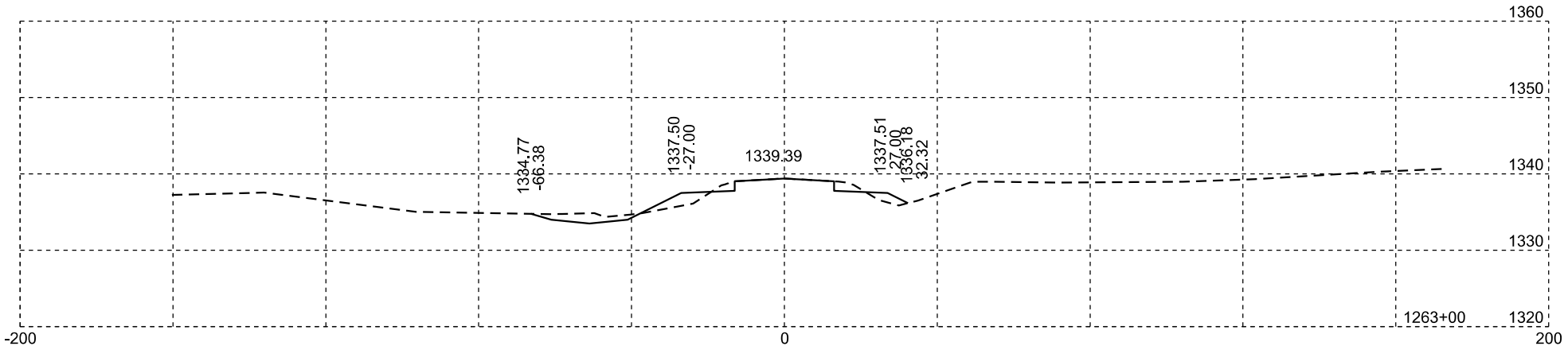

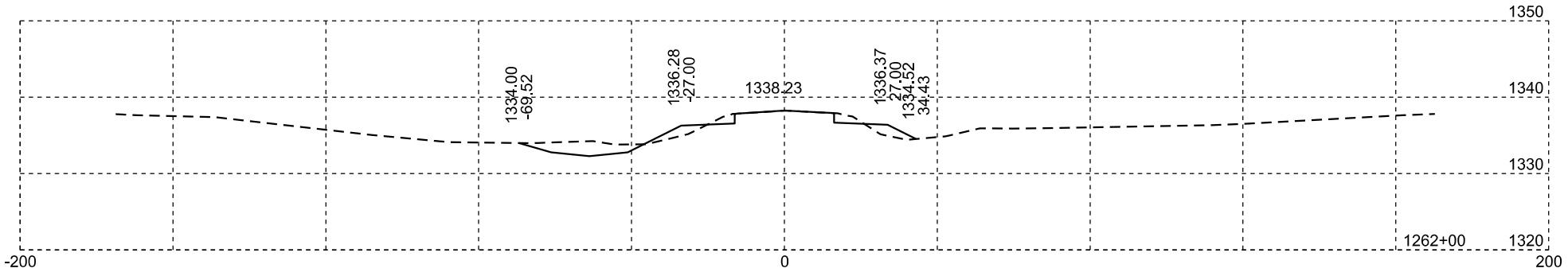

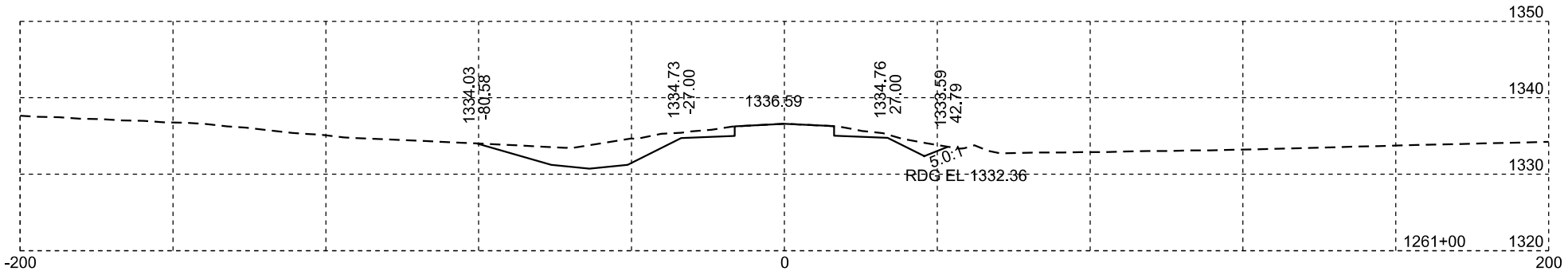

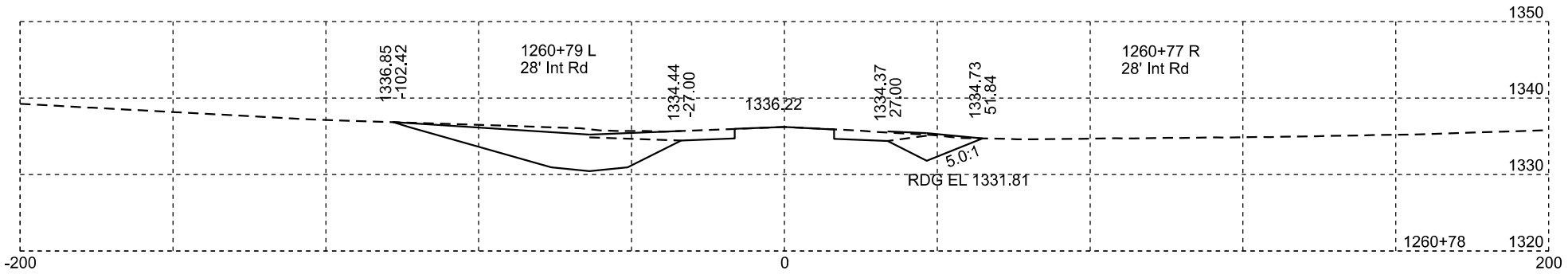

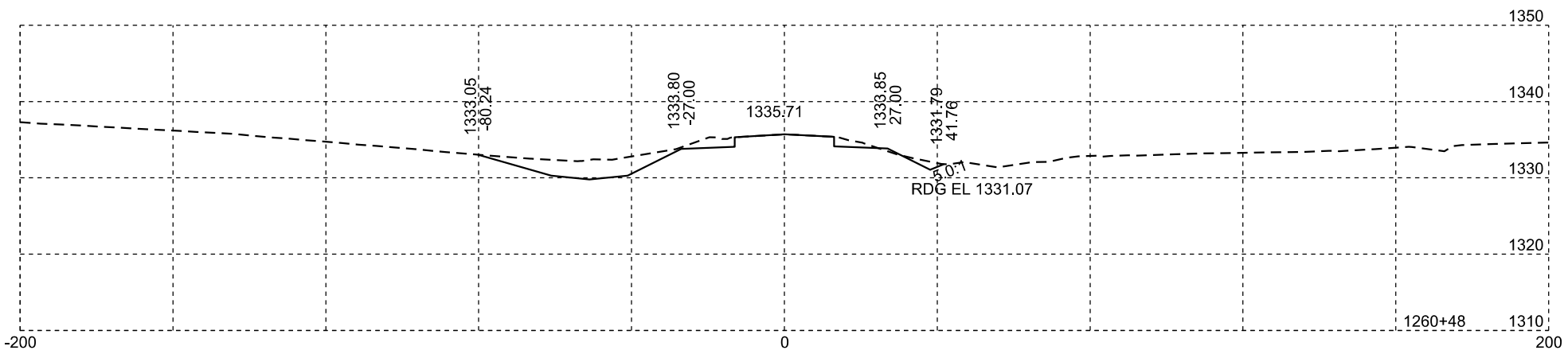

Plotting Date: 01/19/2024

STATE OF SOUTH DAKOTA	PROJECT	SHEET NO.	TOTAL SHEETS
	P-PH-B-PT 0010(124)296	X12	X169

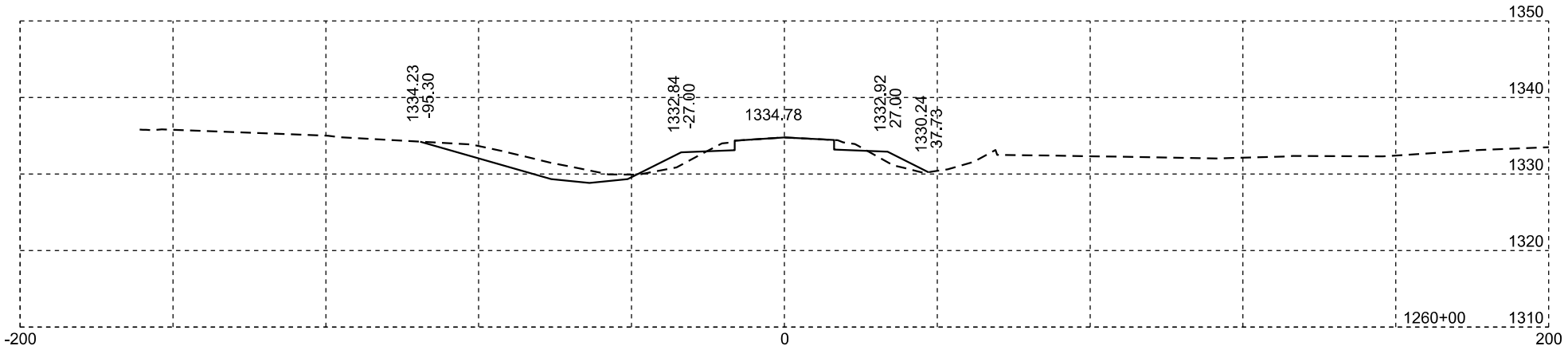

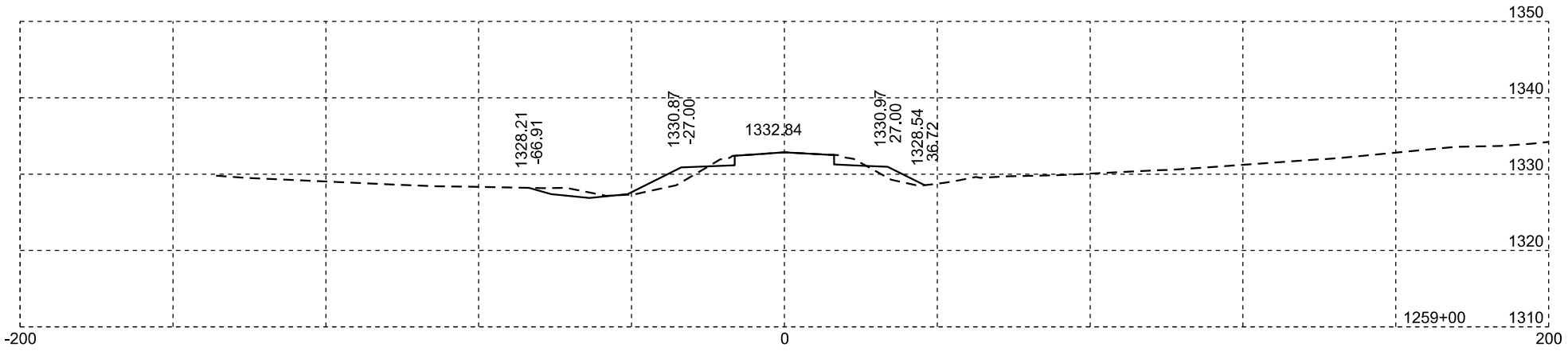

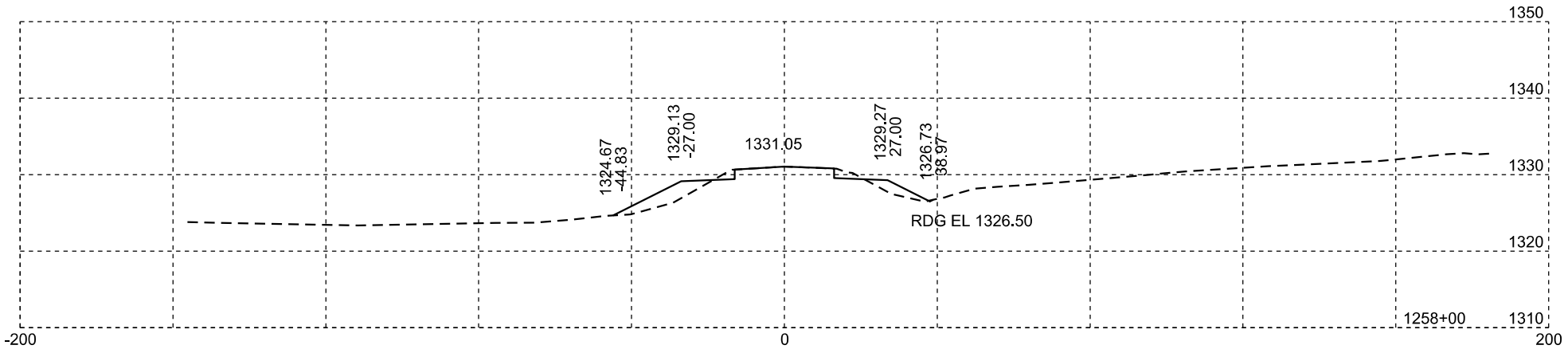

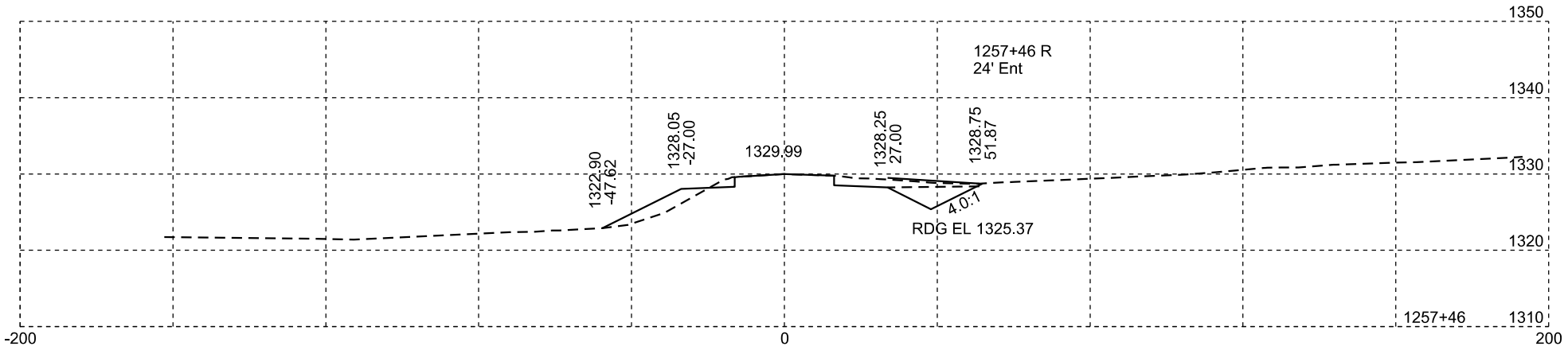

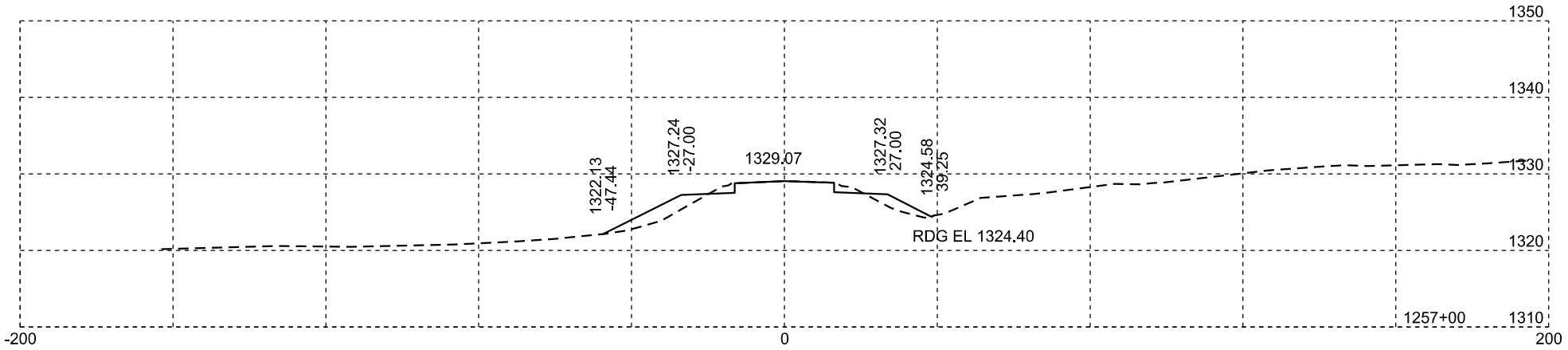

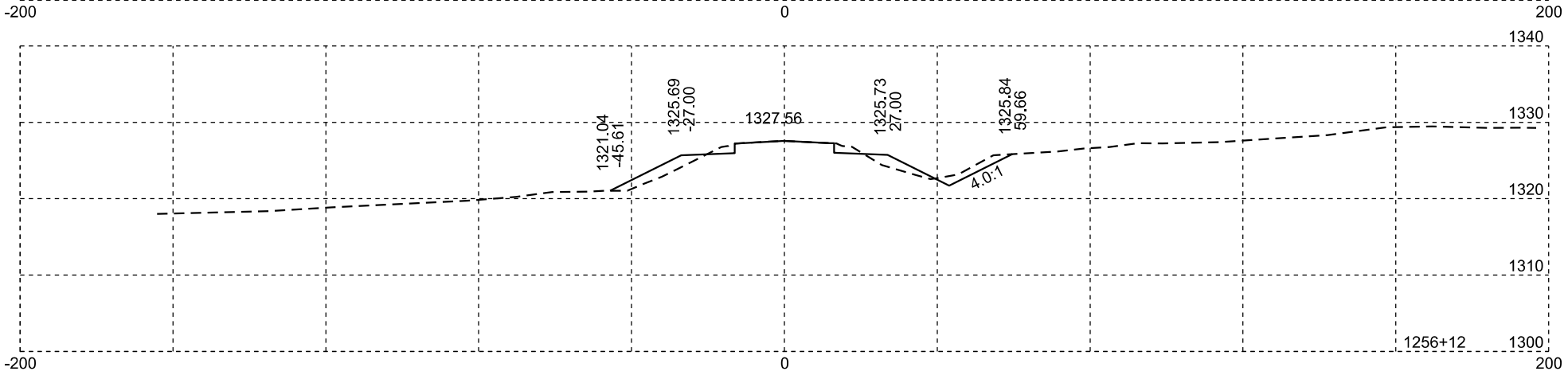

Plotting Date: 01/19/2024

STATE OF SOUTH DAKOTA	PROJECT	SHEET NO.	TOTAL SHEETS
	P-PH-B-PT 0010(124)296	X13	X169

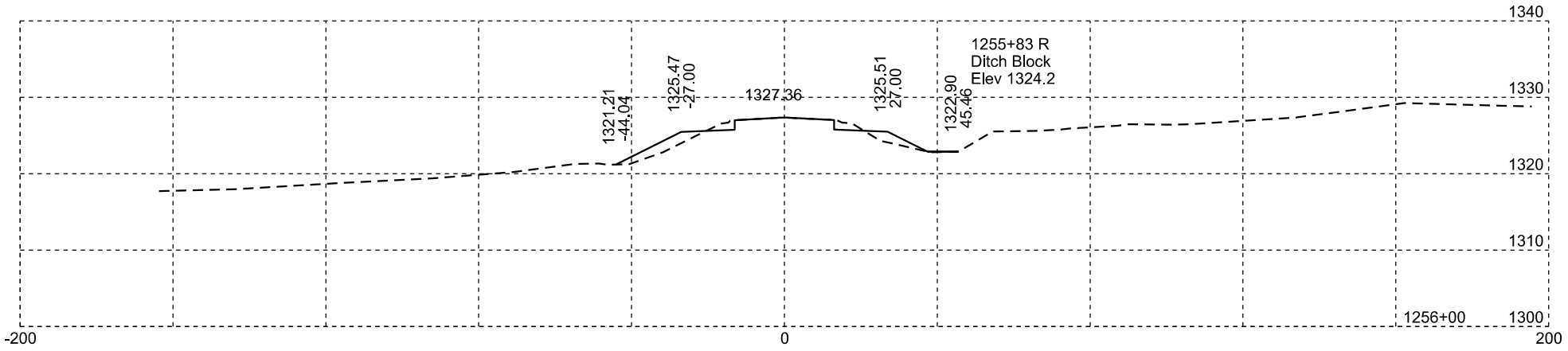

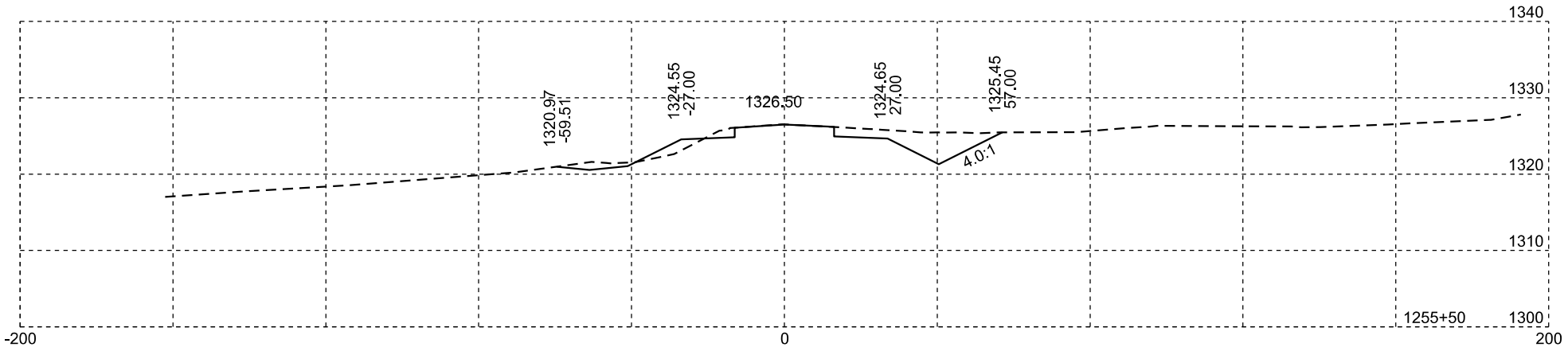

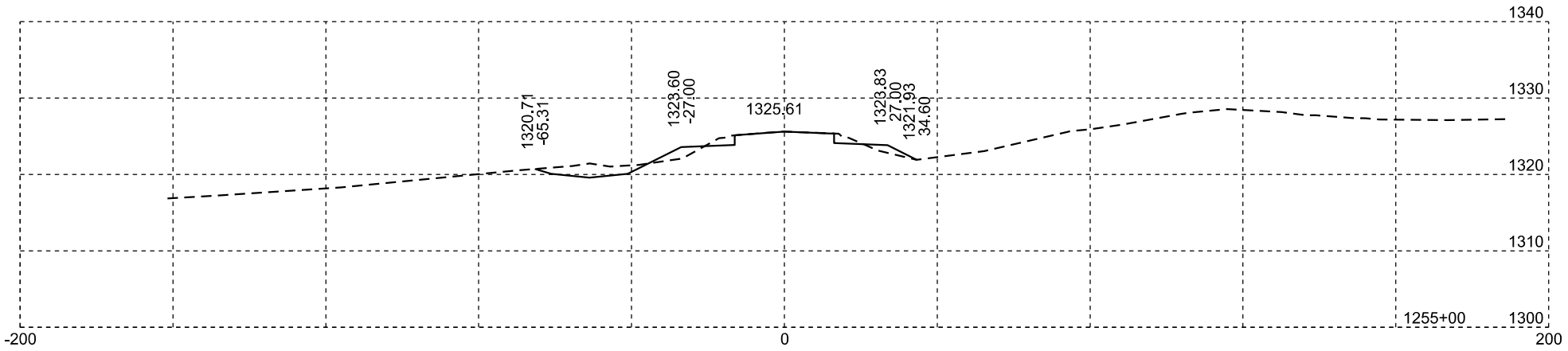

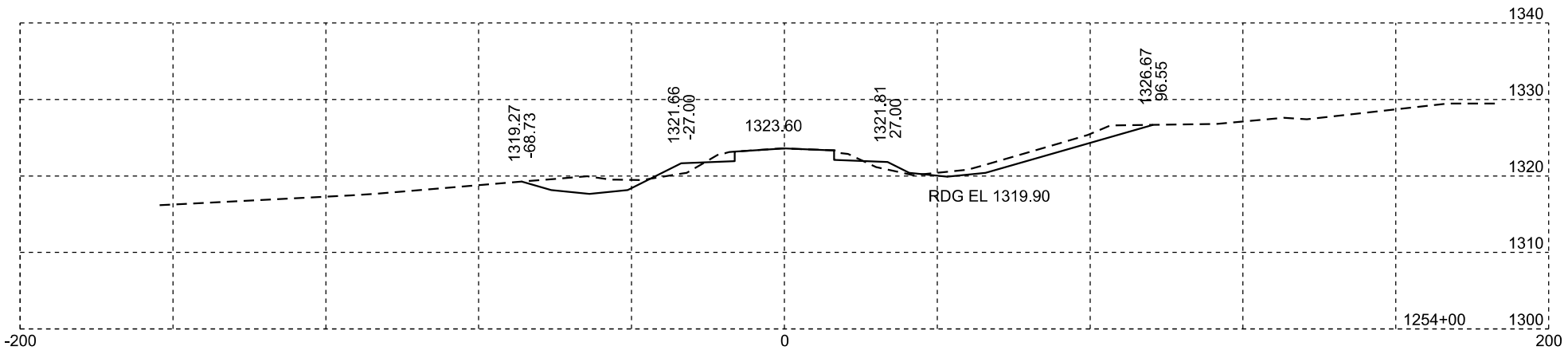

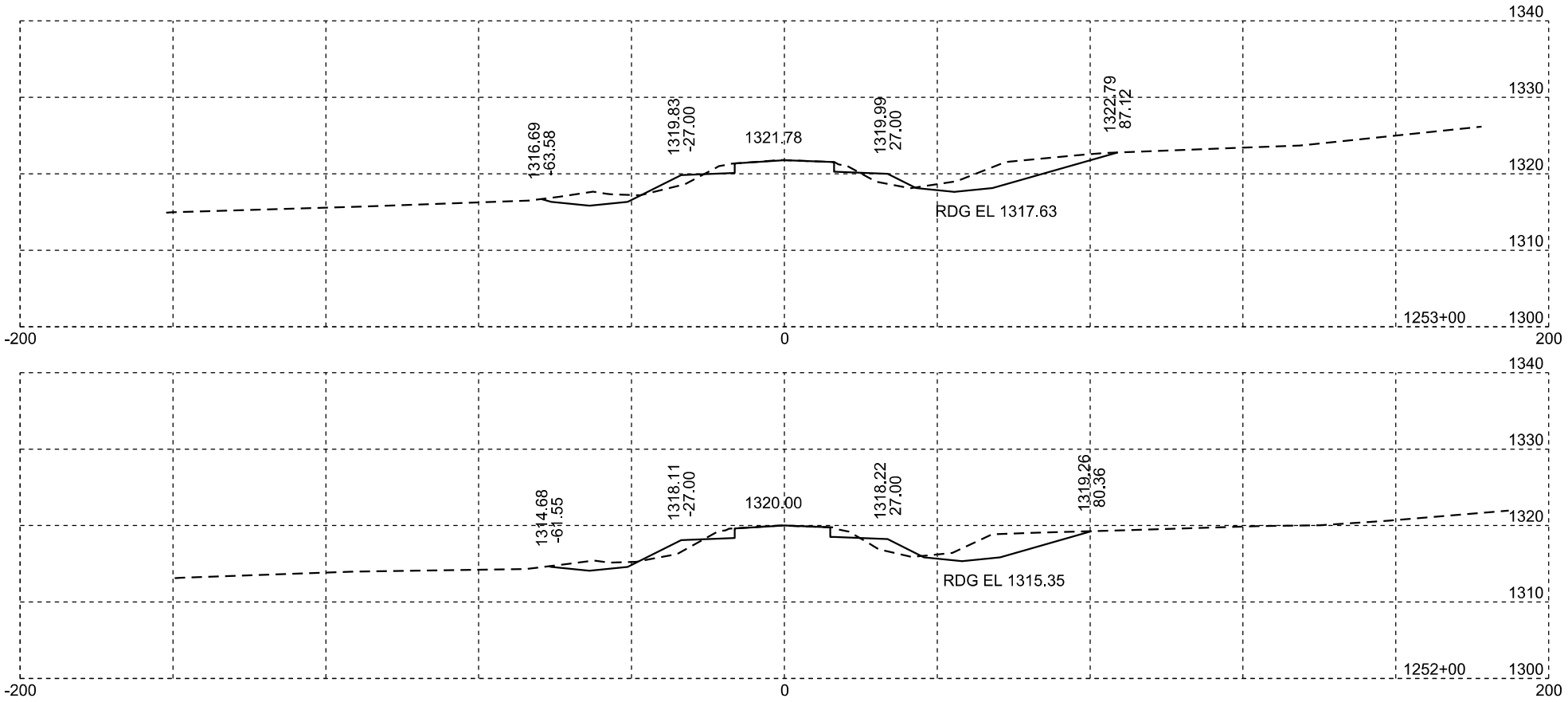

Plotting Date: 01/19/2024

STATE OF SOUTH DAKOTA	PROJECT	SHEET NO.	TOTAL SHEETS
	P-PH-B-PT 0010(124)296	X14	X169

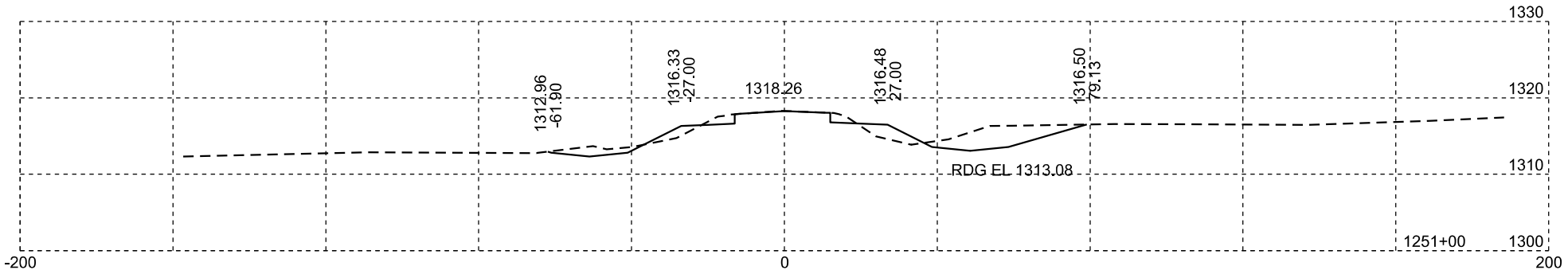

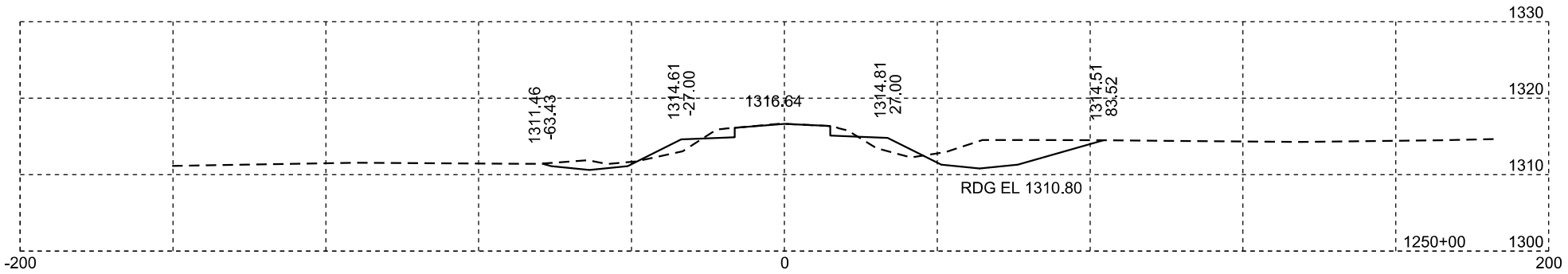

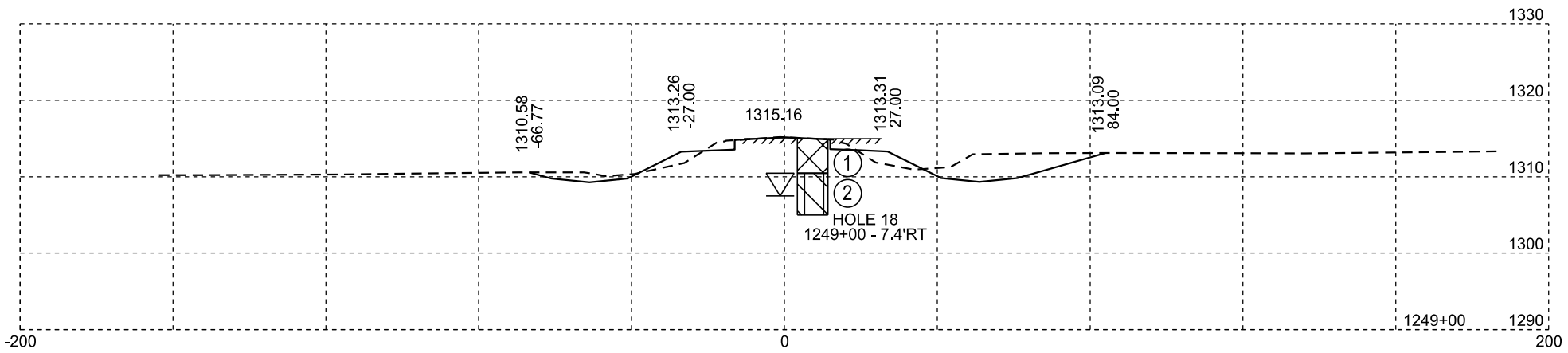

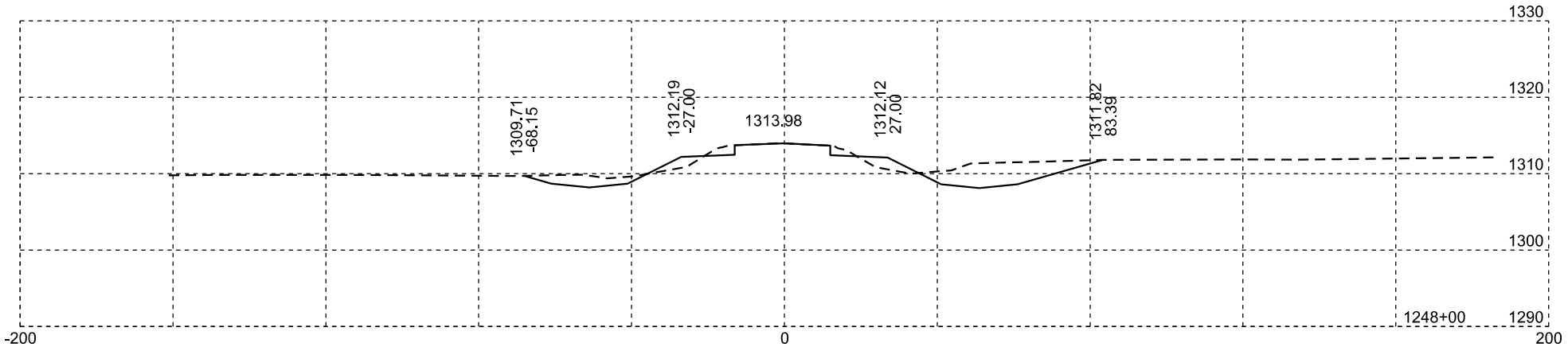

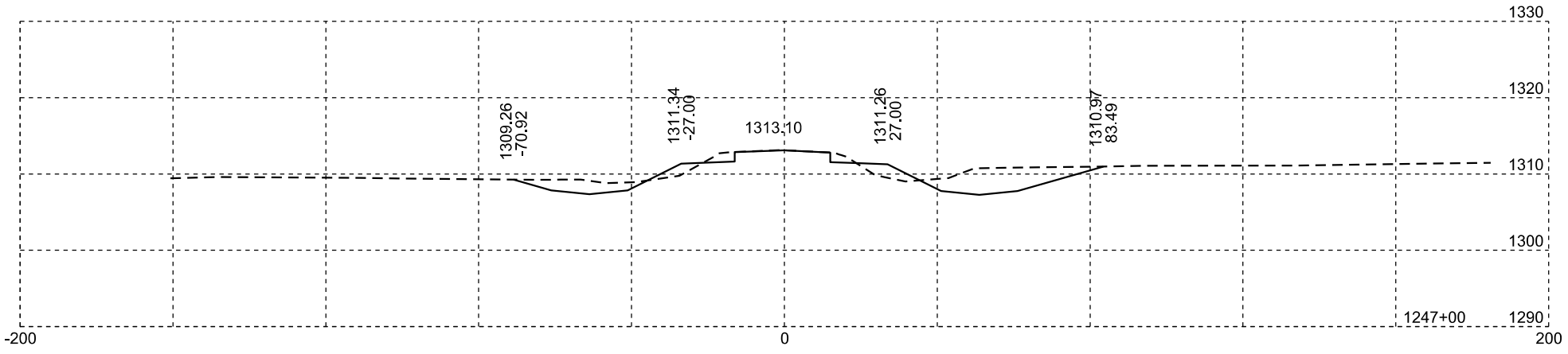

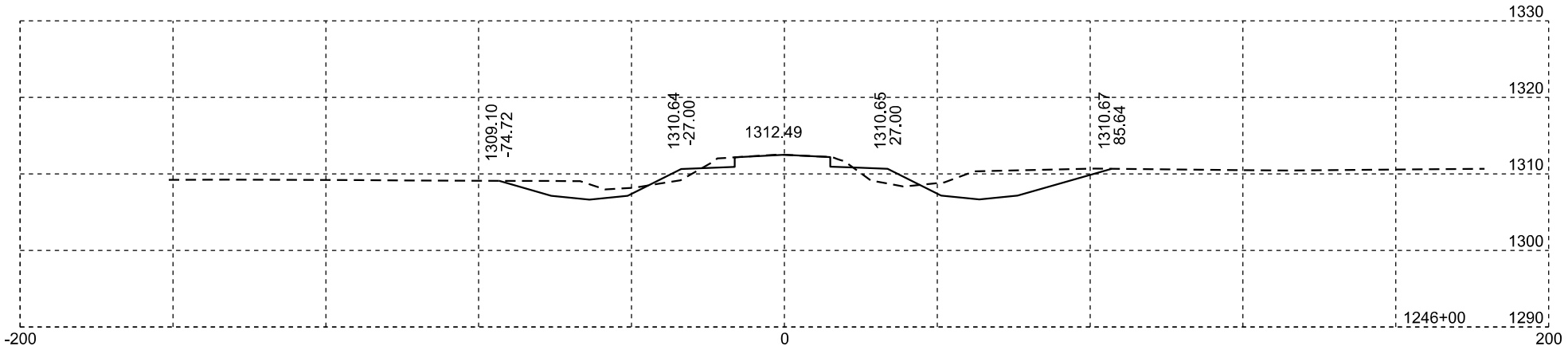

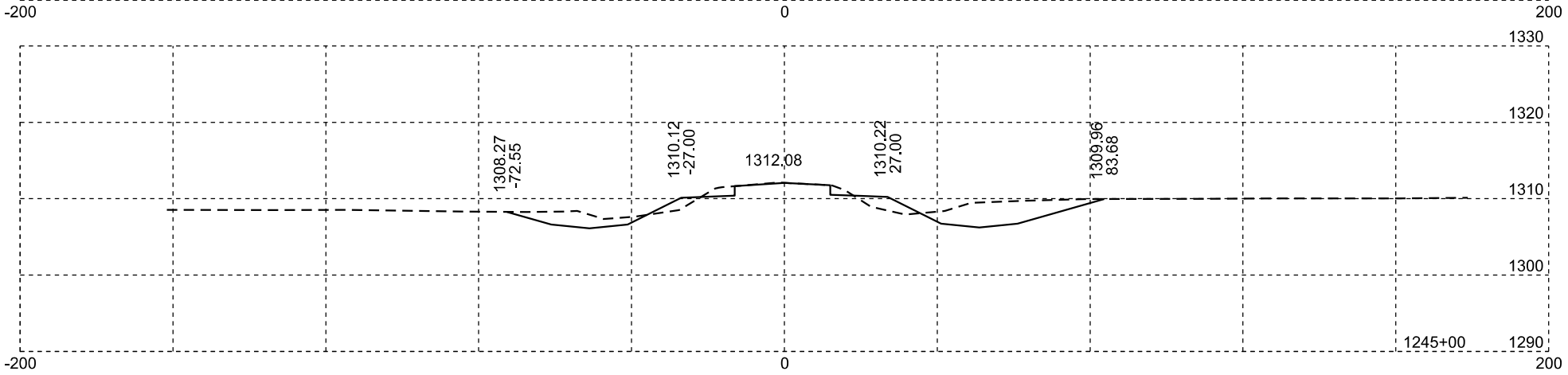

Plotting Date: 01/19/2024

STATE OF SOUTH DAKOTA	PROJECT	SHEET NO.	TOTAL SHEETS
	P-PH-B-PT 0010(124)296	X15	X169

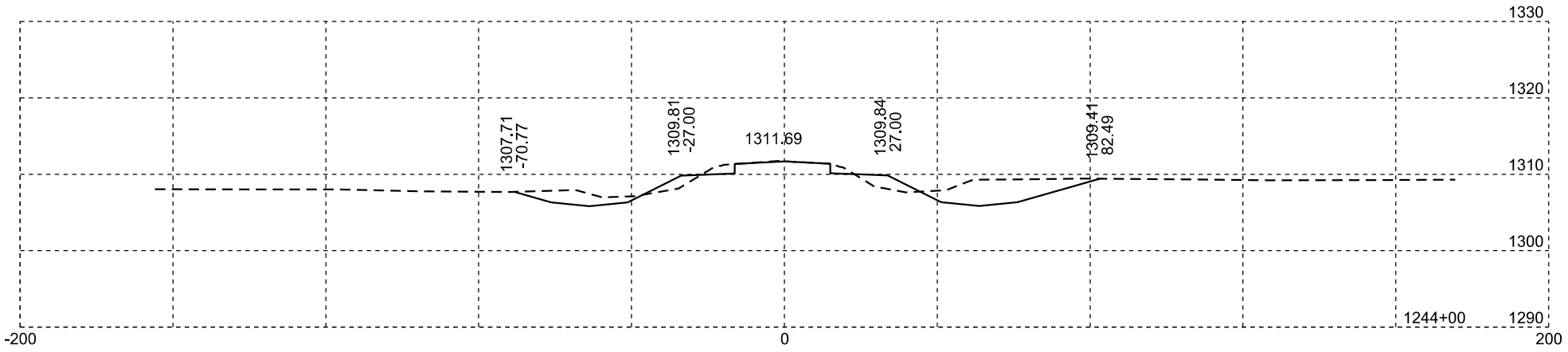

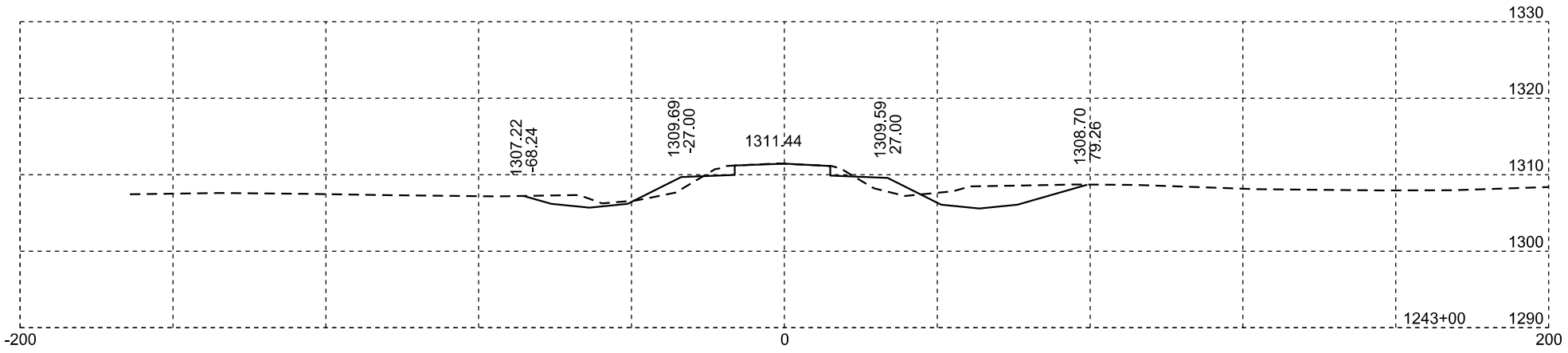

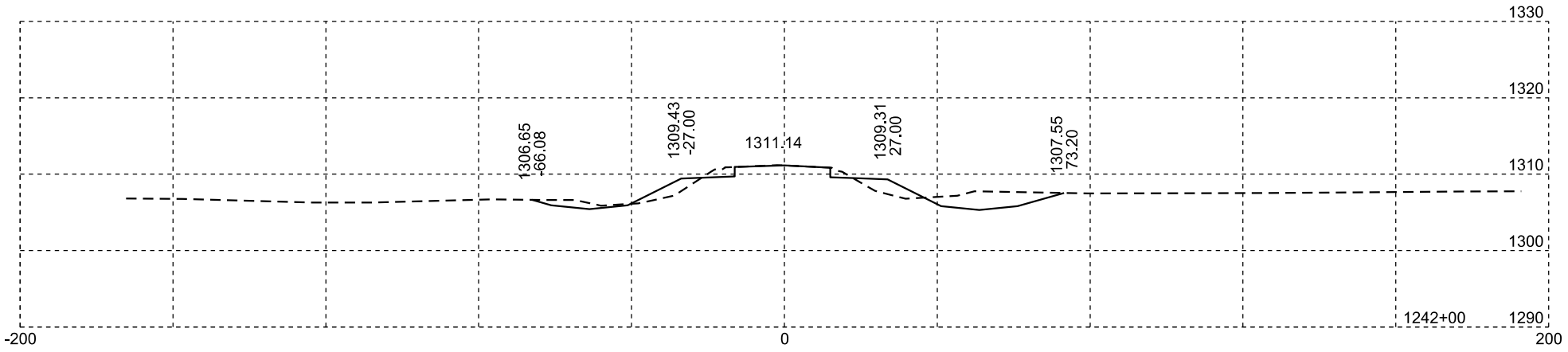

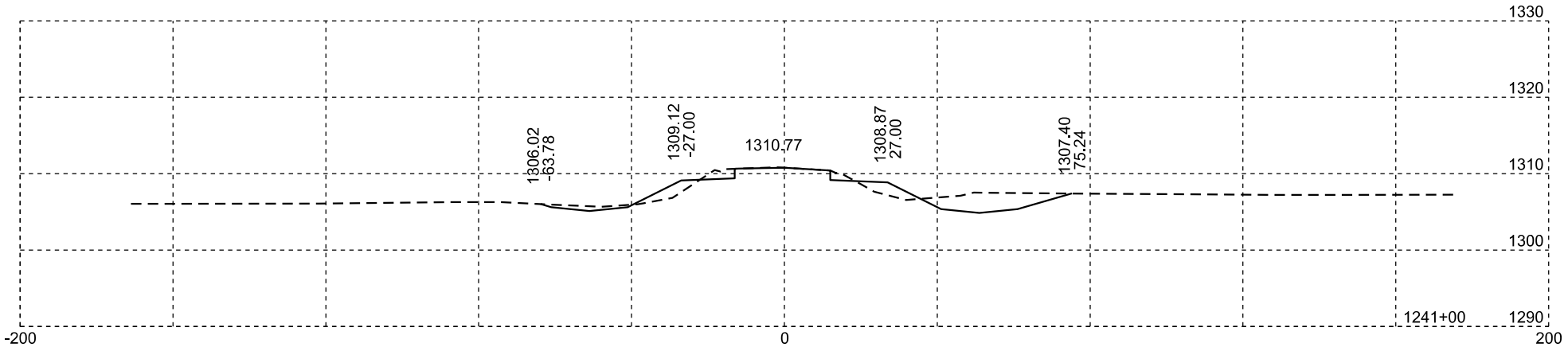

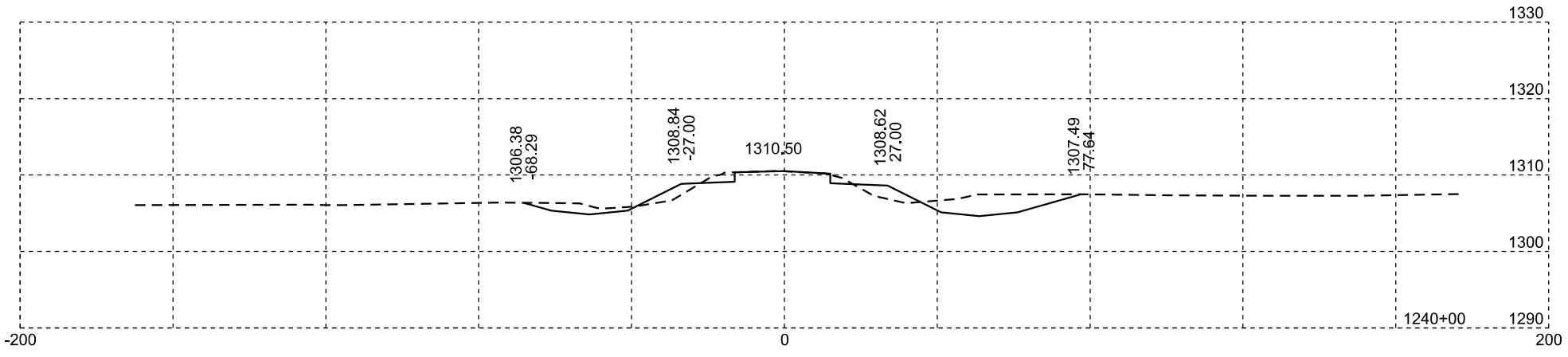

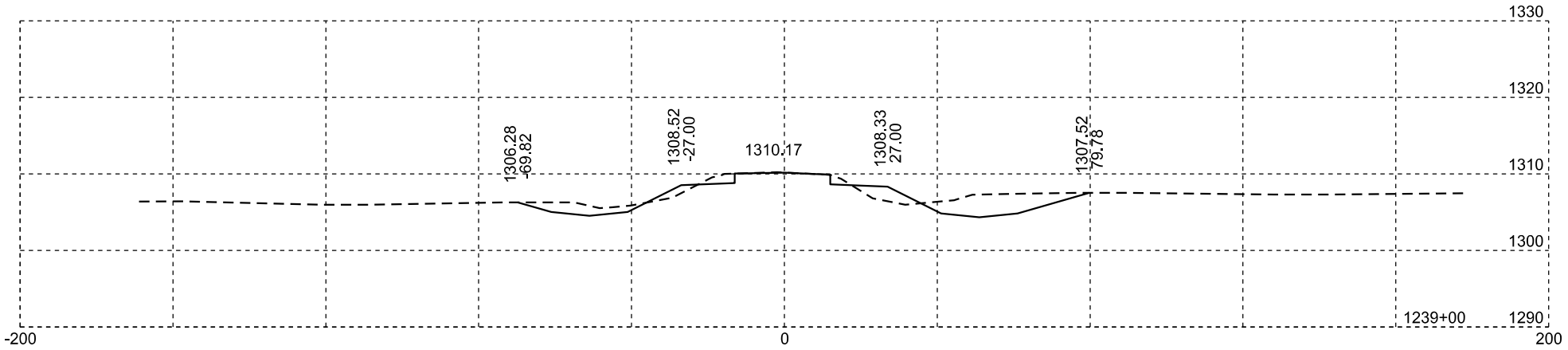

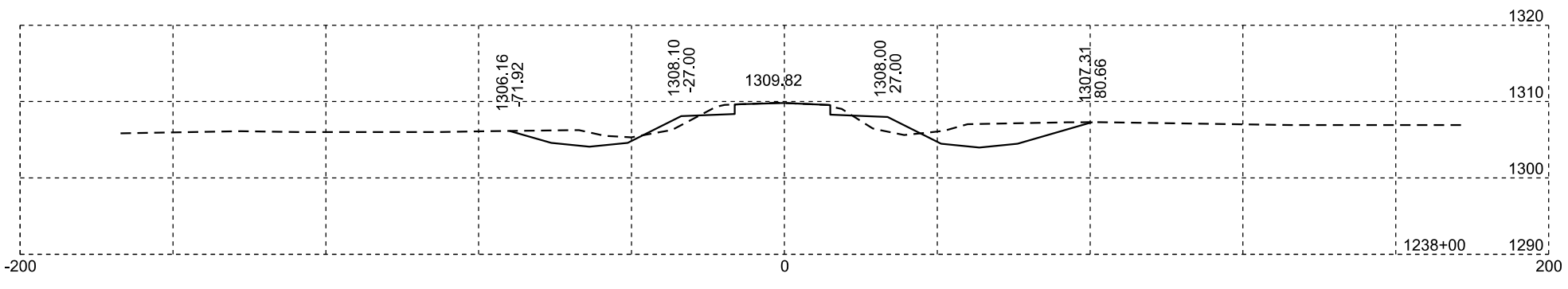

Plotting Date: 01/19/2024

STATE OF SOUTH DAKOTA	PROJECT	SHEET NO.	TOTAL SHEETS
	P-PH-B-PT 0010(124)296	X16	X169

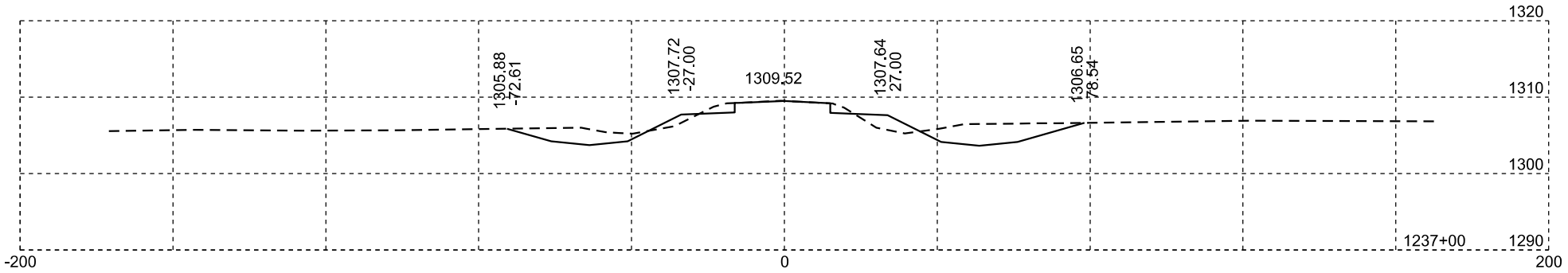

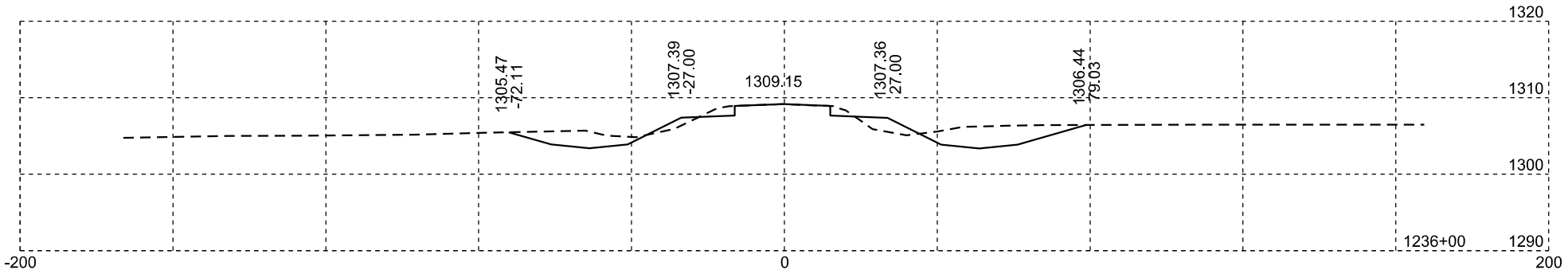

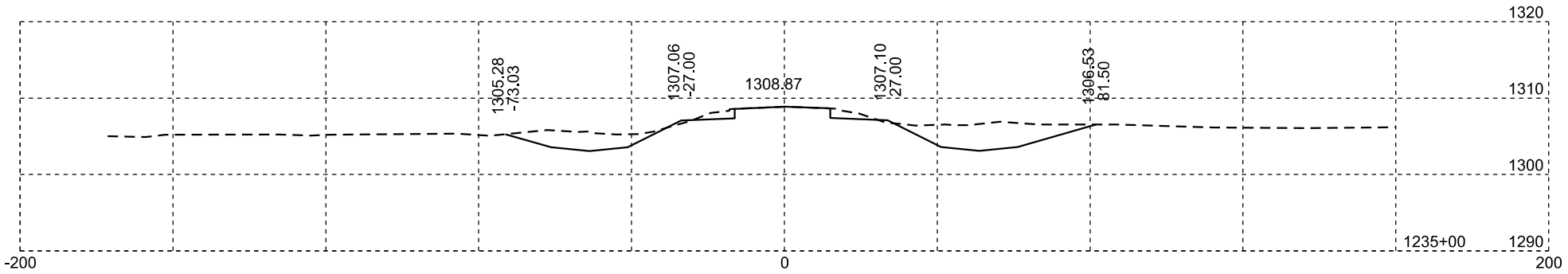

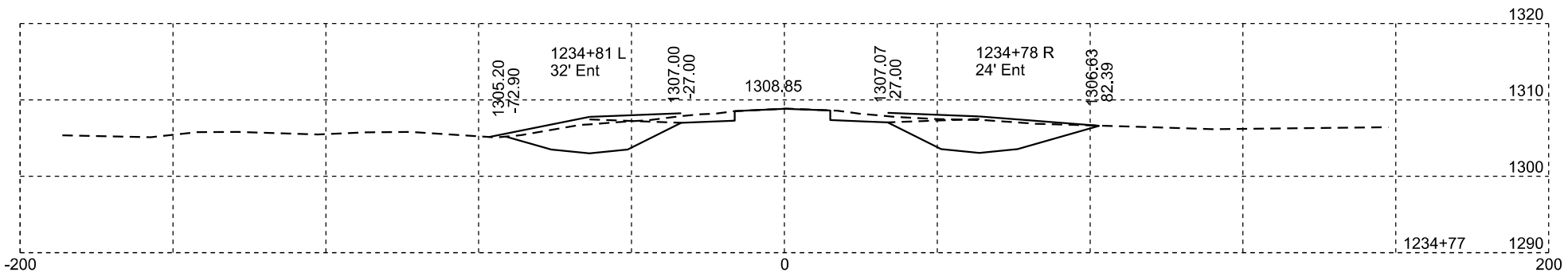

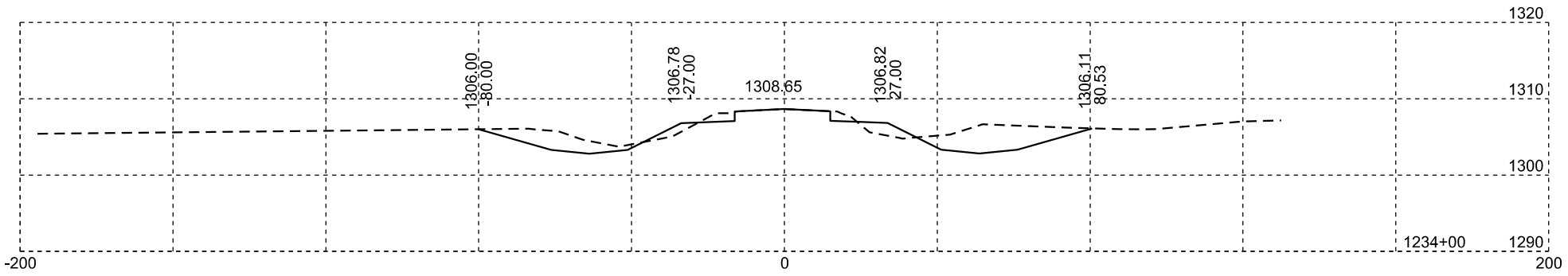

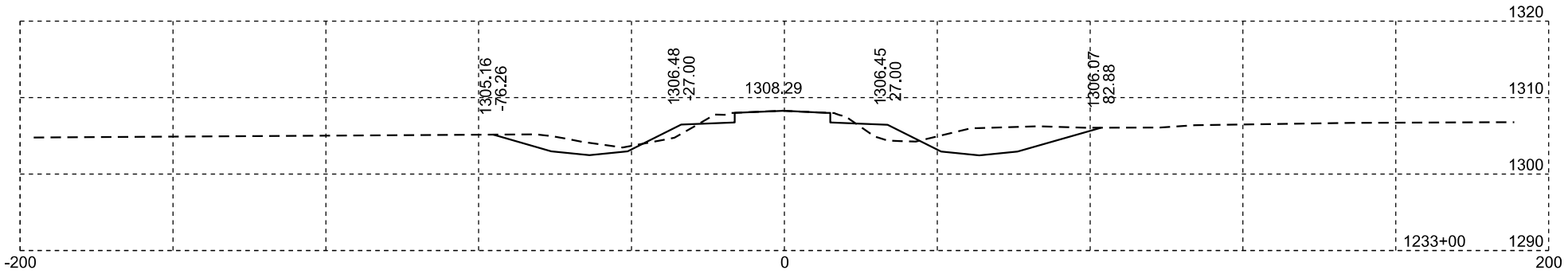

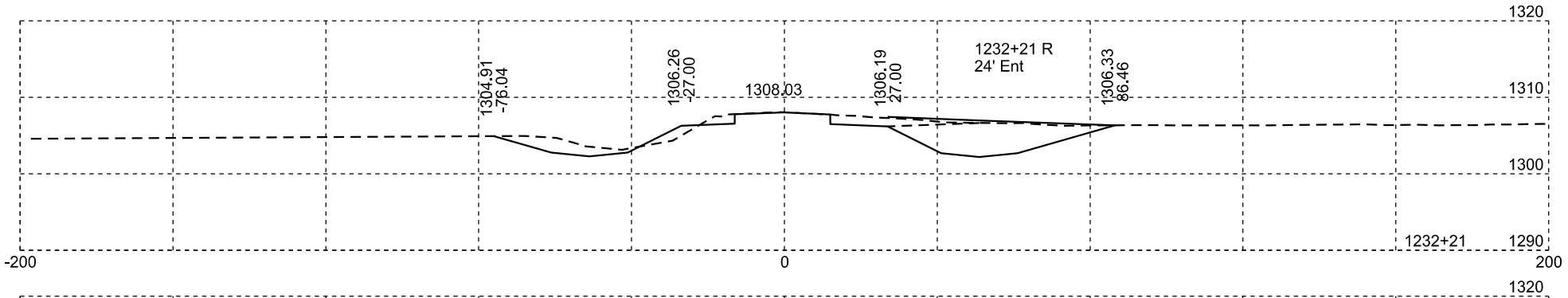

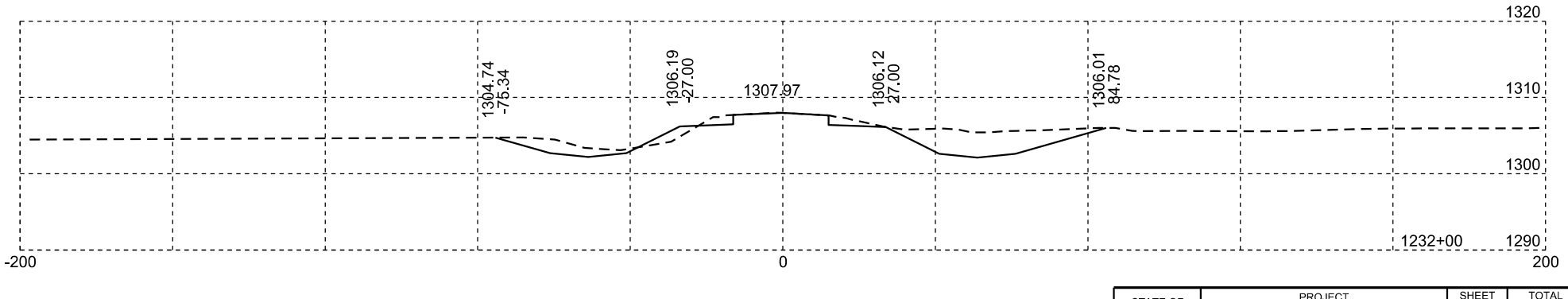

Plotting Date: 01/19/2024

STATE OF SOUTH DAKOTA	PROJECT	SHEET NO.	TOTAL SHEETS
	P-PH-B-PT 0010(124)296	X17	X169

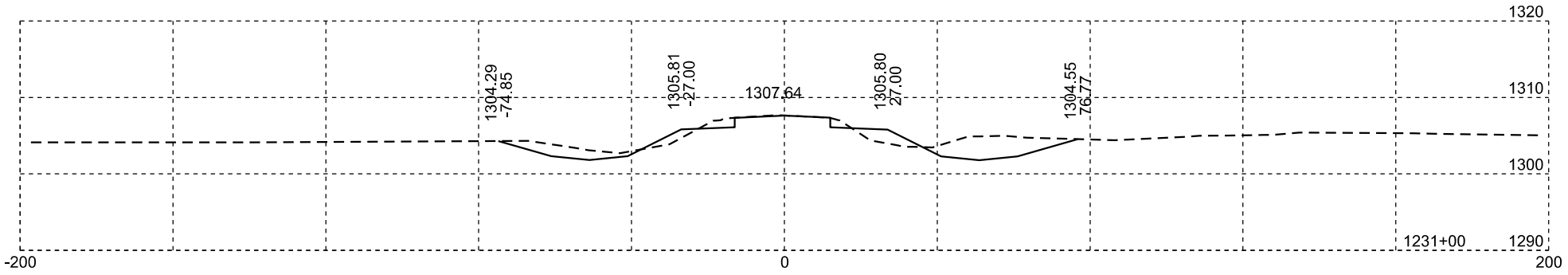

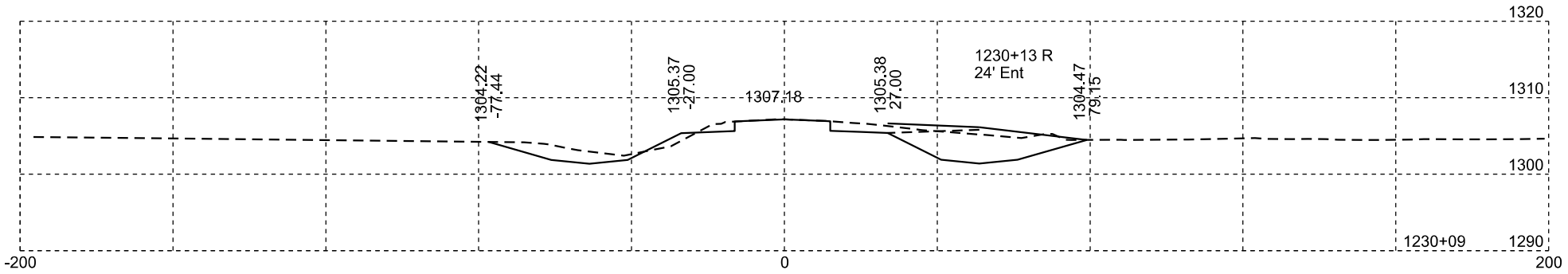

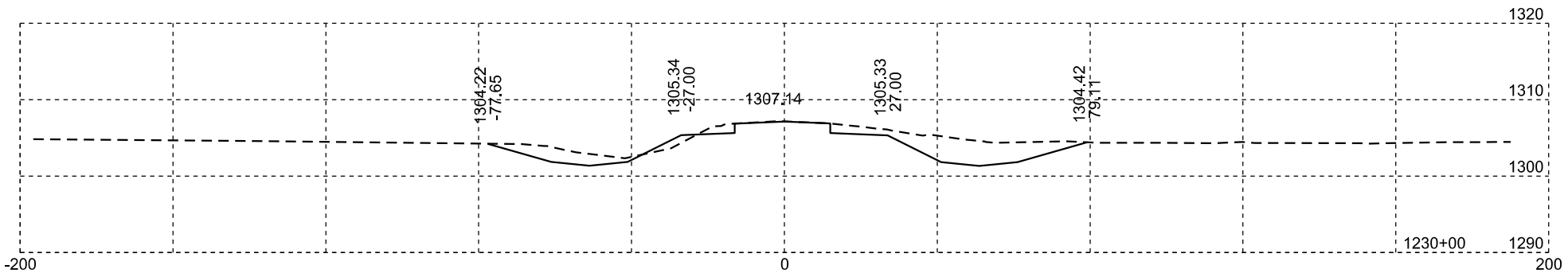

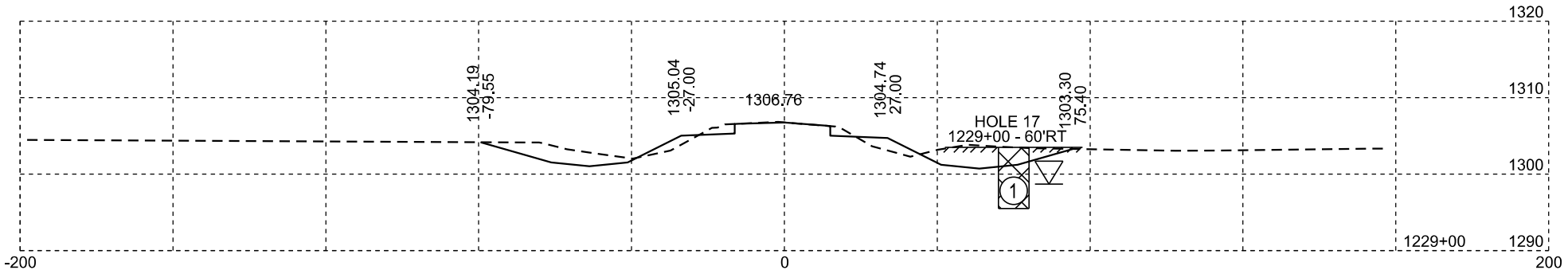

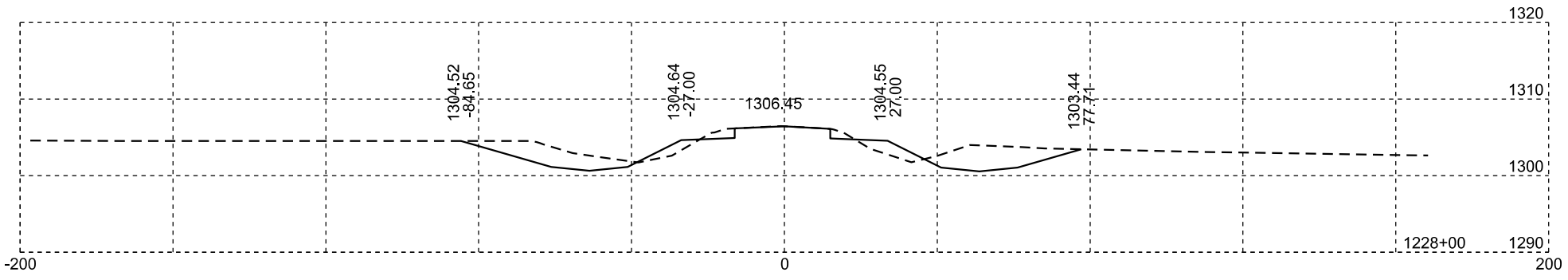

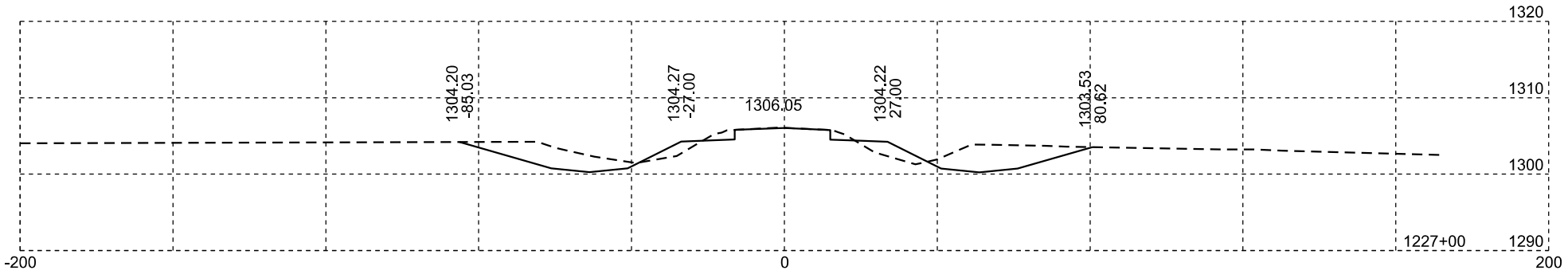

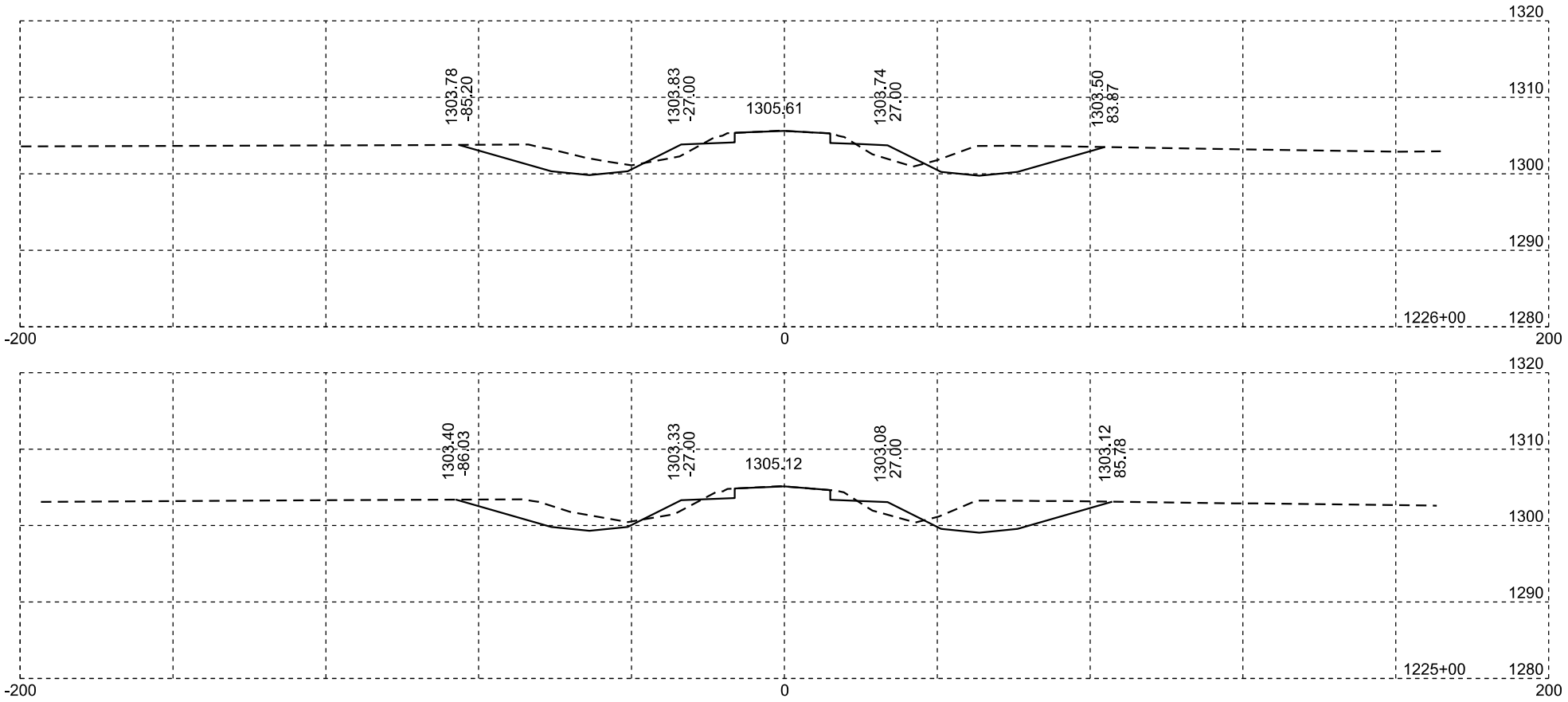

Revised Date: 03/21/2023 DM
Plotting Date: 01/19/2024

STATE OF SOUTH DAKOTA	PROJECT	SHEET NO.	TOTAL SHEETS
	P-PH-B-PT 0010(124)296	X18	X169

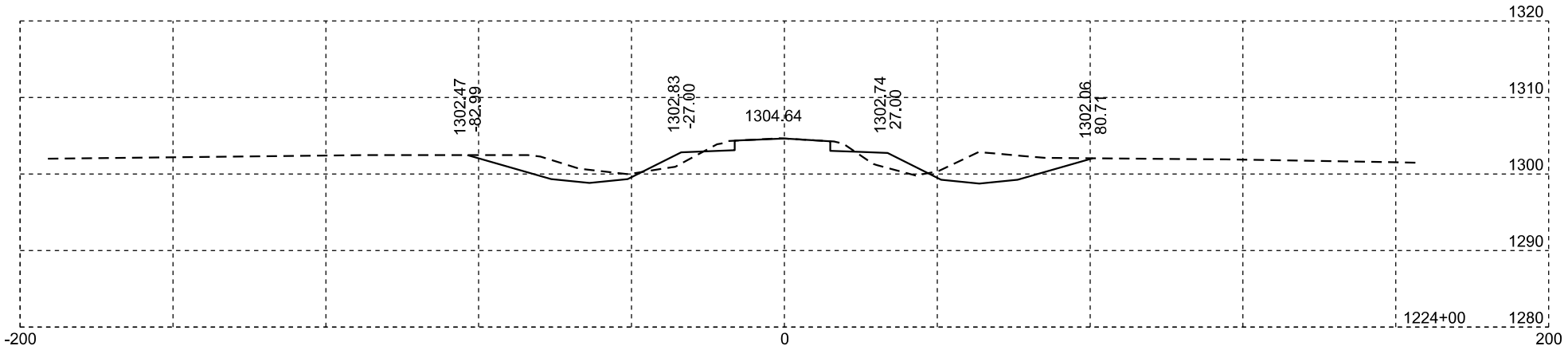

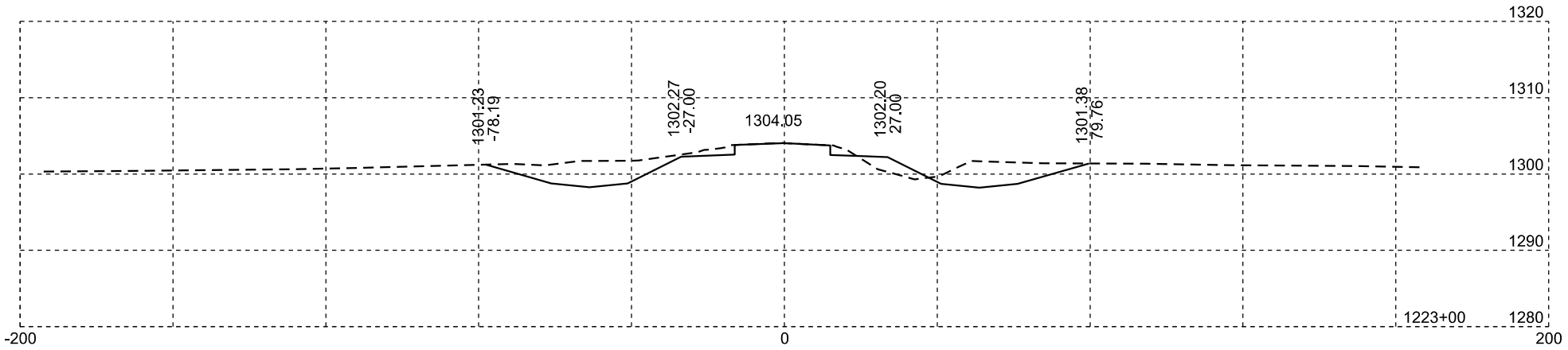

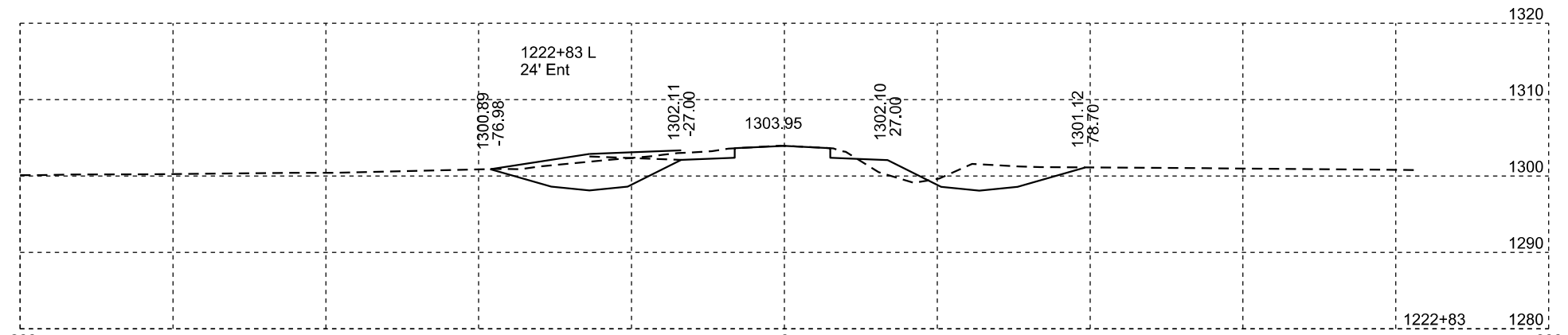

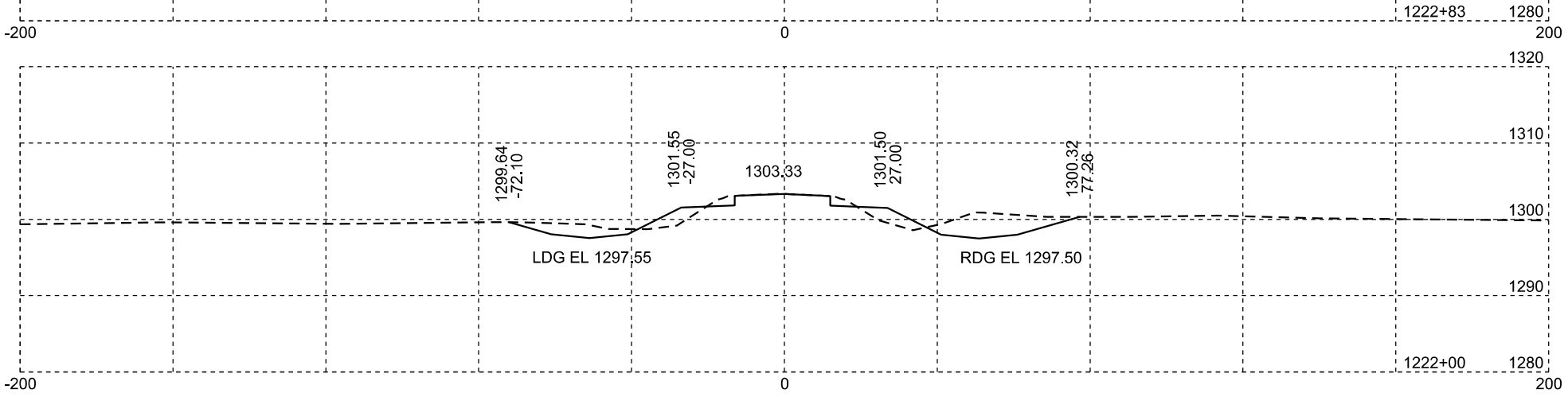

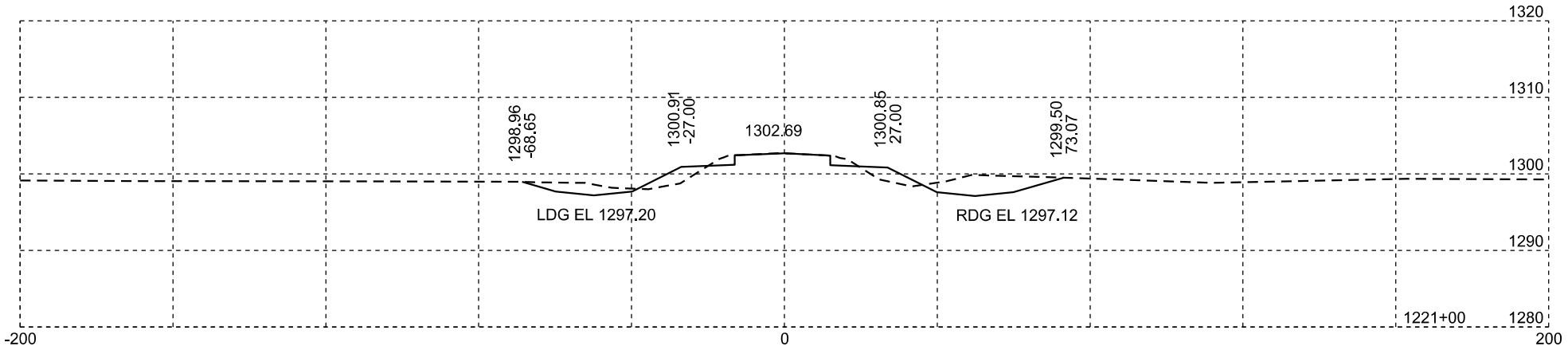

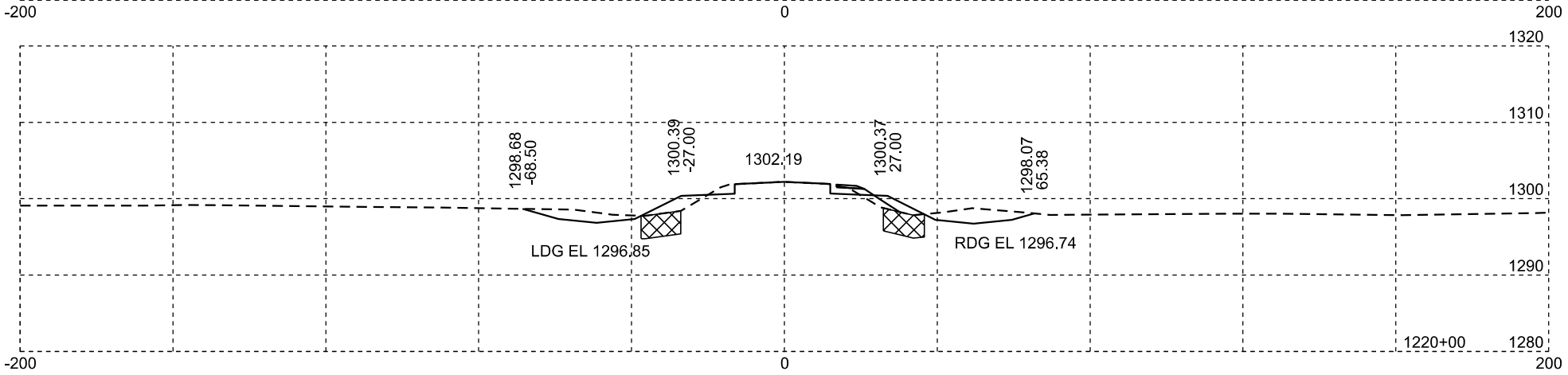

Muck

Plotting Date: 01/19/2024

STATE OF SOUTH DAKOTA	PROJECT	SHEET NO.	TOTAL SHEETS
	P-PH-B-PT 0010(124)296	X19	X169

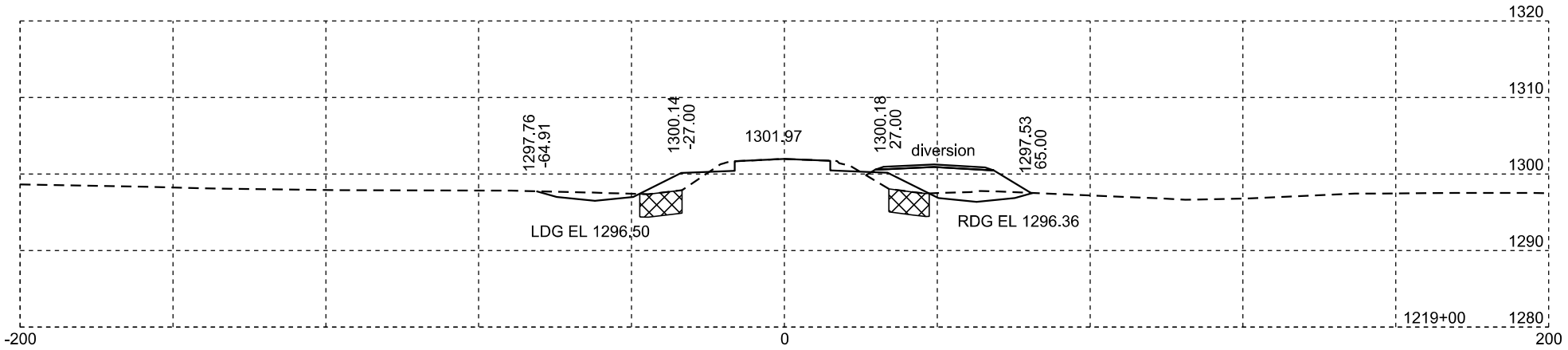

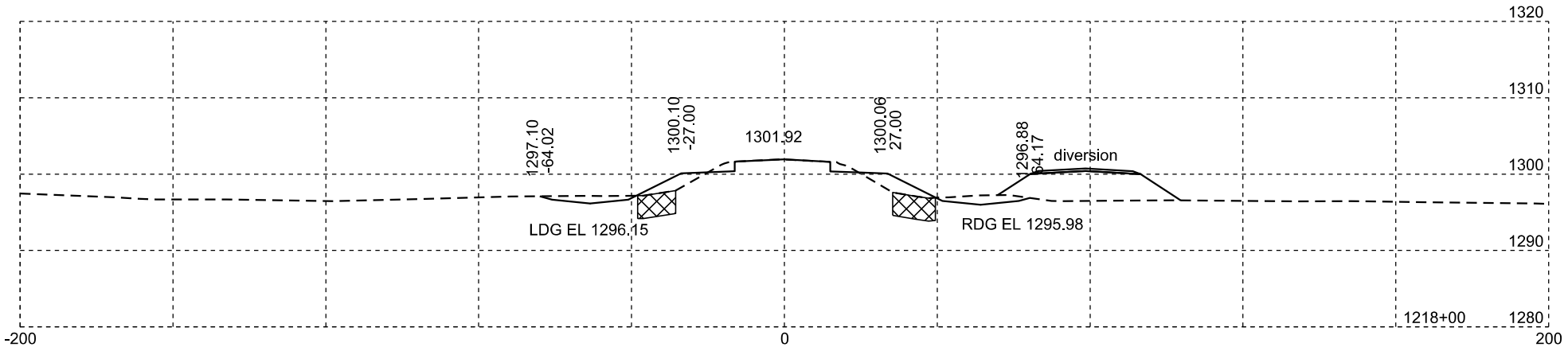

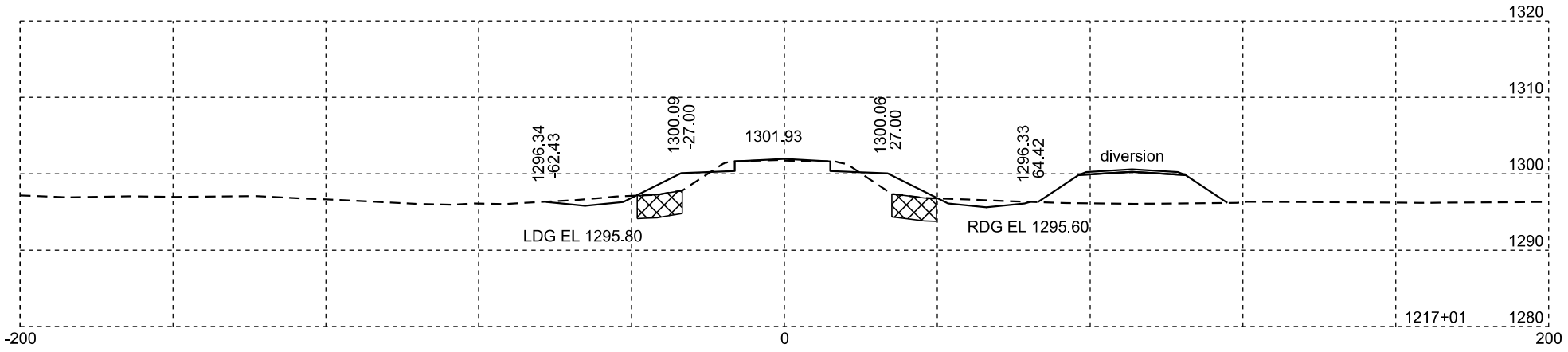

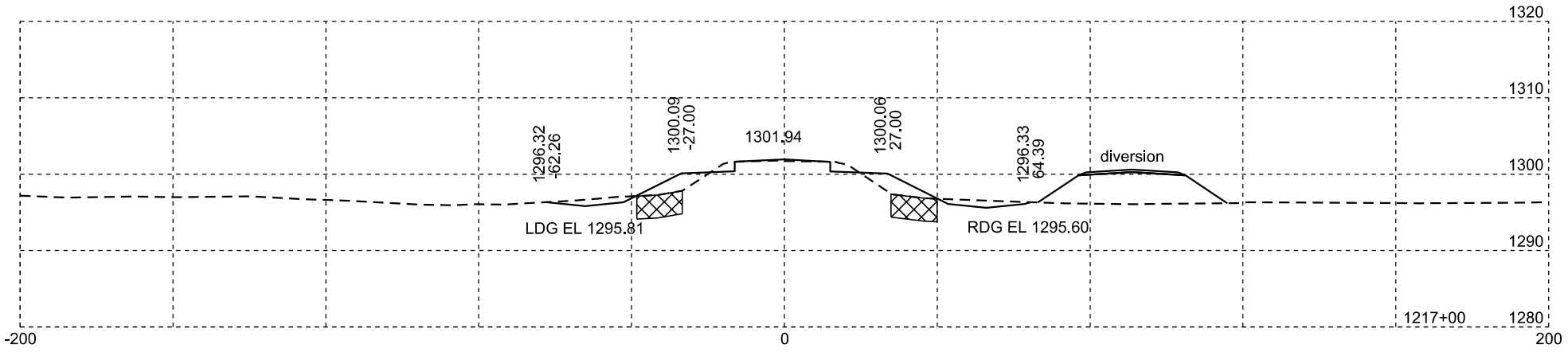

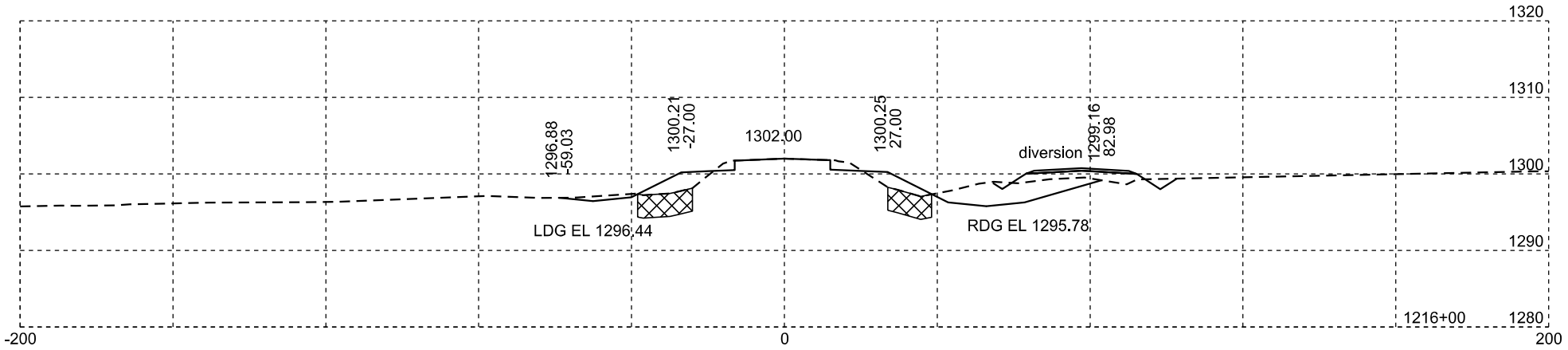

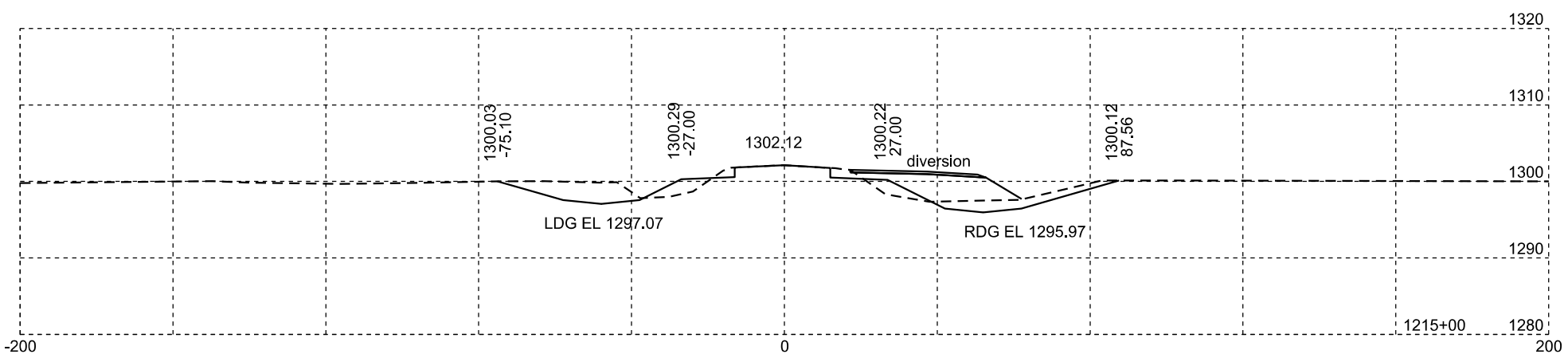

Muck

Plotting Date: 01/19/2024

STATE OF SOUTH DAKOTA	PROJECT	SHEET NO.	TOTAL SHEETS
	P-PH-B-PT 0010(124)296	X20	X169

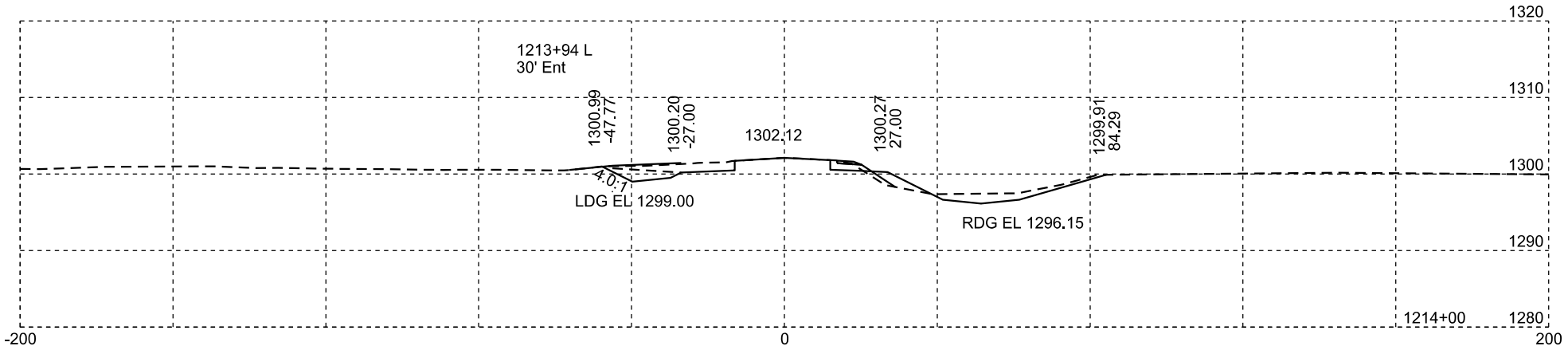

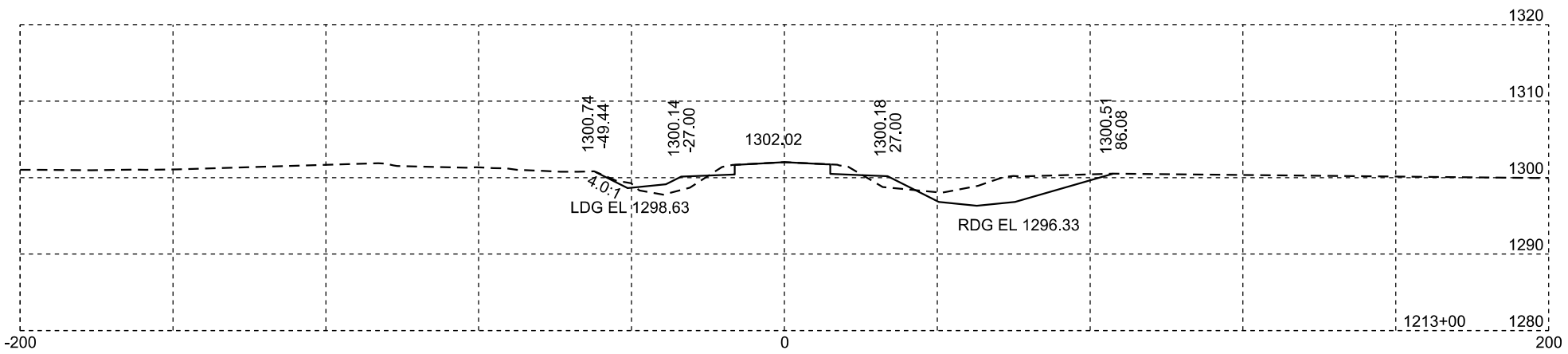

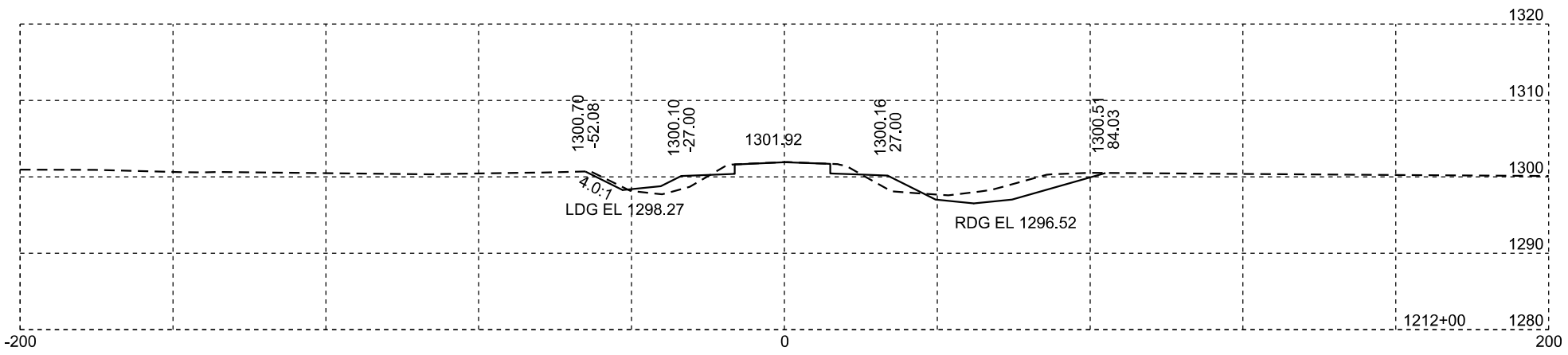

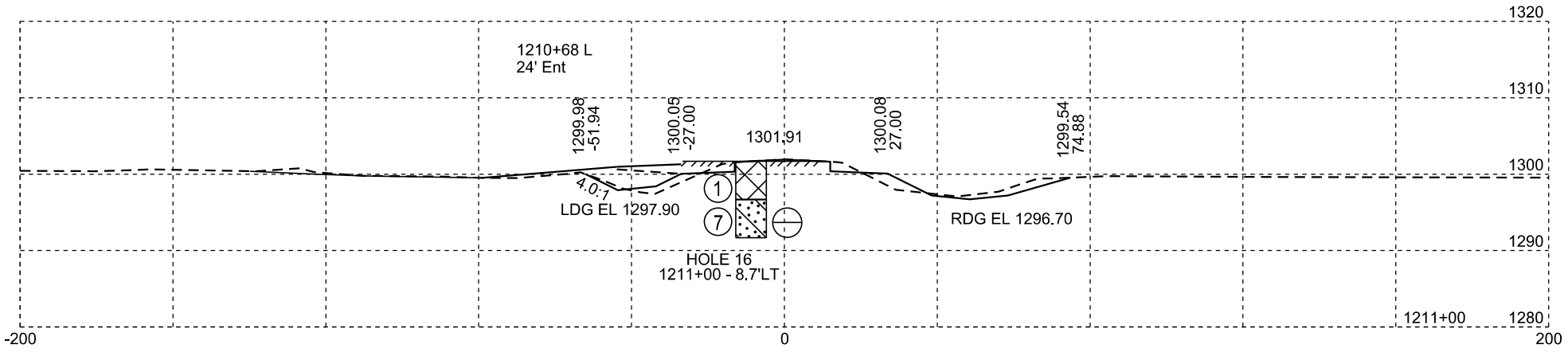

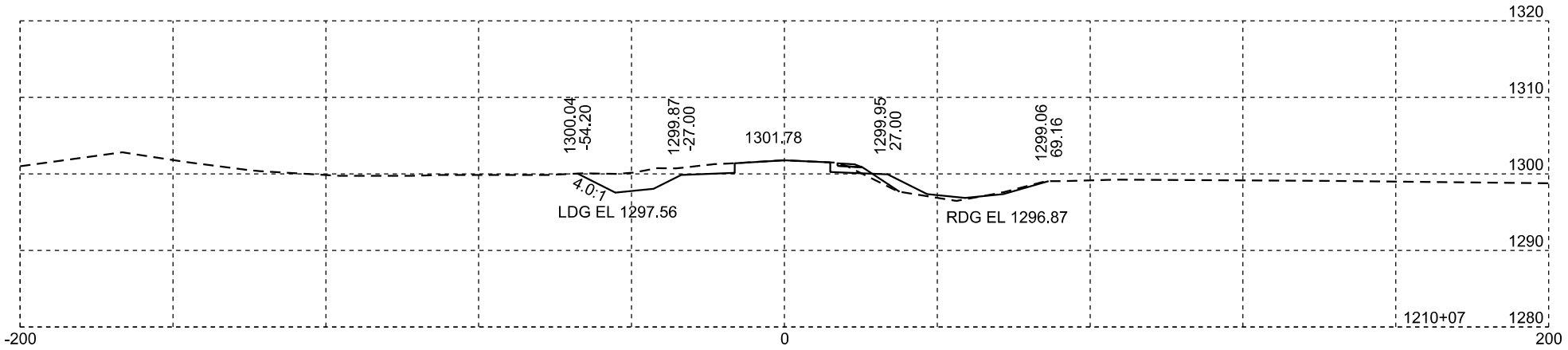

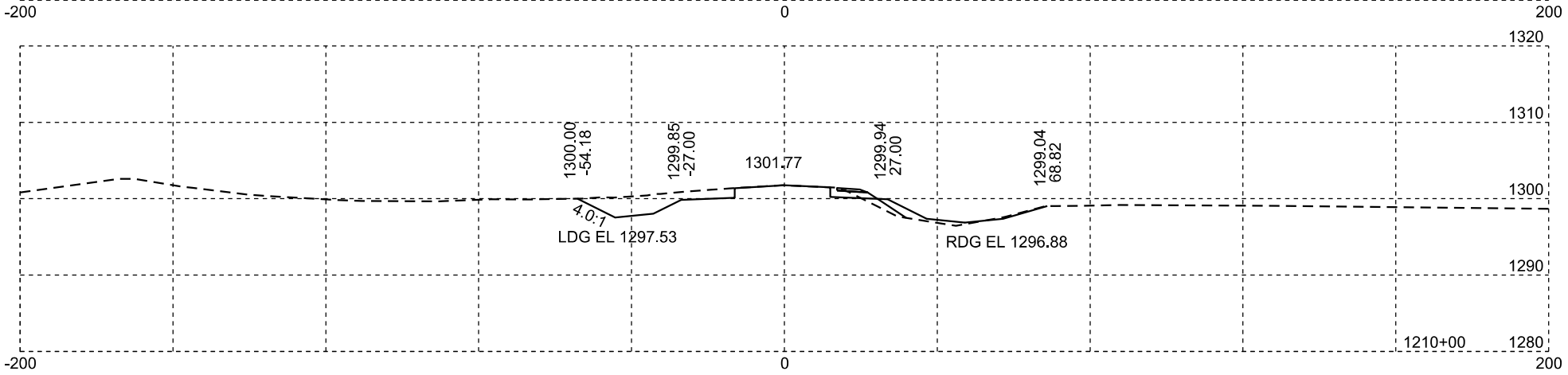

Plotting Date: 01/19/2024

STATE OF SOUTH DAKOTA	PROJECT	SHEET NO.	TOTAL SHEETS
	P-PH-B-PT 0010(124)296	X21	X169

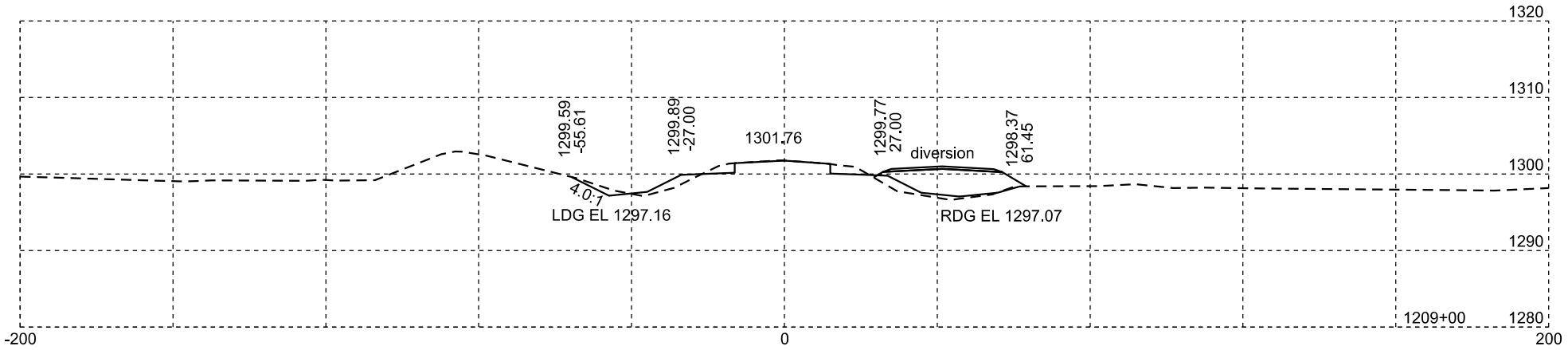

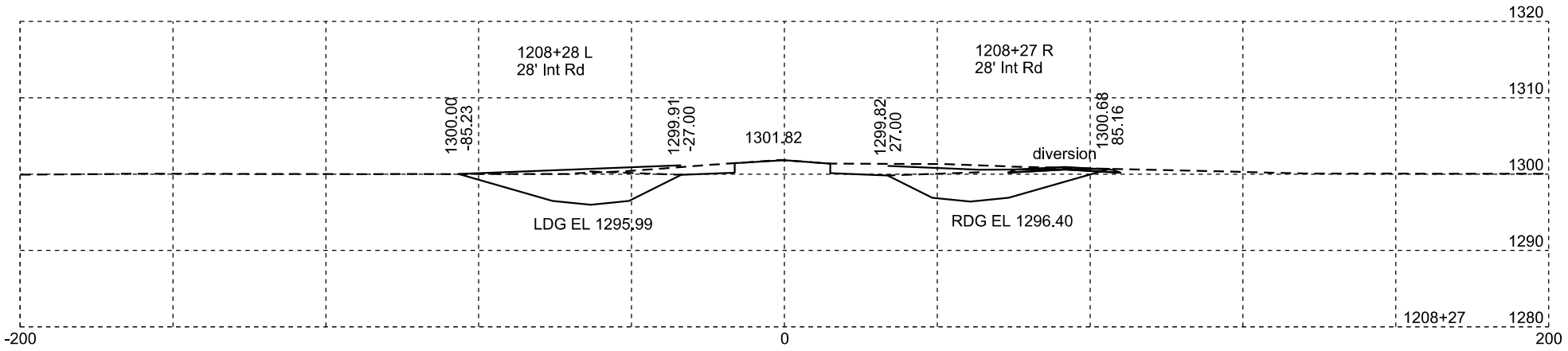

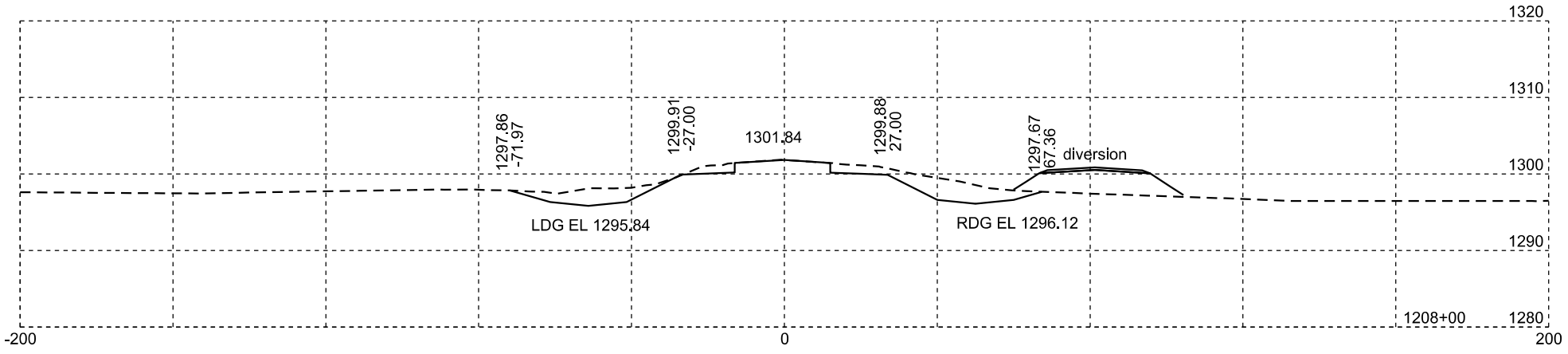

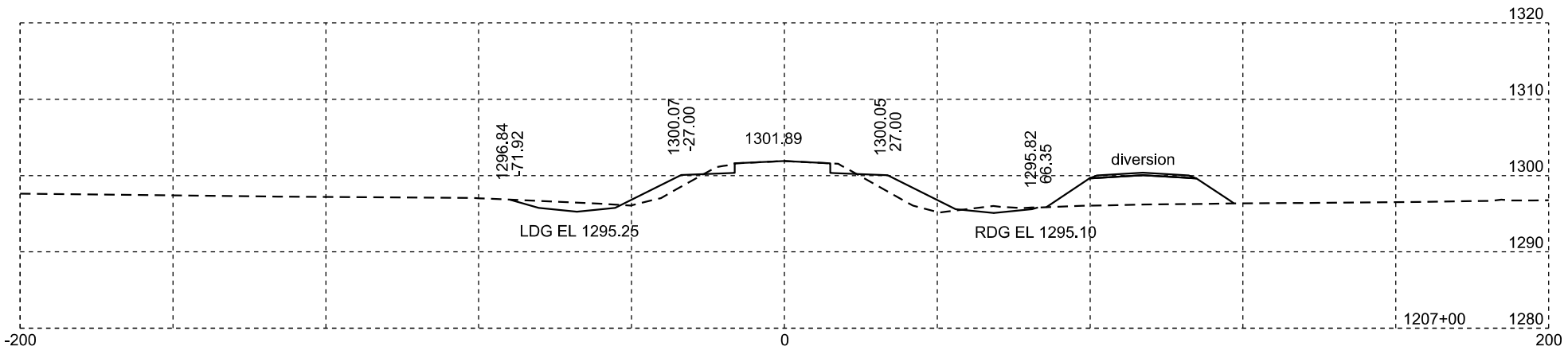

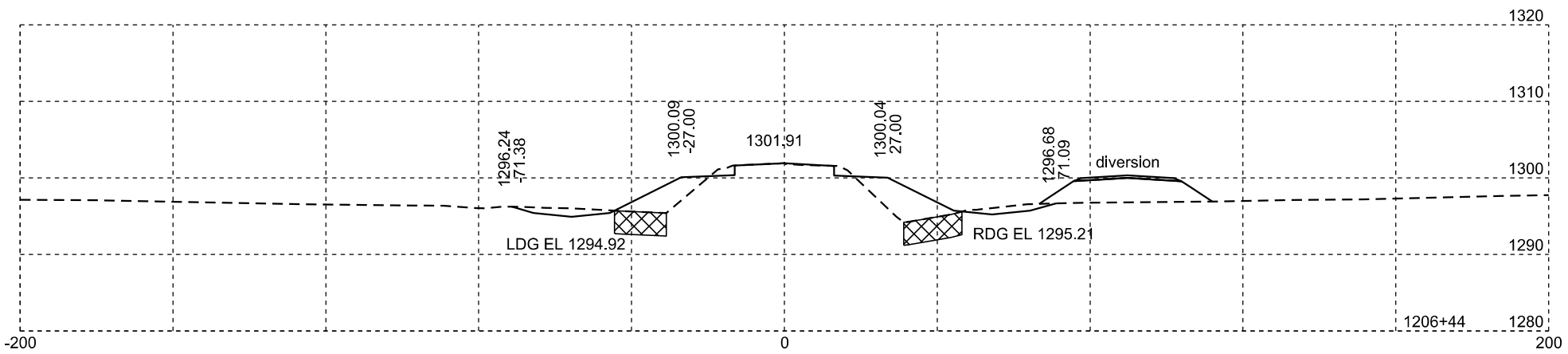

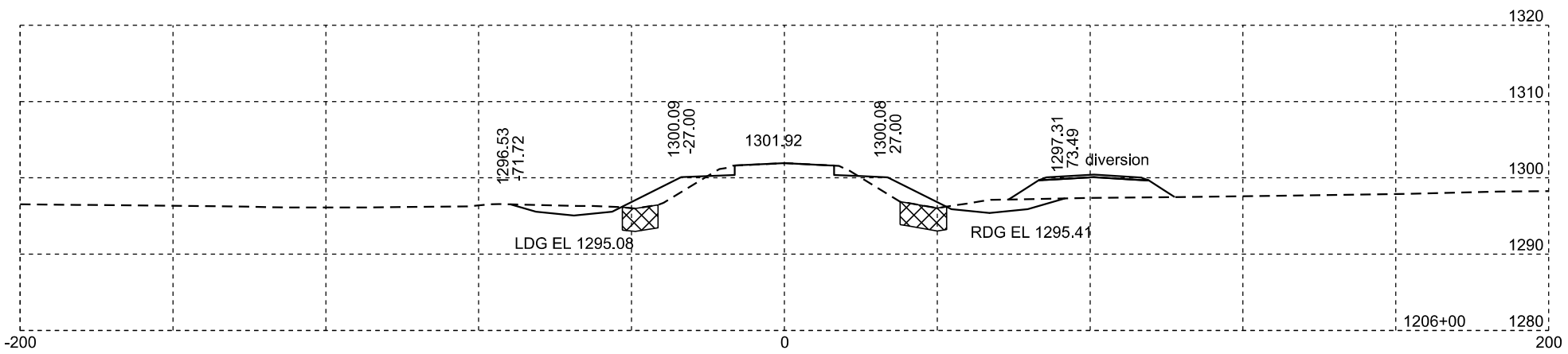

Muck

Plotting Date: 01/19/2024

STATE OF SOUTH DAKOTA	PROJECT	SHEET NO.	TOTAL SHEETS
	P-PH-B-PT 0010(124)296	X22	X169

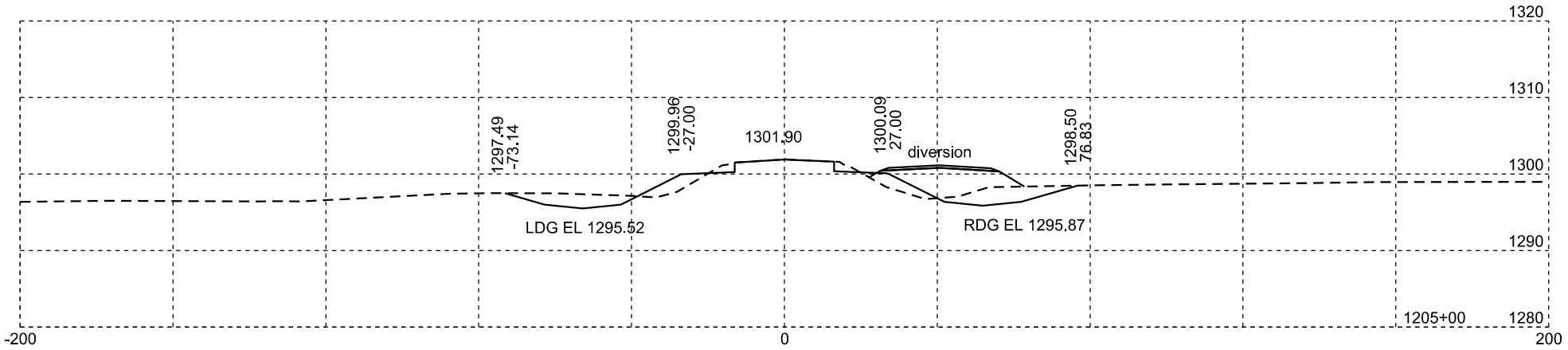

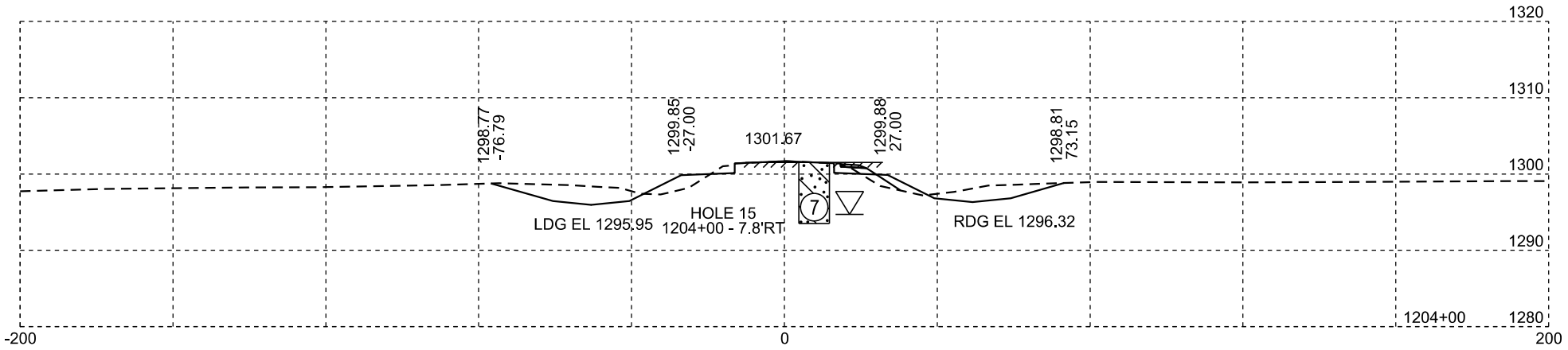

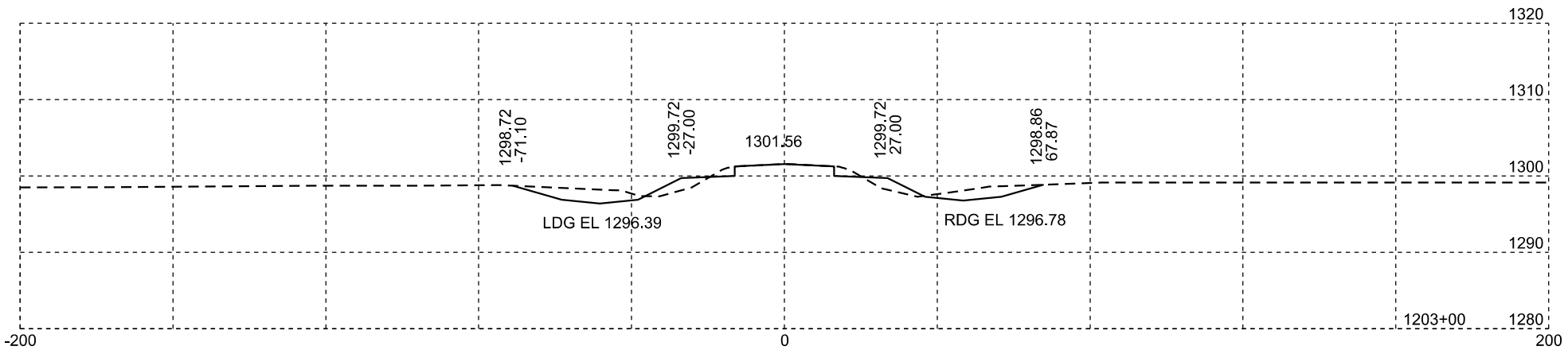

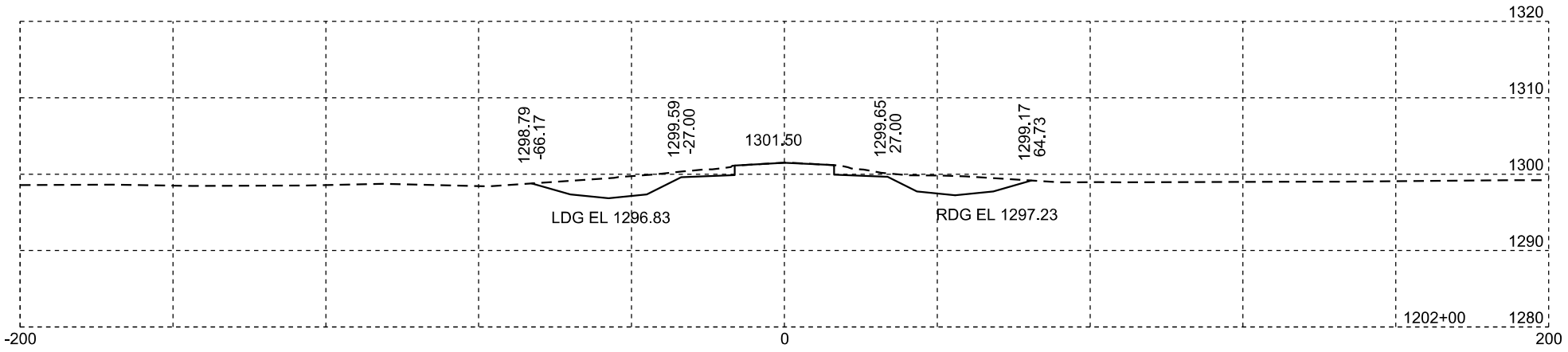

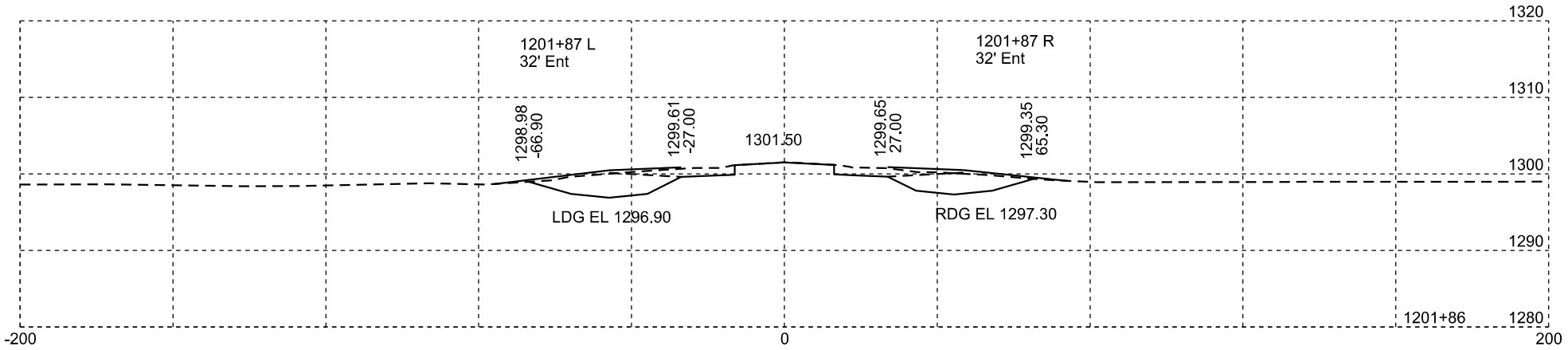

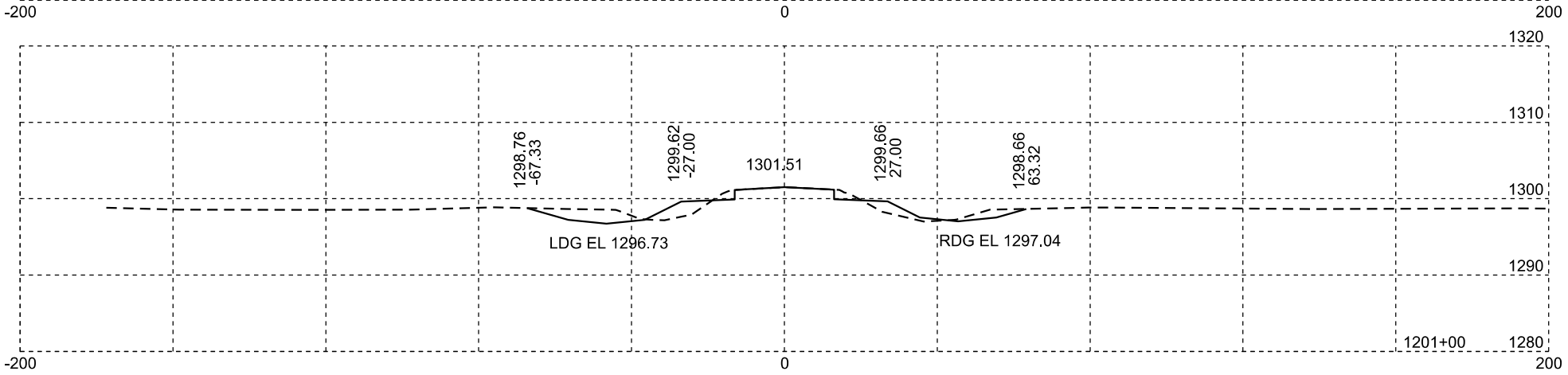

Rev 02/29/2024 DRM
Plotting Date: 02/29/2024

STATE OF SOUTH DAKOTA	PROJECT	SHEET NO.	TOTAL SHEETS
	P-PH-B-PT 0010(124)296	X23	X169

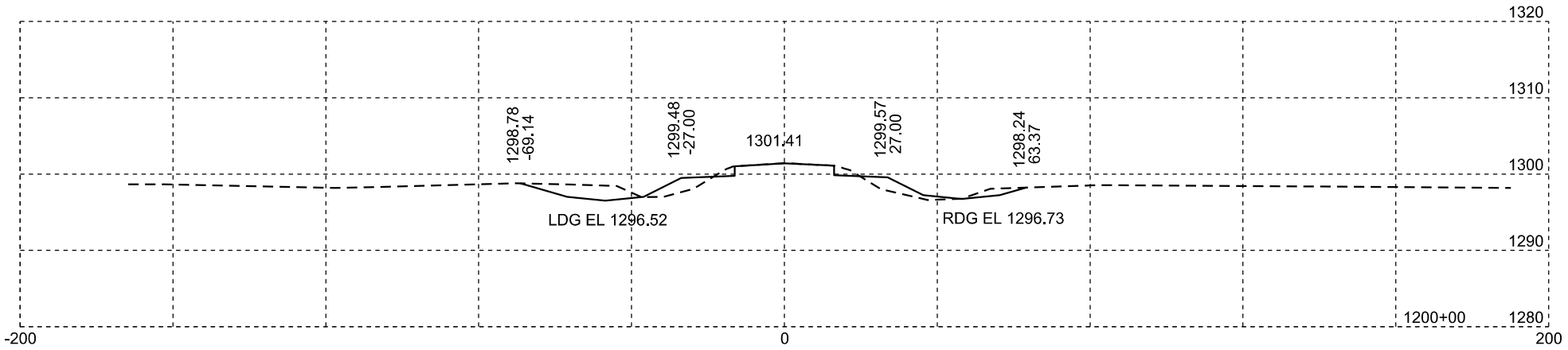

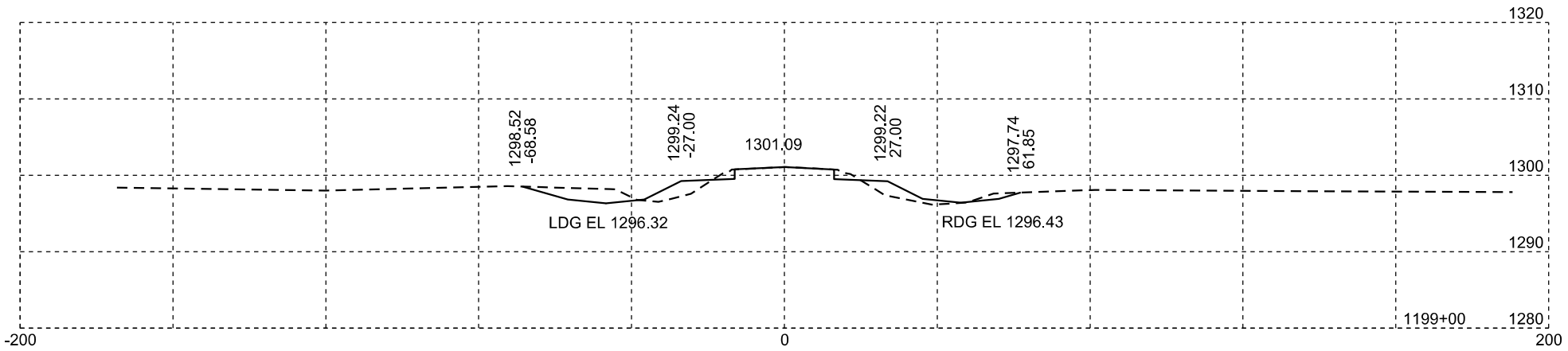

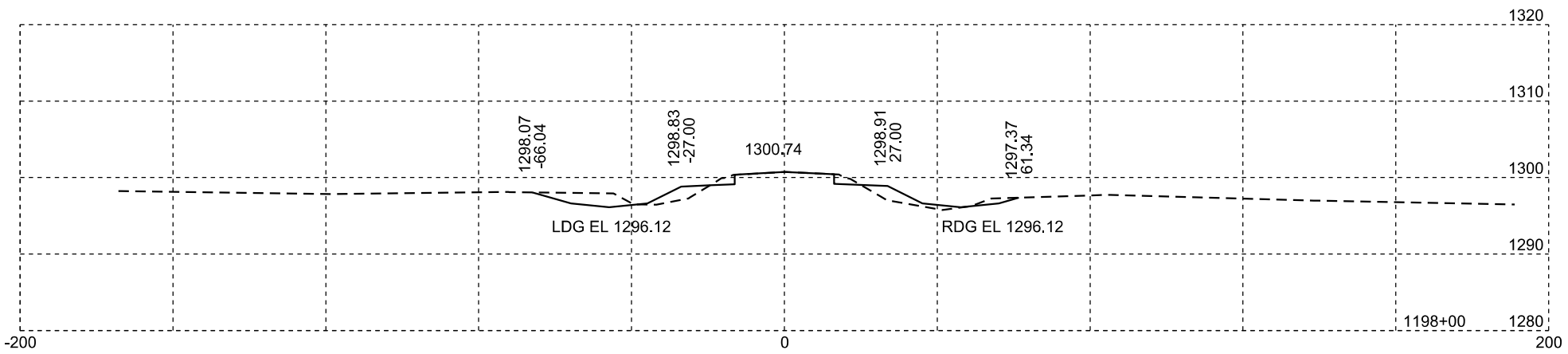

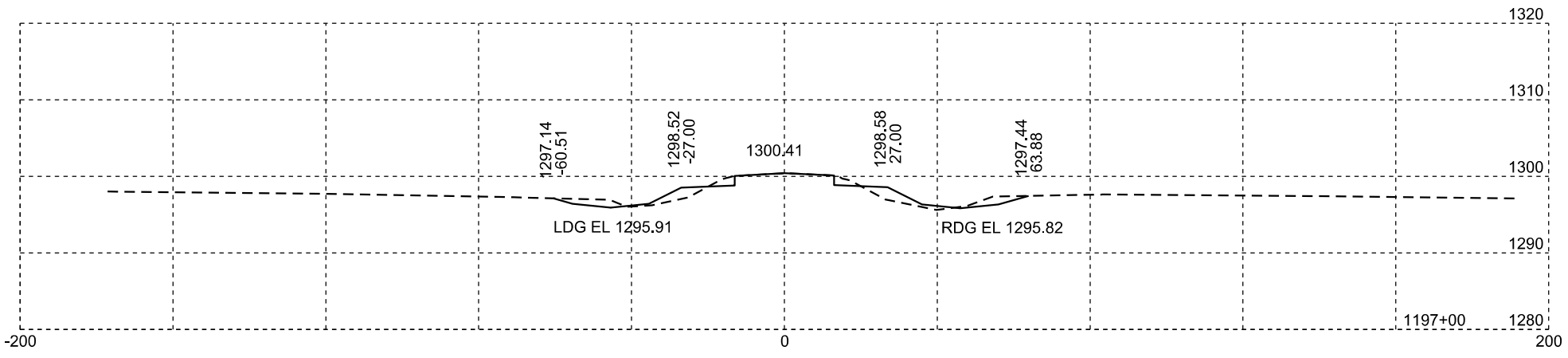

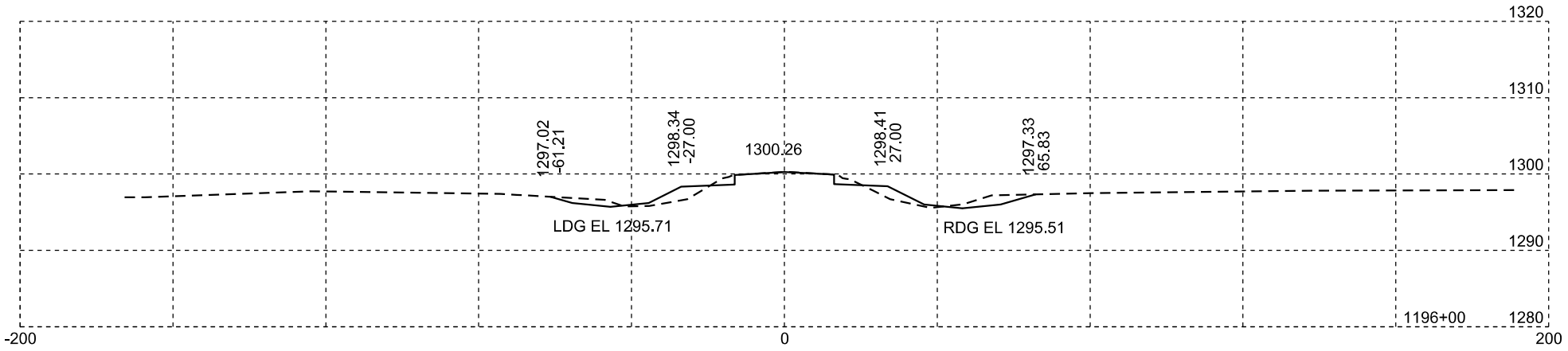

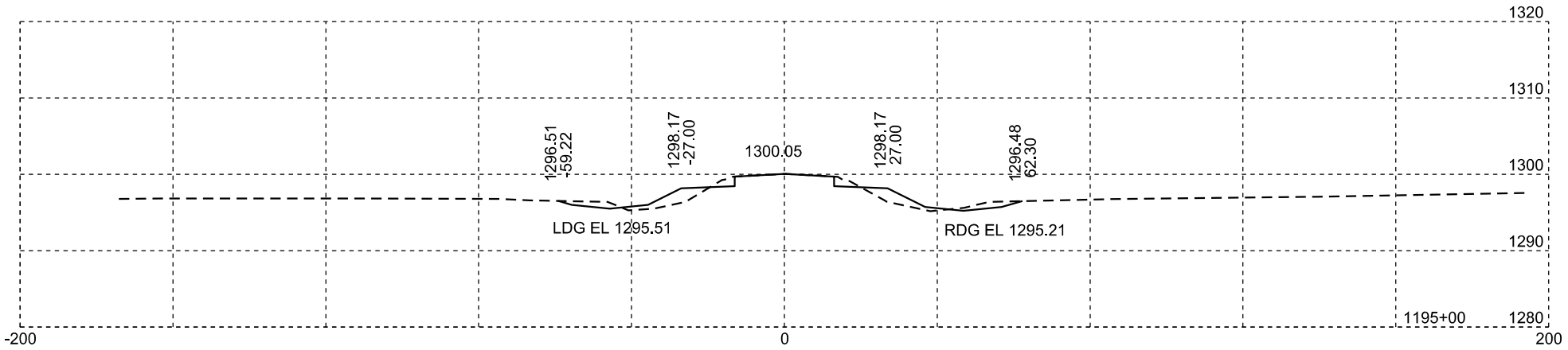

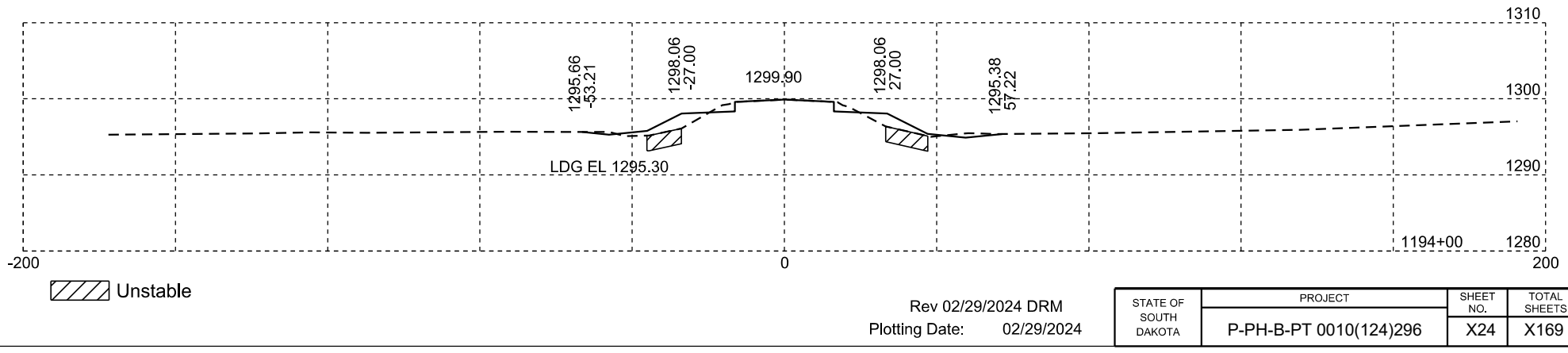

Unstable

Rev 02/29/2024 DRM
Plotting Date: 02/29/2024

STATE OF SOUTH DAKOTA	PROJECT	SHEET NO.	TOTAL SHEETS
	P-PH-B-PT 0010(124)296	X24	X169

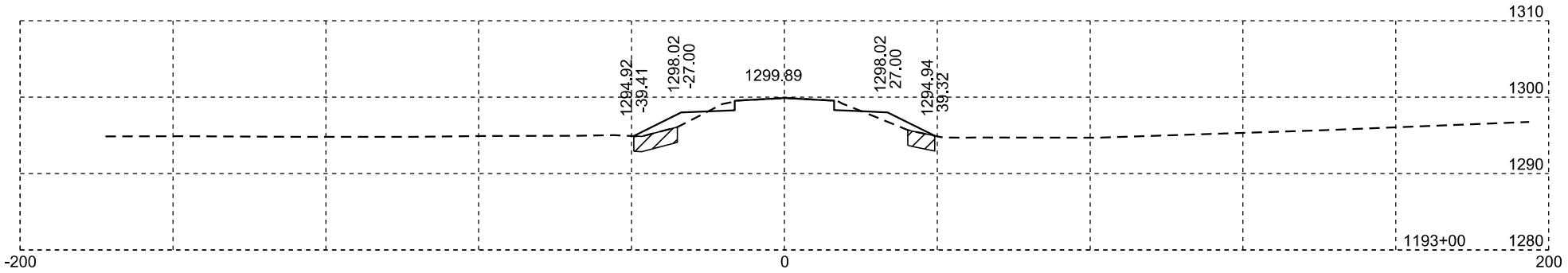

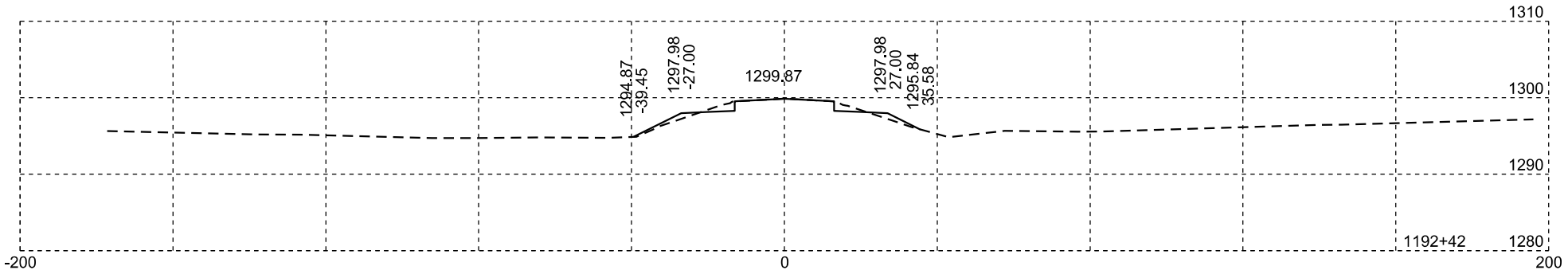

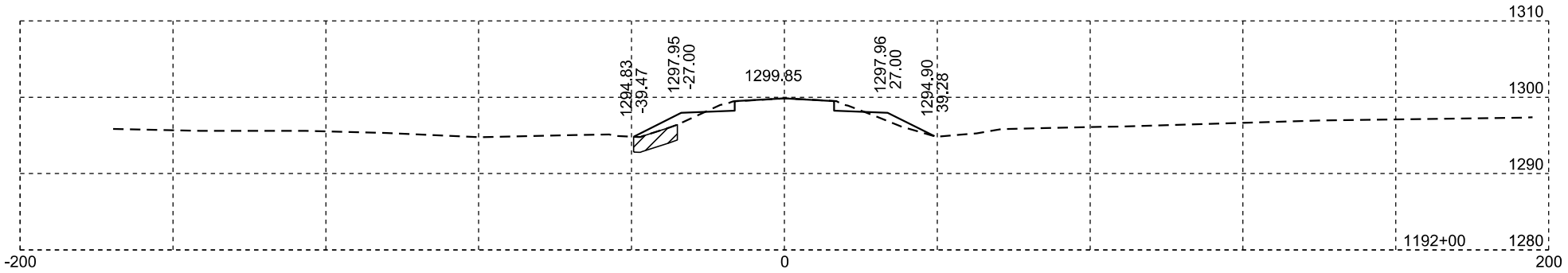

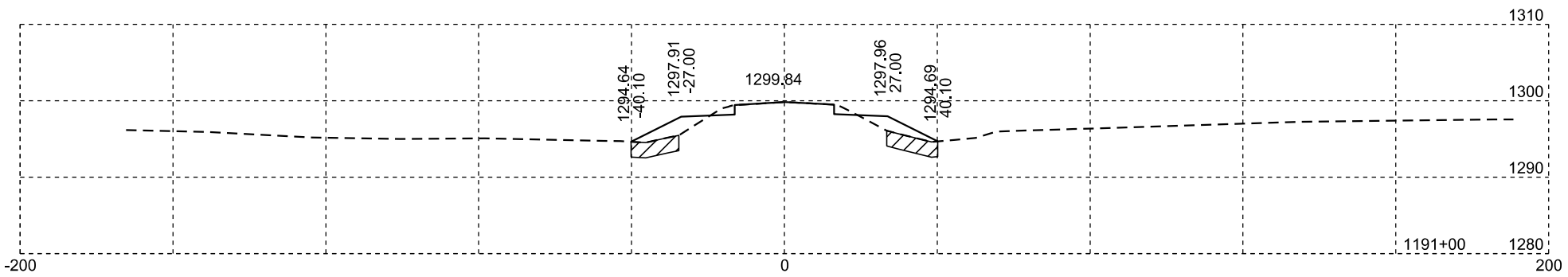

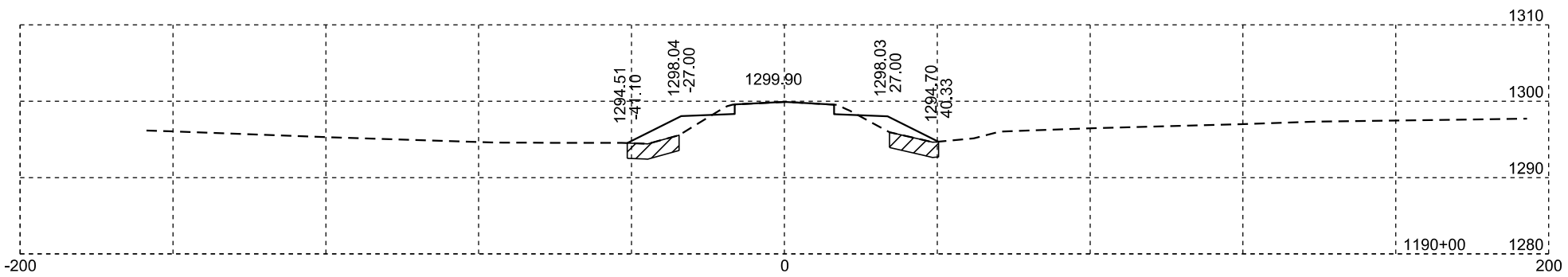

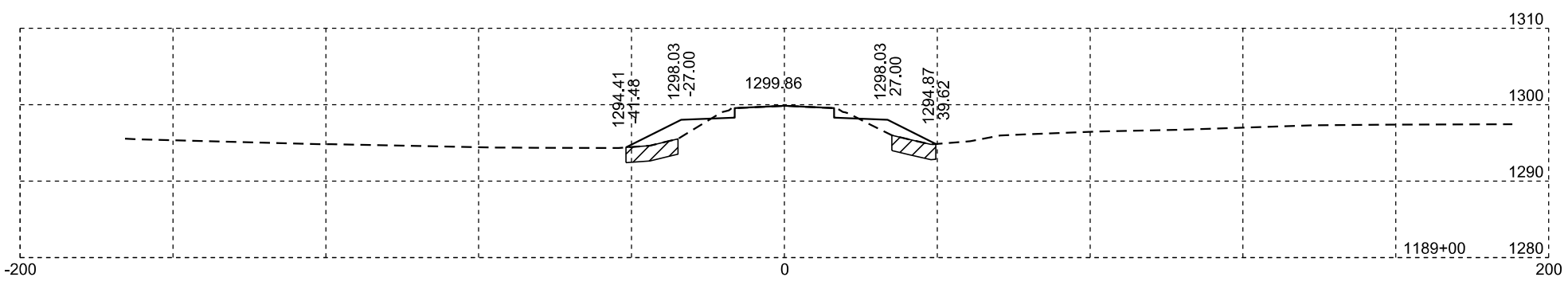

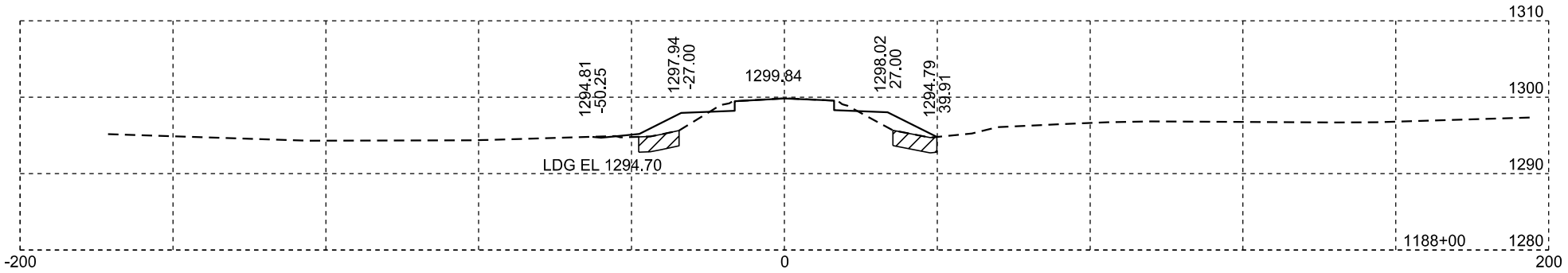

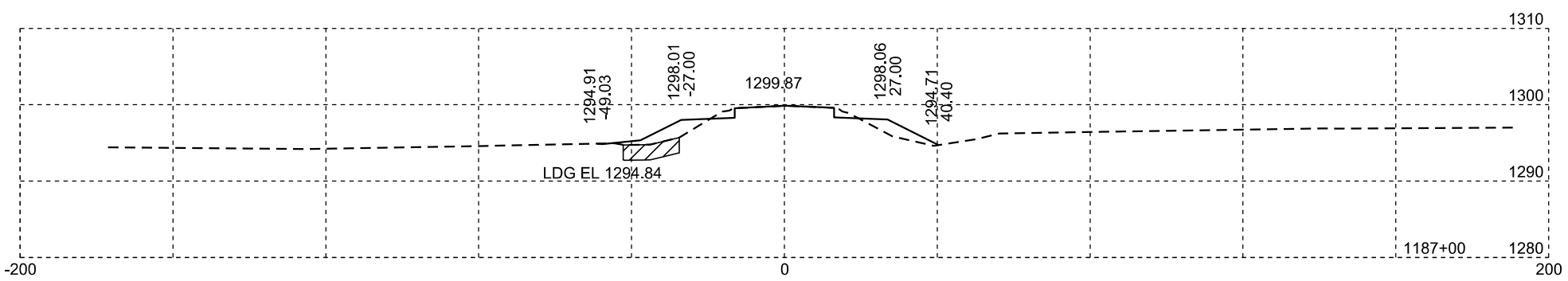

Unstable

Plotting Date: 01/19/2024

STATE OF SOUTH DAKOTA	PROJECT	SHEET NO.	TOTAL SHEETS
	P-PH-B-PT 0010(124)296	X25	X169

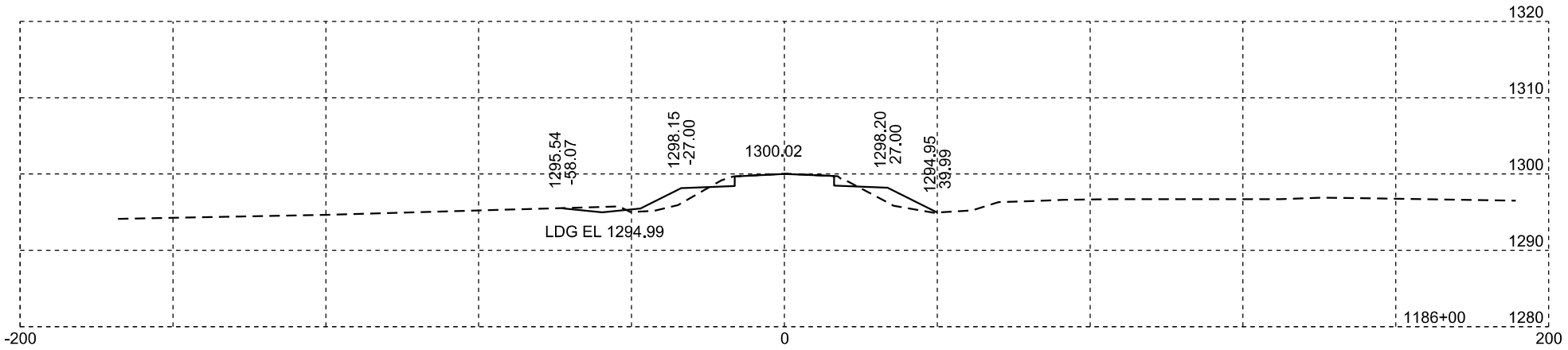

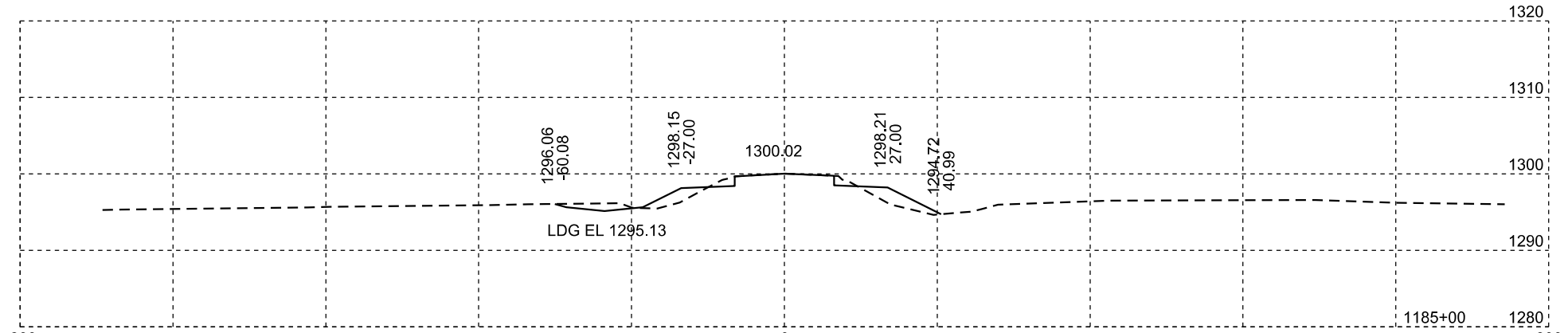

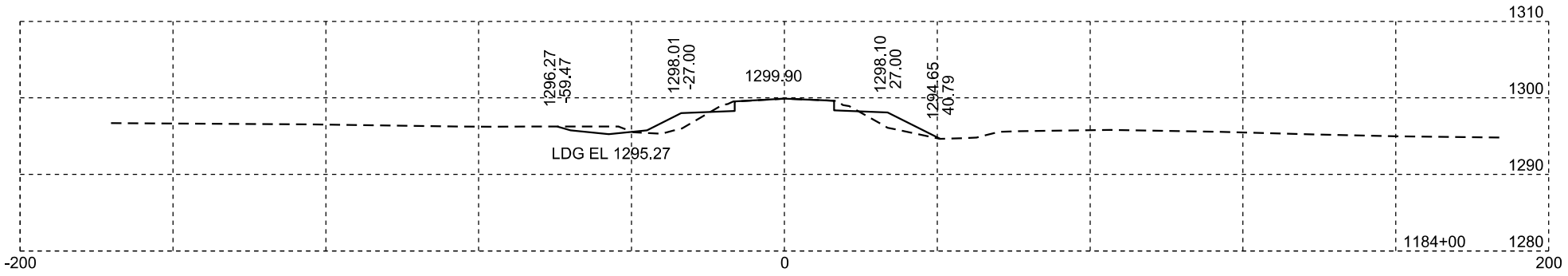

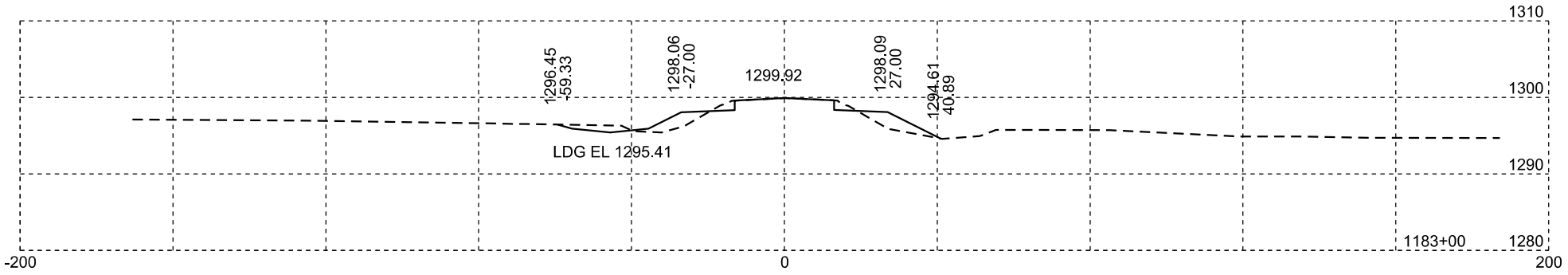

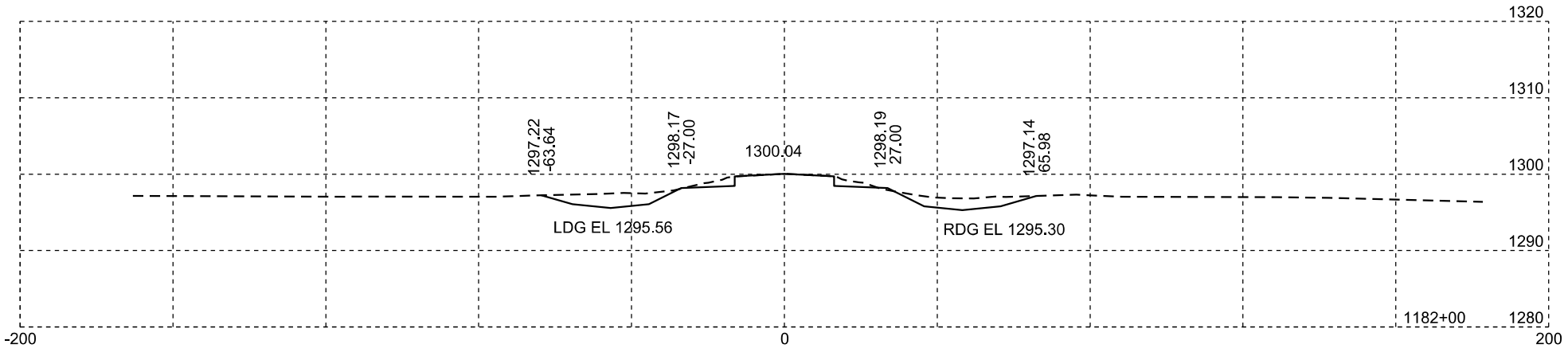

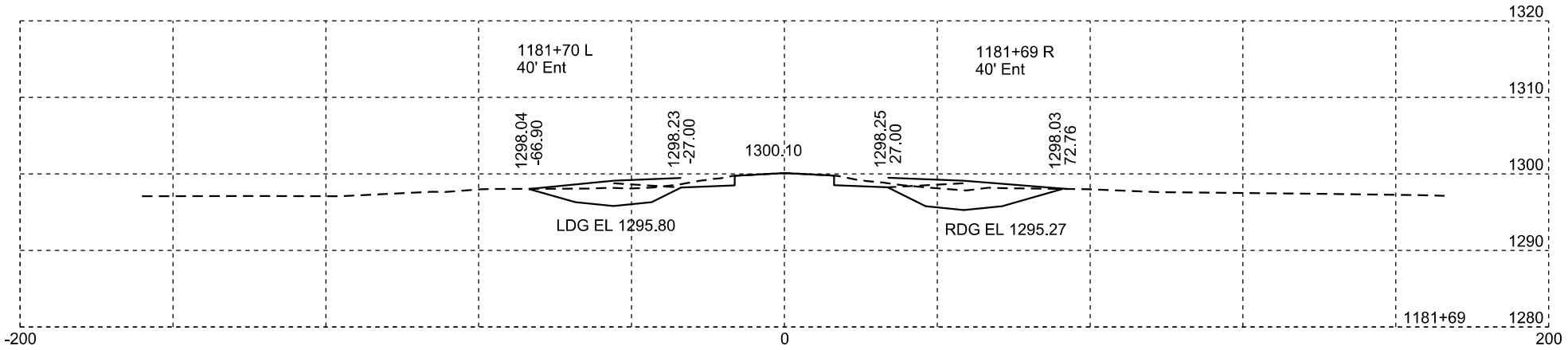

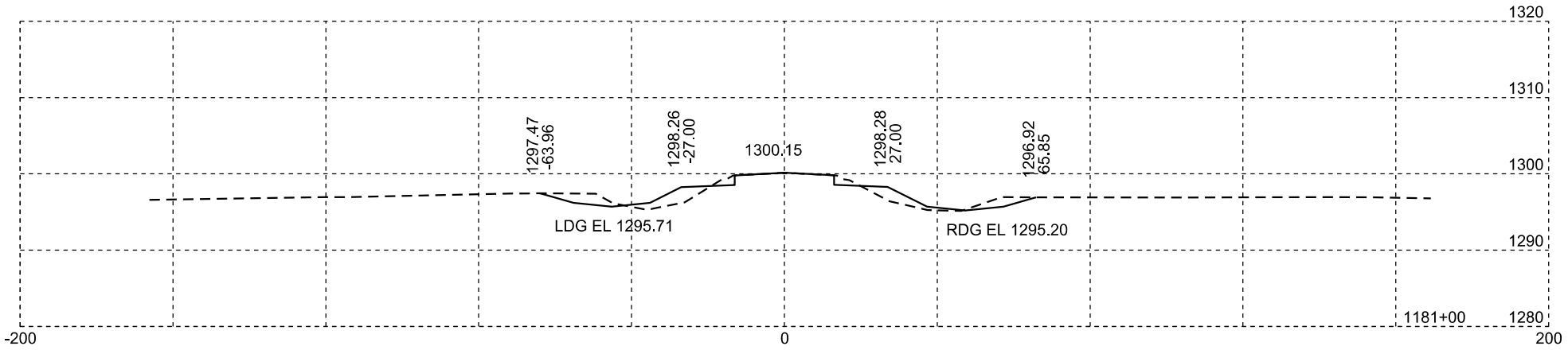

Rev 02/29/2024 DRM
Plotting Date: 02/29/2024

STATE OF SOUTH DAKOTA	PROJECT	SHEET NO.	TOTAL SHEETS
	P-PH-B-PT 0010(124)296	X26	X169

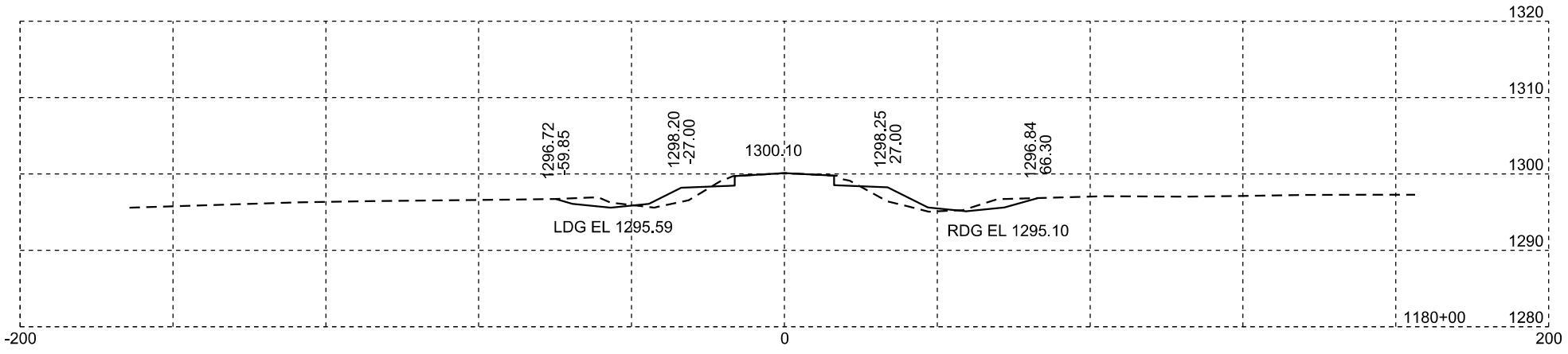

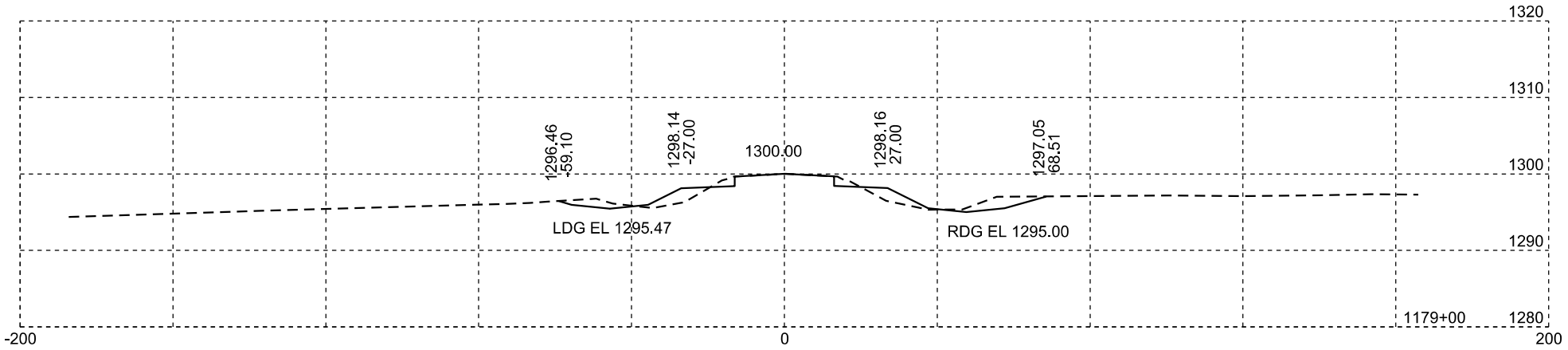

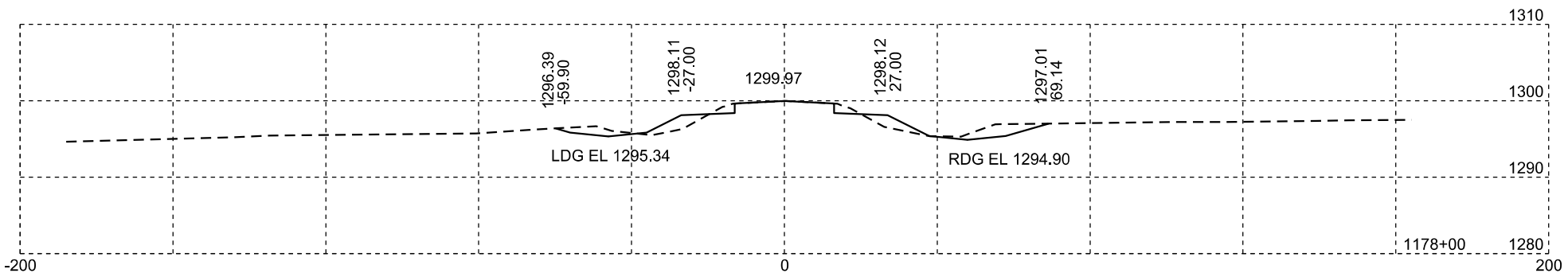

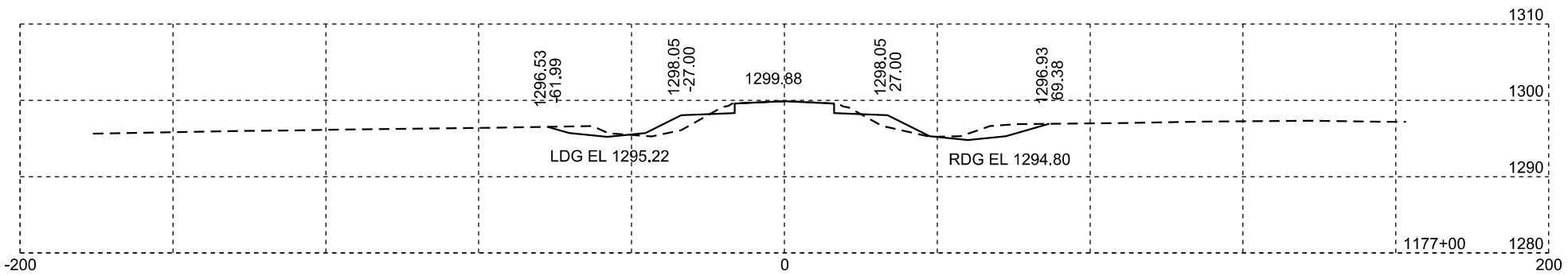

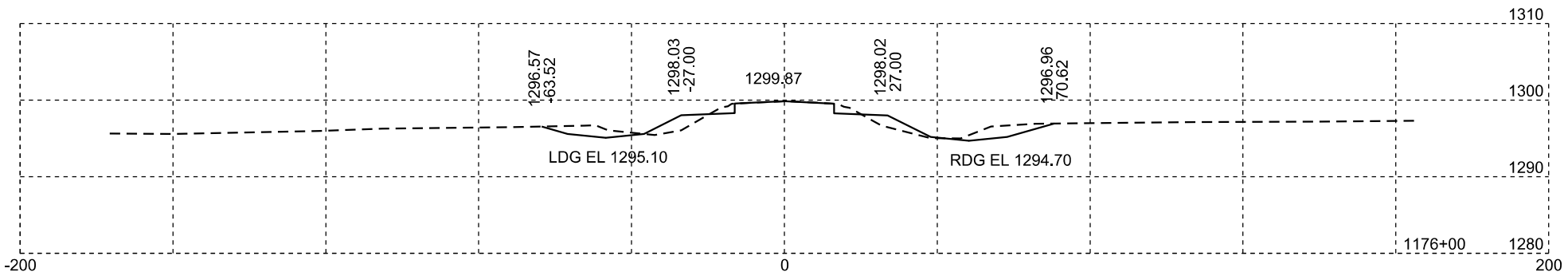

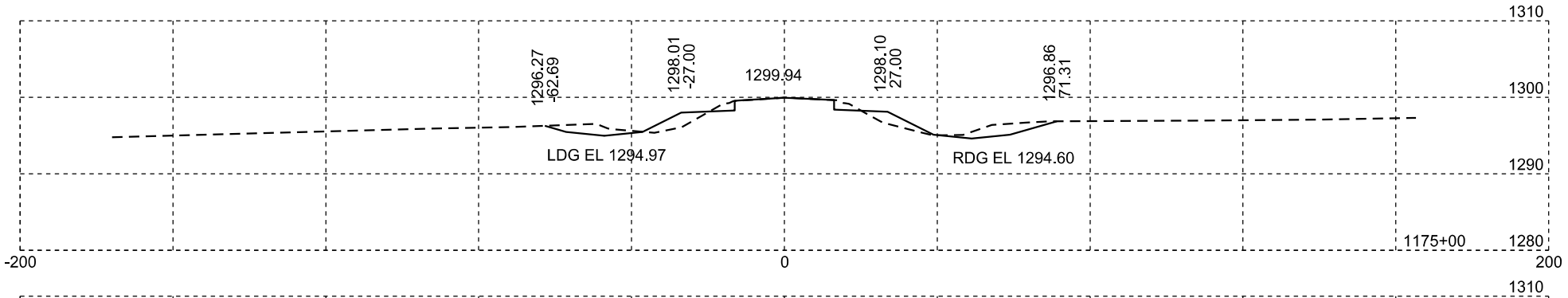

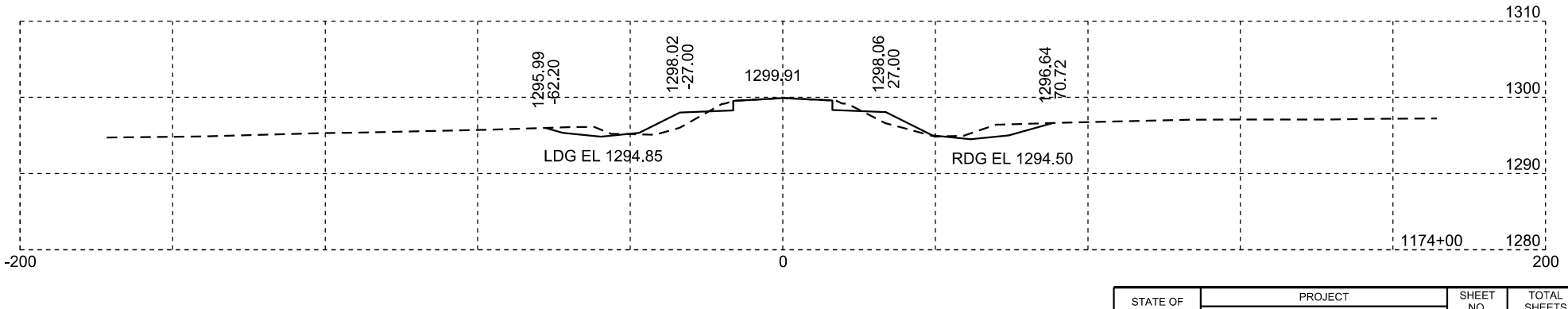

Plotting Date: 01/19/2024

STATE OF SOUTH DAKOTA	PROJECT	SHEET NO.	TOTAL SHEETS
	P-PH-B-PT 0010(124)296	X27	X169

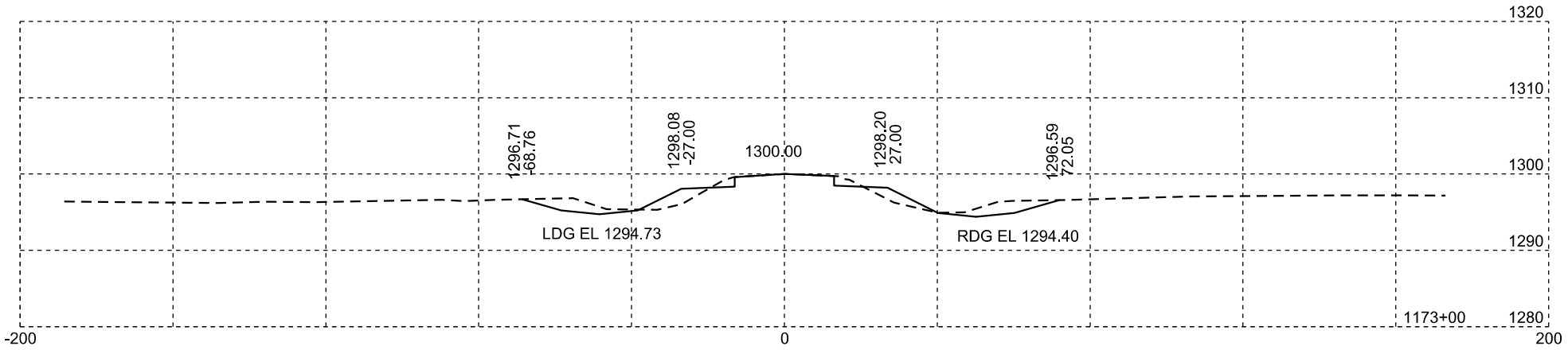

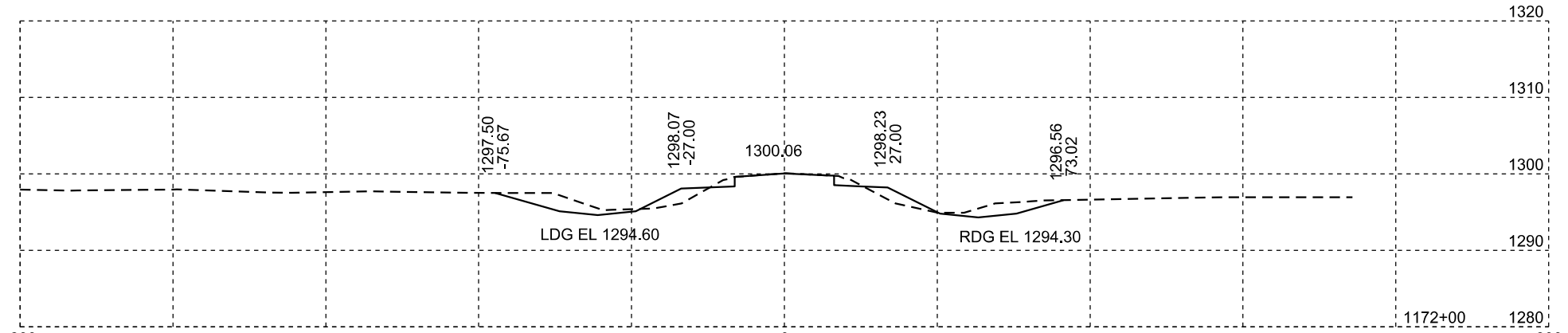

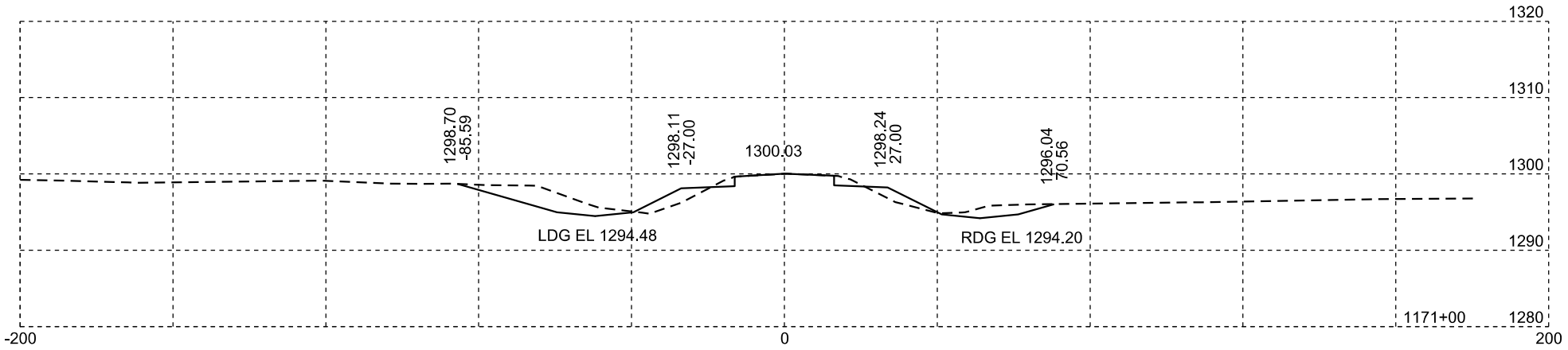

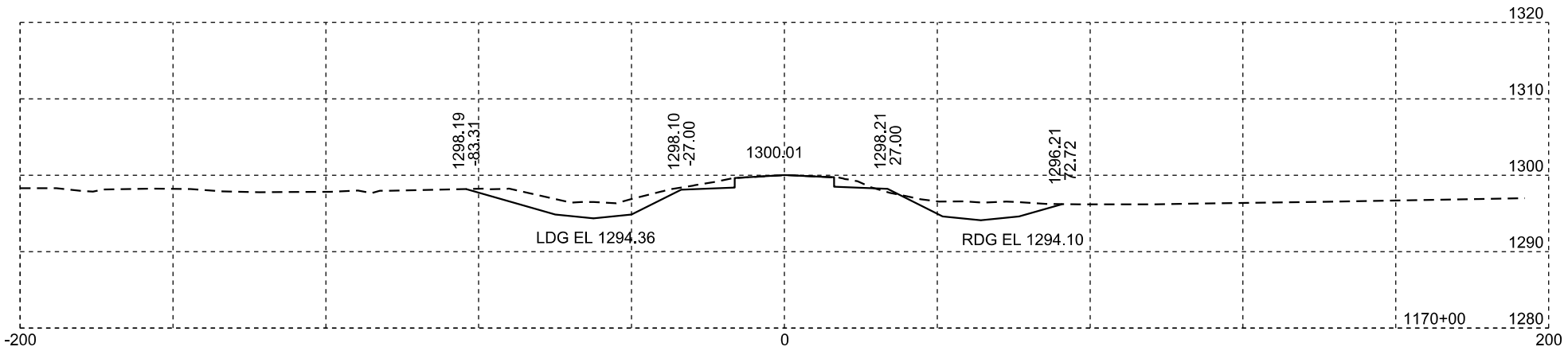

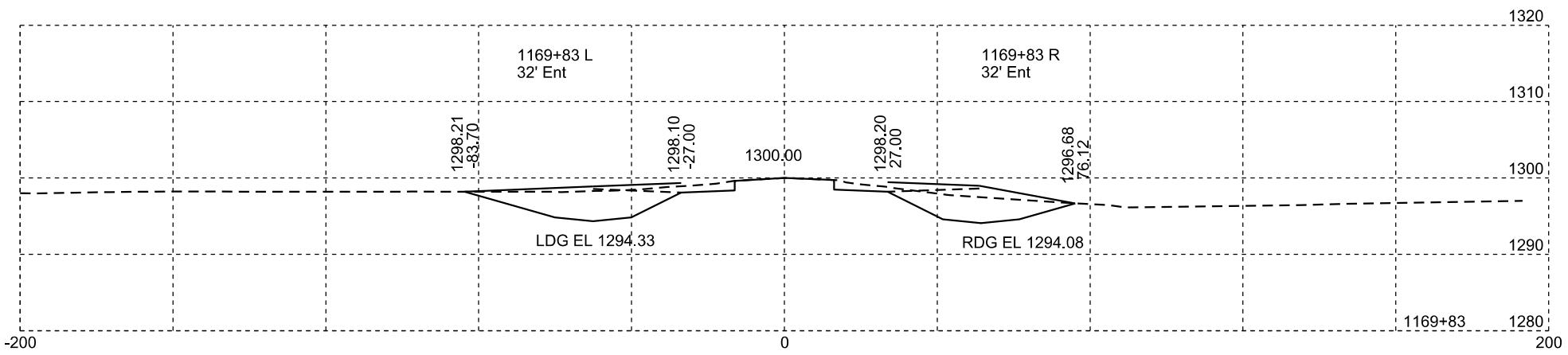

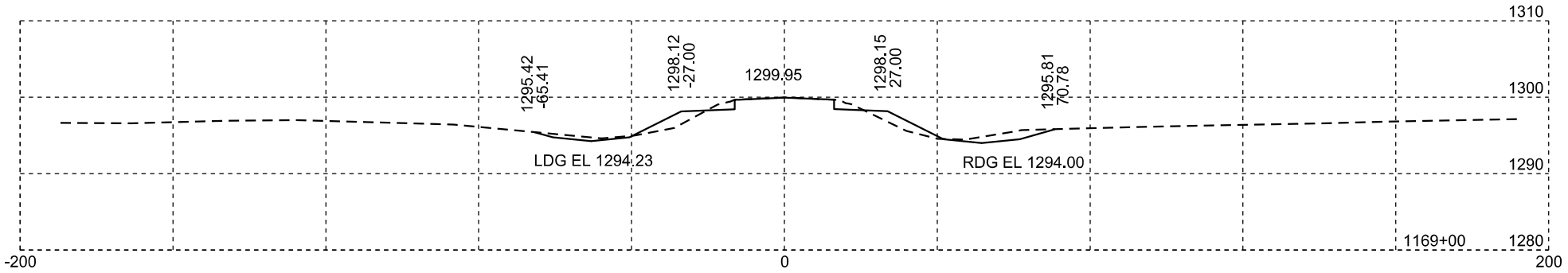

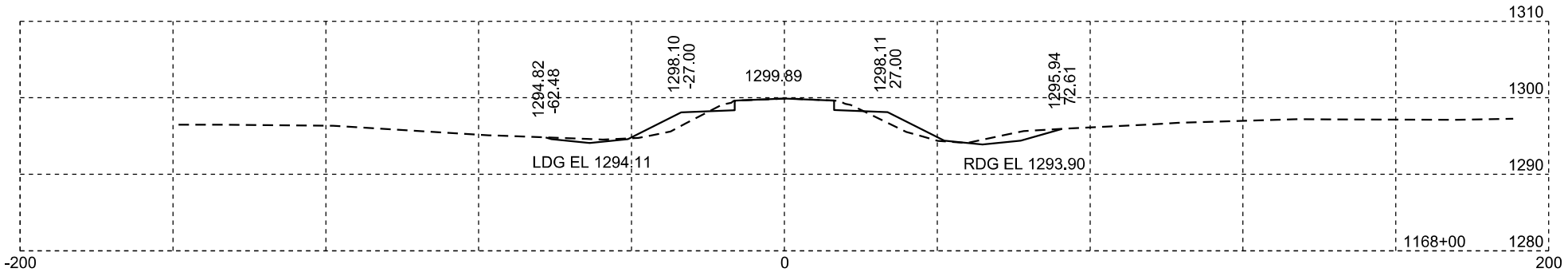

Rev 02/29/2024 DRM
Plotting Date: 02/29/2024

STATE OF SOUTH DAKOTA	PROJECT	SHEET NO.	TOTAL SHEETS
	P-PH-B-PT 0010(124)296	X28	X169

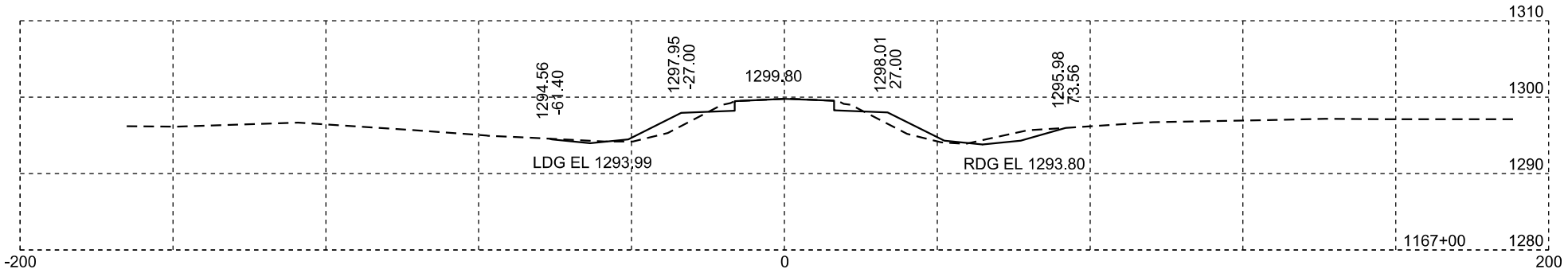

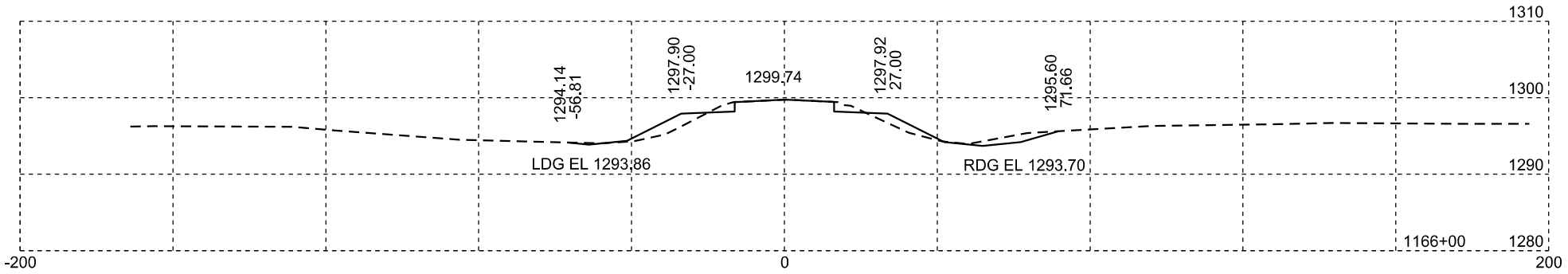

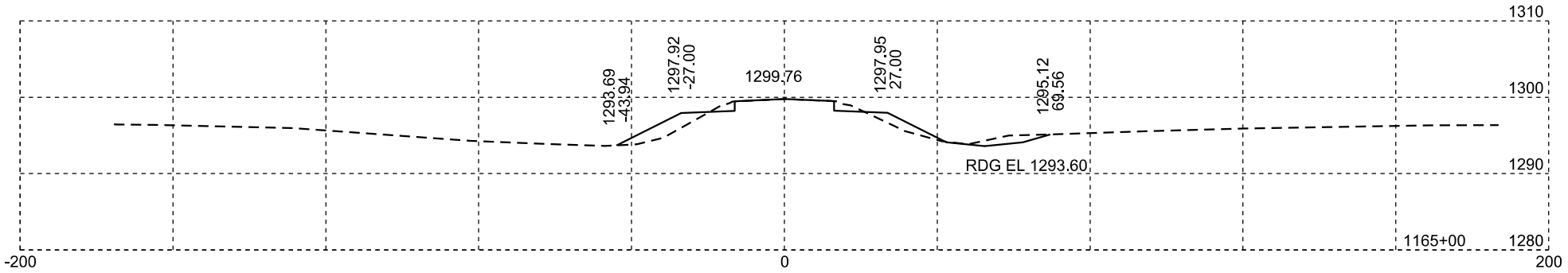

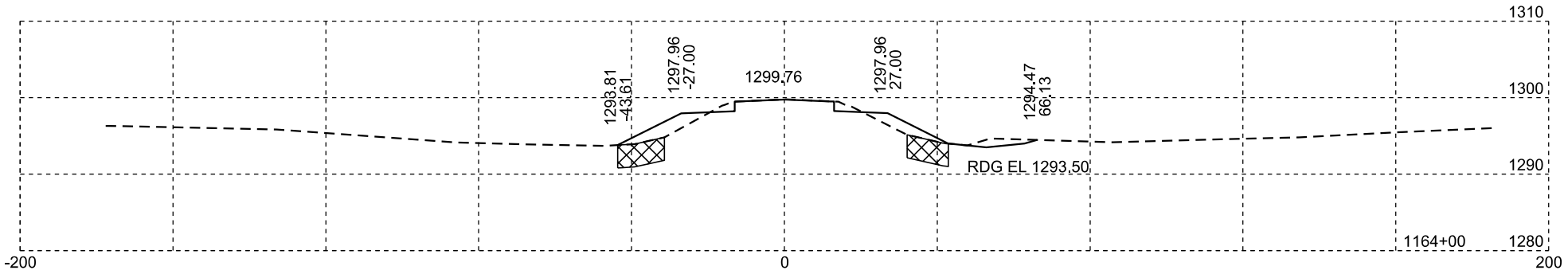

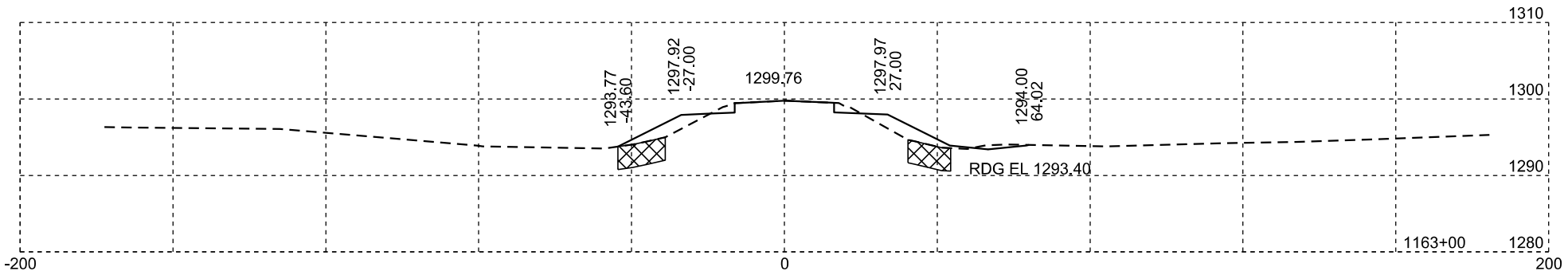

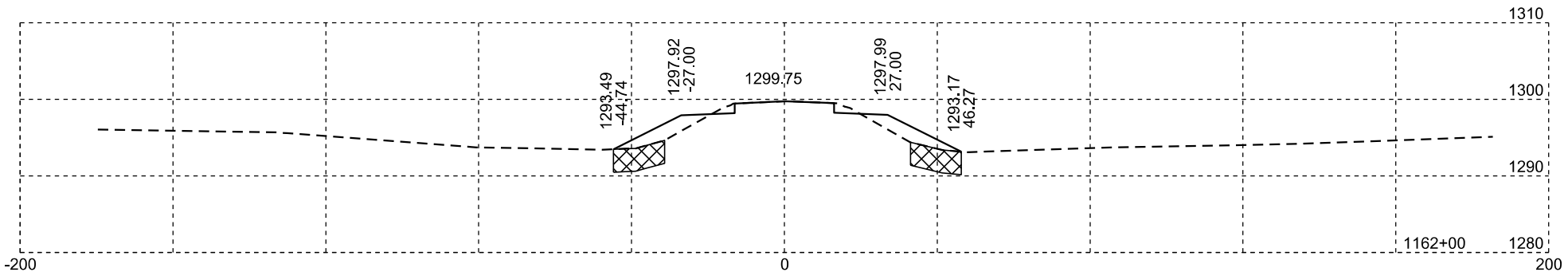

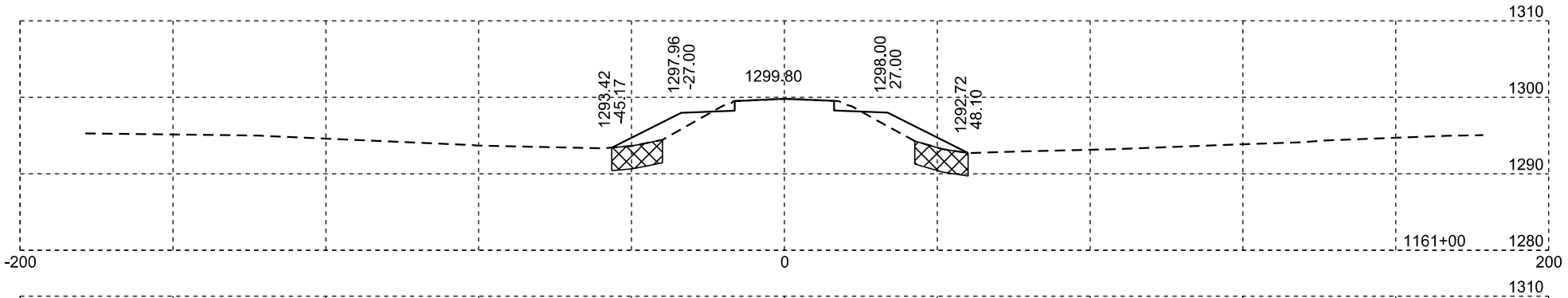

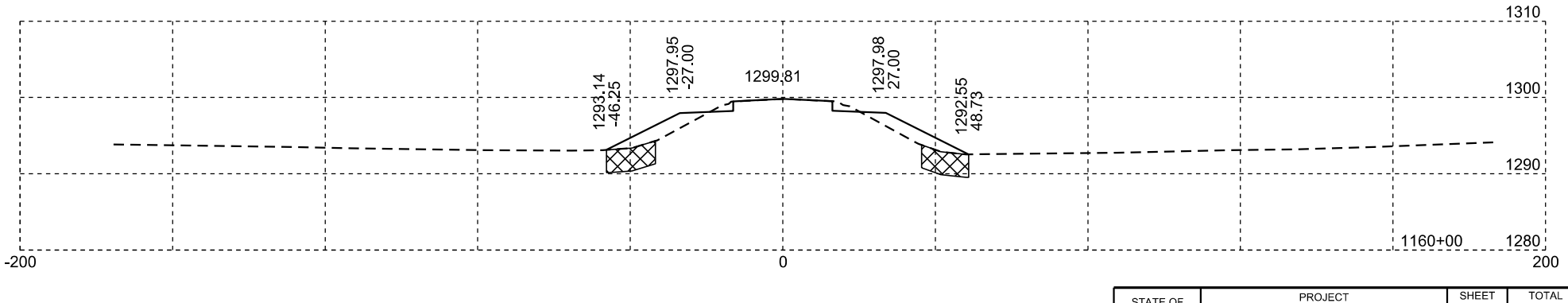

Muck

Plotting Date: 01/19/2024

STATE OF SOUTH DAKOTA	PROJECT	SHEET NO.	TOTAL SHEETS
	P-PH-B-PT 0010(124)296	X29	X169

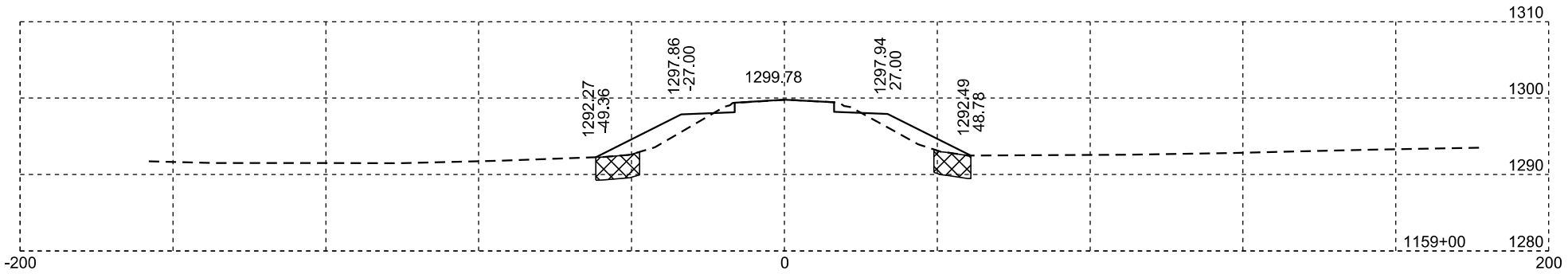

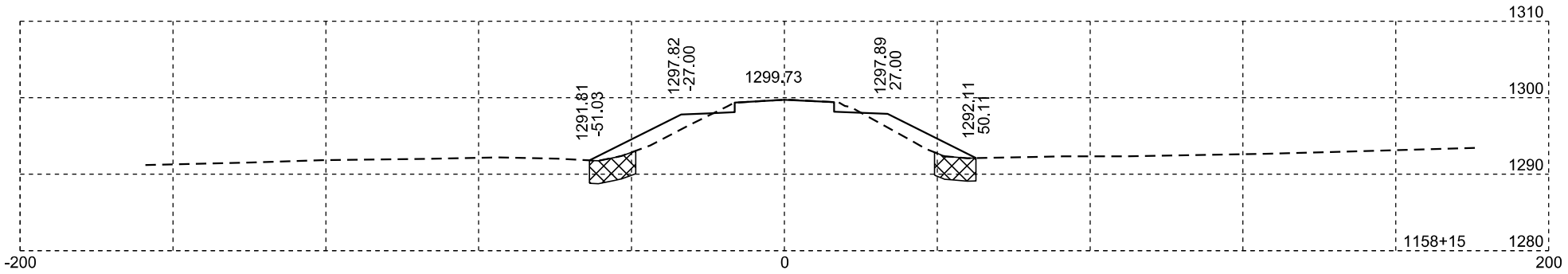

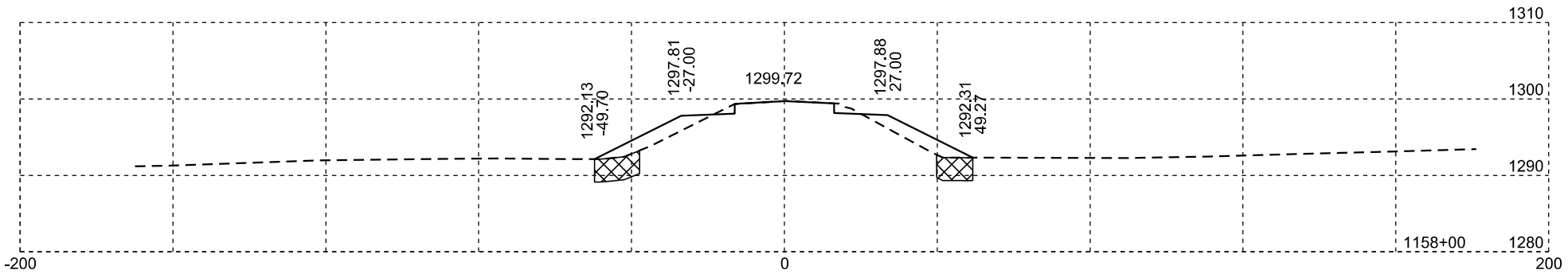

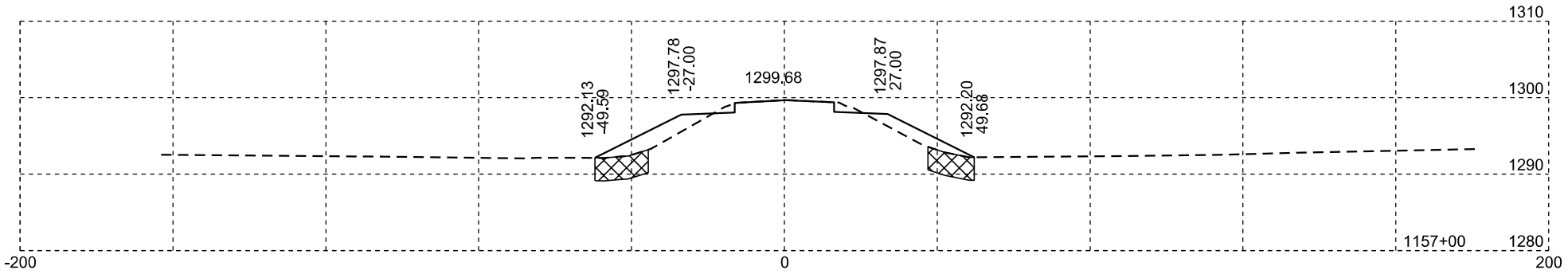

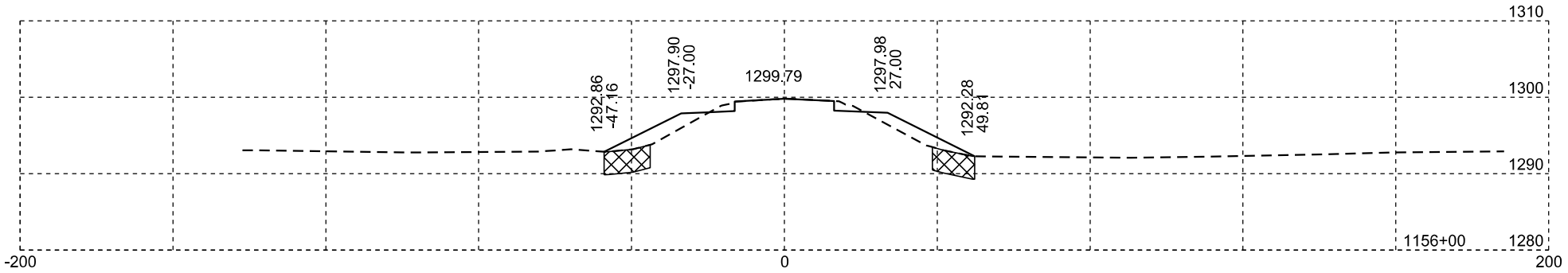

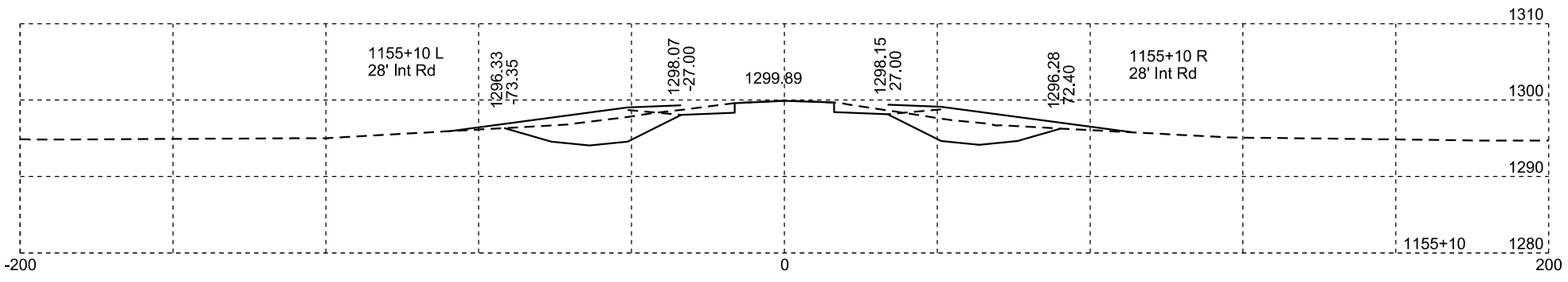

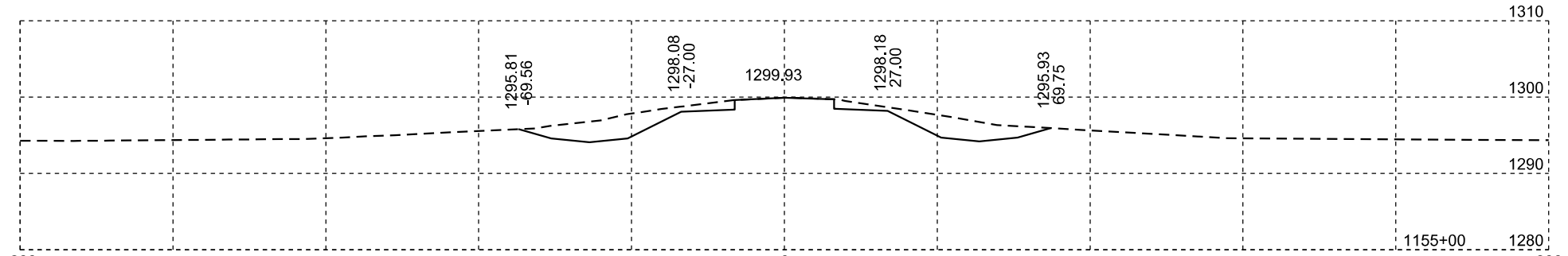

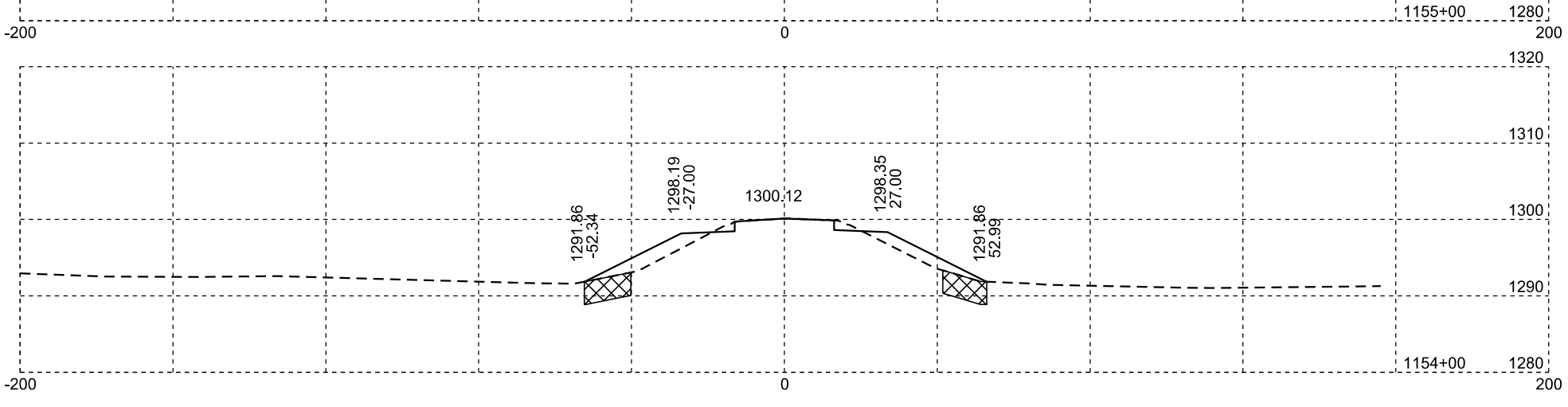

Muck

Plotting Date: 01/19/2024

STATE OF SOUTH DAKOTA	PROJECT	SHEET NO.	TOTAL SHEETS
	P-PH-B-PT 0010(124)296	X30	X169

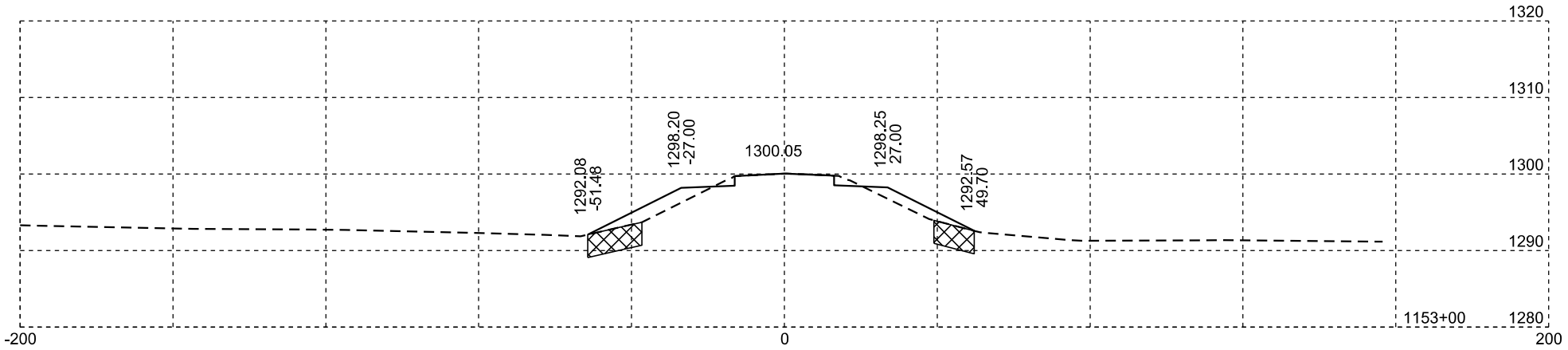

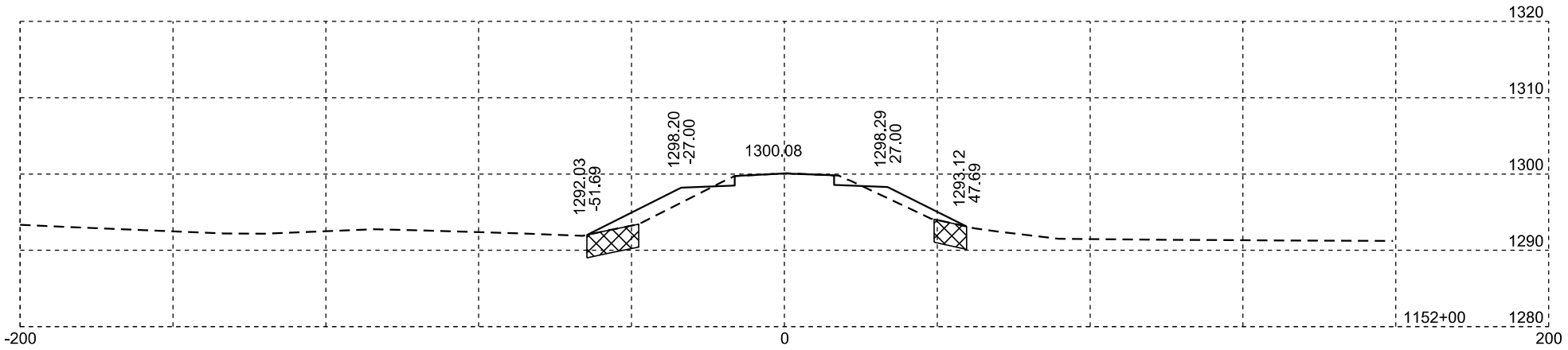

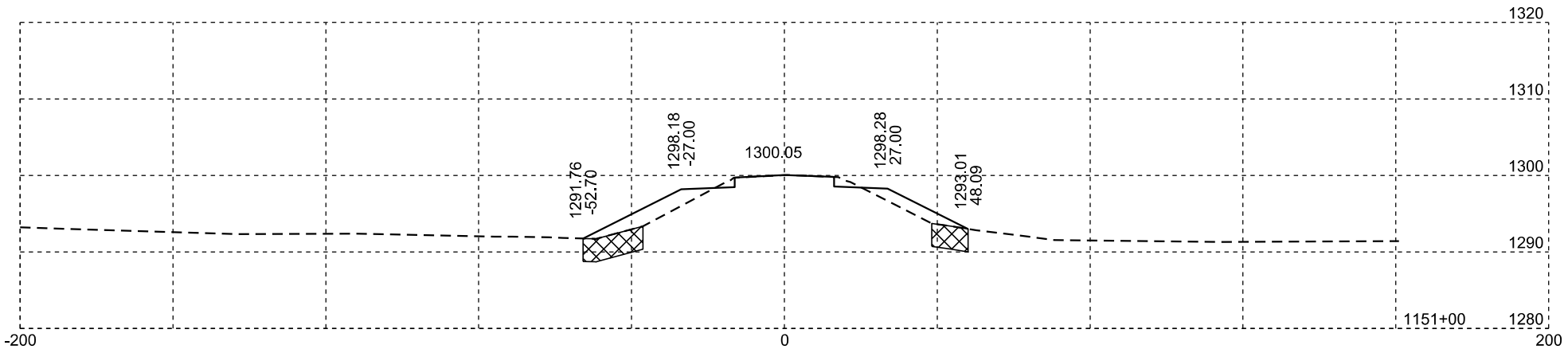

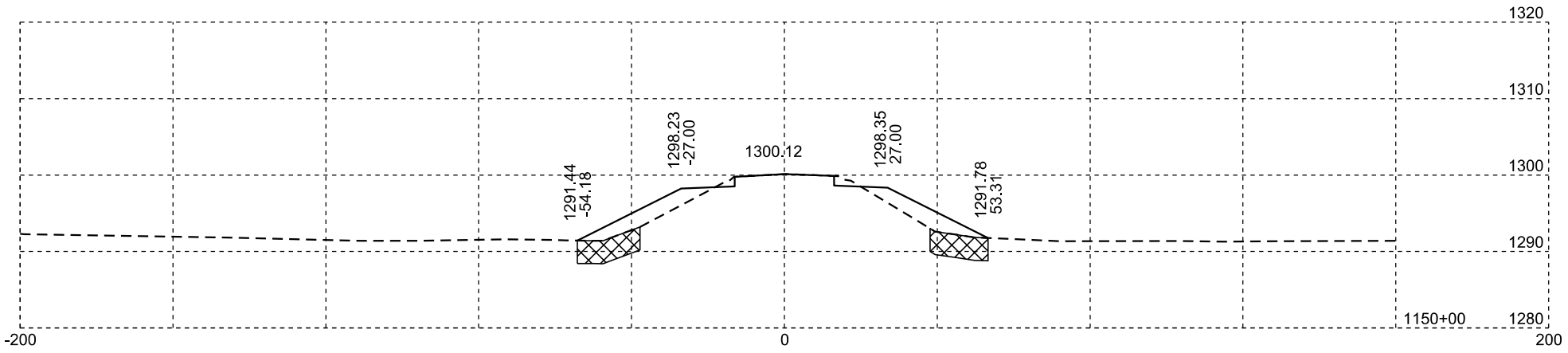

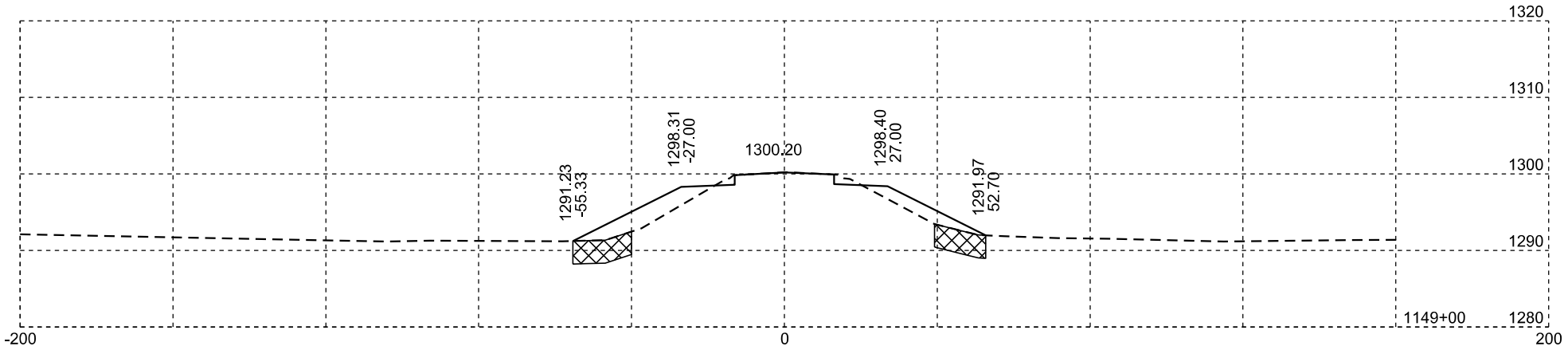

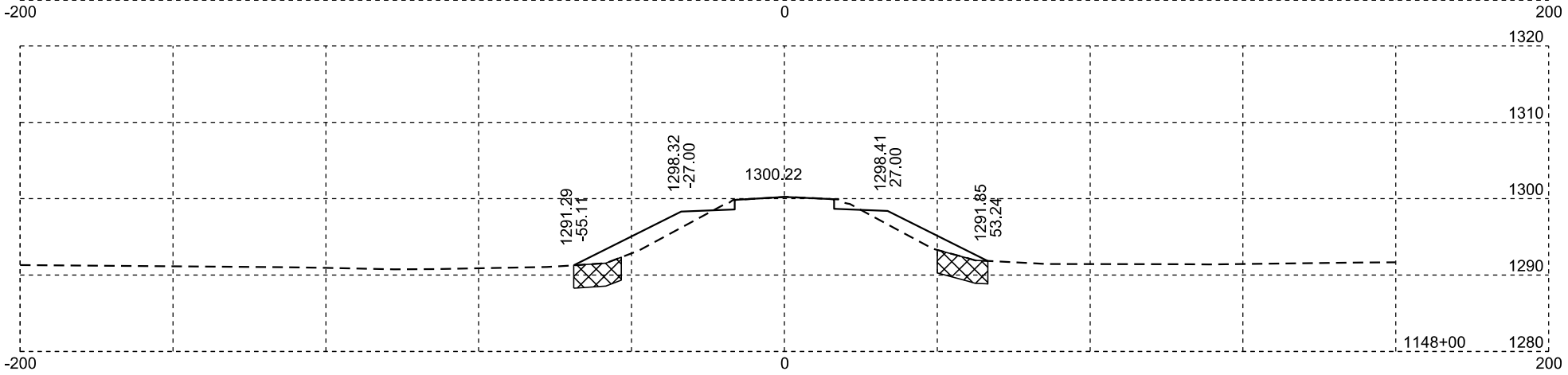

Muck

Plotting Date: 01/19/2024

STATE OF SOUTH DAKOTA	PROJECT	SHEET NO.	TOTAL SHEETS
	P-PH-B-PT 0010(124)296	X31	X169

Muck

-200
0
1292.14
-50.95
1298.12
-27.00
1299.94
1298.08
27.00
1291.79
52.16
1142+00
1280
1290
1300
1310
1320
200

-200
0
1291.78
-52.92
1298.26
-27.00
1300.18
1298.34
27.00
1291.97
52.49
1143+00
1280
1290
1300
1310
1320
200

-200
0
1291.24
-55.93
1298.47
-27.00
1300.51
1298.69
27.00
1291.59
55.40
1144+00
1280
1290
1300
1310
1320
200

-200
0
1291.24
-55.97
1298.48
-27.00
1300.53
1298.71
27.00
1291.63
55.33
1144+05
1280
1290
1300
1310
1320
200

-200
0
1291.55
-54.59
1298.44
-27.00
1300.42
1298.58
27.00
1292.08
52.97
1145+00
1280
1290
1300
1310
1320
200

-200
0
1291.59
-53.86
1298.30
-27.00
1300.24
1298.44
27.00
1291.80
53.57
1146+00
1280
1290
1300
1310
1320
200

-200
0
1291.19
-55.42
1298.30
-27.00
1300.23
1298.43
27.00
1291.81
53.47
1147+00
1280
1290
1300
1310
1320
200

Plotting Date: 01/19/2024

STATE OF SOUTH DAKOTA	PROJECT	SHEET NO.	TOTAL SHEETS
	P-PH-B-PT 0010(124)296	X32	X169

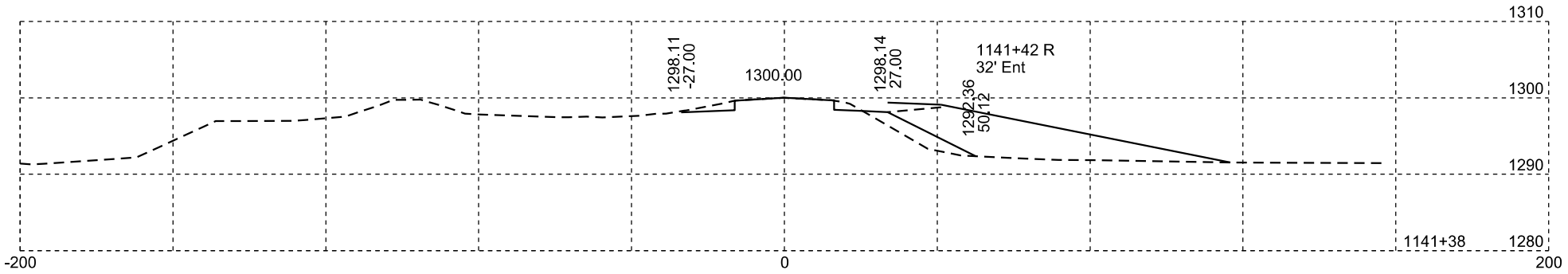

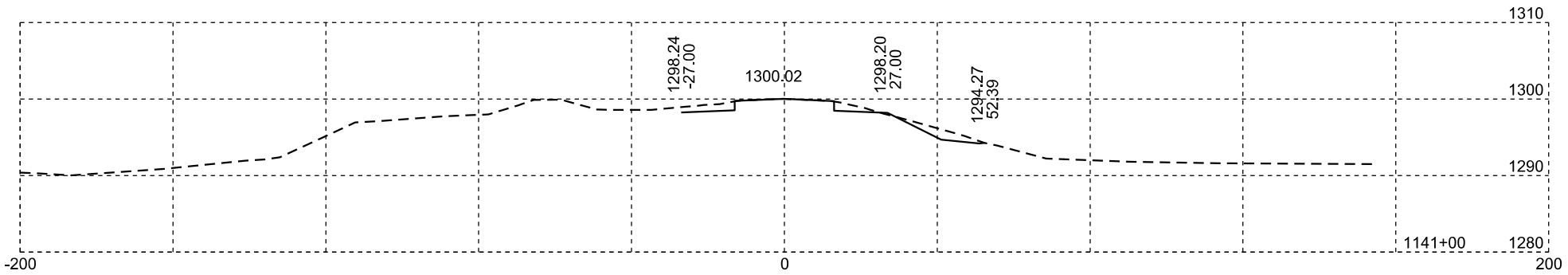

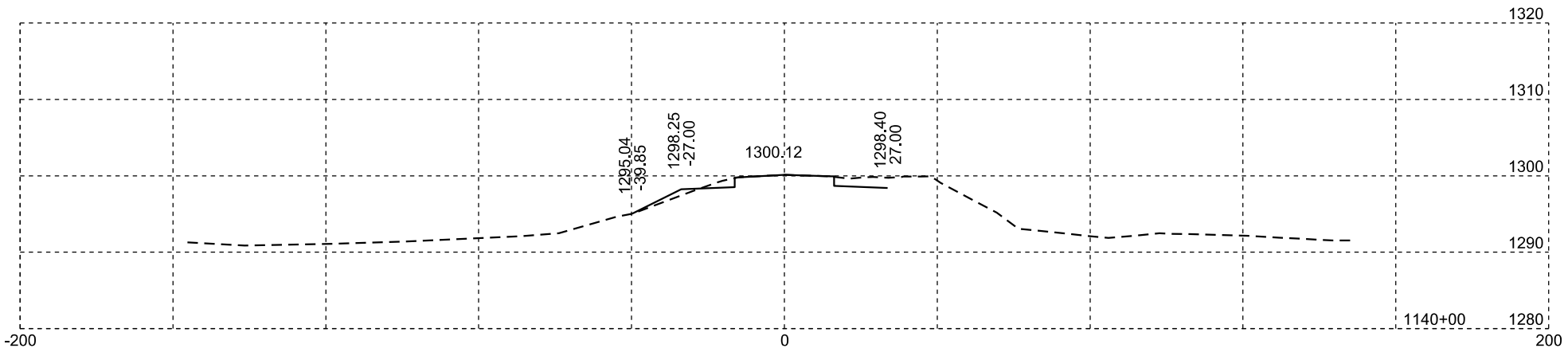

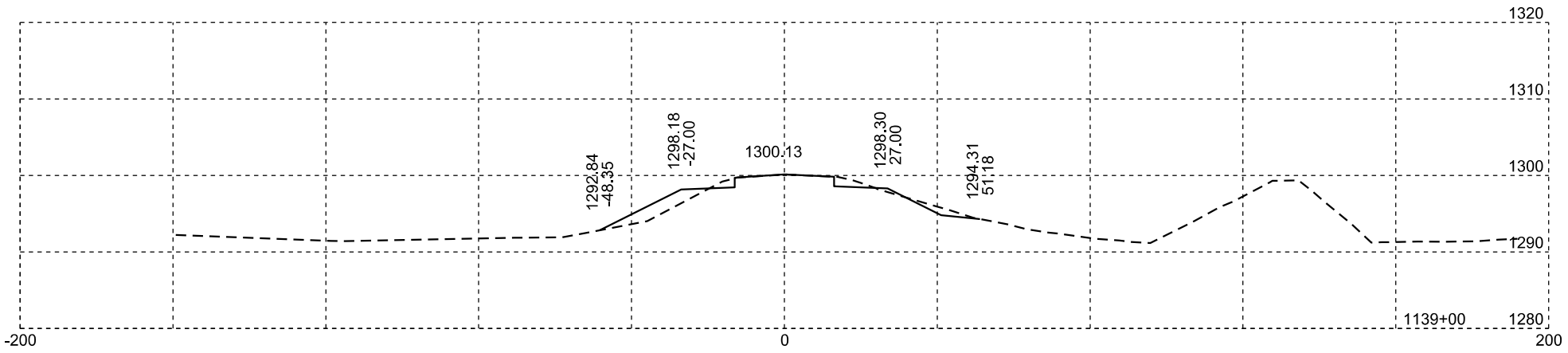

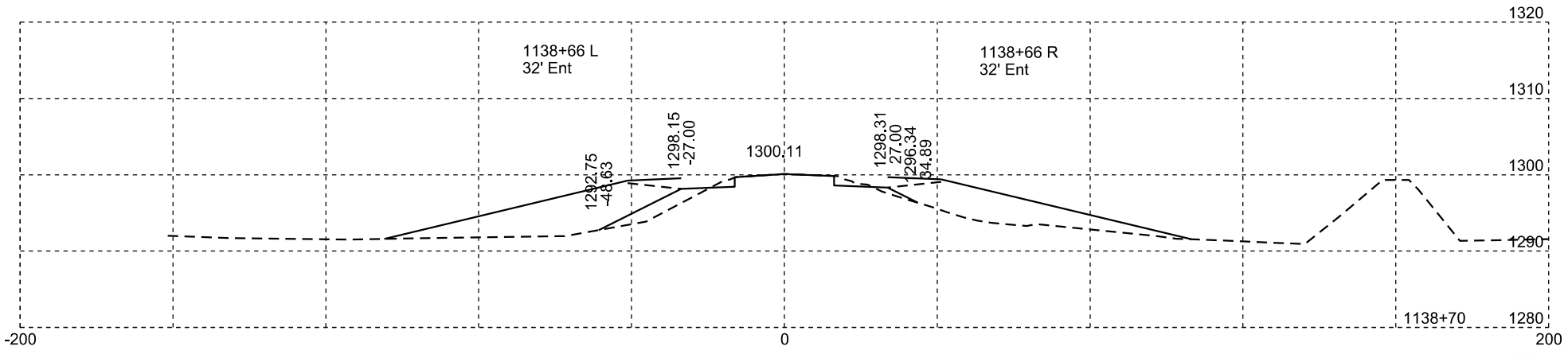

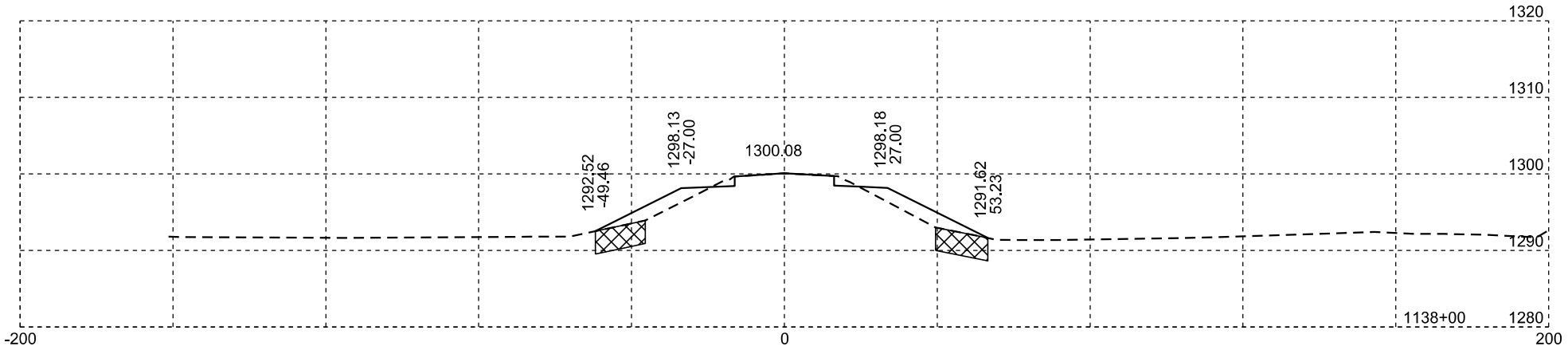

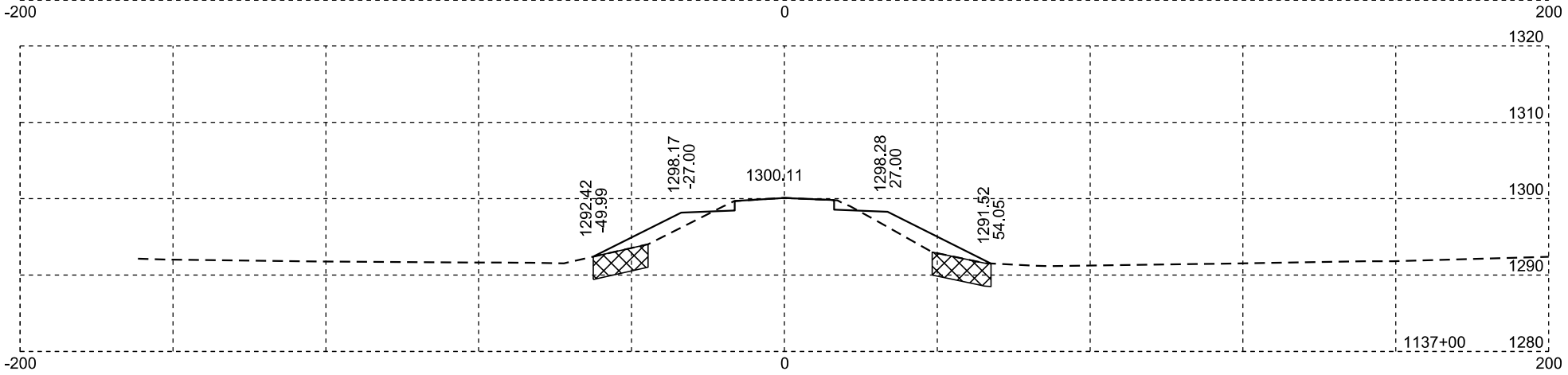

Muck

Rev 02/29/2024 DRM
Plotting Date: 02/29/2024

STATE OF SOUTH DAKOTA	PROJECT	SHEET NO.	TOTAL SHEETS
	P-PH-B-PT 0010(124)296	X33	X169

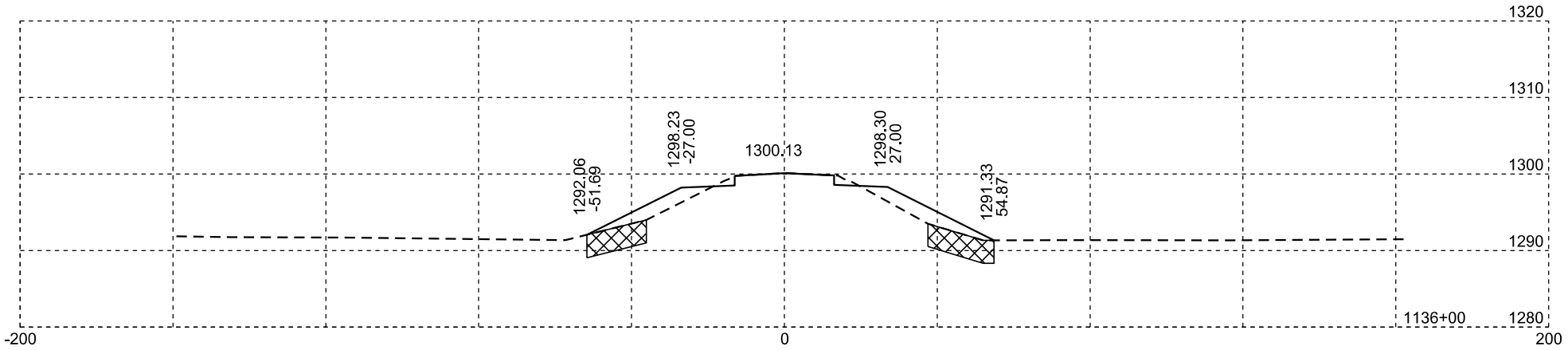

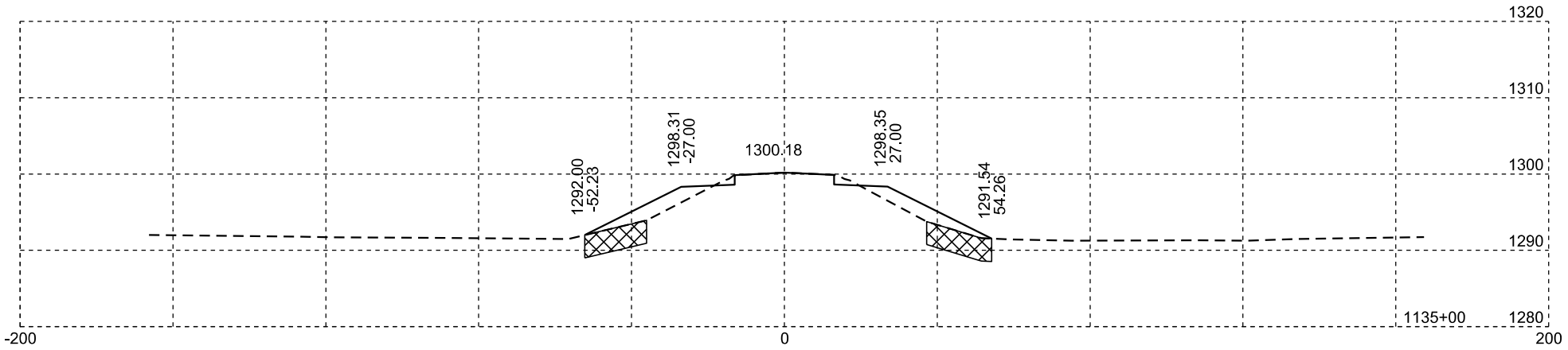

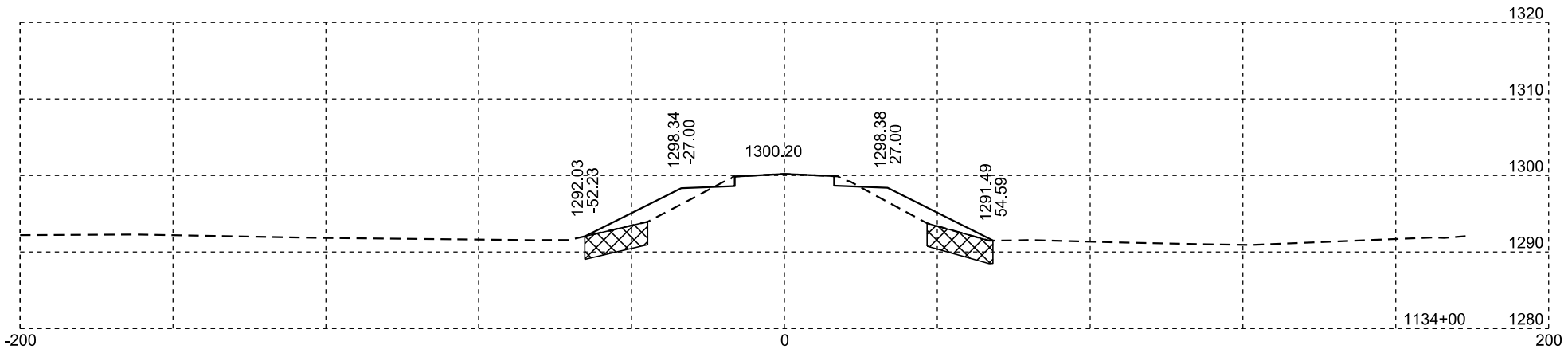

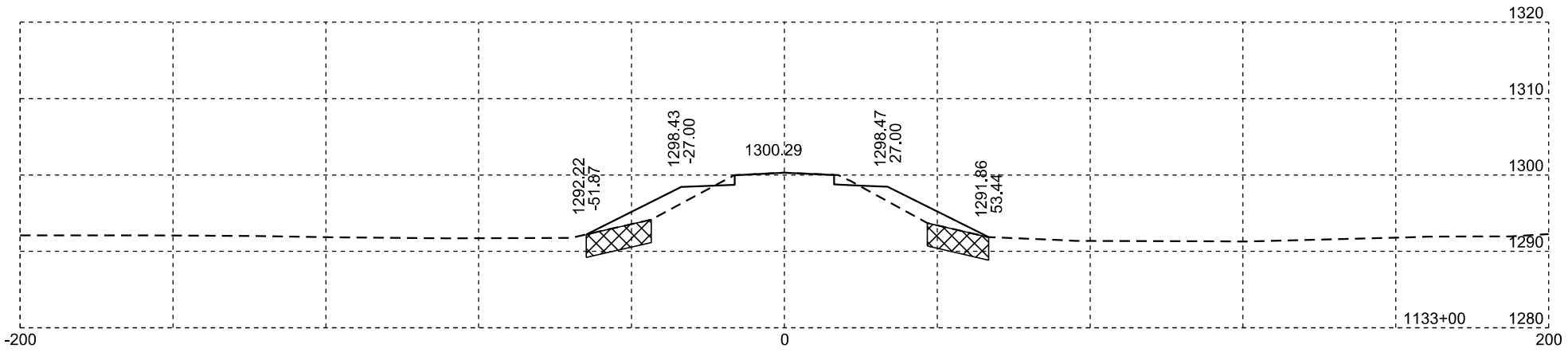

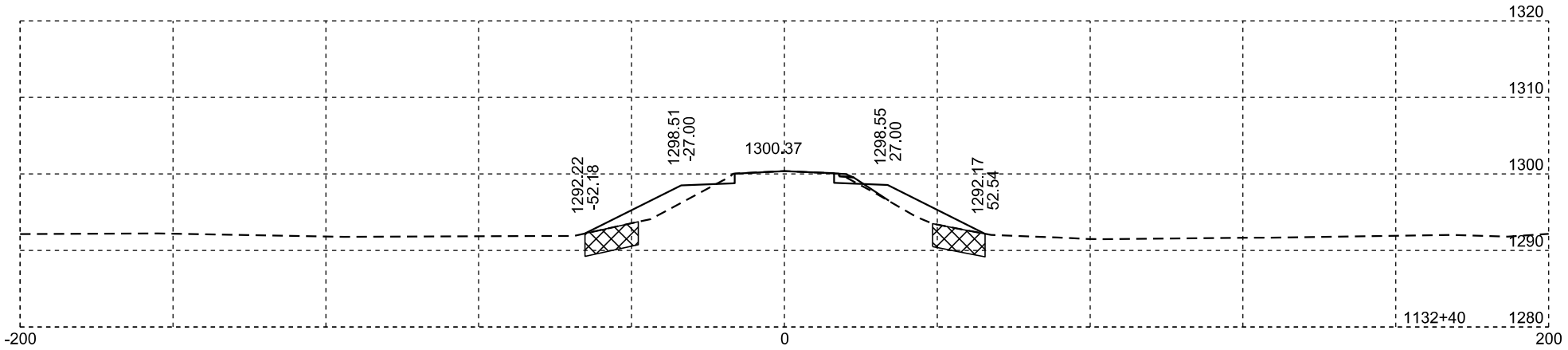

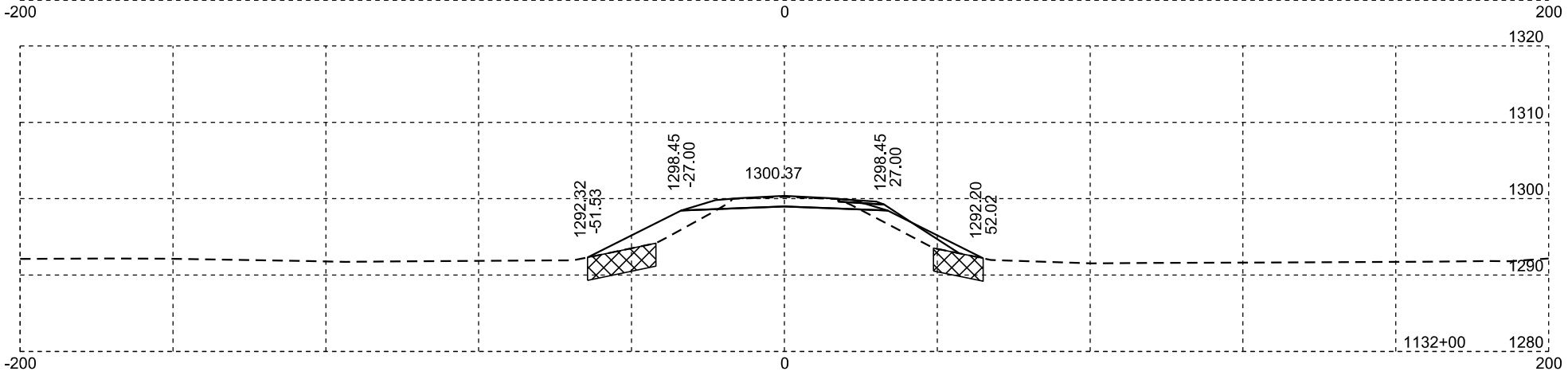

Muck

Rev 02/29/2024 DRM
Plotting Date: 02/29/2024

STATE OF SOUTH DAKOTA	PROJECT	SHEET NO.	TOTAL SHEETS
	P-PH-B-PT 0010(124)296	X34	X169

Muck

-200
0
1292.95
-48.81
1298.40
-27.00
1300.32
1298.40
27.00
1295.79
67.22
diversion
1126+79 R
24' Ent
1126+79
1280
200
1290
1300
1310
1320

-200
0
1292.88
-49.11
1298.40
-27.00
1300.32
1298.40
27.00
1294.59
54.67
diversion
1127+00
1280
200
1290
1300
1310

-200
0
1294.71
-43.97
1298.41
-27.00
1300.33
1298.41
27.00
1294.99
45.27
diversion
1128+00
1280
200
1290
1300
1310

-200
0
1285.91
-77.03
1298.42
-27.00
1300.34
1298.42
27.00
1286.16
76.04
diversion
1128+64
1270
200
1280
1290
1300
1310

-200
0
1296.12
-43.38
1298.42
-27.00
1300.34
1298.42
27.00
1289.79
61.51
diversion
1129+00
1270
200
1280
1290
1300
1310

-200
0
1292.72
-49.86
1298.43
-27.00
1300.35
1298.43
27.00
1291.04
56.55
diversion
1130+00
1280
200
1290
1300
1310

-200
0
1292.47
-50.87
1298.44
-27.00
1300.36
1298.44
27.00
diversion
1292.14
52.21
1131+00
1280
200
1290
1300
1310

Rev 02/29/2024 DRM
Plotting Date: 02/29/2024

STATE OF SOUTH DAKOTA	PROJECT	SHEET NO.	TOTAL SHEETS
	P-PH-B-PT 0010(124)296	X35	X169

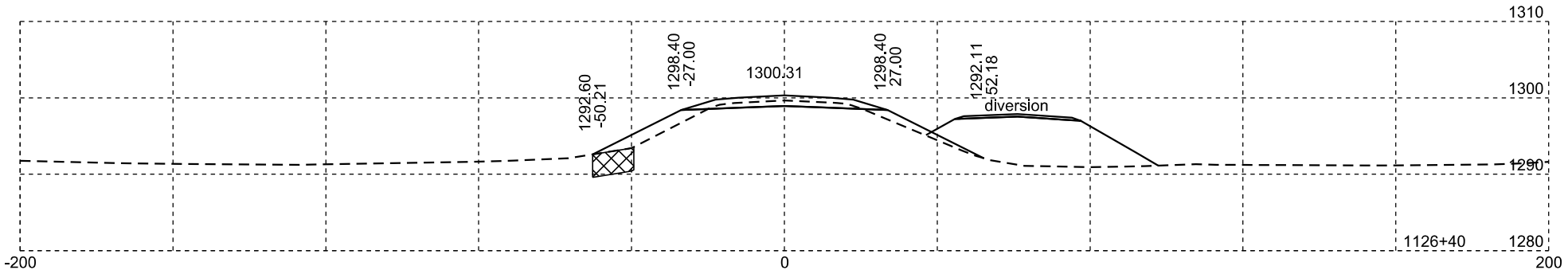

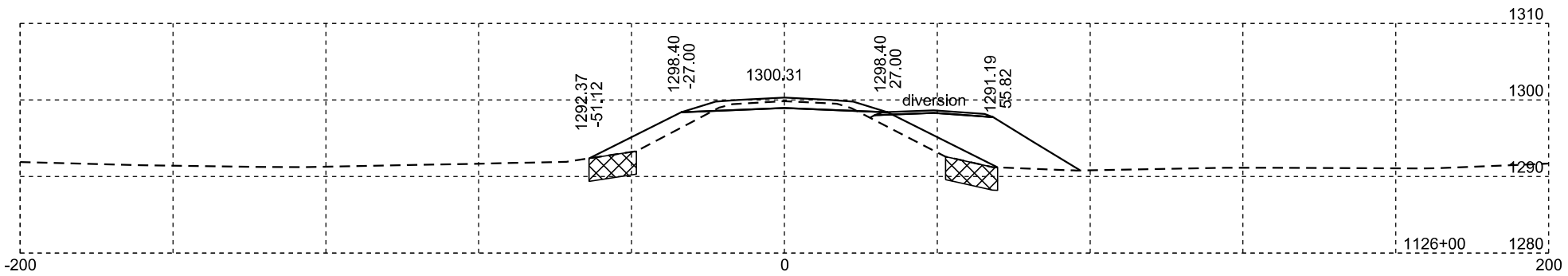

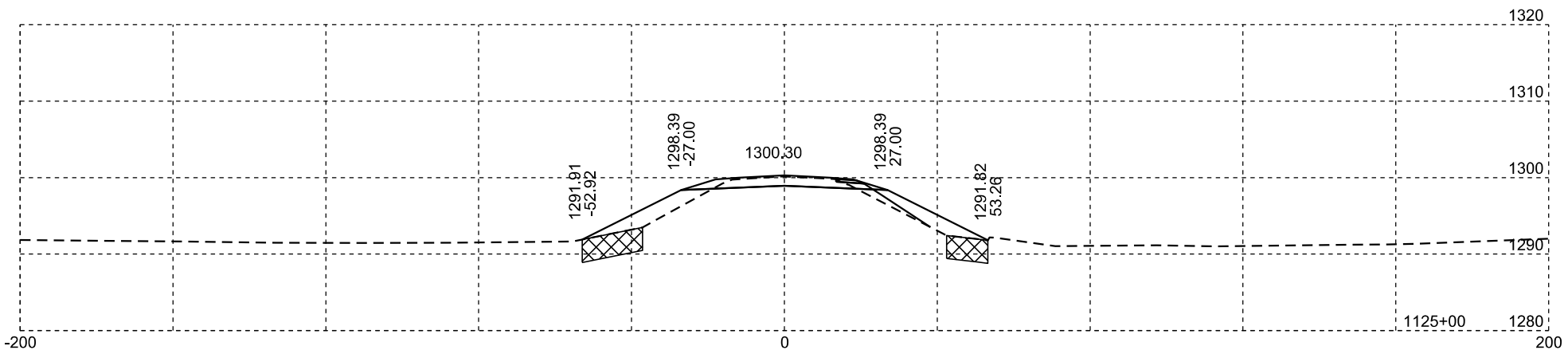

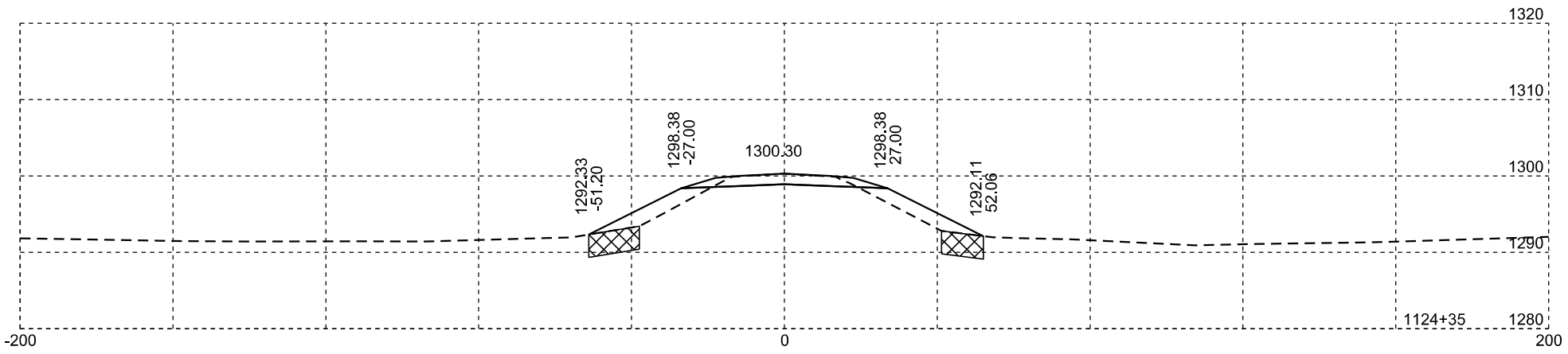

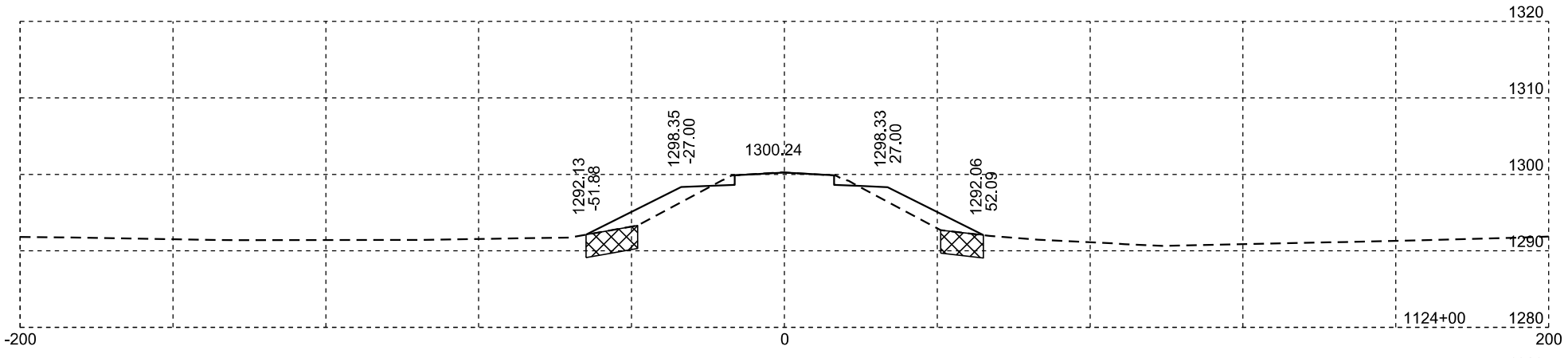

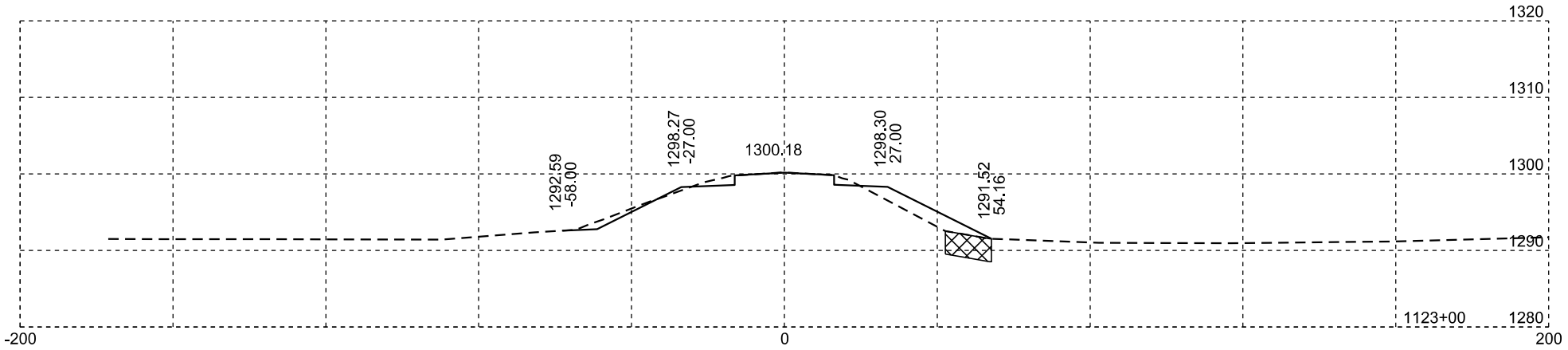

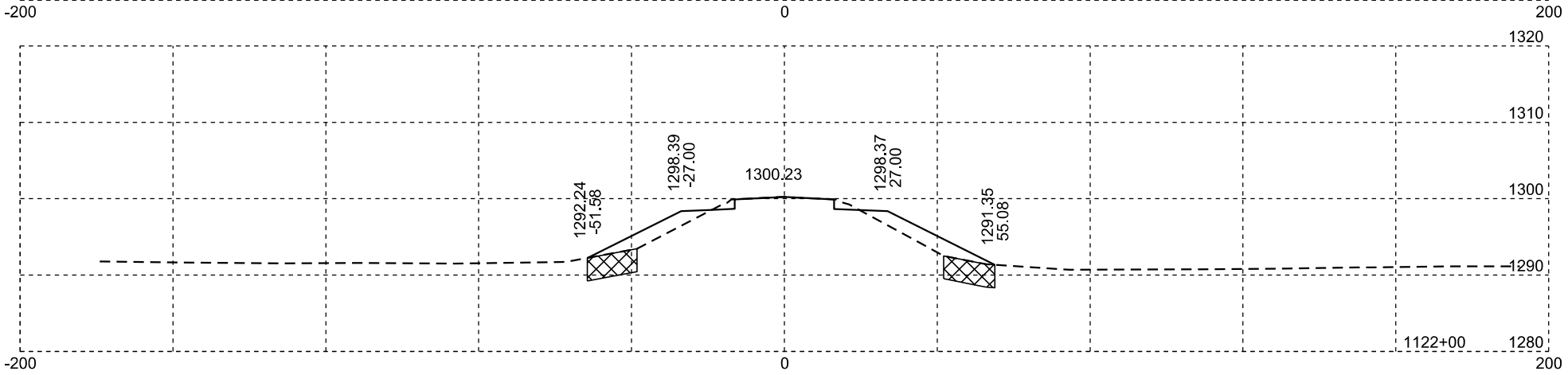

Muck

Rev 02/29/2024 DRM
Plotting Date: 02/29/2024

STATE OF SOUTH DAKOTA	PROJECT	SHEET NO.	TOTAL SHEETS
	P-PH-B-PT 0010(124)296	X36	X169

Muck

-200

1291.70
-54.34

1298.53
-27.00

1300.43

1298.58
27.00

1290.33
60.03

0

1116+00

-200

1291.82
-53.78

1298.52
-27.00

1300.44

1298.59
27.00

1290.79
58.20

0

1117+00

-200

1292.12
-52.60

1298.52
-27.00

1300.39

1298.59
27.00

1290.65
58.77

0

1118+00

-200

1292.43
-51.23

1298.48
-27.00

1300.36

1298.54
27.00

1291.04
56.97

0

1119+00

-200

1292.20
-51.96

1298.44
-27.00

1300.37

1298.52
27.00

1291.01
57.02

0

1120+00

-200

1292.10
-52.22

1298.40
-27.00

1300.28

1298.40
27.00

1291.93
81.56

0

1121+00

1280
1290
1300
1310
1320
200

Plotting Date: 01/19/2024

STATE OF SOUTH DAKOTA	PROJECT	SHEET NO.	TOTAL SHEETS
	P-PH-B-PT 0010(124)296	X37	X169

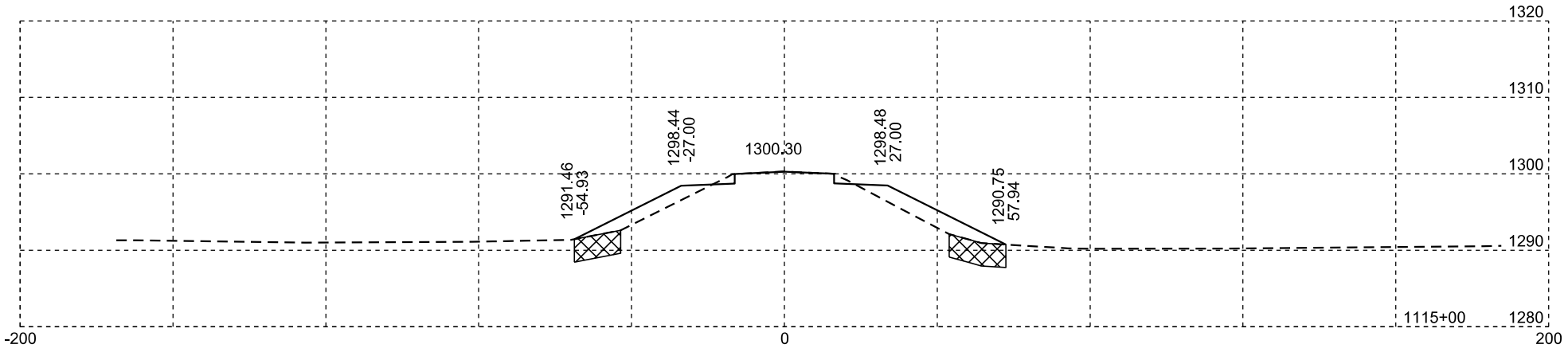

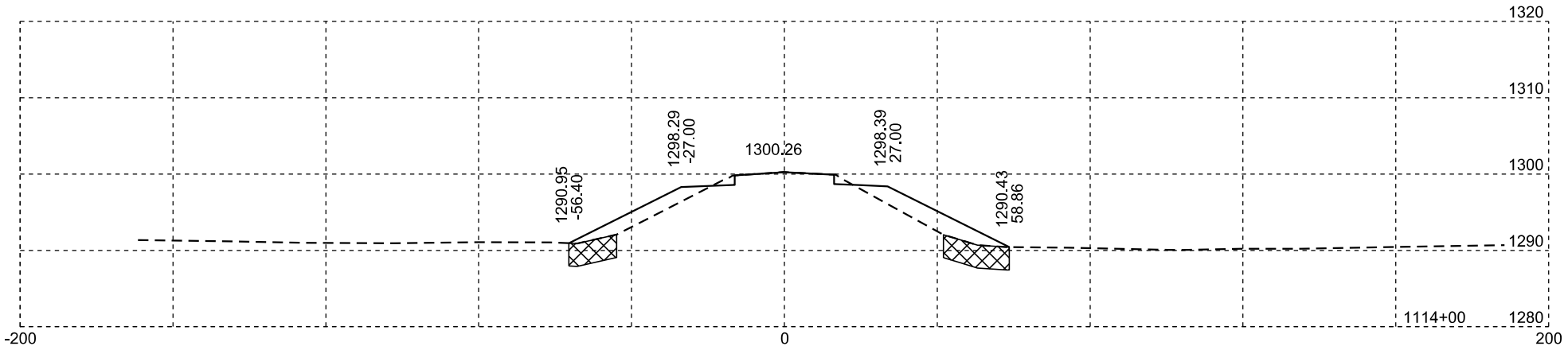

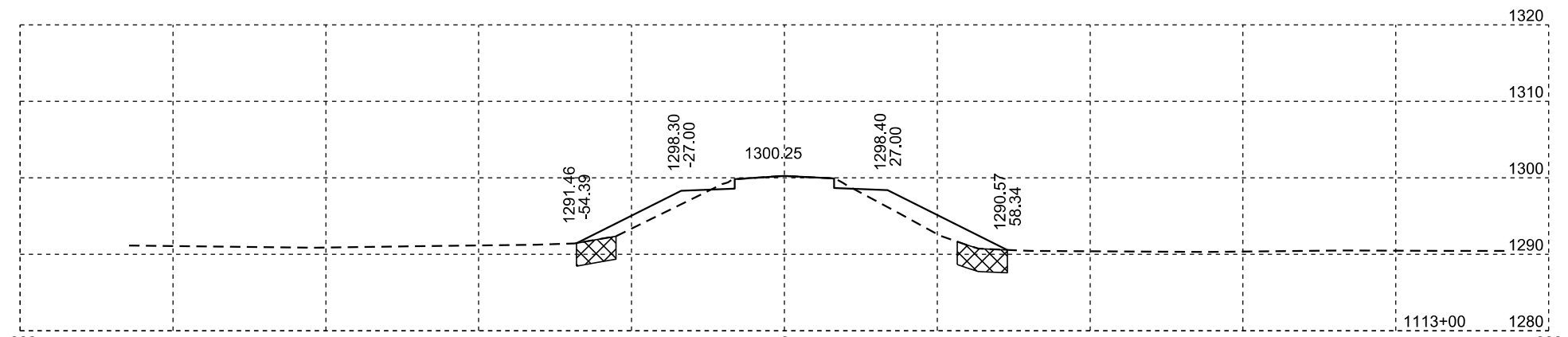

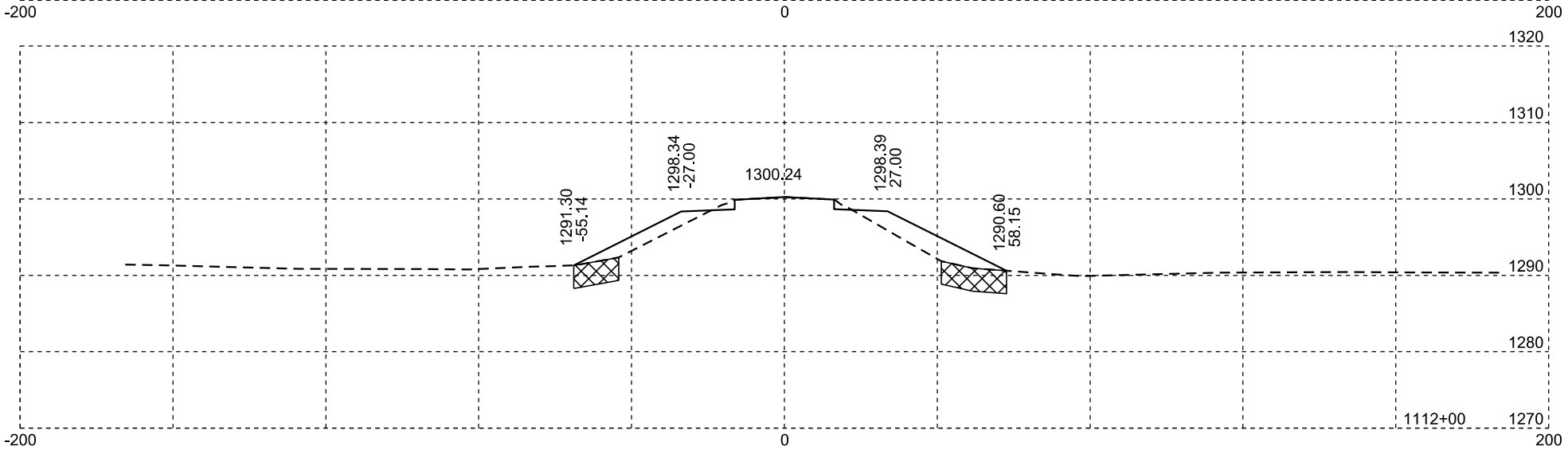

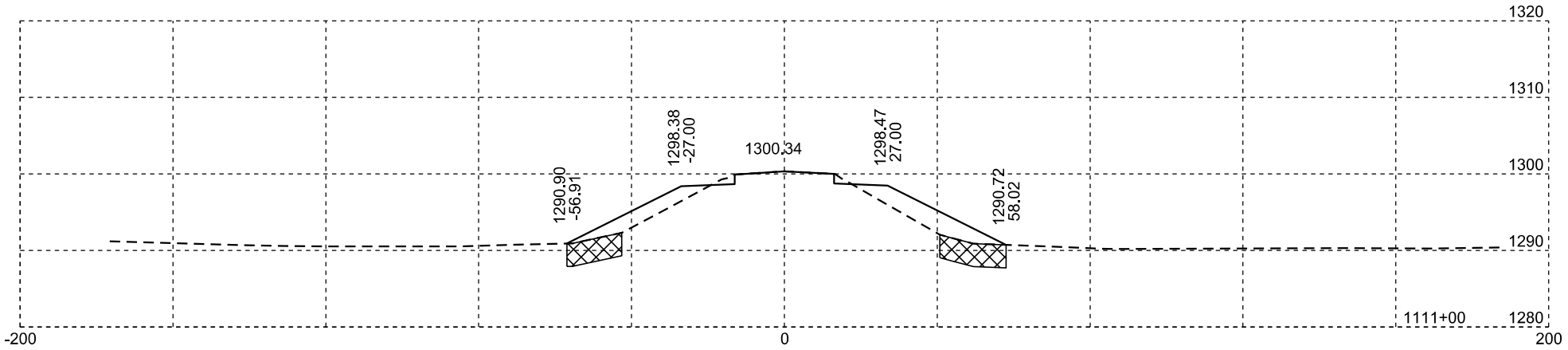

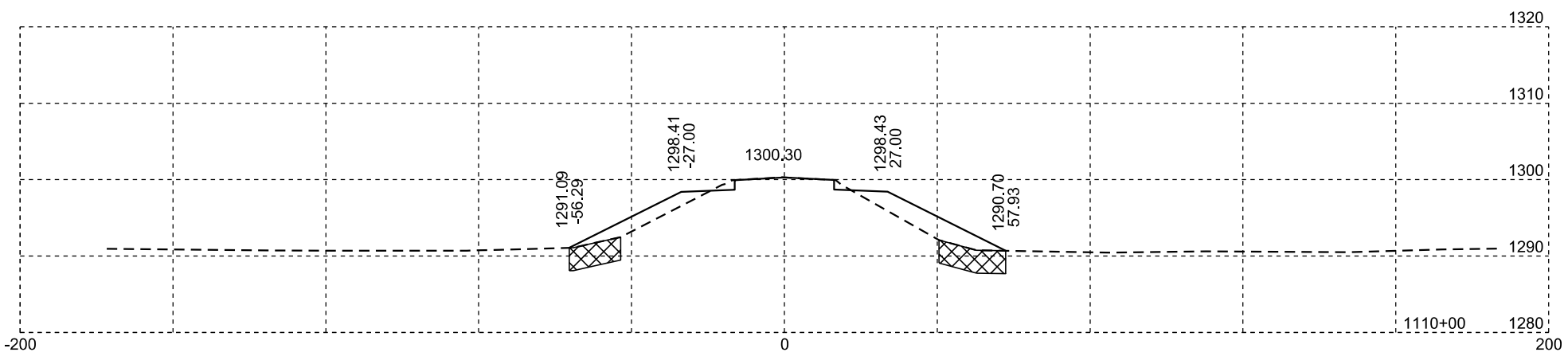

Muck

Plotting Date: 01/19/2024

STATE OF SOUTH DAKOTA	PROJECT	SHEET NO.	TOTAL SHEETS
	P-PH-B-PT 0010(124)296	X38	X169

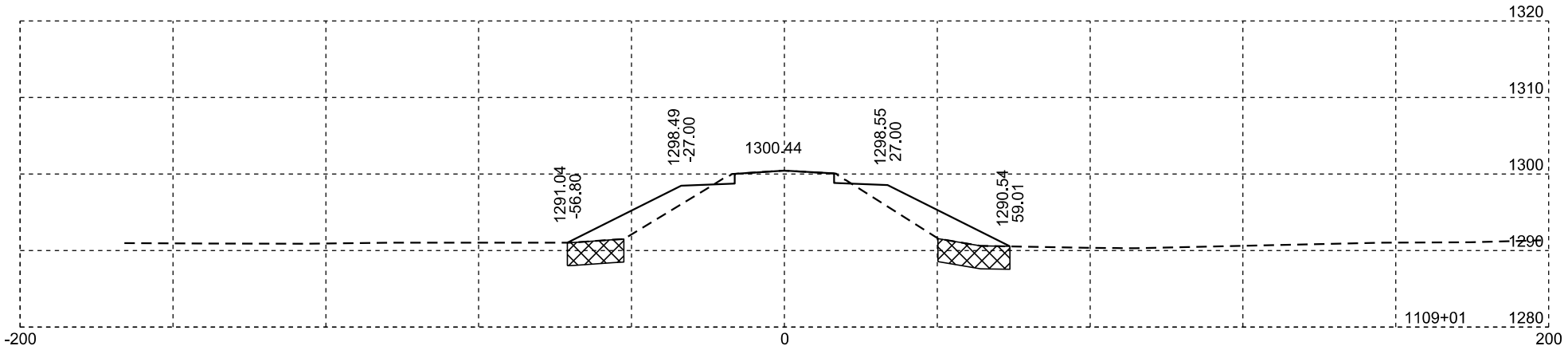

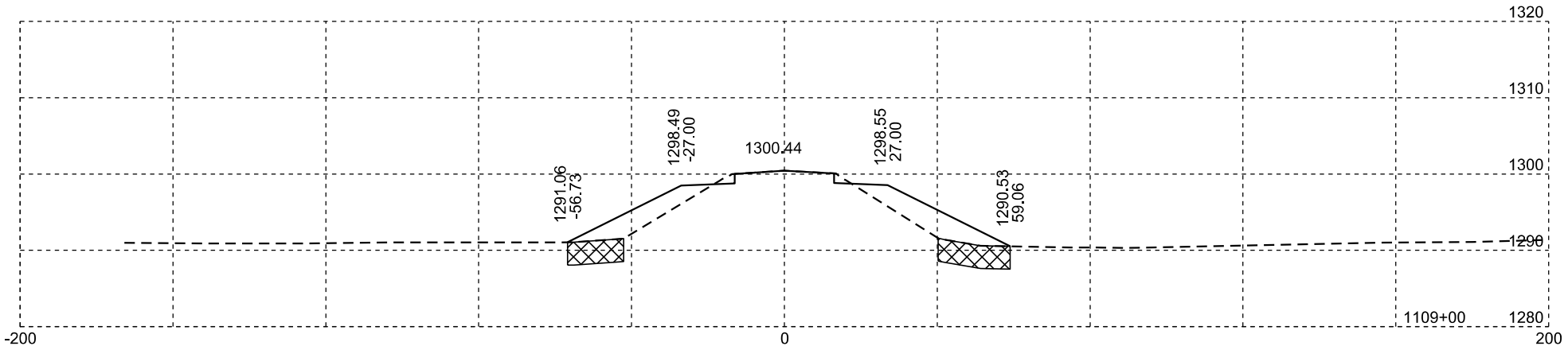

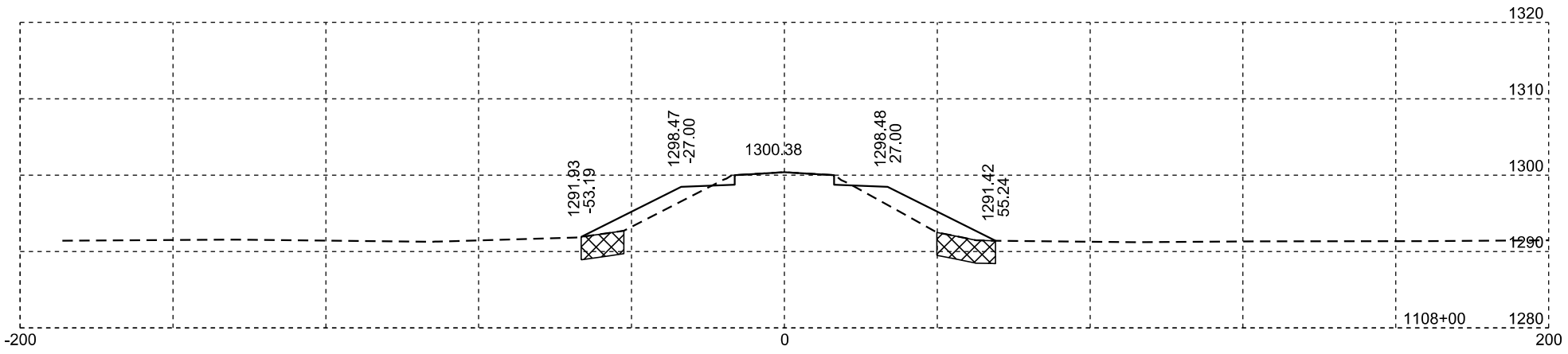

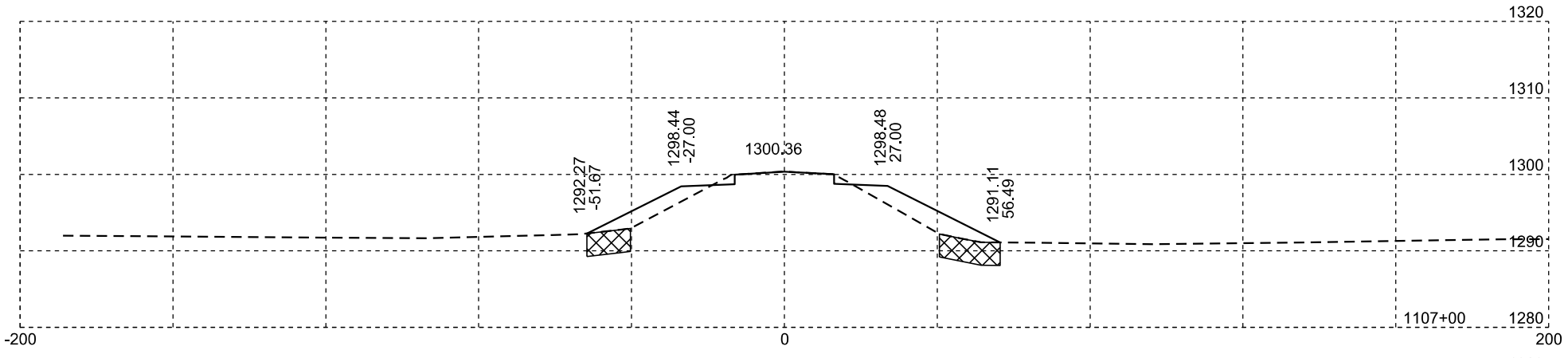

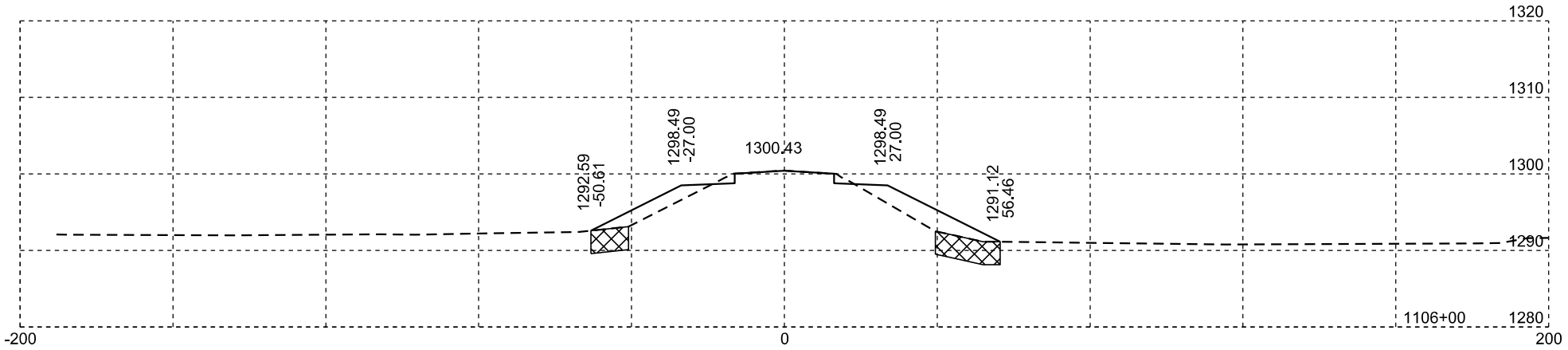

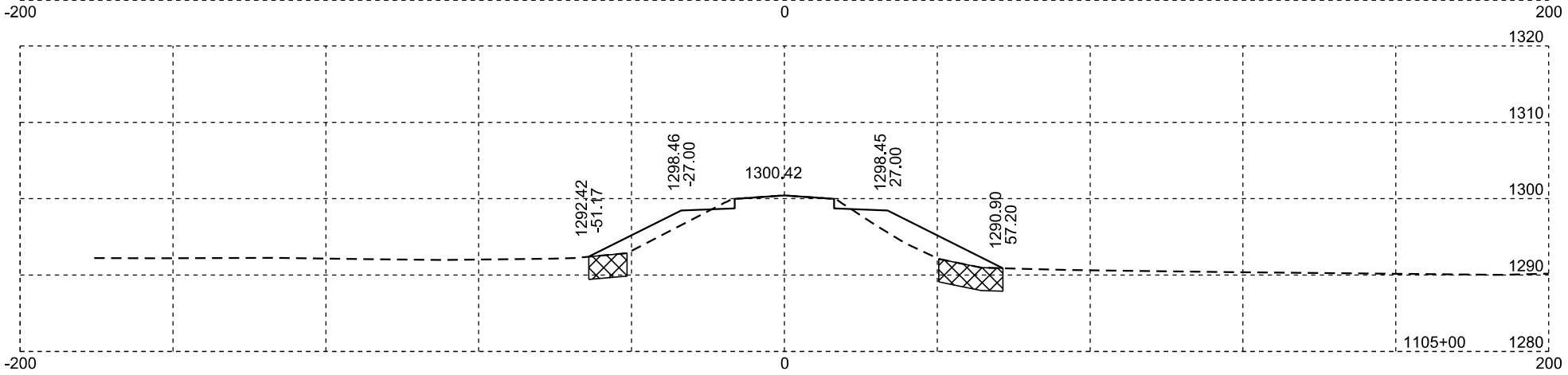

Muck

Plotting Date: 01/19/2024

STATE OF SOUTH DAKOTA	PROJECT	SHEET NO.	TOTAL SHEETS
	P-PH-B-PT 0010(124)296	X39	X169

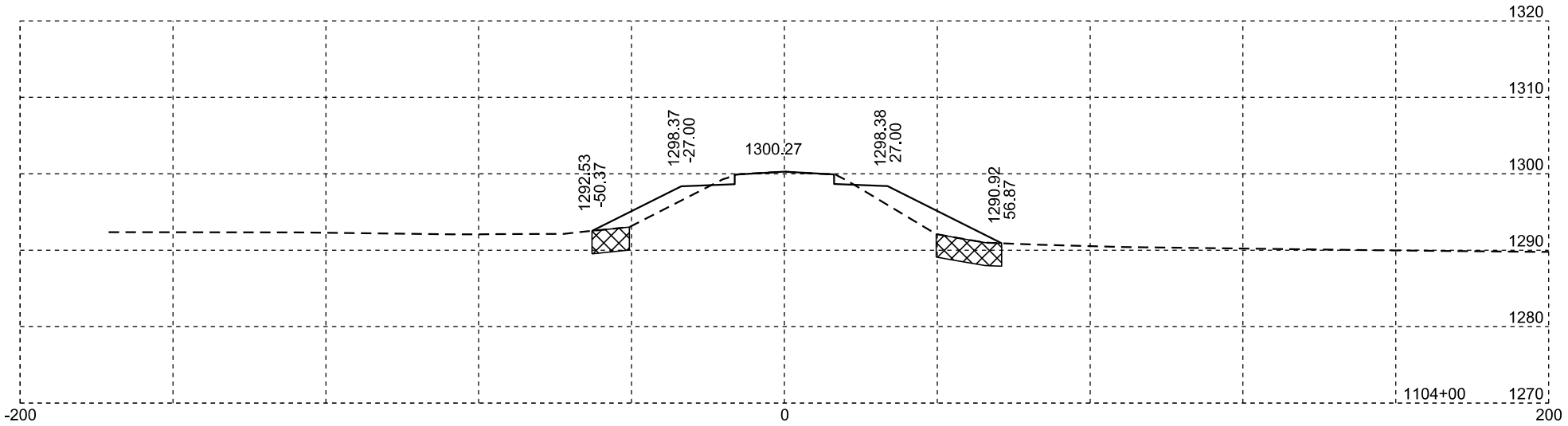

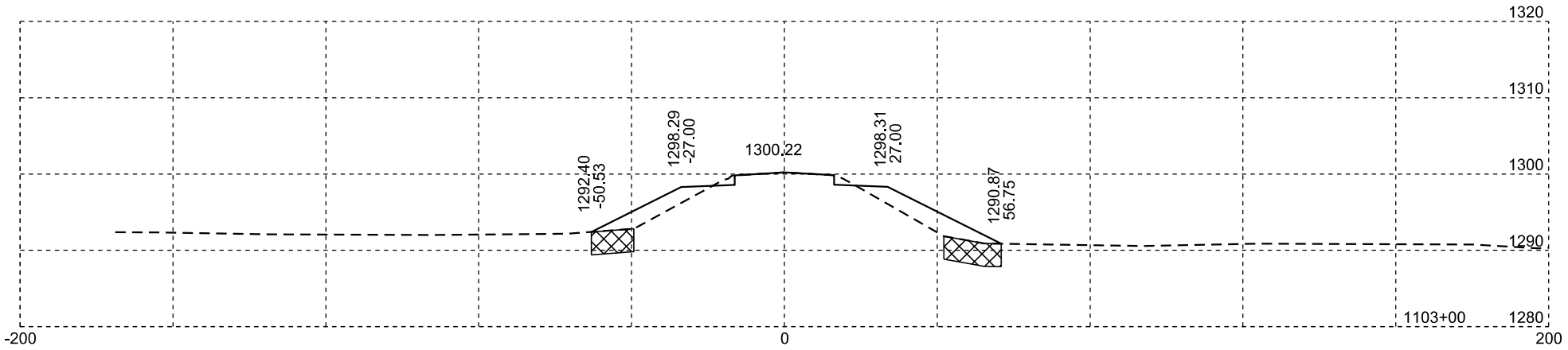

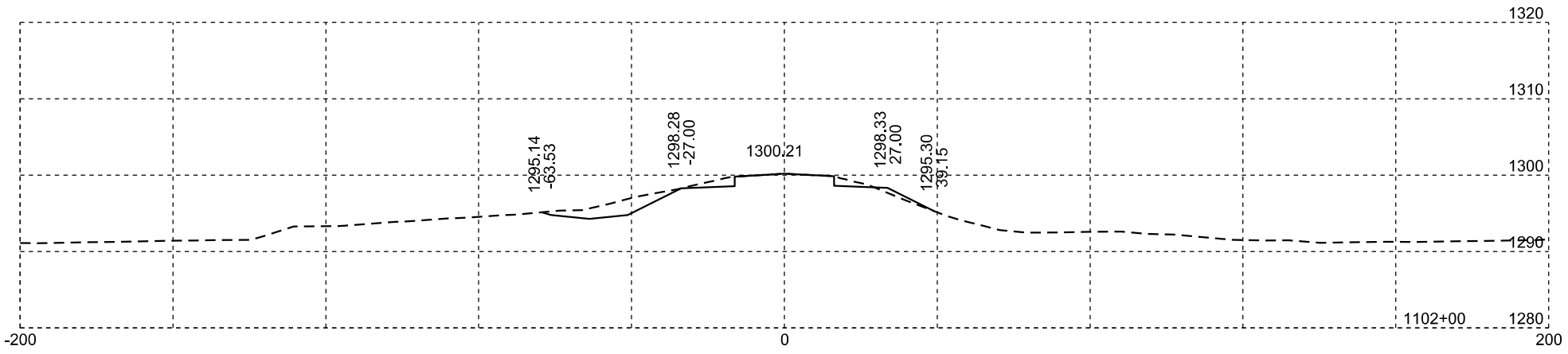

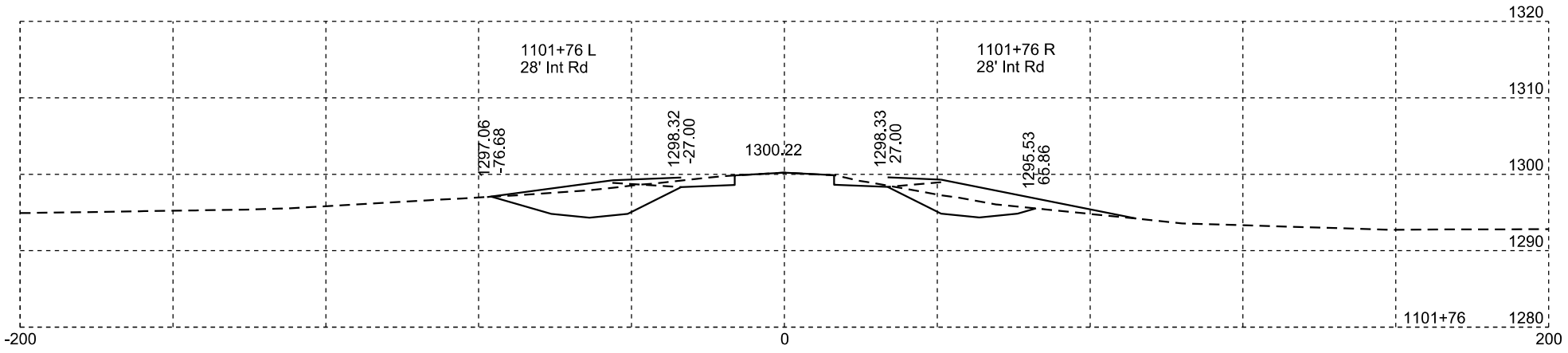

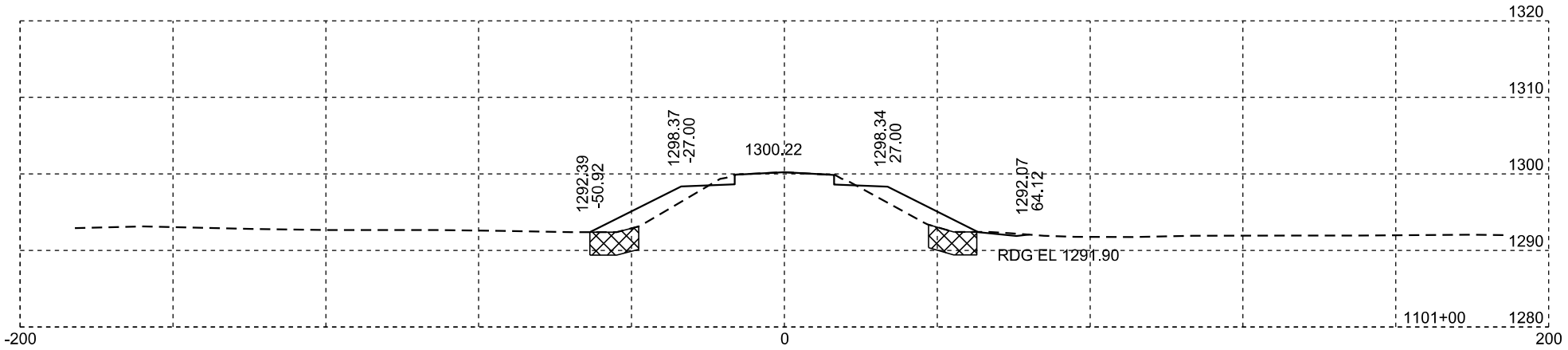

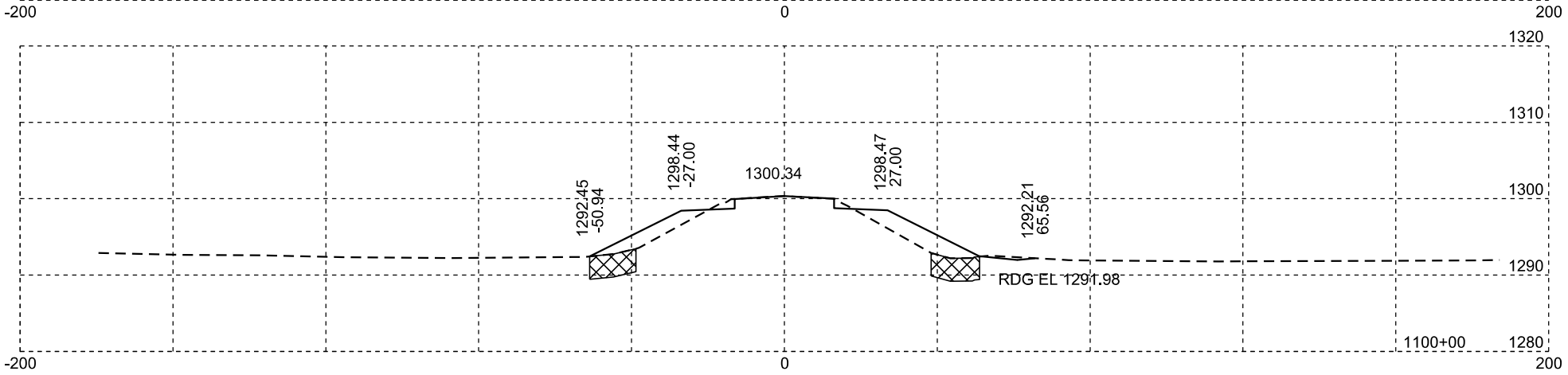

Muck

Rev 02/29/2024 DRM
Plotting Date: 02/29/2024

STATE OF SOUTH DAKOTA	PROJECT	SHEET NO.	TOTAL SHEETS
	P-PH-B-PT 0010(124)296	X40	X169

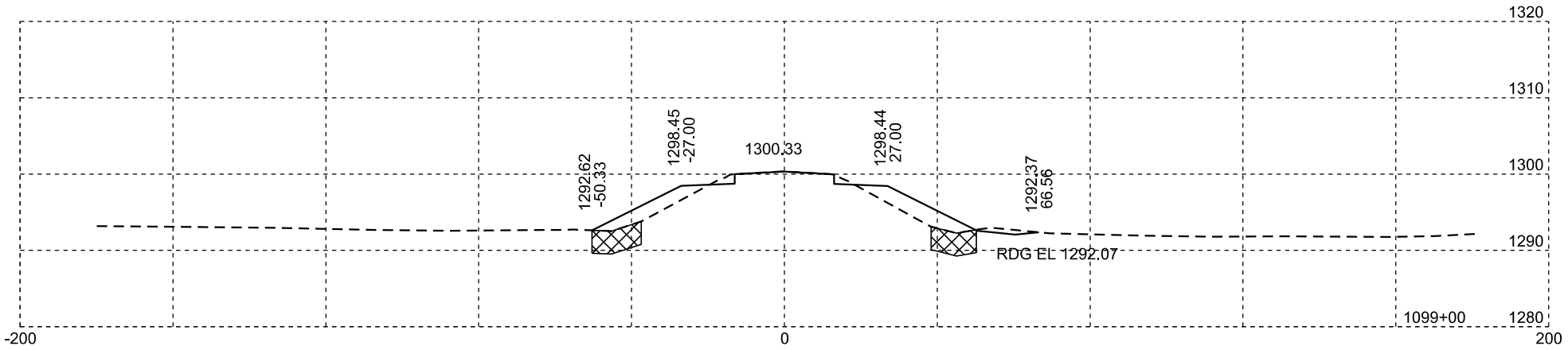

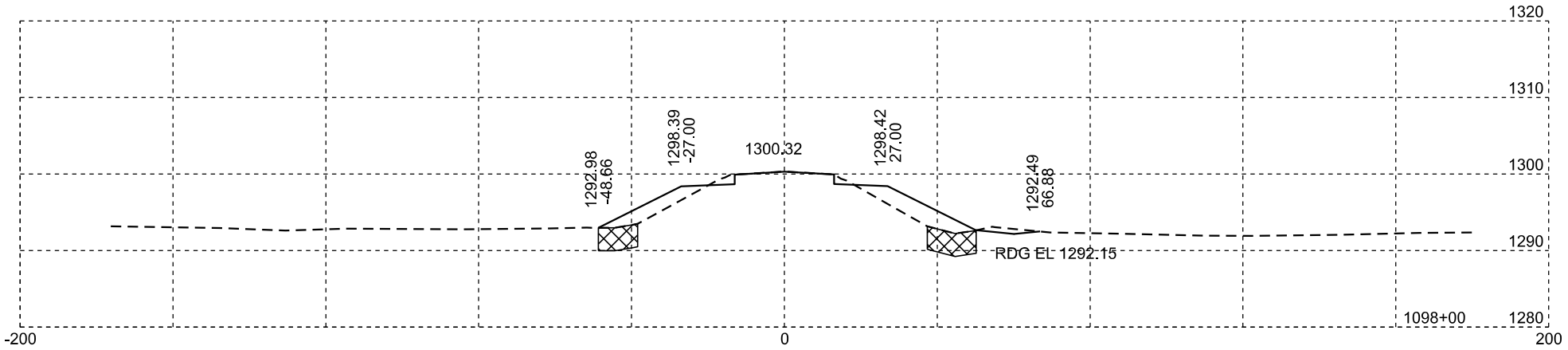

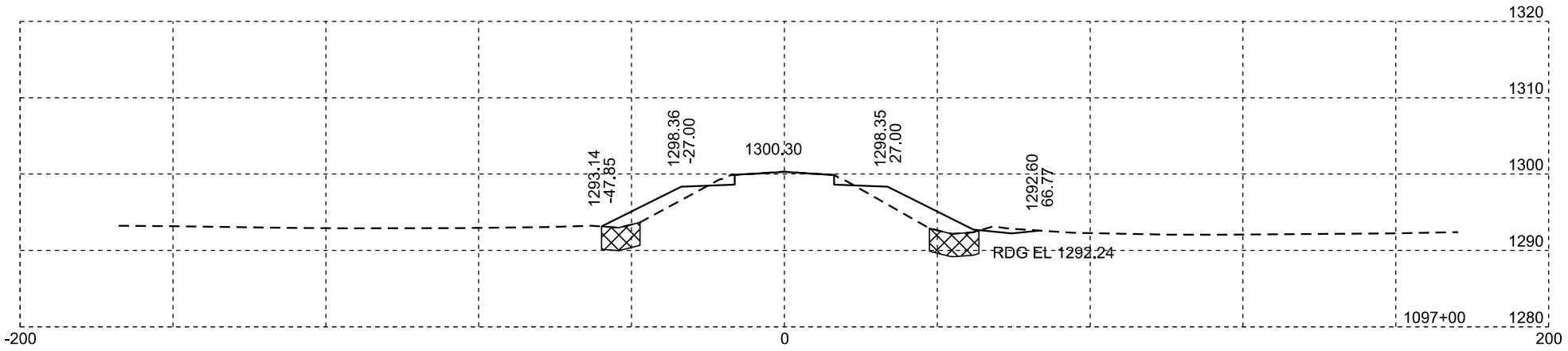

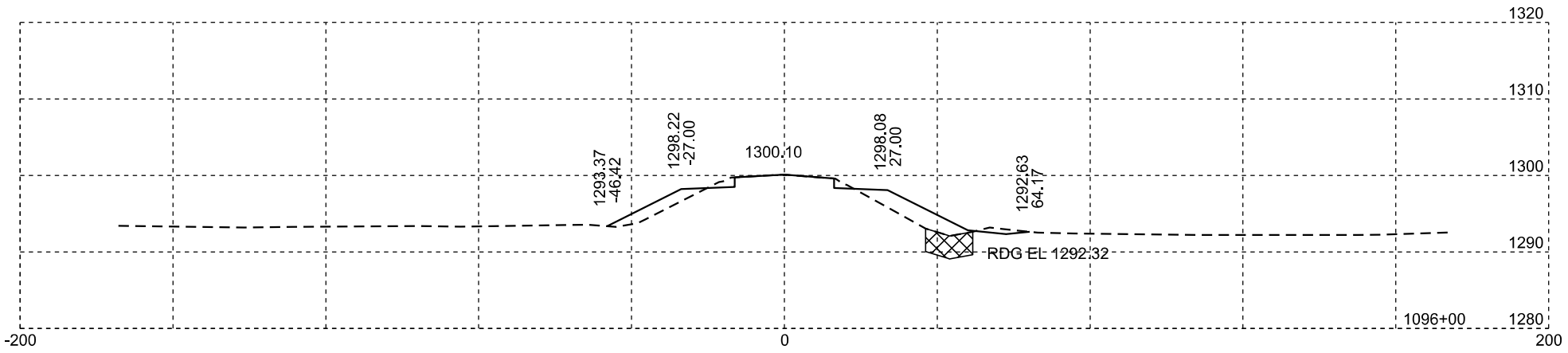

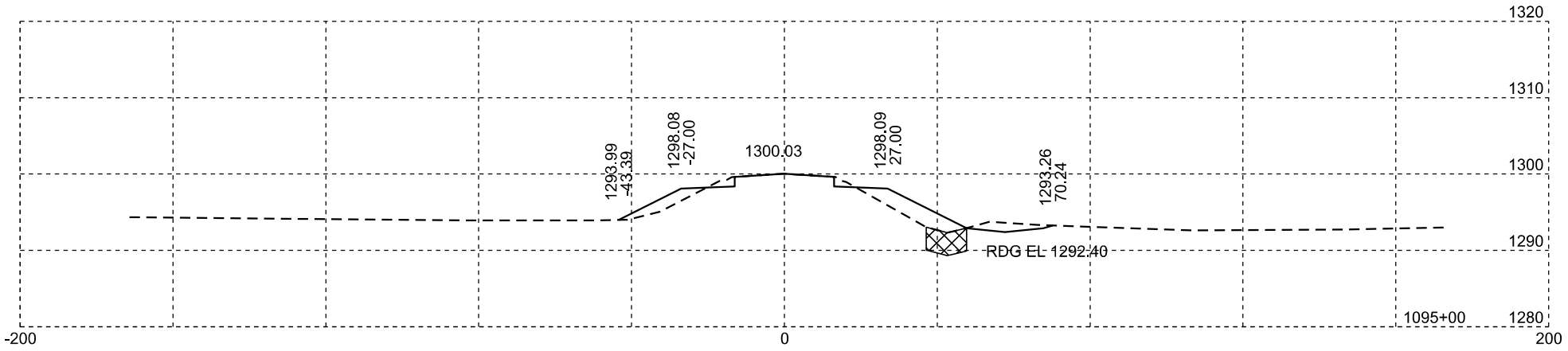

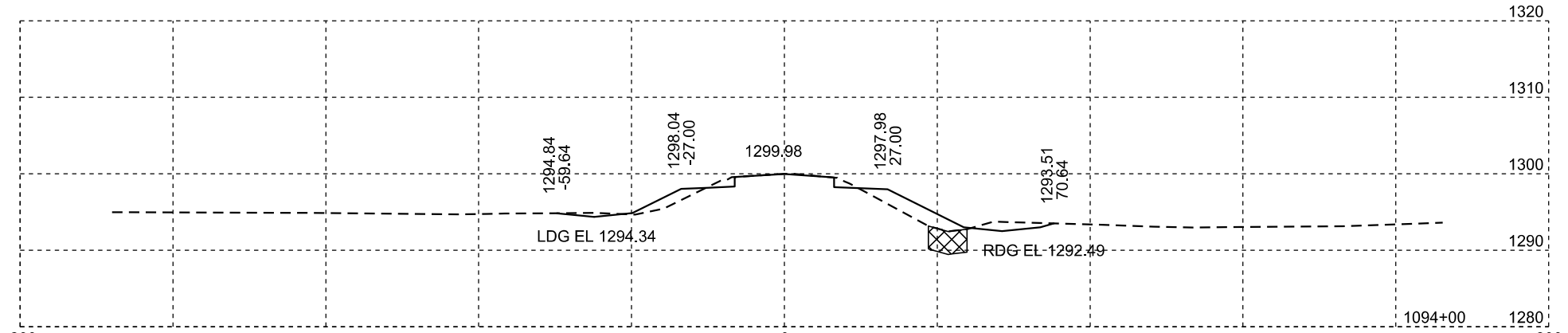

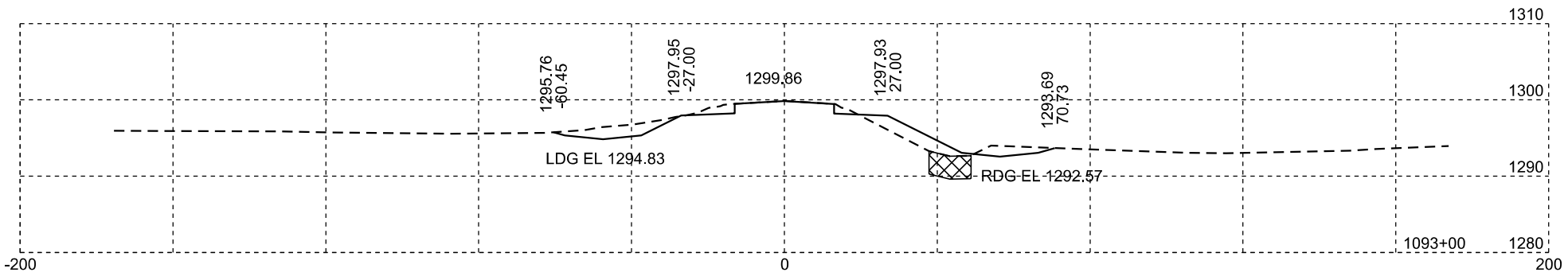

Muck

Plotting Date: 01/19/2024

STATE OF SOUTH DAKOTA	PROJECT	SHEET NO.	TOTAL SHEETS
	P-PH-B-PT 0010(124)296	X41	X169

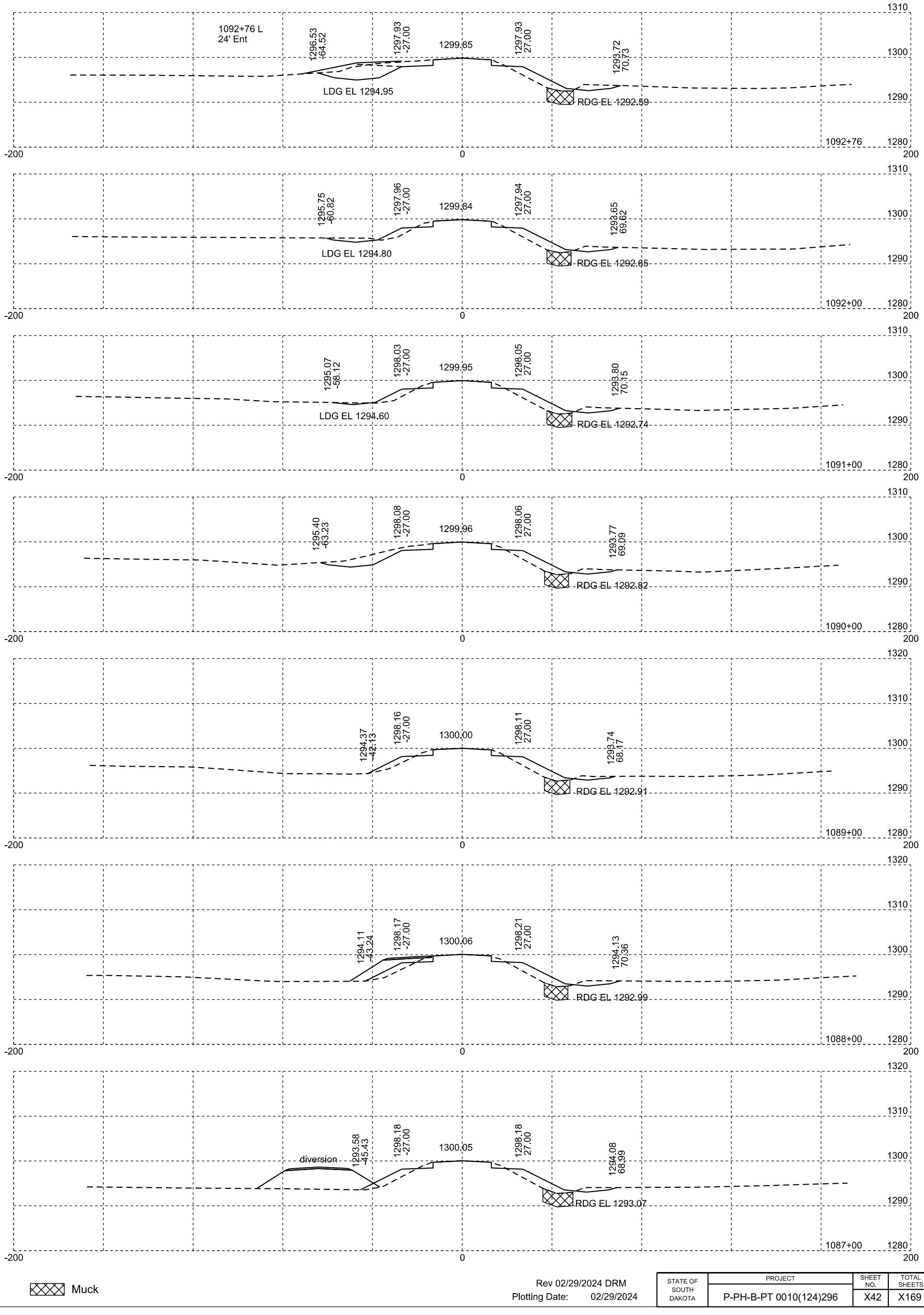

Muck

Rev 02/29/2024 DRM
Plotting Date: 02/29/2024

STATE OF SOUTH DAKOTA	PROJECT	SHEET NO.	TOTAL SHEETS
	P-PH-B-PT 0010(124)296	X42	X169

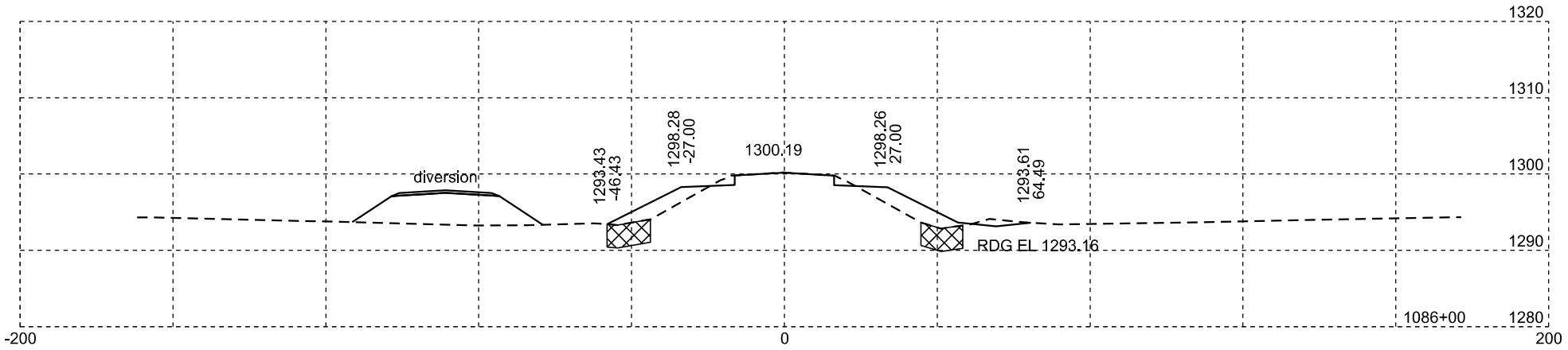

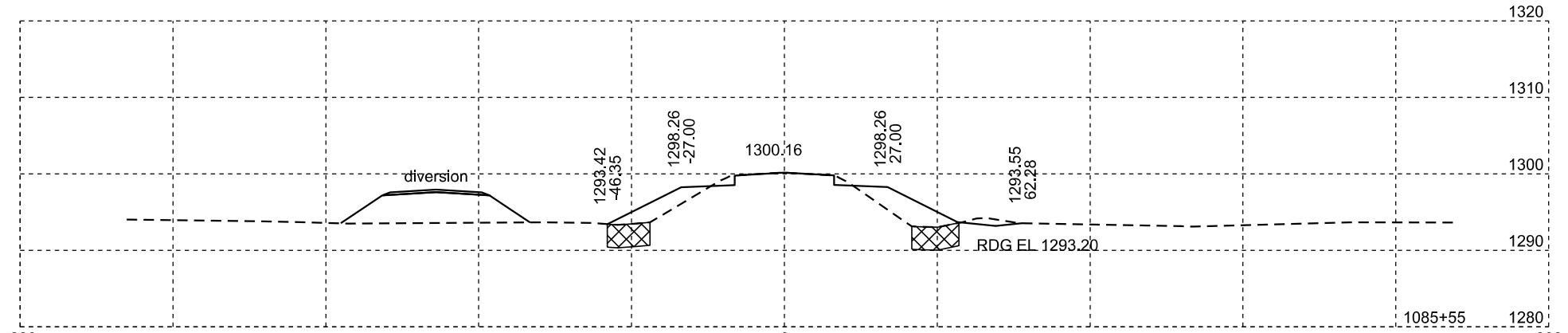

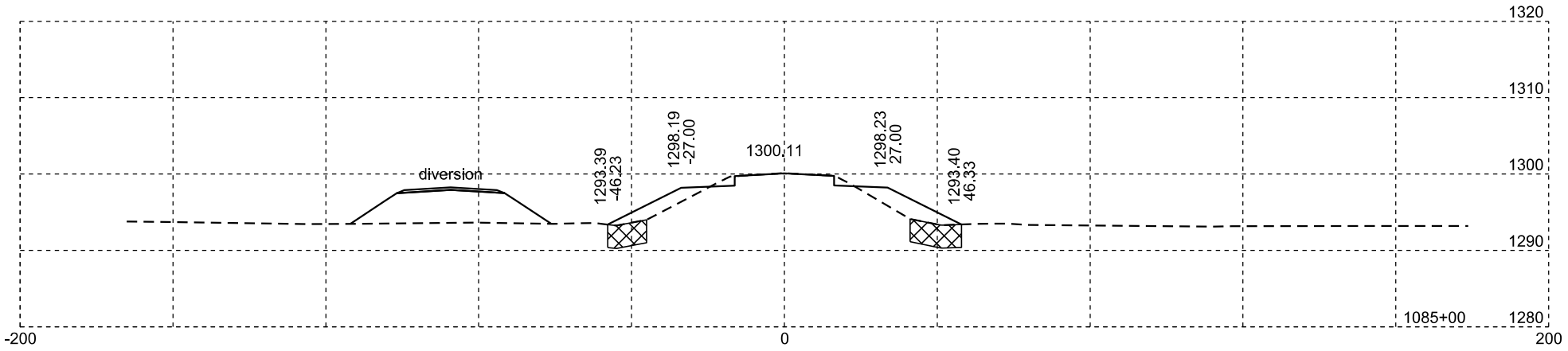

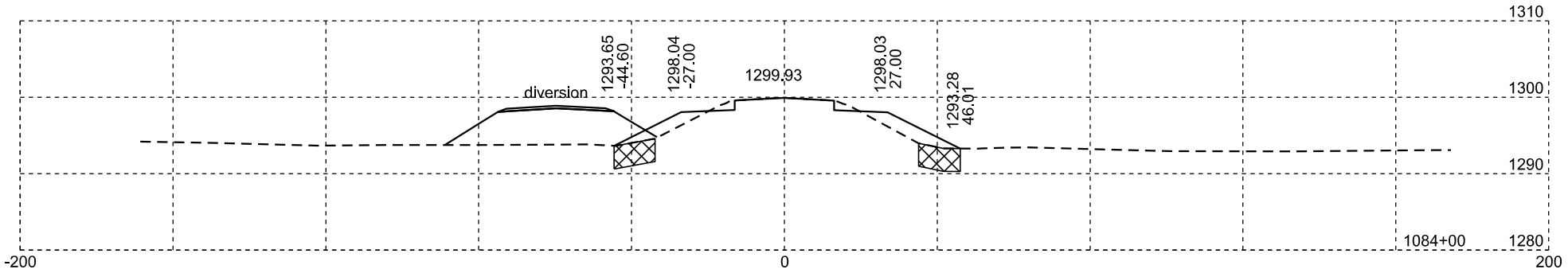

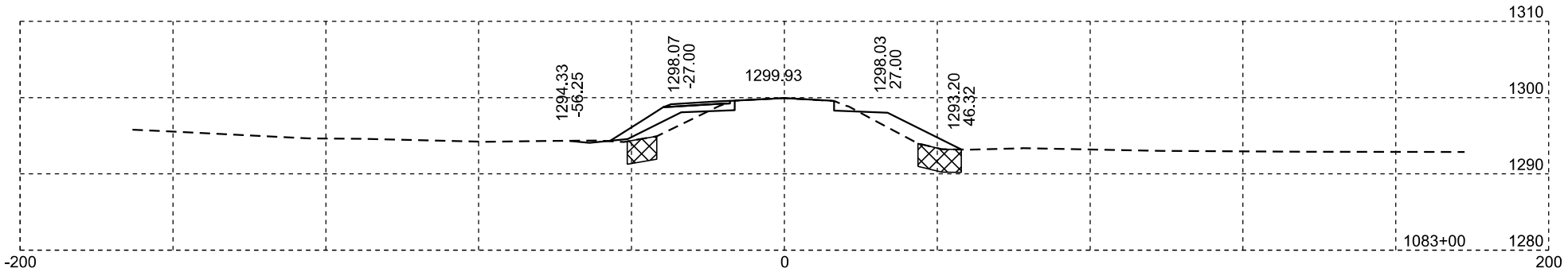

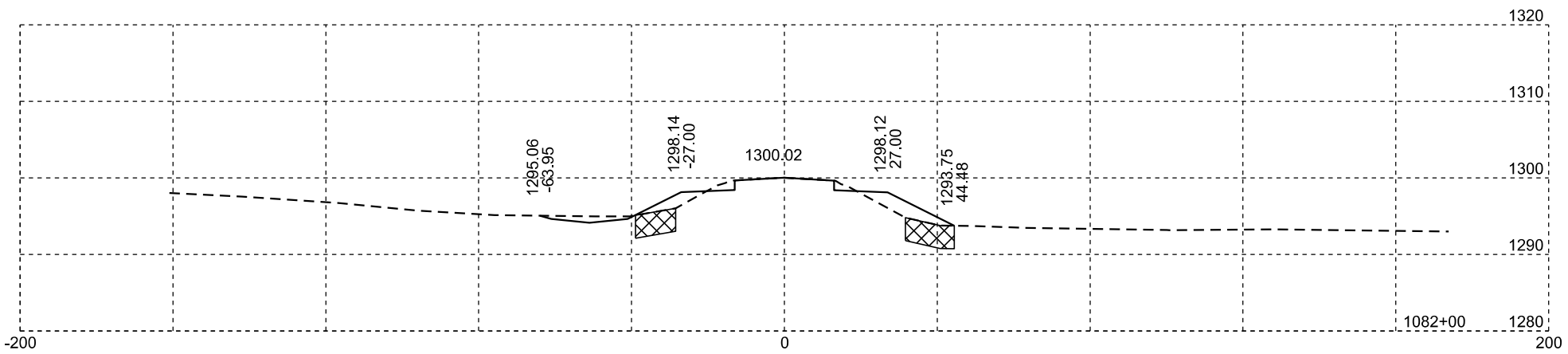

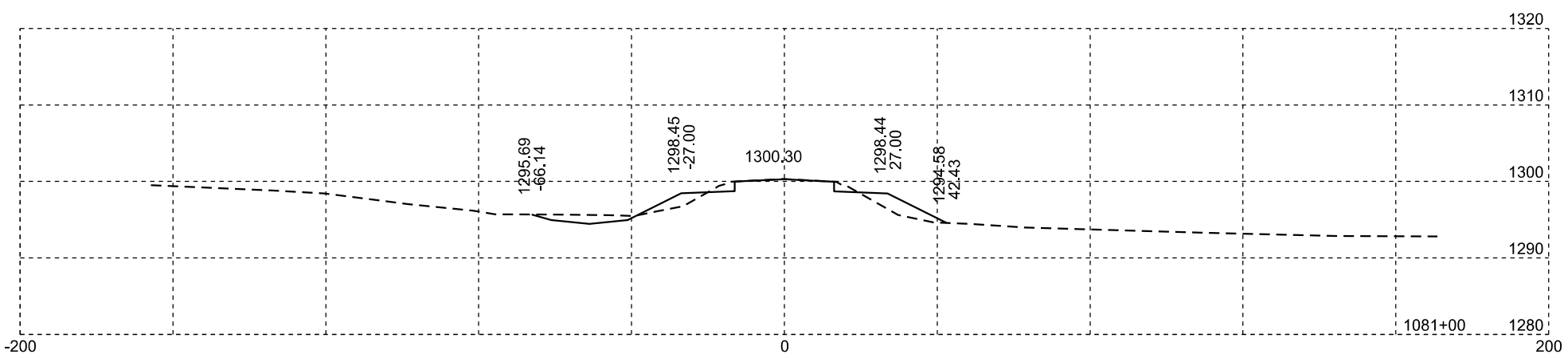

Muck

Plotting Date: 01/19/2024

STATE OF SOUTH DAKOTA	PROJECT	SHEET NO.	TOTAL SHEETS
	P-PH-B-PT 0010(124)296	X43	X169

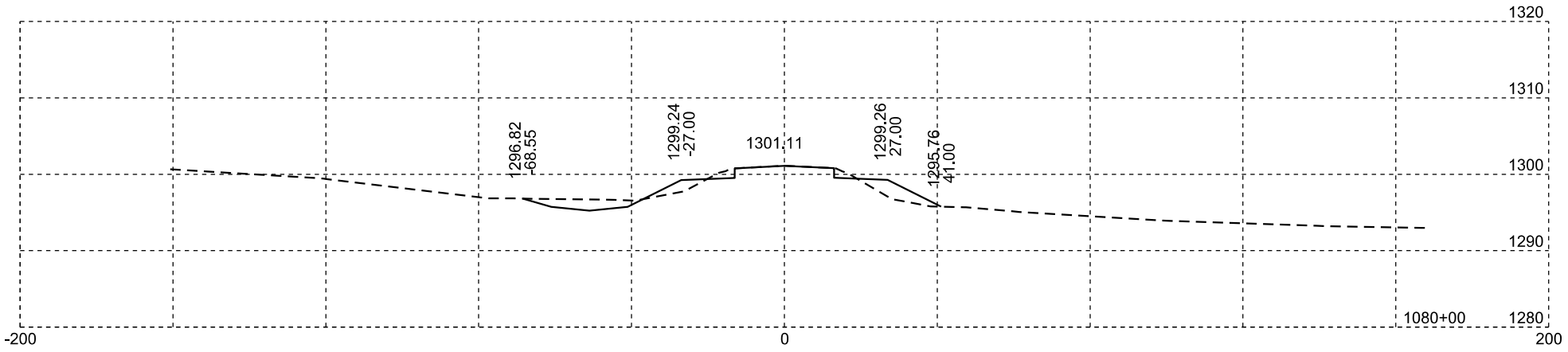

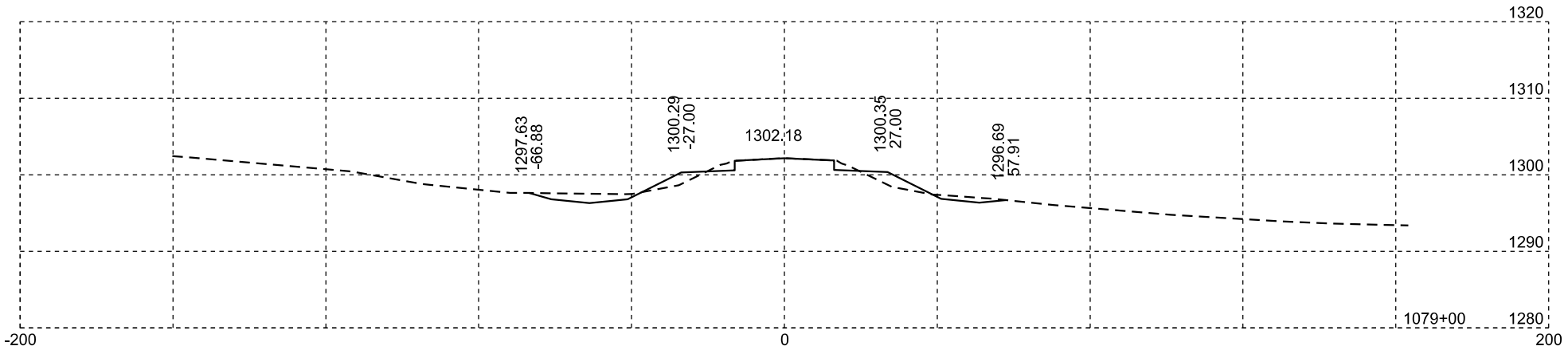

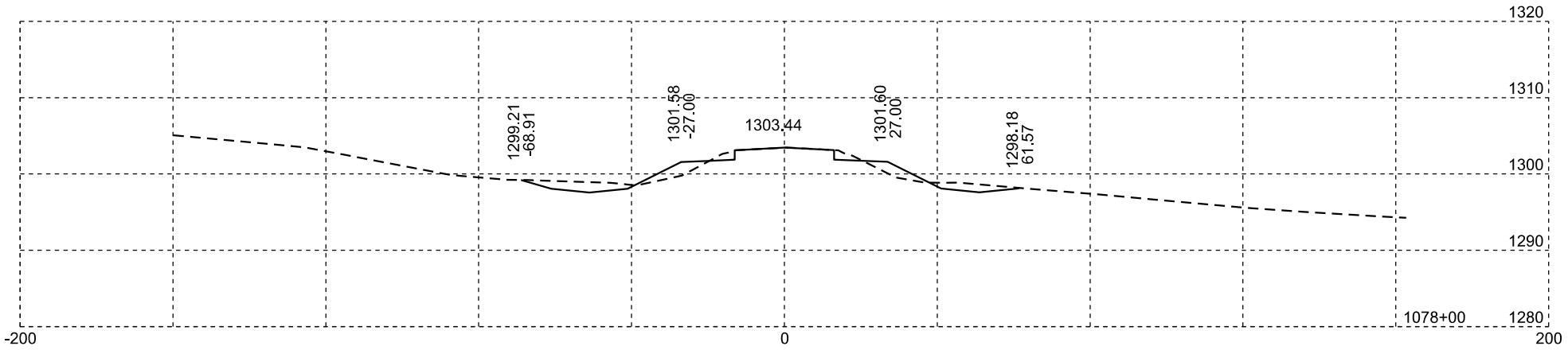

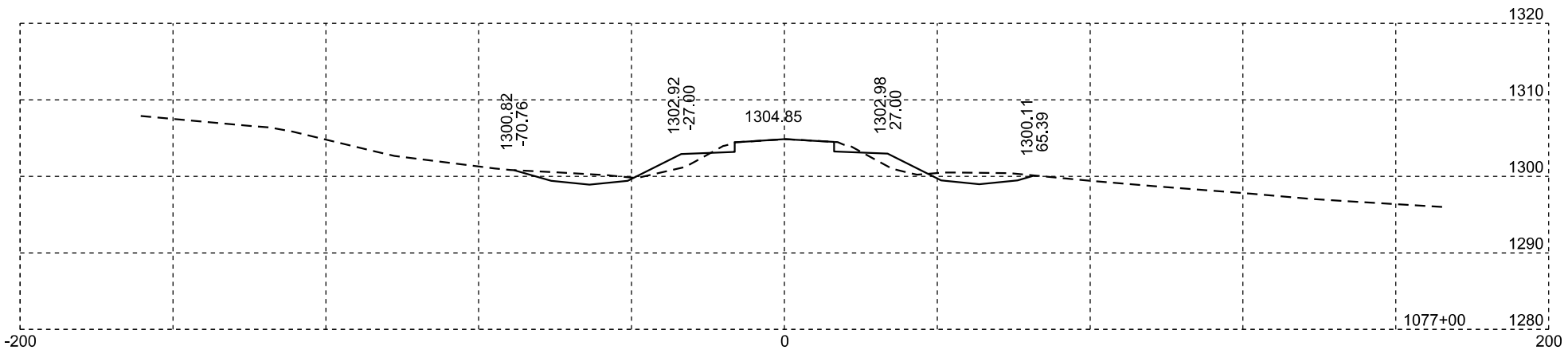

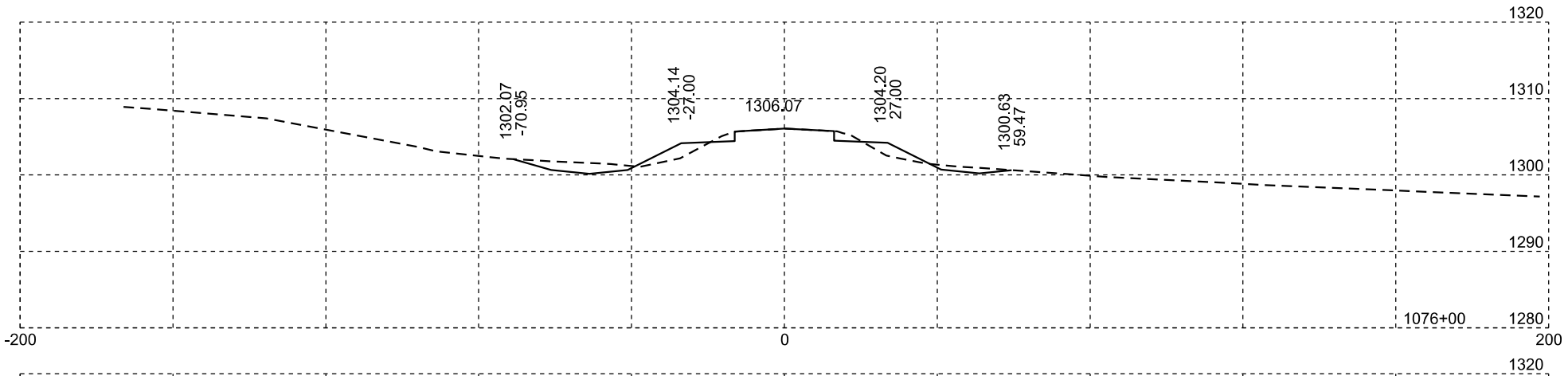

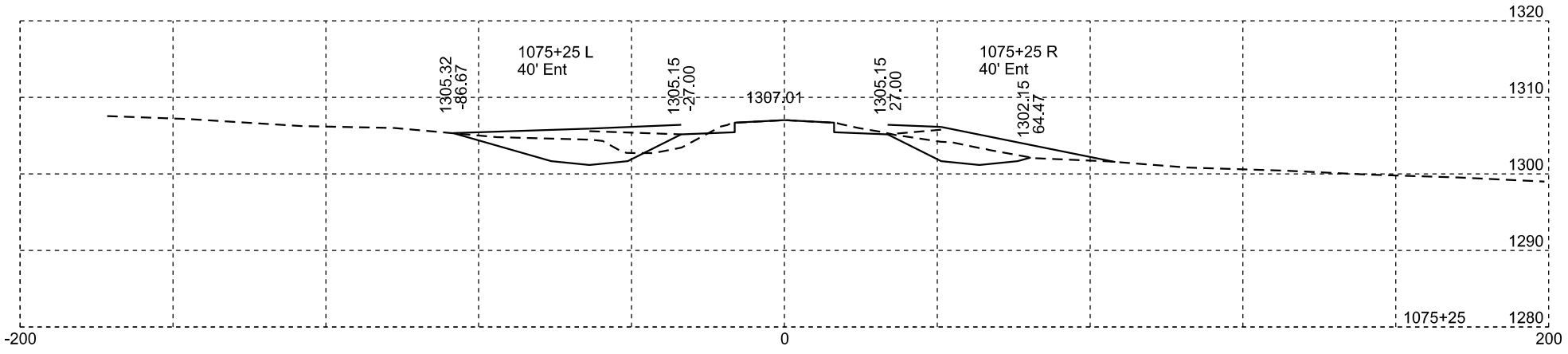

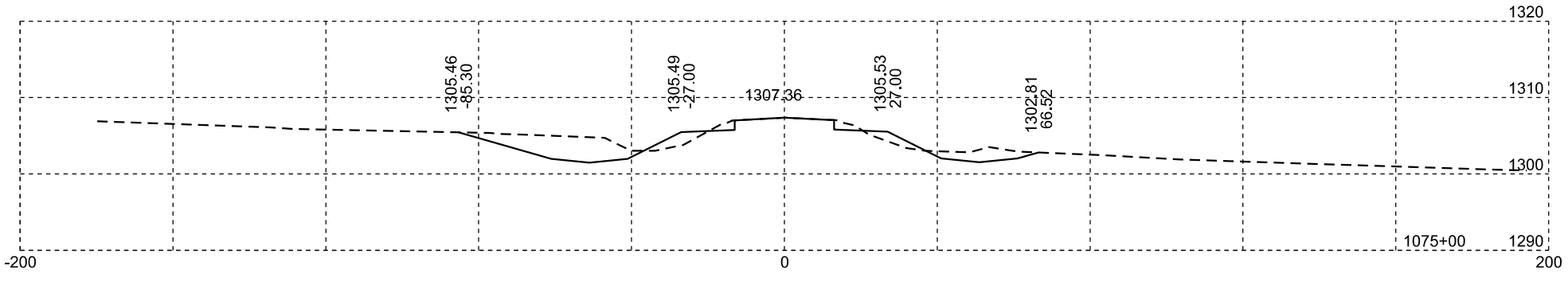

Plotting Date: 01/19/2024

STATE OF SOUTH DAKOTA	PROJECT	SHEET NO.	TOTAL SHEETS
	P-PH-B-PT 0010(124)296	X44	X169

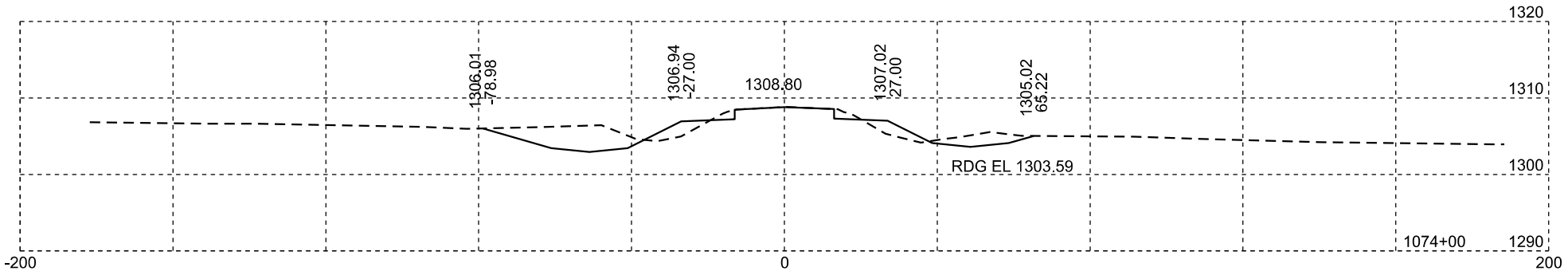

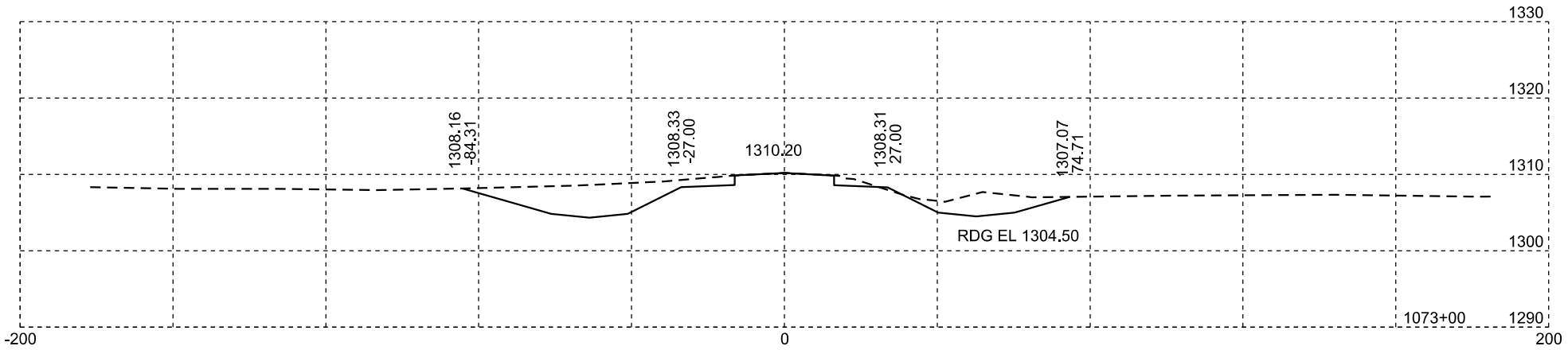

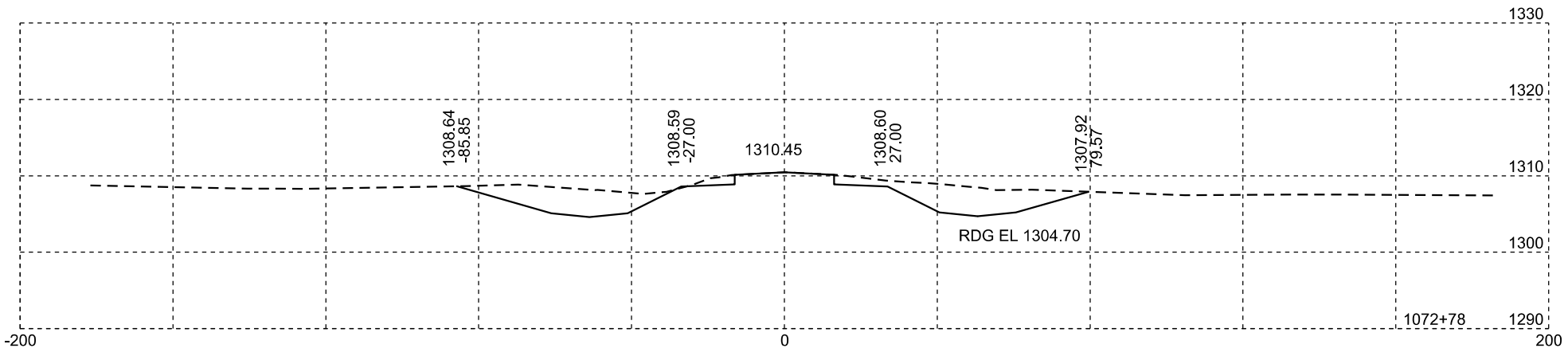

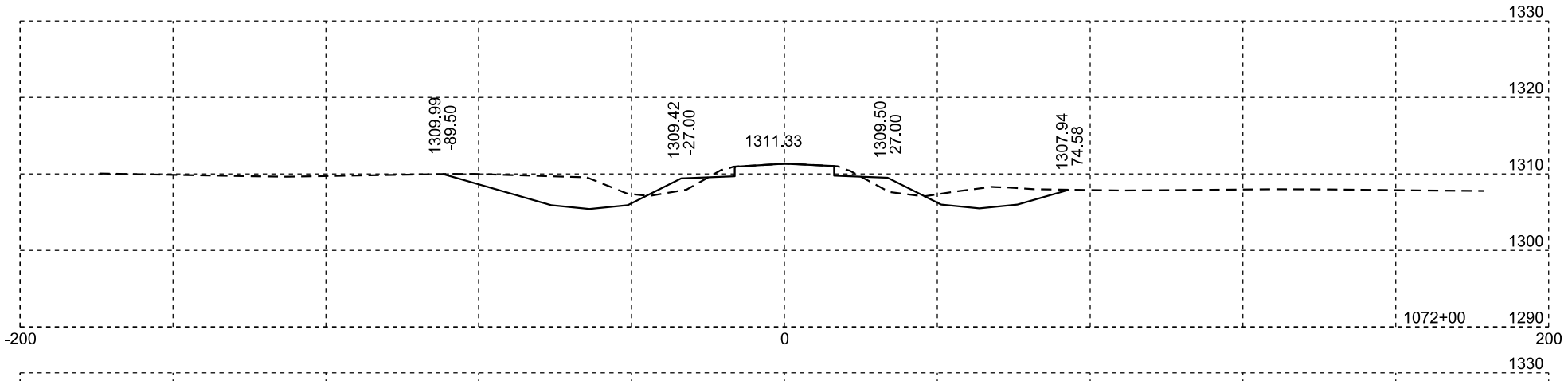

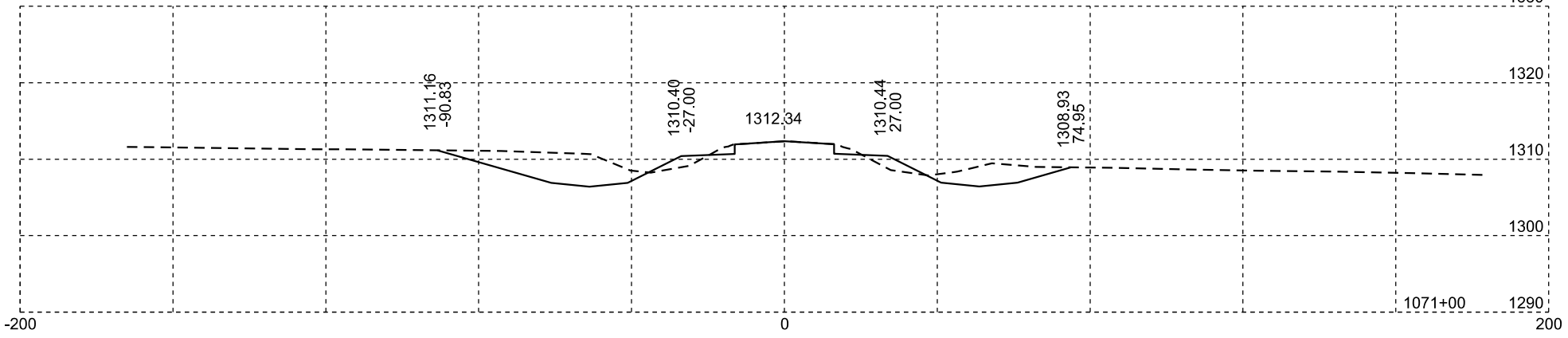

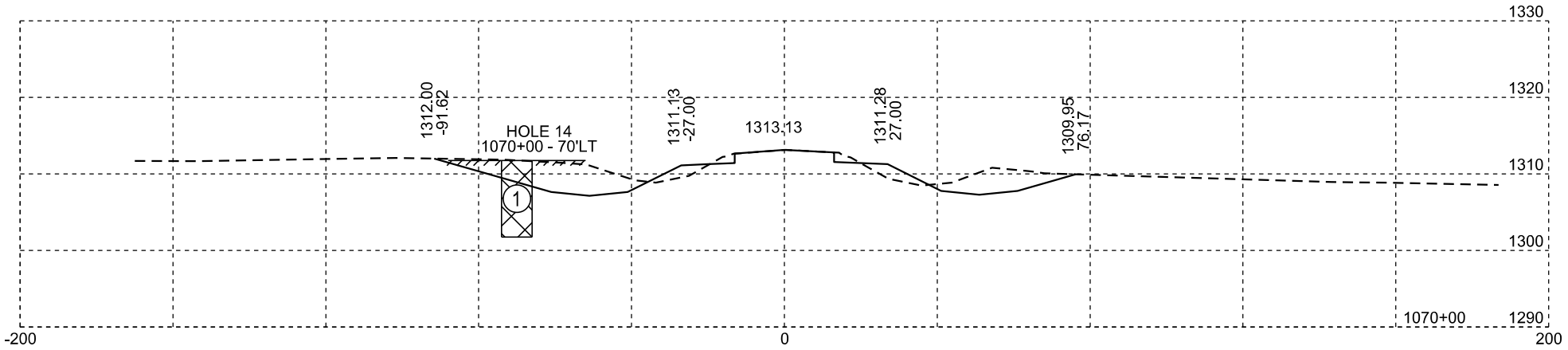

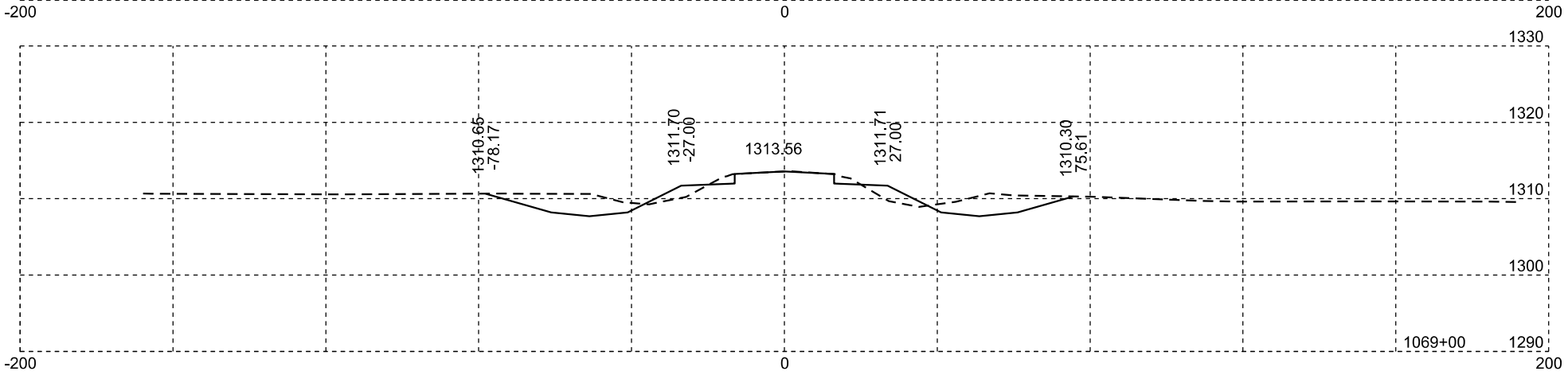

Plotting Date: 01/19/2024

STATE OF SOUTH DAKOTA	PROJECT	SHEET NO.	TOTAL SHEETS
	P-PH-B-PT 0010(124)296	X45	X169

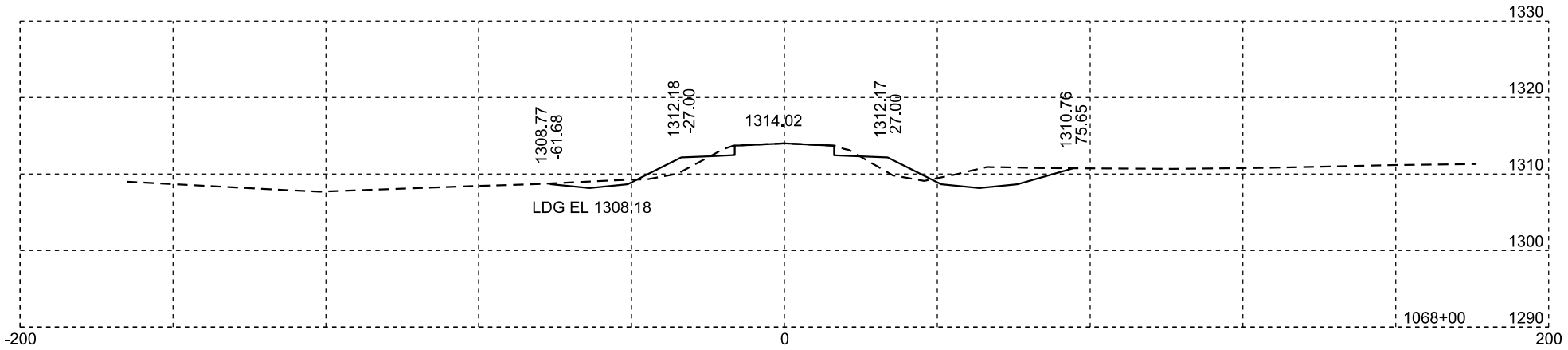

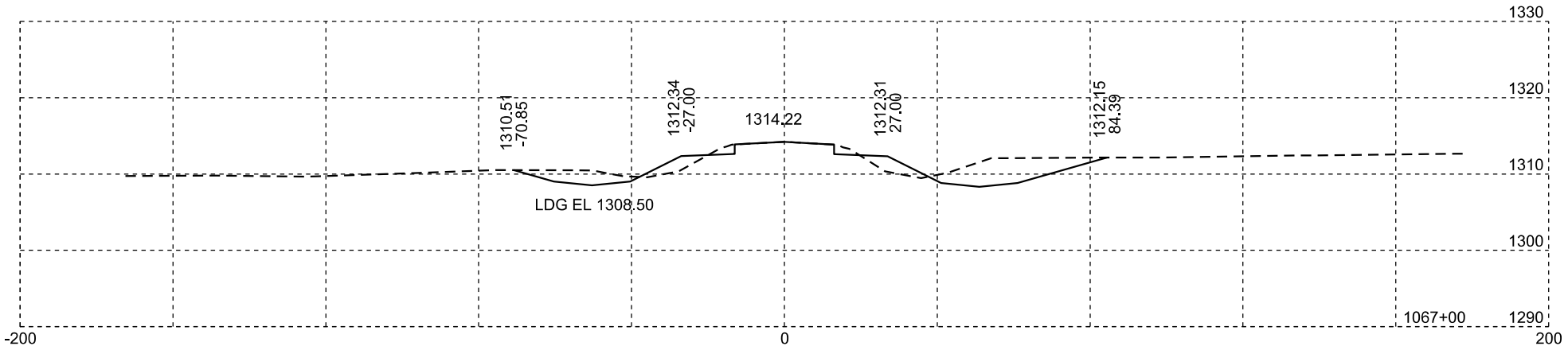

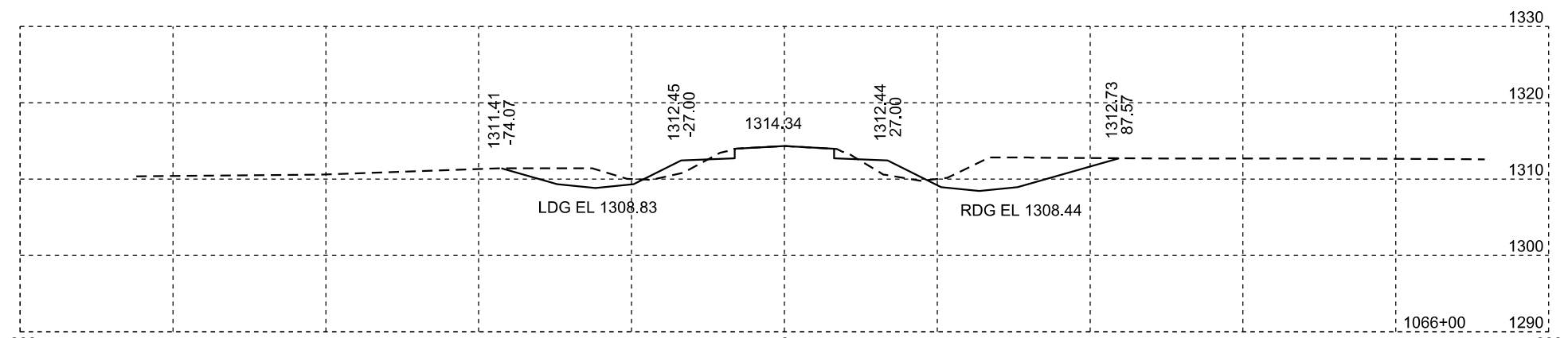

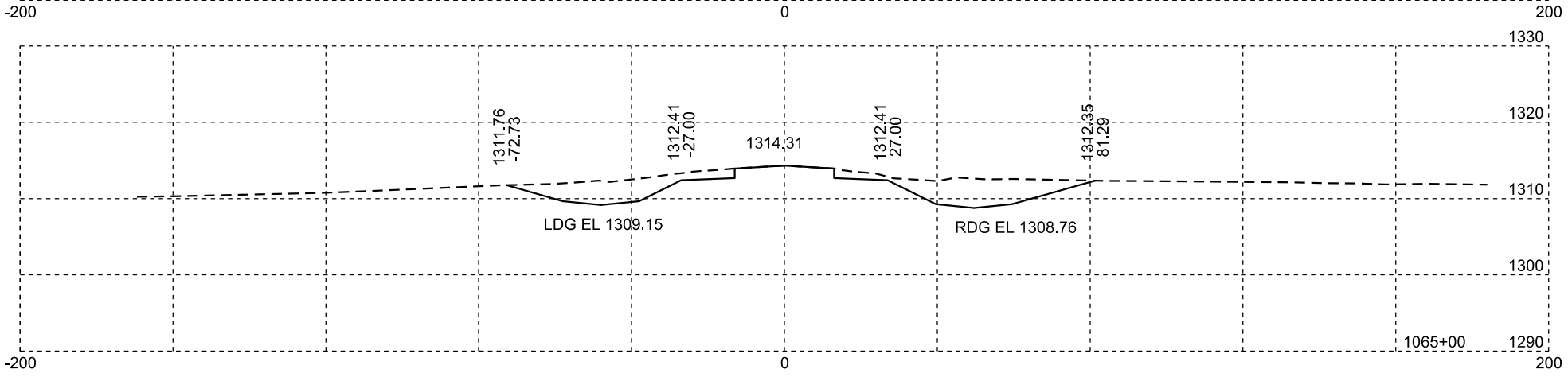

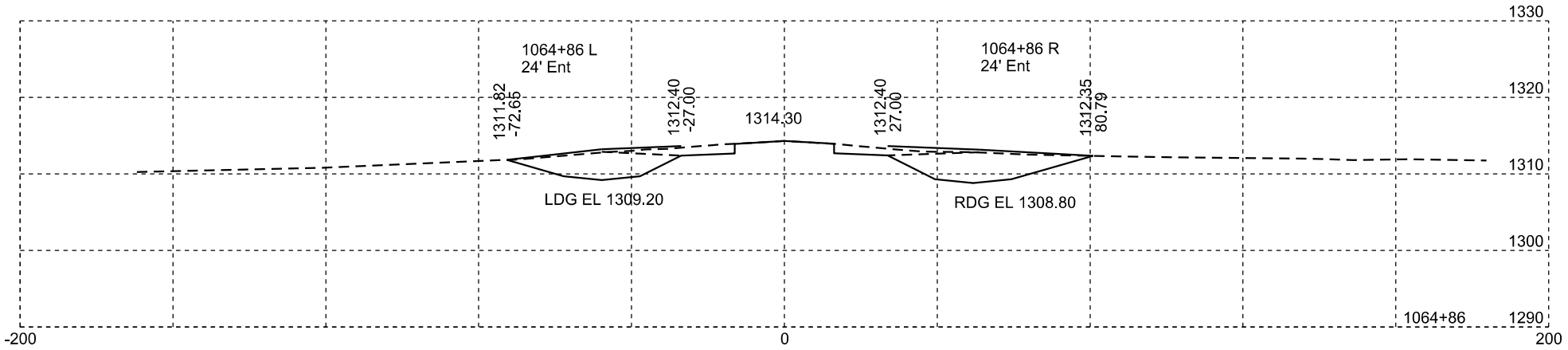

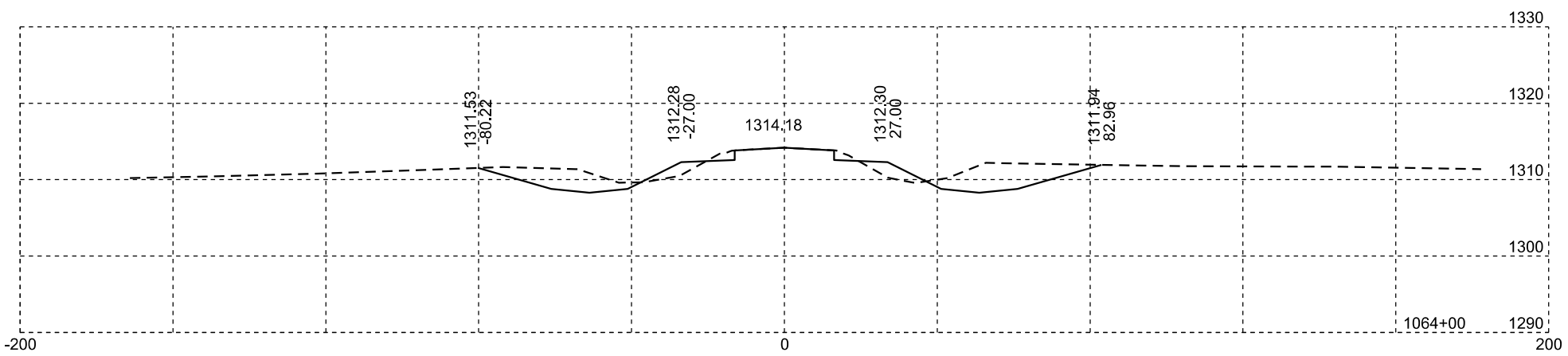

Plotting Date: 01/19/2024

STATE OF SOUTH DAKOTA	PROJECT	SHEET NO.	TOTAL SHEETS
	P-PH-B-PT 0010(124)296	X46	X169

Plotting Date: 01/19/2024

STATE OF SOUTH DAKOTA	PROJECT	SHEET NO.	TOTAL SHEETS
	P-PH-B-PT 0010(124)296	X47	X169

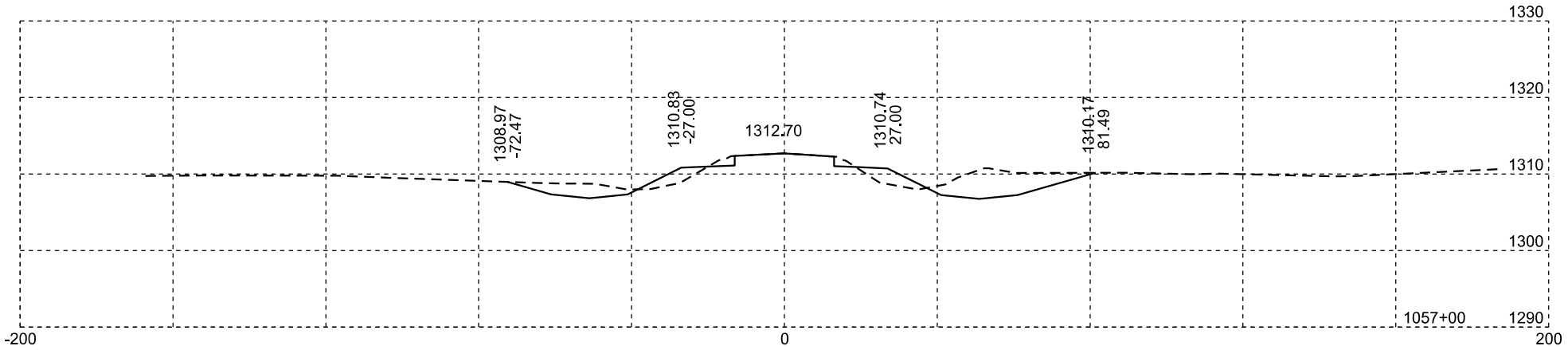

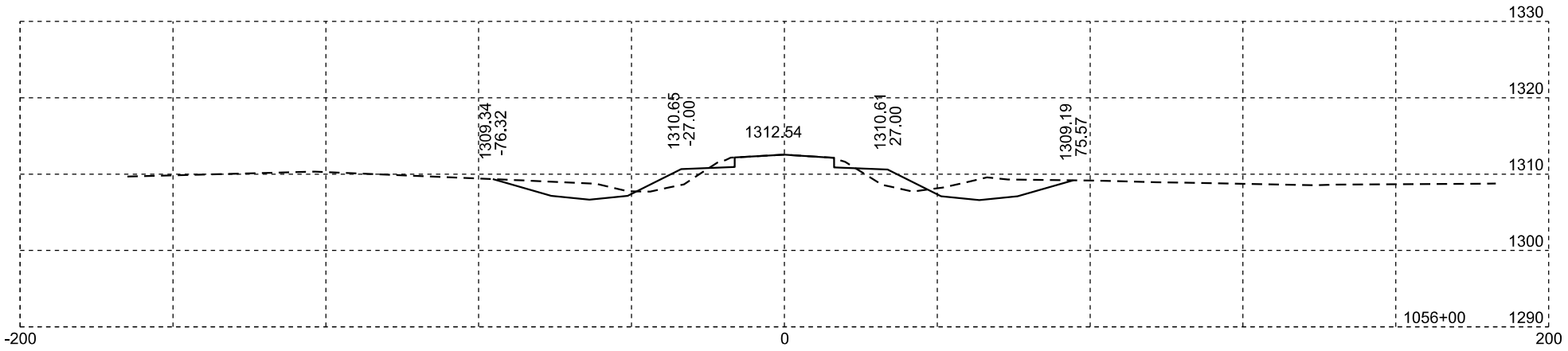

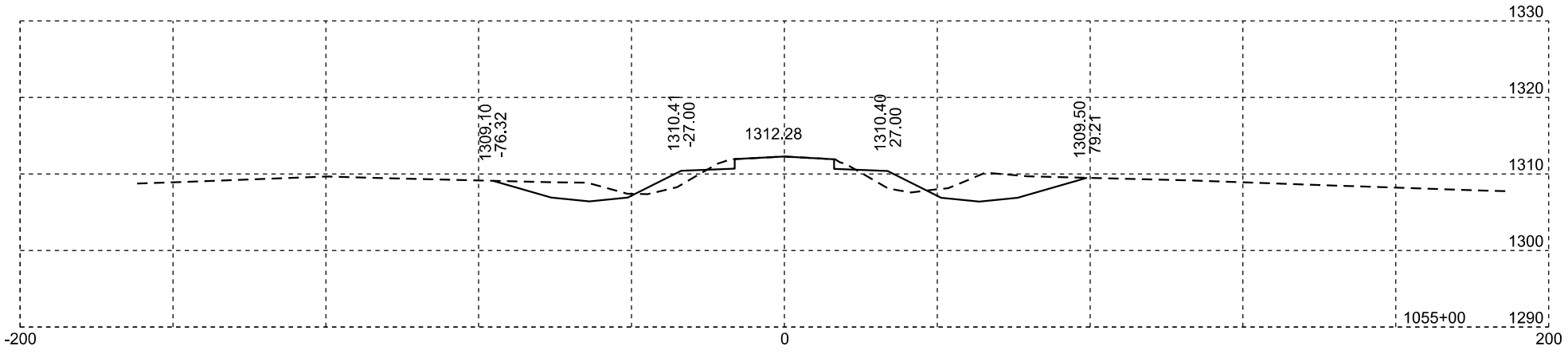

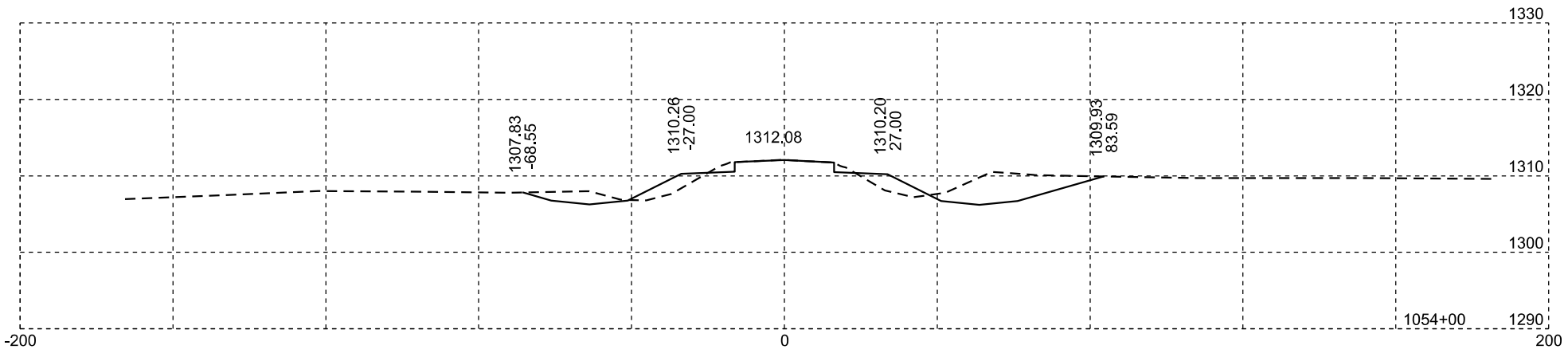

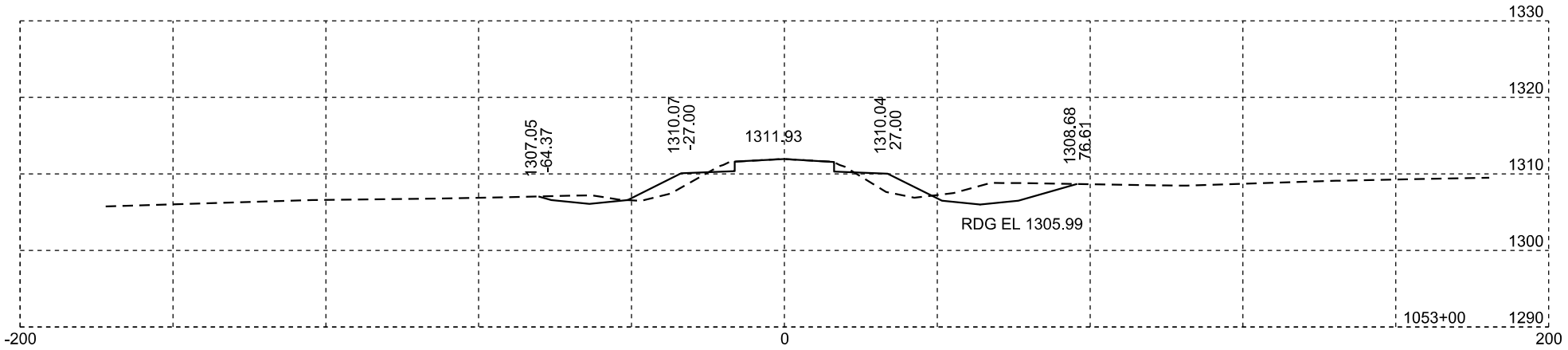

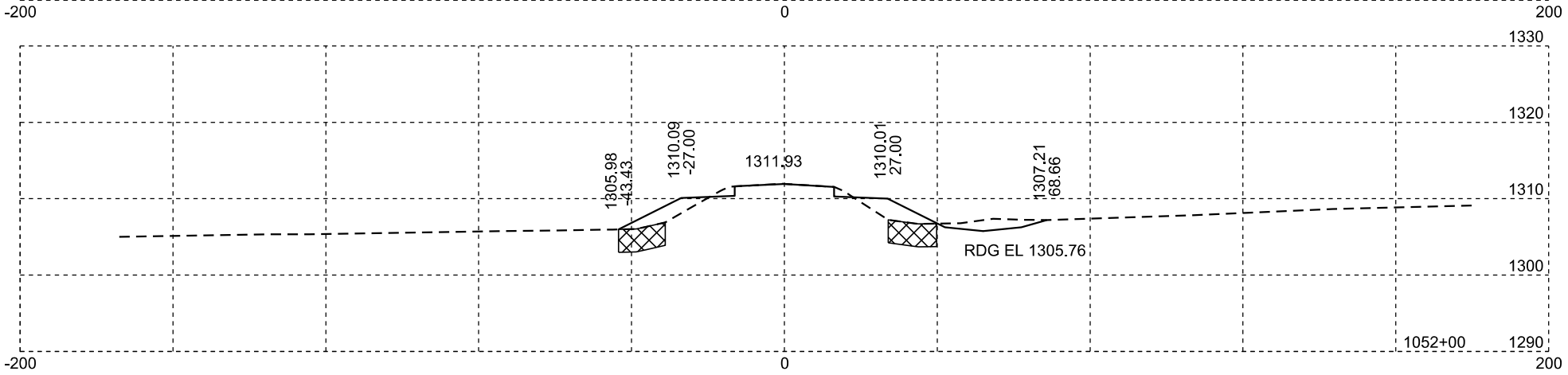

Muck

Plotting Date: 01/19/2024

STATE OF SOUTH DAKOTA	PROJECT	SHEET NO.	TOTAL SHEETS
	P-PH-B-PT 0010(124)296	X48	X169

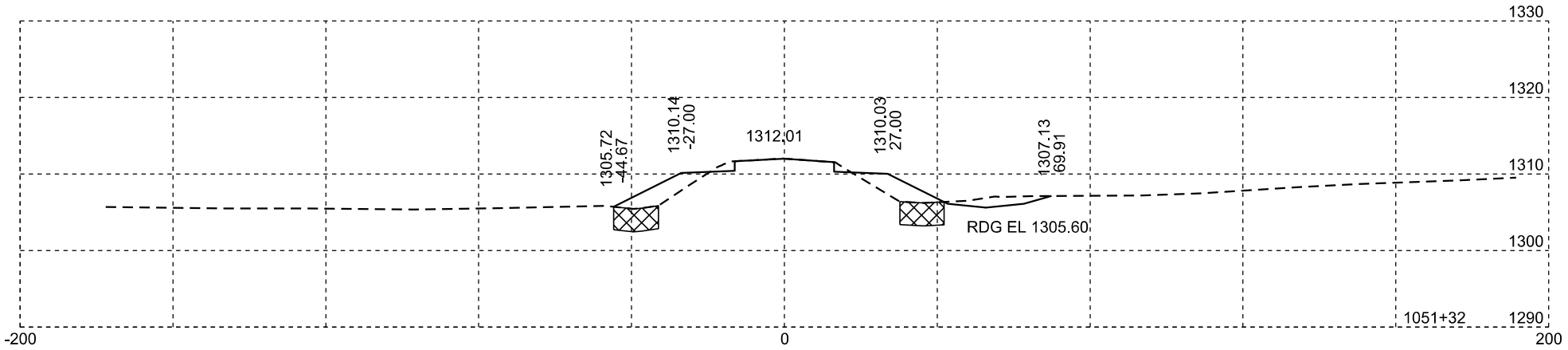

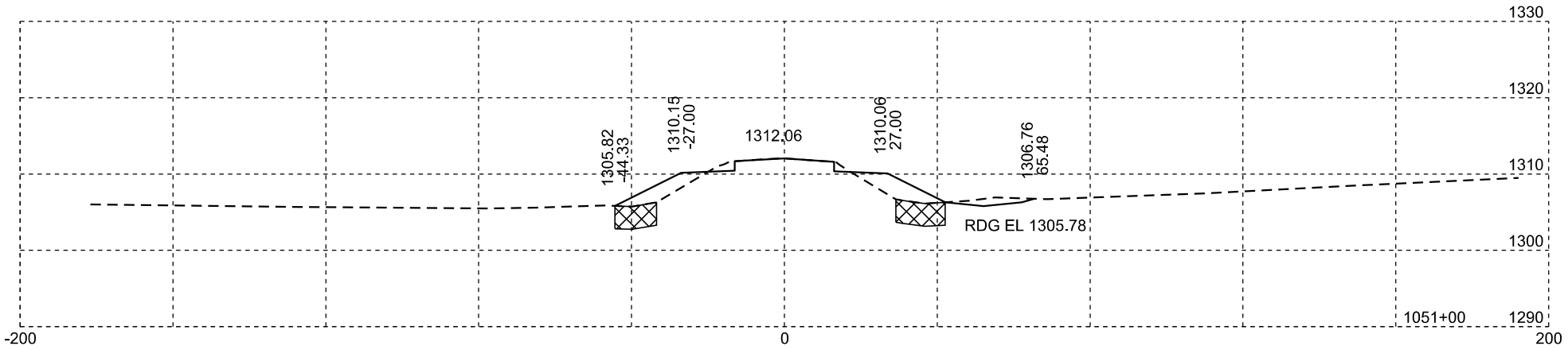

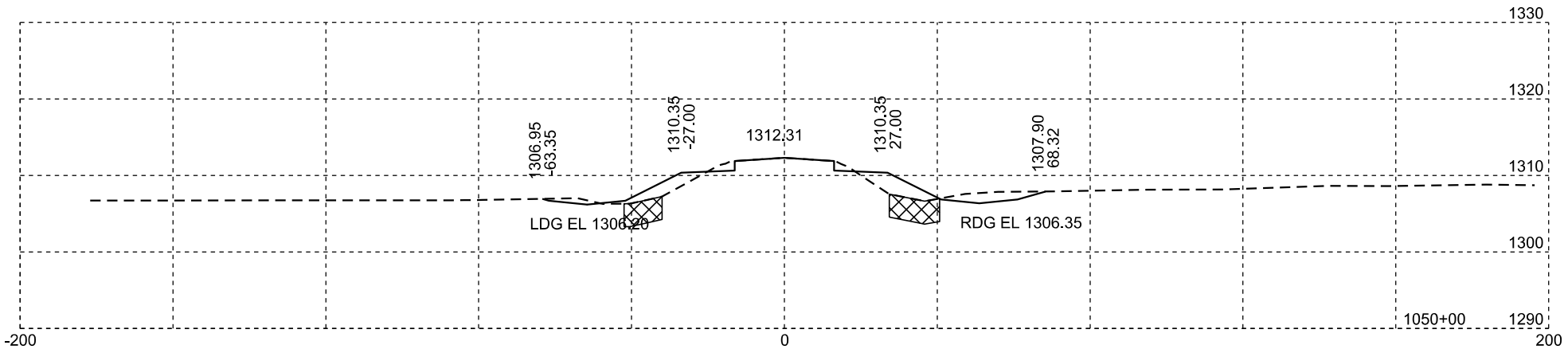

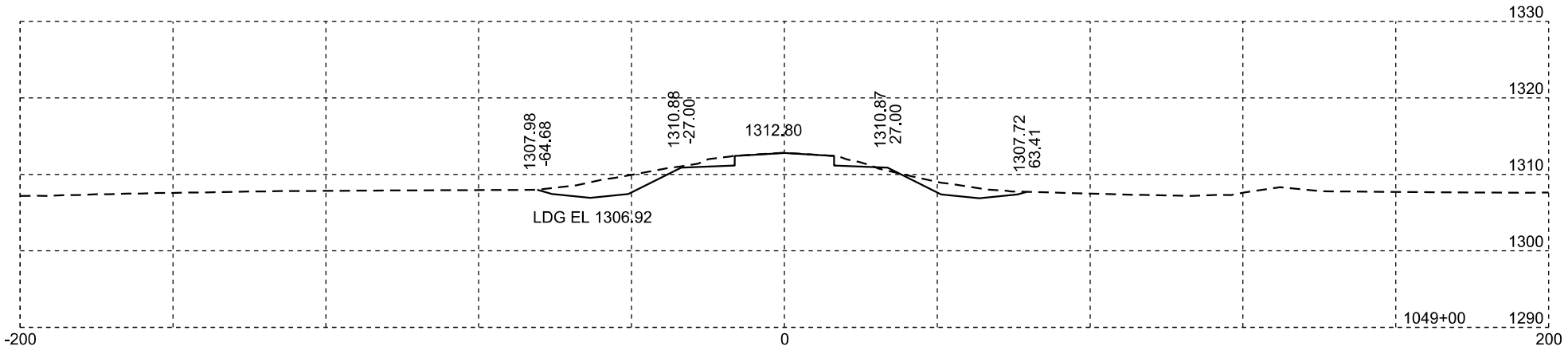

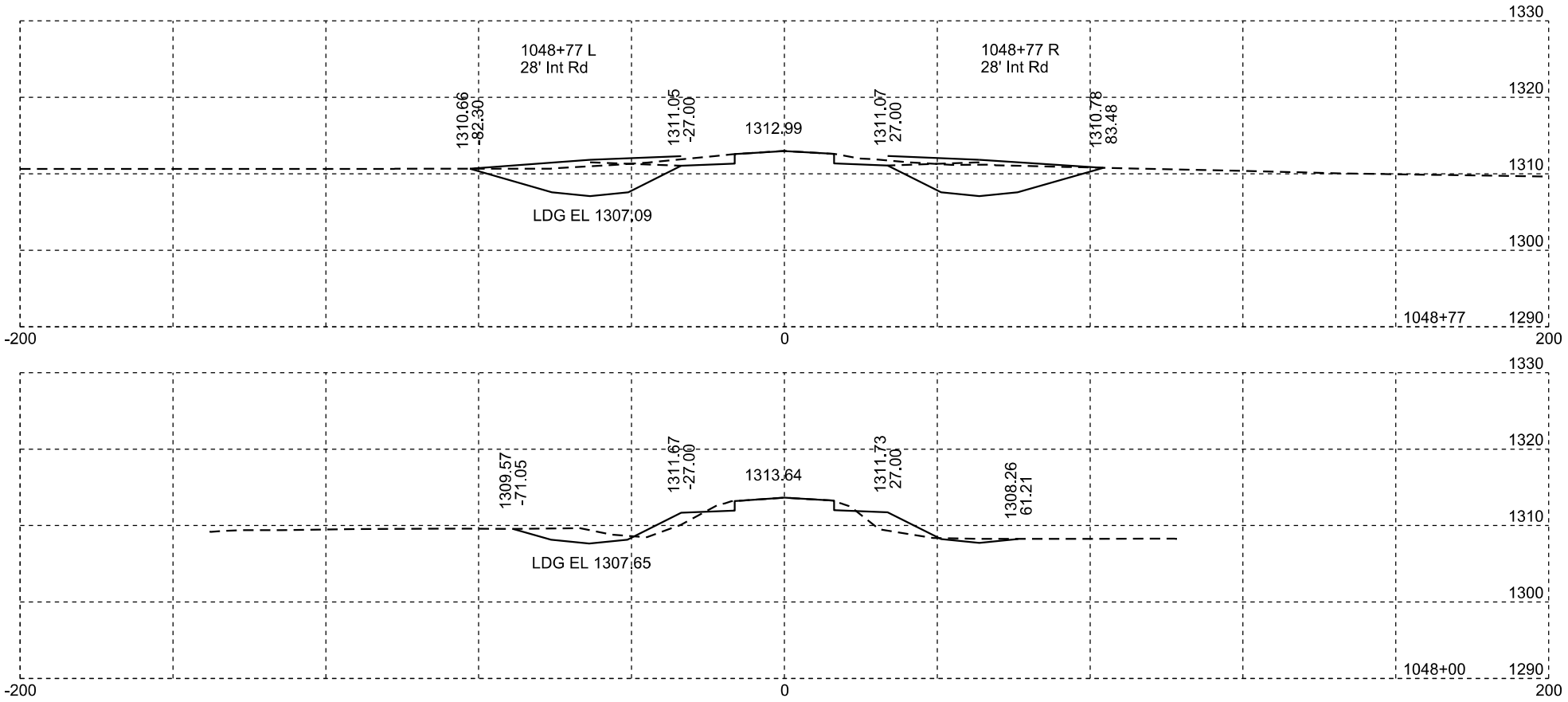

Muck

Plotting Date: 01/19/2024

STATE OF SOUTH DAKOTA	PROJECT	SHEET NO.	TOTAL SHEETS
	P-PH-B-PT 0010(124)296	X49	X169

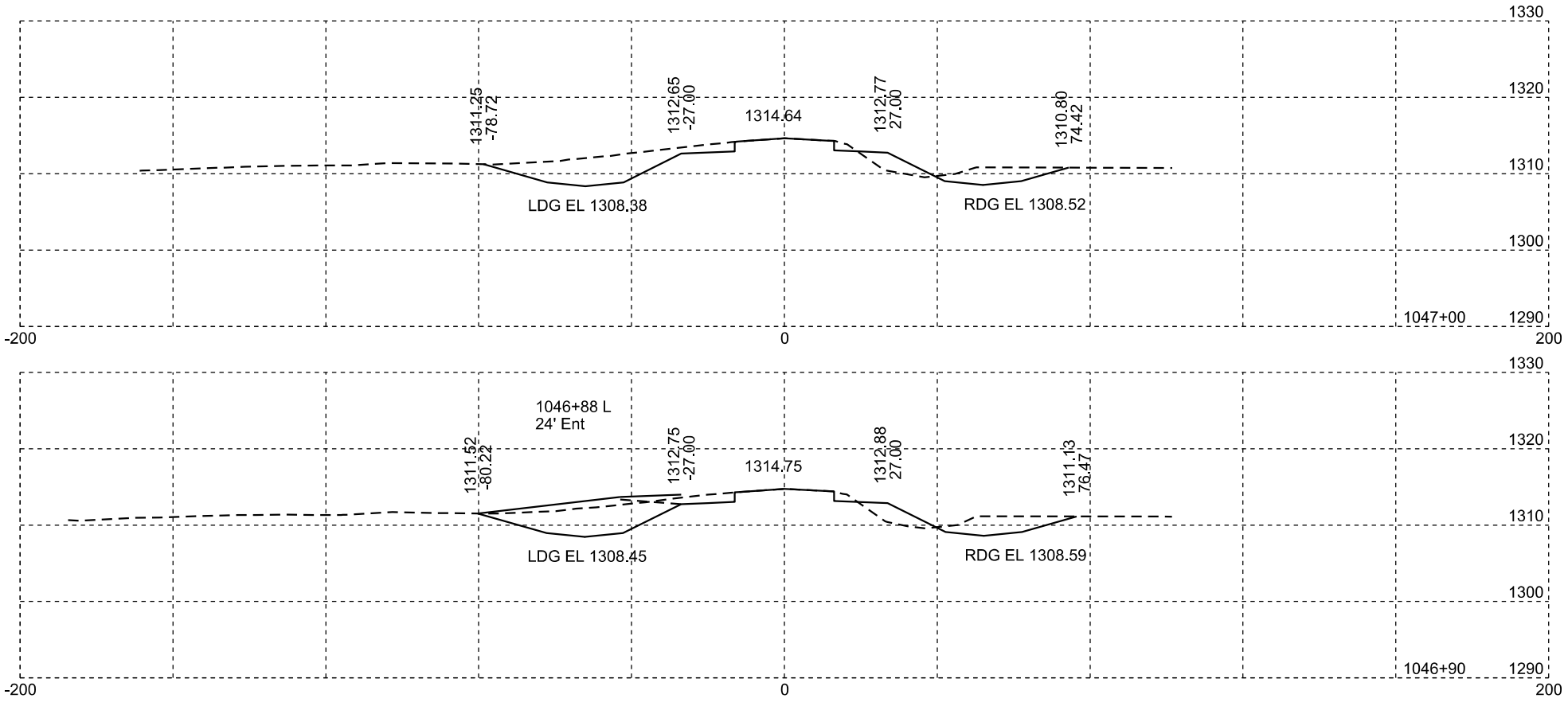

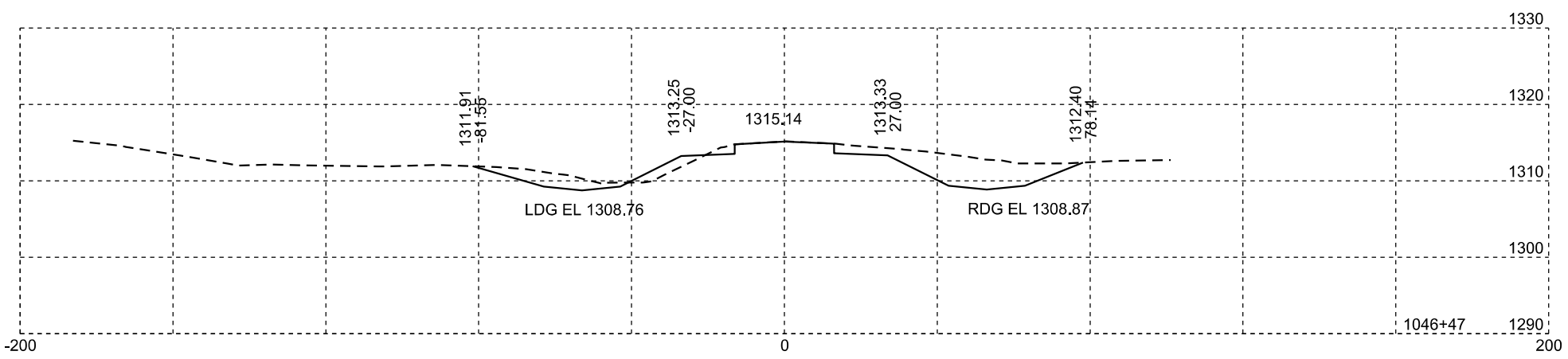

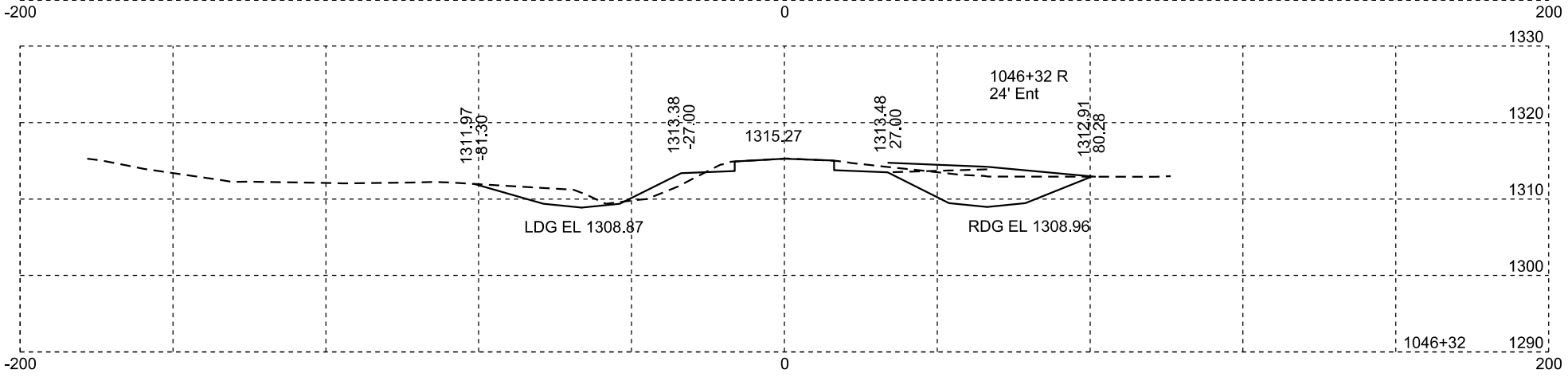

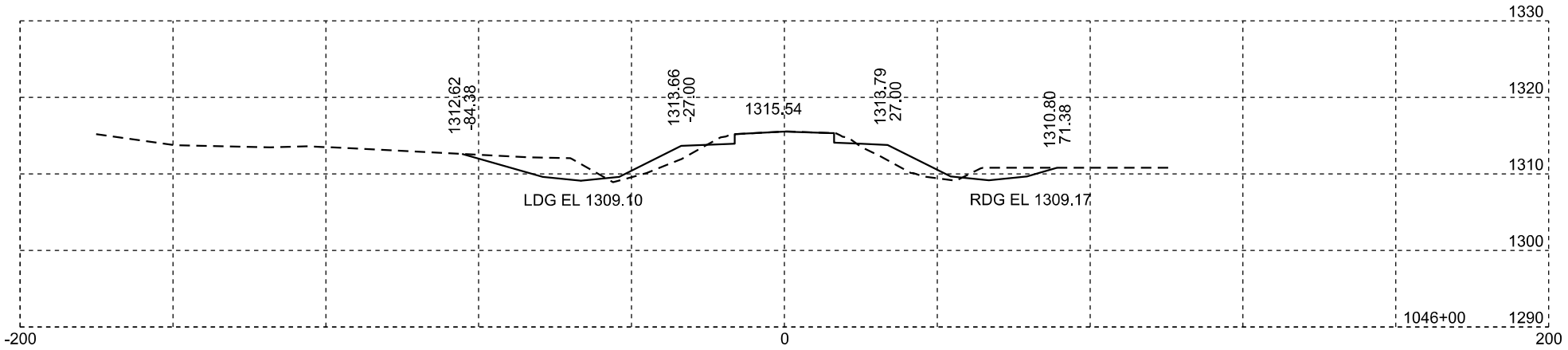

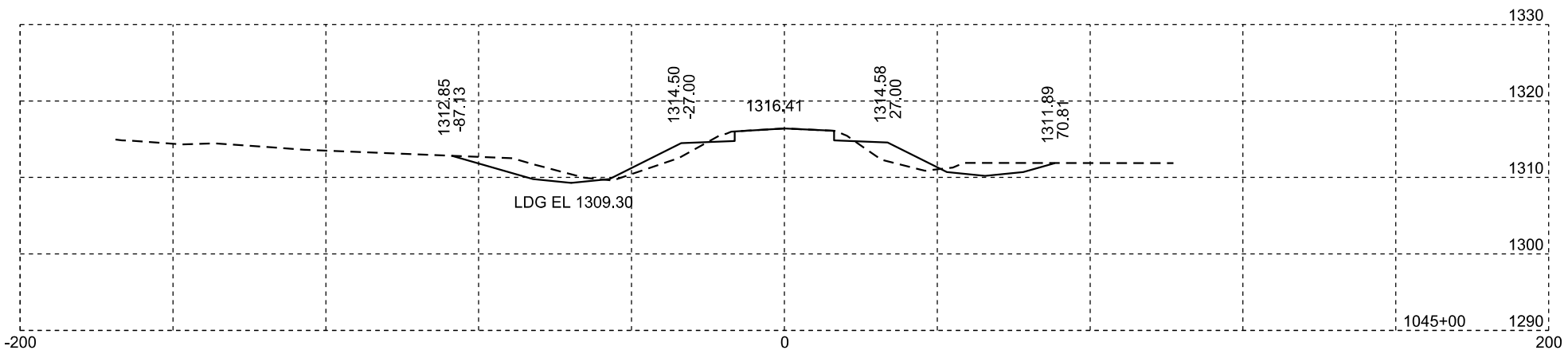

Rev 02/29/2024 DRM
Plotting Date: 02/29/2024

STATE OF SOUTH DAKOTA	PROJECT	SHEET NO.	TOTAL SHEETS
	P-PH-B-PT 0010(124)296	X50	X169

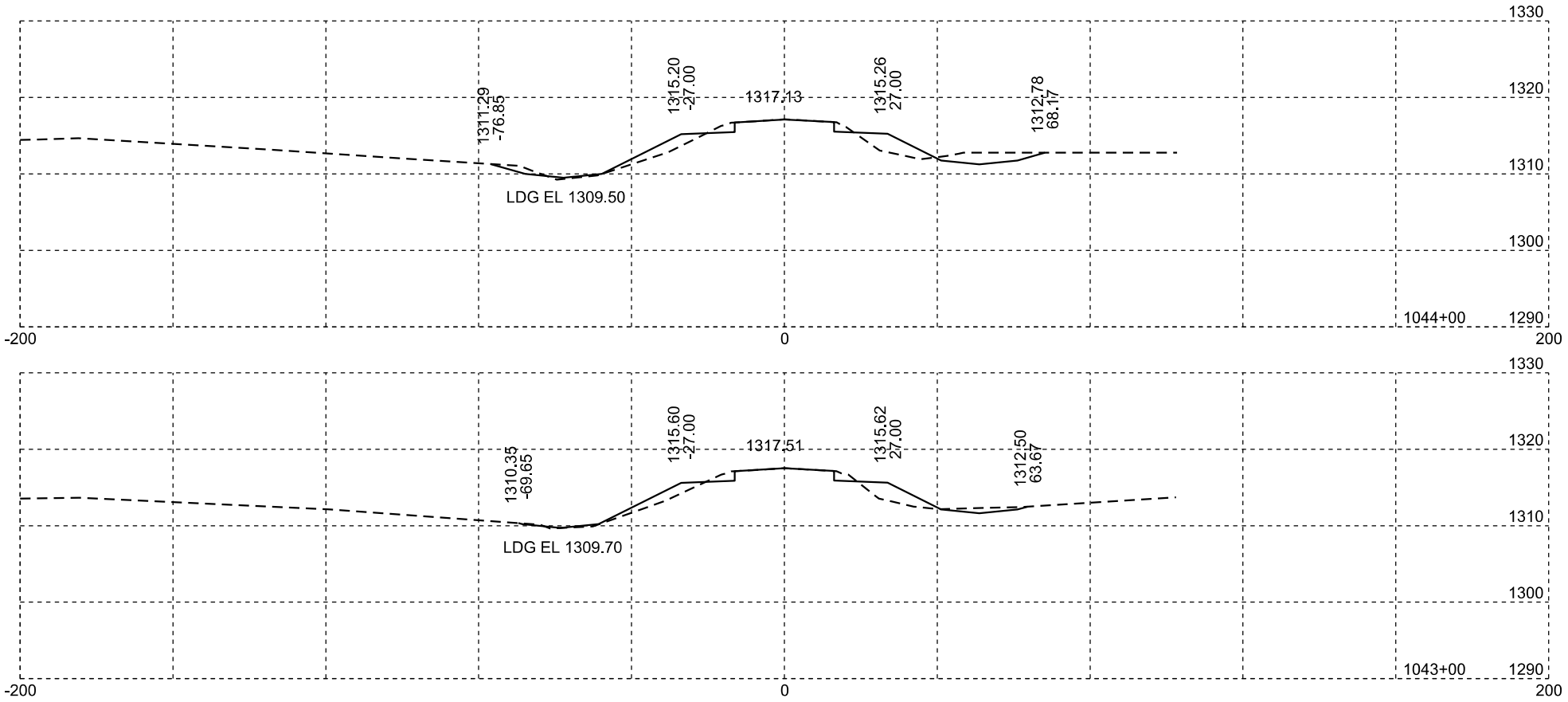

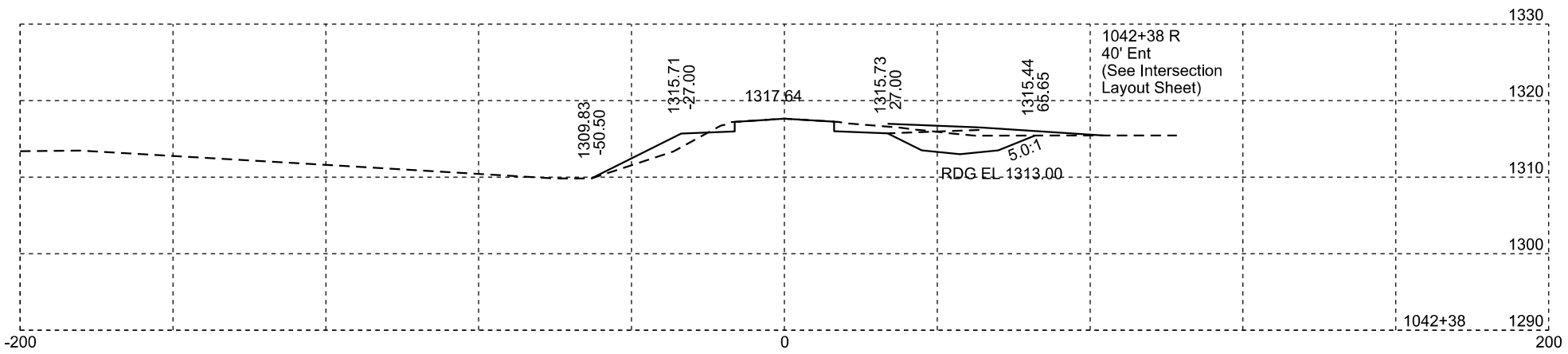

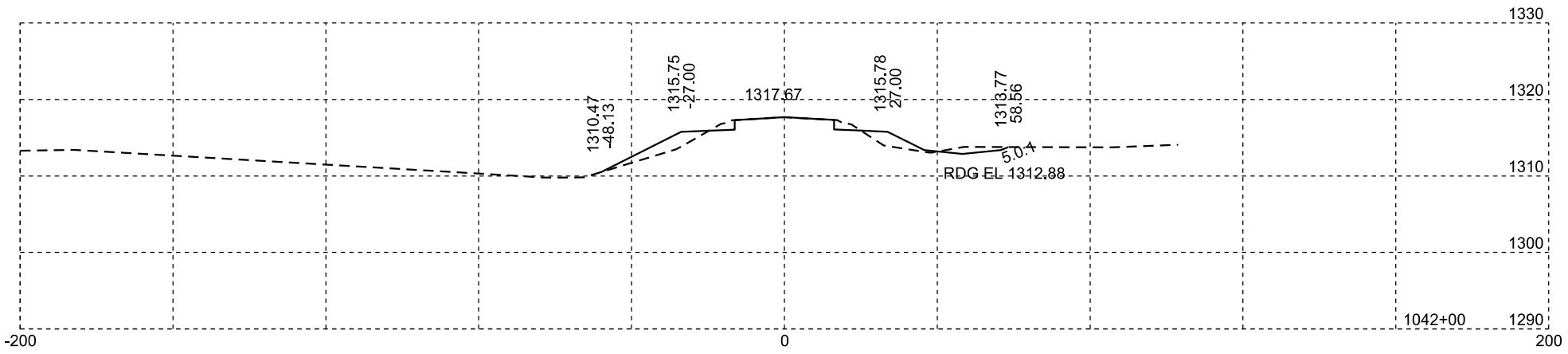

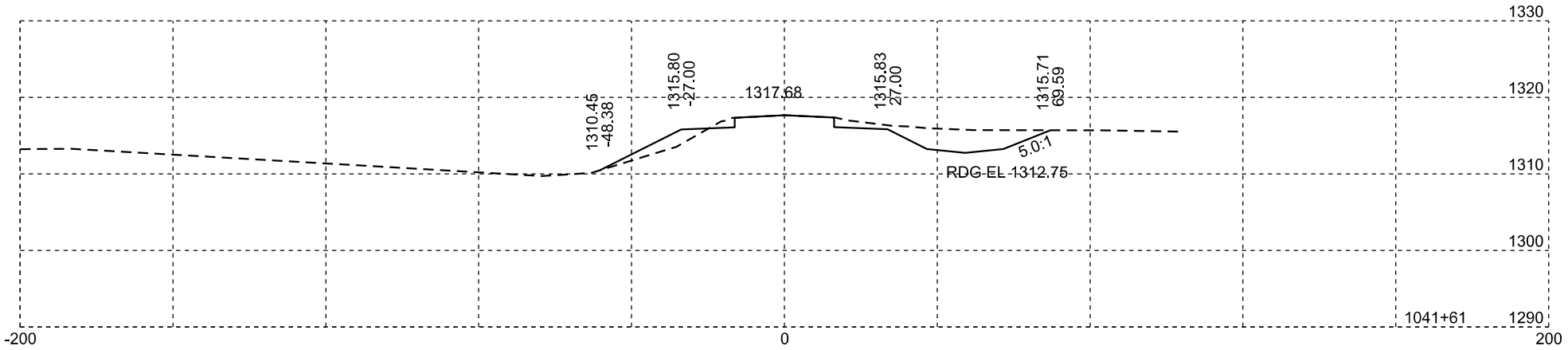

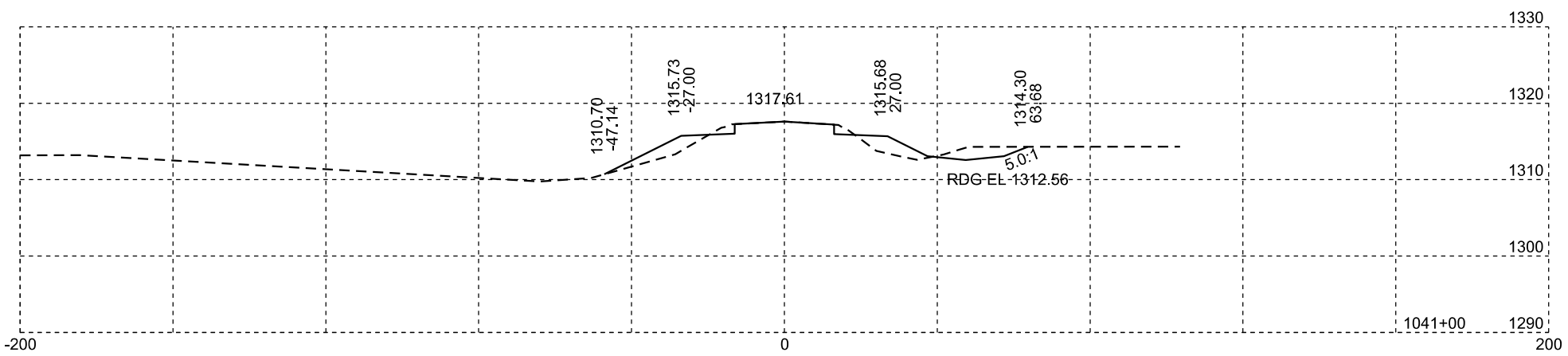

Rev 02/29/2024 DRM
Plotting Date: 02/29/2024

STATE OF SOUTH DAKOTA	PROJECT	SHEET NO.	TOTAL SHEETS
	P-PH-B-PT 0010(124)296	X51	X169

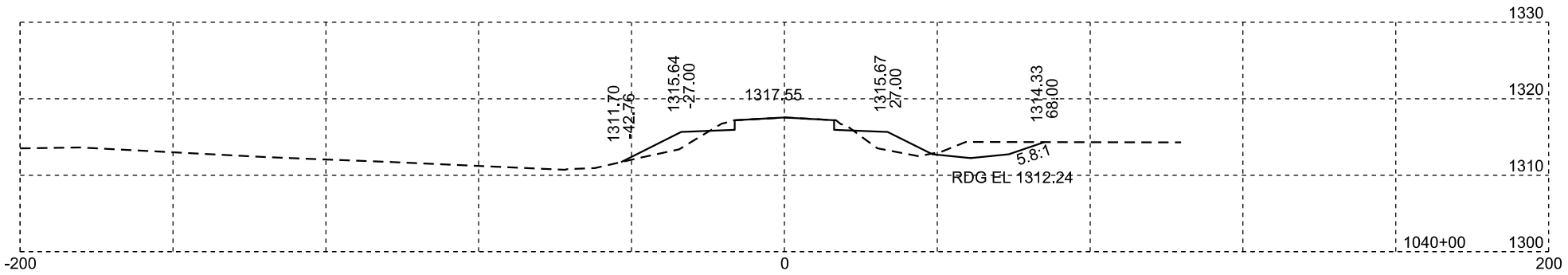

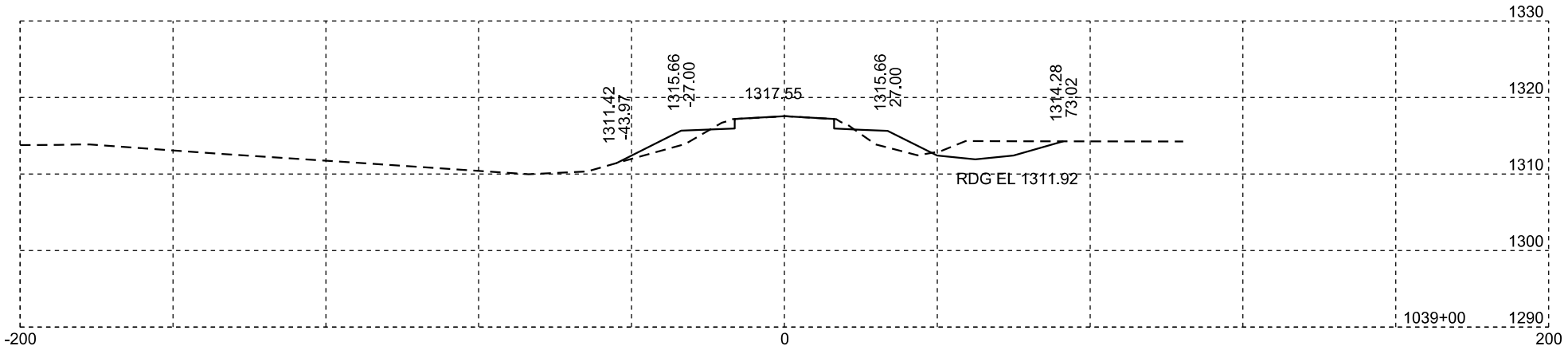

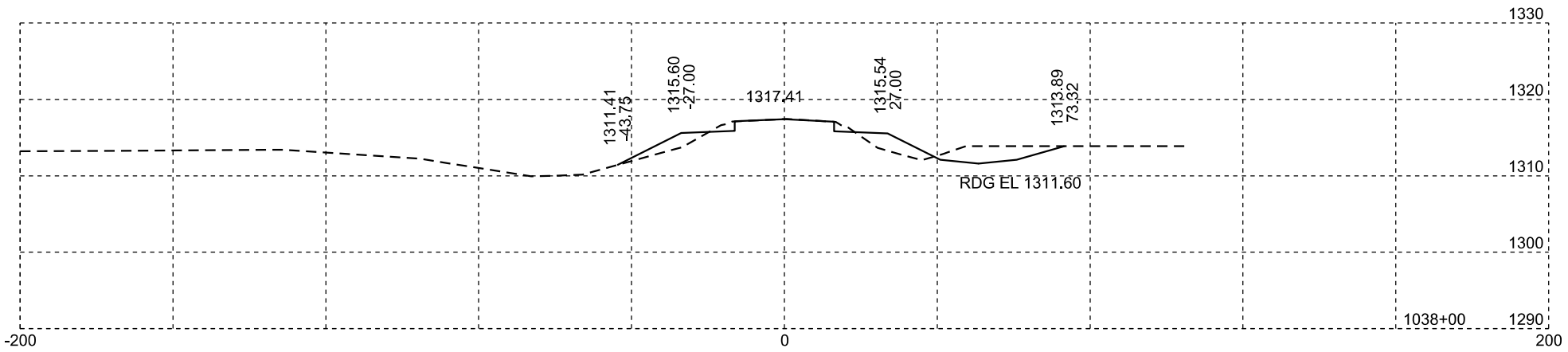

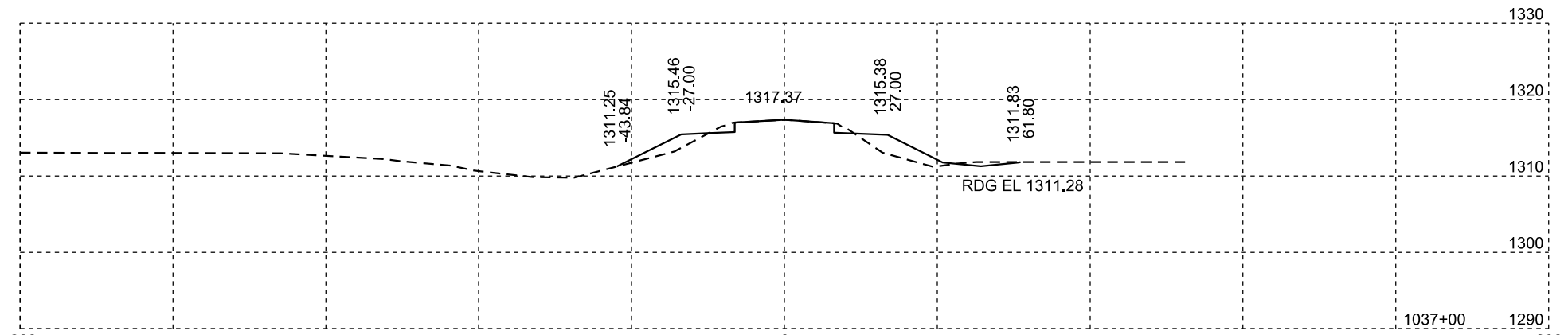

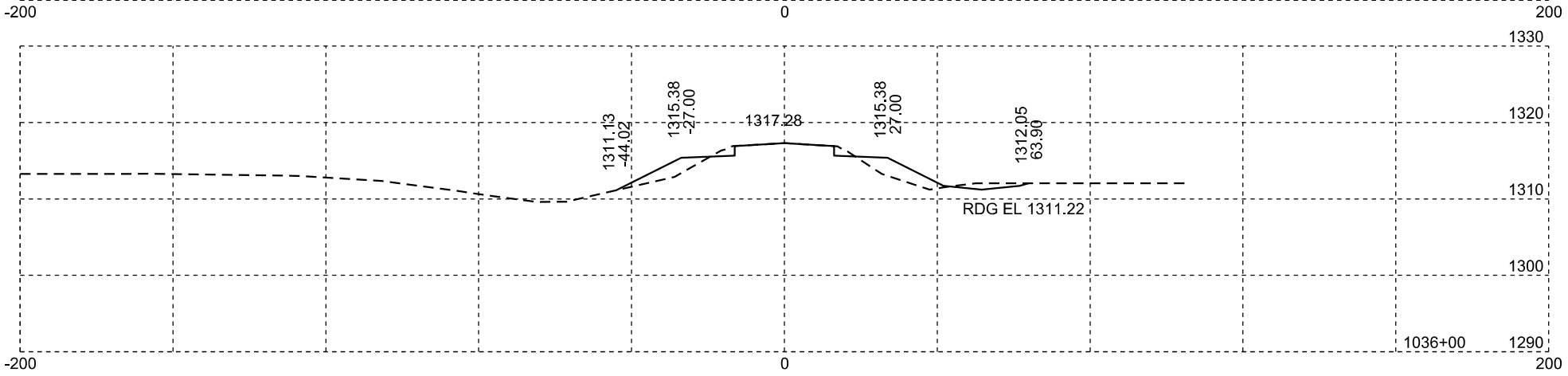

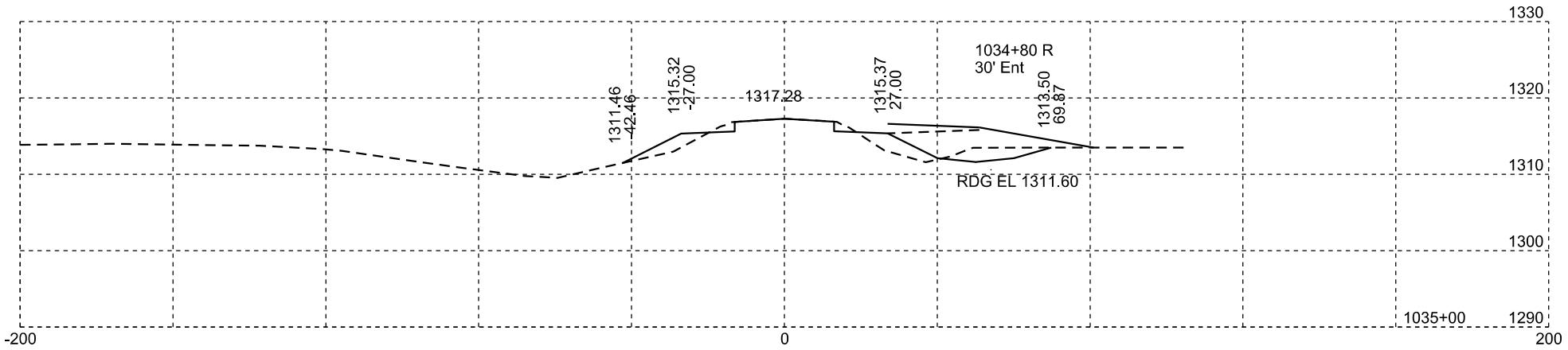

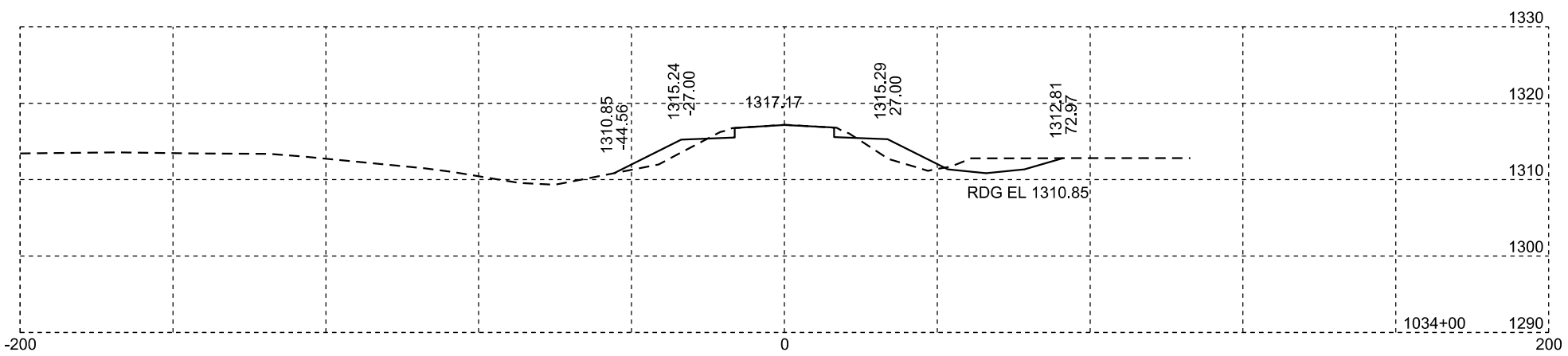

Rev 02/29/2024 DRM
Plotting Date: 02/29/2024

STATE OF SOUTH DAKOTA	PROJECT	SHEET NO.	TOTAL SHEETS
	P-PH-B-PT 0010(124)296	X52	X169

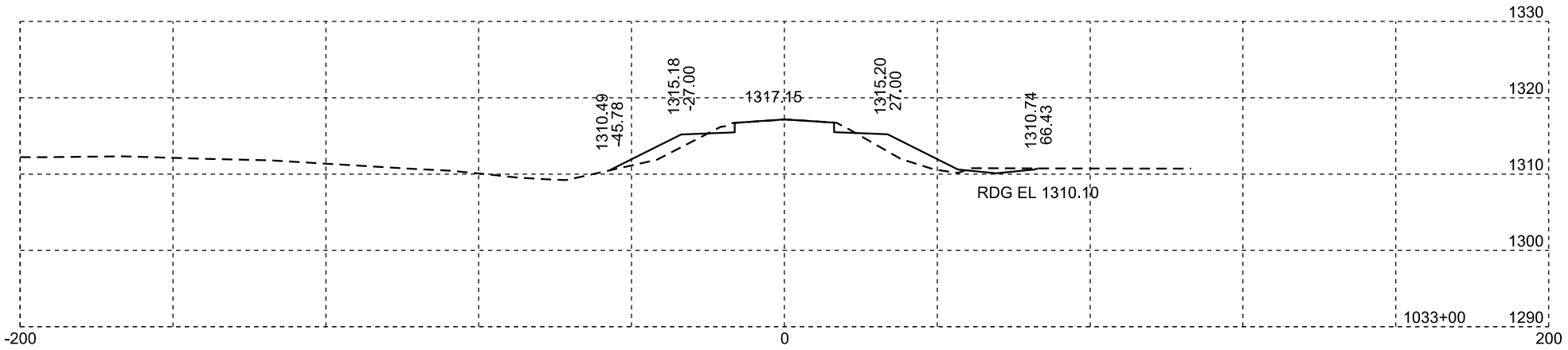

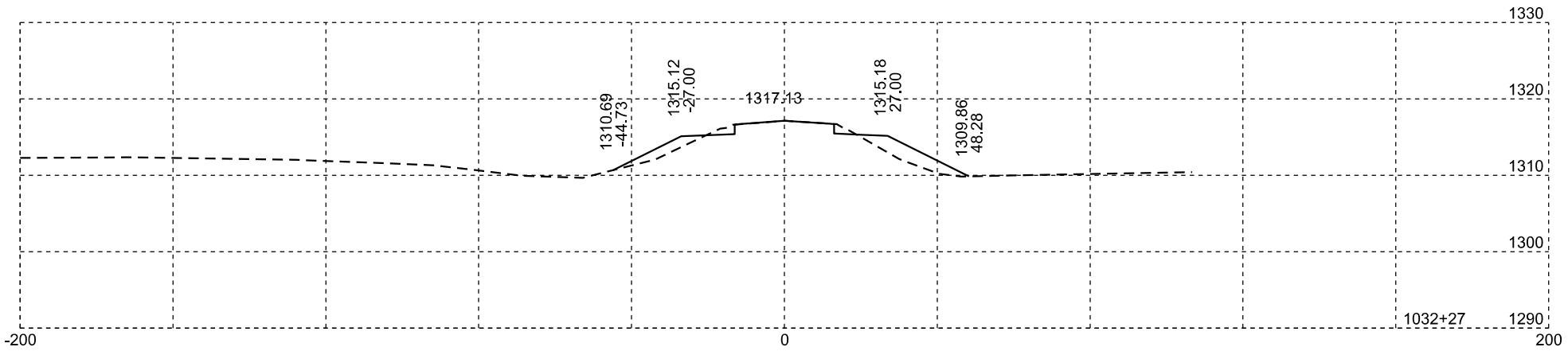

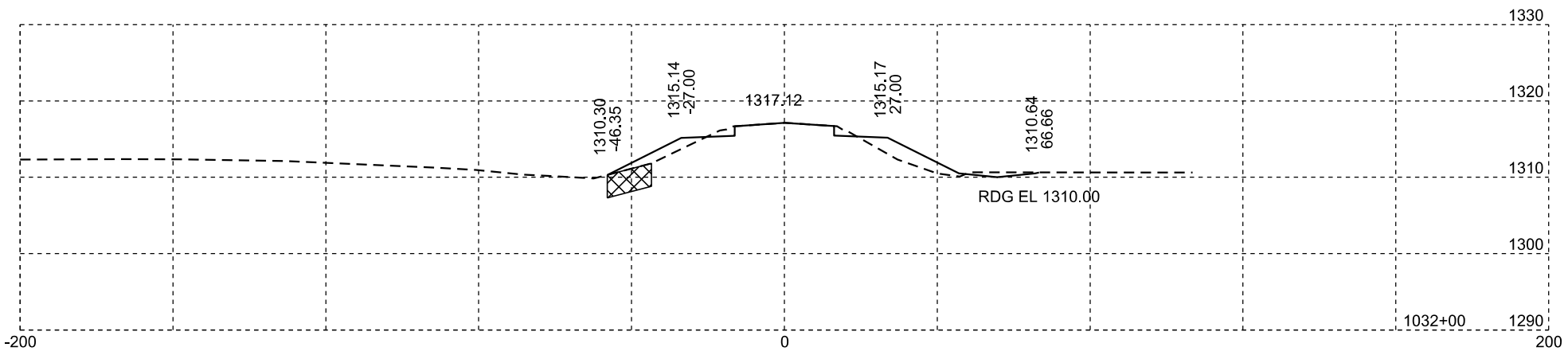

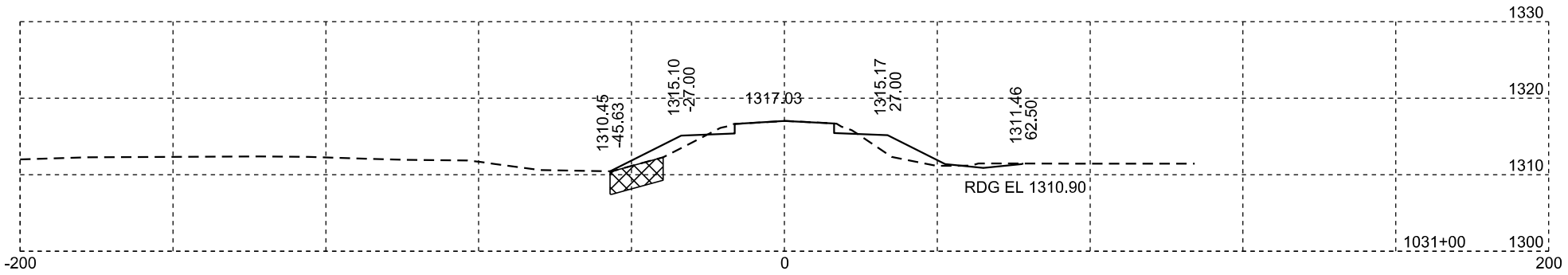

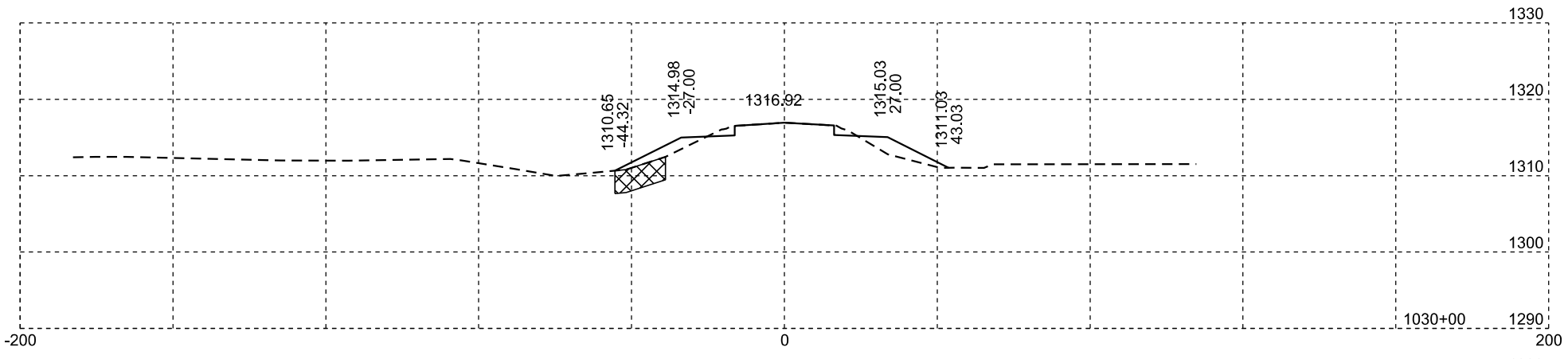

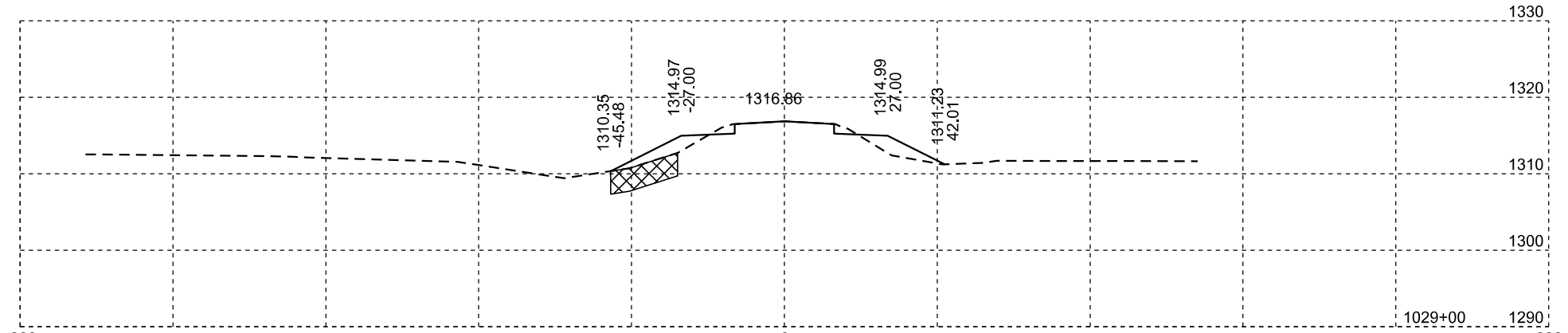

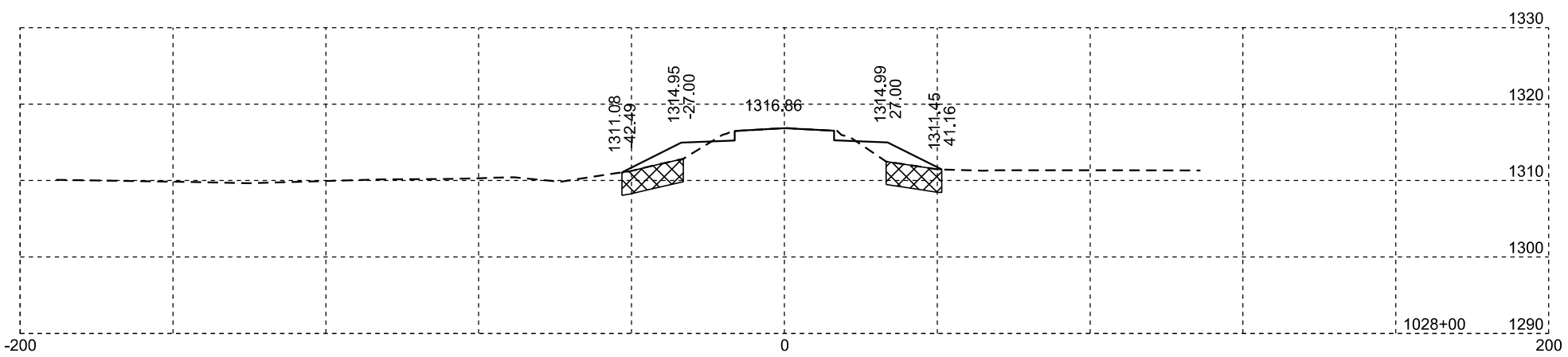

Muck

Rev 02/29/2024 DRM
Plotting Date: 02/29/2024

STATE OF SOUTH DAKOTA	PROJECT	SHEET NO.	TOTAL SHEETS
	P-PH-B-PT 0010(124)296	X53	X169

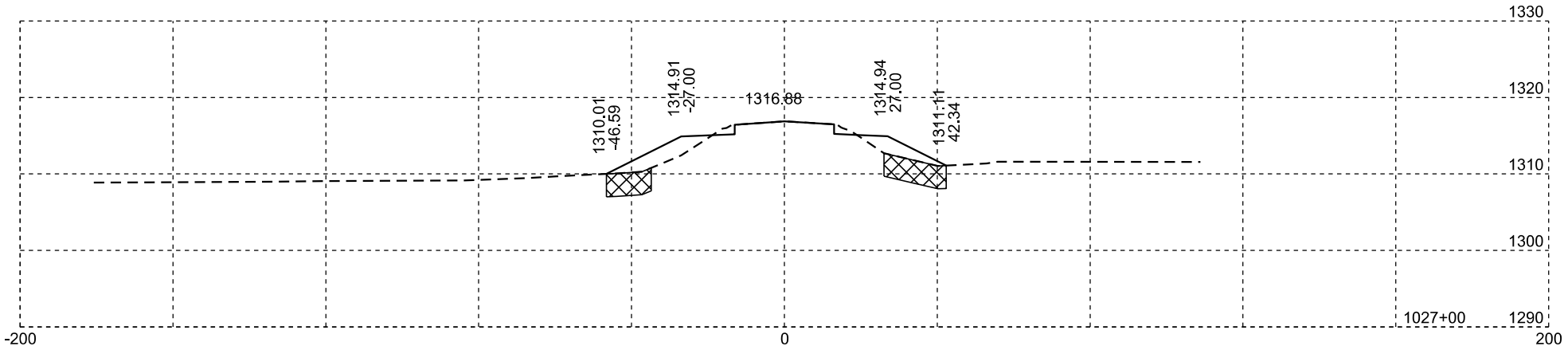

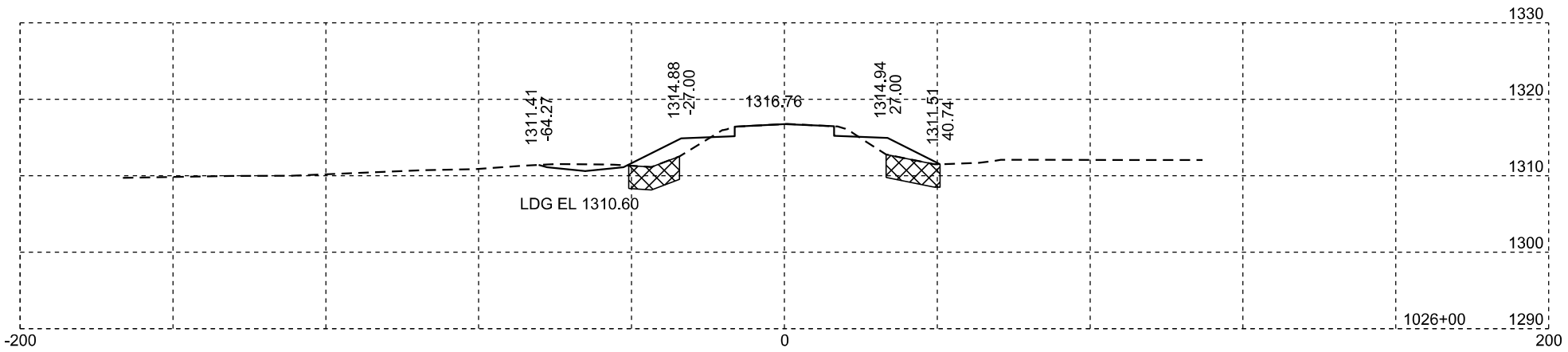

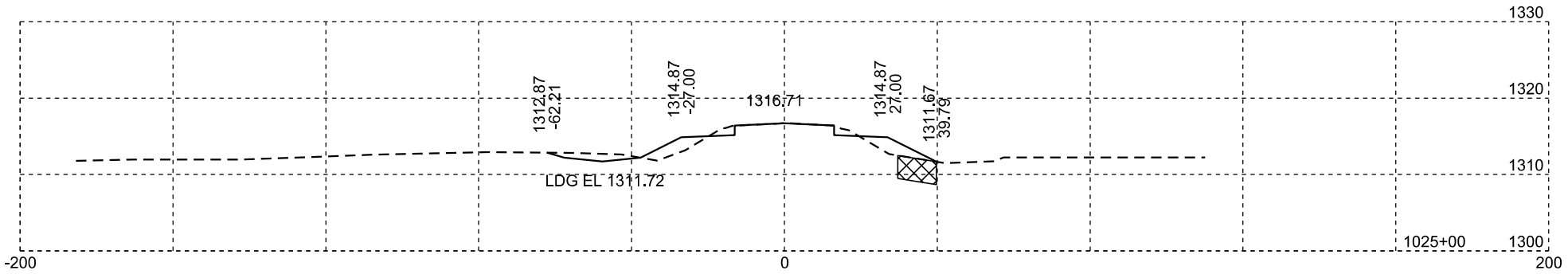

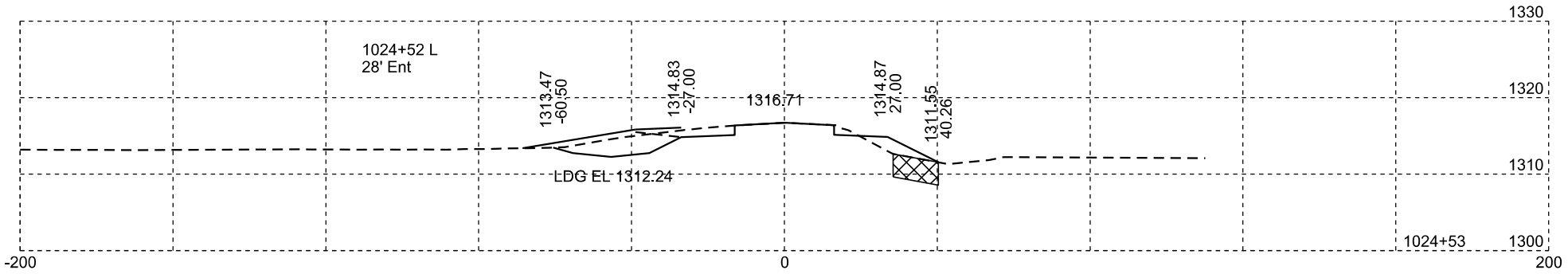

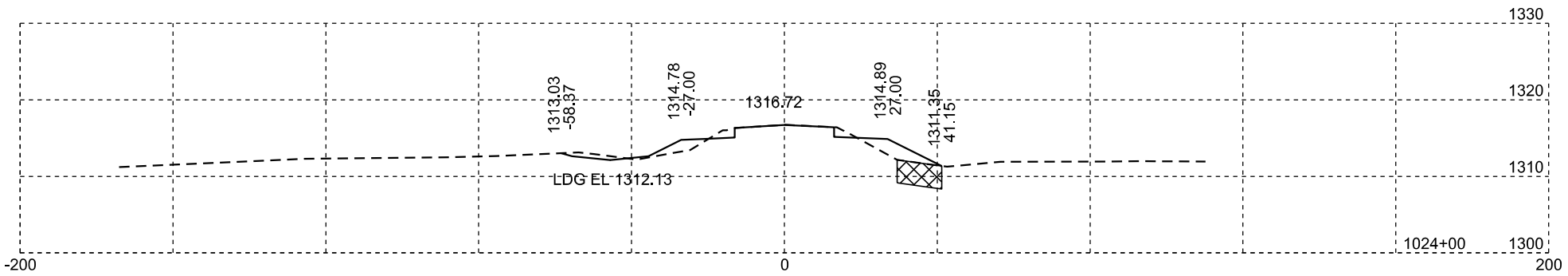

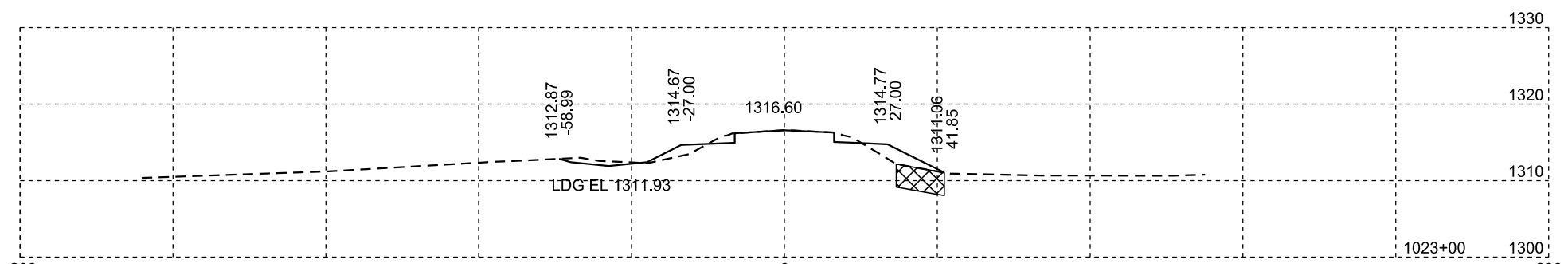

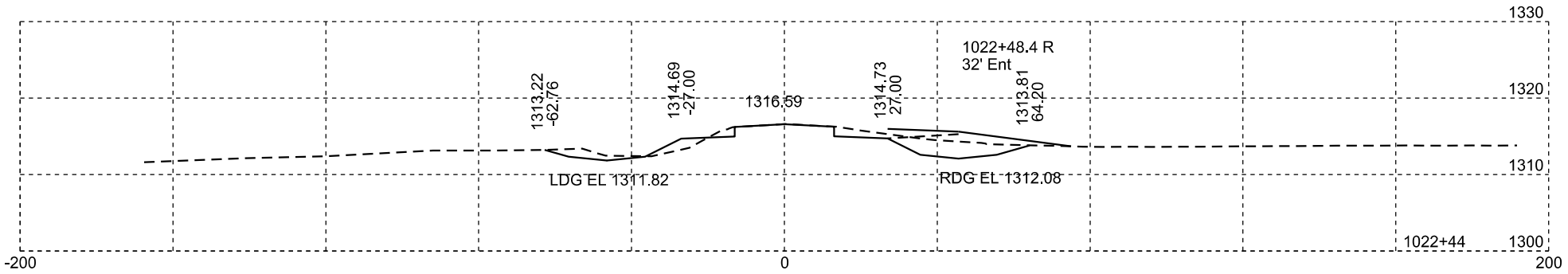

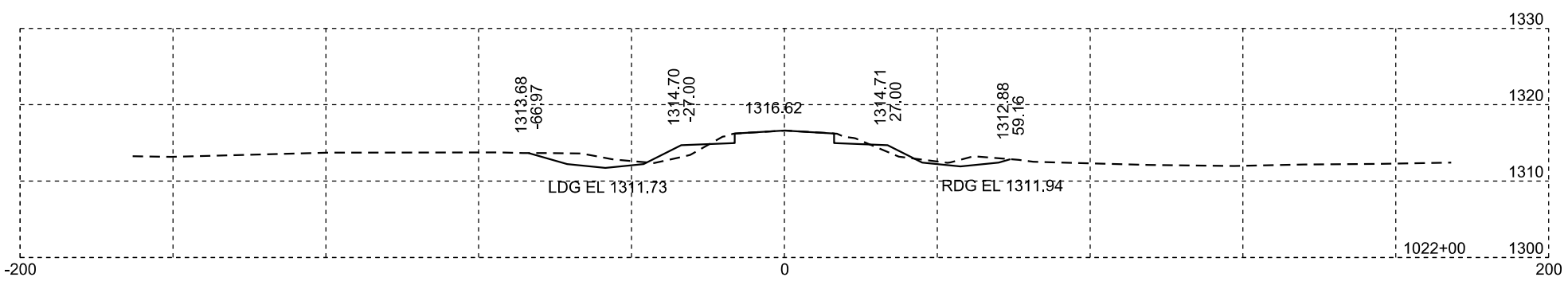

Muck

Rev 02/29/2024 DRM
Plotting Date: 02/29/2024

STATE OF SOUTH DAKOTA	PROJECT	SHEET NO.	TOTAL SHEETS
	P-PH-B-PT 0010(124)296	X54	X169

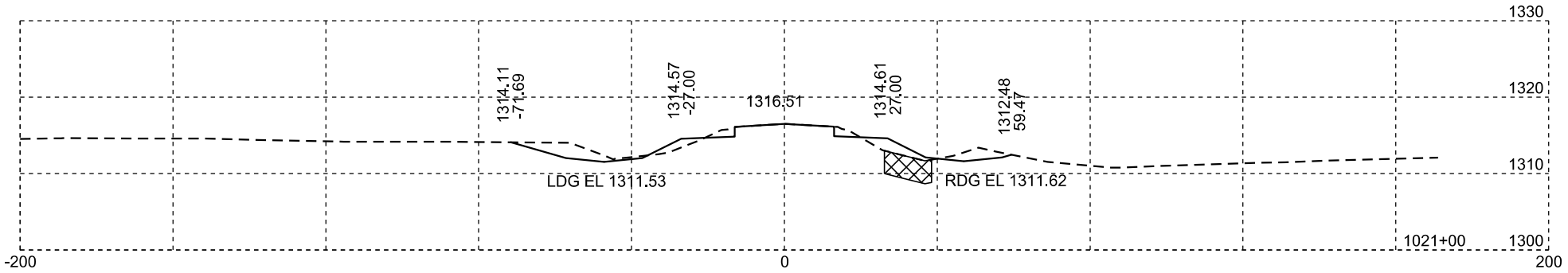

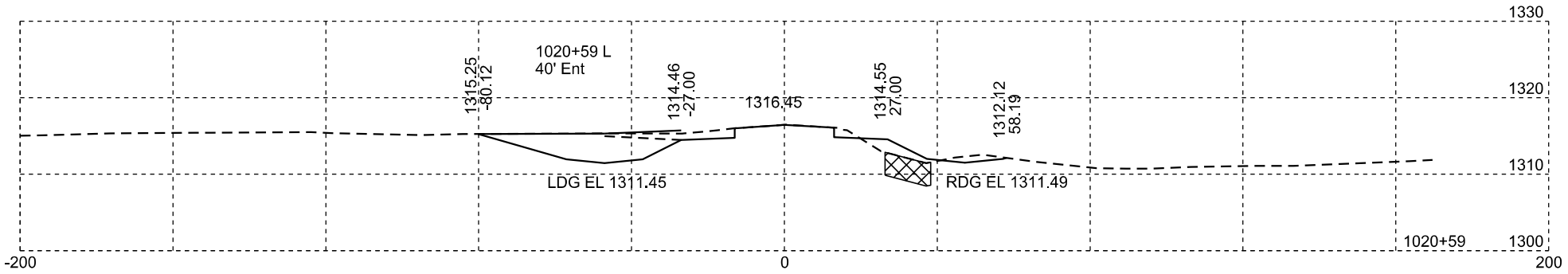

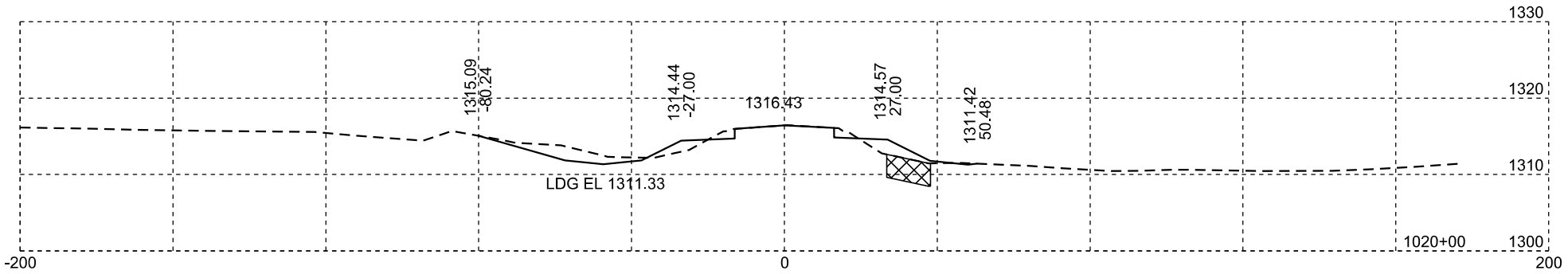

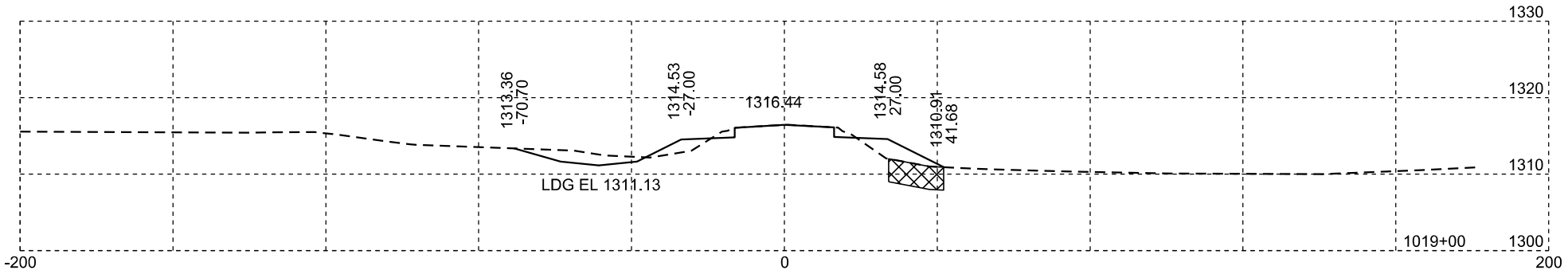

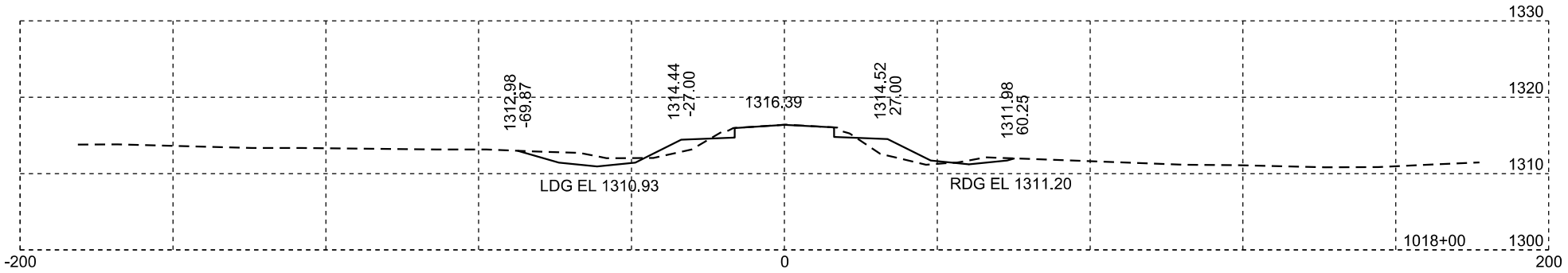

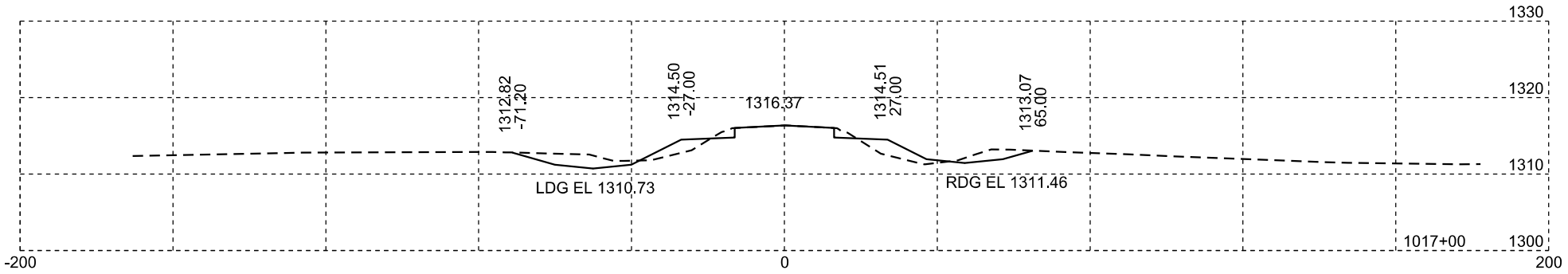

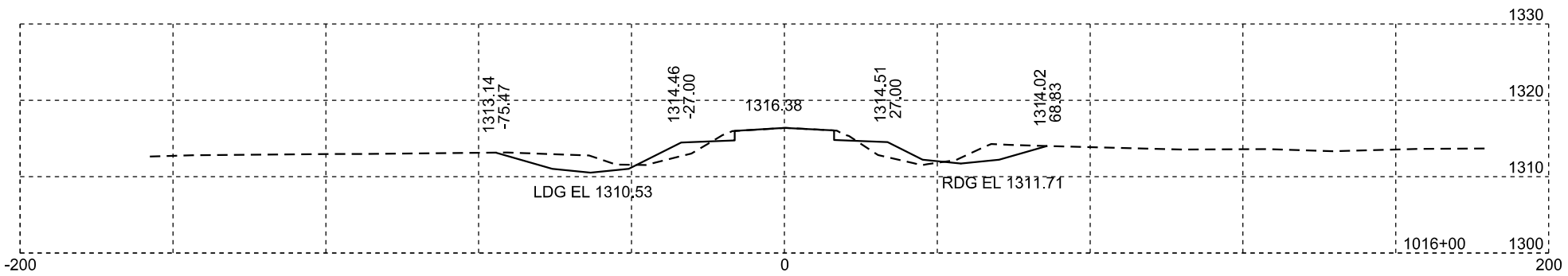

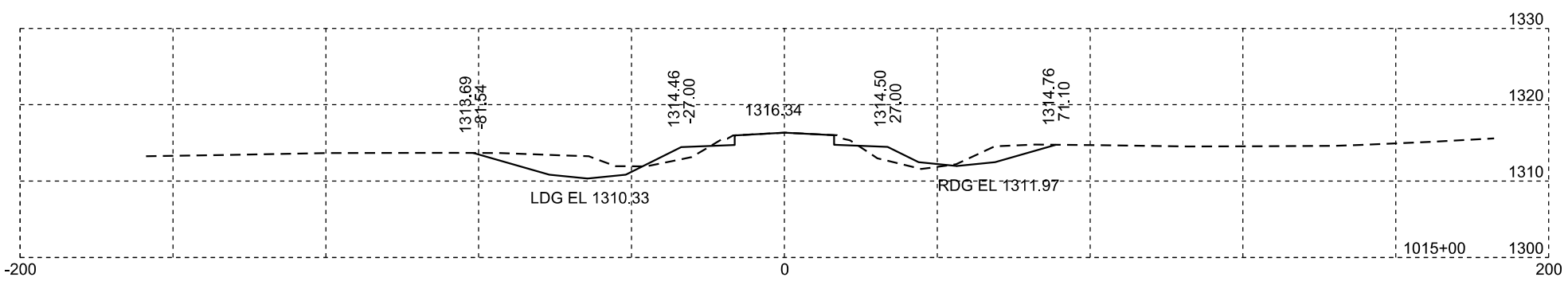

Muck

Rev 02/29/2024 DRM
Plotting Date: 02/29/2024

STATE OF SOUTH DAKOTA	PROJECT	SHEET NO.	TOTAL SHEETS
	P-PH-B-PT 0010(124)296	X55	X169

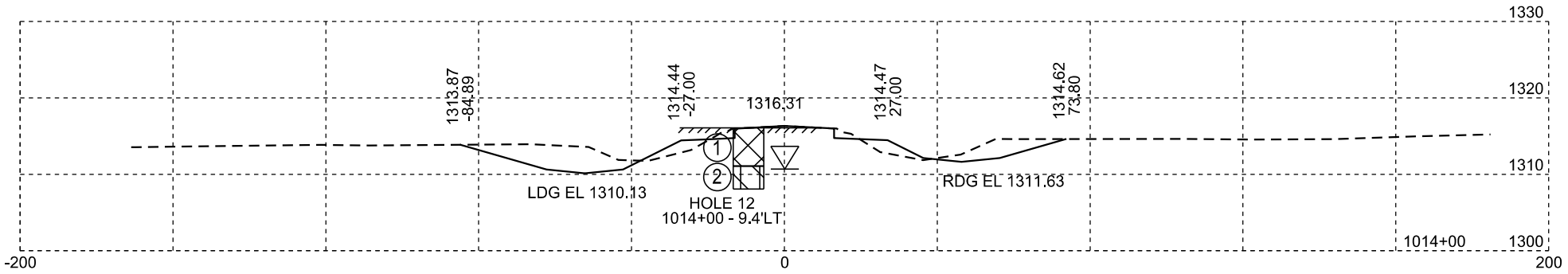

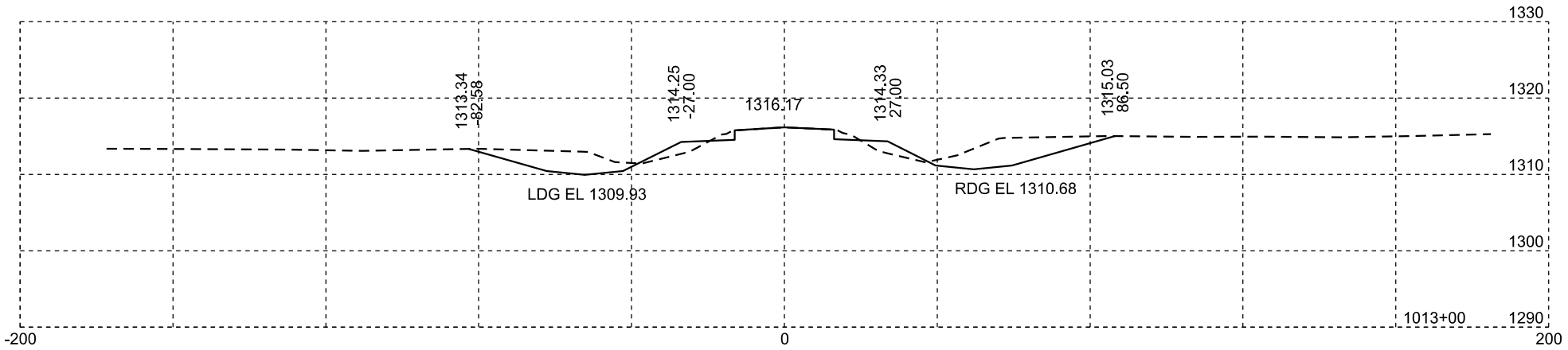

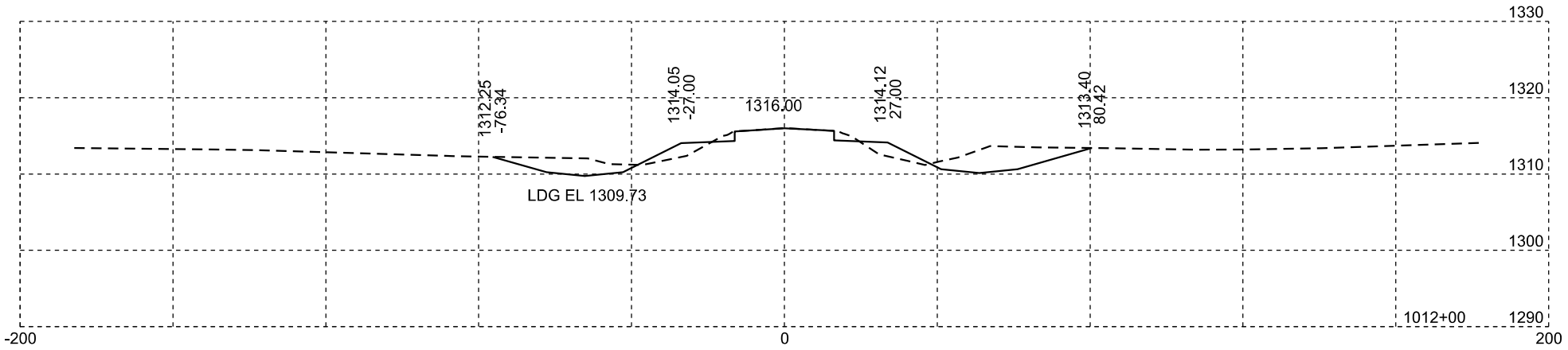

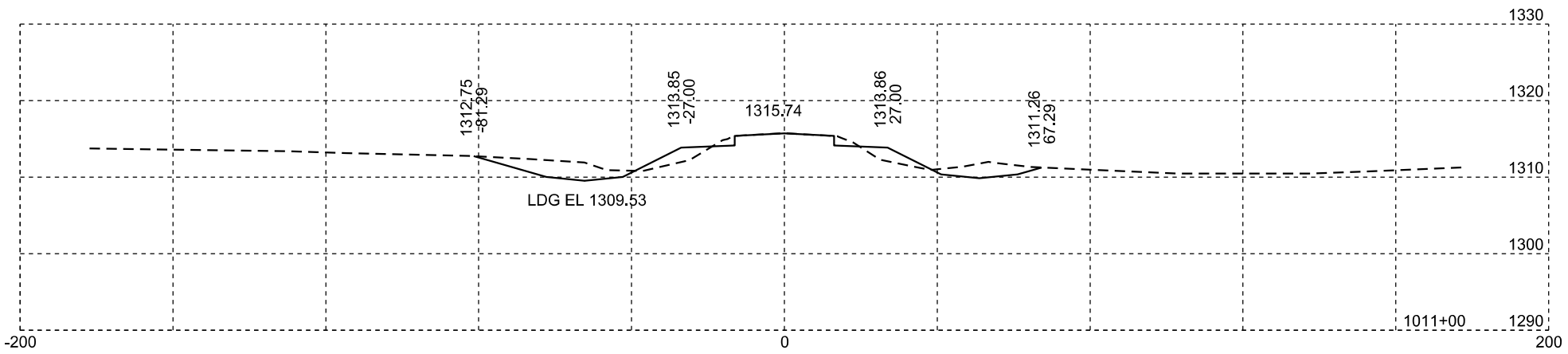

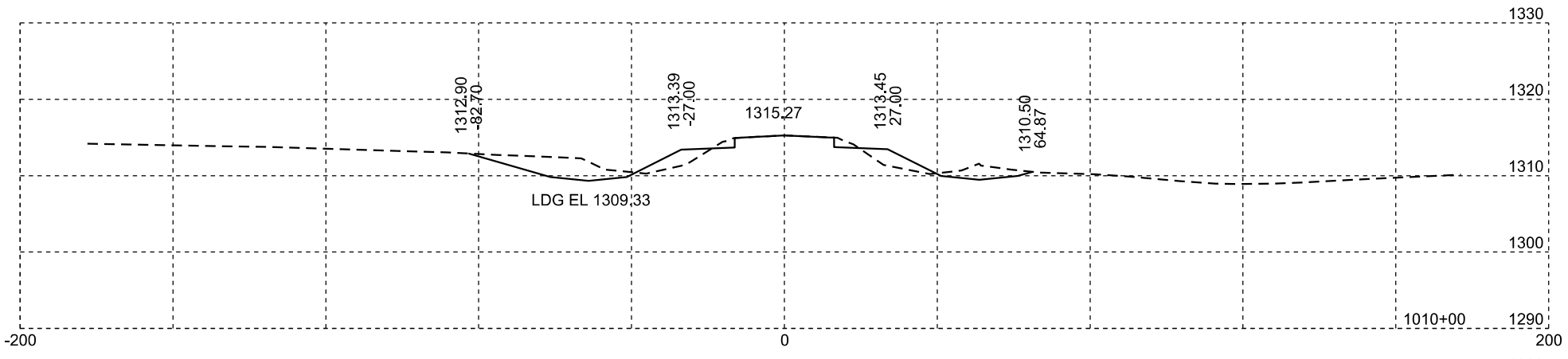

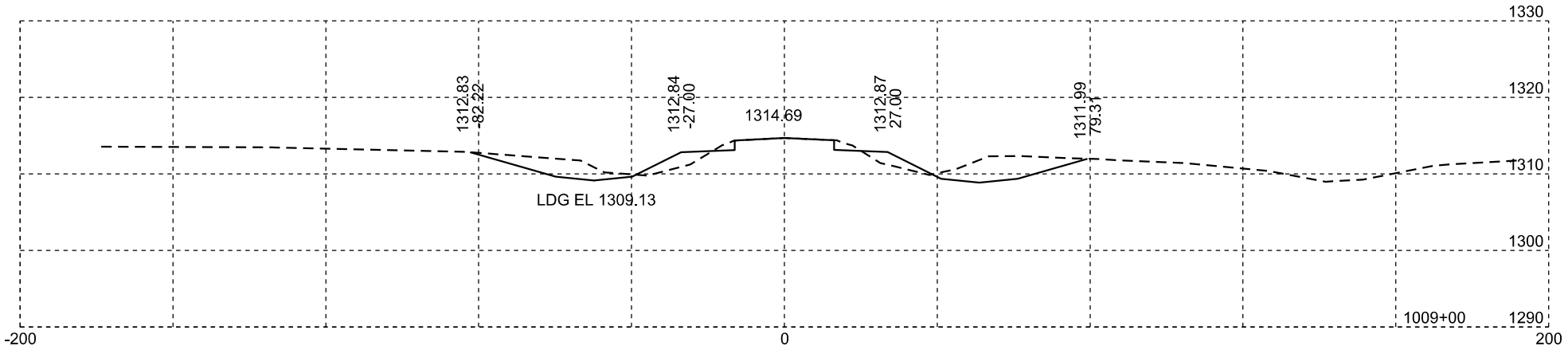

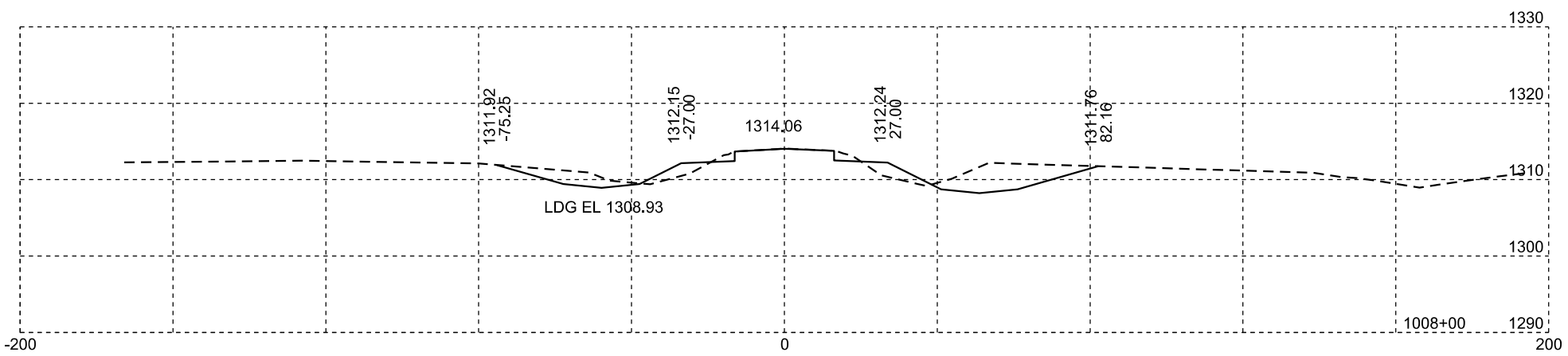

Plotting Date: 01/19/2024

STATE OF SOUTH DAKOTA	PROJECT	SHEET NO.	TOTAL SHEETS
	P-PH-B-PT 0010(124)296	X56	X169

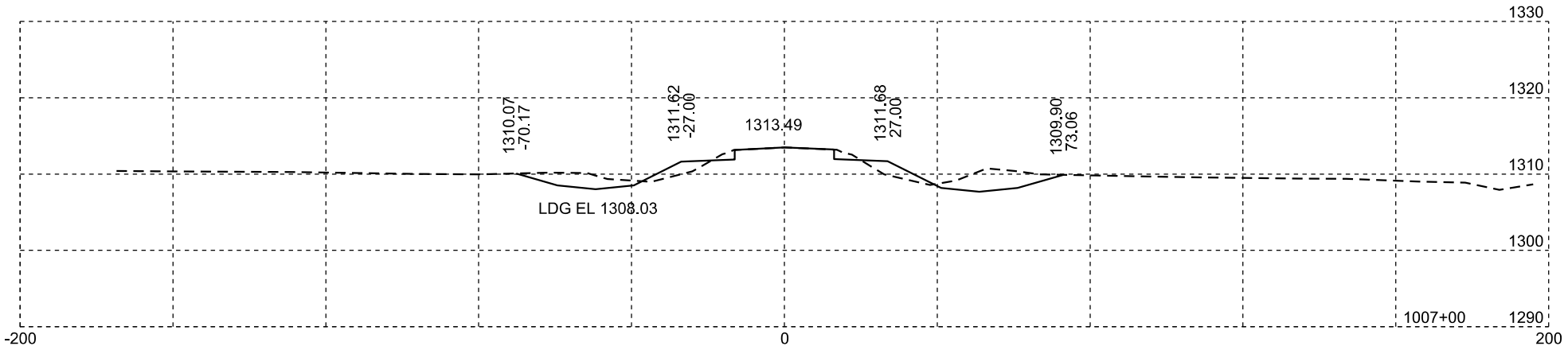

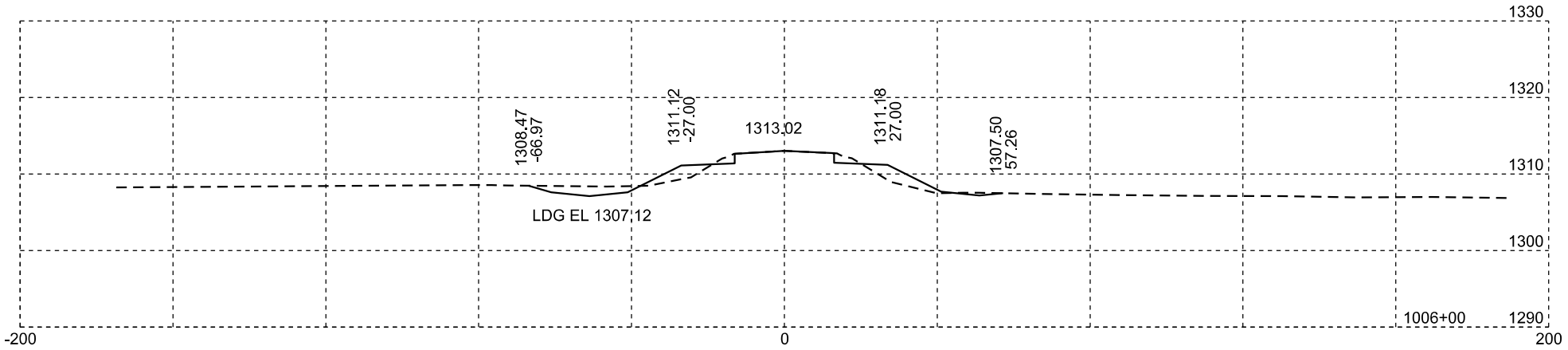

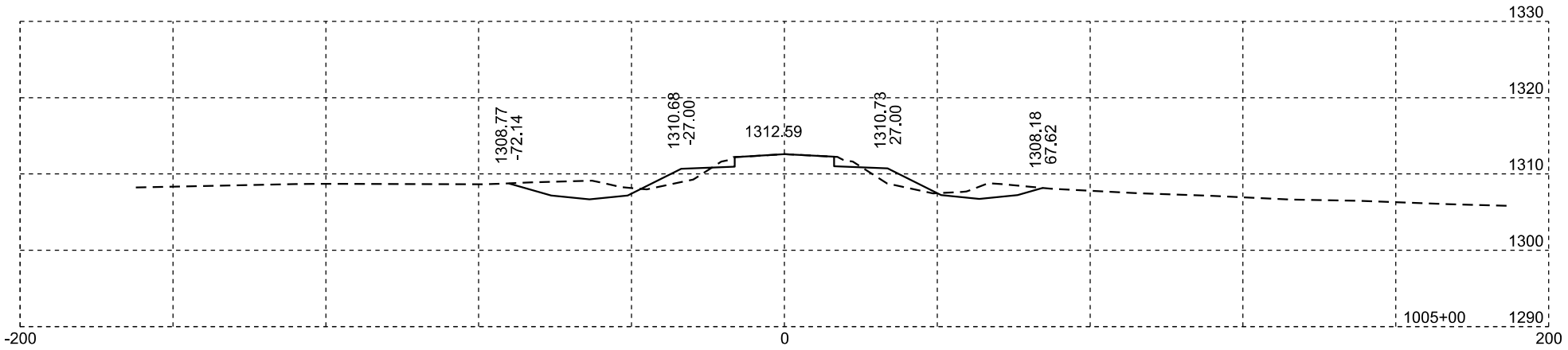

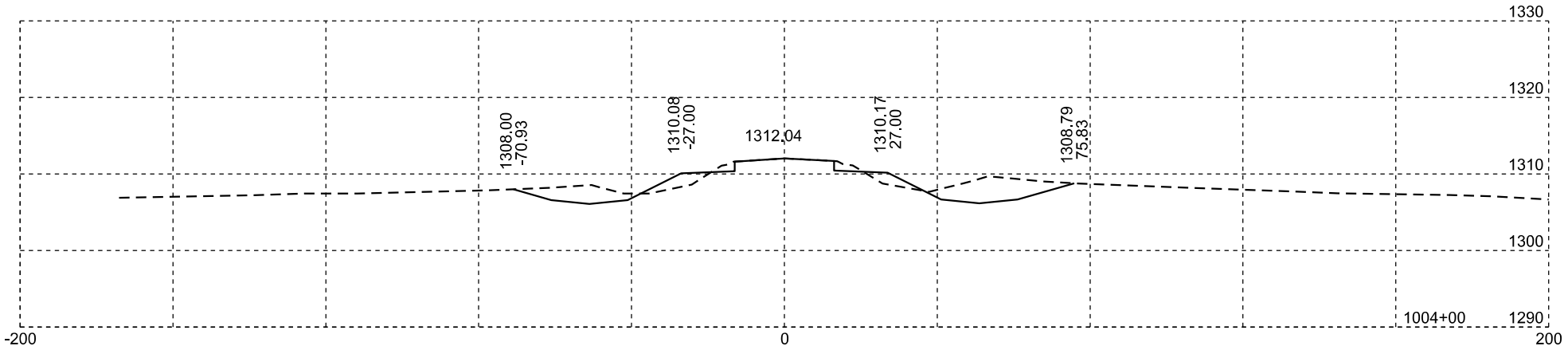

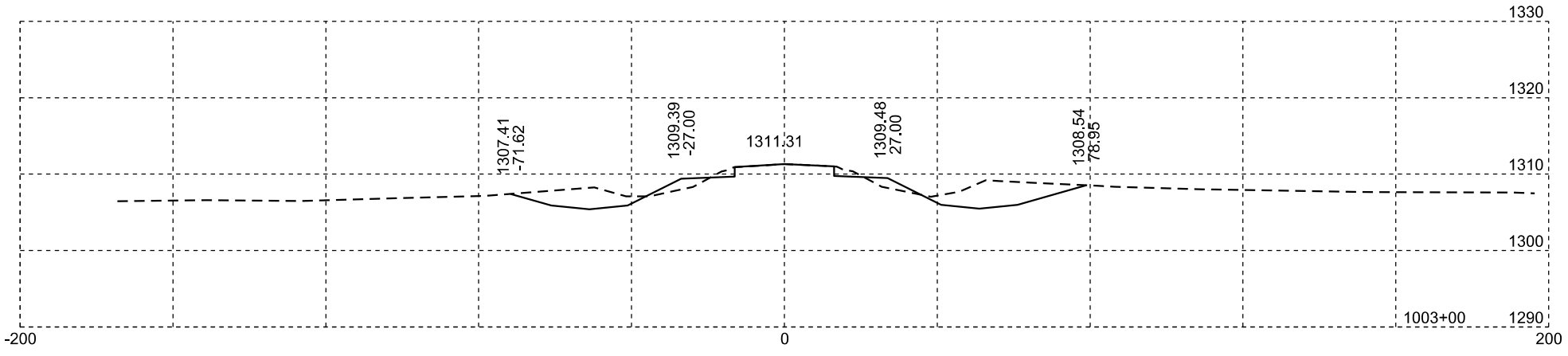

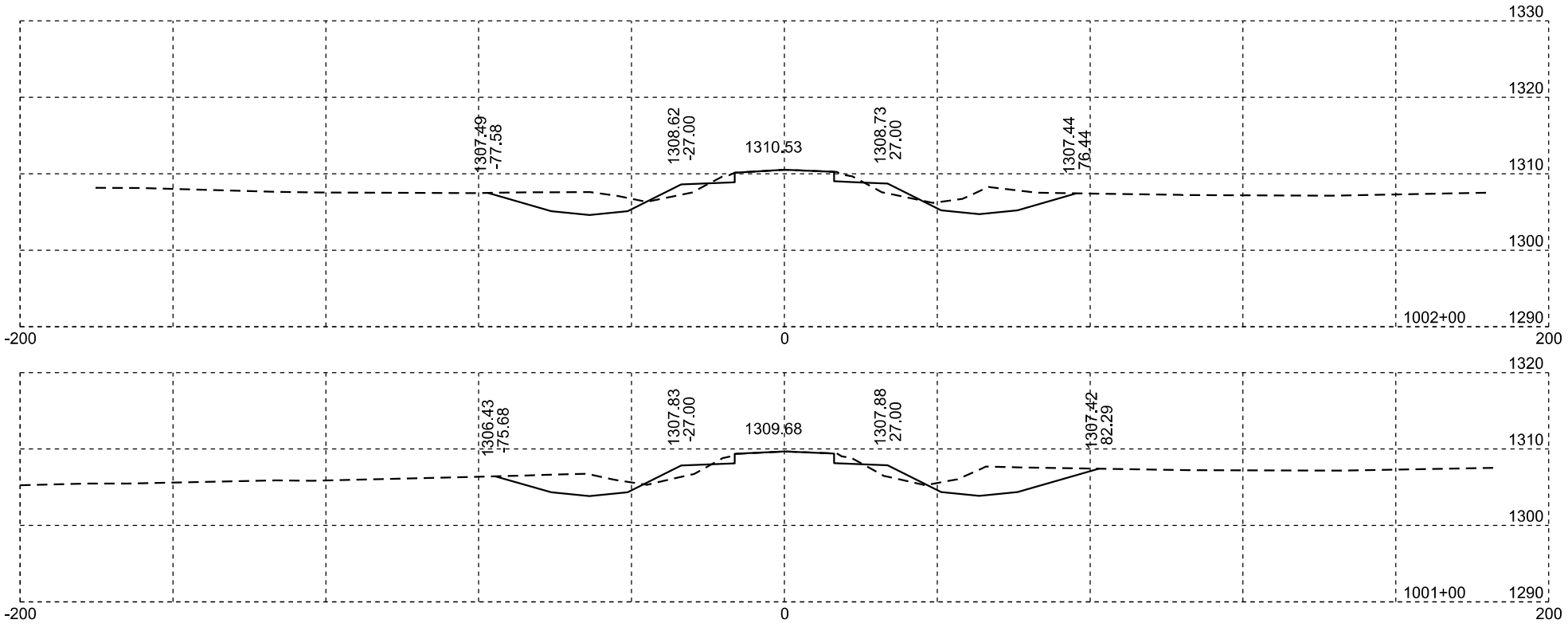

Plotting Date: 01/19/2024

STATE OF SOUTH DAKOTA	PROJECT	SHEET NO.	TOTAL SHEETS
	P-PH-B-PT 0010(124)296	X57	X169

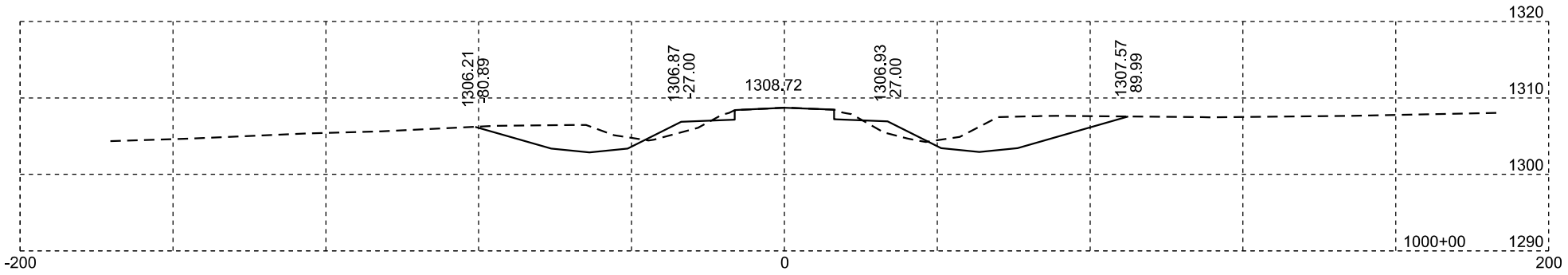

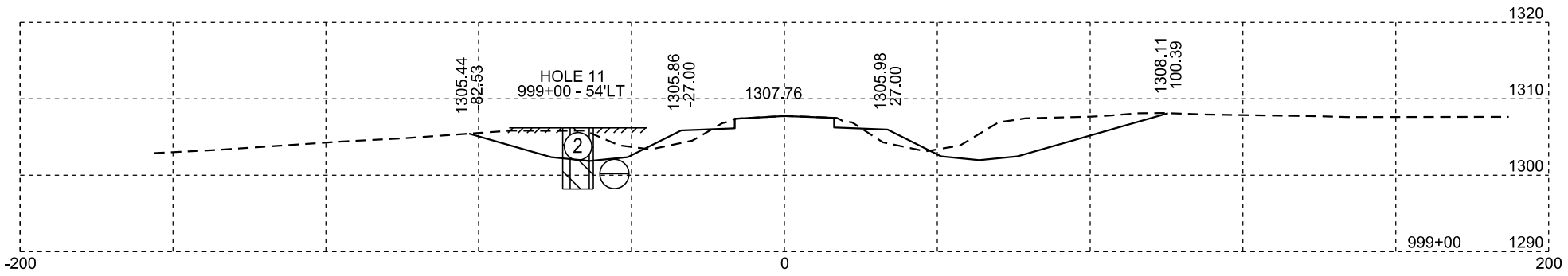

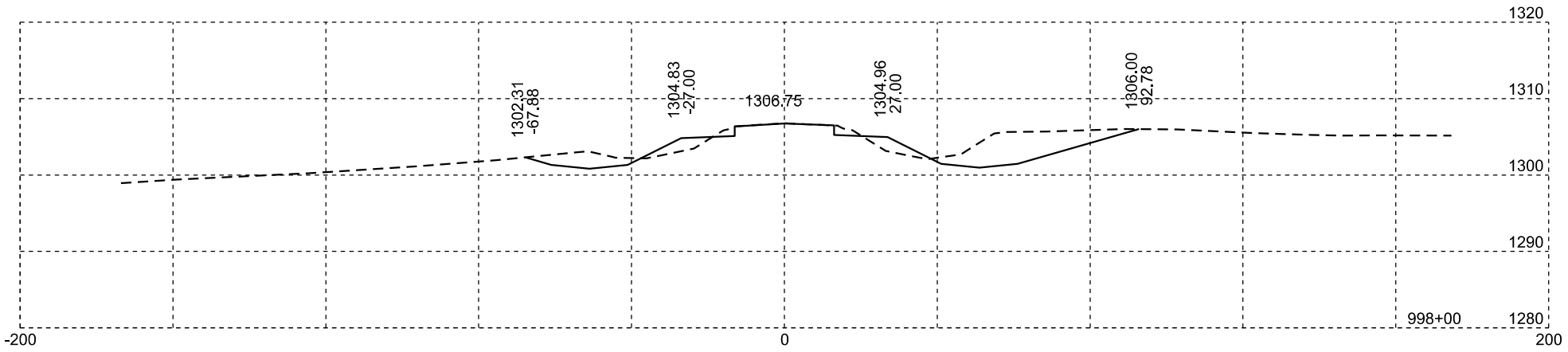

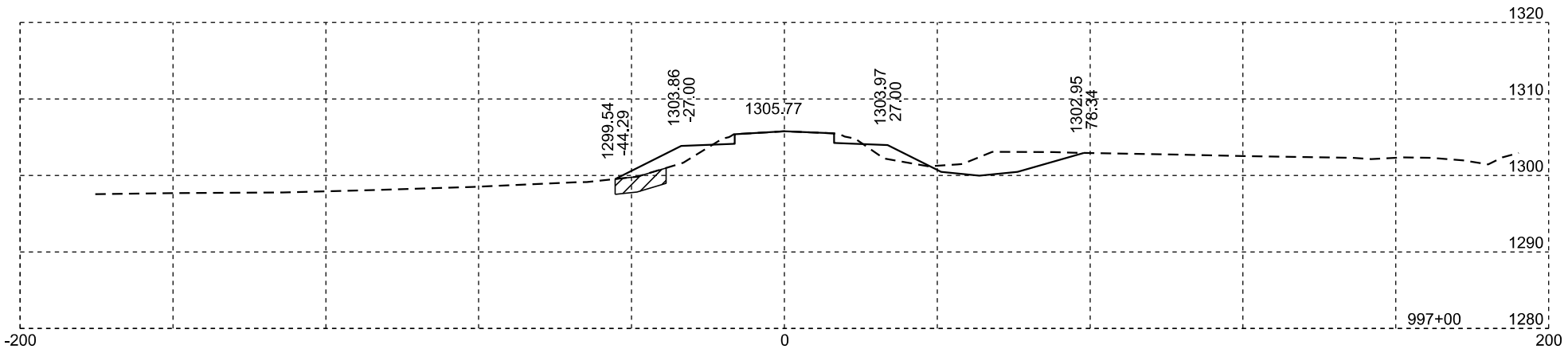

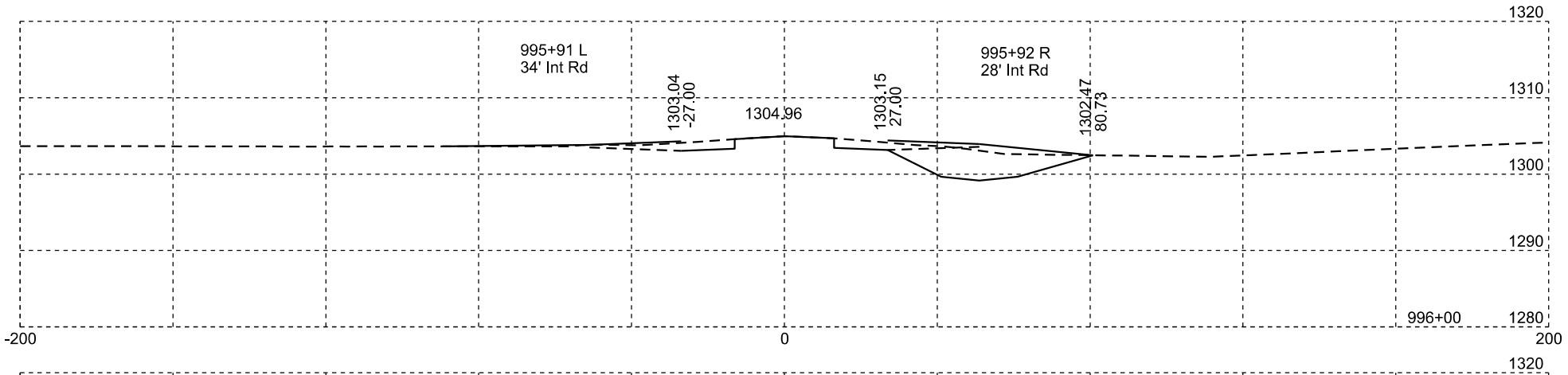

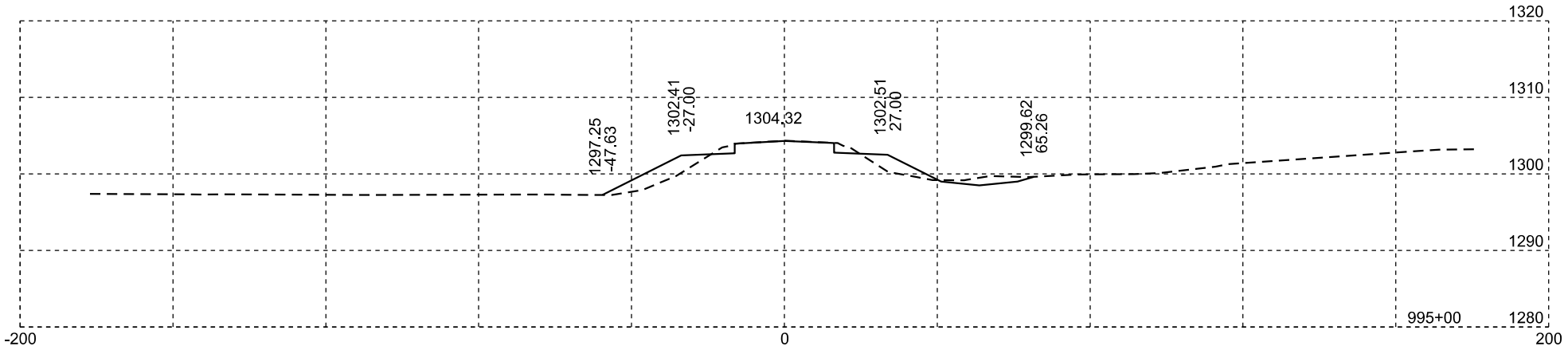

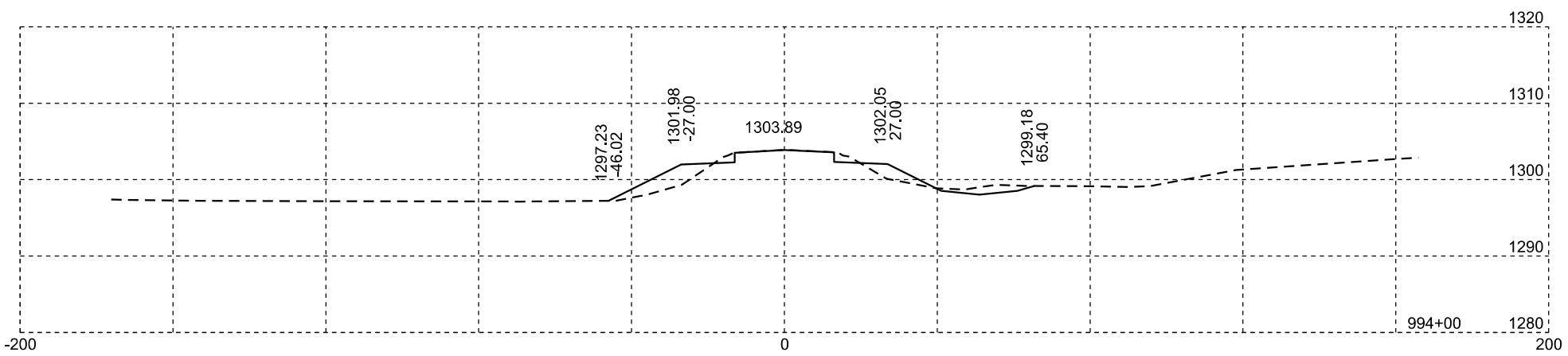

Unstable

Plotting Date: 01/19/2024

STATE OF SOUTH DAKOTA	PROJECT	SHEET NO.	TOTAL SHEETS
	P-PH-B-PT 0010(124)296	X58	X169

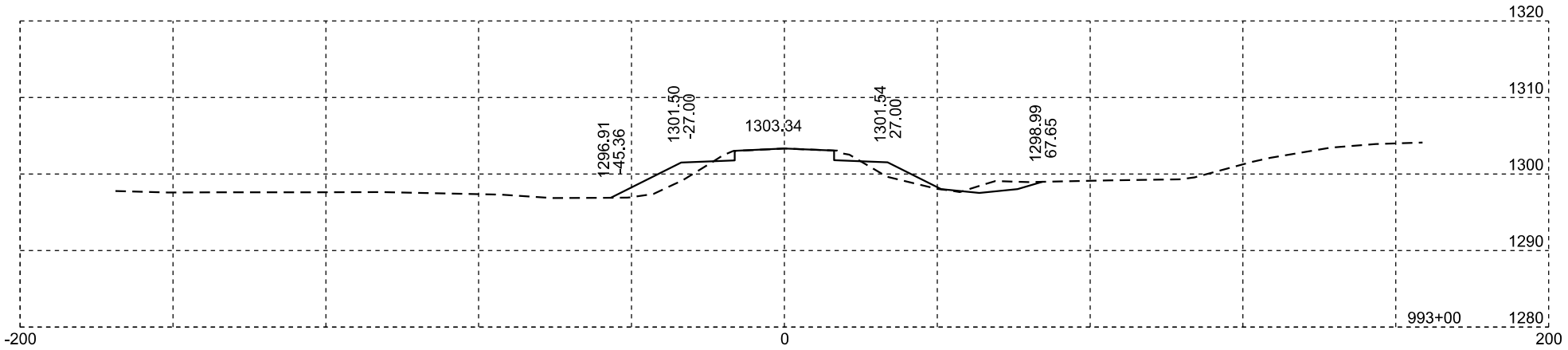

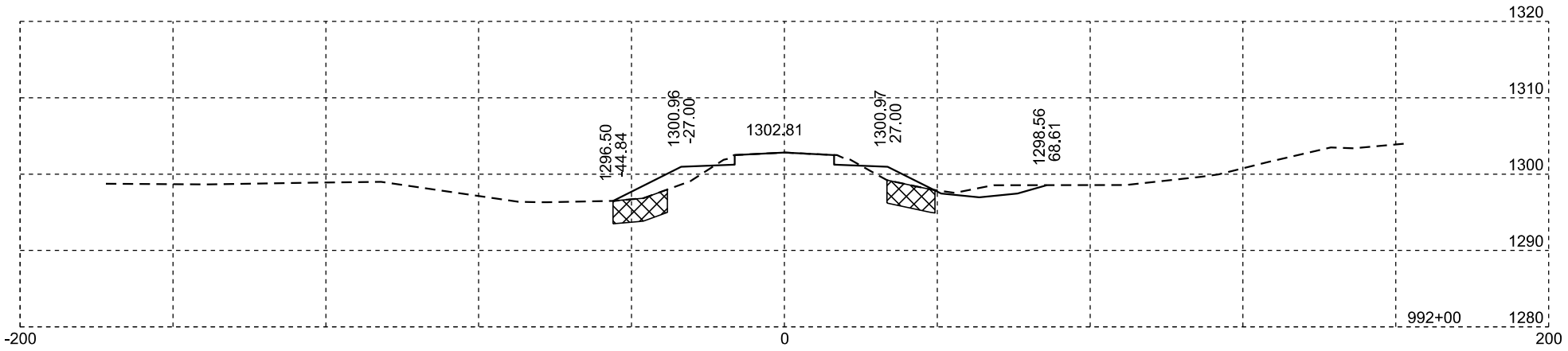

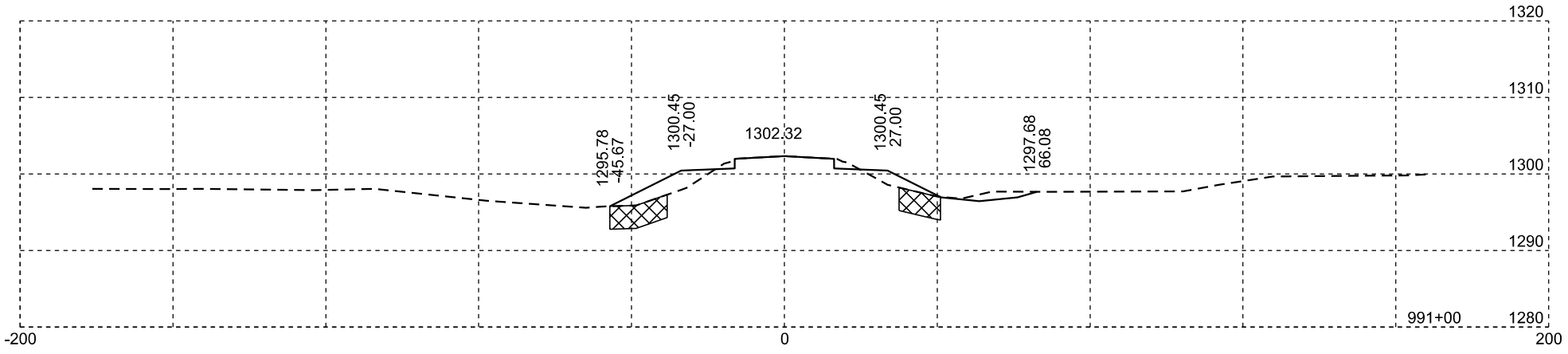

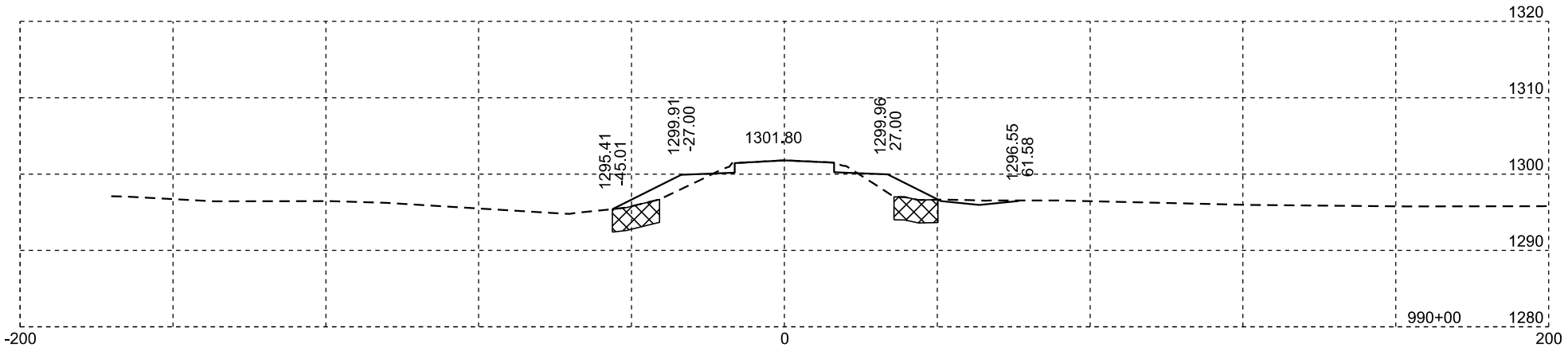

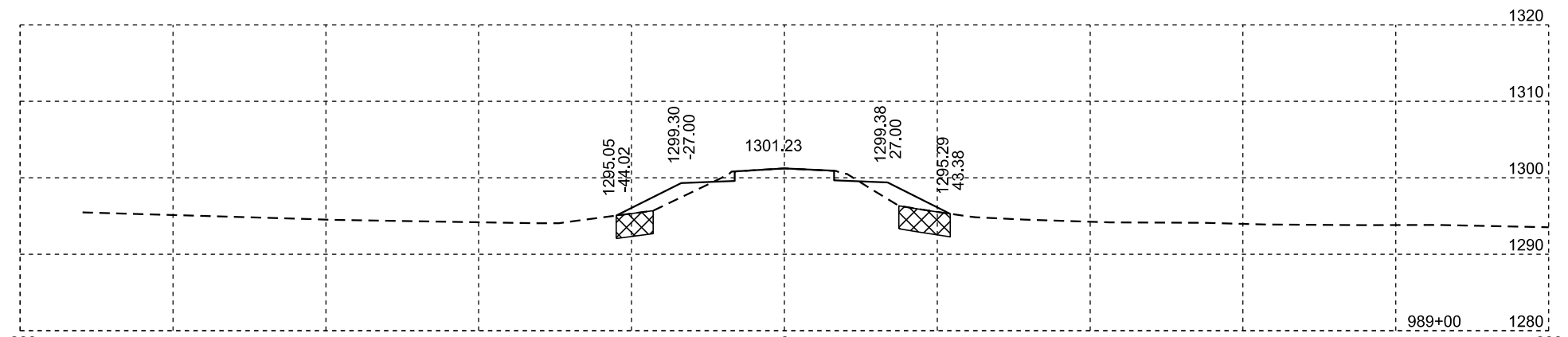

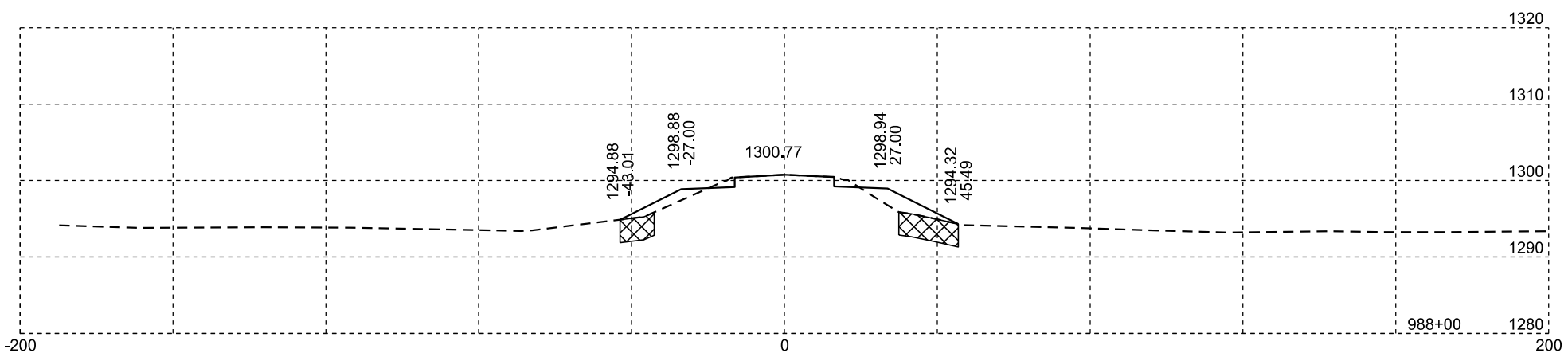

Muck

Plotting Date: 01/19/2024

STATE OF SOUTH DAKOTA	PROJECT	SHEET NO.	TOTAL SHEETS
	P-PH-B-PT 0010(124)296	X59	X169

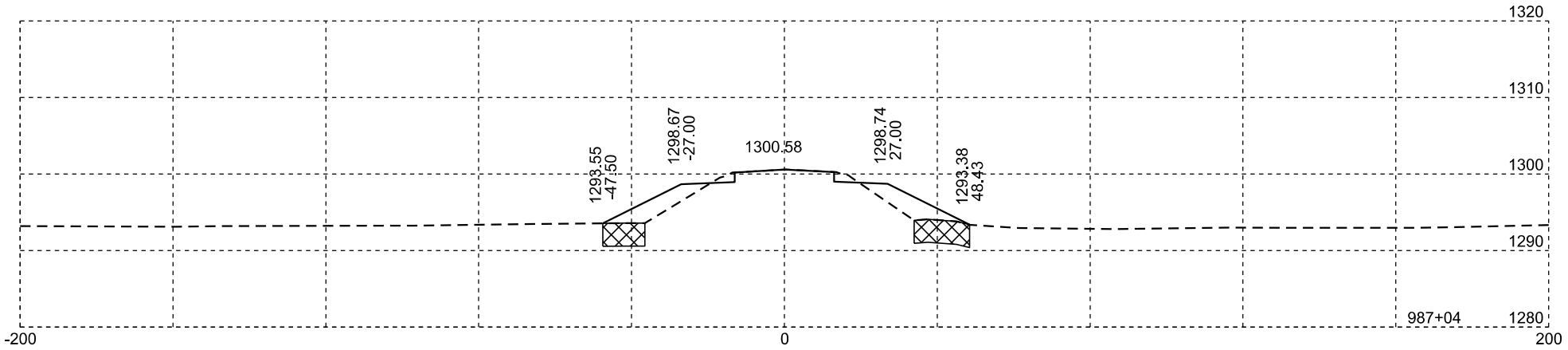

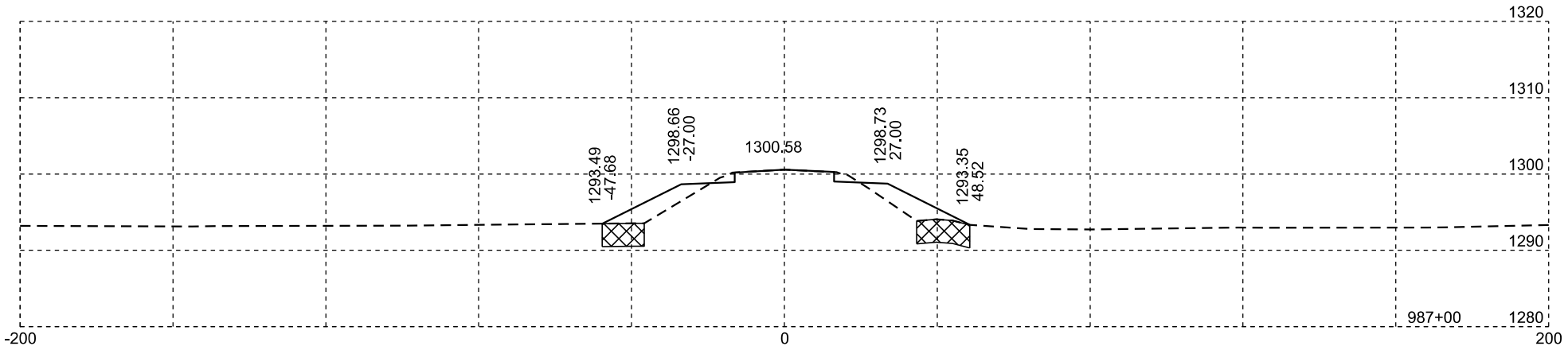

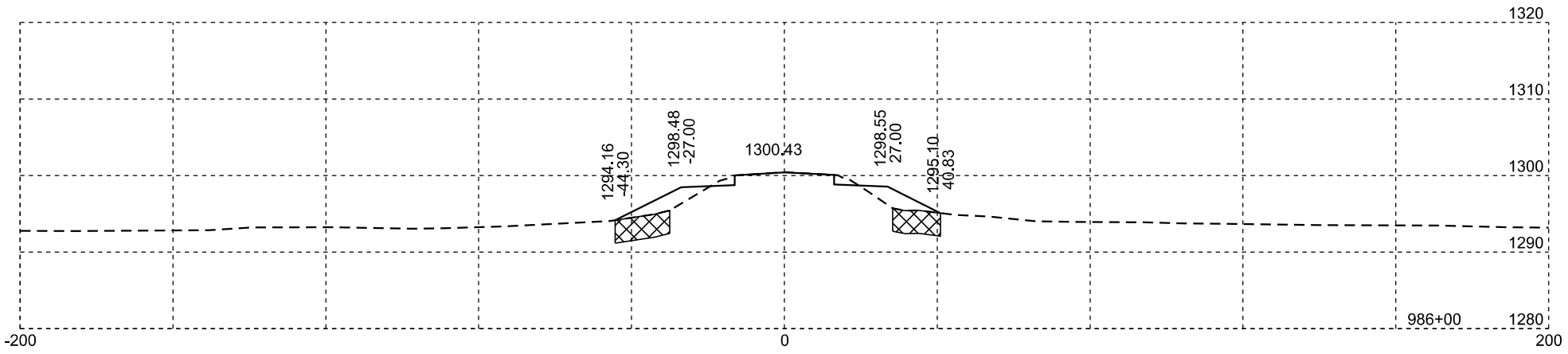

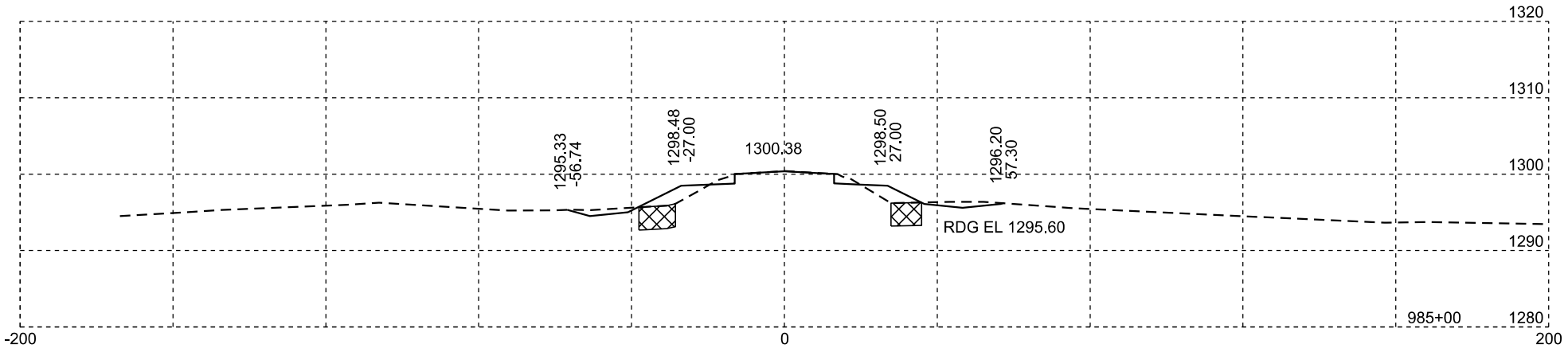

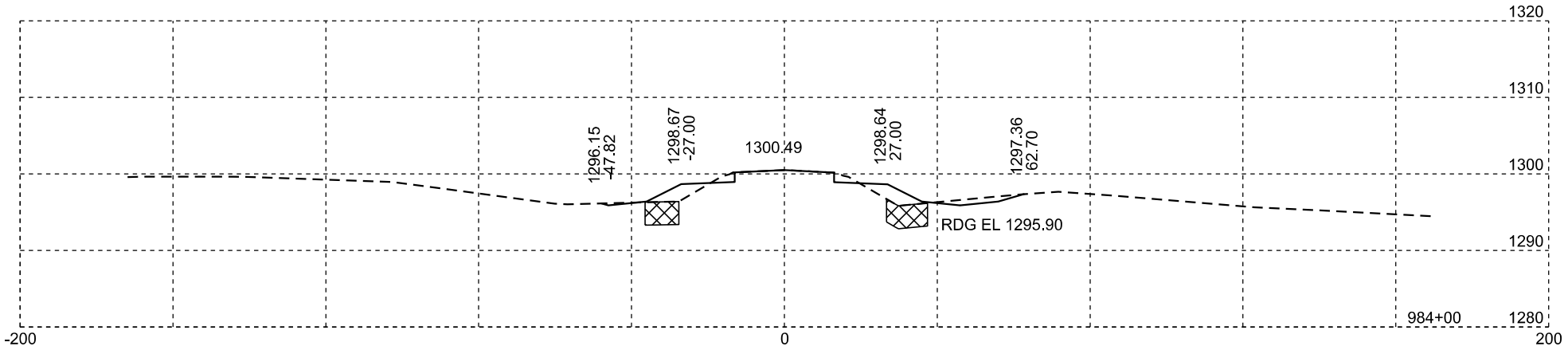

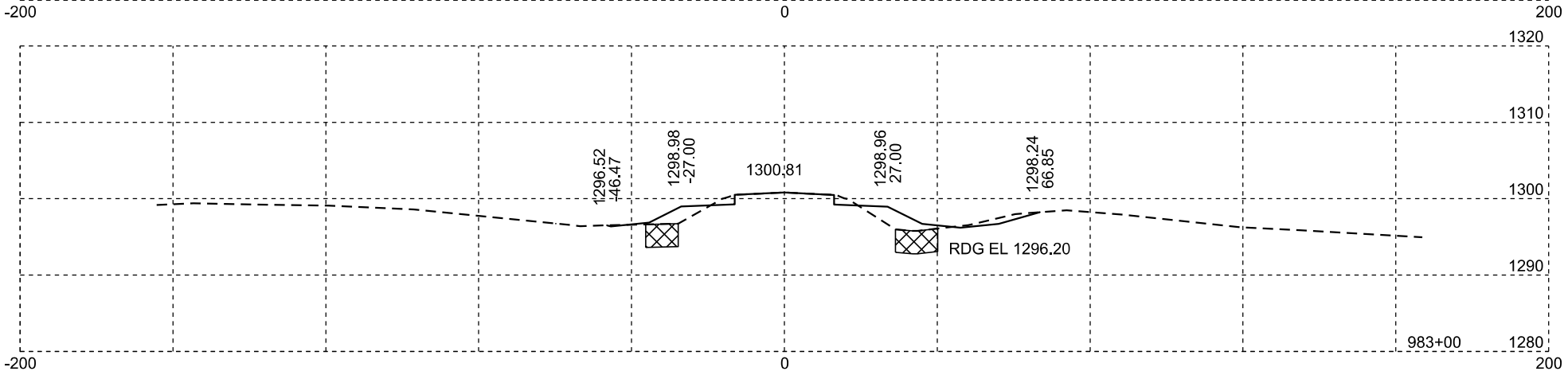

Muck

Rev 02/29/2024 DRM
Plotting Date: 02/29/2024

STATE OF SOUTH DAKOTA	PROJECT	SHEET NO.	TOTAL SHEETS
	P-PH-B-PT 0010(124)296	X60	X169

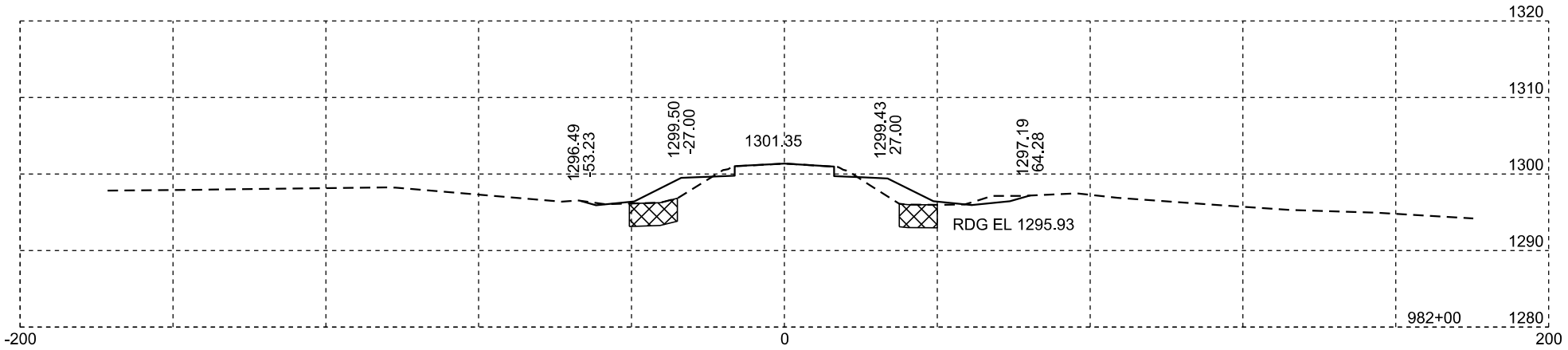

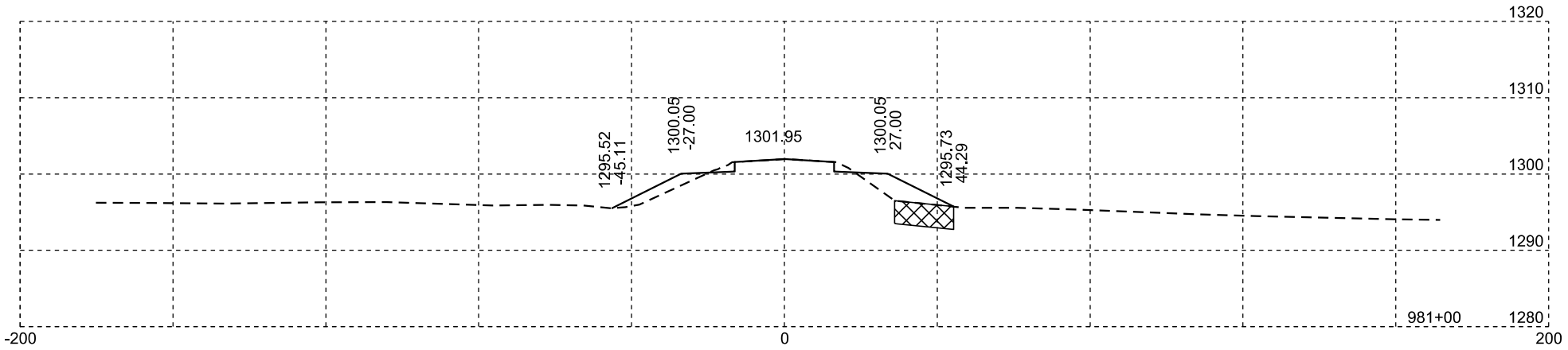

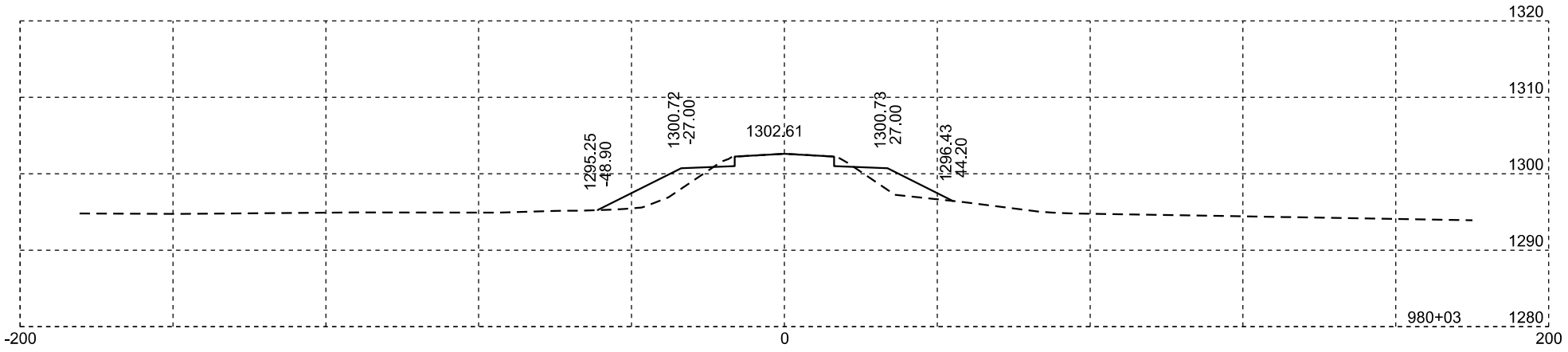

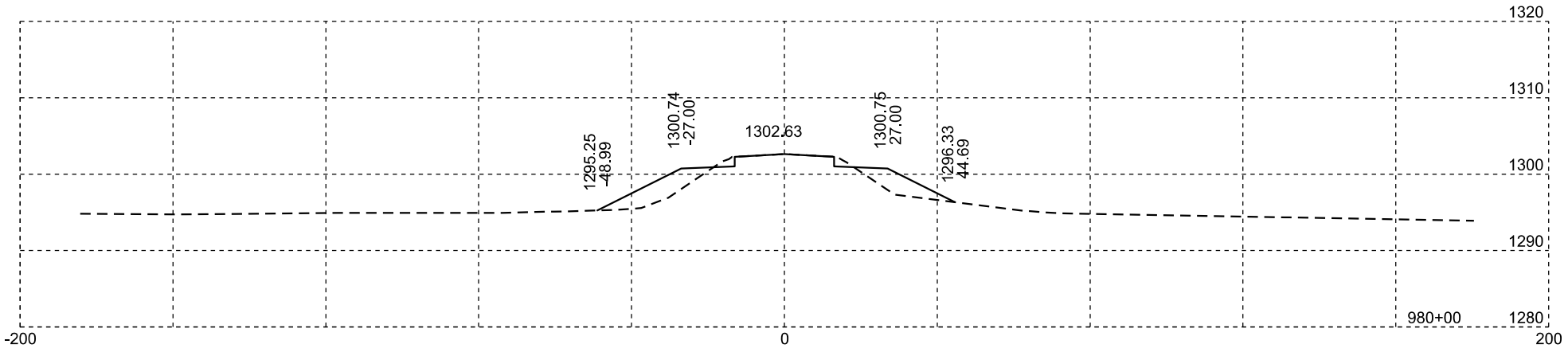

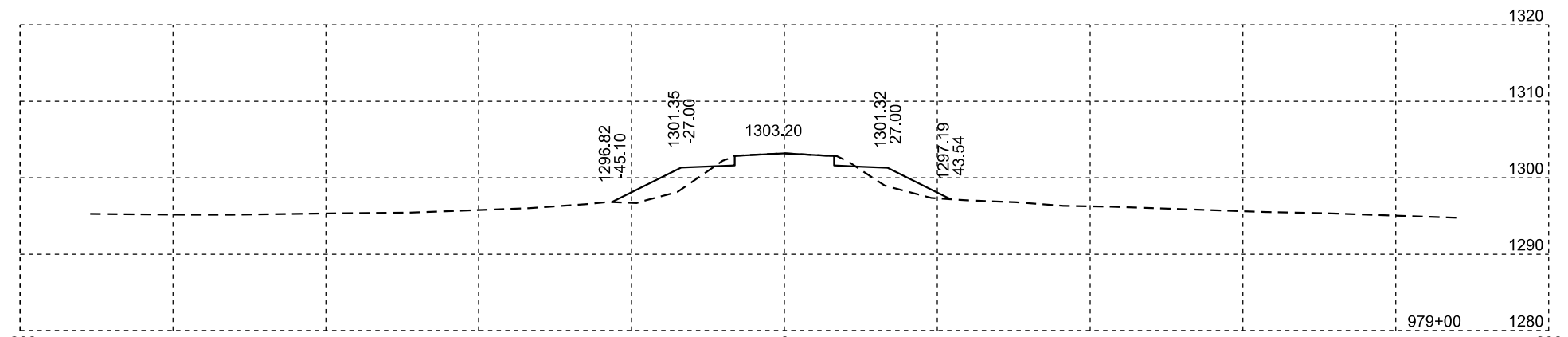

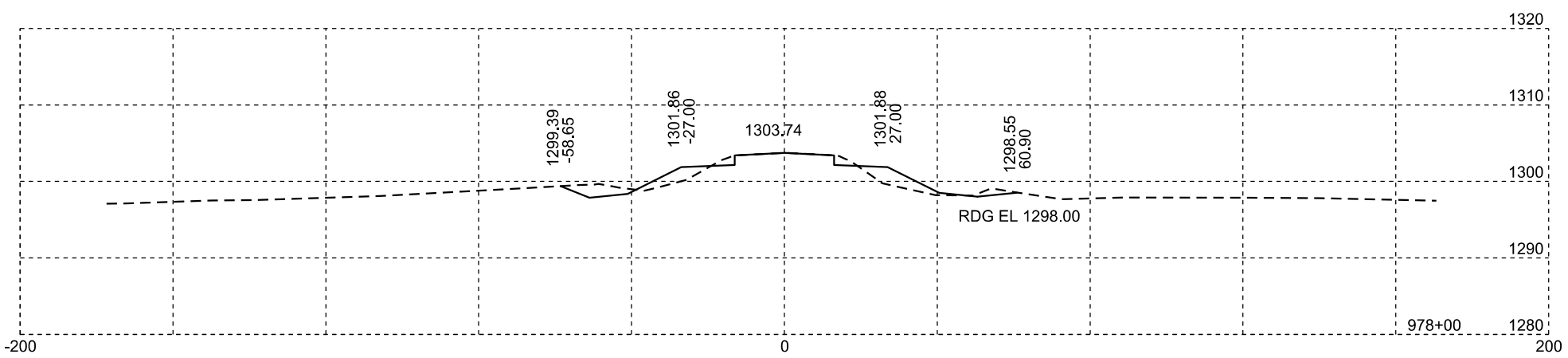

Muck

Rev 02/29/2024 DRM
Plotting Date: 02/29/2024

STATE OF SOUTH DAKOTA	PROJECT	SHEET NO.	TOTAL SHEETS
	P-PH-B-PT 0010(124)296	X61	X169

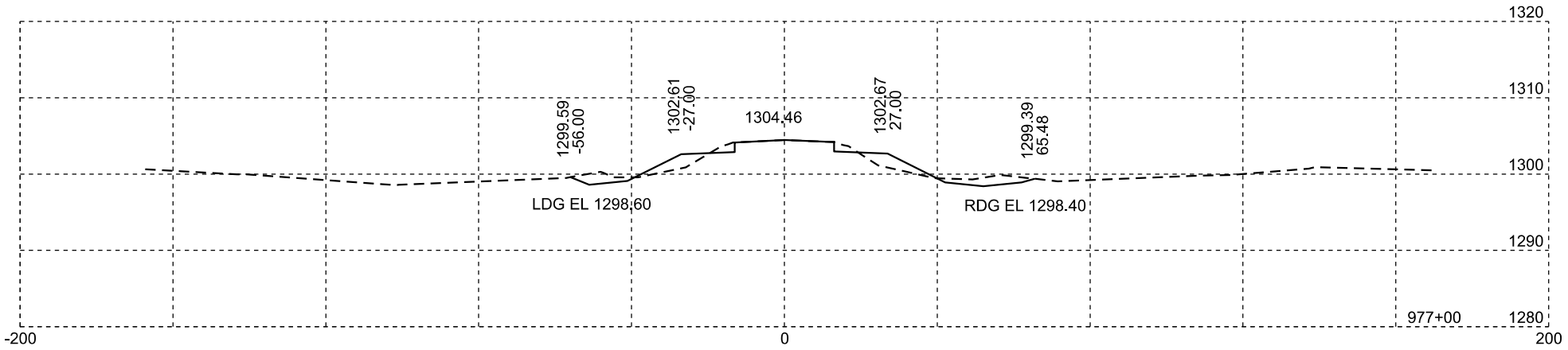

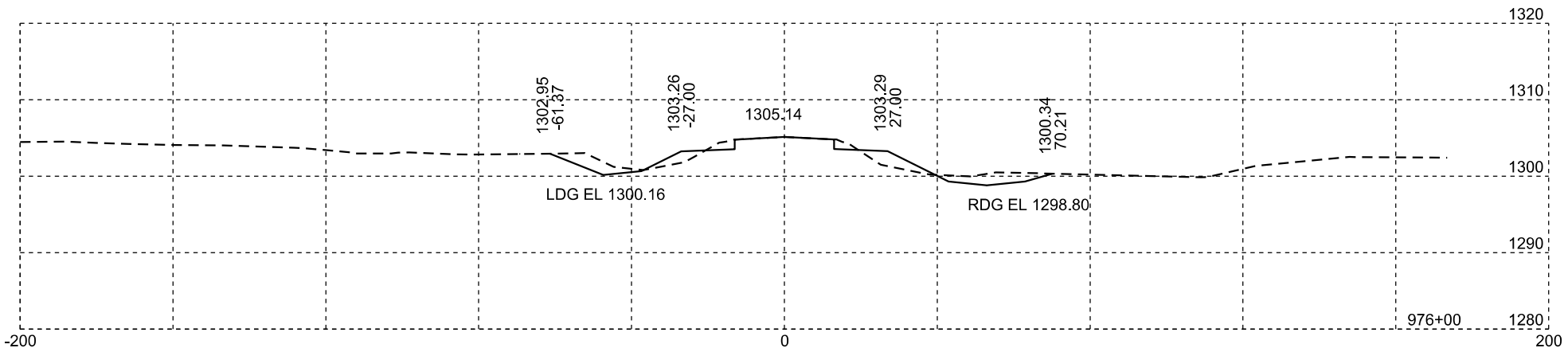

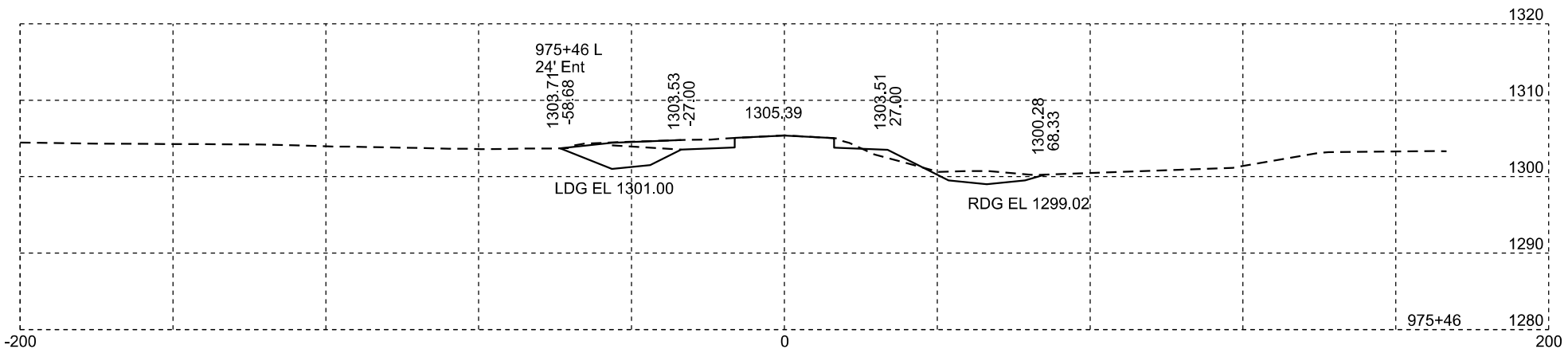

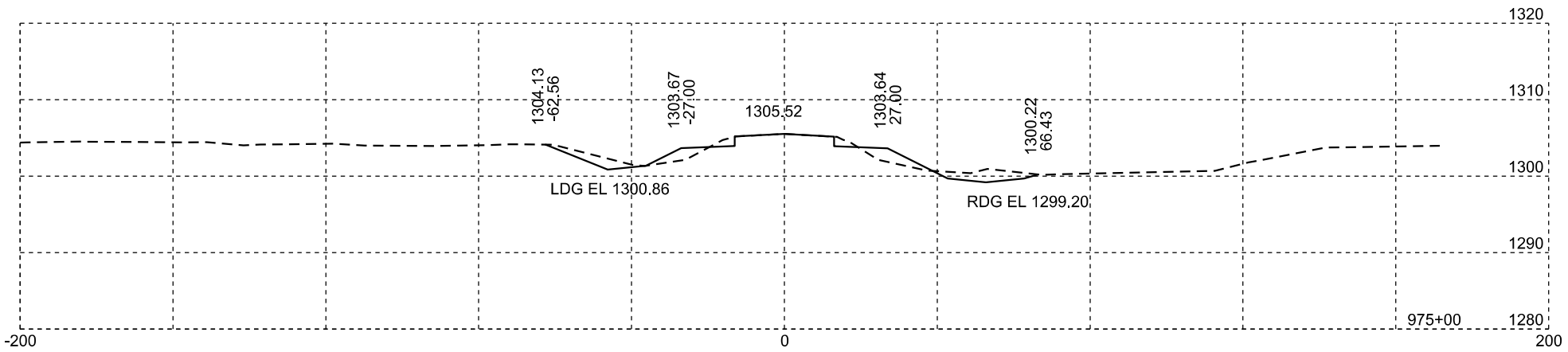

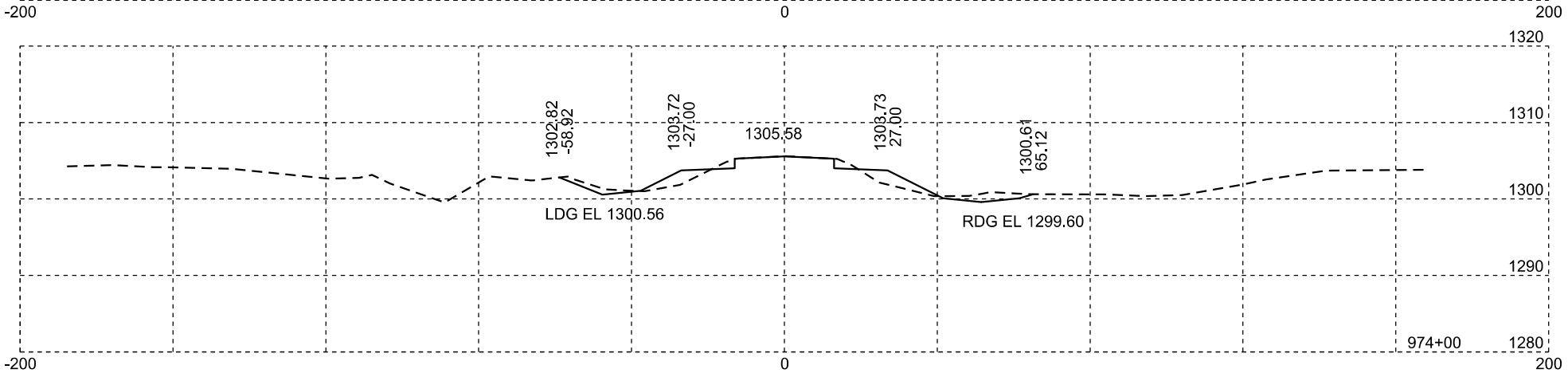

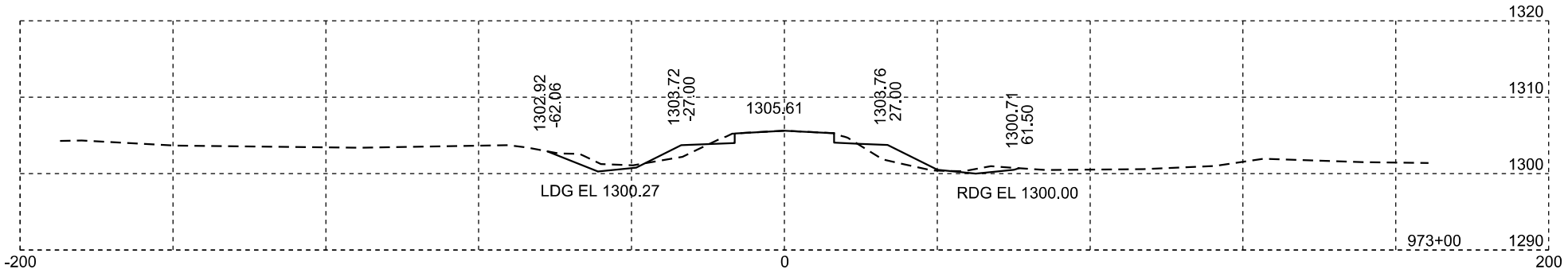

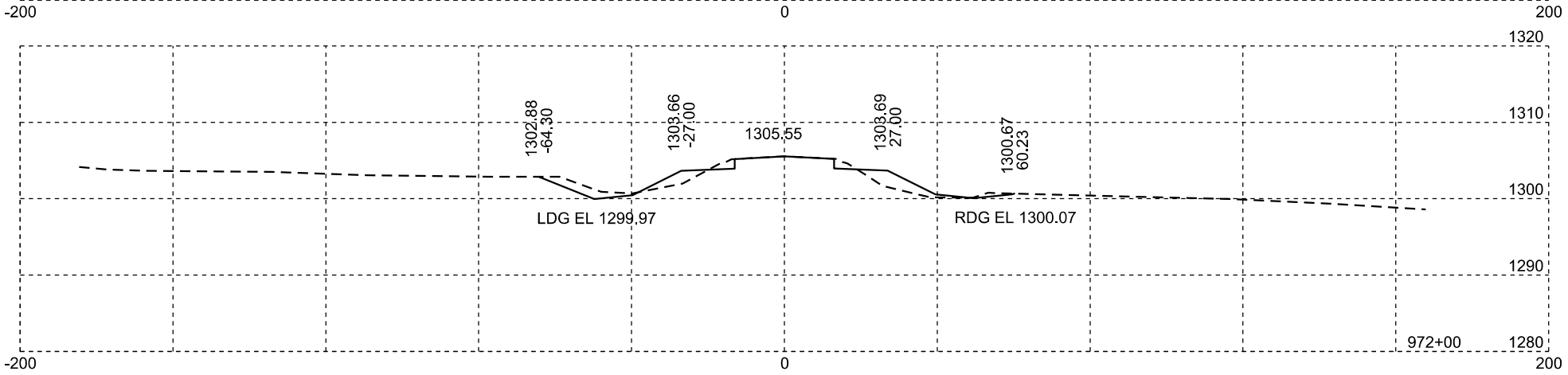

Rev 02/29/2024 DRM
Plotting Date: 02/29/2024

STATE OF SOUTH DAKOTA	PROJECT	SHEET NO.	TOTAL SHEETS
	P-PH-B-PT 0010(124)296	X62	X169

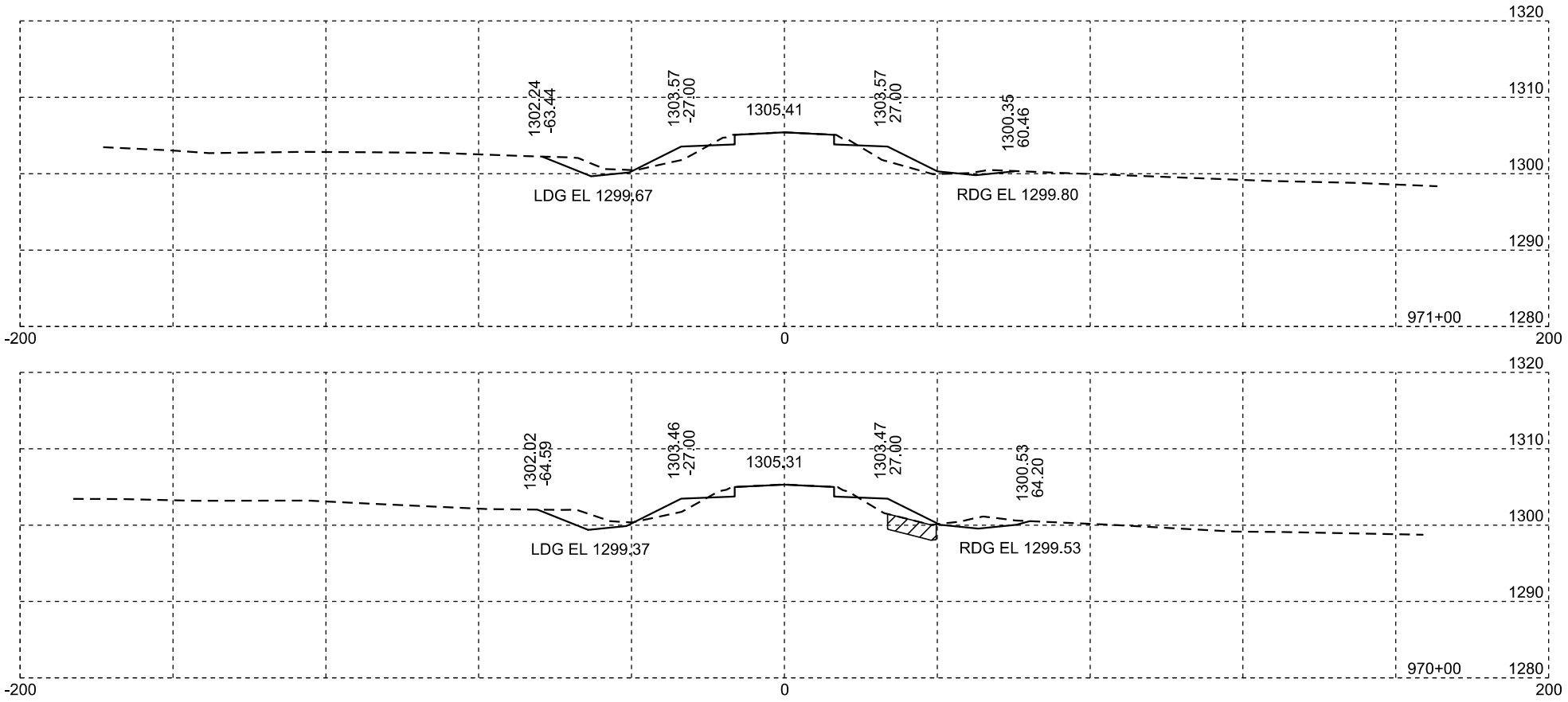

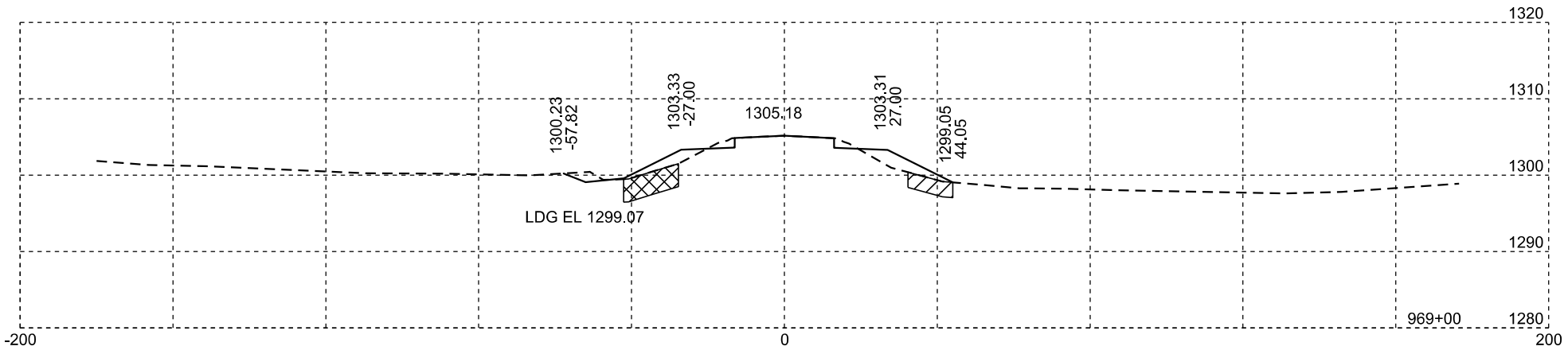

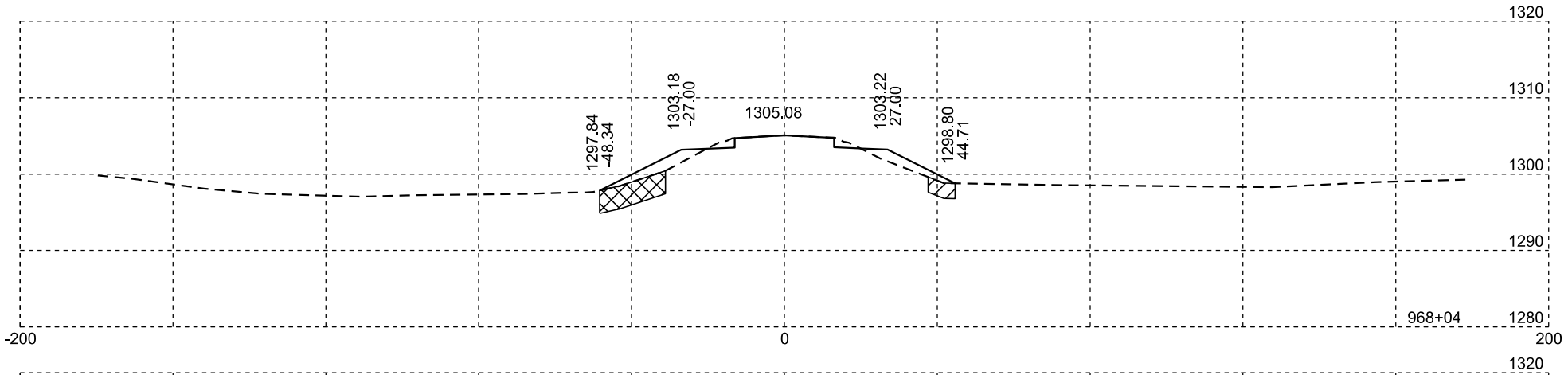

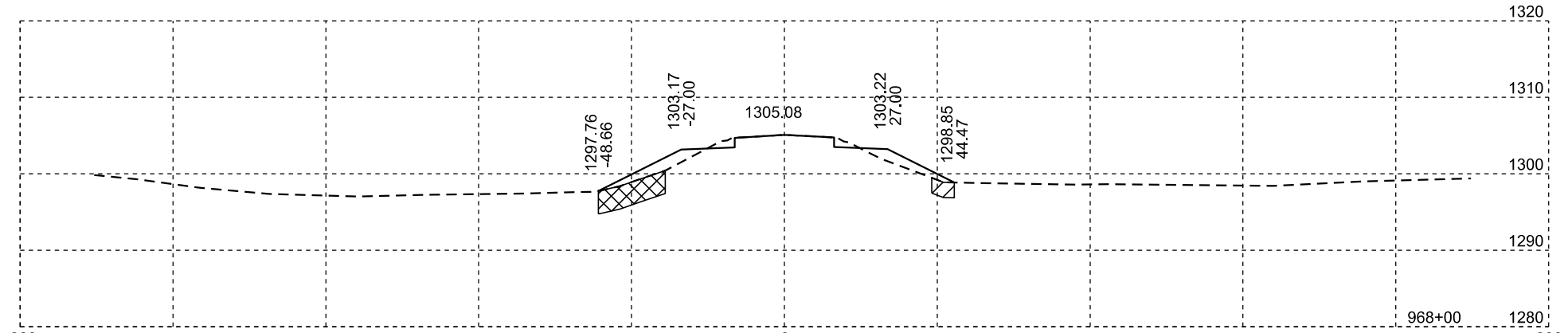

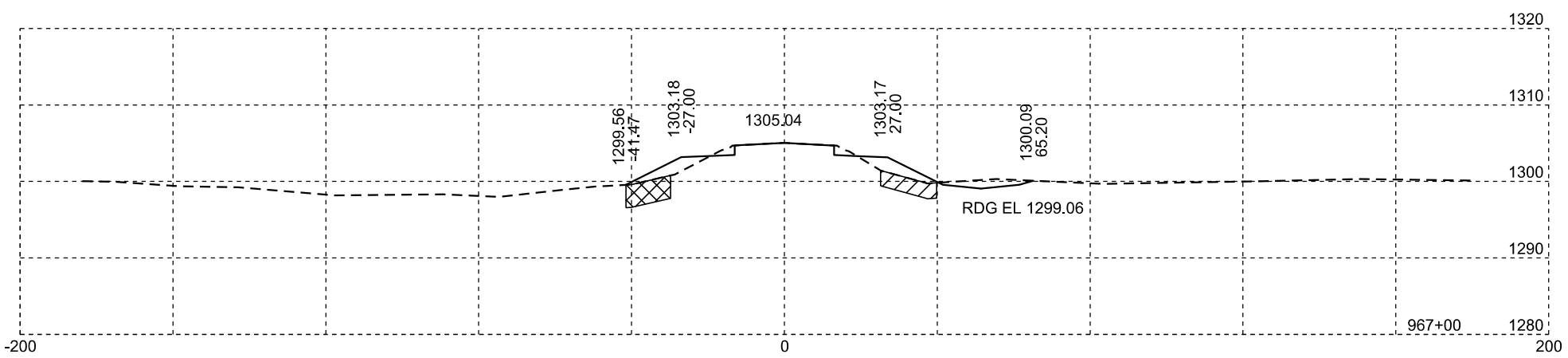

Unstable
Muck

Rev 02/29/2024 DRM
Plotting Date: 02/29/2024

STATE OF SOUTH DAKOTA	PROJECT	SHEET NO.	TOTAL SHEETS
	P-PH-B-PT 0010(124)296	X63	X169

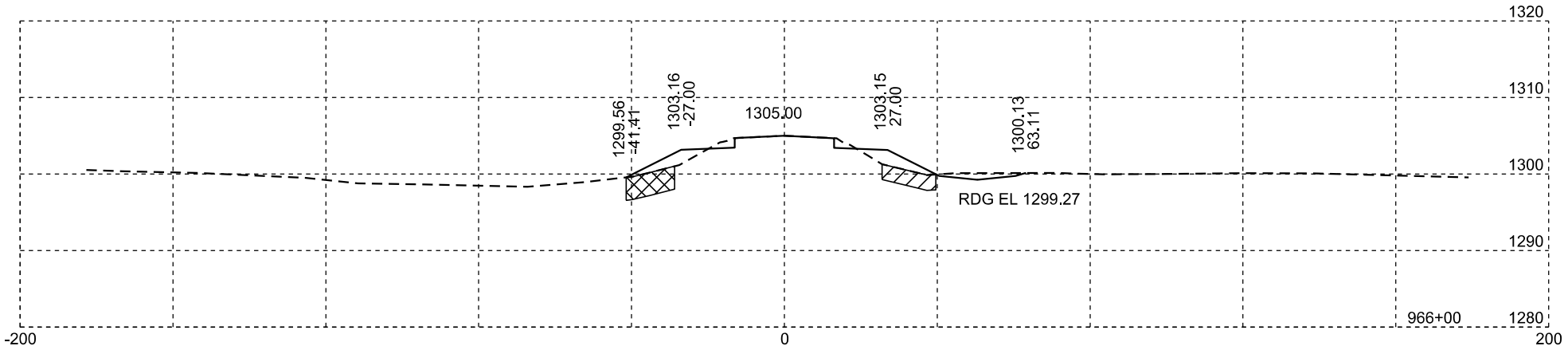

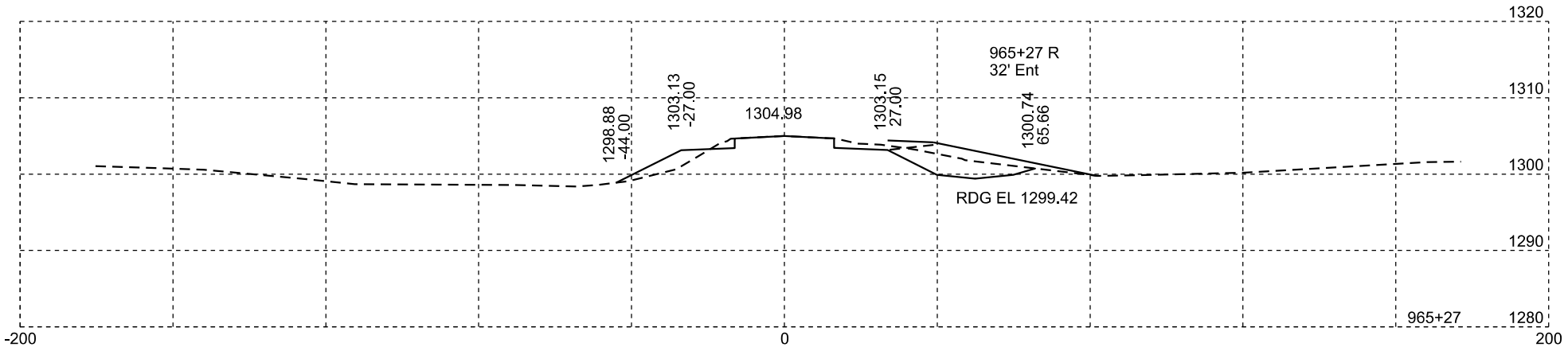

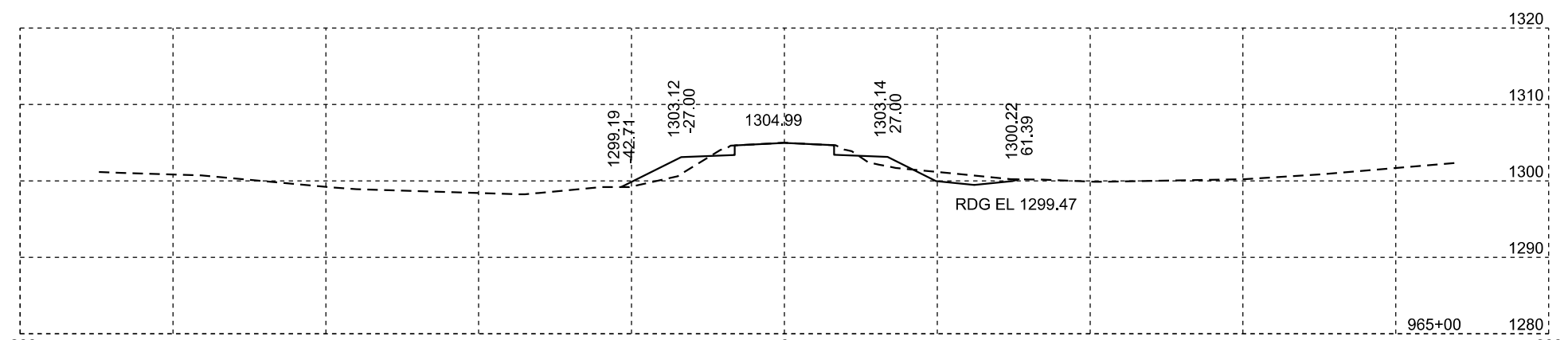

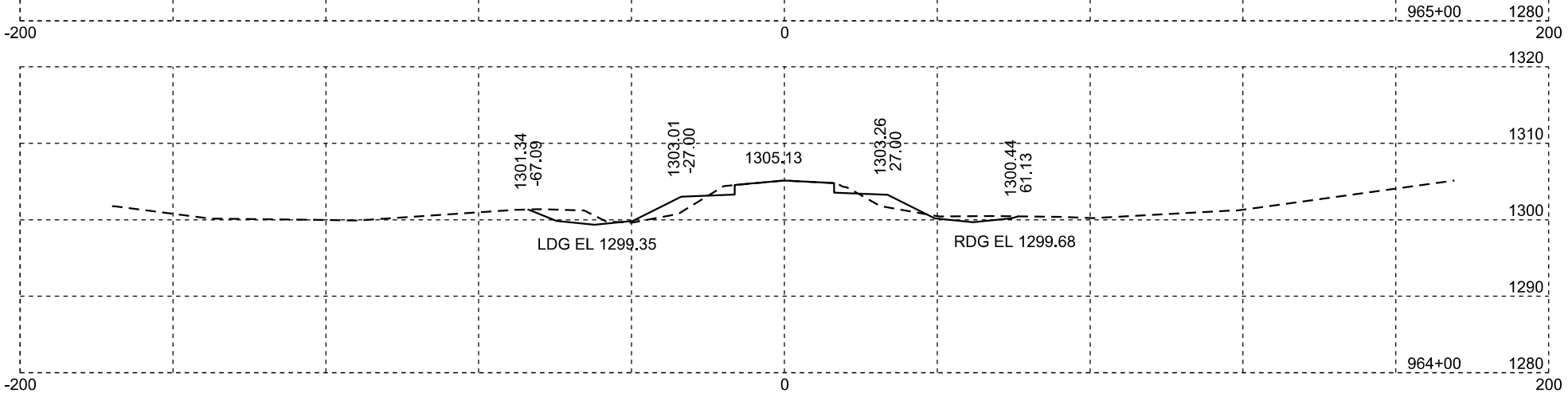

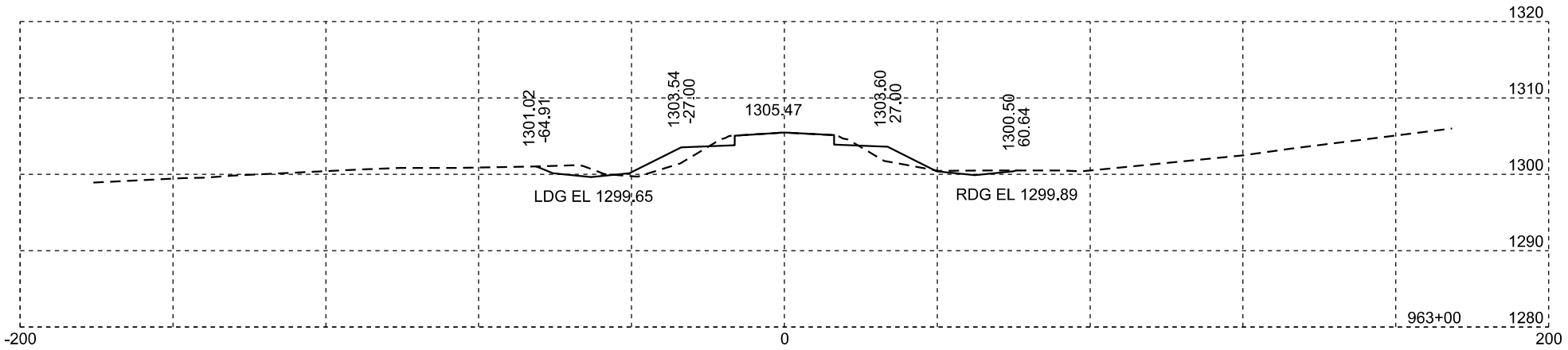

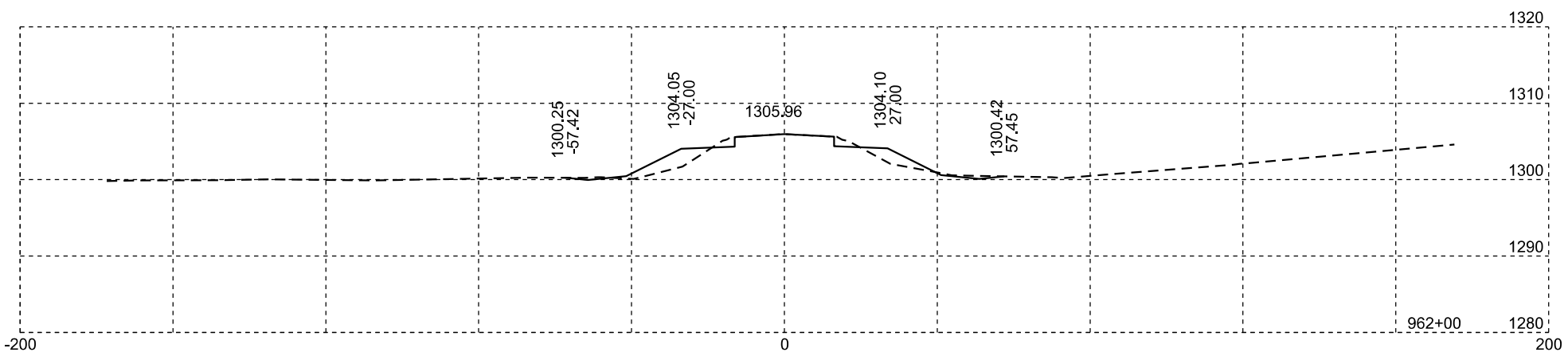

Unstable
Muck

Rev 02/29/2024 DRM
Plotting Date: 02/29/2024

STATE OF SOUTH DAKOTA	PROJECT	SHEET NO.	TOTAL SHEETS
	P-PH-B-PT 0010(124)296	X64	X169

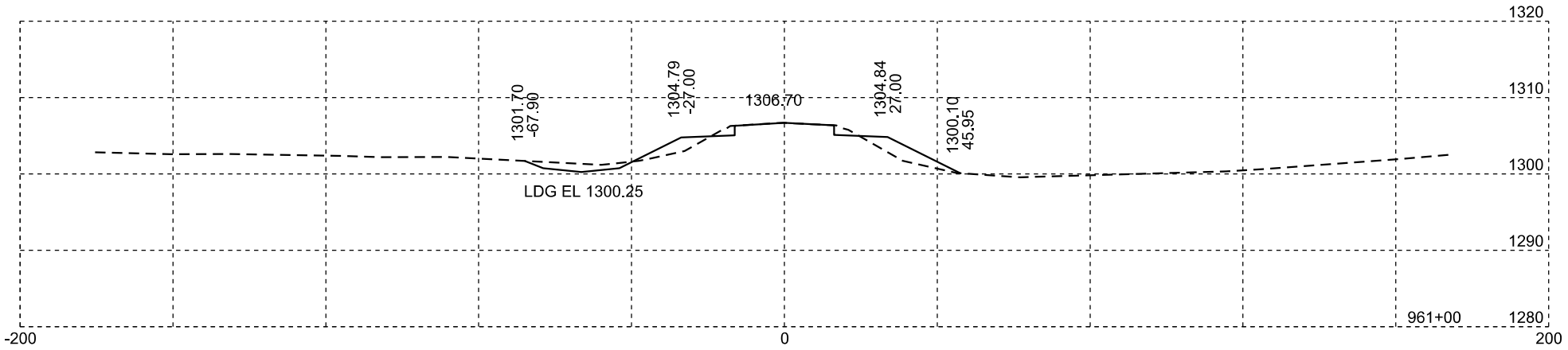

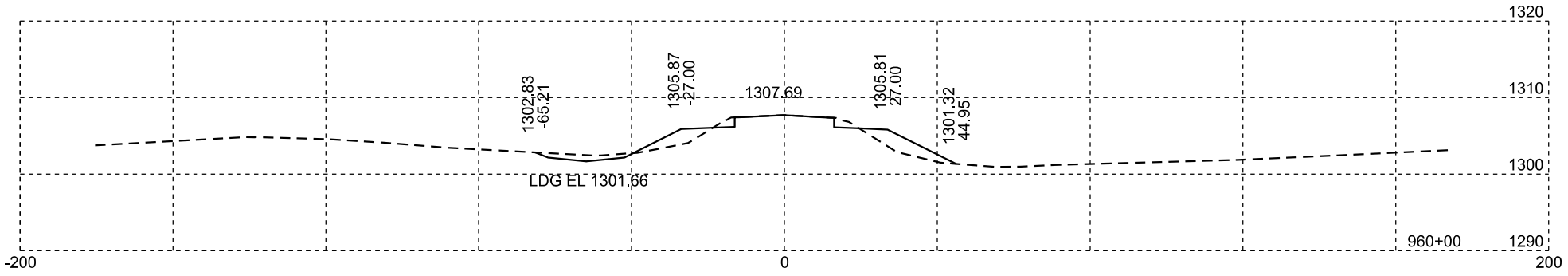

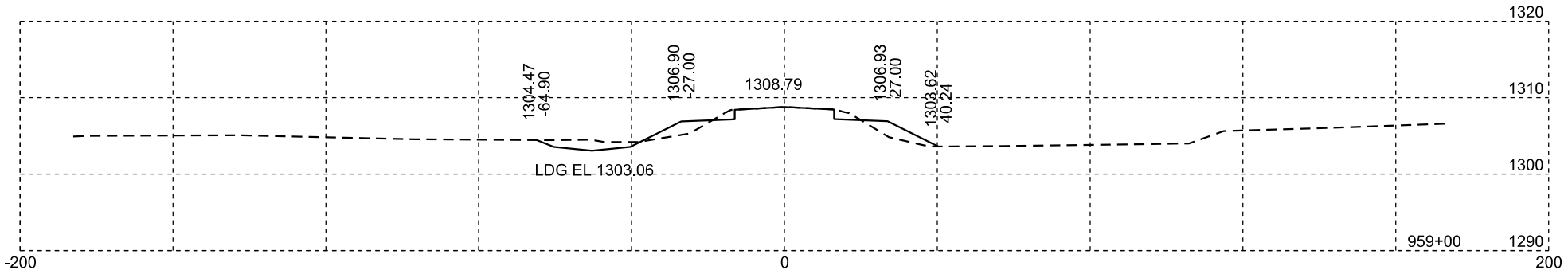

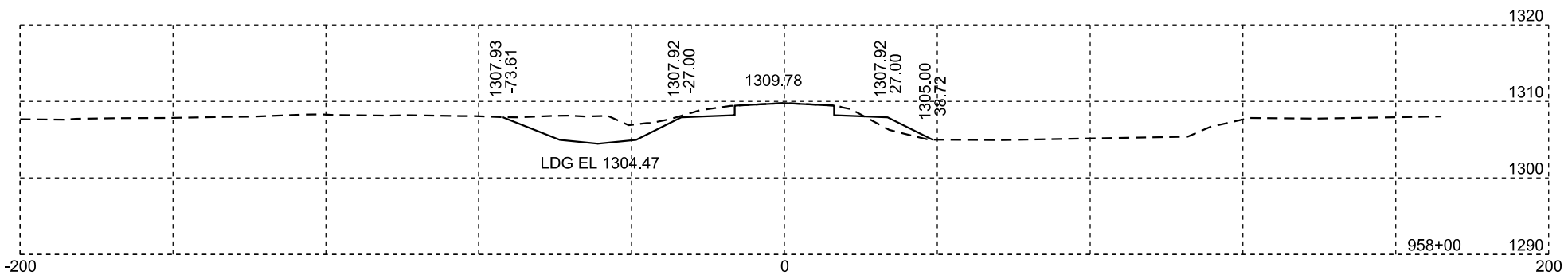

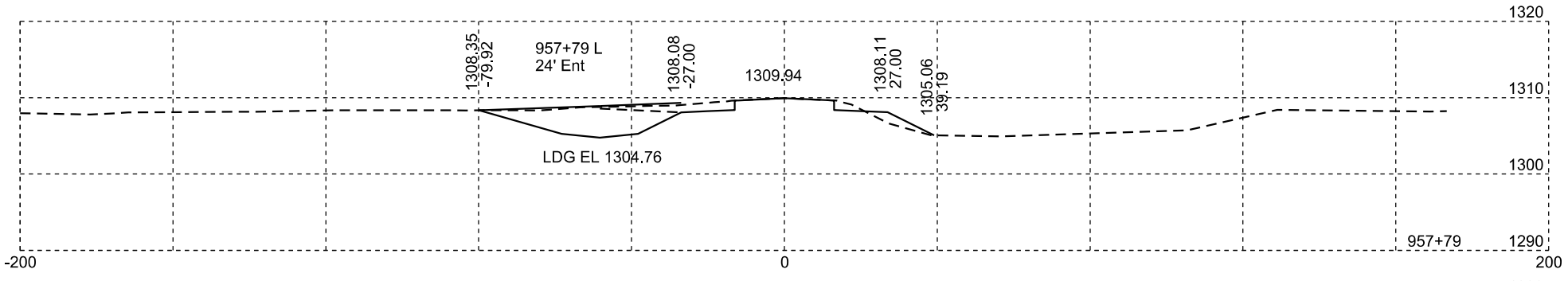

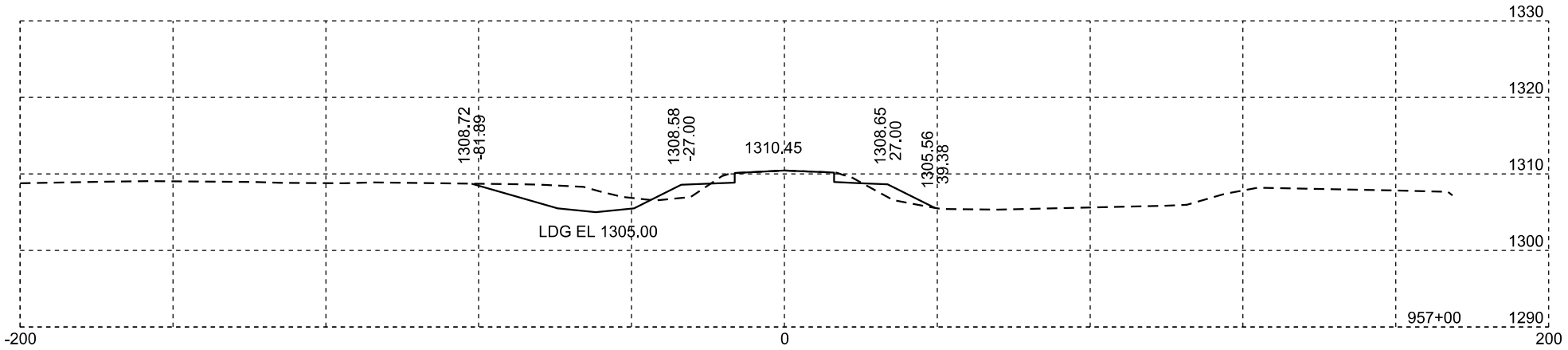

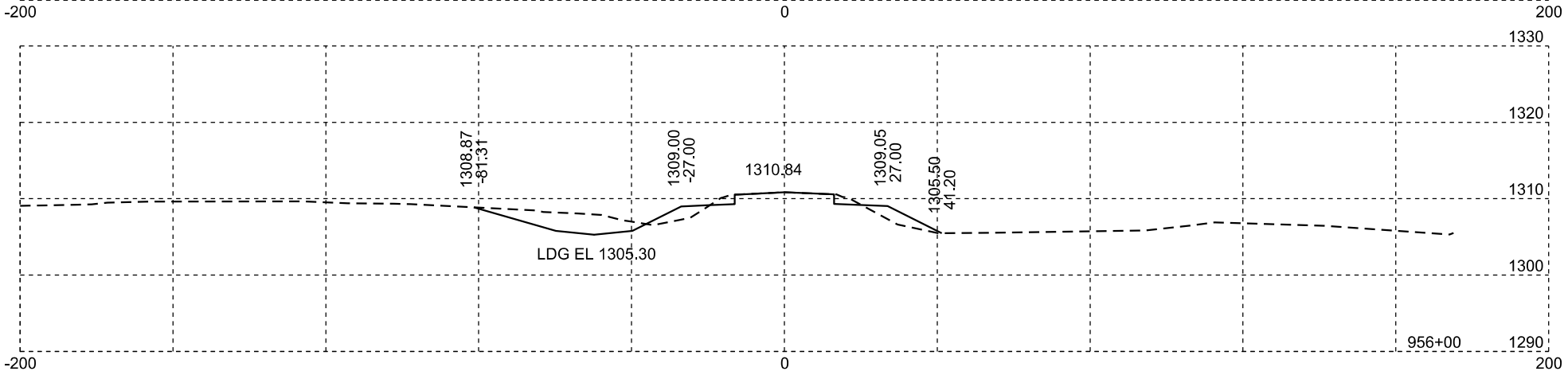

Rev 02/29/2024 DRM
Plotting Date: 02/29/2024

STATE OF SOUTH DAKOTA	PROJECT	SHEET NO.	TOTAL SHEETS
	P-PH-B-PT 0010(124)296	X65	X169

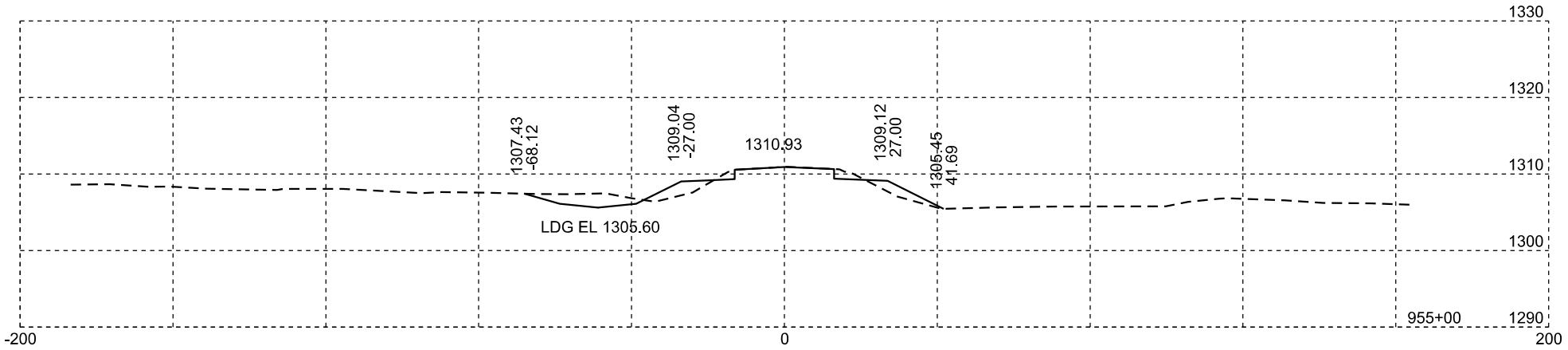

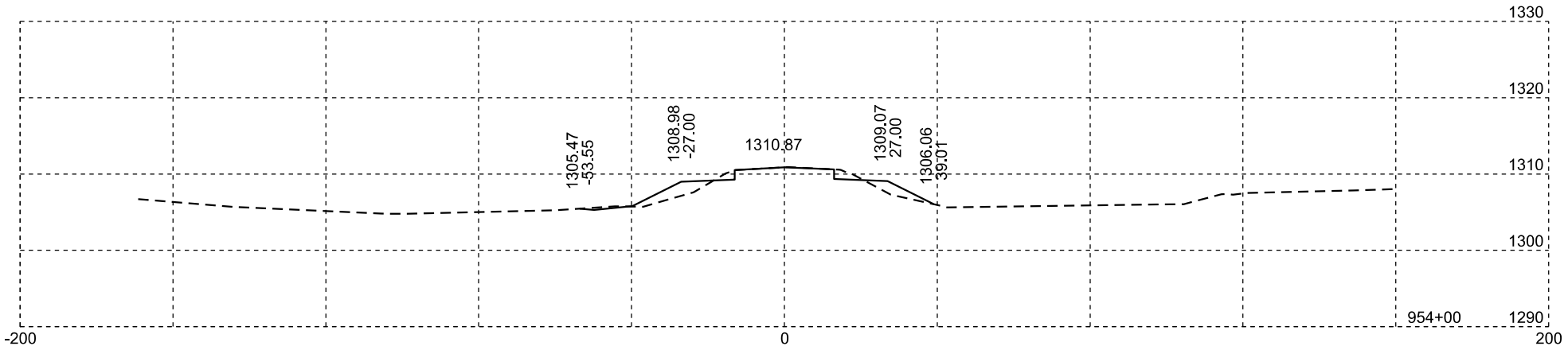

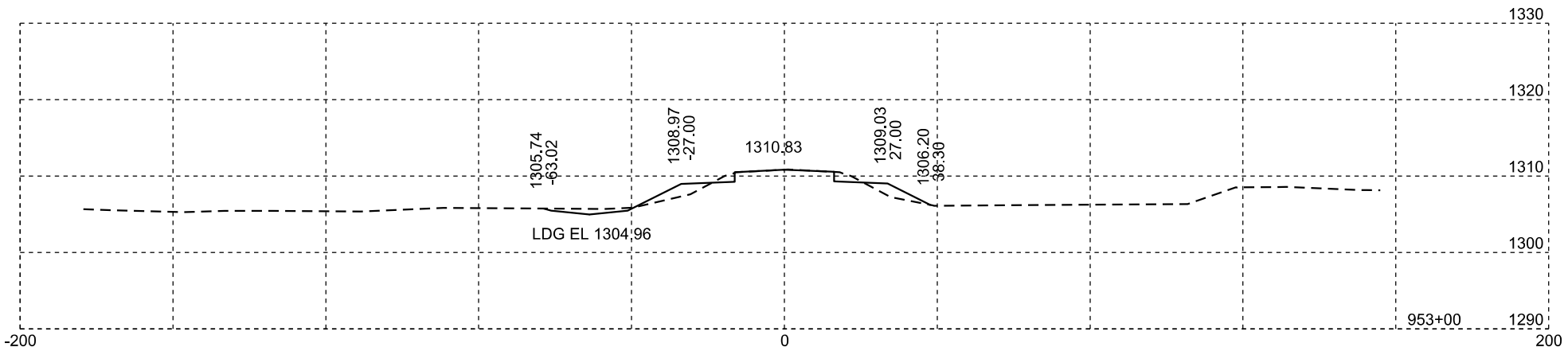

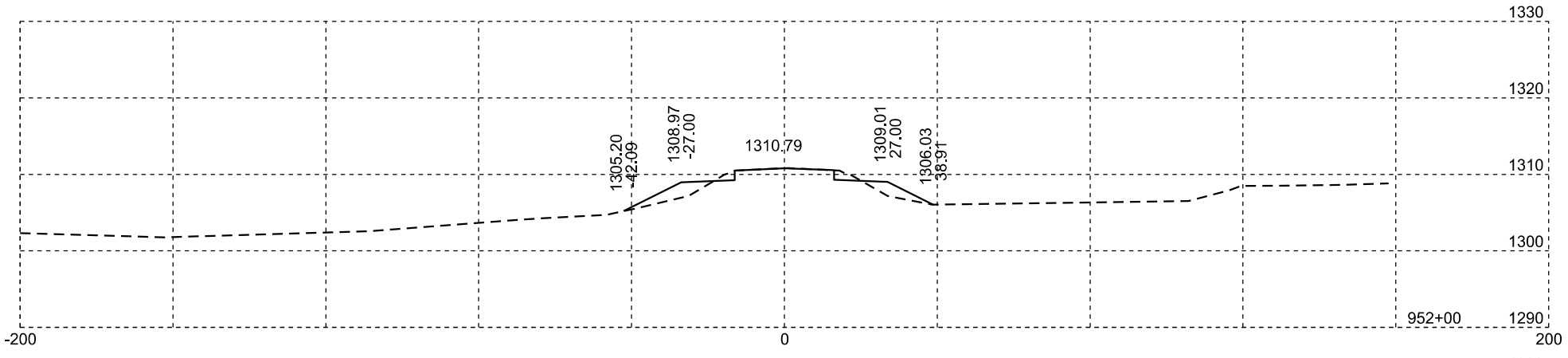

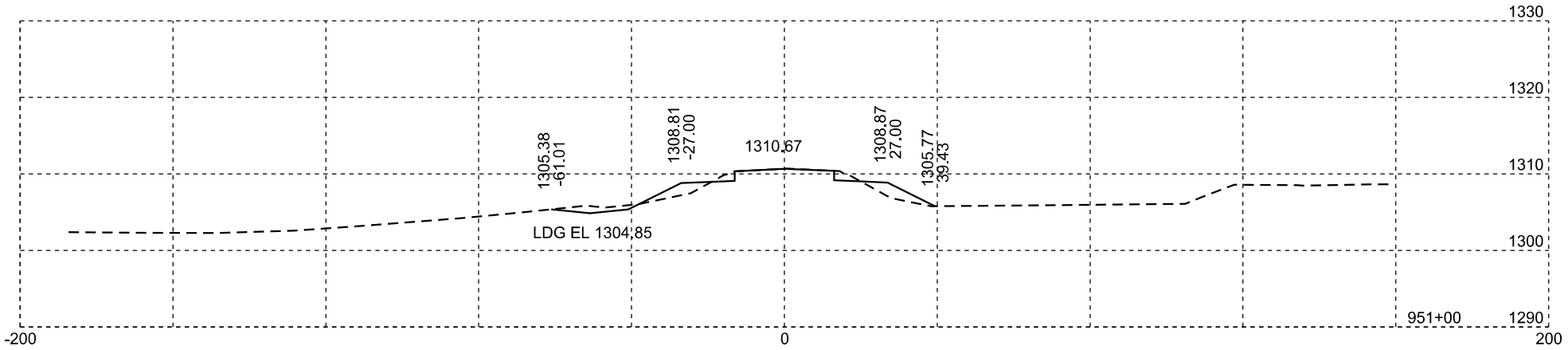

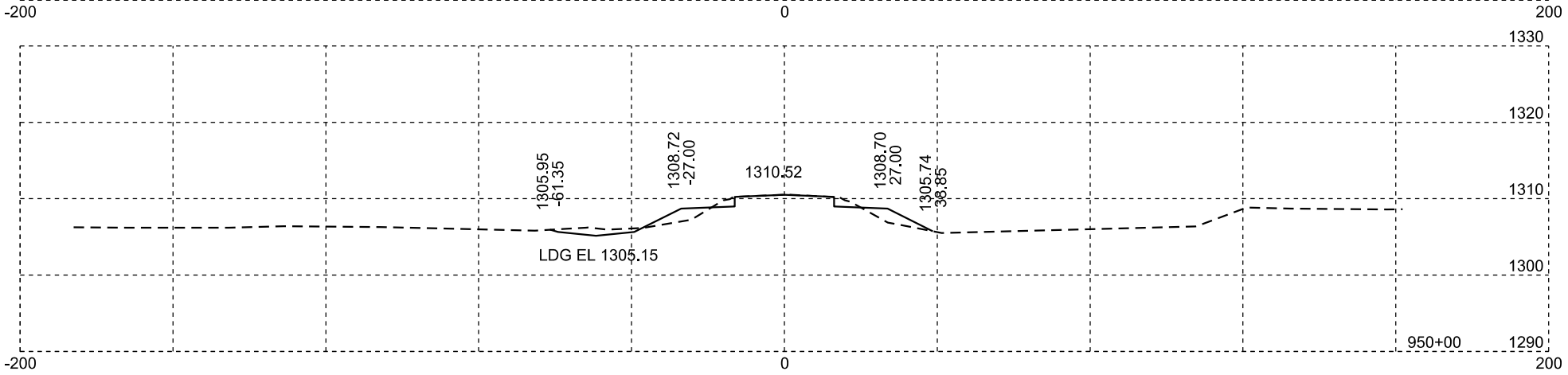

Rev 02/29/2024 DRM
Plotting Date: 02/29/2024

STATE OF SOUTH DAKOTA	PROJECT	SHEET NO.	TOTAL SHEETS
	P-PH-B-PT 0010(124)296	X66	X169

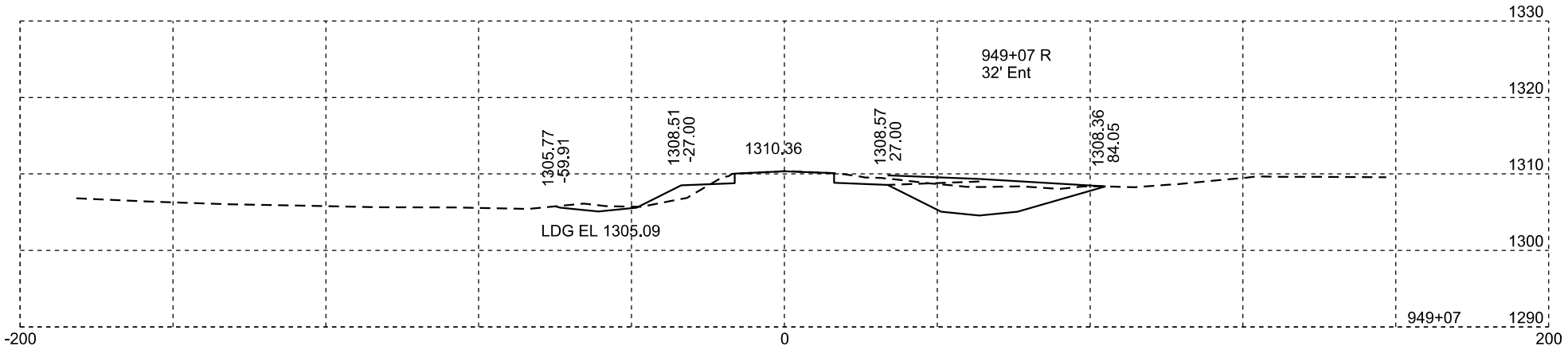

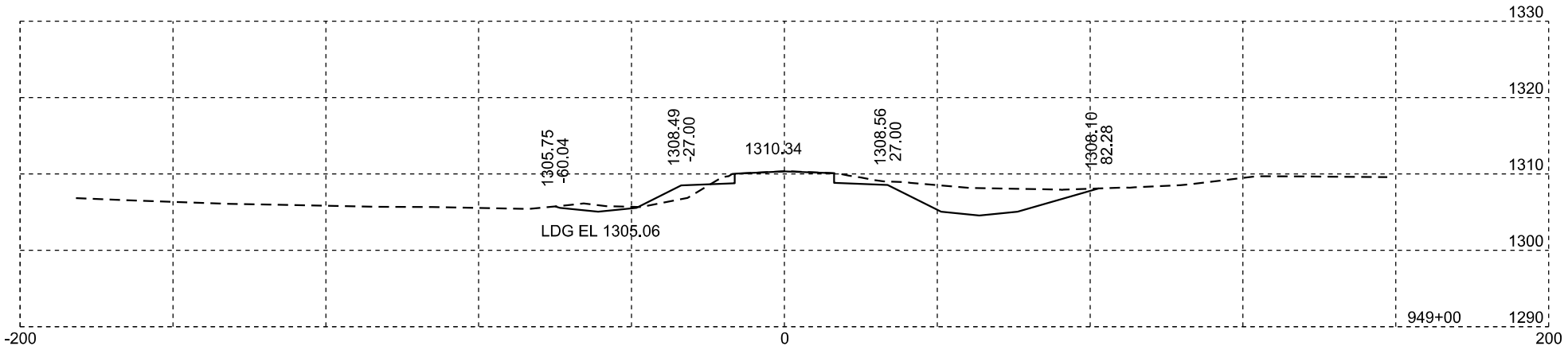

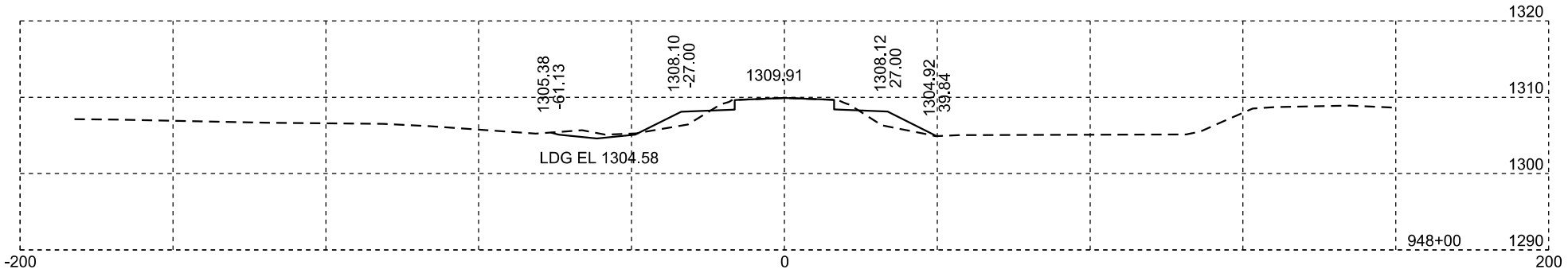

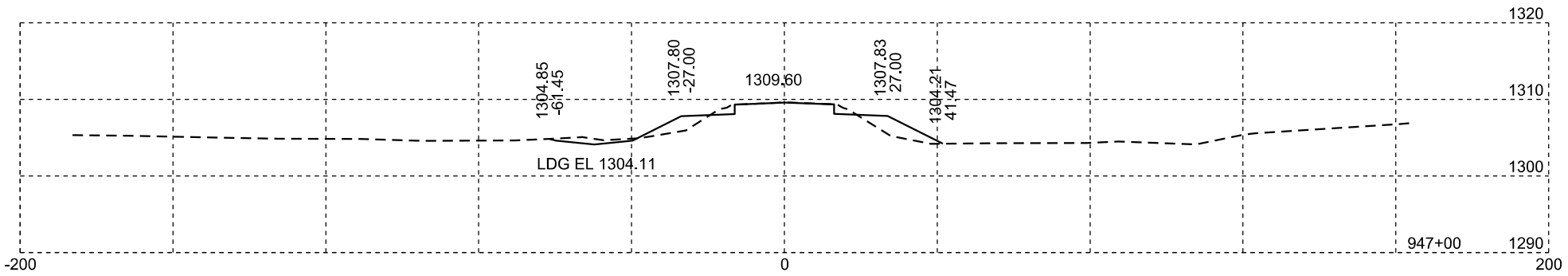

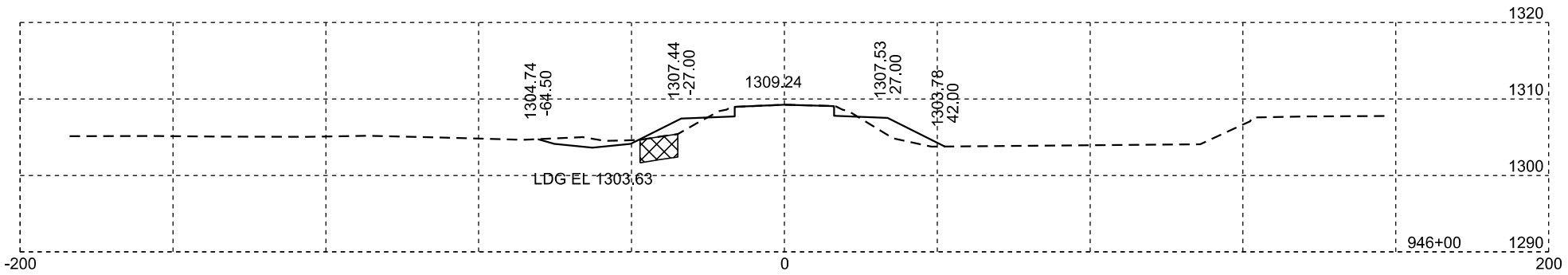

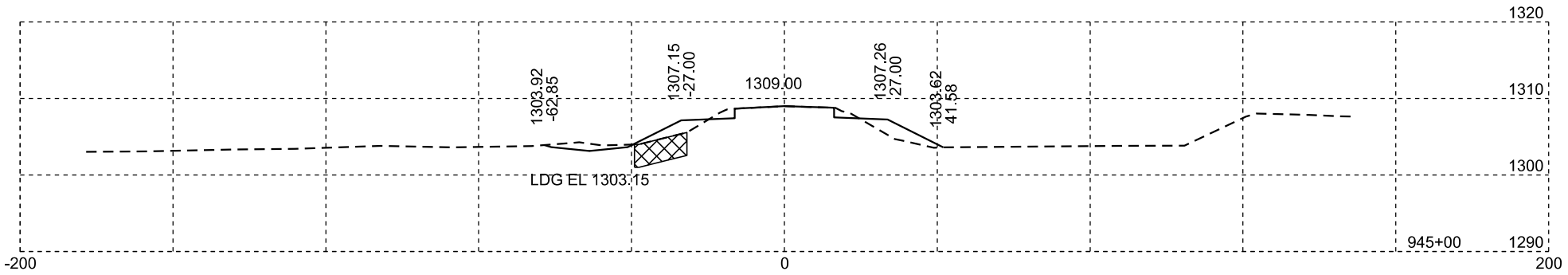

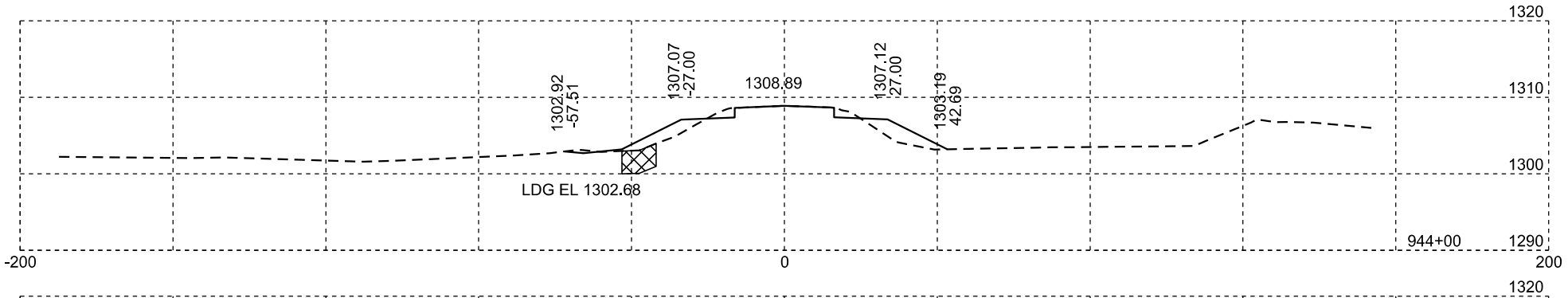

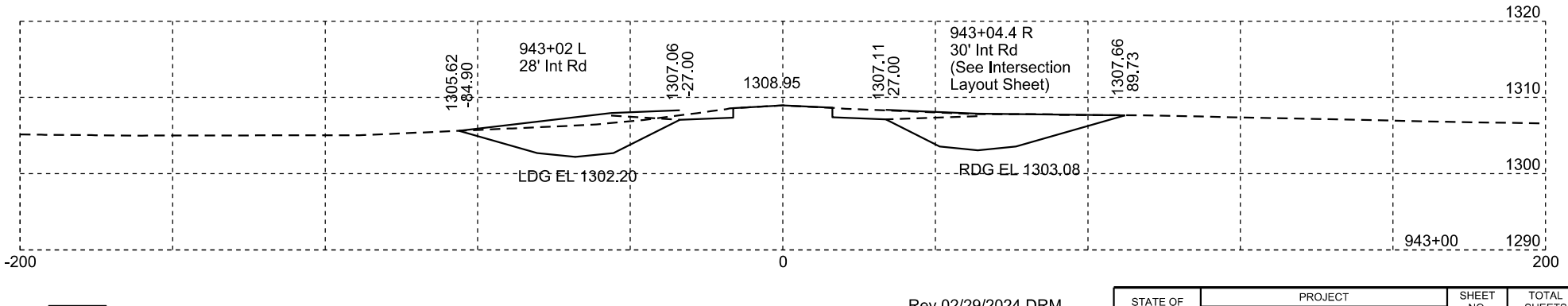

Muck

Rev 02/29/2024 DRM
Plotting Date: 02/29/2024

STATE OF SOUTH DAKOTA	PROJECT	SHEET NO.	TOTAL SHEETS
	P-PH-B-PT 0010(124)296	X67	X169

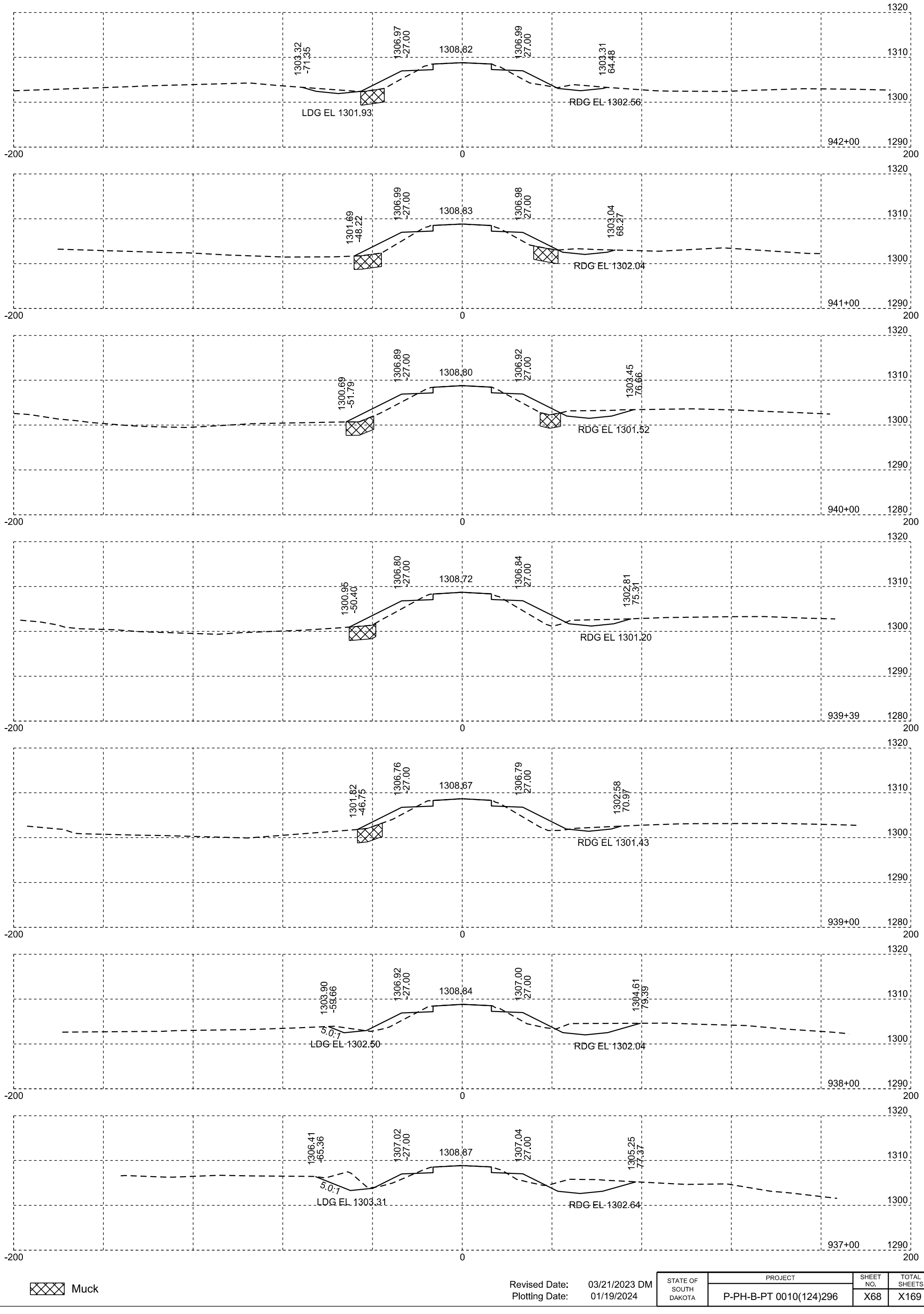

Muck

Revised Date: 03/21/2023 DM
Plotting Date: 01/19/2024

STATE OF SOUTH DAKOTA	PROJECT	SHEET NO.	TOTAL SHEETS
	P-PH-B-PT 0010(124)296	X68	X169

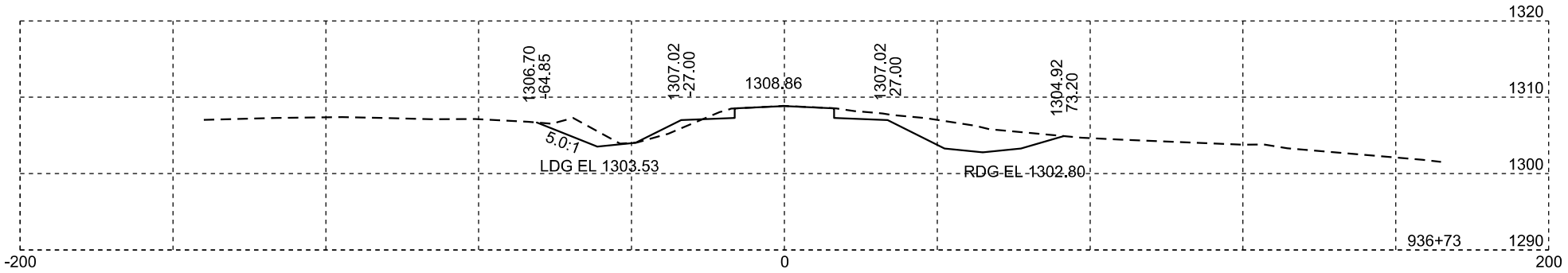

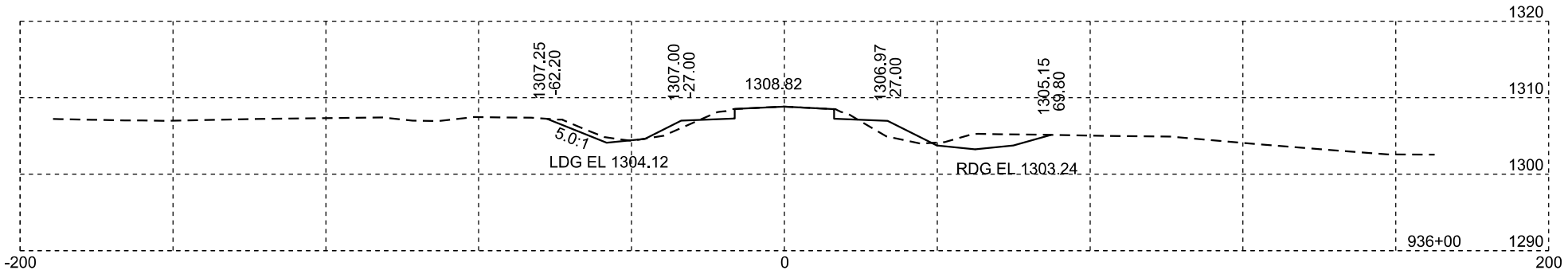

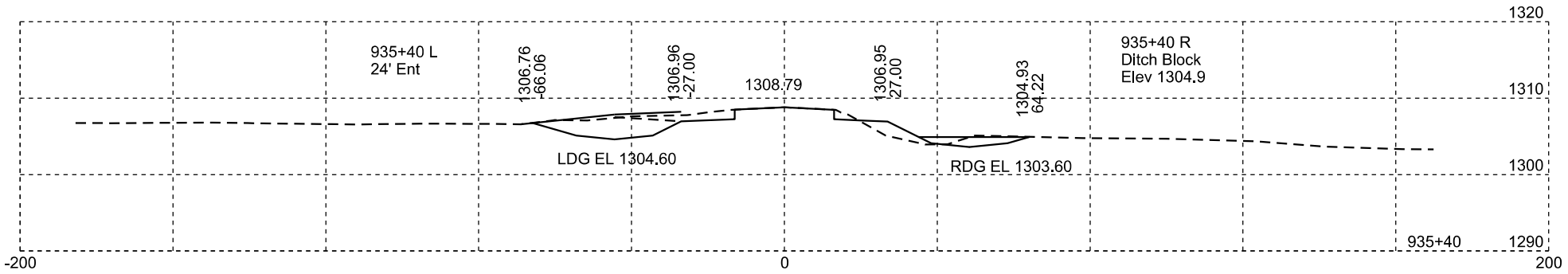

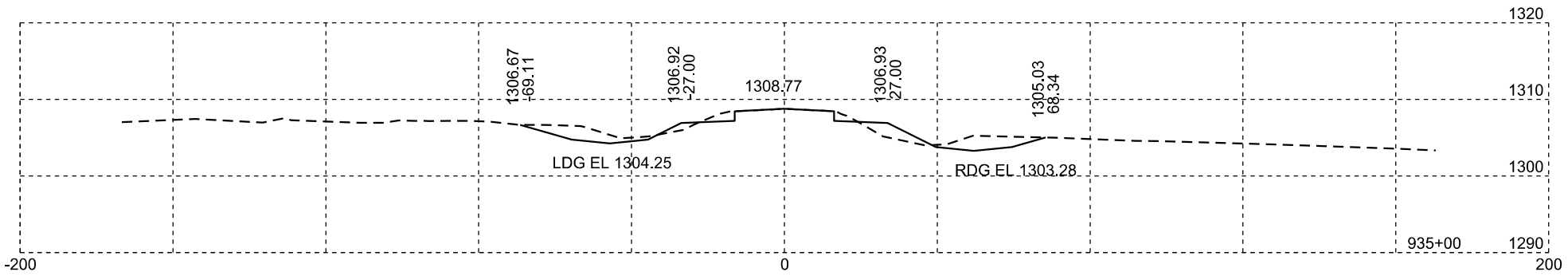

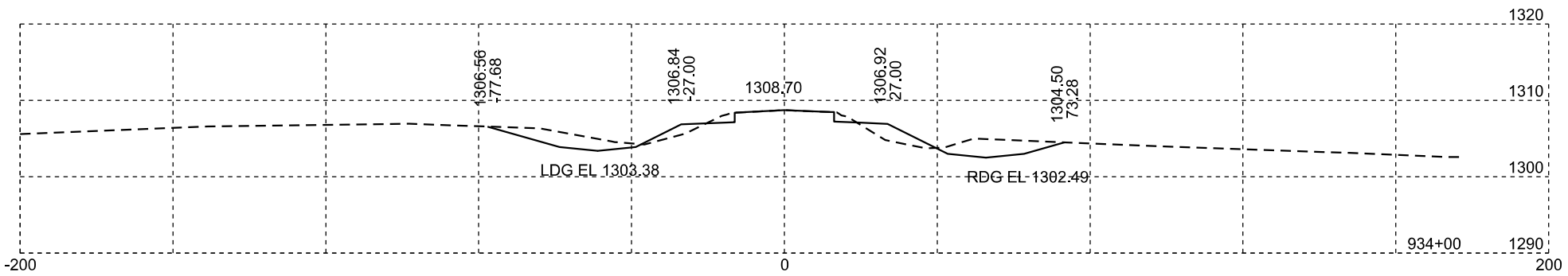

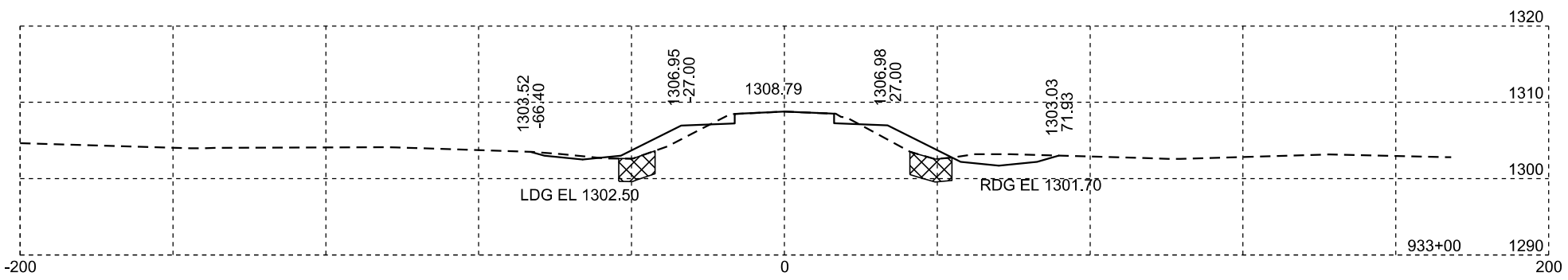

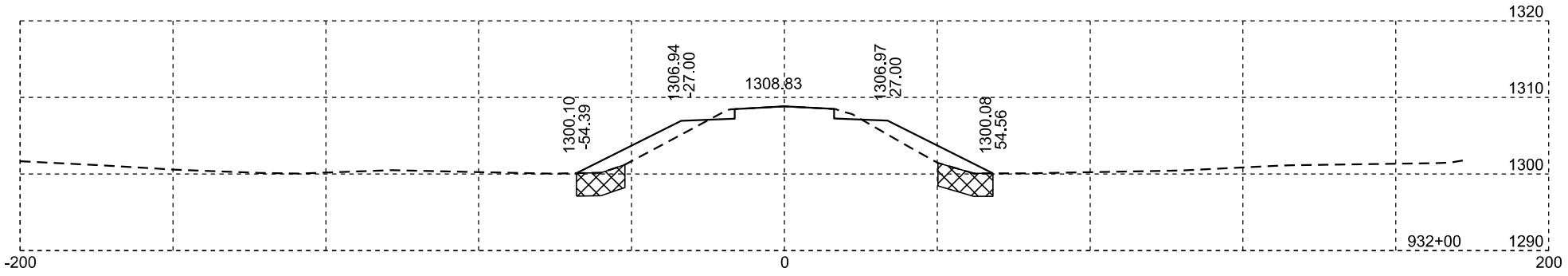

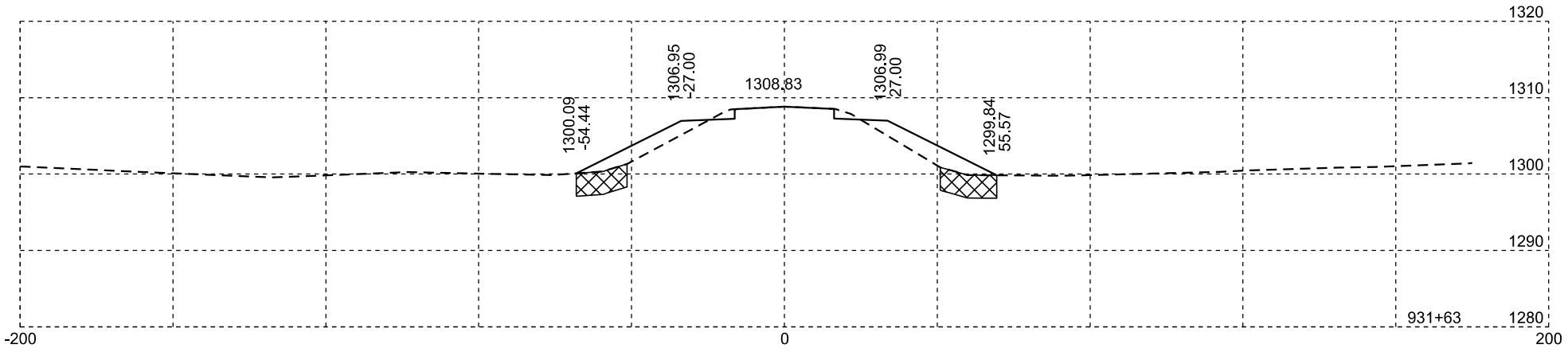

Muck

Revised Date: 03/21/2023 DM
Plotting Date: 01/19/2024

STATE OF SOUTH DAKOTA	PROJECT	SHEET NO.	TOTAL SHEETS
	P-PH-B-PT 0010(124)296	X69	X169

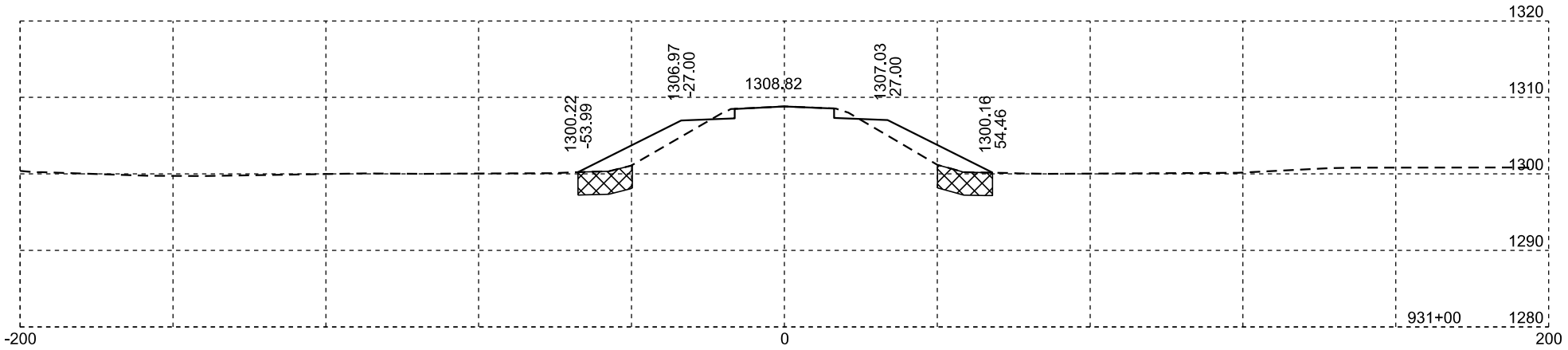

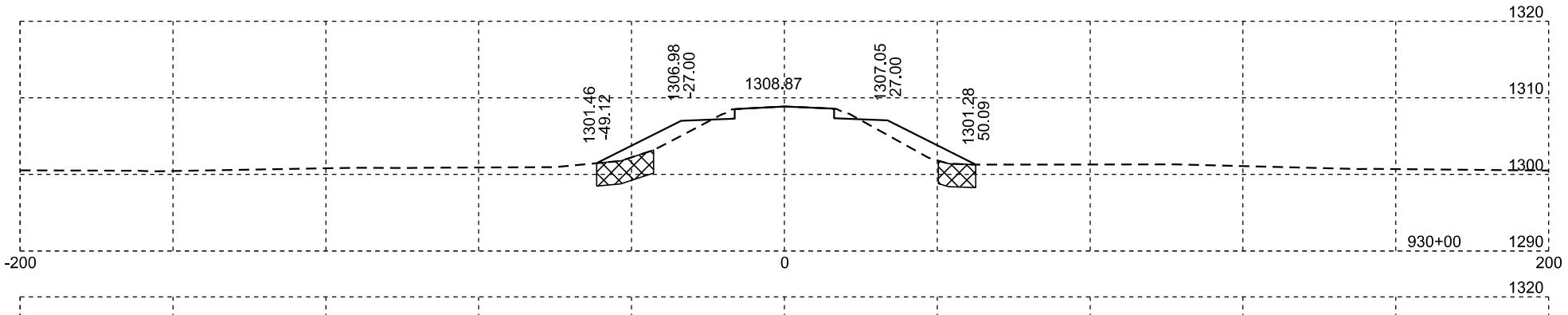

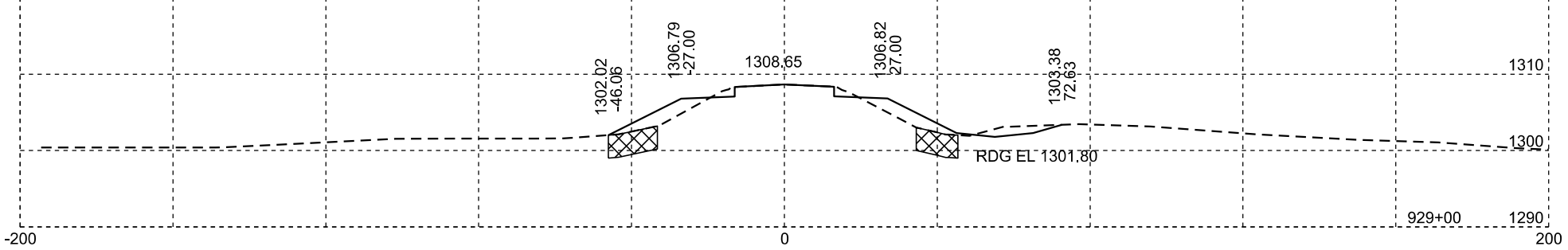

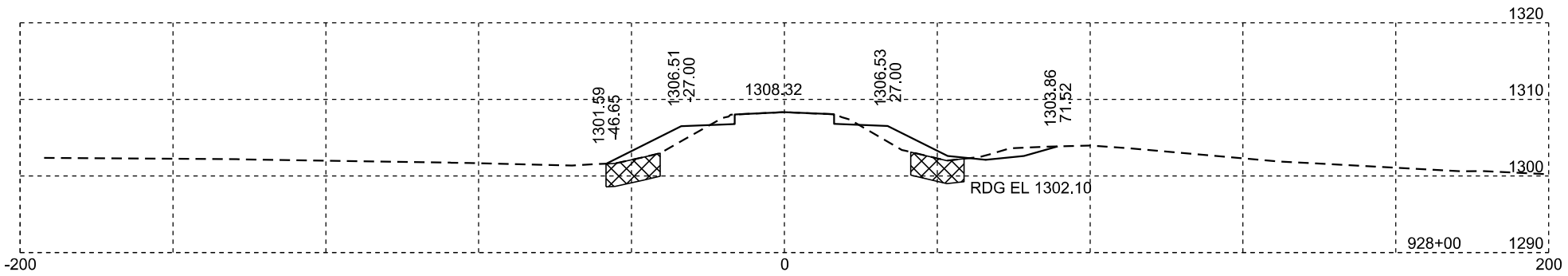

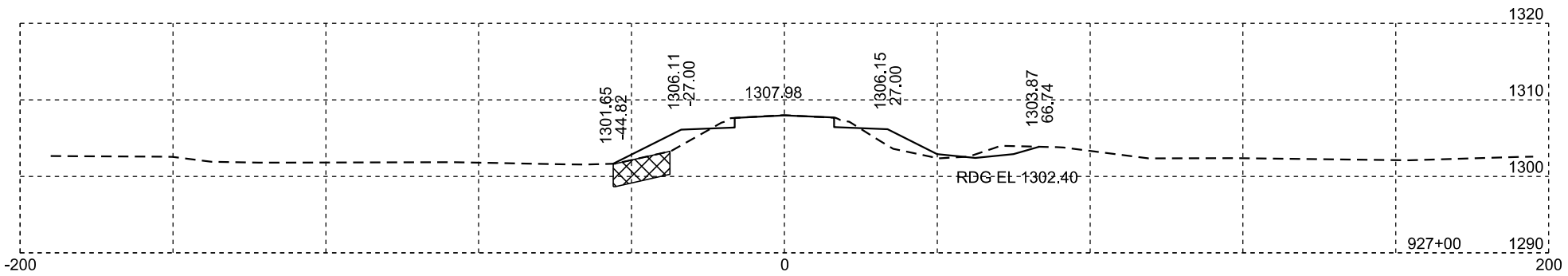

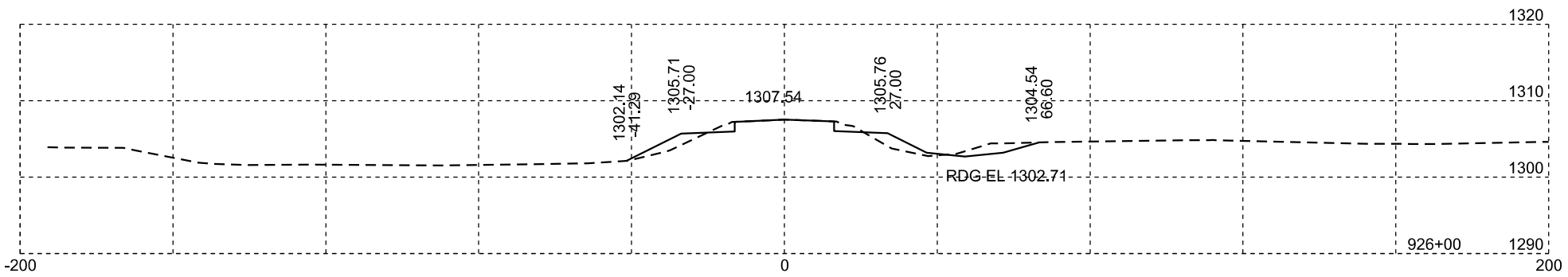

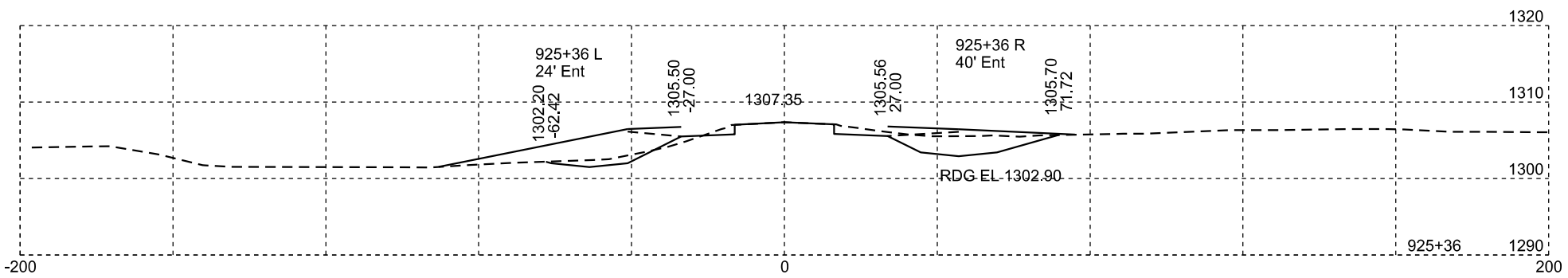

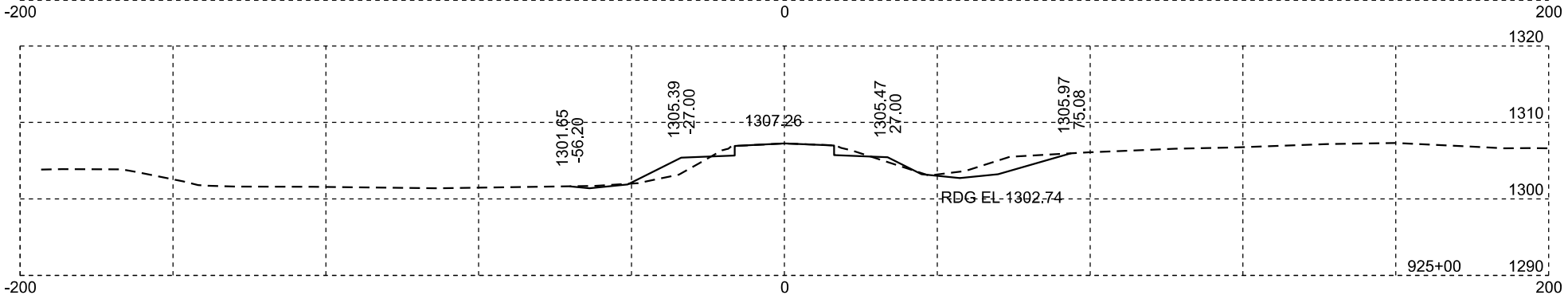

Muck

Plotting Date: 01/19/2024

STATE OF SOUTH DAKOTA	PROJECT	SHEET NO.	TOTAL SHEETS
	P-PH-B-PT 0010(124)296	X70	X169

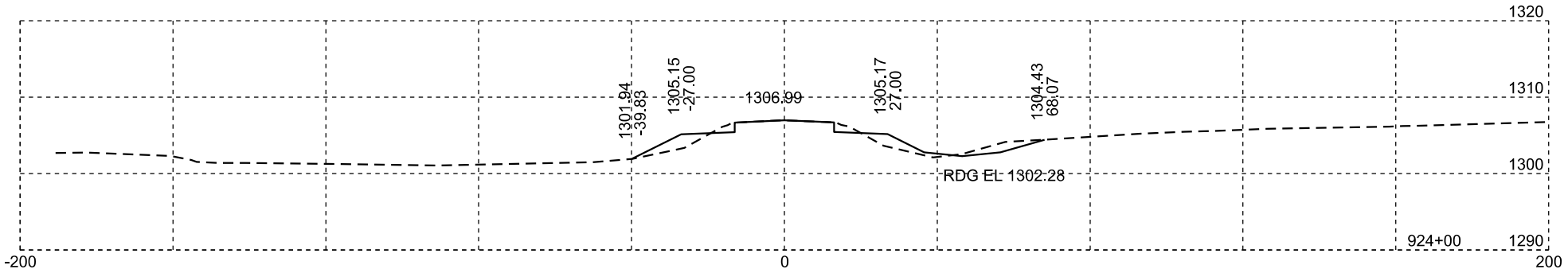

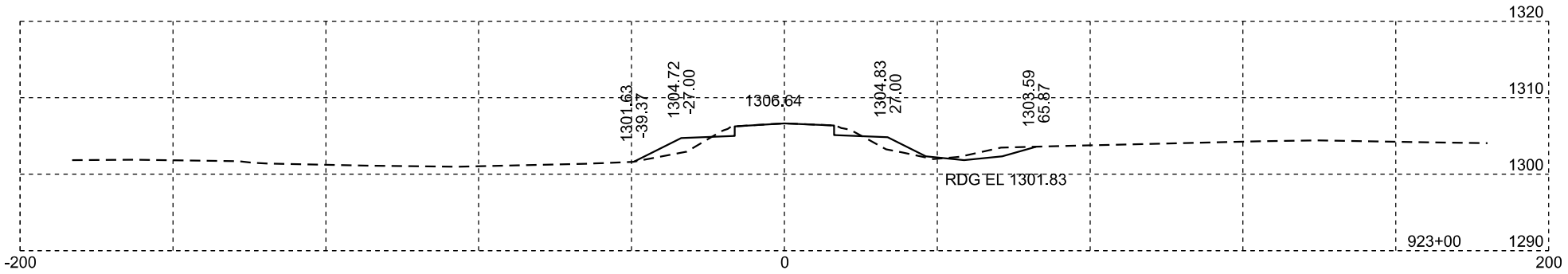

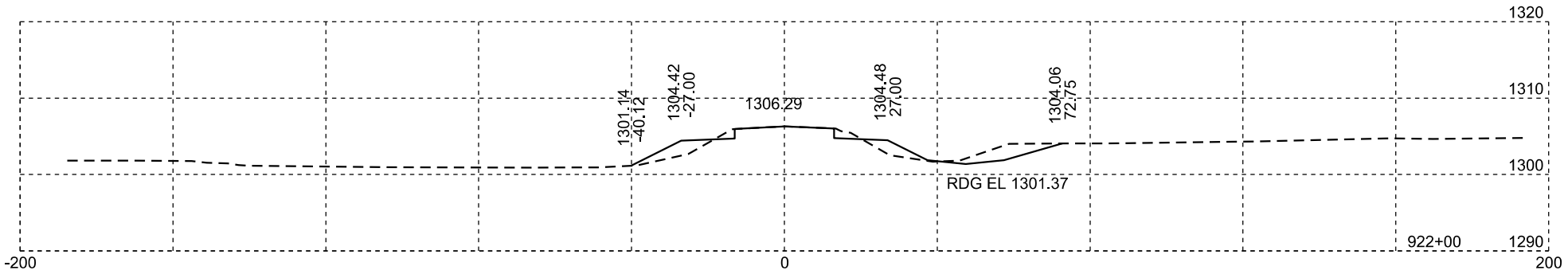

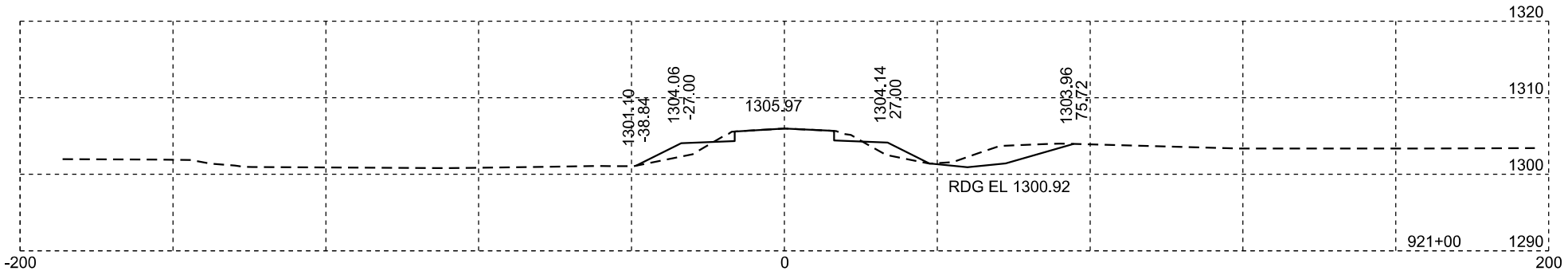

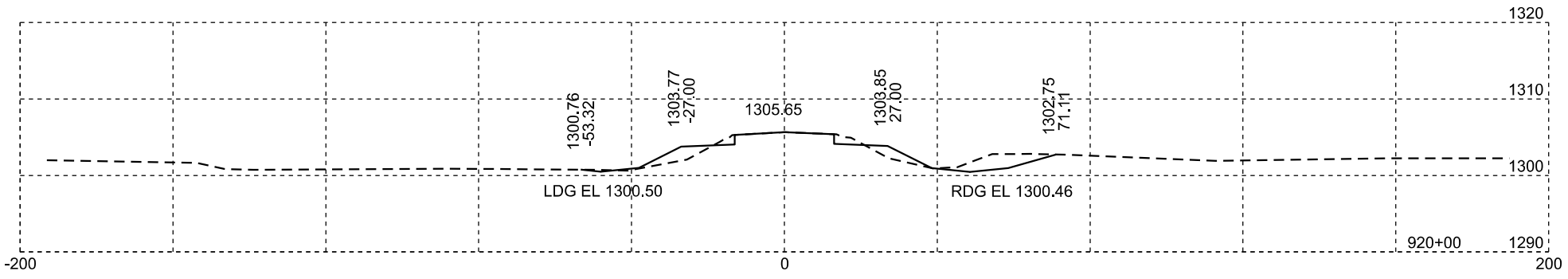

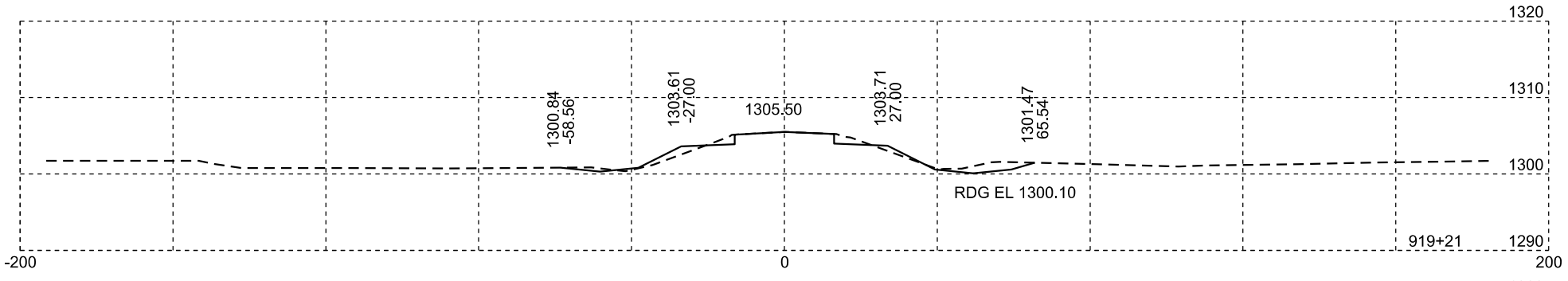

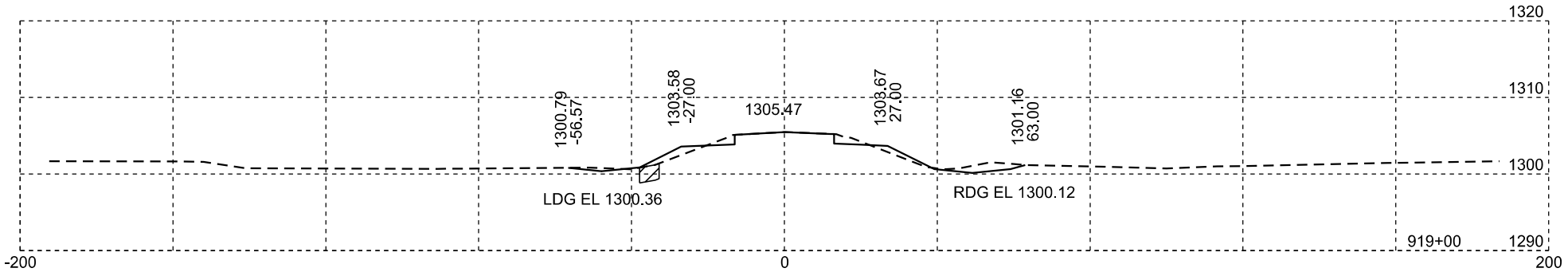

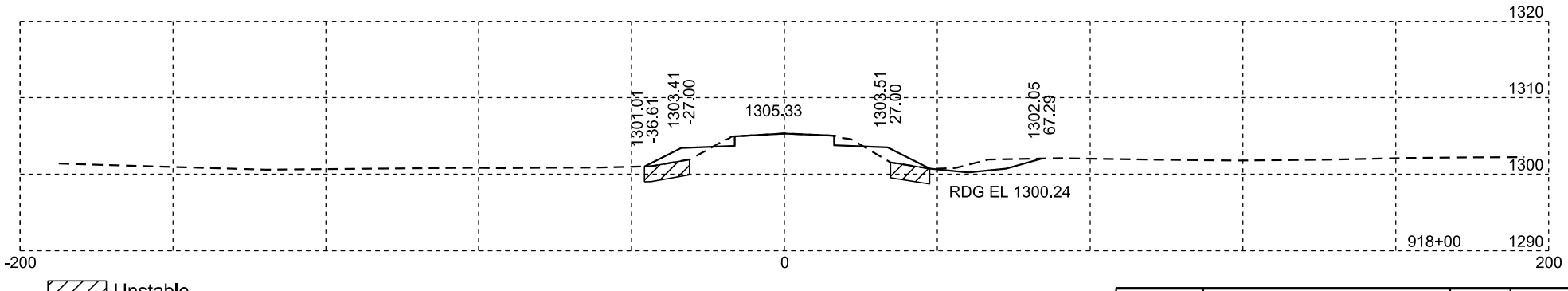

Unstable

Rev 02/29/2024 DRM
Plotting Date: 02/29/2024

STATE OF SOUTH DAKOTA	PROJECT	SHEET NO.	TOTAL SHEETS
	P-PH-B-PT 0010(124)296	X71	X169

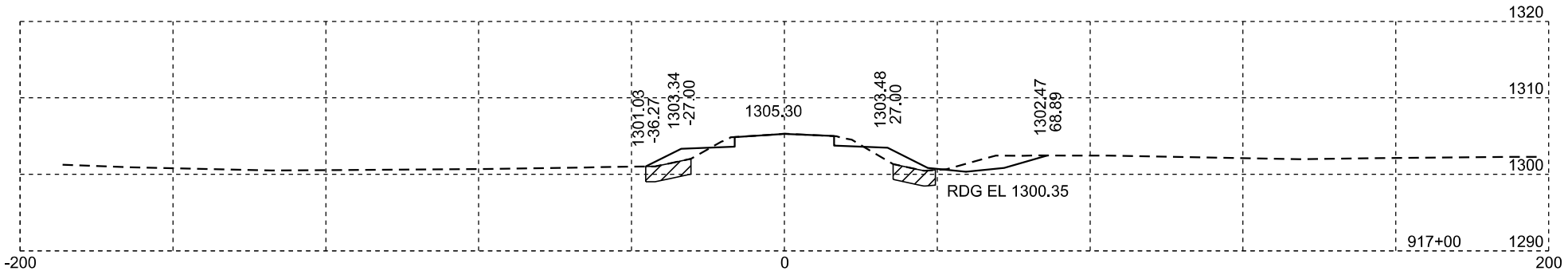

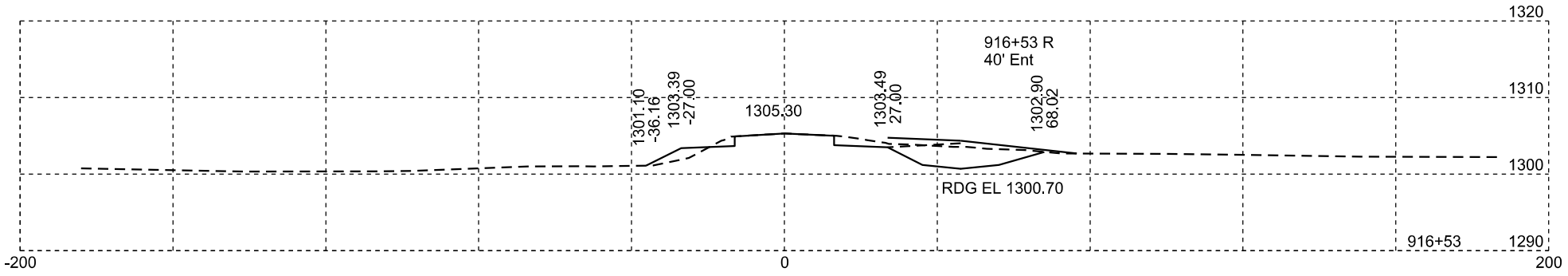

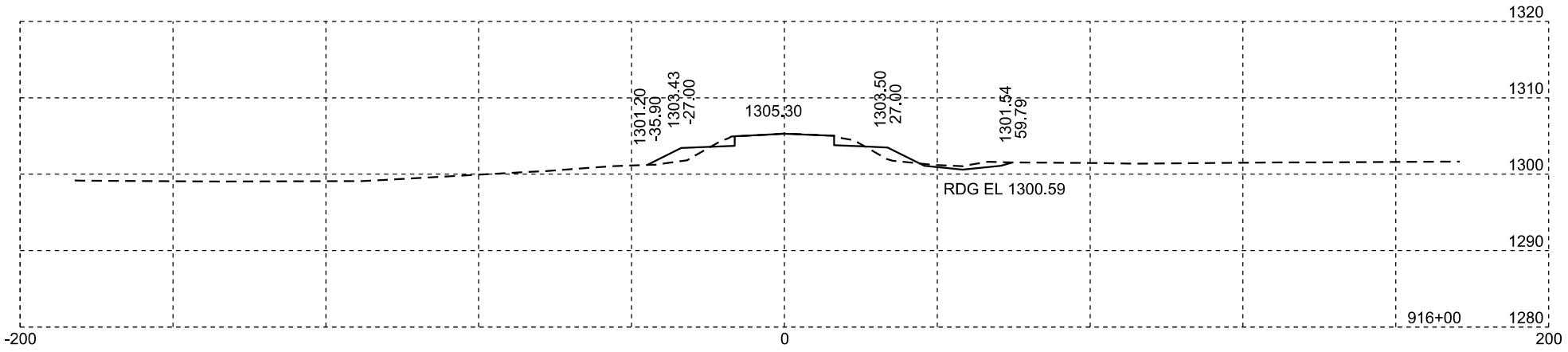

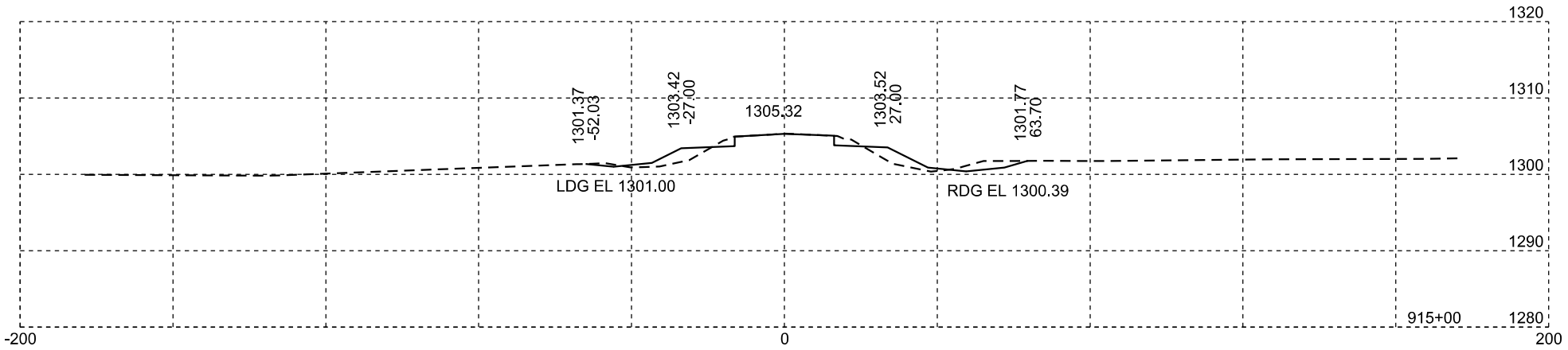

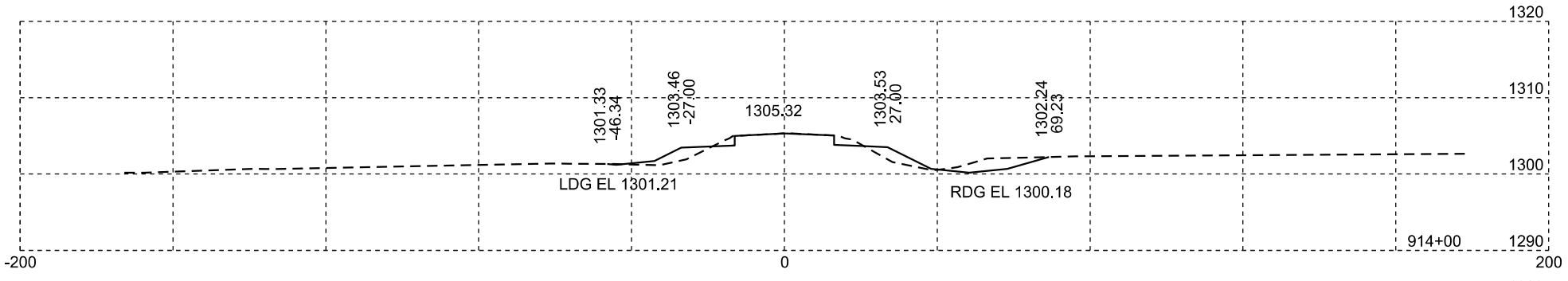

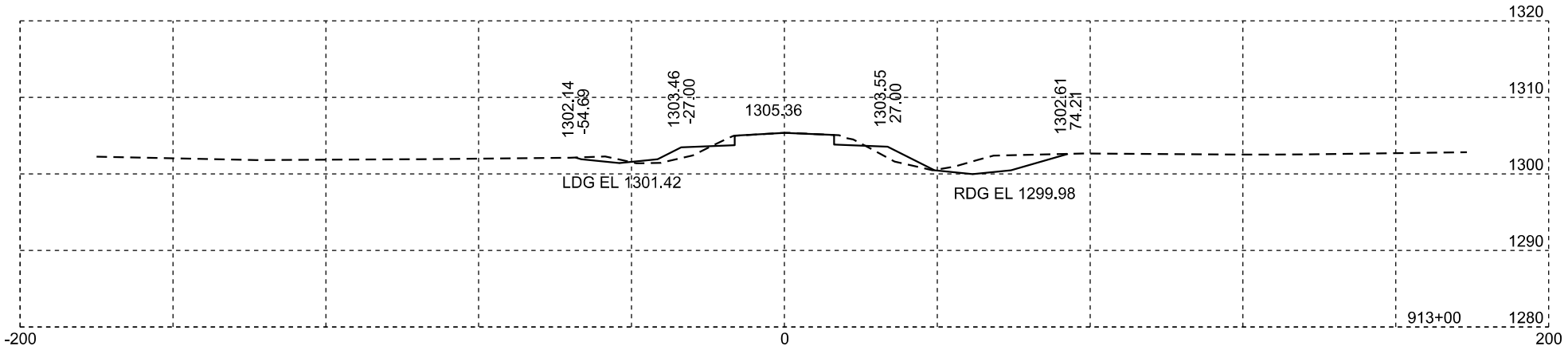

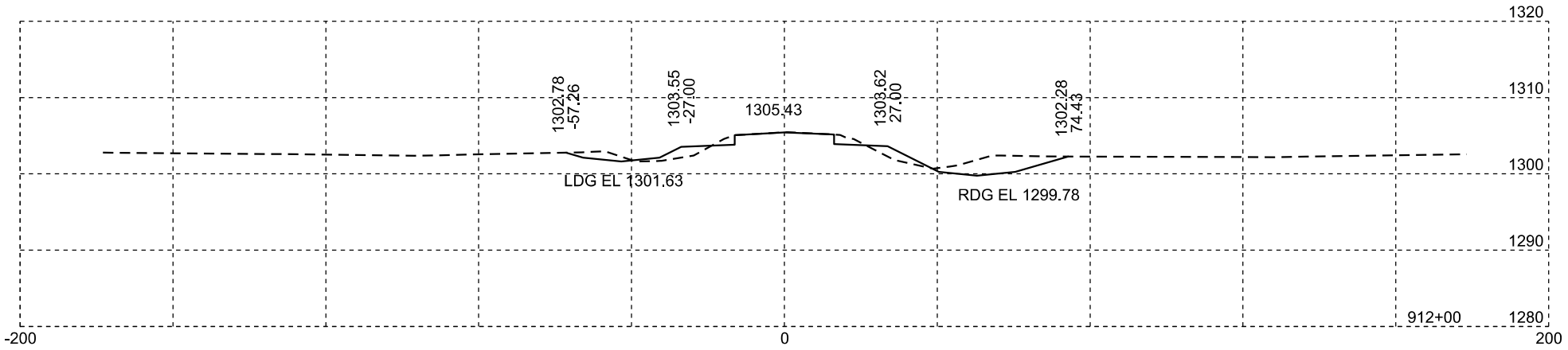

Unstable

Plotting Date: 01/19/2024

STATE OF SOUTH DAKOTA	PROJECT	SHEET NO.	TOTAL SHEETS
	P-PH-B-PT 0010(124)296	X72	X169

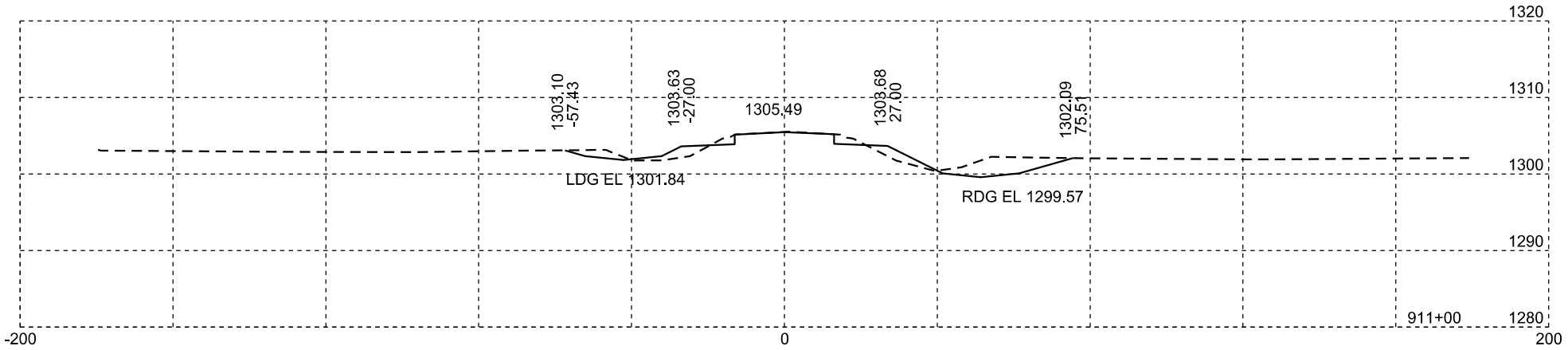

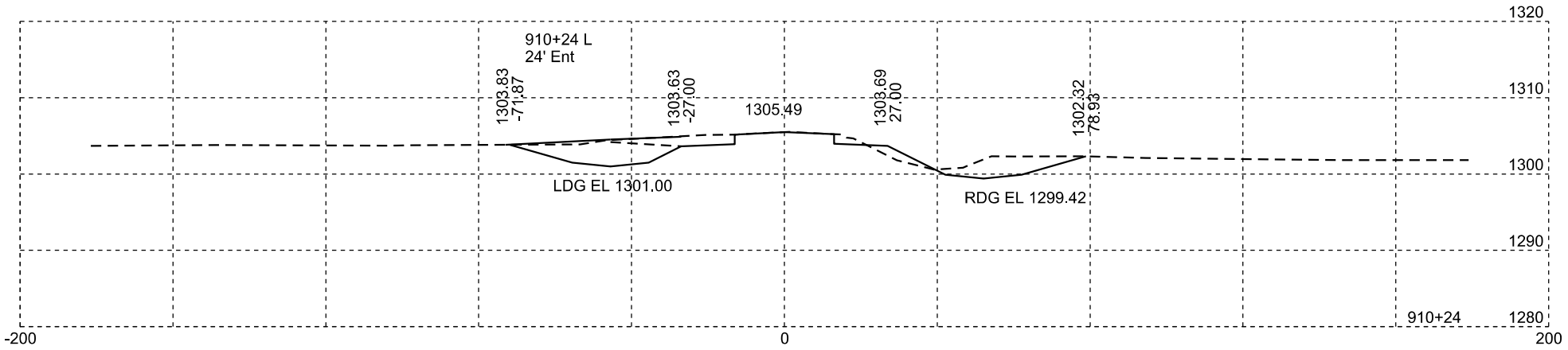

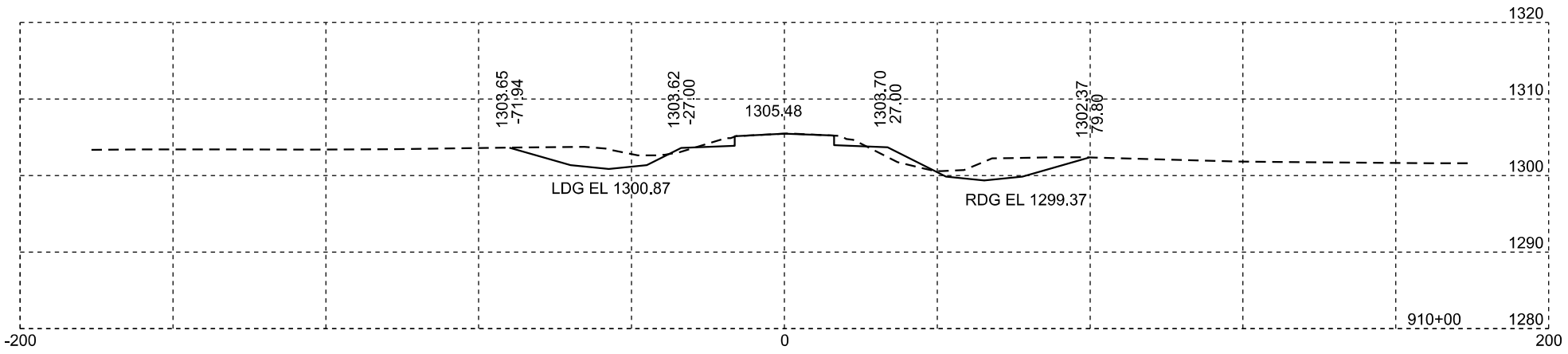

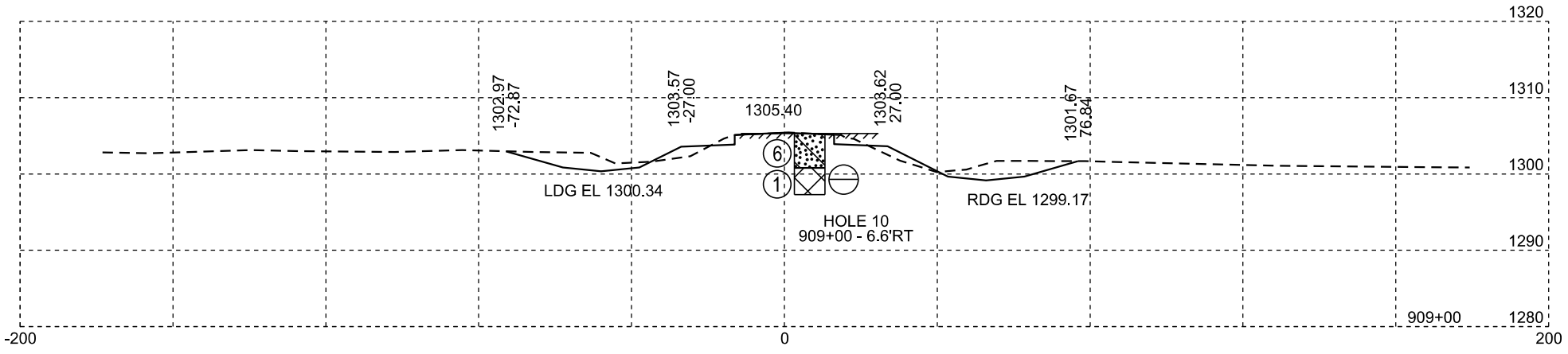

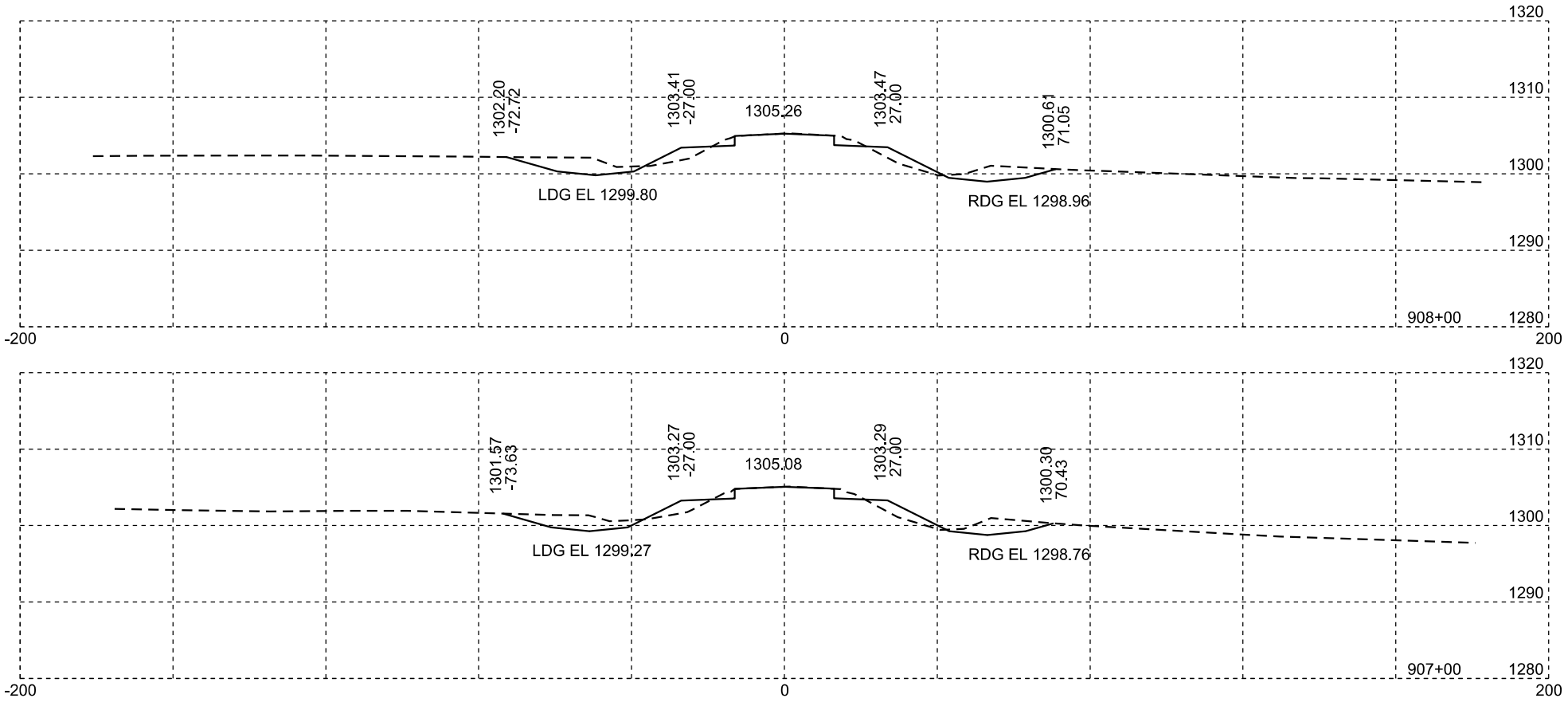

Plotting Date: 01/19/2024

STATE OF SOUTH DAKOTA	PROJECT	SHEET NO.	TOTAL SHEETS
	P-PH-B-PT 0010(124)296	X73	X169

Plotting Date: 01/19/2024

STATE OF SOUTH DAKOTA	PROJECT	SHEET NO.	TOTAL SHEETS
	P-PH-B-PT 0010(124)296	X74	X169

Plotting Date: 01/19/2024

STATE OF SOUTH DAKOTA	PROJECT	SHEET NO.	TOTAL SHEETS
	P-PH-B-PT 0010(124)296	X75	X169

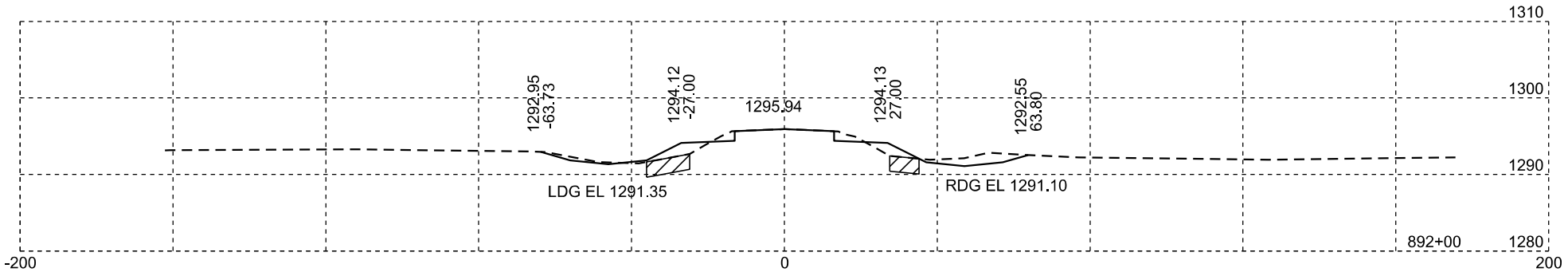

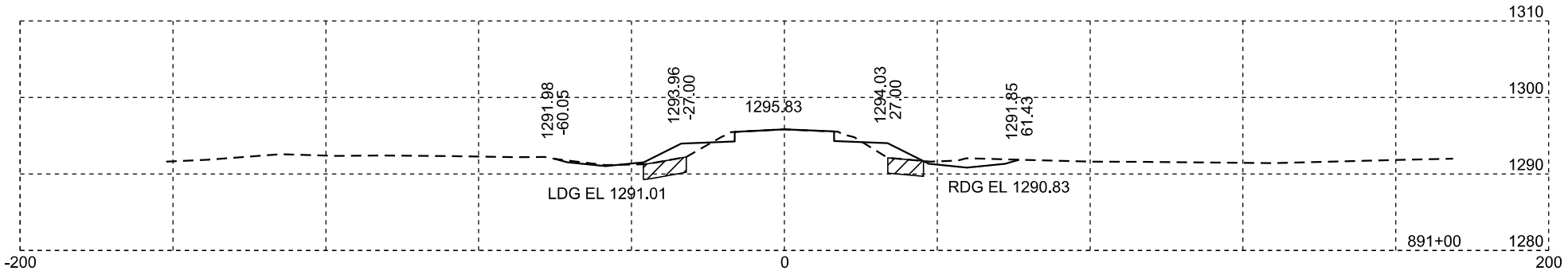

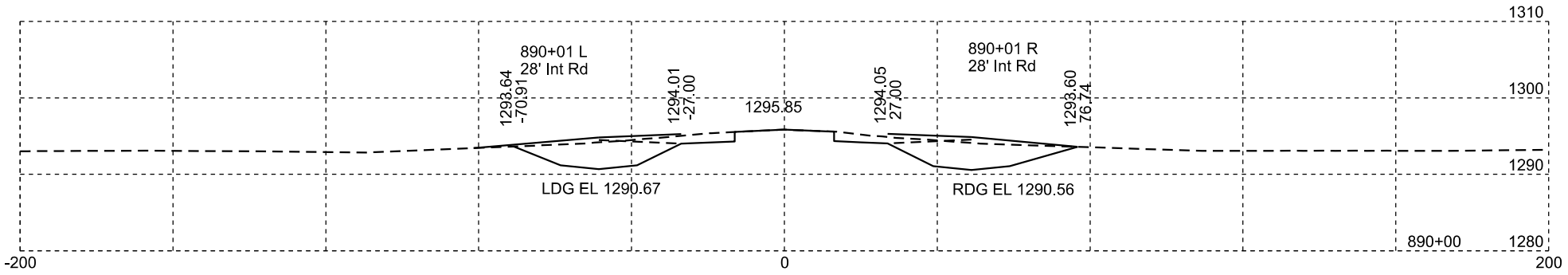

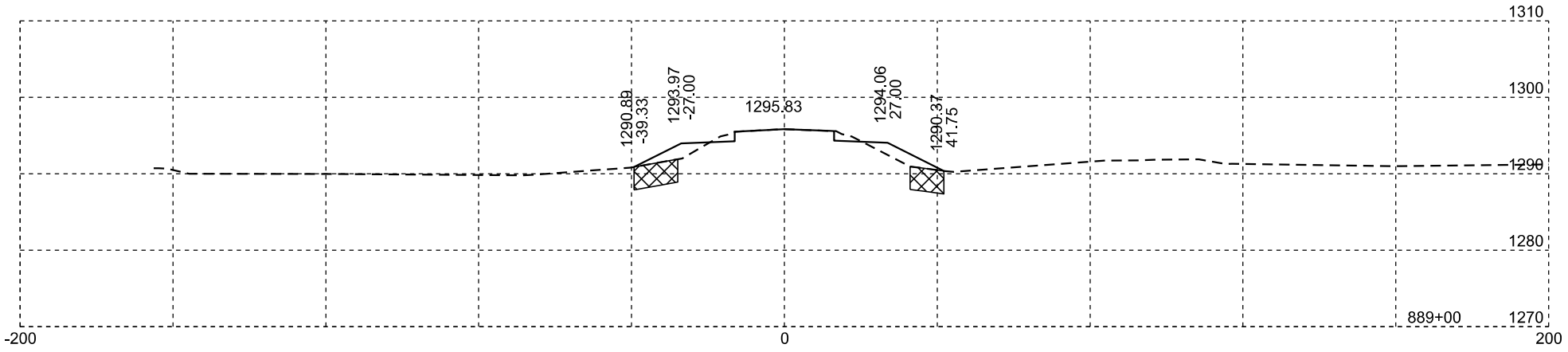

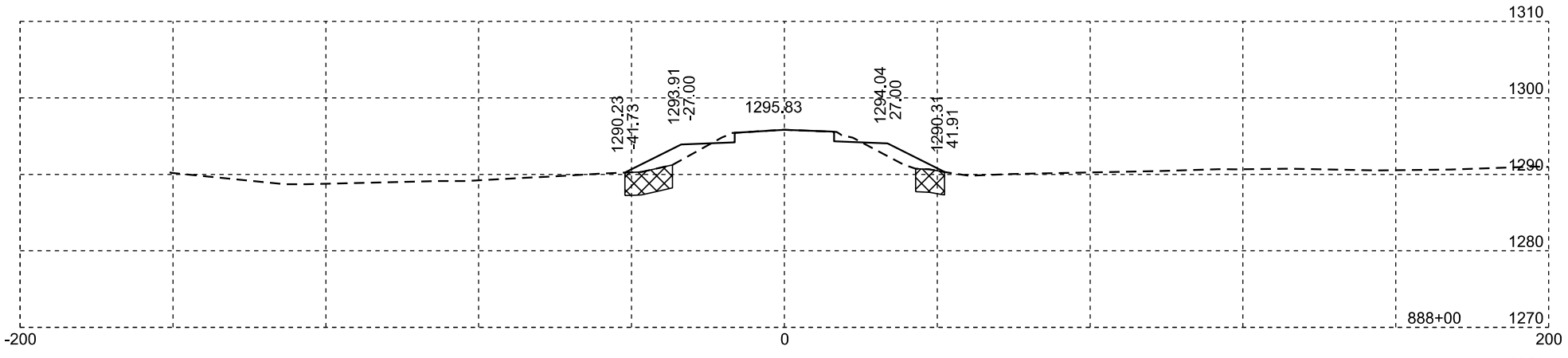

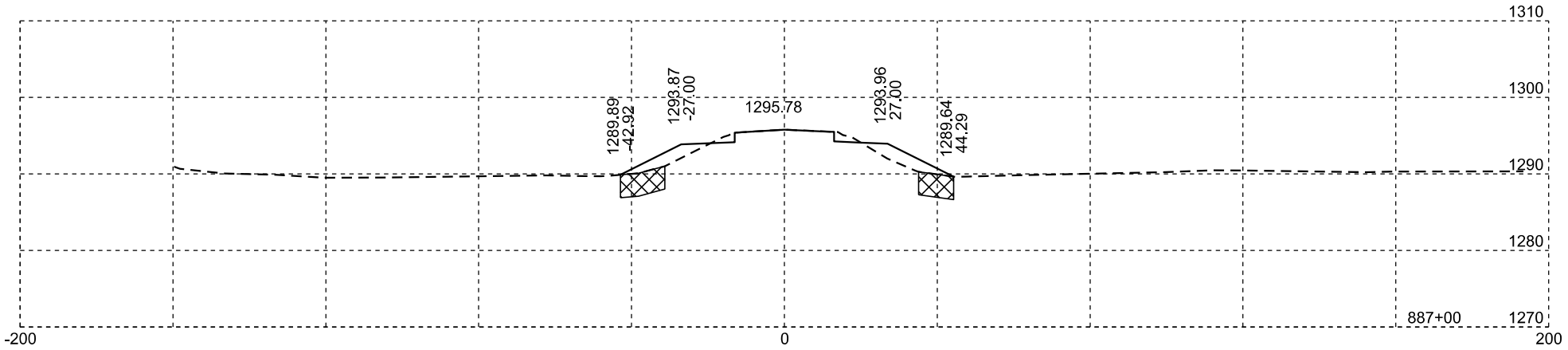

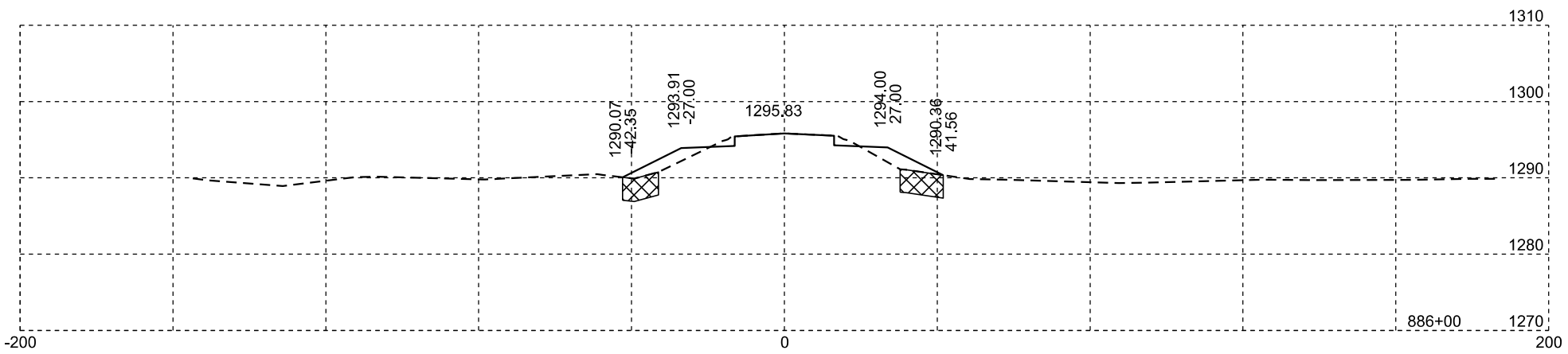

Unstable
Muck

Plotting Date: 01/19/2024

STATE OF SOUTH DAKOTA	PROJECT	SHEET NO.	TOTAL SHEETS
	P-PH-B-PT 0010(124)296	X76	X169

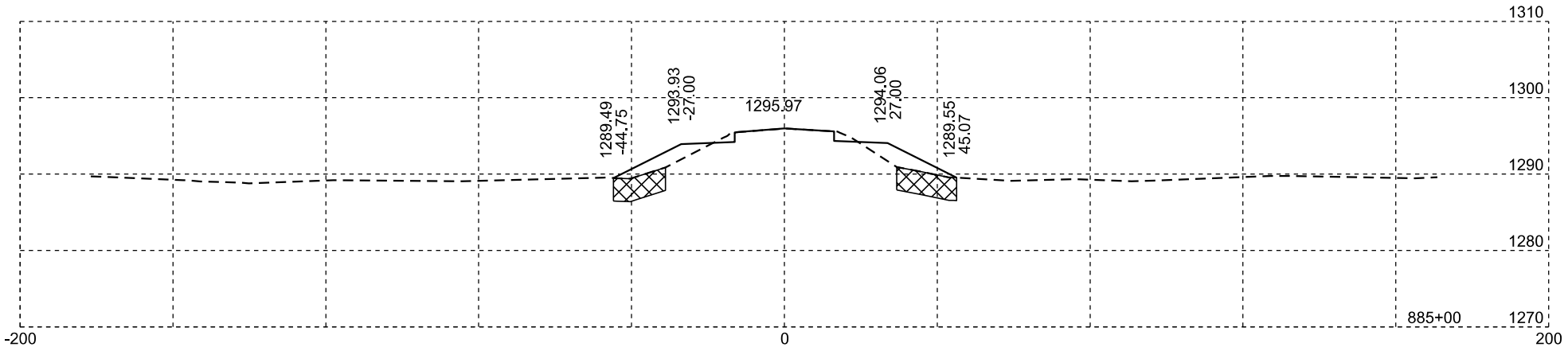

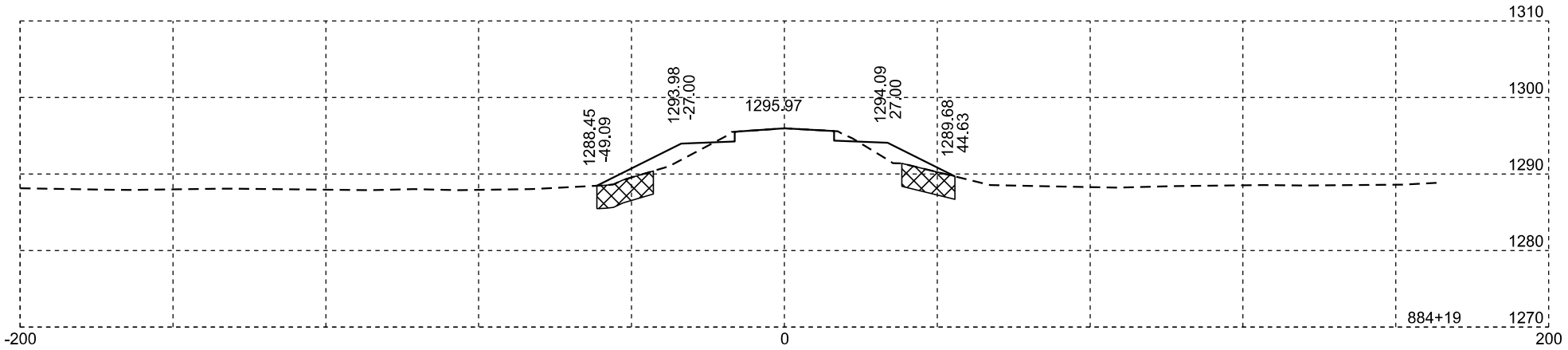

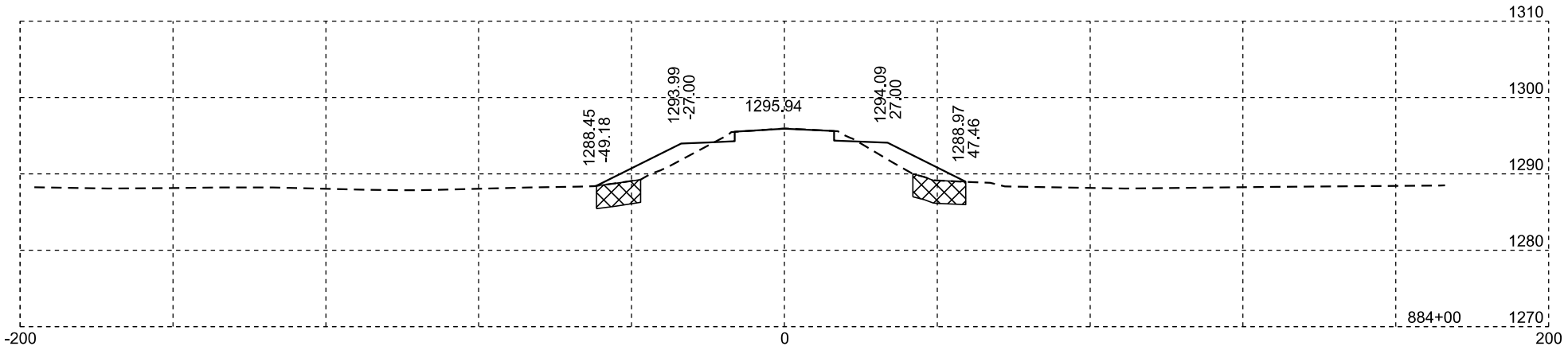

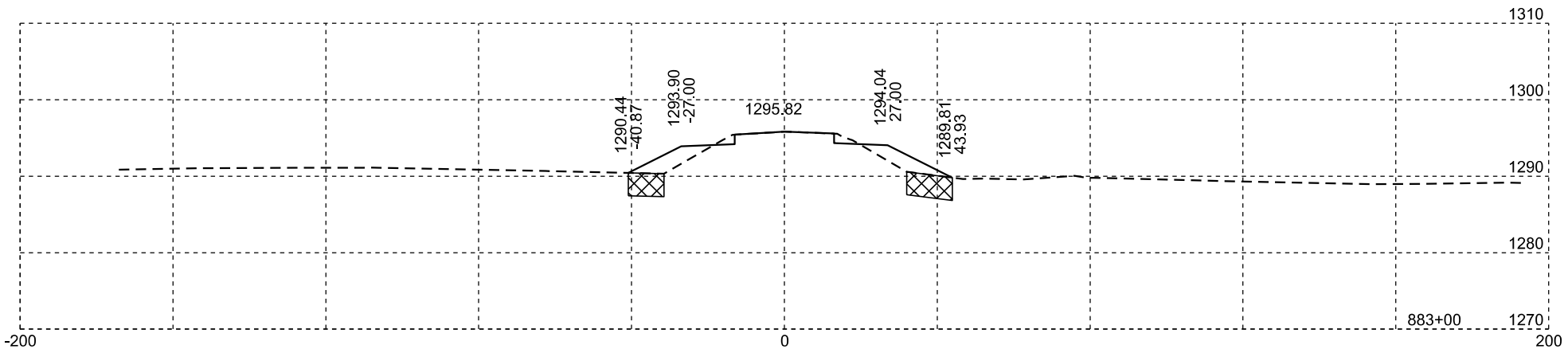

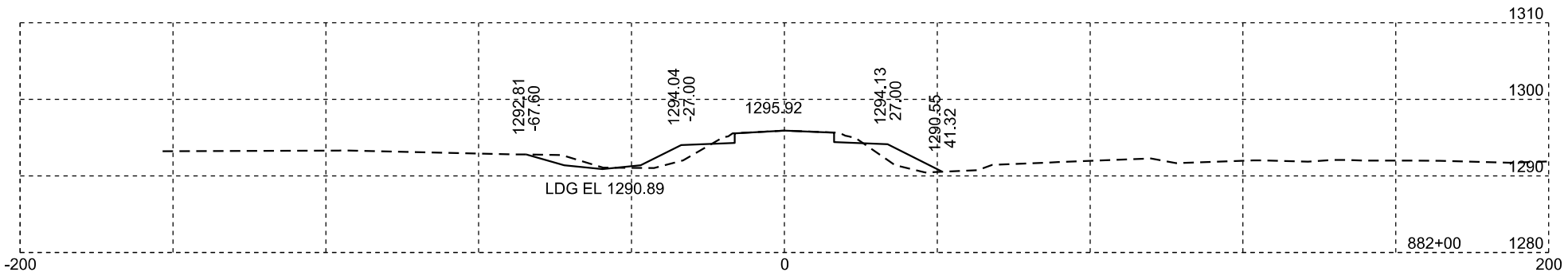

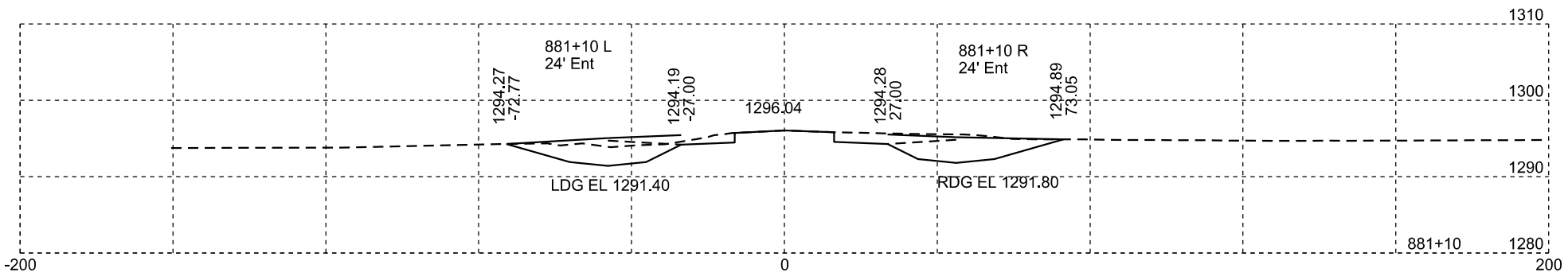

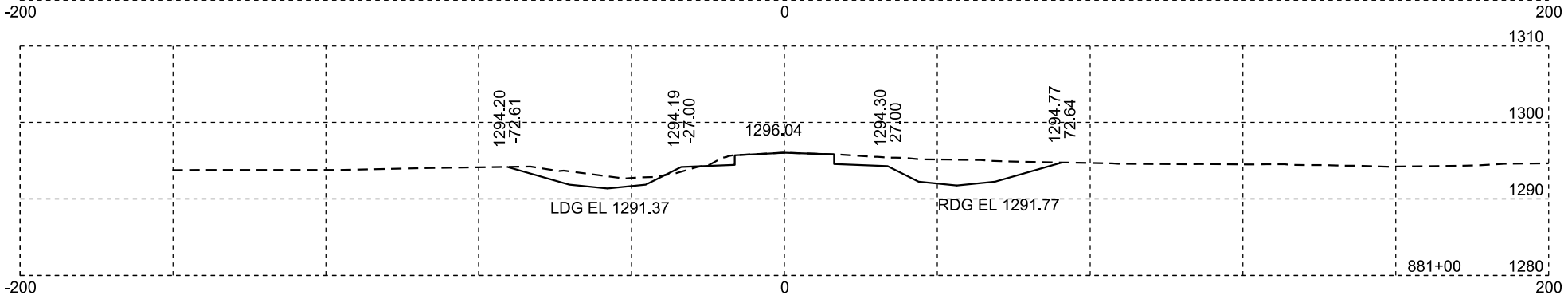

Muck

Plotting Date: 01/19/2024

STATE OF SOUTH DAKOTA	PROJECT	SHEET NO.	TOTAL SHEETS
	P-PH-B-PT 0010(124)296	X77	X169

Muck

Plotting Date: 01/19/2024

STATE OF SOUTH DAKOTA	PROJECT	SHEET NO.	TOTAL SHEETS
	P-PH-B-PT 0010(124)296	X78	X169

875+00

1289.31
-45.72

1293.99
-27.00

1295.91

1294.05
27.00

1290.49
41.26

876+00

1289.60
-44.61

1294.00
-27.00

1295.86

1294.01
27.00

1290.51
41.00

877+00

1289.82
-43.58

1293.96
-27.00

1295.85

1294.01
27.00

1290.55
40.86

877+57

1289.88
-43.23

1293.93
-27.00

1295.83

1294.02
27.00

1291.66
58.47

878+00

1290.11
-42.22

1293.92
-27.00

1295.81

1294.03
27.00

1290.88
39.60

879+00

LDG EL 1290.75

1291.96
-62.85

1293.95
-27.00

1295.84

1294.08
27.00

RDG EL 1291.15

1292.86
65.19

880+00

LDG EL 1291.06

1293.66
-72.11

1294.15
-27.00

1296.00

1294.24
27.00

RDG EL 1291.46

1294.10
71.07

-200
0
200
1270
1280
1290
1300
1310

Muck

Plotting Date: 01/19/2024

STATE OF SOUTH DAKOTA	PROJECT	SHEET NO.	TOTAL SHEETS
	P-PH-B-PT 0010(124)296	X79	X169

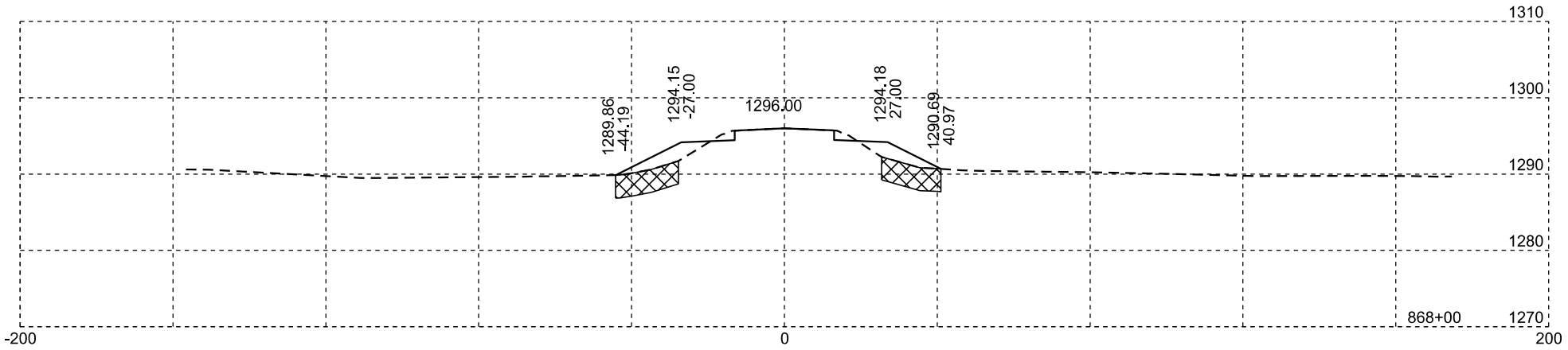

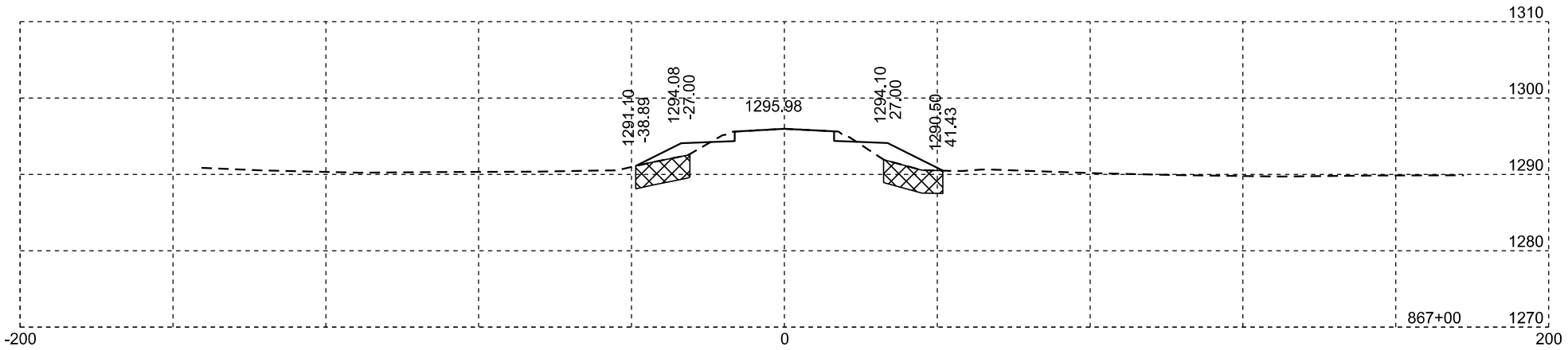

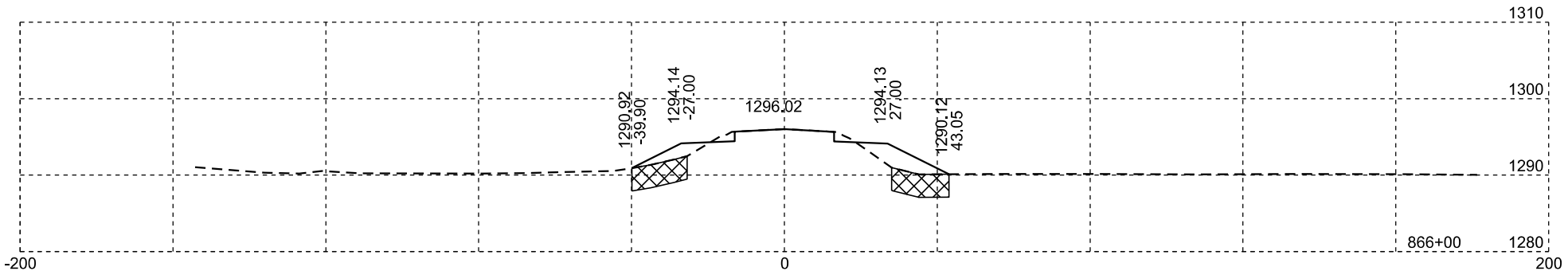

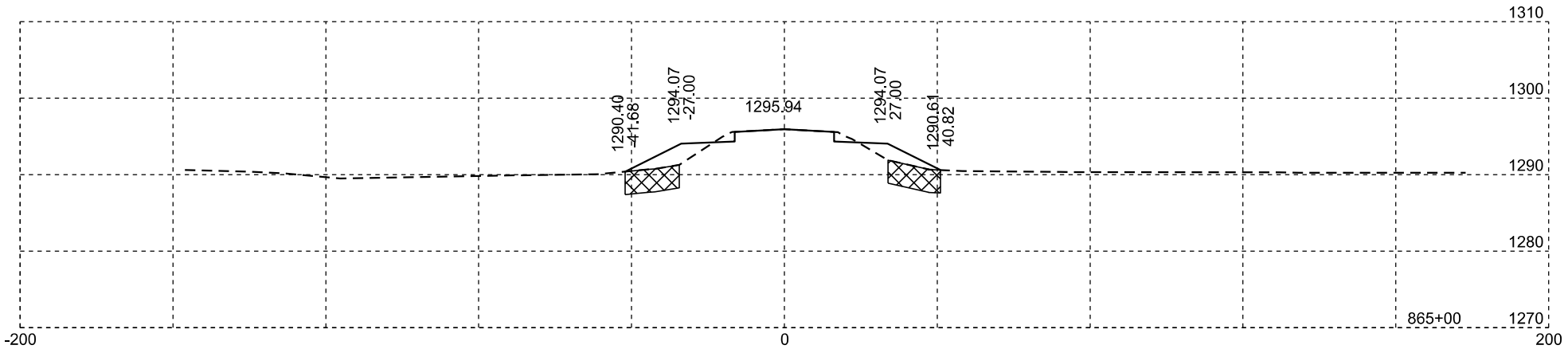

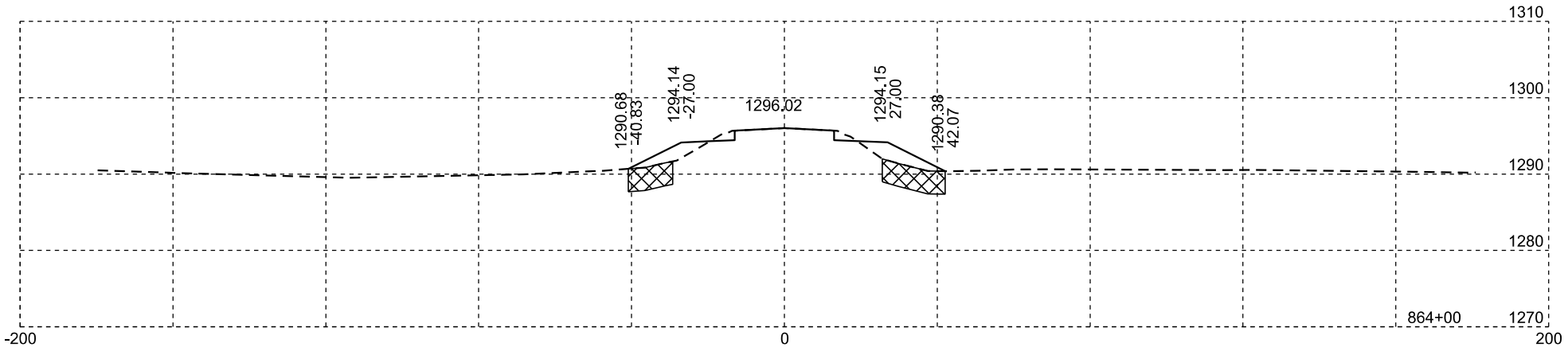

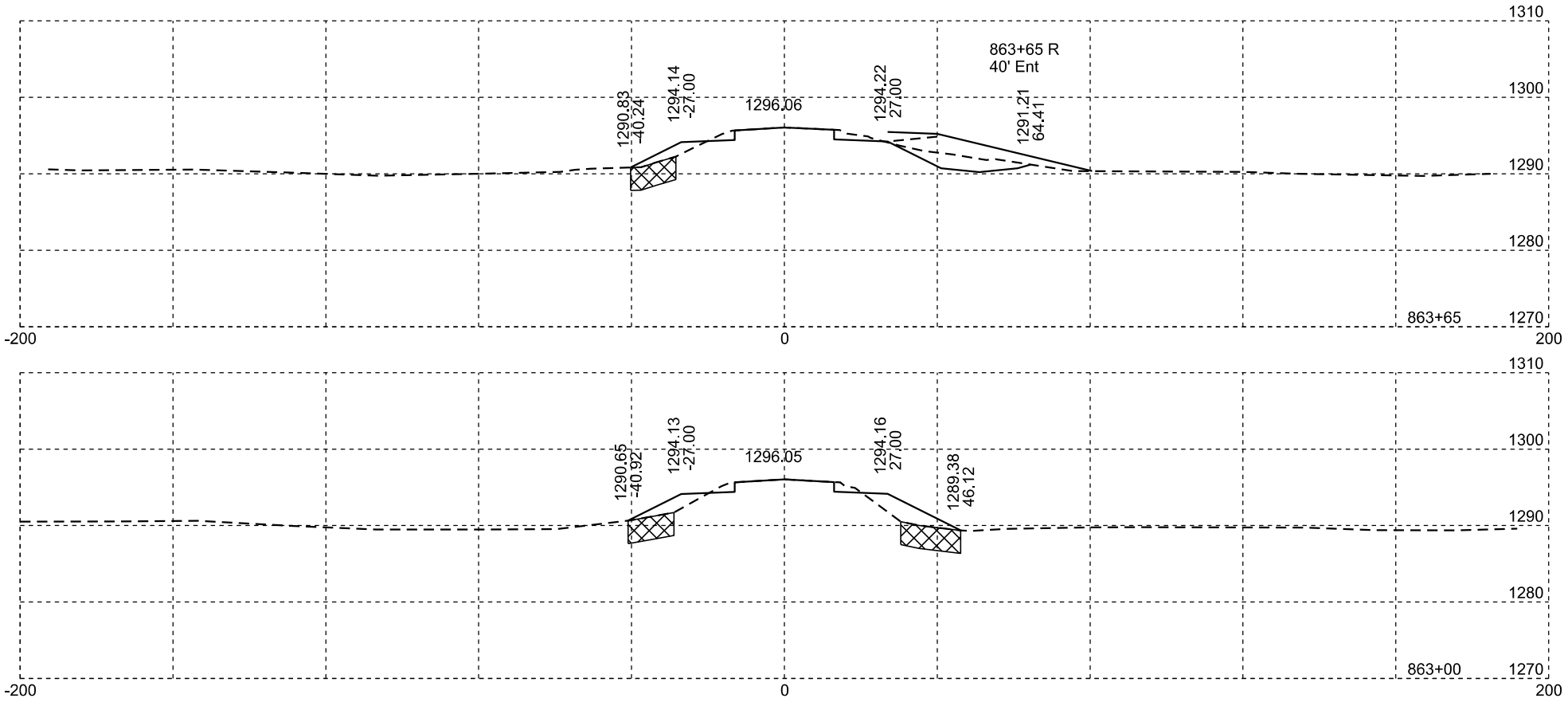

Muck

Plotting Date: 01/19/2024

STATE OF SOUTH DAKOTA	PROJECT	SHEET NO.	TOTAL SHEETS
	P-PH-B-PT 0010(124)296	X80	X169

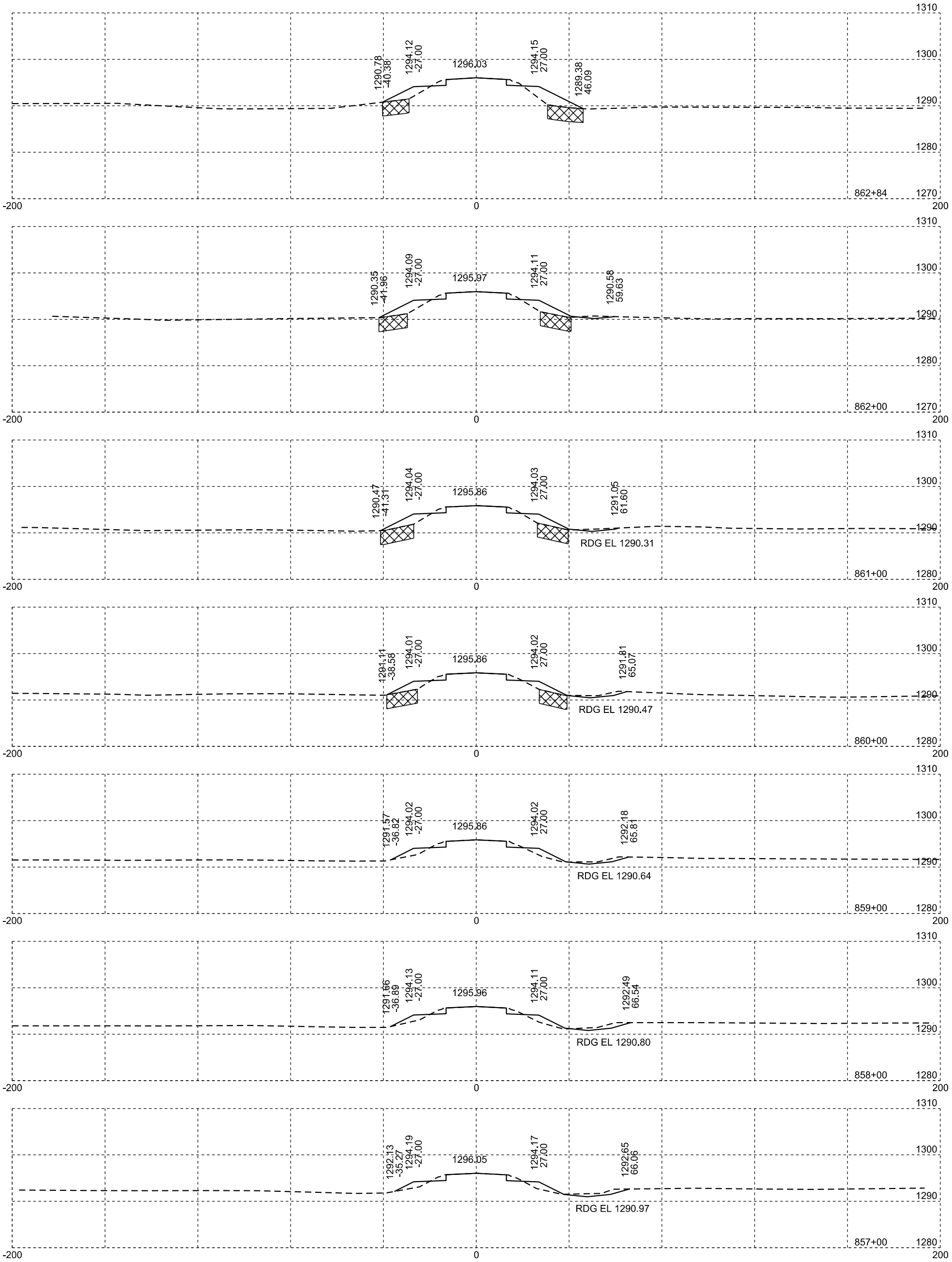

Muck

Rev 02/29/2024 DRM
Plotting Date: 02/29/2024

STATE OF SOUTH DAKOTA	PROJECT	SHEET NO.	TOTAL SHEETS
	P-PH-B-PT 0010(124)296	X81	X169

Plotting Date: 01/19/2024

STATE OF SOUTH DAKOTA	PROJECT	SHEET NO.	TOTAL SHEETS
	P-PH-B-PT 0010(124)296	X82	X169

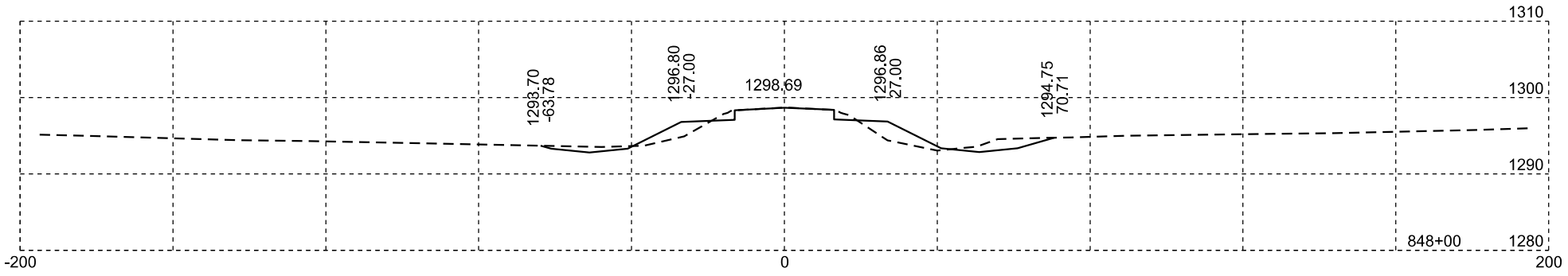

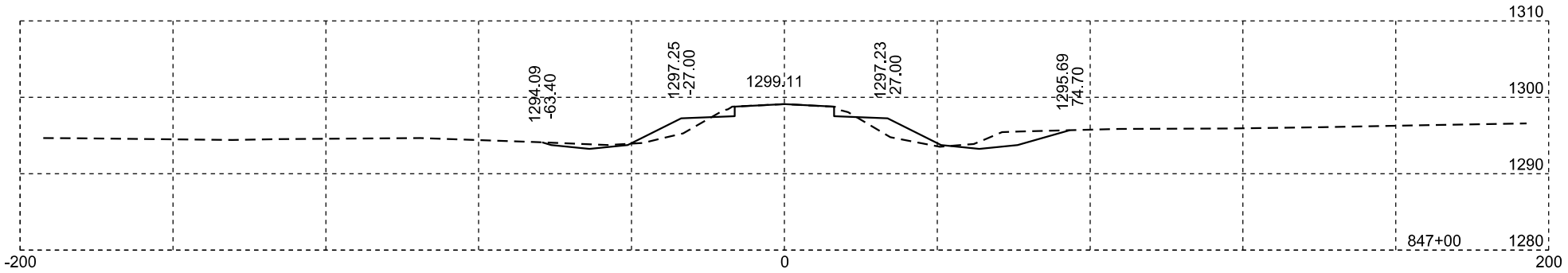

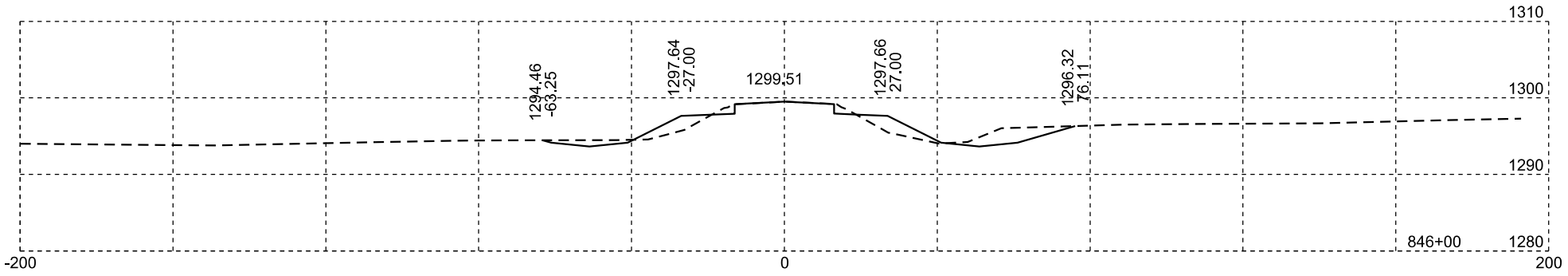

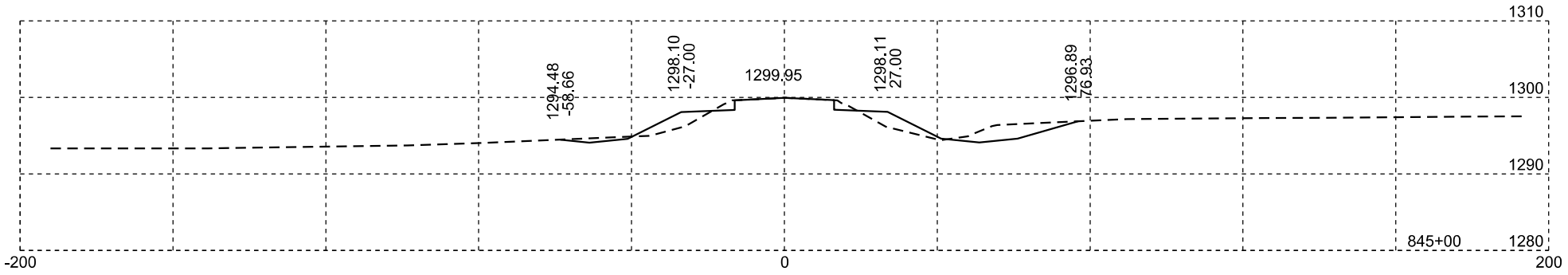

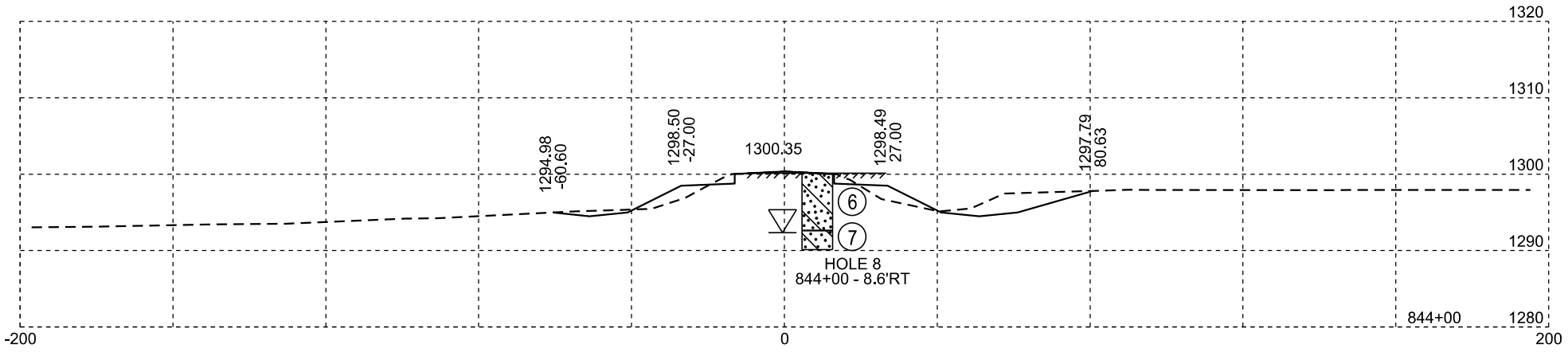

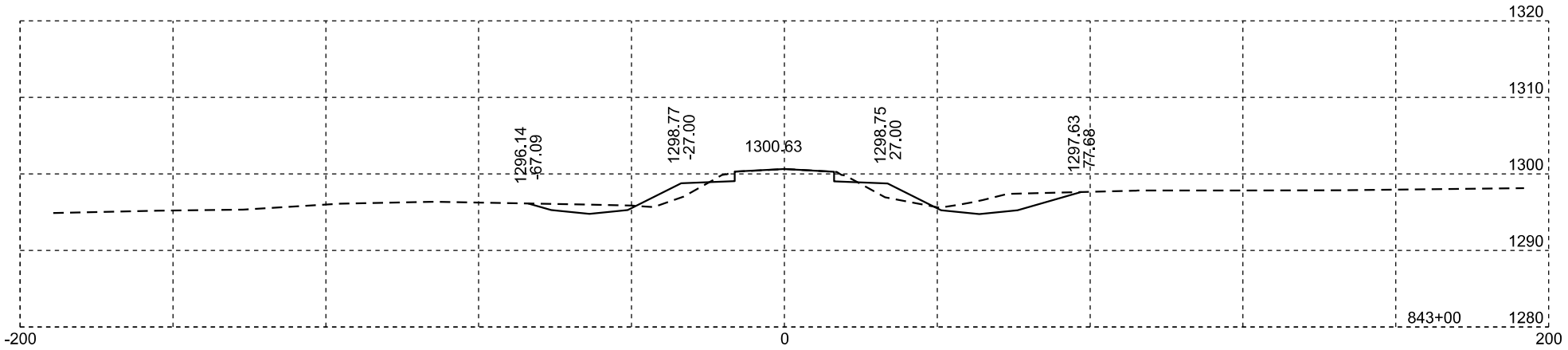

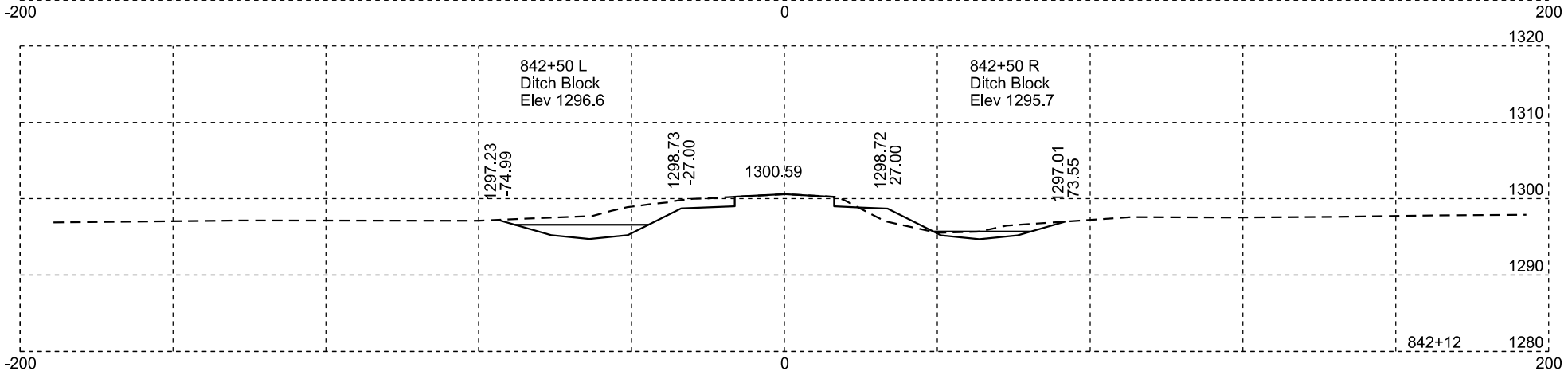

Plotting Date: 01/19/2024

STATE OF SOUTH DAKOTA	PROJECT	SHEET NO.	TOTAL SHEETS
	P-PH-B-PT 0010(124)296	X83	X169

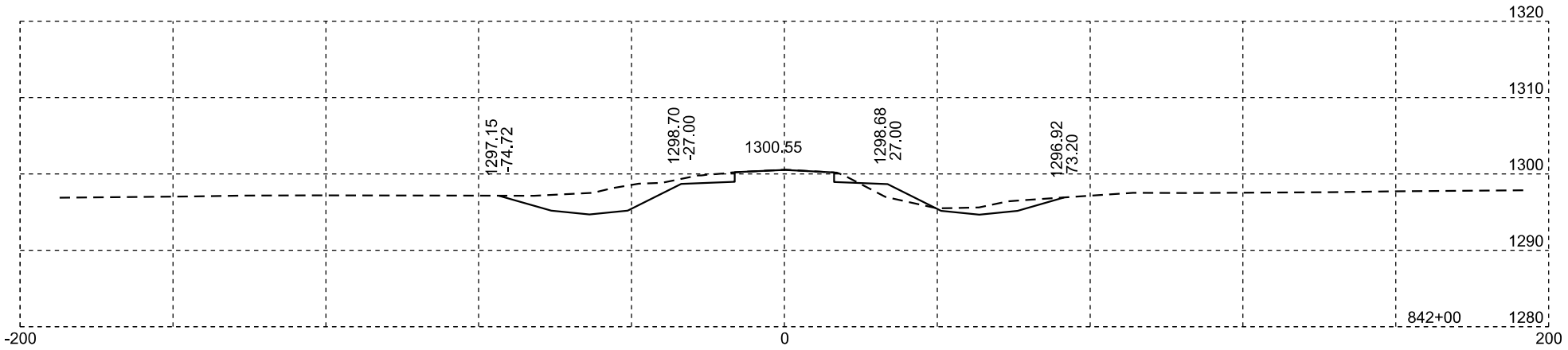

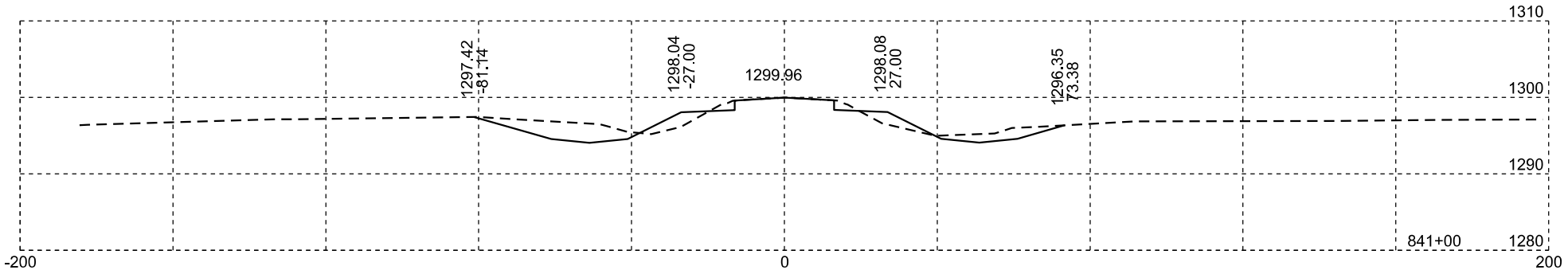

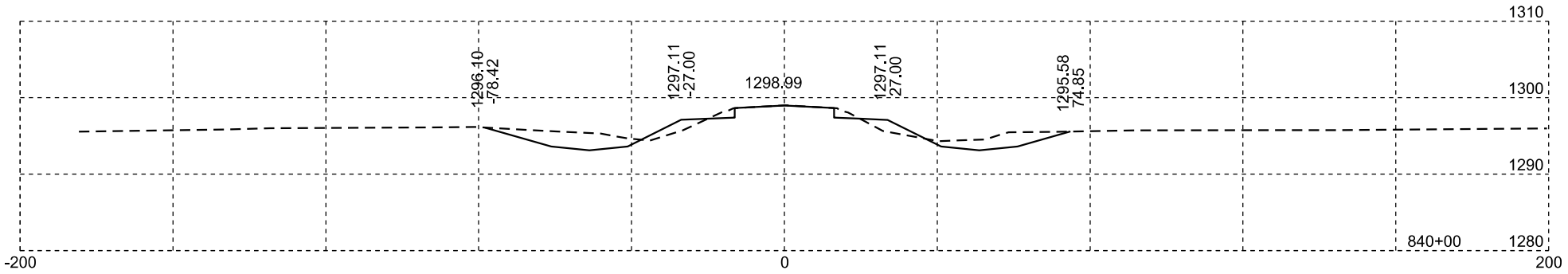

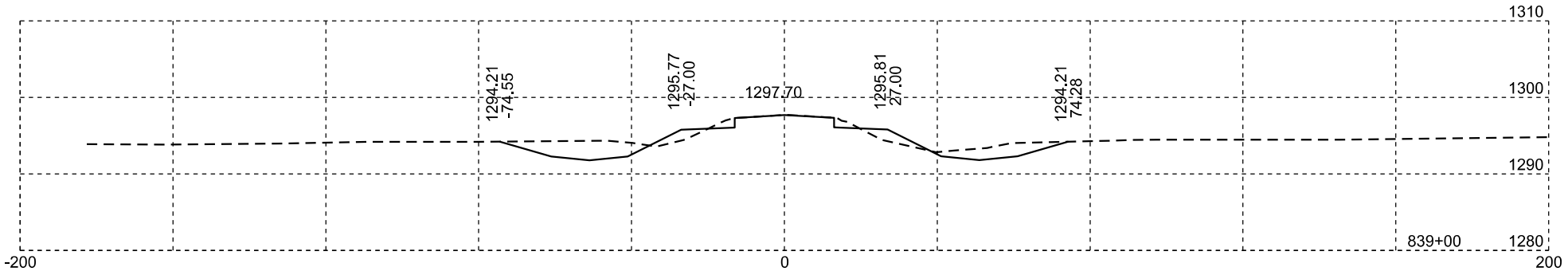

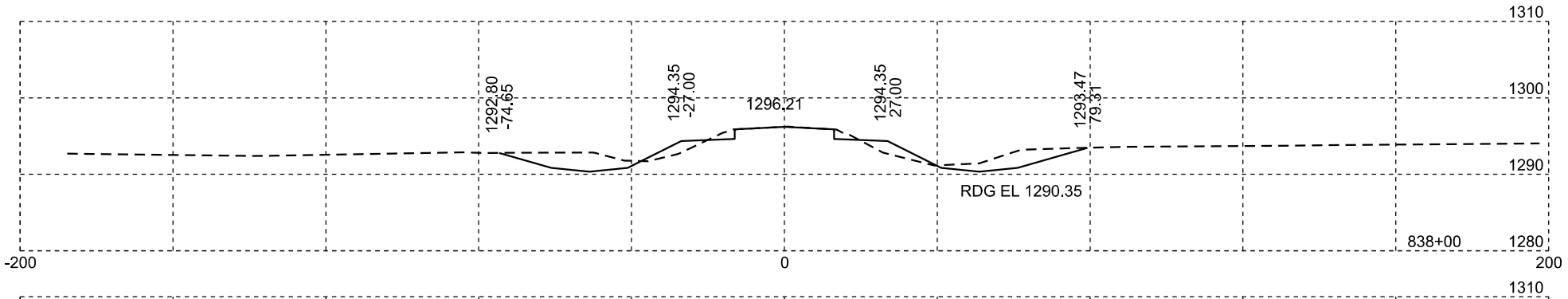

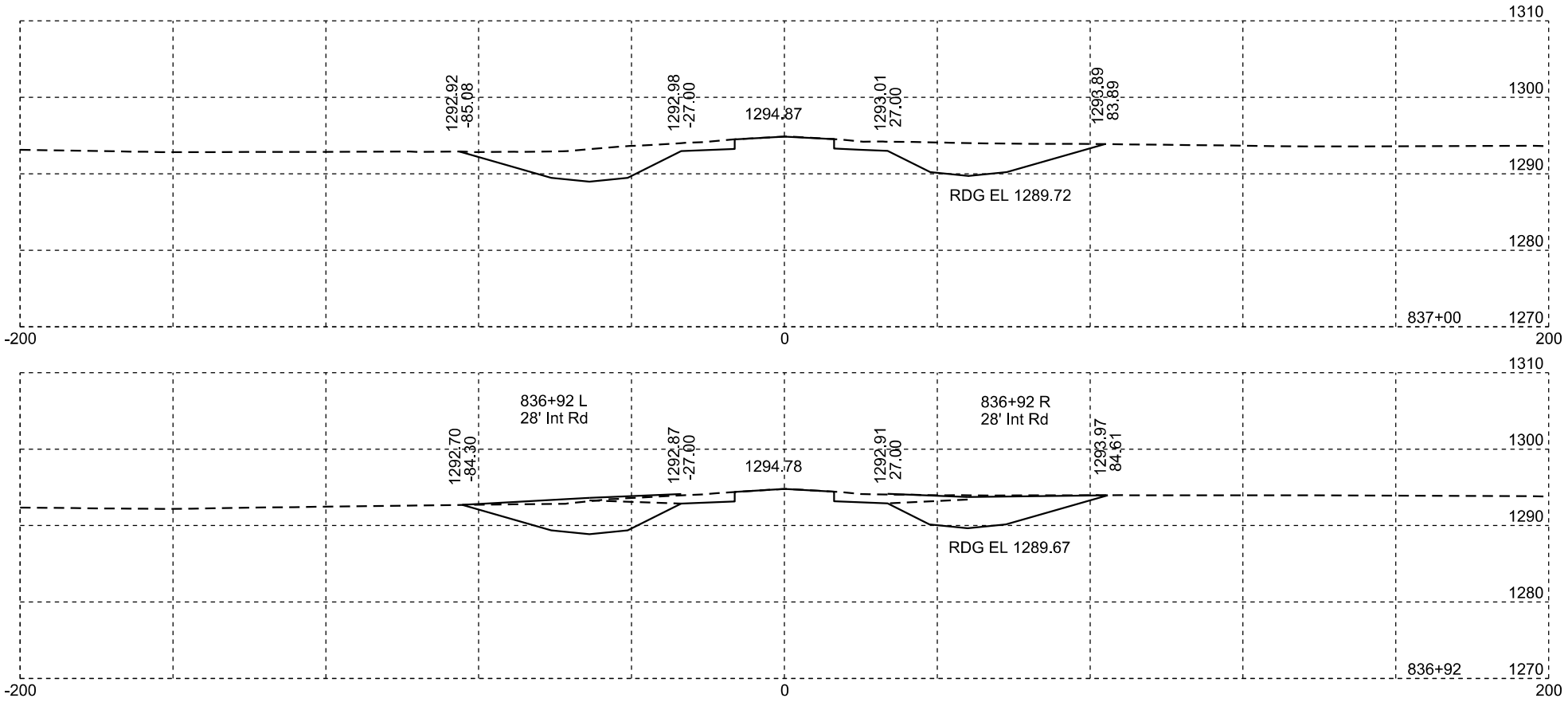

Plotting Date: 01/19/2024

STATE OF SOUTH DAKOTA	PROJECT	SHEET NO.	TOTAL SHEETS
	P-PH-B-PT 0010(124)296	X84	X169

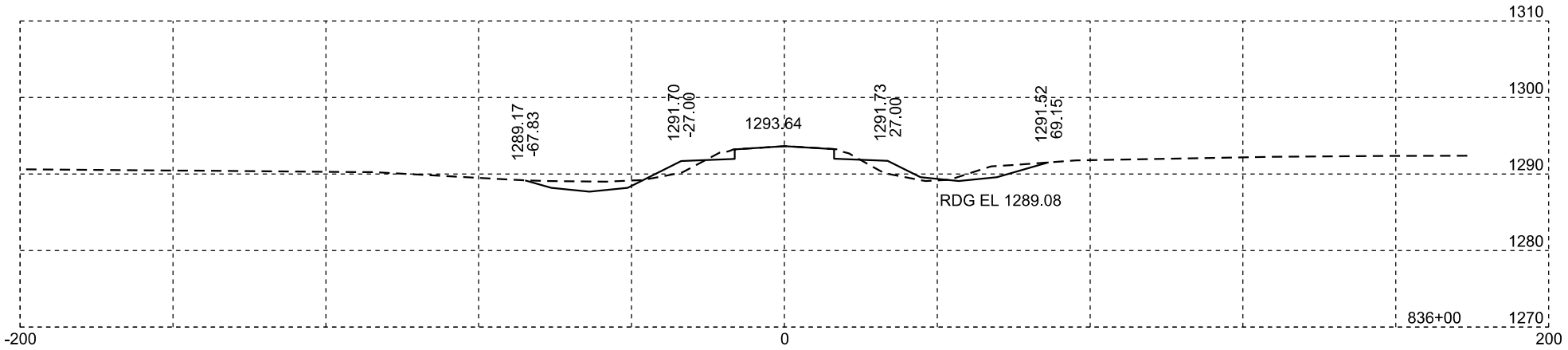

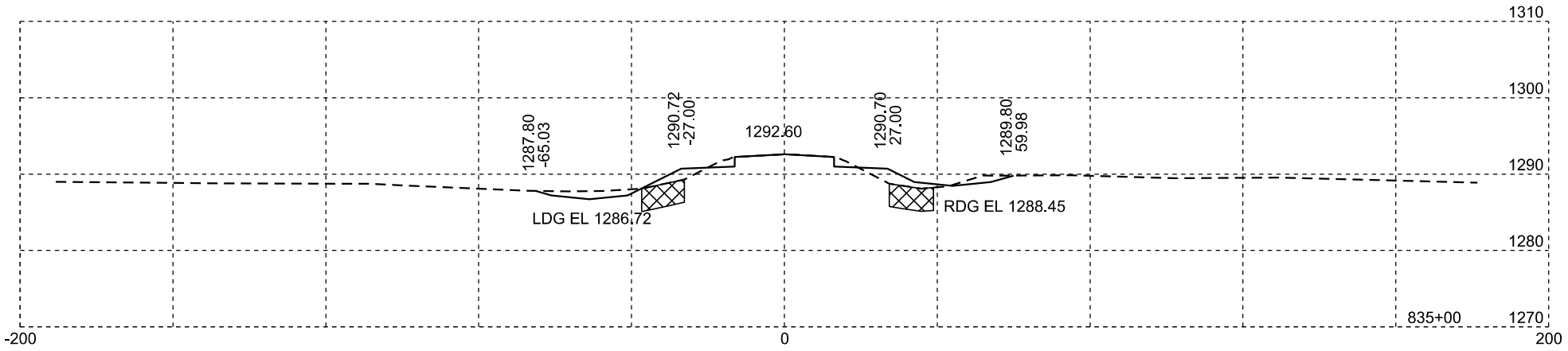

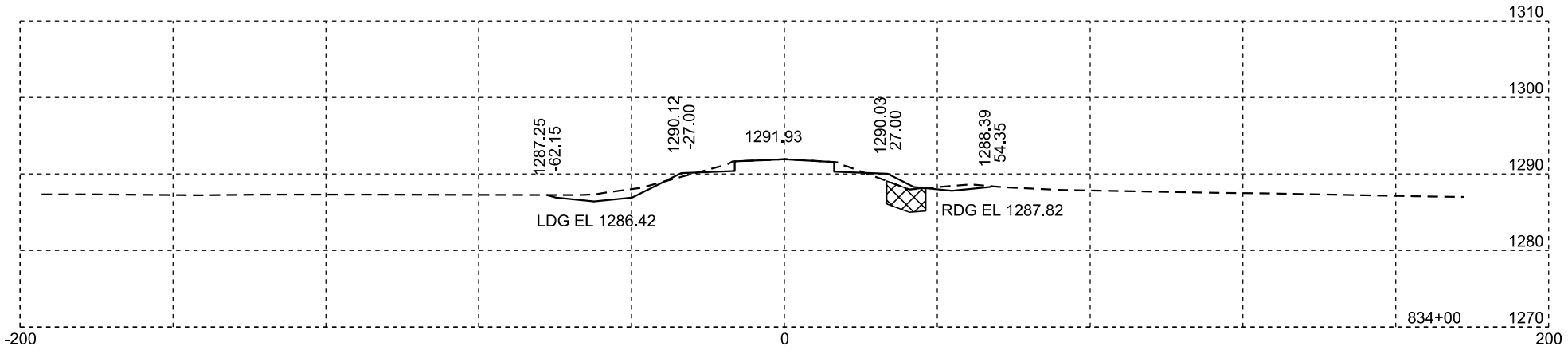

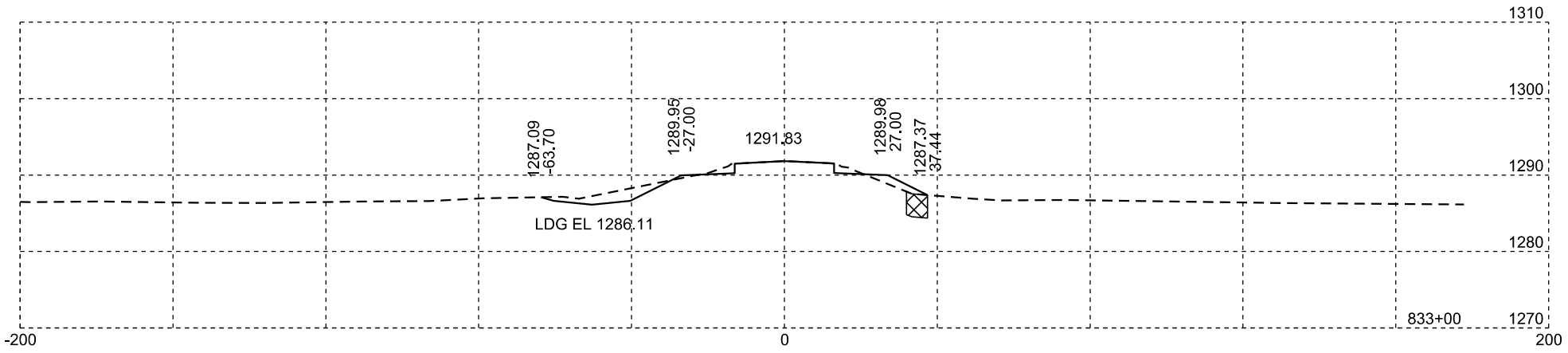

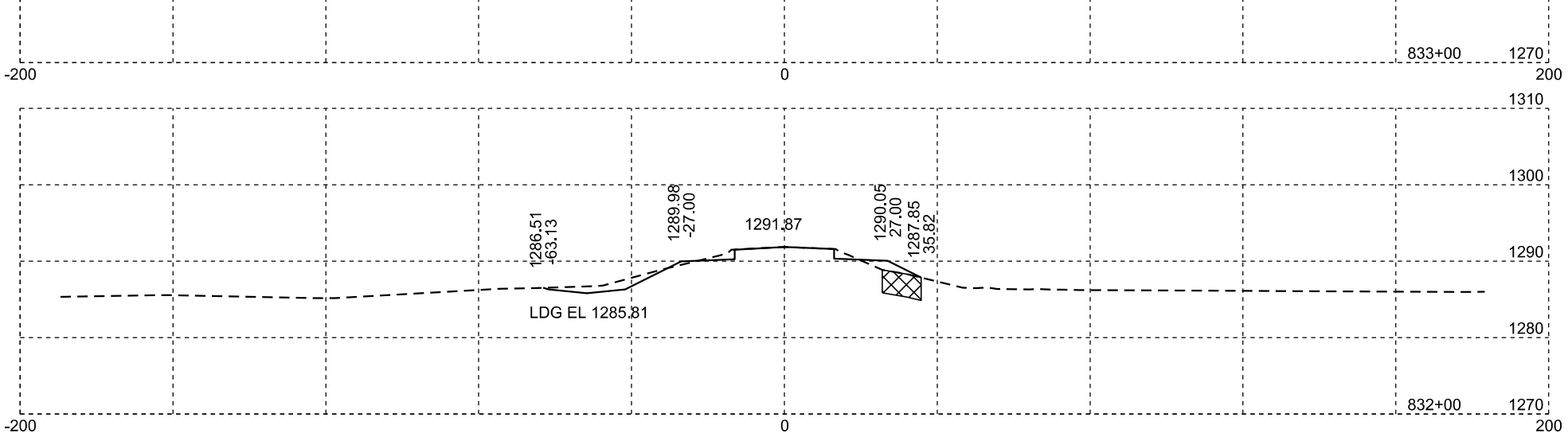

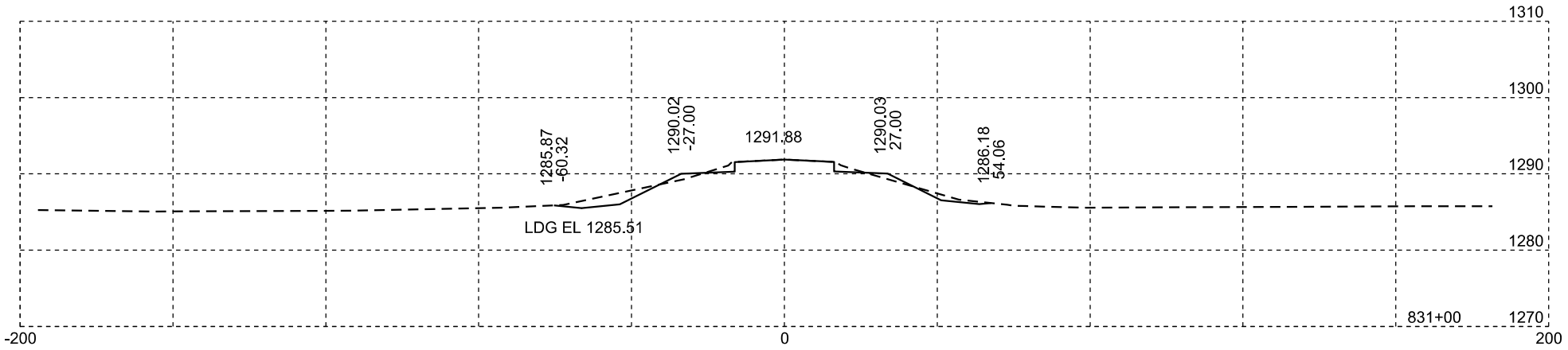

Muck

Plotting Date: 01/19/2024

STATE OF SOUTH DAKOTA	PROJECT	SHEET NO.	TOTAL SHEETS
	P-PH-B-PT 0010(124)296	X85	X169

Muck

-200
0
1288.03
-62.26
1291.35
-27.00
1293.30
1291.43
27.00
RDG EL 1288.75
1291.94
74.55
826+00
1270
200
1280
1290
1300
1310

-200
0
1287.05
-57.77
1290.72
-27.00
1292.58
1290.68
27.00
RDG EL 1287.47
1290.32
74.22
827+00
1270
200
1280
1290
1300
1310

-200
0
1286.29
-52.24
1290.23
-27.00
1292.14
1290.24
27.00
1286.35
54.15
828+00
1270
200
1280
1290
1300
1310

-200
0
1284.98
-47.25
1290.04
-27.00
1291.94
1290.03
27.00
1284.85
47.73
829+00
1270
200
1280
1290
1300
1310

-200
0
1284.66
-48.43
1290.02
-27.00
1291.93
1290.02
27.00
1285.19
46.34
829+49
1270
200
1280
1290
1300
1310

-200
0
1284.93
-47.38
1290.02
-27.00
1291.91
1290.02
27.00
1284.94
47.31
830+00
1270
200
1280
1290
1300
1310

Rev 02/29/2024 DRM

Plotting Date: 02/29/2024

STATE OF SOUTH DAKOTA	PROJECT	SHEET NO.	TOTAL SHEETS
	P-PH-B-PT 0010(124)296	X86	X169

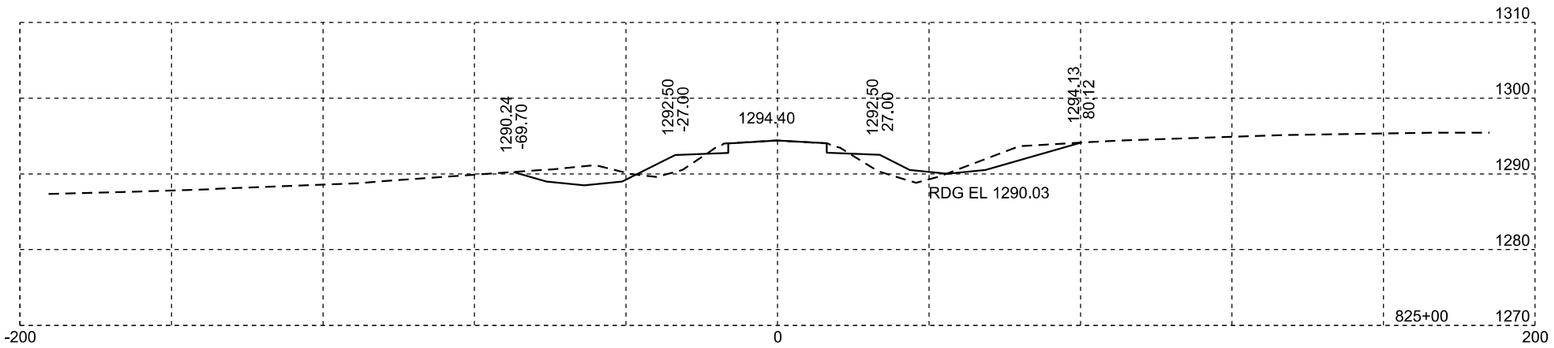

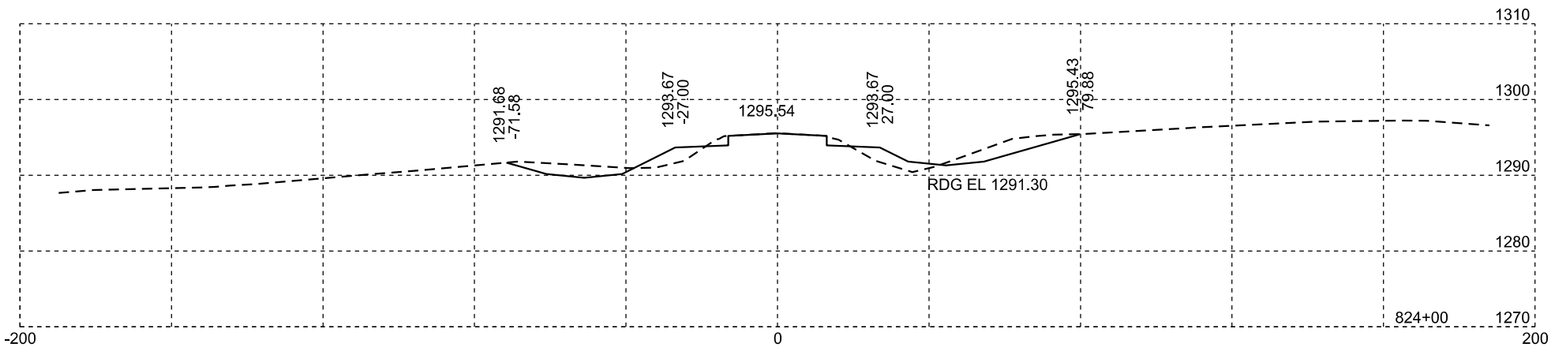

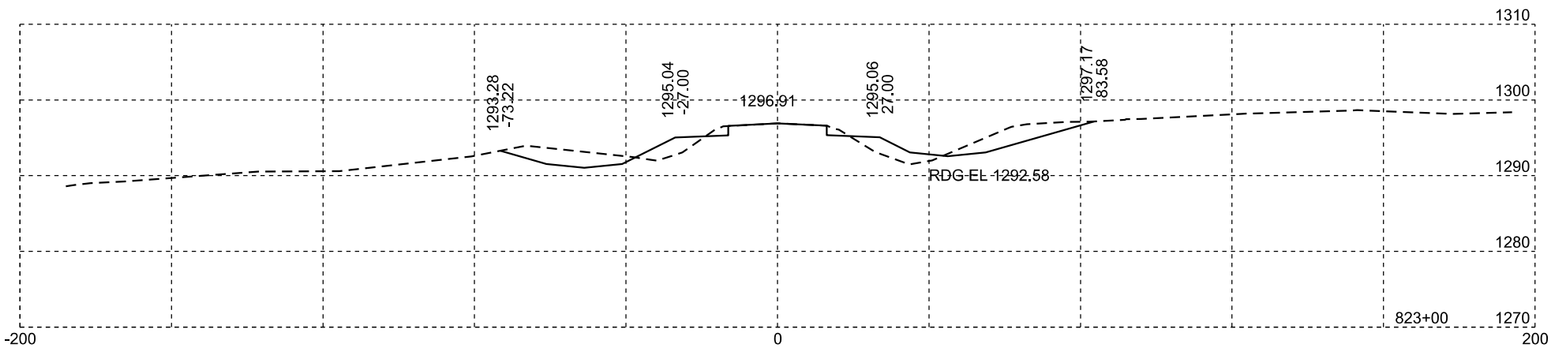

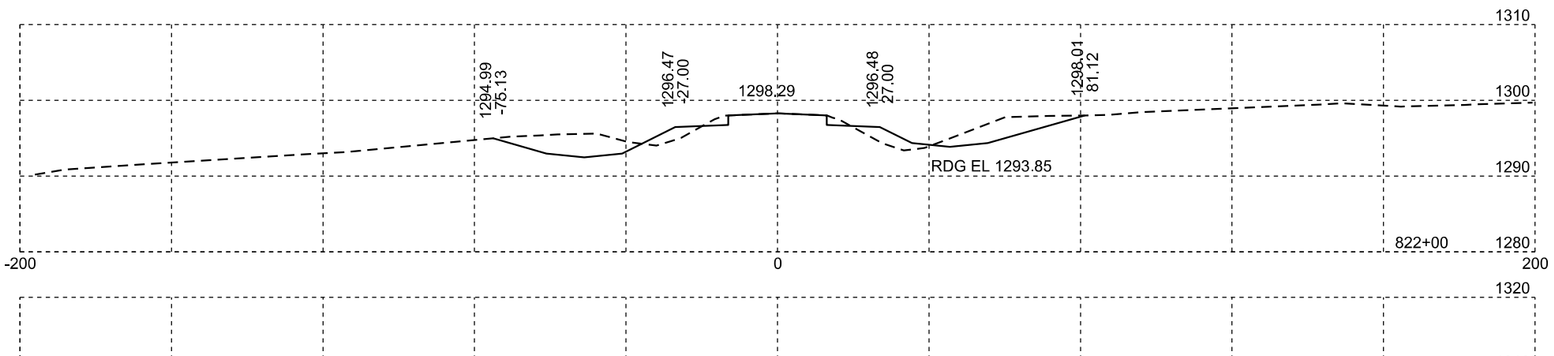

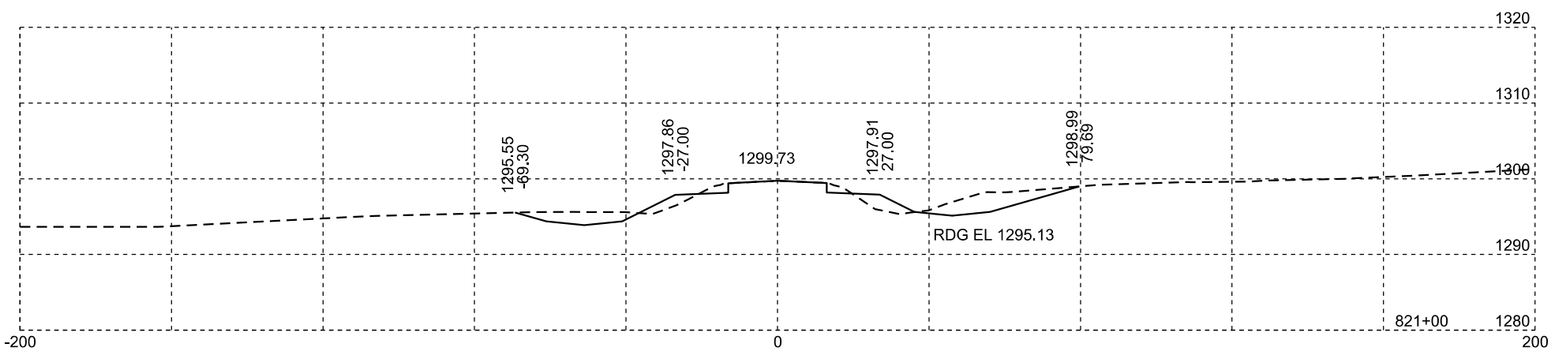

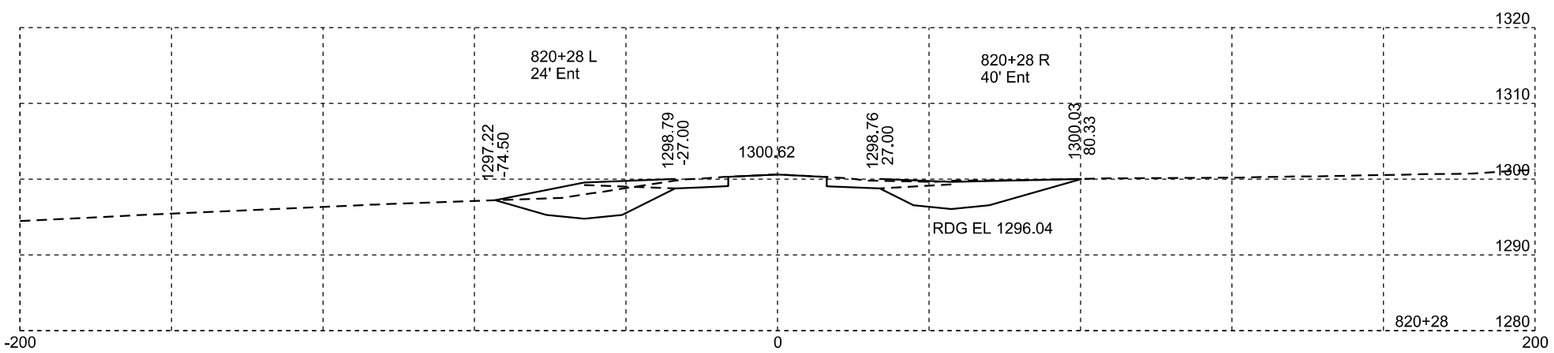

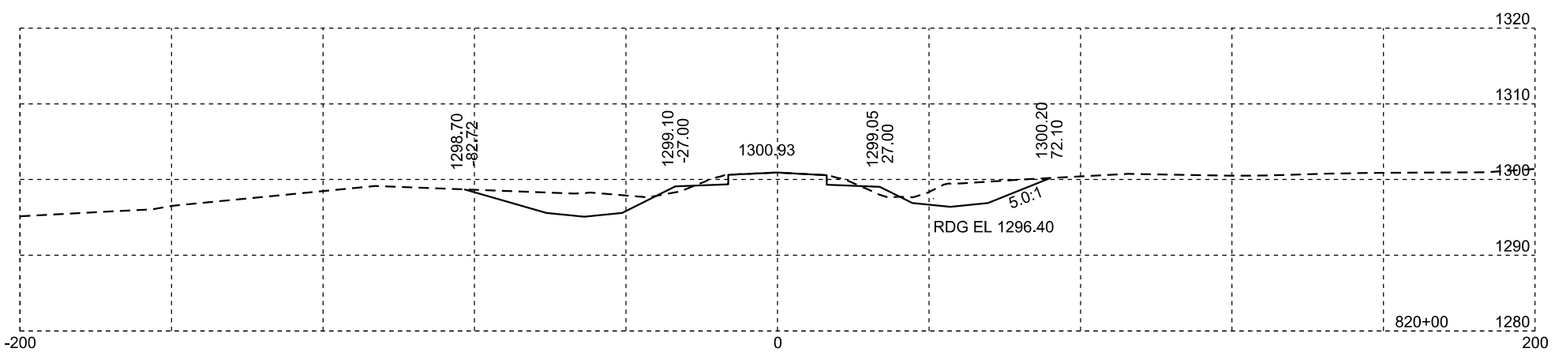

Plotting Date: 01/19/2024

STATE OF SOUTH DAKOTA	PROJECT	SHEET NO.	TOTAL SHEETS
	P-PH-B-PT 0010(124)296	X87	X169

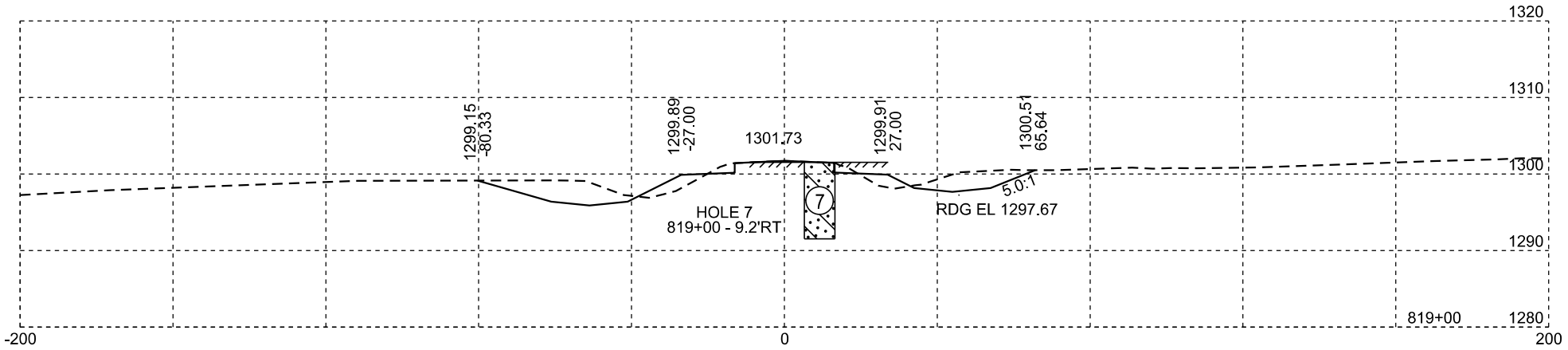

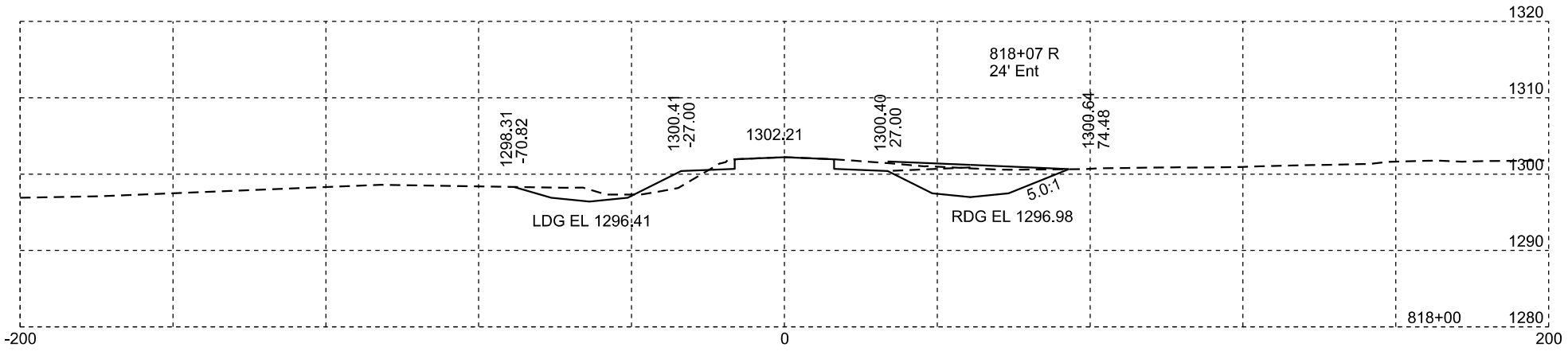

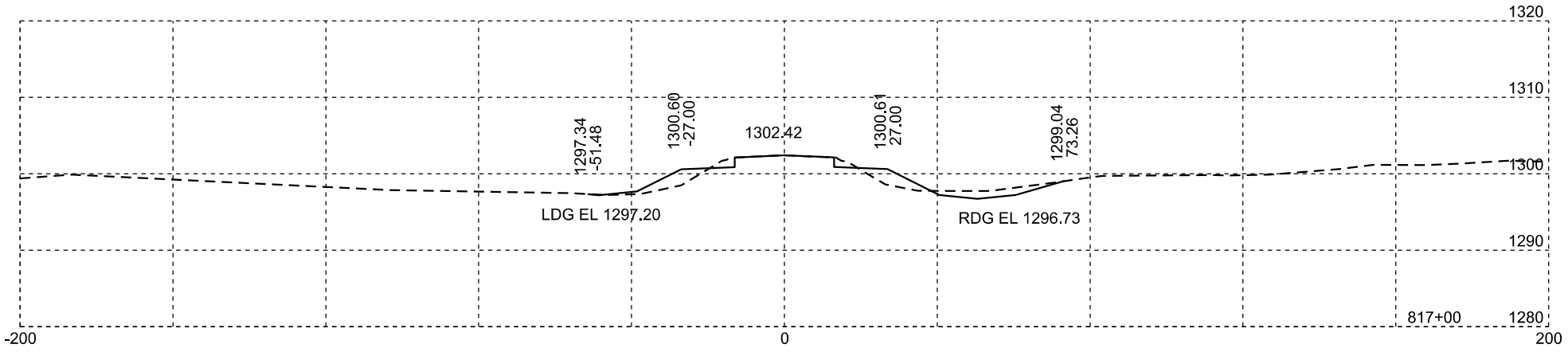

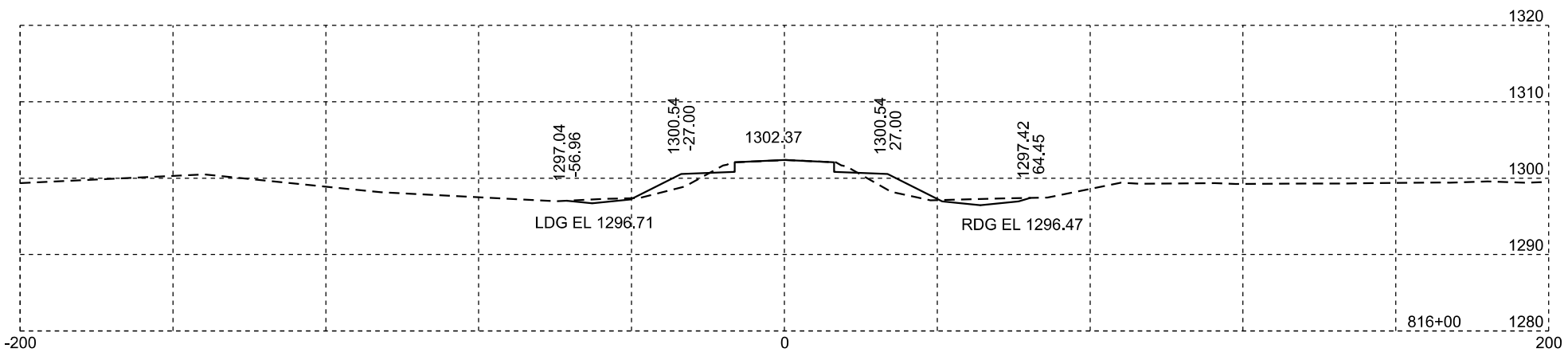

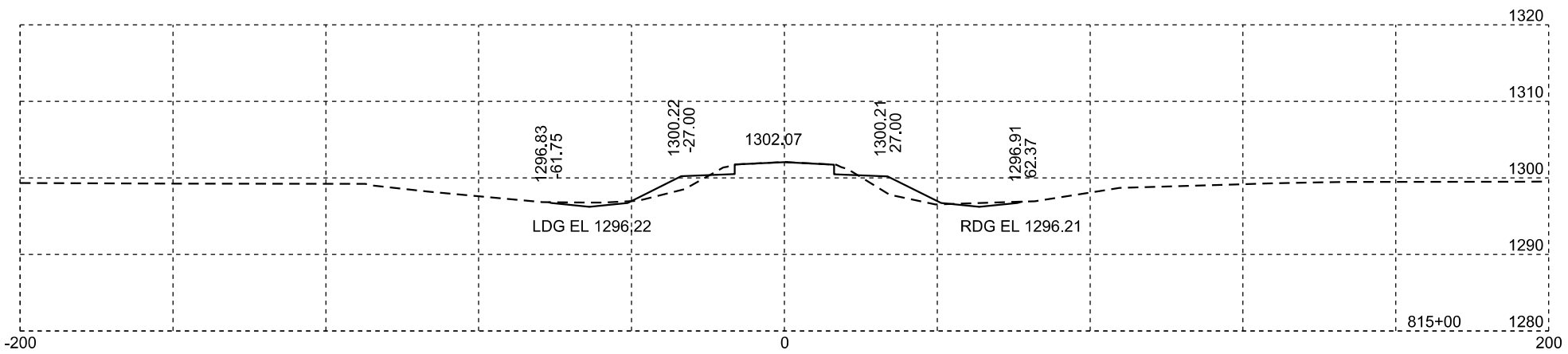

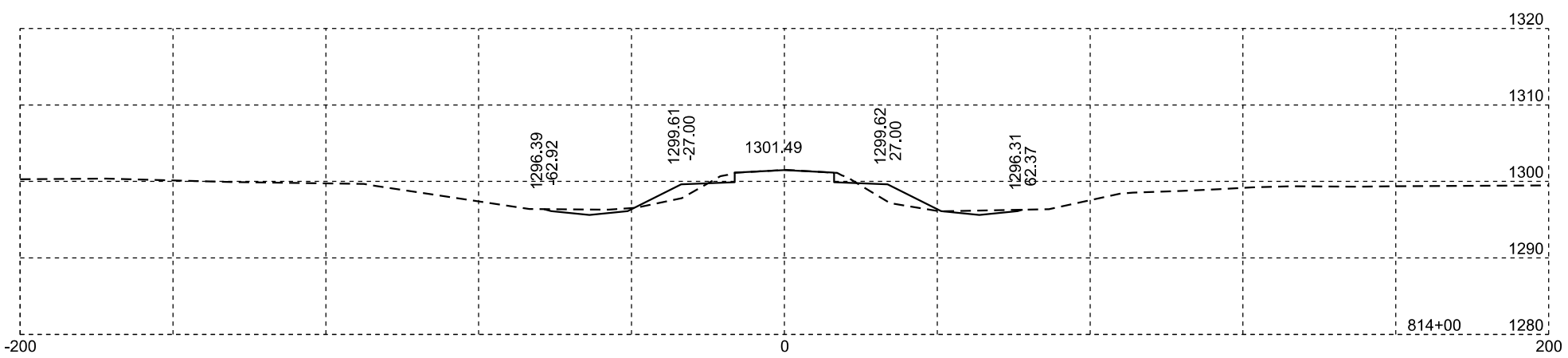

Plotting Date: 01/19/2024

STATE OF SOUTH DAKOTA	PROJECT	SHEET NO.	TOTAL SHEETS
	P-PH-B-PT 0010(124)296	X88	X169

Plotting Date: 01/19/2024

STATE OF SOUTH DAKOTA	PROJECT	SHEET NO.	TOTAL SHEETS
	P-PH-B-PT 0010(124)296	X89	X169

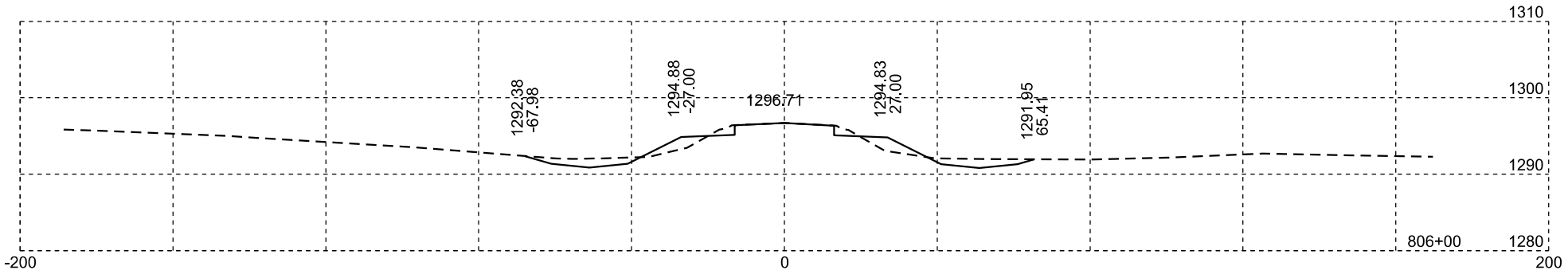

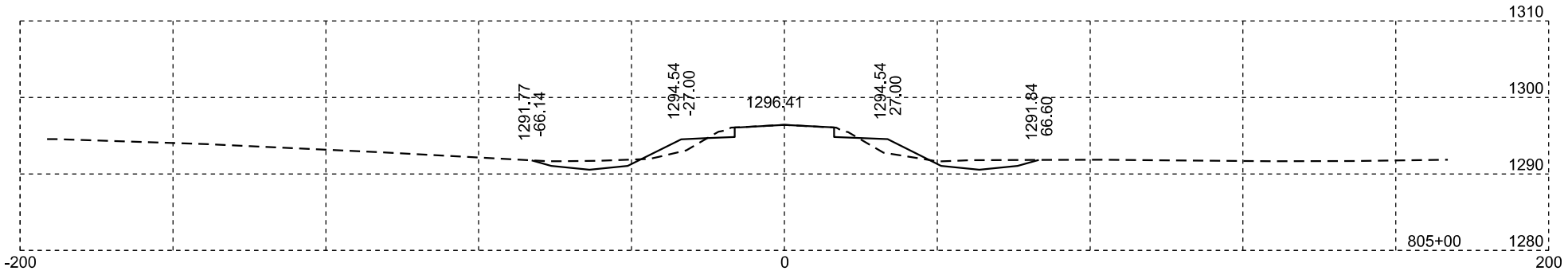

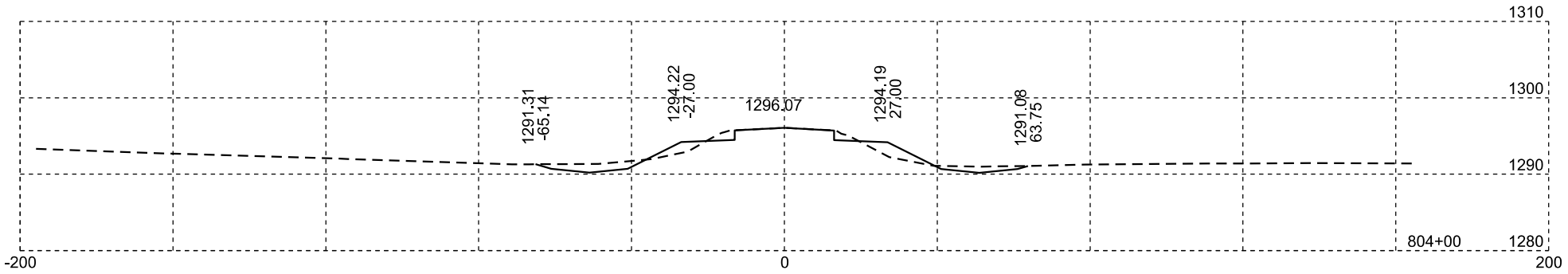

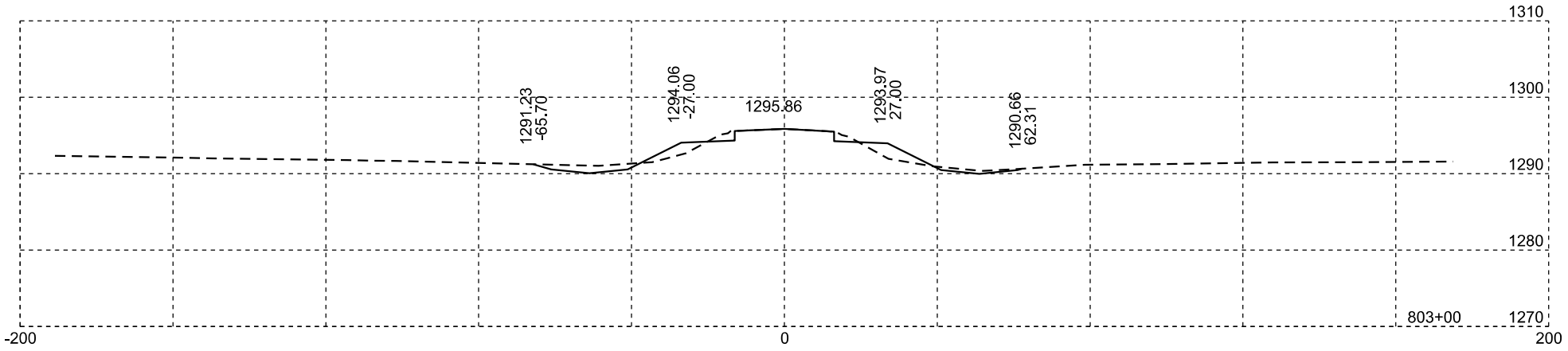

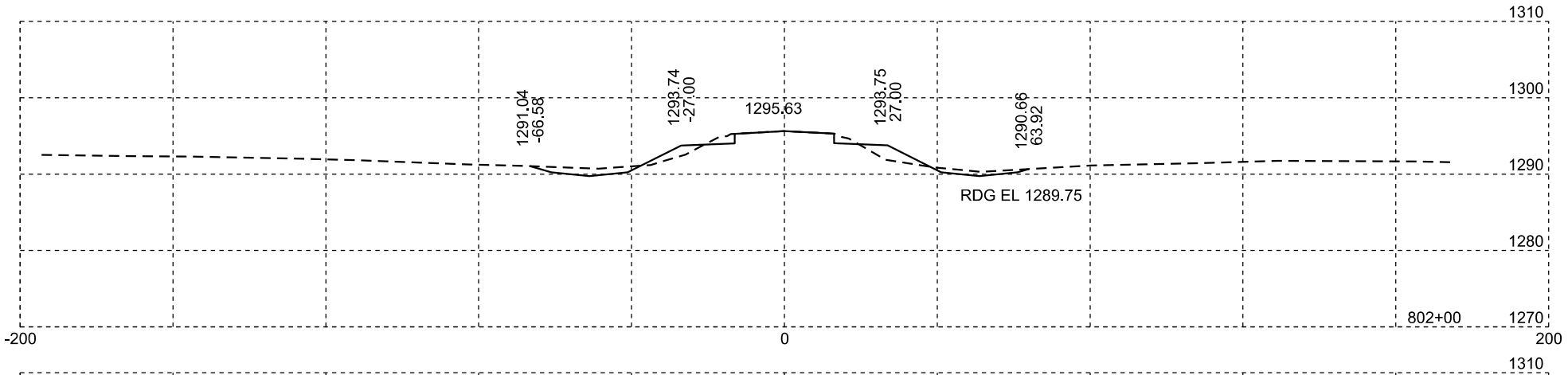

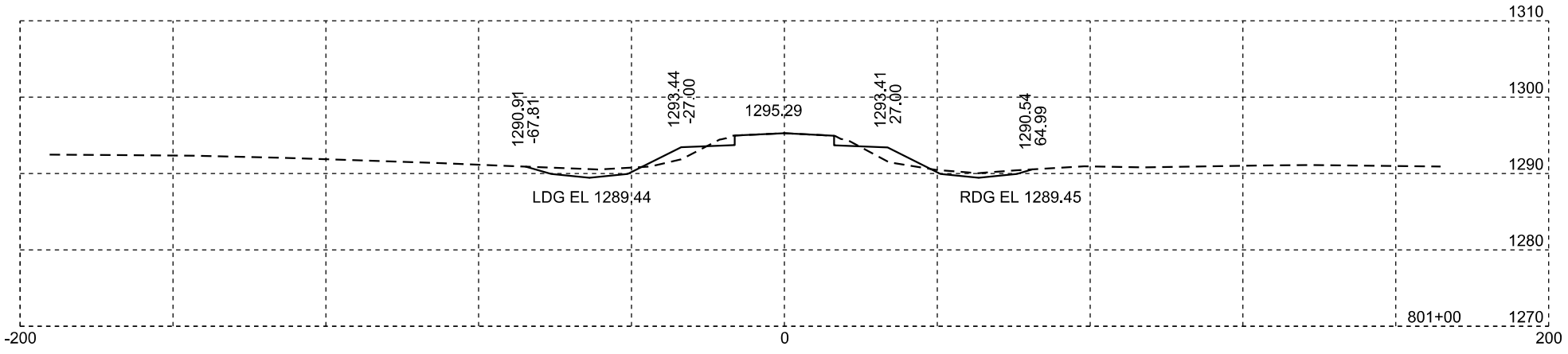

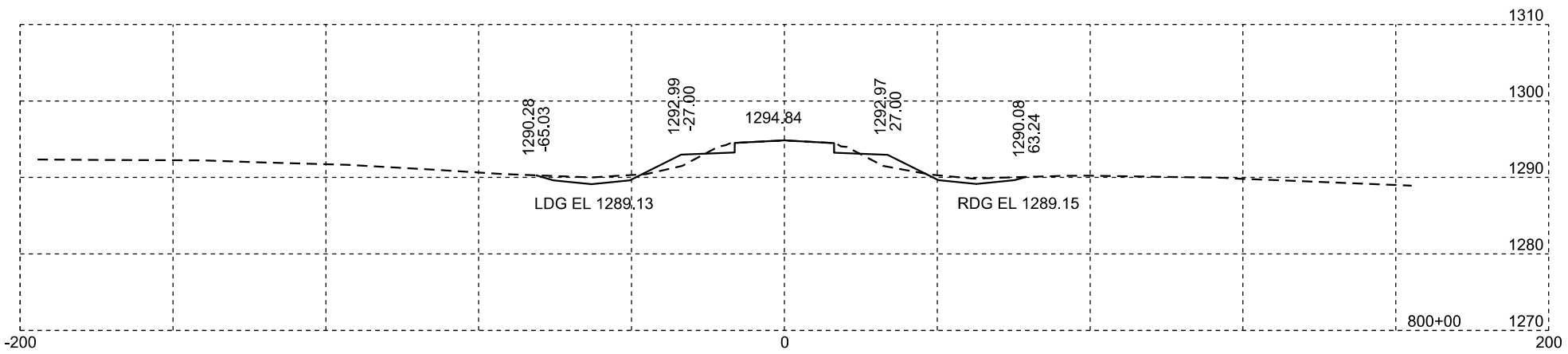

Plotting Date: 01/19/2024

STATE OF SOUTH DAKOTA	PROJECT	SHEET NO.	TOTAL SHEETS
	P-PH-B-PT 0010(124)296	X90	X169

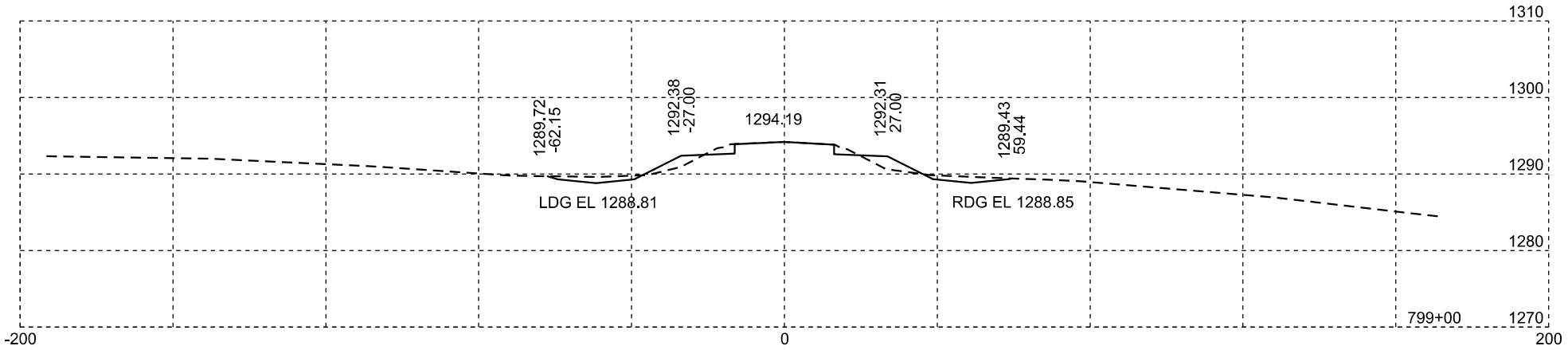

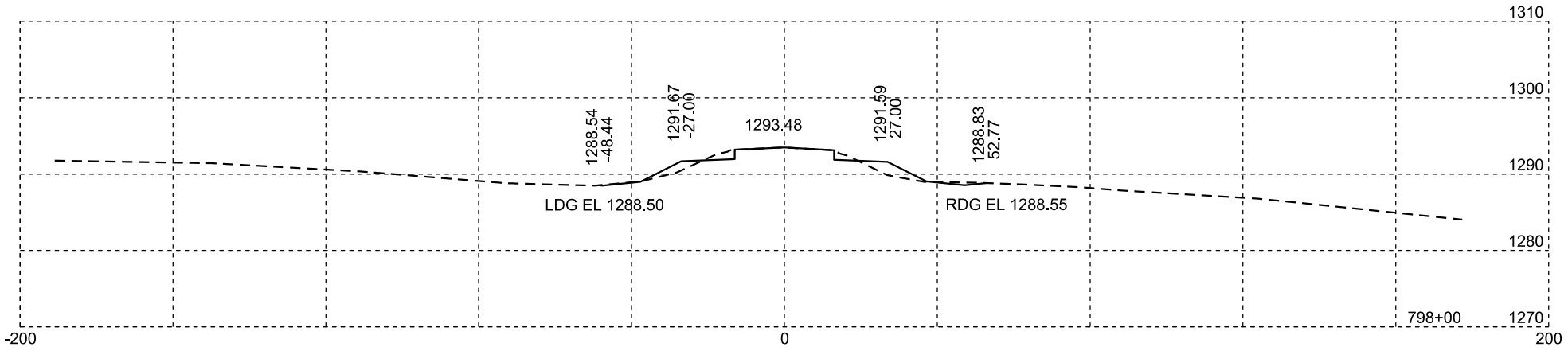

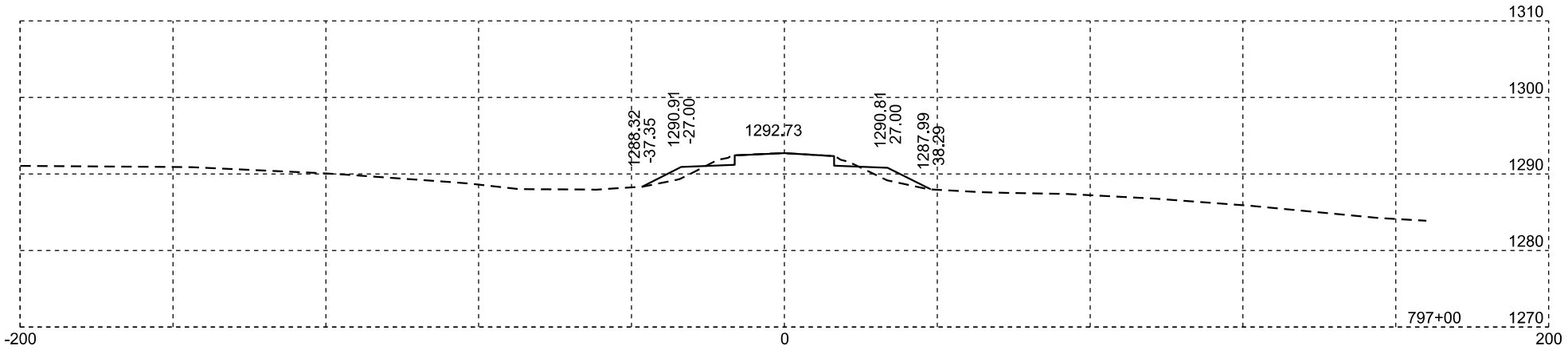

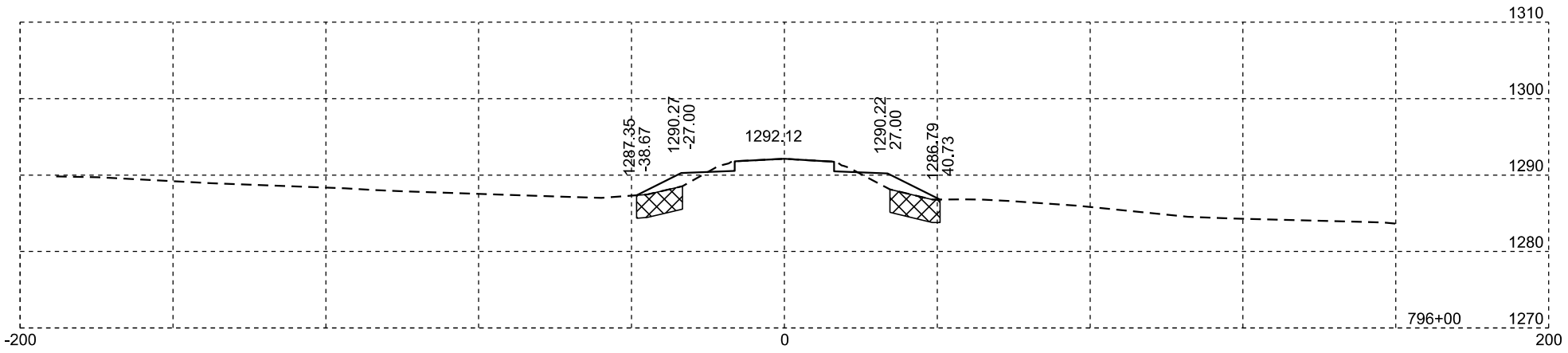

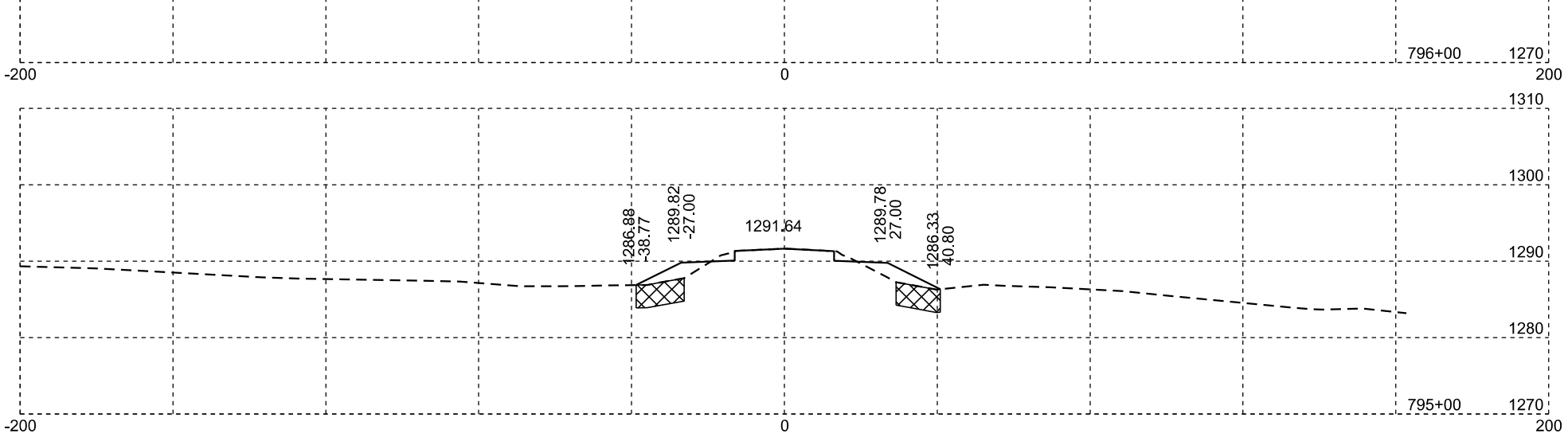

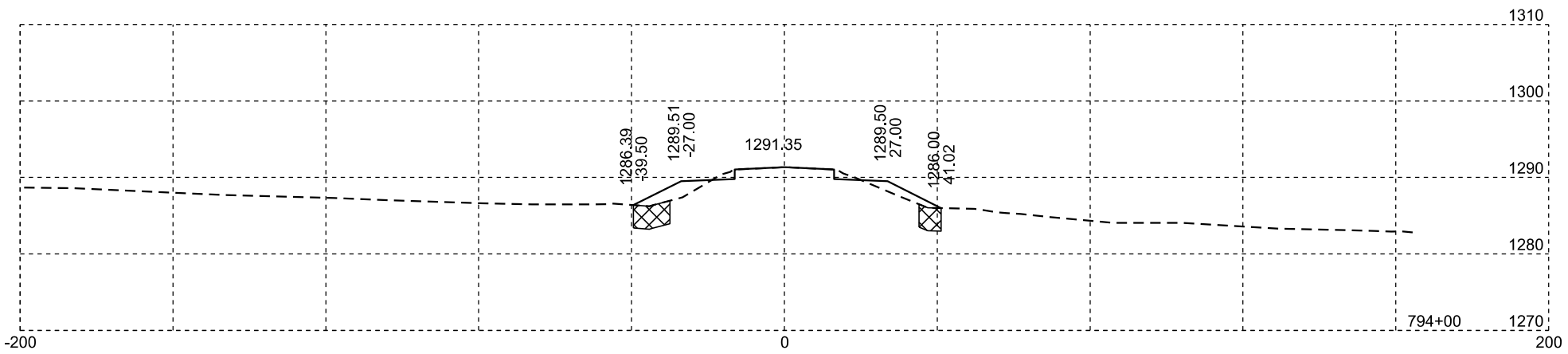

Muck

Plotting Date: 01/19/2024

STATE OF SOUTH DAKOTA	PROJECT	SHEET NO.	TOTAL SHEETS
	P-PH-B-PT 0010(124)296	X91	X169

Muck

Plotting Date: 01/19/2024

STATE OF SOUTH DAKOTA	PROJECT	SHEET NO.	TOTAL SHEETS
	P-PH-B-PT 0010(124)296	X92	X169

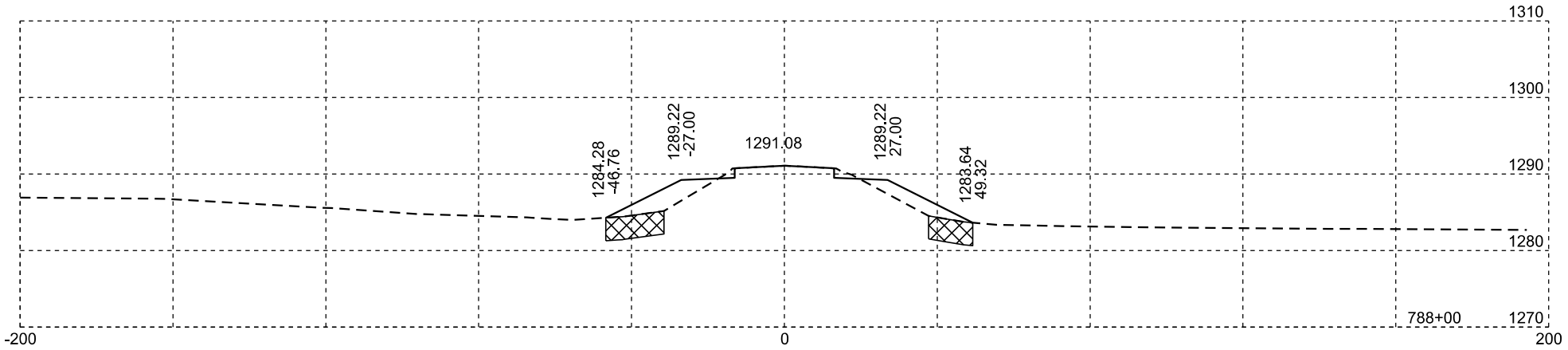

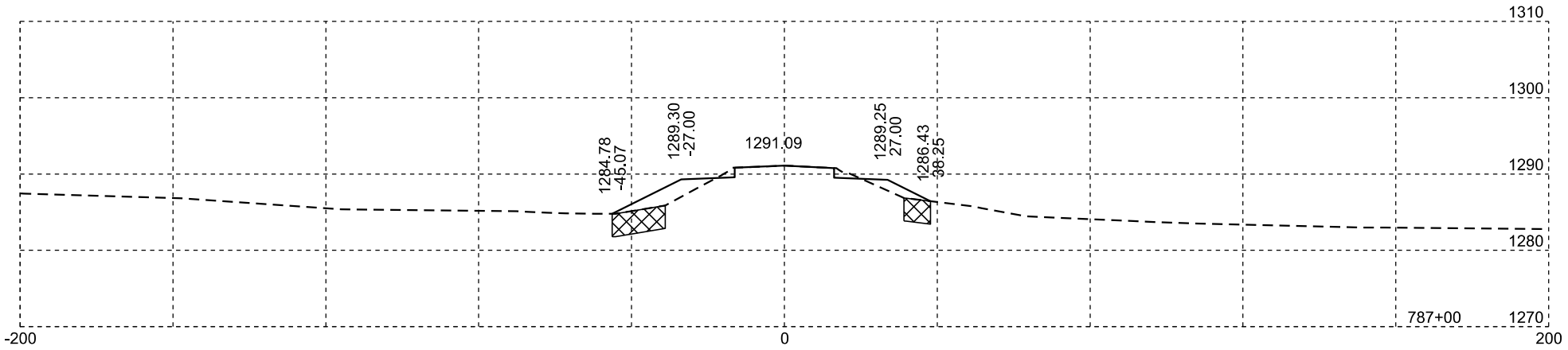

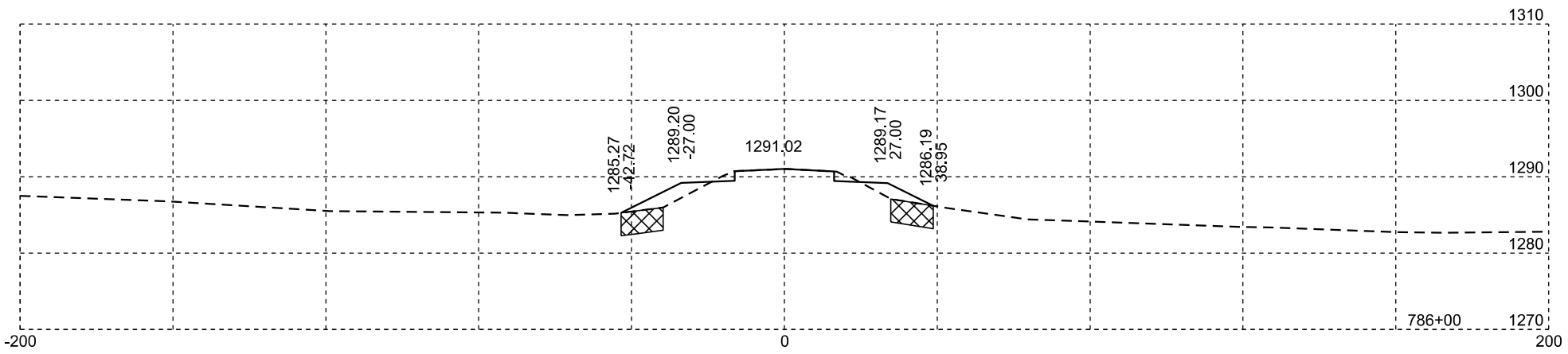

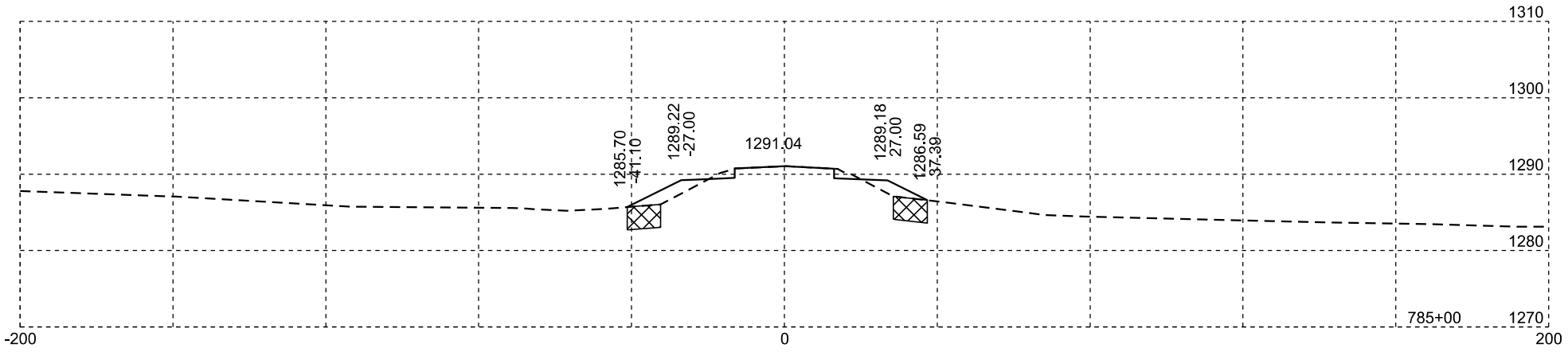

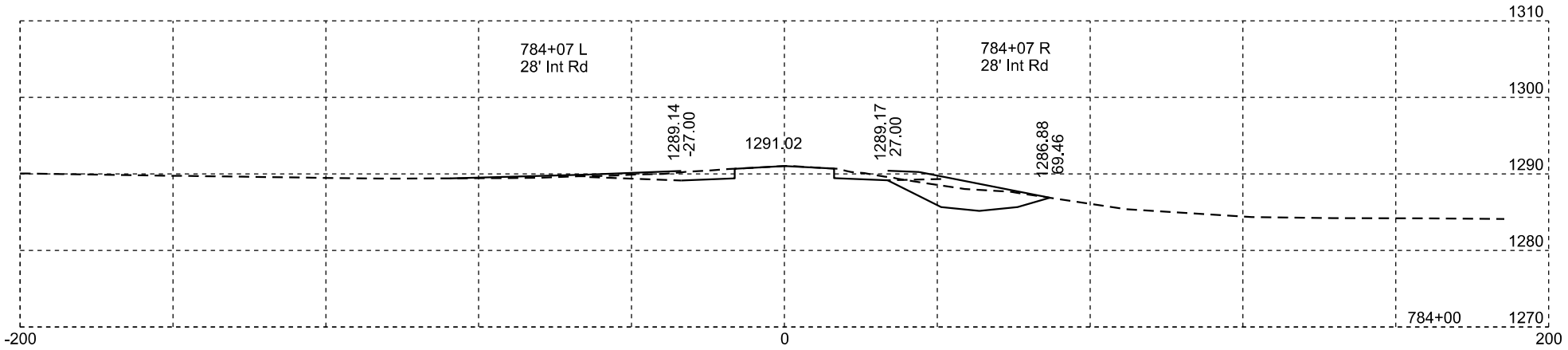

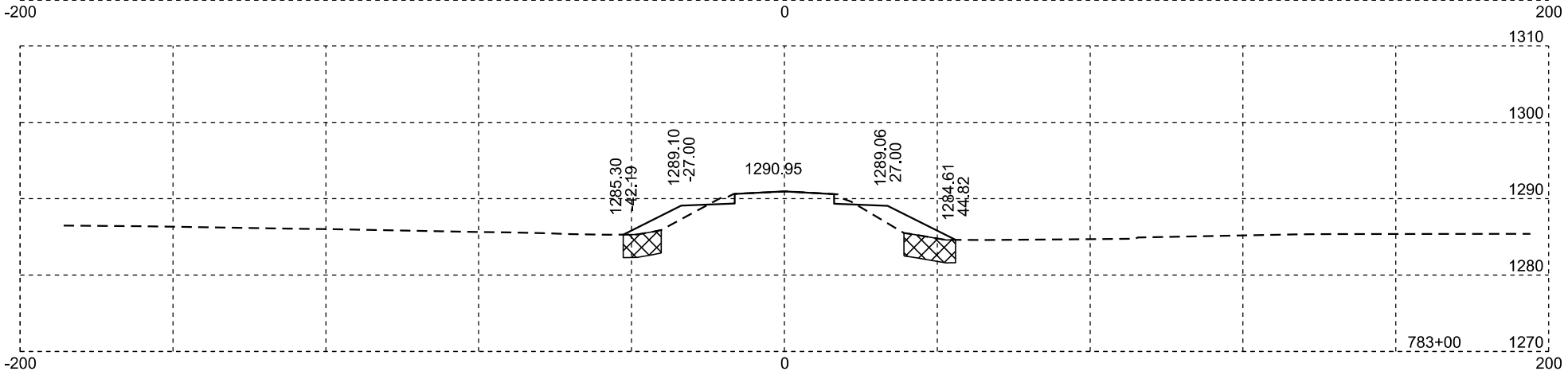

Muck

Rev 02/29/2024 DRM
Plotting Date: 02/29/2024

STATE OF SOUTH DAKOTA	PROJECT	SHEET NO.	TOTAL SHEETS
	P-PH-B-PT 0010(124)296	X93	X169

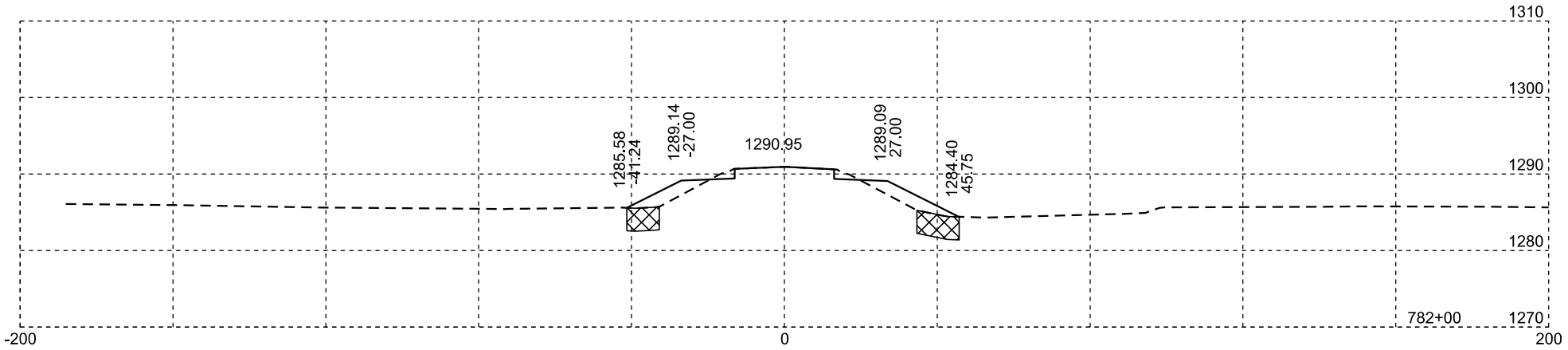

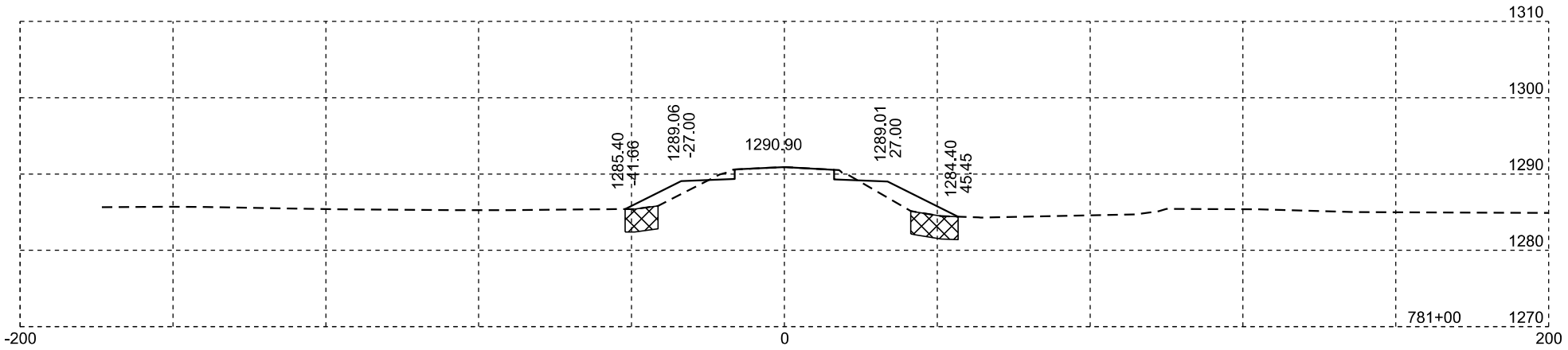

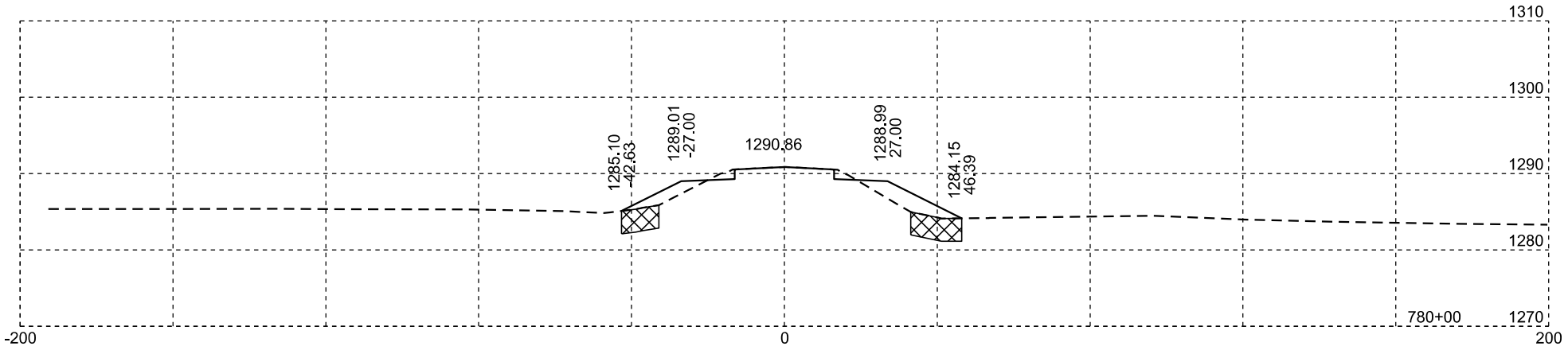

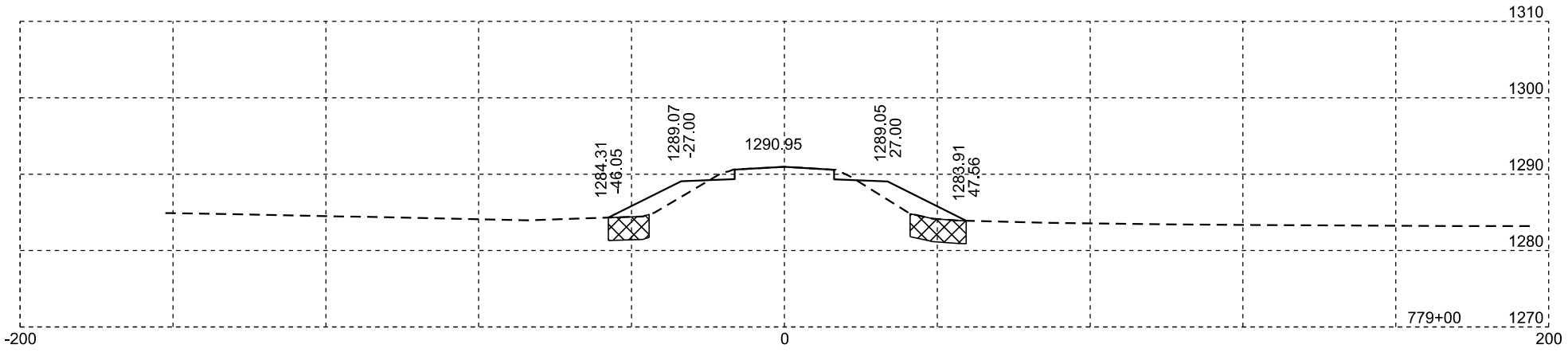

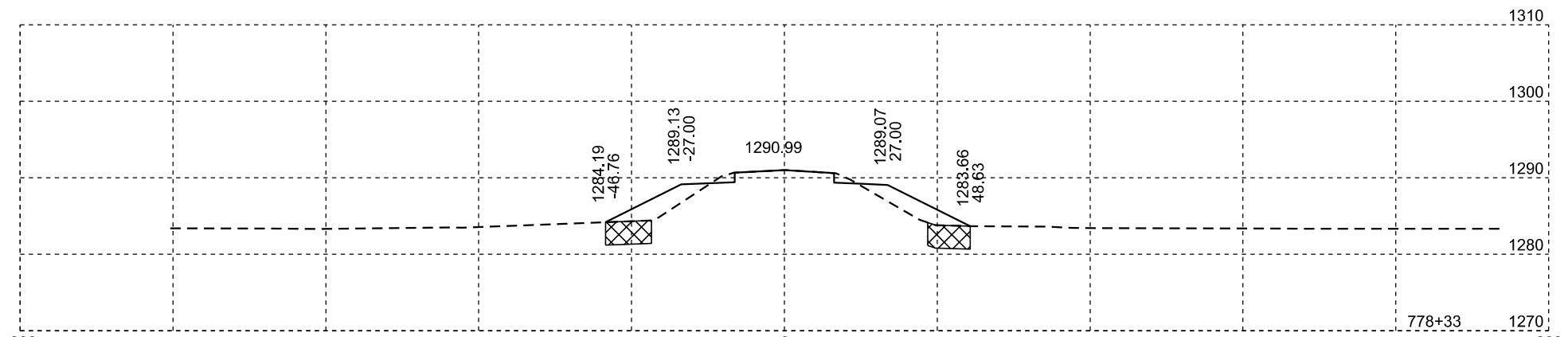

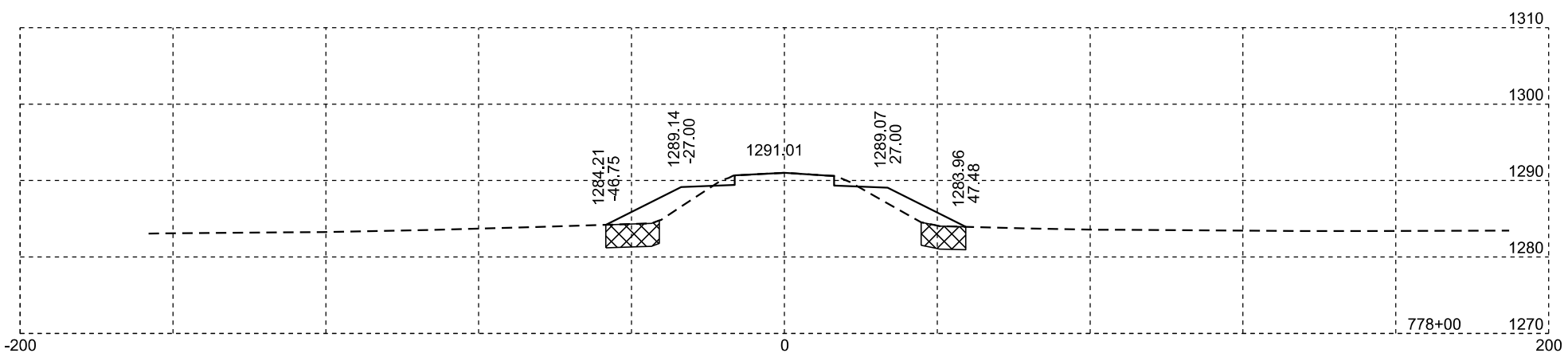

Muck

Plotting Date: 01/19/2024

STATE OF SOUTH DAKOTA	PROJECT	SHEET NO.	TOTAL SHEETS
	P-PH-B-PT 0010(124)296	X94	X169

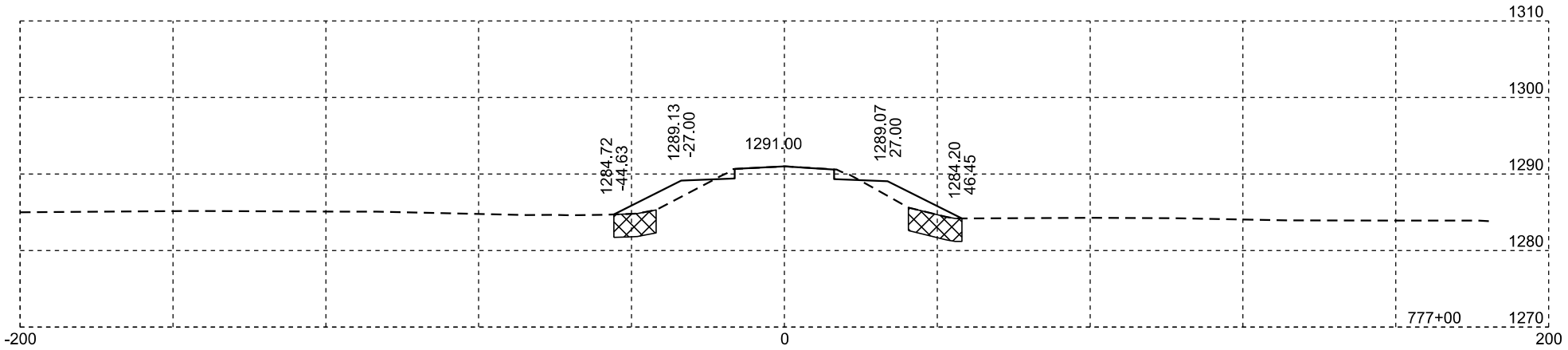

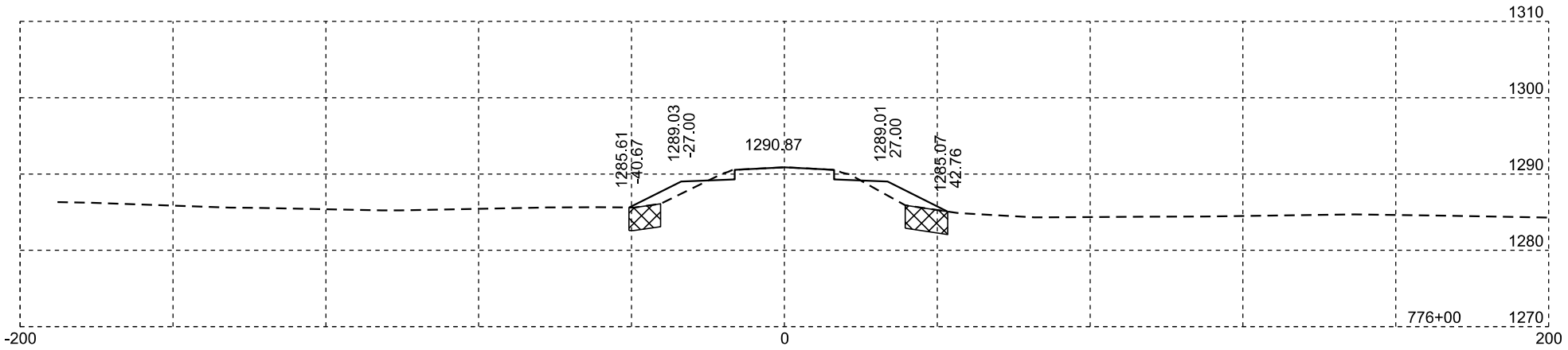

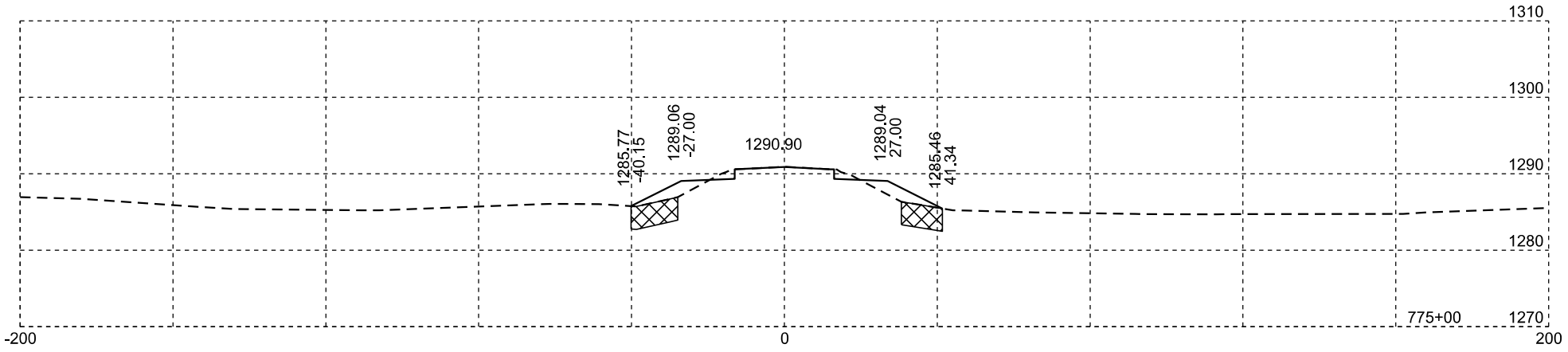

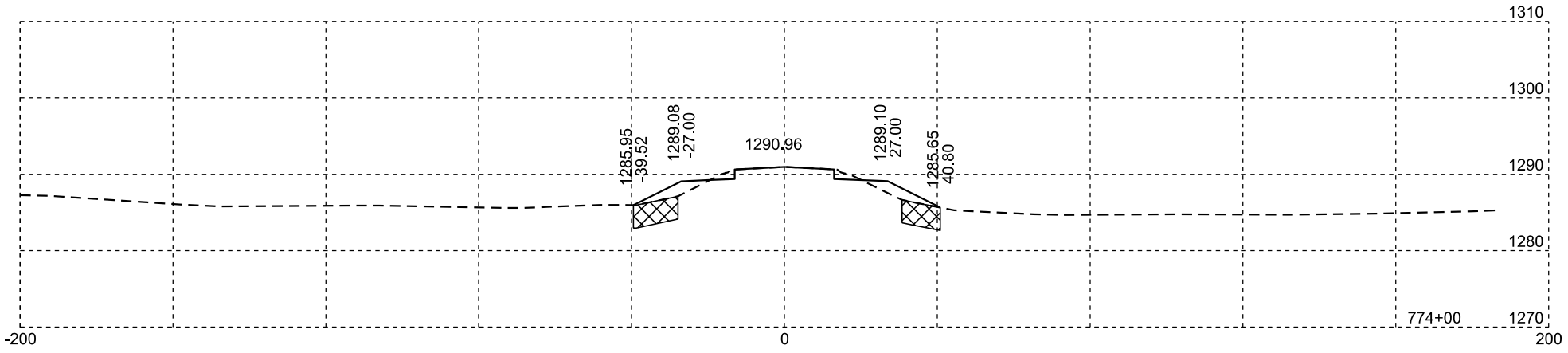

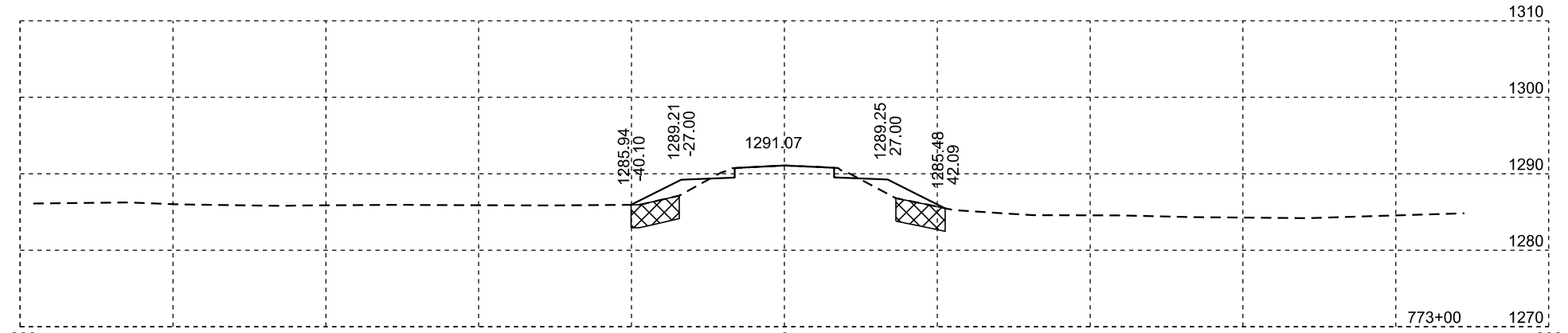

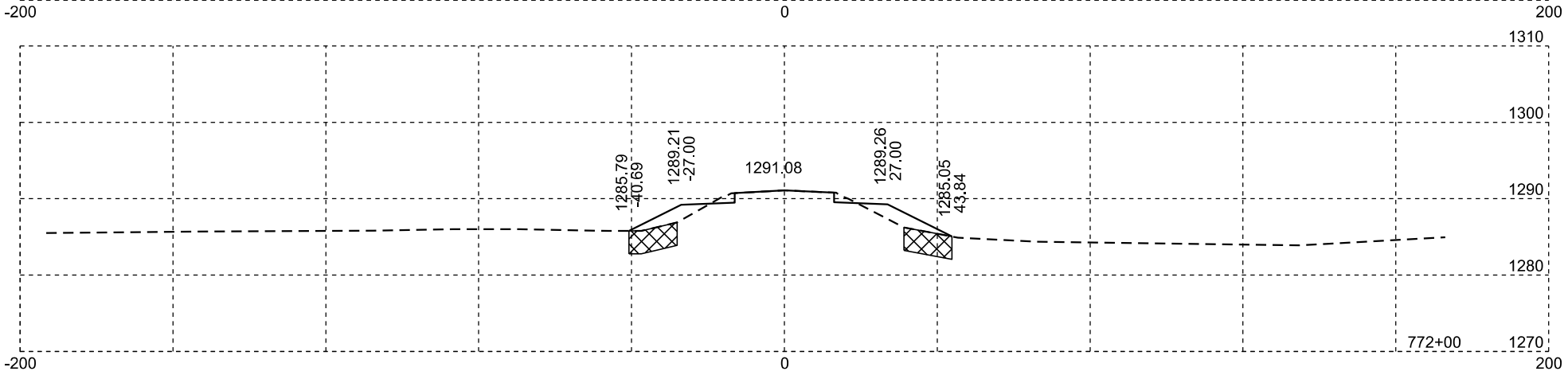

Muck

Plotting Date: 01/19/2024

STATE OF SOUTH DAKOTA	PROJECT	SHEET NO.	TOTAL SHEETS
	P-PH-B-PT 0010(124)296	X95	X169

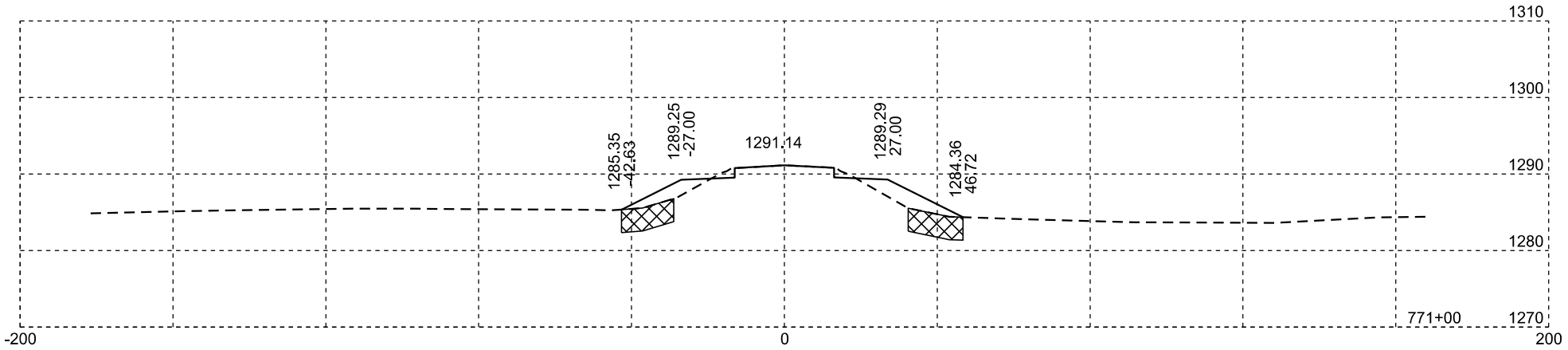

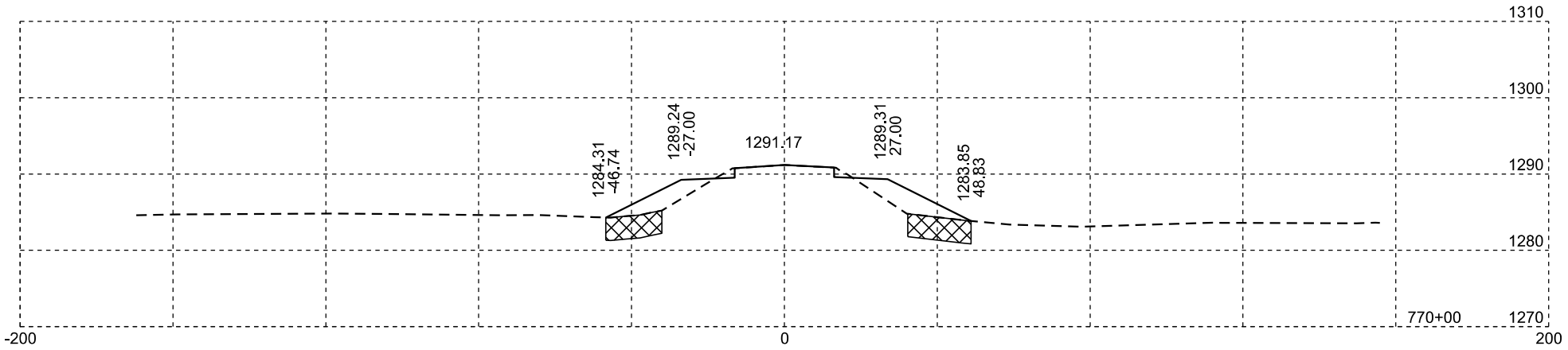

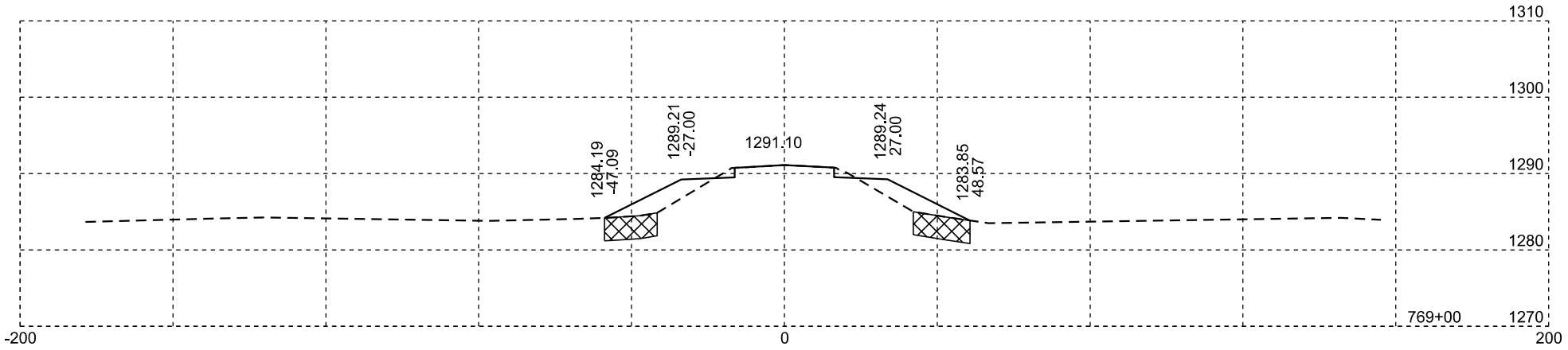

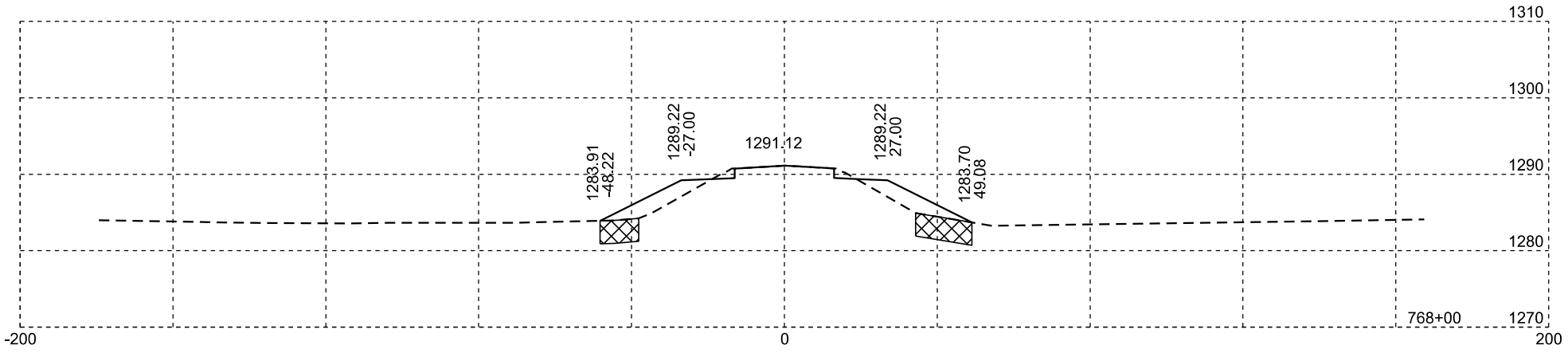

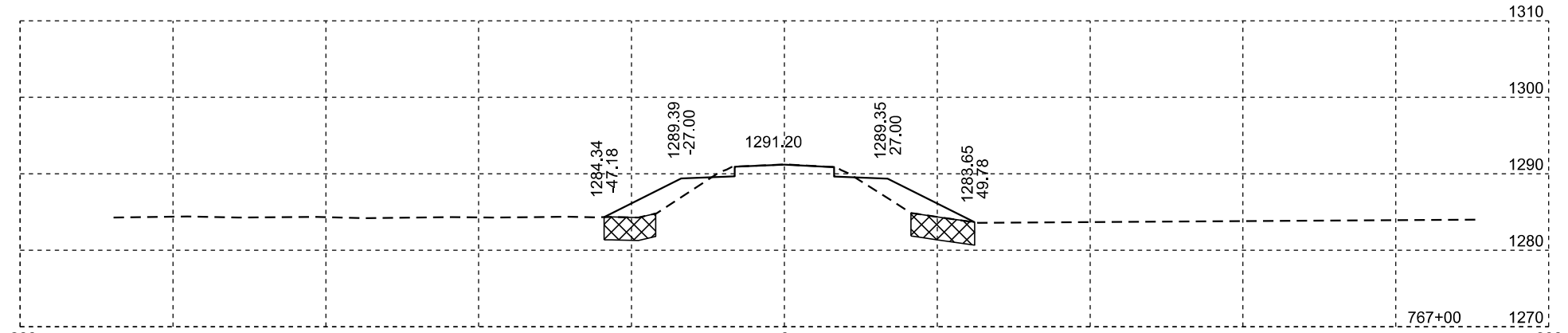

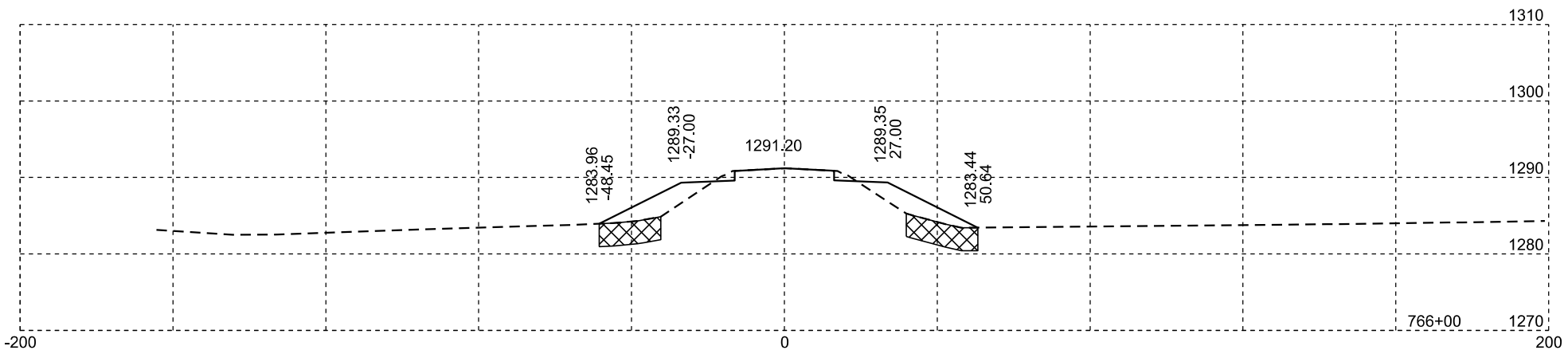

Muck

Plotting Date: 01/19/2024

STATE OF SOUTH DAKOTA	PROJECT	SHEET NO.	TOTAL SHEETS
	P-PH-B-PT 0010(124)296	X96	X169

Muck

Plotting Date: 01/19/2024

STATE OF SOUTH DAKOTA	PROJECT	SHEET NO.	TOTAL SHEETS
	P-PH-B-PT 0010(124)296	X97	X169

761+00

1285.23
-42.38

1289.07
-27.00

1290.91

1289.00
27.00

1283.22
50.10

762+00

1284.38
-46.05

1289.14
-27.00

1290.97

1289.12
27.00

1283.32
50.21

763+00

1284.04
-47.57

1289.18
-27.00

1291.07

1289.20
27.00

1283.54
49.64

764+00

1284.03
-47.73

1289.22
-27.00

1291.04

1289.23
27.00

1283.72
49.05

765+00

1284.33
-46.52

1289.20
-27.00

1291.16

1289.23
27.00

1283.64
49.35

765+33

1284.03
-47.85

1289.25
-27.00

1291.18

1289.26
27.00

1283.59
49.68

-200 0 200

1270 1280 1290 1300 1310

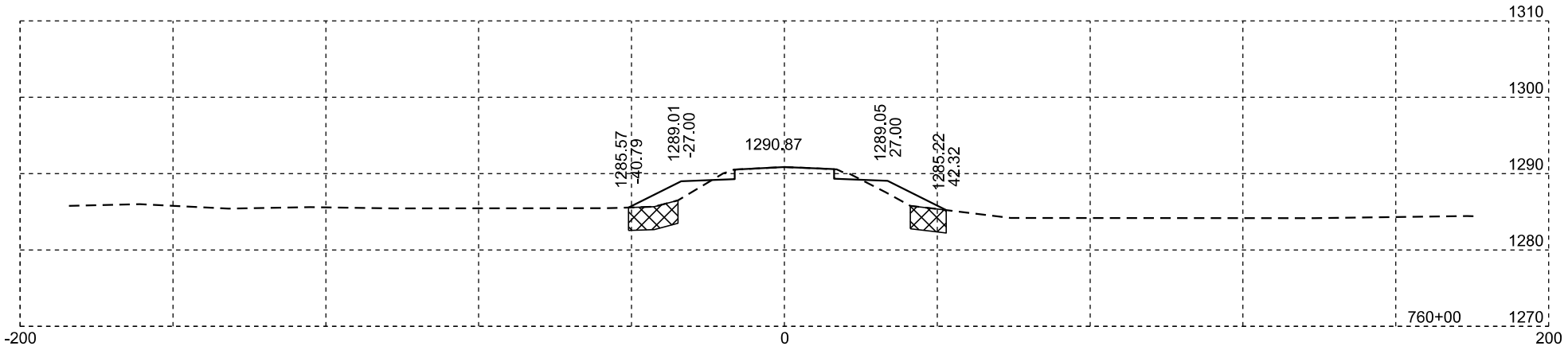

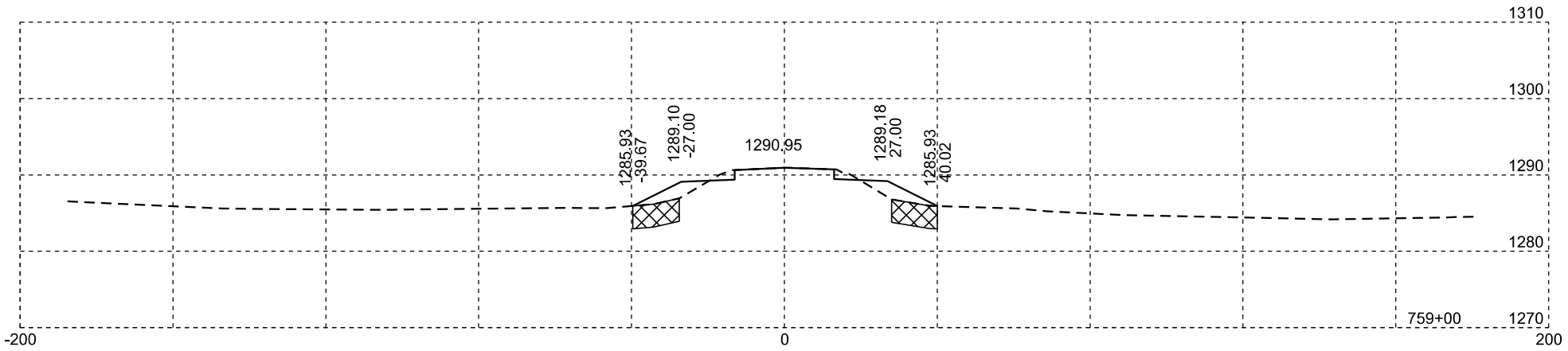

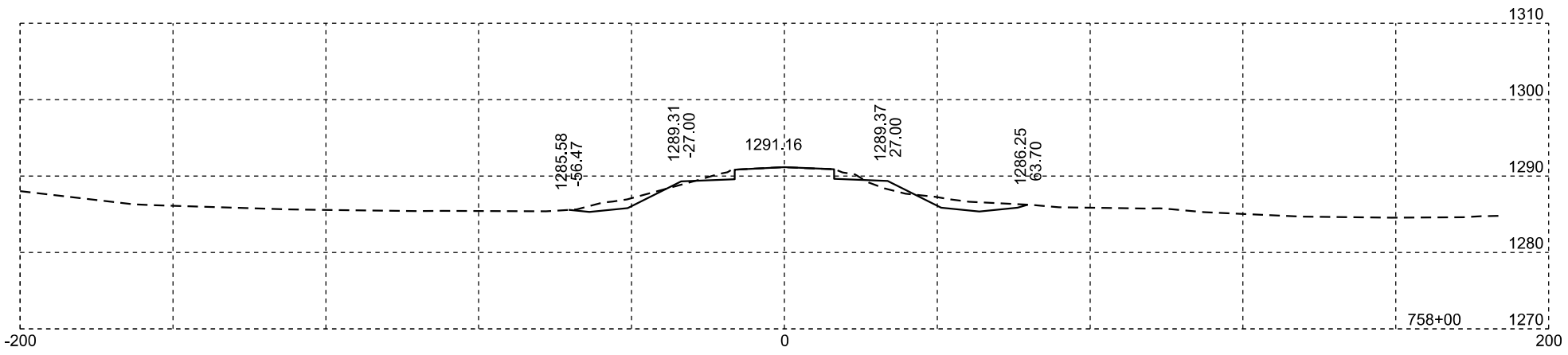

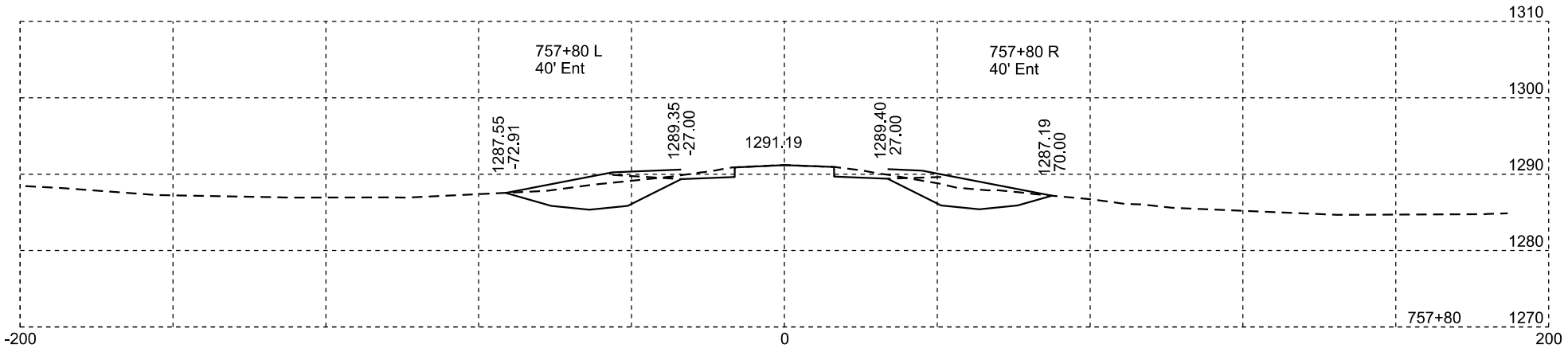

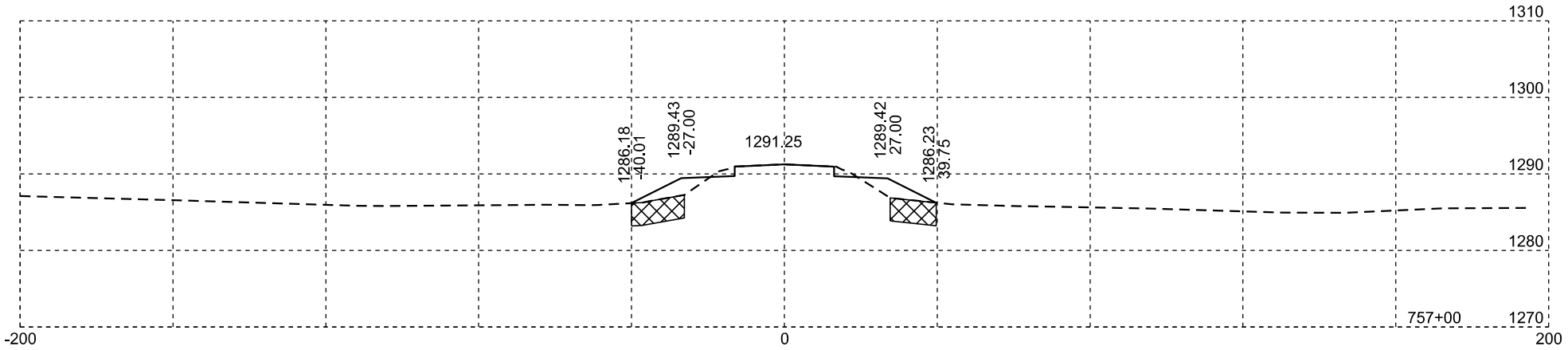

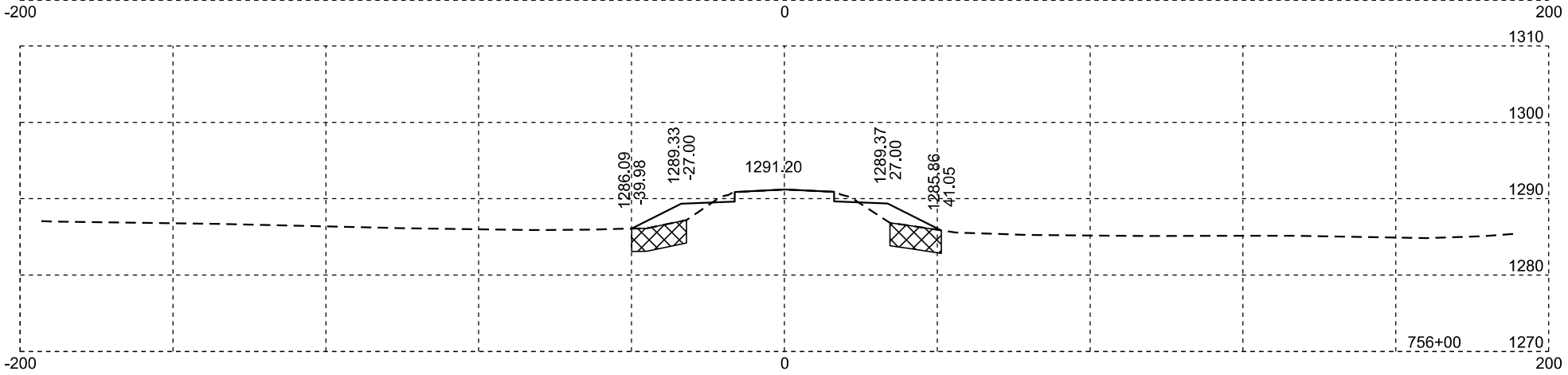

Muck

Plotting Date: 01/19/2024

STATE OF SOUTH DAKOTA	PROJECT	SHEET NO.	TOTAL SHEETS
	P-PH-B-PT 0010(124)296	X98	X169

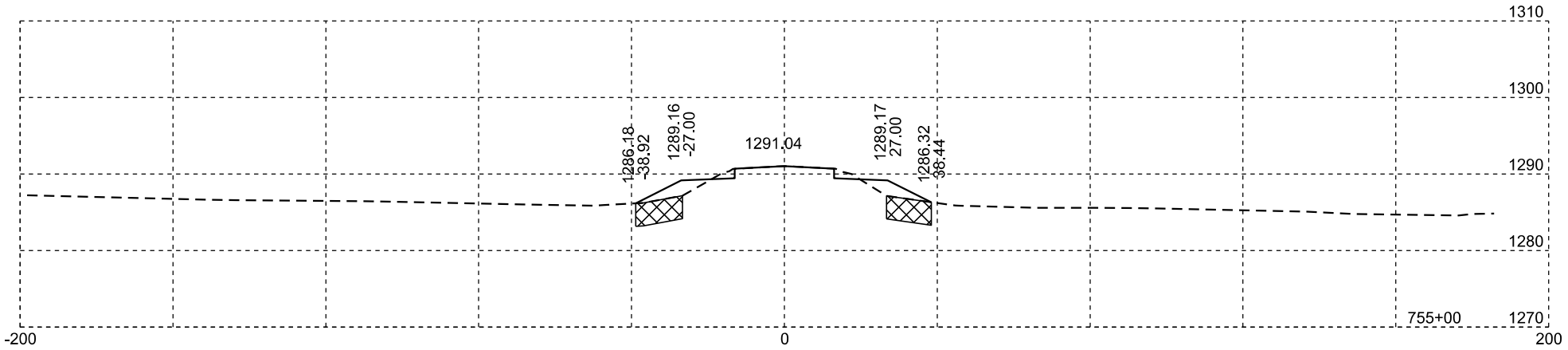

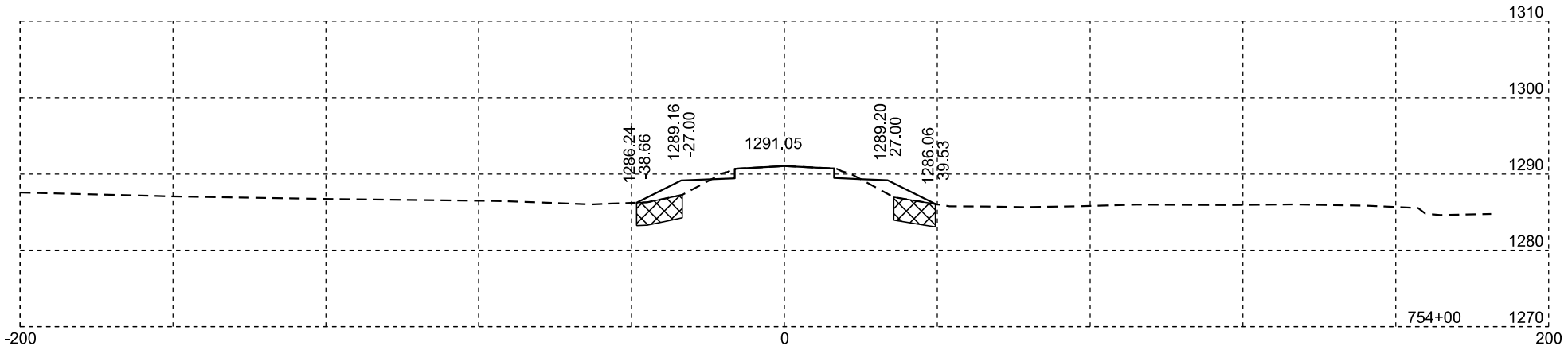

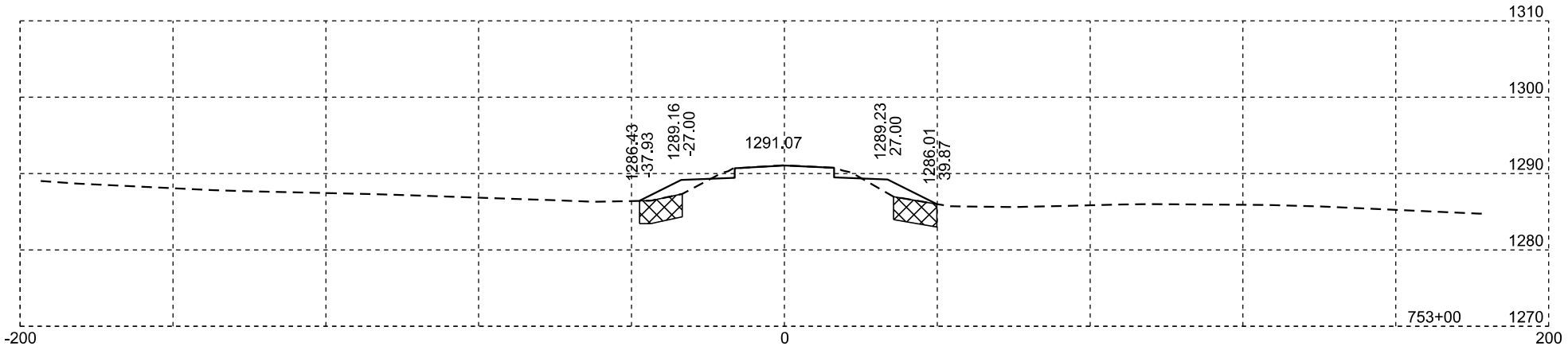

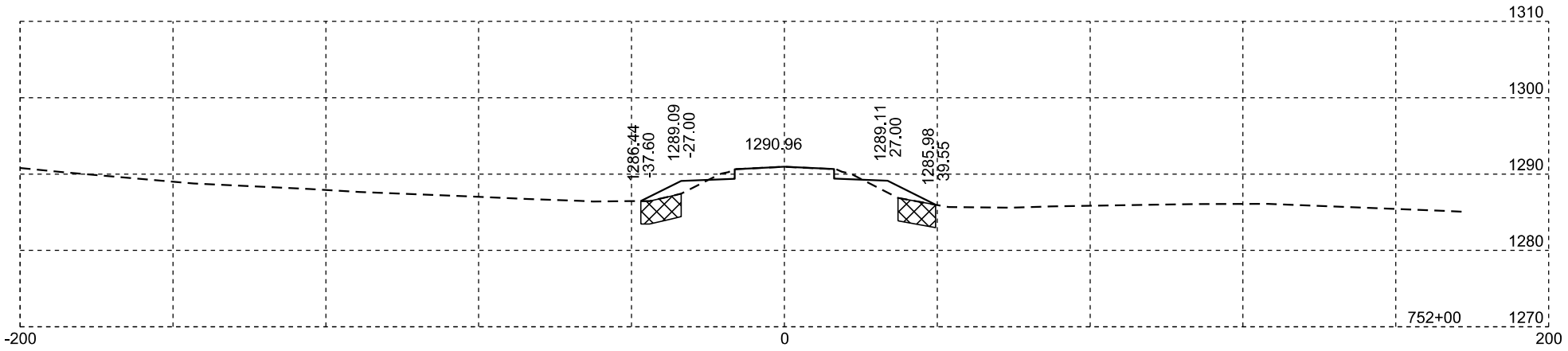

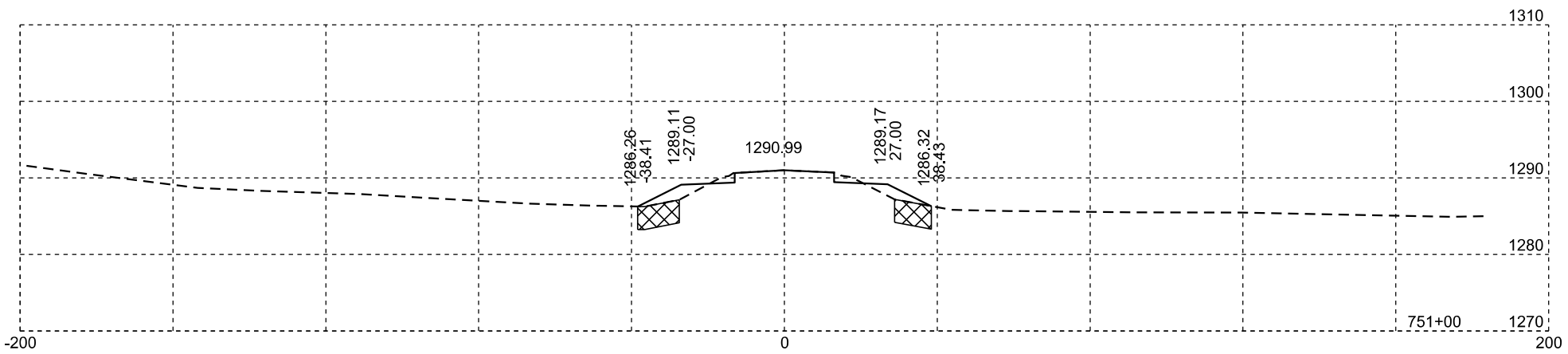

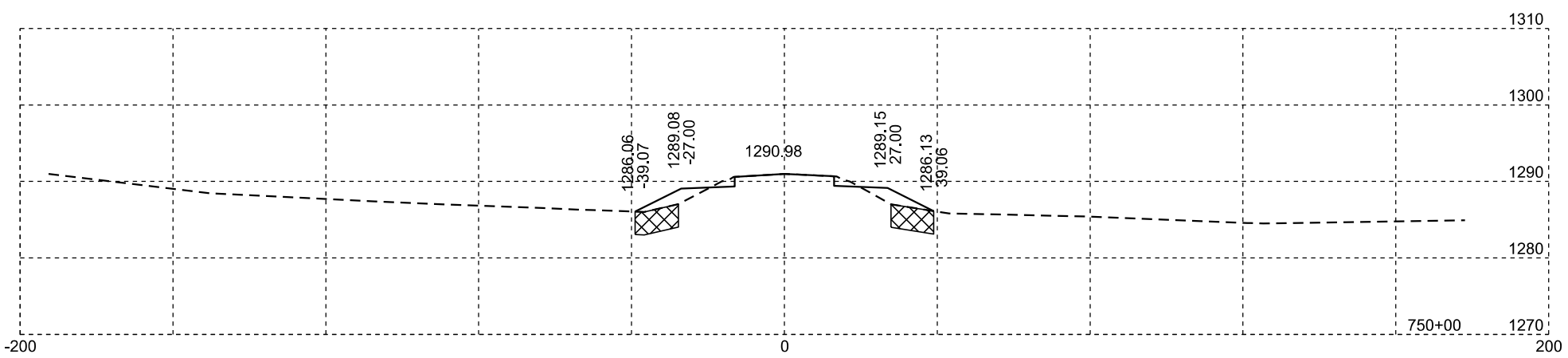

Muck

Plotting Date: 01/19/2024

STATE OF SOUTH DAKOTA	PROJECT	SHEET NO.	TOTAL SHEETS
	P-PH-B-PT 0010(124)296	X99	X169

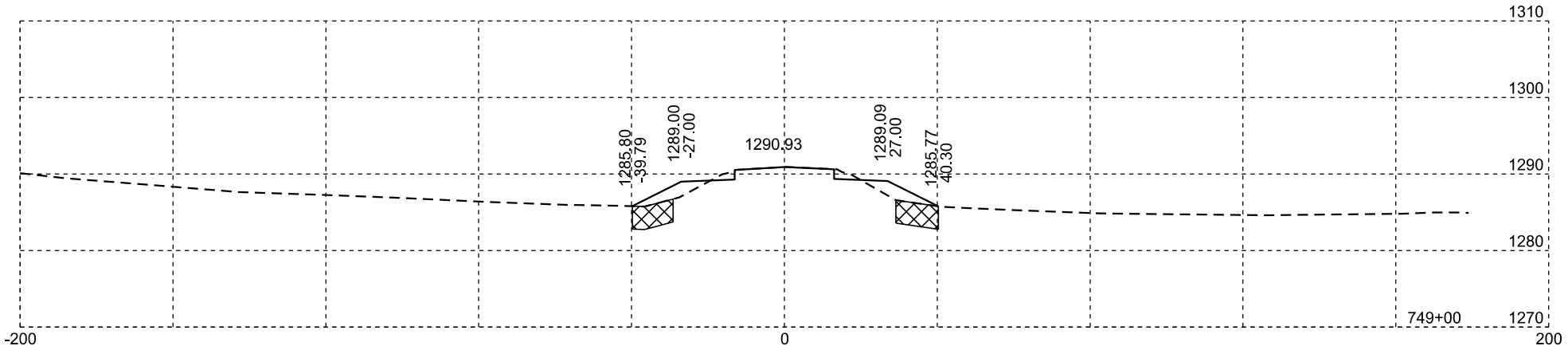

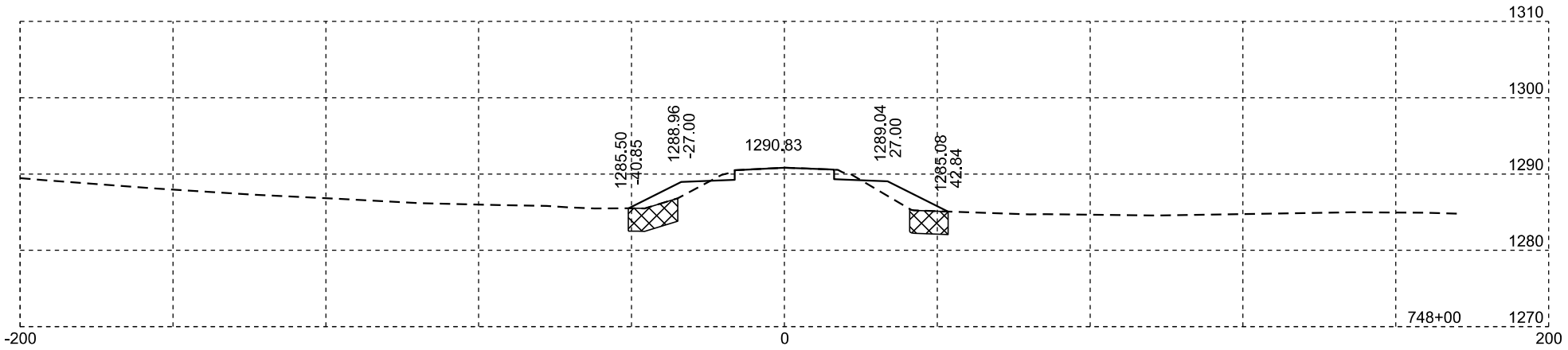

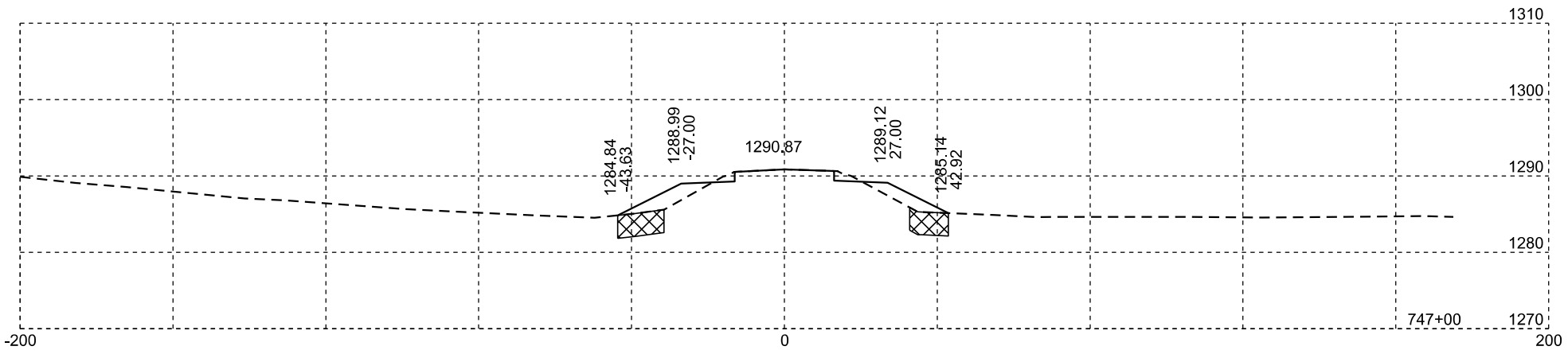

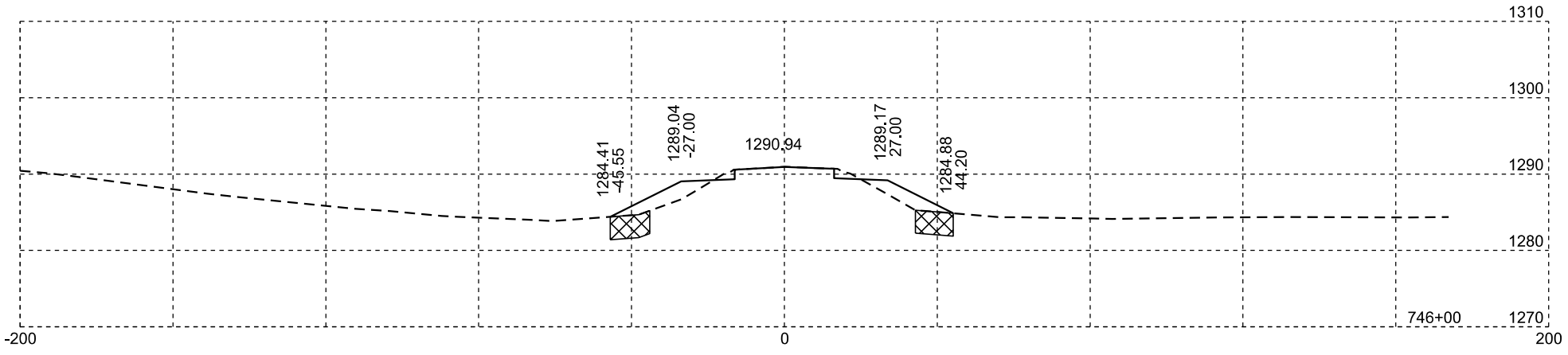

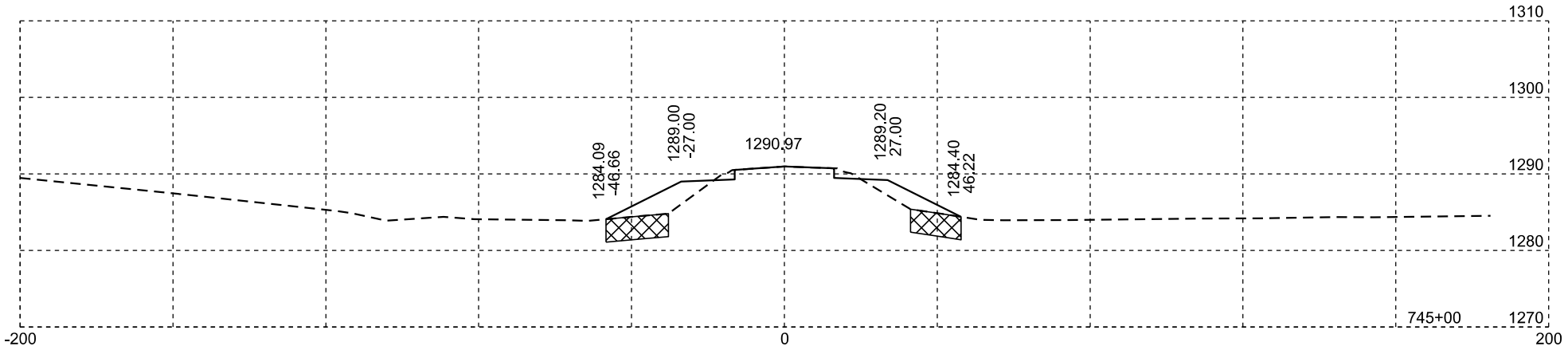

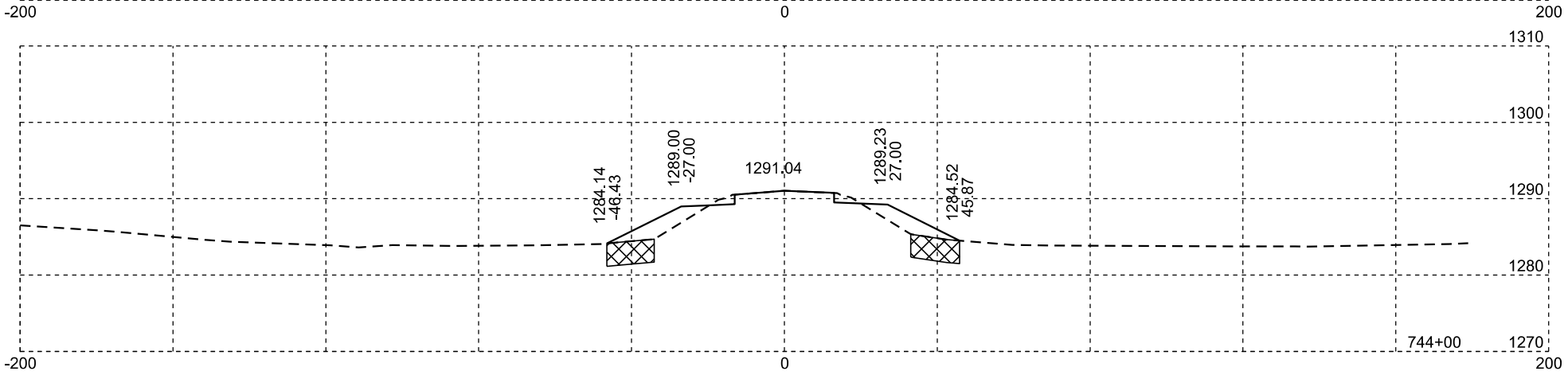

Muck

Plotting Date: 01/19/2024

STATE OF SOUTH DAKOTA	PROJECT	SHEET NO.	TOTAL SHEETS
	P-PH-B-PT 0010(124)296	X100	X169

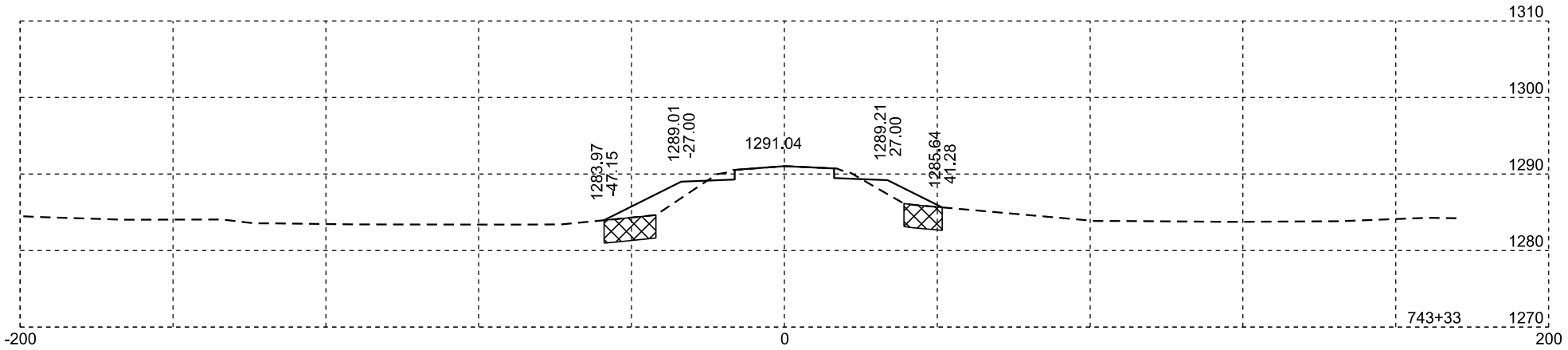

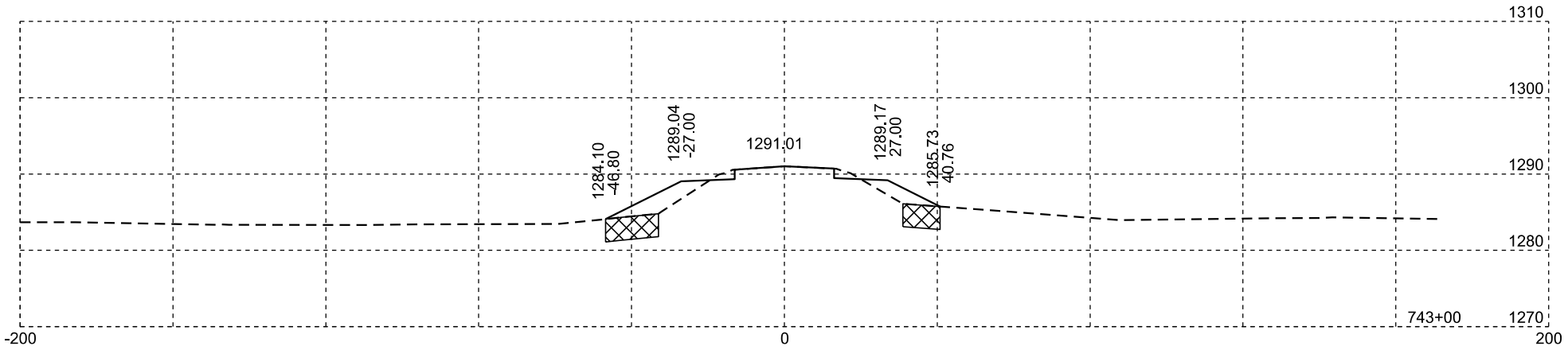

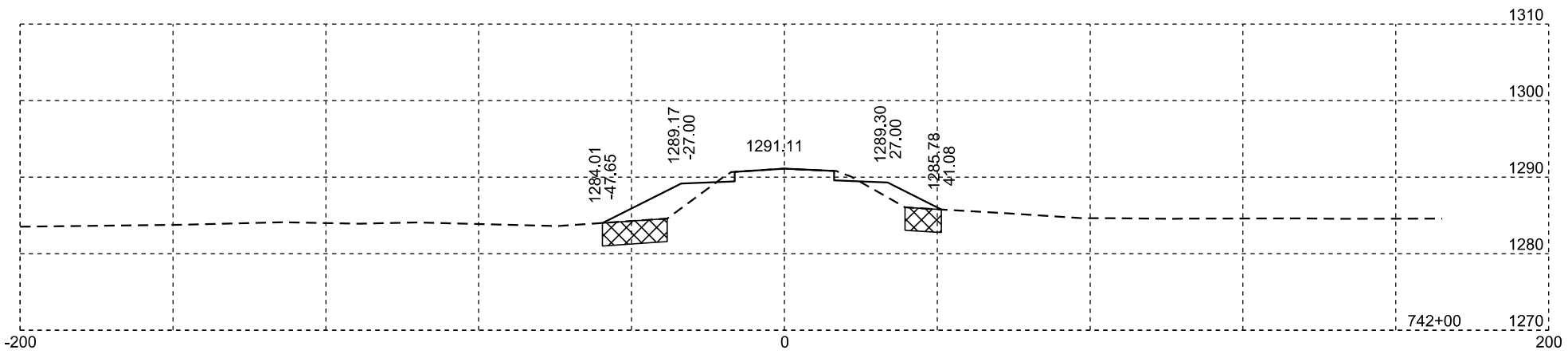

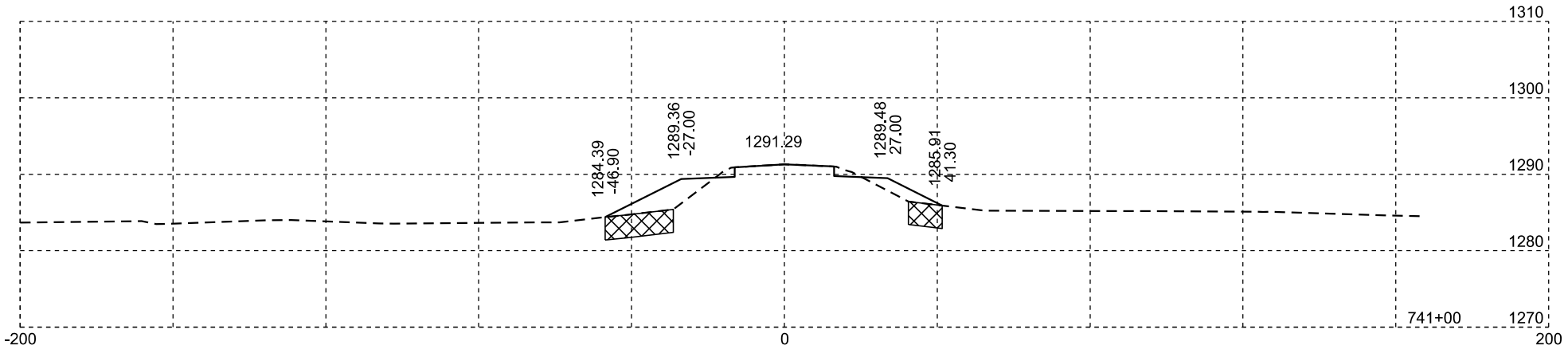

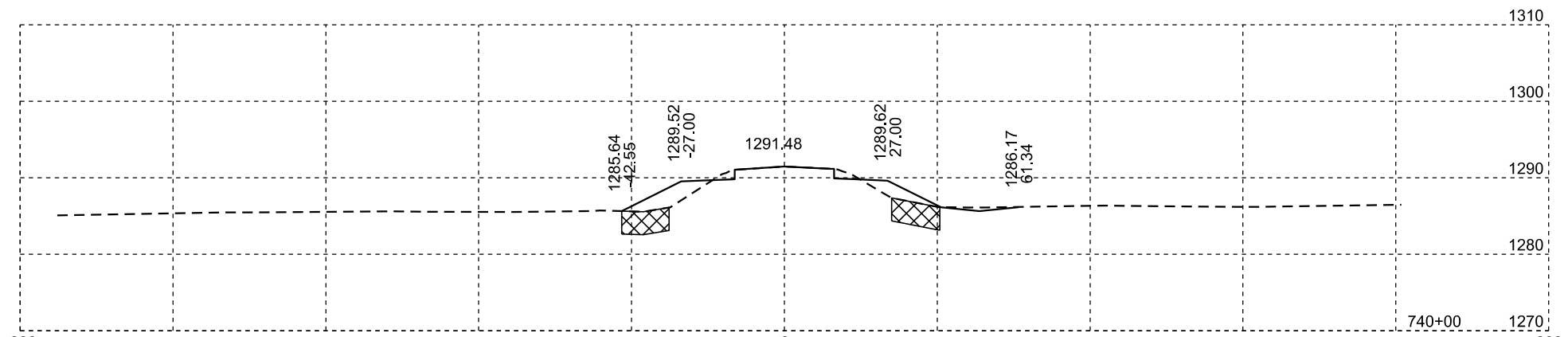

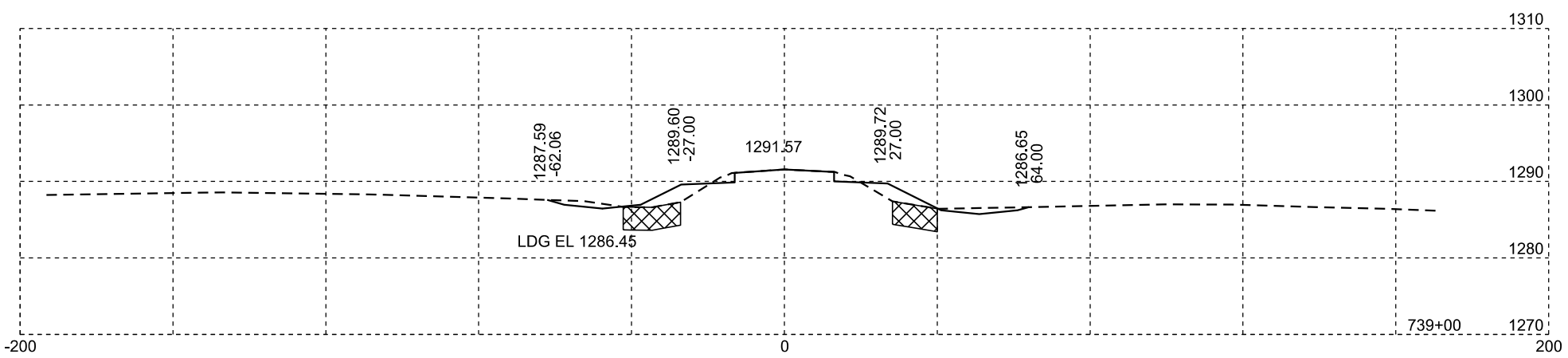

Muck

Plotting Date: 01/19/2024

STATE OF SOUTH DAKOTA	PROJECT	SHEET NO.	TOTAL SHEETS
	P-PH-B-PT 0010(124)296	X101	X169

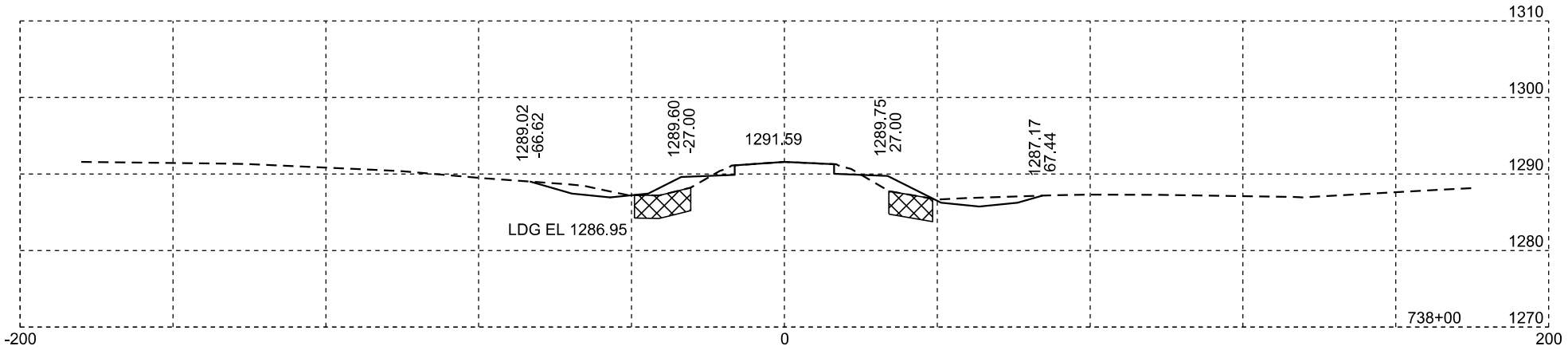

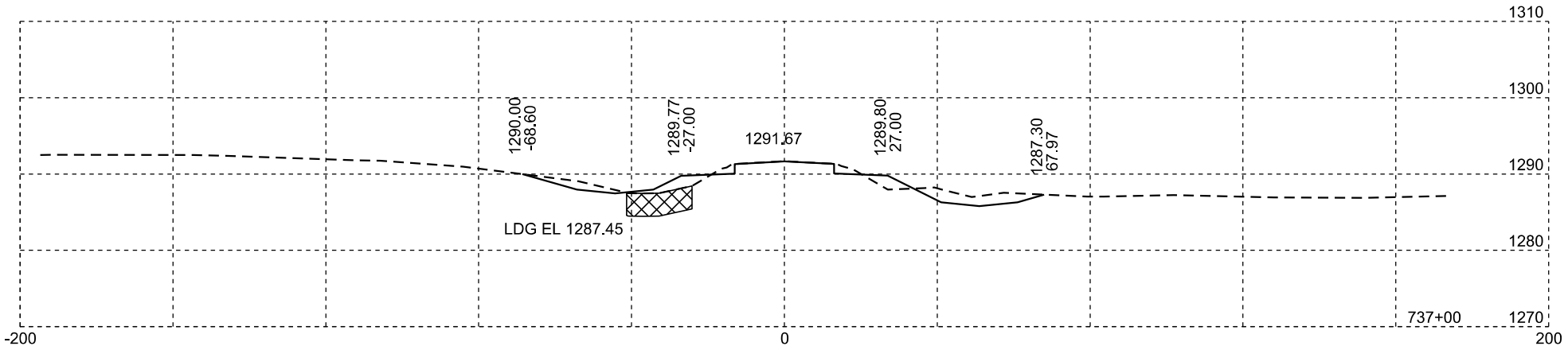

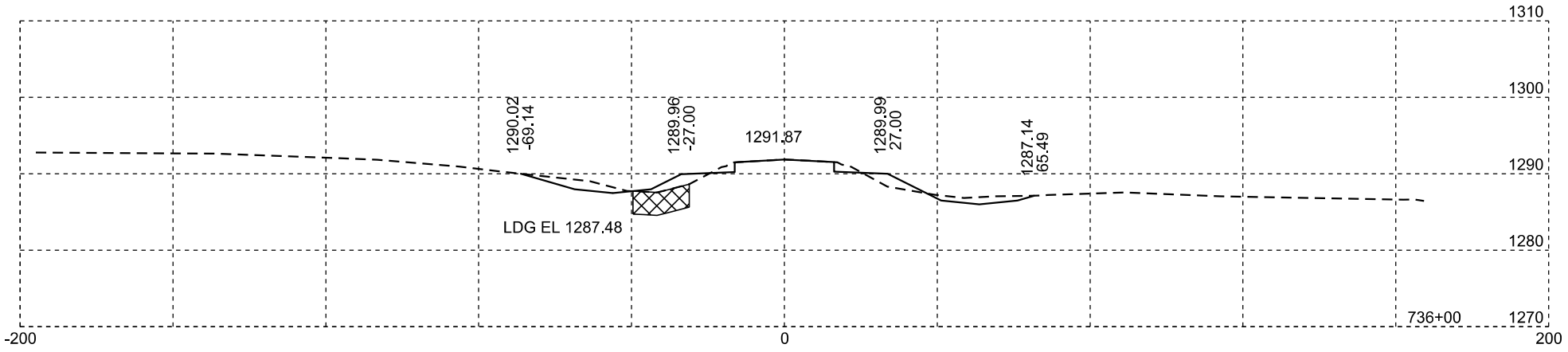

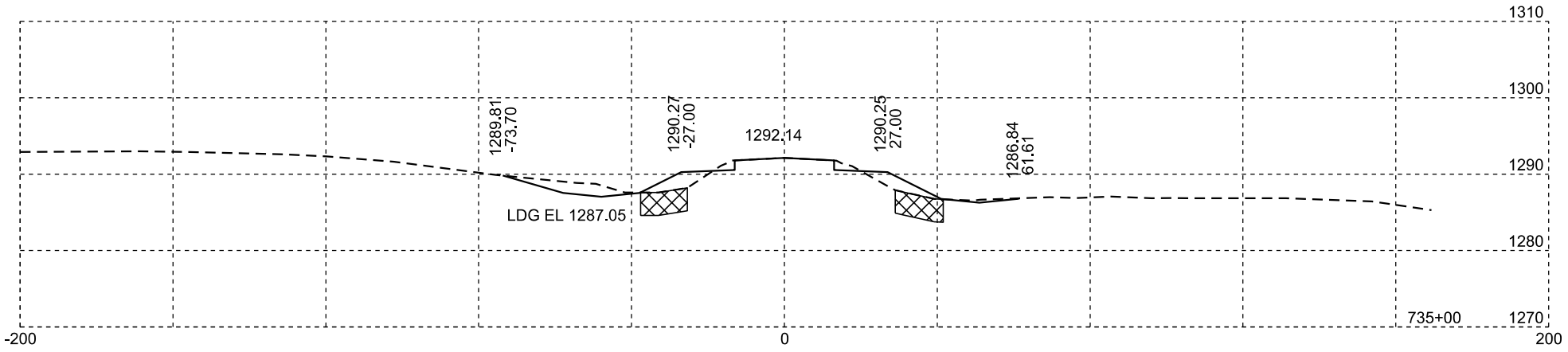

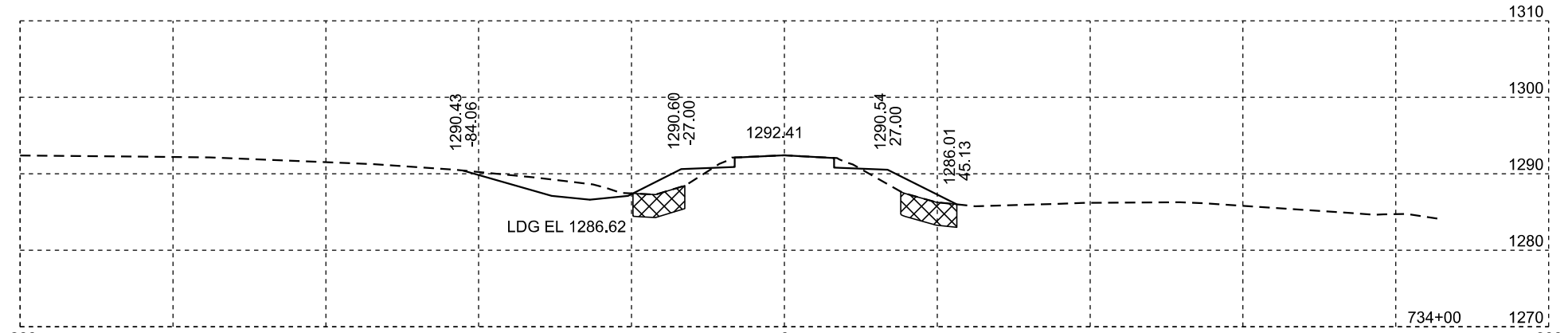

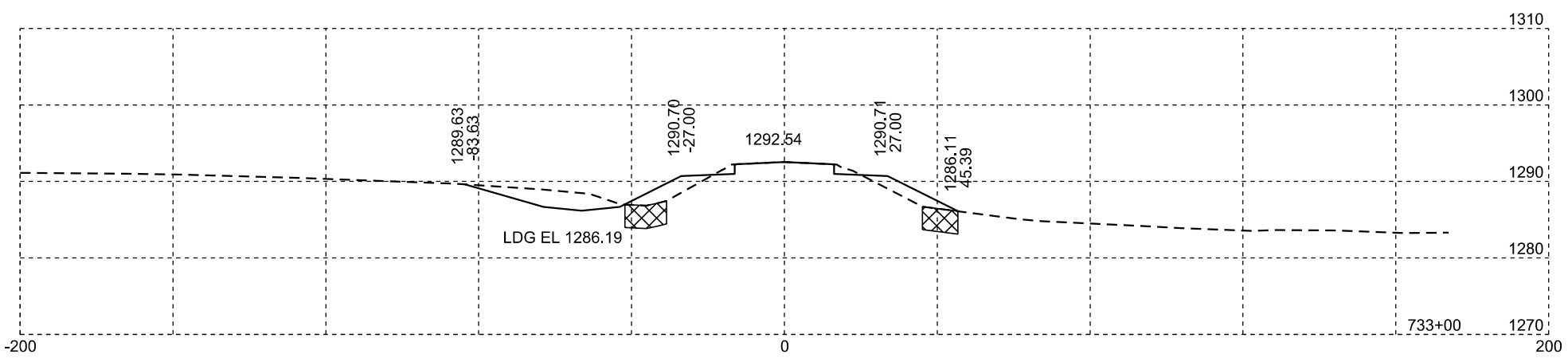

Muck

Plotting Date: 01/19/2024

STATE OF SOUTH DAKOTA	PROJECT	SHEET NO.	TOTAL SHEETS
	P-PH-B-PT 0010(124)296	X102	X169

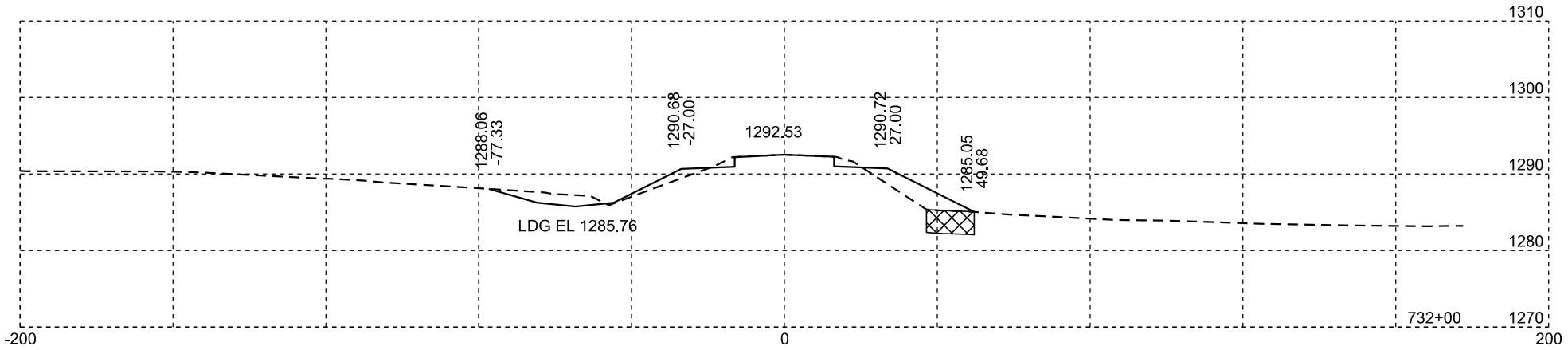

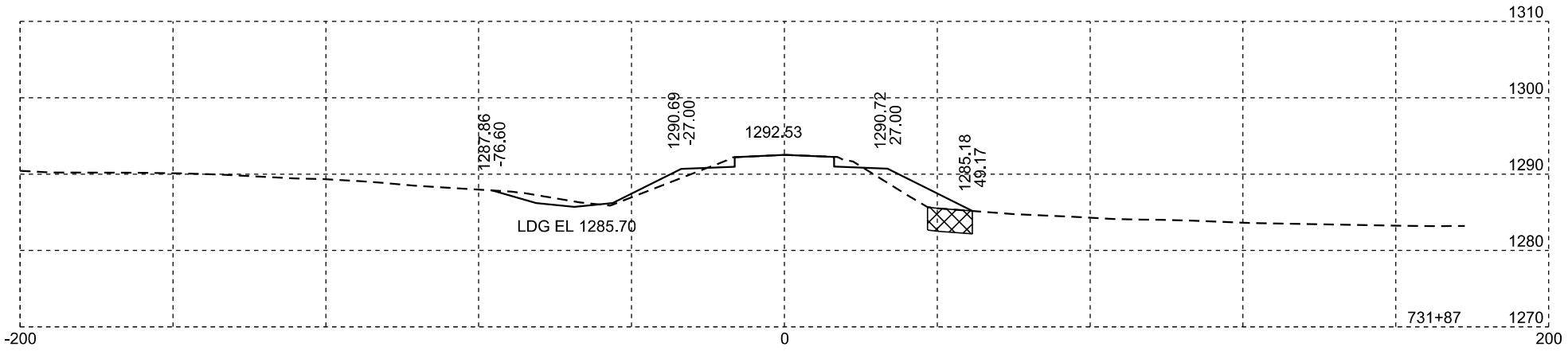

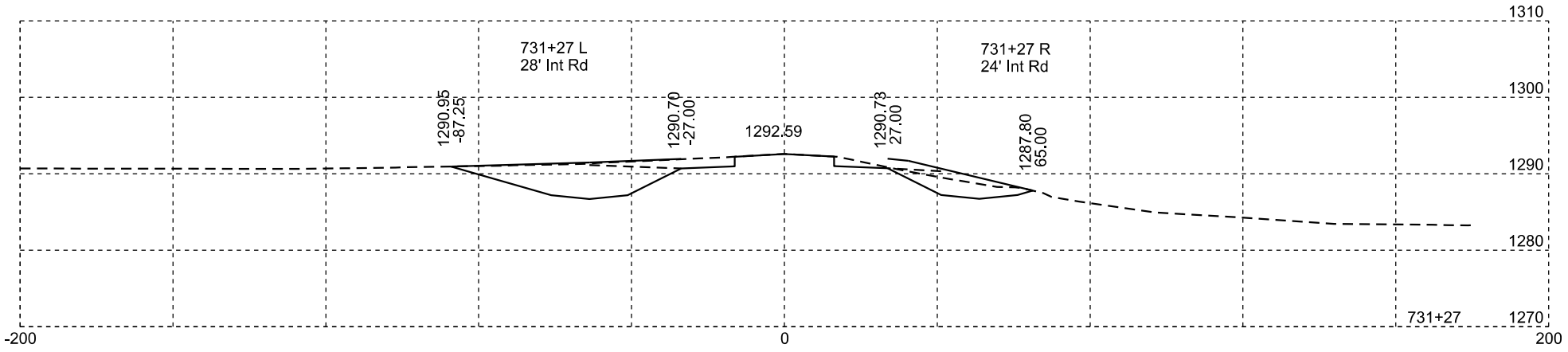

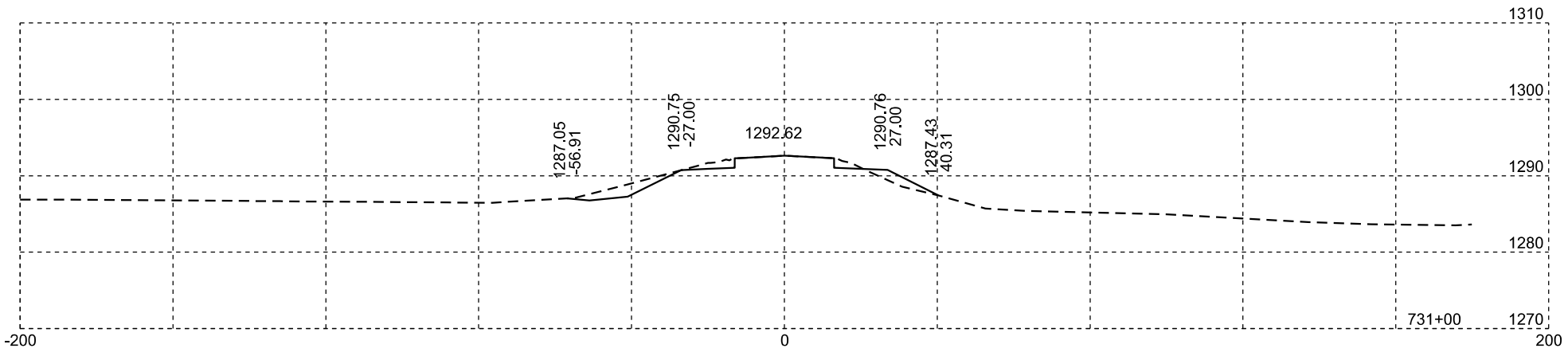

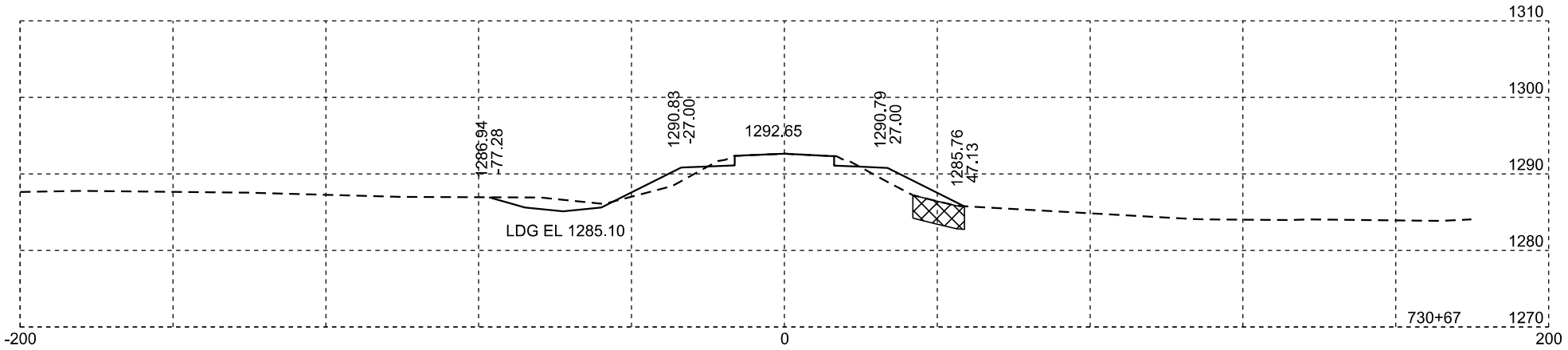

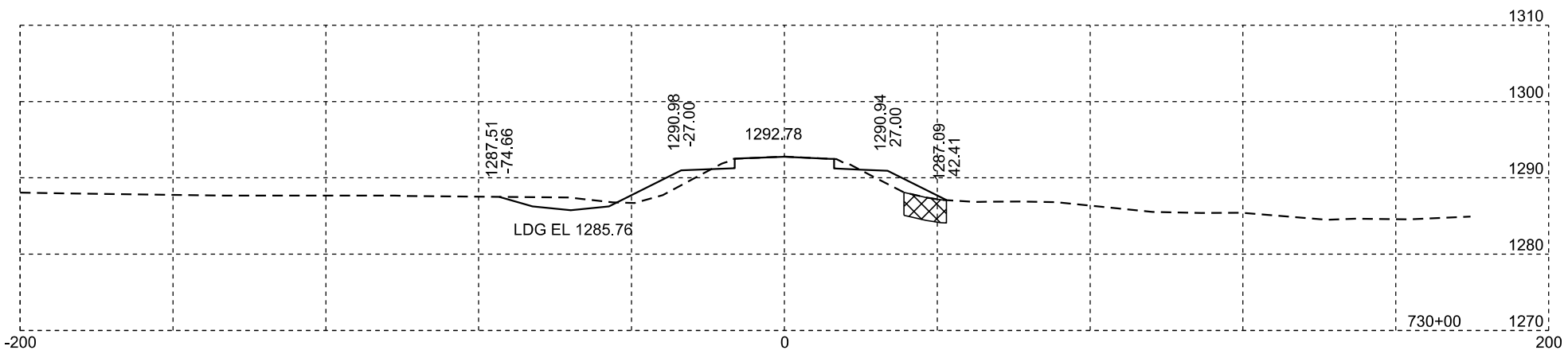

Muck

Rev 02/29/2024 DRM
Plotting Date: 02/29/2024

STATE OF SOUTH DAKOTA	PROJECT	SHEET NO.	TOTAL SHEETS
	P-PH-B-PT 0010(124)296	X103	X169

Plotting Date: 01/19/2024

STATE OF SOUTH DAKOTA	PROJECT	SHEET NO.	TOTAL SHEETS
	P-PH-B-PT 0010(124)296	X104	X169

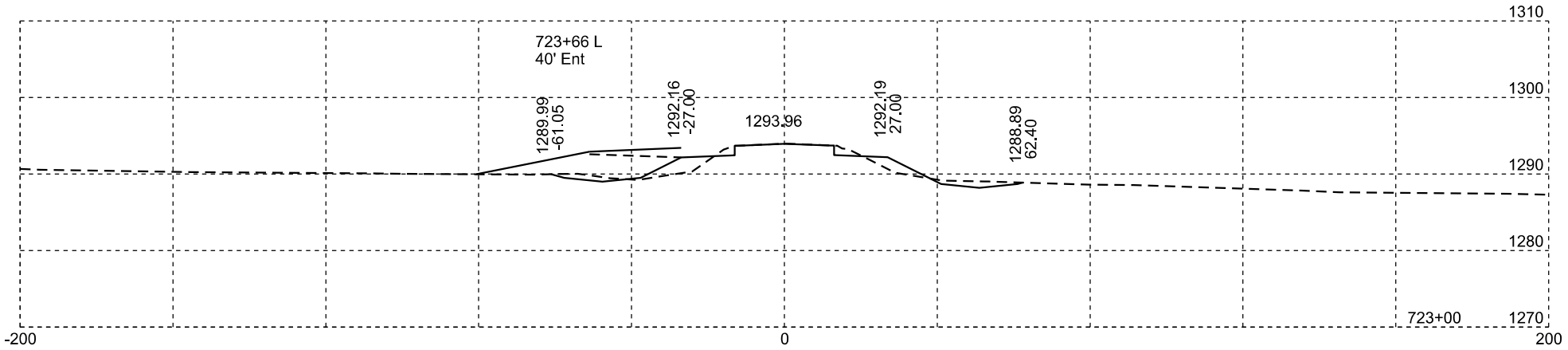

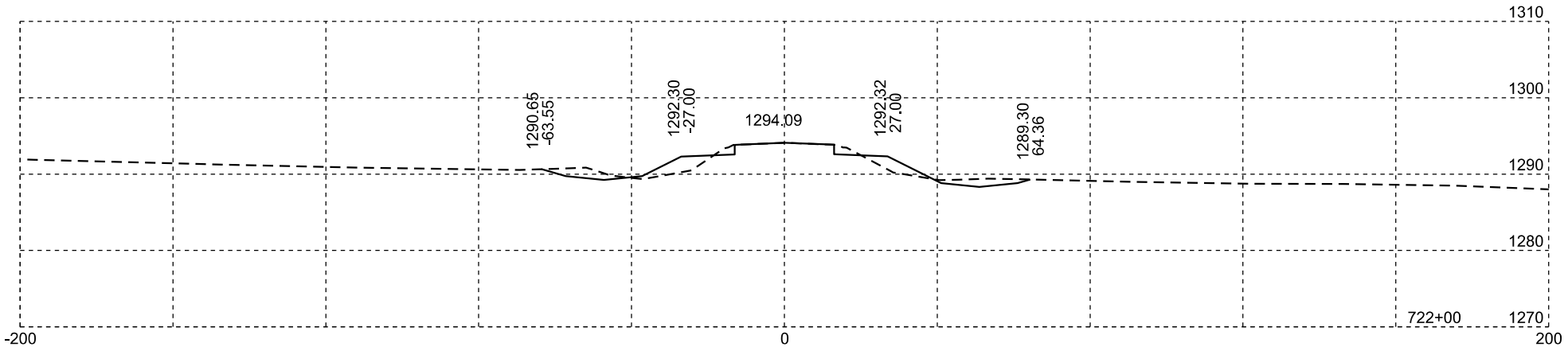

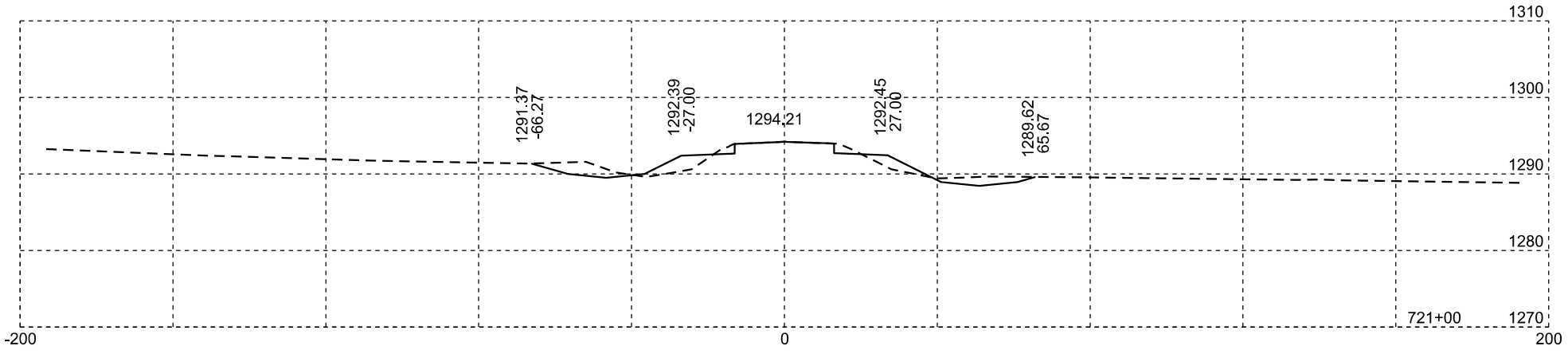

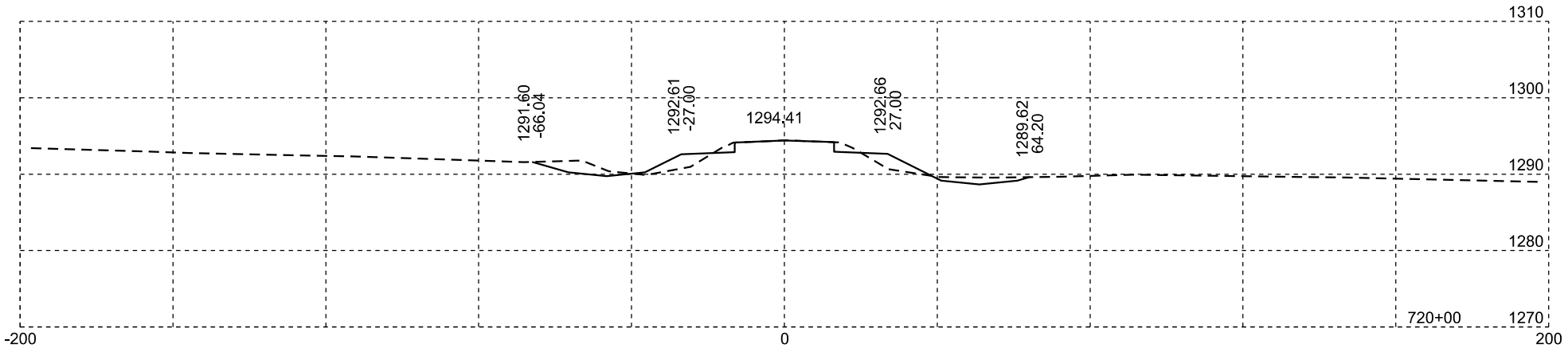

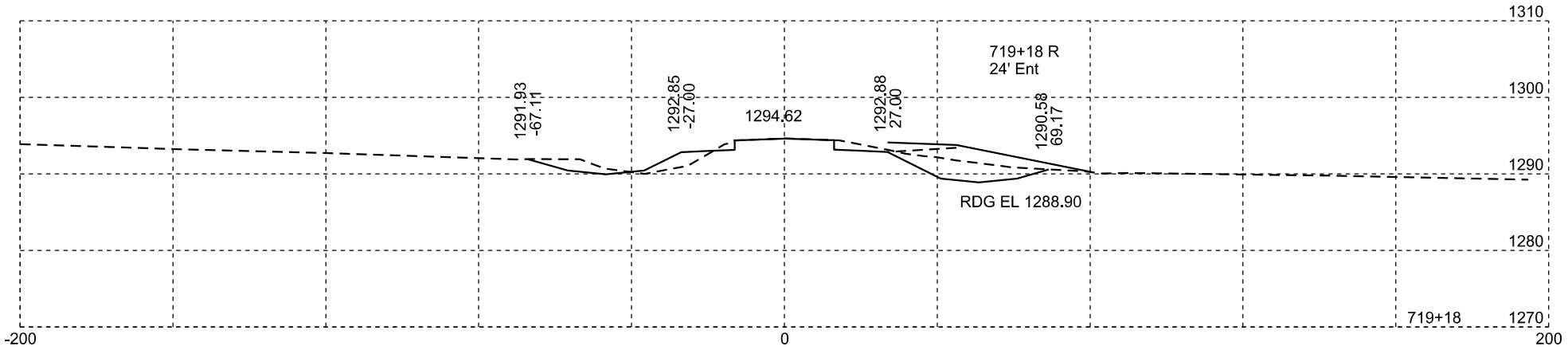

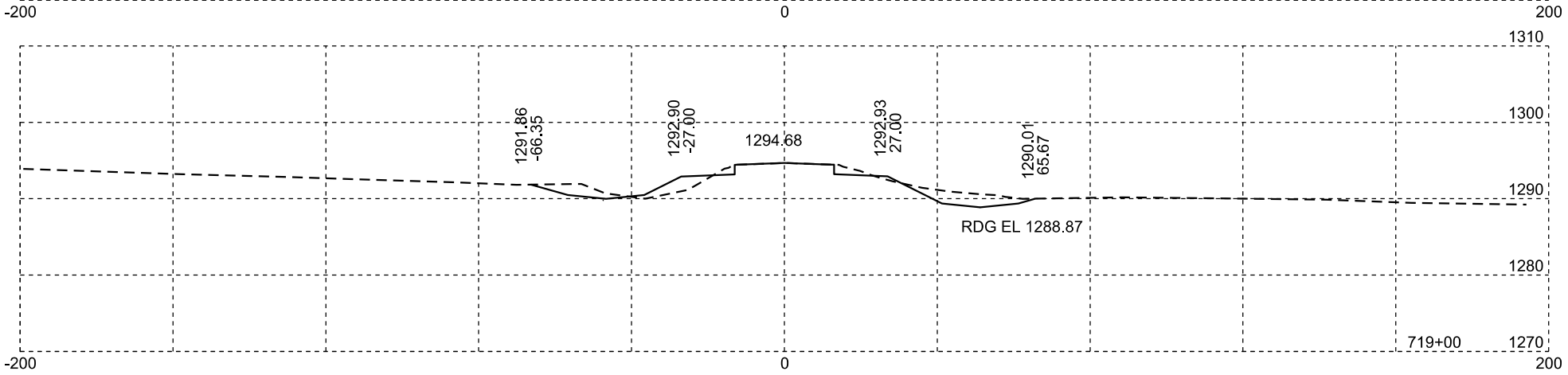

Plotting Date: 01/19/2024

STATE OF SOUTH DAKOTA	PROJECT	SHEET NO.	TOTAL SHEETS
	P-PH-B-PT 0010(124)296	X105	X169

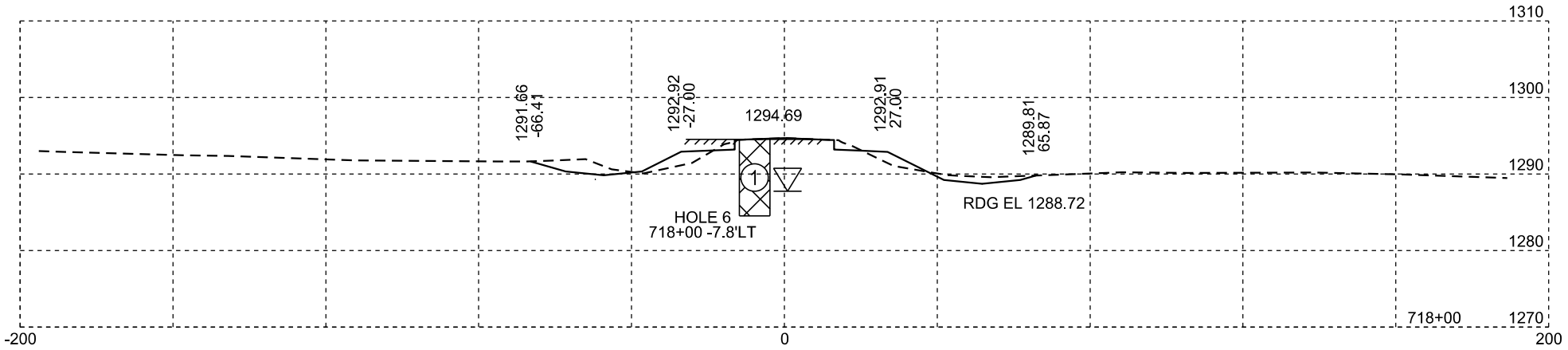

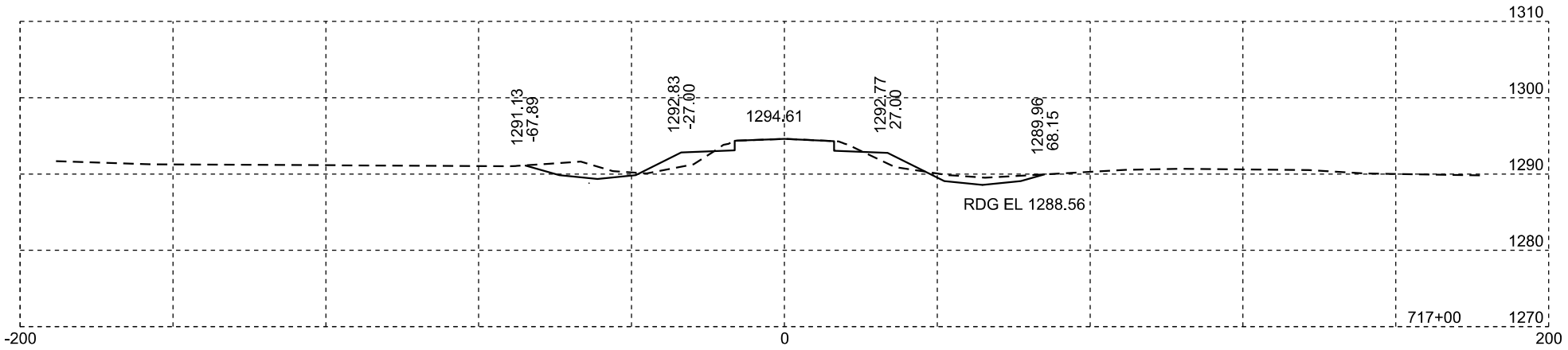

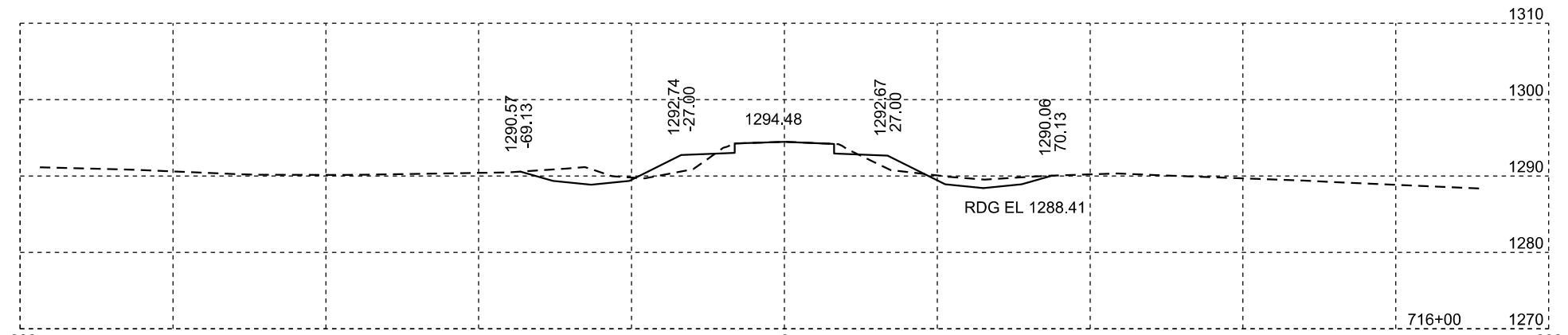

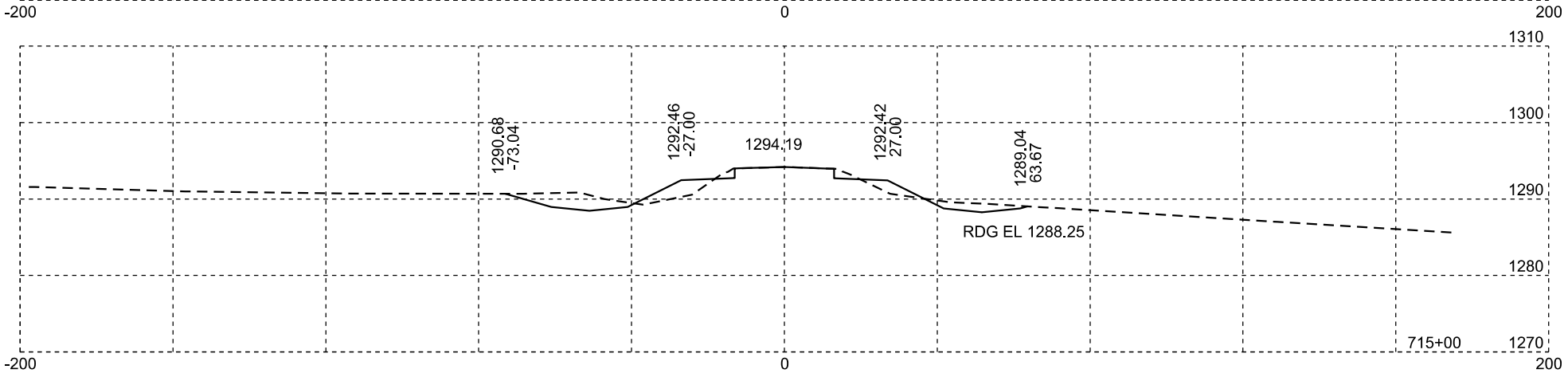

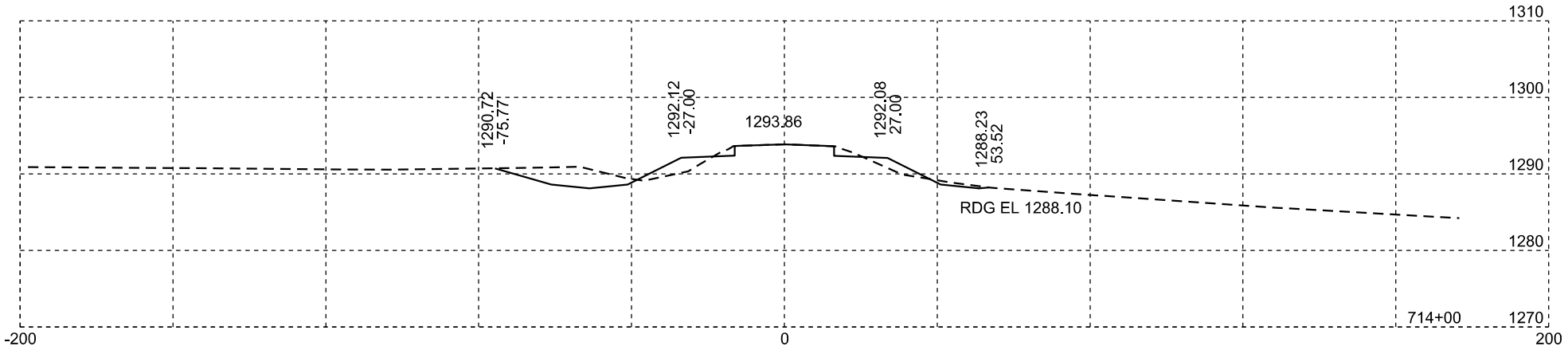

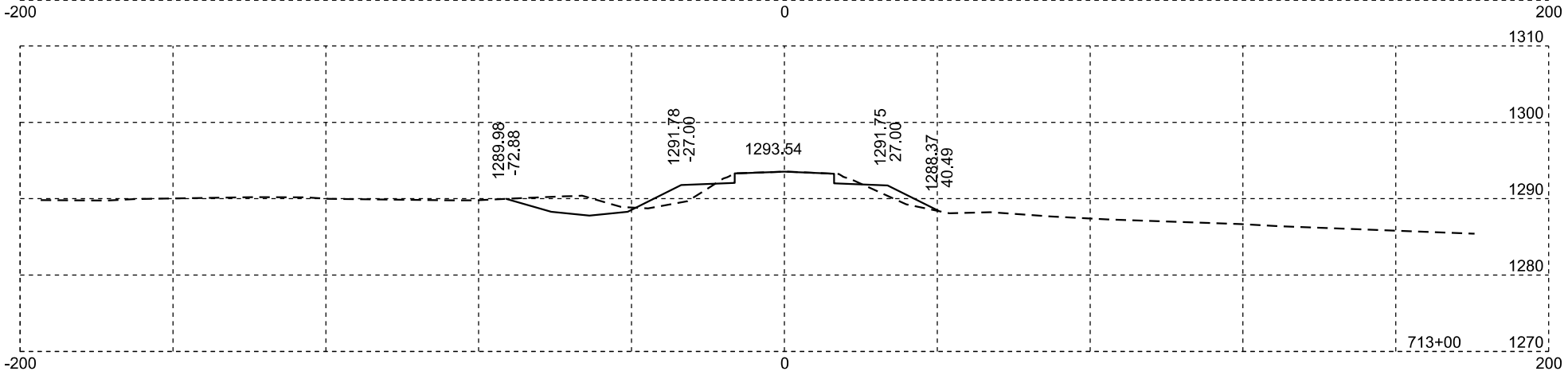

Plotting Date: 01/19/2024

STATE OF SOUTH DAKOTA	PROJECT	SHEET NO.	TOTAL SHEETS
	P-PH-B-PT 0010(124)296	X106	X169

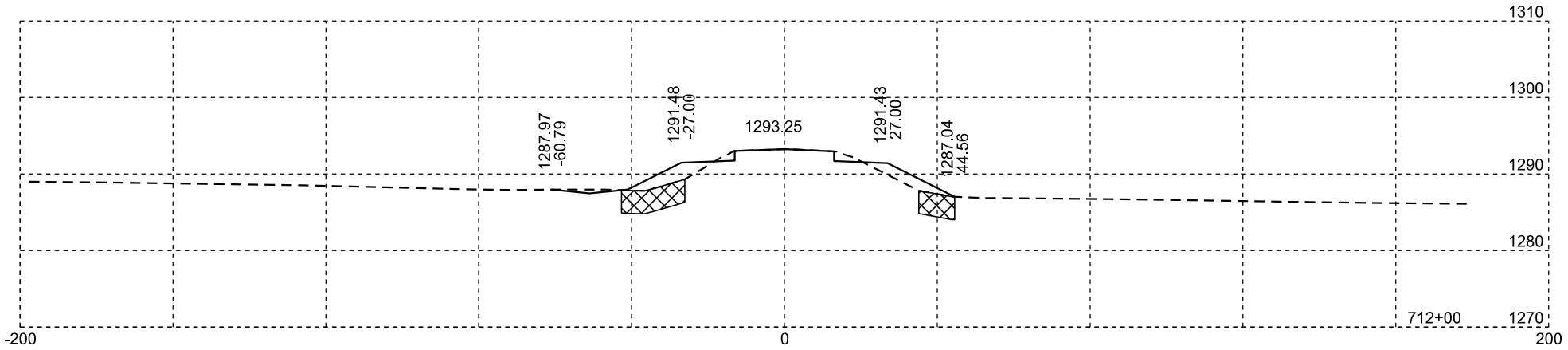

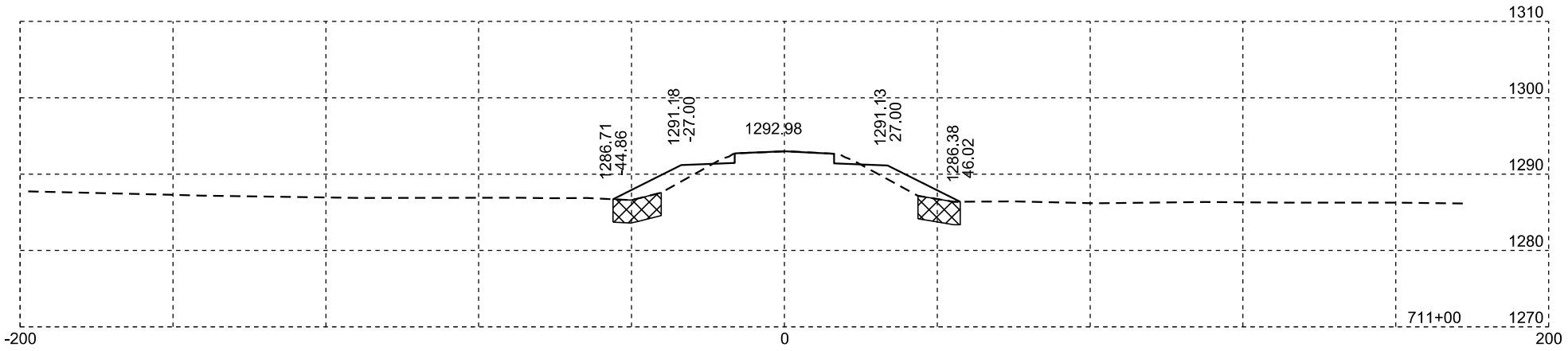

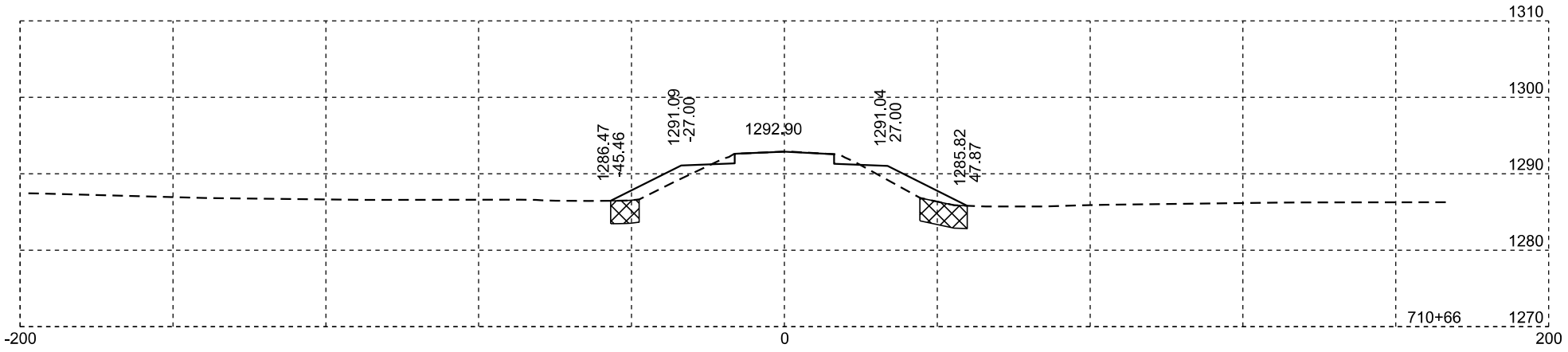

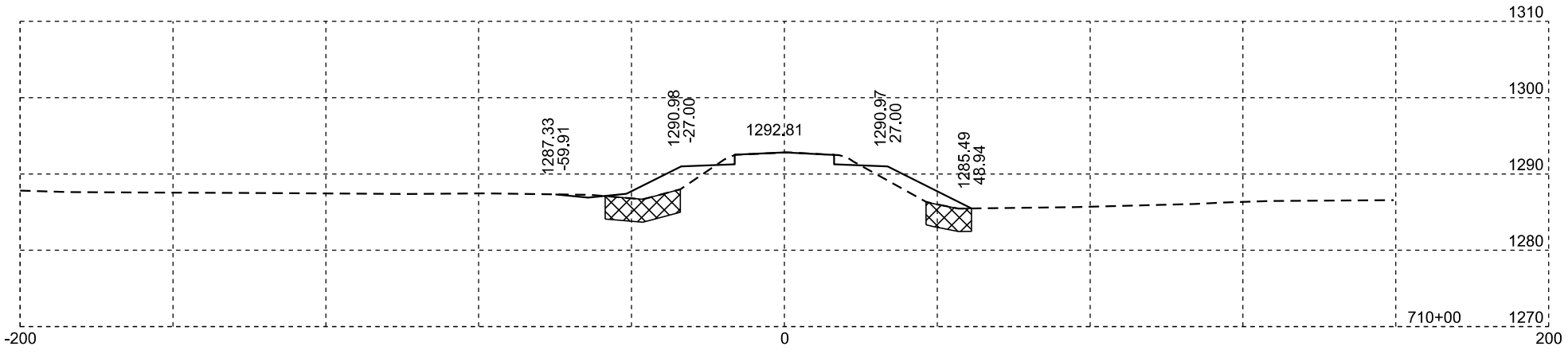

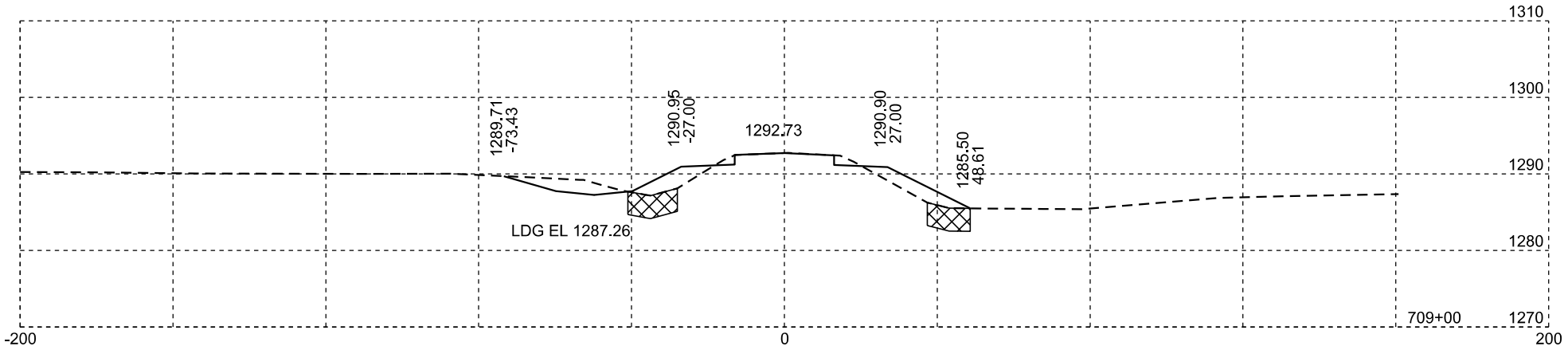

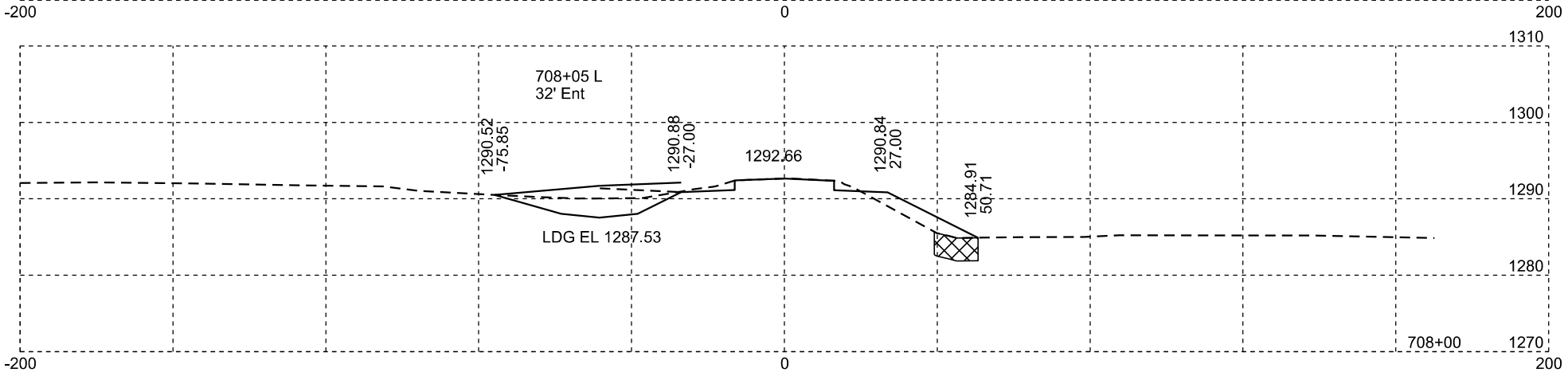

Muck

Rev 02/29/2024 DRM
Plotting Date: 02/29/2024

STATE OF SOUTH DAKOTA	PROJECT	SHEET NO.	TOTAL SHEETS
	P-PH-B-PT 0010(124)296	X107	X169

Muck

Rev 02/29/2024 DRM

Plotting Date: 02/29/2024

STATE OF SOUTH DAKOTA	PROJECT	SHEET NO.	TOTAL SHEETS
	P-PH-B-PT 0010(124)296	X108	X169

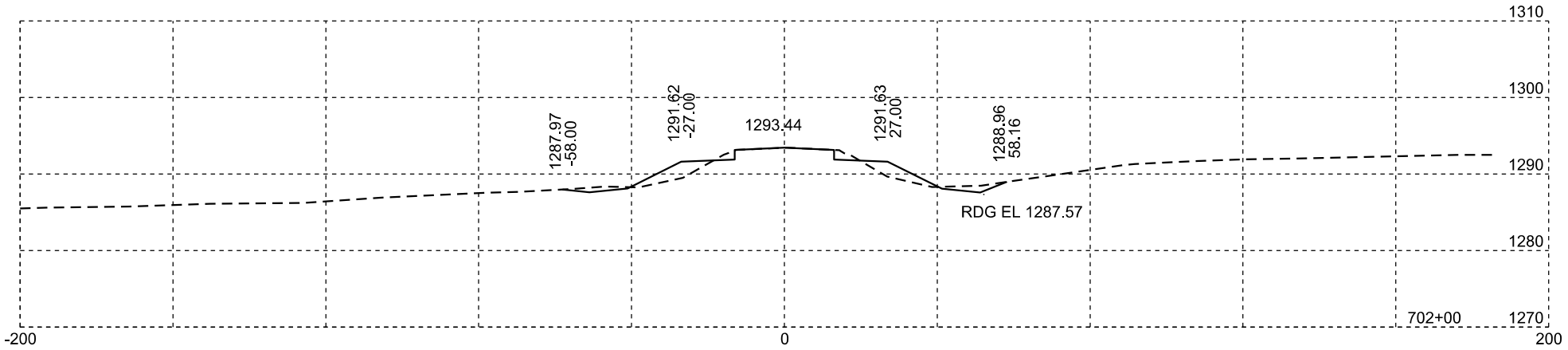

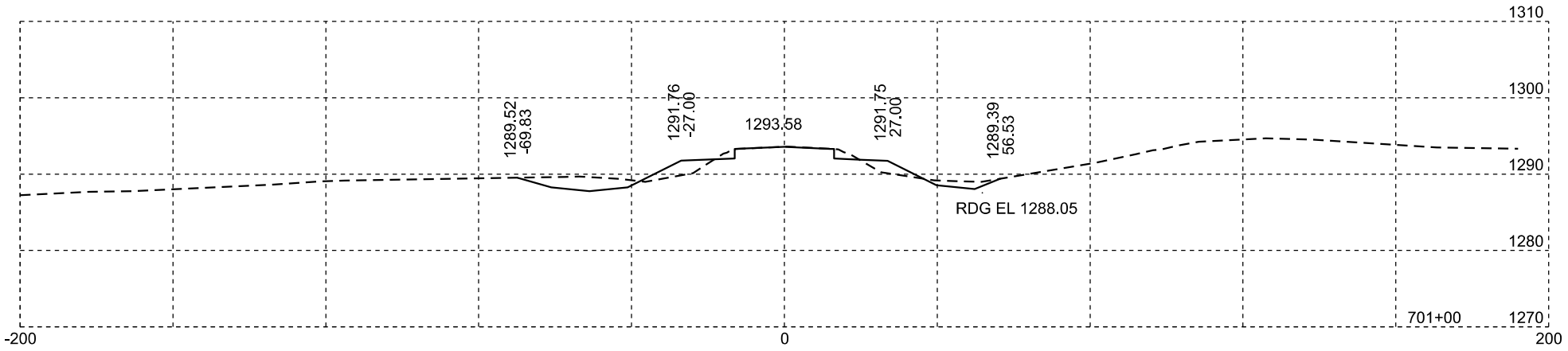

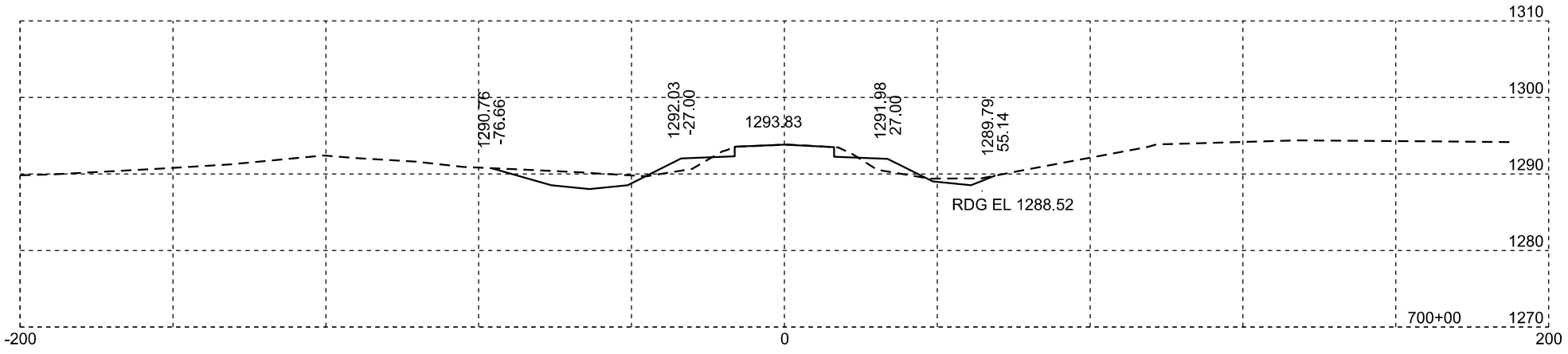

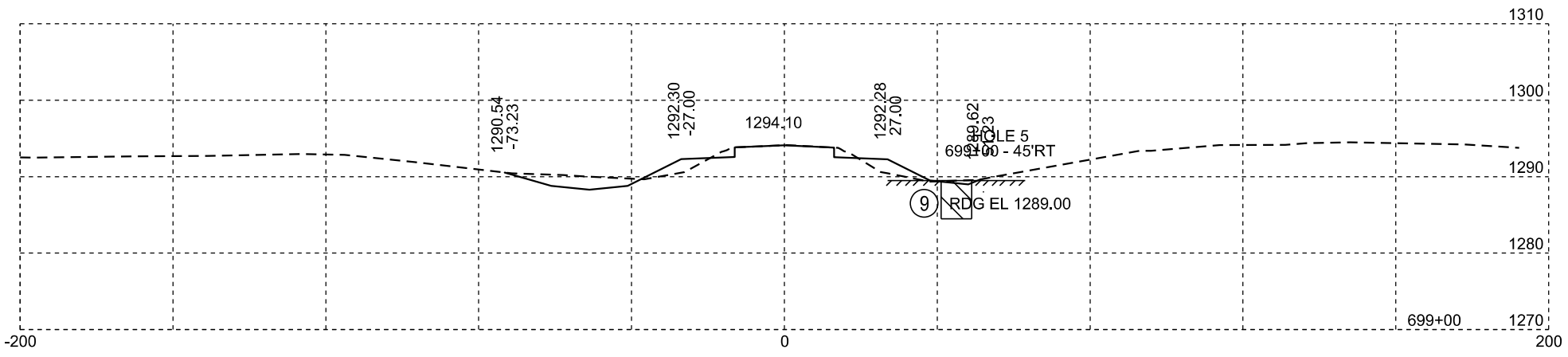

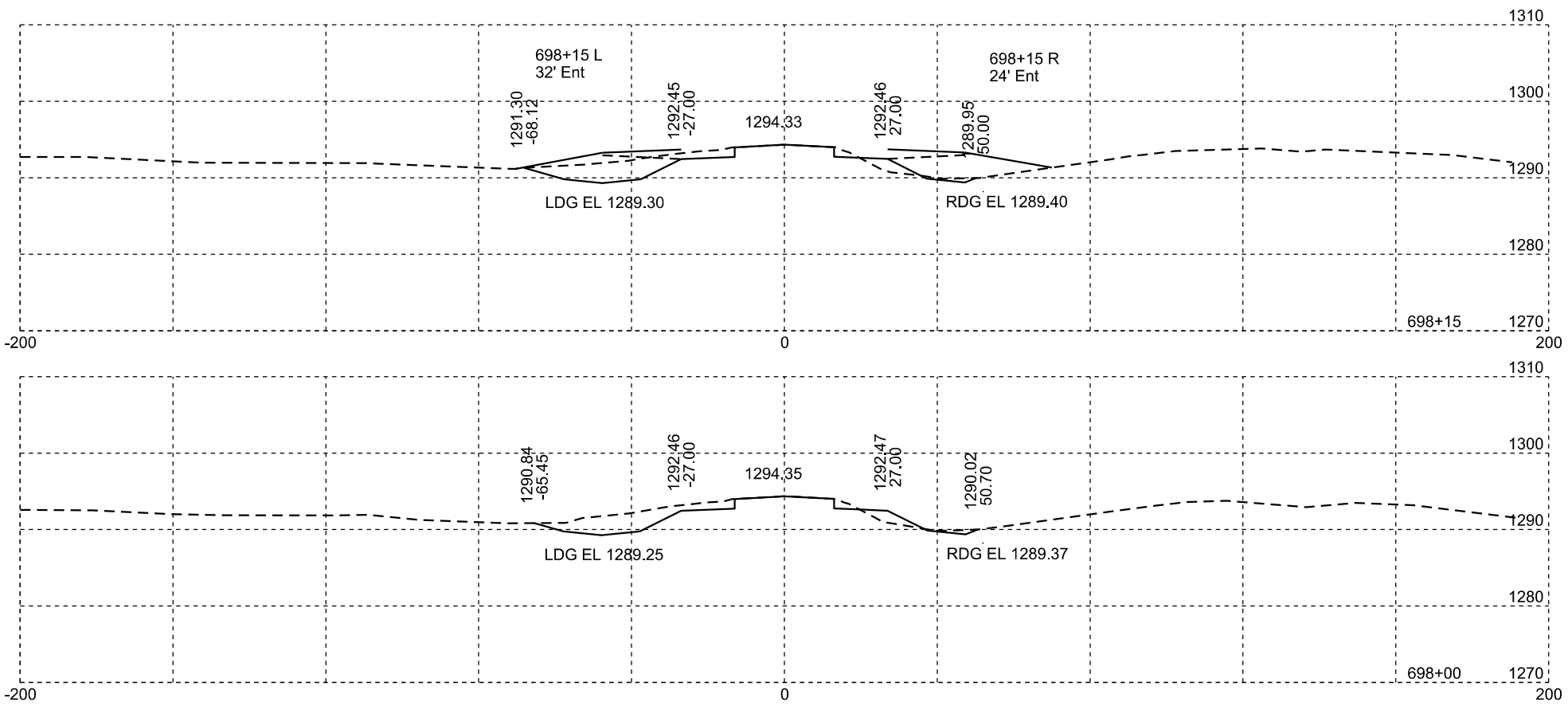

Rev 02/29/2024 DRM
Plotting Date: 02/29/2024

STATE OF SOUTH DAKOTA	PROJECT	SHEET NO.	TOTAL SHEETS
	P-PH-B-PT 0010(124)296	X109	X169

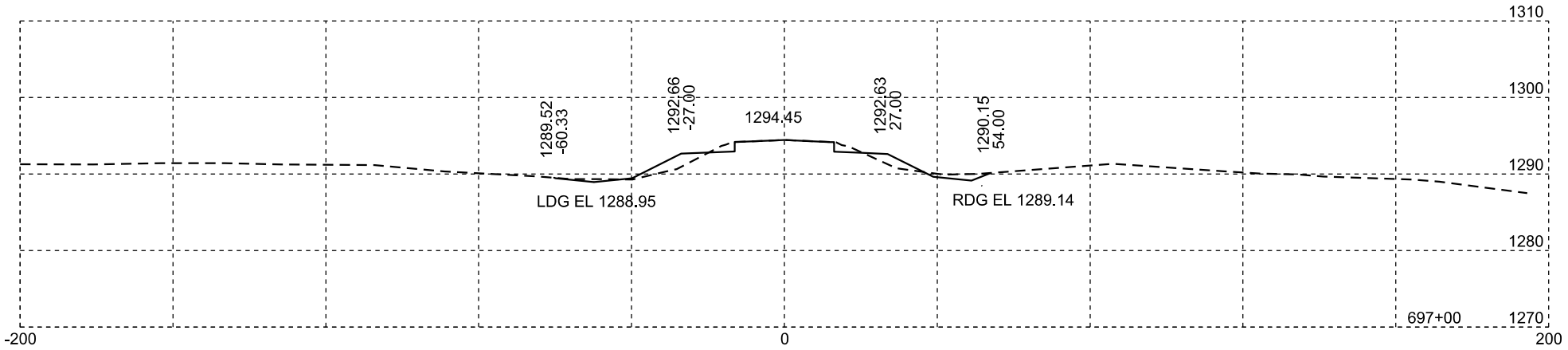

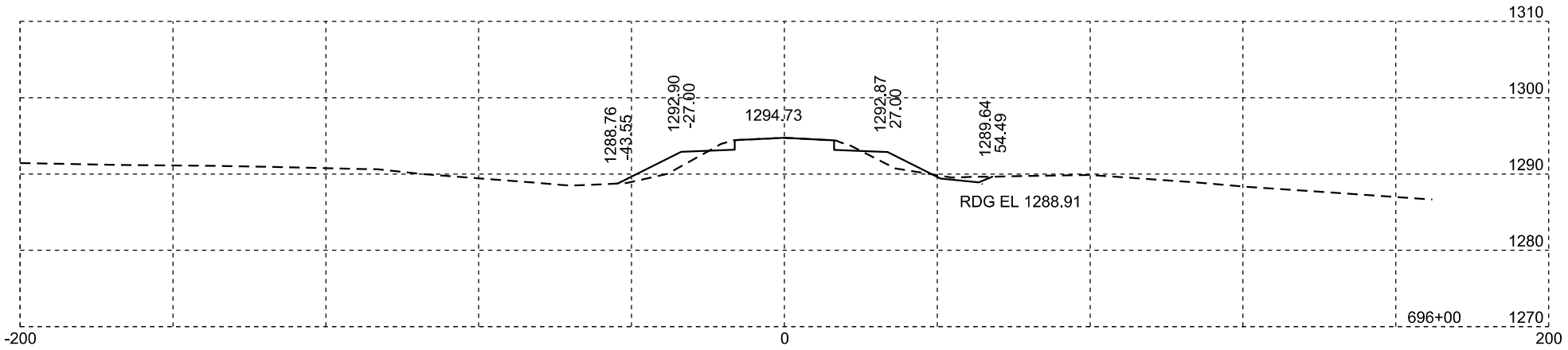

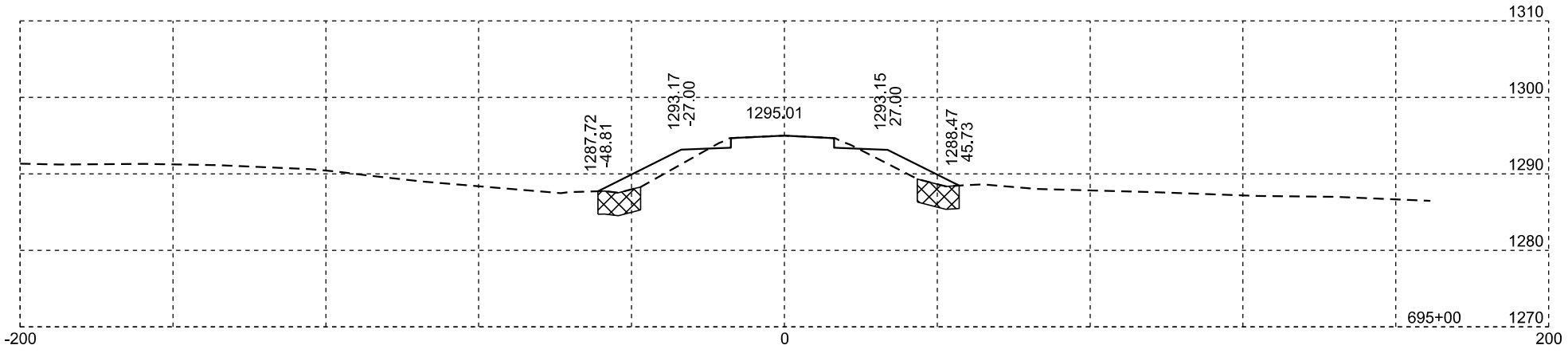

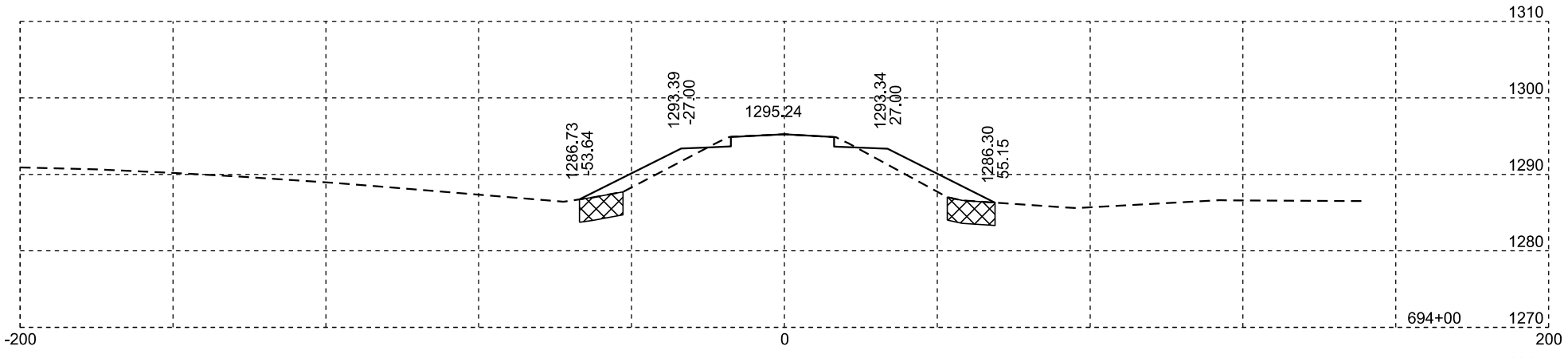

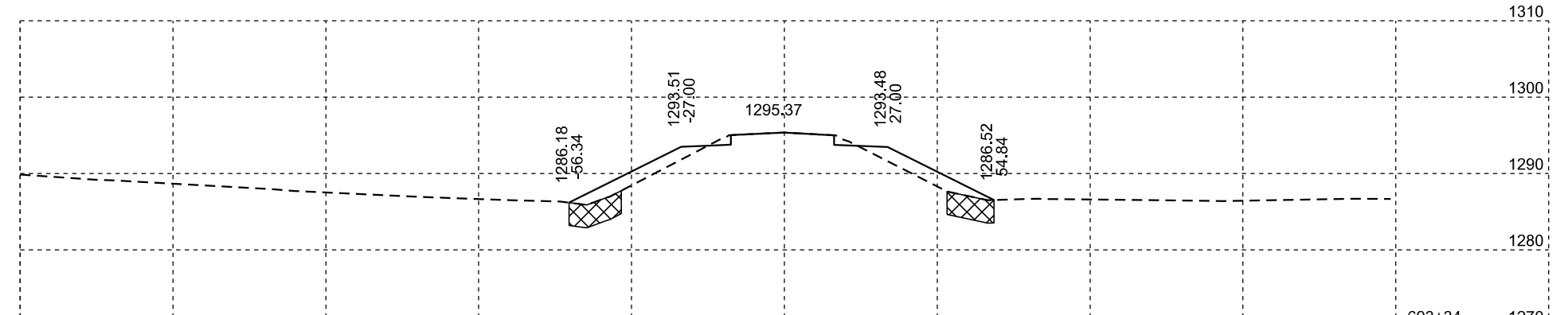

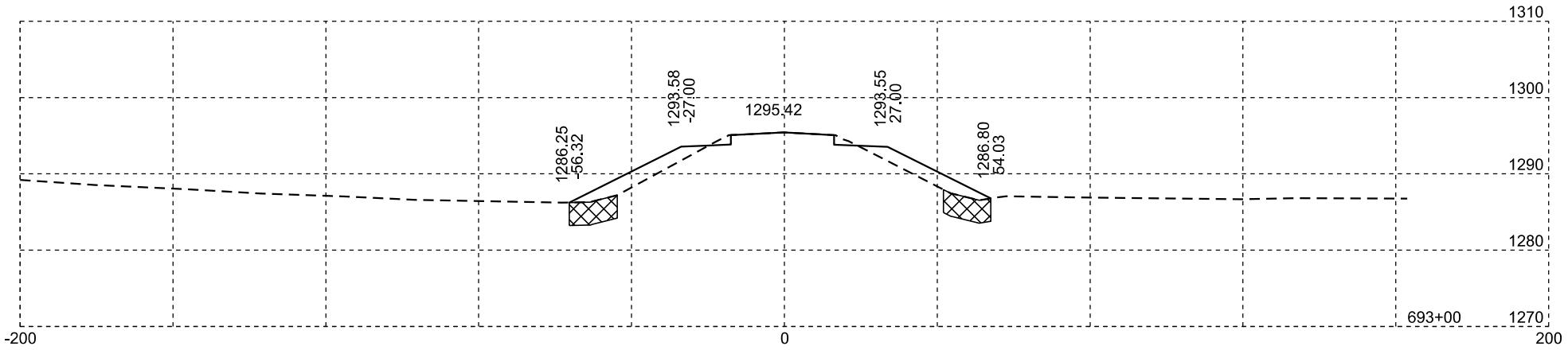

Muck

Rev 02/29/2024 DRM
Plotting Date: 02/29/2024

STATE OF SOUTH DAKOTA	PROJECT	SHEET NO.	TOTAL SHEETS
	P-PH-B-PT 0010(124)296	X110	X169

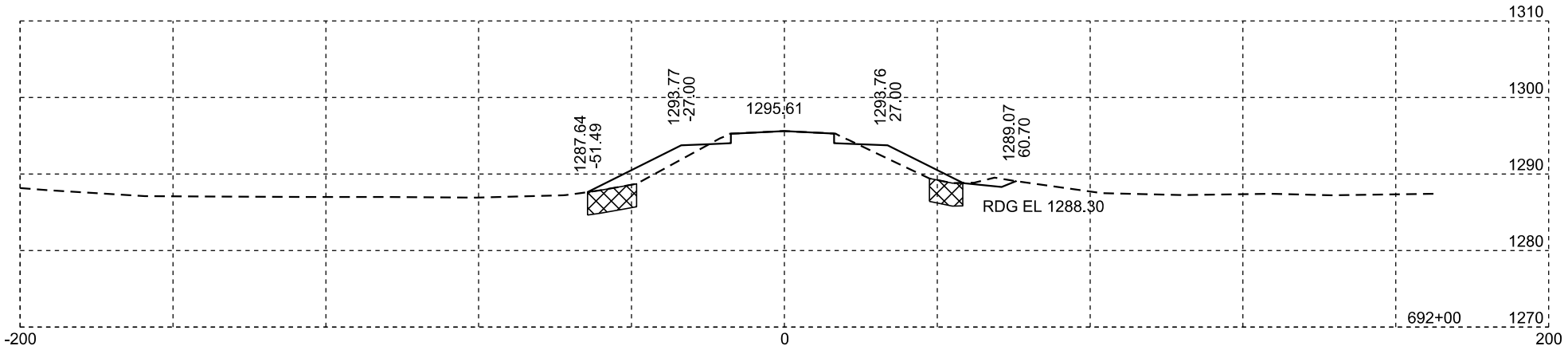

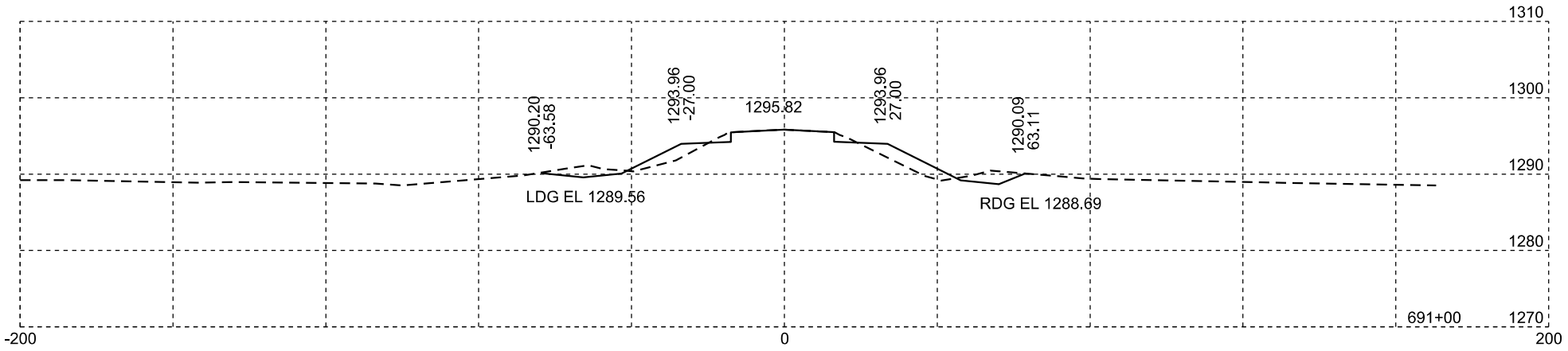

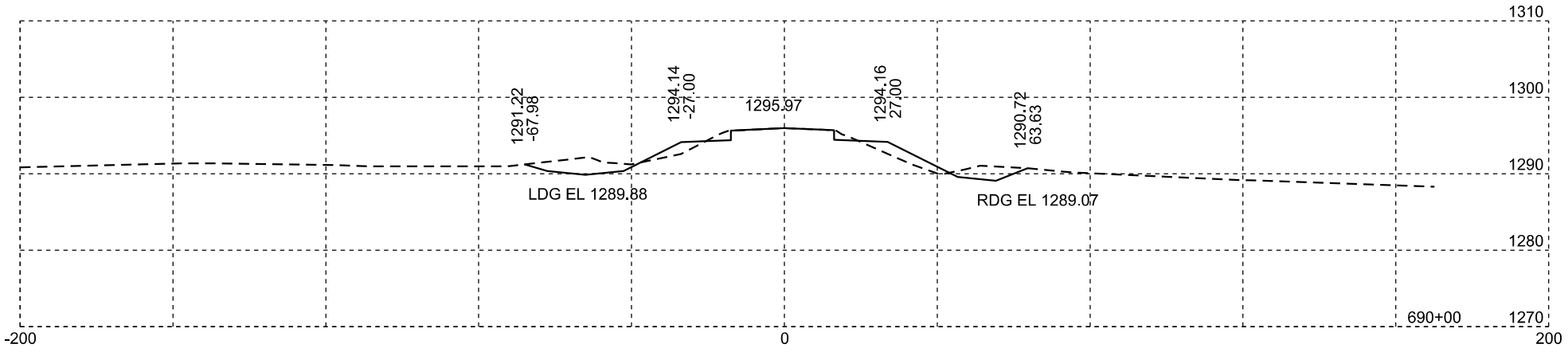

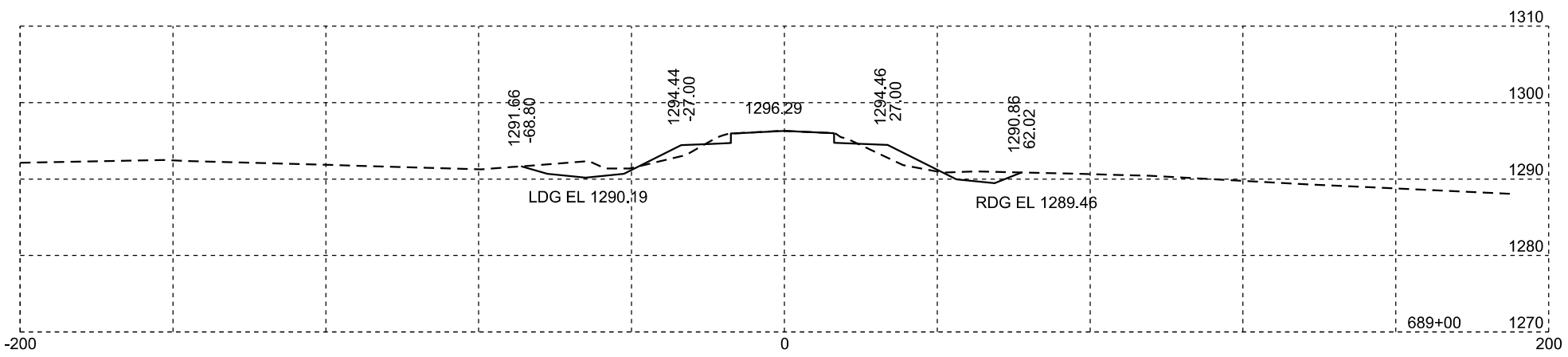

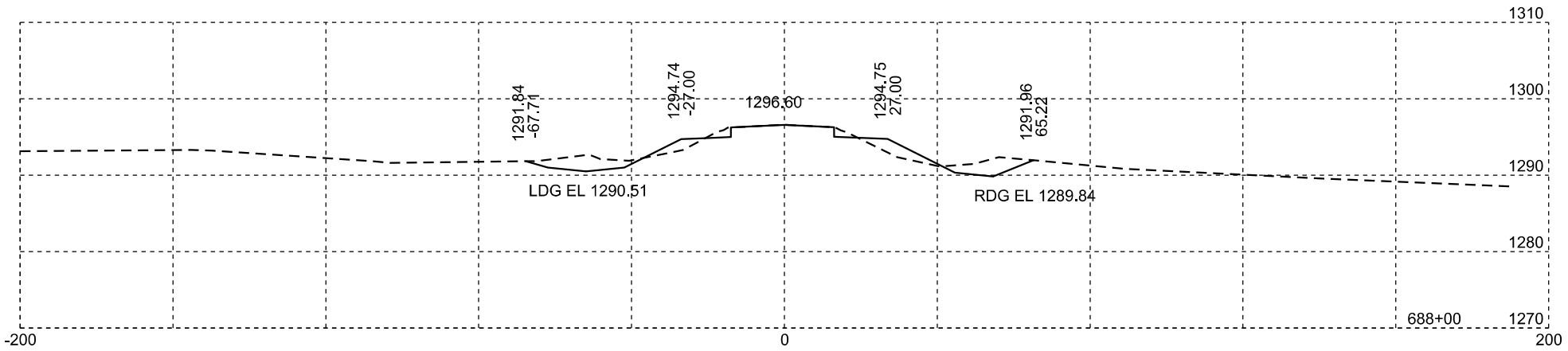

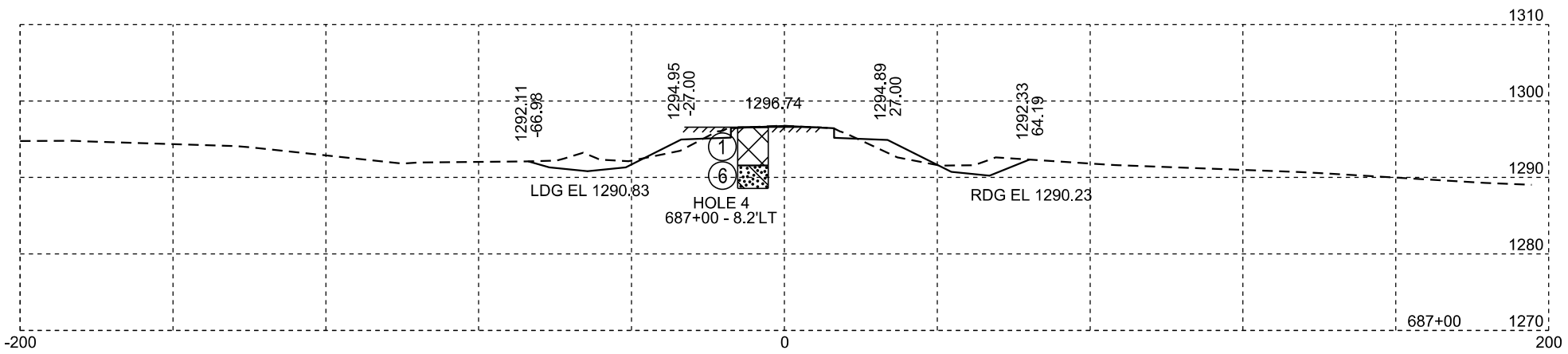

Muck

Rev 02/29/2024 DRM
Plotting Date: 02/29/2024

STATE OF SOUTH DAKOTA	PROJECT	SHEET NO.	TOTAL SHEETS
	P-PH-B-PT 0010(124)296	X111	X169

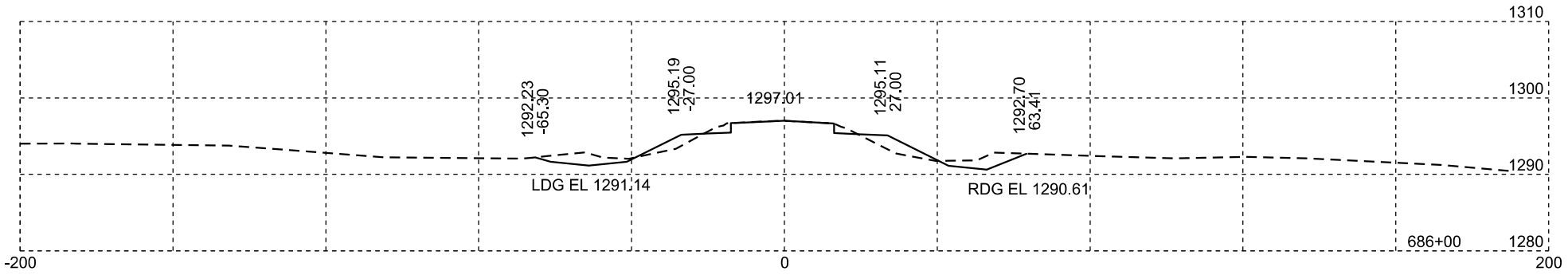

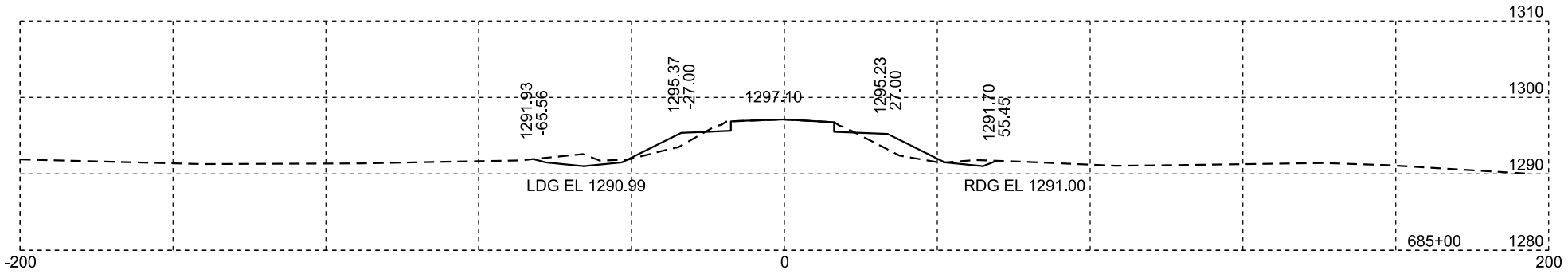

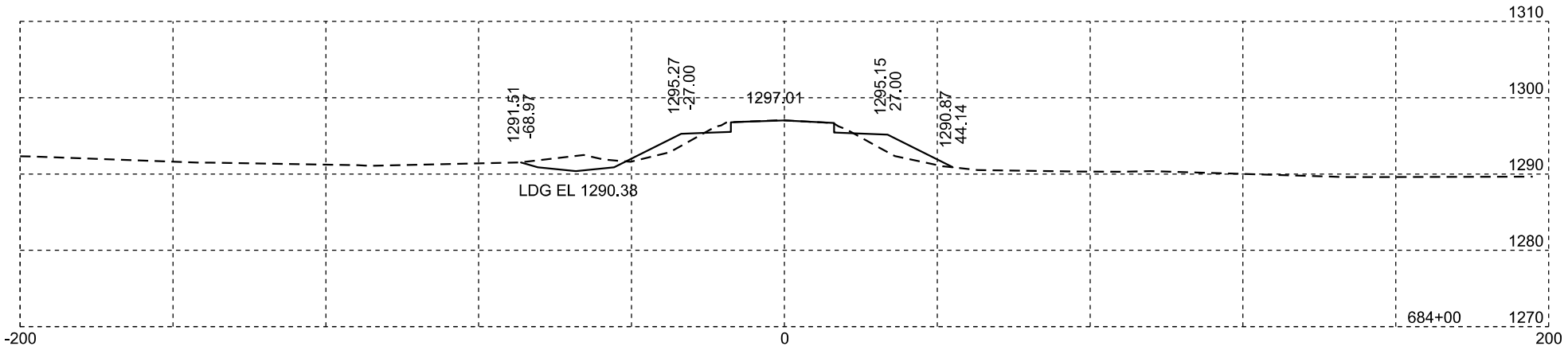

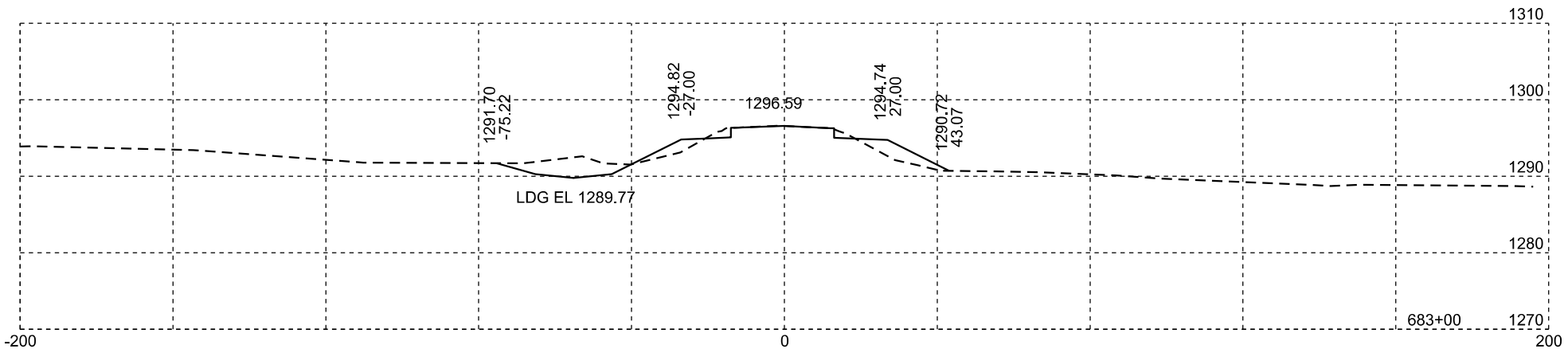

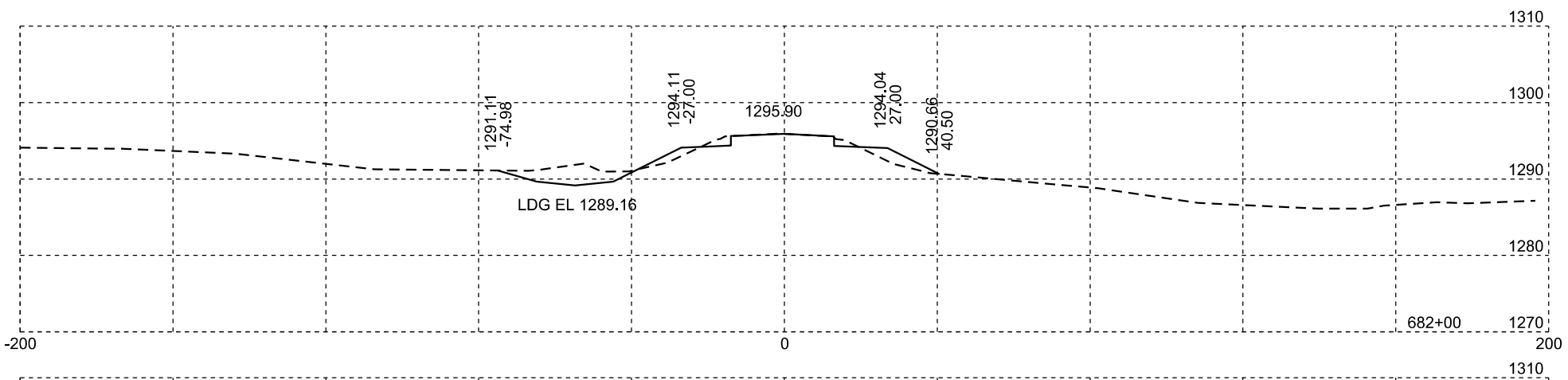

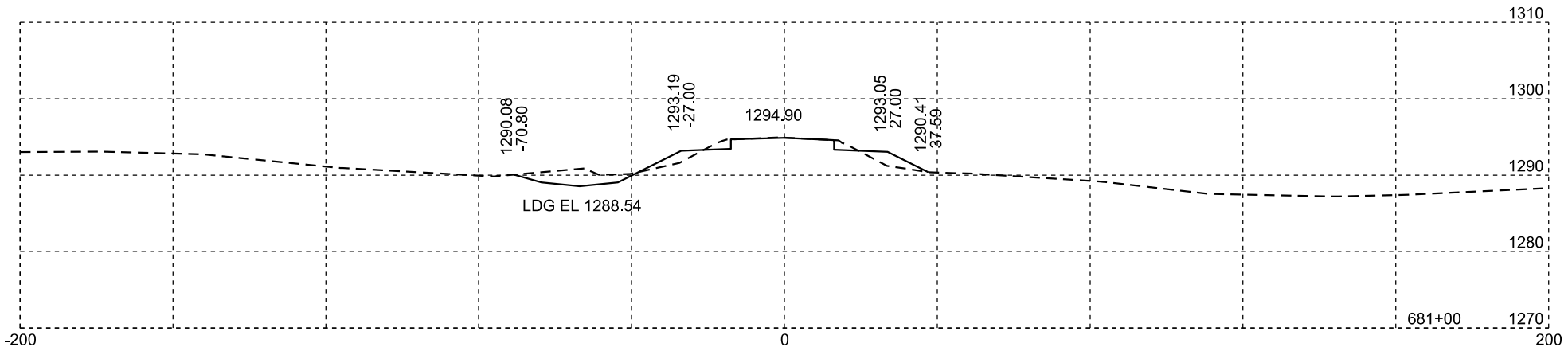

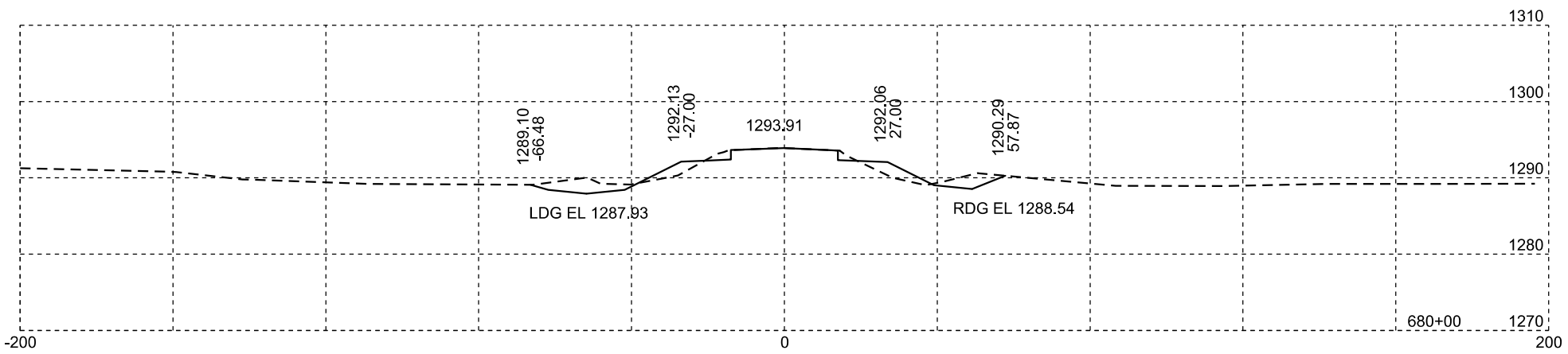

Rev 02/29/2024 DRM
Plotting Date: 02/29/2024

STATE OF SOUTH DAKOTA	PROJECT	SHEET NO.	TOTAL SHEETS
	P-PH-B-PT 0010(124)296	X112	X169

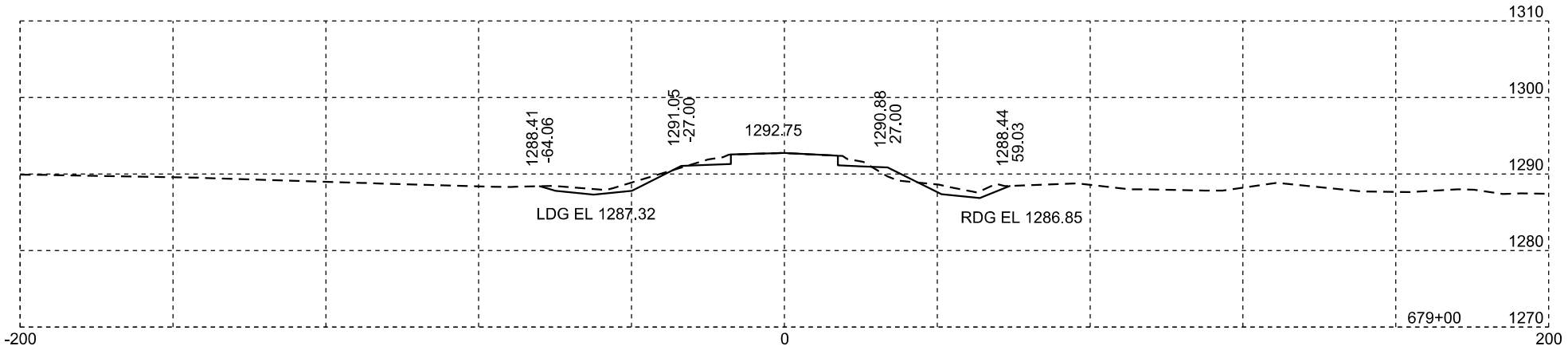

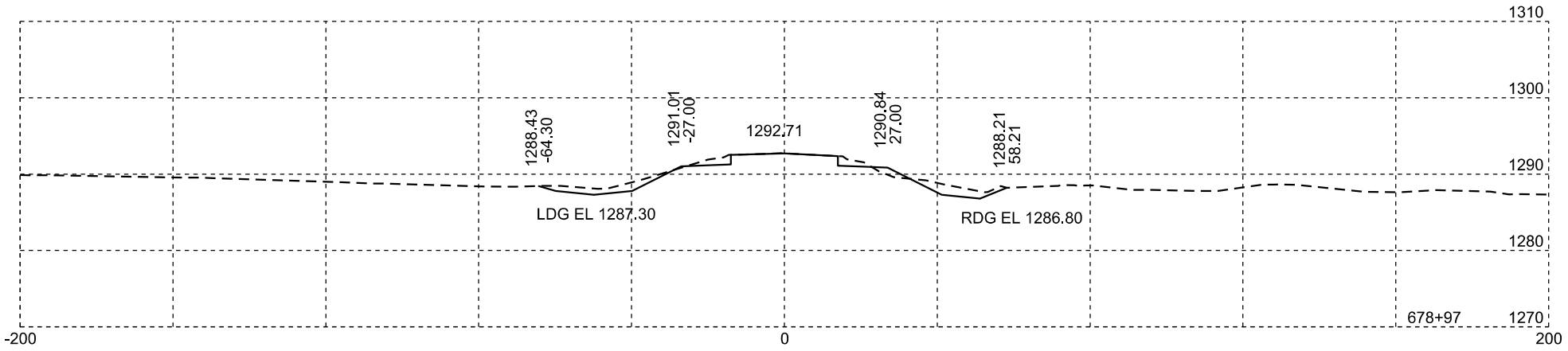

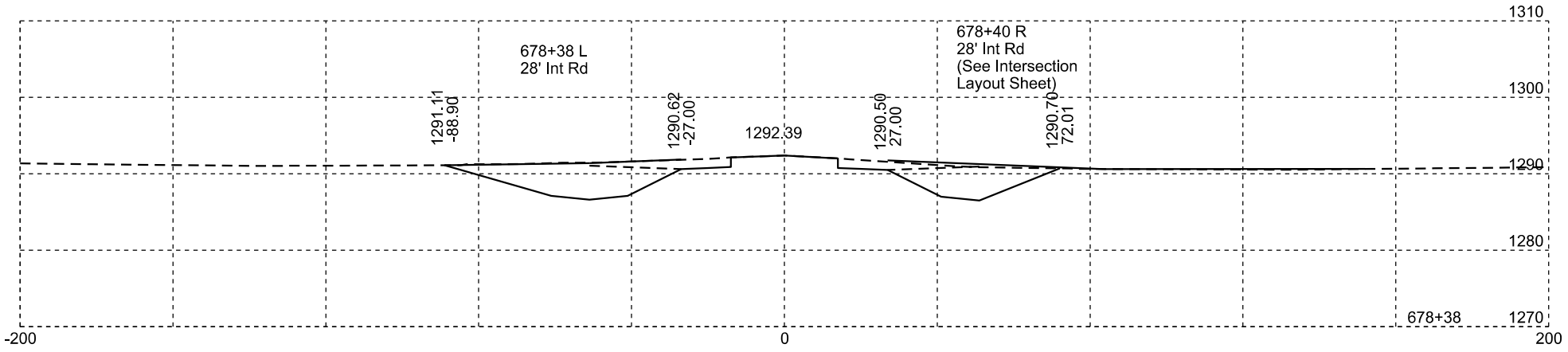

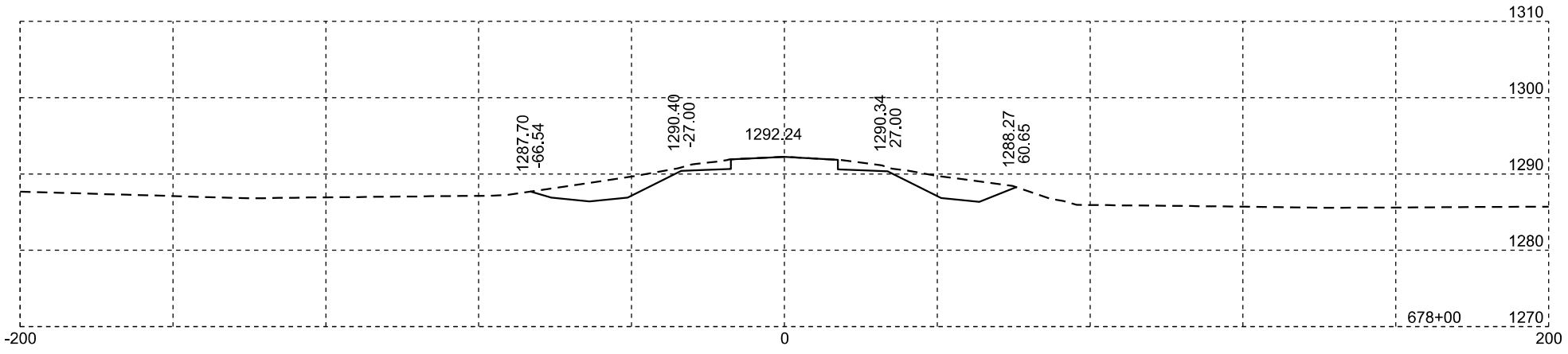

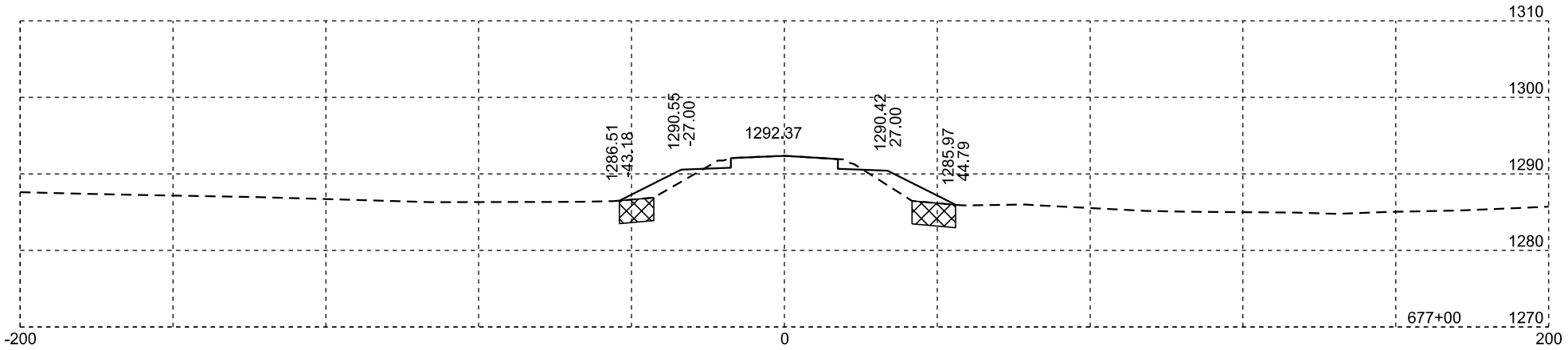

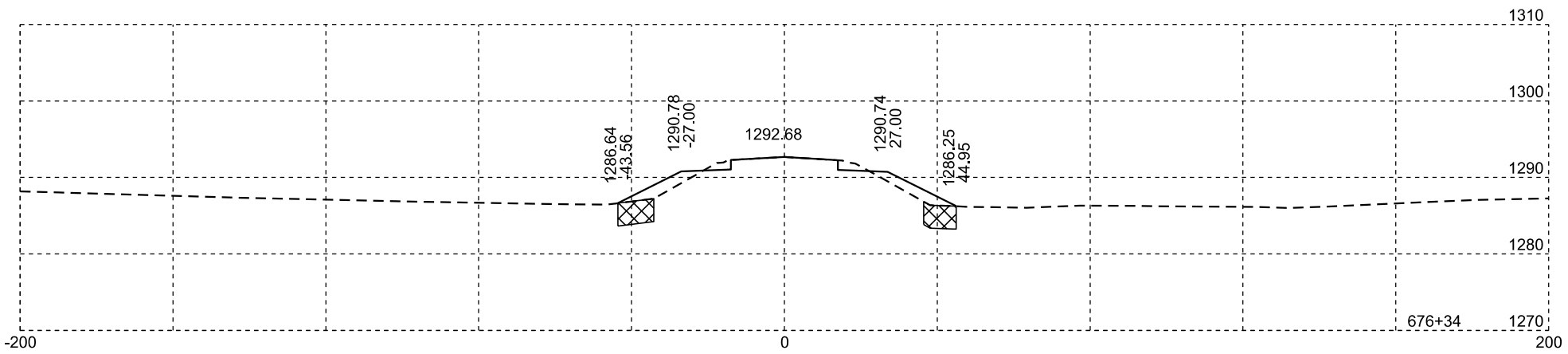

Muck

Rev 02/29/2024 DRM
Plotting Date: 02/29/2024

STATE OF SOUTH DAKOTA	PROJECT	SHEET NO.	TOTAL SHEETS
	P-PH-B-PT 0010(124)296	X113	X169

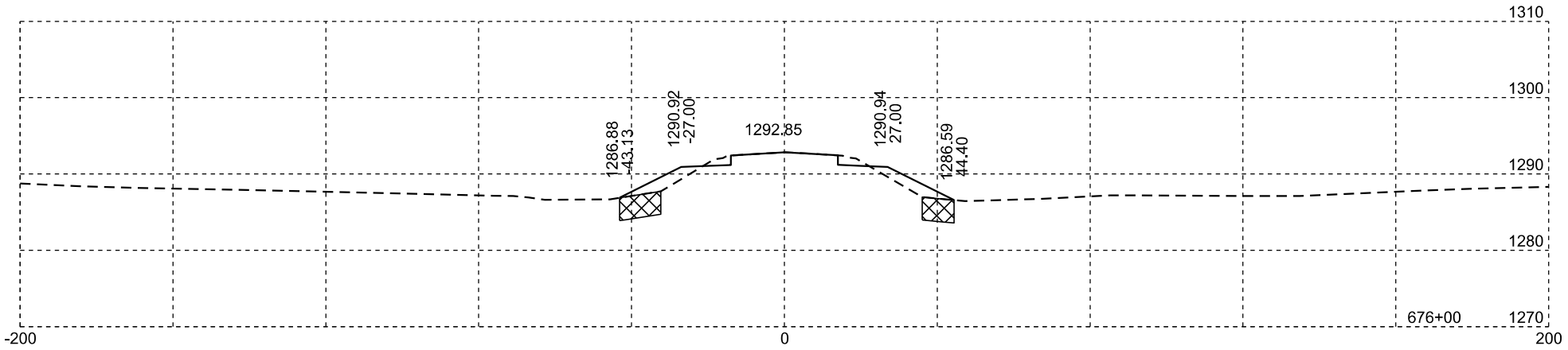

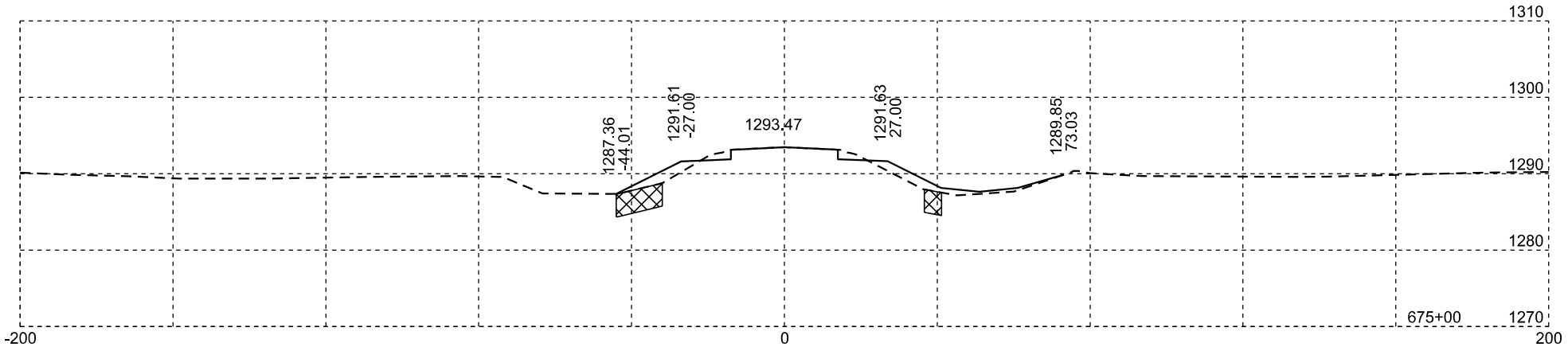

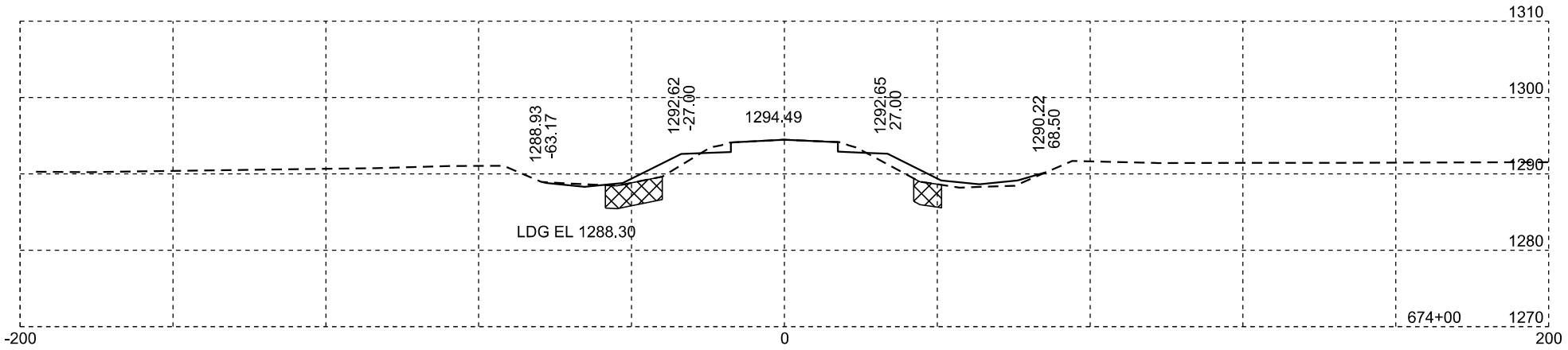

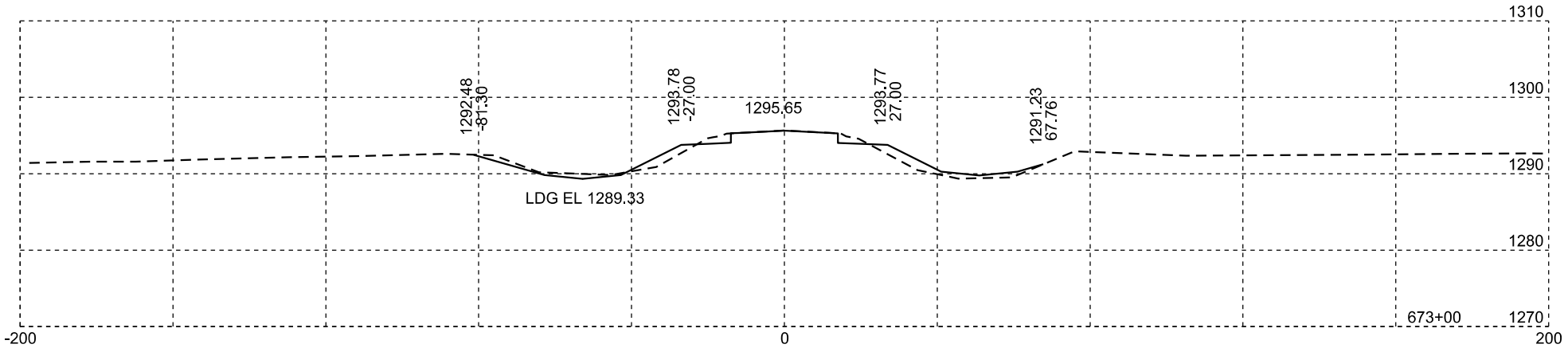

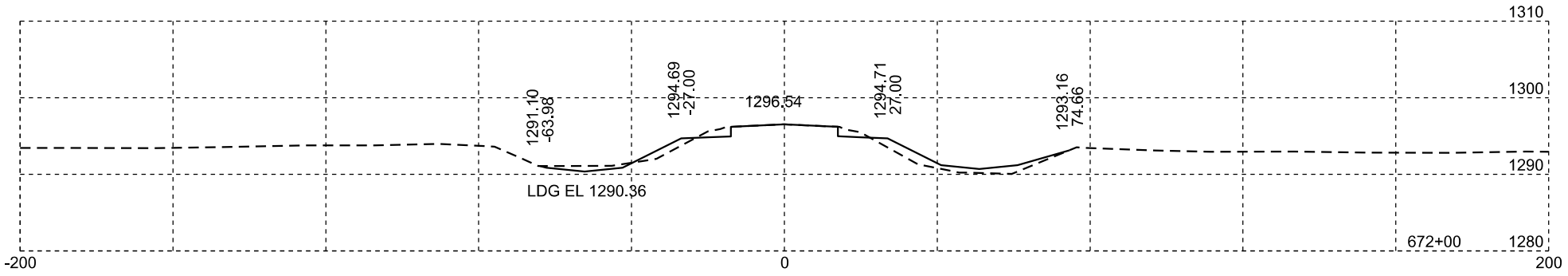

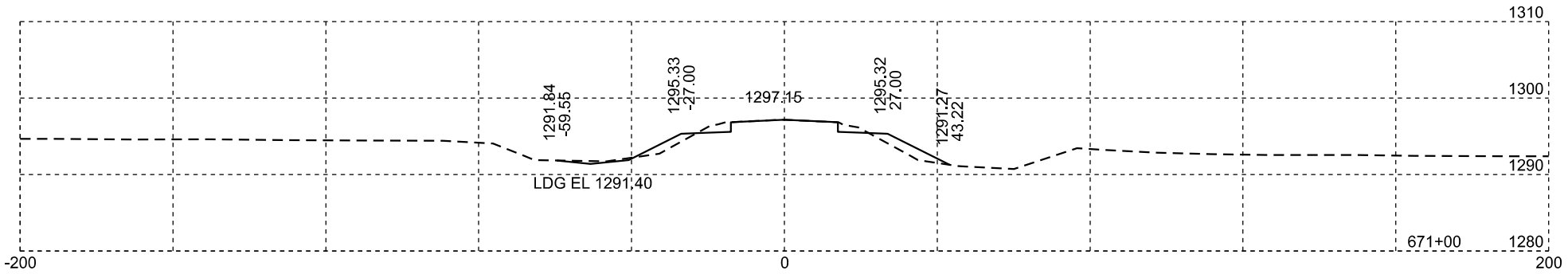

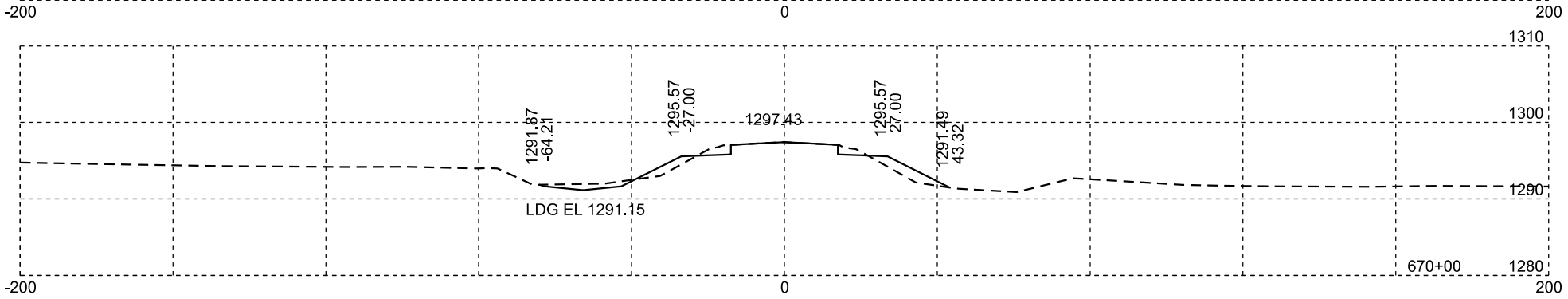

Muck

Plotting Date: 01/19/2024

STATE OF SOUTH DAKOTA	PROJECT	SHEET NO.	TOTAL SHEETS
	P-PH-B-PT 0010(124)296	X114	X169

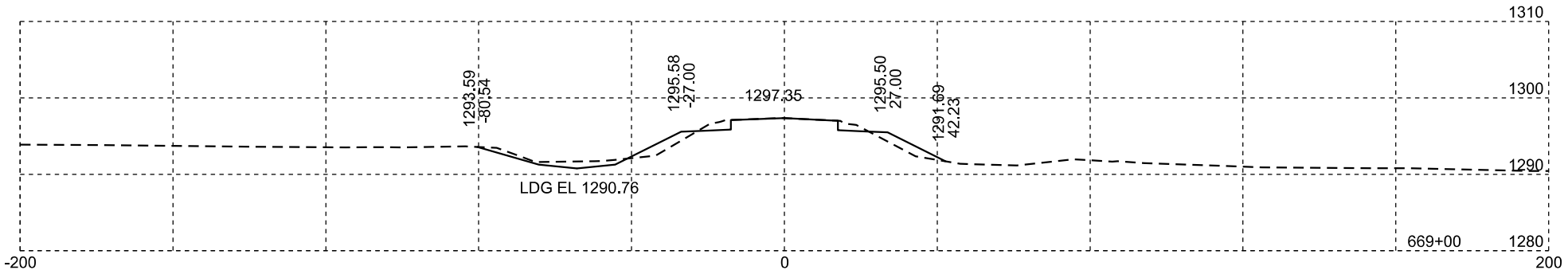

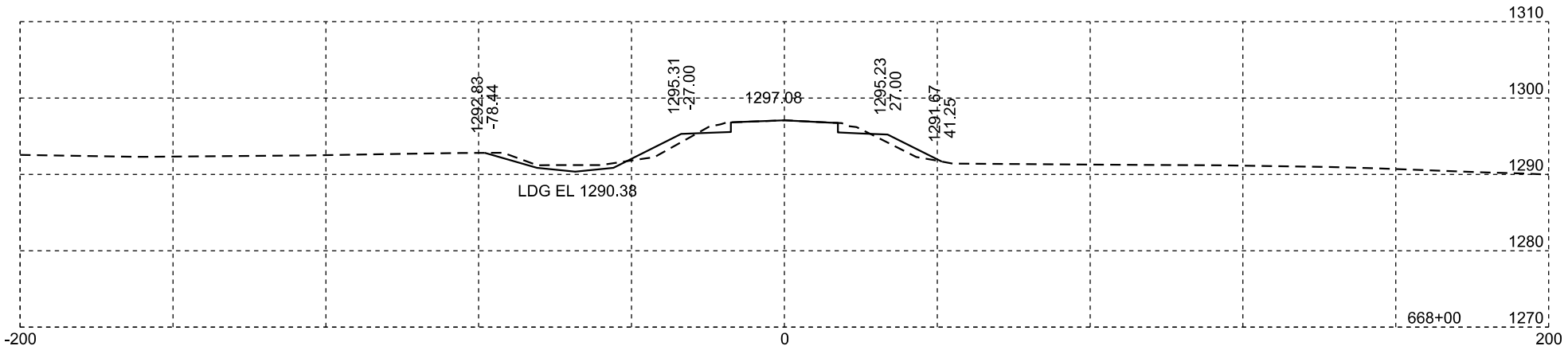

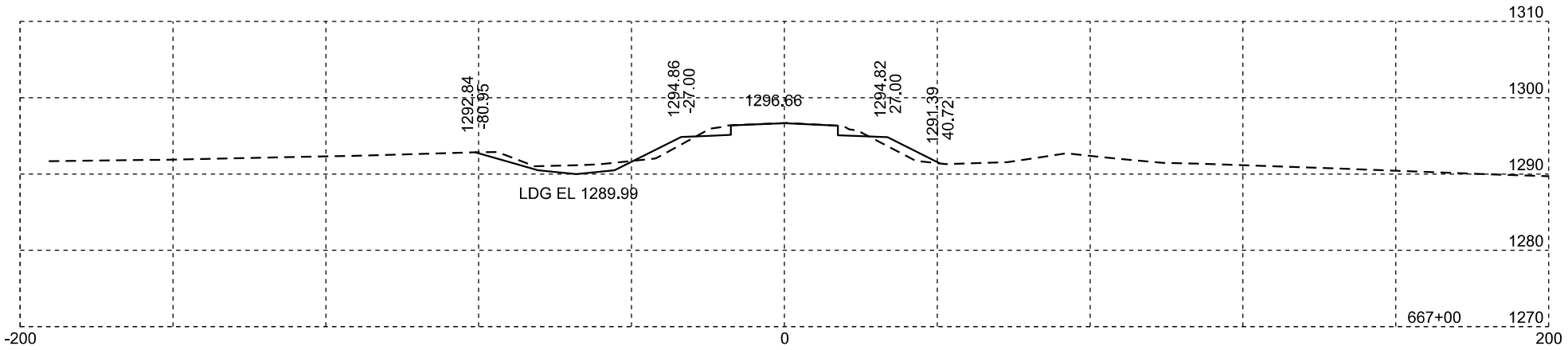

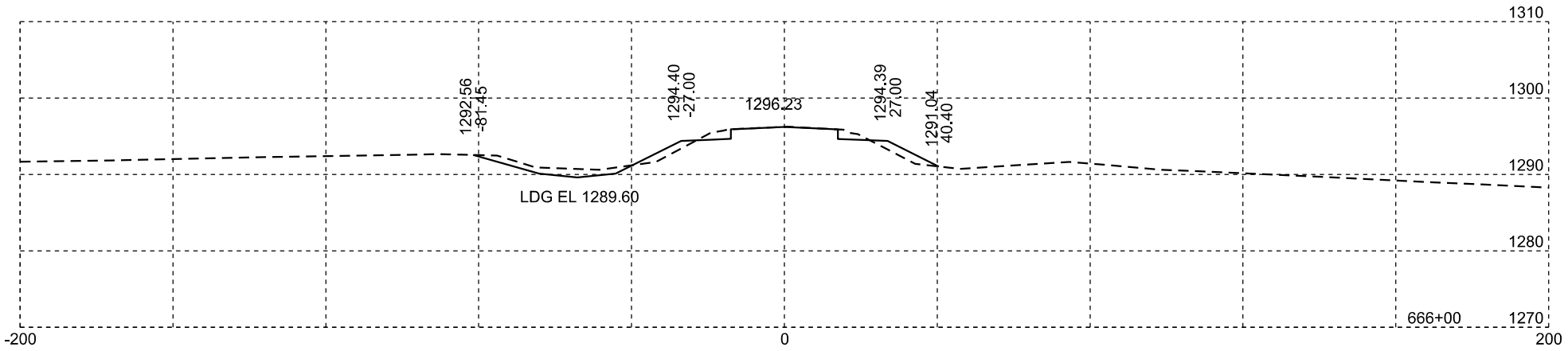

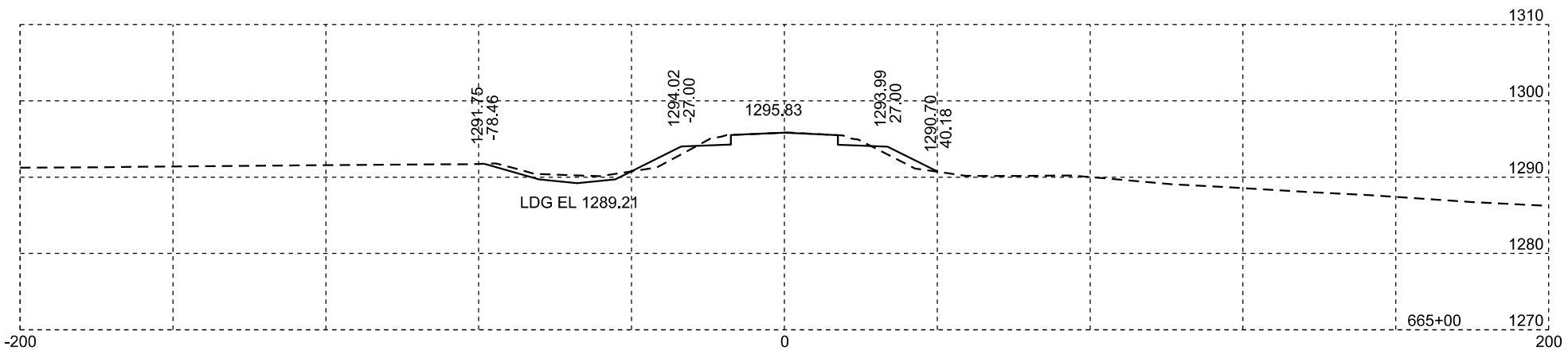

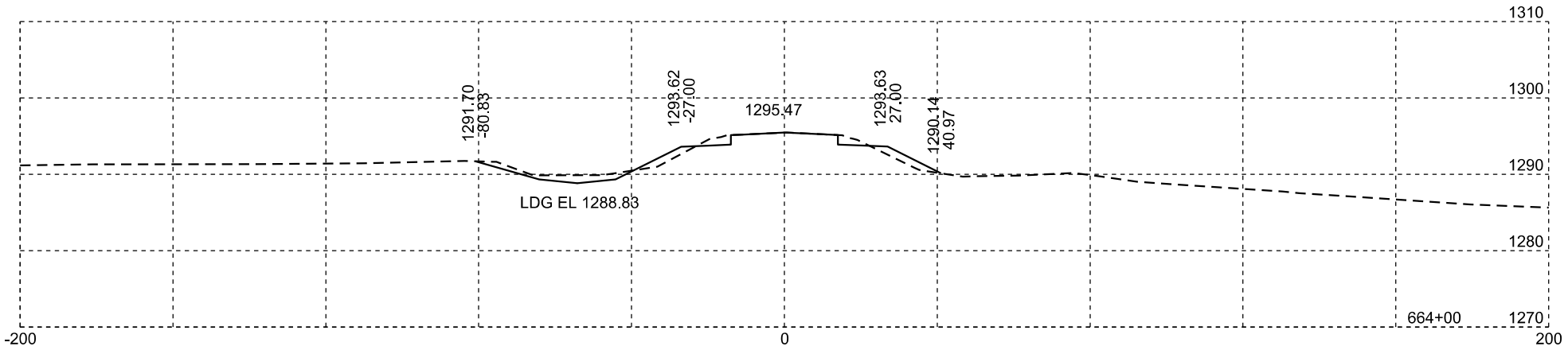

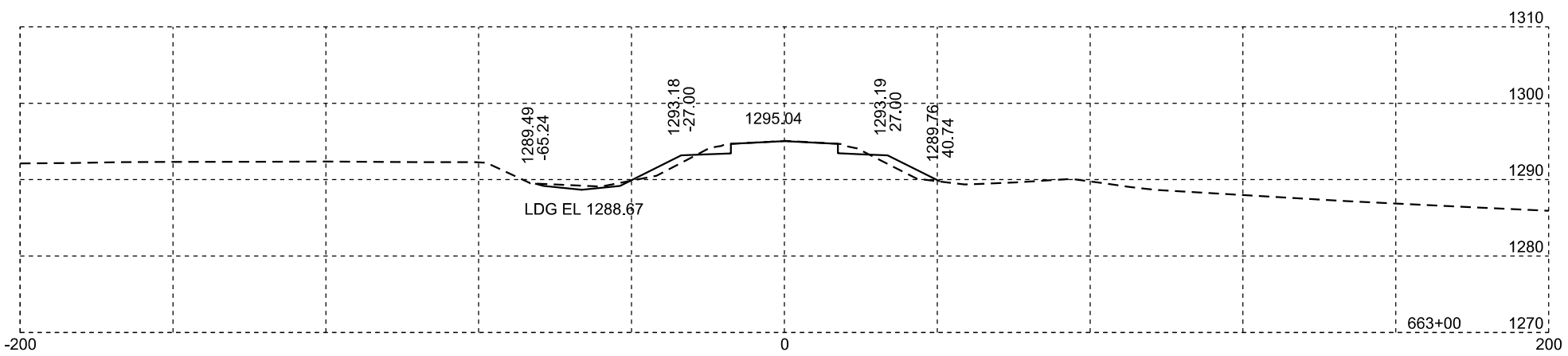

Plotting Date: 01/19/2024

STATE OF SOUTH DAKOTA	PROJECT	SHEET NO.	TOTAL SHEETS
	P-PH-B-PT 0010(124)296	X115	X169

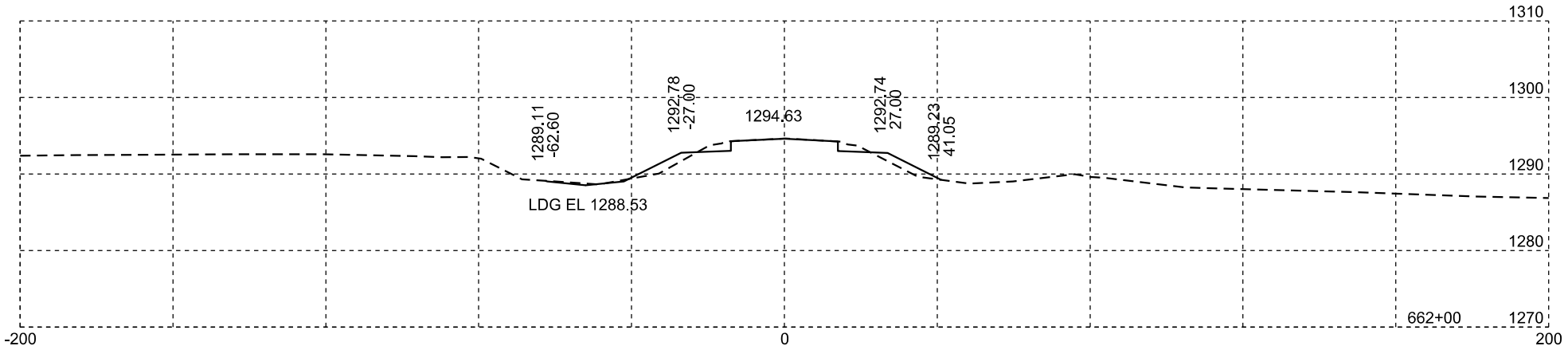

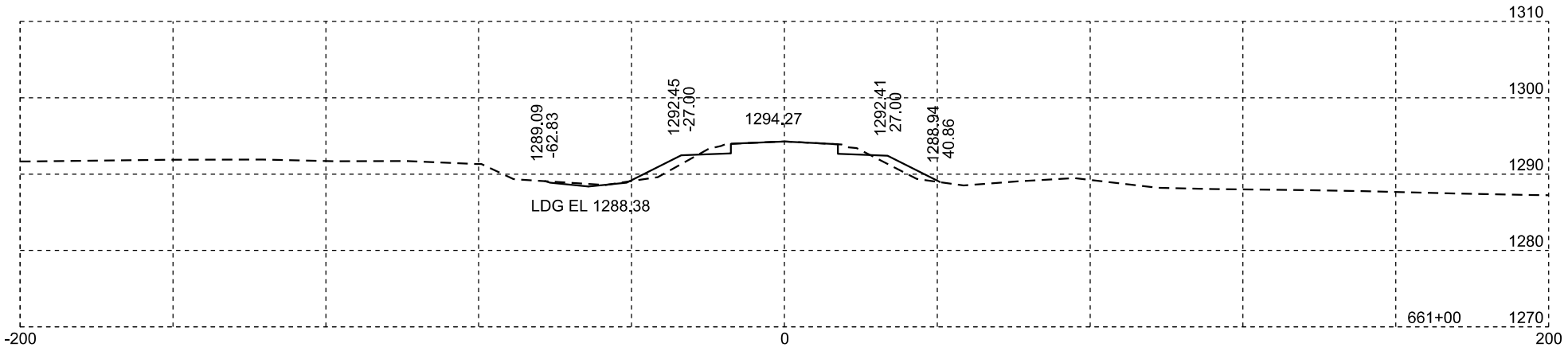

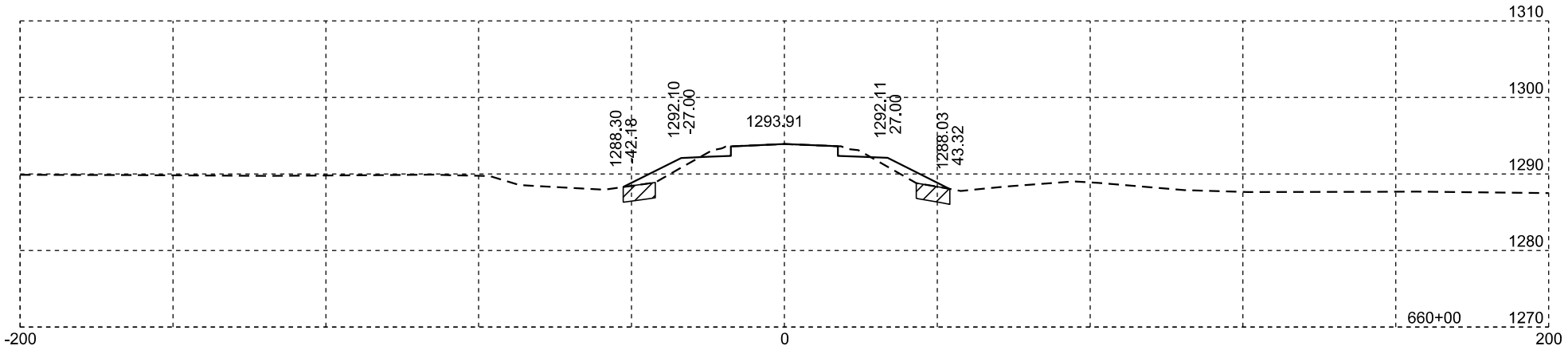

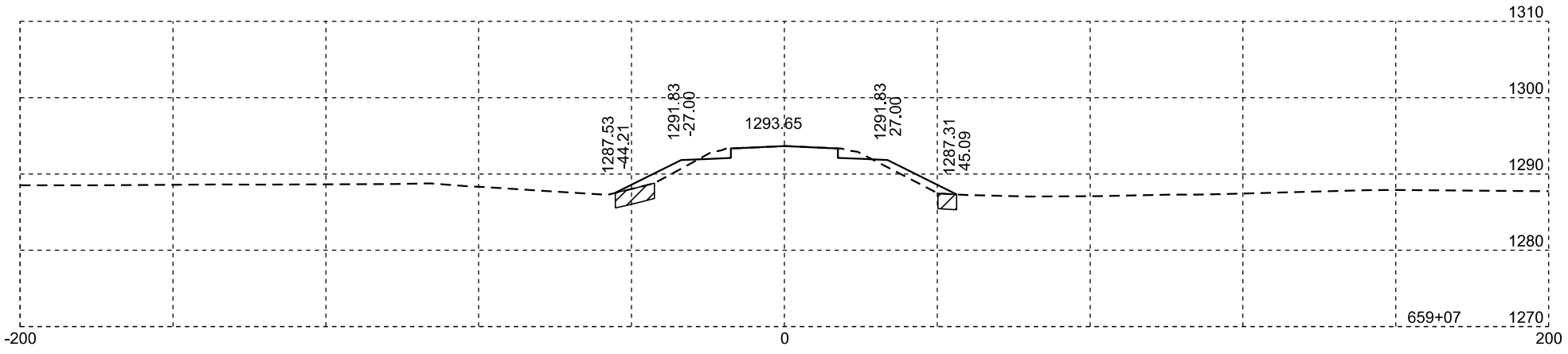

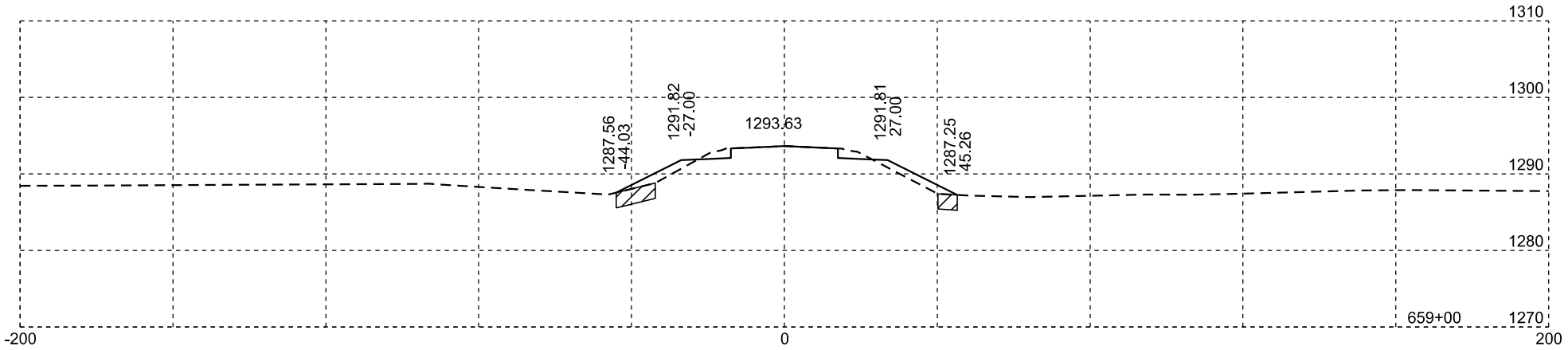

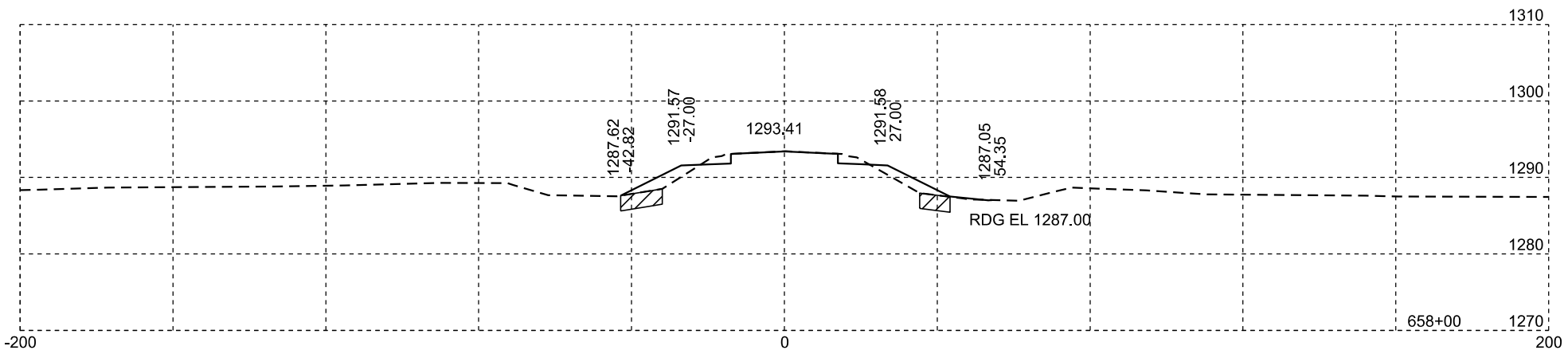

Unstable

Plotting Date: 01/19/2024

STATE OF SOUTH DAKOTA	PROJECT	SHEET NO.	TOTAL SHEETS
	P-PH-B-PT 0010(124)296	X116	X169

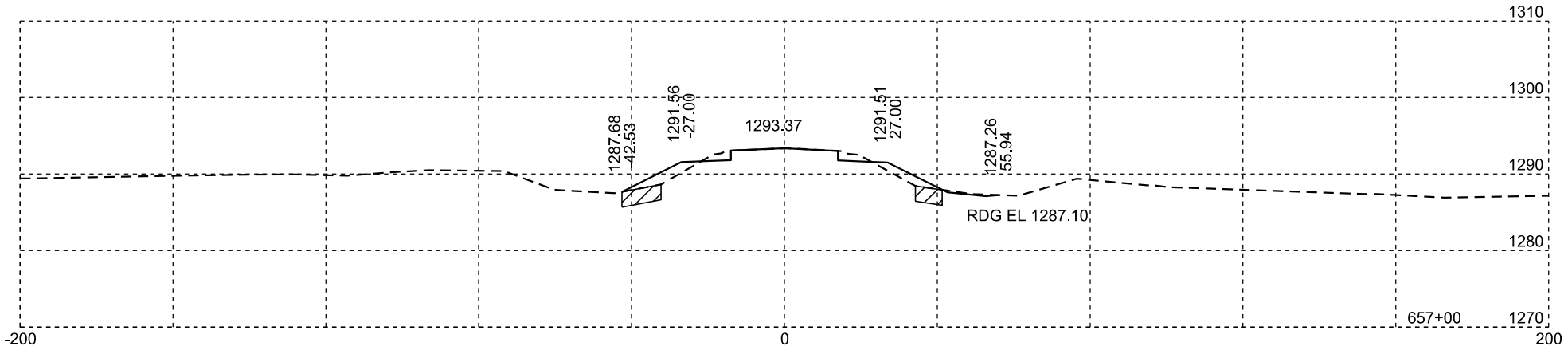

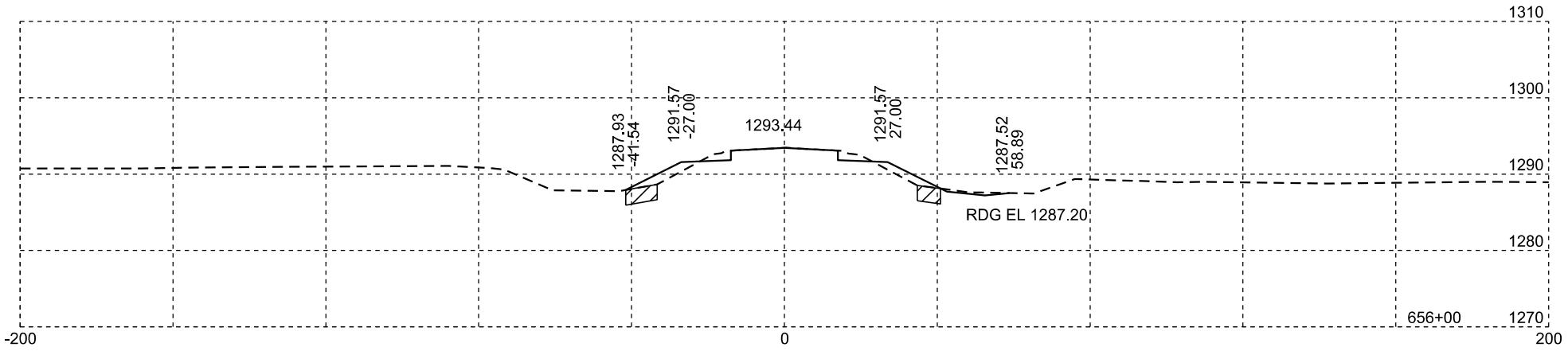

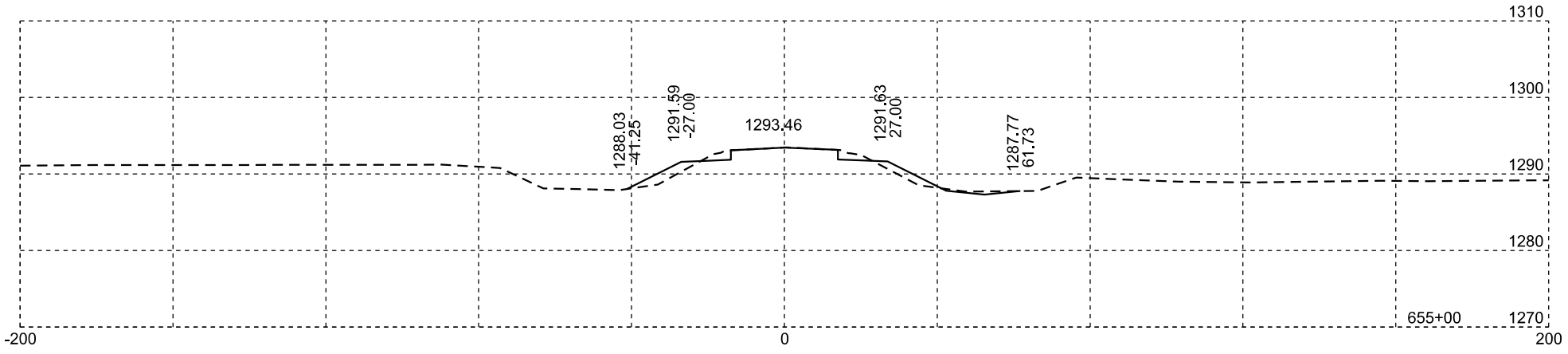

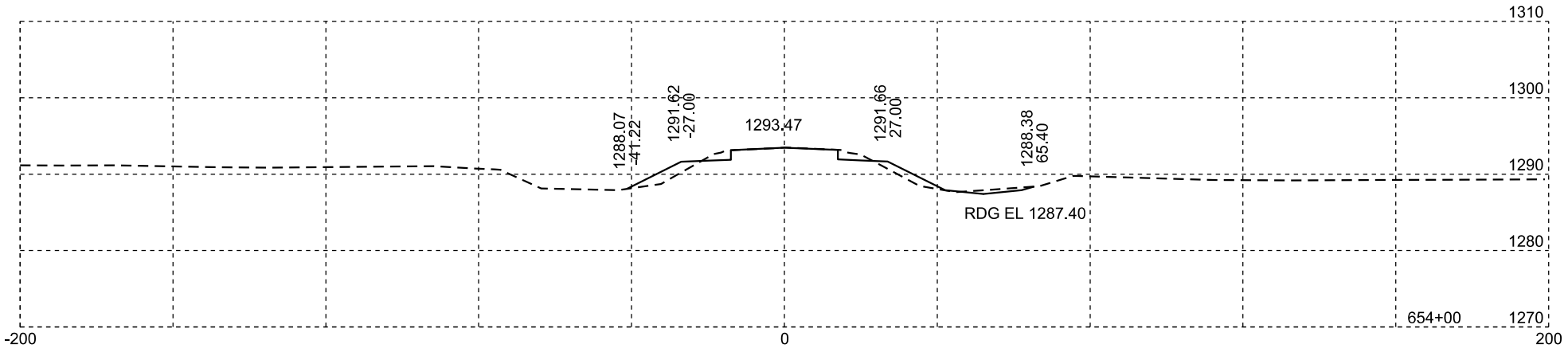

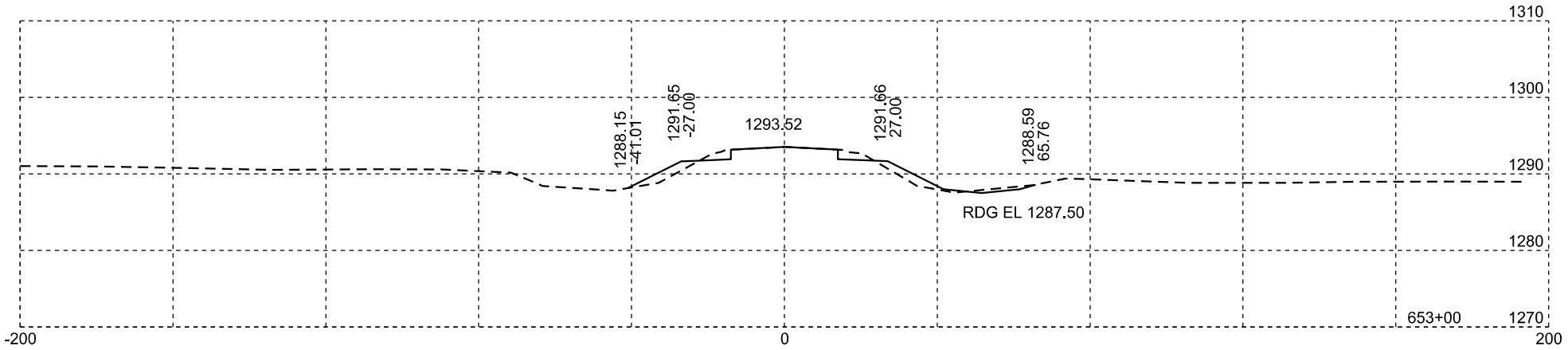

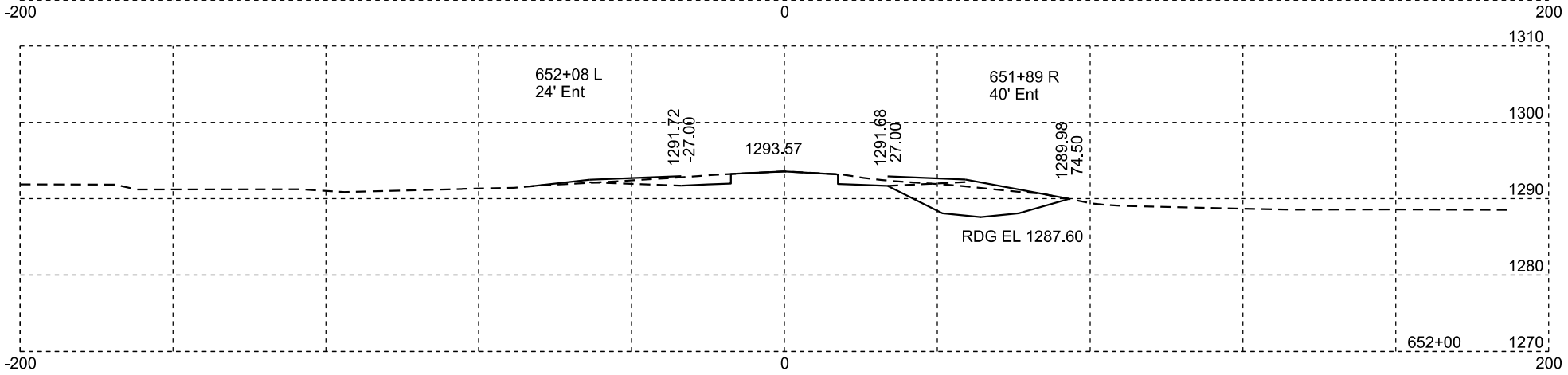

Unstable

Rev 02/29/2024 DRM
Plotting Date: 02/29/2024

STATE OF SOUTH DAKOTA	PROJECT	SHEET NO.	TOTAL SHEETS
	P-PH-B-PT 0010(124)296	X117	X169

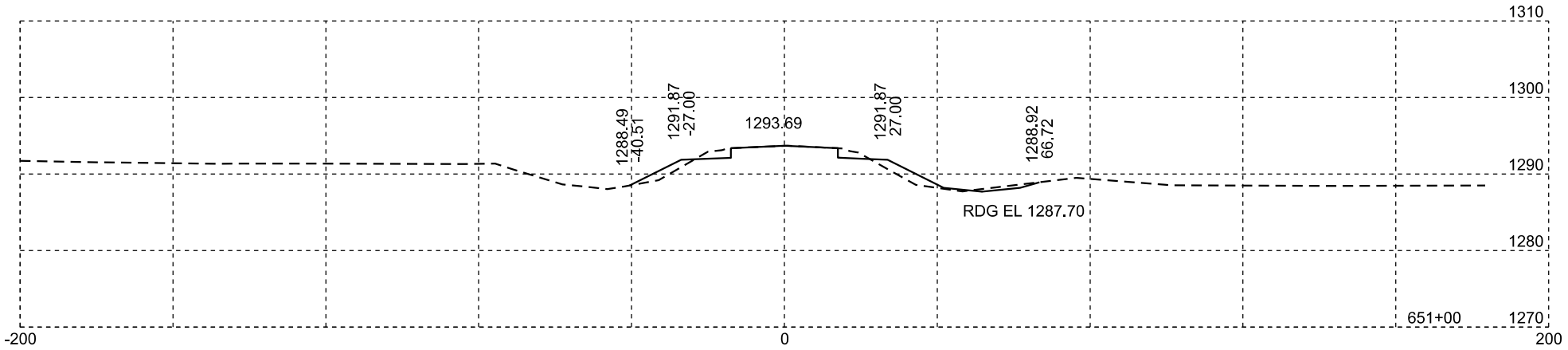

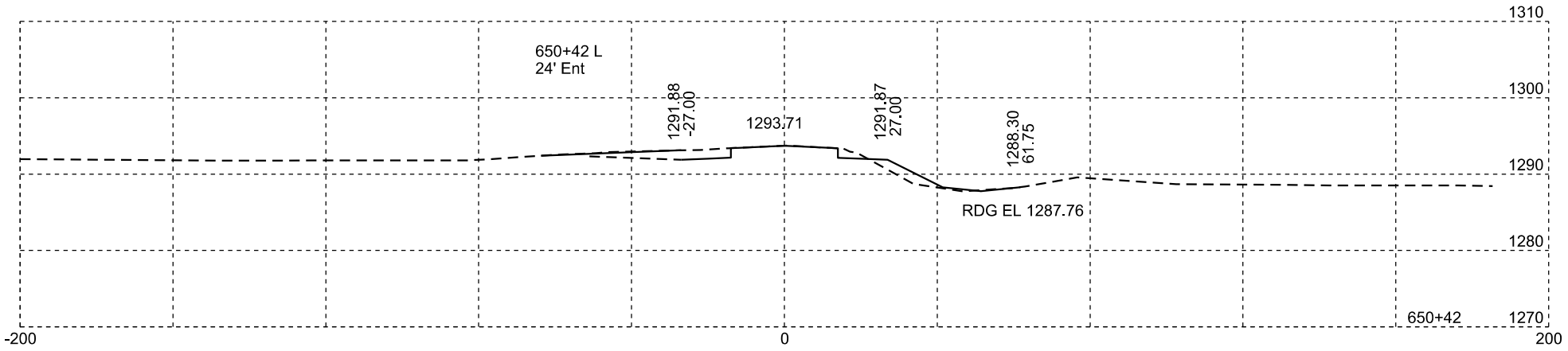

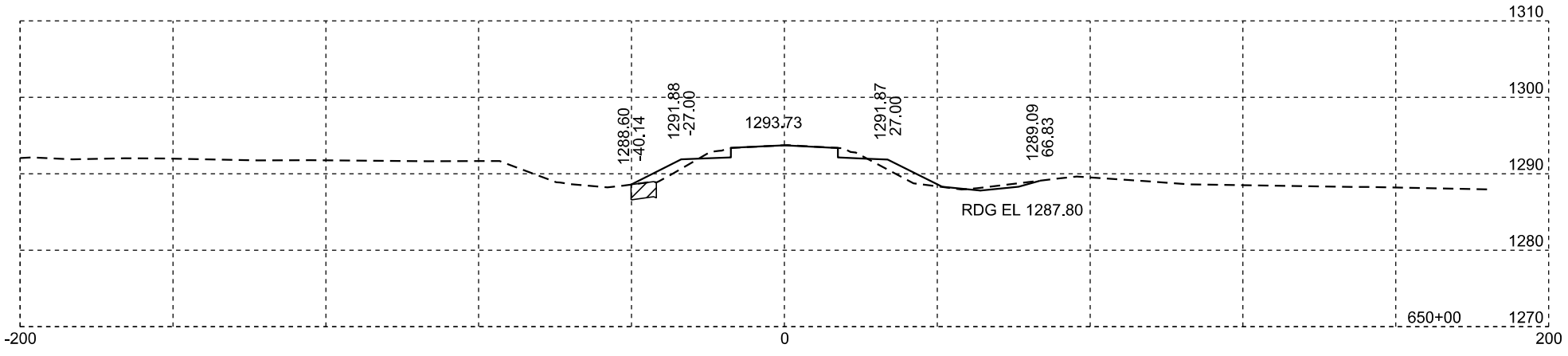

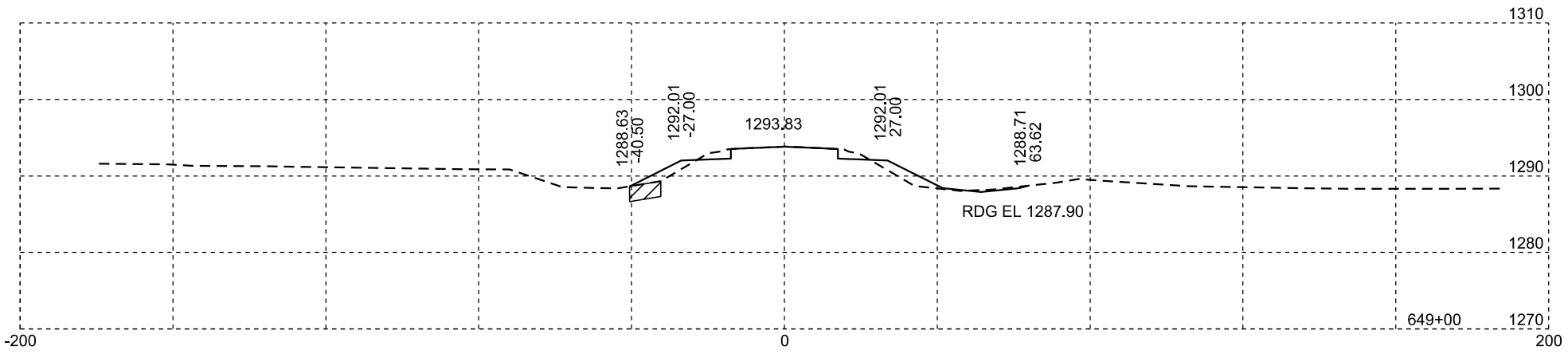

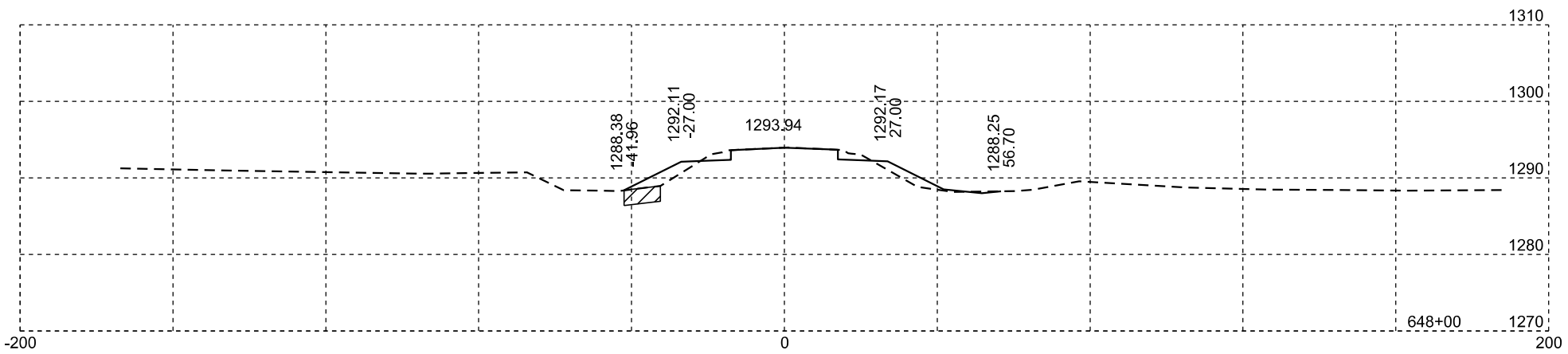

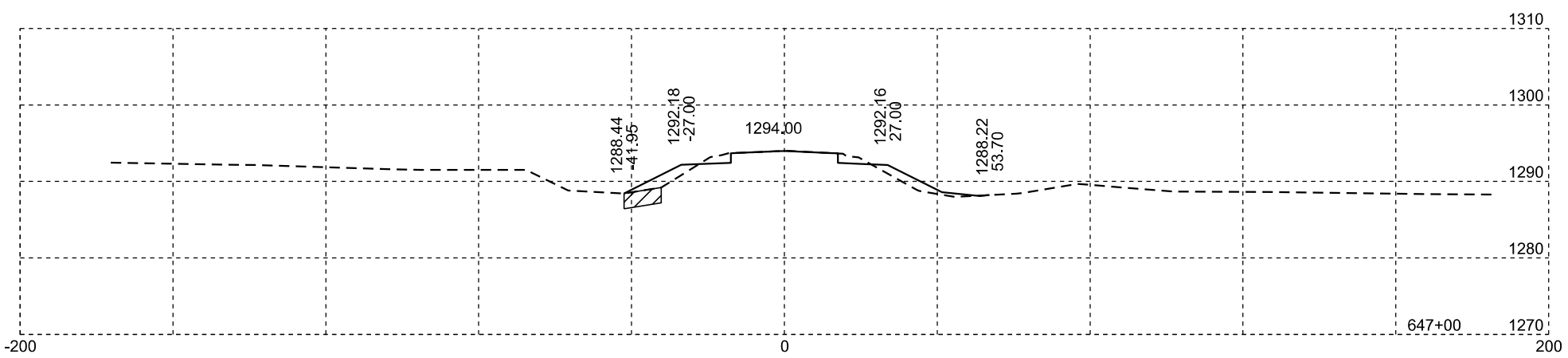

Unstable

Rev 02/29/2024 DRM
Plotting Date: 02/29/2024

STATE OF SOUTH DAKOTA	PROJECT	SHEET NO.	TOTAL SHEETS
	P-PH-B-PT 0010(124)296	X118	X169

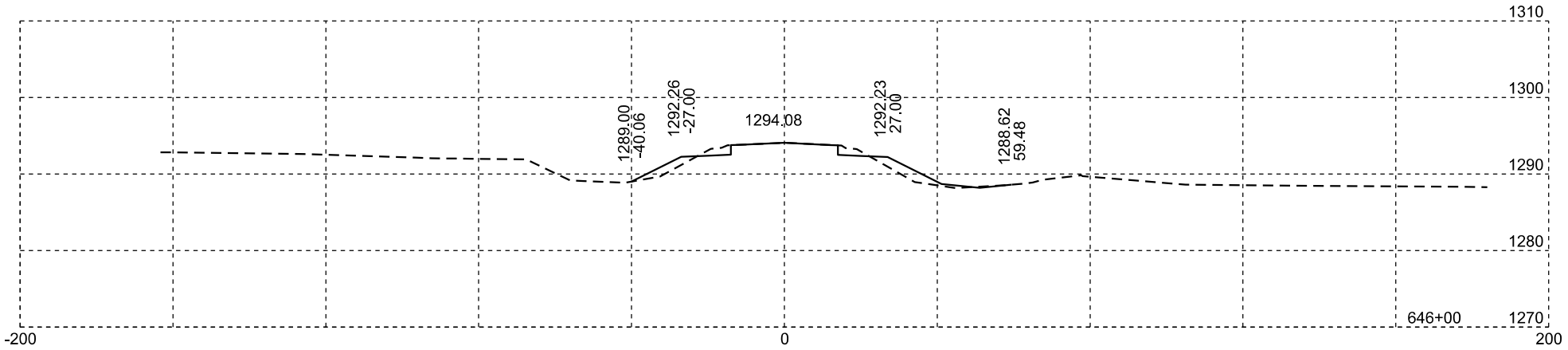

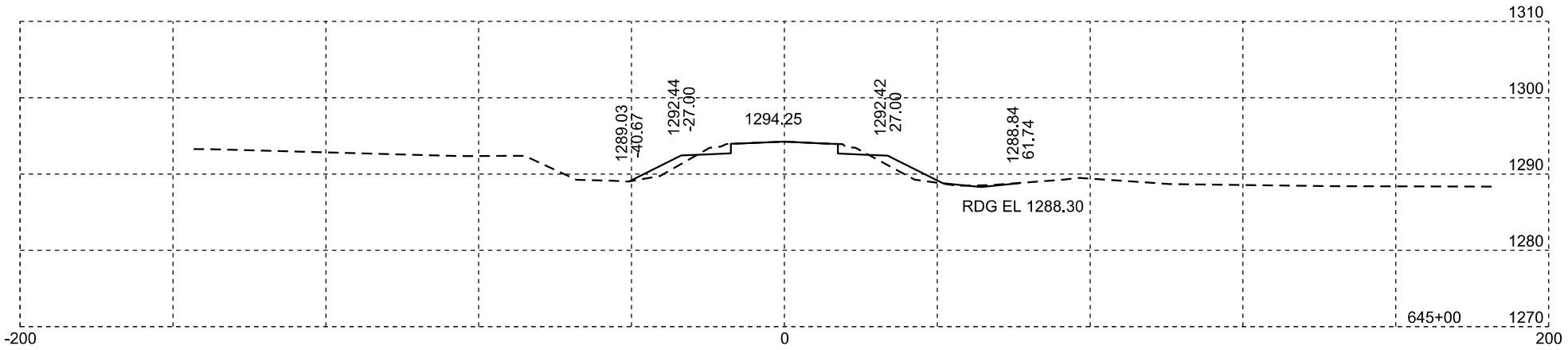

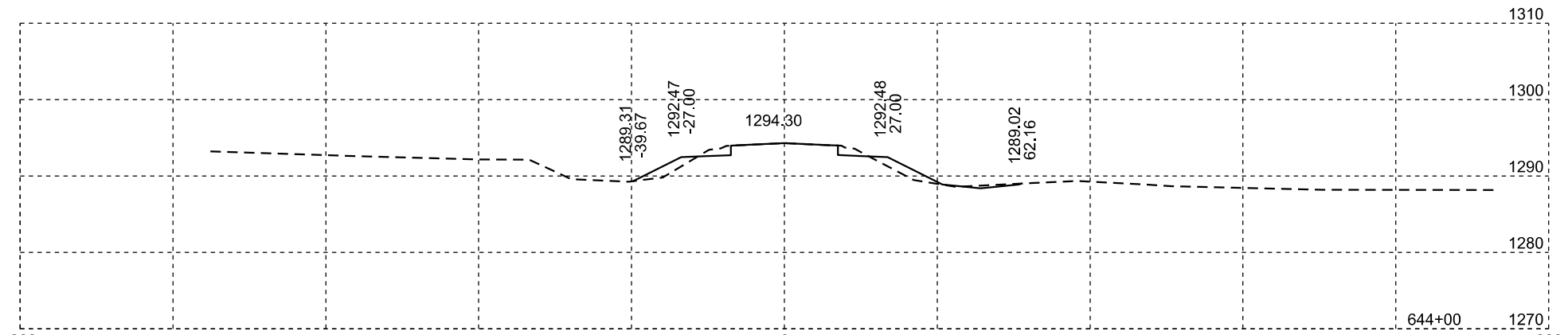

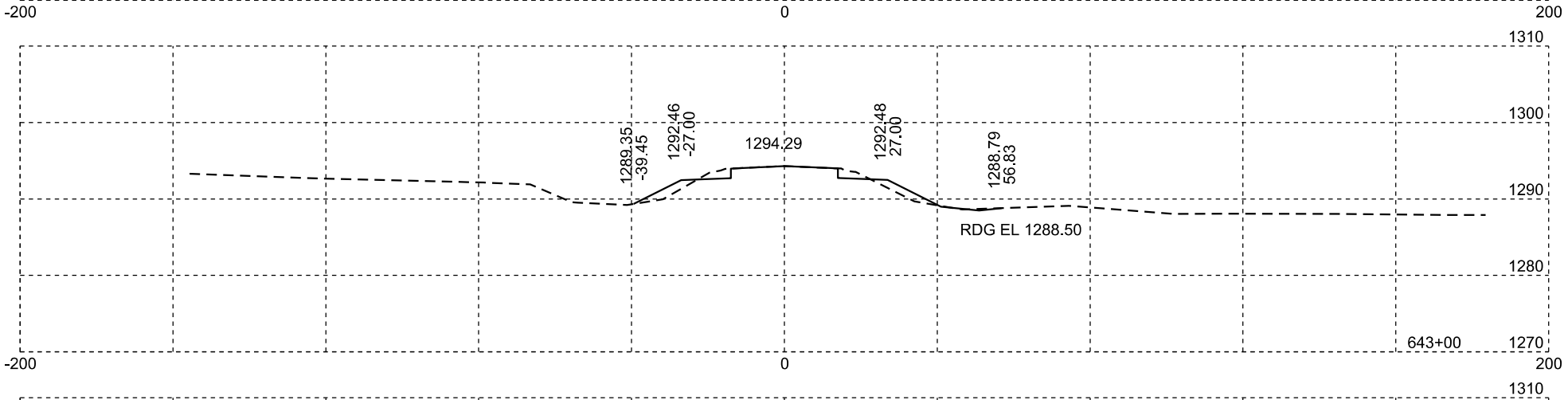

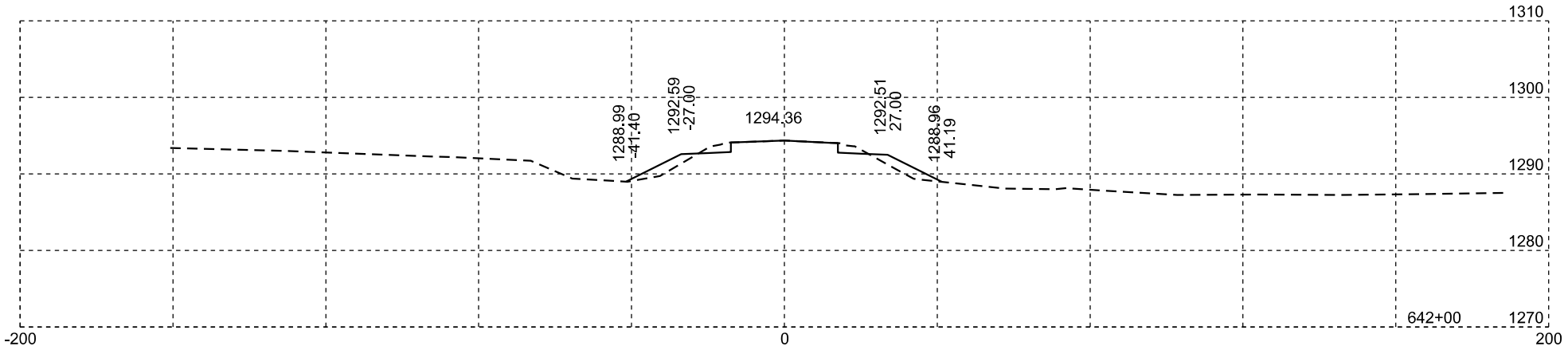

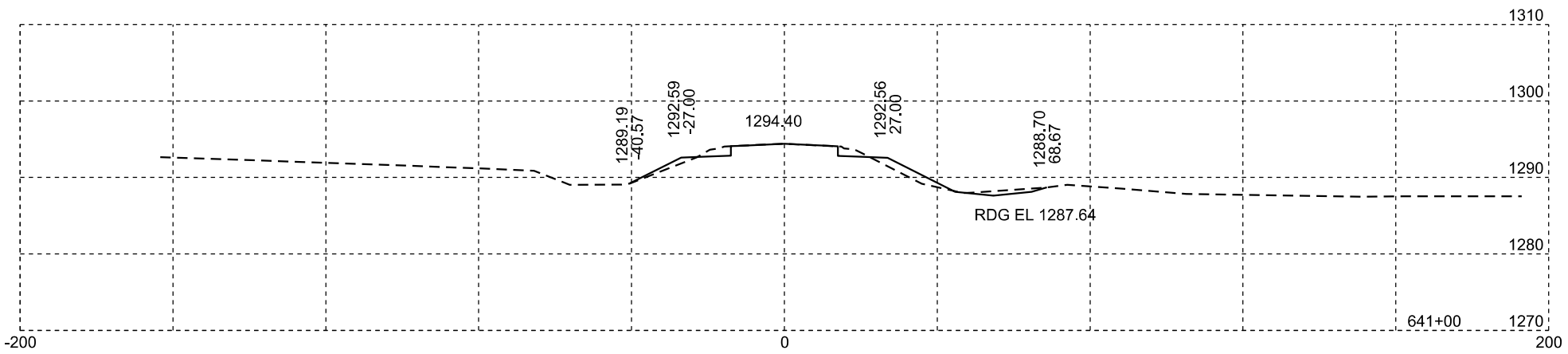

Rev 02/29/2024 DRM
Plotting Date: 02/29/2024

STATE OF SOUTH DAKOTA	PROJECT	SHEET NO.	TOTAL SHEETS
	P-PH-B-PT 0010(124)296	X119	X169

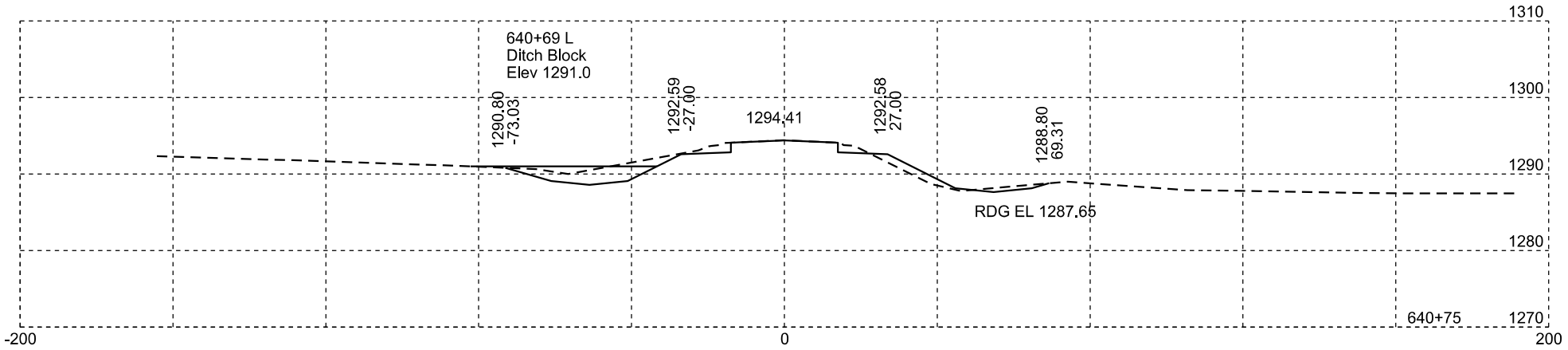

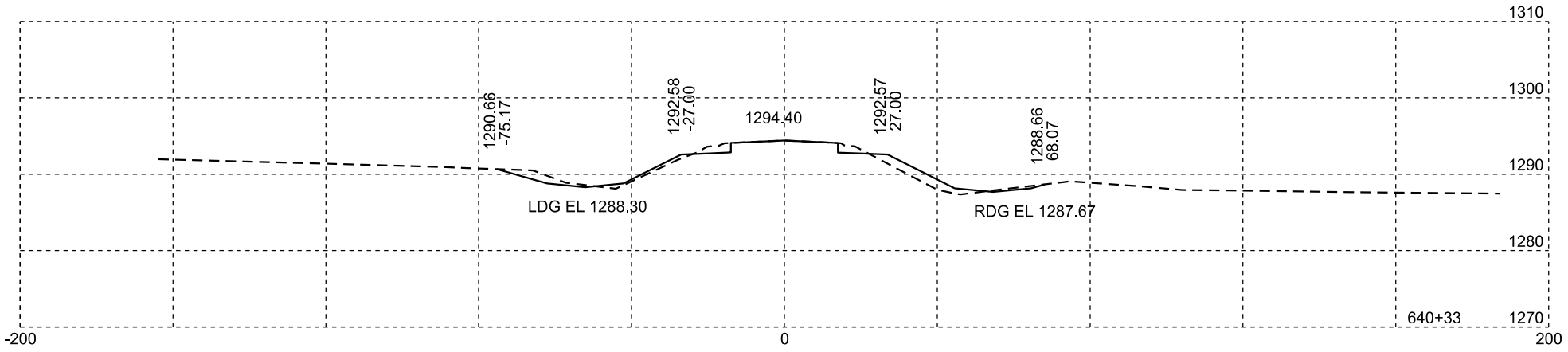

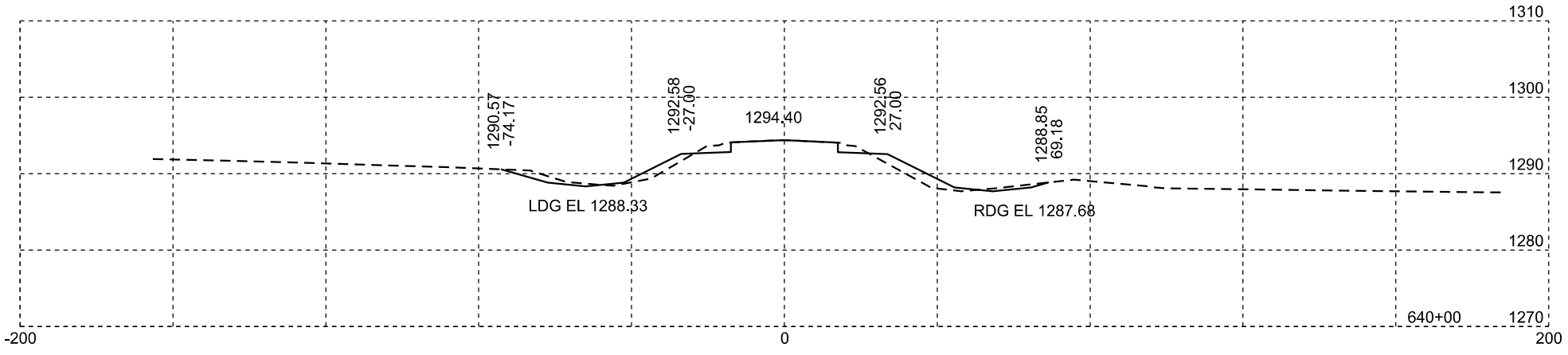

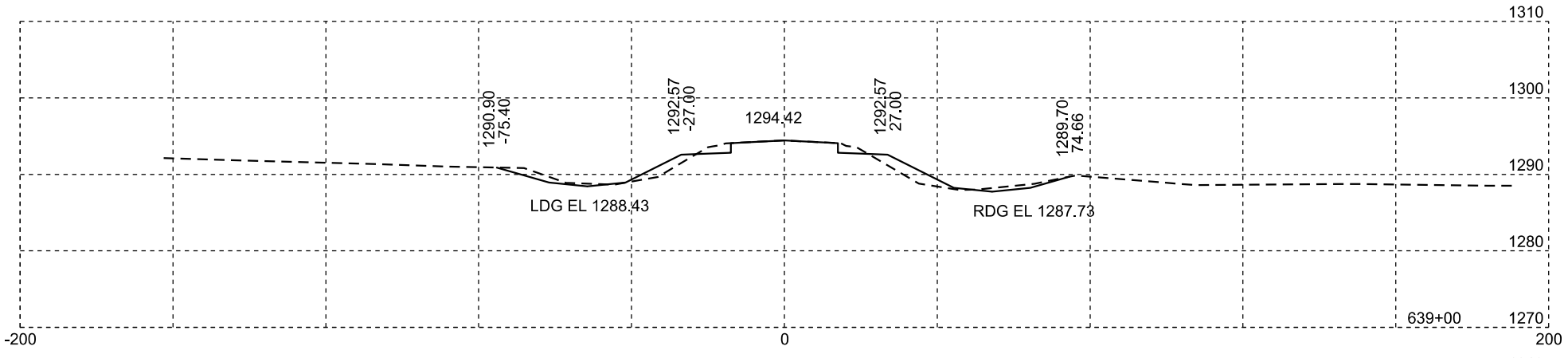

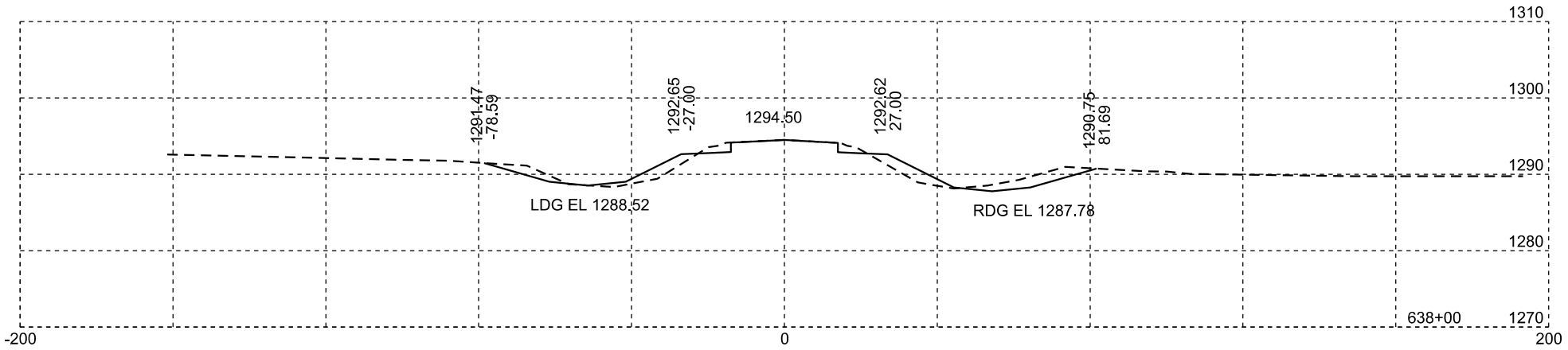

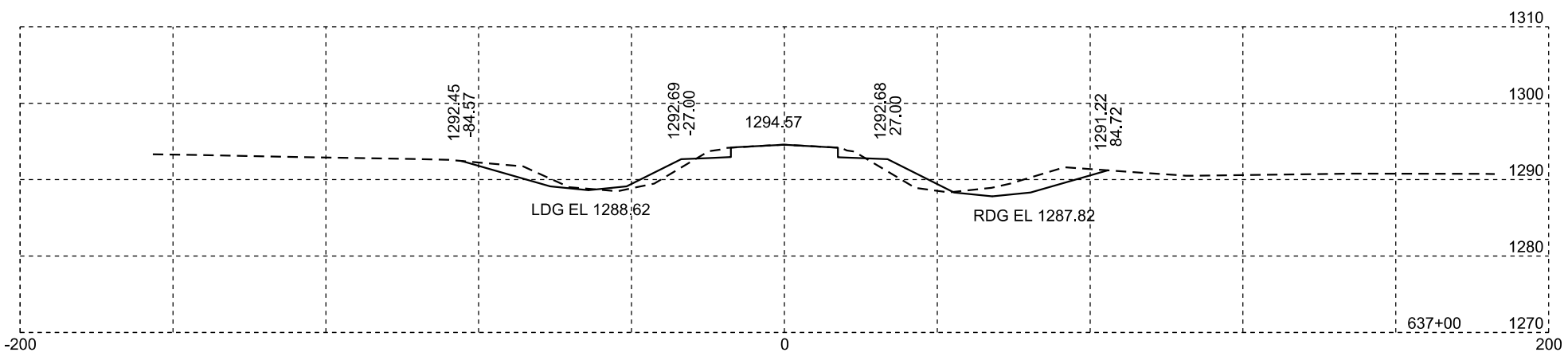

Plotting Date: 01/19/2024

STATE OF SOUTH DAKOTA	PROJECT	SHEET NO.	TOTAL SHEETS
	P-PH-B-PT 0010(124)296	X120	X169

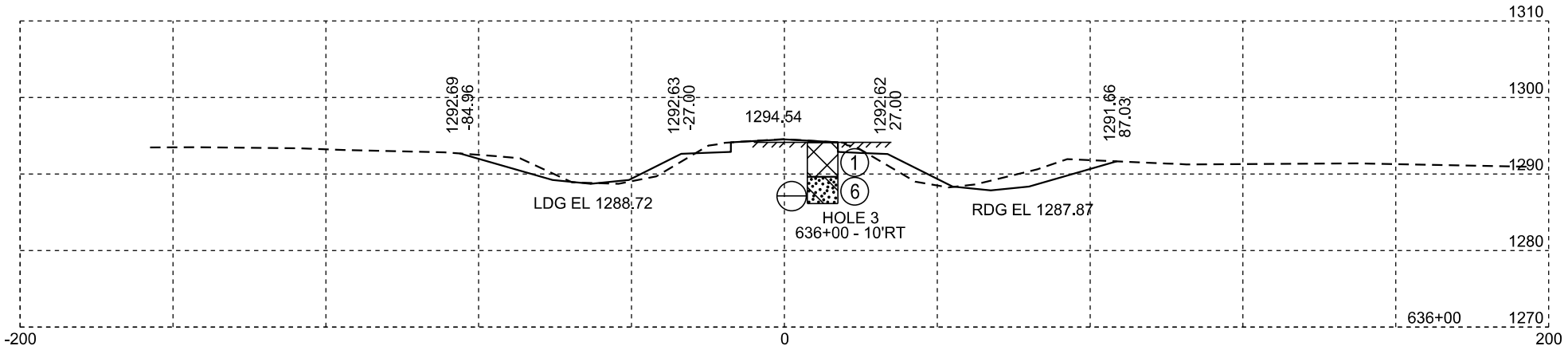

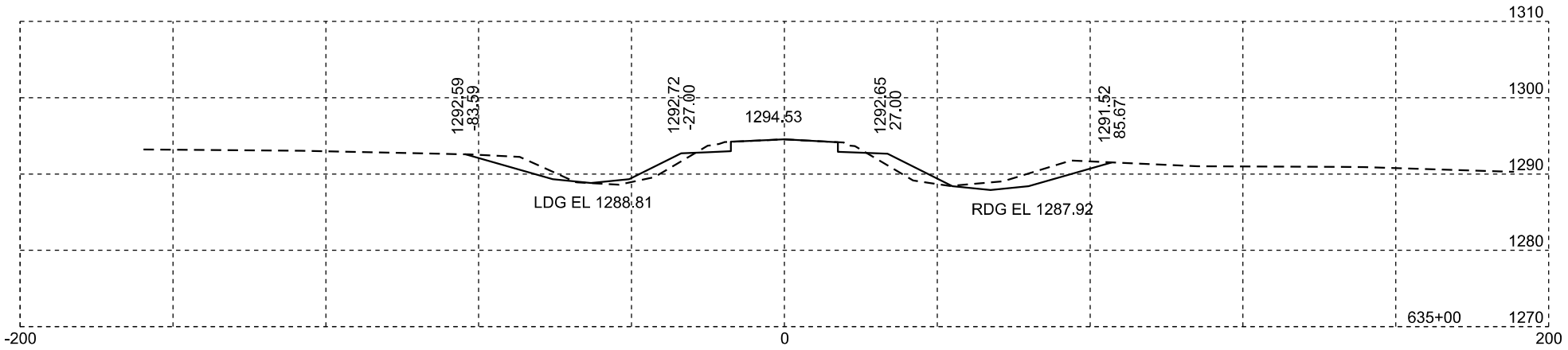

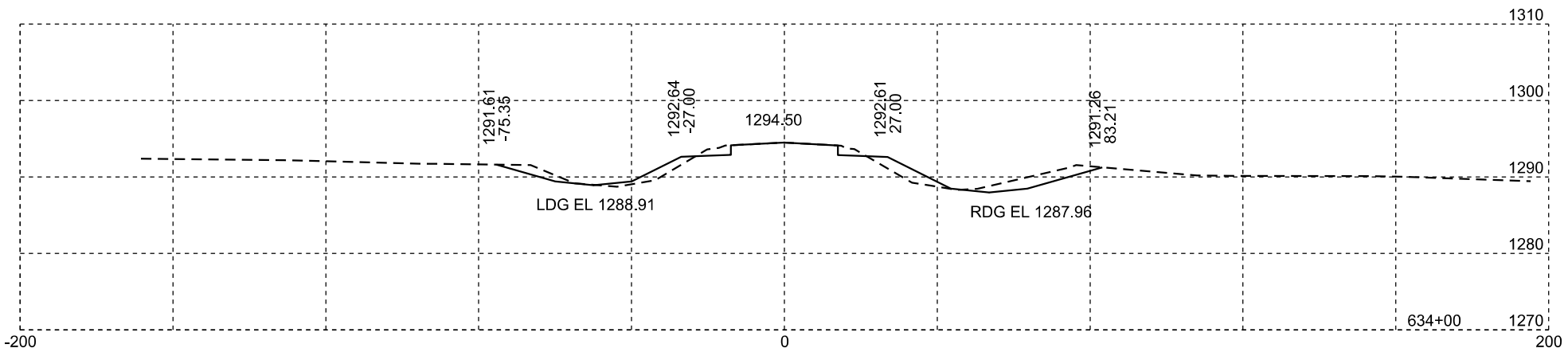

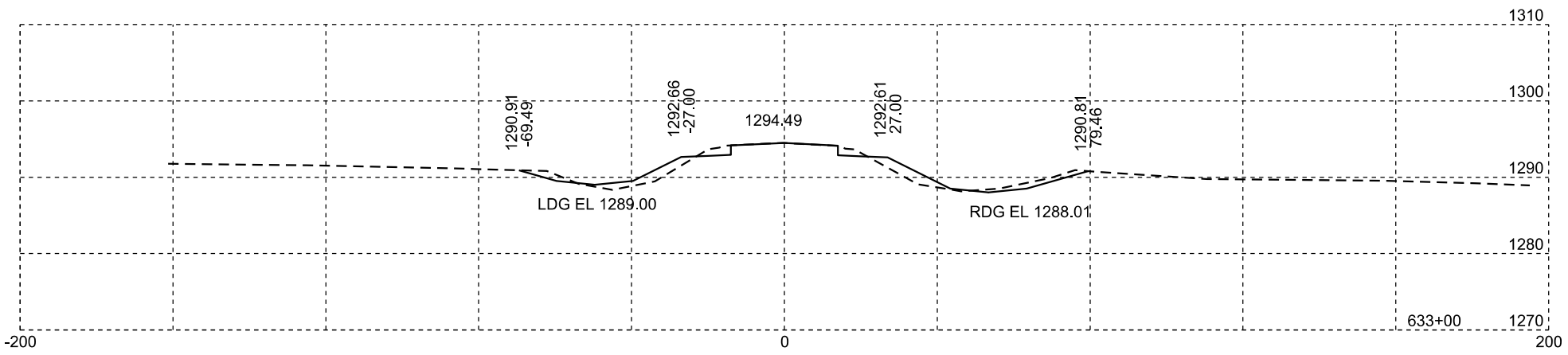

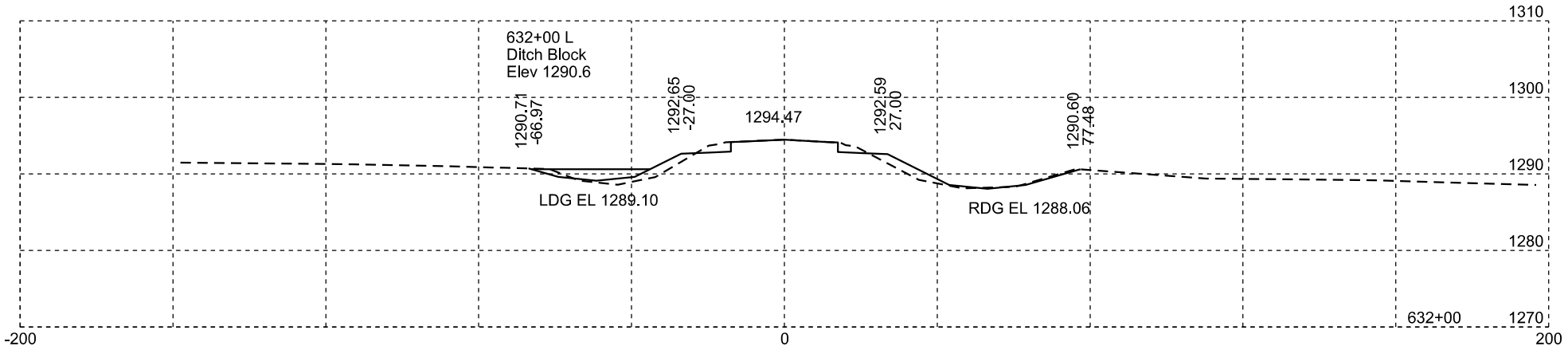

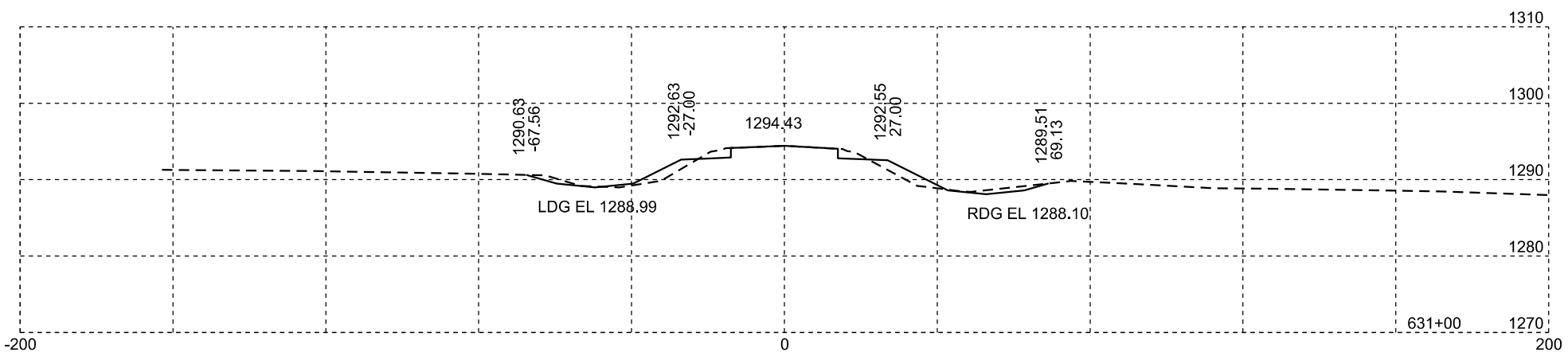

Plotting Date: 01/19/2024

STATE OF SOUTH DAKOTA	PROJECT	SHEET NO.	TOTAL SHEETS
	P-PH-B-PT 0010(124)296	X121	X169

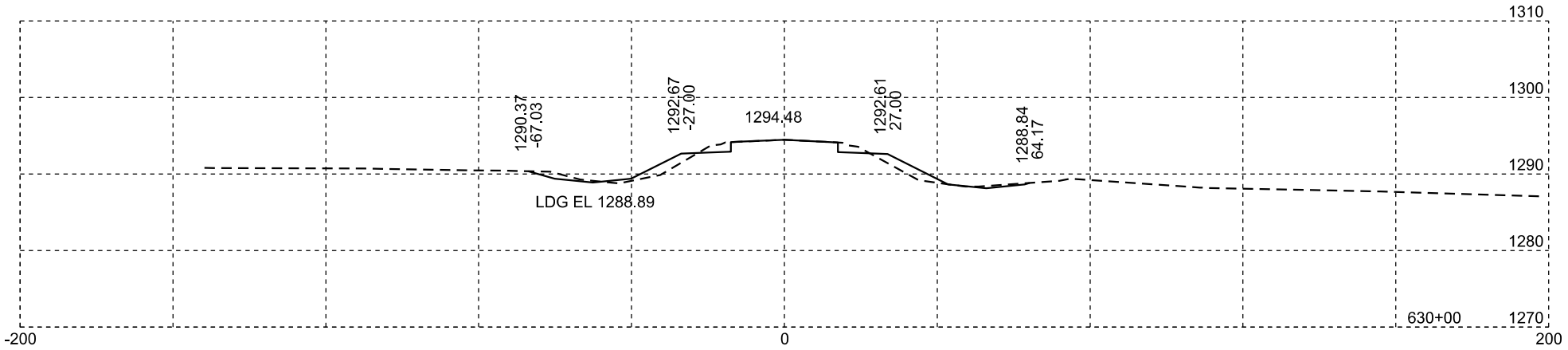

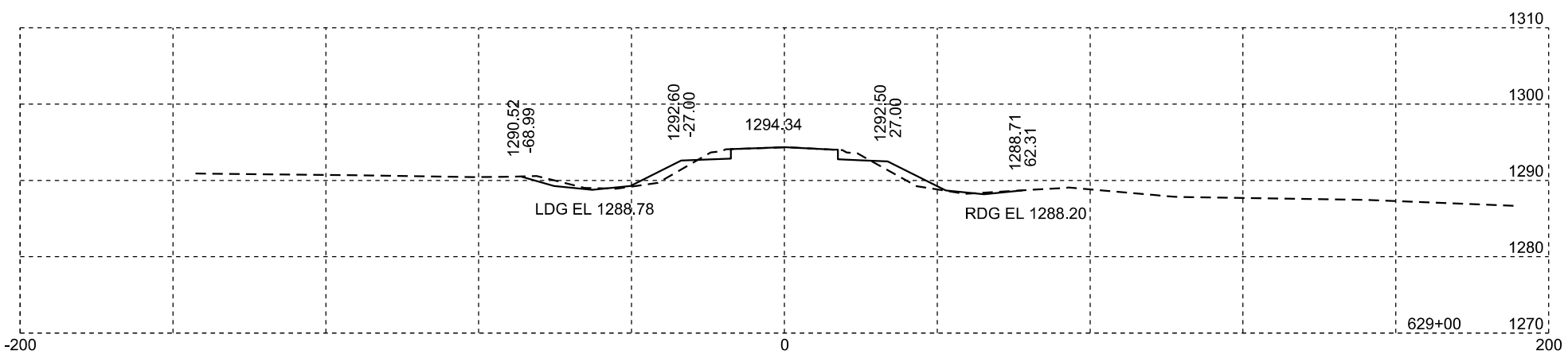

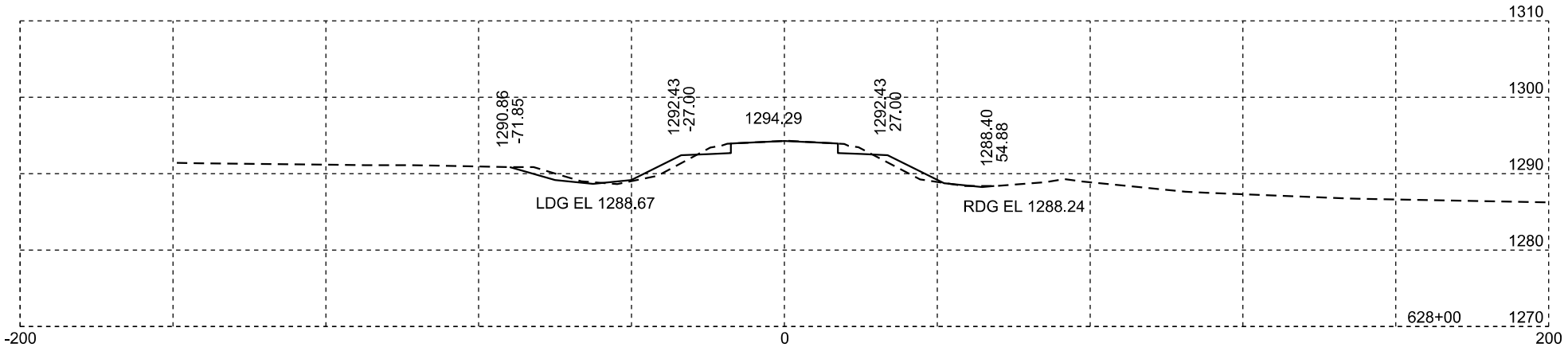

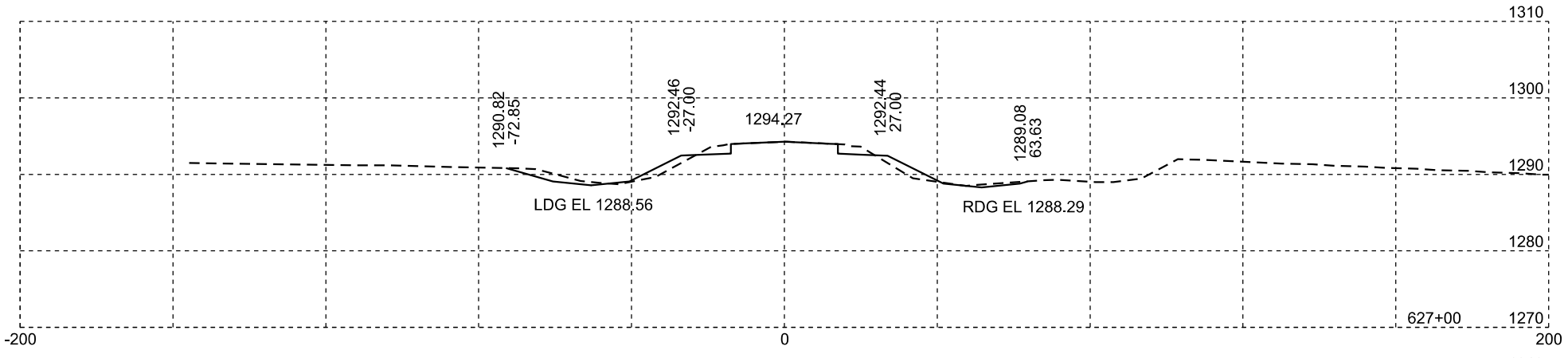

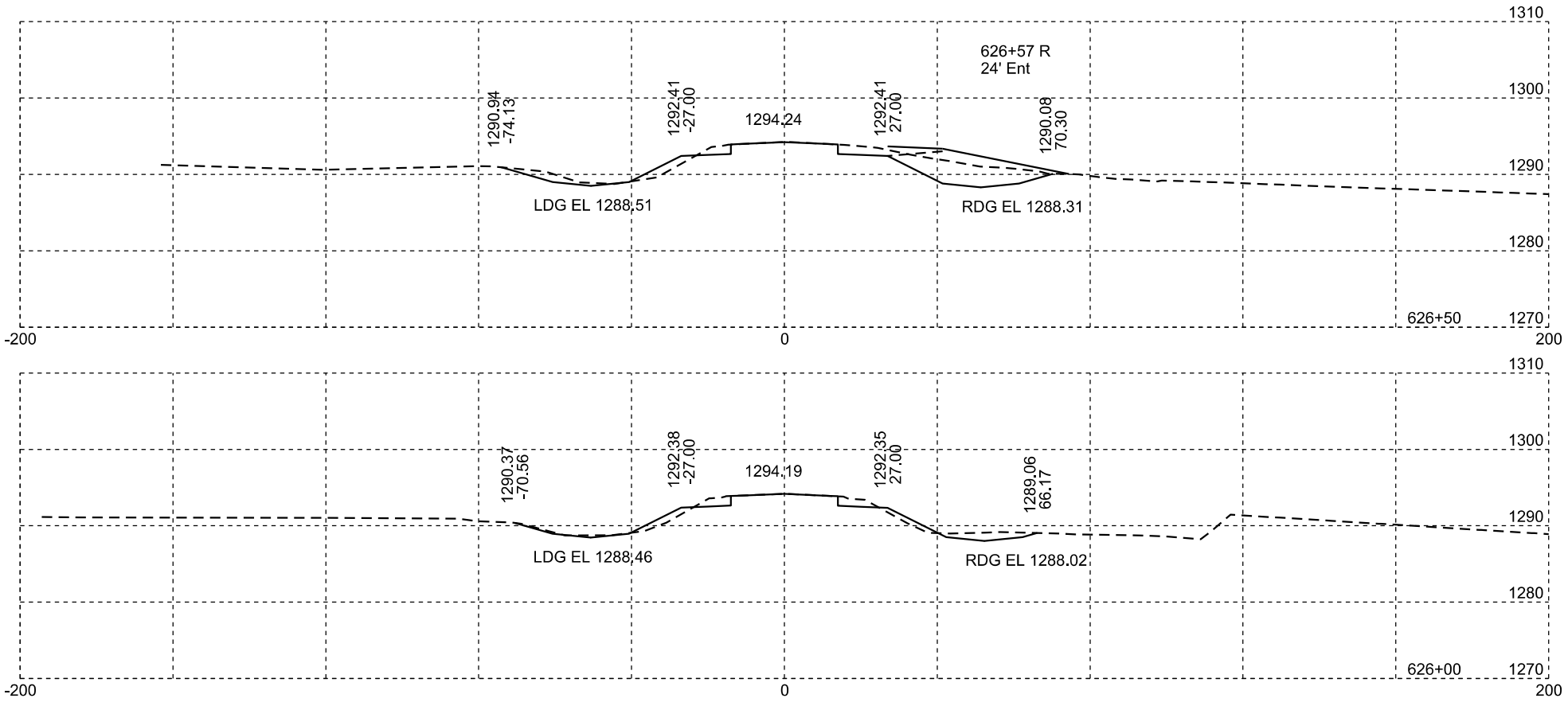

Rev 02/29/2024 DRM
Plotting Date: 02/29/2024

STATE OF SOUTH DAKOTA	PROJECT	SHEET NO.	TOTAL SHEETS
	P-PH-B-PT 0010(124)296	X122	X169

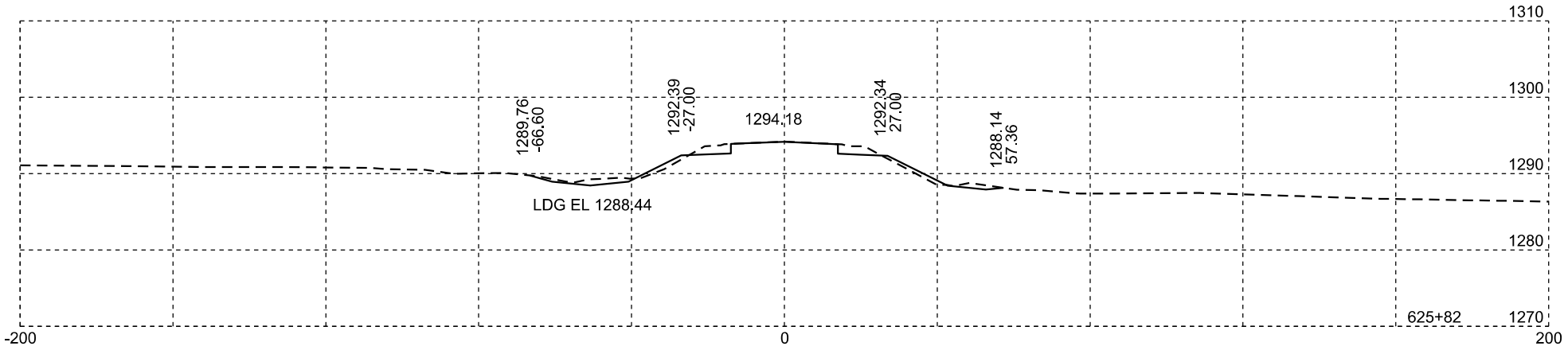

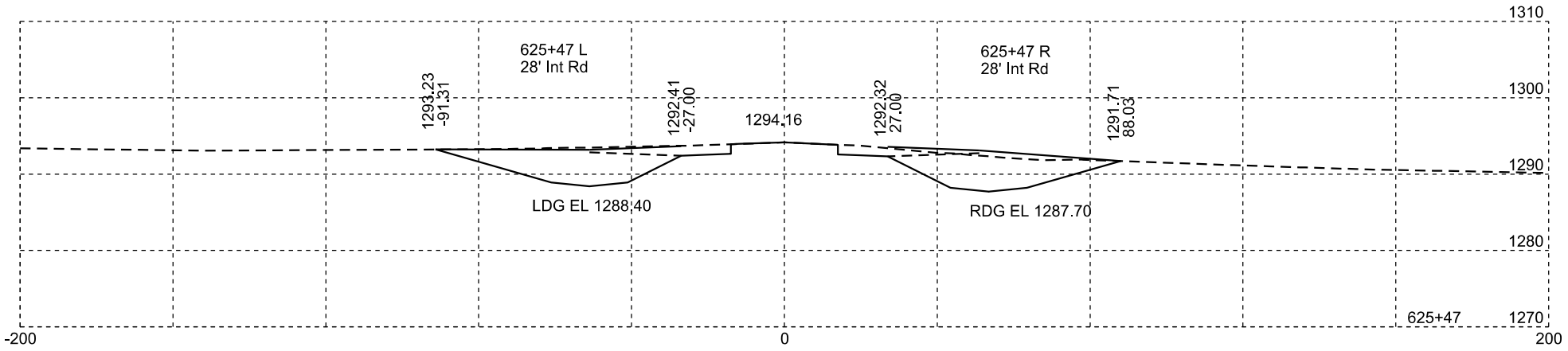

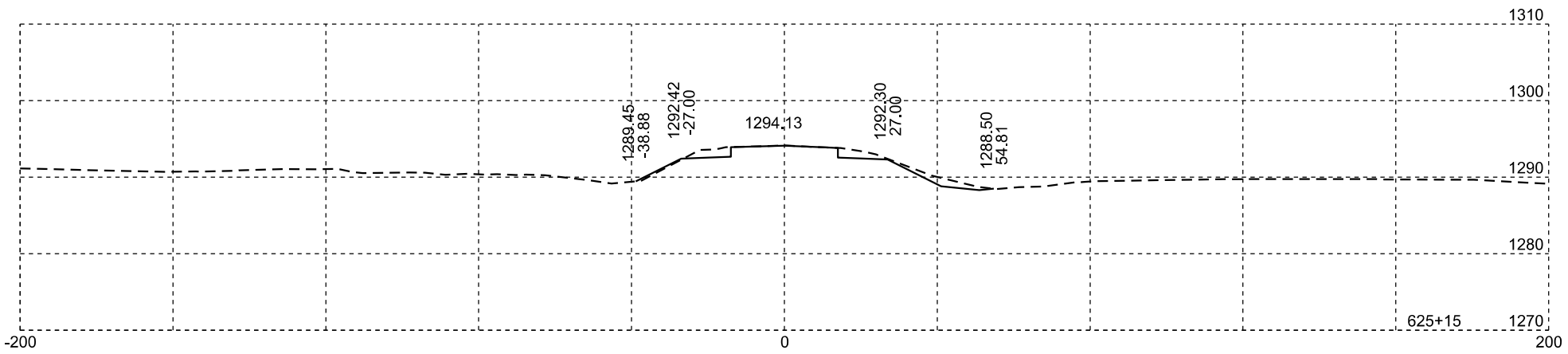

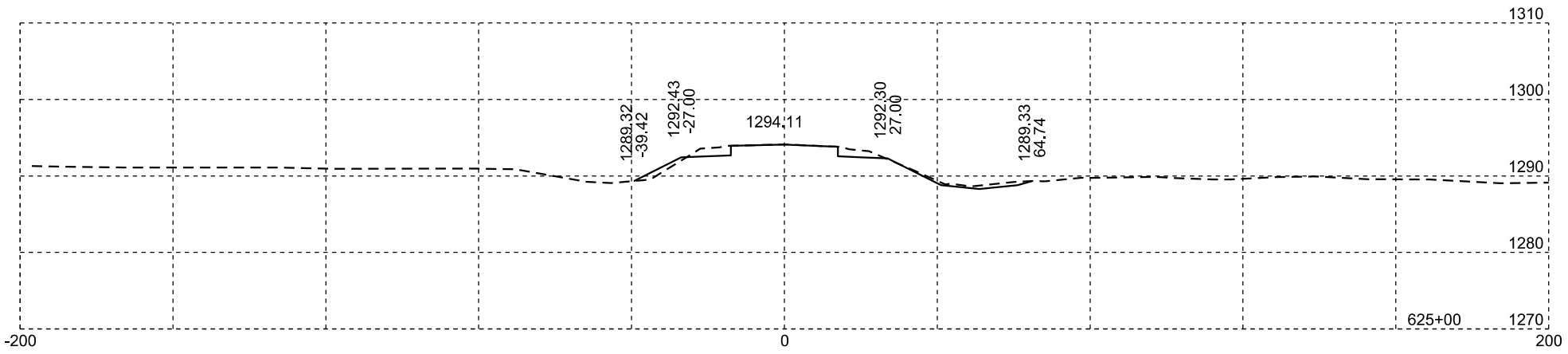

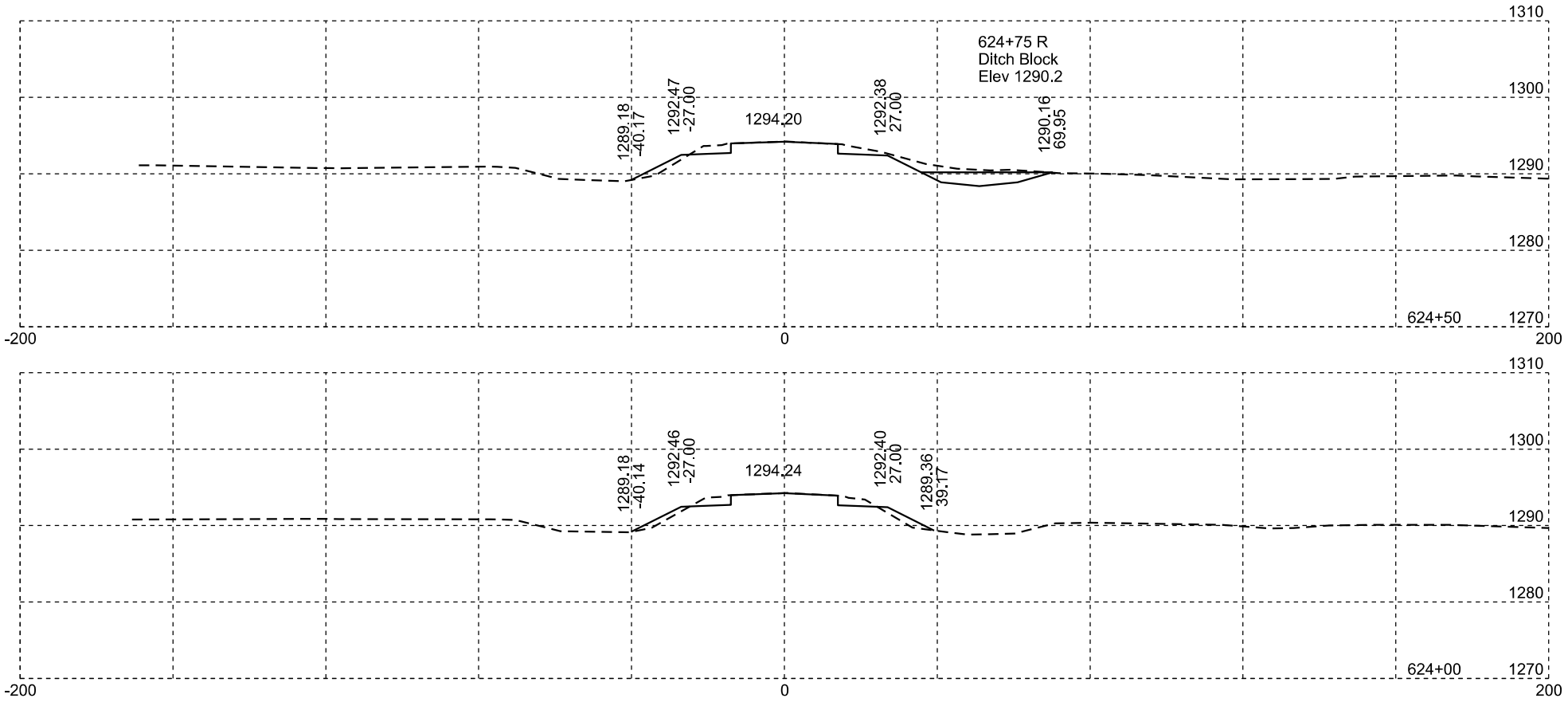

Rev 02/29/2024 DRM
Plotting Date: 02/29/2024

STATE OF SOUTH DAKOTA	PROJECT	SHEET NO.	TOTAL SHEETS
	P-PH-B-PT 0010(124)296	X123	X169

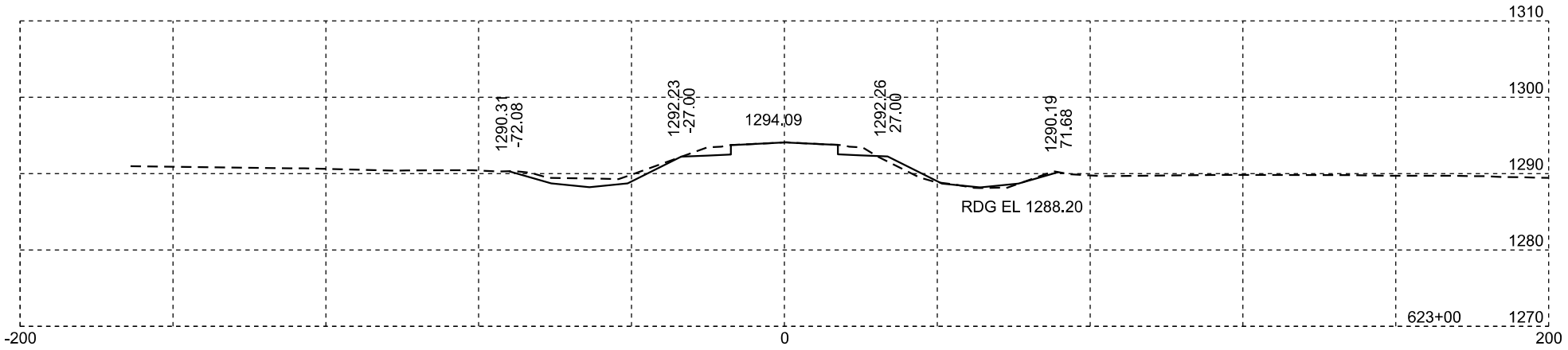

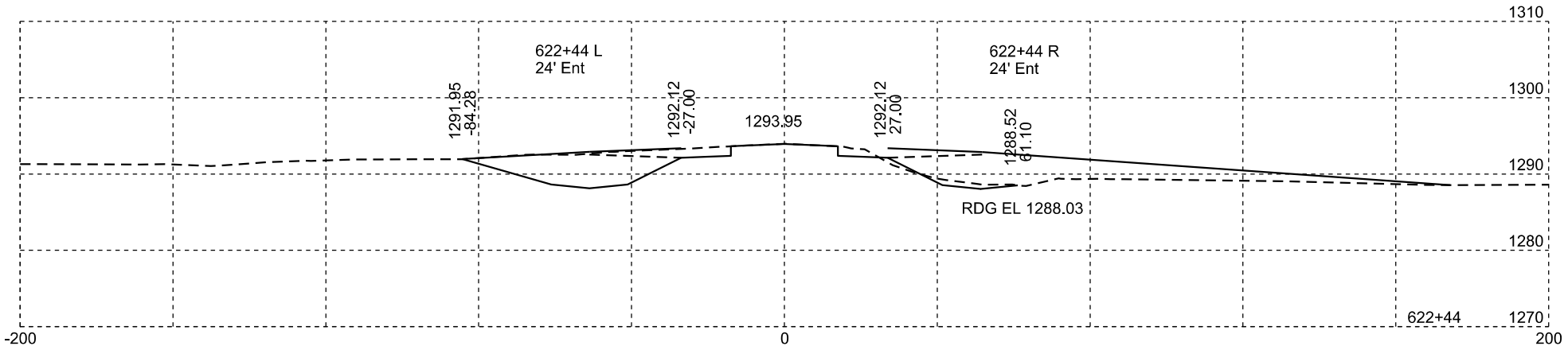

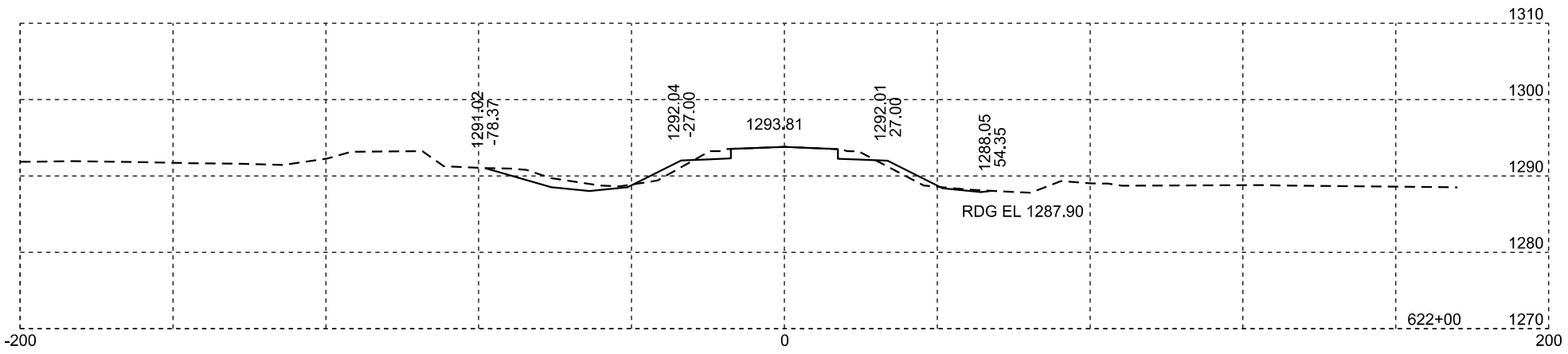

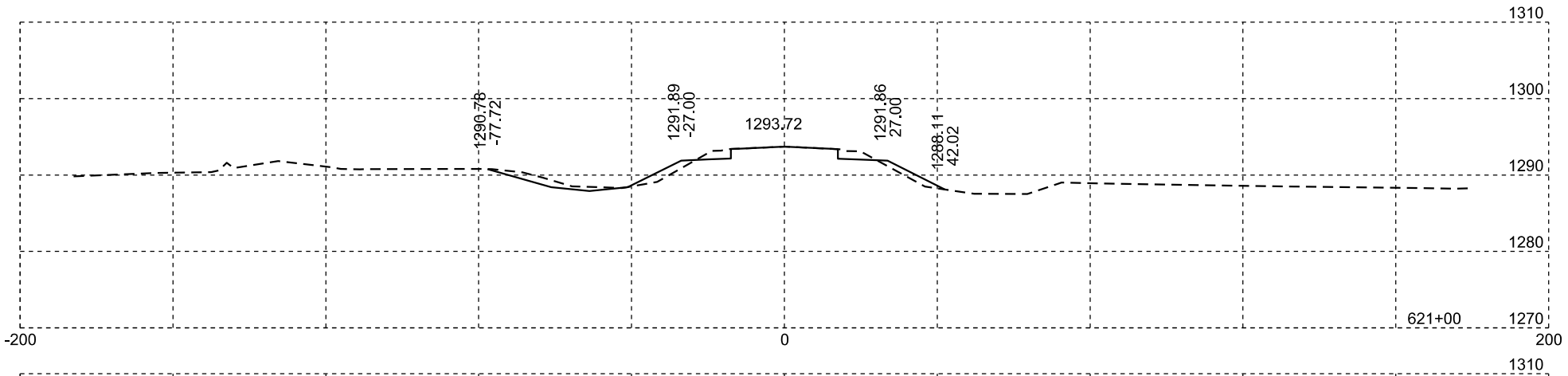

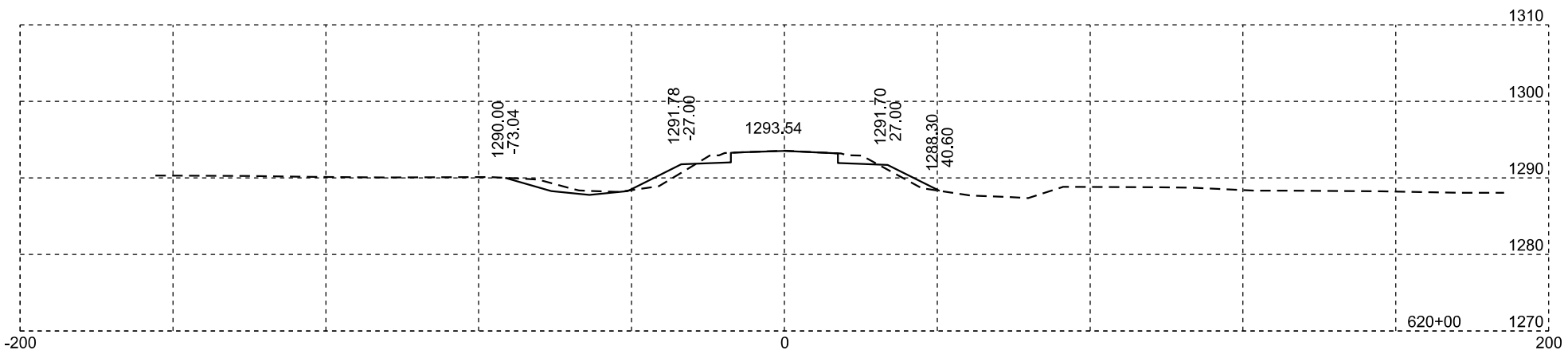

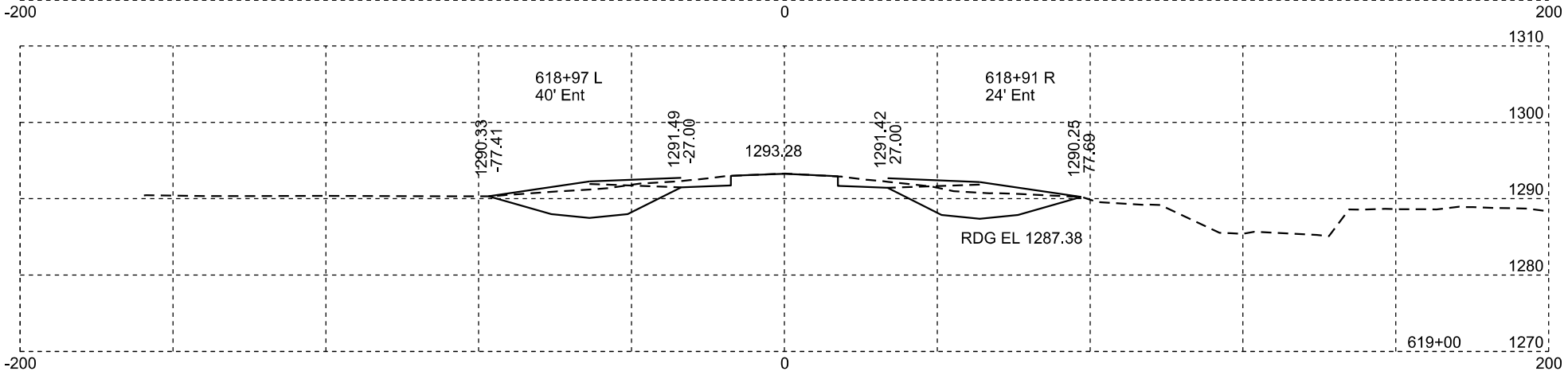

Plotting Date: 01/19/2024

STATE OF SOUTH DAKOTA	PROJECT	SHEET NO.	TOTAL SHEETS
	P-PH-B-PT 0010(124)296	X124	X169

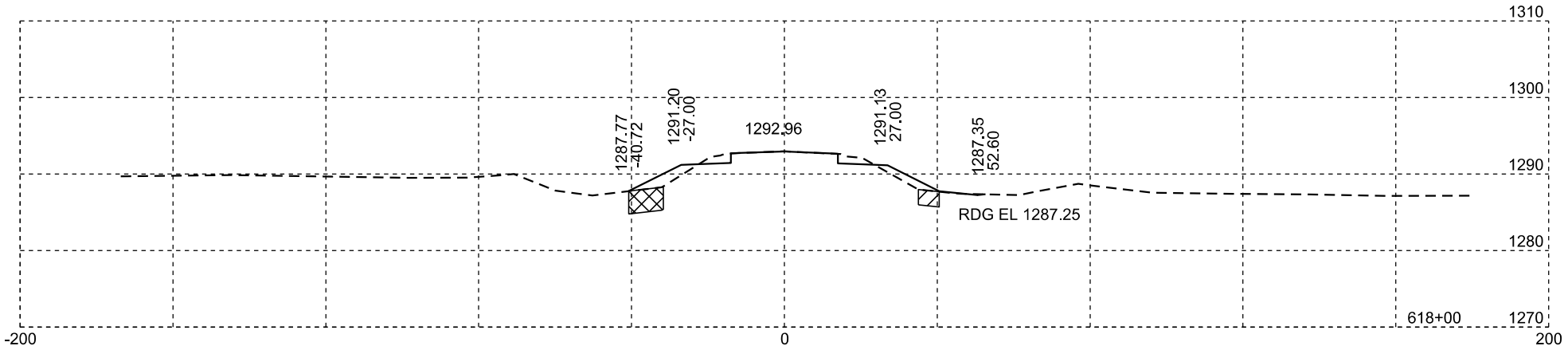

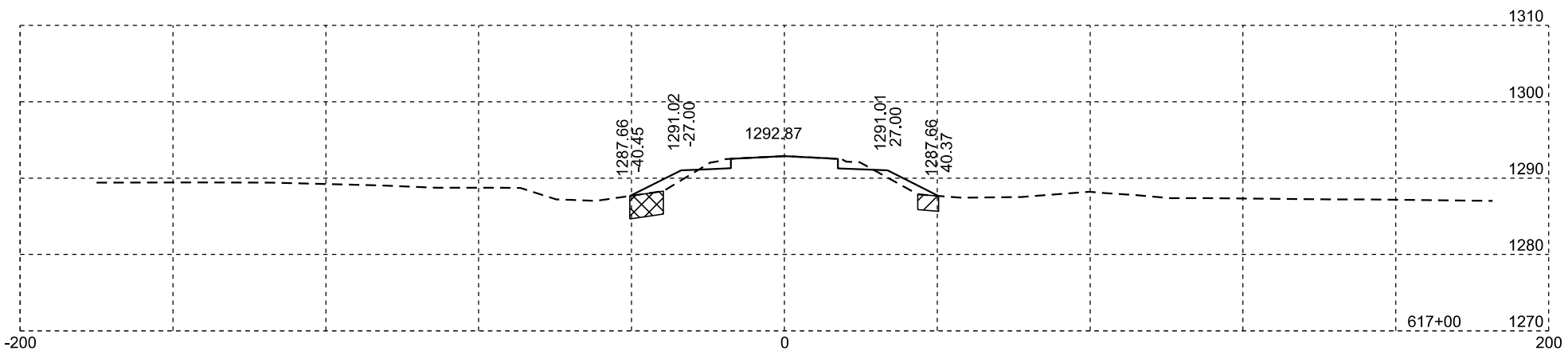

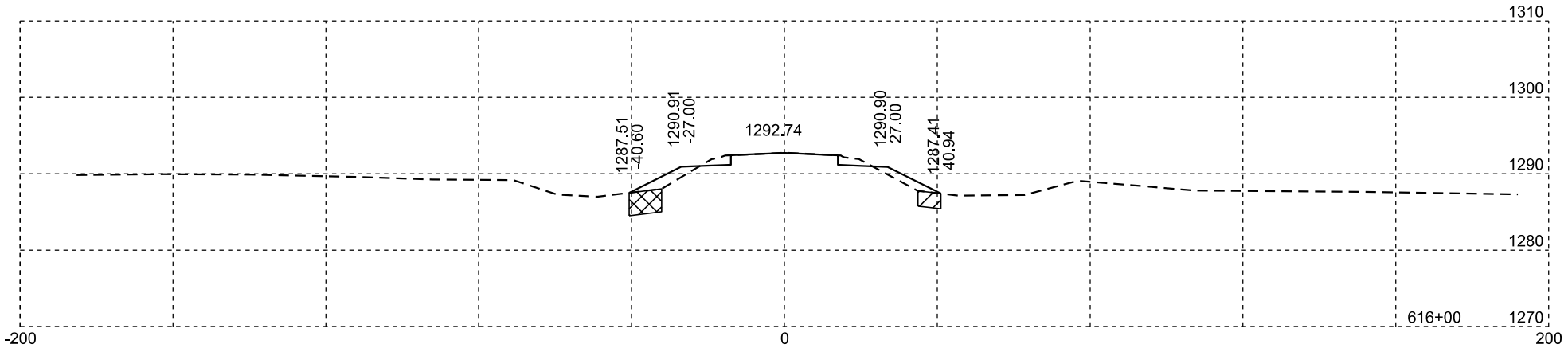

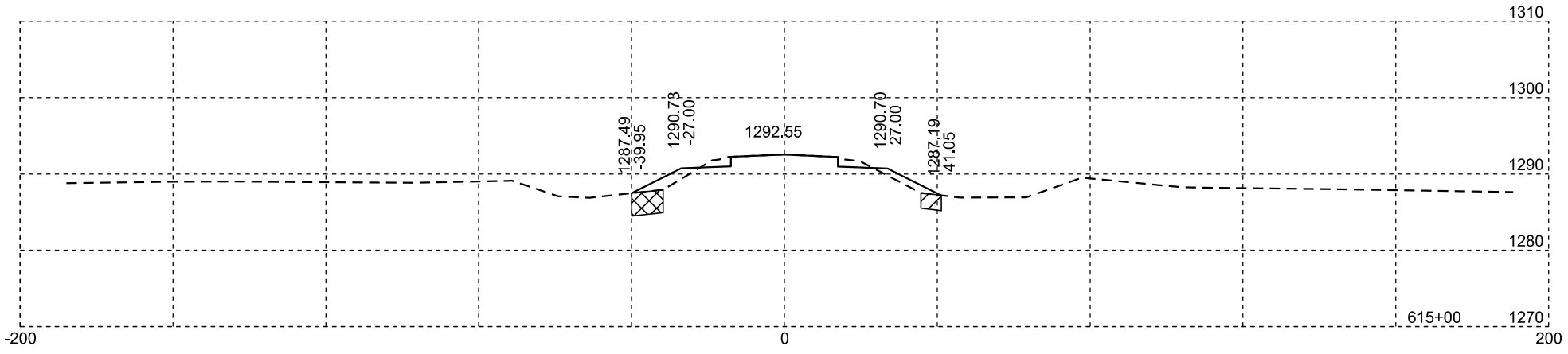

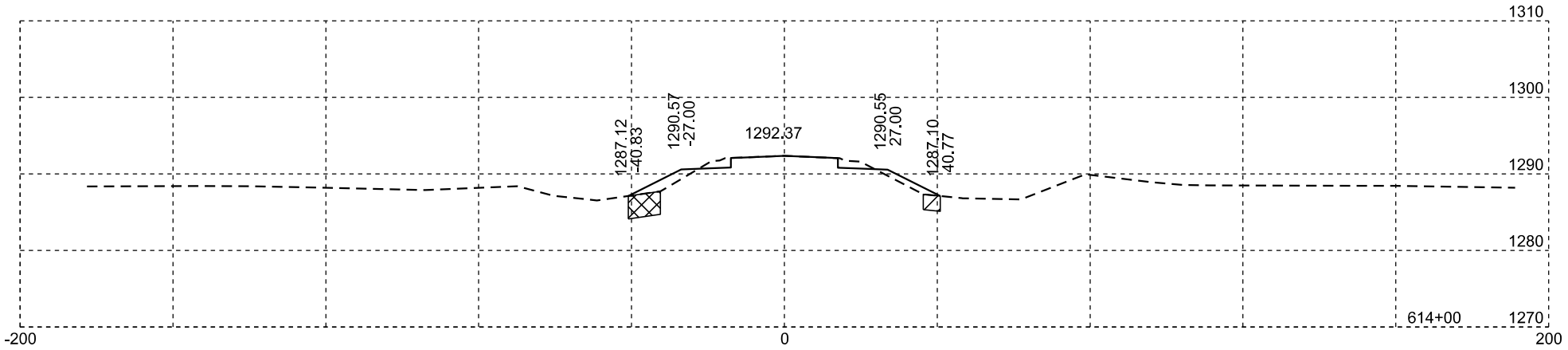

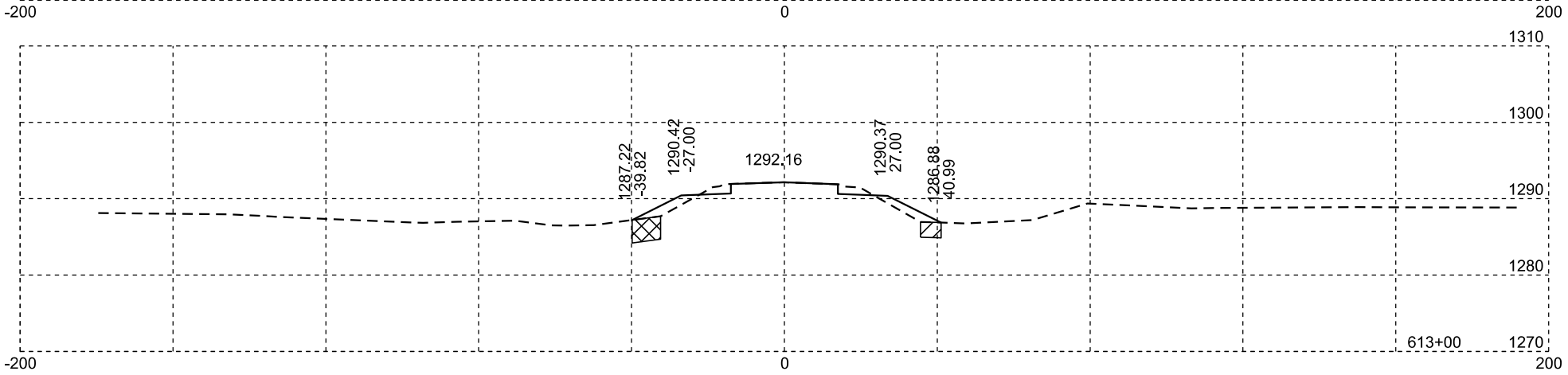

Unstable
Muck

Plotting Date: 01/19/2024

STATE OF SOUTH DAKOTA	PROJECT	SHEET NO.	TOTAL SHEETS
	P-PH-B-PT 0010(124)296	X125	X169

Unstable
Muck

-200
0

1290.60
-76.91
5.0:1
LDG EL 1286.78
1290.61
-27.00
1292.43
1290.57
27.00
1287.19
40.49

608+00

1286.99
-41.12
1290.52
-27.00
1292.32
1290.50
27.00
1287.16
40.37

609+00

1286.73
-41.91
1290.46
-27.00
1292.26
1290.44
27.00
1287.05
40.57

610+00

1286.72
-41.90
1290.44
-27.00
1292.25
1290.40
27.00
1287.50
38.63

611+00

1286.36
-42.91
1290.34
-27.00
1292.18
1290.32
27.00
1287.27
39.22

611+80

1286.37
-42.90
1290.35
-27.00
1292.16
1290.32
27.00
1287.11
39.87

612+00

1270
1280
1290
1300
1310
200

Plotting Date: 01/19/2024

STATE OF SOUTH DAKOTA	PROJECT	SHEET NO.	TOTAL SHEETS
	P-PH-B-PT 0010(124)296	X126	X169

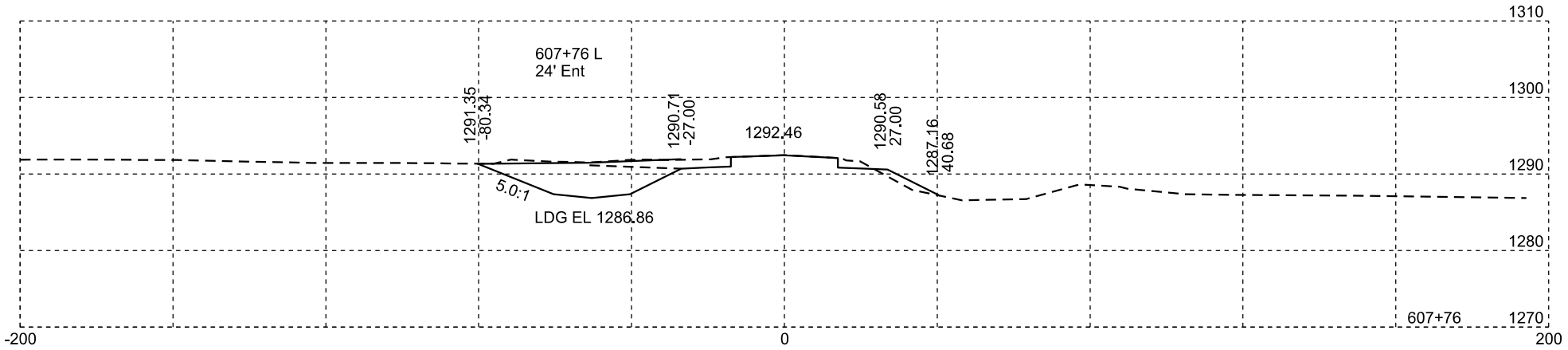

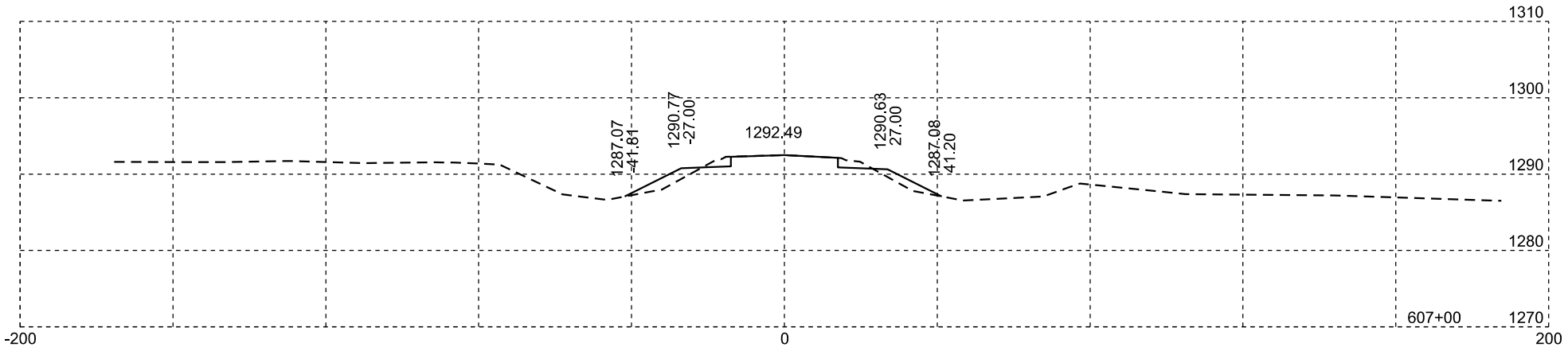

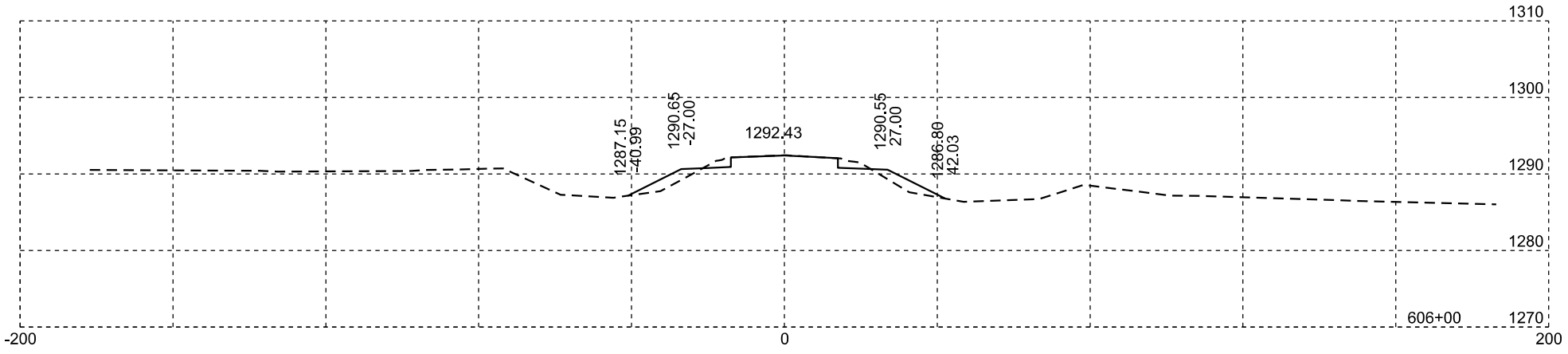

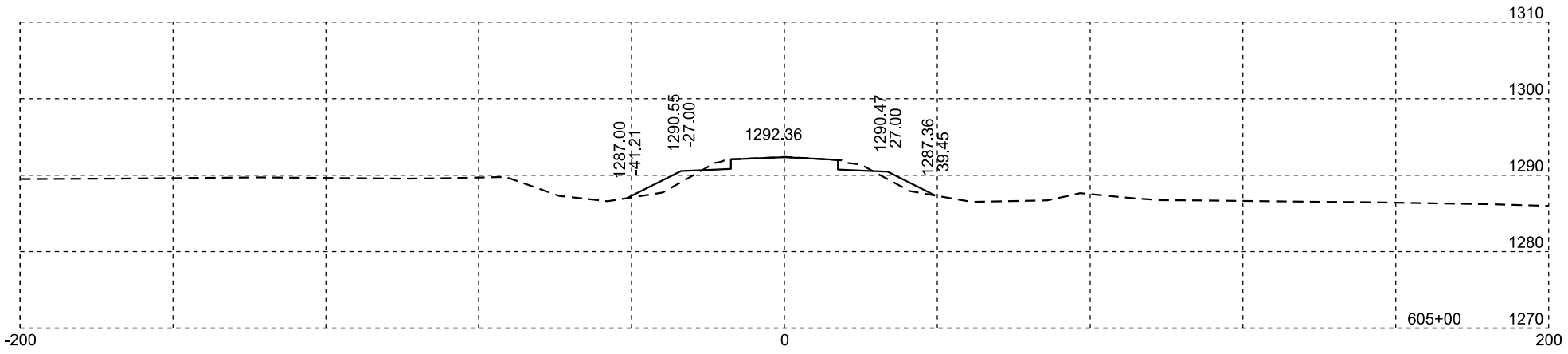

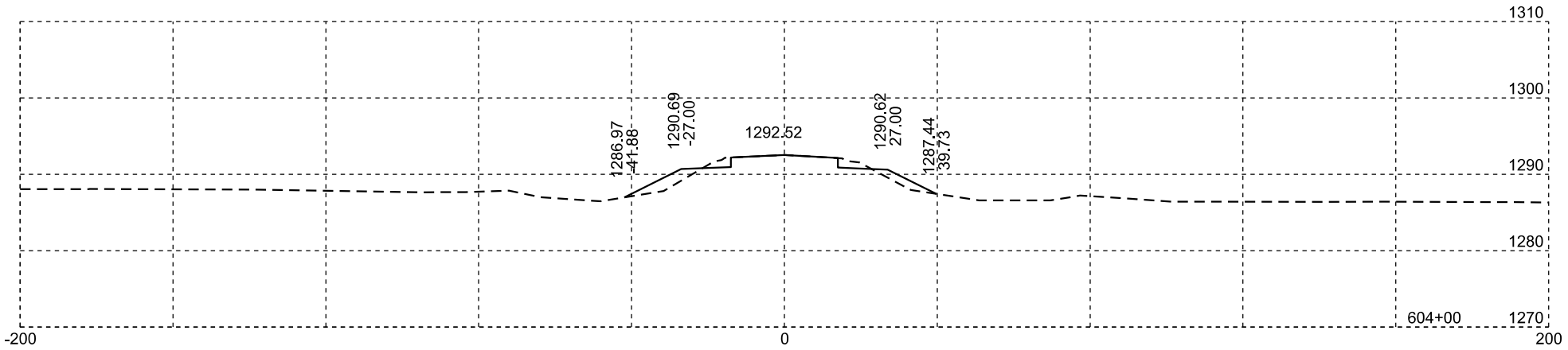

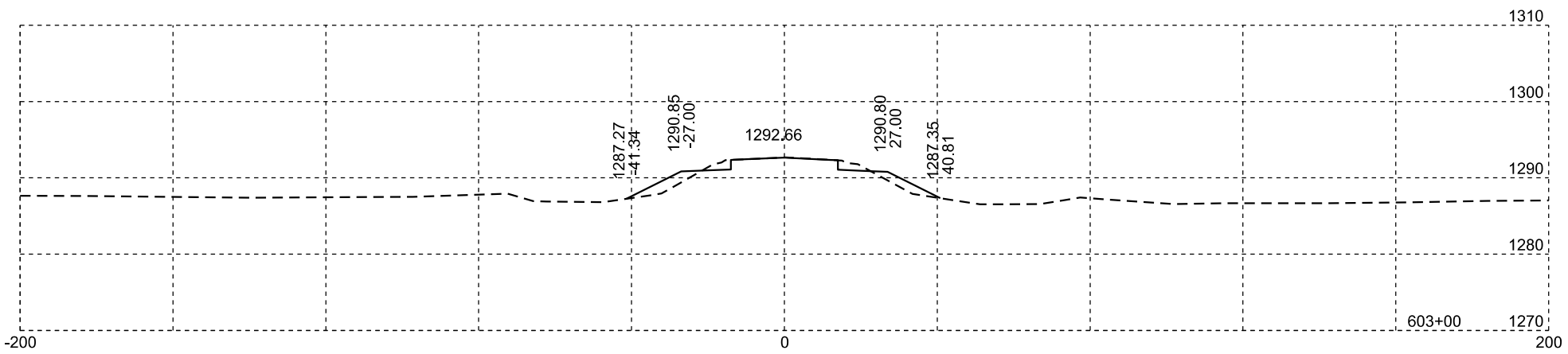

Plotting Date: 01/19/2024

STATE OF SOUTH DAKOTA	PROJECT	SHEET NO.	TOTAL SHEETS
	P-PH-B-PT 0010(124)296	X127	X169

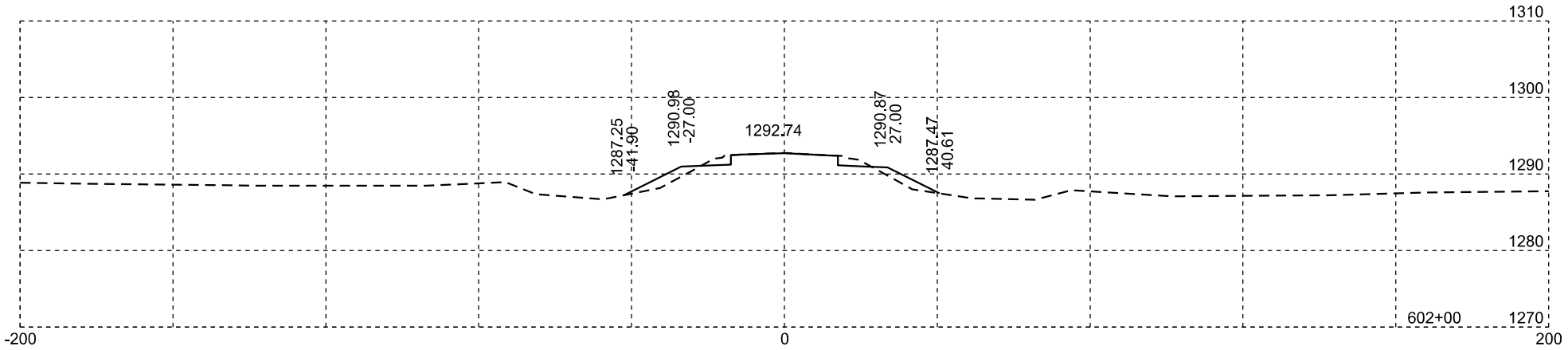

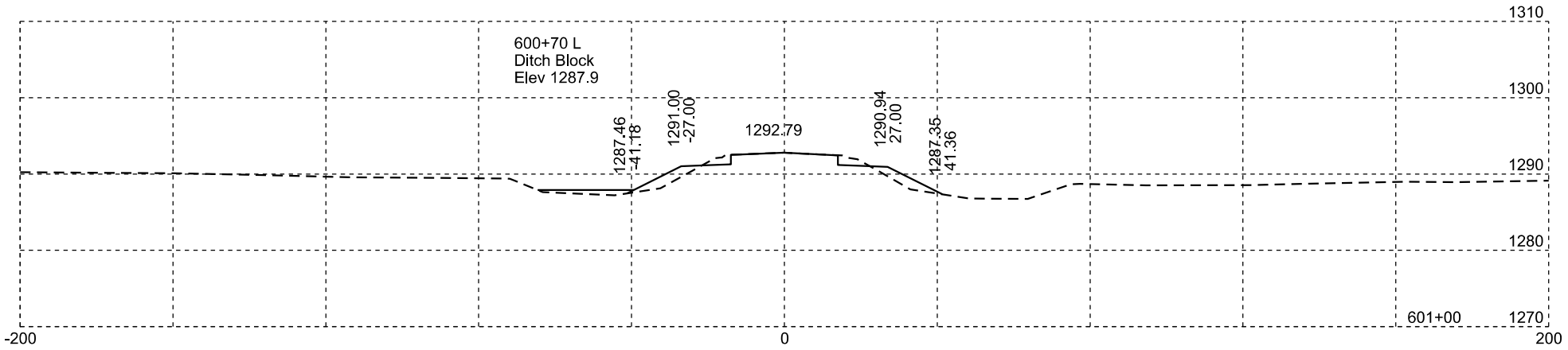

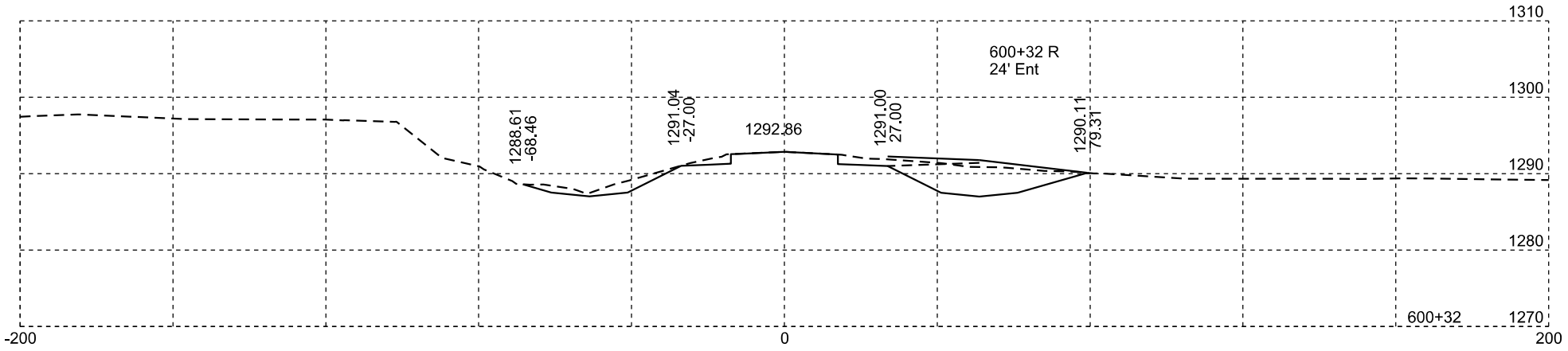

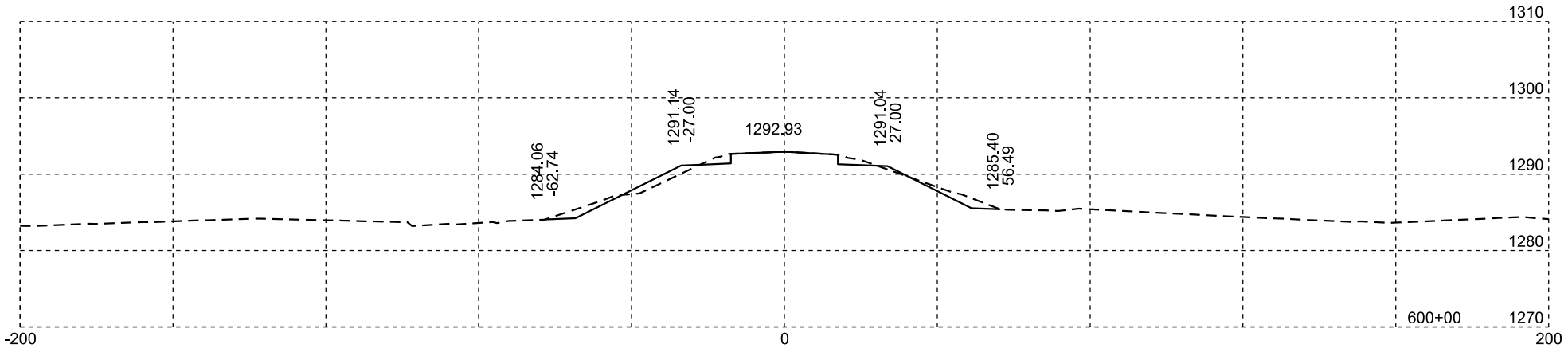

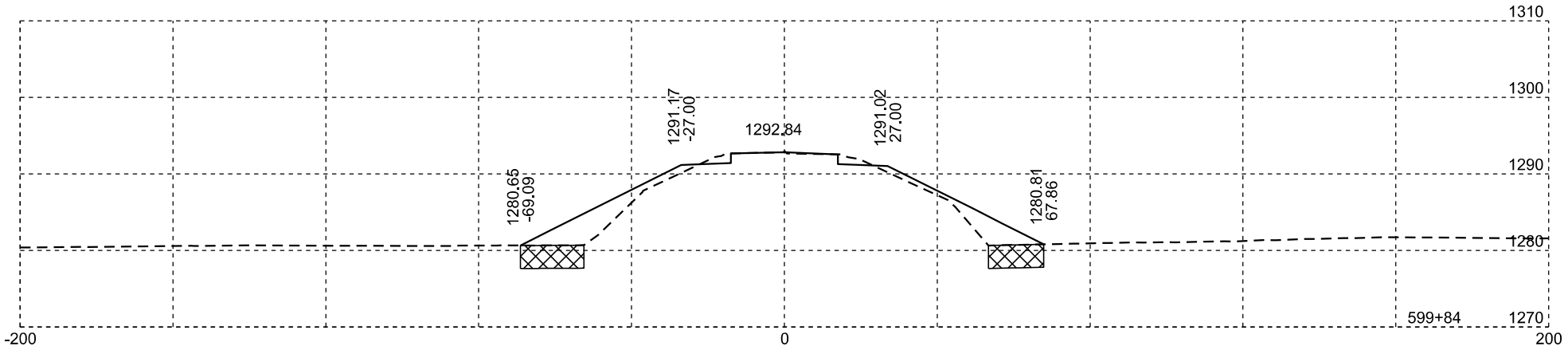

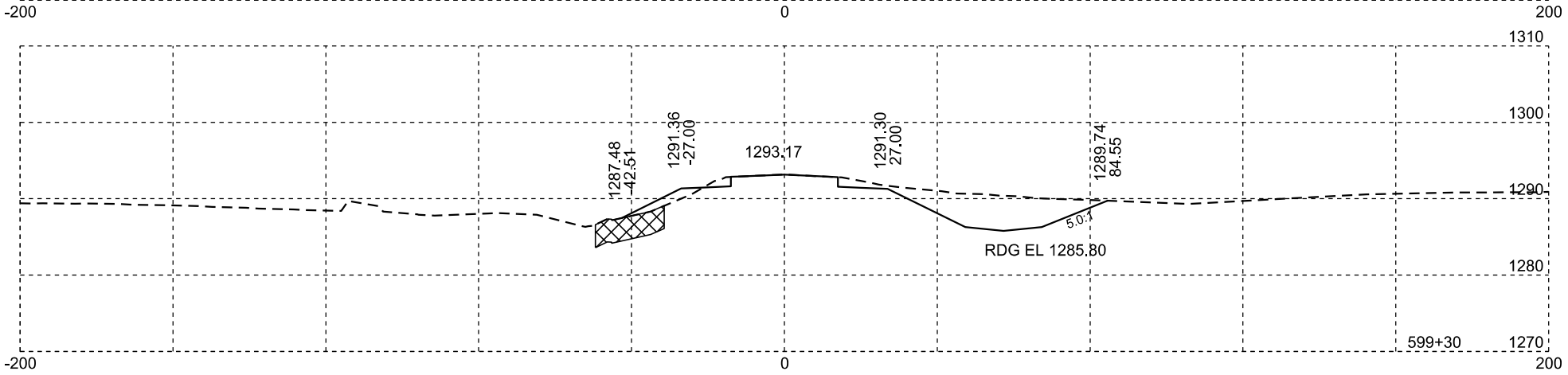

Muck

Plotting Date: 01/19/2024

STATE OF SOUTH DAKOTA	PROJECT	SHEET NO.	TOTAL SHEETS
	P-PH-B-PT 0010(124)296	X128	X169

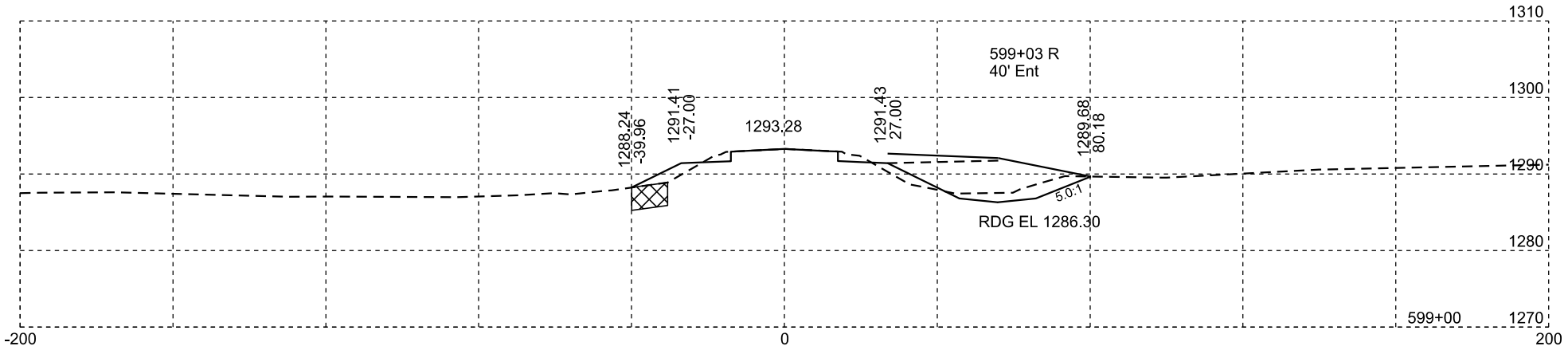

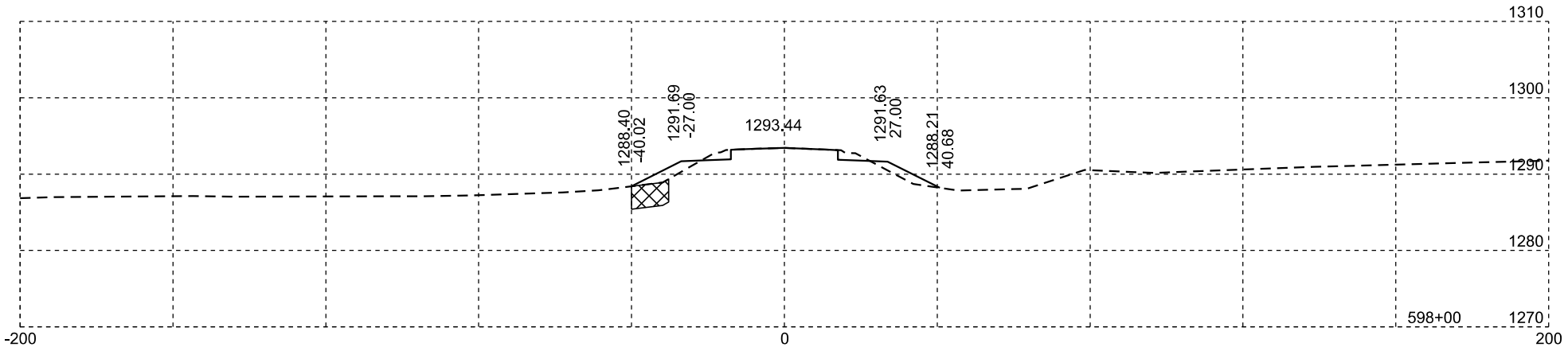

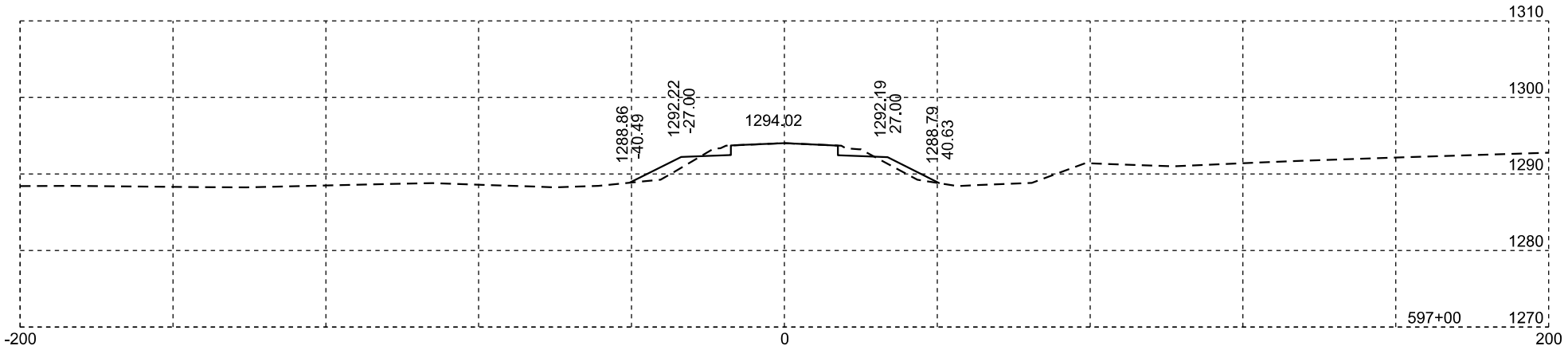

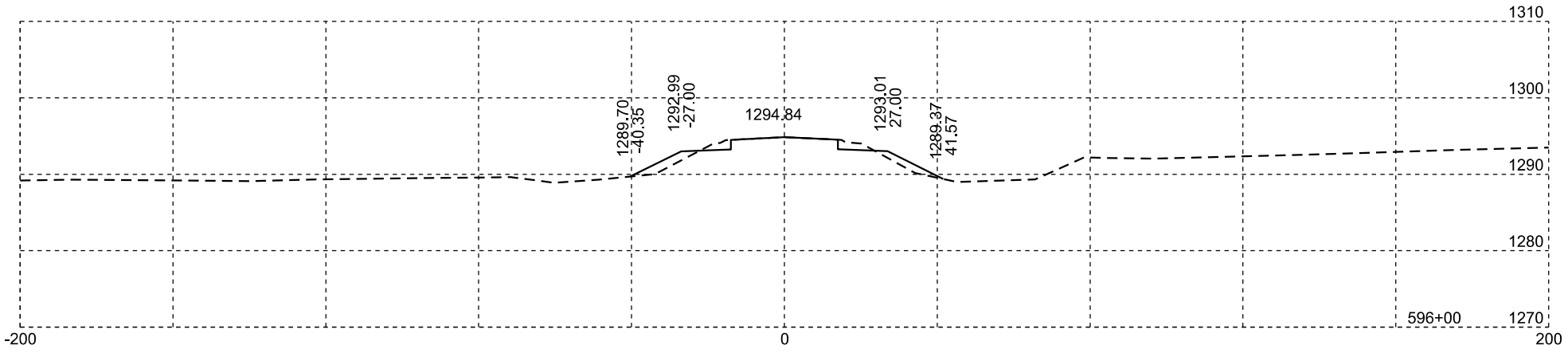

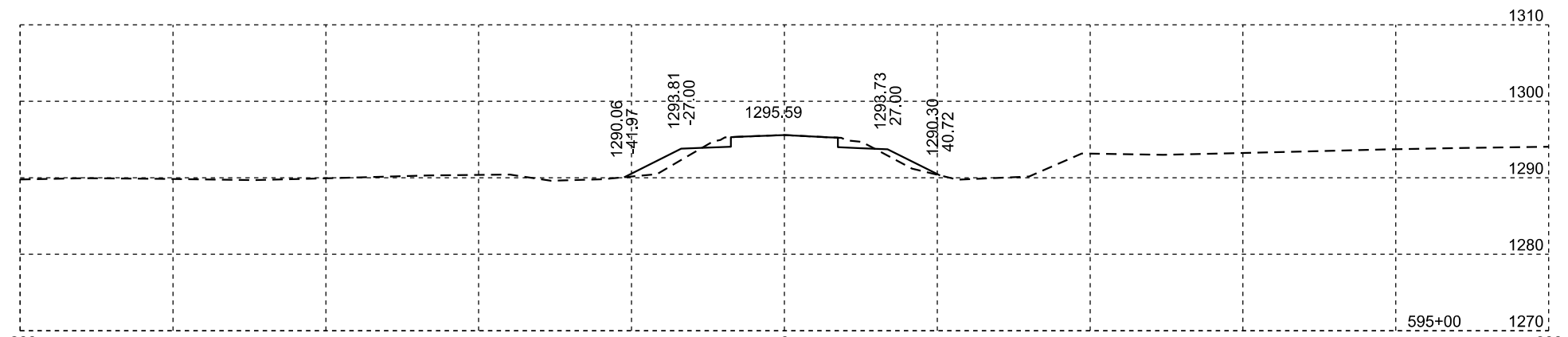

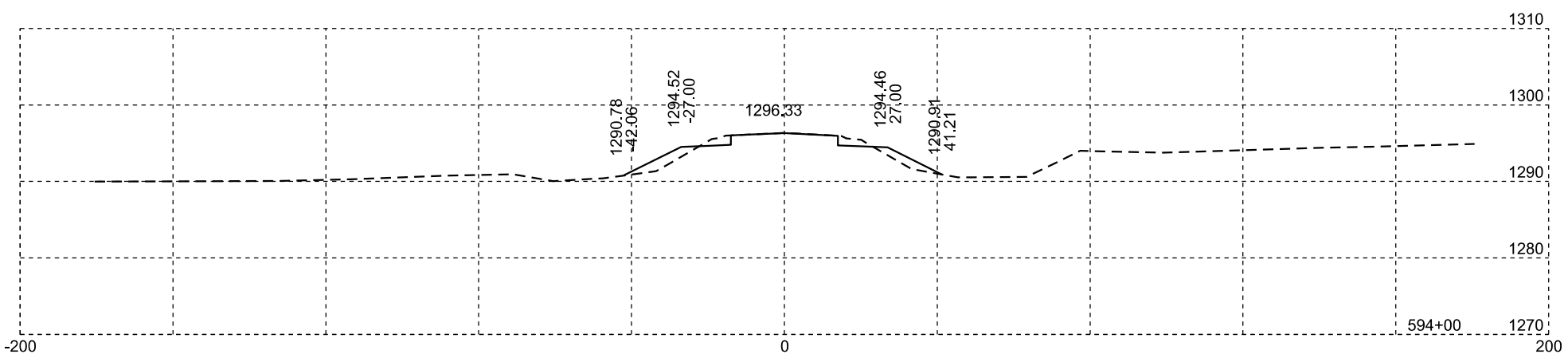

Muck

Plotting Date: 01/19/2024

STATE OF SOUTH DAKOTA	PROJECT	SHEET NO.	TOTAL SHEETS
	P-PH-B-PT 0010(124)296	X129	X169

Plotting Date: 01/19/2024

STATE OF SOUTH DAKOTA	PROJECT	SHEET NO.	TOTAL SHEETS
	P-PH-B-PT 0010(124)296	X130	X169

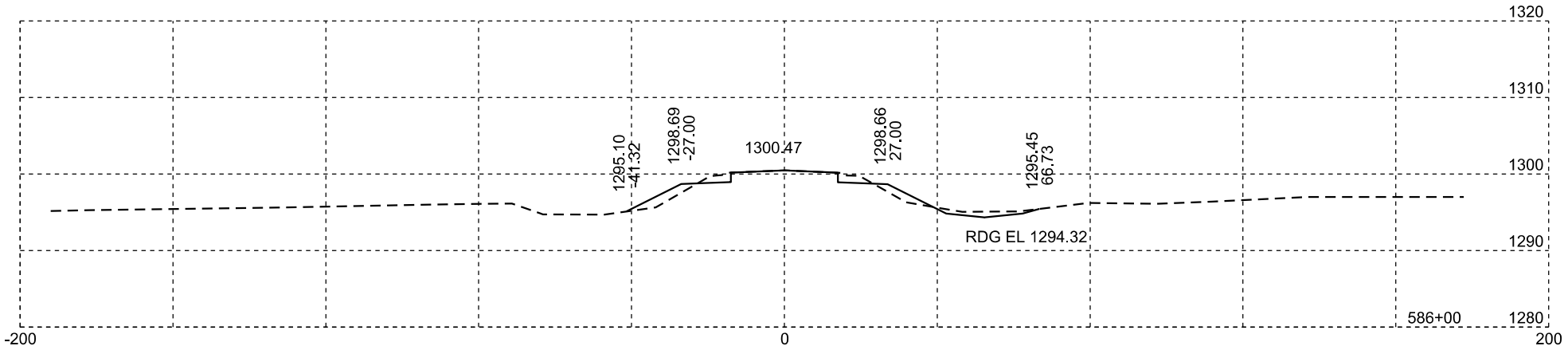

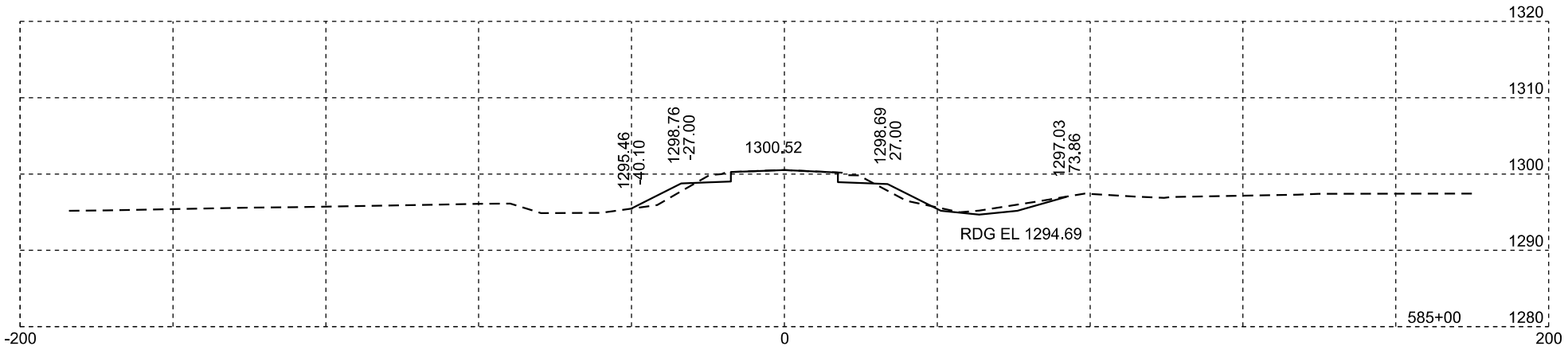

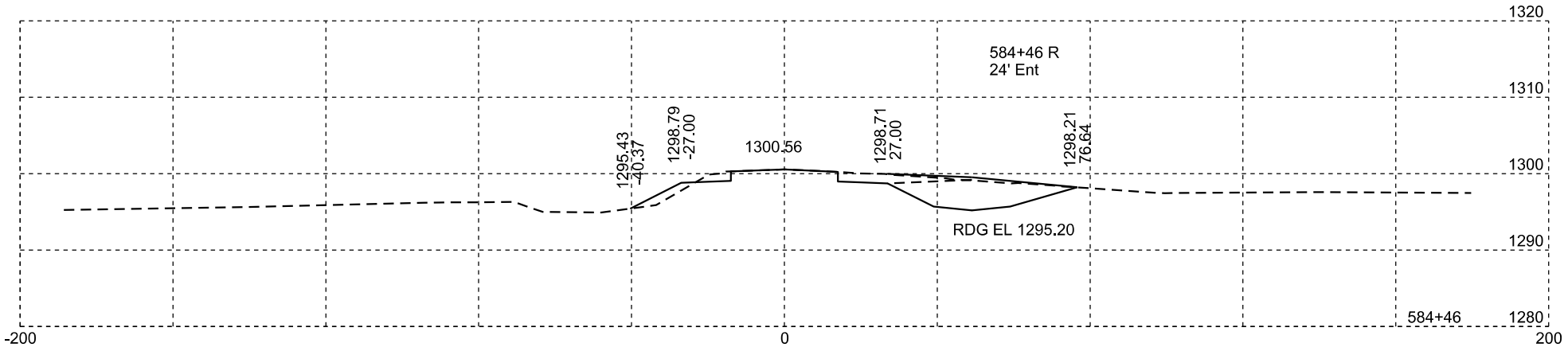

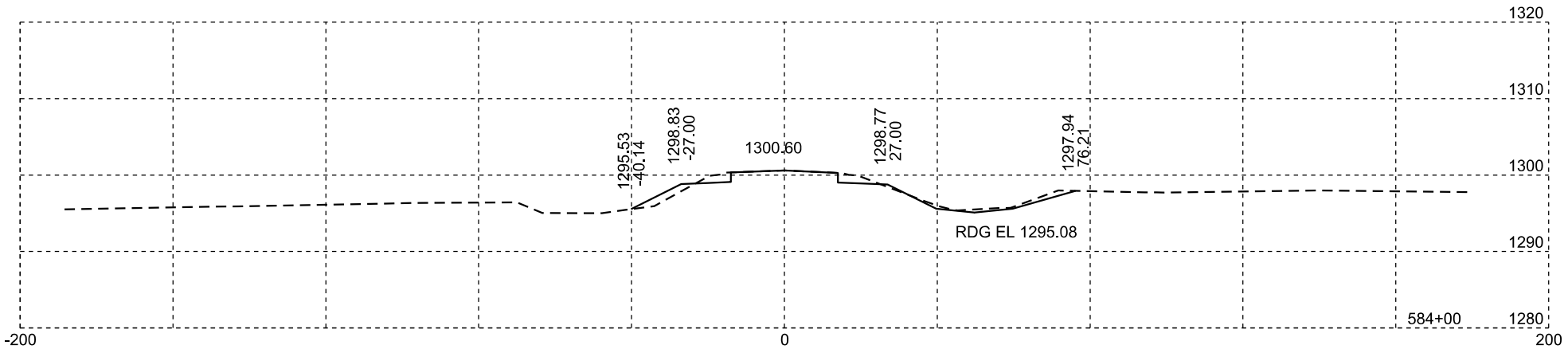

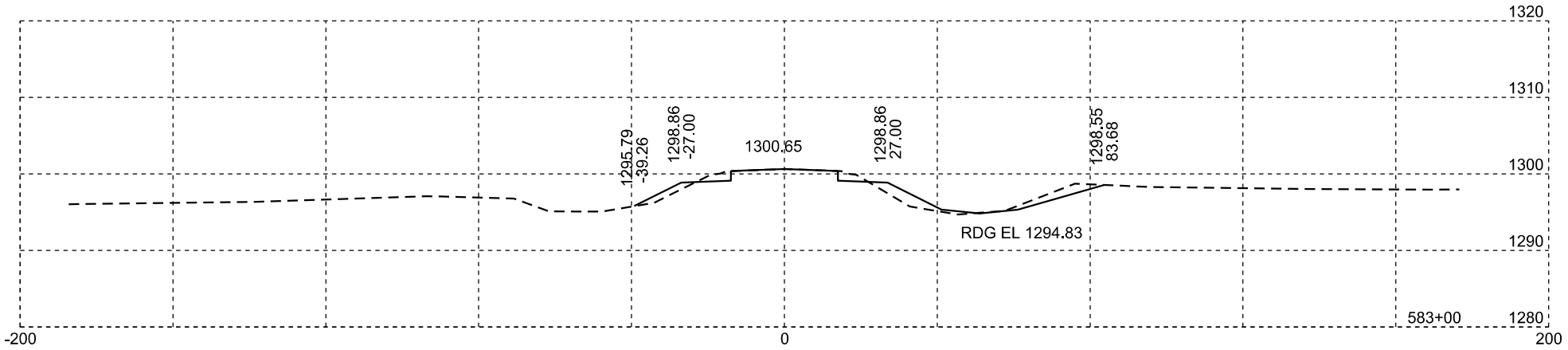

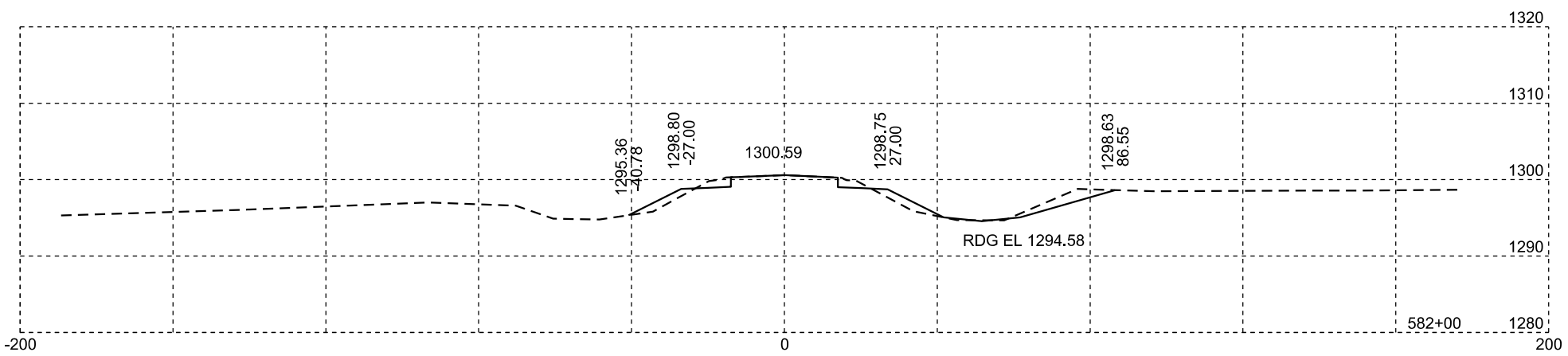

Plotting Date: 01/19/2024

STATE OF SOUTH DAKOTA	PROJECT	SHEET NO.	TOTAL SHEETS
	P-PH-B-PT 0010(124)296	X131	X169

1296.83
-69.62

1299.10
-27.00

1300.96

1299.13
27.00

1297.02
70.71

1295.27
-41.93

1299.00
-27.00

1300.85

1298.96
27.00

1295.33
41.51

1293.35
-48.37

1298.70
-27.00

1300.53

1298.68
27.00

1293.02
49.62

1293.33
-48.83

1298.79
-27.00

1300.54

1298.69
27.00

1293.08
49.45

1294.35
-44.75

1298.78
-27.00

1300.52

1298.66
27.00

1295.01
41.60

1294.70
-43.43

1298.81
-27.00

1300.60

1298.76
27.00

RDG EL 1294.33

1298.21
86.39

-200 0 200 400 577+62 578+00 578+86 579+00 580+00 581+00

1280 1290 1300 1310 1320

Plotting Date: 01/19/2024

STATE OF SOUTH DAKOTA	PROJECT	SHEET NO.	TOTAL SHEETS
	P-PH-B-PT 0010(124)296	X132	X169

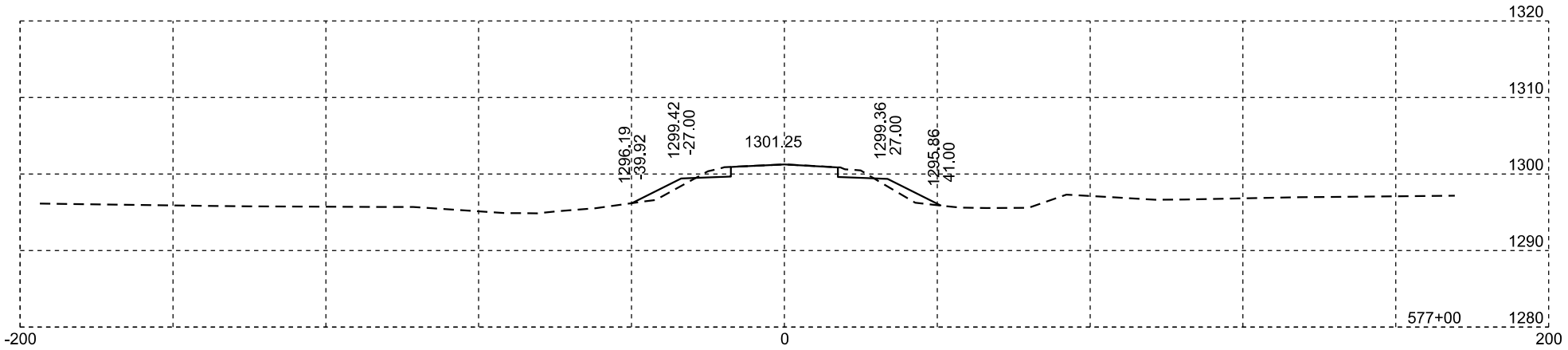

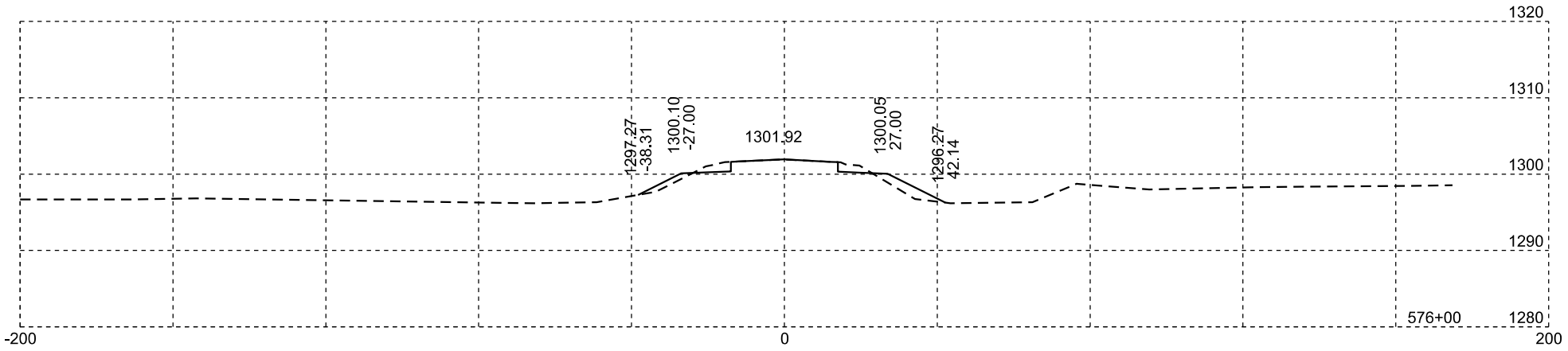

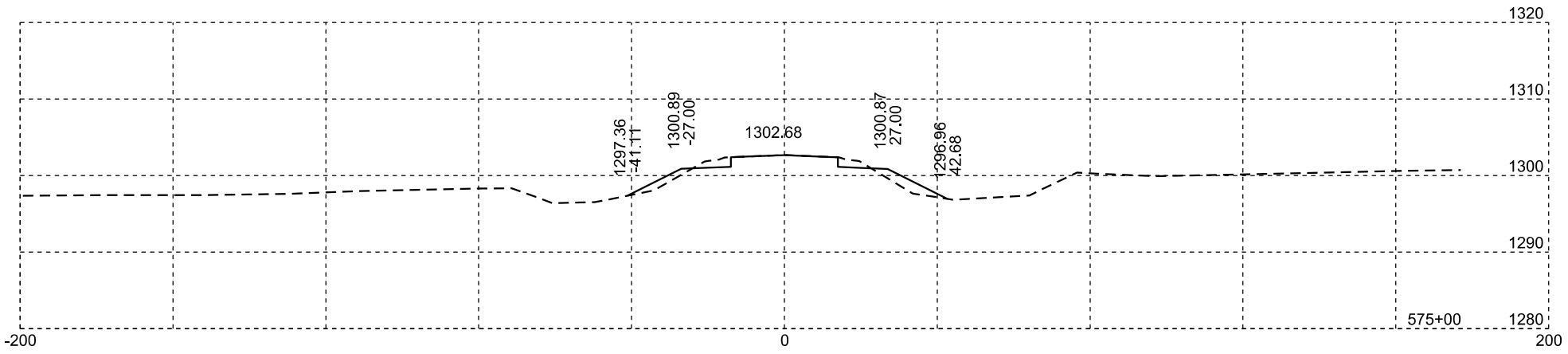

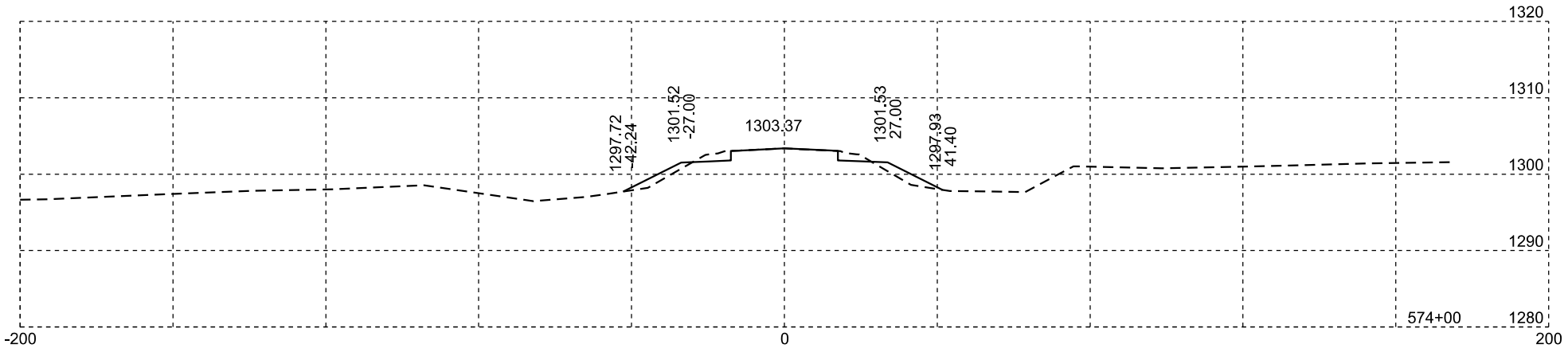

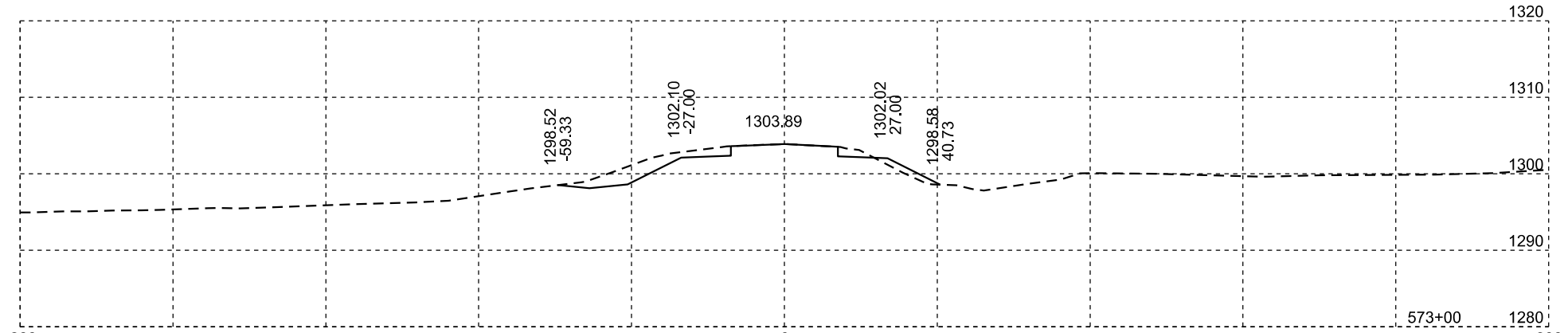

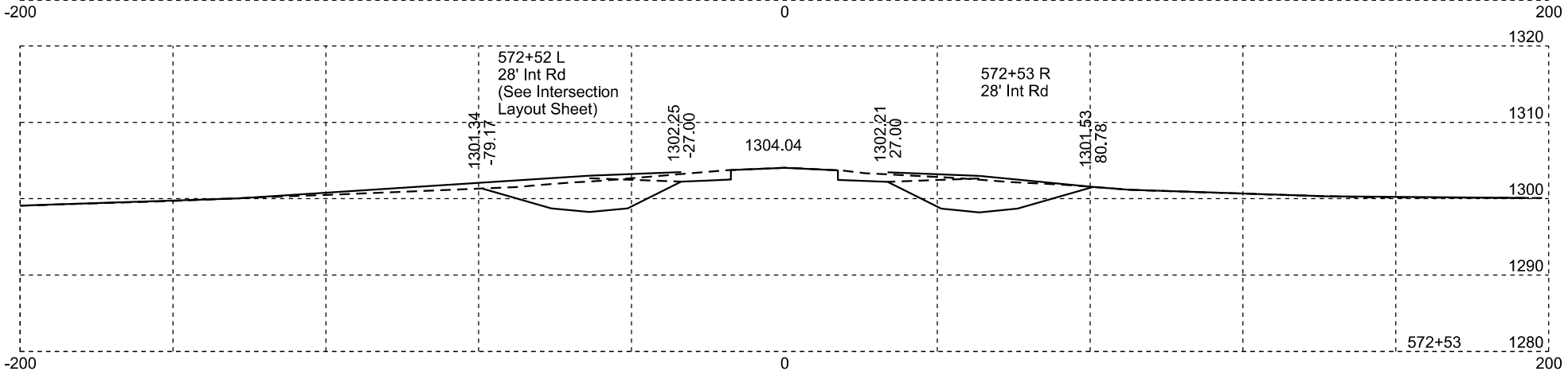

Plotting Date: 01/19/2024

STATE OF SOUTH DAKOTA	PROJECT	SHEET NO.	TOTAL SHEETS
	P-PH-B-PT 0010(124)296	X133	X169

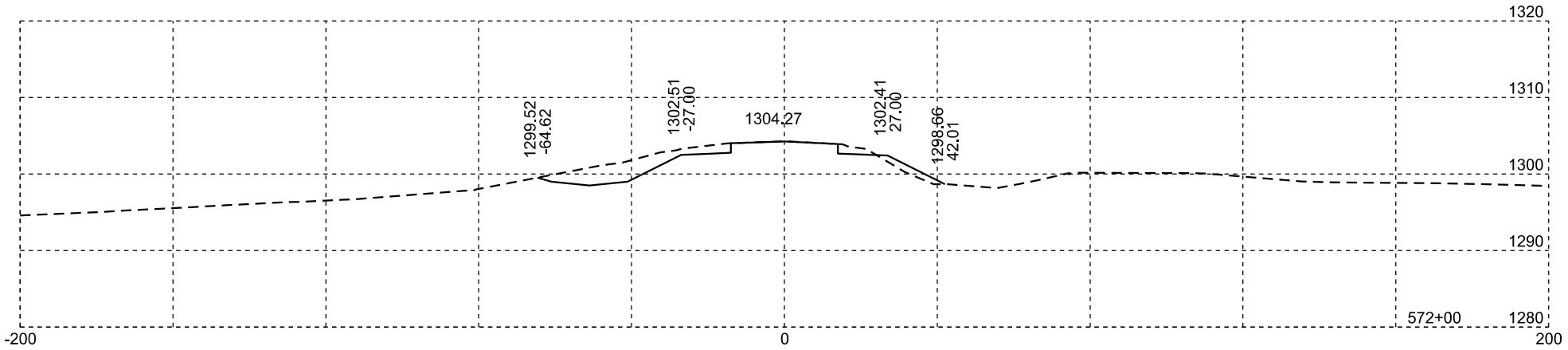

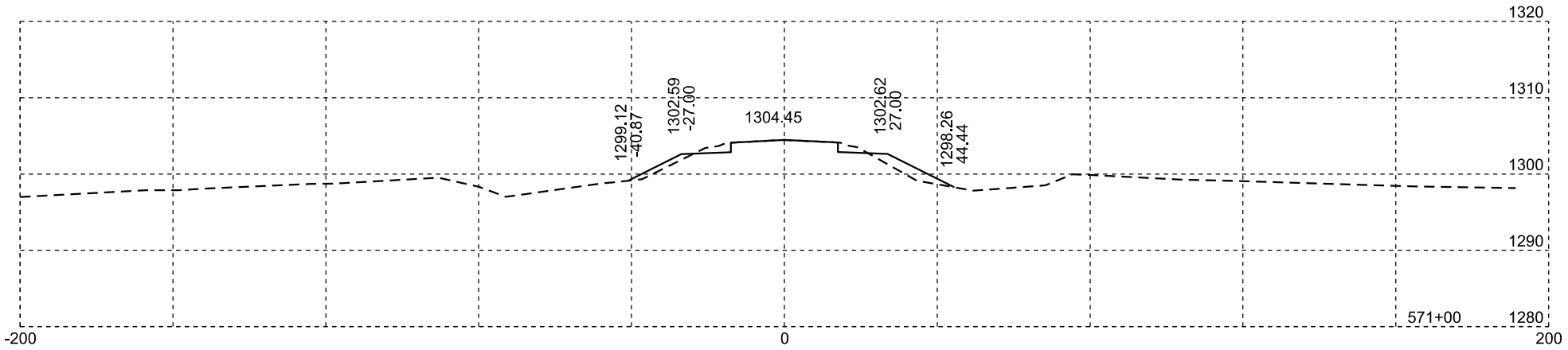

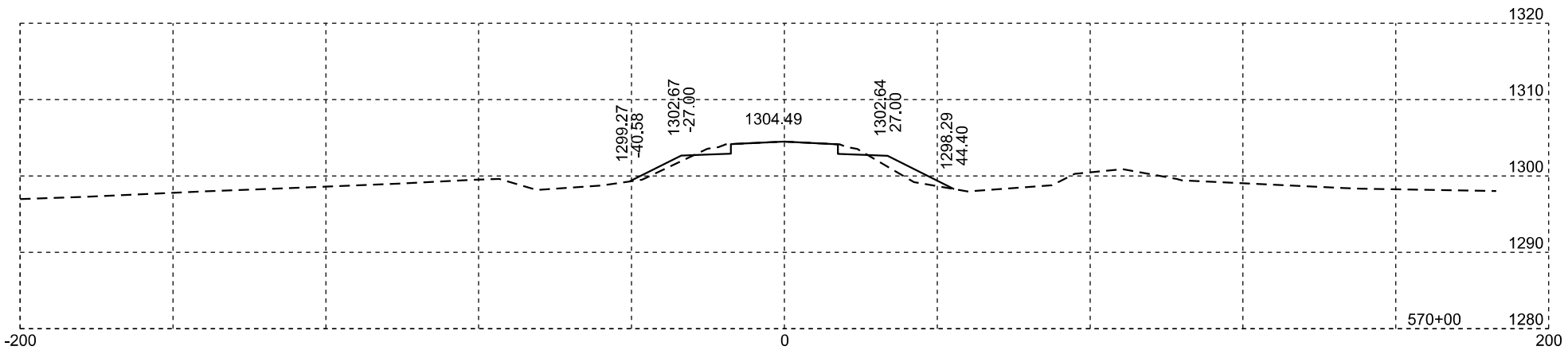

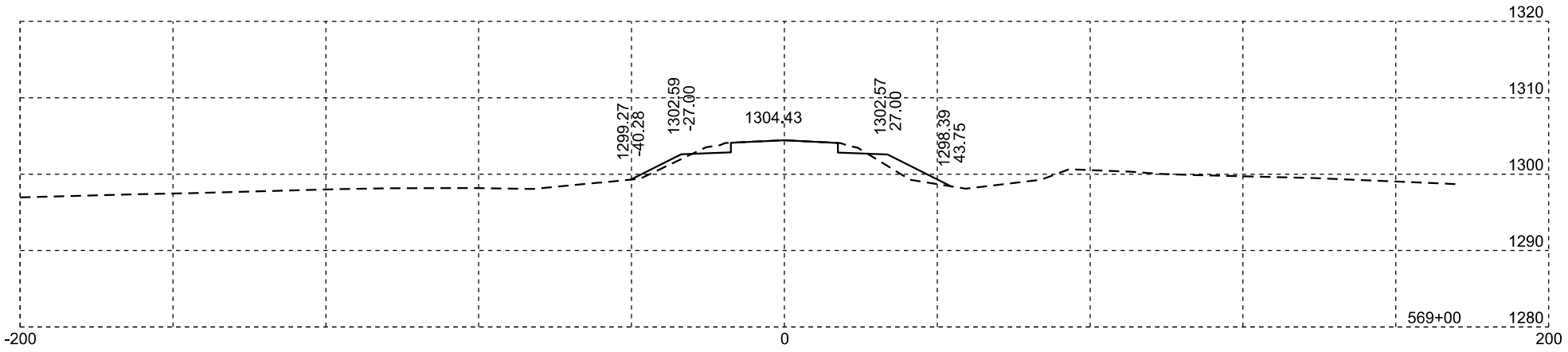

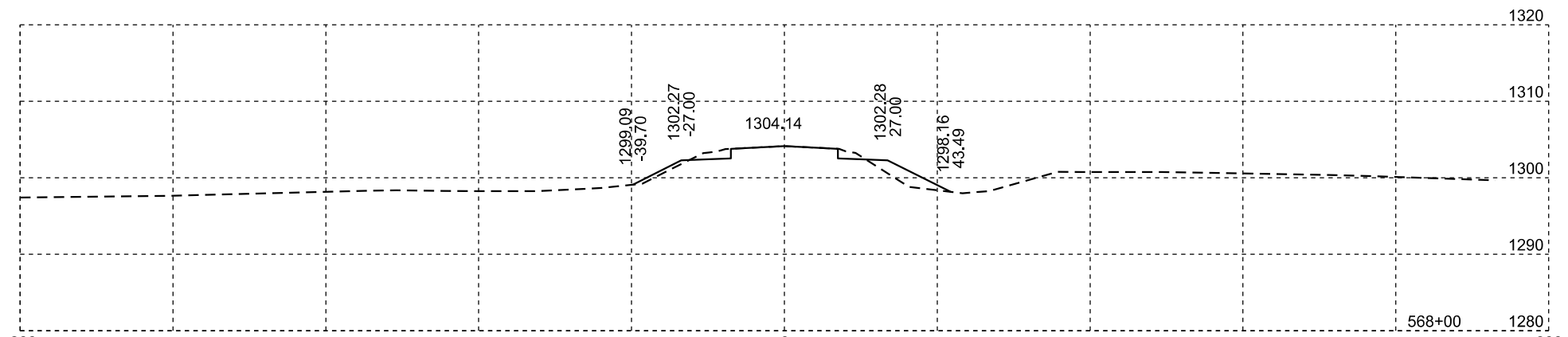

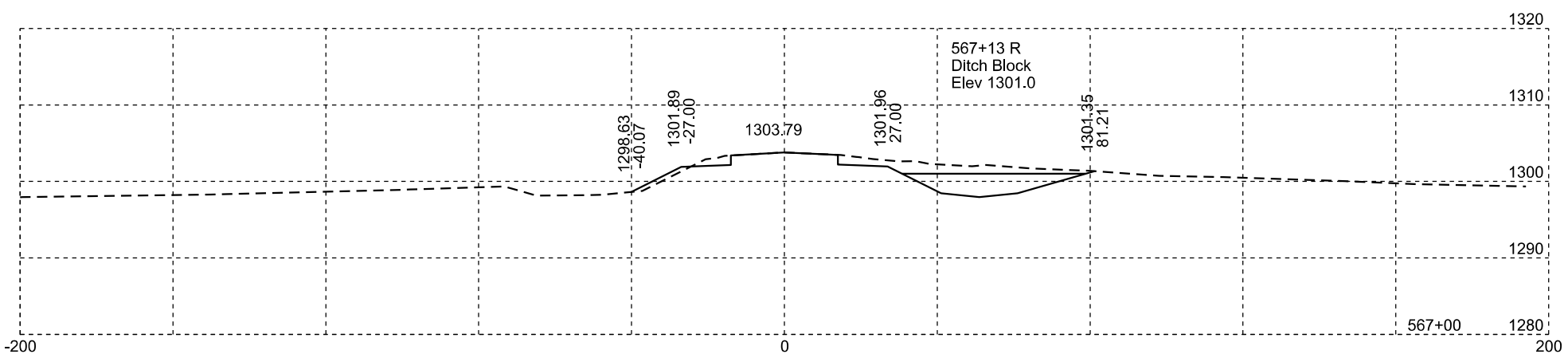

Plotting Date: 01/19/2024

STATE OF SOUTH DAKOTA	PROJECT	SHEET NO.	TOTAL SHEETS
	P-PH-B-PT 0010(124)296	X134	X169

Plotting Date: 01/19/2024

STATE OF SOUTH DAKOTA	PROJECT	SHEET NO.	TOTAL SHEETS
	P-PH-B-PT 0010(124)296	X135	X169

Unstable

-200
0
200

1295.83
-42.50
1299.71
-27.00
1301.57
1299.79
27.00
1296.34
40.82

556+00

1295.66
-42.82
1299.61
-27.00
1301.46
1299.71
27.00
1296.16
41.18

557+00

1295.53
-43.01
1299.53
-27.00
1301.36
1299.56
27.00
1296.06
41.01

558+00

1296.00
-41.01
1299.50
-27.00
1301.37
1299.54
27.00
1296.19
40.38

559+00

1296.02
-40.94
1299.50
-27.00
1301.44
1299.52
27.00
1296.23
40.18

559+55

1296.20
-40.46
1299.57
-27.00
1301.46
1299.58
27.00
1296.20
40.53

560+00

1280
1290
1300
1310
1320

Plotting Date: 01/19/2024

STATE OF SOUTH DAKOTA	PROJECT	SHEET NO.	TOTAL SHEETS
	P-PH-B-PT 0010(124)296	X136	X169

Plotting Date: 01/19/2024

STATE OF SOUTH DAKOTA	PROJECT	SHEET NO.	TOTAL SHEETS
	P-PH-B-PT 0010(124)296	X137	X169

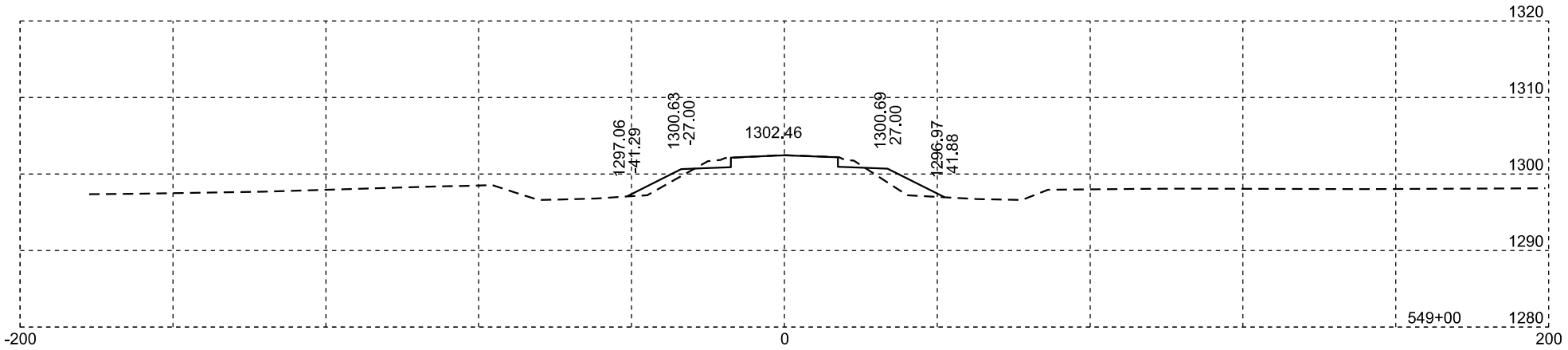

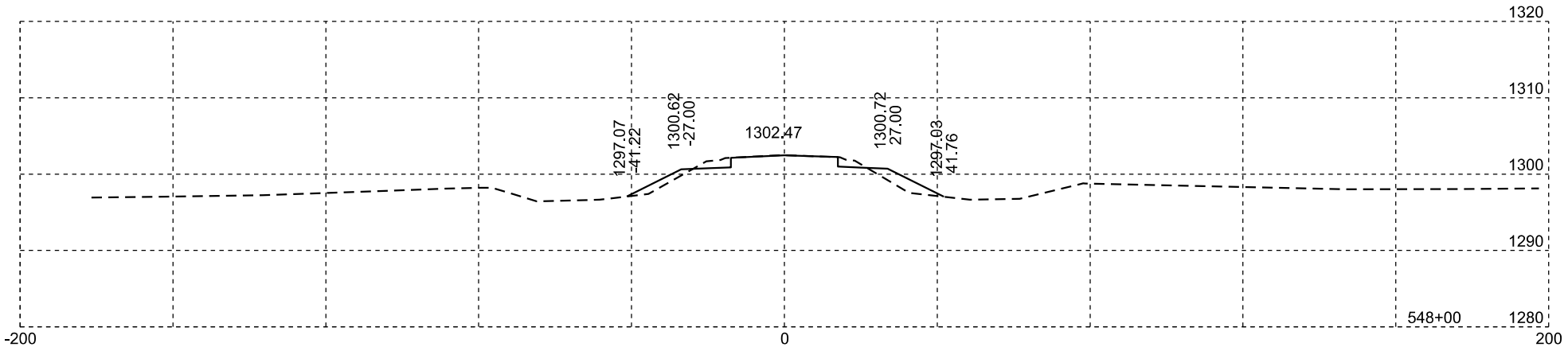

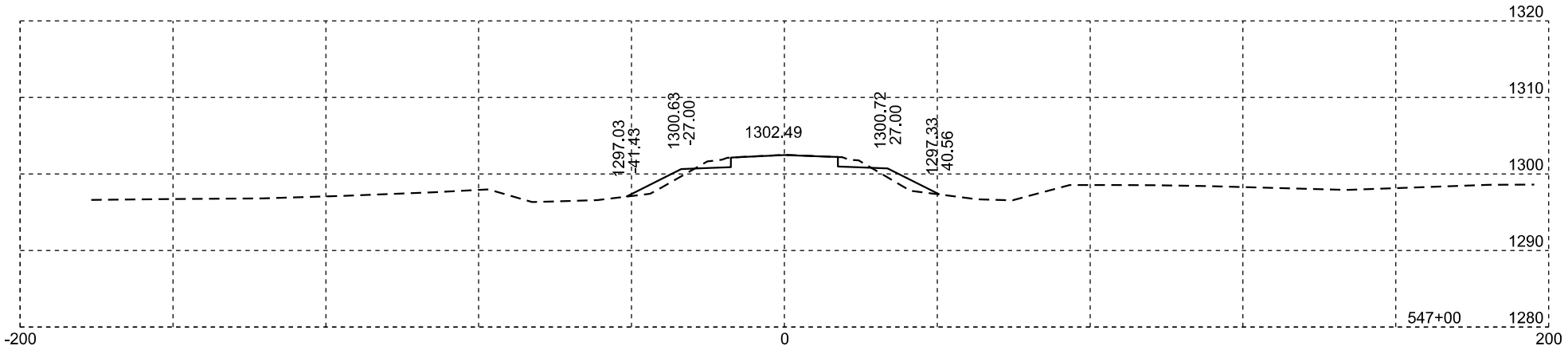

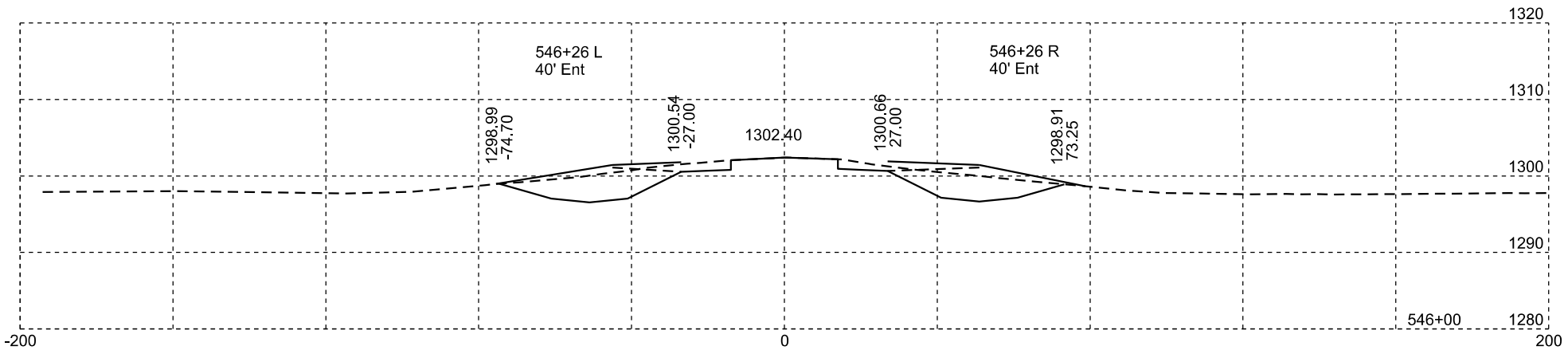

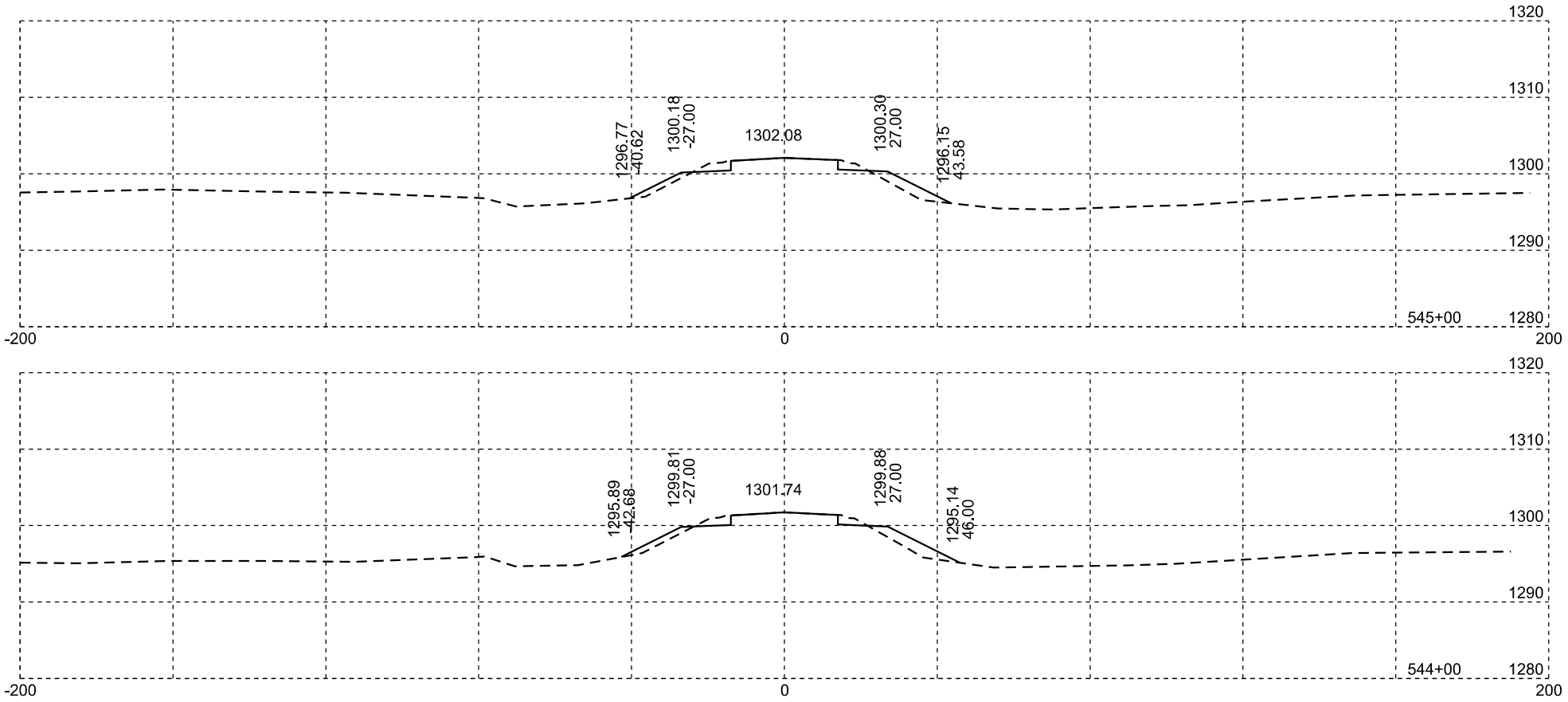

Plotting Date: 01/19/2024

STATE OF SOUTH DAKOTA	PROJECT	SHEET NO.	TOTAL SHEETS
	P-PH-B-PT 0010(124)296	X138	X169

Plotting Date: 01/19/2024

STATE OF SOUTH DAKOTA	PROJECT	SHEET NO.	TOTAL SHEETS
	P-PH-B-PT 0010(124)296	X139	X169

Muck

Plotting Date: 01/19/2024

STATE OF SOUTH DAKOTA	PROJECT	SHEET NO.	TOTAL SHEETS
	P-PH-B-PT 0010(124)296	X140	X169

Muck

Plotting Date: 01/19/2024

STATE OF SOUTH DAKOTA	PROJECT	SHEET NO.	TOTAL SHEETS
	P-PH-B-PT 0010(124)296	X141	X169

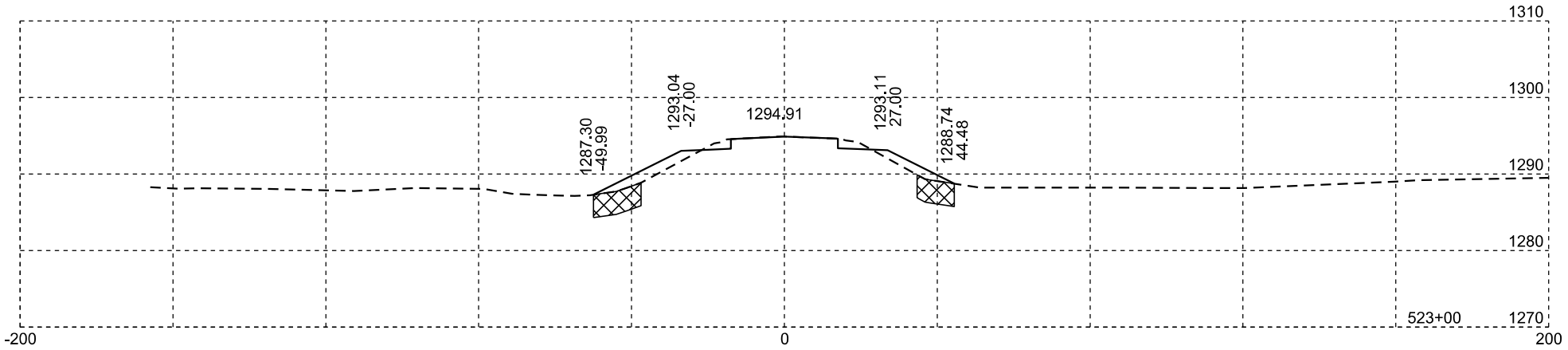

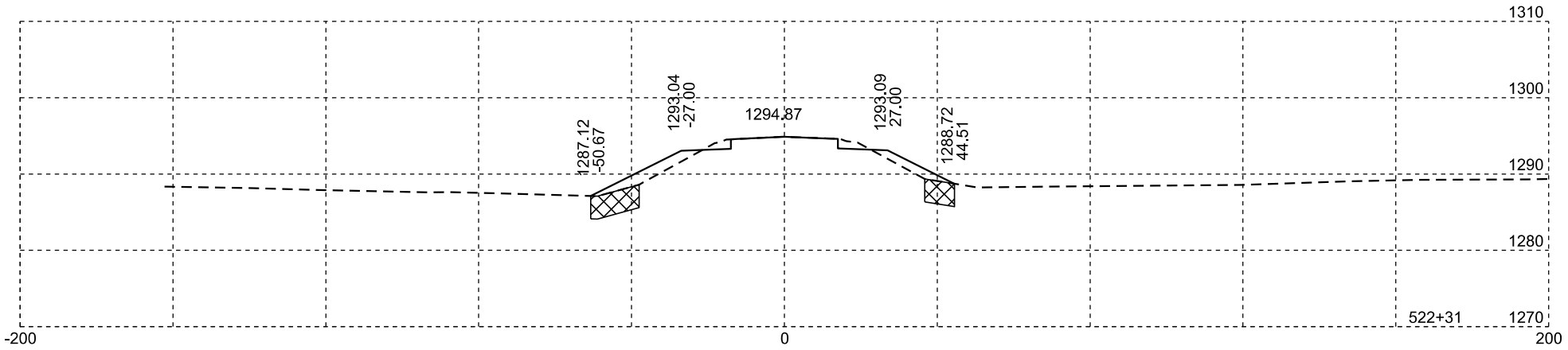

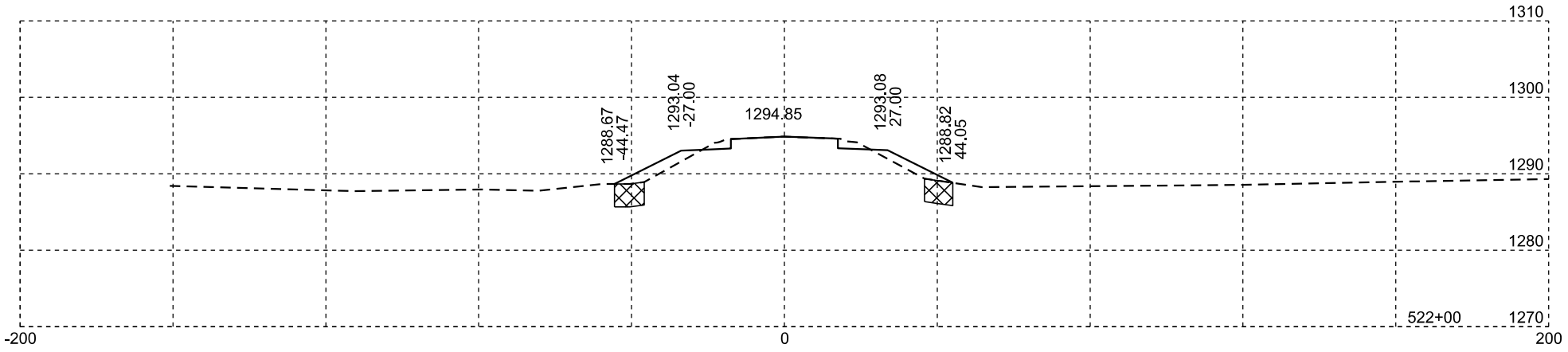

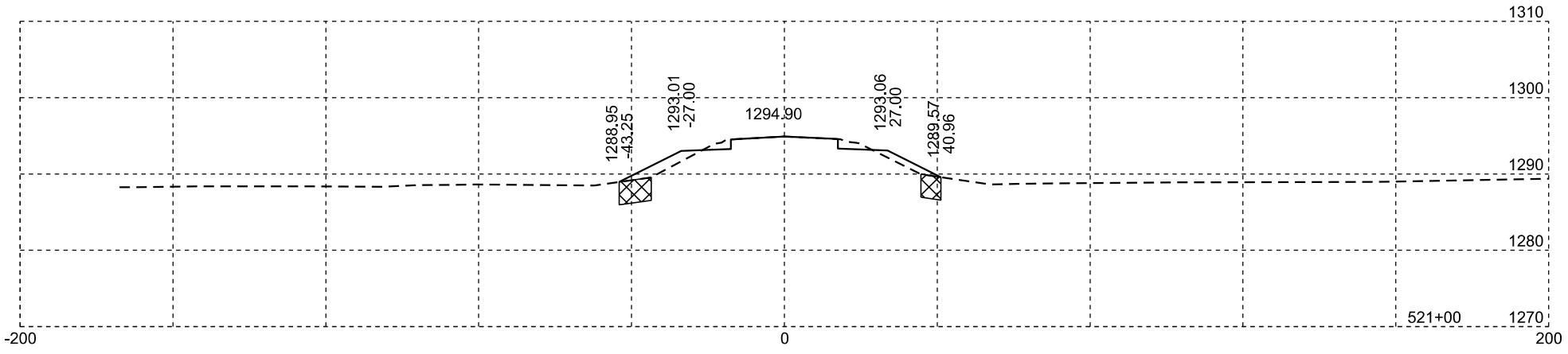

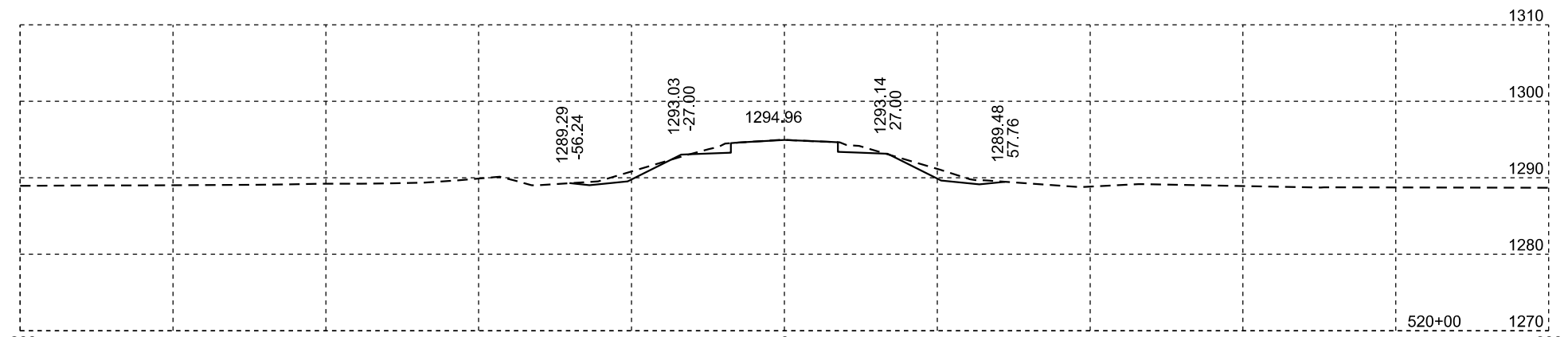

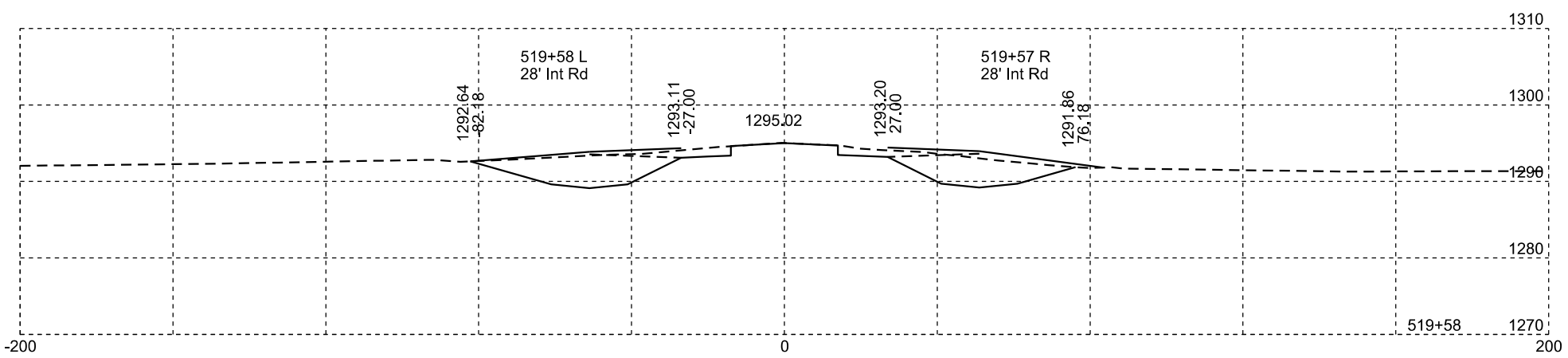

Muck

Plotting Date: 01/19/2024

STATE OF SOUTH DAKOTA	PROJECT	SHEET NO.	TOTAL SHEETS
	P-PH-B-PT 0010(124)296	X142	X169

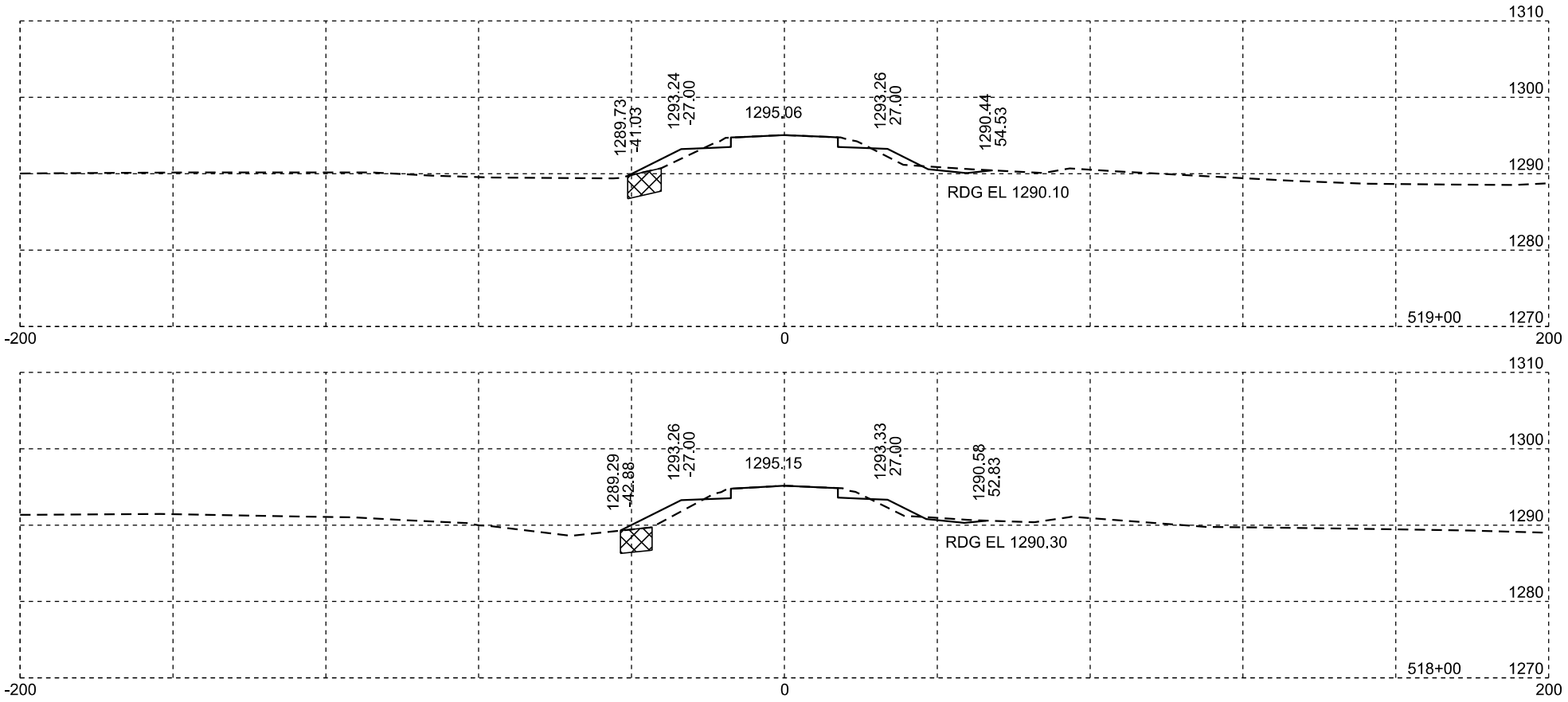

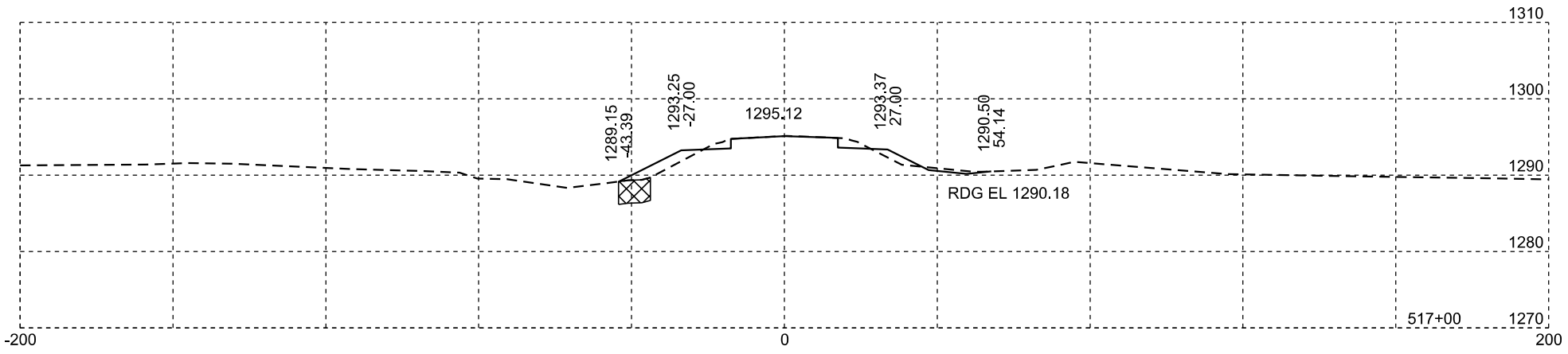

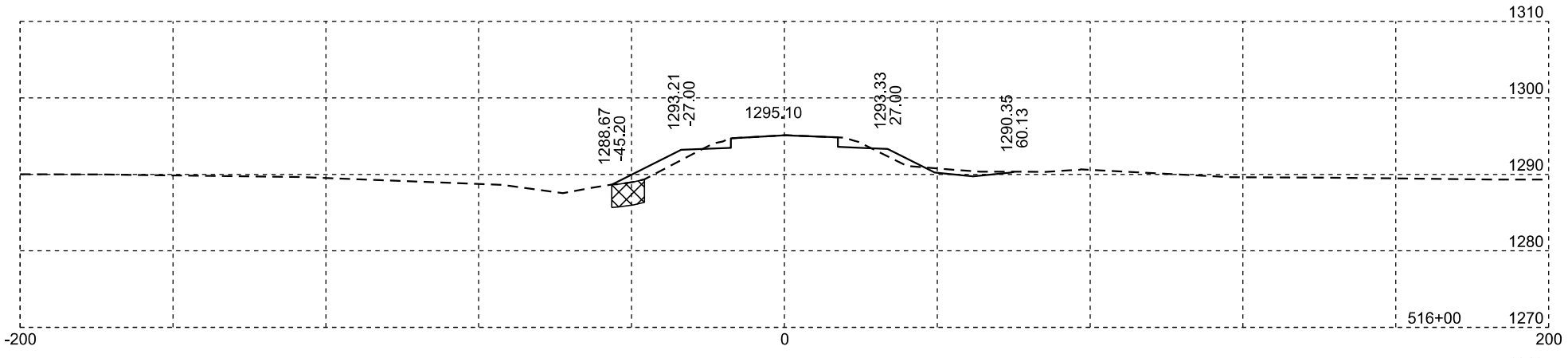

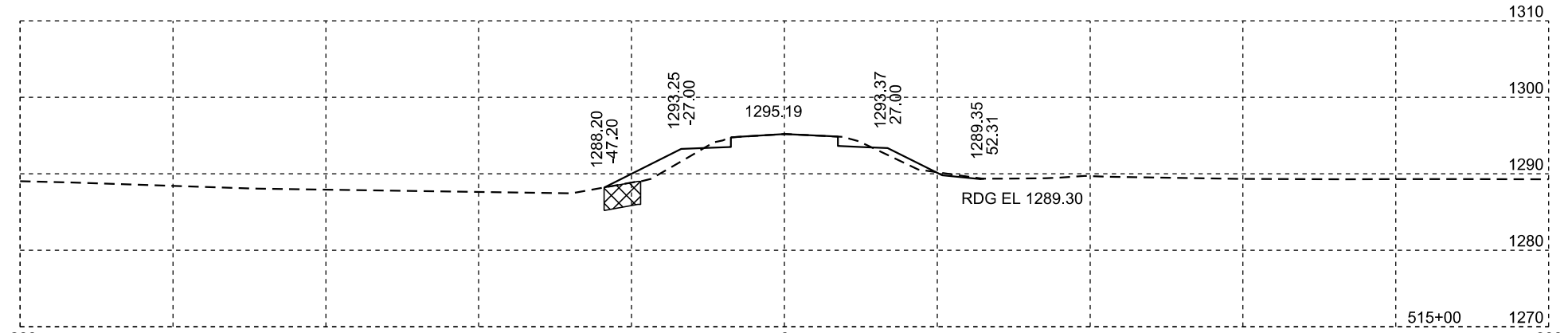

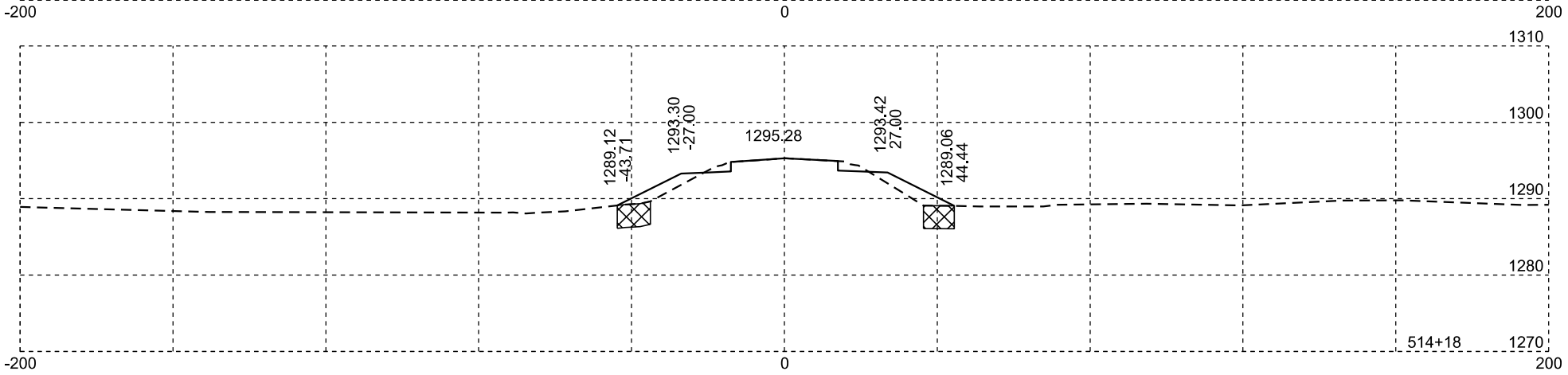

Muck

Rev 02/29/2024 DRM
Plotting Date: 02/29/2024

STATE OF SOUTH DAKOTA	PROJECT	SHEET NO.	TOTAL SHEETS
	P-PH-B-PT 0010(124)296	X143	X169

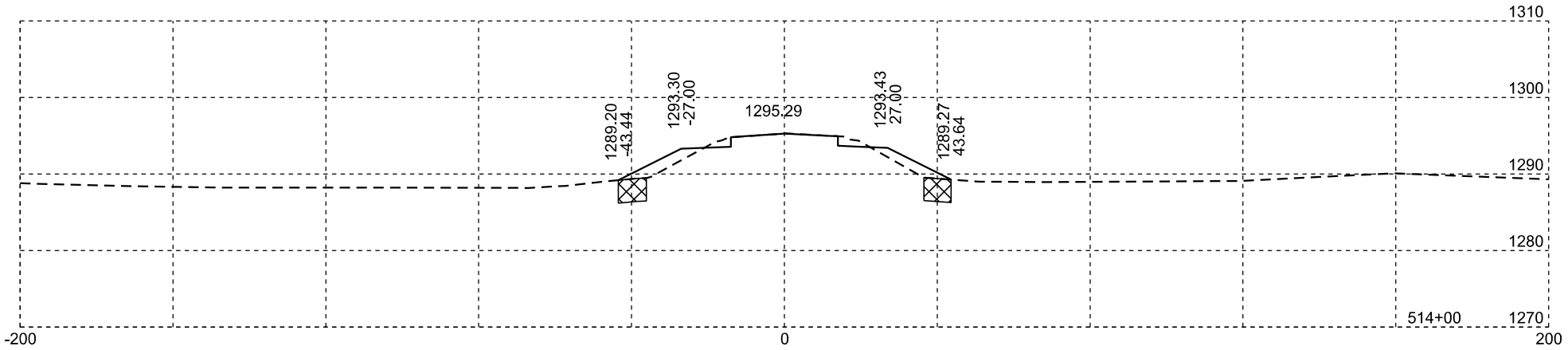

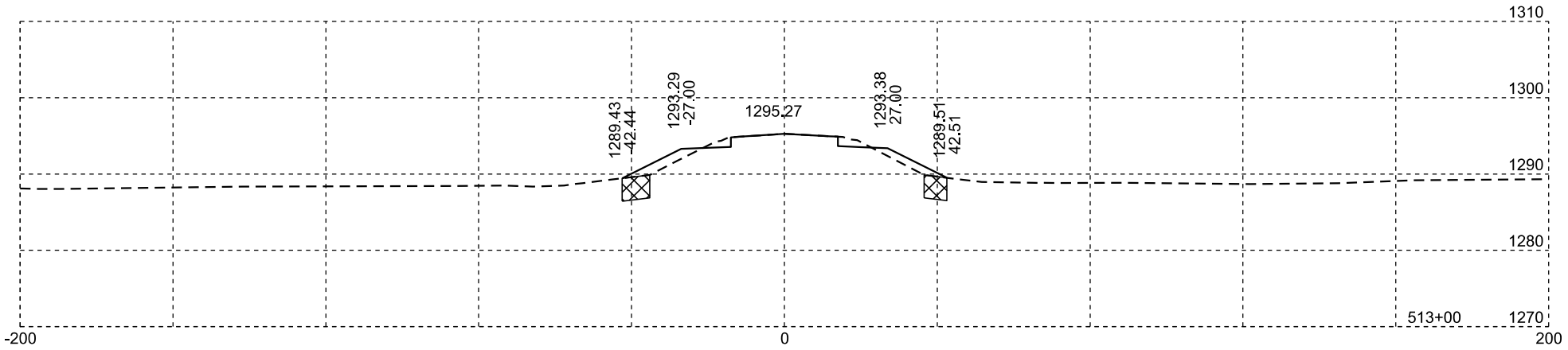

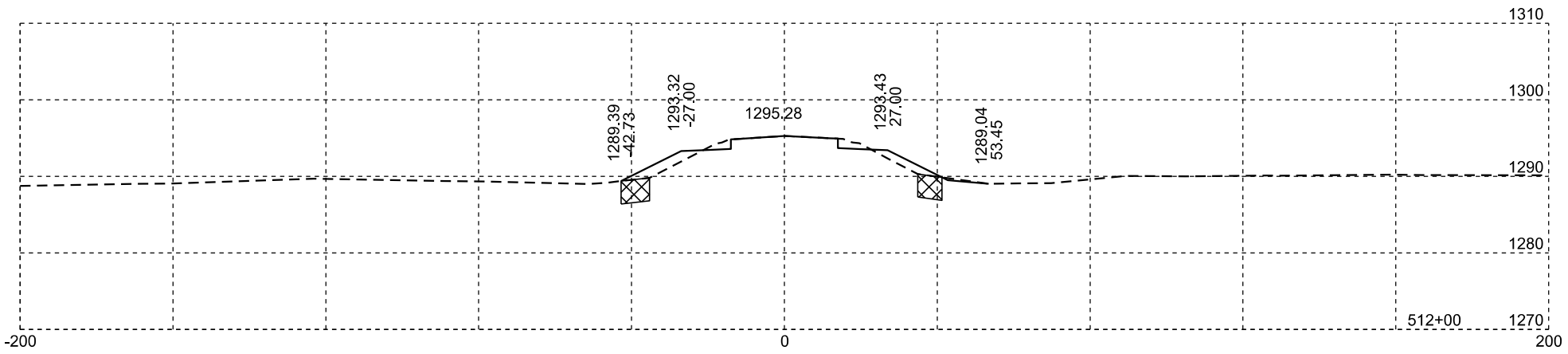

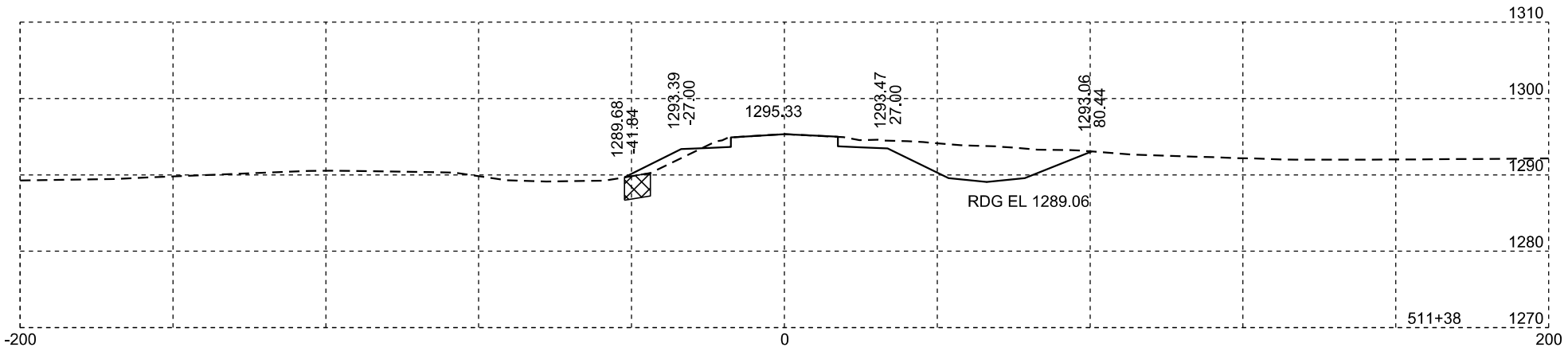

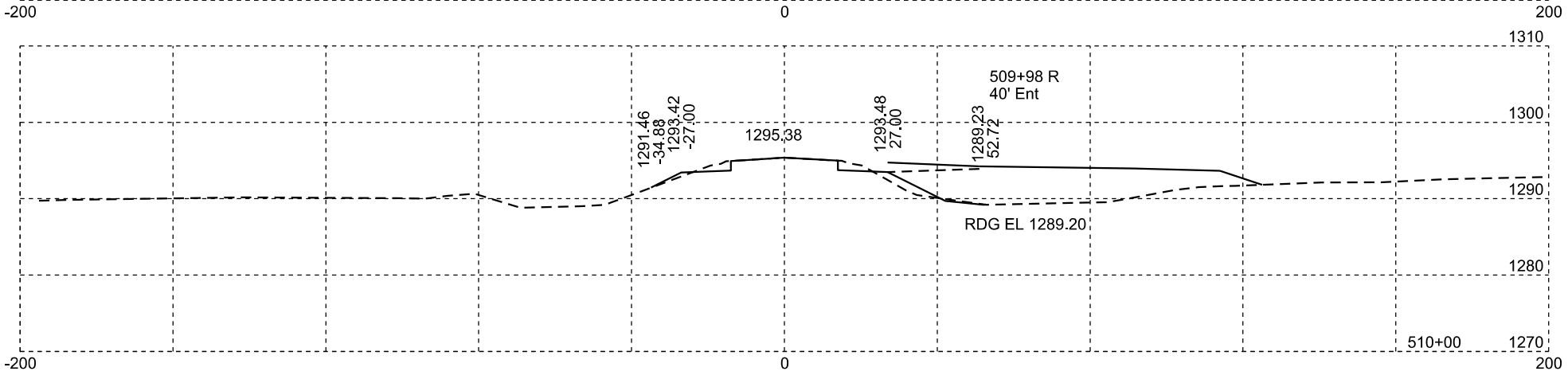

Muck

Plotting Date: 01/19/2024

STATE OF SOUTH DAKOTA	PROJECT	SHEET NO.	TOTAL SHEETS
	P-PH-B-PT 0010(124)296	X144	X169

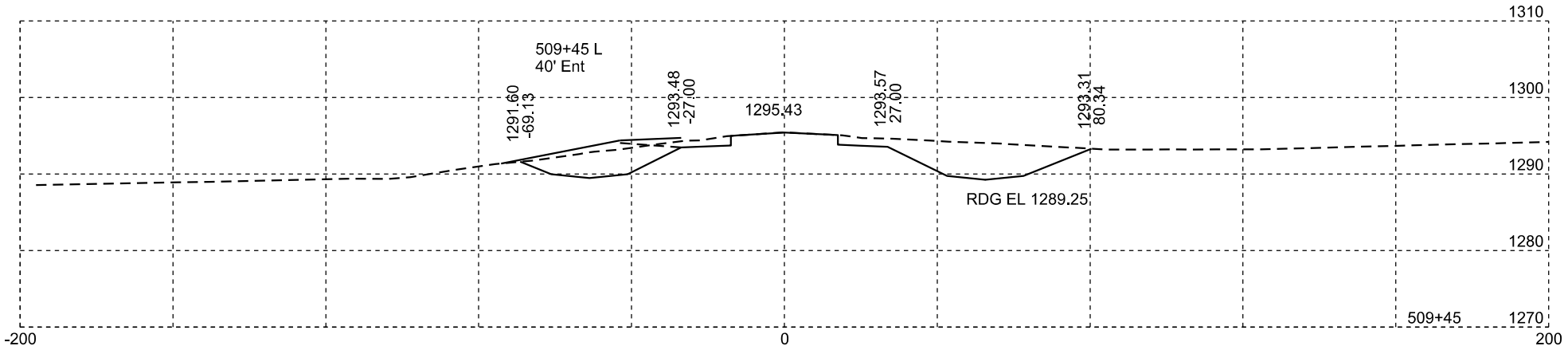

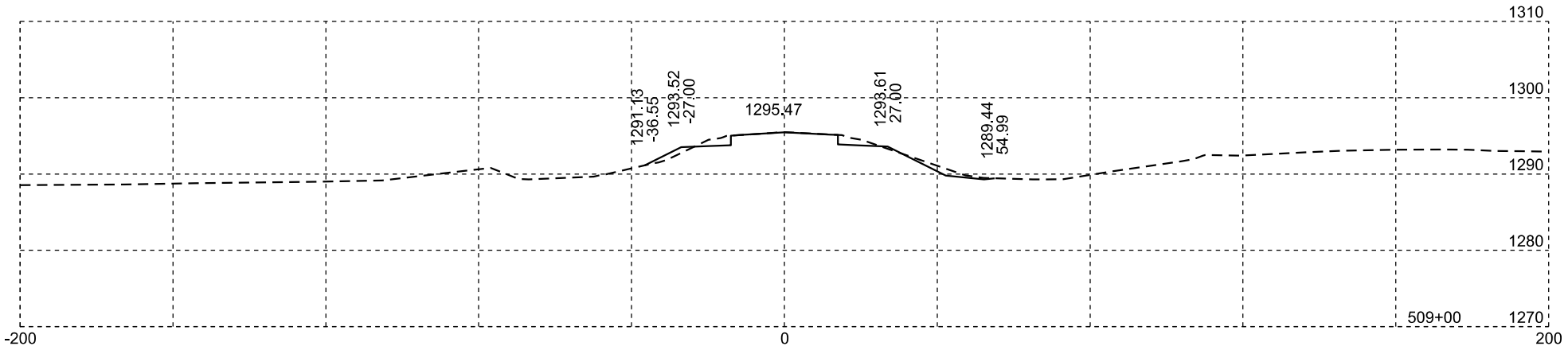

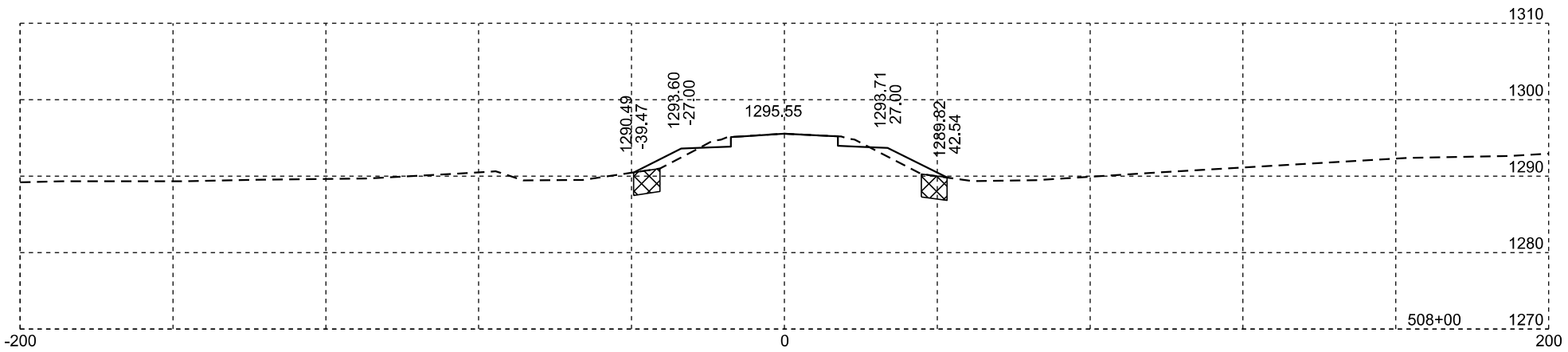

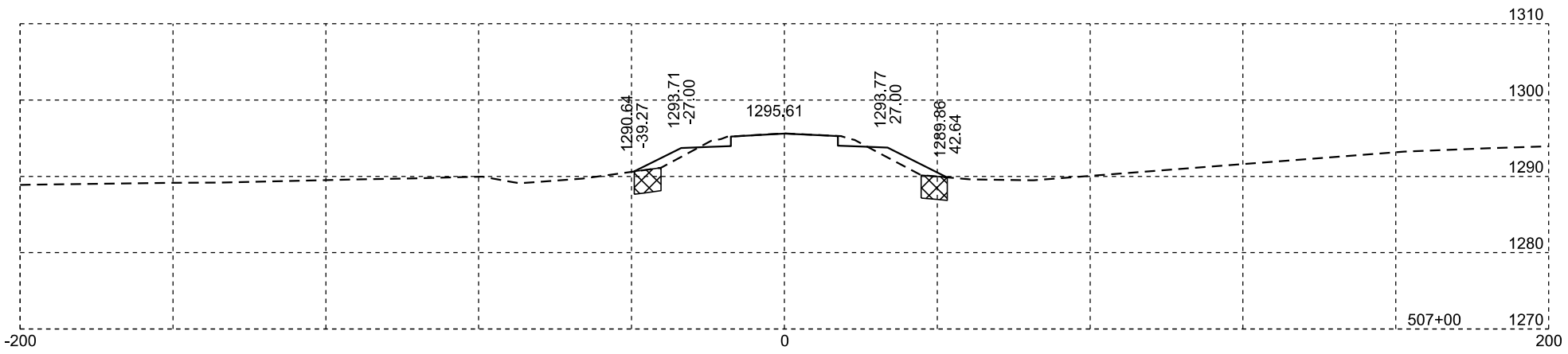

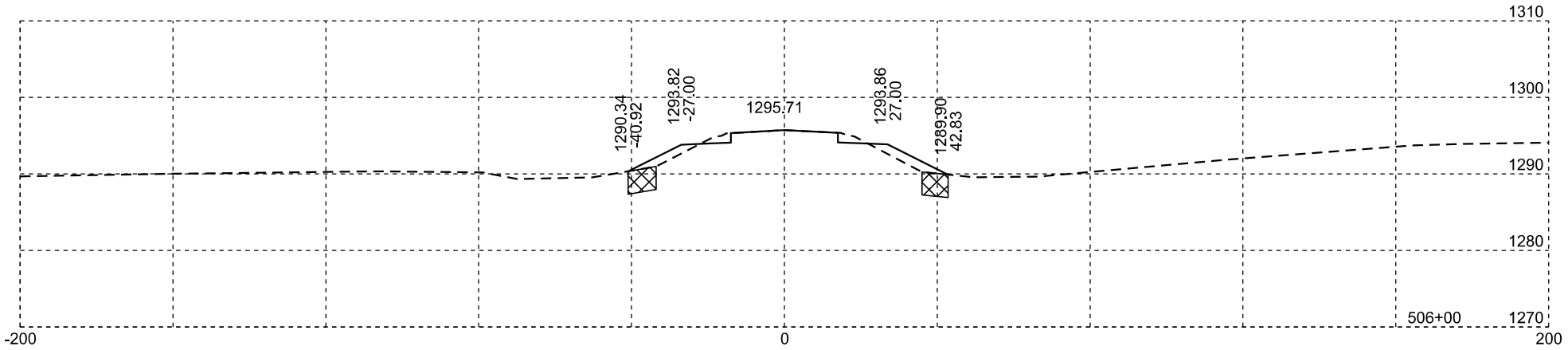

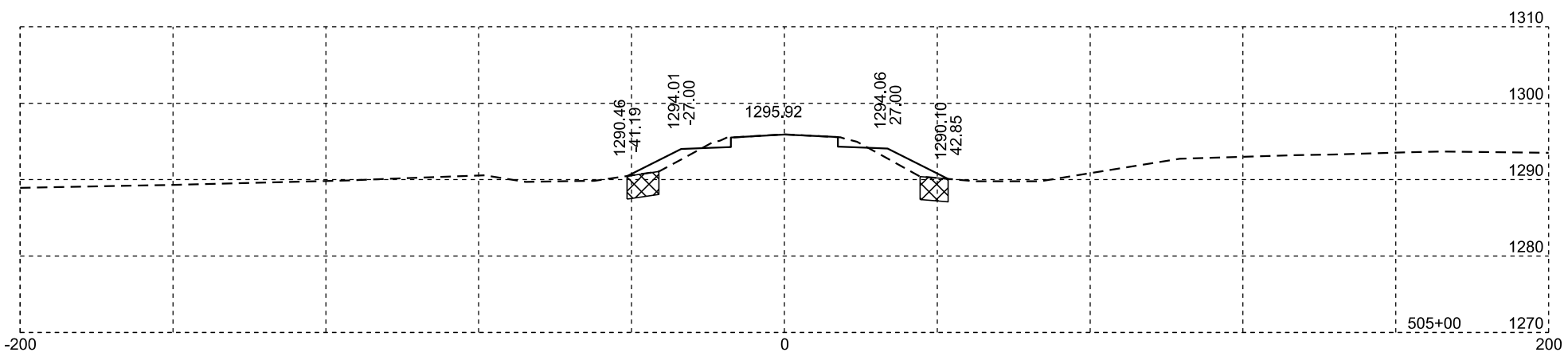

Muck

Rev 02/29/2024 DRM
Plotting Date: 02/29/2024

STATE OF SOUTH DAKOTA	PROJECT	SHEET NO.	TOTAL SHEETS
	P-PH-B-PT 0010(124)296	X145	X169

Plotting Date: 01/19/2024

STATE OF SOUTH DAKOTA	PROJECT	SHEET NO.	TOTAL SHEETS
	P-PH-B-PT 0010(124)296	X146	X169

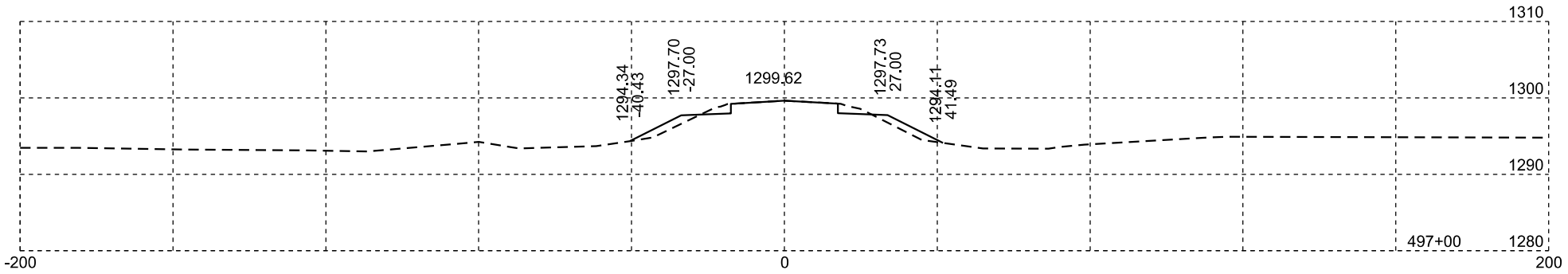

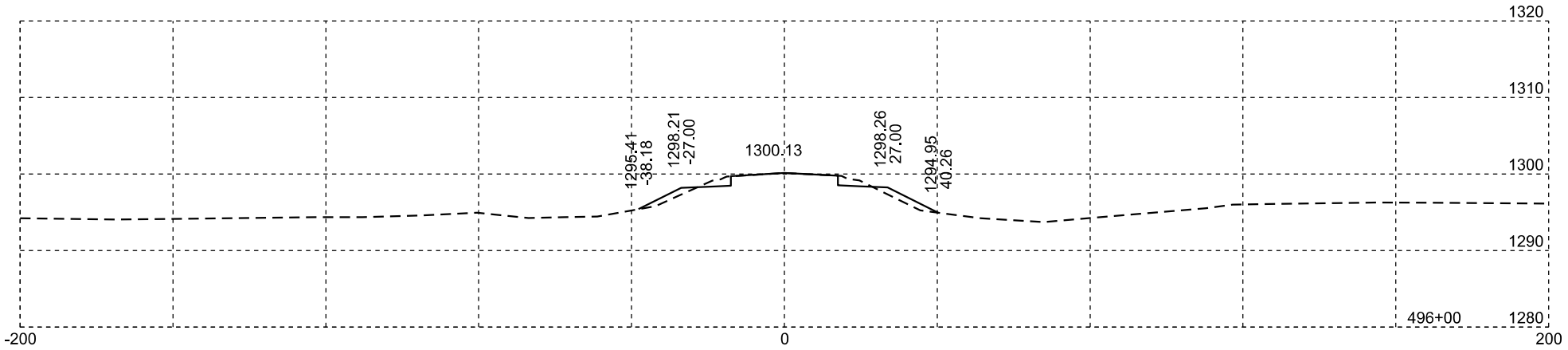

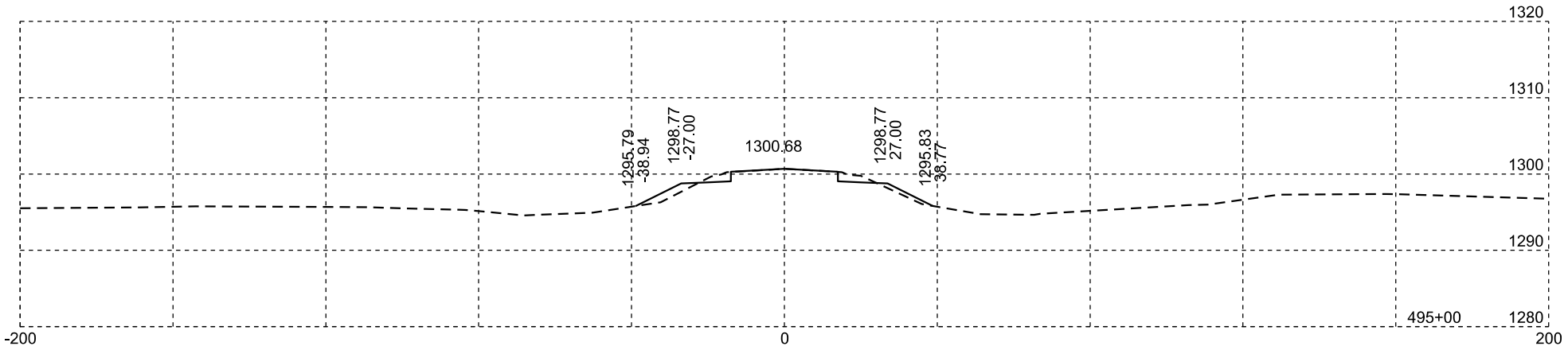

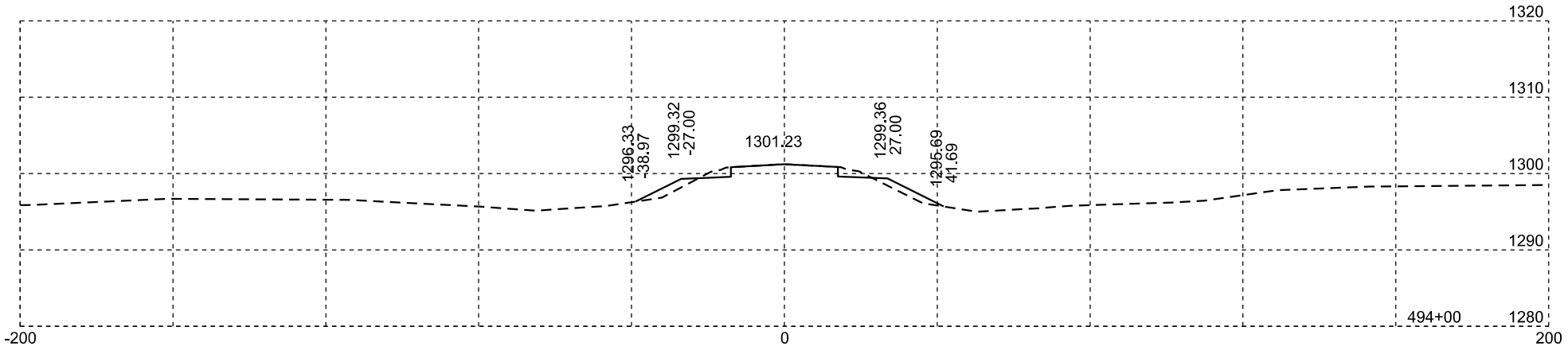

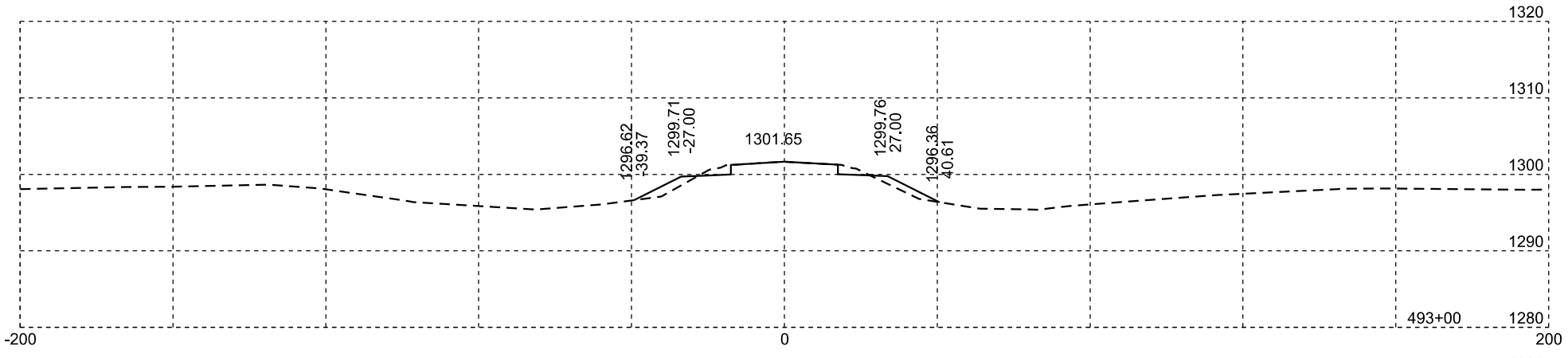

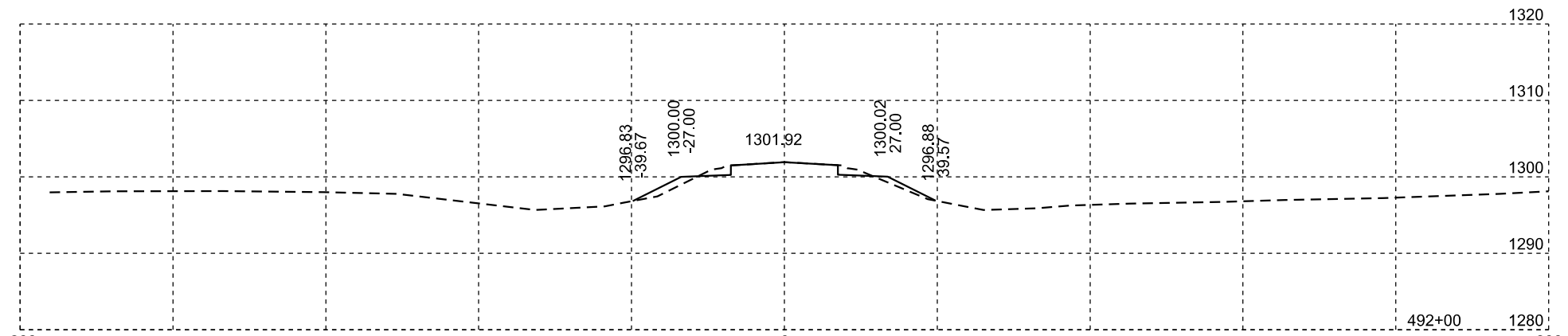

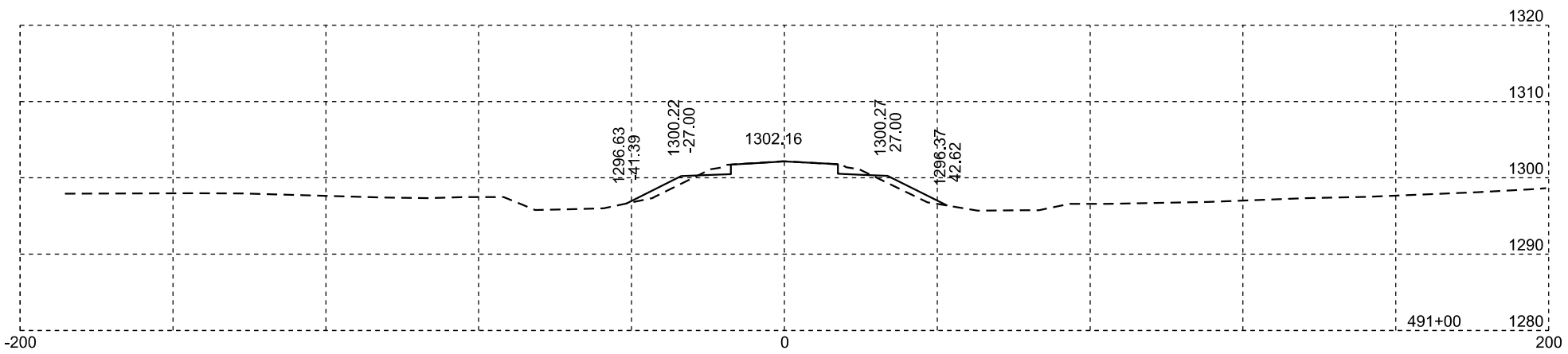

Plotting Date: 01/19/2024

STATE OF SOUTH DAKOTA	PROJECT	SHEET NO.	TOTAL SHEETS
	P-PH-B-PT 0010(124)296	X147	X169

Unstable

-200

1296.33
-39.45

1299.44
-27.00

1301.34

1299.42
27.00

5.0:1

1297.94
71.08

484+75 R
40' Ent

0

1296.37
-40.22

1299.67
-27.00

1301.57

1299.63
27.00

1295.85
42.10

1296.49
-40.50

1299.86
-27.00

1301.76

1299.82
27.00

1295.83
42.97

1296.54
-41.31

1300.12
-27.00

1302.01

1300.10
27.00

1296.00
43.41

1296.85
-40.86

1300.32
-27.00

1302.24

1300.33
27.00

1296.38
42.81

1296.58
-42.09

1300.35
-27.00

1302.27

1300.43
27.00

1296.14
44.13

485+00

486+00

487+00

488+00

489+00

490+00

1280
200

1290

1300

1310

1320

Plotting Date: 01/19/2024

STATE OF SOUTH DAKOTA	PROJECT	SHEET NO.	TOTAL SHEETS
	P-PH-B-PT 0010(124)296	X148	X169

Muck

Plotting Date: 01/19/2024

STATE OF SOUTH DAKOTA	PROJECT	SHEET NO.	TOTAL SHEETS
	P-PH-B-PT 0010(124)296	X149	X169

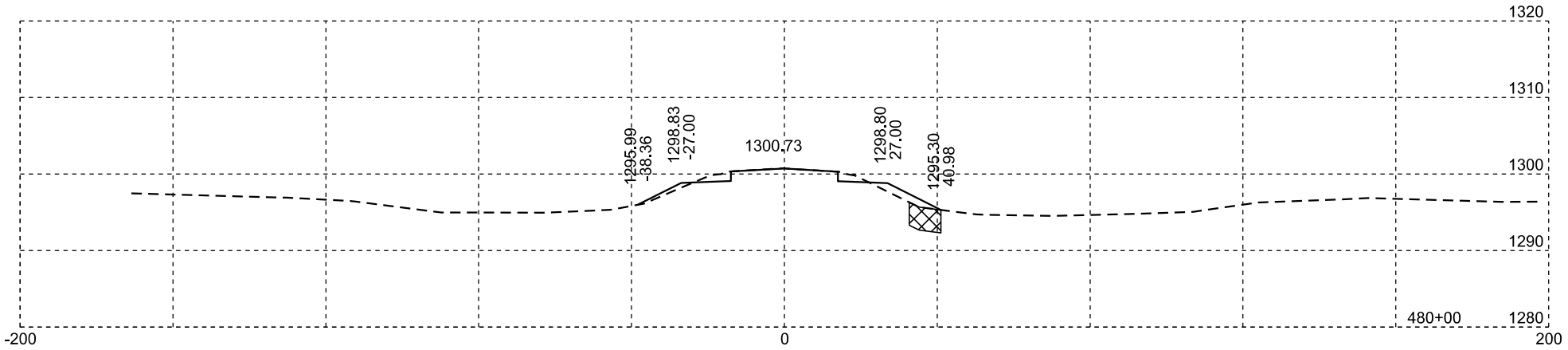

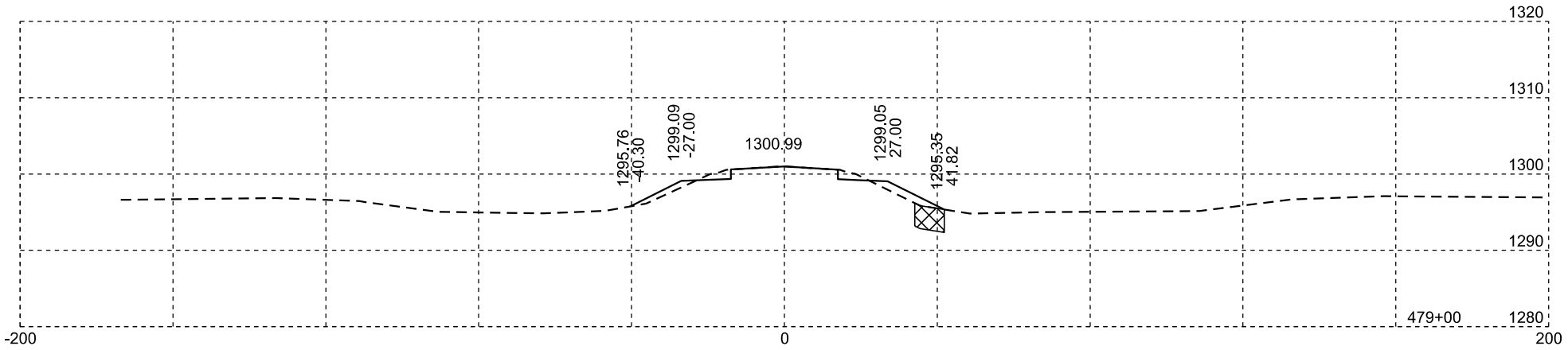

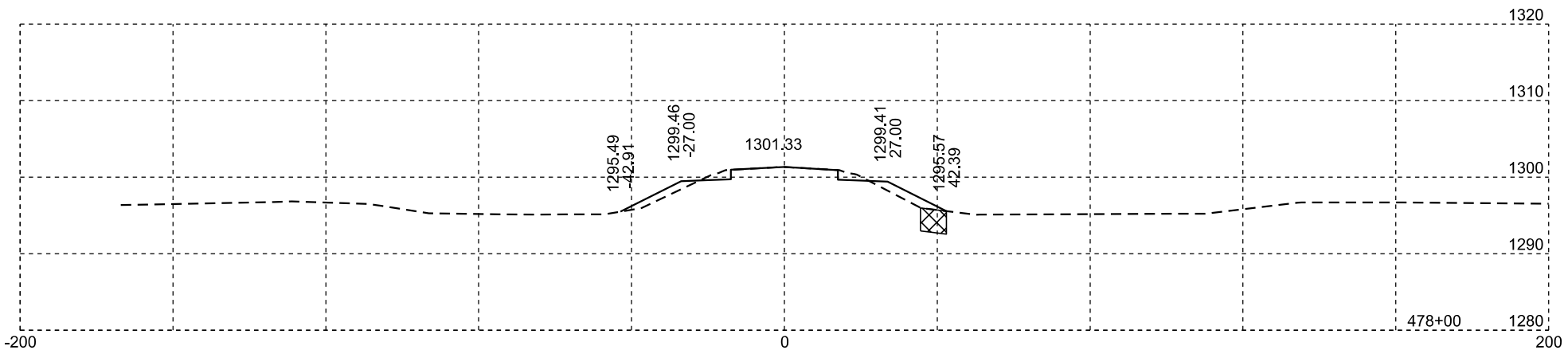

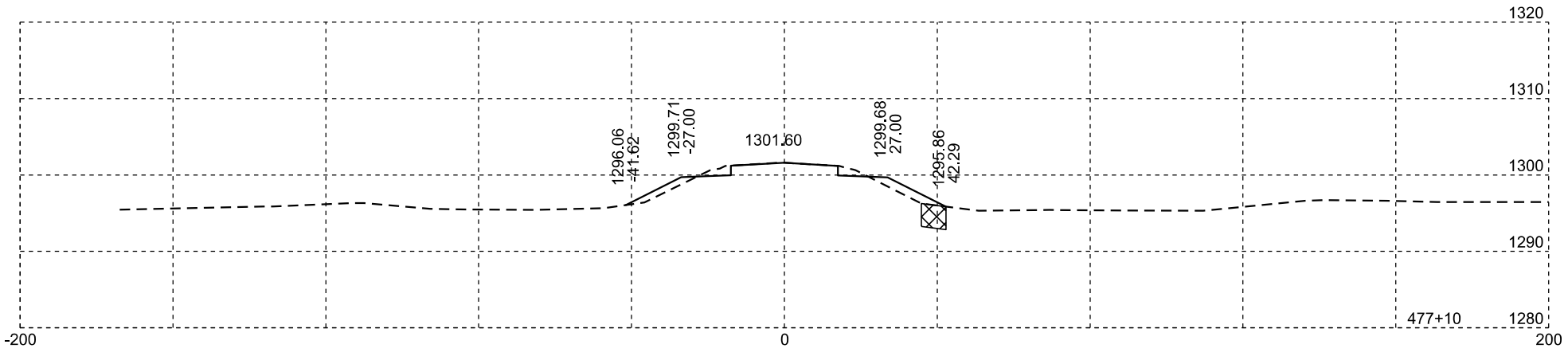

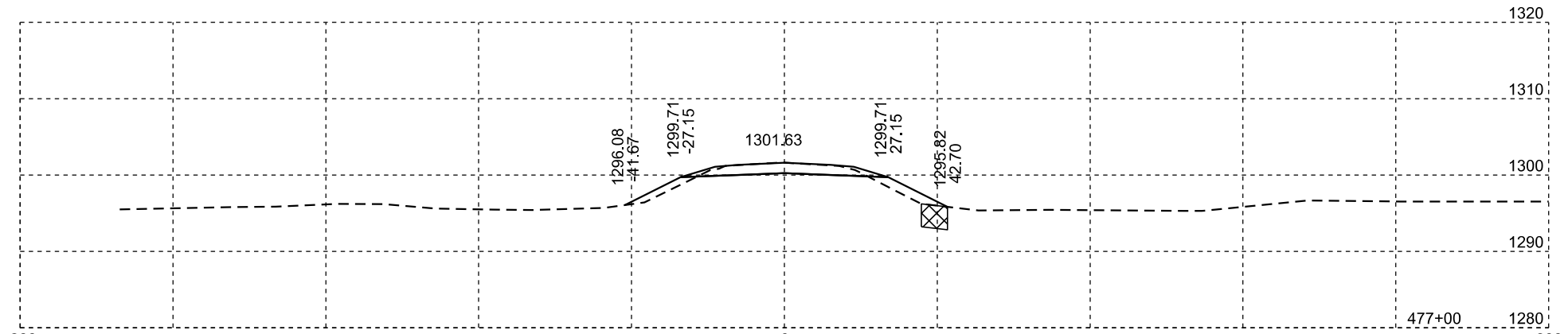

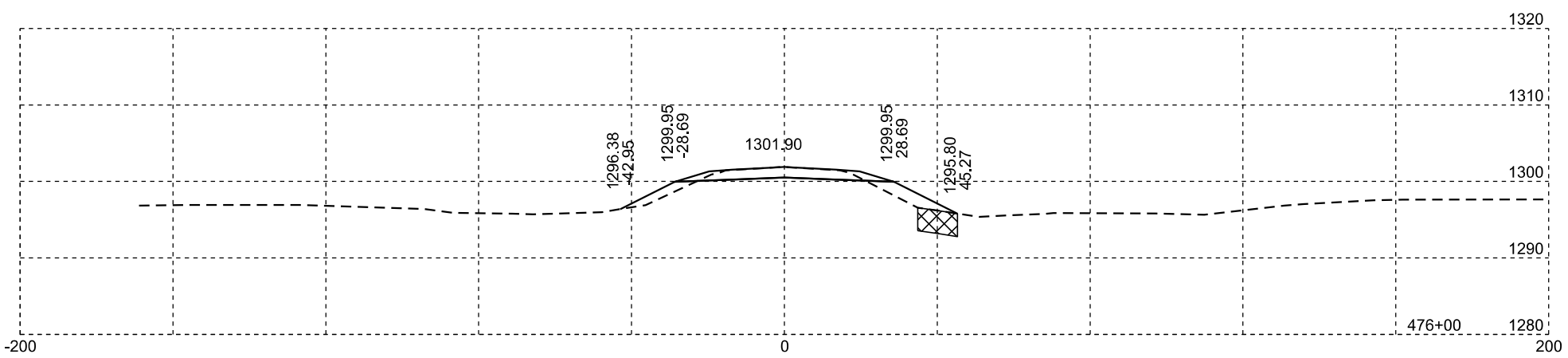

Muck

Plotting Date: 01/19/2024

STATE OF SOUTH DAKOTA	PROJECT	SHEET NO.	TOTAL SHEETS
	P-PH-B-PT 0010(124)296	X150	X169

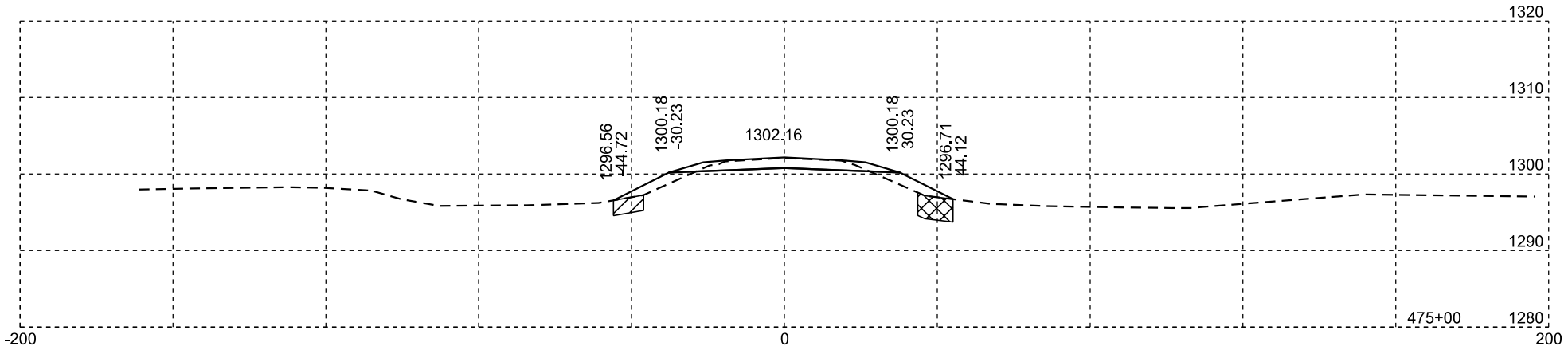

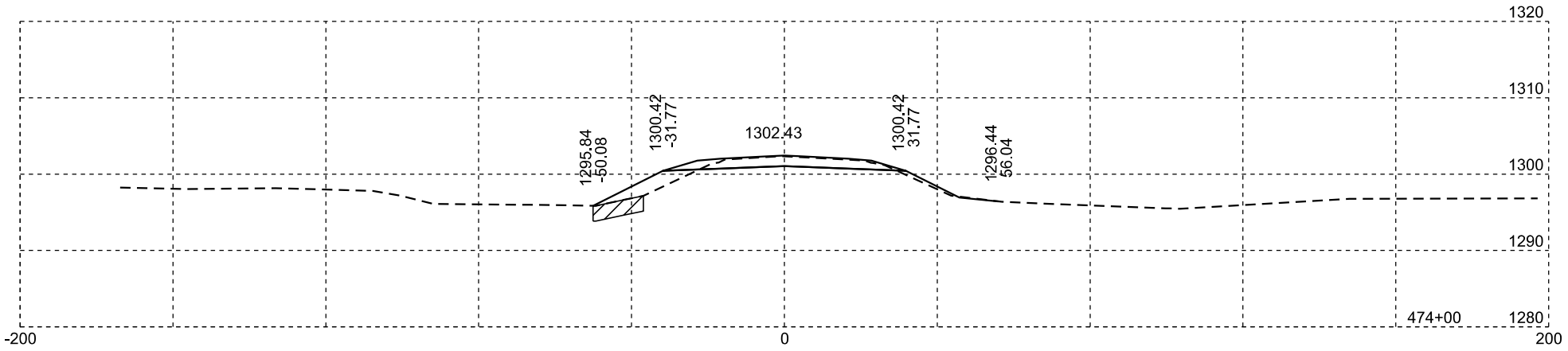

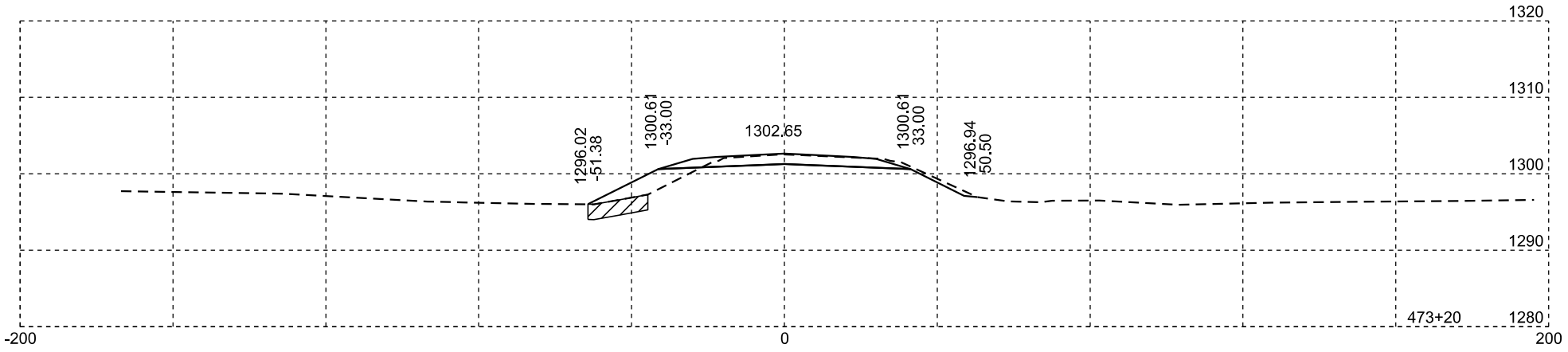

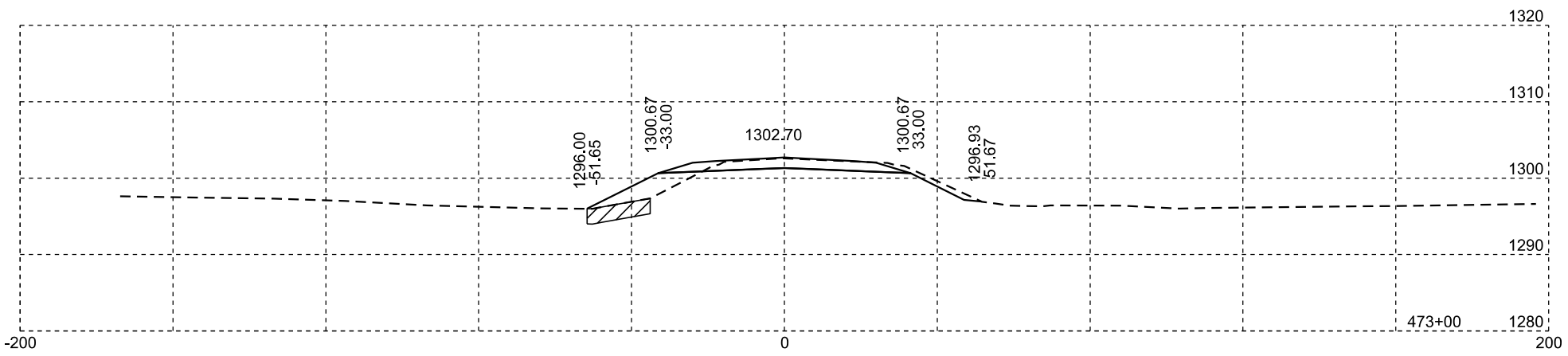

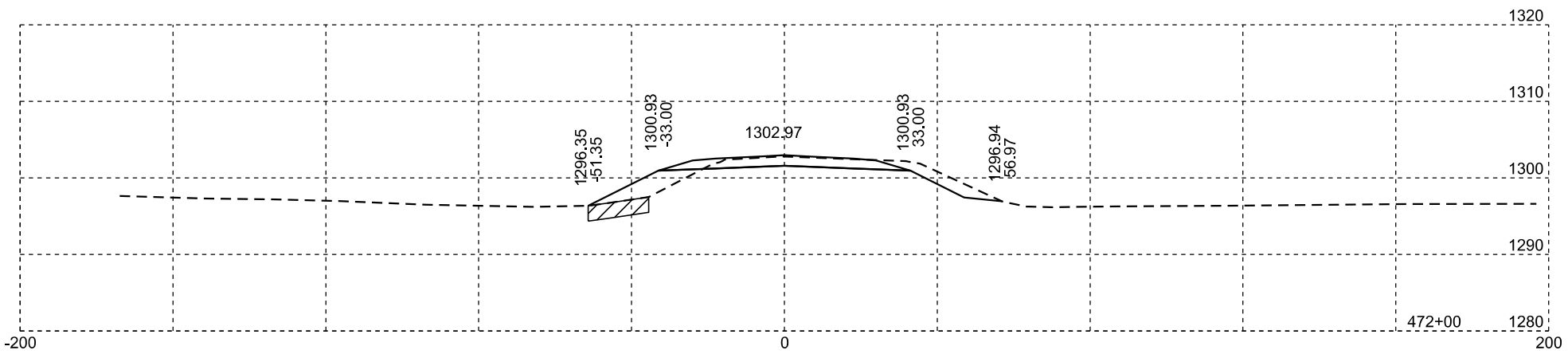

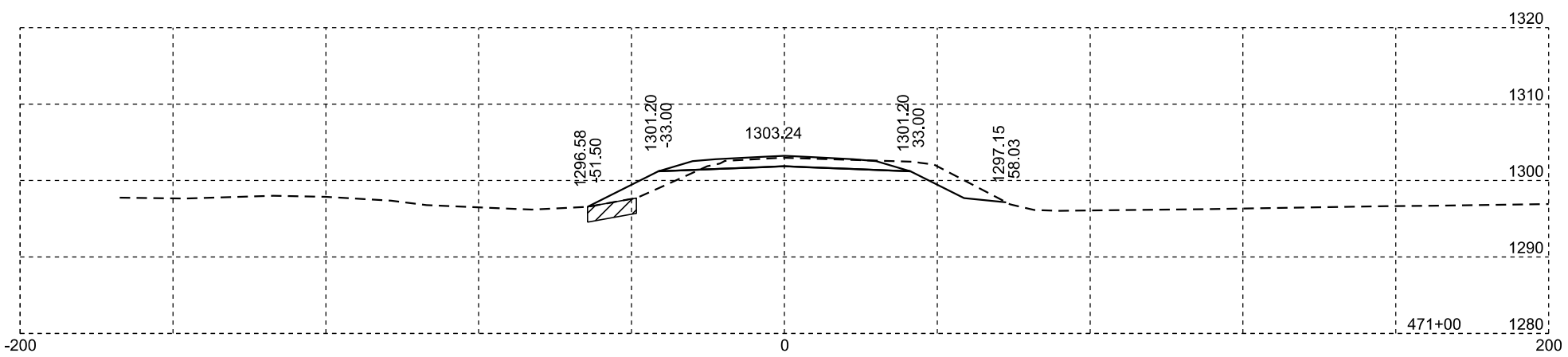

Unstable

Muck

Plotting Date: 01/19/2024

STATE OF SOUTH DAKOTA	PROJECT	SHEET NO.	TOTAL SHEETS
	P-PH-B-PT 0010(124)296	X151	X169

Unstable

-200

1298.06
-61.28

1301.85
-33.00

1303.89

1301.85
33.00

1298.46
67.75

HOLE 2
466+00 - 9.4' RT

0

466+00

1280

1290

1300

1310

1320

-200

1302.05
-92.64

466+76 L
28' Int Rd

1301.89
-33.00

1303.92

1301.89
33.00

466+82 R
36' Int Rd
(See Intersection
Layout Sheet)

1302.94
98.88

0

466+79

1280

1290

1300

1310

1320

-200

1300.81
-83.97

1301.89
-33.00

1303.92

1301.89
33.00

1302.66
96.90

0

467+00

1280

1290

1300

1310

1320

-200

1298.77
-45.26

1301.83
-33.00

1303.87

1301.83
33.00

1298.08
61.88

0

468+00

1280

1290

1300

1310

1320

-200

1297.57
-49.49

1301.70
-33.00

1303.73

1301.70
33.00

1297.47
61.54

0

469+00

1280

1290

1300

1310

1320

-200

1296.95
-51.10

1301.47
-33.00

1303.51

1301.47
33.00

1297.43
57.88

0

470+00

1280

1290

1300

1310

1320

Plotting Date: 01/19/2024

STATE OF SOUTH DAKOTA	PROJECT	SHEET NO.	TOTAL SHEETS
	P-PH-B-PT 0010(124)296	X152	X169

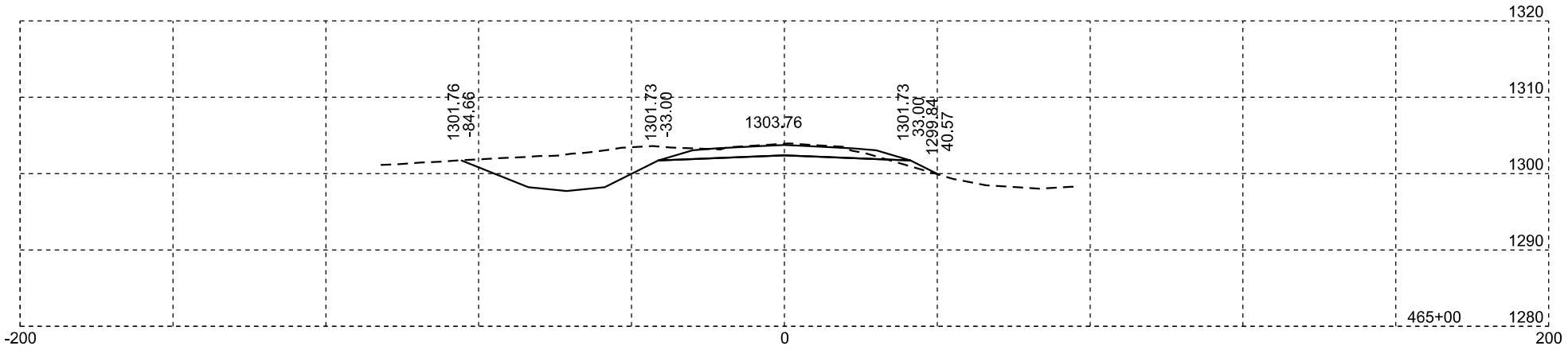

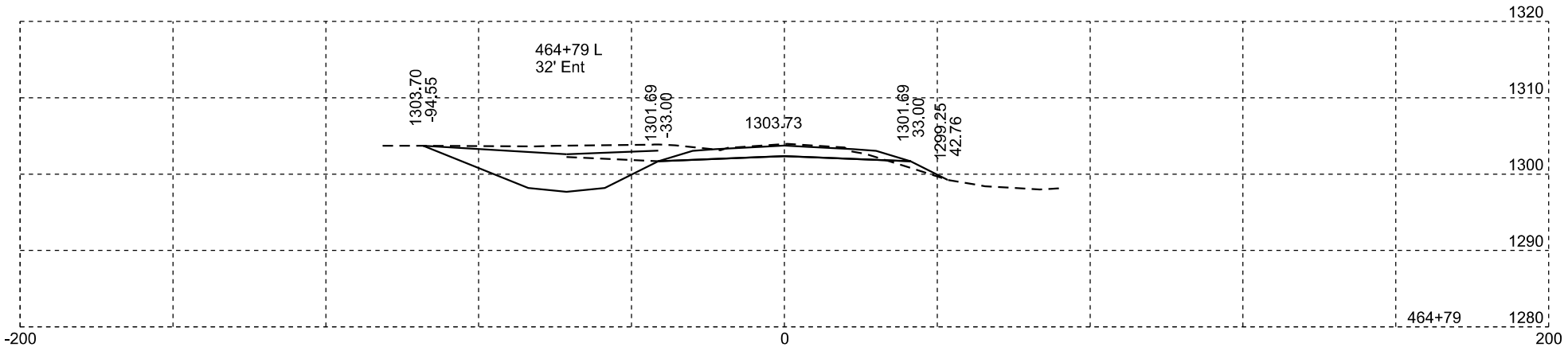

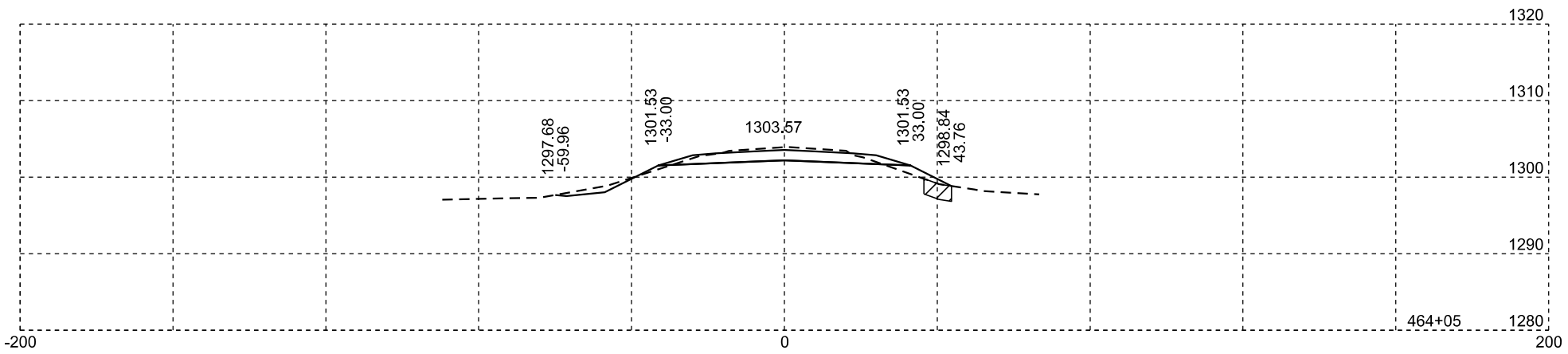

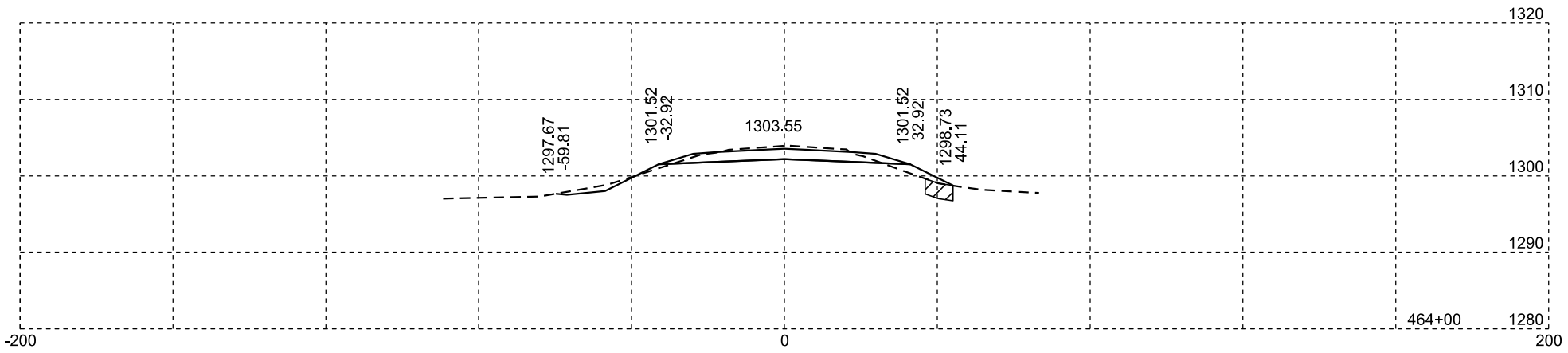

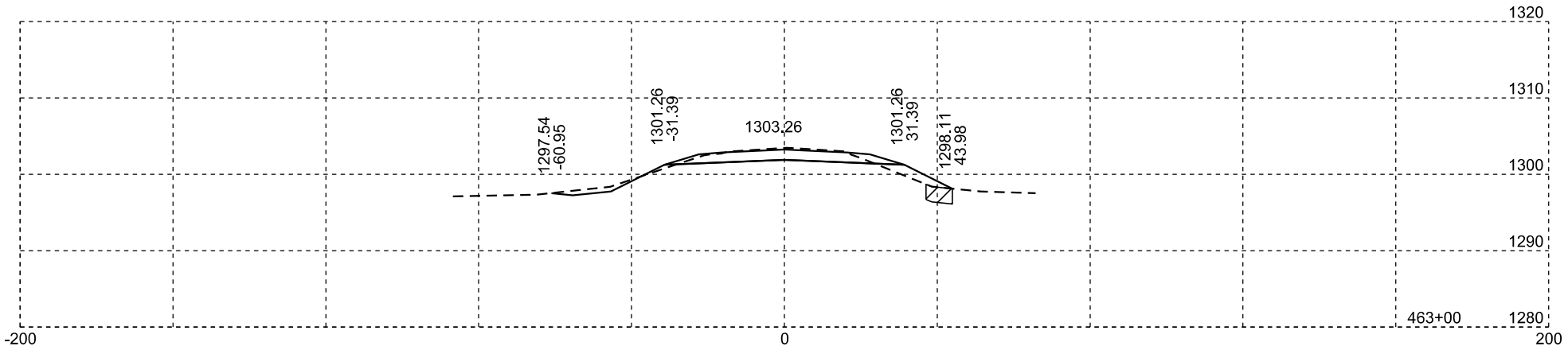

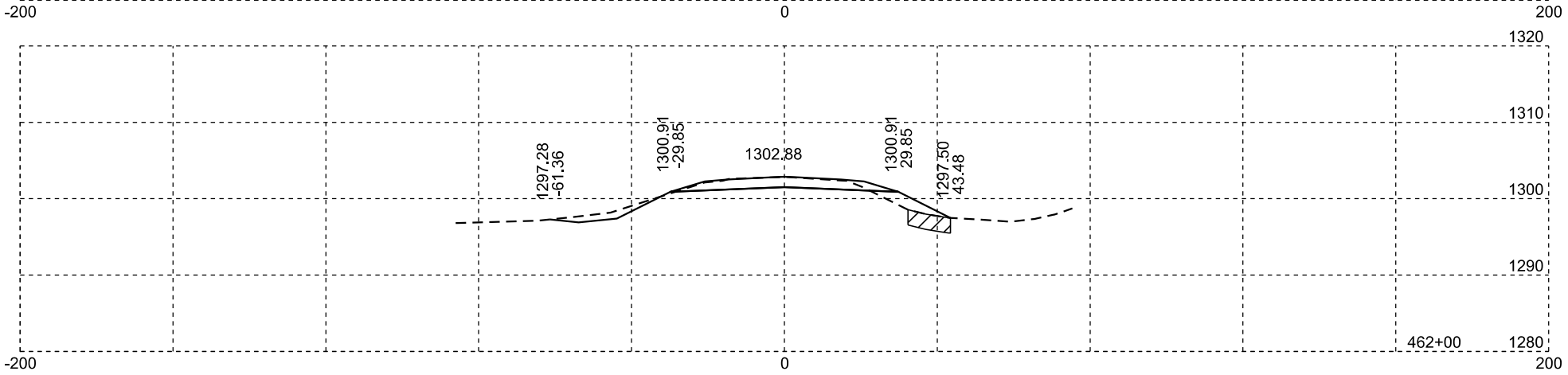

Unstable

Plotting Date: 01/19/2024

STATE OF SOUTH DAKOTA	PROJECT	SHEET NO.	TOTAL SHEETS
	P-PH-B-PT 0010(124)296	X153	X169

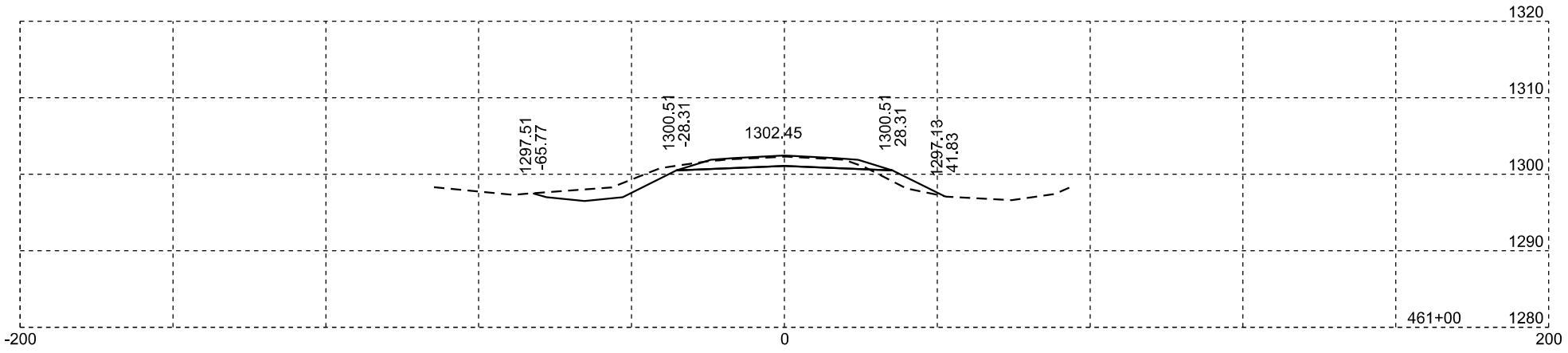

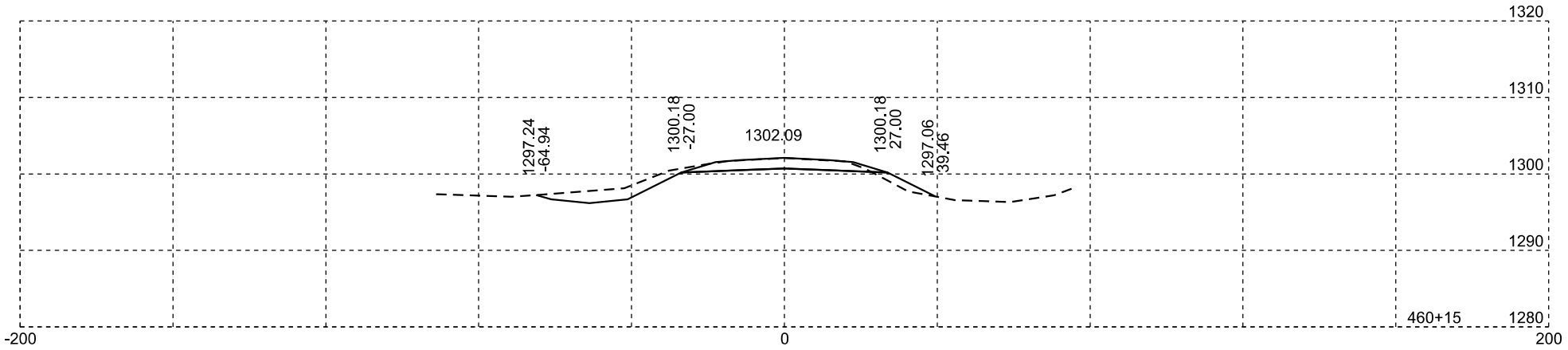

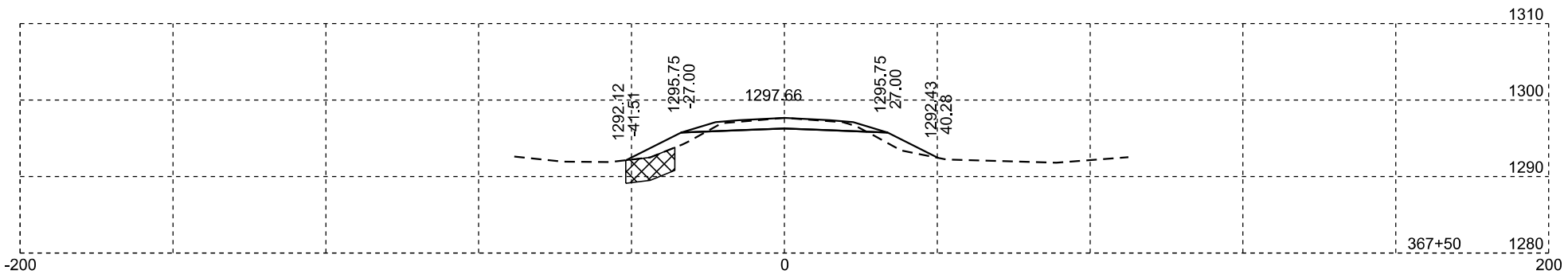

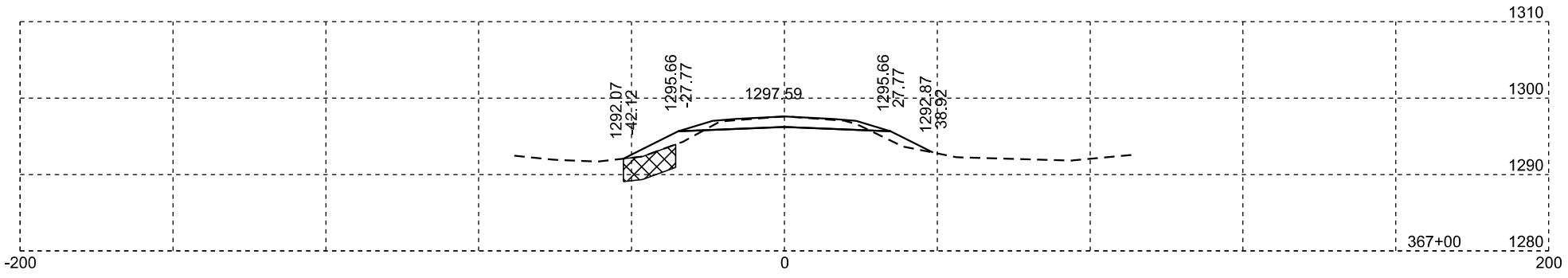

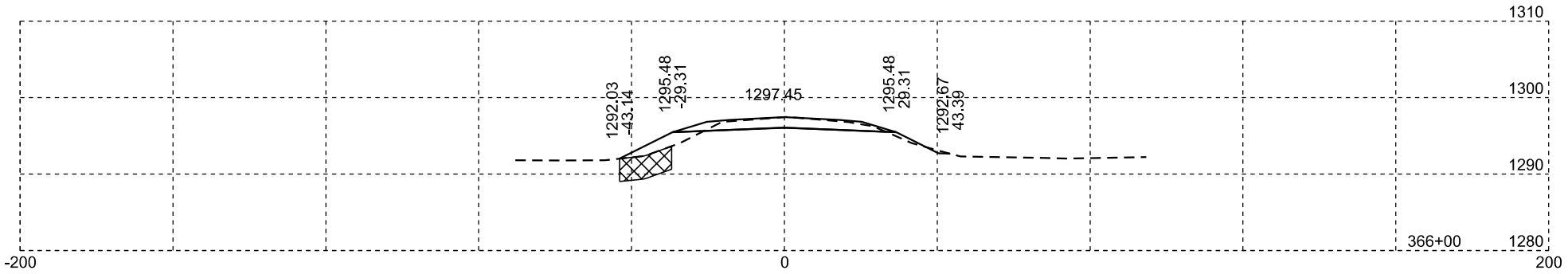

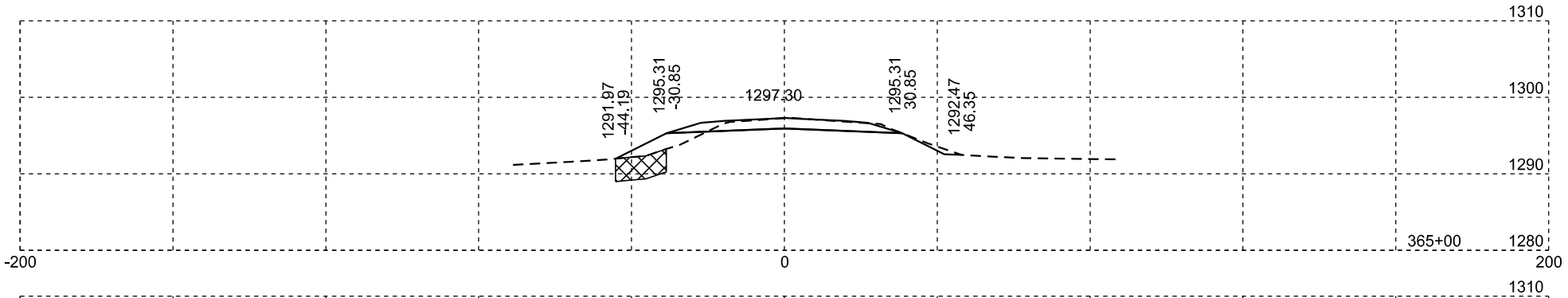

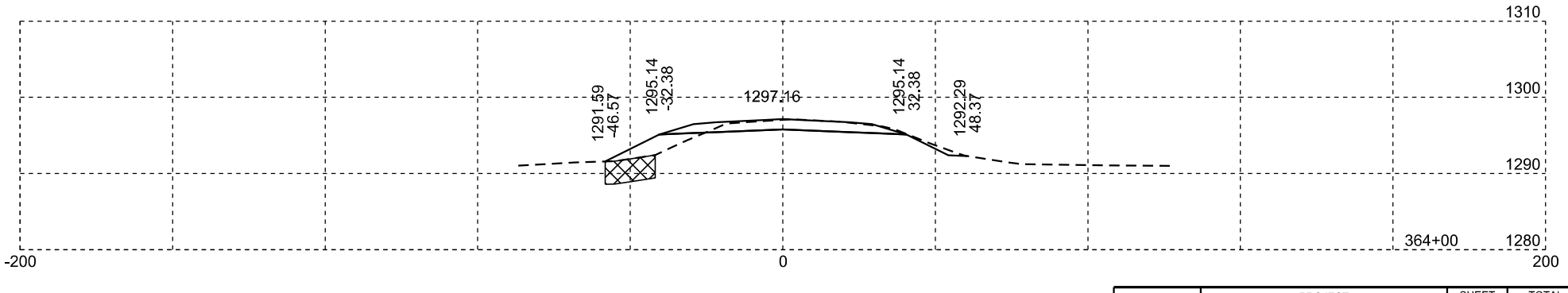

Muck

Plotting Date: 01/19/2024

STATE OF SOUTH DAKOTA	PROJECT	SHEET NO.	TOTAL SHEETS
	P-PH-B-PT 0010(124)296	X154	X169

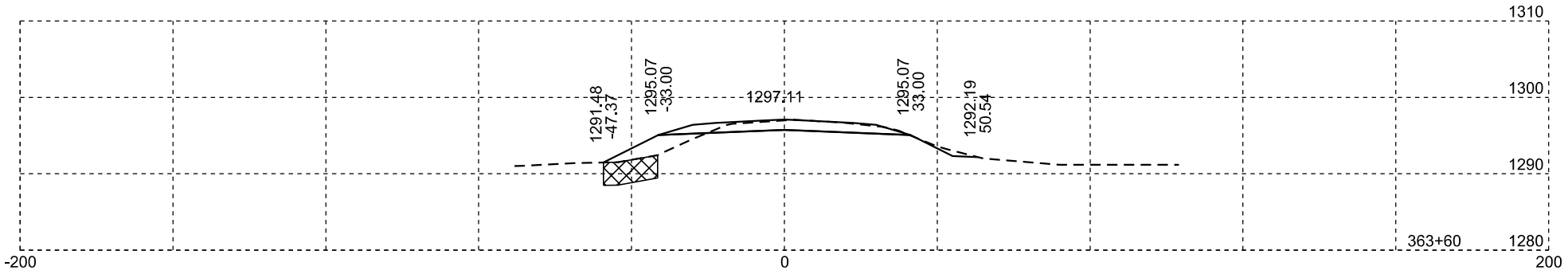

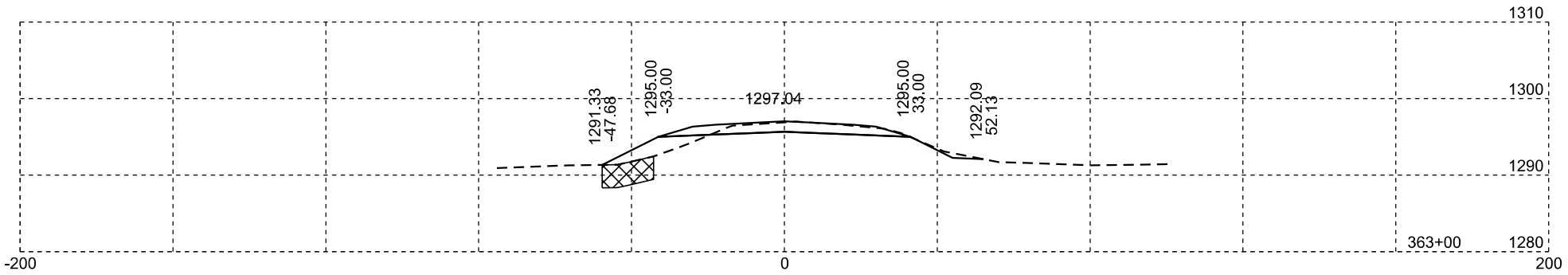

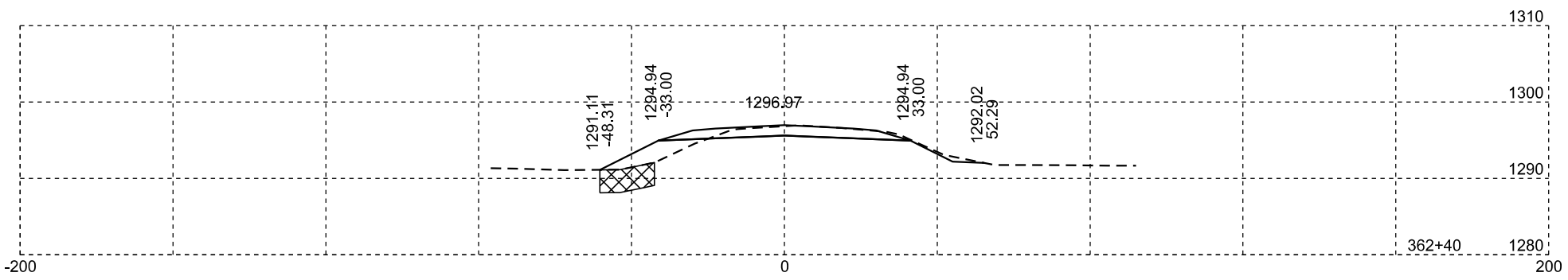

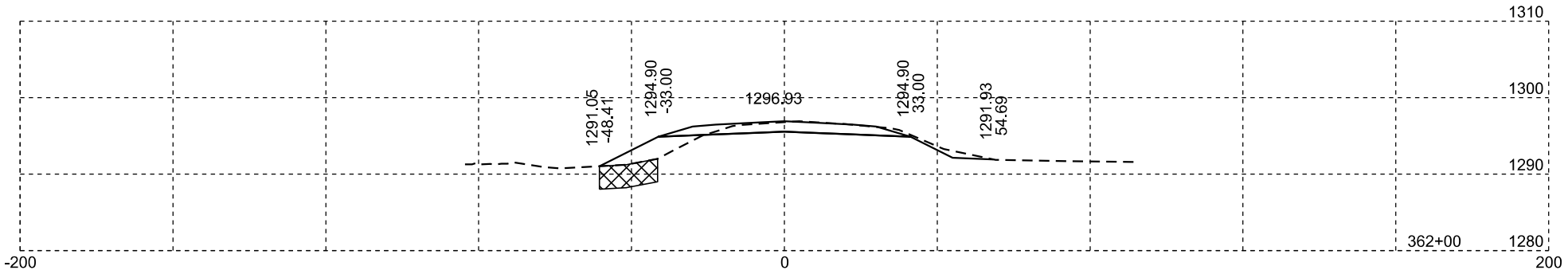

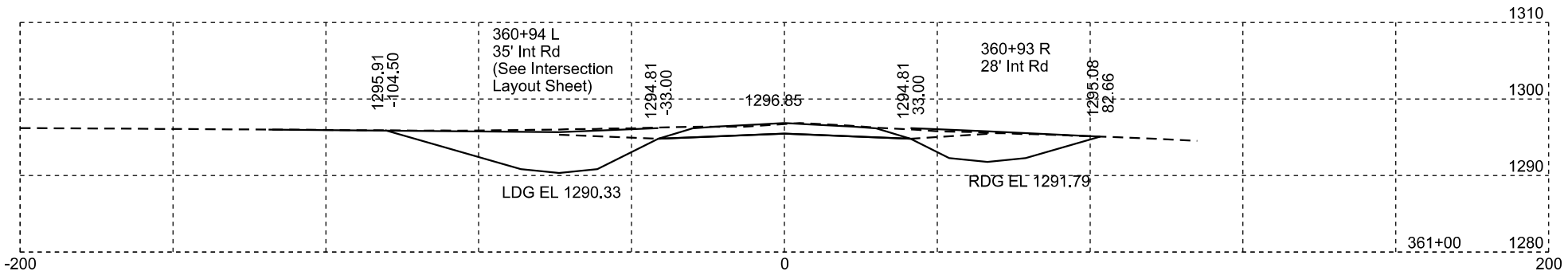

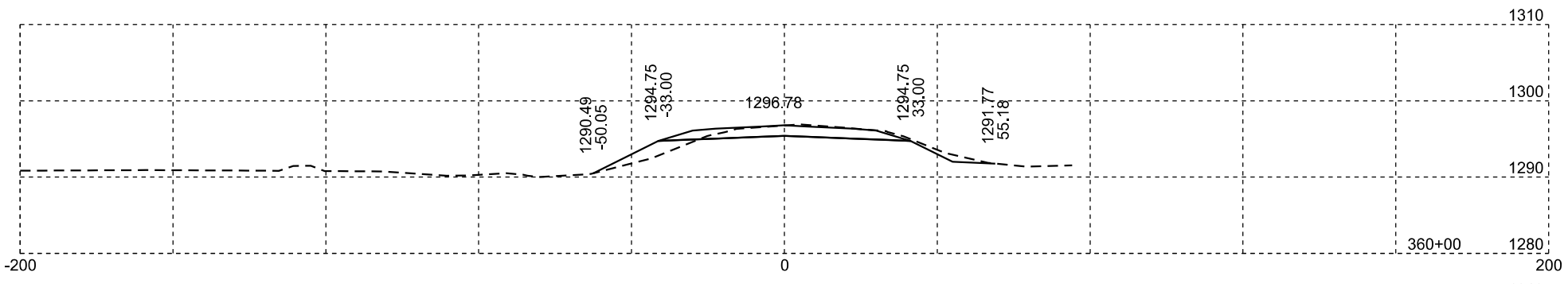

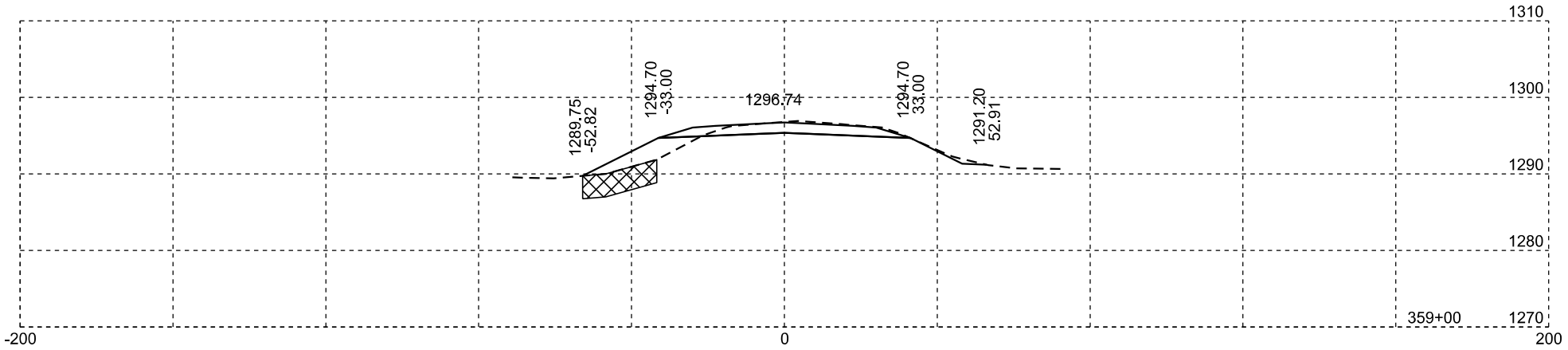

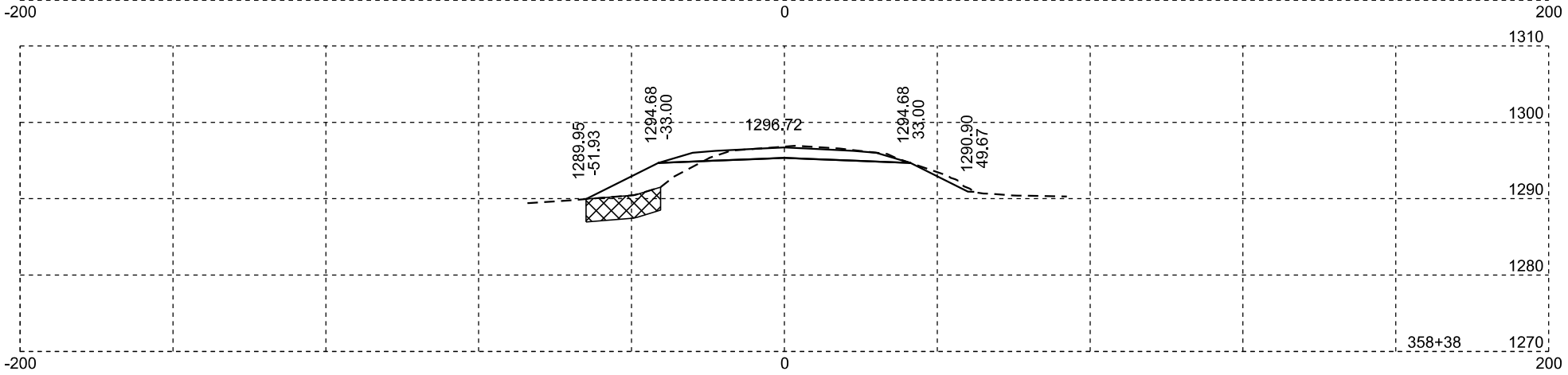

Muck

Plotting Date: 01/19/2024

STATE OF SOUTH DAKOTA	PROJECT	SHEET NO.	TOTAL SHEETS
	P-PH-B-PT 0010(124)296	X155	X169

Muck

Plotting Date: 01/19/2024

STATE OF SOUTH DAKOTA	PROJECT	SHEET NO.	TOTAL SHEETS
	P-PH-B-PT 0010(124)296	X156	X169

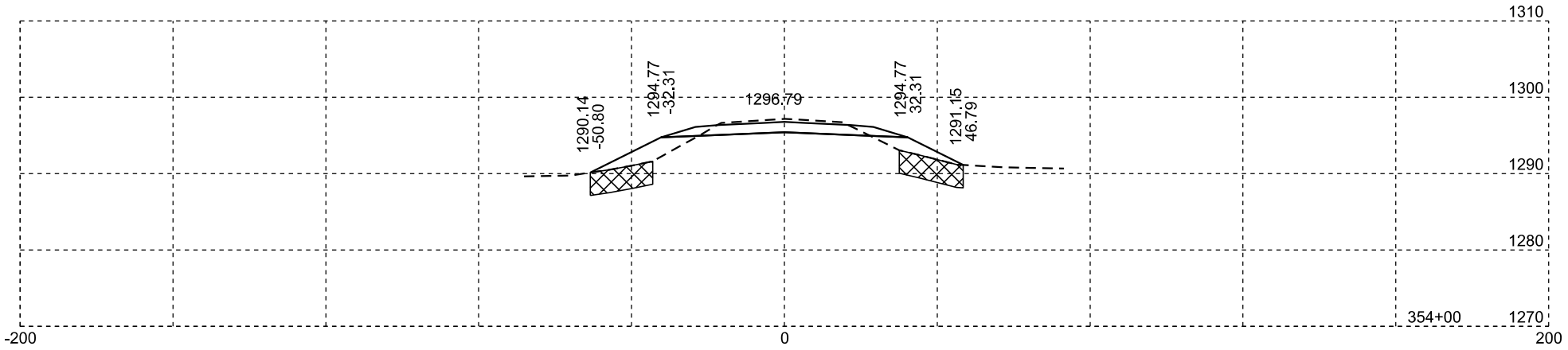

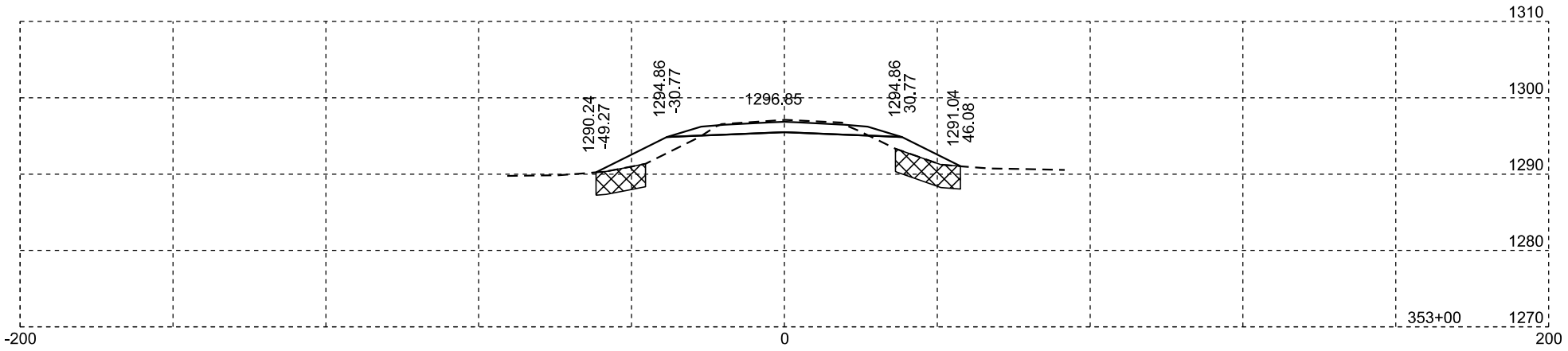

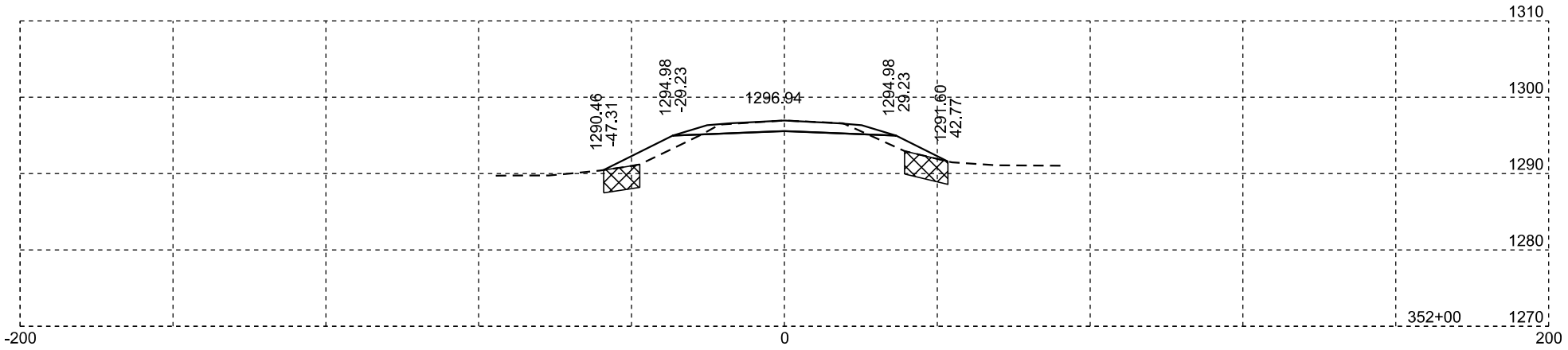

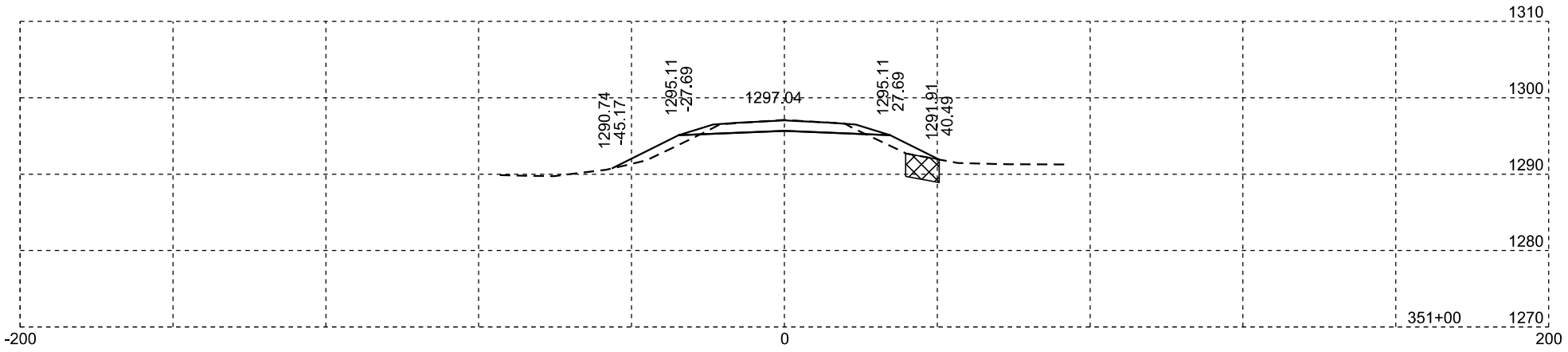

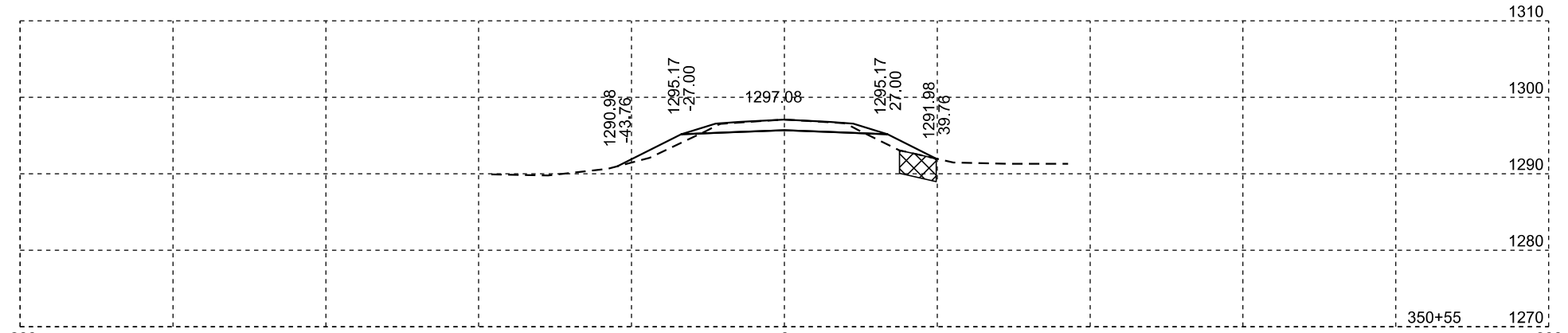

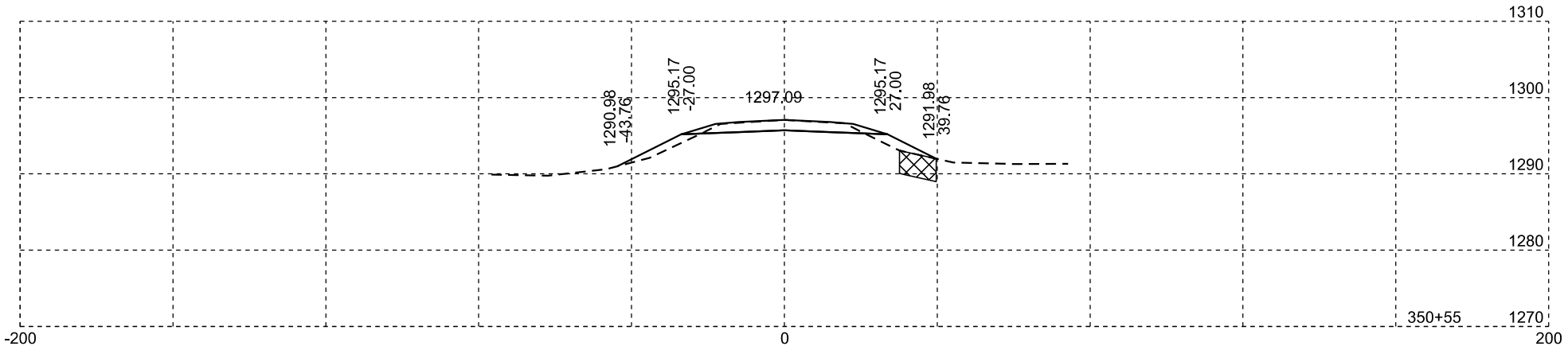

Muck

Plotting Date: 01/19/2024

STATE OF SOUTH DAKOTA	PROJECT	SHEET NO.	TOTAL SHEETS
	P-PH-B-PT 0010(124)296	X157	X169

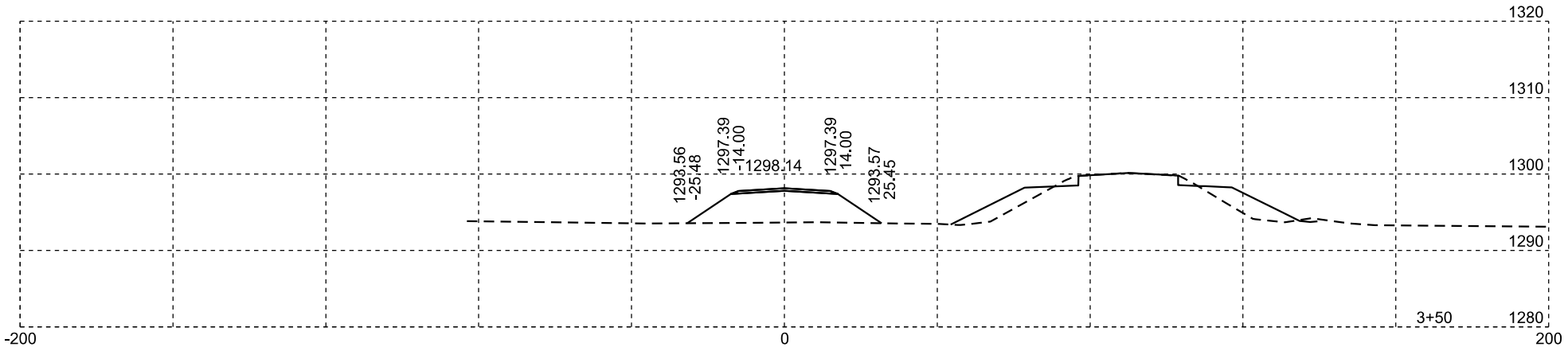

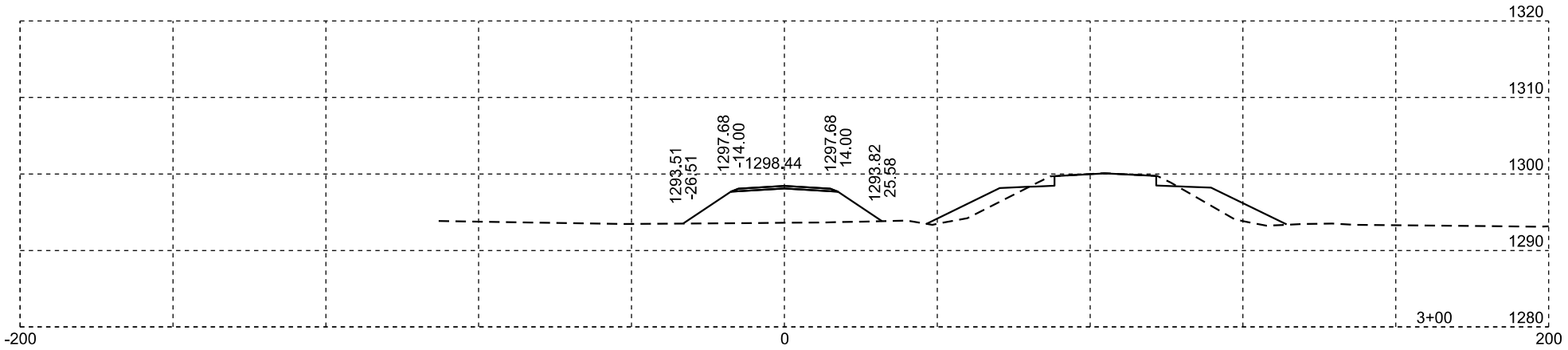

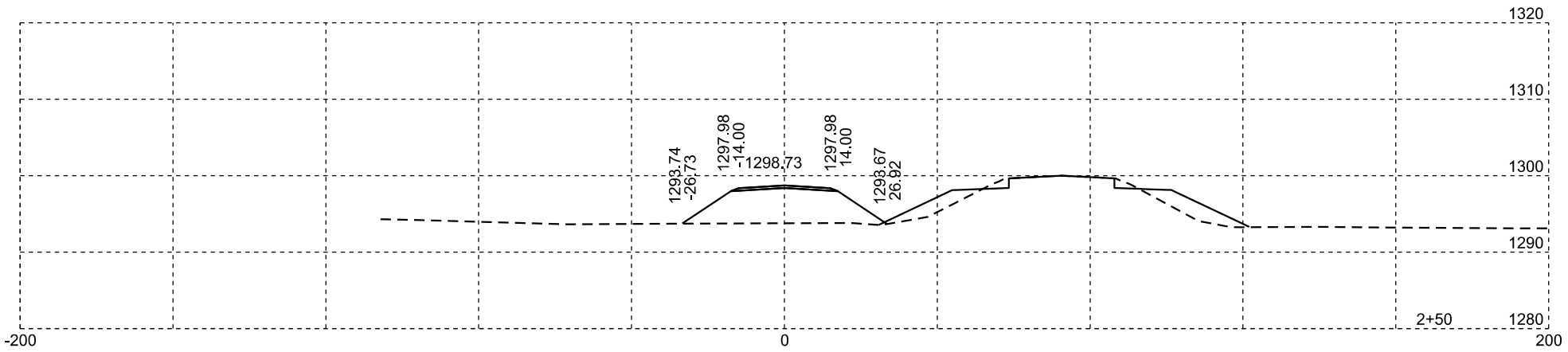

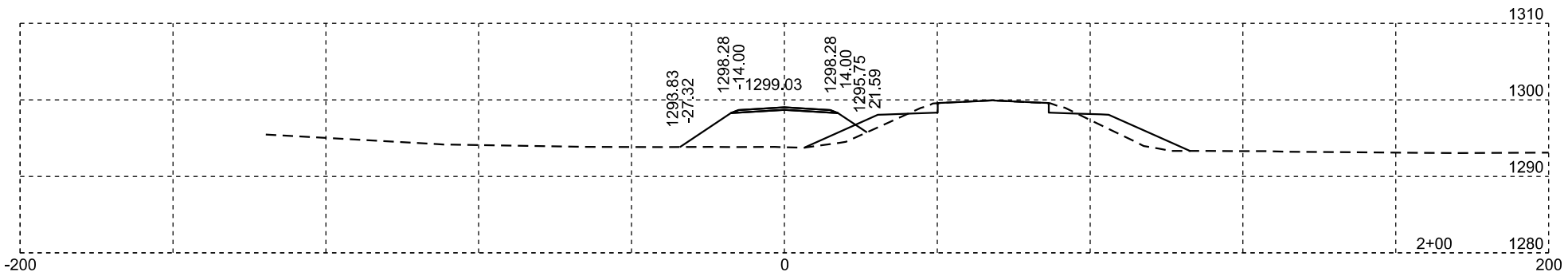

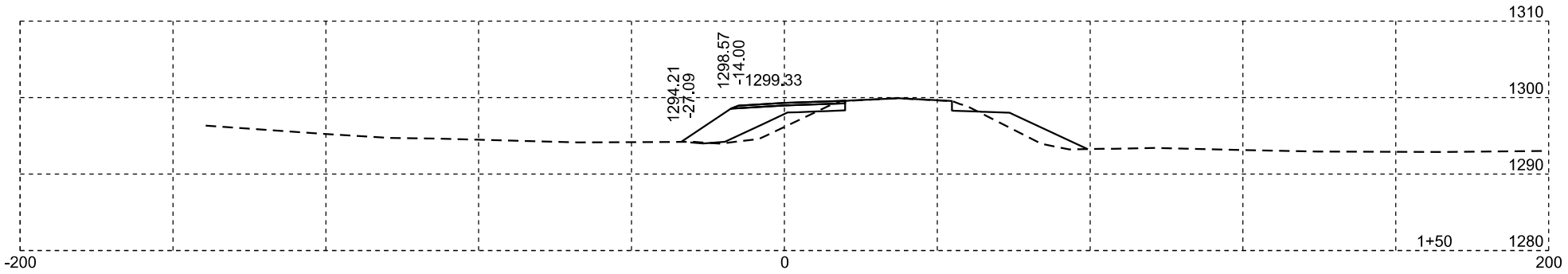

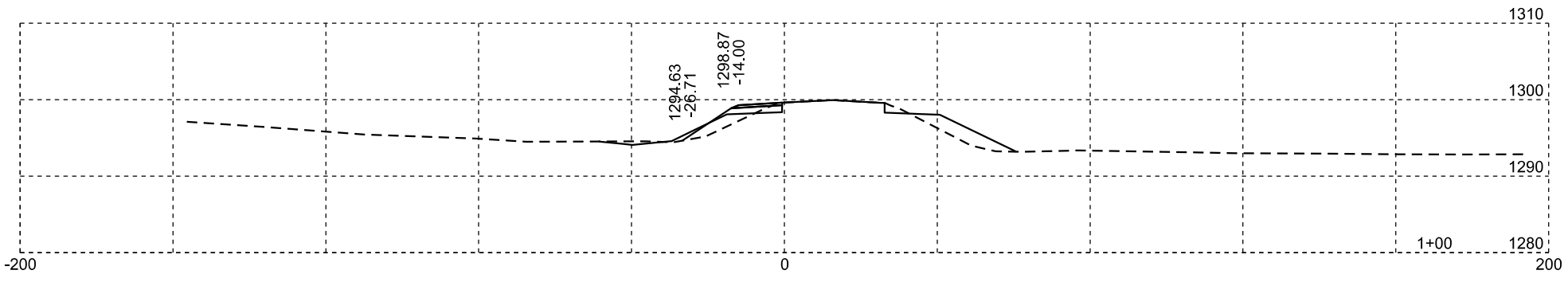

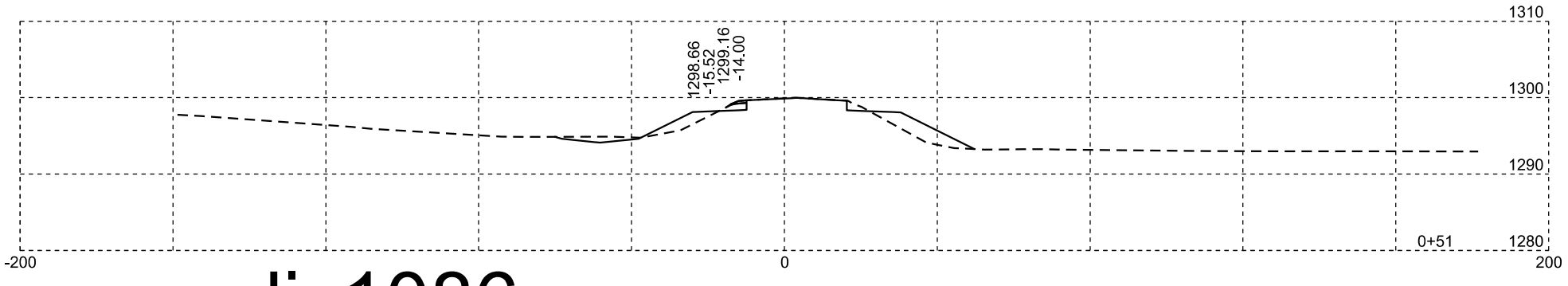

div1086

Plotting Date: 01/19/2024

STATE OF SOUTH DAKOTA	PROJECT	SHEET NO.	TOTAL SHEETS
	P-PH-B-PT 0010(124)296	X158	X169

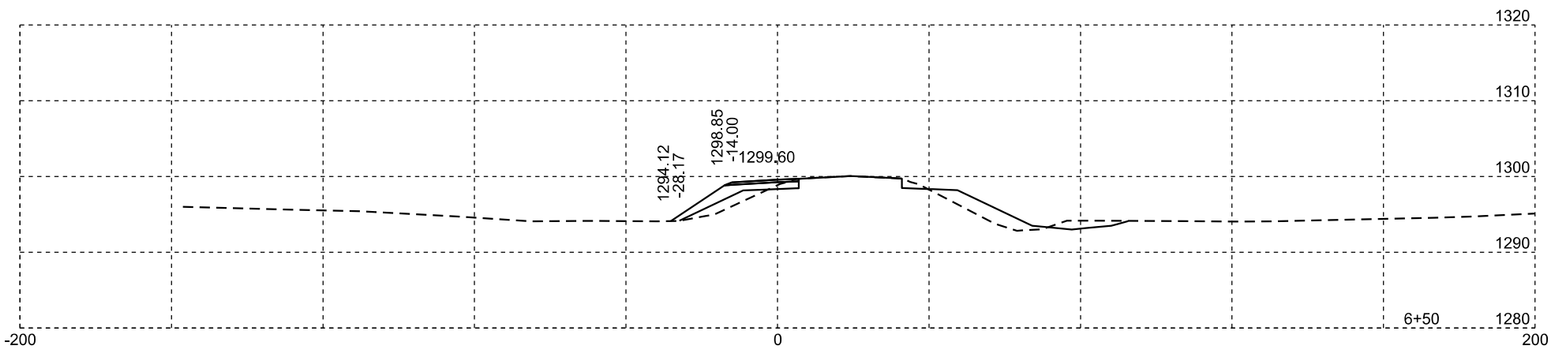

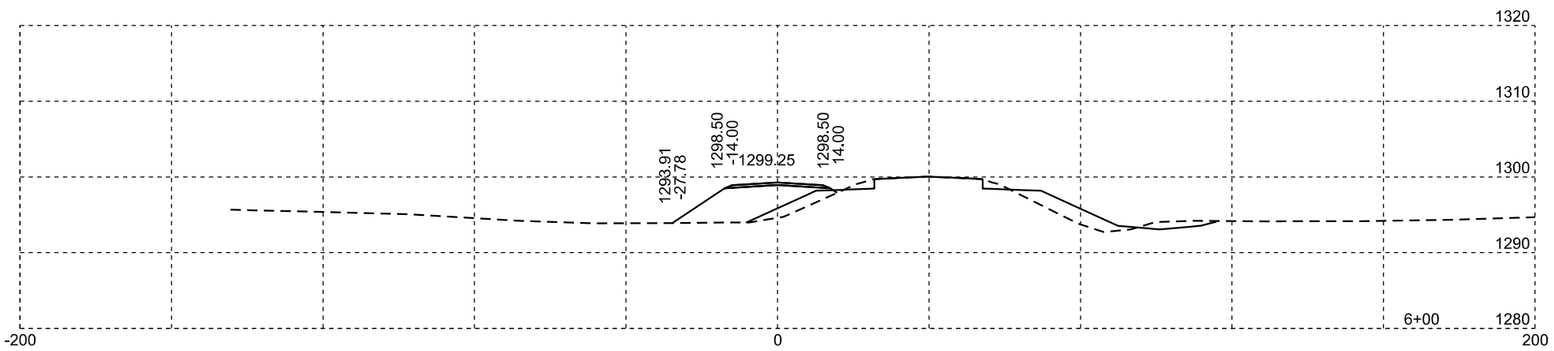

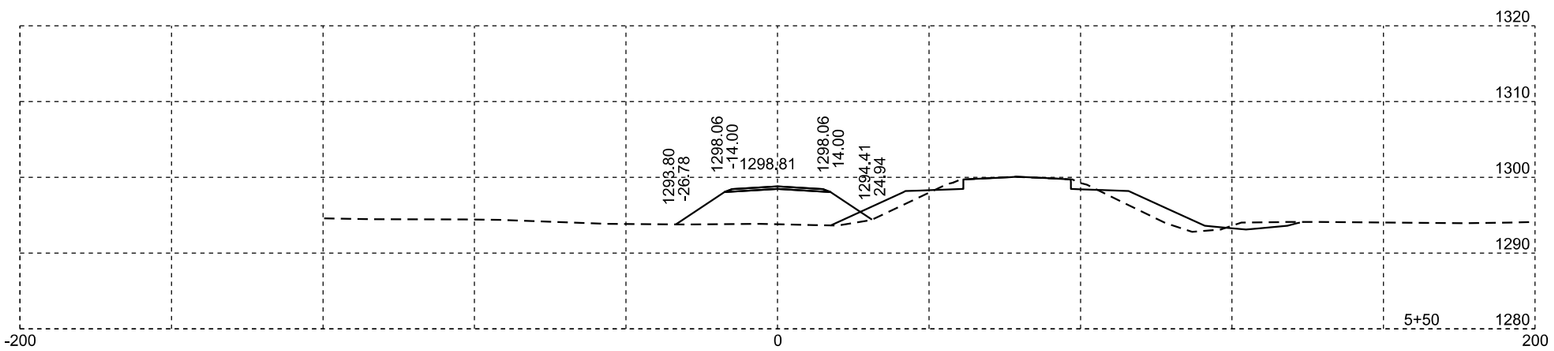

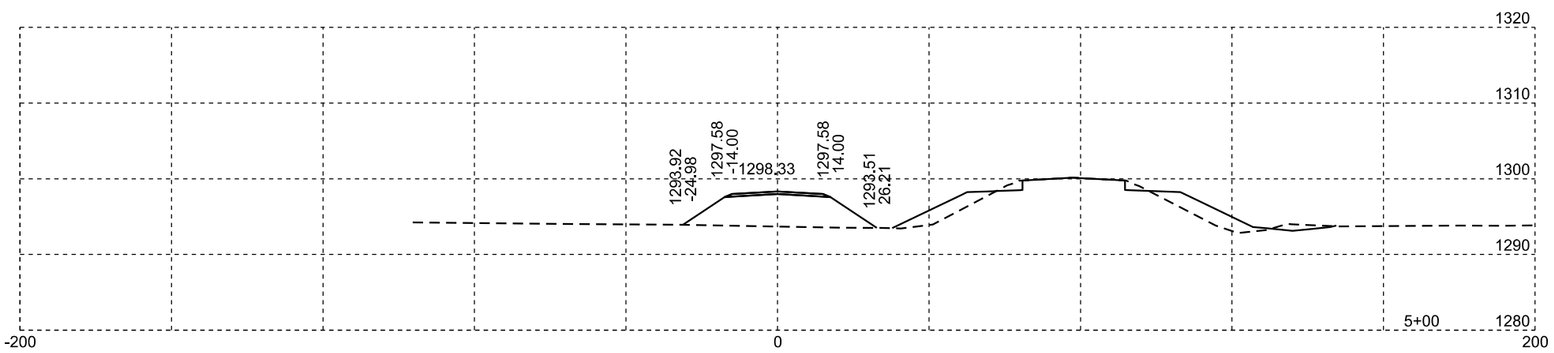

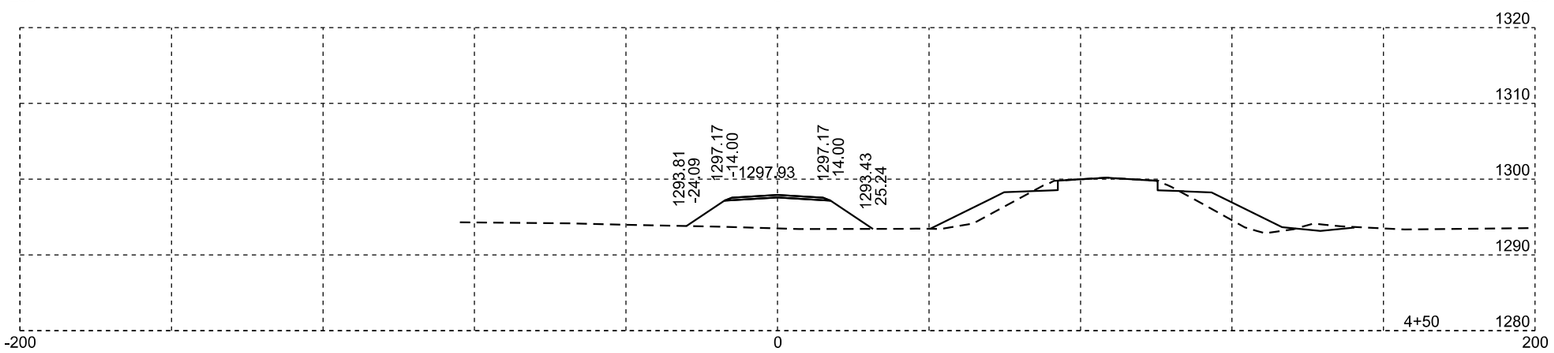

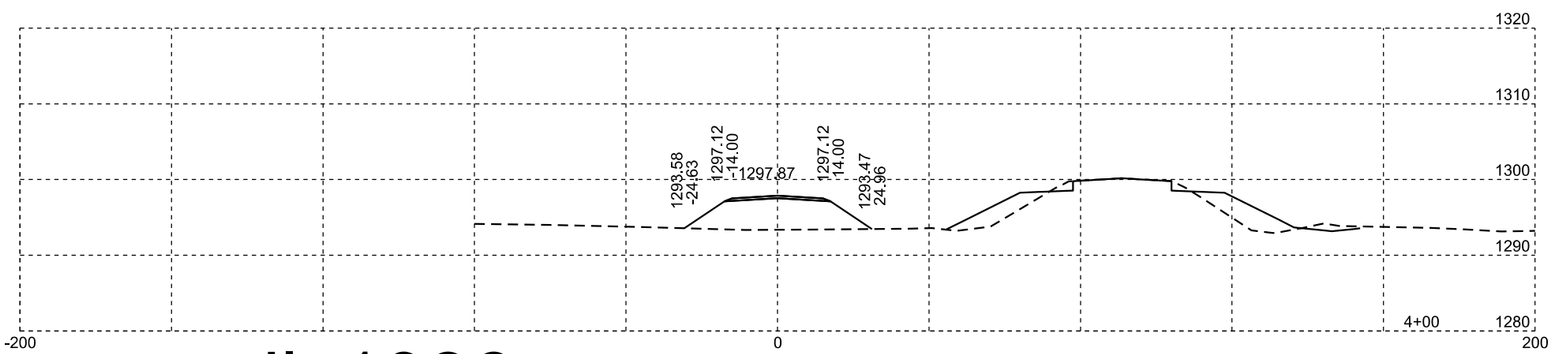

div1086

Plotting Date: 01/19/2024

STATE OF SOUTH DAKOTA	PROJECT	SHEET NO.	TOTAL SHEETS
	P-PH-B-PT 0010(124)296	X159	X169

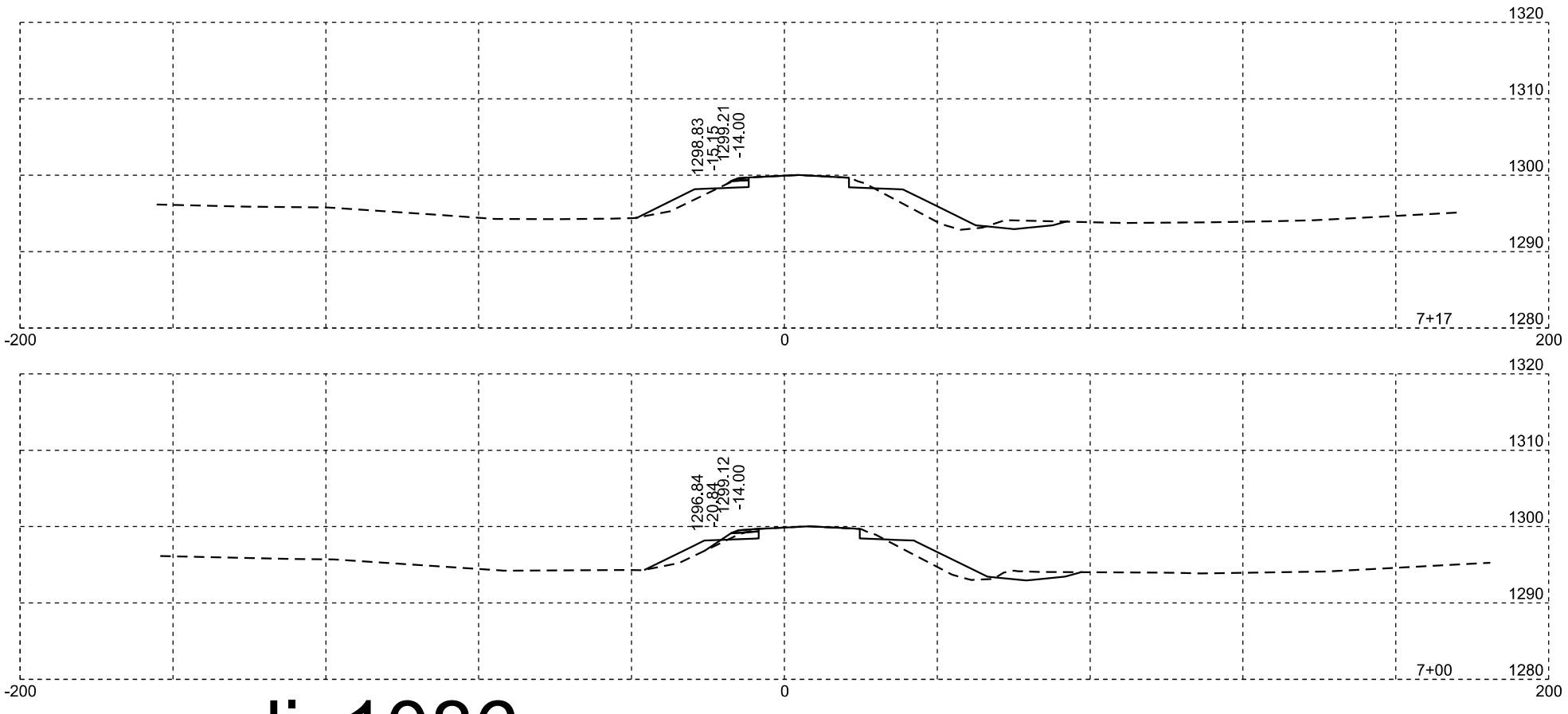

div1086

Plotting Date: 01/19/2024

STATE OF SOUTH DAKOTA	PROJECT	SHEET NO.	TOTAL SHEETS
	P-PH-B-PT 0010(124)296	X160	X169

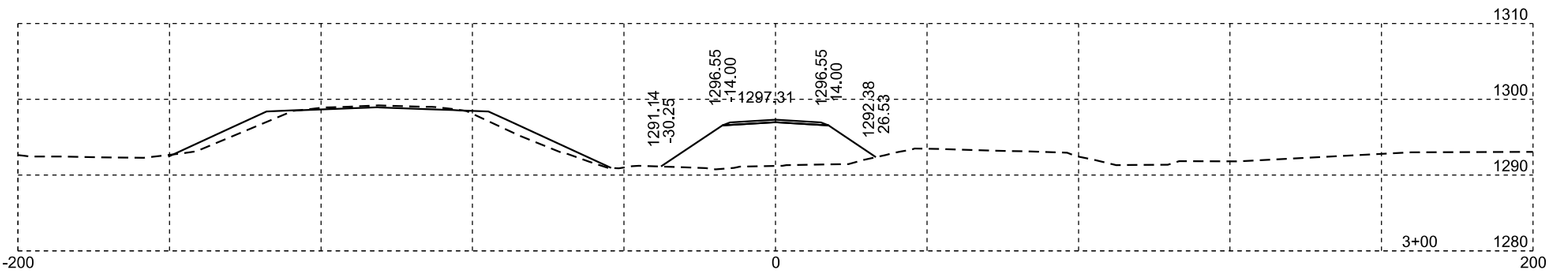

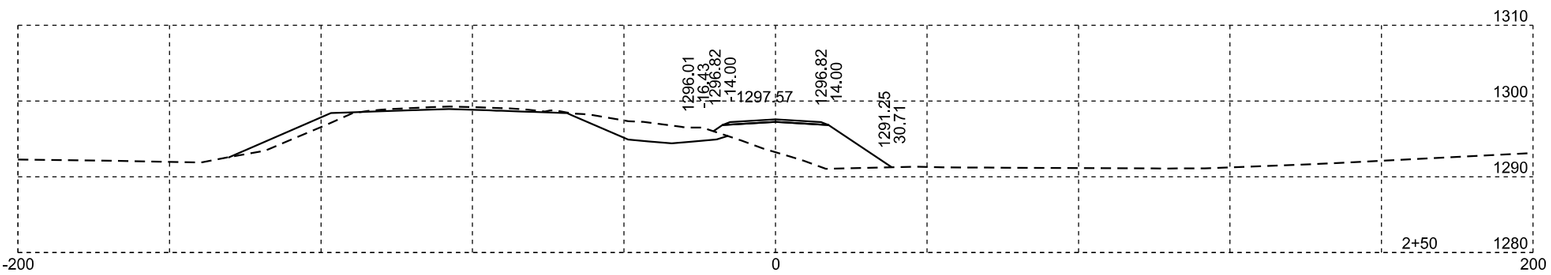

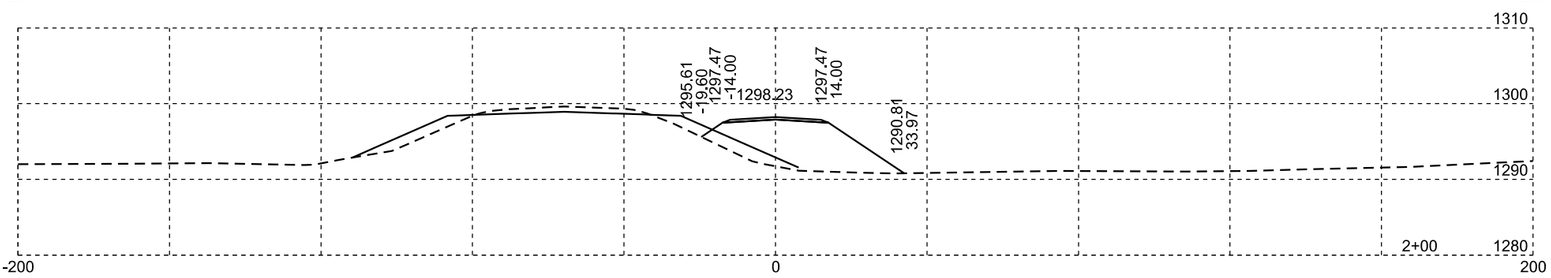

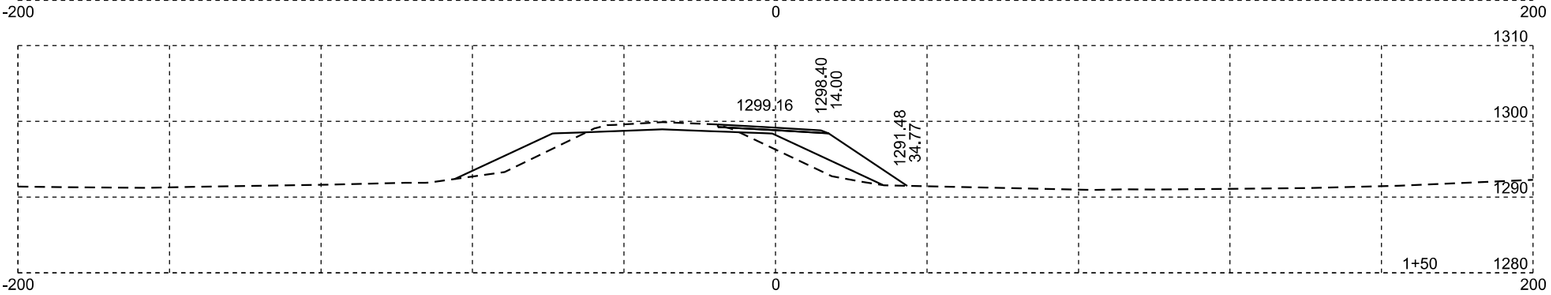

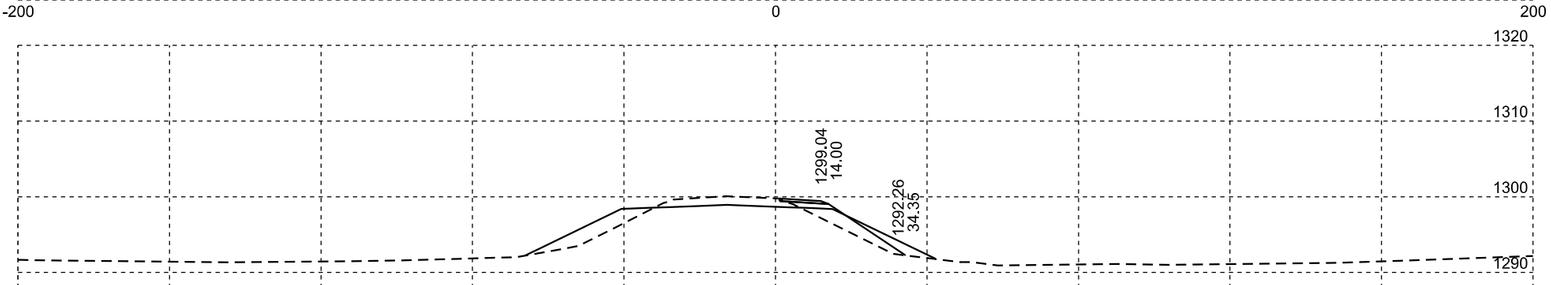

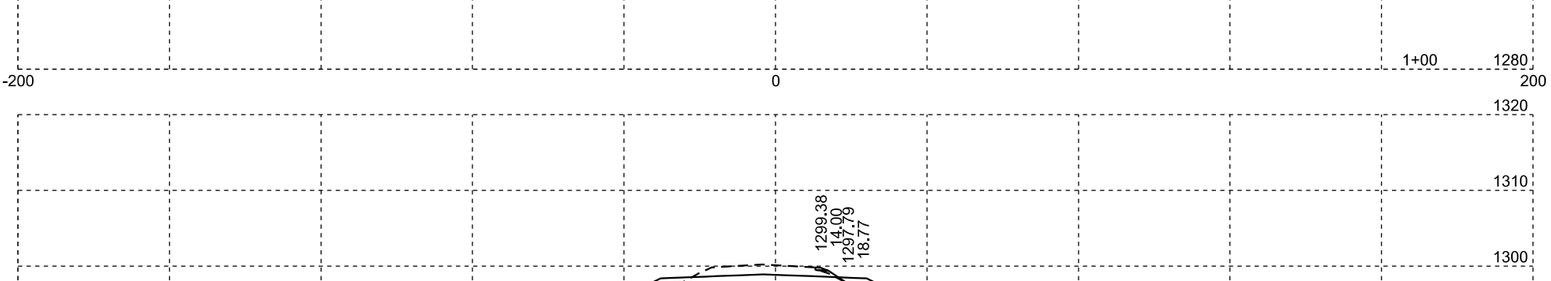

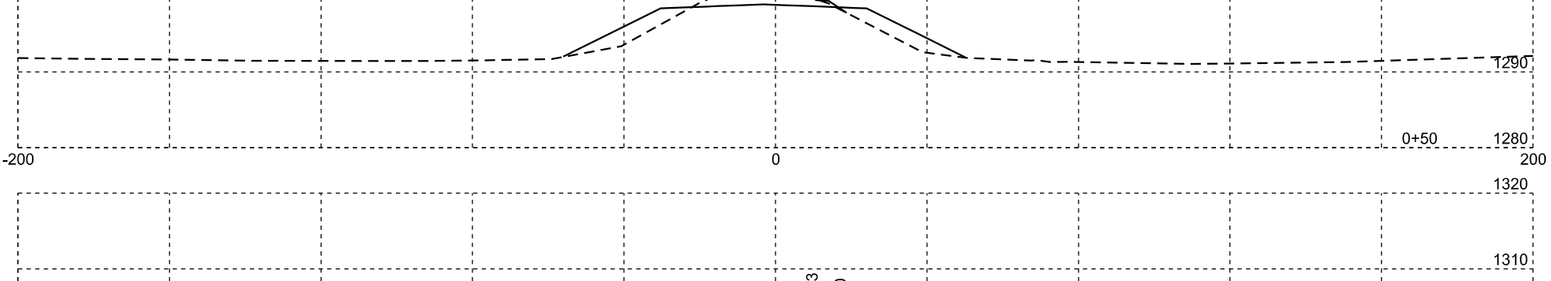

div1129

Rev 02/29/2024 DRM
Plotting Date: 02/29/2024

STATE OF SOUTH DAKOTA	PROJECT	SHEET NO.	TOTAL SHEETS
	P-PH-B-PT 0010(124)296	X161	X169

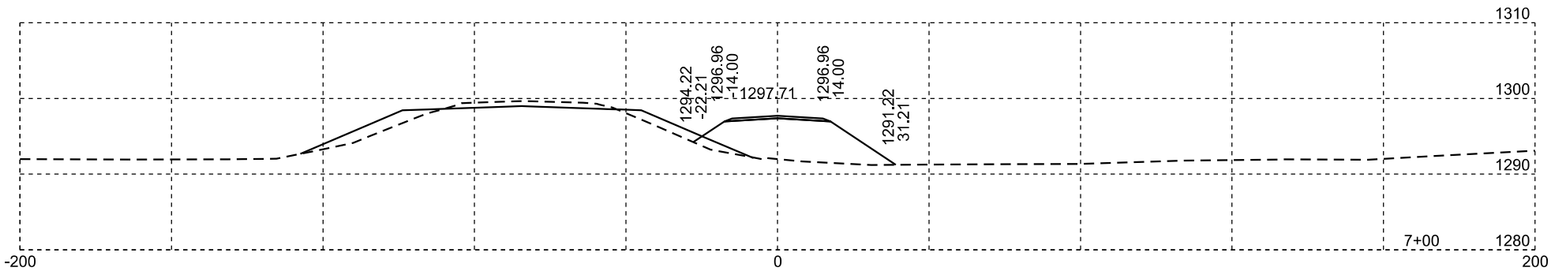

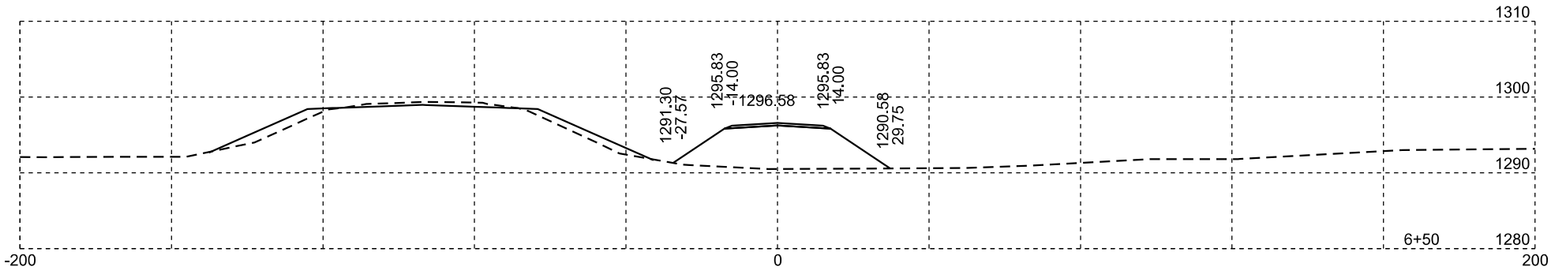

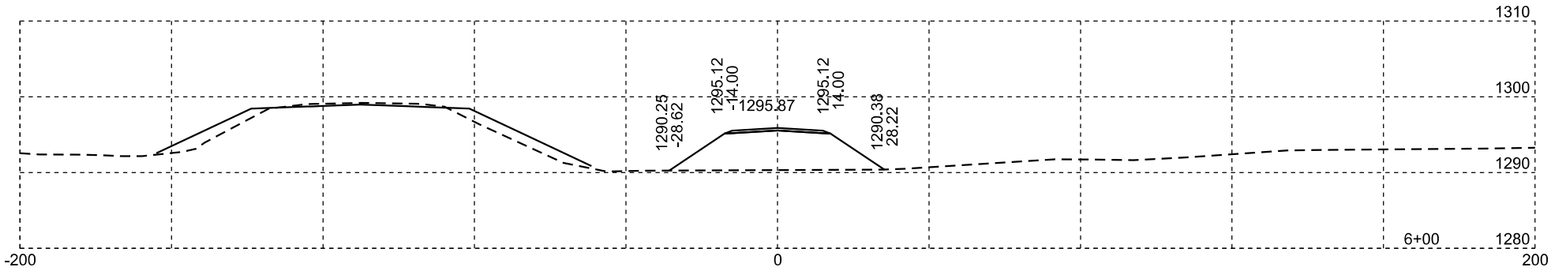

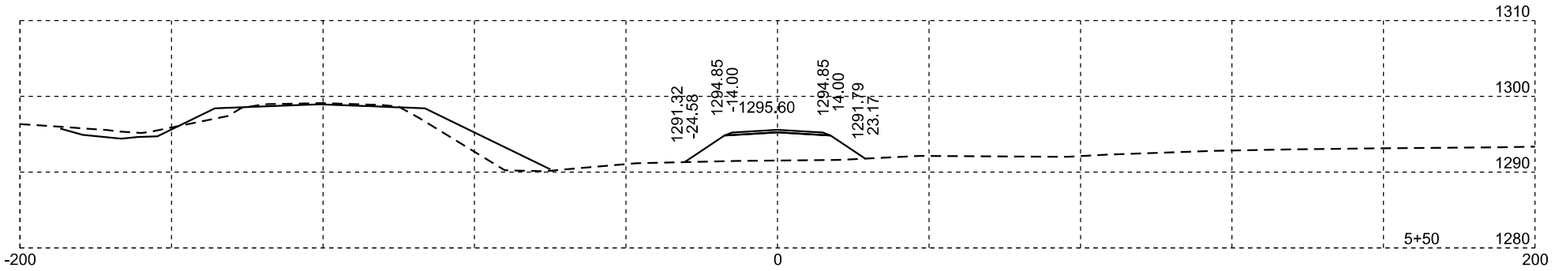

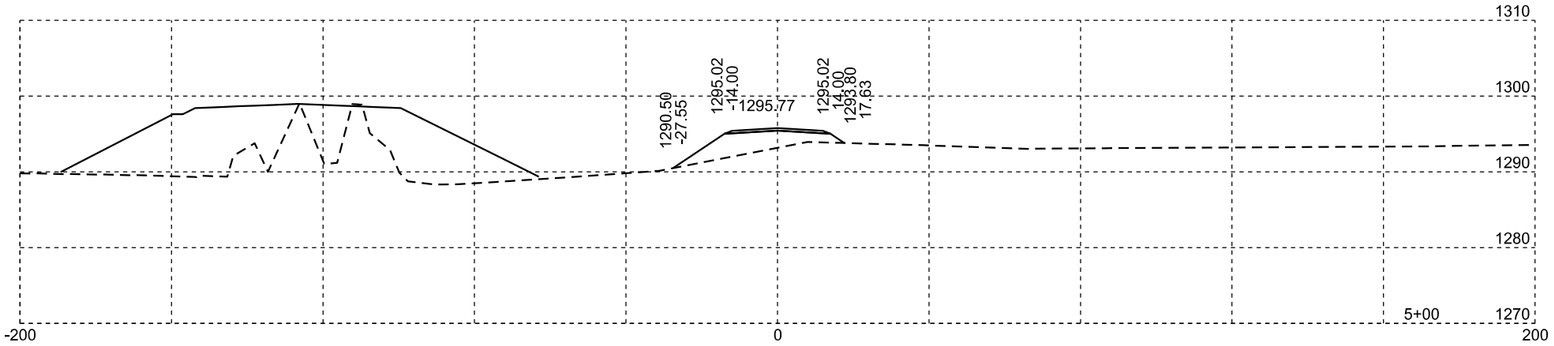

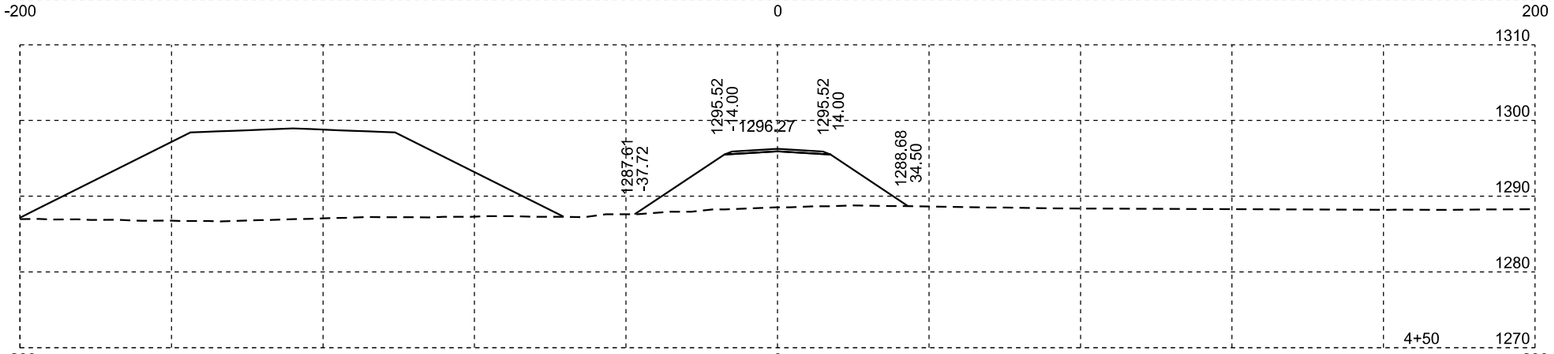

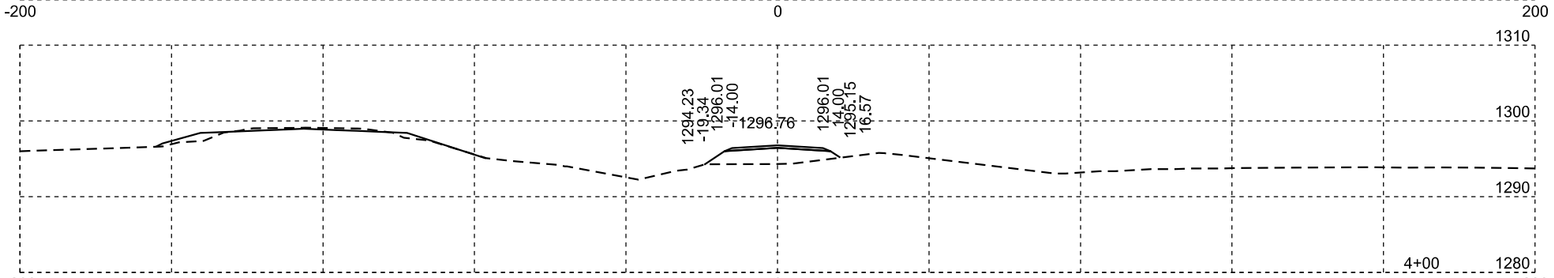

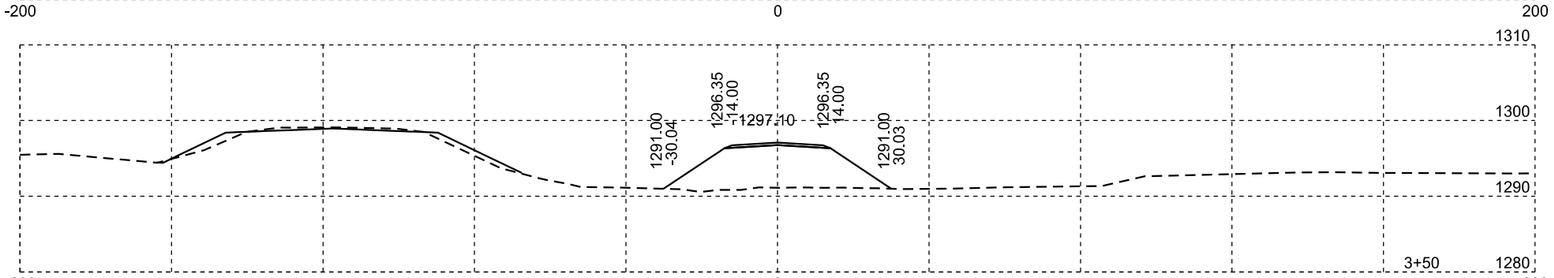

div1129

Rev 02/29/2024 DRM
Plotting Date: 02/29/2024

STATE OF SOUTH DAKOTA	PROJECT	SHEET NO.	TOTAL SHEETS
	P-PH-B-PT 0010(124)296	X162	X169

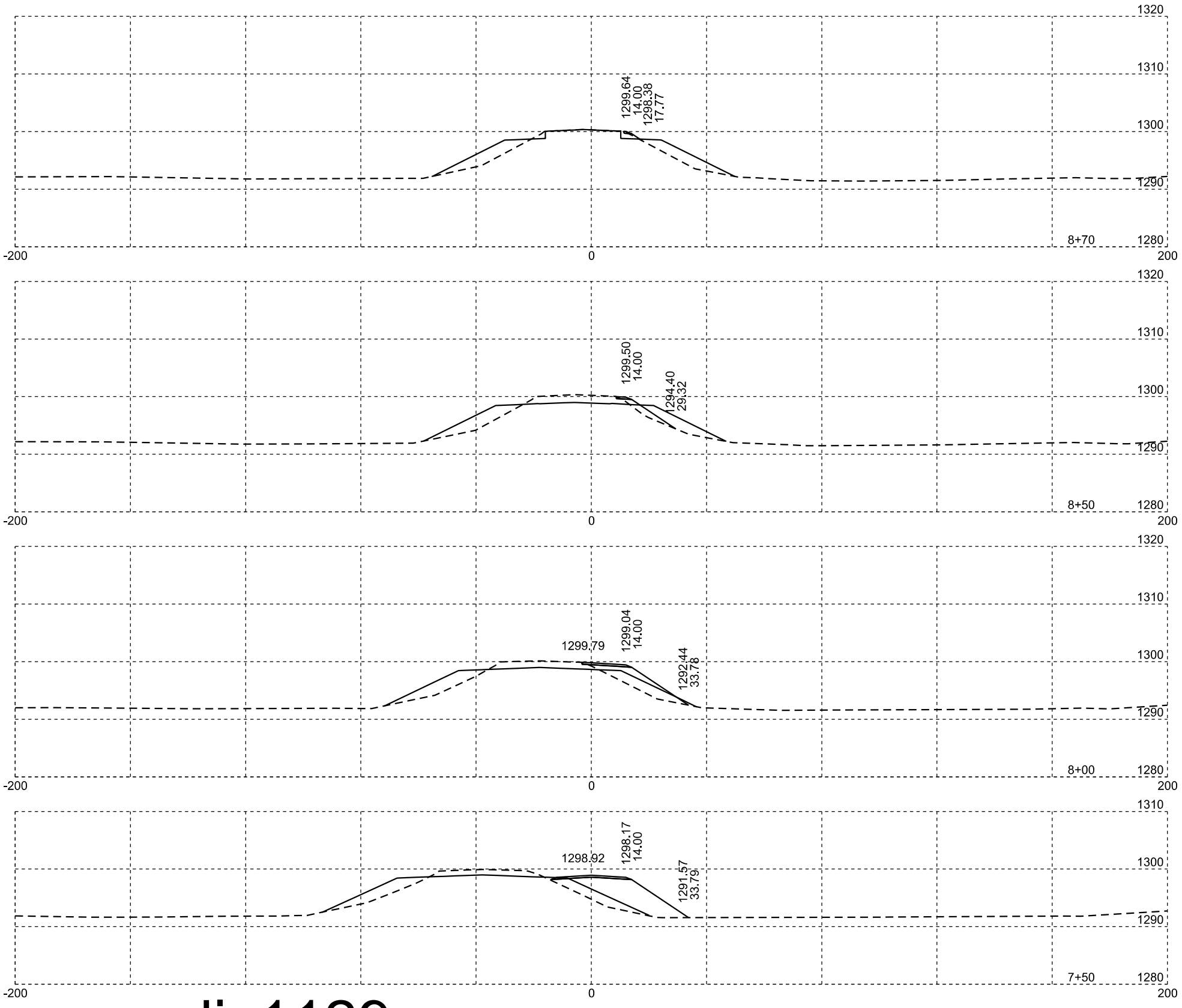

div1129

Rev 02/29/2024 DRM
Plotting Date: 02/29/2024

STATE OF SOUTH DAKOTA	PROJECT	SHEET NO.	TOTAL SHEETS
	P-PH-B-PT 0010(124)296	X163	X169

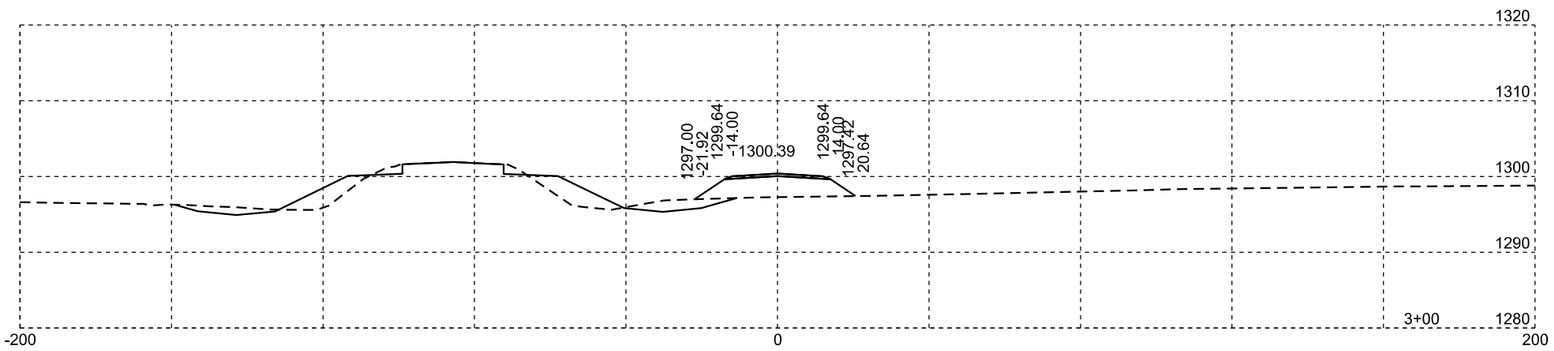

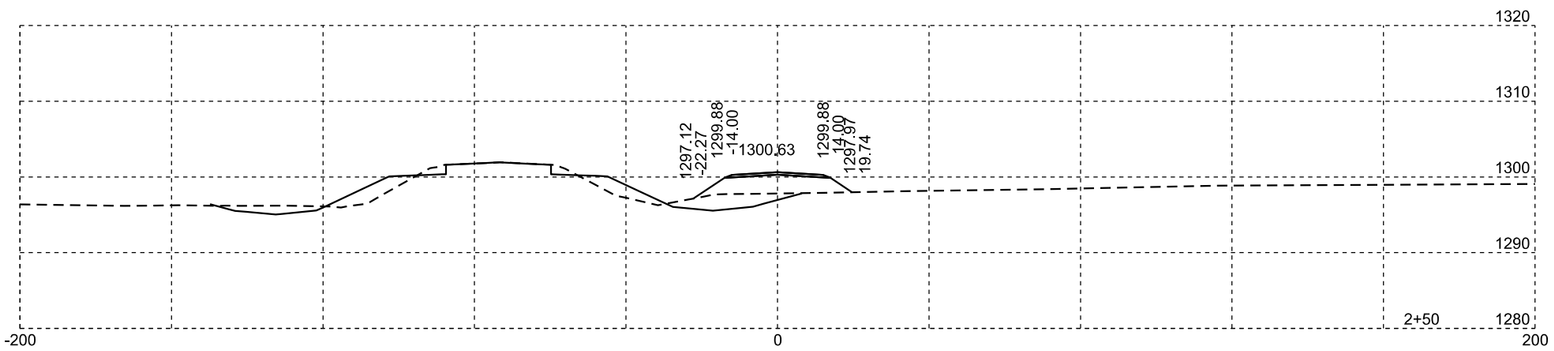

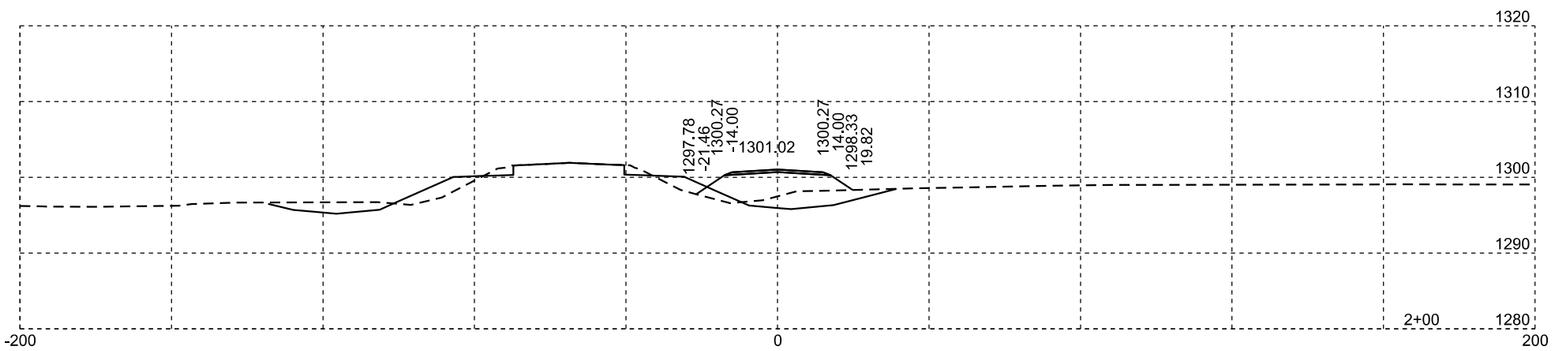

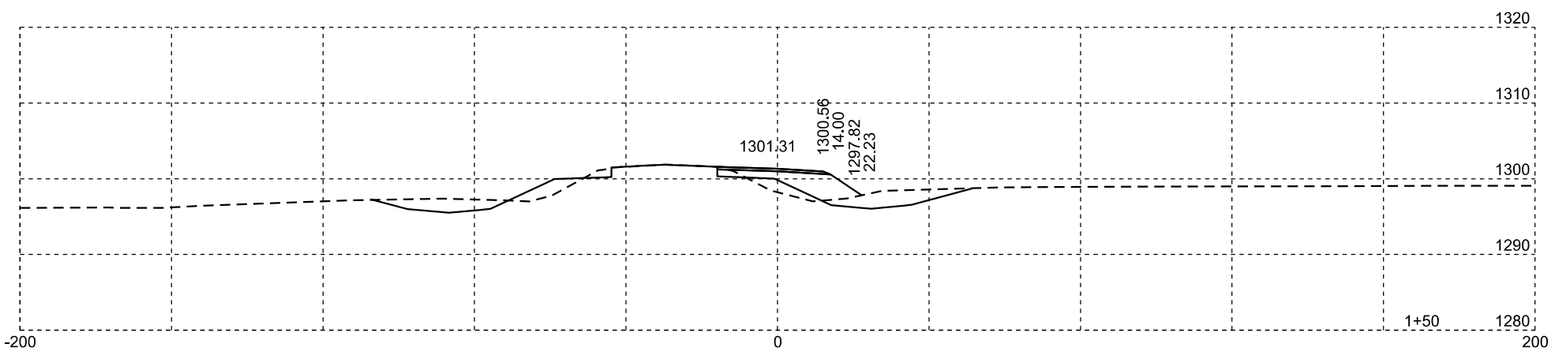

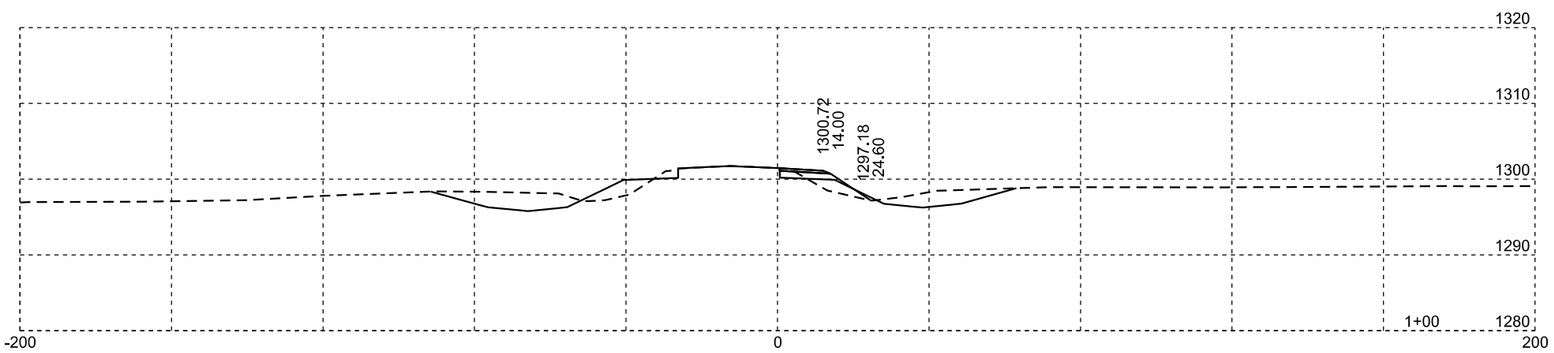

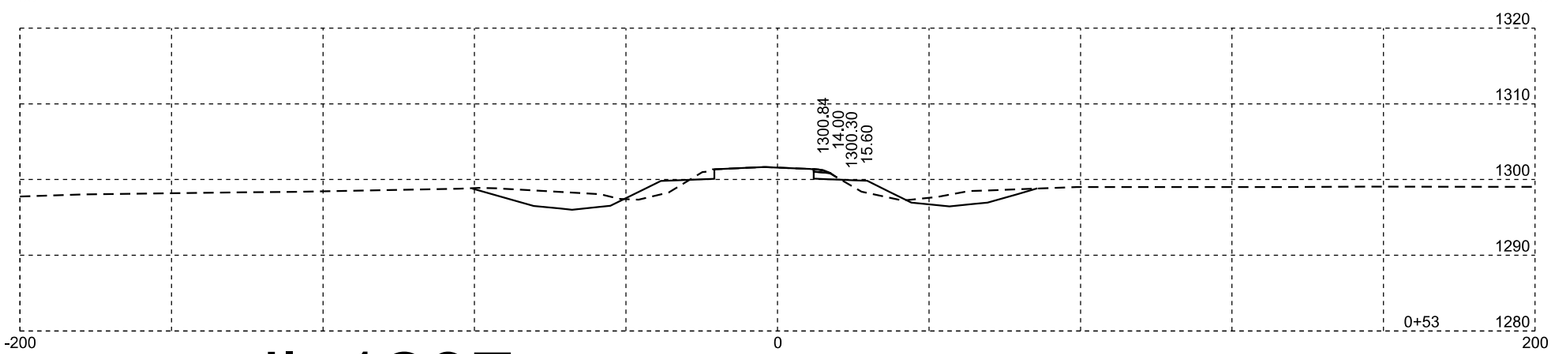

div1207

Plotting Date: 01/19/2024

STATE OF SOUTH DAKOTA	PROJECT	SHEET NO.	TOTAL SHEETS
	P-PH-B-PT 0010(124)296	X164	X169

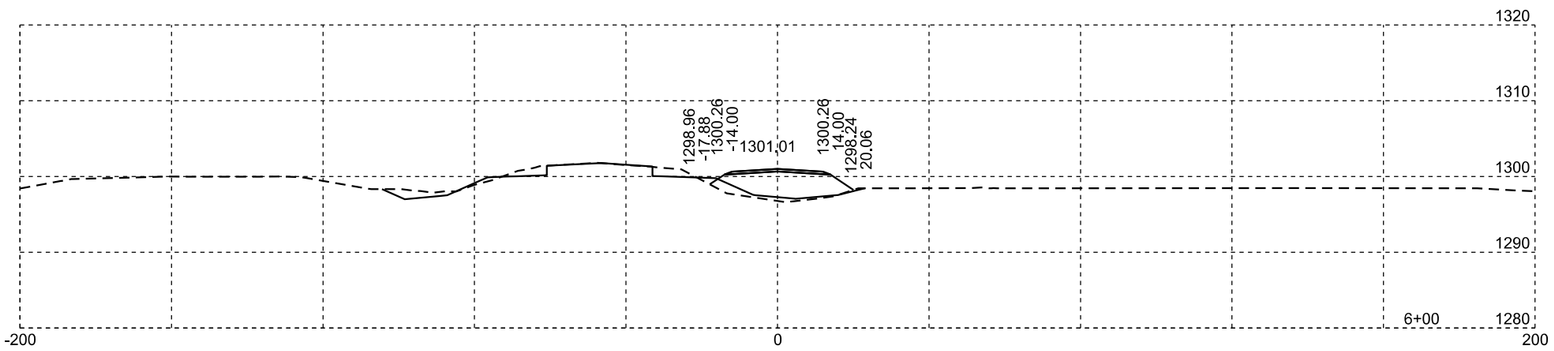

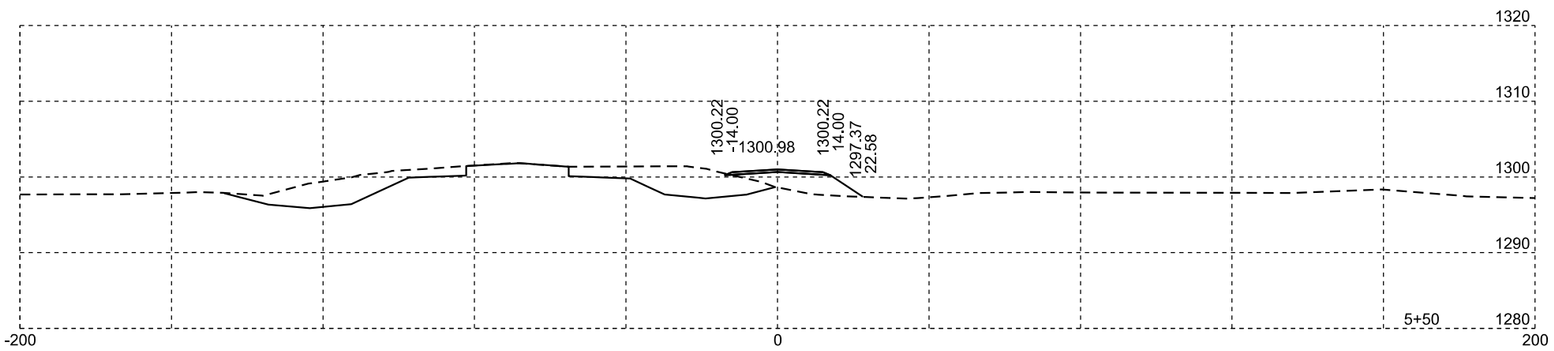

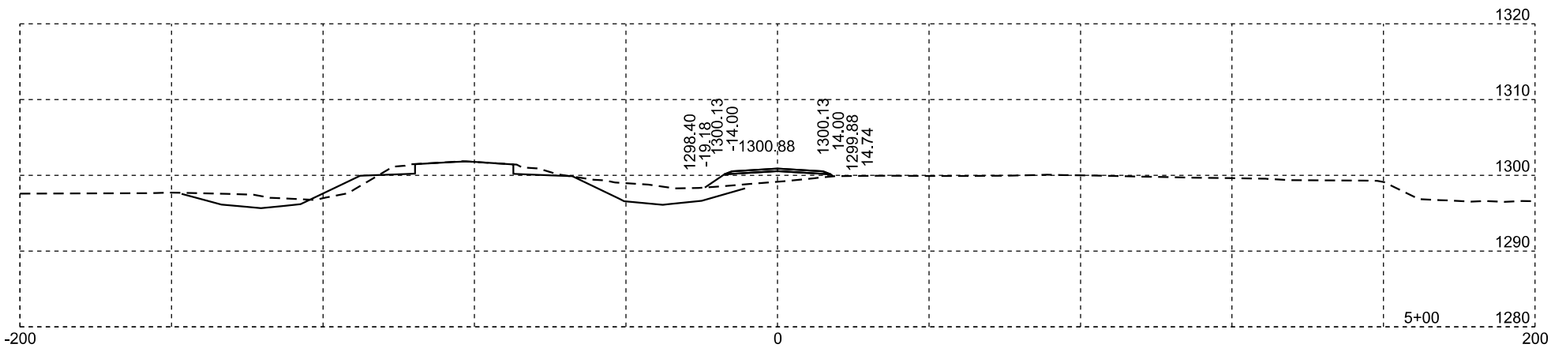

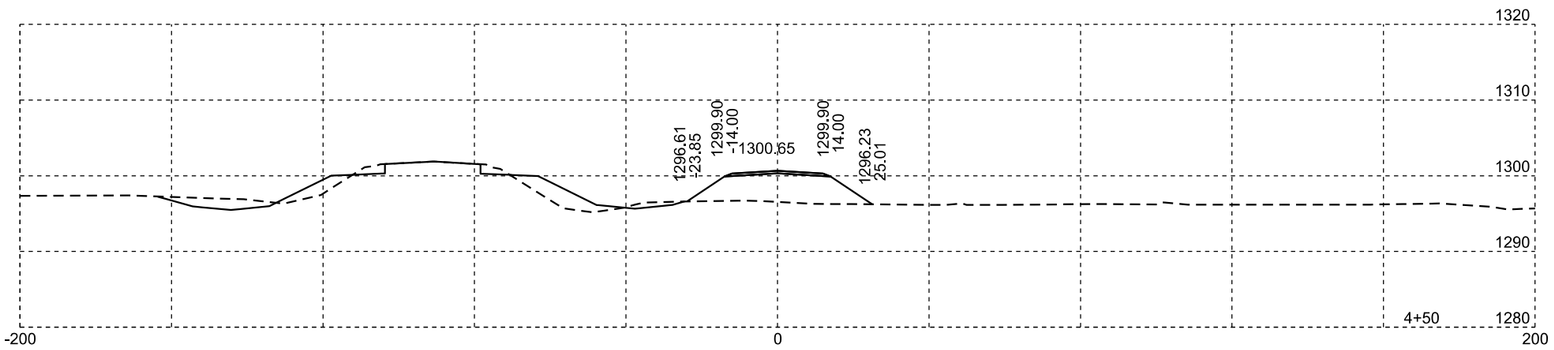

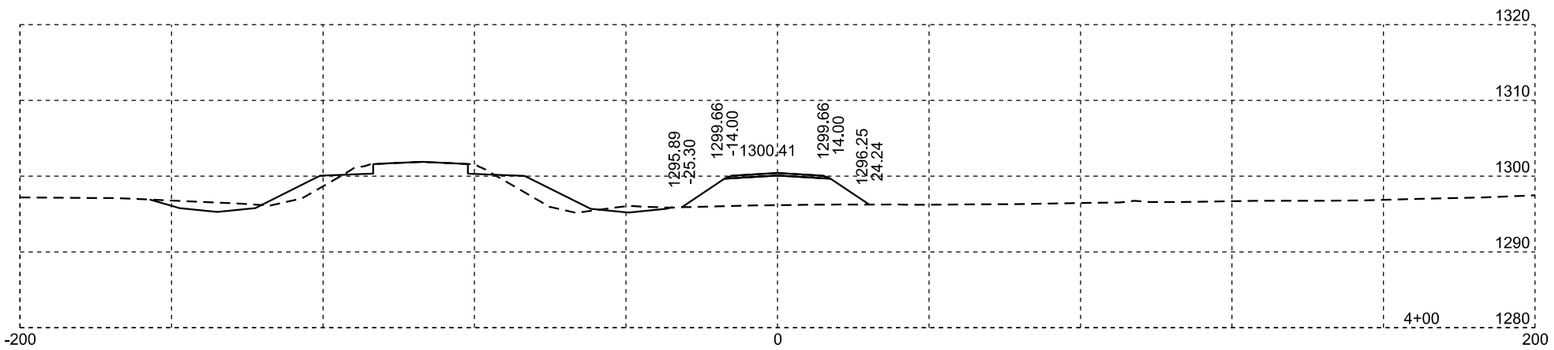

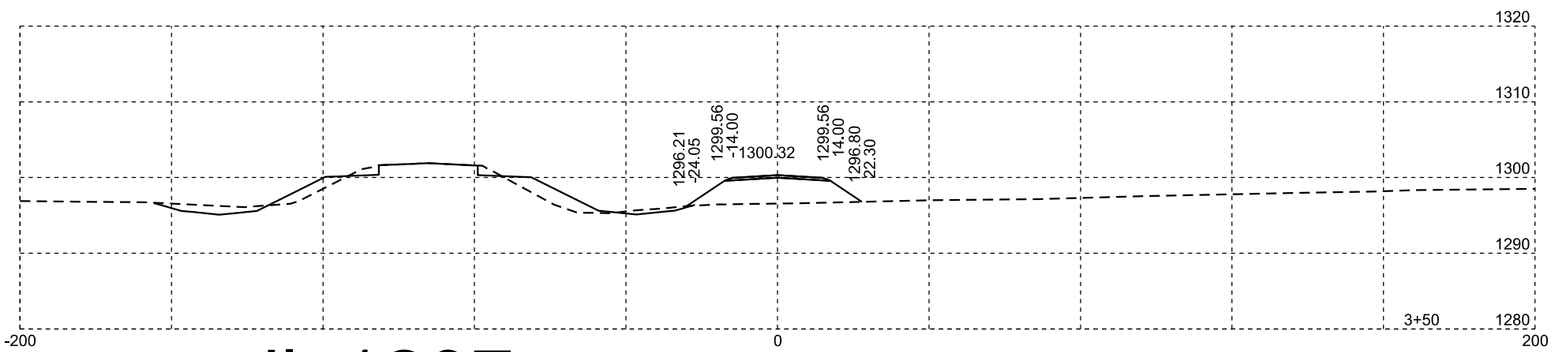

div1207

Plotting Date: 01/19/2024

STATE OF SOUTH DAKOTA	PROJECT	SHEET NO.	TOTAL SHEETS
	P-PH-B-PT 0010(124)296	X165	X169

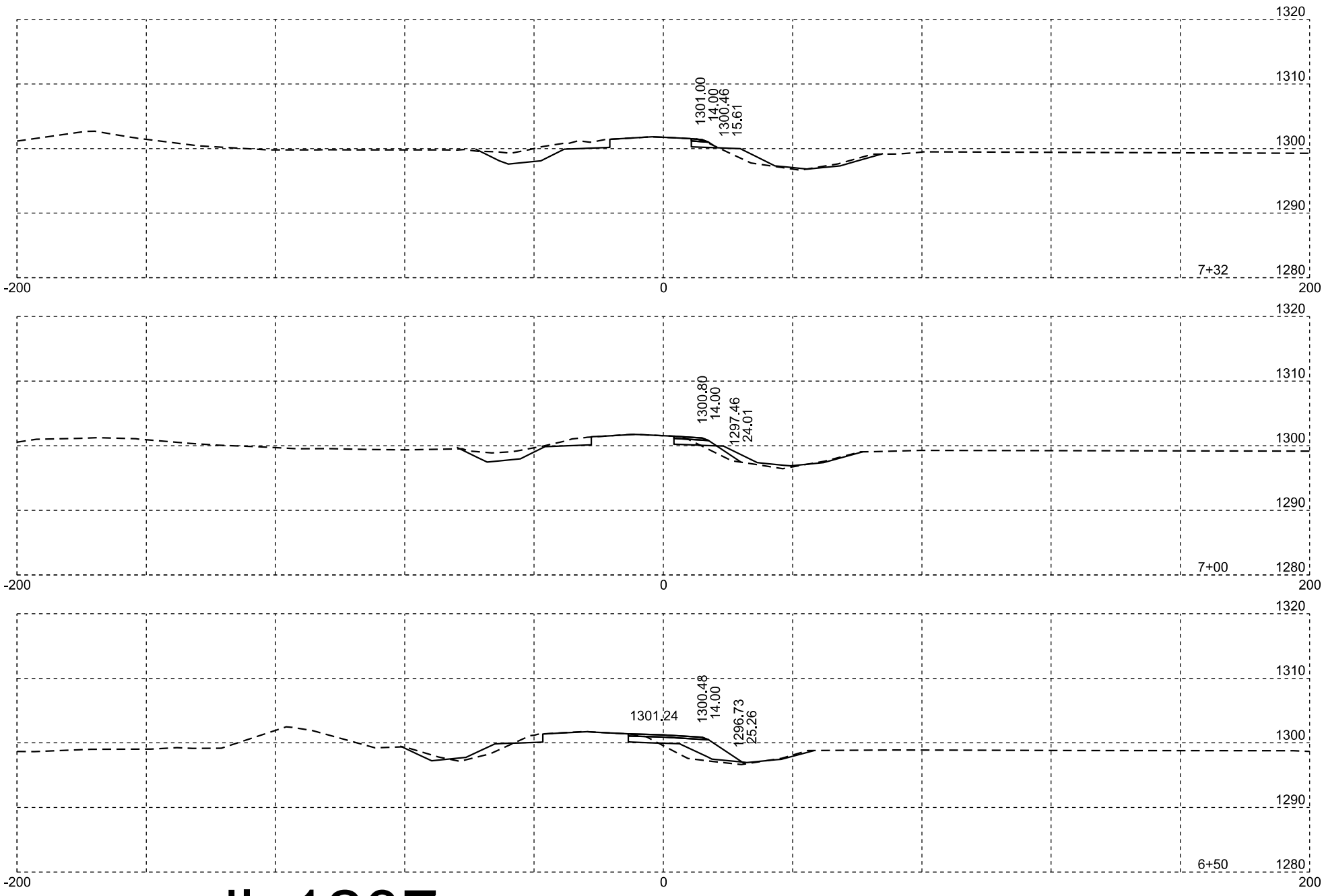

div1207

Plotting Date: 01/19/2024

STATE OF SOUTH DAKOTA	PROJECT	SHEET NO.	TOTAL SHEETS
	P-PH-B-PT 0010(124)296	X166	X169

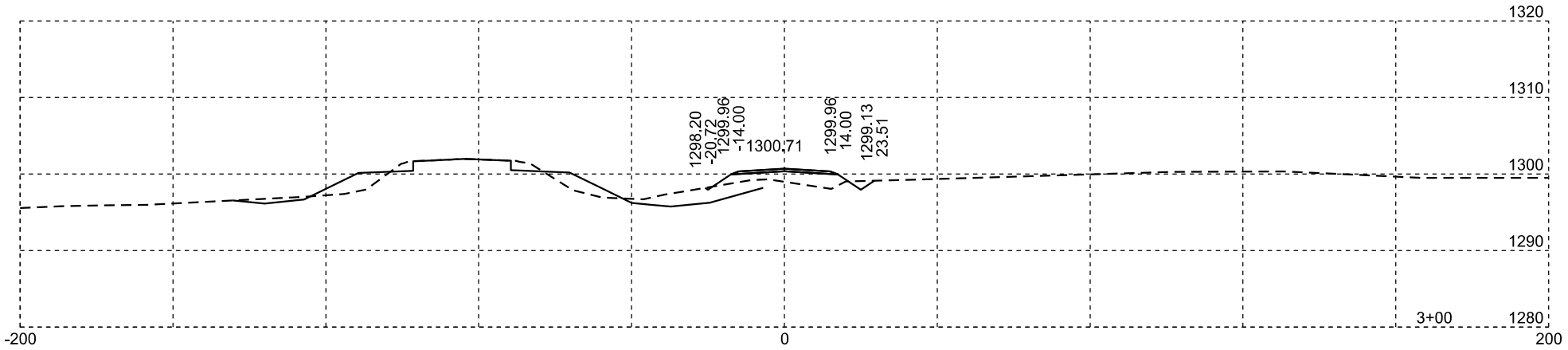

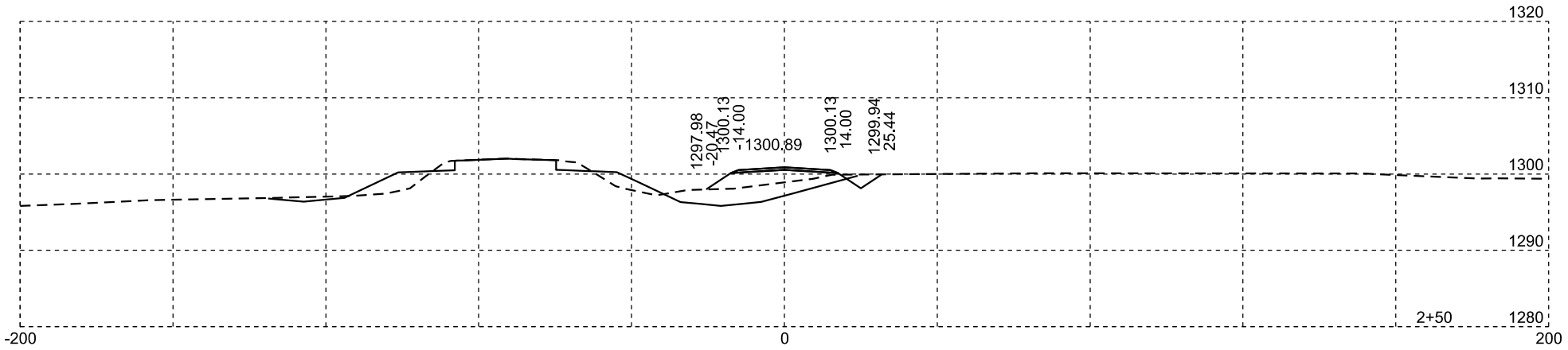

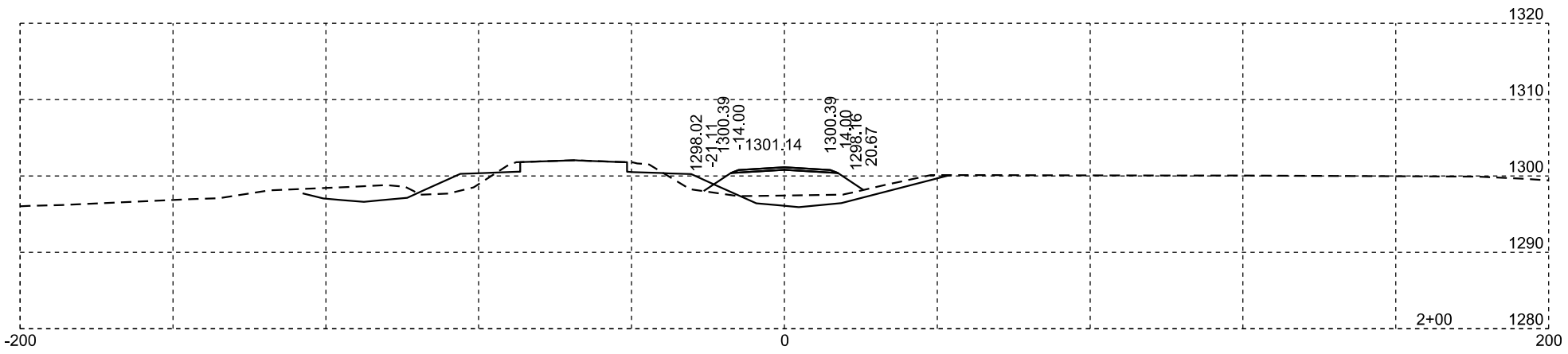

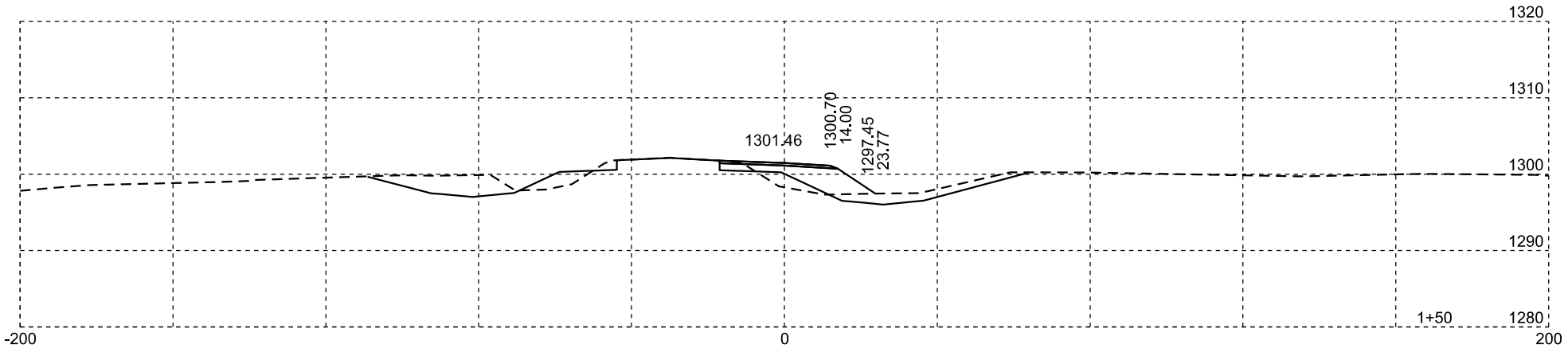

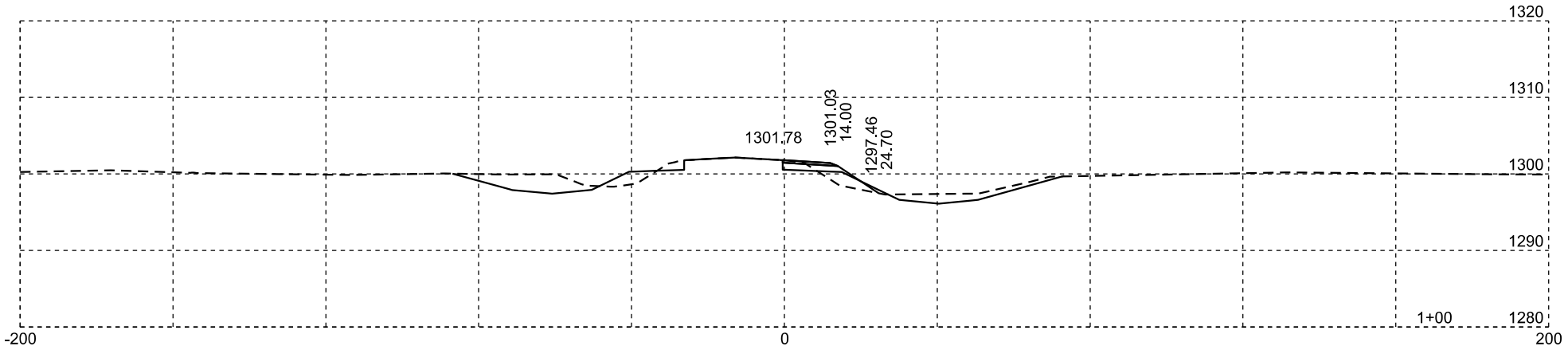

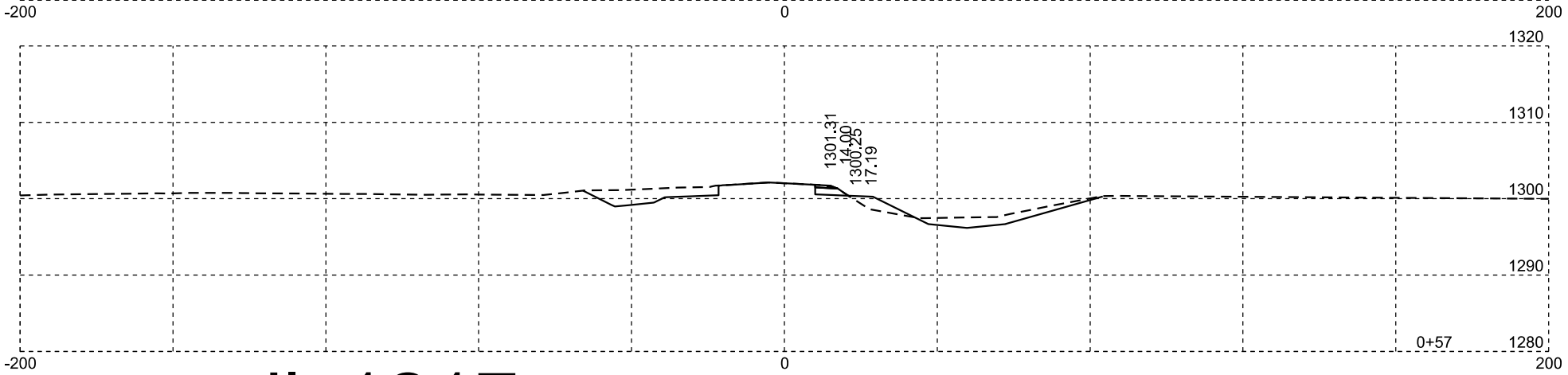

div1217

Plotting Date: 01/19/2024

STATE OF SOUTH DAKOTA	PROJECT	SHEET NO.	TOTAL SHEETS
	P-PH-B-PT 0010(124)296	X167	X169

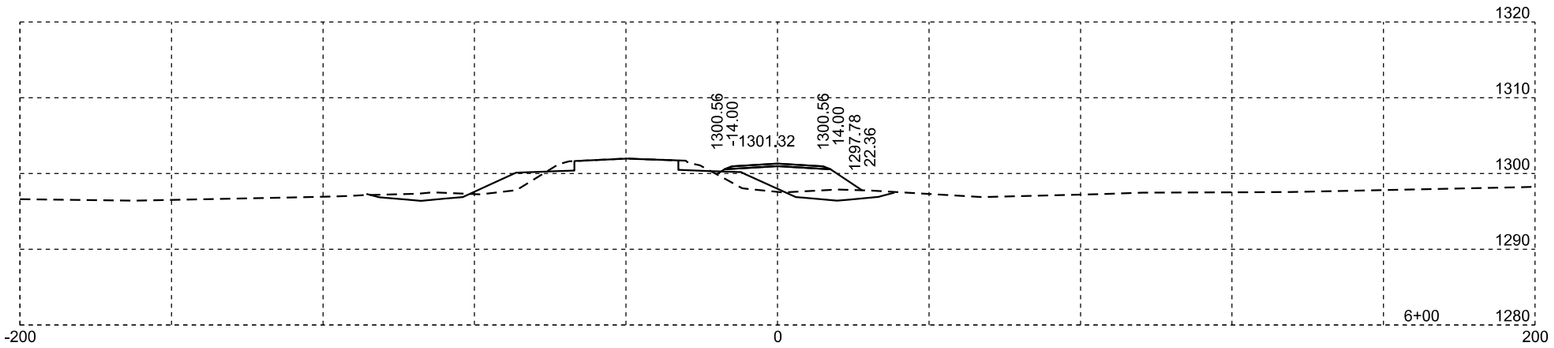

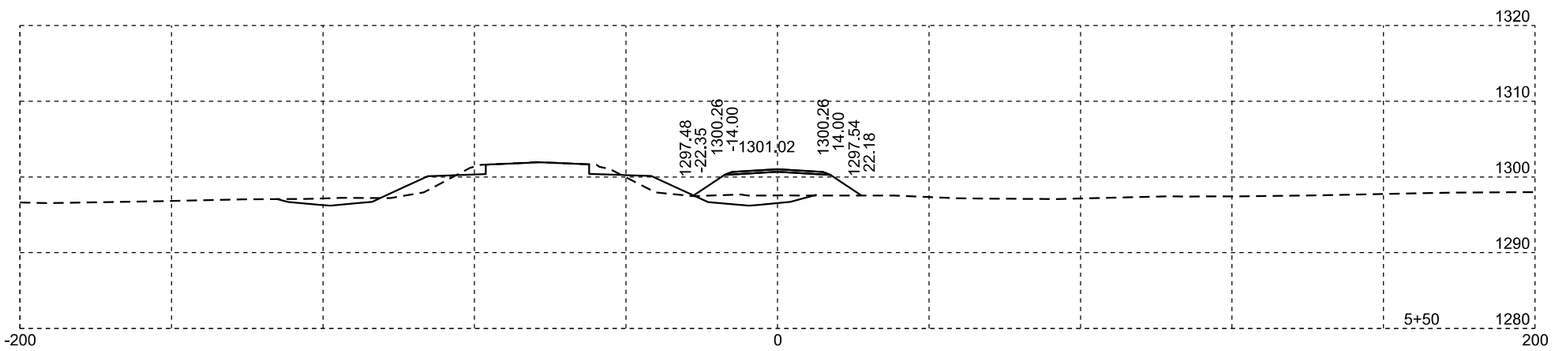

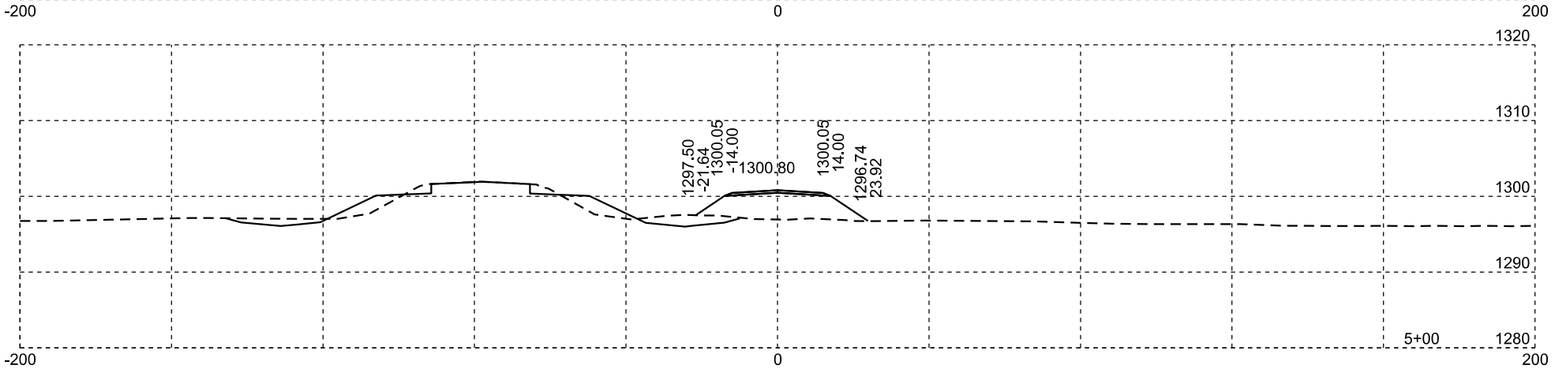

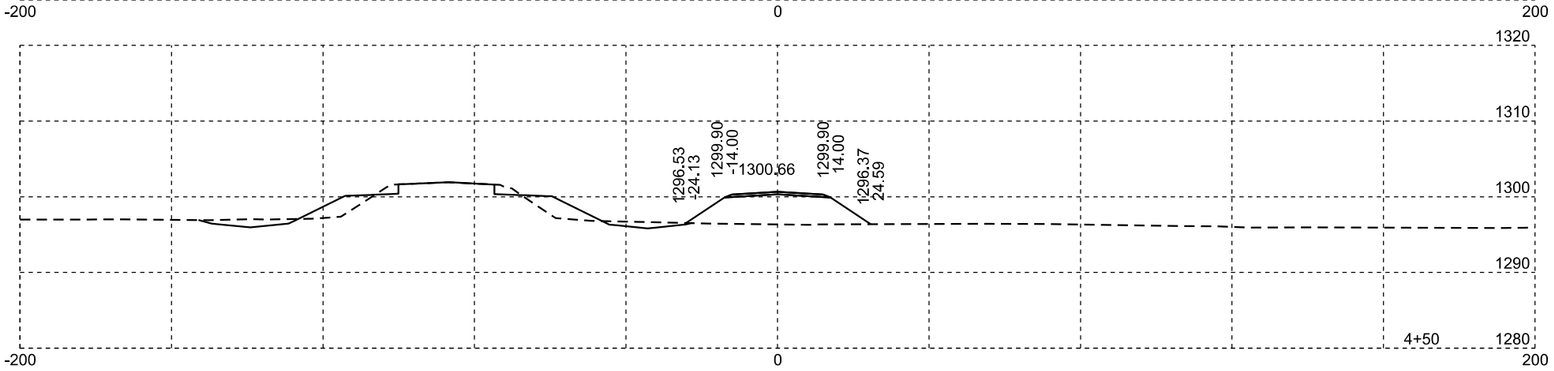

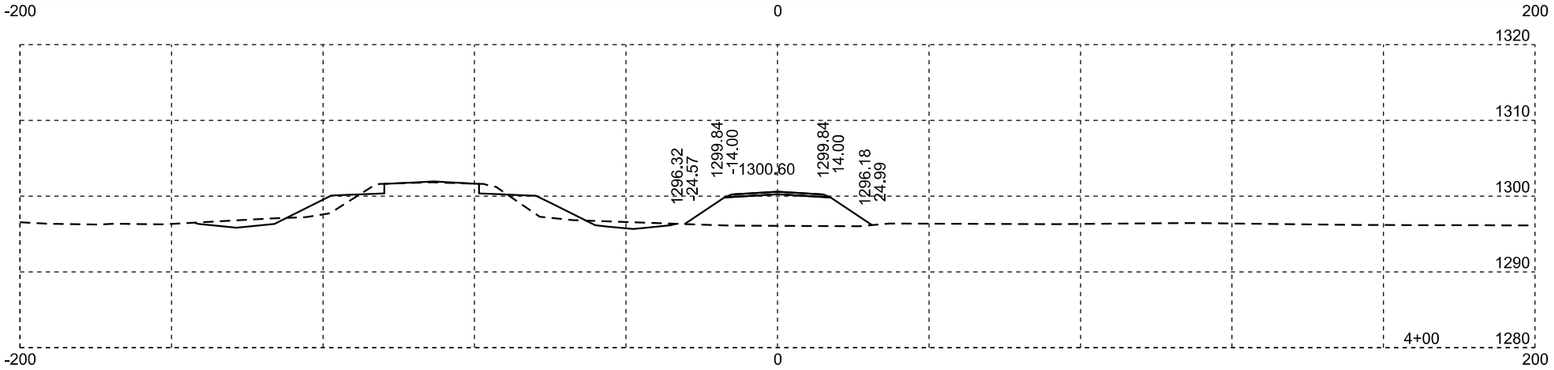

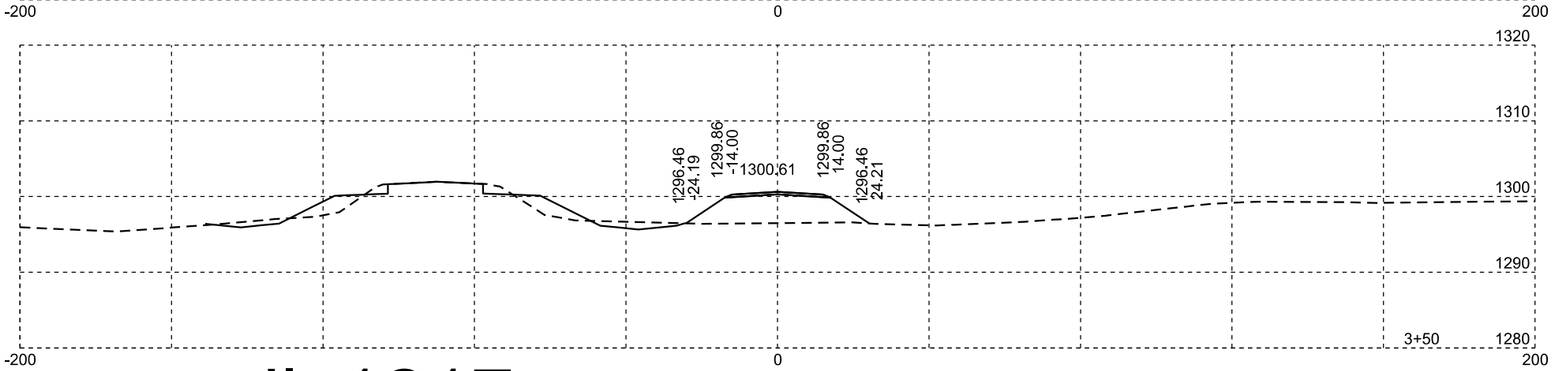

div1217

Plotting Date: 01/19/2024

STATE OF SOUTH DAKOTA	PROJECT	SHEET NO.	TOTAL SHEETS
	P-PH-B-PT 0010(124)296	X168	X169

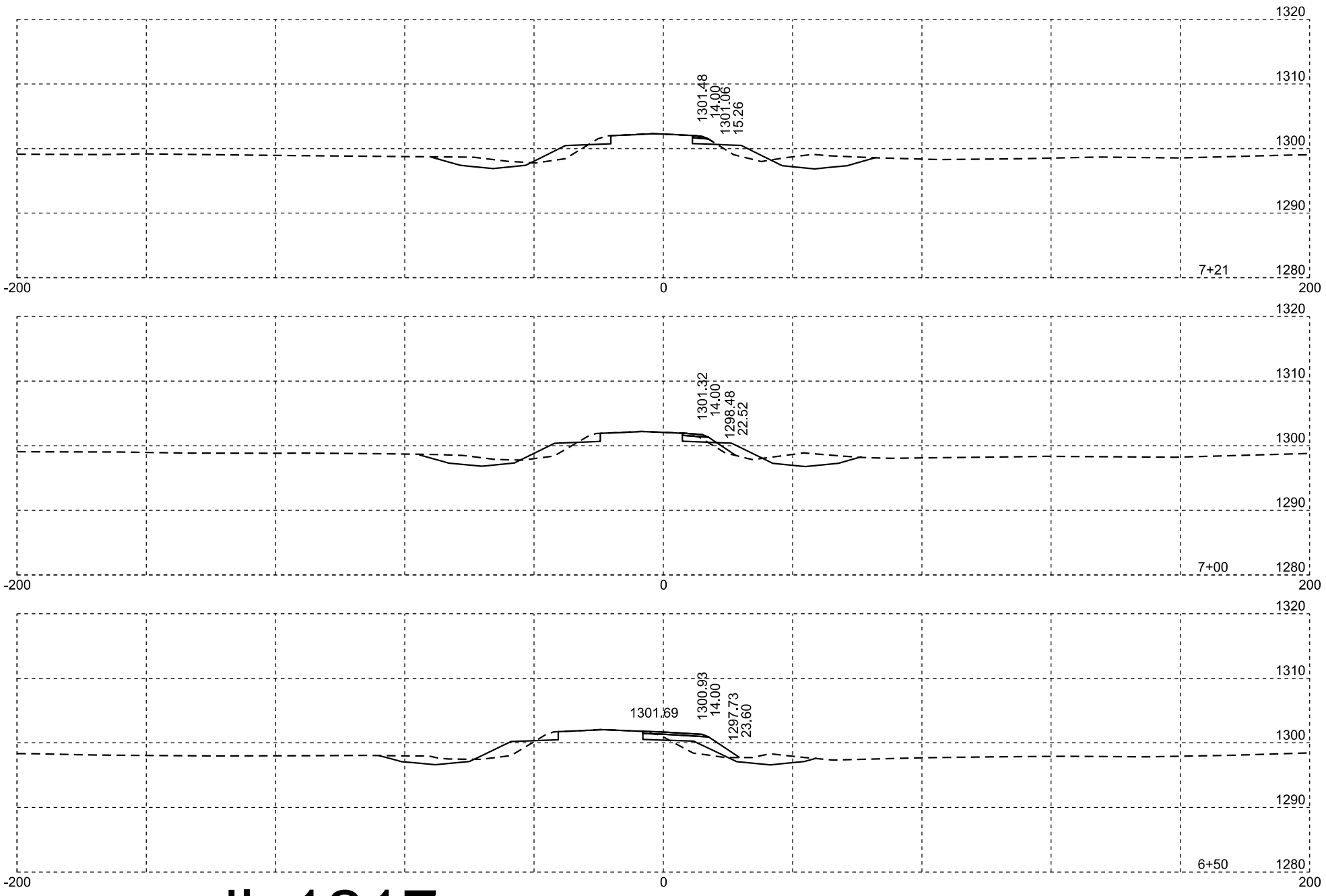

div1217

Plotting Date: 01/19/2024

STATE OF SOUTH DAKOTA	PROJECT	SHEET NO.	TOTAL SHEETS
	P-PH-B-PT 0010(124)296	X169	X169