SECTION B: GRADING PLANS

STATE OF SOUTH DAKOTA	PROJECT	SHEET	TOTAL SHEETS
	NH-CR 0034(193)402	B1	B146

Plotting Date: 08/16/2024 Revised 07/24/2024 AR

INDEX OF SHEETS

B1	General Layout with Index
B2-B14	Estimate with General Notes & Tables
B15-B17	Pipe Quantities
B18	Fence Quantities
B19-B20	Cub and Gutter Quantities
B21	Pavement Removal Quantities
B22-B29	Typical Grading Sections
B30	Horizontal Alignment Data
B31	Control Data
B32	Legend
B33-B62	Plan and Profile Sheets
B63-B77	Pavement Removal Layout
B78-B89	Curb and Gutter Layout
B90-B99	Curb Ramp Layout
B100	PCC Fillet Special Detail
B101-B146	Standard Plates

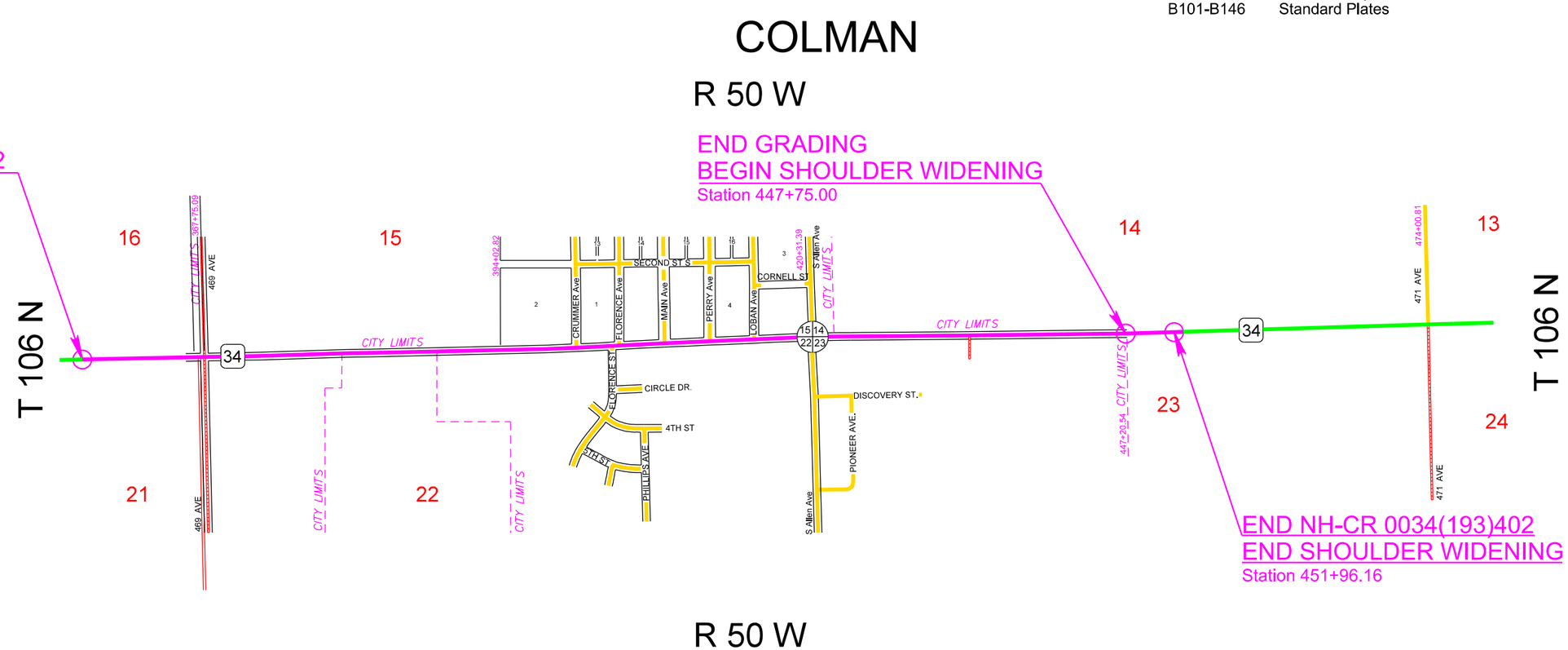

Plot Scale - 1:200

Plotted From - TRSF12141

File - U:\rdp\jmody0609\Title5.dgn

SectionB Page # : B1

SECTION B ESTIMATE OF QUANTITIES

BID ITEM NUMBER	ITEM	QUANTITY	UNIT
009E0010	Mobilization	Lump Sum	LS
009E3220	Reestablish Right-of-Way and Property Corner	135	Each
009E3225	Reestablish Public Land Survey System Corner	6	Each
009E3230	Grade Staking	5.538	Mile
009E3245	Final Cross Section Survey	1.798	Mile
009E3250	Miscellaneous Staking	1.798	Mile
009E3280	Slope Staking	1.798	Mile
009E3301	Engineer Directed Surveying/Staking	40.0	Hour
009E4300	Construction Schedule, Category III	Lump Sum	LS
100E0100	Clearing	Lump Sum	LS
110E0300	Remove Concrete Curb and/or Gutter	47	Ft
110E0400	Remove Drop Inlet	21	Each
110E0600	Remove Fence	4,062	Ft
110E1010	Remove Asphalt Concrete Pavement	1,812.3	SqYd
110E1100	Remove Concrete Pavement	40,200.9	SqYd
110E1130	Remove Concrete Driveway Pavement	892.6	SqYd
110E1140	Remove Concrete Sidewalk	4.7	SqYd
120E0010	Unclassified Excavation	79,475	CuYd
120E0900	Contaminated Material Excavation	100	CuYd
120E1000	Muck Excavation	1,654	CuYd
120E2000	Undercutting	19,225	CuYd
120E6100	Water for Embankment	515.6	MGal
250E0020	Incidental Work, Grading	Lump Sum	LS
260E6010	Granular Material	247.0	Ton
270E0040	Salvage and Stockpile Asphalt Mix and Granular Base Material	18,802.6	Ton
380E3520	6" PCC Approach Pavement	983.3	SqYd
380E3540	8" PCC Approach Pavement	339.8	SqYd
380E4050	8" PCC Fillet Section	356.6	SqYd
421E0100	Pipe Culvert Undercut	131	CuYd
450E0122	18" RCP Class 2, Furnish	4,436	Ft
450E0130	18" RCP, Install	4,436	Ft
450E0142	24" RCP Class 2, Furnish	512	Ft
450E0150	24" RCP, Install	512	Ft
450E0162	30" RCP Class 2, Furnish	618	Ft
450E0170	30" RCP, Install	618	Ft
450E0182	36" RCP Class 2, Furnish	50	Ft
450E0190	36" RCP, Install	50	Ft
450E0192	42" RCP Class 2, Furnish	188	Ft
450E0200	42" RCP, Install	188	Ft
450E2008	18" RCP Flared End, Furnish	3	Each
450E2009	18" RCP Flared End, Install	3	Each
450E2028	36" RCP Flared End, Furnish	1	Each

BID ITEM NUMBER	ITEM	QUANTITY	UNIT
450E2029	36" RCP Flared End, Install	1	Each
450E2032	42" RCP Flared End, Furnish	8	Each
450E2033	42" RCP Flared End, Install	8	Each
450E2200	24" RCP Sloped End, Furnish	2	Each
450E2201	24" RCP Sloped End, Install	2	Each
450E3012	24" RCP Arch Class 2, Furnish	492	Ft
450E3020	24" RCP Arch, Install	492	Ft
450E3022	30" RCP Arch Class 2, Furnish	666	Ft
450E3030	30" RCP Arch, Install	666	Ft
450E3032	36" RCP Arch Class 2, Furnish	142	Ft
450E3040	36" RCP Arch, Install	142	Ft
450E4512	36" RCP Arch Flared End, Furnish	2	Each
450E4513	36" RCP Arch Flared End, Install	2	Each
450E4600	24" RCP Arch Sloped End, Furnish	3	Each
450E4601	24" RCP Arch Sloped End, Install	3	Each
450E4604	30" RCP Arch Sloped End, Furnish	7	Each
450E4605	30" RCP Arch Sloped End, Install	7	Each
450E4606	36" RCP Arch Sloped End, Furnish	2	Each
450E4607	36" RCP Arch Sloped End, Install	2	Each
450E4759	18" CMP 16 Gauge, Furnish	530	Ft
450E4760	18" CMP, Install	530	Ft
450E4789	36" CMP 16 Gauge, Furnish	56	Ft
450E4790	36" CMP, Install	56	Ft
450E5025	36" CMP Elbow, Furnish	2	Each
450E5026	36" CMP Elbow, Install	2	Each
450E5318	36" CMP Sloped End, Furnish	2	Each
450E5319	36" CMP Sloped End, Install	2	Each
450E5406	18" CMP Safety End, Furnish	16	Each
450E5407	18" CMP Safety End, Install	16	Each
450E5509	18" CMP Arch 16 Gauge, Furnish	54	Ft
450E5510	18" CMP Arch, Install	54	Ft
450E6006	18" CMP Arch Safety End, Furnish	2	Each
450E6007	18" CMP Arch Safety End, Install	2	Each
450E8910	Cleanout for Culvert Treatment	2	Each
450E9232	Slipline 48" Pipe	320	Ft
462E0100	Class M6 Concrete	153.2	CuYd
462E0250	Cellular Grout	78.6	CuYd
464E0100	Controlled Density Fill	3.9	CuYd
480E0100	Reinforcing Steel	27,607	Lb
600E0300	Type III Field Laboratory	1	Each
620E0020	Type 2 Right-of-Way Fence	2,587	Ft
620E0040	Type 4 Right-of-Way Fence	1,033	Ft
620E0060	Type 6 Right-of-Way Fence	489	Ft

BID ITEM NUMBER	ITEM	QUANTITY	UNIT
620E1020	2 Post Panel	25	Each
620E1030	3 Post Panel	10	Each
620E2016	16' Tubular Gate	2	Each
650E0079	Modified Type B68 Concrete Curb and Gutter	2,631	Ft
650E0080	Type B68 Concrete Curb and Gutter	5,134	Ft
650E1079	Modified Type F68 Concrete Curb and Gutter	2,853	Ft
650E1080	Type F68 Concrete Curb and Gutter	301	Ft
650E3060	Type B6 Concrete Curb	19	Ft
650E4679	Modified Type P8 Concrete Gutter	320	Ft
650E4680	Type P8 Concrete Gutter	484	Ft
650E6080	8" Concrete Valley Gutter	48	Ft
651E0040	4" Concrete Sidewalk	19,335	SqFt
651E0060	6" Concrete Sidewalk	27,793	SqFt
651E0160	6" Reinforced Concrete Sidewalk	168	SqFt
651E0540	4" Colored Concrete Sidewalk	6,889	SqFt
651E0560	6" Colored Concrete Sidewalk	303	SqFt
651E0740	4" Reinforced Colored Concrete Sidewalk	30	SqFt
651E7000	Type 1 Detectable Warnings	550	SqFt
670E1200	Type B Frame and Grate	70	Each
670E2200	Type C Frame and Grate	9	Each
670E3300	Type E Frame and Grate	1	Each
670E5340	4' x 11' Precast Concrete Type S Drop Inlet Lid	7	Each
670E5400	Precast Drop Inlet Collar	71	Each
671E4548	48" Manhole Cone Section	4.0	Ft
671E6007	Type A7 Manhole Frame and Lid	2	Each
720E1015	Bank and Channel Protection Gabion	20.0	CuYd
831E0110	Type B Drainage Fabric	58	SqYd
831E0300	Reinforcement Fabric (MSE)	1,800	SqYd
900E0010	Refurbish Single Mailbox	4	Each

Plot Scale - 1:200
Plotted From - TRSF12144
File - ...\prj\mody0609\NotesSectionB.dgn

GRADING OPERATIONS

Water for Embankment is estimated at the rate of 10 gallons of water per cubic yard of Embankment minus Waste.

The estimated cubic yards of excavation and/or embankment required to construct outlet ditches, ditch blocks, and approaches are included in the earthwork balance notes on the profile sheets.

Special ditch grades and other sections of the roadway different than the typical section(s) will be constructed to the limits shown on the cross sections. If significant changes to the cross sections are necessary during construction, the Engineer will contact the Designer for the proposed change.

Generally, all shallow inlet and outlet ditches as noted on the plan sheets will be cut with a 10-foot-wide bottom with 5:1 backslopes. However, the Engineer may direct the Contractor to adjust the ditch width for proper alignment with the drainage structure.

Temporary fence and/or permanent fence will be placed ahead of the grading operation unless otherwise directed by the Engineer.

A copy of the subsurface investigation for this project is available for review at the Mitchell Region and Sioux Falls Area Offices.

TYPE III FIELD LABORATORY

The lab will be equipped with an internet connection such as DSL, cable modem, or other approved service. The internet connection will be provided with a multi-port wireless router. The internet connection will be a minimum speed of 5 Mbps unless limited by job location and approved by the DOT. Prior to installing the wireless router, the Contractor will submit the wireless router's technical data to the Area Office to check for compatibility with the state's computer equipment. The internet connection is intended for state personnel usage only. The Contractor's personnel are prohibited from using the internet connection unless pre-approved by the Project Engineer. These items will be incidental to the contract unit price per each for "Type III Field Laboratory".

UTILITIES

The Contractor will be aware that the existing utilities shown in the plans were surveyed prior to the design of this project and might have been relocated or replaced by a new utility facility prior to construction of this project, might be relocated or replaced by a new utility facility during the construction of this project, or might not require adjustment and may remain in its current location. The Contractor will contact each utility owner and confirm the status of all existing and new utility facilities. The utility contact information is provided elsewhere in the plans or bidding documents.

INSLOPE TRANSITIONS

Inslope transitions will be required at various pipe locations. Refer to Standard Plate 120.05 for details.

TABLE OF INSLOPE TRANSITIONS AT PIPE CULVERTS OR REINFORCED CONCRETE BOX CULVERTS

Station	L/R	Type
430+45	L	1
430+80	L	1

COORDINATION COMBINED LETTING PROJECT

The ditch in SDDOT right-of-way between stations 409+99 Rt to 412+46 Rt will be lowered beneath existing ground elevations, and the pipes at stations 409+99, 412+08, and 412+47 and storm sewer runs that outlet at those locations will be set to the new flow line elevations to increase capacity for the City of Colman Storm Sewer System.

The City of Colman combined utility project PCN X06M (City Project Number 21005951) will include work to construct an outlet ditch from SD Highway 34 starting at approximately station 409+99 Rt directly outside SDDOT right-of-way and terminating at the Sunrise Ridge Golf Course. The outlet ditch should be constructed prior to grading to lower the existing flow line elevations of the ditch between station 409+99 Rt and 412+46 Rt and the storm sewer runs that outlet at stations 409+99, 412+08, & 412+46.

City utility project PCN X06M is to be let in conjunction with SDDOT project PCN 0609.

EXCESS MATERIAL FROM PIPE AND DROP INLET INSTALLATION

The excess material which will result from installing drop inlets and pipe culverts which are larger than previously existed or where no such features previously existed is not included in the Waste quantity listed in the Table of Excavation Quantities. Disposal of this excess material will be incidental to the corresponding contract pay items which generated the excess material.

INUNDATED CONSTRUCTION AREAS

The following area adjoins a slough area and could be inundated at the time of construction. Extra effort may be required to excavate saturated organic material from the embankment footprint prior to fill placement. The Contractor will excavate muck materials ahead of the advancing fill. Special excavation techniques (long-reach equipment etc.) may be required at the following locations: Station 427+00± to Station 435+00±, Lt.

If in the opinion of the Engineer, Muck Excavation cannot be completed through conventional methods, the embankment may be constructed by end dumping and pushing fill material into the inundated area. Prior to placement of fill the foundation will be prepared to the satisfaction of the Engineer by use of long-reach or other equipment to displace soft, organic, and unstable material. Push fill material into the water at an angle that will cause the mud wave to be pushed outside the limits of the embankment. Payment for excavation of inundated construction areas will be incidental to the bid item for muck excavation.

CLASSIFICATION OF EXCAVATION

Large glacial boulders may be encountered sporadically within the project limits. Very large boulders could require more effort to excavate. Most of the material encountered should be able to be excavated using conventional methods associated with normal Unclassified Excavation. Muck Excavation will be required at the areas shown in the plans or as directed by the Engineer.

TABLE OF EXCAVATION FOR DEEP PIPE REMOVAL

Station	Type	Quantity (CuYd)
370+61		3,261
	Total:	3,261

REMOVAL OF EXISTING CONCRETE PAVEMENT STA. 357+14.77 to STA. 451+96.16

Existing asphalt concrete and/or existing asphalt concrete patch work that was placed above the existing concrete pavement is included in the quantity for "Remove Concrete Pavement". The Contractor will dispose of the concrete pavement and asphalt concrete at a site approved by the Engineer.

The existing concrete from Sta. 357+14.77 to 451+96.16 is 8" Non-Reinforced PCC Pavement. The existing transverse joints are perpendicular and are spaced at 15 feet. The aggregate in the existing Plain Jointed PCC Pavement is Crushed Quartzite Ledge Rock.

In place PCC Pavement removed from within the project limits may be crushed and reused on the project as Base Course, Salvaged material. The crushed PCC Pavement must meet the requirements of Base Course, Salvaged material. All in place rebar will be separated and removed from the in-place PCC Pavement. Existing rebar will become the property of the Contractor. If in place PCC Pavement is reused as Base Course, Salvaged, the quantity of virgin Base Course will be reduced by an equal amount.

See estimated quantity for "Remove Concrete Pavement" in the Table of Pavement Removal Quantities elsewhere in Section B.

EXCAVATION FOR DEEP PIPE REMOVAL

Included in the quantity of "Unclassified Excavation" are 3,261 cubic yards of excavation for removal of deep pipes. Deep pipes are existing mainline pipes at depths of 10 feet or greater (measured from the flow line to the lowest elevation of either the existing ground line, undercut line, or bottom of removed or salvaged surfacing).

All work necessary to excavate and backfill the deep pipes including labor, equipment, and incidentals will be incidental to the contract unit price per cubic yard for "Unclassified Excavation". Payment for deep pipe excavation will be based only on plans quantity and measurement of these excavation quantities during construction will not be performed.

The excavation quantities for deep pipes are not included with the earthwork balance quantities on the plans profile sheets. The quantities computed for excavation of the deep pipes are based on the limits shown in the drawing below. The drawing shows a box culvert for illustration purposes only; the limits are similar for a pipe.

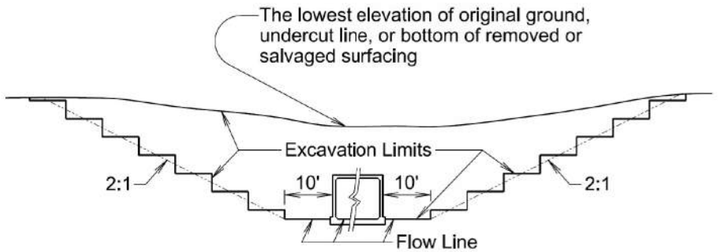

Plot Scale - 1:200
Plotted From - TRSF12141
File - ...\prj\mody06091NotesSectionB.dgn

GENERAL GEOLOGY

The project alignment traverses glacial terrain typical of eastern South Dakota. Included within this terrain may be areas of loess, shale, sand, gravel, glacial till, and boulder till. As is the case with most glacial terrain, the materials throughout the project can vary greatly in a short distance.

SOIL BORING LOG

Station	Offset (ft)	Depth (ft)	Description	Initial Water Level (ft)	Final Water Level (ft)	Time Between Reading (hrs)
363+00	18.8 RT	1.3-20.0	Brown to gray silt clay	Dry	13.0	24
370+50	20.2 RT	1.3-3.2	Brown clay silt	Dry	Dry/caved at 18.0	24
		3.2-20.0	Brown to gray clay sand			
380+00	23.0 RT	1.3-3.2	Gray silt clay	Dry	10.0	23
		3.2-6.8	Gray clay silt			
		6.8-20.0	Brown silt clay			
386+00	18.8 RT	1.4-20.0	Brown to gray silt clay	Dry	Dry/caved at 6.0	21
392+00	20.0 LT	1.3-3.3	Gray to black sandy clay	10.0	9.5	20
		3.3-6.4	Brown clay sand			
		6.4-20.0	Brown silt clay			
402+00	20.2 LT	1.5-10.0	Black clay silt	19.5	16.4	20
		10.0-20.0	Brown silt clay			
410+00	18.6 RT	1.4-3.4	Black sandy clay	19.0	9.0	166
		3.4-20.0	Brown silt clay			
416+00	18.1 RT	1.4-3.6	Black to brown clay sand	Dry	10.0	47
		3.6-20.0	Brown to gray silt clay			
424+00	18.0 LT	1.5-3.4	Black clay silt	19.5	10.0	22
		3.4-6.2	Gray silty sand			
		6.2-20.0	Brown silt clay			
431+00	17.4 RT	1.5-3.7	Brown silt clay	9.0	9.0	18
		3.7-6.4	Gray to black sandy clay			
		6.4-20.0	Gray silt clay			
440+00	18.2 RT	1.5-20.0	Brown to gray silt clay	Dry	15.8	40
447+00	17.6 RT	1.5-20.0	Brown to gray silt clay	Dry	16.0	24

Free water was encountered at Station 431+00 at a level that will be near the bottom of the new storm sewer trench. Proper protective measures will be required for the storm sewer construction. Seasonal changes may affect the groundwater elevations. Sumps and/or other dewatering methods will likely be required.

IN-PLACE SURFACING AND GRANULAR MATERIAL

Test holes were drilled to check the depth of in-place surfacing. A log of these test holes is shown below.

		Thickness (in)			Width (ft)	
Station	Centerline Offset (ft)	Concrete	AC (shoulder)	Gravel	Mainline	Shoulder AC
363+00	18.8 RT		2.0	13.0	23.4	6.0
370+50	20.2 RT		2.0	13.0	32.6	6.0
380+00	23.0 RT		3.0	12.0	43.2	2.4
386+00	18.8 RT		2.0	14.0	37.6	7.0
392+00	20.0 LT	9.0		6.0	46.0	
402+00	20.2 LT	7.0		10.0	44.2	
410+00	18.6 RT	8.0		8.0	44.0	
416+00	18.1 RT	9.0		7.0	45.0	
424+00	18.0 LT		5.0	12.0	30.2	7.0
431+00	17.4 RT		5.0	12.0	30.0	5.8
440+00	18.2 RT		4.0	13.0	29.0	5.6
447+00	17.0 RT		6.0	11.0	30.2	6.0

Plot Scale - 1:200
Plotted From - TRSF12141
File - ...\prj\moody0609\NotesSectionB.dgn

SHRINKAGE FACTOR: Embankment +25%

TABLE OF EXCAVATION QUANTITIES BY BALANCES

Station	to Station	Excavation (CuYd)	*Undercut (CuYd)	*Muck Exc. (CuYd)	Total Excavation (CuYd)	**Out-of-Balance Exc. (CuYd)	**Out-of-Balance Waste (CuYd)	**Unc. Exc. Waste (CuYd)	** Waste (CuYd)	** Haul (CuYdSta)	** Out-of-Balance Exc. Haul (CuYdSta)
357+15	385+00	17,840	6,056	0	23,896	0	172	7,555	0	145,500	0
385+00	415+00	6,495	5,092	38	11,587	0	830	0	38	48,200	0
415+00	447+75	15,597	6,915	1,616	24,752	624	0	0	1,616	69,300	5,100
447+75	451+96	418	501	0	1,335	378	0	0	0	1,000	13,600
	Totals:	40,350	18,564	1,654	61,570	1,002	1,002	5,356	1,654	264,000	18,700

* The quantities for these items are in the Estimate of Quantities under their respective bid items.
** The quantities for these items are for information only.

TABLE OF UNCLASSIFIED EXCAVATION

	(CuYd)
Excavation	40,350
Undercut	19,225
Topsoil	6,691
Salvaged Asphalt Mix and Granular Base Material (from fill sections)	9,948.2
Exc. for Deep Pipe Removal	3,261
Total	79,475.2

Plot Scale - 1:200
Plotted From - TRSF12141
File - ...\prj\mody0609\NotesSectionB.dgn

PROCEDURES FOR DETERMINING UNCLASSIFIED EXCAVATION QUANTITY

When plan quantities are used for payment, the Unclassified Excavation quantity will be used for final payment and the plans quantity of Topsoil and salvaged surfacing items listed in the Table of Unclassified Excavation will not be adjusted according to field measurements.

The following paragraphs are general earthwork information and information in regard to computing the Unclassified Excavation quantity when final cross sections are taken in the field:

The Unstable Material Excavation quantity is included in the Excavation quantity listed in the Table of Unclassified Excavation. When finaling a project, the Unstable Material Excavation quantity will be added to the Excavation quantity to compute the Unclassified Excavation quantity.

The Topsoil quantity in the Table of Unclassified Excavation is an estimate. When finaling a project, the total quantity of field measured Topsoil will be used in place of the estimated Topsoil quantity. The quantity of Topsoil from the cuts will be paid for twice as Unclassified Excavation, as it will be in both the Excavation and Topsoil quantities. This will be full compensation for Excavation, which includes necessary undercutting to provide space for placement of topsoil.

The Excavation quantities from individual balances and the Table of Unclassified Excavation have been reduced by the volume of in place surfacing that will be removed and/or salvaged.

Salvaged Asphalt Mix and Granular Base Material will be paid for at the contract unit price per ton and is also included in and paid for once as Unclassified Excavation. As shown in the Table of Unclassified Excavation, the estimated quantity of 7423 cubic yards of Salvaged Asphalt Mix and Granular Base Material from fill sections will be added to the Excavation quantity to determine the Unclassified Excavation quantity. When finaling a project, the quantities of Salvaged Asphalt Mix and Granular Base Material from fill sections will not be adjusted according to field measurements. The quantity of Salvaged Asphalt Mix and Granular Base Material from cut sections will not be added to the Excavation quantity as it is already in the cuts on the final cross sections.

The volume of in place Concrete Surfacing and Asphalt Surfacing removed will NOT be paid for as Unclassified Excavation.

The Excavation quantities from individual balances and the table above have been reduced by the volume of in place concrete pavement and asphalt pavement that will be removed.

When finaling a project, the estimated quantity of 3,499 cubic yards of Concrete Pavement and Asphalt Pavement removed from the cut sections will be subtracted from the Unclassified Excavation quantity for final payment. The quantity of Concrete Pavement and Asphalt Pavement from cut sections subtracted from the Unclassified Excavation quantity will be plans quantity and will not be adjusted according to field measurements.

HAUL

Included in the Table of Excavation Quantities by Balances are Out-of-Balance Haul and Haul. They are not pay items and are for informational purposes only. Haul was not estimated for moving Contractor Furnished Borrow Excavation. The mass haul diagram is available as part of the bid package for use in figuring this haul.

Out-of-Balance Haul: 18,700 (CuYdSta) for moving material from an earthwork balance to another earthwork balance.

Haul: 264,000 (CuYdSta) for moving unclassified excavation material to the locations where it is needed throughout the earthwork balance.

For Purpose of Extra Haul Computations:

Average Haul = (Haul + Out-of-Balance Haul)/Unclassified Excavation = 264,000/79,752 = 3.3 Sta.

Compensation for “Extra Haul” will not be made for haul distances less than 5 stations. When payment for “Extra Haul” is authorized, the distance used for “Extra Haul” calculations will be that in excess of 5 stations.

UNDERCUTTING

In all cut sections the earthen subgrade will be undercut 1 foot below the finished subgrade. The undercut material or other suitable material, as directed by the Engineer, will then be replaced and compacted to the density specified for the section being constructed. In the curb and gutter sections, the undercut will extend from behind the outside curb to behind the opposite outside curb. The distance behind the curb will be determined based on the paving operation.

Shallow embankment sections, fills less than 1 foot in height measured at the finished subgrade shoulders, will be undercut to ensure a minimum 1-foot height of earth embankment for the entire width of roadbed. The upper 4 inches of undercut material that consists of topsoil with a high humus content will be used as topsoil, placed in the fill slopes outside the shoulders of the earthen subgrade, or placed in the lower portion (below 4-foot depth) in fills which are greater than 4 feet in height. The remaining undercut soil and soil obtained from adjacent excavation (excluding the upper 4 inches) will then be replaced and compacted to the density specified for the section being constructed.

Intersecting roads will be undercut to the same depth as the Mainline roadway out to the limits of asphalt concrete or PCC pavement placement on the intersecting road unless specified otherwise. Quantities are included in the “Table of Undercutting”.

In the shoulder widening sections, the existing embankment will be undercut in a manner that allows 1 feet of new embankment to be constructed below the finished subgrade top. The remaining new embankment will be benched in to the existing inslope as per Section 120.3 B.2 of the Specifications.

The plan shown quantity will be the basis of payment. However, if there are additional areas of undercut other than what is shown in the plans, the Engineer will direct removal of these areas and the additional areas will be measured according to the Engineer.

TABLE OF UNDERCUTTING QUANTITIES URBAN

Station	to	Station	Description	Quantity (CuYd)
357+15		385+00	SD34	6,056
385+00		415+00	SD34	5,092
415+00		447+75	SD34	6,915
447+75		451+96	SD34	501
399+92 Lt			Int. Road	79
402+95 Rt			Int. Road	71
403+68 Lt			Int. Road	35
407+61 Lt			Int. Road	86
411+52 Lt			Int. Road	41
415+28 Rt			Int. Road	50
415+33 Lt			Int. Road	49
420+29 Rt			Int. Road	53
420+29 Lt			Int. Road	53
433+98 Rt			Int. Road	77
442+06 Rt			Int. Road	67
			Total:	19,225

UNSTABLE MATERIAL EXCAVATION

The areas of unstable material excavation are drawn on the cross sections with a normal depth of 2 feet. The estimated quantity of 1,060 cubic yards of unstable material excavation will be paid for at the contract unit price per cubic yard for “Unclassified Excavation”.

All areas designated as Unstable will be excavated. The unstable material excavated on this project will be placed outside the subgrade shoulder in fill sections or stockpiled and used as topsoil.

Field measurement of unstable material excavation will not be made. However, if there are additional areas of unstable material excavation other than what is shown in the plans, the Engineer will direct removal of these areas and the additional areas will be measured according to the Engineer.

TABLE OF UNSTABLE MATERIAL EXCAVATION

Station	to	Station	L/R	Depth (Ft)	Quantity (CuYd)
394+00		396+00	R	2	102
410+00		413+00	R	2	117
411+75		412+25	L	2	19
435+00		437+00	L	2	98
435+00		441+00	R	2	608
441+00		444+00	L	2	116
				Total:	1,060

Plot Scale - 1:200
Plotted From - TRSF12141
File - ...\prjmody0609\NotesSectionB.dgn

MUCK EXCAVATION

The areas of muck excavation are drawn on the cross sections with a normal depth of 3 feet. The estimated quantity of 1,616 cubic yards of muck excavation will be paid for at the contract unit price per cubic yard for "Muck Excavation".

Muck excavation consists of the removal of highly organic and/or highly saturated material from the designated areas shown on the cross sections. Highly organic muck material will not be used in the embankment but may be used as topsoil. Non-organic muck material may be used as embankment outside of the fill subgrade shoulder if it is properly handled and dried prior to placement in the embankment.

Field measurement of muck excavation will not be made unless the Engineer orders additional excavation, or when the Engineer determines, in accordance with Section 120.3 A.1 of the Specifications, that the classification of excavation be changed.

If the areas designated as muck excavation can be removed with similar equipment and procedures as used for unclassified excavation, the material will be measured and paid for as "Unclassified Excavation".

TABLE OF MUCK EXCAVATION

Station	to	Station	L/R	Depth (Ft)	Quantity (CuYd)
396+00		396+63	L	3	38
427+00		435+00	L	3	851
427+75		433+25	R	3	765
				Total:	1,654

REINFORCEMENT FABRIC (MSE)

Although poor subgrade conditions are not anticipated, the conditions may change during construction. Any unstable areas should be reworked and recompacted. If, in the opinion of the Engineer, the subgrade will not stabilize by this method, Reinforcement Fabric (MSE) and granular material may be used. Contact the Geotechnical Engineering Activity (605-773-3725 for assistance should the use of Reinforcement Fabric (MSE) and additional granular material become necessary.

1,800 square yards (70'x200') of Reinforcement Fabric (MSE) and an additional 980 tons. (70'x200'x1') of base course are included in the materials quantities for bidding purposes. The Reinforcement Fabric (MSE) quantity has been increased by 15% to account for overlaps. These quantities can quantities can be adjusted or eliminated by CCO, depending on field conditions.

Section B	Section F
Reinforcement Fabric (MSE)	Base Course
1,800 sq. yds. (70'x200')	980 tons (70'x200'x1')

SALVAGE AND STOCKPILE ASPHALT MIX AND GRANULAR BASE MATERIAL

An estimated 18,802.6 tons (9,948.2 Cubic Yards) of asphalt mix and granular base material will be salvaged from asphalt concrete shoulders and base and stockpiled at a site furnished by the Contractor and satisfactory to the Engineer.

The quantity of salvage asphalt mix and granular base material may vary from the plans. No adjustment will be made to the contract unit price for variations of the quantity of "Salvage and Stockpile Asphalt Mix and Granular Base Material."

See Section F for typical existing surfacing sections. In-place surfacing sections vary within the project. Estimated quantities are listed below.

SD Hwy 34 In-Place Surfacing:

Station		Station	Salvage & Stockpile Asphalt Mix and Granular Base Material (CuYd)	(Tons)
	SD34			
357+14.77	to	372+44.10	1,400.0	2,646.1
372+44.10	to	379+40.2	523.6	989.6
379+40.20	to	380+00.30	52.1	98.5
380+00.30	to	391+14.70	847.6	1,602.1
391+14.70	to	392+09.60	60.1	113.6
392+09.60	to	398+99.90	522.6	987.8
398+99.90	to	420+91.40	1,388.8	2,624.8
420+91.40	to	421+99.90	82.7	156.3
421+99.90	to	447+75.00	2,321.3	4,387.3
447+75.00	to	451+96.16	245.4	463.8
		Subtotal:	7,444.2	14,069.9

Traffic Control Surfacing from Temporary Widening:

Station		Station	Salvage & Stockpile Asphalt Mix and Granular Base Material (CuYd)	(Tons)
	SD34			
357+14.77	to	380+00.30	985.6	1,862.8
421+99.90	to	451+96.16	1,356.4	2,563.7
354+14.00	to	358+77.40	106.4	201.2
380+50.00	to	382+00.00	27.8	52.5
408+80.00	to	410+30.00	27.8	52.5
		Subtotal:	2,504.0	4,732.7

PIPE COVER

The earthen subgrade cover for some pipe installations is less than one foot. The Contractor will take the necessary precautions to ensure the structural properties of the pipes are not damaged after installation and prior to the placement of final surfacing. Any additional costs for preventing damage to these pipes will be incidental to the contract unit price per foot for the corresponding pipe installation contract item.

PIPE CULVERT UNDERCUT

The table includes undercut for 36 inch and larger pipe culverts. The depth of undercut is an estimate and the actual depth necessary will be determined during construction. Pipes listed may or may not require undercutting and pipes not listed may require undercutting. The Engineer will determine which pipe will be undercut in accordance with Section 421 of the Specifications.

Station	Undercut Depth (Ft)	Pipe Culvert Undercut (CuYd)	Granular Material (Ton)
370+61	2	130.7	247.0
	Total:	130.7	247.0

The table specifies locations where granular material is required for backfilling the pipe culvert undercut area. Other locations of pipe culvert undercut may require granular material backfill where site conditions warrant. Granular material will conform to the gradation requirements in Section 421.2.A of the Specifications and will be paid for at the contract unit price per ton for "Granular Material".

The table below contains the rate for one-foot depth of pipe culvert undercut per foot of pipe length and should be used as an aid in determining the actual amount of undercut to be performed during construction. The table is derived from the drawing below and conforms to the Specifications. When calculating pipe culvert undercut, the length of pipe ends should be included in the overall pipe length.

Storm sewer and approach pipes do not require undercutting unless specified otherwise in these plans.

Pipe Diameter (In)	Round Pipe Undercut Rate for 1' Depth (CuYd/Ft)	Arch Pipe Undercut Rate for 1' Depth (CuYd/Ft)
24	0.2407	0.2577
30	0.2623	0.2847
36	0.2840	0.3110
42	0.3056	0.3337
48	0.3272	0.3596
54	0.3488	0.3827
60	0.3704	0.4105

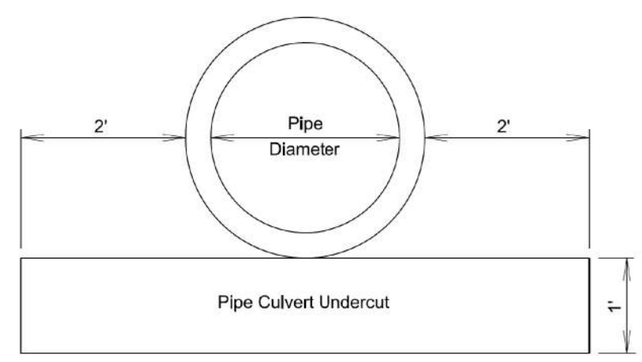

Plot Scale - 1:200
Plotted From - TRSF12141
File - ...\prjmody0609\NotesSectionB.dgn

INCIDENTAL WORK, GRADING

Station	Remarks
372+38-60' R	Take Out 18" – 60' RCP
372+69-53' R to 372+63-24' R	Take Out 18" – 30' CMP
375+43-49' L	Take Out 18" – 58' RCP
381+63-23' L to 381+65-42' R	Take Out 18" – 65' RCP
381+63-23' L to 381+72-34' L	Take Out 18" – 14' RCP
383+69-36' L	Take Out 18" – 56' RCP Arch
385+45-32' L to 385+45-23' L	Take Out 18" – 6' RCP
385+45-23' L to 385+44-38' R	Take Out 18" – 58' RCP Arch
393+77	Take Out 24" – 70' RCP
394+45-23' L to 394+47-35' L	Take Out 18" – 10' RCP
396+59-42' R	Take Out 18" – 44' CMP
397+98-23' L to 397+99-37' R	Take Out 18" – 60' RCP
397+99-37' R to 398+70-54' R	Take Out 18" – 72' RCP
397+99	Take Out 18" – 58 RCP
398+08-39' R to 398+24-25' R	Take Out 18" – 22' RCP
398+24-25' R	Take Out 18" - 40° Bend
398+24-25' R to 398+99-25' R	Take Out 8" – 75' PVC Floor Drain
403+41-37' to 404+10-31' L	Take Out 18" – 68' RCP
404+10-23' L to 404+10-31' L	Take Out 18" – 6' RCP
404+10-23' L to 404+09-34' R	Take Out 18" – 56' RCP
404+10-23' L to 407+08-23' L	Take Out 18" – 298' RCP
404+23-36' L to 407+13-45' L	Remove and reset Rock in Original Position
404+23-36' L to 407+13-45' L	Salvage and Replace Crushed Concrete
407+08-24' R to 407+08-23' L	Take Out 18" – 46' RCP Arch
407+08-23' L to 407+38-54' L	Take Out 18" – 42' RCP
407+38-54' L to 407+82-55' L	Take Out 18" – 42' RCP
407+08-23' L to 409+99-23' R	Take Out 24" – 292' RCP Arch
409+99-23' L to 409+99-30' L	Take Out 24" – 7' RCP Arch
409+99-24' R to 409+99-23' L	Take Out 24" – 48' RCP
409+99-24' R to 409+99-31' R	Take Out 24" – 8' RCP Arch
411+39-23' R to 411+39-37' R	Take Out 18" – 13' RCP
412+13	Take Out 30" – 54' RCP Arch
412+29-23' L to 412+29-35' L	Take Out 30" – 10' RCP Arch
412+29-23' L to 412+30-34' R	Take out 30" – 57' RCP Arch
412+29-23' L to 415+61-23' L	Take Out 30" – 332' RCP
415+61-24' L to 415+52-31' R	Take Out 18" – 52' RCP Arch
422+44-39' R	Take Out 18" – 70' CMP
424+05-37' R	Take Out 18" – 70' CMP
426+25-43' R	Take Out 18" – 66' CMP
427+40-44' R	Take Out 18" – 94' CMP
428+40-96' R to 428+43-85' R	Take Out 1-36" CMP Section & 1 CMP End
428+46-94' R to 428+49-87' R	Take Out 1-36" CMP Sections & 1 CMP End
430+82	Take Out 36" – 86' RCP
433+44-58' R to 43375-84' R	Take Out 24" – 38' RCP
434+00-48' R	Take Out 24" – 74' RCP
441+52-54' R to 441+82-78' R	Take Out 24" – 38' RCP
442+06-51' R	Take Out 24" – 74' RCP
447+98-47' L	Take Out 18" – 68' RCP

CORRUGATED METAL PIPE

Corrugated metal pipes will have 2 ⅔-inch x ½-inch corrugations for 42-inch and smaller round pipe and 48-inch and smaller arch pipe unless otherwise stated in the plans. Corrugated metal pipes will have 3-inch x 1-inch or 5-inch x 1-inch corrugations for 48-inch and larger round pipe and 54-inch and larger arch pipe unless otherwise stated in the plans.

The gauge of the corrugated metal ends will match the thickest gauge of corrugated metal pipe it is connected to.

PIPE FOR APPROACHES AND INTERSECTING ROADS

Class 2 reinforced concrete pipe, high density polyethylene pipe, polypropylene pipe (will be in conformance with AASHTO M330), or steel reinforced polyethylene pipe may be substituted for corrugated metal pipe at approaches and intersecting roads at no additional cost to the State.

If corrugated metal pipes are provided, the pipes will be as specified in the CORRUGATED METAL PIPE note.

If high density polyethylene pipe, polypropylene pipe (will be in conformance with AASHTO M330), or steel reinforced polyethylene pipe are provided, then the end sections will be metal, be compatible, and conform to the type of end section as shown in the plans.

CONTROLLED DENSITY FILL FOR PIPE

Controlled density fill will be in conformance with Section 464 of the Specifications.

The controlled density fill will be placed between the pipes from the base of pipe elevation to the haunch of the pipes and extend to the end of the end section.

TABLE OF CONTROLLED DENSITY FILL FOR PIPE

Station	Quantity (CuYd)
428+43-100' R to 428+75-85' R	3.85
Total:	3.85

CONCRETE PIPE CONNECTIONS

Pipe connections to existing pipes, manholes, junction boxes, and drop inlets will be done by breaking a hole into the existing structure and inserting the pipe. A concrete collar will then be poured around the pipe in the area of the connection.

When it is not possible to use a normal pipe joint (male-female ends), connections to existing pipe will be made by placing a 2' wide by 6" thick M6 concrete collar around the outside of the connection. The concrete collar will be reinforced with 6x6 W2.9 x W2.9 wire mesh.

All costs for constructing the concrete collars including materials and labor will be incidental to the contract unit price per foot for the corresponding pipe contract item.

The earthen subgrade cover for some pipe installations is less than one foot. The Contractor will take the necessary precautions to ensure the structural properties of the pipes are not damaged after installation and prior to the placement of final surfacing. Any additional costs for preventing damage to these pipes will be incidental to the contract unit price per foot for the corresponding pipe installation contract item.

INTERSECTING STREET AND FILLET SLOPES

The pedestrian access route across intersecting streets between the curb ramps should have a 2% maximum cross slope perpendicular to the direction of travel by pedestrians. This includes the fillets of the intersecting street. The fillets require a 2% maximum slope along the curb ramp opening (along the turning space or bottom of curb ramp). See the following detail. The proposed intersecting street top of curb elevations are set to meet these requirements including additional top of curb elevations (grade breaks) of the fillets. Changes may need to be made during construction to meet these requirements. The intent of the plans is for the intersecting street to have only one break in grade along either the outside or inside edge of the pedestrian access route for streets where grade breaks are needed.

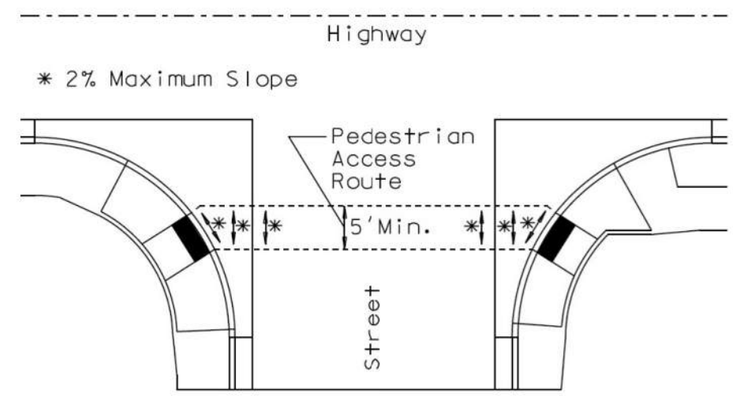

Plot Scale - 1:200
Plotted From - TRSF12141
File - ...\prj\mody0609\NotesSectionB.dgn

STORM SEWER

Reinforced concrete pipe may be bell and spigot. The pipe sections will be adjoined such that the ends are fully entered, and the inner surfaces are reasonably flush and even.

Lift holes in the reinforced concrete pipe will be plugged with grout.

Watertight joints are required for reinforced concrete pipe, drop inlets, manholes, and junction boxes where storm sewers run parallel to and within 10 feet horizontally from existing or proposed water mains.

Watertight joints are required where reinforced concrete pipes, drop inlets, manholes, or junction boxes cross water mains and are separated a distance of 18 inches or less, above or below, the water main.

If watertight joints are required then the watertight joints will extend for a distance of 10 feet beyond the water main. This measurement will be from the sealed concrete joint to the outer most surface of the water main.

Watertight joint seals will conform to the following requirements:

1. Reinforced Concrete Pipe (Circular): Gasketed pipe will conform to the requirements of ASTM C443 and the gasket will be in conformance with Section 990 of the Specifications. Non-gasketed concrete pipe will be sealed with a mastic joint seal conforming to the requirements of ASTM C990 and encased with a minimum 2-foot wide by 6-inch thick M6 concrete collar reinforced with 6x6 W2.9 x W2.9 wire mesh.

2. Reinforced Concrete Pipe (Arch): Gasketed pipe will conform to the requirements of ASTM C443 and the gasket will be in conformance with Section 990 of the Specifications. Non-gasketed concrete pipe joints will be sealed with a hydrophilic flexible water stop seal and wrapped with a 1-foot wide strip of fabric above the cradle. The fabric will conform to the requirements of Section 831 of the Specifications for Type A Drainage Fabric. The hydrophilic flexible water stop will be from the list below.

3. Drop Inlets, Manholes, and Junction Boxes: Joints will be sealed with one of the following methods:

   A. A flexible strip seal placed in the joints conforming to the requirements of ASTM C990 and the perimeter encased with a minimum 2-foot wide by 6-inch thick M6 concrete collar reinforced with 6x6 W2.9 x W2.9 wire mesh.

   B. A hydrophilic flexible water stop seal placed in the joints and a 1-foot wide strip of fabric wrapped around the perimeter of the pipe. The fabric will conform to the requirements of Section 831 of the Specifications for Type A Drainage Fabric. The hydrophilic flexible water stop will be from the list below.

   C. A self-adhesive external joint seal wrap. The seal wrap will be from the list below.

Approved List of Self-adhesive Joint Wrap

Product	Manufacturer
Mar Mac Seal Wrap	Mar Mac Construction Products McBee, SC 843-335-5909 www.marmac.com
ConWrap CS-212	Concrete Sealants, Inc. Tipp City, OH 800-332-7325 http://www.conseal.com

Approved List of Hydrophilic Flexible Water Stop Seal:

Product	Manufacturer
Waterstop RX	Cetco Hoffman Estates, IL 800-527-9948 www.cetco.com
Conseal CS-231	Concrete Sealants, Inc. Tipp City, OH 800-332-7325 http://www.conseal.com

Gaskets and seals (mastic, waterstop, and seal wraps) will be installed in accordance with the Manufacturer's recommendations.

The cost for furnishing and installing all gaskets, mastic joint seal, water stop seal, seal wrap, concrete collars, and for plugging the lift holes will be incidental to the contract unit price per foot for the corresponding pipe contract item.

ADJUSTEMENT OF MANHOLES

The Contractor will adjust manholes to the extent necessary on this project. Adjusting the manholes may consist of removing the upper course of brick or removing the concrete walls, replacing the removed materials with brick or Class M6 concrete, placing adjusting rings if necessary, and resetting the manhole frame and lid. The elevation of the lid will be set at the same elevation of the adjacent new pavement or surrounding ground. All manhole frames, lids, and rings that are cracked or broken due to carelessness of the Contractor will be replaced with new manhole frames, lids, and rings that conform with the Specifications at the Contractor's expense. Manholes will be adjusted to the satisfaction of the Engineer.

See City of Colman project PCN X06M (City Project Number 21005951 for a table of adjust manholes. See bid item for adjust manhole in City of Colman plans (PCN X06M).

TABLE OF CLASS M6 CONCRETE & REINFORCING STEEL

Item	Class M6 Concrete (CuYd)	Reinforcing Steel (Lb)
Drop Inlets	146.4	26,170
Junction Boxes	6.8	1,437
Totals:	153.2	27,607

COLORED CONCRETE FOR SIDEWALK BOULEVARDS

The colored concrete will have the integral color Solomon Brick Red #417 or an equal approved by the Engineer.

ColorFlo Liquid Color
Color #417 Brick Red
Solomon Colors, Inc.
www.solomoncolors.com

Brick Red requires a rate of 12.50 pounds of Solomon ColorFlo #417 Red per cubic yard of concrete. The colored concrete must be cured according to the manufacturer's recommendations with two coats of a non-yellowing acrylic curing and sealing compound. The curing and sealing compound will meet ASTM C309. The curing and sealing product will be DECRA-SEAL or an equal approved by the Engineer.

DECRA-SEAL
W.R. Meadows, Inc.
1-800-342-5976
www.wrmeadows.com

White pigmented cure will not be used. The Contractor will protect the colored concrete to ensure white pigmented curing compound will not come in contact with the colored concrete. All costs for furnishing, handling, applying the curing and sealing compound, and liquid integral color, including the materials, equipment, labor, and incidentals necessary will be incidental to the contract unit price for "4" or 6" Colored Concrete Sidewalk" or "4" Colored Reinforced Concrete Sidewalk.

TABLE OF PVC COATED BANK AND CHANNEL PROTECTION GABIONS AND DRAINAGE FABRIC

Station	L/R	Bank and Channel Protection Gabion (CuYd)	Type B Drainage Fabric (SqYd)
370+27	85' R	10.0	29
370+48	85' R	10.0	29
	Totals:	20.0	58

8" PCC FILLET SECTIONS

Payment for "8" PCC Fillet Section" will be based on plans quantity. If additions or reductions to the area of PCC fillet sections are ordered by the Engineer, payment will be made in accordance with the contract unit price per square yard for "8" PCC Fillet Section".

Plot Scale - 1:200
Plotted From - TRSF12141
File - ...\prj\mody06\09\NotesSectionB.dgn

TABLE OF JUNCTION BOXES AND QUANTITIES

Station	L/R	Size L'xW'xH'	Frame and Lid (Type)	Class M6 Concrete (CuYd)	Reinforcing Steel (Lb)	** 48" Manhole Cone Section (Ft)
433+72.91	R	5'x5'x2.4'	A7	3.6	741	2.0
441+79.71	R	5'x5'x1.5'	A7	3.2	696	2.0
			Totals	6.8	1,437	4.0

:

Total Type A7 Manhole Frame and Lid 2

DROP INLETS

Where drop inlets are constructed within areas of curb and gutter, the Contractor will construct weep holes of at least 3 inches in diameter in the drop inlet walls. The weep holes will be constructed at the same elevation as the adjacent top of the earthen subgrade and will be maintained clean and open at all times until the permanent surfacing is placed. The drop inlets will be covered throughout construction operations as necessary with an Engineer approved cover to provide safe travel for motorists and to prevent materials from entering the storm sewer system. After the permanent surfacing has been placed, the Contractor will seal the weep holes with grout and remove all debris from the drop inlet. All costs involved with the coverings, weep holes, and removing debris from the drop inlets will be incidental to the contract unit prices for the components of the drop inlets.

The plan shown quantities of the drop inlet components such as Class M6 Concrete, Reinforcing Steel, Type B Frame and Grate, Type C Frame and Grate, Precast Drop Inlet Collar, and Precast Concrete Type S Drop Inlet Lid will be the basis of payment for these items.

If additions or reductions to the number of drop inlets are ordered by the Engineer, payment for the components required to construct the drop inlets will be made at the contract unit prices for the components of the drop inlets.

TABLE OF DROP INLETS AND QUANTITIES

Station	L/R	Drop Inlet Size	Drop Inlet Type	Class M6 Concrete (CuYd)	Reinf Steel (Lb)	Precast Drop Inlet Collar (Each)	Frame and Grate/Lid Type	Floor Elev.	Top of Wall Elev.	**H (Ft)
372+54.56	59.00' R	3'x4'	B	1.87	299	1	B	1672.60	1677.21	4.61
372+89.16	22.67' R	2'x3'	B	0.90	180	1	B	1675.65	1679.01	3.36
375+55.67	62.83' L	2'x3'	B	1.35	239	1	B	1673.82	1679.21	5.39
375+92.47	22.67' R	2'x3'	B	0.99	192	1	B	1677.15	1680.92	3.77
375+92.47	22.67' L	2'x3'	B	0.94	179	1	B	1677.37	1680.68	3.31
*379+40.01	22.10' R	2'x3'	B	1.04	193	1	B	1678.29	1682.07	3.78
380+05.76	39.65' L	3'x4'	C	1.02	184		C	1677.58	1679.87	2.29
380+27.19	47.01' L	2'x3'	B	0.81	162	1	B	1678.25	1680.96	2.71
381+63.77	21.17' R	2'x3'	B	0.84	196	1	B	1677.12	1681.01	3.89
381+63.77	21.17' L	2'x3'	B	0.83	184	1	B	1677.32	1680.79	3.47
381+63.77	35.95' L	3'x4'	C	0.98	179		C	1677.38	1646.56	2.18
381+63.77	47.34' L	2'x3'	B	0.80	160	1	B	1677.42	1680.08	2.66
382+00.00	23.63' L	4'x11'	S	3.49	621		S	1677.47	1680.73	3.26
382+00.00	23.63' R	4'x11'	S	3.70	644		S	1677.34	1680.95	3.61
382+43.23	21.17' R	2'x3'	B	0.95	186	1	B	1677.52	1681.09	3.57
382+43.23	21.17' L	2'x3'	B	0.92	176	1	B	1677.65	1680.87	3.22
384+17.01	21.17' R	2'x3'	B	1.00	193	1	B	1678.37	1682.18	3.81
384+17.01	18.17' L	2'x3'	B	0.92	183	1	B	1678.56	1682.02	3.46
384+19.69	37.52' L	3'x4'	C	1.30	215		C	1678.64	1681.70	3.06
385+44.83	21.17' R	3'x4'	B	1.63	269	1	B	1679.23	1683.02	3.79
385+44.83	18.17' L	2'x3'	B	0.88	183	1	B	1679.41	1682.86	3.45
385+44.83	34.52' L	3'x4'	C	1.48	240		C	1679.48	1683.16	3.68
387+54.97	21.17' R	2'x3'	B	1.02	202	1	B	1680.26	1684.38	4.12
387+54.97	18.17' L	2'x3'	B	1.04	192	1	B	1680.45	1684.22	3.77
389+53.45	21.17' R	2'x3'	B	0.98	191	1	B	1681.94	1685.67	3.73
389+53.45	18.17' L	2'x3'	B	0.93	178	1	B	1682.22	1685.51	3.29
393+77.56	21.17' R	3'x5.5'	B	2.07	258	1	B	1682.50	1686.56	4.06
393+77.56	18.17' L	3'x5.5'	B	1.95	247	1	B	1682.68	1686.40	3.72
394+12.61	21.17' R	3'x4'	B	1.60	255	1	B	1683.03	1686.43	3.40
394+12.61	18.17' L	3'x4'	B	1.50	243	1	B	1683.20	1686.27	3.07
394+50.00	23.62' R	4'x11'	S	3.44	615		S	1683.18	1686.35	3.17
394+50.00	20.63' L	4'x11'	S	3.25	592		S	1683.35	1686.19	2.84
394+87.39	21.17' R	3'x4'	B	1.61	245	1	B	1683.33	1686.46	3.13
394+87.39	18.17' L	2'x3'	B	0.83	164	1	B	1683.50	1686.30	2.80
396+90.50	21.17' R	4'x3'	B	1.60	253	1	B	1685.46	1688.94	3.48
396+90.50	18.17' L	2'x3'	B	0.90	174	1	B	1685.64	1688.78	3.14
398+05.54	21.17' R	4'x4'	B	2.00	346	1	B	1687.94	1691.73	3.79
398+05.54	18.17' L	3'x4'	B	3.65	257	1	B	1688.12	1691.57	3.45
398+12.57	45.92' L	4'x5'	C	2.34	348		C	1688.24	1691.93	3.69
399+39.43	21.17' R	3'x4'	B	1.96	300	1	B	1689.65	1694.29	4.64
399+39.43	18.17' L	2'x3'	B	1.16	208	1	B	1689.83	1694.13	4.30
400+40.33	18.17' R	2'x3'	B	1.17	216	1	B	1690.87	1695.47	4.60
400+40.33	18.17' L	2'x3'	B	1.09	199	1	B	1691.25	1695.25	4.00
402+52.50	18.17' R	2'x3'	B	0.93	184	1	B	1692.11	1695.61	3.50
402+52.50	18.17' L	2'x3'	B	0.89	173	1	B	1692.28	1695.39	3.11
404+05.94	40.52' L	4'x5'	C	2.46	369		C	1690.57	1694.72	4.15
404+15.90	18.17' R	4'x4'	B	2.09	378	1	B	1690.31	1694.82	4.51
404+15.90	18.17' L	3'x4'	B	1.68	282	1	B	1690.47	1694.60	4.13
404+15.90	42.88' R	3'x4'	C	1.06	183		C	1691.41	1693.69	2.28
405+50.44	18.17' R	4'x3'	B	1.74	293	1	B	1689.65	1694.17	4.52
405+50.44	18.17' L	2'x3'	B	0.90	174	1	B	1690.82	1693.95	3.13
407+03.67	18.17' R	4'x3'	B	1.74	294	1	B	1688.90	1693.43	4.53
407+03.67	18.17' L	3'x4'	B	1.57	246	1	B	1690.06	1693.21	3.21

Plot Scale - 1:200
Plotted From - TRSF12141
File - ...\prj\moody0609\NotesSectionB.dgn

TABLE OF DROP INLETS AND QUANTITIES (CONTINUED)

Station	L/R	Drop Inlet Size	Drop Inlet Type	Class M6 Concrete (CuYd)	Reinf Steel (Lb)	Precast Drop Inlet Collar (Each)	Frame and Grate/Lid Type	Floor Elev.	Top of Wall Elev.	**H (Ft)
407+39.33	50.75' L	2'x3'	B	0.90	174	1	B	1690.29	1693.42	3.13
407+82.67	50.75' L	2'x3'	B	1.02	190	1	B	1689.74	1693.42	3.68
408+17.16	18.17' R	4'x3'	B	1.74	294	1	B	1688.35	1692.88	4.53
408+17.16	18.17' L	3'x4'	B	1.57	246	1	B	1689.51	1692.66	3.15
409+99.68	18.17' R	4'x4'	B	2.40	425	1	B	1686.40	1692.00	5.60
409+99.68	18.17' L	2'x3'	B	1.01	201	1	B	1687.72	1691.78	4.06
409+99.68	37.68' L	3'x4'	C	1.65	262		C	1688.56	1692.78	4.22
411+36.33	49.19' L	2'x3'	B	0.93	184	1	E	1687.95	1691.42	3.47
411+67.00	18.17' R	2'x3'	B	1.03	191	1	B	1687.58	1691.32	3.74
411+67.67	49.19' L	3'x5.5'	B	1.80	217	1	B	1687.81	1690.56	2.75
412+07.91	20.63' R	4'x11'	S	3.95	709		S	1686.69	1691.28	4.59
412+07.91	20.63' L	7'x11'	S	7.68	1883		S	1686.87	1691.06	4.19
412+46.99	18.17' R	5.5'x5.5'	B	3.96	649	1	B	1686.79	1691.39	4.60
412+46.99	18.17' L	3'x5.5'	B	2.09	260	1	B	1687.03	1691.17	4.14
415+62.54	41.68' R	3'x4'	C	1.33	219		C	1689.28	1692.44	3.16
415+79.54	18.17' R	4'x3'	B	1.85	302	1	B	1688.77	1693.50	4.73
415+79.54	18.17' L	2'x3'	B	1.08	198	1	B	1689.32	1693.28	3.96
418+02.29	18.17' R	2'x3'	B	1.24	225	1	B	1692.84	1697.74	4.90
418+02.29	18.17' L	2'x3'	B	1.20	214	1	B	1693.01	1697.52	4.51
422+11.62	22.67' R	2'x3'	B	1.17	216	1	B	1693.28	1697.86	4.58
422+11.62	22.67' L	2'x3'	B	1.12	202	1	B	1693.50	1697.62	4.12
423+84.96	22.67' R	2'x3'	B	0.98	191	1	B	1691.30	1695.03	3.73
425+48.05	22.67' R	2'x3'	B	0.95	187	1	B	1689.10	1692.69	3.59
427+67.08	22.67' R	3'x4'	B	1.87	288	1	B	1686.25	1690.54	4.29
430+45.00	22.67' R	3'x5.5'	B	2.66	331	1	B	1681.95	1688.37	6.42
430+80.00	25.13' R	7'x11'	S	8.31	2244		S	1681.66	1688.30	6.64
431+14.83	24.13' R	4'x4'	B	2.69	445	1	B	1682.30	1688.35	6.05
432+21.82	34.67' R	3'x4'	B	2.00	304	1	B	1683.82	1688.55	4.73
433+41.67	34.67' R	2'x3'	B	1.08	204	1	B	1684.90	1689.07	4.17
434+50.10	22.67' R	2'x3'	B	1.11	209	1	B	1685.43	1689.77	4.34
436+09.88	22.67' R	2'x3'	B	1.10	206	1	B	1686.21	1690.46	4.25
438+20.20	22.67' R	2'x3'	B	1.07	202	1	B	1687.25	1691.37	4.12
439+49.67	34.67' R	2'x3'	B	1.00	193	1	B	1687.89	1691.69	3.80
441+42.18	34.67' R	2'x3'	B	1.02	189	1	B	1688.84	1692.51	3.67
			Totals	146.4	26,170	71				

Total Type E Frame and Grate	1
Total Type B Frame and Grate	70
Total Type C Frame and Grate	9
Total 4'x11' Precast Concrete Type S Drop Inlet Lid	7

* Drop inlet requires watertight joints in accordance with the STORM SEWER notes.

** H = Height of the drop inlet as shown on the cross sections and standard plates.

Plot Scale - 1:200
Plotted From - TRSF12141
File - ...\prj\moody\0609\NotesSectionB.dgn

SLIPLINE PIPE

The Contractor will furnish and install slipliner pipe at locations specified in the Table of Slipline Pipe. This work consists of slipping a pipe liner inside existing pipe and grouting the void between the liner and the existing pipe.

The Contractor will submit a proposed procedure for sliplining pipes, including the grouting procedure, to the Engineer at least two weeks prior to beginning this work.

Slipliner pipe will conform to one of the following types:

1. Closed Profile HDPE:
   Closed profile HDPE pipe will meet the requirements of ASTM F894 and will have a cell classification of 345464C in accordance with ASTM D3350. The pipe will have a minimum Ring Stiffness Constant (RSC) classification of 160 lb/ft as defined in ASTM F894. Pipe joints will be in accordance with the pipe manufacturer's recommendations and as approved by the Engineer.

2. Solid Wall HDPE:
   Solid wall HDPE pipe will meet the requirements of ASTM F714 (SDR 32.5) and will have a cell classification of 445574C in accordance with ASTM D3350. Pipe joints may be grooved press-on joints or heat fused as approved by the Engineer. Heat fused joints will be fused in accordance with the pipe manufacturer's recommendations by an experienced operator of the heat fusion equipment.

3. PVC:
   PVC pipe will meet the requirements of ASTM F949 or ASTM D1784 with a cell classification of 12454. Pipe joints will be elastomeric seals (gaskets) in accordance with the requirements of ASTM F477.

4. Spirally Wound PVC:
   Spirally wound PVC slipliner will meet the requirements of ASTM F949 with minimum pipe stiffness of 46 psi. Pipe joints will be in accordance with the pipe manufacturer's recommendations and as approved by the Engineer.

The diameter specified in the bid item description is the diameter of the existing pipe to be sliplined. The Contractor will provide the largest diameter slipliner pipe that will fit into the existing pipe to maximize flow capacity.

Slipliner pipe will have a smooth interior surface.

Slipliner pipe will be joined into a continuous length with joints that are adequate for pushing, pulling, or winding the liner pipe through the existing pipe. The joints will not allow seepage during pressure grouting. To allow for unrestricted insertion of the liner, the outside diameter of the liner pipe will not be increased at the joints.

Prior to sliplining, the Contractor will clean the existing pipe of all debris, silt, and obstructions to ensure that the slipliner pipe can be inserted, the grout will flow to all voids, and the inserted slipliner pipe will not be set upon or irregularly supported by such material. Cleaning will be accomplished by the use of jet rodding equipment or other approved methods.

The slipliner pipe will be inserted into the existing pipe by pushing, pulling, or winding methods that do not damage the slipliner pipe. The slipliner pipe will be clean and substantially dry before insertion.

To minimize the change in flowline, slipliner pipe will be held down during the grouting operation. This may be accomplished by attaching fasteners or blocks at the top of the pipe, adding weight to the inside of the slipliner pipe, placing multiple grout lifts, or other means as approved by the Engineer.

Bulkheads will be constructed at each end of the pipe. Each bulkhead will be constructed to withstand the pressure of the grouting operation. The bulkhead will extend from the end of the existing pipe inward a minimum depth of 18 inches. The bulkhead will be free from leaks and the exterior surface will be given a smooth trowel finish. The bulkhead at the inlet end will be finished with a 45 degree mitered bevel transition between the existing pipe and the inside of the slipliner pipe with the slipliner pipe face pushed inside the existing pipe face.

Pressure grouting will be done to ensure all the voids are filled between the slipliner pipe and the existing pipe including all breaks or holes in and around the existing pipe. Grouting pressures used will ensure all voids are filled, but do not collapse or deform the slipliner pipe more than 5 percent of the diameter. Multiple grout lifts may be necessary to minimize pipe deflection for 60-inch diameter and larger pipe in accordance with the pipe manufacturer's recommendations.

The grout will be a cellular grout (grout with pre-generated foam) with a minimum 28 day compressive strength of 100 pounds per square inch. If water is not present within the sliplined pipe a low density grout with a minimum of 30 pounds per cubic foot wet density may be used. When it is not possible to dewater the existing pipe or keep water out of the annular space during grouting, a high density grout with a minimum of 70 pounds per cubic foot will be used which may include approved sand. The foaming agent used will meet the requirements of ASTM C869 when tested in accordance with ASTM C796.

Both of the cellular grout mix designs will be submitted to the SDDOT Concrete Engineer for approval prior to use. The mix design submittal will include the base cement slurry mix per cubic yard, expansion factor from the foaming agent, and the cellular grout wet density (pounds per cubic foot).

The Contractor will install a bypass valve adjacent to the location where the pressure grouting hose is attached for obtaining samples to be checked for wet density. The wet density of the cellular grout will be checked by the Contractor to verify the proper minimum wet density before the cellular grout filling operations begin and at a minimum once every two hours during production. The SDDOT will document the results of the density checks.

Cellular grout will be wasted until the cellular grout meets the minimum wet density required; however, if 0.5 cubic yards or more of base cement slurry is wasted trying to meet density requirements, then that quantity will not be included for payment.

If grout holes are utilized, cylindrical wooden plugs or other approved plugs will be inserted to plug holes until the grout has set. After the plugs are removed the holes will be filled with concrete.

The quantity of cellular grout was estimated based on void quantity between the slipliner pipe and the existing pipe, and an additional quantity for the void volume outside the existing pipe.

The quantity of base cement slurry ordered will be approved by the Engineer. The quantity of base cement slurry needed will be calculated to the nearest tenth of a cubic yard using the approved mix design, expansion factor of the foaming agent, and estimated amount of cellular grout. The quantity for payment to the nearest tenth of a cubic yard of "Cellular Grout" is a calculated quantity based on the amount of base cement slurry used on the project to the nearest tenth of a cubic yard, expansion factor of the foaming agent, and approved mix design.

All costs for furnishing and installing the slipliner pipe, including work area excavation, backfilling, and incidentals necessary to satisfactorily complete the work will be included in the contract unit price per foot for the corresponding contract item for "Slipline 48" Pipe". Cost to clean the culvert for sliplining will be paid for at the contract unit price per each for "Cleanout for Culvert Treatment".

All costs for furnishing and installing the cellular grout including bulkhead construction, inlet bevel construction, and incidentals necessary to satisfactorily complete the work will be included in the contract unit price per cubic yard for "Cellular Grout".

TABLE OF CELLULAR GROUT

Station	Quantity (CuYd)
370+61	78.64
Total:	78.64

The quantity at each location includes an additional 15% to account for void volume outside the existing pipe.

TEMPORARY STORM SEWER CONNECTIONS

Storm water discharge will be maintained during all traffic phases. The Contractor may make temporary connections between old and new storm sewer. Where it is not feasible to provide temporary connections between the new and old storm sewer, dewatering at storm sewer inlets may be required. There is no separate bid item for dewatering or temporary storm sewer connections. All costs will be incidental to the contract bid items for replacing storm sewer inlets and storm sewer pipe.

Plot Scale - 1:200
Plotted From - TRSF12141
File - ...\prj\mody0609\NotesSectionB.dgn

GRANULAR CUSION THICKNESS FOR SHARED USE PATH

The thickness of granular cushion for the shared use path will be 4" for the 8' wide shared use path. All costs to provide this additional cushion material will be included in the contract unit price per square foot for "6" Concrete Sidewalk."

TYPE 1 DETECTABLE WARNINGS

Detectable warnings will be in compliance with the Americans with Disabilities Act regulations.

The detectable warnings will be installed according to the manufacturer's installation instructions.

A concrete thickness equal to the adjacent concrete sidewalk thickness and 2 inches of granular cushion material will be placed below the Type 1 Detectable Warnings. When concrete is placed below the detectable warnings then the concrete thickness will be transitioned at the rate of 1" per foot to match the adjacent concrete sidewalk thickness.

The detectable warnings will be a brick red color for application in concrete curb ramps.

Type 1 Detectable Warning Panels will be one of the following products:

Type 1 Detectable Warnings

Product	Manufacturer
Detectable Warning Plate Cast Iron Plate	Neenah Foundry Company Neenah, WI 800-558-5075 http://www.neenahfoundry.com/
Detectable Warning Plate Cast Iron Plate	Deeter Foundry Lincoln, NE 800-234-7466 http://www.deeter.com/
Detectable Warning Plate Cast Iron Plate (No Coating)	East Jordan Iron Works, Inc. 301 Spring Street East Jordan, MI 49727 800-626-4653 http://www.ejiw.com
Advantage Tactile Detectable Warning Cast Iron Plate	Advantage Tactile Systems, Inc. 241 Main Street, Suite 100 Buffalo, NY 14203 800-679-4022 https://advantagetactile.com/

TABLE OF DROP INLET REMOVAL

All costs for removal of the frame and grate assembly will be incidental to the contract unit price per each for "Remove Drop Inlet".

Station	L/R	Quantity (Each)
372+63-24'	R	1
381+63-23'	L	1
385+45-32'	L	1
385+45-23'	L	1
394+45-23'	L	1
397+98-23'	L	1
398+70-54'	R	1
399+47-33'	L	1
400+19-30'	R	1
404+10-31'	L	1
404+10-23'	L	1
407+08-24'	R	1
407+08-23'	L	1
407+38-54'	L	1
407+82-54'	L	1
409+99-23'	L	1
409+99-24'	R	1
411+39-23'	R	1
412+29-23'	L	1
415+52-31'	R	1
415+61-23'	L	1
	Total:	21

MAILBOXES

The Contractor will reset the existing mailboxes on new posts with the necessary support hardware for single mailbox assemblies. The local Postmaster will determine the recommended mounting height of the mailboxes throughout the project. The Contractor will coordinate with the Engineer on the proper postal representative to contact.

All costs for removing existing mailboxes, providing temporary mailboxes, and resetting mailboxes with new posts and necessary support hardware will be incidental to the contract unit price per each for "Refurbish Single Mailbox".

TABLE OF REFURBISH MAILBOX

Station	L/R	Single (Each)
405+18	R	1
408+12	R	1
421+94	R	1
441+58	R	1
	Totals:	4

PUBLIC LANDS SURVEY SYSTEM, RIGHT OF WAY, AND PROPERTY CORNERS

The Contractor will have a Land Surveyor, licensed in the State of South Dakota, to set, reestablish or verify public land survey system (PLSS) corners, right of way (ROW) corners, and property corners as directed by the appropriate SDDOT Region Land Surveyor. It is estimated that 6 PLSS corners and 134 ROW and property corners will be set, reestablished, or verified for this project. The Contractor's Land Surveyor, under the direction of the Region Land Surveyor, will set, reestablish, or verify all corner monuments after surfacing and fencing operations are completed in accordance with the PUBLIC LANDS SURVEY SYSTEM CORNERS section and the RIGHT OF WAY AND PROPERTY CORNERS section in Chapter 8 of the SDDOT Survey Manual.

< https://dot.sd.gov/doing-business/engineering/design-services/surveyors >

All costs associated with furnishing and installing PLSS caps, rebar, and all other materials associated with setting, reestablishing, or verifying PLSS, ROW corners, and property corners in accordance with the SDDOT Survey Manual will be incidental to the contract unit price per each for "Reestablish Public Land Survey System Corner" and/or "Reestablish Right-of-Way and Property Corner".

BRACE PANELS FOR ROW FENCE

The E-Z Brace or an approved equal may be utilized as an alternate horizontal brace in the brace panels if approved by the Engineer. The E-Z Brace will be attached to each wood post utilizing two 5/16" x 3" lag screws. Holes of appropriate diameter, based on wood post condition, will be drilled before placement of lag screws. The following is the contact regarding the E-Z Brace:

Charlie Mack
Macksteel E-Z Braces
415 20th Ave. SE.
Watertown, SD 57201
605-882-2177

Plot Scale - 1:200
Plotted From - TRSF12141
File - ...\prjmody0609\NotesSectionB.dgn

TABLE OF CONSTRUCTION STAKING

Roadway and Description	Begin Station	End Station	Number of Lanes	Length (Ft)	Grade Staking: Length (Mile)	Grade Staking: Lane Factor	Grade Staking: *Sets of Stakes	Grade Staking: **Grade Staking Quantity (Mile)	Miscellaneous Staking Quantity (Mile)	Slope Staking Quantity (Mile)	Final Cross Section Survey Quantity (Mile)
SD Hwy 34 (Transition from 2 Lanes to 3 Lanes PCCP)	357+15	361+05	3	390	0.074	1.5	2	0.222	0.074	0.074	0.074
SD Hwy 34 (3 Lanes PCCP)	361+05	431+00	3	6,995	1.325	1.5	2	3.974	1.325	1.325	1.325
SD Hwy 34 (Transition from 3 Lanes to 4 Lanes PCCP)	431+00	432+20	4	120	0.023	2	2	0.091	0.023	0.023	0.023
SD Hwy 34 (4 lanes PCCP)	432+20	433+45	4	125	0.024	2	2	0.095	0.024	0.024	0.024
SD Hwy 34 (Transition from 4 Lanes to 3 Lanes PCCP)	433+45	434+49	4	104	0.020	2	2	0.079	0.020	0.020	0.020
SD Hwy 34 (3 Lanes PCCP)	434+49	438+23	3	374	0.071	1.5	2	0.213	0.071	0.071	0.071
SD Hwy 34 (Transition from 3 Lanes to 4 Lanes PCCP)	438+23	439+43	4	120	0.023	2	2	0.091	0.023	0.023	0.023
SD Hwy 34 (4 lanes PCCP)	439+43	441+53	4	210	0.040	2	2	0.160	0.040	0.040	0.040
SD Hwy 34 (Transition from 4 Lanes to 3 Lanes PCCP)	441+53	442+59	4	106	0.020	2	2	0.080	0.020	0.020	0.020
SD Hwy 34 (3 Lanes PCCP)	442+59	448+06	3	547	0.104	1.5	2	0.311	0.104	0.104	0.104
SD Hwy 34 (Transition from 3 Lanes to 2 Lanes PCCP)	448+06	451+96	3	390	0.074	1.5	2	0.222	0.074	0.074	0.074
							Totals:	5.538	1.798	1.798	1.798

* 1 = Blue Top Stakes Only (Asphalt Concrete Pavement)
2 = Blue Top and Paving Hub Stakes (PCC Pavement)

** Grade Staking Quantity = (Length) x (Lane Factor) x (Sets of Stakes)

Plot Scale - 1:200
Plotted From - TRSF12141
File - ...\prj\mody0609\NotesSectionB.dgn

PIPE QUANTITIES

STATE OF SOUTH DAKOTA	PROJECT	SHEET	TOTAL SHEETS
	NH-CR 0034(193)402	B15	B146

Plotting Date: 08/16/2024

NH-CR 0034(193)403 PCN 0609	Reinforced Concrete								RCP Ends Circular				RCP Ends Arch				Slipline Pipe	Corrugated Metal			CMP Elbow	CMP Ends Arch	CMP Ends Circular		Cleanout for Culvert Treatment
	Circular					Arch			Flared			Sloped	Sloped			Flared	Circular	Circular		Arch	Circular	Safety	Safety	Sloped	
	18" Cl.2	24" Cl.2	30" Cl.2	36" Cl.2	42" Cl.2	24" Cl.2	30" Cl.2	36" Cl.2	36"	42"	18"	24"	24"	30"	36"	36"	48"	18" 16 Ga	36" 16 Ga	18" 16 Ga	36" 50°	18"	18"	36"	
Station Offset (L/R)	Ft	Ft	Ft	Ft	Ft	Ft	Ft	Ft	Each	Each	Each	Each	Each	Each	Each	Each	Ft	Ft	Ft	Ft	Each	Each	Each	Each	Each
370+61					24					4							320								1
371+77.47-59.00' R to 372+54.56-59.00' R		76										1													
372+54.56-59.00' R to 372+79.44-59.00' R		24										1													
372+54.56-59.00' R to 372+89.16-22.67' R	50																								
372+89.16-22.67' R to 375+92.47-22.67' R	300																								
374+89.99-67.85' L to 375+55.67-62.83' L	64										1														
375+55.67-62.83' L to 375+98.00-68.70' L	42										1														
375+92.47-22.67' R to 375+92.47-22.67' L	44																								
*379+09.82-60.57' L to 380+05.76-39.65' L	96										1														
379+40.01-22.10' R to 381+63.77-21.17' R	222																								
380+05.76-39.65' L to 380+27.19-47.01' L	20																								
381+63.77-35.95' L to 381+63.77-47.34' L	8																								
381+63.77-35.95' L to 381+63.77-21.17' L	12																								
381+63.77-21.17' L to 381+63.77-21.17' R						40																			
381+63.77-21.17' R to 381+63.77-47.17' R						20							1												
381+63.77-21.17' R to 382+00.00-23.63' R	30																								
381+63.77-21.17' L to 382+00.00-23.63' L	30																								
382+00.00-23.63' L to 382+43.23-21.17' L	36																								
382+00.00-23.63' R to 382+43.23-21.17' R	36																								
382+43.23-21.17' R to 384+17.01-21.17' R	172																								
384+17.01-21.17' R to 384+17.01-18.17' L	38																								
384+17.01-18.17' L to 384+19.69-37.52' L	18																								
385+44.83-21.17' R to 385+44.83-46.75' R						20							1												
385+44.83-18.17' L to 385+44.83-21.17' R						36																			
385+44.83-34.52' L to 385+44.83-18.17' L	14																								
*385+44.83-21.17' R to 387+54.97-21.17' R	208																								
387+54.97-18.17' L to 387+54.97-21.17' R	38																								
*387+54.97-21.17' R to 389+53.45-21.17' R	196																								
389+53.45-18.17' L to 389+53.45-21.17' R	38																								
393+21-58' R																		80					2		
393+77.56-21.17' R to 393+77.56-47.11' R							18							1											
393+77.56-18.17' L to 393+77.56-21.17' R							36																		
393+77.56-46.28' L to 393+77.56-18.17' L							20							1											
393+77.56-21.17' R to 394+12.61-21.17' R						30																			
393+77.56-18.17' L to 394+12.61-18.17' L						30																			
394+12.61-18.17' L to 394+50.00-20.63' L	30																								
394+12.61-21.17' R to 394+50.00-23.62' R	30																								
394+50.00-20.63' L to 394+87.39-18.17' L	30																								
394+50.00-23.63' R to 394+87.39-21.17' R	30																								
396+31.14-52.67' R to 396+90.50-21.17' R						66							1												
396+53-63' R																		34					2		
396+90.50-18.17' L to 396+90.50-21.17' R	36																								
396+90.50-21.17' R to 398+12.57-21.10' R						112																			
398+05.54-18.17' L to 398+05.54-21.17' R						36																			
398+12.57-45.92' L to 398+05.54-18.17' L						26																			
*398+05.54-21.10' R to 399+39.43-21.23' R	130																								
398+26-52' R																		66					2		
Subtotal:	1998	100			24	416	74			4	3	2	3	2			320	180					6		1

Pipes denoted with an asterisk(*) indicate that the entire length or a portion of the pipe requries watertight joints in accordance with the STORM SEWER plan note.

Plot Scale - 1:200
Plotted From - TRSF12141
File - ...rd\prj\moodyb09\TablePipe.dgn

PIPE QUANTITIES

STATE OF SOUTH DAKOTA	PROJECT	SHEET	TOTAL SHEETS
	NH-CR 0034(193)402	B16	B146

Plotting Date: 08/16/2024

NH-CR 0034(193)403 PCN 0609	Reinforced Concrete								RCP Ends Circular				RCP Ends Arch				Slipline Pipe	Corrugated Metal			CMP Elbow	CMP Ends Arch	CMP Ends Circular		Cleanout for Culvert Treatment
	Circular					Arch			Flared			Sloped	Sloped			Flared	Circular	Circular		Arch	Circular	Safety	Safety	Sloped	
	18" Cl.2	24" Cl.2	30" Cl.2	36" Cl. 2	42" Cl.2	24" Cl.2	30" Cl.2	36" Cl.2	36"	42"	18"	24"	24"	30"	36"	36"	48"	18" 16 Ga	36" 16 Ga	18" 16 Ga	36" 50°	18"	18"	36"	
Station Offset (L/R)	Ft	Ft	Ft	Ft	Ft	Ft	Ft	Ft	Each	Each	Each	Each	Each	Each	Each	Each	Ft	Ft	Ft	Ft	Each	Each	Each	Each	Each
399+39.43-18.17' L to 399+39.43-21.23' R	38																								
399+39.43-21.17' R to 400+40.33-18.17' R	98																								
400+40.33-18.17' L to 400+40.33-18.17' R	36																								
402+52.50-18.17' L to 402+52.50-18.17' R	36																								
*402+52.50-18.17' R to 404+15.90-18.17' R	160																								
*403+37.25-48.51' L to 404+05.94-40.52' L							68							1											
404+05.94-40.52' L to 404+15.90-18.17' L			20																						
404+15.90-18.17' L to 404+15.90-18.17' R			32																						
404+15.90-18.17' R to 404+15.90-42.88' R	20																								
404+15.90-18.17' R to 405+50.44-18.17' R			130																						
405+50.44-18.17' L to 405+50.44-18.17' R	34																								
405+50.44-18.17' R to 407+03.67-18.17' R			150																						
407+03.67-18.17' L to 407+03.67-18.17' R	32																								
*407+03.67-18.17' L to 407+39.33-50.75' L	48																								
407+03.67-18.17' R to 408+17.16-18.17' R			108																						
*407+82.67-50.75' L to 408+17.16-18.17' L	48																								
408+17.16-18.17' L to 408+17.16-18.17' R	32																								
*408+17.16-18.17' R to 409+99.68-18.17' R			178																						
409+99.68-18.17' R to 409+99.68-51.07' R				22					1																
409+99.68-18.17' L to 409+99.68-18.17' R		34																							
409+99.68-18.17' L to 409+99.68-37.68' L	18																								
*411+36.33-49.19' L to 411+67.67-49.19' L						30																			
*411+67.67-49.19' L to 412+07.91-20.63' L						46																			
411+67.00-18.17' R to 412+07.91-20.63' R	34																								
412+07.91-47.52' L to 412+07.91-20.63' L								16								1									
412+07.91-20.63' L to 412+07.91-20.63' R								36																	
412+07.91-20.63' R to 412+07.91-49.29' R								18							1										
412+46.99-47.15' L to 412+46.99-18.17' L								20								1									
412+46.99-18.17' L to 412+46.99-18.17' R								32																	
412+46.99-18.17' R to 412+46.99-49.20' R								20							1										
412+46.99-18.17' R to 415+79.54-18.17' R							328																		
415+62.54-41.68' R to 415+79.54-18.17' R	26																								
415+79.54-18.17' L to 415+79.54-18.17' R	34																								
415+79.54-18.17' R to 418+02.29-18.17' R	220																								
418+02.29-18.17' L to 418+02.29-18.17' R	34																								
422+11.62-22.67' L to 422+11.62-22.67' R	44																								
422+11.62-22.67' R to 423+84.96-22.67' R	170																								
422+48-55' R																				54		2			
423+84.96-22.67' R to 425+48.05-22.67' R	160																								
424+25-55' R																		66					2		
424+28-59' L																		76					2		
425+48.05-22.67' R to 427+67.08-22.67' R	214																								
426+14-55' R																		60					2		
427+67.08-22.66' R to 430+45.00-22.67' R		274																							
428+24-63' R																		80					2		
428+43-100' R to 428+75-85' R																			56		2			2	
Subtotal:	1536	308	618	22		76	396	142	1					1	2	2		282	56	54	2	2	8	2	

Pipes denoted with an asterisk(*) indicate that the entire length or a portion of the pipe requries watertight joints in accordance with the STORM SEWER plan note.

Plot Scale - 1:200
Plotted From - TRSF12141
File - ...\roj\jmody0609\TablePipe.dgn

PIPE QUANTITIES

STATE OF SOUTH DAKOTA	PROJECT	SHEET	TOTAL SHEETS
	NH-CR 0034(193)402	B17	B146

Plotting Date: 08/16/2024

NH-CR 0034(193)403
PCN 0609

Station	Offset (L/R)	Reinforced Concrete Circular 18" Cl.2 Ft	Reinforced Concrete Circular 24" Cl.2 Ft	Reinforced Concrete Circular 30" Cl.2 Ft	Reinforced Concrete Circular 36" Cl. 2 Ft	Reinforced Concrete Circular 42" Cl.2 Ft	Reinforced Concrete Arch 24" Cl.2 Ft	Reinforced Concrete Arch 30" Cl.2 Ft	Reinforced Concrete Arch 36" Cl.2 Ft	RCP Ends Circular Flared 36" Each	RCP Ends Circular Flared 42" Each	RCP Ends Circular Flared 18" Each	RCP Ends Circular Sloped 24" Each	RCP Ends Arch Sloped 24" Each	RCP Ends Arch Sloped 30" Each	RCP Ends Arch Sloped 36" Each	RCP Ends Arch Flared 36" Each	Slipline Pipe Circular 48" Ft	Corrugated Metal Circular 18" 16 Ga Ft	Corrugated Metal Circular 36" 16 Ga Ft	Corrugated Metal Arch 18" 16 Ga Ft	CMP Elbow Circular 36" 50° Each	CMP Ends Arch Safety 18" Each	CMP Ends Circular Safety 18" Each	CMP Ends Circular Sloped 36" Each	Cleanout for Culvert Treatment Each
430+45.00-53.16' R to 430+45.00-22.67' R						22					1															
430+45.00-22.67' R to 430+45.00-47.08' L						62					1															
430+80.00-53.99' R to 430+80.00-25.13' R						18					1															
430+80.00-25.13' R to 430+80.00-48.17' L						62					1															
430+80.00-25.13' R to 431+14.83-24.13' R				28																						
431+14.83-24.13' R to 432+21.82-34.67' R			104																							
432+21.82-34.67' R to 433+41.67-34.67' R		116																								
433+56.63-63.00' R to 433+72.91-62.69' R								14						1												
433+72.91-62.69' R to 433+74.91-79.89' R								14																		
433+72.91-62.69' R to 434+36.22-63.00' R								60						1												
433+41.67-34.67' R to 434+50.10-22.67' R		106																								
434+50.10-22.67' R to 436+09.88-22.67' R		156																								
436+09.88-22.67' R to 438+20.20-22.67' R		206																								
438+20.20-22.67' R to 439+49.67-34.67' R		128																								
439+49.67-34.67' R to 441+42.18-34.67' R		190																								
441+42.18-62.88' R to 441+79.71-62.88' R								36						1												
441+79.71-62.88' R to 442+42.76-62.88' R								60						1												
441+79.71-62.88' R to 441+82.147-76.85' R								12																		
447+20-55' L																			68					2		
Subtotal:		902	104		28	164		196			4				4				68					2		
Total:		4436	512	618	50	188	492	666	142	1	8	3	2	3	7	2	2	320	530	56	54	2	2	16	2	1

Pipes denoted with an asterisk(*) indicate that the entire length or a portion of the pipe requries watertight joints in accordance with the STORM SEWER plan note.

Plot Scale - 1:200
TRSF12141
Plotted From -
File - ...\rd\prj\moody0609\TablePipe.dgn

FENCE QUANTITIES

STATE OF SOUTH DAKOTA	PROJECT	SHEET	TOTAL SHEETS
	NH-CR 0034(193)402	B18	B146

Plotting Date: 08/16/2024

Station to Station		Side (L/R)	Right-of-Way Fence Type 2 (Ft)	Right-of-Way Fence Type 4 (Ft)	Right-of-Way Fence Type 6 (Ft)	Right-of-Way Fence Remove Fence (Ft)	Post Panels 2 Post Panel (Each)	Post Panels 3 Post Panel (Each)	Gates N.A.B.I. 16' Tubular Gate (Each)	Gates N.A.B.I. 30' Barbed Wire Gate (Each)	Stream Crossings N.A.B.I. Stream Crossing (Each)
NH-CR 0034(193)403											
357+15	367+42	L	1026			1026		2			
368+07	372+24	L			489	403	10				1
372+24	373+57	L				139					
447+19	452+17	L	498			498	2	2	2	1	
357+15	367+42	R		1033		1033		2			
368+07	372+19	R	546			468	11	2			1
447+18	452+17	R	517			495	2	2			
		Total:	2587	1033	489	4062	25	10	2	1	2

Post Type and Sequence:

Right-of-way fence shall be constructed using alternate wood and steel posts except as noted.

Plot Scale - 1:200
Plotted From - TRSF12141
File - ...\rdprj\mody0609\TableFence.dgn

PAVEMENT, CURB AND GUTTER, AND SIDEWALK QUANTITIES

STATE OF SOUTH DAKOTA	PROJECT	SHEET	TOTAL SHEETS
	NH-CR 0034(193)402	B19	B146

Plotting Date: 08/16/2024

Station to Station	Fillet Section	Concrete Curb and Gutter				Concrete Curb	Concrete Gutter			PCC Approach Pavement				Concrete Sidewalk						Detectable Warning
	PCC	Type B	Modified Type B	Type F	Modified Type F	Type B	Type P	Modified Type P	Valley	Type A		Type B				Colored		Reinforced	Reinforced Colored	Type 1
	8"	68	68	68	68	6	8"	8"	8"	6"	8"	6"	8"	4"	6"	4"	6"	6"	4"	
	SqYd	Ft	Ft	Ft	Ft	Ft	Ft	Ft	Ft	Sq Yd	Sq Yd	Sq Yd	SqYd	SqFt	SqFt	SqFt	SqFt	SqFt	SqFt	SqFt
Sewage Lagoon Entrance to Crummer Ave																				
375+54.00-72.83' L 379+20.28-18.00' L				69.9	333.4															
379+20.28-18.00' L 383+12.62-16.50' L	105.4	98.6	313.3	5.0		18.7														
383+12.62-16.50' L 384+95.88-16.50' L		211.1							37.1						905.5	288.7				16.0
384+95.88-16.50' L 393+00.50-16.50' L		764.5					40.0						63.5		6020.2	2257.6				
393+00.50-16.50' L 397+54.00-16.50' L		413.2					40.0			63.5					3040.9	1103.1		168.0	30.0	
397+54.00-16.50' L 399+77.75-57.50' L		209.7					40.0					83.8			1520.1					20.0
Cemetery Entrance to SW 3rd Street Apartments																				
372+52.89-101.75' R 377+31.00-18.00' R				100.7	443.2															
377+31.00-18.00' R 379+47.43-17.48' R					196.4			20.0				18.5								
379+47.43-17.48' R 391+15.00-16.50' R			1,127.6					40.0				28.1								
391+15.00-16.50' R 393+00.57-16.50' R			149.6					36.0		26.7										
393+00.57-16.50' R 396+43.01-16.50' R			302.7					40.0			29.4									
SW 3rd Street Apartments to Florence Avenue																				
396+43.01-16.50' R 398+13.54-16.50' R			130.5					40.0				46.2		591.9		355.6				
398+13.54-16.50' R 400+84.44-16.50' R		43.7	203.2					24.0				32		1343.0		337.5				20.0
400+84.44-16.50' R 401+34.00-16.50' R		25.6					24.0					48		67.8						
401+34.00-16.50' R 402+78.38-69.74' R	25.9	124.2					24.0					47.9		505.1	224.7					20.0
Crummer Avenue to Florence Avenue																				
400+05.75-57.50' L 403+54.00-47.50' L	25.9	355.2													3054.9					62.0
Florence Avenue to Loban Avenue																				
403+10.38-69.74' R 404+48.94-16.50' R	25.9	141.2												691.5	228.9					30.0
404+48.94-16.50' R 404+81.17-16.50' R		12.2					20.0			42.7										
404+81.17-16.50' R 406+56.34-16.50' R		145.2					30.0			56.3				665.8						
406+56.34-16.50' R 407+21.92-16.50' R		47.6					18.0			42.3				177.9						
407+21.92-16.50' R 408+32.00-16.50' R		78.1					32.0			62.0				414.9						10.0
408+32.00-16.50' R 408+94.58-16.50' R		38.6					24.0			50.7				132.9						
408+94.58-16.50' R 415+15.00-41.50' R	25.9	577.4					24.0			50.7				3057.3	152.7					40.0
Florence Avenue to Main Avenue																				
403+82.00-47.50' L 404+80.17-16.50' L	25.9	79.2													804.9	384.4				26.0
404+80.17-16.50' L 407+41.00-60.15' L		257.4					32.0					67.2			1878.0	1142.2				26.0
Main Avenue to Perry Avenue																				
407+81.00-60.15' L 408+74.92-16.50' L		122.5													803.5					26.0
408+74.92-16.50' L 410+07.18-16.50' L		110.3					16.0					42.0			839.8		61.6			
410+07.18-16.50' L 411+38.00-54.98' L	25.9	32.6					76.0		10.5	135.1					353.1		240.9			26.0
Perry Avenue to Loban Avenue																				
411+66.00-44.50' L 415+18.66-54.48' L	51.6	331.7													3021.2					52.0
Subtotal:	312.4	4219.7	2,227.0	175.6	973.0	18.7	440.0	200.0	47.6	529.9	29.4	413.7	63.5	7648.1	22848.4	5869.1	302.5	168.0	30.0	374.0

Plot Scale - 1:200
Plotted From - TRSF12141
File - U:\rdprj\moody0609\TableCG.dgn

PAVEMENT, CURB AND GUTTER, AND SIDEWALK QUANTITIES

STATE OF SOUTH DAKOTA	PROJECT	SHEET	TOTAL SHEETS
	NH-CR 0034(193)402	B20	B146

Plotting Date: 08/16/2024

Station to Station	Fillet Section	Concrete Curb and Gutter				Concrete Curb	Concrete Gutter			PCC Approach Pavement				Concrete Sidewalk						Detectable Warning
	PCC	Type B	Modified Type B	Type F	Modified Type F	Type B	Type P	Modified Type P	Valley	Type A		Type B				Colored		Reinforced	Reinforced Colored	Type 1
	8"	68	68	68	68	6	8"	8"	8"	6"	8"	6"	8"	4"	6"	4"	6"	6"	4"	
	SqYd	Ft	Ft	Ft	Ft	Ft	Ft	Ft	Ft	Sq Yd	Sq Yd	Sq Yd	SqYd	SqFt	SqFt	SqFt	SqFt	SqFt	SqFt	SqFt
S Loban Ave to S Allen Ave																				
415+46.48-54.48' L 417+77.01-16.50' L	18.2	218.1													1874.9					26.0
417+77.01-16.50' L 420+13.36-51.37' L		242.3					16.0			39.7					1772.3					20.0
415+43.00-47.50' R 418+15.99-16.50' R	25.9	255.2												1233.4	213.7					20.0
418+15.99-16.50' R 420+13.35-57.47' R		187.0					28.0				56.2			730.5	191.6					20.0
S Allen Ave to Access Easement																				
420+45.28-55.48' L 422+19.11-18.00' L		6.0	192.6											809.6	186.3	338.7				20.0
420+45.44-61.97' R 422+27.99-18.00' R		6.0	211.3											792.1	193.3					20.0
422+27.99-18.00' R 424+05.00-18.00' R					136.9			40.0			63.5			623.8						
424+05.00-18.00' R 425+93.93-18.00' R					148.9			40.0			63.6			685.3						
425+93.93-18.00' R 428+03.58-62.00' R				6.0	192.6			40.0			63.6			705.6	103.0					10.0
Access Easement to S Summit Ave																				
428+43.58-62.00' R 433+80.35-79.38' R				17.3	583.3									2451.6	205.8					20.0
S Summit Ave to S Enterprise Ave																				
434+15.91-79.34' R 441+87.58-76.23' R				31.8	817.9									3655.0	203.8	681.3				20.0
442+23.57-75.80' R 442+58.55-26.02' R				69.8																
Subtotal:	44.1	914.6	403.9	124.9	1879.6	0.0	44.0	120.0	0.0	39.7	246.9	0.0	0.0	11687.0	4944.7	1020.0	0.0	0.0	0.0	176.0
Total:	356.6	5134.3	2630.9	300.5	2852.6	18.7	484.0	320.0	47.6	569.6	276.3	413.7	63.5	19335.1	27793.1	6889.2	302.5	168.0	30.0	550.0

Plot Scale - 1:200
Plotted From - TRSF12141
File - U:\rdp\jmoody0609\TableCG.dgn

Pavement Removal Quantities

STATE OF SOUTH DAKOTA	PROJECT	SHEET	TOTAL SHEETS
	NH-CR 0034(193)402	B21	B146

Plotting Date: 08/16/2024

Station to Station		Concrete Pavement	Concrete Driveway Pavement	Concrete Sidewalk	Concrete Curb and / or Gutter	Asphalt Concrete Pavement		
		SqYd	SqYd	SqYd	Ft	SqYd		
Project Begin to 469th Avenue								
357+14.77 L	367+24.53 L	1709.6						
357+14.77 R	367+24.53 R	1655.3						
469th Avenue to Cemetery Entrance								
367+24.53 R	371+93.89 R	911.6				133.6		
469th Avenue to T&R West Entrance								
367+24.53 L	379+20.28 L	2112.8				143.7		
Cemetery Entrance to SW 3rd Street Apartments								
371+93.89 R	398+18 R	5571.7	43.8			85.4		
T&R West Entrance to Crummer Avenue								
379+20.28 L	399+42.75 L	5478.8	286.3		47	519.2		
SW 3rd Street Apartments to Florence Avenue								
398+18 R	402+54 R	1174.3	75.6			123.3		
Crummer Avenue to Florence Avenue								
399+42.75 L	403+29 L	1177.3				27.8		
Florence Avenue to Loban Avenue								
402+54 R	414+88.62 R	3457.7	90.5	4.7		188.5		
Florence Avenue to Main Avenue								
403+29 L	407+06 L	1088.4	122.4			24.7		
Main Avenue to Perry Avenue								
407+06 L	411+13 L	1334.5	195.1			55.2		
Perry Avenue to Loban Avenue								
411+13 L	414+94 L	1117.4	37.5			35.2		
Loban Avenue to Allen Avenue								
414+88.62 R	419+78.28 R	1341.6	30.3					
414+94 L	419+78.29 L	1391.0	11.0			68.4		
Allen Avenue to Access Easement								
419+78.28 R	427+68.58 R	1647.8				30.8		
Access Easement to Summit Avenue								
427+68.58 R	433+45.32 R	976.5						
Summit Avenue to Enterprise								
433+45.32 R	441+52.56 R	1374.1				344.5		
Enterprise Avenue to Project End								
441+52.56 R	451+96.16 R	1424.1						
Allen Avenue to Project End								
419+78.28 L	451+96.16 L	5256.4				32.0		
	Total:	40200.9	892.6	4.7	47	1812.3		

Plot Scale - 1:200
Plotted From - TRSF12141
File - ...\TablePavementRemoval.dgn

TYPICAL GRADING SECTION

STATE OF SOUTH DAKOTA	PROJECT	SHEET	TOTAL SHEETS
	NH-CR 0034(193)402	B22	B146

Plotting Date: 08/16/2024 Revised 02/27/2024 AR

Mainline

357+14.77 to 372+87.85

442+58.55 to 447+75.00

Transitions:

357+14.77 to 361+04.77
0' to 6'

(Cemetery Entrance)
371+93.89 to 372+87.85
* 8' to 3'

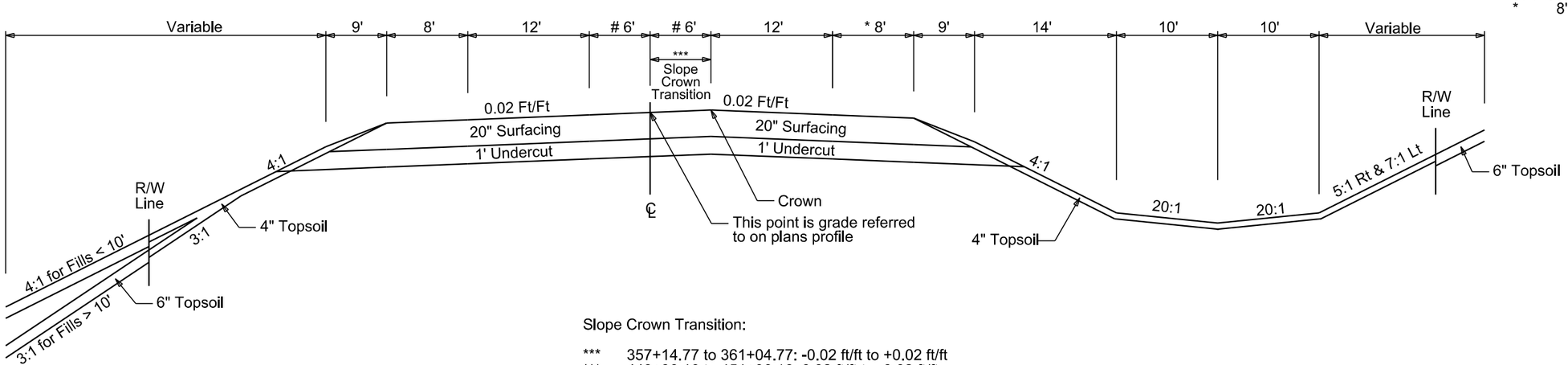

Slope Crown Transition:

*** 357+14.77 to 361+04.77: -0.02 ft/ft to +0.02 ft/ft
*** 448+06.16 to 451+96.16: 0.02 ft/ft to -0.02 ft/ft

Mainline

Shoulder Widening
447+75 to 451+96.16

Transition:

448+06.16 to 451+96.16
13' to 8.37'
13' to 8.65'

447+75 to 448+06.16
* 7'
** 6'

448+06.16 to 451.96.16
* 7' to 10'
** 6' to 3'

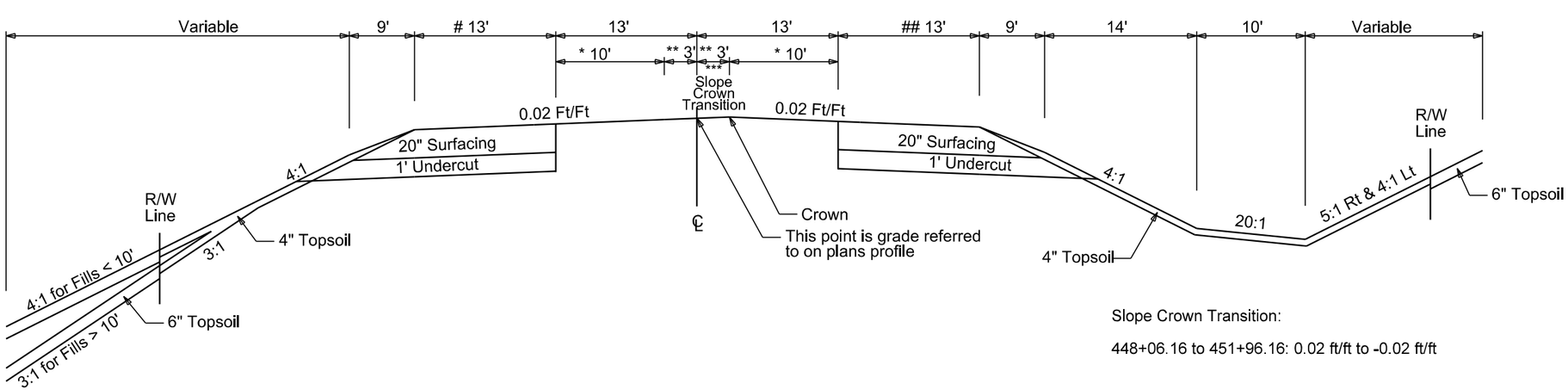

Slope Crown Transition:

448+06.16 to 451+96.16: 0.02 ft/ft to -0.02 ft/ft

Plot Scale - 1:200
Plotted From - TRSF12141
File - U:\rdi\pjjmody06091Typ.dgn
SectionB Page # : B2

TYPICAL GRADING SECTION

STATE OF SOUTH DAKOTA	PROJECT	SHEET	TOTAL SHEETS
	NH-CR 0034(193)402	B23	B146

Plotting Date: 08/16/2024 Revised 02/27/2024 AR

Mainline

372+87.85 to 375+87.03

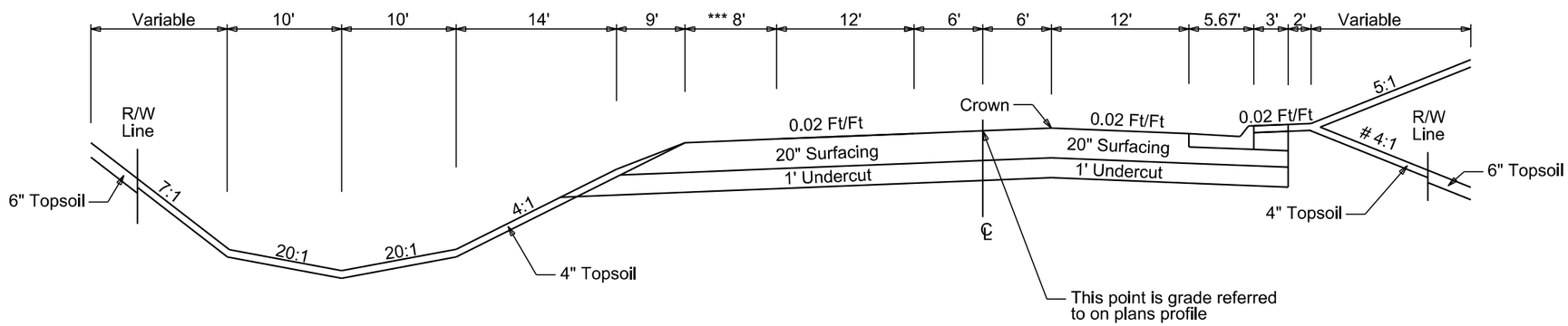

Transitions:

372+87.85 to 373+87.85
2:1 to 4:1

(Sewage Lagoon Entrance)
374+95.00 to 375+87.03
*** 8' to 3'

Plot Scale - 1:200

Plotted From - TRSF12141

SectionB Page # : B3

File - U:\rdprj\moody0609\Typ.dgn

TYPICAL GRADING SECTION

STATE OF SOUTH DAKOTA	PROJECT	SHEET	TOTAL SHEETS
	NH-CR 0034(193)402	B24	B146

Plotting Date: 08/16/2024 Revised 02/27/2024 AR

Mainline

375+87.03 to 379+99.41

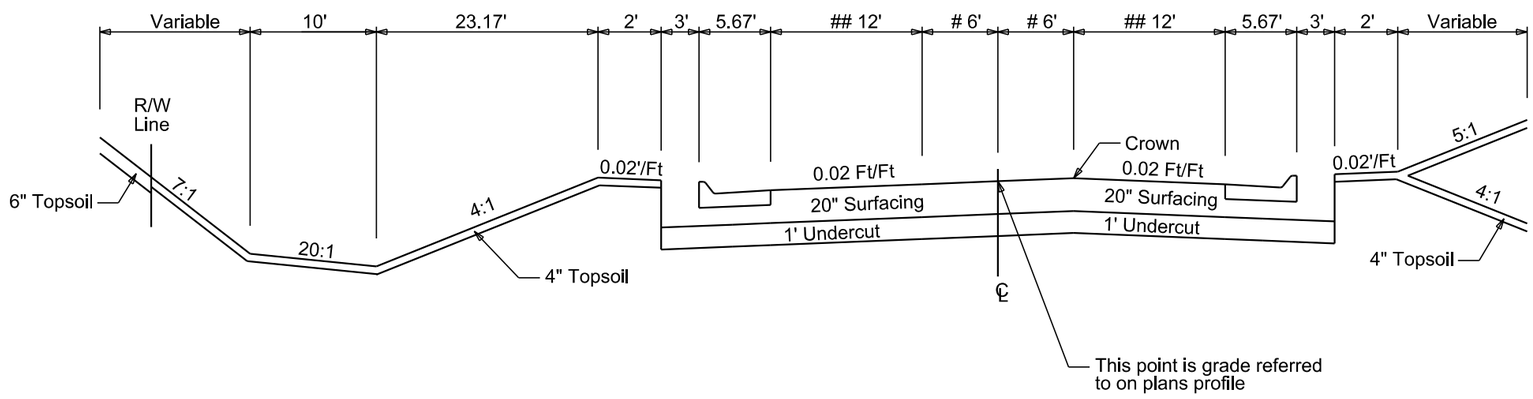

Transitions:

(T&R West Entrance)
379+20.28 to 379+99.41
6' to 5.5'
12' to 11'

Plot Scale - 1:200
Plotted From - TRSF12141
SectionB Page # : B4
File - U:\rdpjmody06091Typ.dgn

TYPICAL GRADING SECTION

STATE OF SOUTH DAKOTA	PROJECT	SHEET	TOTAL SHEETS
	NH-CR 0034(193)402	B25	B146

Plotting Date: 08/16/2024 Revised 02/27/2024 AR

Mainline

379+99.41 to 384+14.79

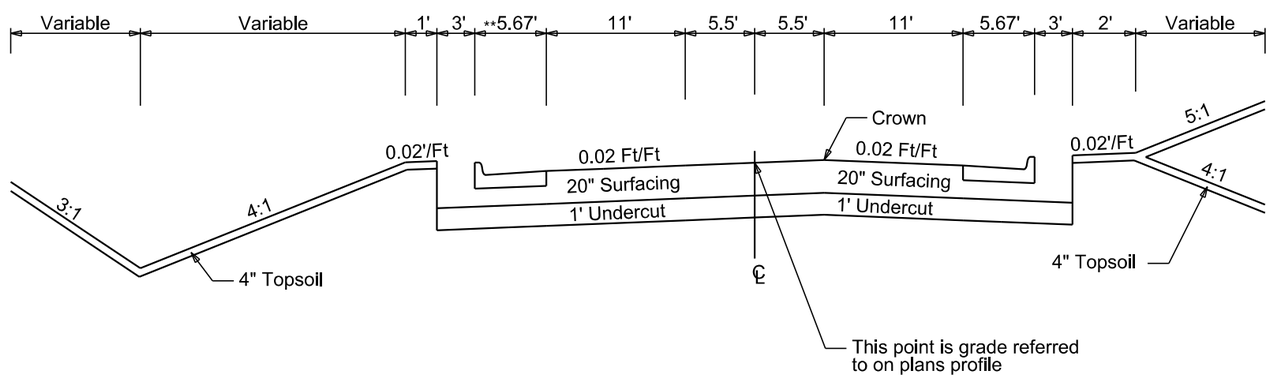

Transition:

(T&R Main Entrance)
383+12.62 to 384+14.79
** 5.67' to 2.67'

Plot Scale - 1:200
Plotted From - TRSF12141
File - U:\rdprj\mody0609\Typ.dgn
SectionB Page # : B5

TYPICAL GRADING SECTION

STATE OF SOUTH DAKOTA	PROJECT	SHEET	TOTAL SHEETS
	NH-CR 0034(193)402	B26	B146

Plotting Date: 08/16/2024 Revised 02/27/2024 AR

Mainline

384+14.79 to 396+89.00

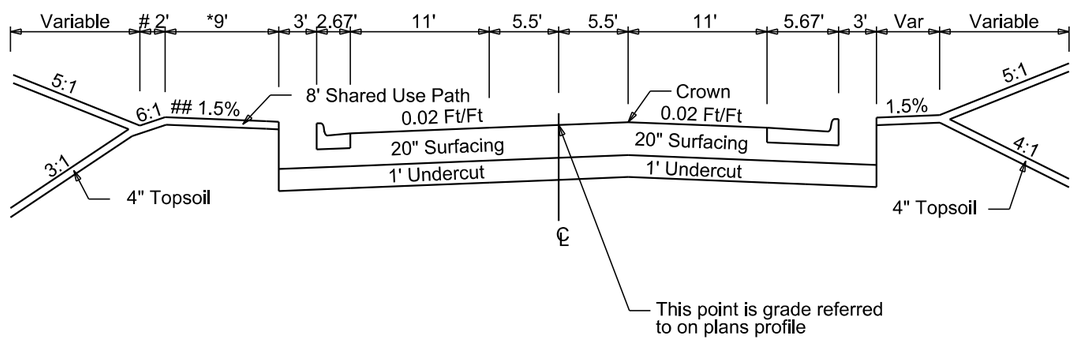

Transitions:

384+14.79 to 395+65.06
* 8'
391+40.06 to 392+40.06
\# 2' to 1.5'
1.5% to -2%
392+40.06 to 394+02.96
\# 1.5'
##- 2%
394+02.96 to 395+02.96
\# 1.5' to 2'
##- 2% to 1.5%
395+65.06 to 396+65.06
* 8' to 11.5'
396+65.06 to 396+89.00
11.5'

Plot Scale - 1:200
Plotted From - TRSF12141
SectionB Page # : B6
File - U:\rdprj\mcdy0609\Typ.dgn

TYPICAL GRADING SECTION

STATE OF SOUTH DAKOTA	PROJECT	SHEET	TOTAL SHEETS
	NH-CR 0034(193)402	B27	B146

Plotting Date: 08/16/2024 Revised 02/27/2024 AR

Mainline

396+89.00 to 420+79.50

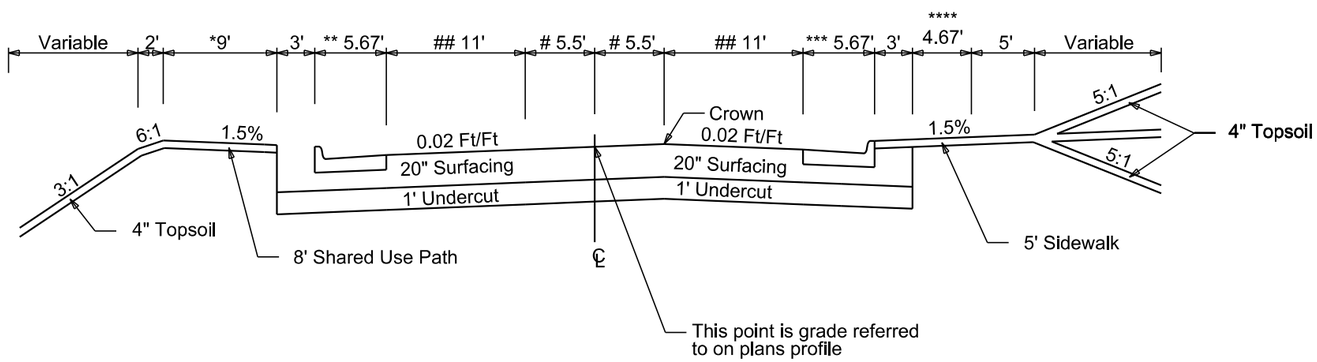

Transitions:

396+89.00 to 419+78.28
** 2.67'

396+89.00 to 399+41.32
**** 2'
399+41.32 to 399+53.95
**** 2' to 4.67'
415+33.00 to 420+79.50
**** 2'

392+44 to 393+90.32
* 10.5'
393+90.32 to 396+65.06
* 10.5' to 11.5'
396+65.06 to 399+51.47
11.5'
399+51.47 to 400+32.36
* 11.5' to 11.25'
400+32.36 to 403+34.77
* 11.25'
403+04.32 to 404+02.00 Lt
-11.25 to -10.75
404+02 to 407+13.21 Lt
-10.75
407+13.21 to 408+09.02 Lt
-10.75 to -10.5
408+09.02 Lt to 408+96.92 Lt
-10.5
408+96.92 to 409+95.18
-10.5 to -7
409+95.18 to 411+13
-7
411+13 to 411+89.04
-7 to -9.75
411+89.04 to 419+84.77
-9.75

399+42.75 to 400+40.75
*** 5.67' to 2.67'
400+40.75 to 419+78.28
*** 2.67'

419+78.28 to 420+79.50
11' to 12'
5.5' to 6'
*** 2.67' to 5.67'
** 2.67' to 5.67'

Plot Scale - 1:200
Plotted From - TRSF12141
SectionB Page # : B7
File - U:\rdprj\moody\0609\Typ.dgn

TYPICAL GRADING SECTION

STATE OF SOUTH DAKOTA	PROJECT	SHEET	TOTAL SHEETS
	NH-CR 0034(193)402	B28	B146

Plotting Date: 08/16/2024 Revised 02/27/2024 AR

Mainline

420+79.50 to 422+19.11

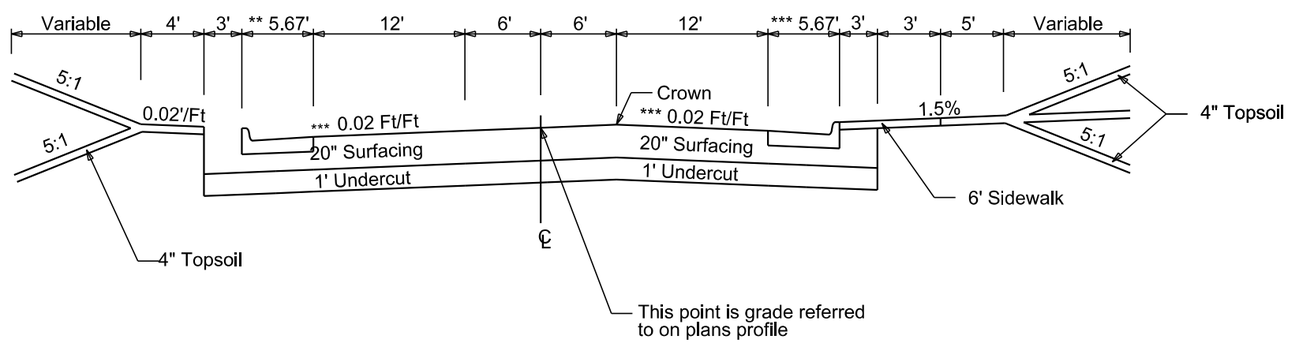

Plot Scale - 1:200

Plotted From - TRSF12141

File - U:\rdprj\moody0609\Typ.dgn

SectionB Page # : B8

TYPICAL GRADING SECTION

STATE OF SOUTH DAKOTA	PROJECT	SHEET	TOTAL SHEETS
	NH-CR 0034(193)402	B29	B146

Plotting Date: 08/16/2024 Revised 07/17/2024 AR

Mainline

422+19.11 to 442+58.55

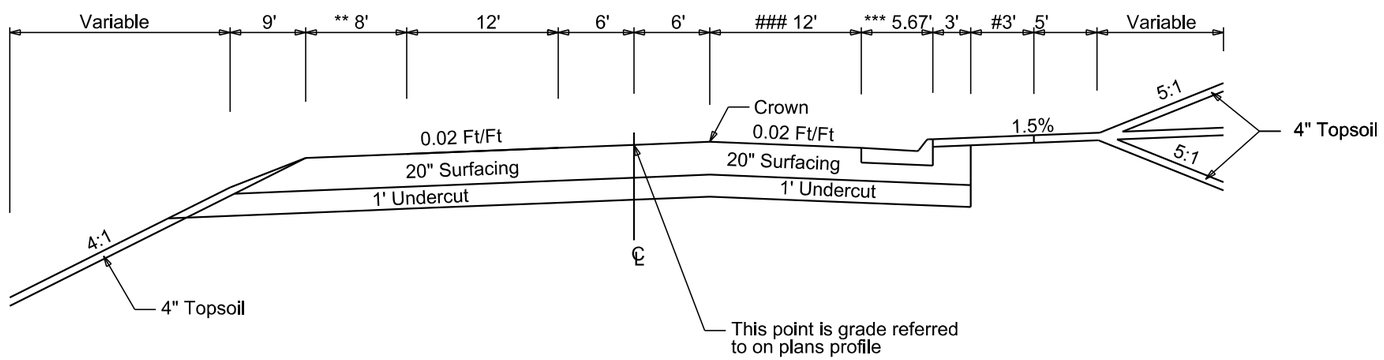

Transitions:

422+19.11 to 423+19.11
** 5.67' to 8'

Right Turn
(Summit Avenue)
431+00.32 to 432+20.32
12' to 24'
432+20.32 to 433+45.32
24'
433+45.32 to 434+49.29
24' to 12'

Right Turn
(Enterprise Avenue)
438+22.94 to 439+42.94
12' to 24'
439+42.92 to 441+52.56
24'
441+52.56 to 442+58.55
24' to 12'
*** 5.67' to 10.67'
437+22.94 to 438+22.94
3' to 7'
438+22.94 to 439+42.66
7' to 0'
439+42.66 to 441+87.49
0'

Plot Scale - 1:200
Plotted From - TRSF12141
SectionB Page # : B9
File - U:\drj\prj\mody\06091Typ.dgn

HORIZONTAL ALIGNMENT DATA

STATE OF SOUTH DAKOTA	PROJECT	SHEET	TOTAL SHEETS
	NH-CR 0034(193)402	B30	B146

Plotting Date: 08/16/2024

Mainline

Type	Station			Northing	Easting
POB	356+85.16			619245.358	2889479.017
		TL= 1089.93	N 87°48'44" E		
PI	367+75.09			619286.965	2890568.149
		TL= 2364.98	N 87°49'45" E		
PC	391+40.06			619376.551	2892931.428
PI	394+02.57	R = 23661.33	Delta = 1°16'17" L	619386.495	2893193.751
PT	396+65.06			619402.256	2893455.788
		TL= 1968.68	N 86°33'28" E		
PC	416+33.74			619520.459	2895420.917
PI	420+33.78	R = 22988.02	Delta = 1°59'38" R	619544.477	2895820.235
PT	424+33.74			619554.588	2896220.148
		TL= 23.37	N 88°33'06" E		
PI	424+57.11			619555.179	2896243.509
		TL= 2263.43	N 88°33'06" E		
PI	447+20.54			619612.385	2898506.214
		TL= 655.47	N 88°35'31" E		
PI	453+76.01			619628.490	2899161.487
		TL= 2024.68	N 88°35'31" E		
PI	474+00.69			619678.237	2901185.552
		TL= 337.12	N 88°35'31" E		
POE	477+37.80			619686.521	2901522.566

The coordinates shown on this sheet are based on the South Dakota State Plane Coordinate System. South Zone (NAD 83/11); epoch 2010.00; Geoid 12B; SF = 0.9998553033

Plot Scale - 1:200
Plotted From - TRSF12141
File - ...trd\prj\moody\6091\DataHoriz.dgn

CONTROL DATA

STATE OF SOUTH DAKOTA	PROJECT	SHEET	TOTAL SHEETS
	NH-CR 0034(193)402	B31	B146

Plotting Date: 08/16/2024

HORIZONTAL AND VERTICAL CONTROL POINTS

POINT	STATION	OFFSET	DESCRIPTION	NORTHING	EASTING	ELEVATION
1287	360+74.14	0.06 R	ALUM CAP PT OF ALIGNMENT @ STA 360+73.95	619260.692	2889867.693	1672.613
1000	367+75.09	0.06 R	HWY ALIGNMENT POINT @ STA 367+75.15 ALUM CAP GROUND OFF	619286.900	2890568.149	1500.000
1288	391+42.92	0.39 R	ALUM CAP - PC OF ALIGNMENT CURVE @ STA 391+43.31	619376.266	2892934.294	1687.785
1213	394+02.84	0.85 L	HWY PI ALIGNMENT POINT @ STA 394+02.60 - ALUM MON GROUND OFF	619388.809	2893193.909	1687.668
1289	396+61.36	0.21 R	ALUM CAP - PT OF ALIGNMENT CURVE @ STA 396+61.87	619401.825	2893452.101	1689.559
1290	400+42.82	0.24 R	ALUM CAP - POT OF ALIGNMENT @ STA 400+43.43	619424.695	2893832.878	1696.835
1212	420+31.41	2.93 L	HIGHWAY ALIGNMENT PI @ STA 420+33.72 - ALUM MON GROUND OFF	619543.824	2895817.930	1701.027
1237	447+20.53	0.03 R	HWY ALIGNMENT POT @ STA 447+21.92 - 1.5" ALUM CAP GROUND OFF	619612.352	2898506.205	1695.545
CP1	374+64.18	84.37 L	Nail	619397.380	2891253.553	1679.898
Cp2	379+00.75	27.62 L	Nail	619357.210	2891691.955	1681.530
Cp3	384+13.09	25.58 R	Nail	619323.451	2892205.941	1682.522
CP4	391+02.20	26.55 R	Nail	619348.589	2892894.596	1687.043
CP5	399+24.14	29.12 L	Nail	619446.875	2893712.645	1696.965
CP6	405+17.12	30.31 L	Nail	619483.665	2894304.483	1695.889
CP7	407+92.83	28.8 R	Nail	619441.218	2894583.248	1695.674
CP8	415+07.36	28.89 L	Nail	619541.713	2895293.029	1694.558
CP9	419+87.58	30.98 R	Nail	619508.039	2895775.646	1701.481
CP9_Check	419+87.51	30.97 R	Nail	619508.039	2895775.577	1701.400
MRM405	472+78.33	20.8 R	REFMRK	619654.435	2901063.742	1681.773
Colman Sign	435+01.70	14.77 L	REFMRK	619596.340	2897287.384	1690.760
1284	None	None	REFMRK	619102.479	2886618.456	1674.392
1285	None	None	REFMRK - ALUM CAP POT OF ALIGNMENT	619102.484	2886618.457	1674.399
1286	None	None	REFMRK - PC ALUM CAP	619209.800	2888721.072	1665.205
1287	360+74.14	0.06 R	REFMRK - ALUM CAP PT OF ALIGNMENT	619260.692	2889867.693	1672.613
1288	391+42.92	0.39 R	REFMRK - ALUM CAP - PC OF ALIGNMENT CURVE	619376.266	2892934.294	1687.785
1289	396+61.36	0.21 R	REFMRK - ALUM CAP - PT OF ALIGNMENT CURVE	619401.825	2893452.101	1689.559
1290	400+42.82	0.24 R	REFMRK - ALUM CAP - POT OF ALIGNMENT	619424.695	2893832.878	1696.835

The coordinates shown on this sheet are based on the South Dakota State Plane Coordinate System. South Zone (NAD 83/11); epoch 2010.00; Geoid 12B; SF = 0.9998553033
The elevations shown on this sheet are based on NAVD 88.

Plot Scale - 1:200
Plotted From - TRSF12141
File - ...\prj\mody0609\DataControl.dgn

LEGEND

STATE OF SOUTH DAKOTA	PROJECT	SHEET	TOTAL SHEETS
	NH-CR 0034(193)402	B32	B146

Plotting Date: 08/16/2024

Anchor
Antenna
Approach
Assumed Corner
Azimuth Marker
BBQ Grill/ Fireplace
Bearing Tree
Bench Mark
Box Culvert
Bridge
Brush
Buildings
Bulk Tank
Cattle Guard
Cemetery
Centerline
Cistern
Clothes Line
Commercial Sign Double Face
Commercial Sign One Post
Commercial Sign Overhead
Commercial Sign Two Post
Concrete Symbol
Creek Edge
Curb/Gutter
Curb
Dam Grade/Dike/Levee
Deck Edge
Ditch Block
Doorway Threshold
Drainage Profile
Drop Inlet
Edge Of Asphalt
Edge Of Concrete
Edge Of Gravel
Edge Of Other
Edge Of Shoulder
Elec. Trans./Power Jct. Box
Fence Barbwire
Fence Chainlink
Fence Electric
Fence Misc.
Fence Rock
Fence Snow
Fence Wood
Fence Woven
Fire Hydrant
Flag Pole
Flower Bed
Gas Valve Or Meter
Gas Pump Island
Grain Bin
Guardrail
Guide Sign One Post
Guide Sign Two Post
Gutter
Guy Pole
Haystack
Hedge

Highway R.O.W. Marker
Interstate Close Gate
Iron Pin
Irrigation Ditch
Lake Edge
Lawn Sprinkler
Mailbox
Manhole Electric
Manhole Gas
Manhole Misc
Manhole Sanitary Sewer
Manhole Storm Sewer
Manhole Telephone
Manhole Water
Merry-Go-Round
Microwave Radio Tower
Misc. Line
Misc. Property Corner
Misc. Post
Overhang Or Encroachment
Overhead Utility Line — OH —
Parking Meter
Pedestrian Push Button Pole
Pipe With End Section
Pipe With Headwall
Pipe Without End Section
Playground Slide
Playground Swing
Power And Light Pole
Power And Telephone Pole
Power Meter
Power Pole
Power Pole And Transformer
Power Tower Structure
Propane Tank
Property Pipe
Property Pipe With Cap
Property Stone
Public Telephone
Railroad Crossing Signal
Railroad Milepost Marker
Railroad Profile
Railroad R.O.W. Marker
Railroad Signs
Railroad Switch
Railroad Track
Railroad Trestle
Rebar
Rebar With Cap
Reference Mark
Regulatory Sign One Post
Regulatory Sign Two Post
Retaining Wall
Riprap
River Edge
Rock And Wire Baskets
Rockpiles
Satellite Dish
Septic Tank

Shrub Tree
Sidewalk
Sign Face
Sign Post
Slough Or Marsh
Spring
Stream Gauge
Street Marker
Subsurface Utility Exploration Test Hole
Telephone Fiber Optics — T/F —
Telephone Junction Box
Telephone Pole
Television Cable Jct Box
Television Tower
Test Wells/Bore Holes
Traffic Signal
Trash Barrel
Tree Belt
Tree Coniferous
Tree Deciduous
Tree Stumps
Triangulation Station
Underground Electric Line — P —
Underground Gas Line — G —
Underground High Pressure Gas Line — HG —
Underground Sanitary Sewer — S —
Underground Storm Sewer — S —
Underground Tank
Underground Telephone Line — T —
Underground Television Cable — TV —
Underground Water Line — W —
Warning Sign One Post
Warning Sign Two Post
Water Fountain
Water Hydrant
Water Meter
Water Tower
Water Valve
Water Well
Weir Rock
Windmill
Wingwall
Witness Corner

State and National Line
County Line
Section Line
Quarter Line
Sixteenth Line
Property Line
Construction Line
R. O. W. Line
New R. O. W. Line
Cut and Fill Limits
Control of Access
New Control of Access
Proposed ROW (After Property Disposal)

Drainage Arrow

Remove Concrete Pavement
Remove Concrete Driveway Pavement
Remove Asphalt Concrete Pavement
Remove Concrete Sidewalk
Remove Concrete Median Pavement
Remove Concrete Curb and/or Gutter

Detectable Warning
Pedestrian Push Button Pole and 30" x 48" Clear Space with 1.5% slope

Plot Scale - 1:200
Plotted From - TRSF12141
File - U:\trafprj\moody\0609\Legend.dgn

STATE OF SOUTH DAKOTA	PROJECT	SHEET	TOTAL SHEETS
	NH-CR 0034(193)402	B33	B146

Plotting Date: 08/16/2024 Revised 07/24/2024 AR

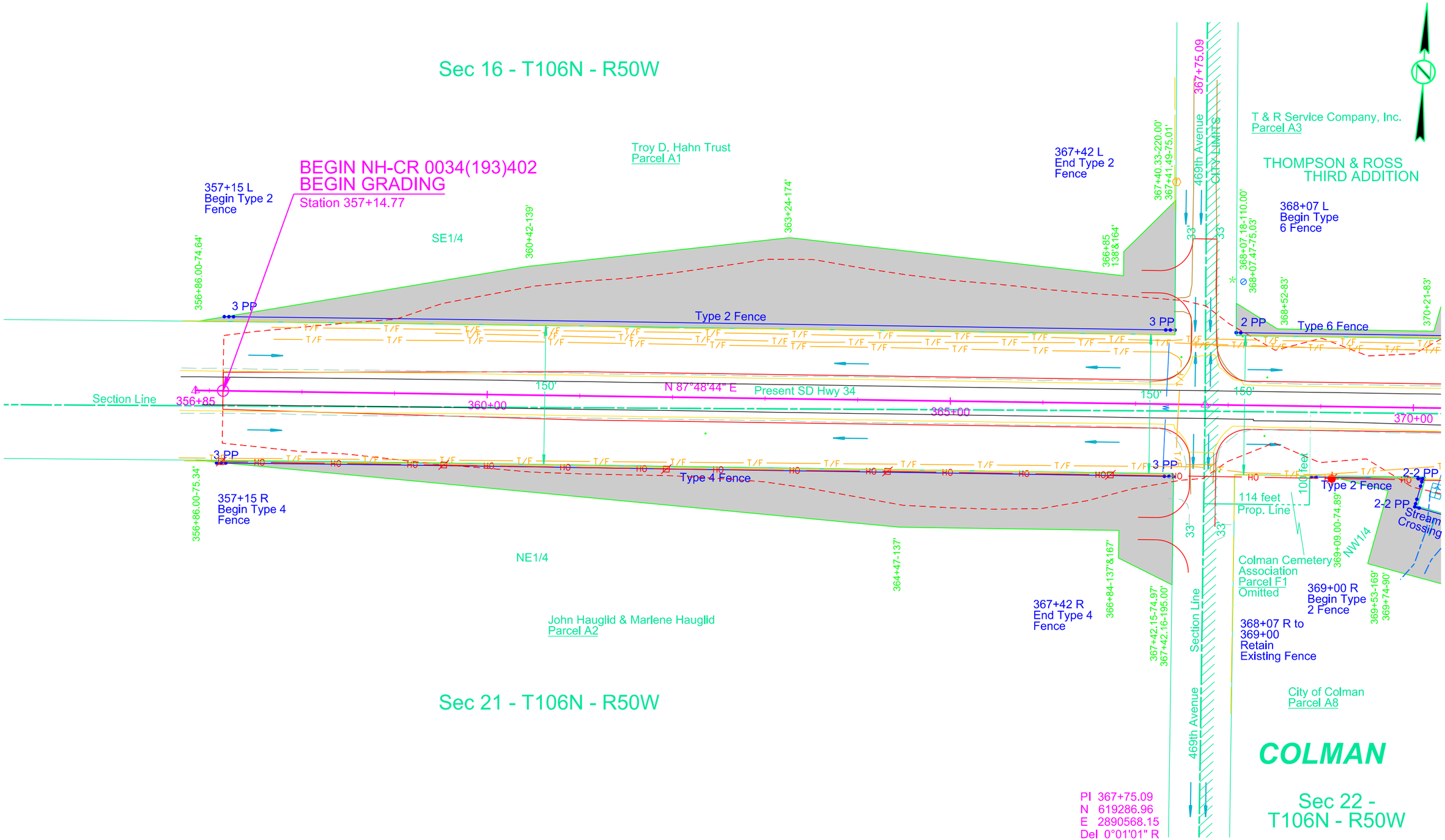

Parcel A1
356+86.00 to 367+41.49 L
Temporary Easement containing
1.6 ac, more or less

Parcel A2
356+86.00 to 367+42.16 R
Temporary Easement containing
1.1 ac, more or less

Parcel A3
368+07.18 to 372+18.28 L
Temporary Easement containing
0.3 ac (13611 sq ft), more or less

Parcel A8
369+09.00 to 371+49.00 R
Temporary Easement containing
0.3 ac (12504 sq ft), more or less

Plot Scale - 1:100
Plotted From - TRSF12141
File - U:\rdp\jmoody\0609\356.dgn

STATE OF SOUTH DAKOTA	PROJECT	SHEET	TOTAL SHEETS
	NH-CR 0034(193)403	B34	B146

Plotting Date: 08/16/2024 Revised 07/17/2024 AR

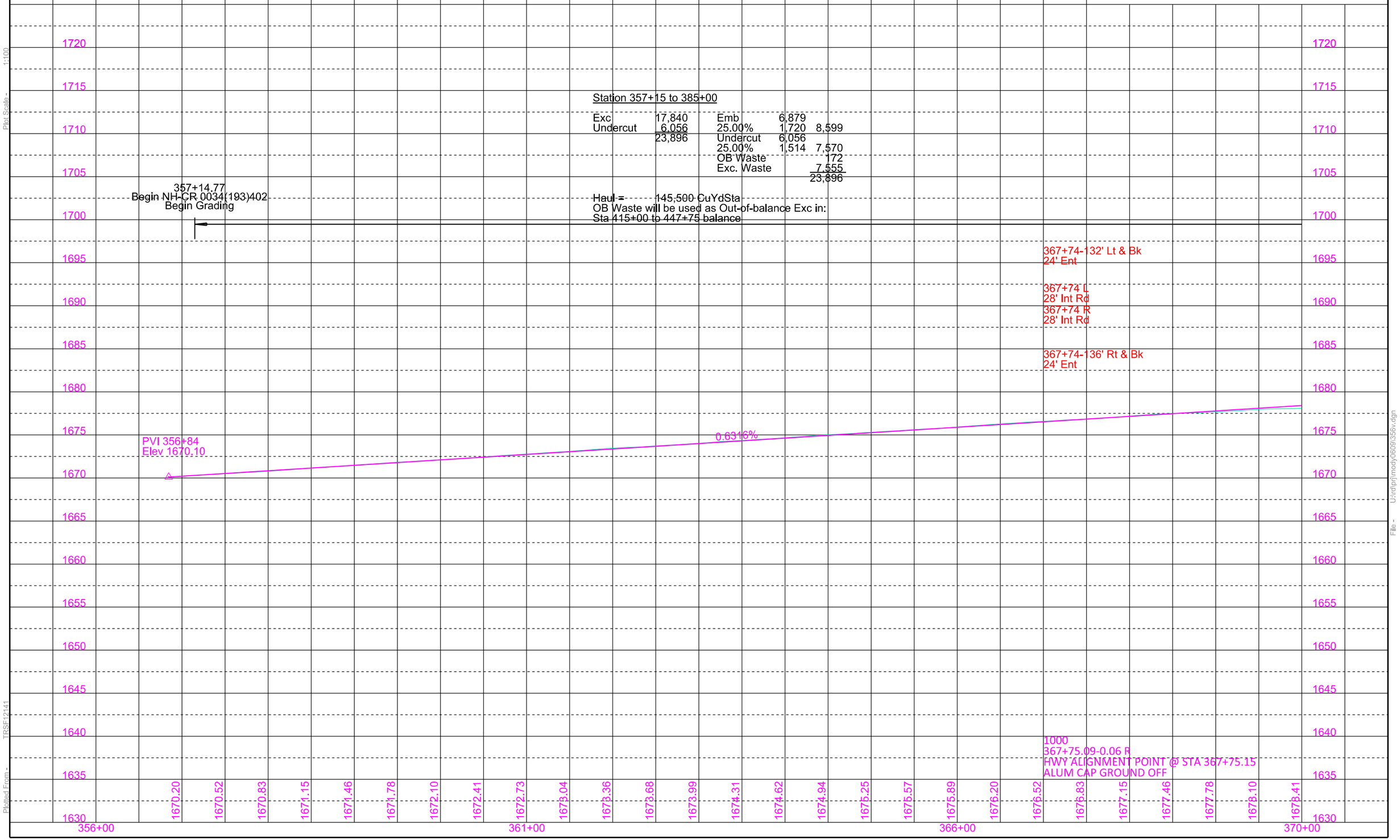

Plot Scale - 1:100

Plotted From - TPSF12141

File - U:\rdeprj\mody0609\356v.dgn

STATE OF SOUTH DAKOTA	PROJECT	SHEET	TOTAL SHEETS
	NH-CR 0034(193)402	B35	B146

Plotting Date: 08/16/2024 Revised 07/24/2024 AR

370+27-85' R
Install Bank and Channel Protection Gabions (10.0 Cu Yd) and Type B Drainage Fabric (29 SqYd)

370+61 (566 Ac)
Skew 15° LHF
Slipline Twin 48"-160' RCP
Install 42" - 24' RCP (6' L & 6' R) & 4 Flared Ends

370+48-85' R
Install Bank and Channel Protection Gabions (10.0 Cu Yd) and Type B Drainage Fabric (29 SqYd)

372+38-60' R
Take Out 18" - 60' RCP
(Incidental Work, Grading)

372+63-24' R
Remove Drop Inlet

372+69-53' R to 372+63-24' R
Take Out 18"-30' CMP
(Incidental Work, Grading)

375+43-49' L
Take Out 18"-58' RCP
(Incidental Work, Grading)

374+89.99-67.85' L to 375+55.67-62.83' L
Install 18" - 64' RCP & 1 Flared End (Between Outlet and Drop Inlet)

375+55.67-62.83' L to 375+98.00-68.70' L
Install 18" - 42' RCP & 1 Flared End (Between Drop Inlet and Inlet)

Install Type B Drop Inlet with 6" Concrete collar and Type B Frame & Grate at the following locations:

372+54.56-59.00' R	(3'x4')
372+89.16-22.67' R	(2'x3')
375+55.67-62.83' L	(2'x3')
375+92.47-22.67' R	(2'x3')
375+92.47-22.67' L	(2'x3')

COLMAN

T & R Service Company, Inc.
Parcel A3

371+37-79' L
Do Not Disturb
Transformer Box and Service Station

371+88-39' L
Do Not Disturb
Manhole

372+24 L
End Type
6 Fence

T & R Electric Supply Company, Inc.
Parcel A4

THOMPSON & ROSS THIRD ADDITION

T & R Service Company, Inc.
Parcel A5

T & R Electric Supply Company, Inc.
Parcel A6
Omitted

Property Line

Stream Crossing

2-2 PP

Type 6 Fence

Type 2 Fence

2 PP

3 PP

620 feet

319.13 feet

374+16-121'

375+56-117'

375+77-102'

150'

113'

112'

Present SD Hwy 34

Section Line

370+00 371+00 372+00 373+00 374+00 375+00 376+00

330 feet

372+83-74' R to 379+39-37' R
Do Not Disturb
Chain Link Fence

Colman Cemetery Association
(INFORMATION ONLY)

COLMAN CEMETERY

BLOCK 2

Colman Cemetery Association
Parcel E1

NW1/4

City of Colman
Parcel A8

370+72-190' R
Do Not Disturb
Detention Ponds

371+63-94' R
371+68-91' R
371+68-92' R
Do Not Disturb
Trees

372+19 R
End Type
2 Fence

372+60-85' R
Do Not Disturb
Sign

Sec 22 - T106N - R50W

371+77.47-59.00' R to 372+54.56-59.00' R
Install 24" - 76' RCP & 1 Sloped End (Between Drop Inlet and Outlet)

372+54.56-59.00' R to 372+79.44-59.00' R
Install 24" - 24' RCP & 1 Sloped End (Between Inlet and Drop Inlet)

372+54.56-59.00' R to 372+89.16-22.67' R
Install 18" - 50' RCP (Between Drop Inlets)

372+89.16-22.67' R to 375+92.47-22.67' R
Install 18" - 300' RCP (Between Drop Inlets)

375+92.47-22.67' R to 375+92.47-22.67' L
Install 18" - 44' RCP (Between Drop Inlets)

Parcel A4
372+18.23 to 375+37.38 L
Temporary Easement containing 0.2 ac (9808 sq ft), more or less

Parcel A5
375+37.02 to 380+24.58 L
Temporary Easement containing 0.3 ac (11745 sq ft), more or less

Parcel A8
371+90.00 to 372+74.00 R
Temporary Easement containing 0.1 ac (2949 sq ft), more or less

Plot Scale - 1:40
Plotted From - TRSF12141
File - U:\drdprjmody06091\370.dgn

STATE OF SOUTH DAKOTA	PROJECT	SHEET	TOTAL SHEETS
	NH-CR 0034(193)403	B36	B146

Plotting Date: 08/16/2024 Revised 07/17/2024 AR

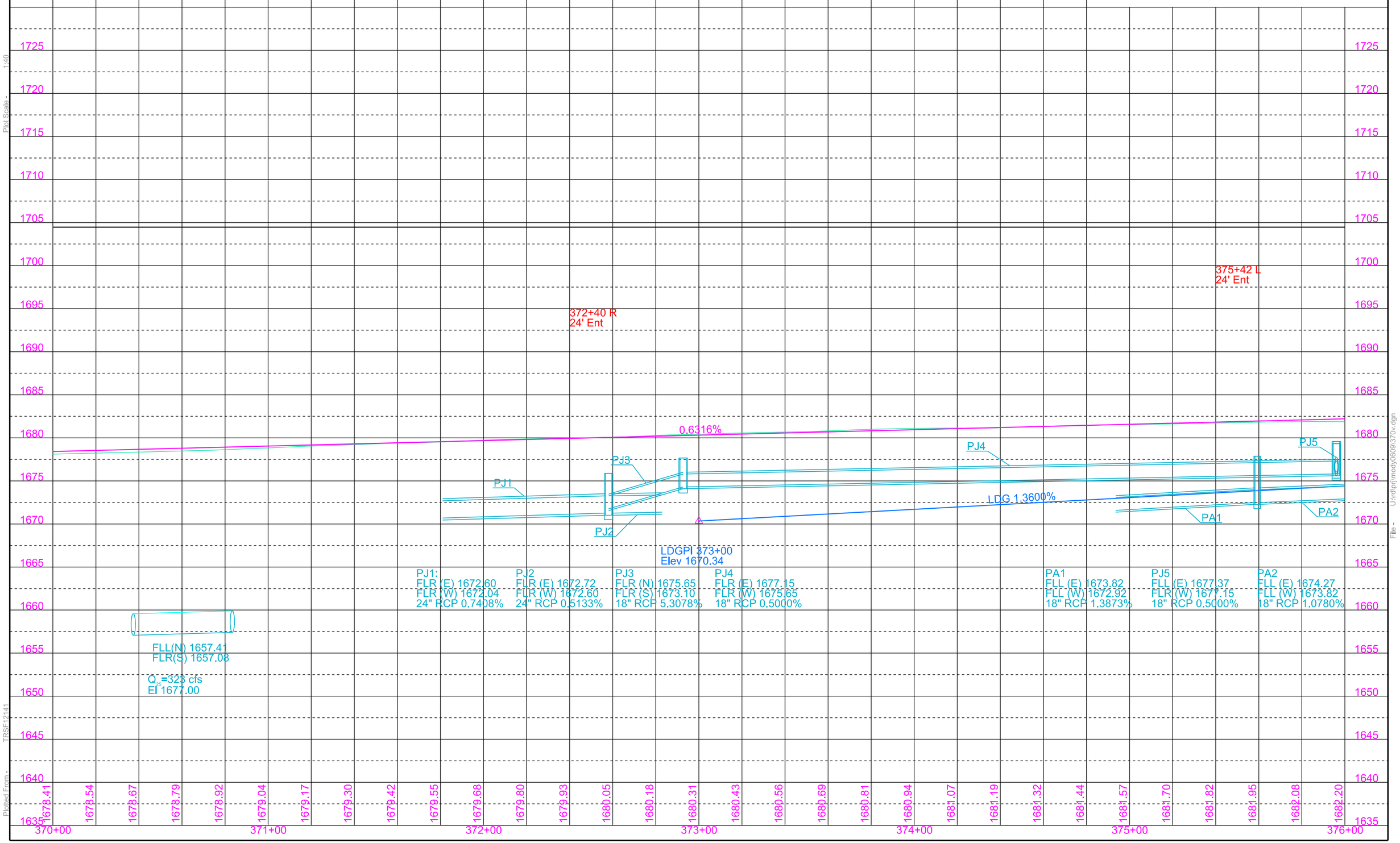

Plot Scale - 1:40

Plotted From - TRSF12141

File - U:\ralph\mody0609\370v.dgn

STATE OF SOUTH DAKOTA	PROJECT	SHEET	TOTAL SHEETS
	NH-CR 0034(193)402	B37	B146

Plotting Date: 08/16/2024 Revised 03/06/2024 AR

379+09.82-60.57' L to 380+05.76-39.65' L
Install 18" - 96' RCP & 1 Flared End (Between Drop Inlet and Outlet)

379+40.01-22.10' R to 381+63.77-21.17' R
Install 18" - 222' RCP (Between Drop Inlets)

380+05.76-39.65' L to 380+27.19-47.01' L
Install 18" - 20' RCP (Between Drop Inlets)

381+63.77-35.95' L to 381+63.77-21.17' L
Install 18" - 12' RCP (Between Drop Inlets)

381+63.77-21.17' L to 381+63.77-21.17' R
Install 24" - 40' RCP Arch (Between Drop Inlets)

381+63.77-21.17' L to 382+00.00-23.63' L
Install 18" - 30' RCP (Between Drop Inlets)

381+63.77-21.17' R to 381+63.77-47.17' R
Install 24" - 20' RCP Arch & 1 Sloped End (Between Drop Inlet and Outlet)

381+63.77-21.17' R to 382+00.00-23.63' R
Install 18" -30' RCP (Between Drop Inlets)

381+63-60' R to 381+63-80' R
Cut Outlet Ditch (10 CY)

381+63.77-35.95' L to 381+63.77-47.34' L
Install 18" - 8' RCP (Between Drop Inlets

381+63-23' L
Remove Drop Inlet

381+63-23' L to 381+65-42' R
Take Out 18"-65' RCP (Incidental Work, Grading)

381+63-23' L to 381+72-34' L
Take Out 18"-14' RCP (Incidental Work, Grading)

Install Type S Drop Inlet Base and Type S Precast Lid at the following locations:
382+00.00-23.63' L (4'x11')
382+00.00-23.63' R (4'x11')

Install Type C Drop Inlet and Type C Frame & Grate at the following locations:
380+05.76-39.65' L (3'x4')
381+63.77-35.95' L (3'x4')

Install Type B Drop Inlet with 6" Concrete collar and Type B Frame & Grate at the following locations:
379+40.01-22.10' R (2'x3')
380+27.19-47.01' L (2'x3')
381+63.77-21.17' R (2'x3')
381+63.77-21.17' L (2'x3')
381+63.77-47.34' L (2'x3')

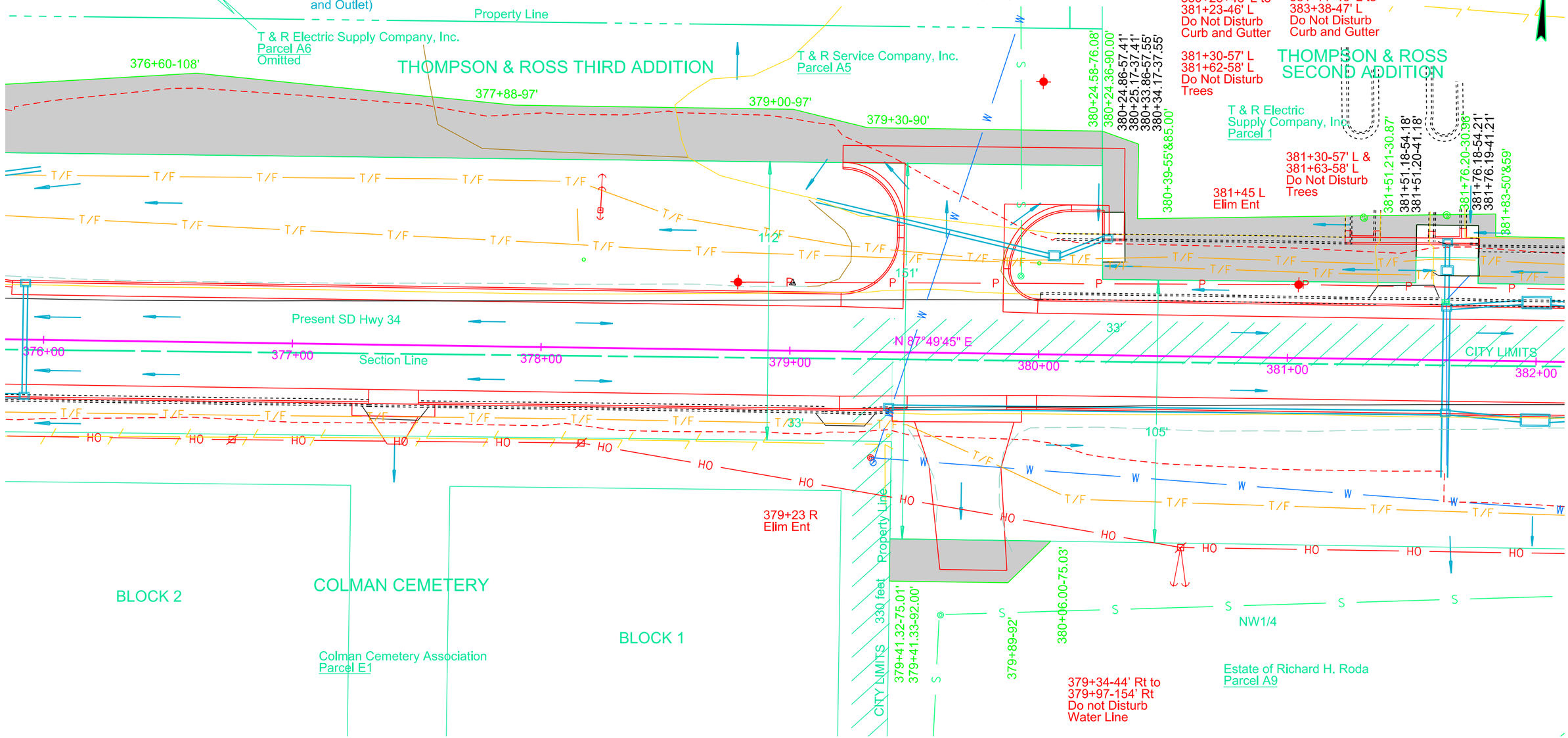

Parcel 1
380+24.36 to 383+86.13 L
Temporary Easement containing
0.2 ac (7879 sq ft), more or less

Parcel A9
379+41.32 to 380+06.00 R
Temporary Easement containing
0.1 ac (954 sq ft), more or less

Plot Scale - 1:40
Plotted From - TRSF12141
File - U:\drlprj\moody\0609\376.dgn

STATE OF SOUTH DAKOTA	PROJECT	SHEET	TOTAL SHEETS
	NH-CR 0034(193)403	B38	B146

Plotting Date: 08/16/2024 Revised 09/19/2023 AR

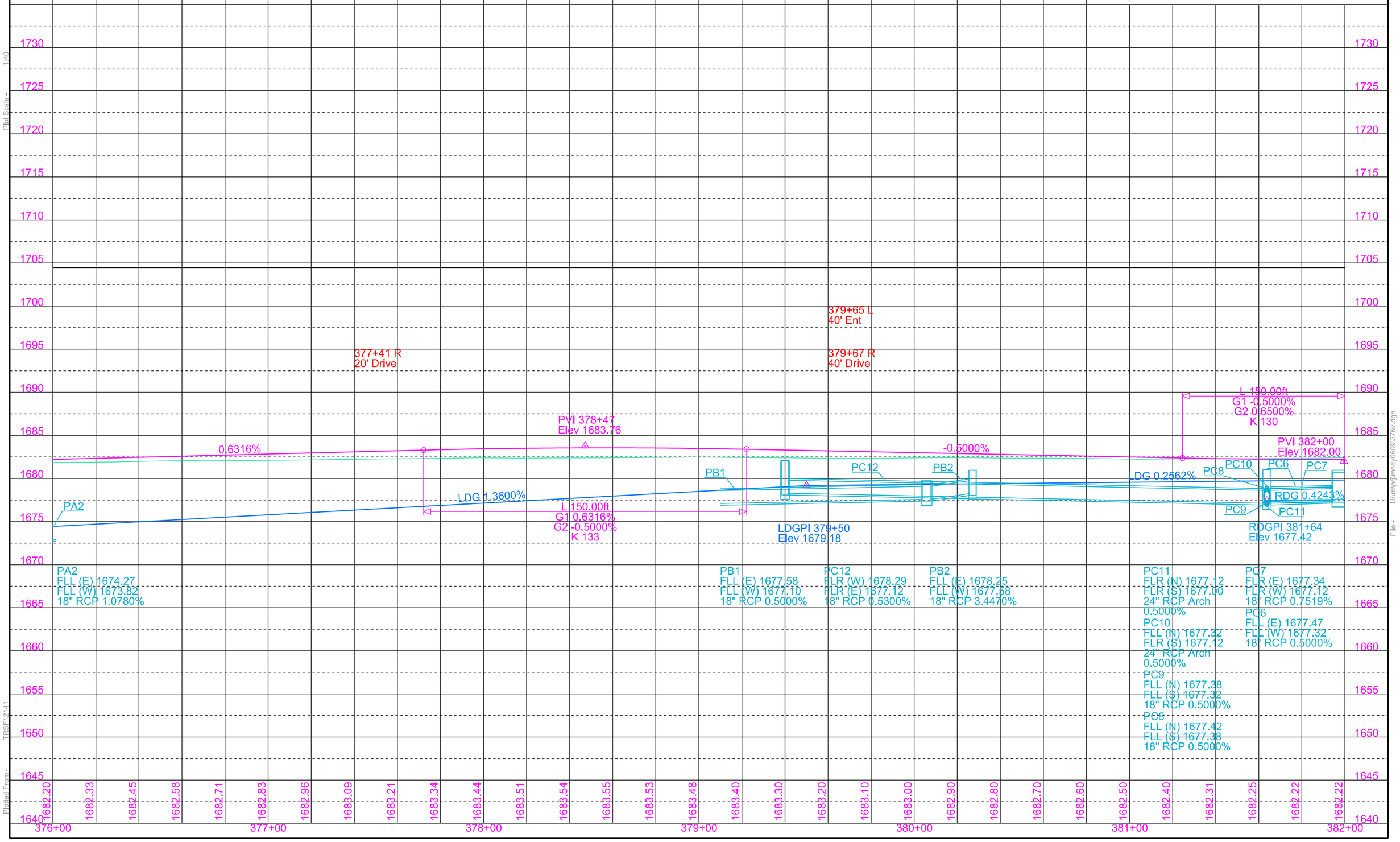

Plot Scale - 1:40

TRSF12141

Plotted From - U:\radprj\moody\609\376v.dgn

File -

STATE OF SOUTH DAKOTA	PROJECT	SHEET	TOTAL SHEETS
	NH-CR 0034(193)402	B39	B146

Plotting Date: 08/16/2024 Revised 03/06/2024 AR

382+00.00-23.63' L to
382+43.23-21.17' L
Install 18" - 36' RCP
(Between Drop Inlets)

383+69-36' L
Take Out 18"-56' RCP Arch
(Incidental Work, Grading)

384+17.01-21.17' R to
384+17.01-18.17' L
Install 18" - 38' RCP
(Between Drop Inlets)

384+17.01-18.17' L to
384+19.69-37.52' L
Install 18" - 18' RCP
(Between Drop Inlets)

385+45-32' L to 385+44-38' R
Take Out 18"-58' RCP Arch
(Incidental Work, Grading)

385+45-32' L to 385+45-23' L
Take Out 18"-6' RCP
(Incidental Work, Grading)

Remove Drop Inlets
at the Following Locations:
385+45-32' L
385+45-23' L

385+44.83-34.52' L to
385+44.83-18.17' L
Install 18"-14' RCP
(Between Drop Inlets)

385+44.83-18.17' L to
385+44.83-21.17' R
Install 24" - 36' RCP Arch
(Between Drop Inlets)

Install Type B Drop Inlet
with 6" Concrete collar
and Type B Frame & Grate
at the following locations:

382+43.23-21.17' L	(2'x3')
382+43.23-21.17' R	(2'x3')
384+17.01-21.17' R	(2'x3')
384+17.01-18.17' L	(2'x3')
385+44.83-21.17' R	(3'x4')
385+44.83-18.17' L	(2'x3')
387+54.97-21.17' R	(2'x3')
387+54.97-18.17' L	(2'x3')

Install Type C Drop Inlet
and Type C Frame & Grate
at the following locations:

384+19.69-37.52' L	(3'x4')
385+44.83-34.52' L	(3'x4')

382+89-47' L to
383+34-45' L
Do Not Disturb
Parking lot signs

383+98-60' L
Do Not Disturb
Tree

384+30-58' L
Do Not Disturb
Tree

384+40-37' L
Do Not Disturb
Power Box

385+00-39' L
Do Not Disturb
Transformer Box

384+09 to 391+00 L
Do Not Disturb
Chain Link Fence

385+18 L
Do Not Disturb Chain
Link Fance Gate

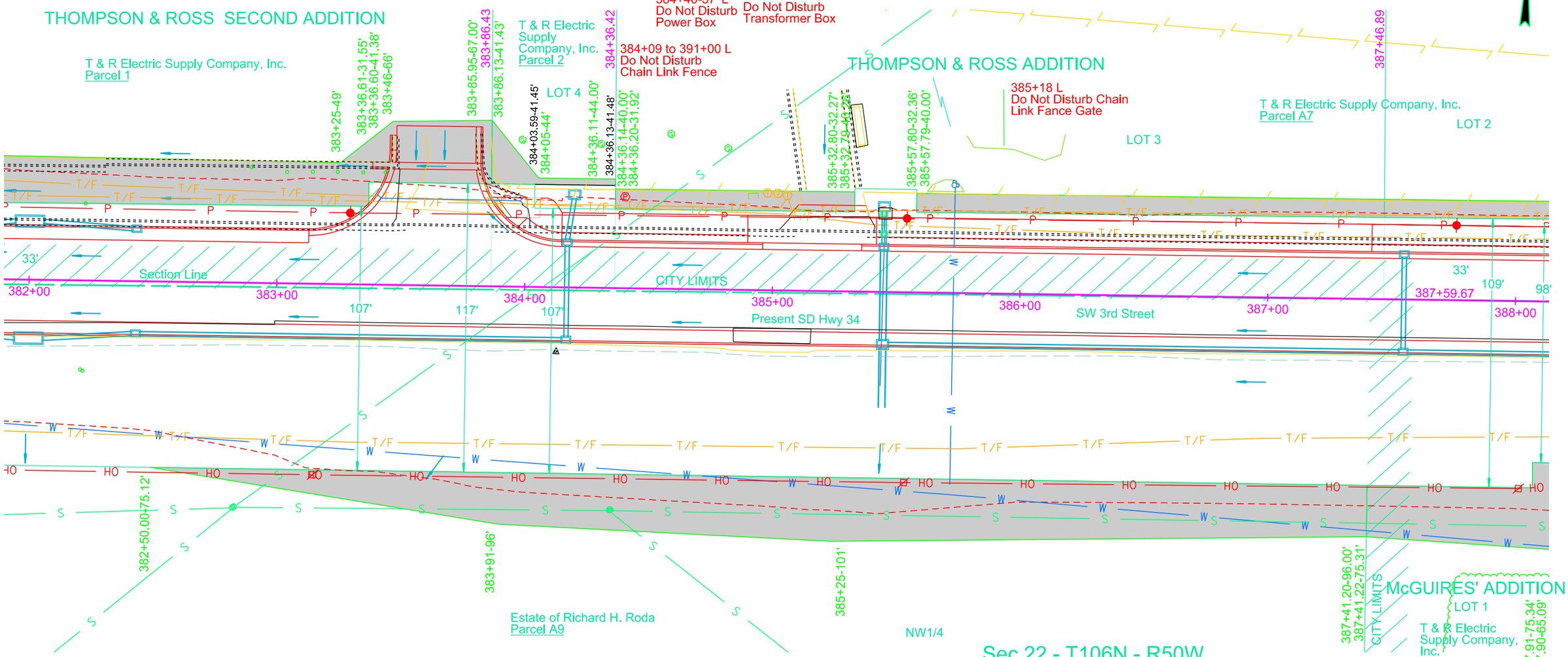

382+00.00-23.63' R to
382+43.23-21.17' R
Install 18" -36' RCP
(Between Drop Inlets)

382+43.23-21.17' R to
384+17.01-21.17' R
Install 18" - 172' RCP
(Between Drop Inlets)

385+44.83-21.17' R to
385+44.83-46.75' R
Install 24" - 20' RCP Arch
& 1 Sloped End
(Between Drop Inlet
and Outlet)

385+44.83-21.17' R to
387+54.97-21.17' R
Install 18" - 208' RCP
(Between Drop Inlets)

387+54.97-21.17' R to
389+53.45-21.17' R
Install 18" - 196' RCP
(Between Drop Inlets)

387+54.97-18.17' L to
387+54.97-21.17' R
Install 18" - 38' RCP
(Between Drop Inlets)

Parcel A9
382+50.00 to 387+41.22 R
Temporary Easement containing
0.2 ac (9612 sq ft), more or less

Parcel 2
383+85.95 to 384+36.13 L
Temporary Easement containing
0.1 ac (344 sq ft), more or less

Parcel A7
384+36.14 to 385+32.80 L
Temporary Easement containing
0.1 ac (777 sq ft), more or less

Parcel A7
385+57.79 to 394+03.03 L
Temporary Easement containing
0.2 ac (9312 sq ft), more or less

Parcel A10
387+41.20 to 389+92.00 R
Temporary Easement containing
0.2 ac (8047 sq ft), more or less

Plot Scale - 1:40
Plotted From - TRSF12141
SectionB Page # : B19
File - U:\ralph\moody0609\382z.dgn

STATE OF SOUTH DAKOTA	PROJECT	SHEET	TOTAL SHEETS
	NH-CR 0034(193)403	B40	B146

Plotting Date: 08/16/2024 Revised 07/17/2024 AR

Station 385+00 to 415+00

Exc	6,457	Emb	3,483	
Undercut	5,092	25.00%	871	4,354
Muck	38	Undercut	5,092	
	11,587	25.00%	1,273	6,365
		OB Waste		868
				11,587

Haul = 48,200 CuYdSta
OB Waste will be used as Out-of-balance Exc in:
Sta 415+00 to 447+75 and Sta 447+75 to 451+96 balances.

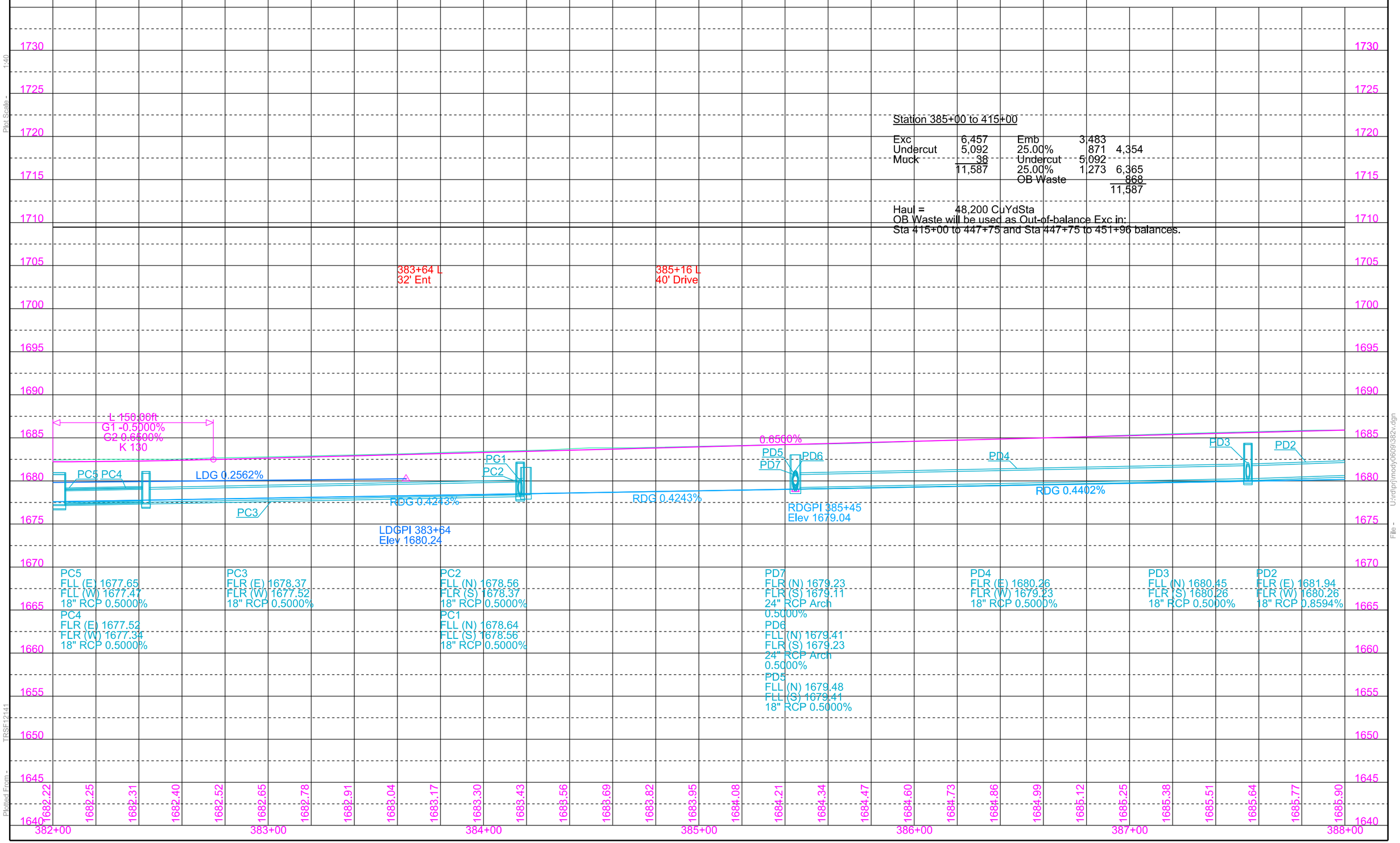

Plot Scale - 1:40
Plotted From - TRSF12141
File - U:\rdlp\jmoody0609\332v.dgn

STATE OF SOUTH DAKOTA	PROJECT	SHEET	TOTAL SHEETS
	NH-CR 0034(193)402	B41	B146

Plotting Date: 08/16/2024 Revised 03/06/2024 AR

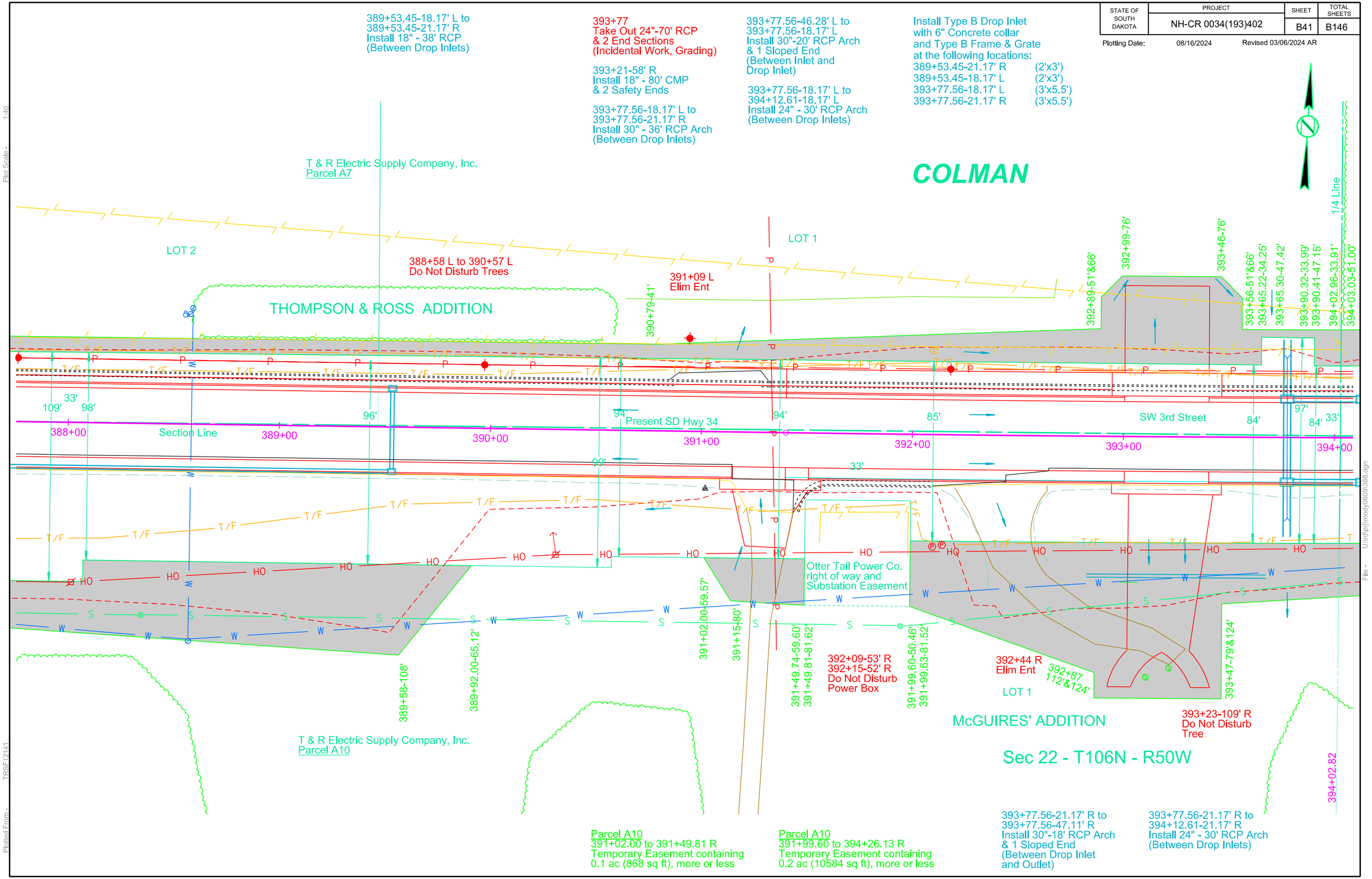

Plot Scale - 1:40

Plotted From - TRSF12141

File - U:\drjm\moody\609\388.dgn

STATE OF SOUTH DAKOTA	PROJECT	SHEET	TOTAL SHEETS
	NH-CR 0034(193)403	B42	B146

Plotting Date: 08/16/2024 Revised 09/19/2023 AR

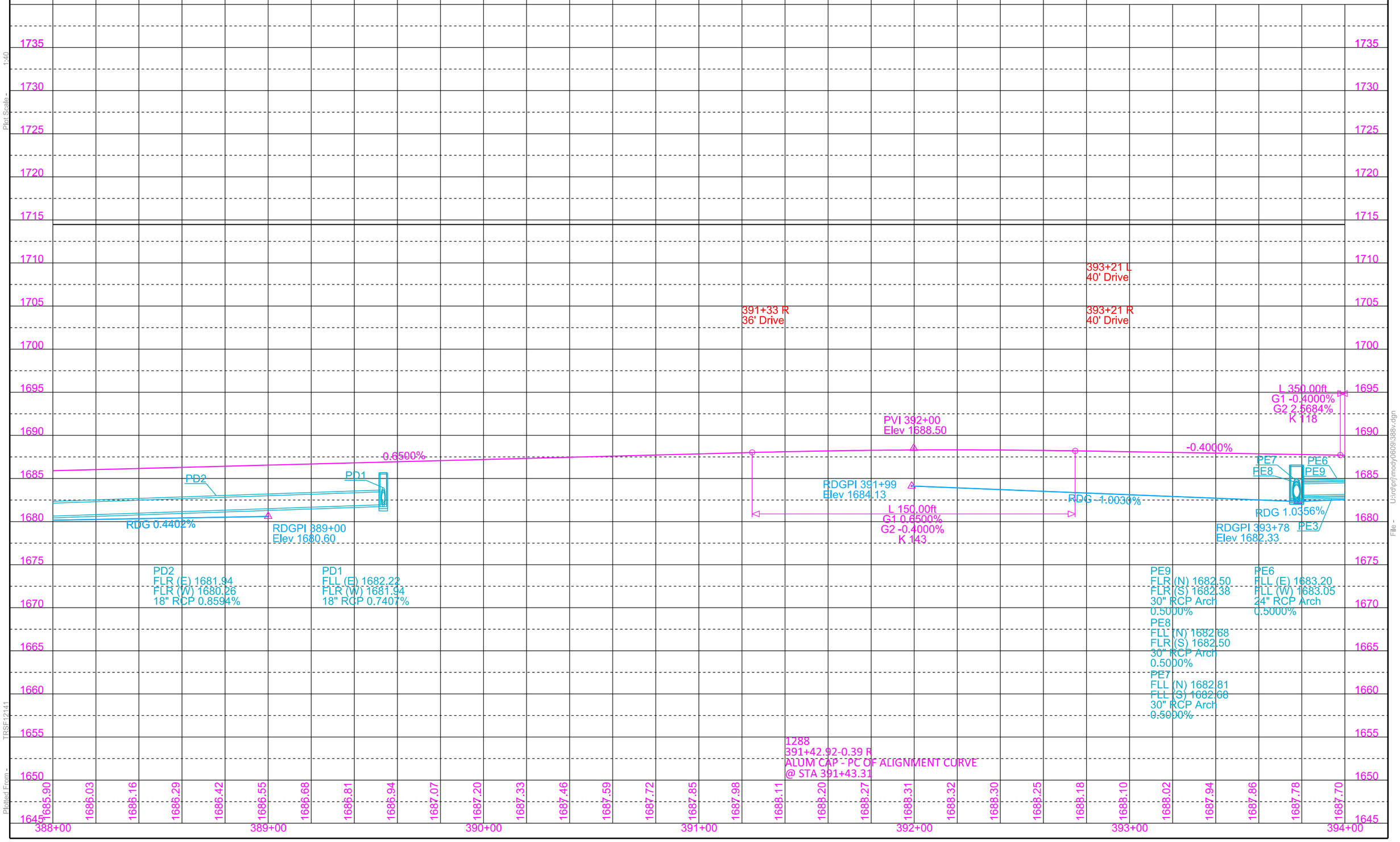

Plot Scale - 1:40

Plotted From - TRSF12141

File - U:\rdprj\moody\609\388v.dgn

STATE OF SOUTH DAKOTA	PROJECT	SHEET	TOTAL SHEETS
	NH-CR 0034(193)402	B43	B146

Plotting Date: 08/16/2024 Revised 03/06/2024 AR

394+45-23' L to 394+47-35' L
Take Out 18"-10' RCP
(Incidental Work, Grading)

394+12.61-18.17' L to
394+50.00-20.63' L
Install 18" - 30' RCP
(Between Drop Inlets)

394+50.00-20.63' L to
394+87.39-18.17' L
Install 18" - 30' RCP
(Between Drop Inlets)

396+59-42' R
Take Out 18" - 44' CMP
(Incidental Work, Grading)

Install Type S Drop Inlet
Base and Type S Precast Lid
at the following locations:
394+50.00-20.63' L (4'x11')
394+50.00-23.62' R (4'x11')

397+99
Take Out 18"-58' RCP
(Incidental Work, Grading)

396+90.50-18.17' L to
396+90.50-21.17' R
Install 18" - 36' RCP
(Between Drop Inlets)

396+53-63' R
Install 18" - 34' CMP
& 2 Safety Ends

397+98-23' L to
397+99+37' R
Take Out 18" - 60' RCP
(Incidental Work, Grading)

397+99-37' R to
398+70-54' R
Take Out 18" - 72' RCP
(Incidental Work, Grading)

398+26-52' R
Install 18" - 66' CMP
& 2 Safety Ends

398+08-39' R to
398+24-25' R
Take out 18"-22' RCP
(Incidental Work, Grading)

398+24-25' R
Take out 18"-40° Bend
(Incidental Work, Grading)

398+24-25' R to
398+99-25' R
Take out 8"-75' PVC
Floor Drain
(Incidental Work, Grading)

398+05.54-18.17' L to
398+05.54-21.17' R
Install 24"-36' RCP Arch
(Between Drop Inlets)

398+12.57-45.92' L to
398+05.54-18.17' L
Install 24"-26' RCP Arch
(Between Drop Inlets)

399+39.43-18.17' L to
399+39.43-21.17' R
Install 18" - 38' RCP
(Between Drop Inlets)

Install Type C Drop Inlet
and Type C Frame & Grate
at the following locations:
398+12.57-45.92' L (4'x5')

Install Type B Drop Inlet
with 6" Concrete collar
and Type B Frame & Grate
at the following locations:

394+12.61-18.17' L	(3'x4')
394+12.61-21.17' R	(3'x4')
394+87.39-18.17' L	(2'x3')
394+87.39-21.17' R	(2'x3')
396+90.50-21.17' R	(4'x3')
396+90.50-18.17' L	(5.5'x3')
398+05.54-18.17' L	(3'x4')
398+05.54-21.17' R	(4'x4')
399+39.43-21.17' R	(3'x4')
399+39.43-18.17' L	(2'x3')

Remove Drop Inlets at
the Following Locations:
394+45-23' L
397+98-23' L
398+70-54' R
399+47-33' L

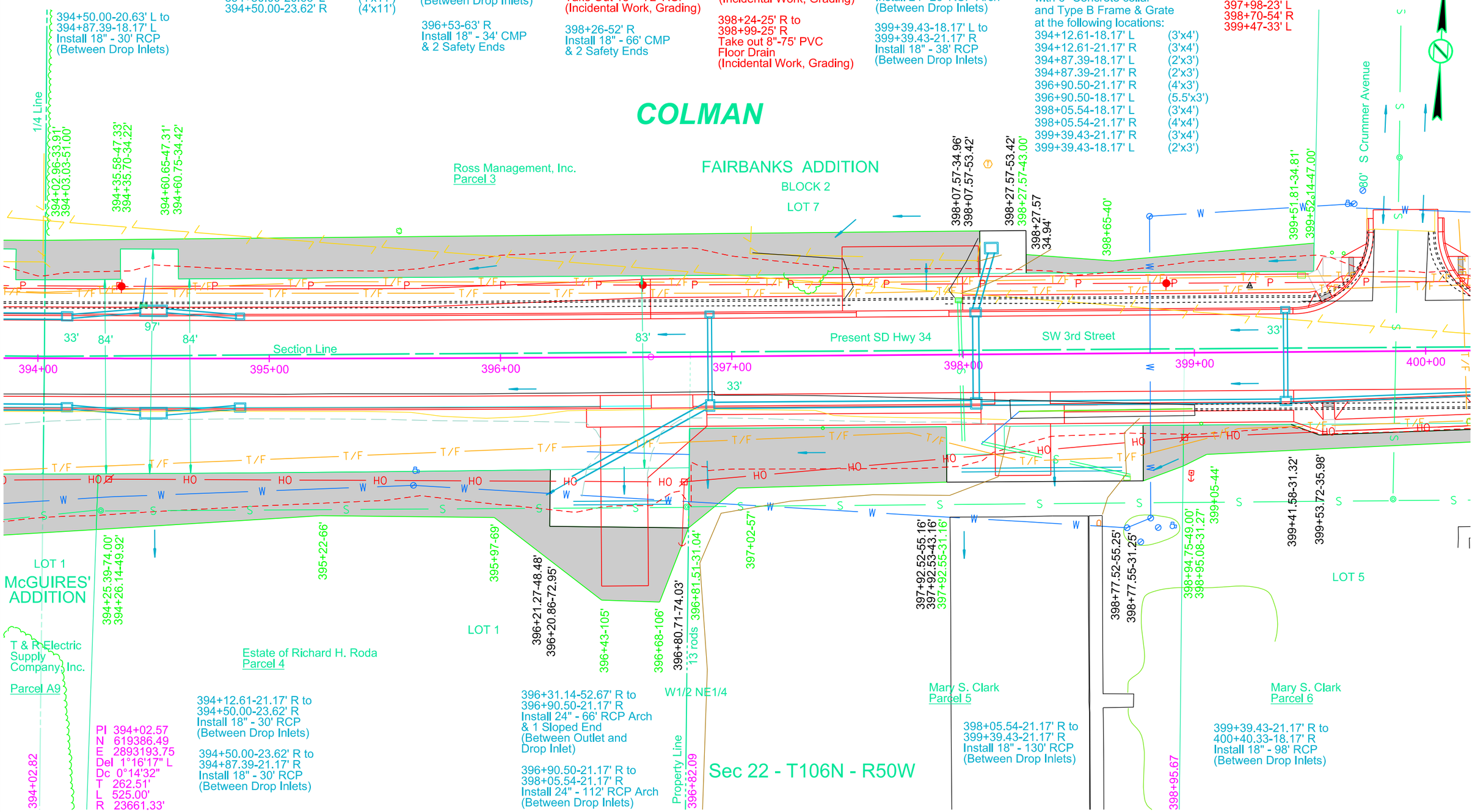

PI 394+02.57
N 619386.49
E 2893193.75
Del 1°16'17" L
Dc 0°14'32"
T 262.51'
L 525.00'
R 23661.33'

394+12.61-21.17' R to
394+50.00-23.62' R
Install 18" - 30' RCP
(Between Drop Inlets)

394+50.00-23.62' R to
394+87.39-21.17' R
Install 18" - 30' RCP
(Between Drop Inlets)

396+31.14-52.67' R to
396+90.50-21.17' R
Install 24" - 66' RCP Arch
& 1 Sloped End
(Between Outlet and
Drop Inlet)

396+90.50-21.17' R to
398+05.54-21.17' R
Install 24" - 112' RCP Arch
(Between Drop Inlets)

398+05.54-21.17' R to
399+39.43-21.17' R
Install 18" - 130' RCP
(Between Drop Inlets)

399+39.43-21.17' R to
400+40.33-18.17' R
Install 18" - 98' RCP
(Between Drop Inlets)

Parcel 3
394+02.96 to 398+07.57 L
Temporary Easement containing
0.2 ac (6859 sq ft), more or less

Parcel 3
398+27.57 to 399+52.14 L
Temporary Easement containing
0.1 ac (998 sq ft), more or less

Parcel 4
394+25.39 to 396+80.71 R
Temporary Easement containing
0.1 ac (5769 sq ft), more or less

Parcel 5
396+80.71 to 397+92.55 R
Temporary Easement containing
0.1 ac (2977 sq ft), more or less

Parcel 5
398+77.52 to 398+95.08 R
Temporary Easement containing
0.1 ac (362 sq ft), more or less

Parcel 6
398+94.75 to 401+08.66 R
Temporary Easement containing
0.1 ac (1981 sq ft), more or less

Plot Scale - 1:40
Plotted From - TRSF12141
File - U:\drdp\jmoody0609\394.dgn

STATE OF SOUTH DAKOTA	PROJECT	SHEET	TOTAL SHEETS
	NH-CR 0034(193)403	B44	B146

Plotting Date: 08/16/2024 Revised 09/19/2023 AR

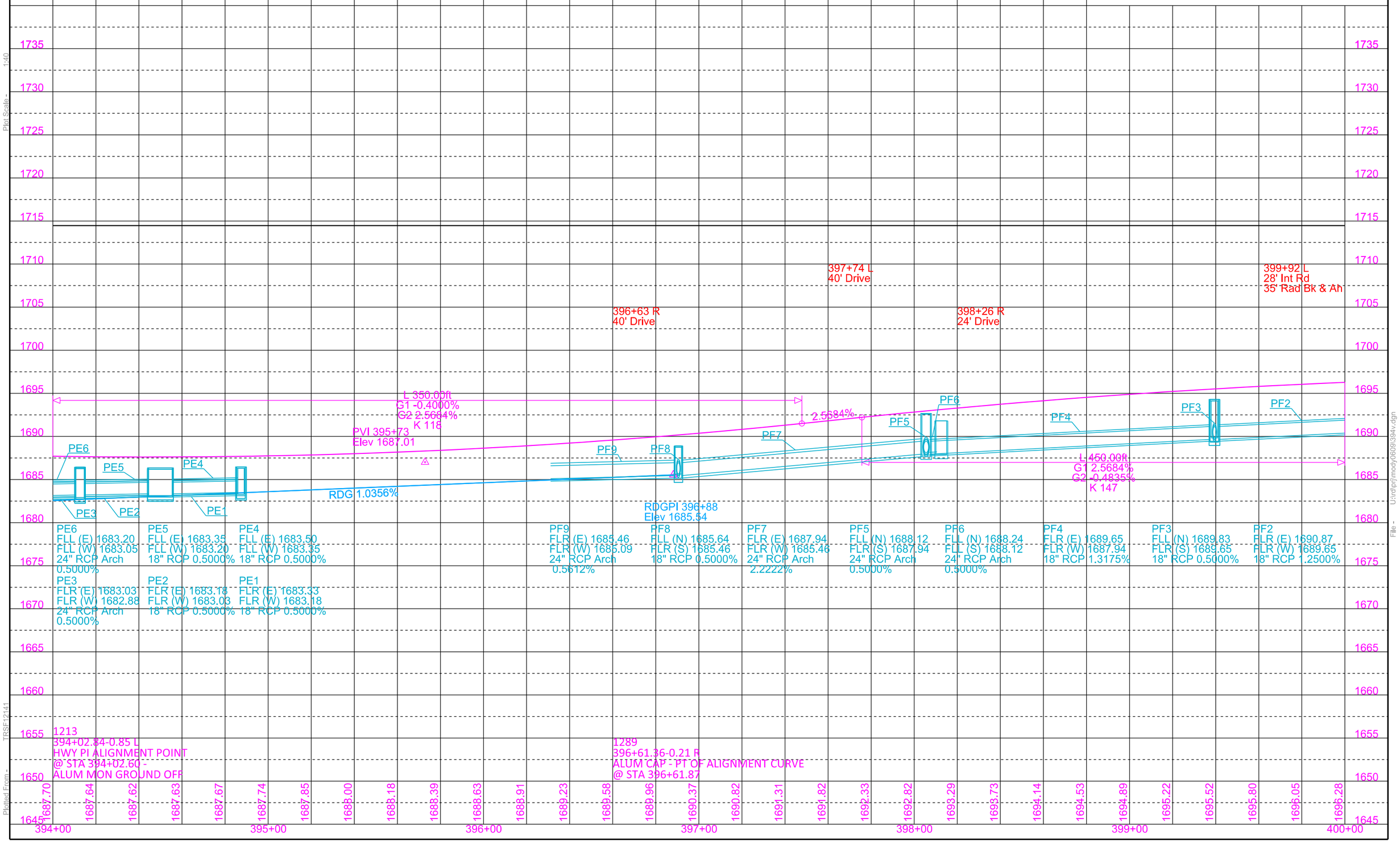

Plot Scale - 1:40

Plotted From - TRSF12141

File - U:\rdi\prj\moody\609\394v.dgn

STATE OF SOUTH DAKOTA	PROJECT	SHEET	TOTAL SHEETS
	NH-CR 0034(193)402	B45	B146

Plotting Date: 08/16/2024 Revised 07/17/2024 AR

Remove Drop Inlets at the following locations:
400+19-30' R
404+10-31' L
404+10-23' L

400+40.33-18.17' L to 400+40.33-18.17' R
Install 18" - 36' RCP
(Between Drop Inlets)

402+52.50-18.17' L to 402+52.50-18.17' R
Install 18" - 36' RCP
(Between Drop Inlets)

403+41-37' L to 404+10-31' L
Take Out 18"-68' RCP
(Incidental Work, Grading)

403+37.25-48.51' L to 404+05.94-40.52' L
Install 30" - 68' RCP Arch
& 1Sloped End
(Between Inlet and Drop Inlet)

404+10-23' L to 404+10-31' L
Take Out 18"-6' RCP
(Incidental Work, Grading)

404+10-23' L to 404+09-34' R
Take out 18"-56' RCP
(Incidental Work, Grading)

404+10-23' L to 407+08-23' L
Take out 18"-298' RCP
(Incidental Work, Grading)

404+05.94-40.52' L to 404+15.90-18.17' L
Install 30" - 20' RCP
(Between Drop Inlets)

404+15.90-18.17' L to 404+15.90-18.17' R
Install 30" - 32' RCP
(Between Drop Inlets)

404+23-36' L to 407+13-45' L
Do Not Disturb
rock if outside
work limits. If necessary,
remove and reset
Rock in Original Position
(Incidental Work, Grading)

404+23-36' L to 407+13-45' L
Salvage and Replace
Crushed Concrete
(Incidental Work, Grading)

405+50.44-18.17' L to 405+50.44-18.17' R
Install 18" - 34 RCP
(Between Drop Inlets)

Install Type C Drop Inlet
and Type C Frame & Grate
at the following locations:
404+05.94-40.52' L (4'x5')
404+15.90-42.88' R (3'x4')

Install Type B Drop Inlet
with 6" Concrete collar
and Type B Frame & Grate
at the following locations:
400+40.33-18.17' R (2'x3')
400+40.33-18.17' L (2'x3')
402+52.50-18.17' L (2'x3')
402+52.50-18.17' R (2'x3')
404+15.90-18.17' R (4'x4')
404+15.90-18.17' L (3'x4')
405+50.44-18.17' L (2'x3')
405+50.44-18.17' R (4'x3')

405+18 R
Refurbish
single mailbox

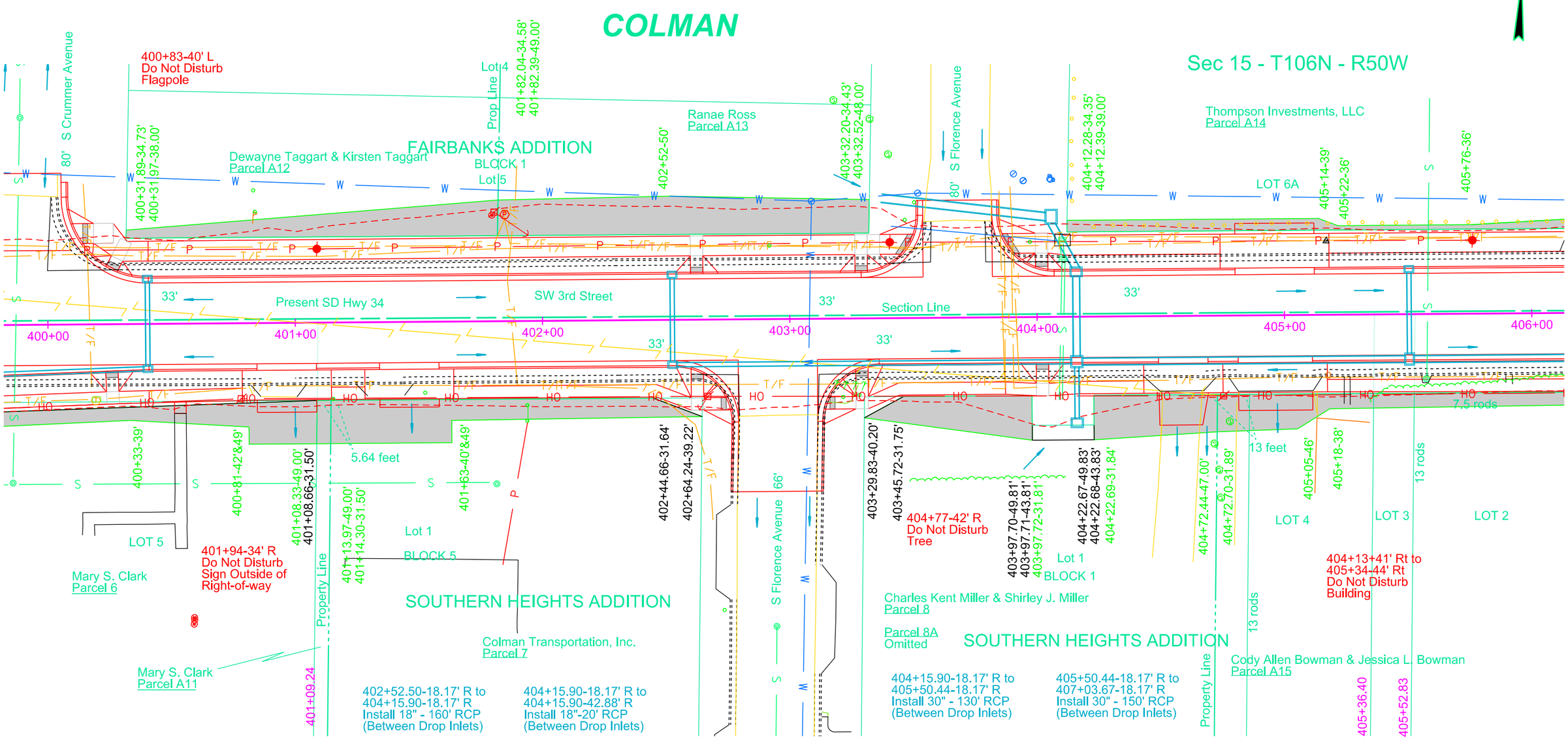

Parcel A11
401+08.33 to 401+14.30 R
Temporary Easement containing
99 sq ft, more or less

Parcel A12
400+31.89 to 401+82.39 L
Temporary Easement containing
1328 sq ft, more or less

Parcel A13
401+82.04 to 403+32.52 L
Temporary Easement containing
2211 sq ft, more or less

Parcel A14
404+12.28 to 407+14.27 L
Temporary Easement containing
1338 sq ft, more or less

Parcel 7
401+13.97 to 402+64.24 R
Temporary Easement containing
1589 sq ft, more or less

Parcel 8
403+29.83 to 403+97.72 R
Temporary Easement containing
831 sq ft, more or less

Parcel 8
404+22.67 to 404+72.70 R
Temporary Easement containing
826 sq ft, more or less

Parcel A15
404+72.44 to 406+75.50 R
Temporary Easement containing
1559 sq ft, more or less

Plot Scale - 1:40
Plotted From - TRSF12141
File - U:\drafprj\moody\0609\400.dgn

STATE OF SOUTH DAKOTA	PROJECT	SHEET	TOTAL SHEETS
	NH-CR 0034(193)403	B46	B146

Plotting Date: 08/16/2024 Revised 09/169/2023 AR

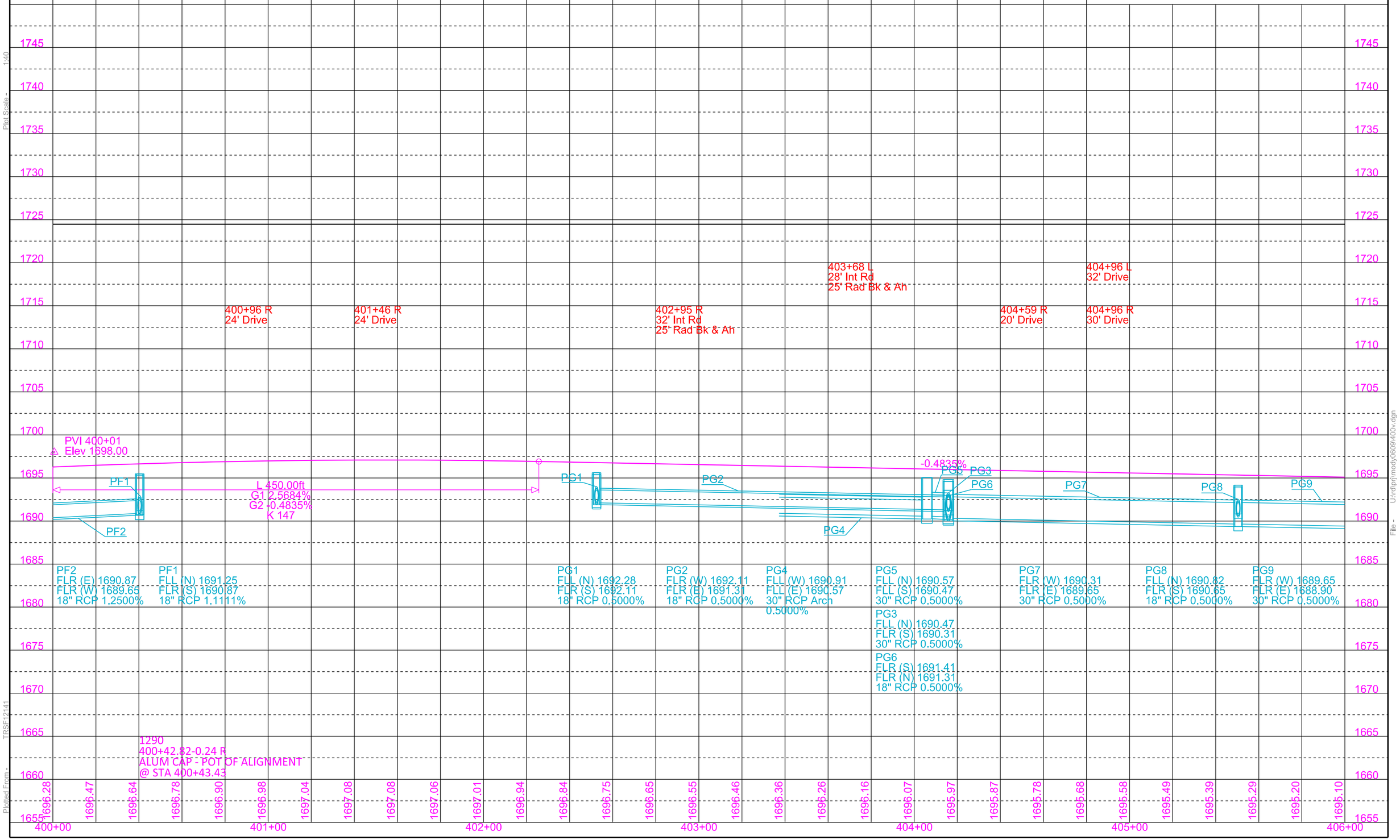

Plot Scale - 1:40

TPSF12141

Plotted From - U:\drlp\jmoody0609\400v.dgn

File -

STATE OF SOUTH DAKOTA	PROJECT	SHEET	TOTAL SHEETS
	NH-CR 0034(193)402	B47	B146

Plotting Date: 09/12/2024 Revised 09/12/2024 AR

Remove Drop Inlets at the following locations:
407+08-24' R
407+08-23' L
407+38-54' L
407+82-54' L
409+99-23' L
409+99-24' R
411+39-23' R

407+08-24' R to 407+08-23' L
Take Out 18"-46' RCP Arch
(Incidental Work, Grading)

407+38-54' L to 407+82-55' L
Take Out 18"-42' RCP
(Incidental Work, Grading)

407+08-23' L to 407+38-54' L
Take Out 18"-42' RCP
(Incidental Work, Grading)

407+08-23' L to 409+99-23' R
Take Out 24"-292' RCP Arch
(Incidental Work, Grading)

407+03.67-18.17' L to
407+03.67-18.17' R
Install 18" - 32' RCP
(Between Drop Inlets)

407+03.67-18.17' L to
407+39.33-50.75' L
Install 18" - 48' RCP
(Between Drop Inlets)

407+82.67-50.75' L to
408+17.16-18.17' L
Install 18" - 48' RCP
(Between Drop Inlets)

408+17.16-18.17' L to
408+17.16-18.17' R
Install 18" - 32' RCP
(Between Drop Inlets)

409+99-23' L to 409+99-30' L
Take Out 24"-7' RCP Arch &
(Incidental Work, Grading)

409+99-24' R to 409+99-31' R
Take Out 24"-4' RCP Arch
(Incidental Work, Grading)

409+99-24' R to 409+99-23' L
Take Out 18"-48' RCP
(Incidental Work, Grading)

409+99.68-18.17' L to
409+99.68-37.68' L
Install 18"-18' RCP
(Between Drop Inlets)

409+99.68-18.17' L to
409+99.68-18.17' R
Install 24"-34' RCP
(Between Drop Inlets)

411+39-23' R to 411+39-37' R
Take Out 18"-13' RCP
(Incidental Work, Grading)

Install Type C Drop Inlet
and Type C Frame & Grate
at the following locations:
409+99.68-37.68' L (3'x4')

411+36.33-49.19' L to
411+67.67-49.19' L
Install 24" - 30' RCP Arch
(Between Drop Inlets)

411+67.67-49.19' L to
412+07.91-20.63' L
Install 24" - 46' RCP Arch
(Between Drop Inlets)

Install Type B Drop Inlet
with 6" Concrete collar and
Type B Frame & Grate at the
following locations:

407+03.67-18.17' L	(3'x4')
407+03.67-18.17' R	(4'x3')
407+39.33-50.75' L	(2'x3')
407+82.67-50.75' L	(2'x3')
408+17.16-18.17' L	(3'x4')
408+17.16-18.17' R	(4'x3')
409+99.68-18.17' L	(2'x3')
409+99.68-18.17' R	(4'x4')
411+67.67-49.19' L	(3'x5.5')
411+67.00-18.17' R	(2'x3')

Install Type B Drop Inlet
with 6" Concrete Collar and
Type E Frame & Grate at
the following location:
411+36.33-49.19' L (2'x3')

408+12 R
Refurbish
single mailbox

COLMAN

Sec 15 - T106N - R50W

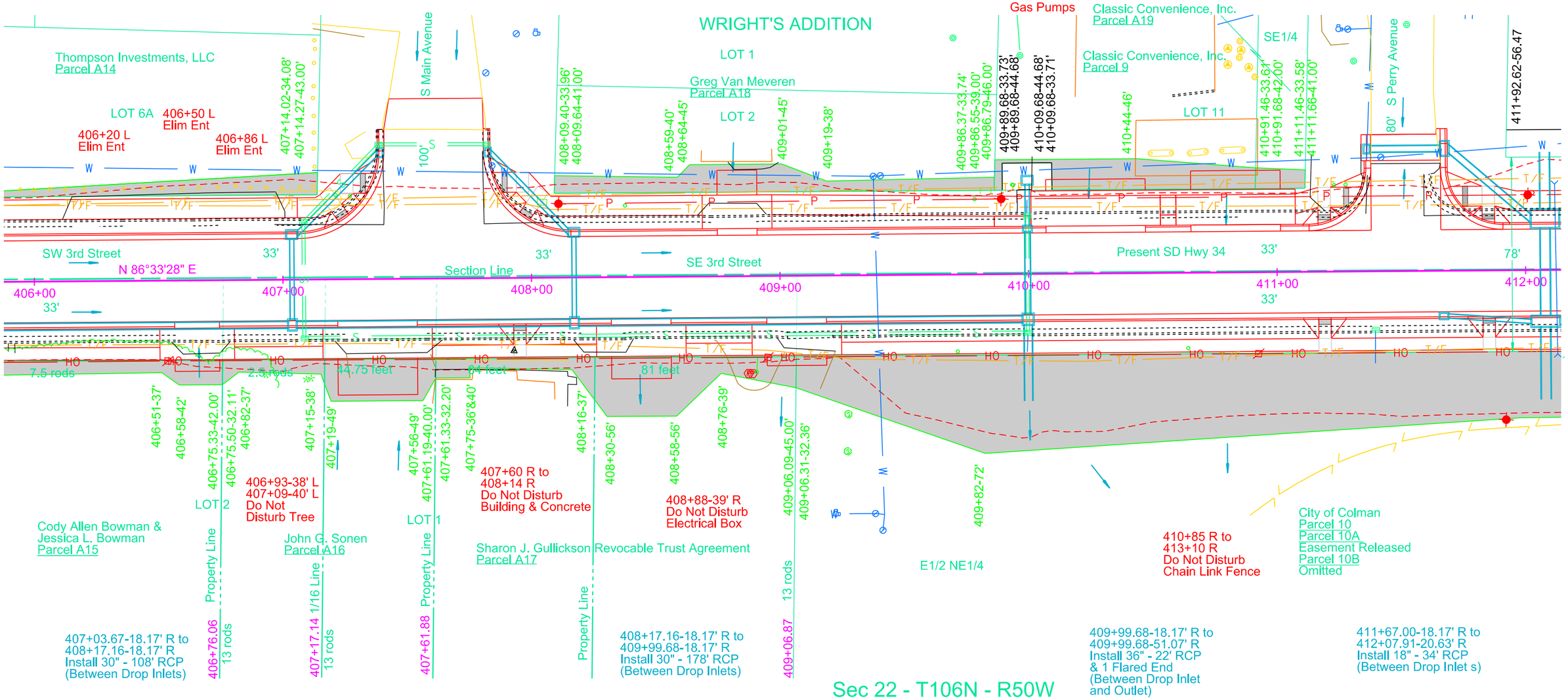

Sec 22 - T106N - R50W

Parcel A18
408+09.40 to 409+86.55 L
Temporary Easement containing
1236 sq ft, more or less

Parcel 9
409+86.37 to 410+91.68 L
Temporary Easement containing
980 sq ft, more or less

Parcel A19
410+91.46 to 411+11.66 L
Temporary Easement containing
158 sq ft, more or less

Parcel A16
406+75.33 to 407+61.33 R
Temporary Easement containing
958 sq ft, more or less

Parcel A17
407+61.19 to 409+06.31 R
Temporary Easement containing
1710 sq ft, more or less

Parcel 10
409+06.09 to 415+53.88 R
Temporary Easement containing
18561 sq ft, more or less

Plot Scale - 1:40
Plotted From - TRSF12144
File - U:\rdprj\mody06\09406.dgn

STATE OF SOUTH DAKOTA	PROJECT	SHEET	TOTAL SHEETS
	NH-CR 0034(193)403	B48	B146

Plotting Date: 08/16/2024

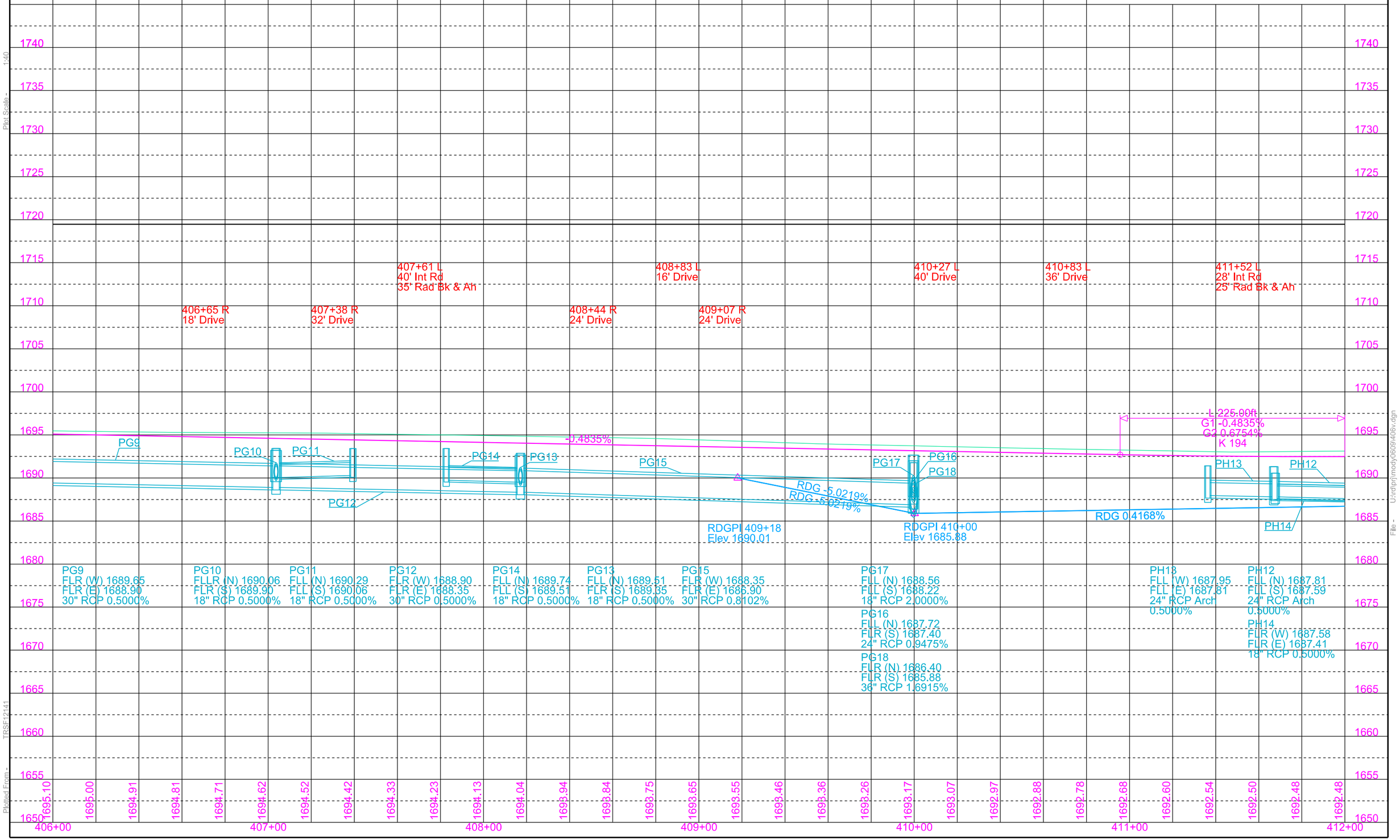

Plot Scale - 1:40

Plotted From - TRSF12141

File - U:\ralph\mody0609\4dev.dgn

STATE OF SOUTH DAKOTA	PROJECT	SHEET	TOTAL SHEETS
	NH-CR 0034(193)402	B49	B146

Plotting Date: 09/12/2024 Revised 09/12/2024 AR

Remove Drop Inlets at the following locations:
412+29-23' L
415+52-31' R
415+61-23' L

412+13
Take Out 30"-54' RCP Arch
(Incidental Work, Grading)

412+07.91-47.52' L to
412+07.91-20.63' L
Install 36" - 16' RCP Arch
& 1 Flared End
(Between Inlet and
Drop Inlet)

412+07.91-20.63' L to
412+07.91-20.63' R
Install 36" - 36' RCP Arch
(Between Drop Inlets)

412+29-23' L to 412+29-35' L
Take Out 30"-10' RCP Arch
(Incidental Work, Grading)

412+29-23' L to 412+30-34' R
Take Out 30"-57' RCP Arch
(Incidental Work, Grading)

412+46.99-47.15' L to
412+46.99-18.17' L
Install 36" - 20' RCP Arch
& 1 Flared end
(Between Drop Inlet
and Inlet)

412+46.99-18.17' L to
412+46.99-18.17' R
Install 36" - 32' RCP Arch
(Between Drop Inlets)

412+29-23' L to
415+61-23' L
Take Out 30" - 332' RCP
(Incidental Work, Grading)

Install Type S Drop Inlet Base and Type S
Precast Lid at the following locations:
412+07.91-20.63' L (7'x11')
412+07-91-20.63' R (4'x11')

415+61-24' L to 415+52-31' R
Take Out 18"-52' RCP Arch
(Incidental Work, Grading)

415+79.54-18.17' L to
415+79.54-18.17' R
Install 18" - 34' RCP
(Between Drop Inlets)

Install Type B Drop Inlet with 6" Concrete
collar and Type B Frame & Grate at the
following locations:
412+46.99-18.17' L (3'x5.5')
412+46.99-18.17' R (5.5'x5.5')
415+79.54-18.17' L (2'x3')
415+79.54-18.17' R (4'x3')
418+02.29-18.17' L (2'x3')
418+02.29-18.17' R (2'x3')

Install Type C Drop Inlet and
Type C Frame & Grate at the
following location:
415+62.54-41.68' R (3'x4')

418+02.29-18.17' L to
418+02.29-18.17' R
Install 18" - 34' RCP
(Between Drop Inlets)

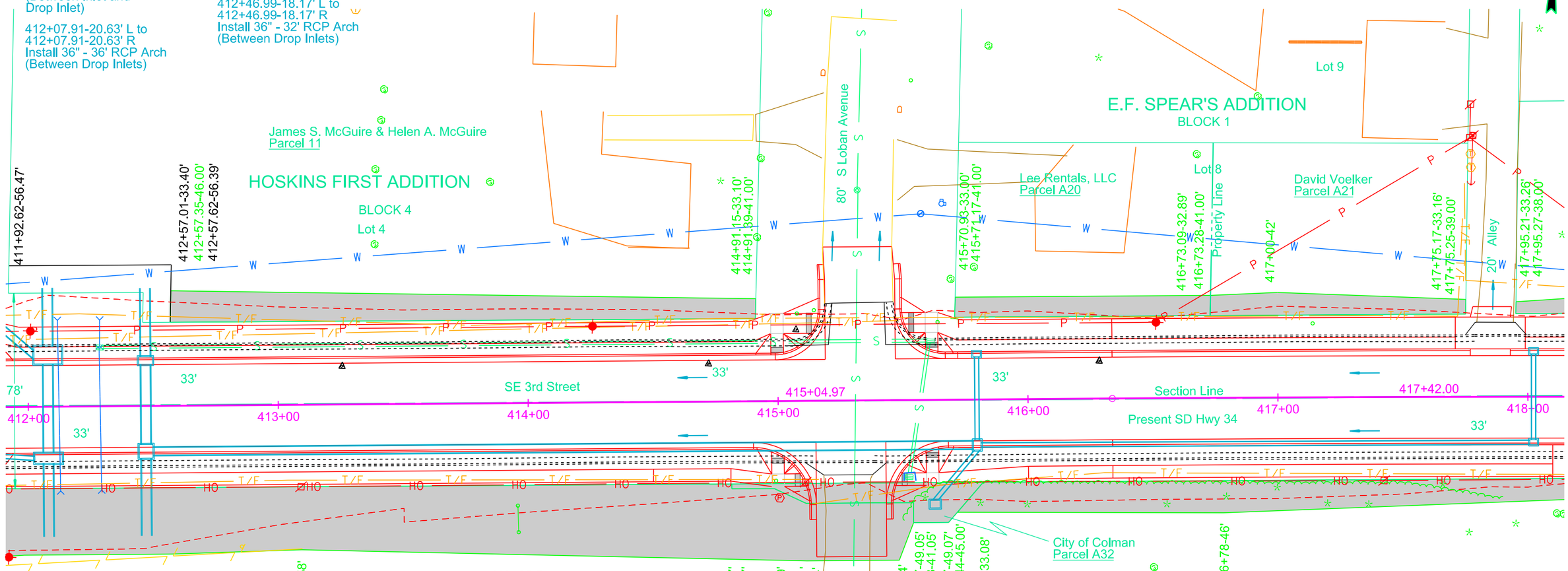

City of Colman
Parcel 10
Parcel 10A
Easement Released
Parcel 10B
Omitted

412+07.91-20.63' R to
412+07.91-49.29' R
Install 36" - 18' RCP Arch
& 1 Sloped End
(Between Drop Inlet
and Outlet)

412+46.99-18.17' R to
412+46.99-49.20' R
Install 36" - 20' RCP Arch
& 1 Sloped End
(Between Drop Inlet
and Outlet)

412+46.99-18.17' R to
415+79.54-18.17' R
Install 30" - 328' RCP Arch
(Between Drop Inlets)

415+62.54-41.68' R to
415+79.54-18.17' R
Install 18" - 26' RCP
(Between Drop Inlets)

415+79.54-18.17' R to
418+02.29-18.17' R
Install 18" - 220' RCP
(Between Drop Inlets)

Parcel 11
412+57.01 to 414+91.39 L
Temporary Easement containing
0.1 ac 2401 sq ft, more or less

Parcel A20
415+70.93 to 416+73.28 L
Temporary Easement containing
0.1 ac (823 sq ft), more or less

Parcel A21
416+73.09 to 417+75.25 L
Temporary Easement containing
0.1 ac (793 sq ft), more or less

Parcel A32
414+81.24 to 415+81.89 R
Temporary Easement containing
0.1 ac (777 sq ft), more or less

Parcel 10
415+71.44 to 419+94.48 R
Temporary Easement containing
0.1 ac (4557 sq ft), more or less

Plot Scale - 1:40
Plotted From - TRSF12144
File - U:\rdp\prj\moody\60094\12.dgn

STATE OF SOUTH DAKOTA	PROJECT	SHEET	TOTAL SHEETS
	NH-CR 0034(193)403	B50	B146

Plotting Date: 08/16/2024 Revised 03/06/2024 AR

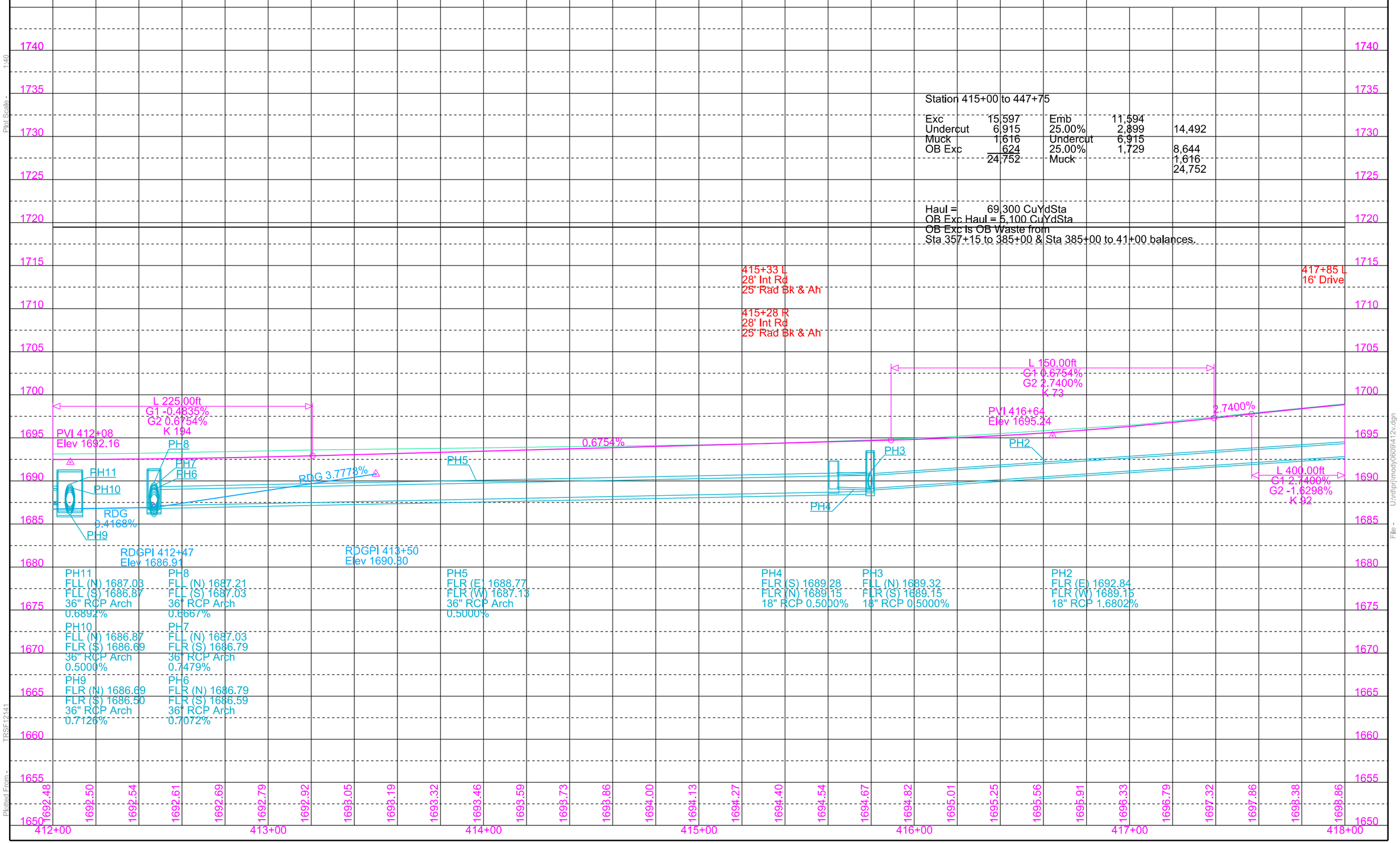

STATE OF SOUTH DAKOTA	PROJECT	SHEET	TOTAL SHEETS
	NH-CR 0034(193)402	B51	B146

Plotting Date: 09/12/2024 Revised 09/12/2024 AR

422+48-55' R
Install 18" - 54' CMP Arch
& 2 Safety Ends

422+44-39' R
Take Out 18" - 70' CMP
(Incidental Work, Grading)

422+11.62-22.67' L to
422+11.62-22.67' R
Install 18" -44' RCP
(Between Drop Inlets)

424+05-37' R
Take Out 18" - 70' CMP
(Incidental Work, Grading)

Install Type B Drop Inlet with 6" Concrete collar and Type B Frame & Grate at the following locations:

422+11.62-22.67' L	(2'x3')
422+11.62-22.67' R	(2'x3')
423+84.96-22.67' R	(2'x3')

421+94 R
Refurbish
single mailbox

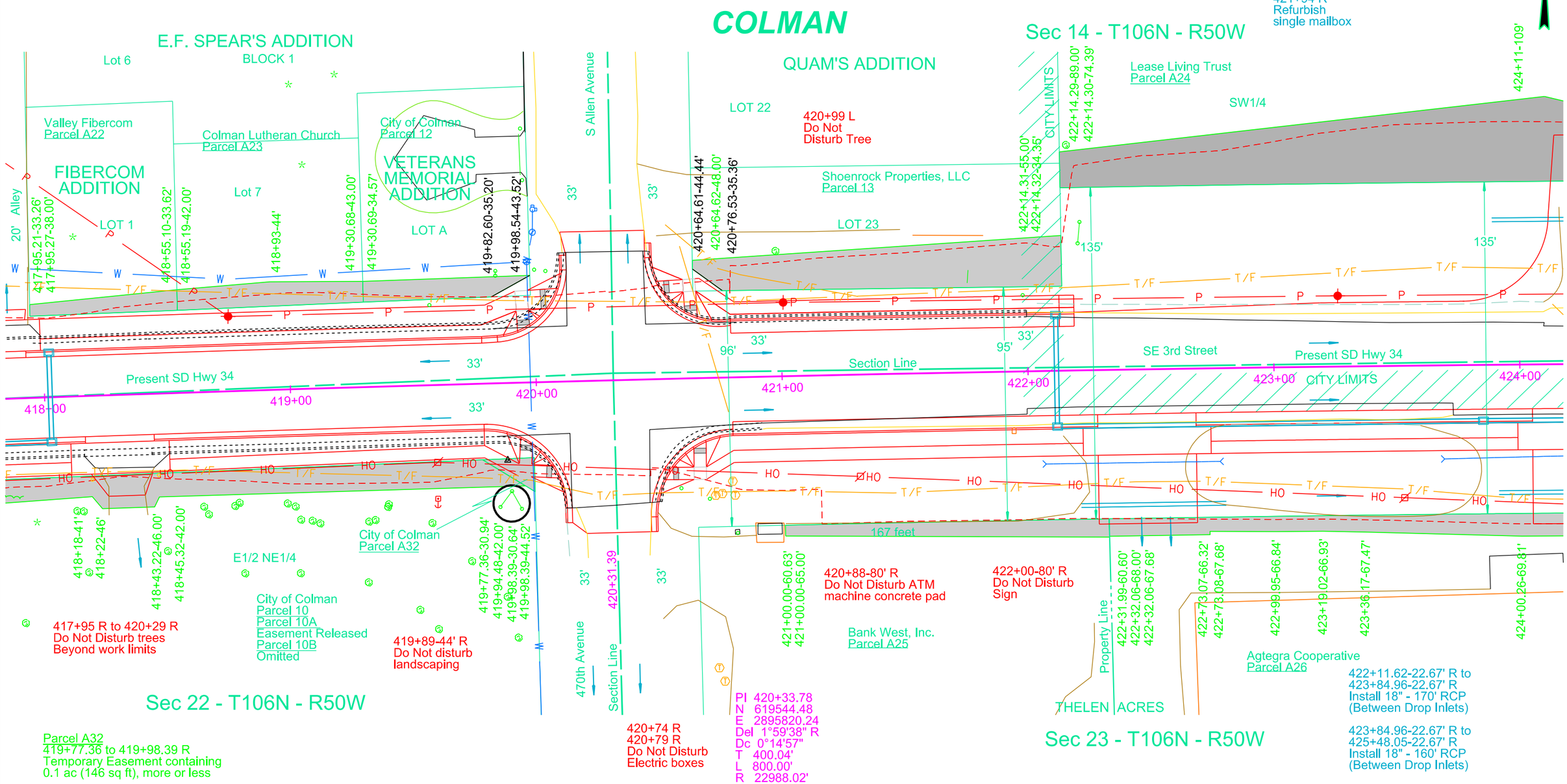

Parcel A32
419+77.36 to 419+98.39 R
Temporary Easement containing
0.1 ac (146 sq ft), more or less

Parcel A22
417+95.21 to 418+55.19 L
Temporary Easement containing
393 sq ft, more or less

Parcel A23
418+55.10 to 419+30.69 L
Temporary Easement containing
694 sq ft, more or less

Parcel 12
419+30.68 to 419+98.54 L
Temporary Easement containing
497 sq ft, more or less

Parcel 13
420+64.61 to 422+14.32 L
Temporary Easement containing
2433 sq ft, more or less

Parcel A24
422+14.29 to 425+50.00 L
Temporary Easement containing
0.2 ac (7226 sq ft), more or less

Parcel A25
421+00.00 to 422+32.06 R
Temporary Easement containing
0.1 ac (783 sq ft), more or less

Parcel A26
422+31.99 to 426+18.77 R
Temporary Easement containing
0.1 ac (3518 sq ft), more or less

Plot Scale - 1:40
Plotted From - TRSF12144
File - U:\drafp\jmoody\0609\418.dgn

STATE OF SOUTH DAKOTA	PROJECT	SHEET	TOTAL SHEETS
	NH-CR 0034(193)403	B52	B146

Plotting Date: 08/16/2024

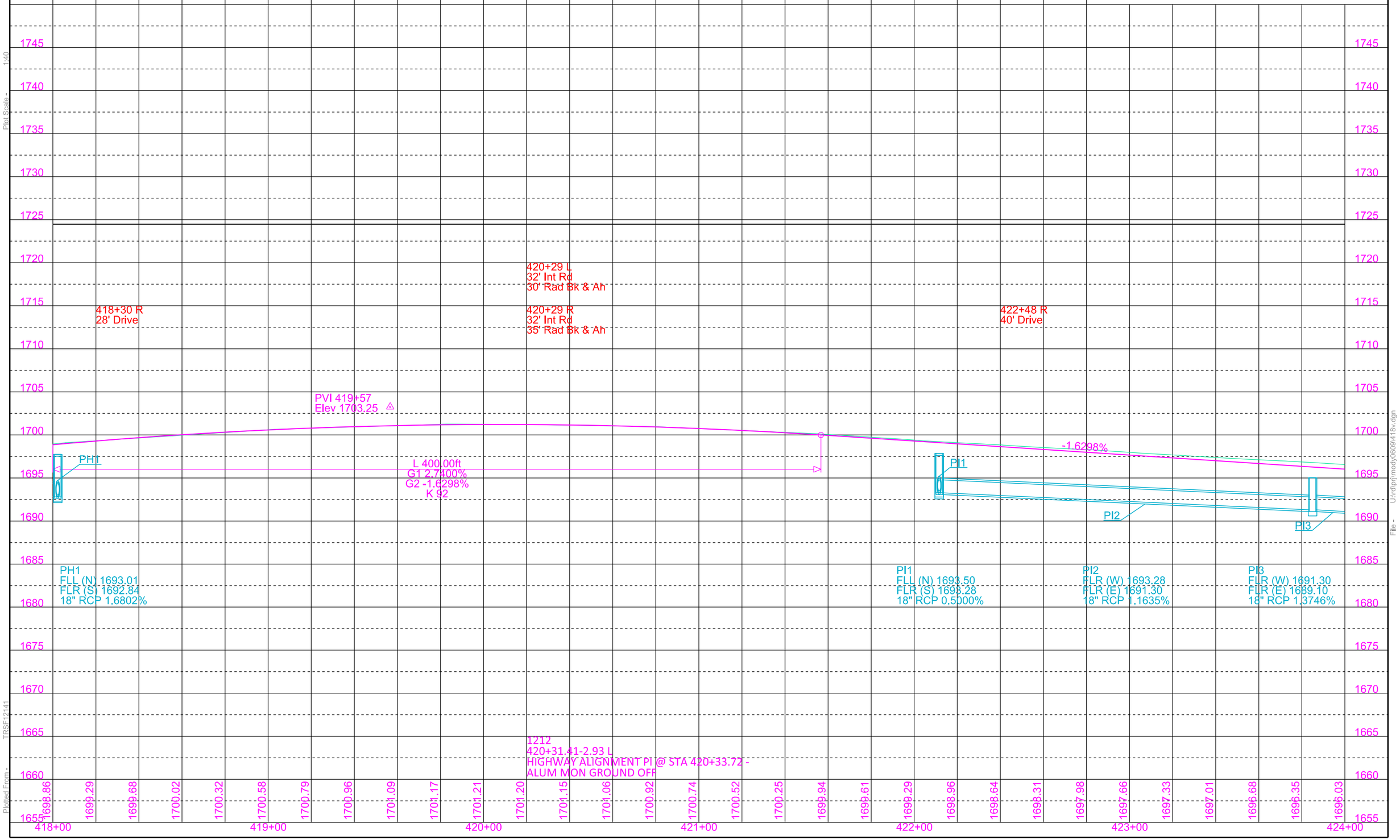

Plot Scale - 1:40

Plotted From - TPSF12141

File - U:\drlp\jmoody0609\418v.dgn

STATE OF SOUTH DAKOTA	PROJECT	SHEET	TOTAL SHEETS
	NH-CR 0034(193)402	B53	B146

Plotting Date: 08/16/2024 Revised 07/17/2024 AR

424+25-55' R
Install 18" - 66' CMP
& 2 Safety Ends

424+28-59' L
Install 18" - 76' CMP
& 2 Safety Ends

425+48.05-22.67' R to
427+67.08-22.67' R
Install 18" - 214' RCP
(Between Drop Inlets)

426+25-43' R
Take Out 18"-66' CMP
(Incidental Work, Grading)

426+14-56' R
Install 18" - 60' CMP
& 2 Safety Ends

427+40-44' R
Take Out 18"-94' CMP
(Incidental Work, Grading)

427+67.08-22.66' R to
430+45.00-22.67' R
Install 24"-274' RCP
(Between Drop Inlets)

428+24-63' R
Install 18" - 80' CMP
& 2 Safety Ends

428+40.52-95.50' R to
428+43.27-85.36' R
Take out 1-36" CMP
Section and 1 CMP End

428+43-100' R to
428+75-85' R
Install Twin 36" - 28' CMP
& 2-50° Elbows
& 2 Sloped Ends
(w/ Controlled Density Fill
Spaced 8.25' Center to Center)

428+46.05-94.85' R to
428+48.57-86.68' R
Take out 1-36" CMP
Sections and 1 CMP End

Install Type B Drop Inlet with 6" Concrete collar and Type B Frame & Grate at the following locations:
425+48.05-22.67' R (2'x3')
427+67.08-22.67' R (3'x4')

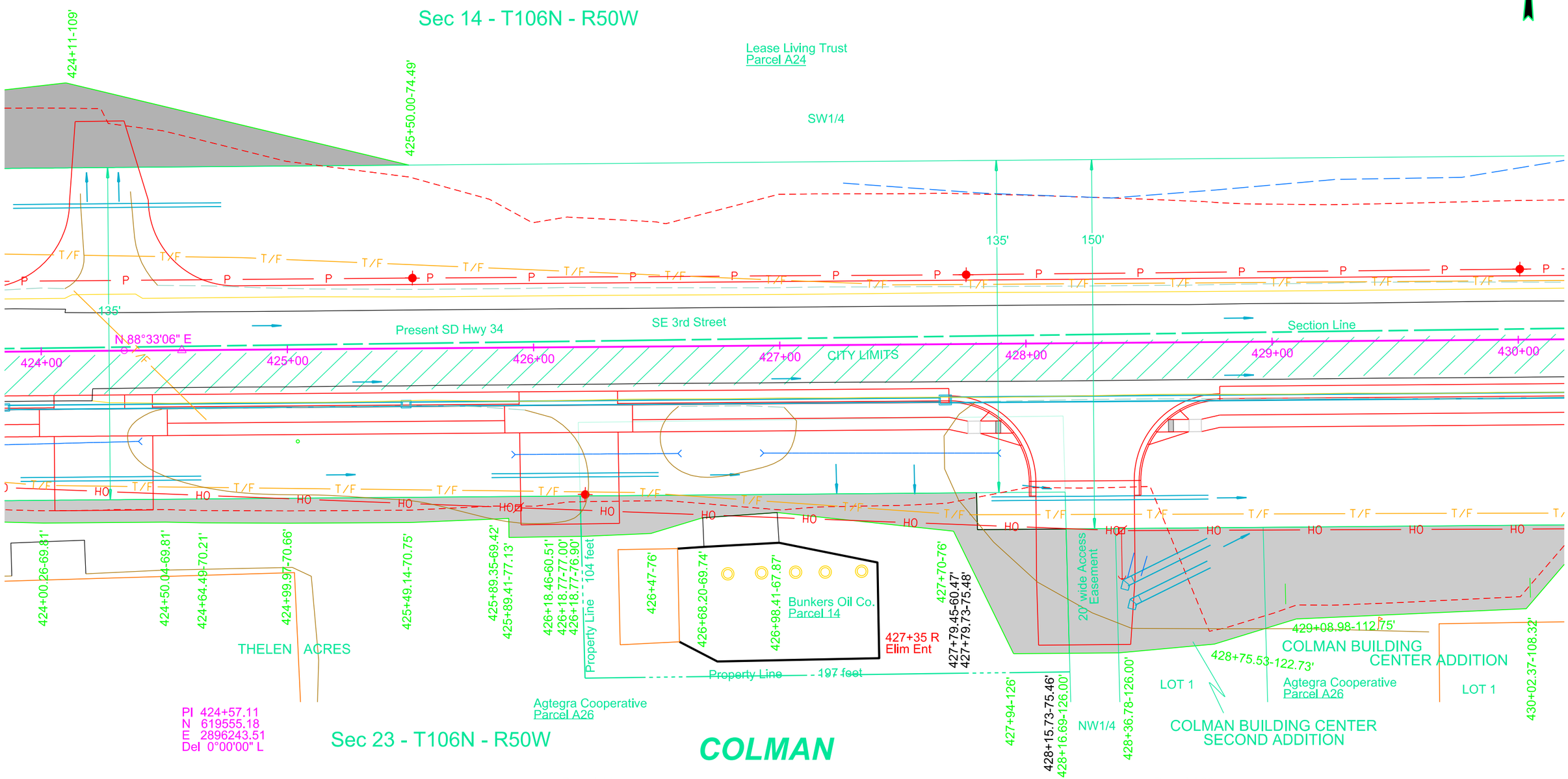

Parcel 14
426+18.46 to 428+16.69 R
Temporary Easement containing
0.1 ac (3667 sq ft), more or less

Parcel A26
428+15.73 to 430+31.96 R
Temporary Easement containing
0.2 ac (8178 sq ft), more or less

Plot Scale - 1:40
Plotted From - TRSF12141
File - U:\radpr\jmoody0609\424.dgn

STATE OF SOUTH DAKOTA	PROJECT	SHEET	TOTAL SHEETS
	NH-CR 0034(193)403	B54	B146

Plotting Date: 08/16/2024

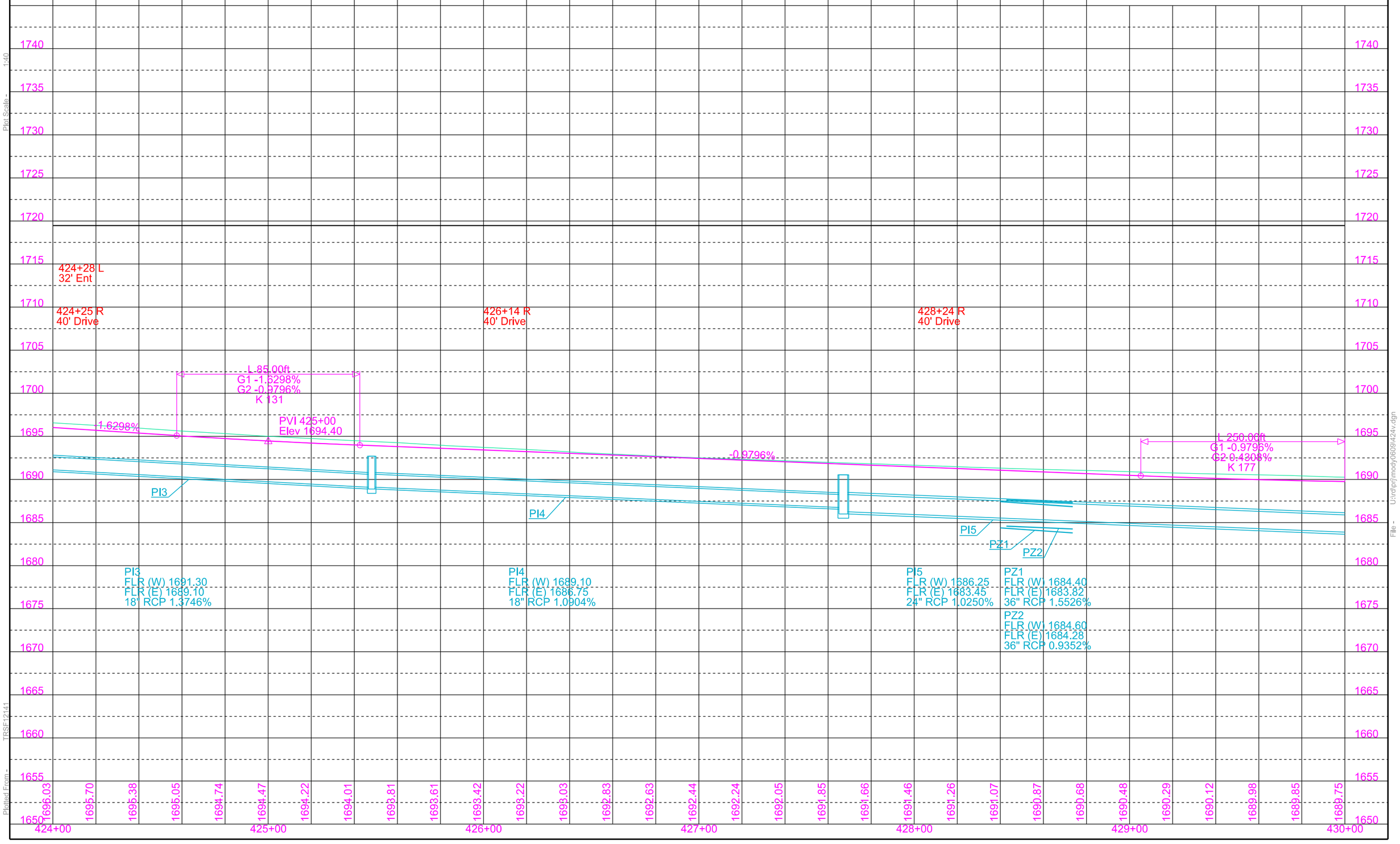

Plot Scale - 1:40

Plotted From - TRSF12141

File - U:\drafprj\moody\6091424v.dgn

STATE OF SOUTH DAKOTA	PROJECT	SHEET	TOTAL SHEETS
	NH-CR 0034(193)402	B55	B146

Plotting Date: 08/16/2024 Revised 07/16/2024 AR

430+82
Take out 36" - 86' RCP
(Incidental Work, Grading)

430+45.00-22.67' R to
430+45.00-47.08' L
Install 42" - 62' RCP & 1 Flared End
(Between Drop Inlet and Outlet)

430+80.00-25.13' R to
430+80.00-48.17' L
Install 42" - 62' RCP
& 1 Flared End
(Between Drop Inlet
and Outlet)

433+75-84' R
Retain Drop Inlet

434+21-83' R
Retain Drop Inlet

434+00- 48' R
Take Out 24"-74' RCP
(Incidental Work, Grading)

433+72.91-62.69' R
Install 5'x5' Junction Box
with Type A7 Manhole
Frame and Lid and 2-2"
Adjustable Rings in
Center of Cover

433+44-58' R to 433+75-84' R
Take Out 24" - 38' RCP
(Incidental Work, Grading)

Install Type S Drop Inlet Base
and Type S Precast Lid at the
following locations:
430+80.00-25.13' R (7'x11')

Install Type B Drop Inlet with 6" Concrete
collar and Type B Frame & Grate at the
following locations:
430+45.00-22.67' R (3'x5.5')
431+14.83-24.13' R (4'x4')
432+21.82-34.67' R (3'x4')
433+41.67-34.67' R (2'x3')
434+50.10-22.67' R (2'x3')
436+09.88-22.67' R (2'x3')

Sec 14 - T106N - R50W

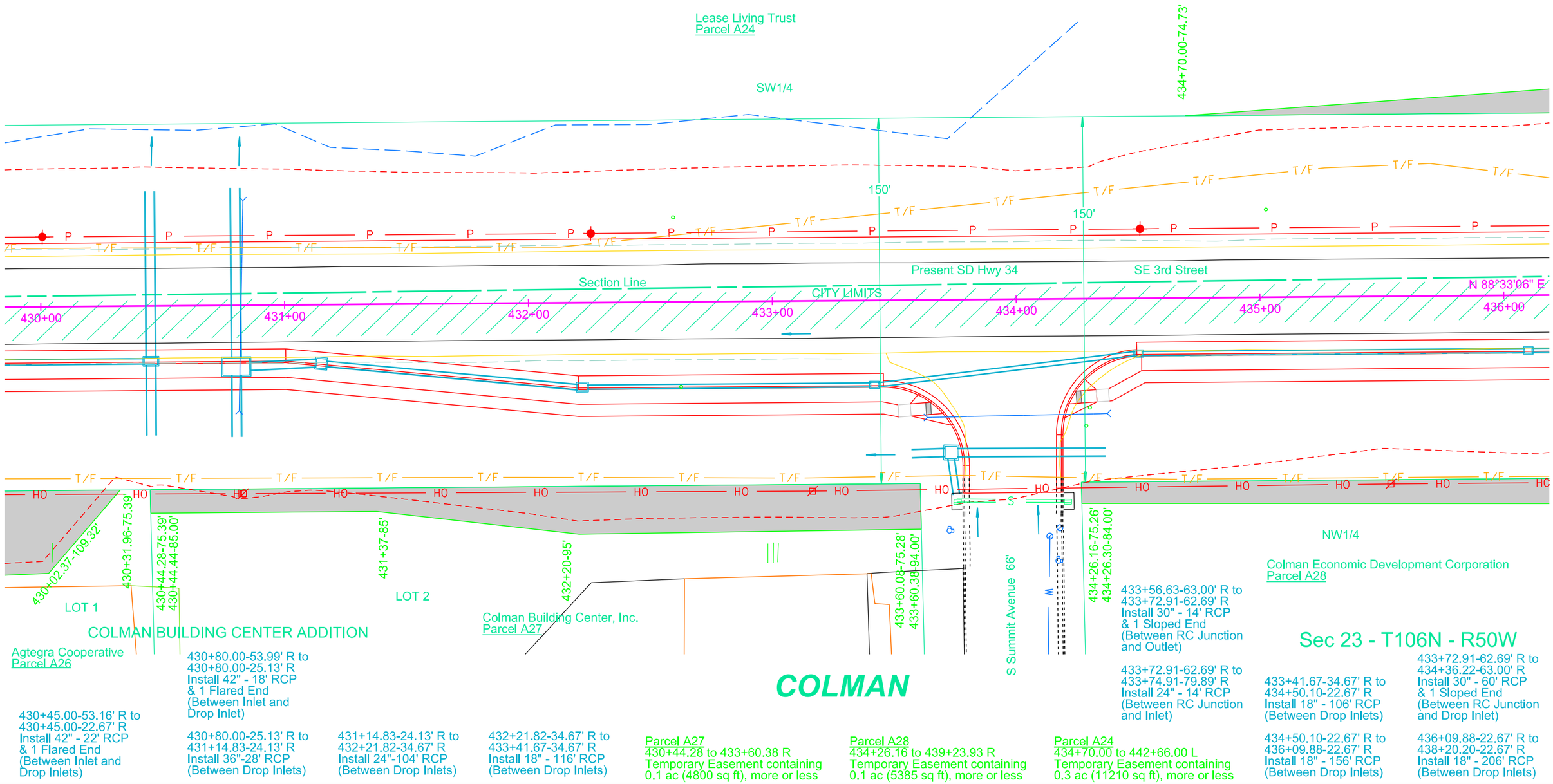

430+45.00-53.16' R to
430+45.00-22.67' R
Install 42" - 22' RCP
& 1 Flared End
(Between Inlet and
Drop Inlets)

430+80.00-53.99' R to
430+80.00-25.13' R
Install 42" - 18' RCP
& 1 Flared End
(Between Inlet and
Drop Inlet)

430+80.00-25.13' R to
431+14.83-24.13' R
Install 36"-28' RCP
(Between Drop Inlets)

431+14.83-24.13' R to
432+21.82-34.67' R
Install 24"-104' RCP
(Between Drop Inlets)

432+21.82-34.67' R to
433+41.67-34.67' R
Install 18" - 116' RCP
(Between Drop Inlets)

Parcel A27
430+44.28 to 433+60.38 R
Temporary Easement containing
0.1 ac (4800 sq ft), more or less

Parcel A28
434+26.16 to 439+23.93 R
Temporary Easement containing
0.1 ac (5385 sq ft), more or less

Parcel A24
434+70.00 to 442+66.00 L
Temporary Easement containing
0.3 ac (11210 sq ft), more or less

433+56.63-63.00' R to
433+72.91-62.69' R
Install 30" - 14' RCP
& 1 Sloped End
(Between RC Junction
and Outlet)

433+72.91-62.69' R to
433+74.91-79.89' R
Install 24" - 14' RCP
(Between RC Junction
and Inlet)

433+41.67-34.67' R to
434+50.10-22.67' R
Install 18" - 106' RCP
(Between Drop Inlets)

434+50.10-22.67' R to
436+09.88-22.67' R
Install 18" - 156' RCP
(Between Drop Inlets)

433+72.91-62.69' R to
434+36.22-63.00' R
Install 30" - 60' RCP
& 1 Sloped End
(Between RC Junction
and Drop Inlet)

436+09.88-22.67' R to
438+20.20-22.67' R
Install 18" - 206' RCP
(Between Drop Inlets)

Plot Scale - 1:40
Plotted From - TRSF12141
File - U:\rdr\jmoody\6091430.dgn

STATE OF SOUTH DAKOTA	PROJECT	SHEET	TOTAL SHEETS
	NH-CR 0034(193)403	B56	B146

Plotting Date: 08/16/2024 Revised 09/19/2023 AR

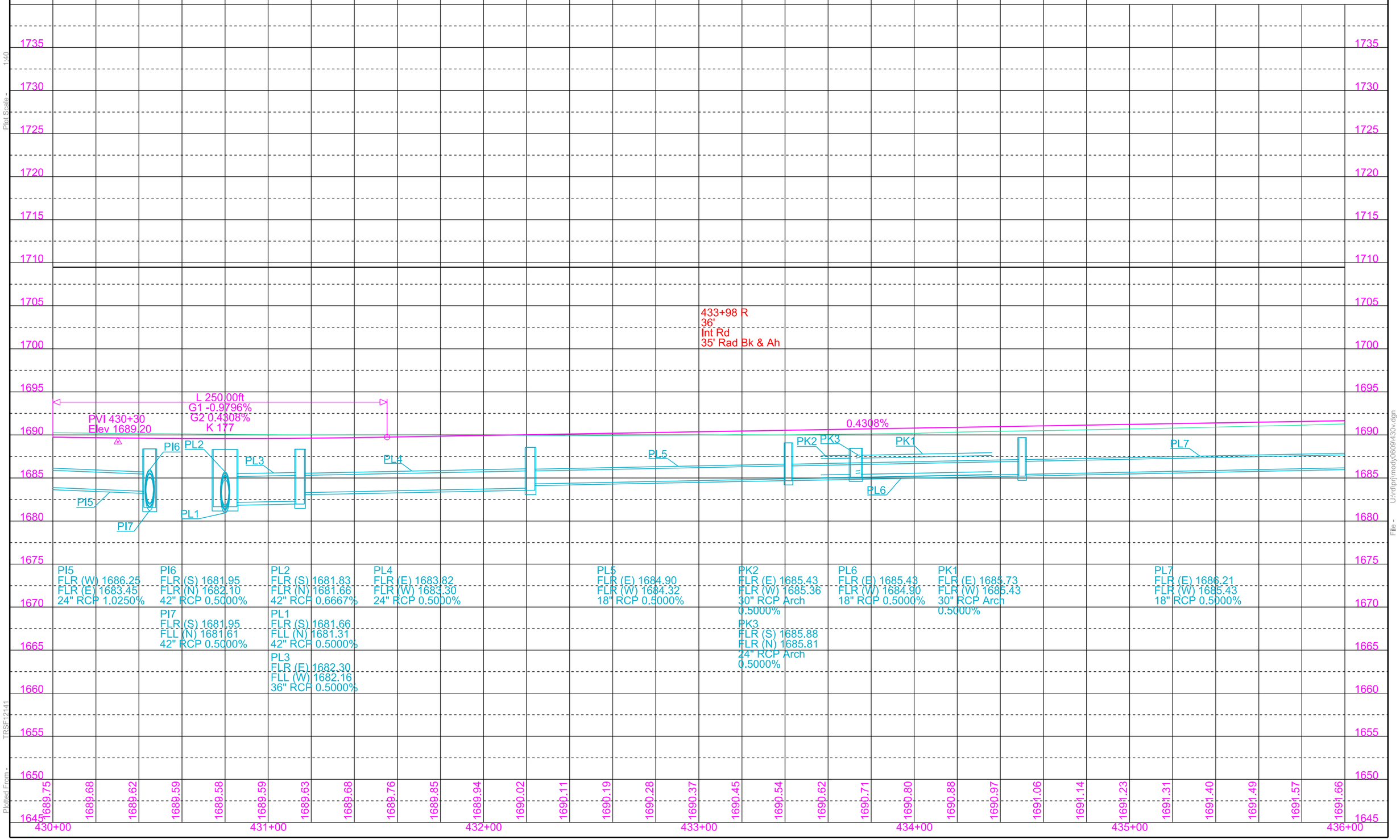

Plot Scale - 1:40

Plotted From - TRSF12141

File - U:\rdp\jmoody0609\430v.dgn

STATE OF SOUTH DAKOTA	PROJECT	SHEET	TOTAL SHEETS
	NH-CR 0034(193)402	B57	B146

Plotting Date: 08/16/2024 Revised 07/17/2024 AR

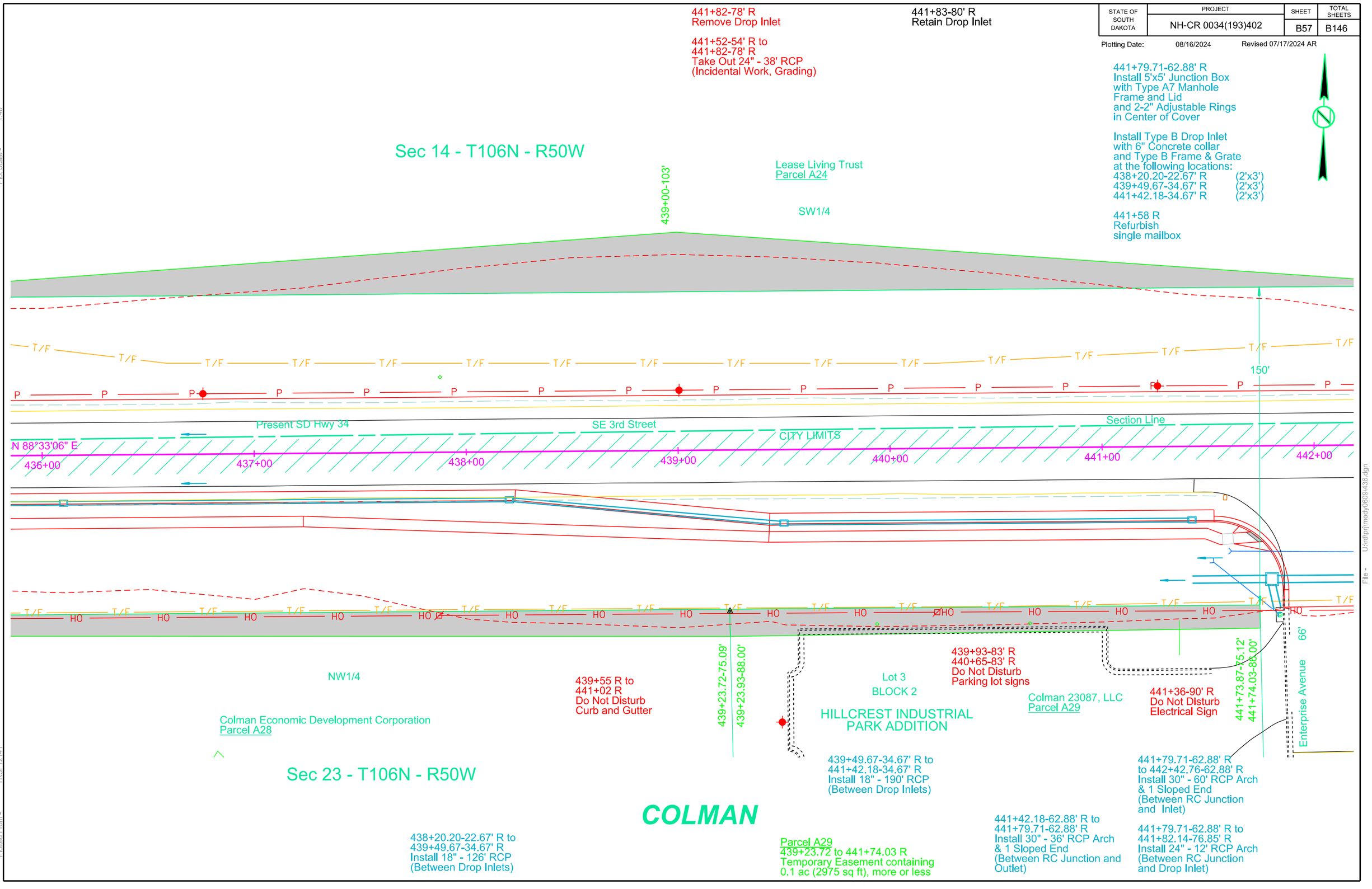

Plot Scale - 1:40

Plotted From - TRSF12141

File - U:\rdprj\modyo0609\436.dgn

STATE OF SOUTH DAKOTA	PROJECT	SHEET	TOTAL SHEETS
	NH-CR 0034(193)403	B58	B146

Plotting Date: 08/16/2024

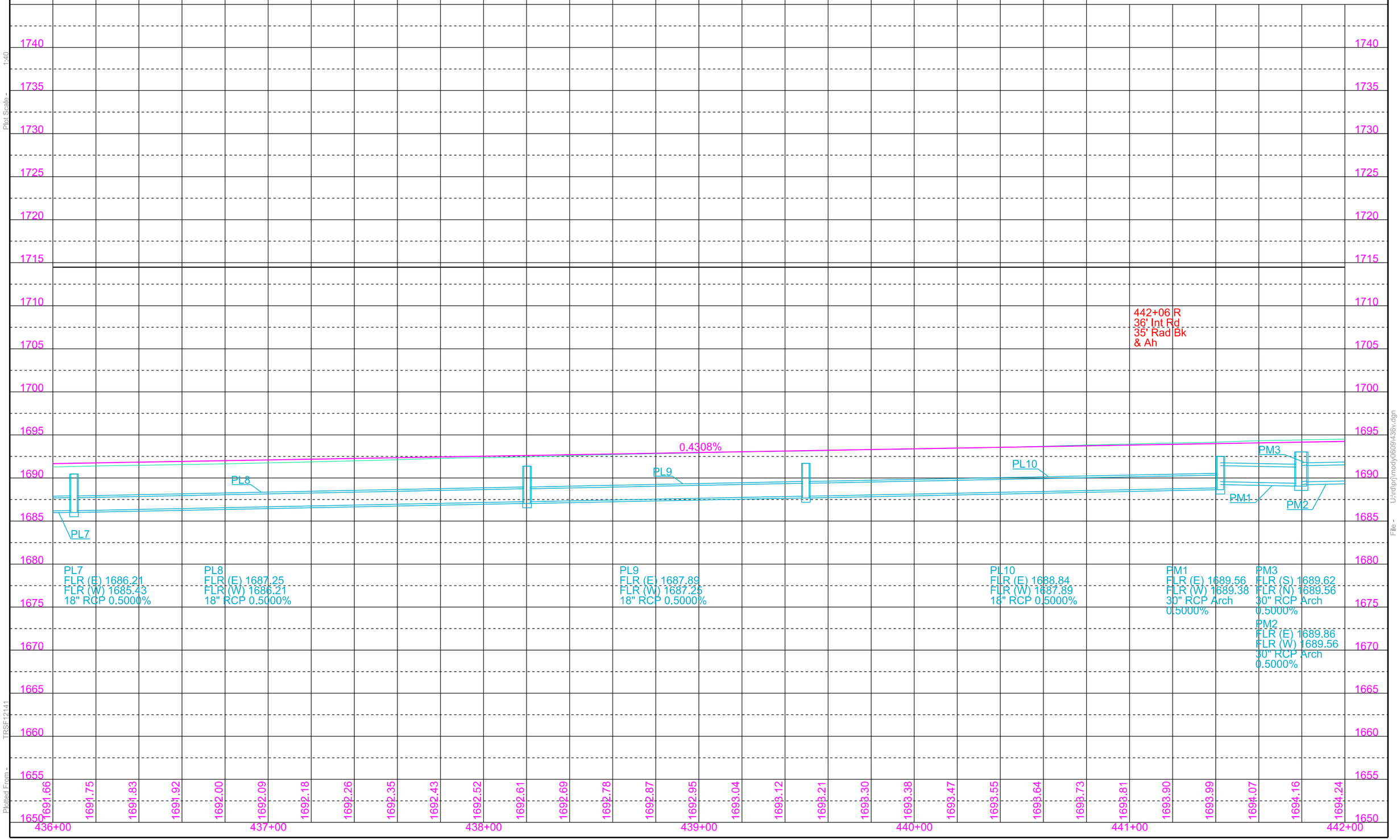

Plot Scale - 1:40

Plotted From - TPSF12141

File - U:\ralph\mody0609\436v.dgn

STATE OF SOUTH DAKOTA	PROJECT	SHEET	TOTAL SHEETS
	NH-CR 0034(193)402	B59	B146

Plotting Date: 08/16/2024 Revised 07/17/2024 AR

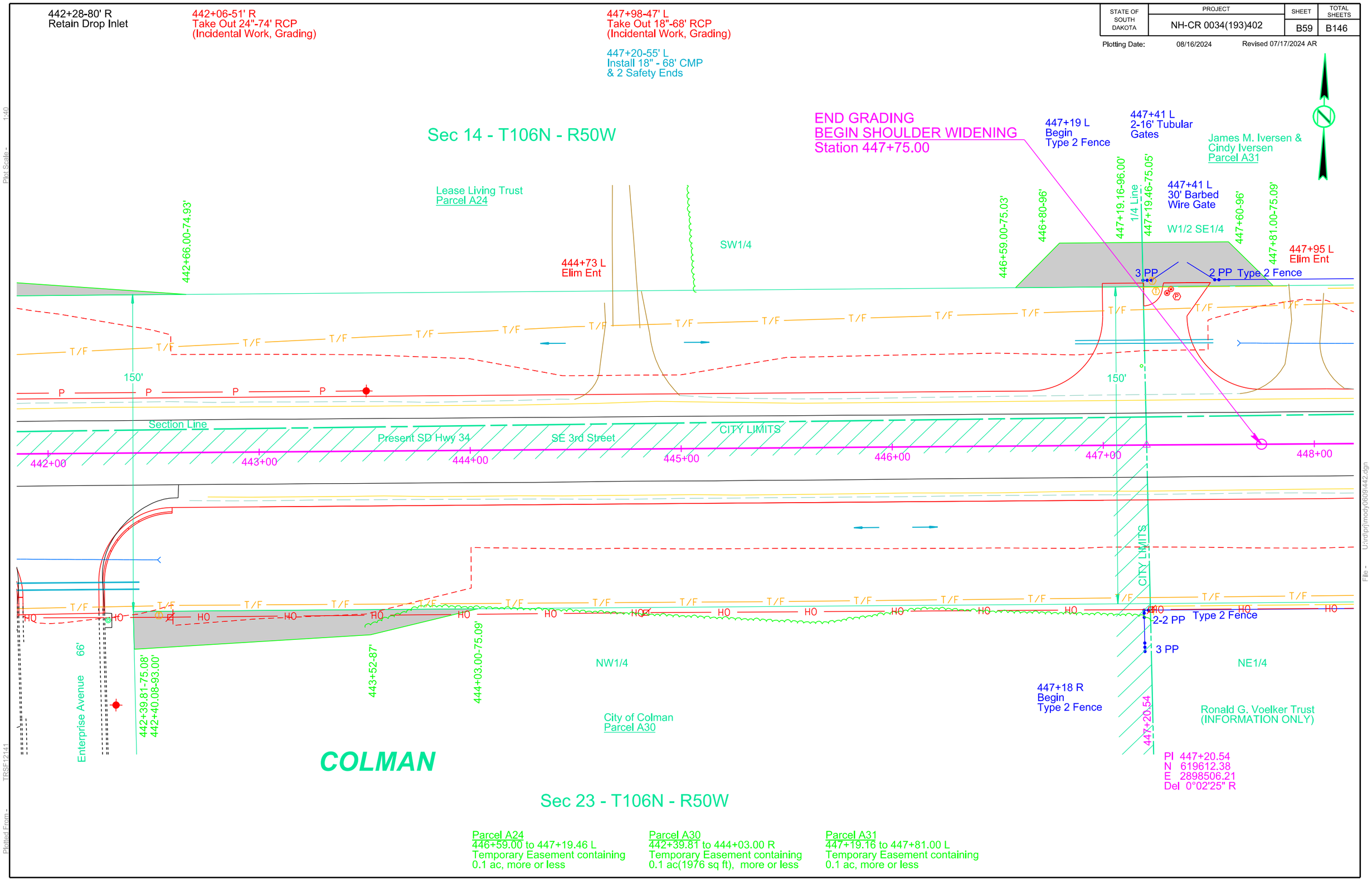

Parcel A24
446+59.00 to 447+19.46 L
Temporary Easement containing
0.1 ac, more or less

Parcel A30
442+39.81 to 444+03.00 R
Temporary Easement containing
0.1 ac(1976 sq ft), more or less

Parcel A31
447+19.16 to 447+81.00 L
Temporary Easement containing
0.1 ac, more or less

Plot Scale - 1:40
Plotted From - TRSF12141
File - U:\rdprj\mody0609\442.dgn

STATE OF SOUTH DAKOTA	PROJECT	SHEET	TOTAL SHEETS
	NH-CR 0034(193)403	B60	B146

Plotting Date: 08/16/2024 Revised 07/17/2024 AR

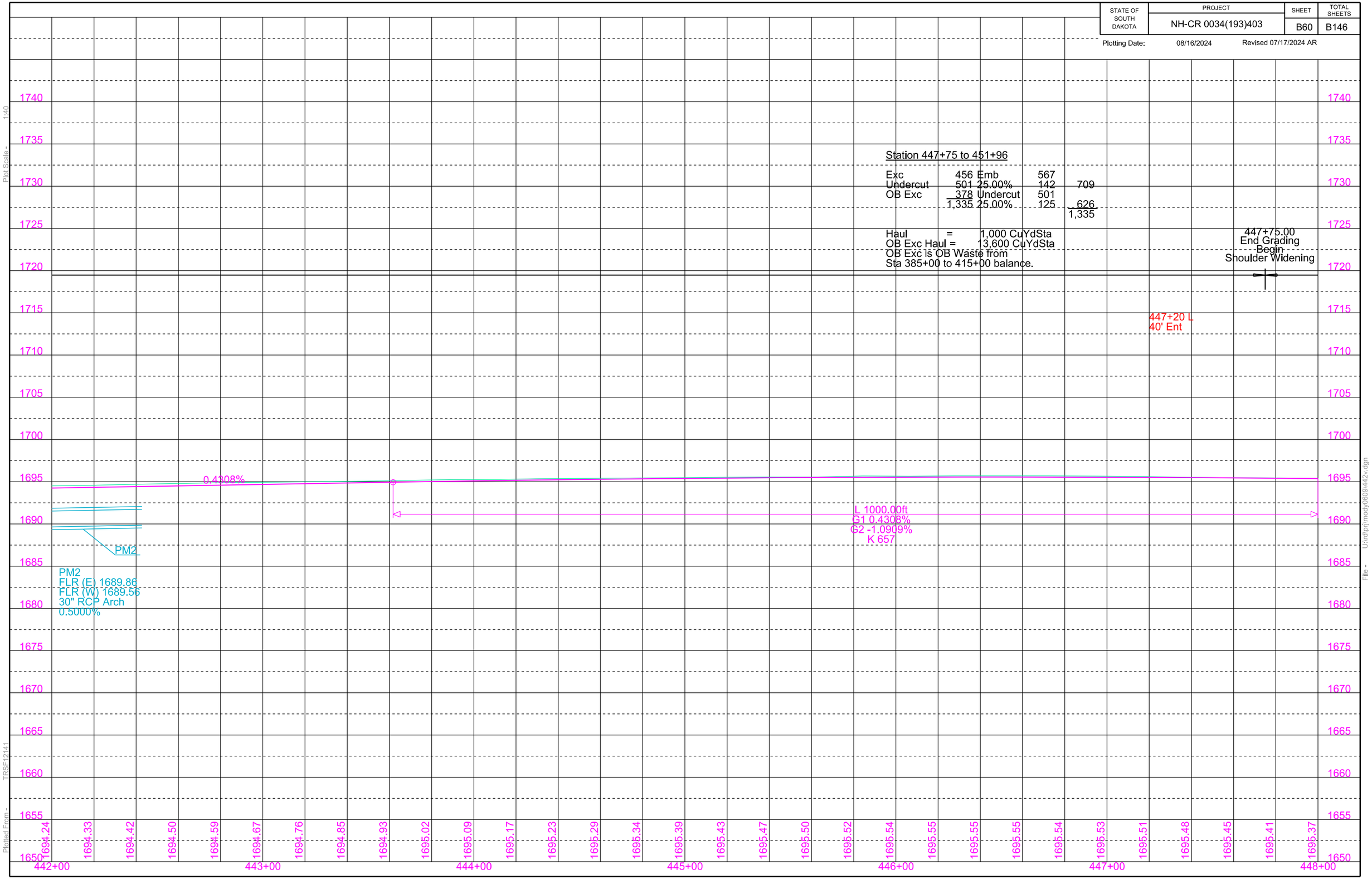

Plot Scale - 1:40

Plotted From - TRSF12141

File - U:\rdep\mody0609\442v.dgn

STATE OF SOUTH DAKOTA	PROJECT	SHEET	TOTAL SHEETS
	NH-CR 0034(193)402	B61	B146

Plotting Date: 08/16/2024

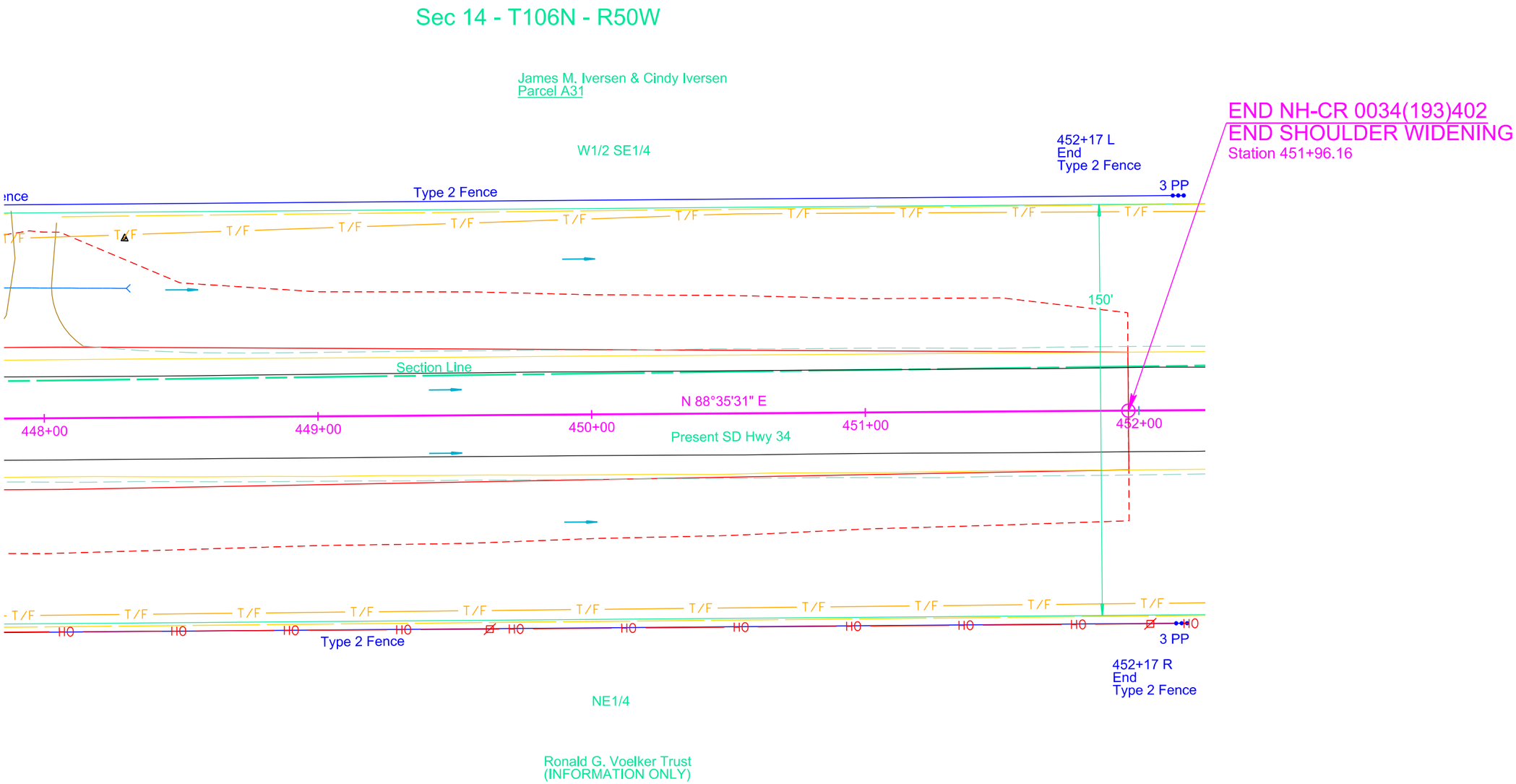

Plot Scale - 1:40

Plotted From - TRSF12141

File - U:\rdprj\moody\60914\48.dgn

STATE OF SOUTH DAKOTA	PROJECT	SHEET	TOTAL SHEETS
	NH-CR 0034(193)403	B62	B146

Plotting Date: 08/16/2024 Revised 07/17/2024 AR

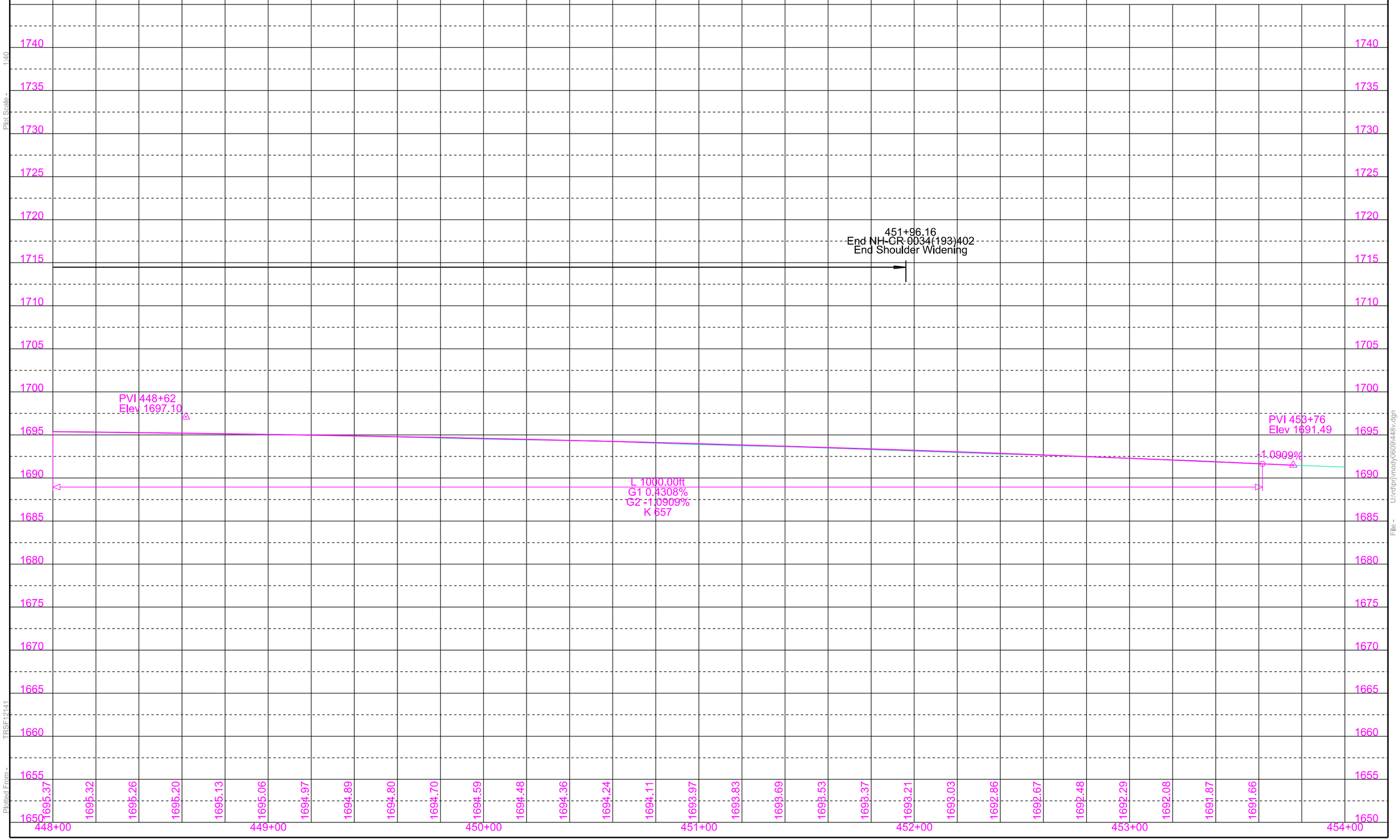

PAVEMENT REMOVAL LAYOUT

STATE OF SOUTH DAKOTA	PROJECT	SHEET	TOTAL SHEETS
	NH-CR 0034(193)402	B63	B146

Plotting Date: 08/16/2024

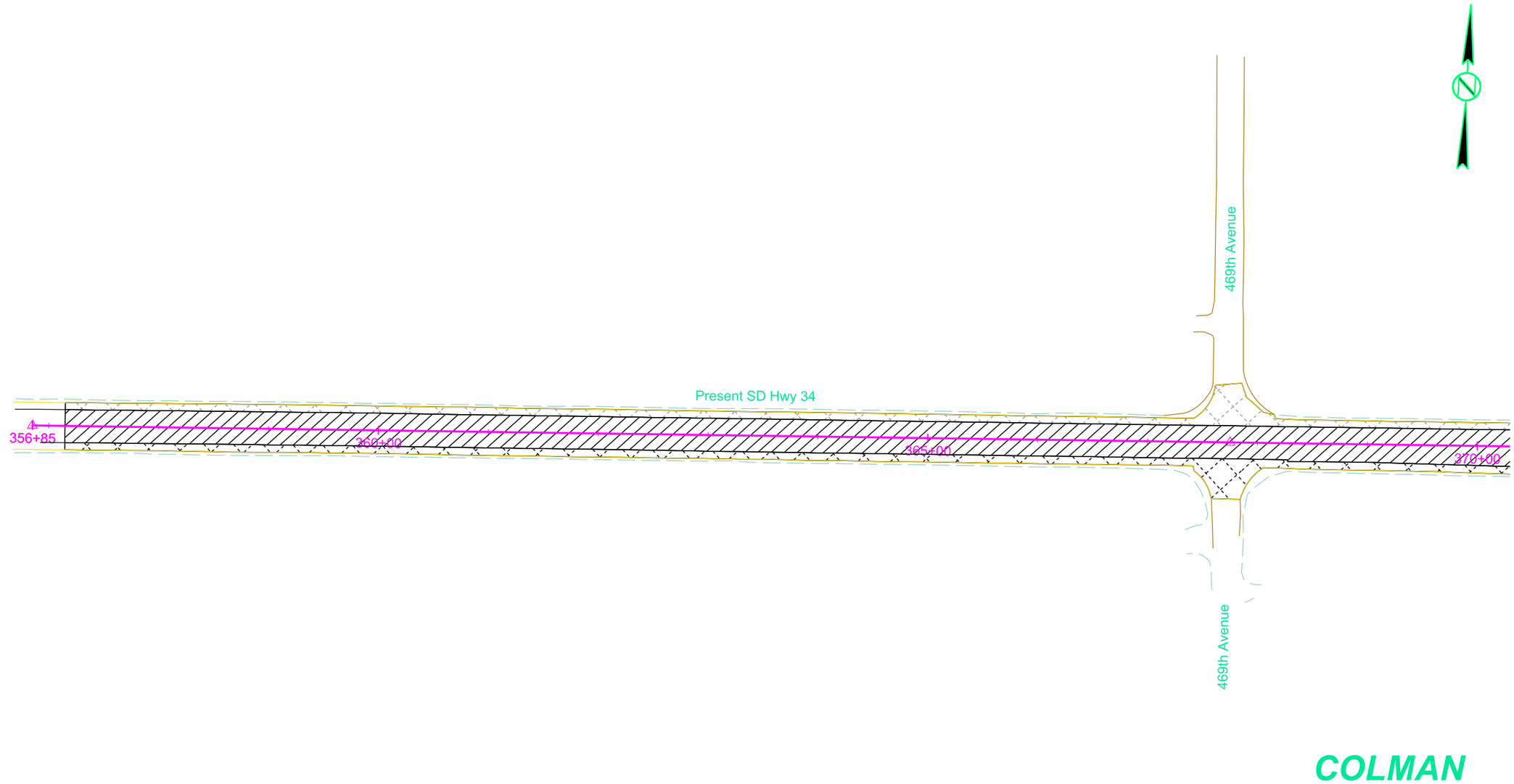

Plot Scale - 1:100

Plotted From - TRSF12141

File - U:\trafprj\mody\0609\356pr.dgn

PAVEMENT REMOVAL LAYOUT

STATE OF SOUTH DAKOTA	PROJECT	SHEET	TOTAL SHEETS
	NH-CR 0034(193)402	B64	B146

Plotting Date: 08/16/2024

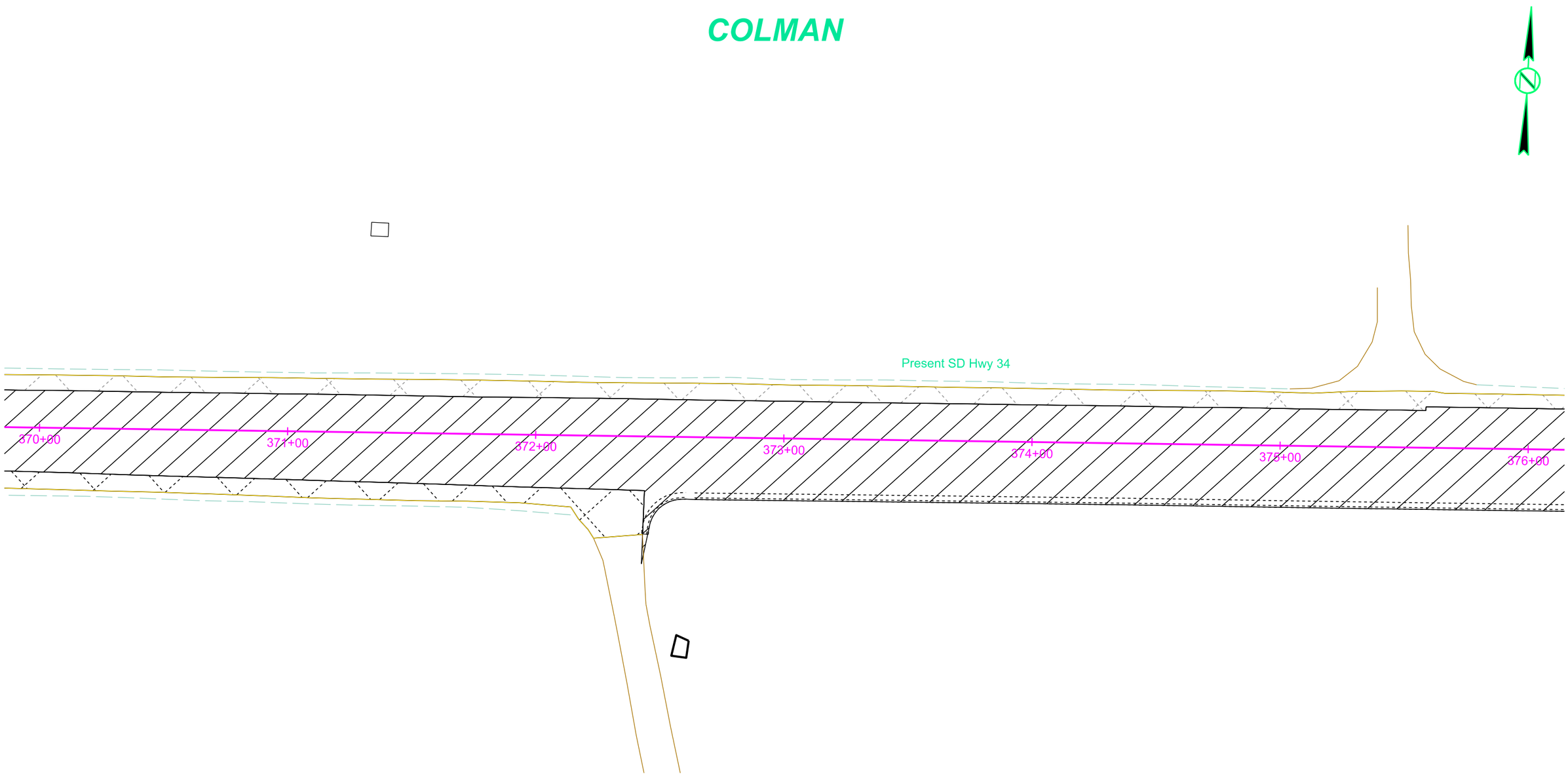

Plot Scale - 1:40

Plotted From - TRSF12141

File - U:\rdv\prj\moedy\069\37\0pr.dgn

PAVEMENT REMOVAL LAYOUT

STATE OF SOUTH DAKOTA	PROJECT	SHEET	TOTAL SHEETS
	NH-CR 0034(193)402	B65	B146

Plotting Date: 08/16/2024

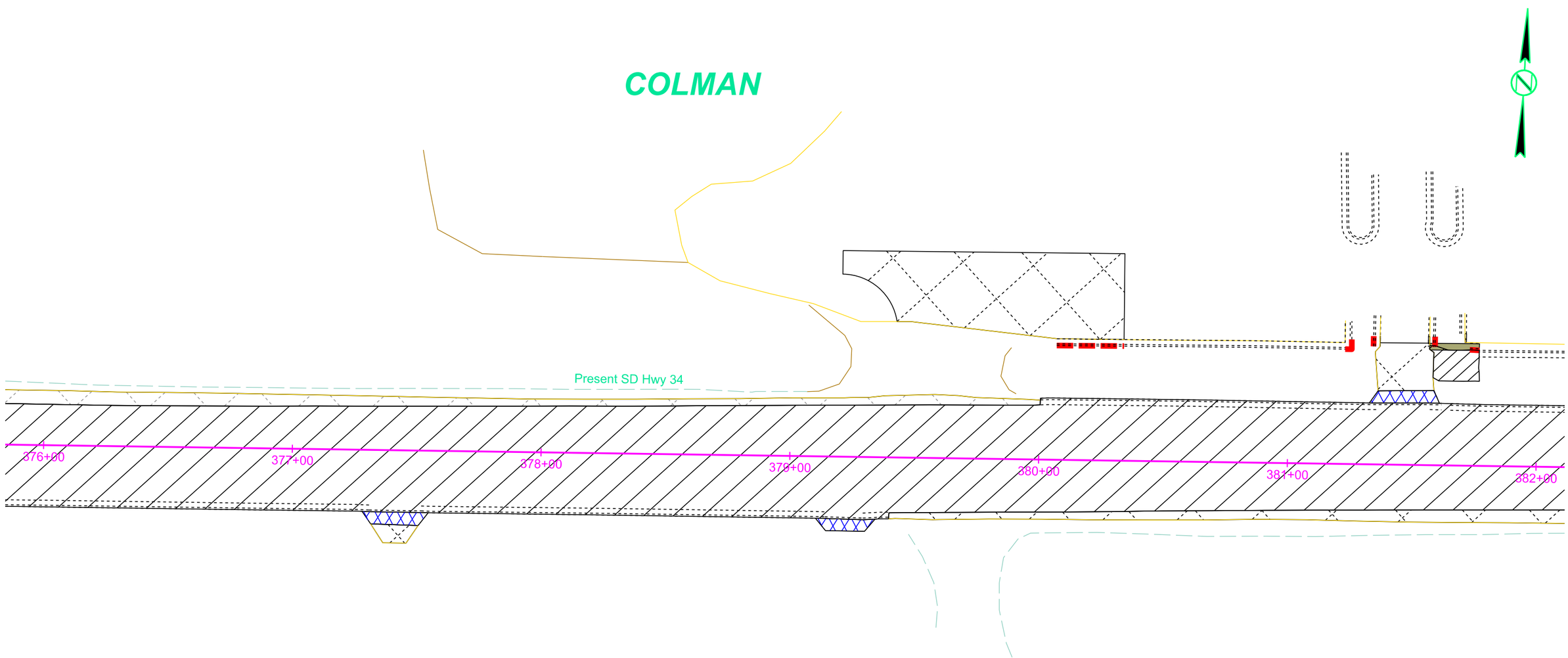

Plot Scale - 1:40

Plotted From - TRSF12141

File - U:\rdprj\moody\069\37\bpr.dgn

PAVEMENT REMOVAL LAYOUT

STATE OF SOUTH DAKOTA	PROJECT	SHEET	TOTAL SHEETS
	NH-CR 0034(193)402	B66	B146

Plotting Date: 08/16/2024

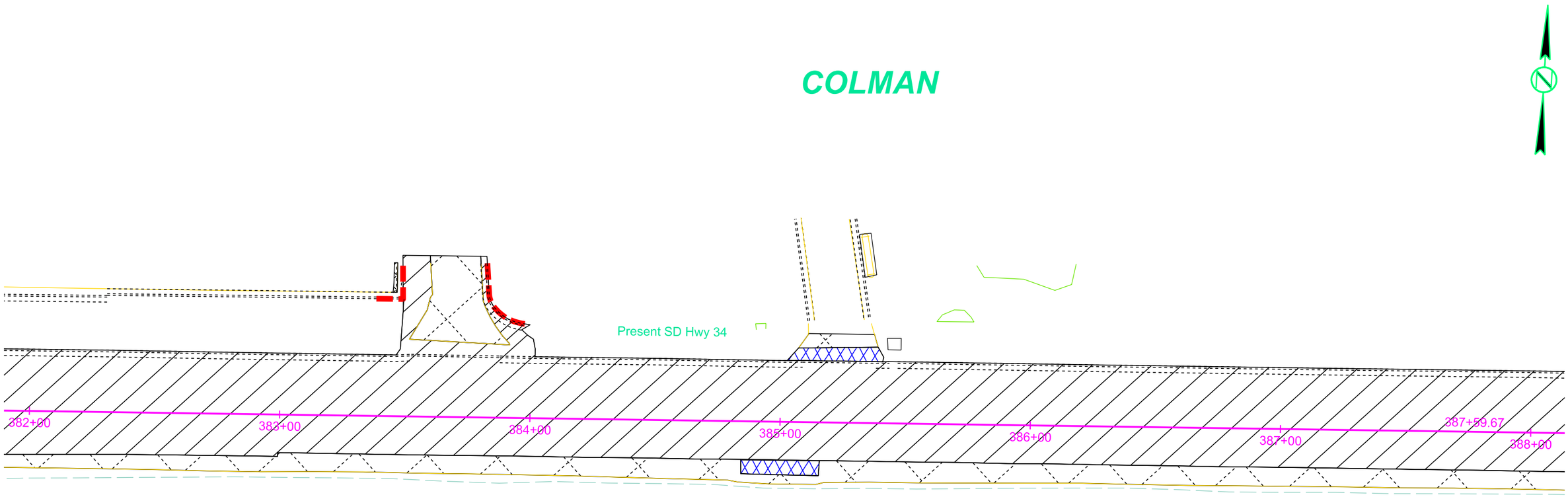

Plot Scale - 1:40
Plotted From - TRSF12141
File - U:\rdprj\mody0609\382pr.dgn

PAVEMENT REMOVAL LAYOUT

STATE OF SOUTH DAKOTA	PROJECT	SHEET	TOTAL SHEETS
	NH-CR 0034(193)402	B67	B146

Plotting Date: 08/16/2024

COLMAN

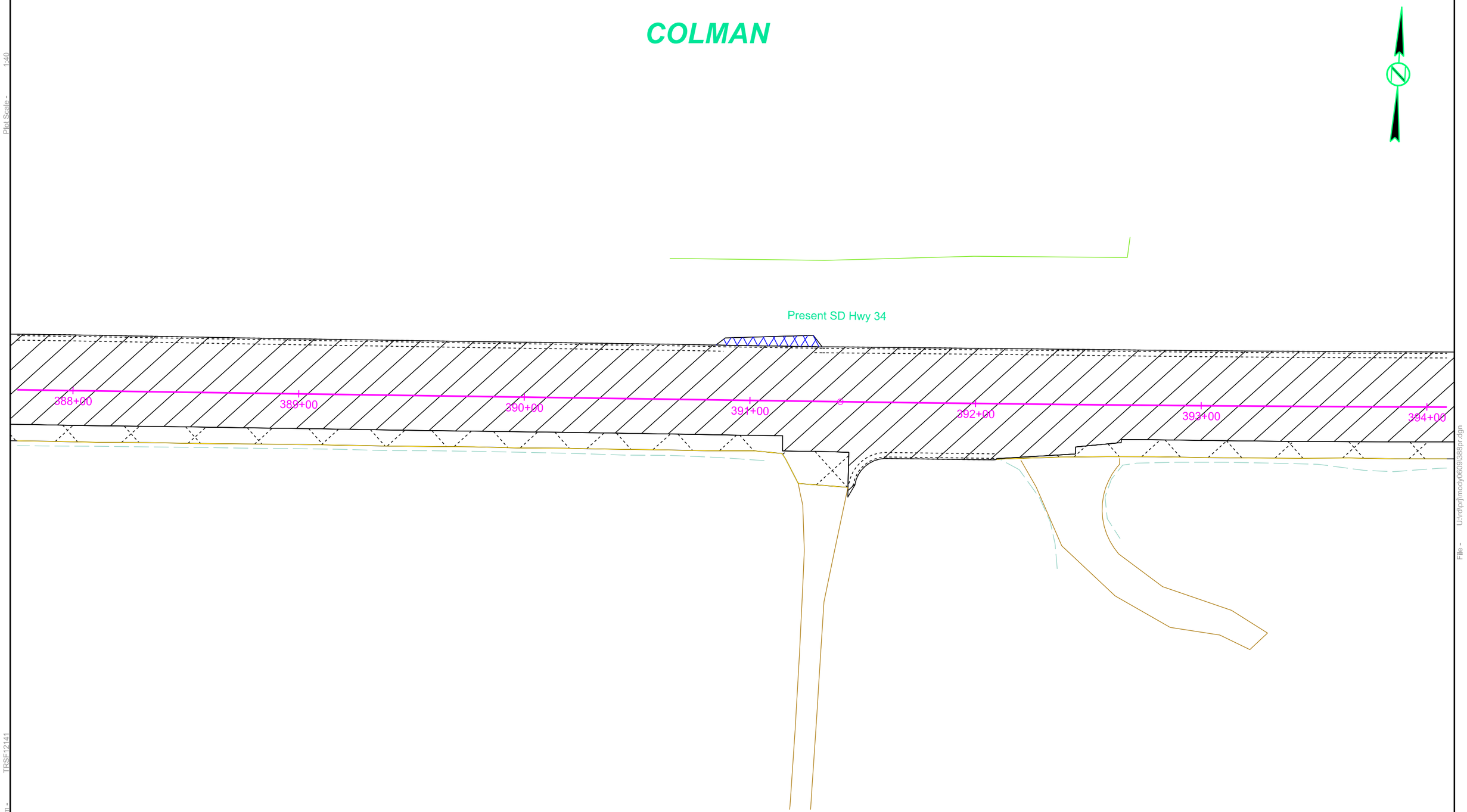

Plot Scale - 1:40

Plotted From - TRSF12141

File - U:\rdr\jmody\60913\388pr.dgn

PAVEMENT REMOVAL LAYOUT

STATE OF SOUTH DAKOTA	PROJECT	SHEET	TOTAL SHEETS
	NH-CR 0034(193)402	B68	B146

Plotting Date: 08/16/2024

COLMAN

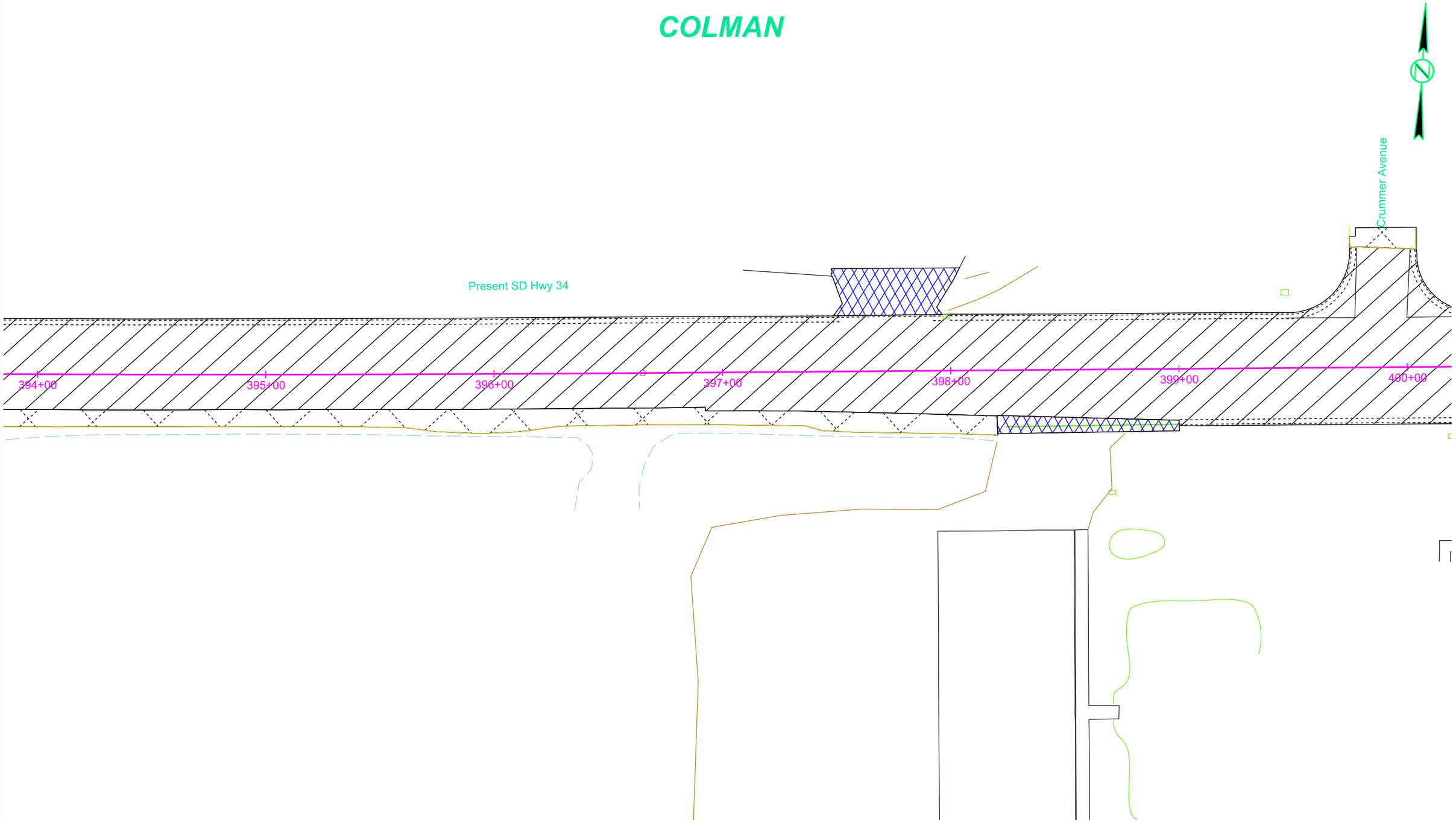

Plot Scale - 1:40

Plotted From - TRSF12141

File - U:\roi\pj\moody\0609\394pr.dgn

PAVEMENT REMOVAL LAYOUT

STATE OF SOUTH DAKOTA	PROJECT	SHEET	TOTAL SHEETS
	NH-CR 0034(193)402	B69	B146

Plotting Date: 08/16/2024

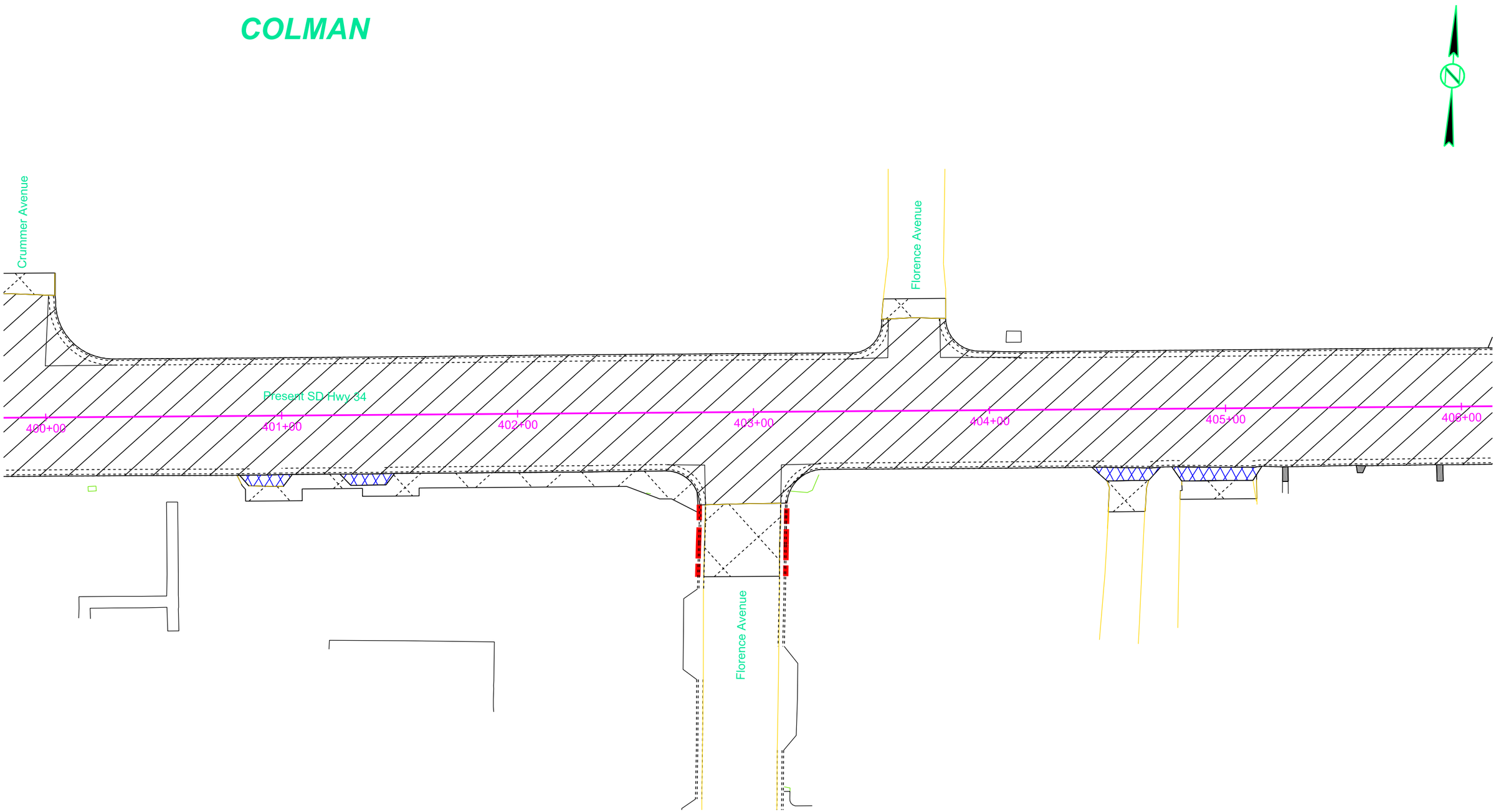

Plot Scale - 1:40

Plotted From - TRSF12141

File - U:\rdprj\moody\06094\400pr.dgn

PAVEMENT REMOVAL LAYOUT

STATE OF SOUTH DAKOTA	PROJECT	SHEET	TOTAL SHEETS
	NH-CR 0034(193)402	B70	B146

Plotting Date: 08/16/2024

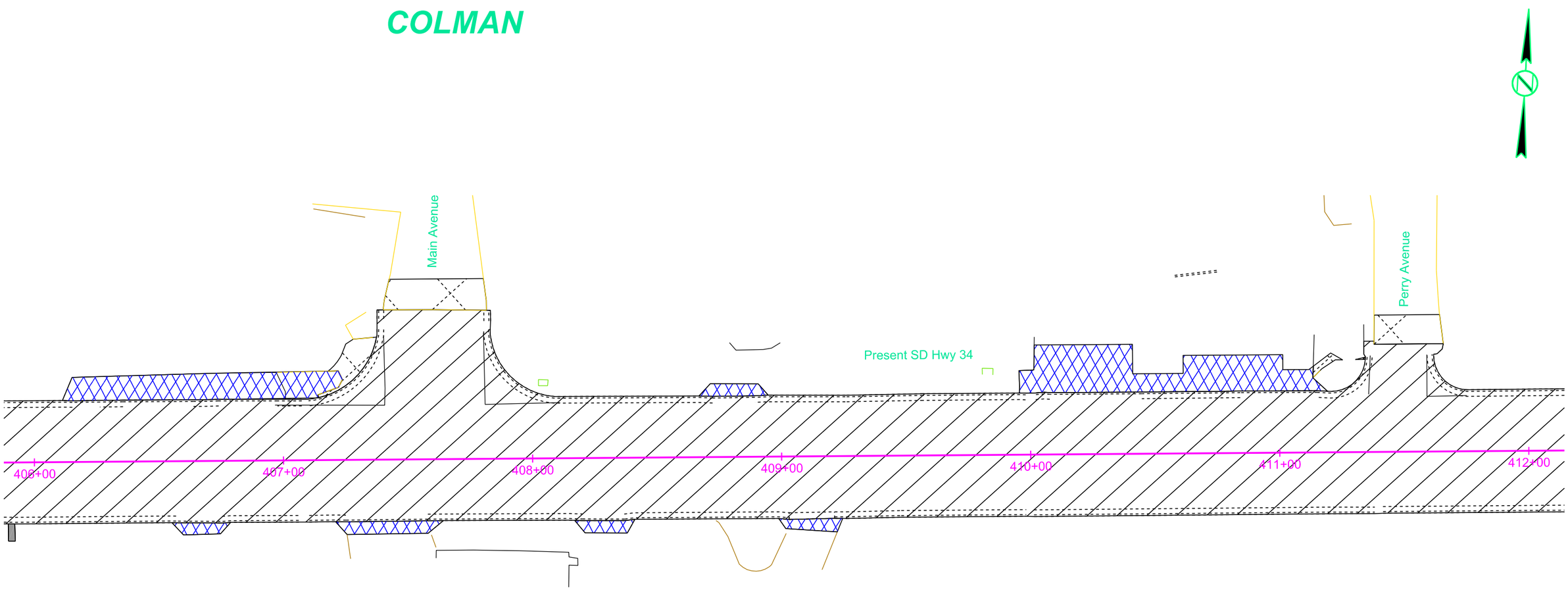

Plot Scale - 1:40

Plotted From - TRSF12141

File - U:\rdprj\mody0609\406pr.dgn

PAVEMENT REMOVAL LAYOUT

STATE OF SOUTH DAKOTA	PROJECT	SHEET	TOTAL SHEETS
	NH-CR 0034(193)402	B71	B146

Plotting Date: 08/16/2024

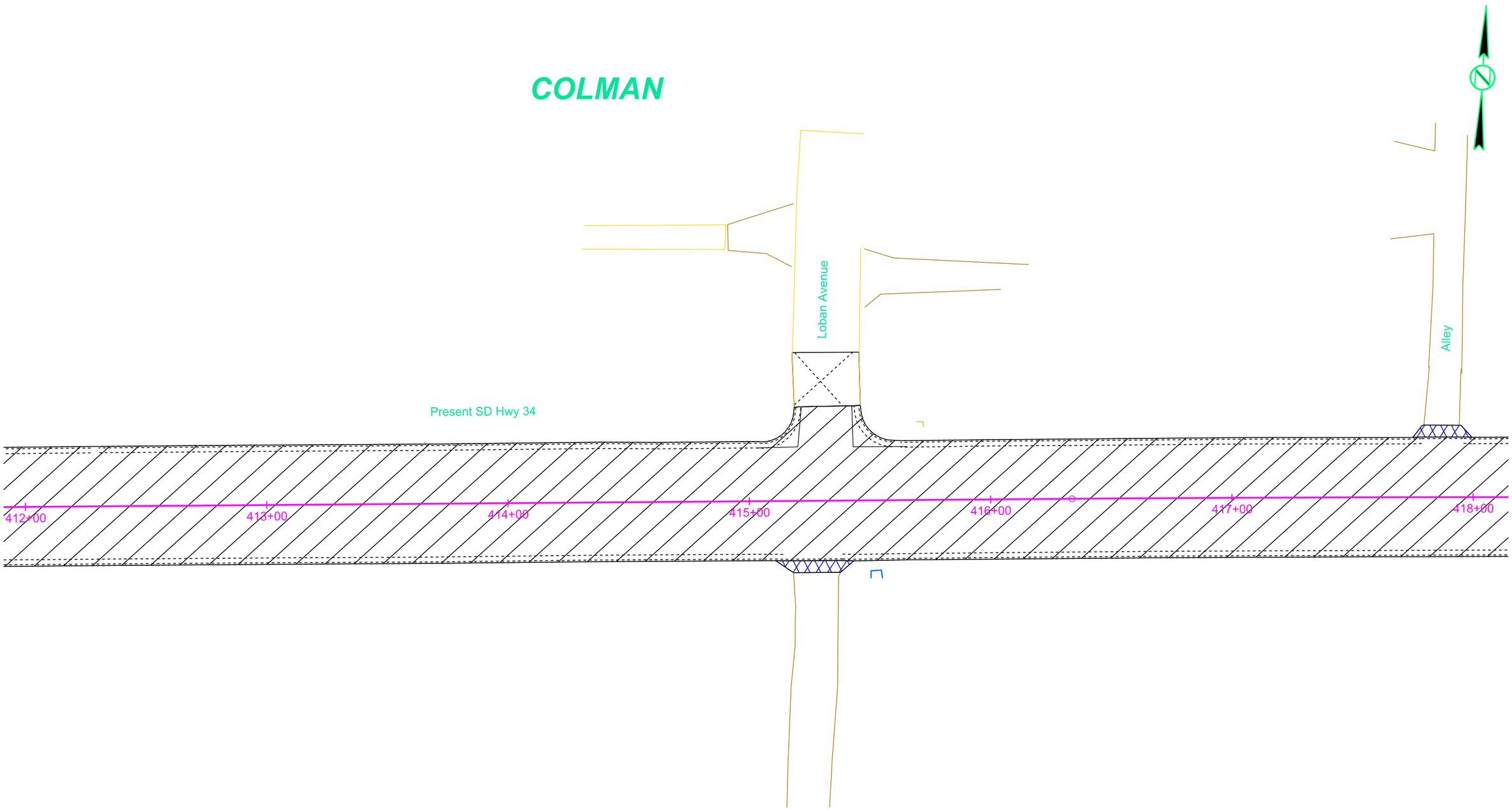

Plot Scale - 1:40
Plotted From - TRSF12141
File - U:\rdprj\moody\60914\12pr.dgn

STATE OF SOUTH DAKOTA	PROJECT	SHEET	TOTAL SHEETS
	NH-CR 0034(193)402	B72	B146

Plotting Date: 08/16/2024

COLMAN

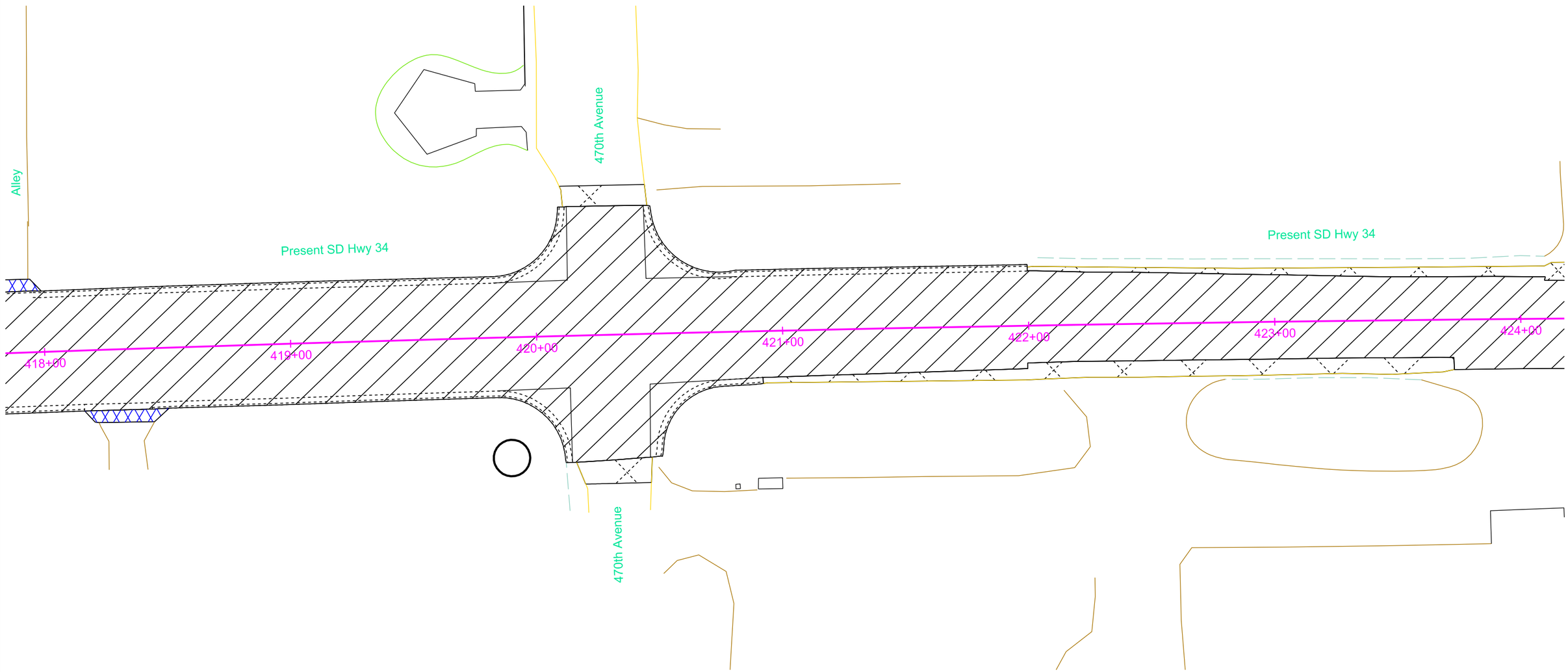

Plot Scale - 1:40

Plotted From - TRSF12141

File - U:\rdprj\moody\60\9418pr.dgn

PAVEMENT REMOVAL LAYOUT

STATE OF SOUTH DAKOTA	PROJECT	SHEET	TOTAL SHEETS
	NH-CR 0034(193)402	B73	B146

Plotting Date: 08/16/2024

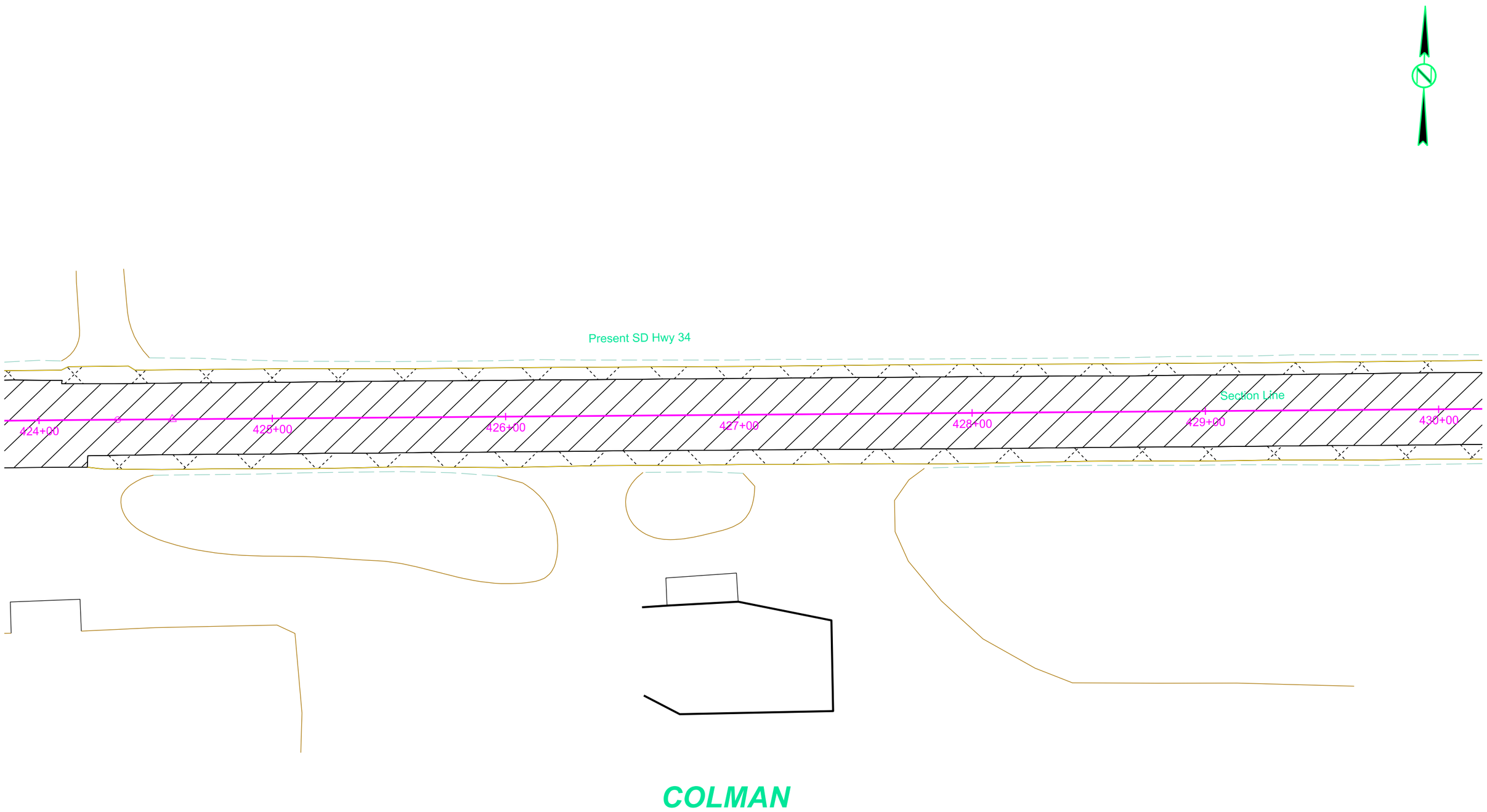

Plot Scale - 1:40

Plotted From - TRSF12141

File - U:\rdprj\moody\b09\424pr.dgn

PAVEMENT REMOVAL LAYOUT

STATE OF SOUTH DAKOTA	PROJECT	SHEET	TOTAL SHEETS
	NH-CR 0034(193)402	B74	B146

Plotting Date: 08/16/2024

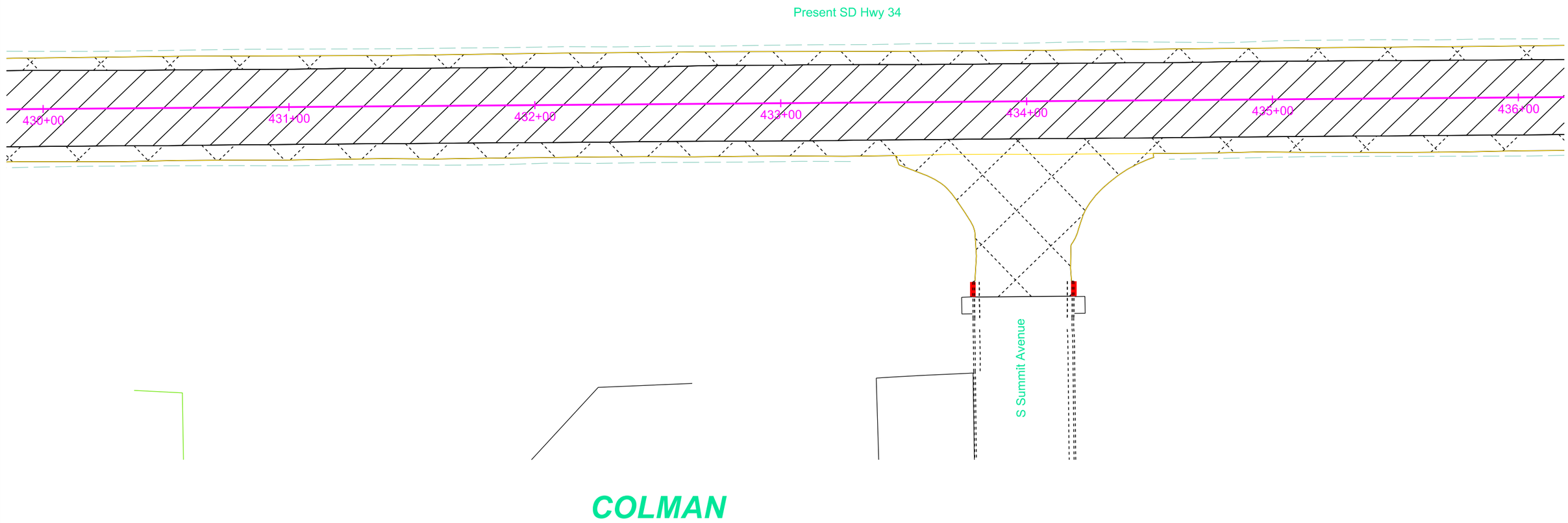

Plot Scale - 1:40

Plotted From - TRSF12141

File - U:\traf\jhmody\609430pr.dgn

PAVEMENT REMOVAL LAYOUT

STATE OF SOUTH DAKOTA	PROJECT	SHEET	TOTAL SHEETS
	NH-CR 0034(193)402	B75	B146

Plotting Date: 08/16/2024

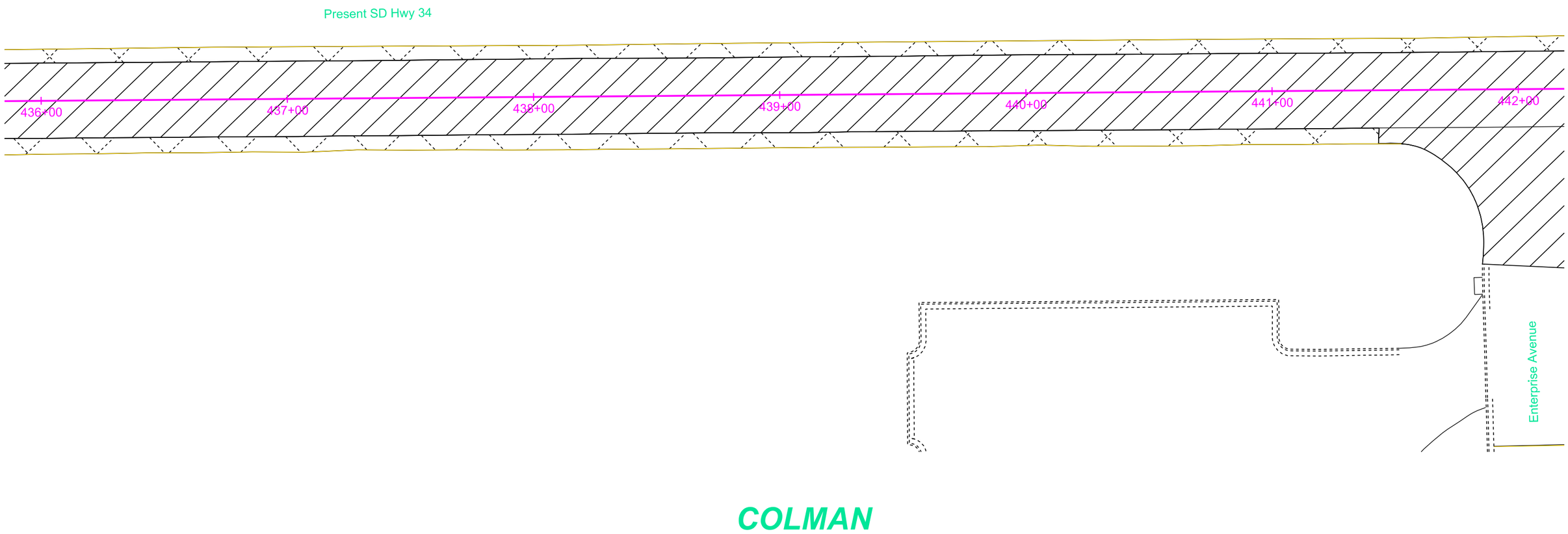

Plot Scale - 1:40

Plotted From - TRSF12141

File - U:\rdpr\moaby0609\436pr.dgn

PAVEMENT REMOVAL LAYOUT

STATE OF SOUTH DAKOTA	PROJECT	SHEET	TOTAL SHEETS
	NH-CR 0034(193)402	B76	B146

Plotting Date: 08/16/2024

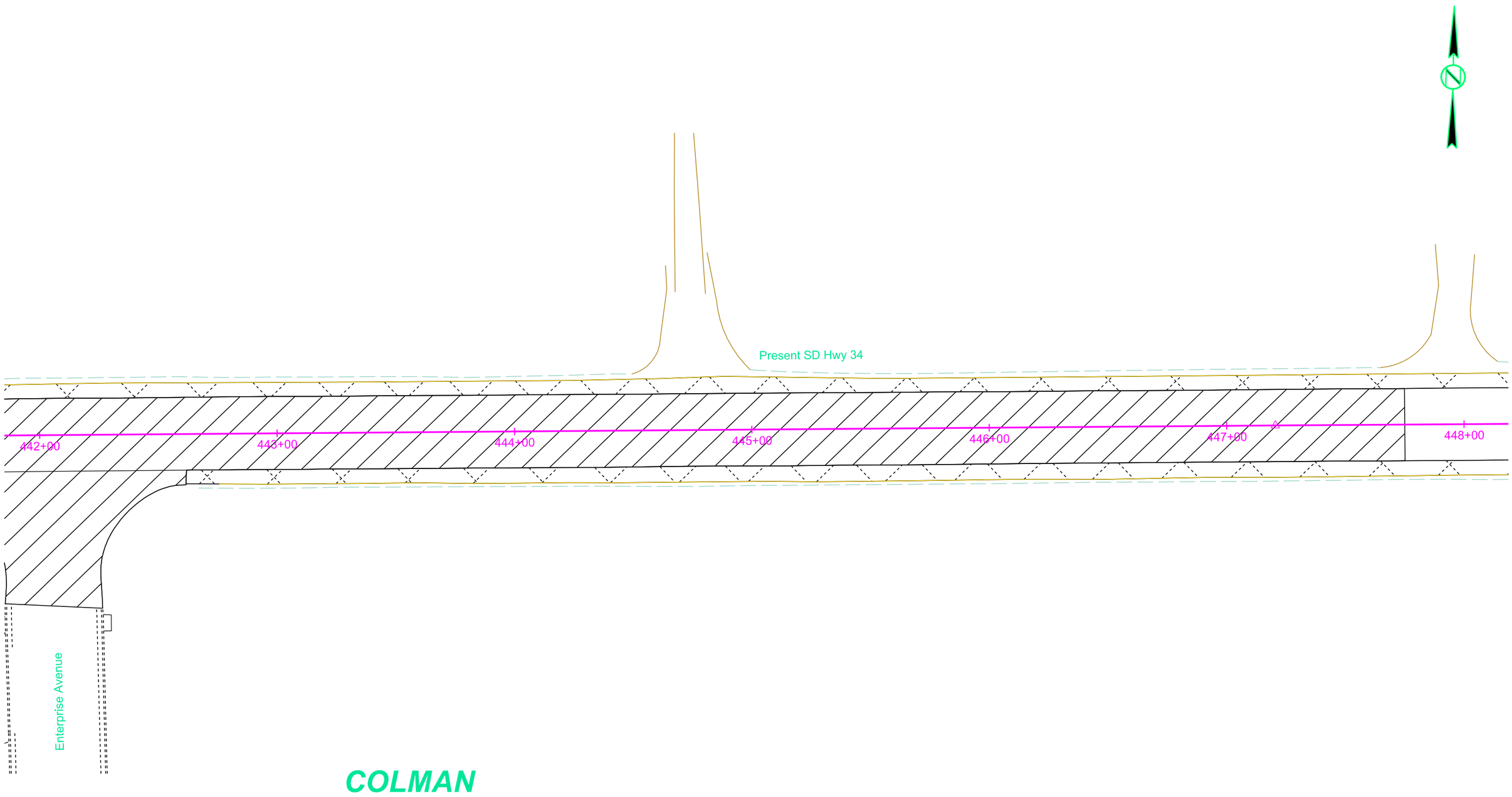

Plot Scale - 1:40

Plotted From - TRSF12141

File - U:\rdprj\mody0609\442pr.dgn

PAVEMENT REMOVAL LAYOUT

STATE OF SOUTH DAKOTA	PROJECT	SHEET	TOTAL SHEETS
	NH-CR 0034(193)402	B77	B146

Plotting Date: 08/16/2024

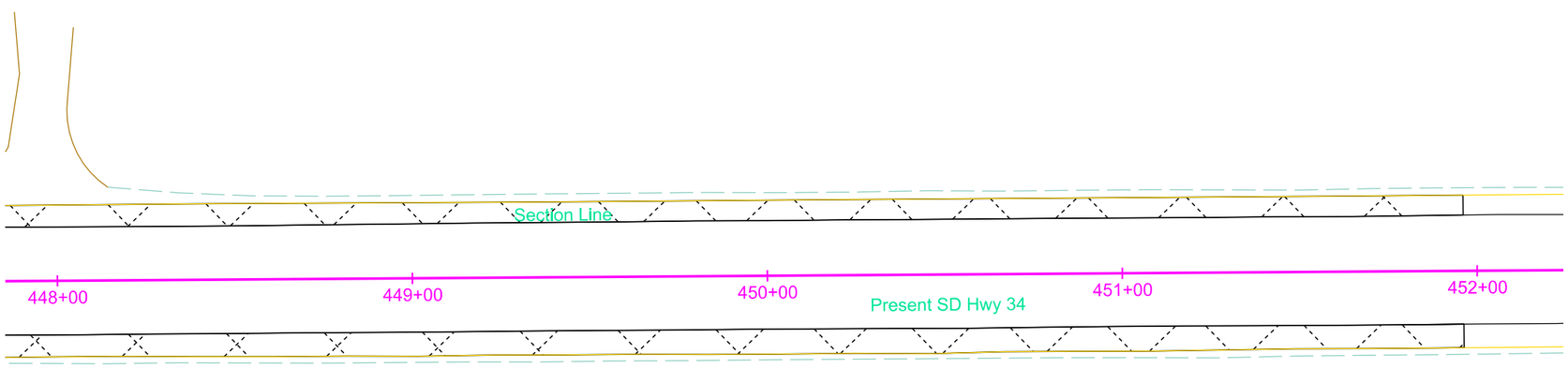

Plot Scale - 1:40
Plotted From - TRSF12141
File - U:\rdprj\mody0609\448pr.dgn

STATE OF SOUTH DAKOTA	PROJECT	SHEET	TOTAL SHEETS
	NH-CR 0034(193)402	B78	B146

Plotting Date: 08/16/2024

CURB & GUTTER LAYOUT

Note: All Curb & Gutter shown on this sheet is Modified Type F68 and all gutter is Modified Type P8 except as noted.
All boulevard sidewalk is 5' wide, except as noted, and the shared use path is 8' wide.

All boulevard less than 4 feet wide will be colored concrete,
and all boulevard greater than 4 feet will be grassed.
All approach pavement is 6" except as noted.

COLMAN

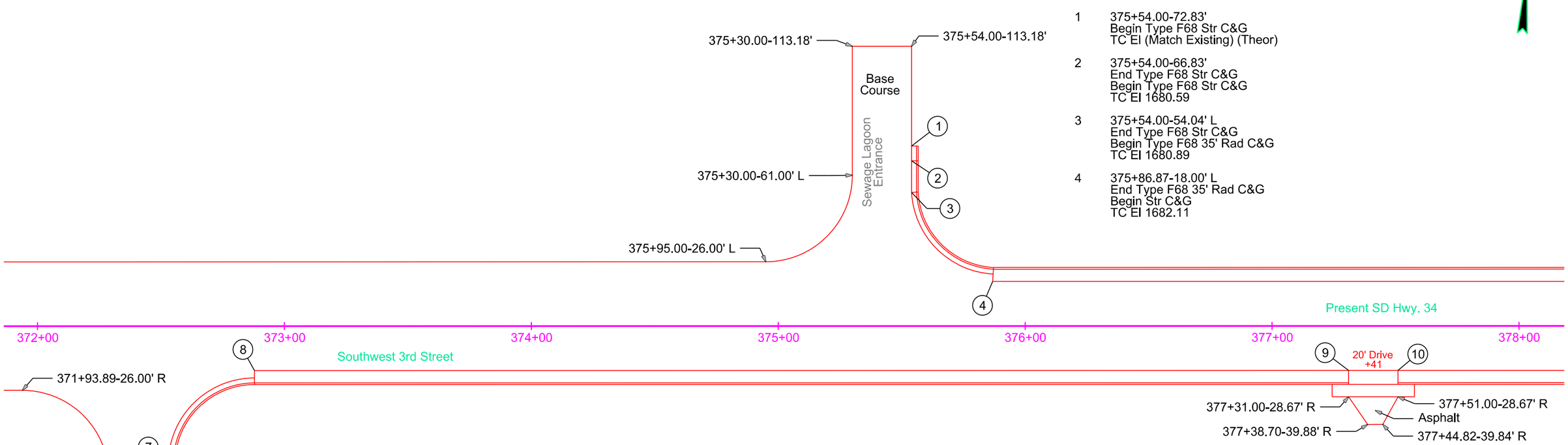

1 375+54.00-72.83'
Begin Type F68 Str C&G
TC El (Match Existing) (Theor)

2 375+54.00-66.83'
End Type F68 Str C&G
Begin Type F68 Str C&G
TC El 1680.59

3 375+54.00-54.04' L
End Type F68 Str C&G
Begin Type F68 35' Rad C&G
TC El 1680.89

4 375+86.87-18.00' L
End Type F68 35' Rad C&G
Begin Str C&G
TC El 1682.11

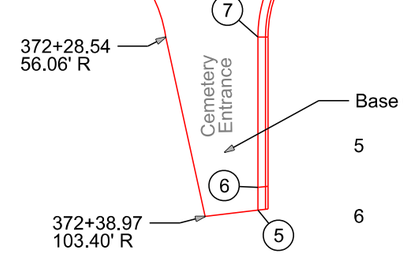

5 372+52.89-101.75' R
Begin Type F68 Str C&G
TC El (Match Existing) (Theor)

6 372+52.89-95.75' R
End Type F68 Str C&G
Begin Type F68 Str C&G
TC El 1676.55

7 372+52.89-56.03' R
End Type F68 Str C&G
Begin Type F68 35' Rad C&G
TC El 1679.31

8 372+87.85-18.00' R
End Type F68 35' Rad C&G
Begin Str C&G
TC El 1680.46

9 377+31.00-18.00' R
End Str C&G
Begin Type P Gutter
TC El 1683.26 (Theor)

10 377+51.00-18.00' R
End Type P Gutter
Begin Str C&G
TC El 1683.39 (Theor)

Plot Scale - 1:40
Plotted From - TRSF12141
File - U:\rdph\moody06\09\372cg.dgn

CURB & GUTTER LAYOUT

STATE OF SOUTH DAKOTA	PROJECT	SHEET	TOTAL SHEETS
	NH-CR 0034(193)402	B79	B146

Plotting Date: 08/16/2024

Note: All Curb & Gutter shown on this sheet is Modified Type B68 and all gutter is Modified Type P8 except as noted.
All boulevard sidewalk is 5' wide, except as noted, and the shared use path is 8' wide.
All boulevard less than 4 feet wide will be colored concrete,
and all boulevard greater than 4 feet will be grassed.
All approach pavement is 6" except as noted.
All Fillets are Type B except as noted.

COLMAN

1 379+20.28-18.00' L
End Modified Type F68 Str C&G
Begin 22.33' Rad Type F68 Fillet
(Radius measured at back of curb)
TC El 1683.38

2 379+45.28-46.00' L
End 22.33' Rad Type F68 Fillet
(Radius measured at back of curb)
Begin Type B68 Str C&G
TC El 1682.31

3 379+45.28-51.00' L
End Type B68 Str C&G
Begin 25' Rad Fillet
TC El 1682.17

4 379+20.28-76.00' L
End 25' Rad Fillet
TC El (Match Existing) (Theor)

5 380+33.69-48.63' L
Begin Type B68 Str C&G
TC El (Match Existing)

6 380+27.67-48.63' L
End Type B68 Str C&G
Begin Type B68 Str C&G
TC El 1681.21

7 380+27.49-60.21' L
End Type B68 Str C&G
Begin Type B68 Str C&G
TC El 1681.61

8 380+12.42-60.19' L
End Type B68 Str C&G
Begin 27' Rad Fillet
TC El 1681.63

9 379+85.48-34.21' L
End 27' Rad Fillet
Begin 11.83' Rad Fillet
(Radius measured at back of curb)
TC El 1682.58

10 379+99.29-16.50' L
End 11.83' Rad Fillet
Begin Str C&G
(Radius measured at back of curb)
TC El 1683.01

11 381+22.55-48.77' L
End Type B68 Str C&G
Begin Type B68 Str C&G
TC El (Match Existing)

12 381+22.53-51.44' L
Begin Type B68 Str C&G
TC El (Match Existing)

13 381+25.22-49.46' L
Begin Type B68 Str C&G
TC El (Set in Field)

14 381+33.99-49.51' L
End Type B68 Str C&G
TC El (Set in Field)

15 381+36.65-51.52' L
Begin Type B68 Str C&G
TC El (Match Existing)

16 381+36.65-48.85' L
End Type B68 Str C&G
TC El (Set in Field)

17 381+56.02-51.63'
Begin Type B68 Str C&G
TC El (Set in Field)

18 381+56.04-48.96' L
End Type B68 Str C&G
TC El (Match Existing)

19 381+58.70-49.65' L
Begin Type B68 Str C&G
TC El (Set in Field)

20 381+68.62-49.71' L
End Type B68 Str C&G
TC El (Set in Field)

21 381+71.31-52.98' L
Begin Type B68 Str C&G
TC El (Match Existing)

22 381+71.28-49.05' L
End Type B68 Str C&G
TC El (Set in Field)

23 381+76.55-49.08' L
End Type B68 Str C&G
TC El (Match Existing)

24 383+12.62-16.50' L
End Str C&G
Begin Type B68 35' Rad C&G
TC El 1682.75

25 383+46.77-46.85' L
End Type B68 35' Rad C&G
Begin Crossing of
Valley Gutter
TC El 1681.48 (Theor)

26 383+38.03-49.51' L
Begin Type B68 Str C&G
TC El (Match Existing)

27 383+44.56-49.52' L
End Type B68 Str C&G
TC El (Theor)

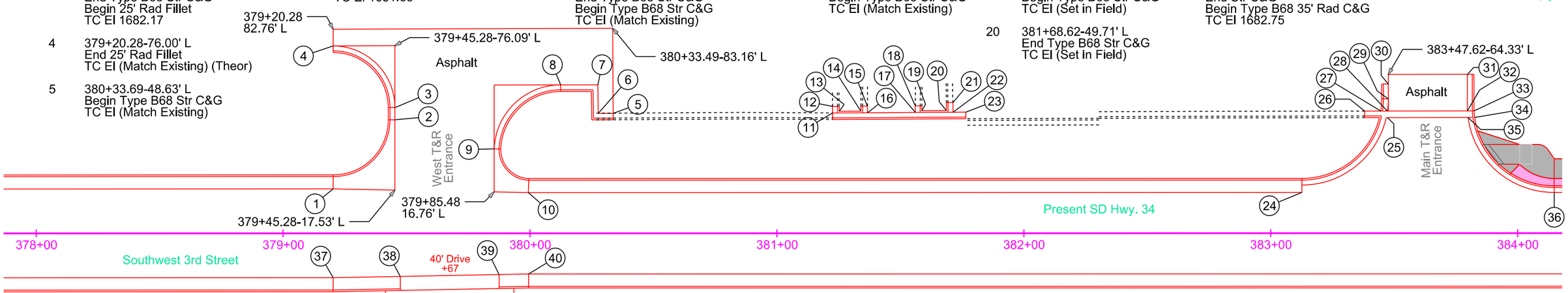

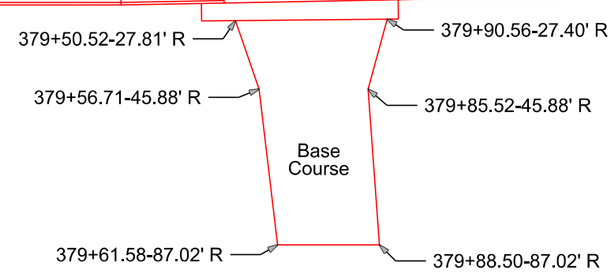

37 379+20.28-18.00' R
End Modified Type F68 Str C&G
Begin Modified Type F68 Str C&G
TC El 1683.63

38 379+47.43-17.48' R
End Modified Type F68 Str C&G
Begin Type P Gutter
TC El 1683.50 (Theor)

39 379+87.43-16.73' R
End Type P Gutter
Begin Str C&G
TC El 1683.30 (Theor)

40 379+99.41+16.50' R
End Str C&G
Begin Str C&G
TC El 1683.23

28 383+47.26-49.52' L
End Crossing of Valley Gutter
Begin Type B68 35' Rad C&G
TC El (Theor)

29 383+47.62-54.48' L
End Type B68 35' Rad C&G
Begin Type B68 Str C&G
TC El 1682.78

30 383+47.62-60.48' L
End Type B68 Str C&G
TC El (Match Existing) (Theor)

31 383+79.62-64.33' L
Begin Type B68 Str C&G
TC El (Match Existing)

32 383+79.66-49.56' L
End Type B68 Str C&G
End Valley Gutter
TC El (Theor)

33 383+82.33-49.57' L
Begin Valley Gutter
Top Gutter El (Match Existing)

34 383+82.60-46.90' L
End Valley Gutter
Top Gutter El (Match Existing)

35 383+79.91-46.90' L
End Valley Gutter
Begin Type B68 35' Rad C&G
TC El 1682.51 (Theor)

36 384+14.79-16.50' L
End Type B68 35' Rad C&G
Begin Type B68 Str C&G
TC El 1683.48

LEGEND
- Grass
- 4" Colored Concrete
- 4" Colored Reinforced Concrete
- 6" Reinforced Concrete
- 6" Concrete

Plot Scale - 1:40
Plotted From - TRSF12141
File - U:\ralph\moody0609\378cg.dgn

CURB & GUTTER LAYOUT

STATE OF SOUTH DAKOTA	PROJECT	SHEET	TOTAL SHEETS
	NH-CR 0034(193)402	B80	B146

Plotting Date: 08/16/2024 Revised 10/06/2023 AR

Note: All Curb & Gutter shown on this sheet is Type B68 and all gutter is Type P8 except as noted.
All boulevard sidewalk is 5' wide, except as noted, and the shared use path is 8' wide.

All boulevard less than 4 feet wide will be colored concrete,
and all boulevard greater than 4 feet will be grassed.
All approach pavement is 6" except as noted.

1 384+95.88-16.50
End Str C&G
Begin Type P Gutter
TC El 1684.00 (Theor)

2 385+35.89-16.50' L
End Type P Gutter
Begin Str C&G
TC El 1684.26 (Theor)

COLMAN

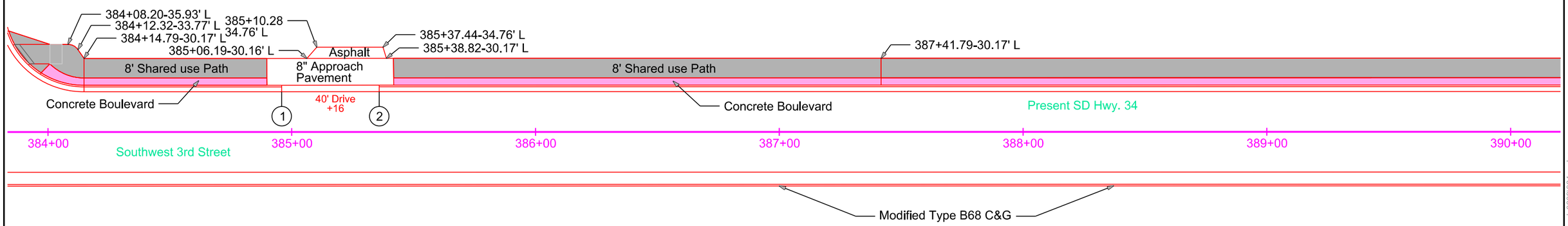

LEGEND
- Grass
- 4" Colored Concrete
- 4" Colored Reinforced Concrete
- 6" Reinforced Concrete
- 6" Concrete

Plot Scale - 1:40
Plotted From - TRSF12141
File - U:\rdph\moody0609\384cg.dgn

CURB & GUTTER LAYOUT

STATE OF SOUTH DAKOTA	PROJECT	SHEET	TOTAL SHEETS
	NH-CR 0034(193)402	B81	B146

Plotting Date: 08/16/2024

Note: All Curb & Gutter shown on this sheet is Modified Type B68 and all gutter is Modified Type P8 except as noted.
All boulevard sidewalk is 5' wide, except as noted, and the shared use path is 8' wide.

All boulevard less than 4 feet wide will be colored concrete,
and all boulevard greater than 4 feet will be grassed.
All approach pavement is 6" except as noted.

COLMAN

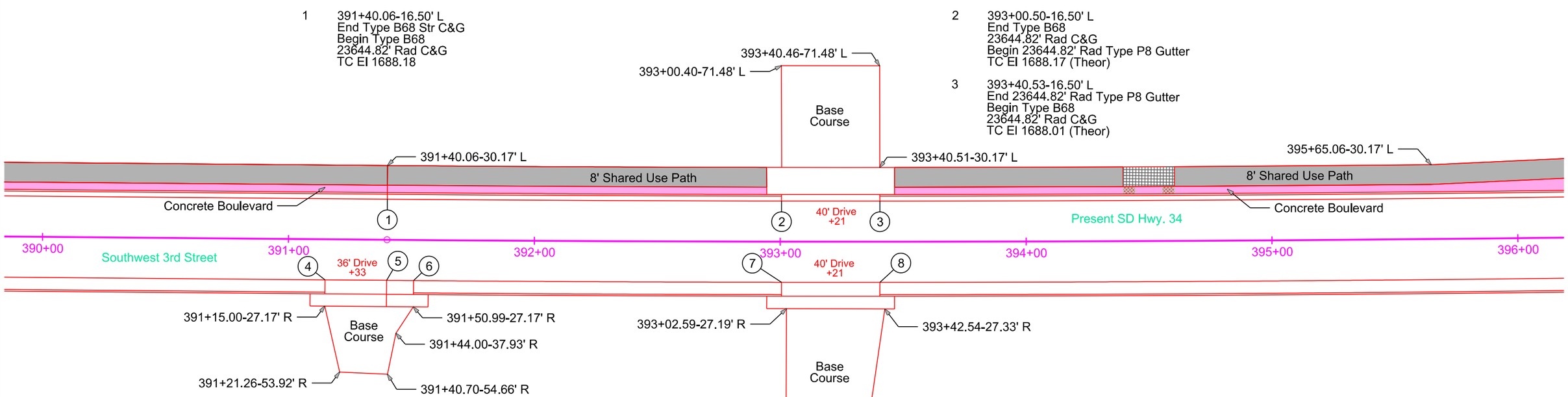

1 391+40.06-16.50' L
End Type B68 Str C&G
Begin Type B68
23644.82' Rad C&G
TC El 1688.18

2 393+00.50-16.50' L
End Type B68
23644.82' Rad C&G
Begin 23644.82' Rad Type P8 Gutter
TC El 1688.17 (Theor)

3 393+40.53-16.50' L
End 23644.82' Rad Type P8 Gutter
Begin Type B68
23644.82' Rad C&G
TC El 1688.01 (Theor)

4 391+15.00-16.50' R
End Str C&G
Begin Type P Gutter
TC El 1688.18 (Theor)

5 391+40.06-16.50' R
End Type P Gutter
Begin 23680.82' Rad Type P Gutter
TC El 1688.34 (Theor)

6 391+50.99-16.50' R
End 23680.82' Rad Type P Gutter
Begin 23680.82' Rad C&G
TC El 1688.39 (Theor)

393+18.89-102.13' R
393+02.39-101.34' R
393+31.78-101.44' R
392+93.11-118.58' R
393+04.22-118.61' R
393+41.51-118.74' R
393+32.44-118.70' R

7 393+00.57-16.50' R
End 23680.82' Rad C&G
Begin 23680.82' Rad Type P Gutter
TC El 1688.33 (Theor)

8 393+40.53-16.50' R
End 23680.82' Rad Type P Gutter
Begin 23680.82' Rad C&G
TC El 1688.17 (Theor)

LEGEND
- Grass
- 4" Colored Concrete
- 4" Colored Reinforced Concrete
- 6" Reinforced Concrete
- 6" Concrete

Plot Scale - 1:40
Plotted From - TRSF12141
File - U:\rdprh\moody0609\390\bcg.dgn

CURB & GUTTER LAYOUT

STATE OF SOUTH DAKOTA	PROJECT	SHEET	TOTAL SHEETS
	NH-CR 0034(193)402	B82	B146

Plotting Date: 08/16/2024

Note: All Curb & Gutter shown on this sheet is Modified Type B68 and all gutter is Modified Type P8 except as noted.
All boulevard sidewalk is 5' wide, except as noted, and the shared use path is 8' wide.

All boulevard less than 4 feet wide will be colored concrete,
and all boulevard greater than 4 feet will be grassed.
All approach pavement is 6" except as noted.

COLMAN

1 396+65.06-16.50' L
End Type B68
23644.82' Rad C&G
Begin Type B68 Str C&G
TC El 1689.74

2 397+54.00-16.50' L
End Type B68 Str C&G
Begin Type P8 Gutter
TC El 1691.73 (Theor)

3 397+94.00-16.50' L
End Type P8 Gutter
Begin Type B68 Str C&G
TC El 1692.75 (Theor)

4 399+42.75-16.50' L
End Type B68 Str C&G
Begin Type B68 35' Rad C&G
TC El 1695.63

5 399+77.75-51.50' L
End Type B68 35' Rad C&G
Begin Type B68 Str C&G
TC El 1696.97

6 399+77.75-57.50' L
End Type B68 Str C&G
TC El 1697.12 (Theor)

7 400+05.75-57.50' L
Begin Type B68 Str C&G
TC El 1697.12 (Theor)

8 400+05.75-51.50' L
End Type B68 Str C&G
Begin Type B68 35' Rad C&G
TC El 1696.97

9 400+40.75-16.50' L
End Type B68 35' Rad C&G
Begin Type B68 Str C&G
TC El 1696.72

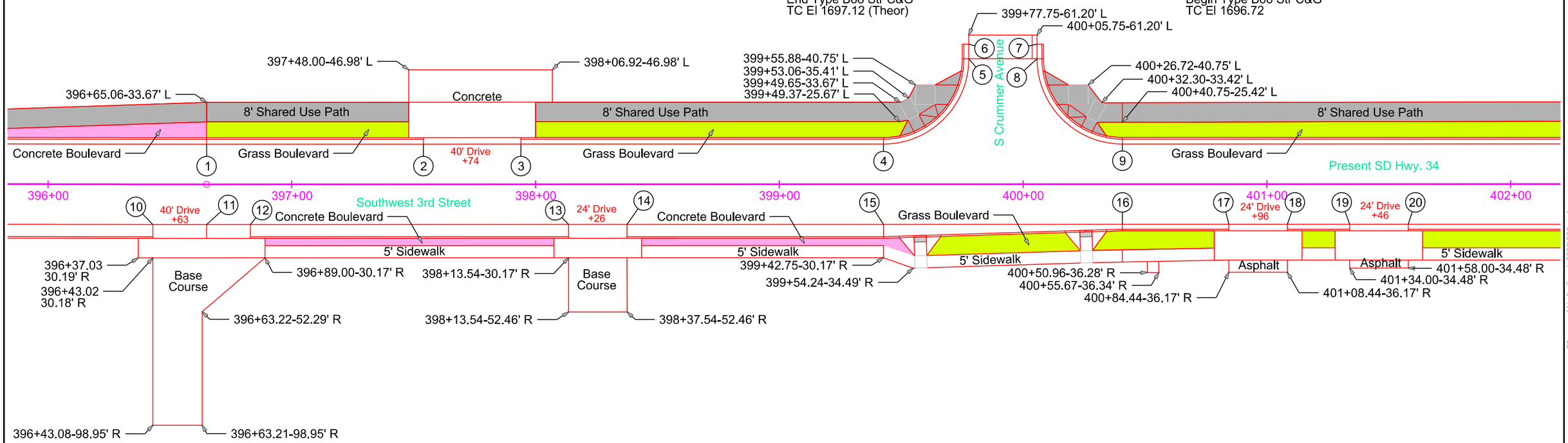

10 396+43.02- 16.50' R
End 23680.82' Rad C&G
Begin 23680.82' Rad Type P Gutter
TC El 1689.51 (Theor)

11 396+65.06-16.50' R
End 23680.82' Rad Type P Gutter
Begin Type P Gutter
TC El 1689.90 (Theor)

12 396+83.00-16.50' R
End Type P Gutter
Begin Str C&G
TC El 1690.25 (Theor)

13 398+13.54-16.50' R
End Str C&G
Begin Type P Gutter
TC El 1693.37 (Theor)

14 398+37.54-16.50' R
End Type P Gutter
Begin Str C&G
TC El 1693.91 (Theor)

15 399+42.75-16.50' R
End Str C&G
Begin Str C&G
TC El 1695.79

16 400+40.75-16.50' R
End Str C&G
Begin Type B68 Str C&G
TC El 1696.94

17 400+84.44-16.50' R
End Type B68 Str C&G
Begin Type P8 Gutter
TC El 1697.21 (Theor)

18 401+08.44-16.50' R
End Type P8 Gutter
Begin Type B68 Str C&G
TC El 1697.30 (Theor)

19 401+34.00-16.50' R
End Type B68 Str C&G
Begin Type P8 Gutter
TC El 1697.36 (Theor)

20 401+58.00-16.50' R
End Type P8 Gutter
Begin Type B68 Str C&G
TC El 1697.37 (Theor)

LEGEND
- Grass
- 4" Colored Concrete
- 4" Colored Reinforced Concrete
- 6" Reinforced Concrete
- 6" Concrete

Plot Scale - 1:40
Plotted From - TRSF12141
File - U:\drlpr\moody\b09\39bcg.dgn

CURB & GUTTER LAYOUT

STATE OF SOUTH DAKOTA	PROJECT	SHEET	TOTAL SHEETS
	NH-CR 0034(193)402	B83	B146

Plotting Date: 08/16/2024

Note: All Curb & Gutter shown on this sheet is Type B68 and all gutter is Type P8 except as noted.
All boulevard sidewalk is 5' wide, except as noted, and the shared use path is 8' wide.

All boulevard less than 4 feet wide will be colored concrete,
and all boulevard greater than 4 feet will be grassed.
All approach pavement is 6" except as noted.

COLMAN

1 403+29.00-16.50' L
End Str C&G
Begin 25' Rad Fillet
TC El 1696.48

2 403+54.00-41.50' L
End 25' Rad Fillet
Begin Str C&G
TC El 1696.44

3 403+54.00-47.50' L
End Str C&G
TC El (Match Existing) (Theor)

4 403+82.00-47.50' L
Begin Str C&G
TC El (Match Existing) (Theor)

5 403+82.00-41.50' L
End Str C&G
Begin 25' Rad Fillet
TC El 1696.44

6 404+07.00-16.50' L
End 25' Rad Fillet
Begin Str C&G
TC El 1696.10

7 404+80.17-16.50' L
End Str C&G
Begin Type P Gutter
TC El 1695.75 (Theor)

8 405+12.17-16.50' L
End Type P Gutter
Begin Str C&G
TC El 1695.60 (Theor)

9 407+06.00-16.50' L
End Str C&G
Begin 35' Rad C&G
TC El 1694.66

10 407+41.00-51.50' L
End 35' Rad C&G
Begin Str C&G
TC El 1695.60

11 407+41.00-60.15' L
End Str C&G
TC El (Match Existing) (Theor)

12 407+81.00-60.15' L
Begin Str C&G
TC El (Match Existing) (Theor)

13 407+81.00-51.50' L
End Str C&G
Begin 35' Rad C&G
TC El 1695.60

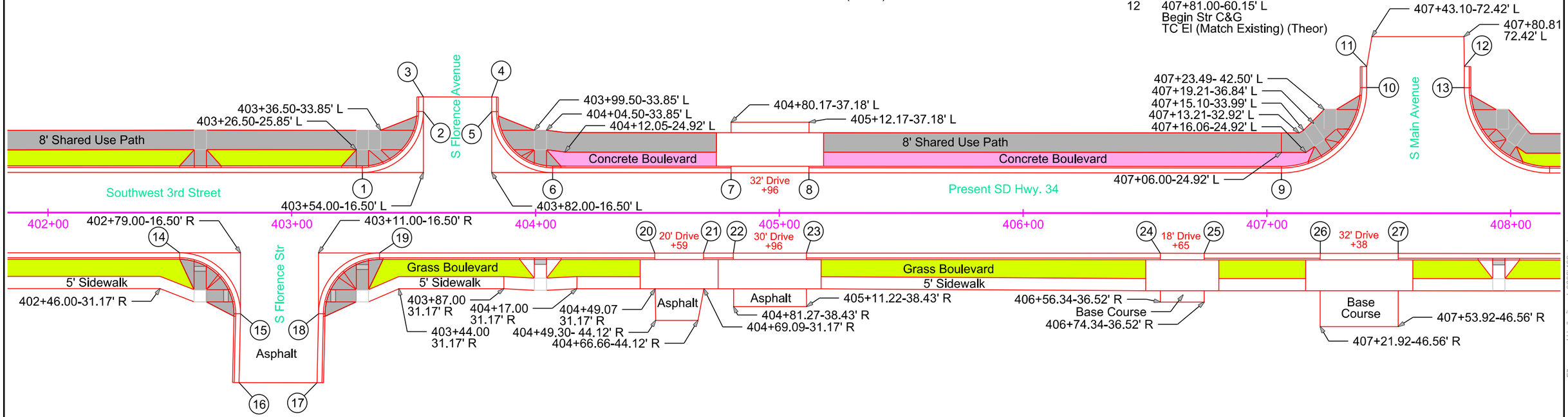

14 402+54.00-16.50' R
End Str C&G
Begin 25' Rad Fillet
TC El 1697.06

15 402+79.00-41.50' R
End 25' Rad Fillet
Begin Str C&G
TC El 1696.27

16 402+78.38-69.74' R
End Str C&G
TC El (Match Existing)

17 403+10.38-69.74' R
Begin Str C&G
TC El (Match Existing)

18 403+11.00-41.50' R
End Str C&G
Begin 25' Rad Fillet
TC El 1696.27

19 403+36.00-16.50' R
End 25' Rad Fillet
Begin Str C&G
TC El 1696.67

20 404+48.94-16.50' R
End Str C&G
Begin Type P Gutter
TC El 1696.12 (Theor)

21 404+68.94-16.50' R
End Type P Gutter
Begin Str C&G
TC El 1696.02 (Theor)

22 404+81.17-16.50' R
End Str C&G
Begin Type P Gutter
TC El 1695.97 (Theor)

23 404+11.15-16.50' R
End Type P Gutter
Begin Str C&G
TC El 1695.82 (Theor)

24 406+56.34-16.50' R
End Str C&G
Begin Type P Gutter
TC El 1695.12 (Theor)

25 406+74.34-16.50' R
End Type P Gutter
Begin Str C&G
TC El 1695.03 (Theor)

26 407+21.92-16.50' R
End Str C&G
Begin Type P Gutter
TC El 1694.80 (Theor)

27 407+53.92-16.50' R
End Type P Gutter
Begin Str C&G
TC El 1694.65 (Theor)

LEGEND
- Grass
- 4" Colored Concrete
- 4" Colored Reinforced Concrete
- 6" Reinforced Concrete
- 6" Concrete

Plot Scale - 1:40
Plotted From - TRSF12141
File - U:\trap\jmoody\60\9402cg.dgn

CURB & GUTTER LAYOUT

STATE OF SOUTH DAKOTA	PROJECT	SHEET	TOTAL SHEETS
	NH-CR 0034(193)402	B84	B146

Plotting Date: 08/16/2024

Note: All Curb & Gutter shown on this sheet is Type B68 and all gutter is Type P8 except as noted.
All boulevard sidewalk is 5' wide, except as noted, and the shared use path is 8' wide.

All boulevard less than 4 feet wide will be colored concrete,
and all boulevard greater than 4 feet will be grassed.
All Approach pavement is 6" except as noted.

COLMAN

1 408+16.00-16.50' L
End 35' Rad Fillet
Begin Str C&G
TC El 1694.13

2 408+74.92- 16.50' L
End Str C&G
Begin Type P Gutter
TC El 1693.84 (Theor)

3 408+90.92-16.50' L
End Type P Gutter
Begin Str C&G
TC El 1693.76 (Theor)

4 410+07.18-16.50' L
End Str C&G
Begin Type P Gutter
TC El 1693.20 (Theor)

5 410+47.18-16.50' L
End Type P Gutter
Begin Type F68 Str C&G
TC El 1693.01 (Theor)

6 410+65.47-16.50' L
End Type F68 Str C&G
Begin Type P Gutter
TC El 1692.92 (Theor)

7 411+01.47-16.50' L
End Type P Gutter
Begin Str C&G
TC El 1692.75 (Theor)

8 411+13.00-16.50' L
End Str C&G
Begin 25' Rad Fillet
TC El 1692.70

9 411+35.26-39.77' L
4" Height Curb
(Top of Curb Taper)
TC El 1691.94

10 411+38.00-41.50' L
End 25' Rad Fillet
Begin Str Curb
3" Curb Height
TC El 1691.90

11 411+38.00-44.50' L
End Str C&G
Begin 8" Concrete Valley Gutter
3.84' Width (FL @ 15.67' L of S Perry)
Top Gutter TC El (Match Existing)

12 411+38.00-54.98' L
End 8" Concrete Valley Gutter
3.84' Width (FL @ 15.67' L of S Perry)
Top Gutter TC El (Match Existing)

13 411+66.00-57.19' L
Begin Str C&G
TC El (Match Existing)

14 411+66.00-51.19' L
End Str C&G
Begin Str C&G
TC El 1692.00

15 411+66.00-41.50' L
End Str C&G
Begin 25' Rad Fillet
TC El 1691.90

16 411+91.00-16.50' L
End 25' Rad Fillet
Begin Str C&G
TC El 1692.55

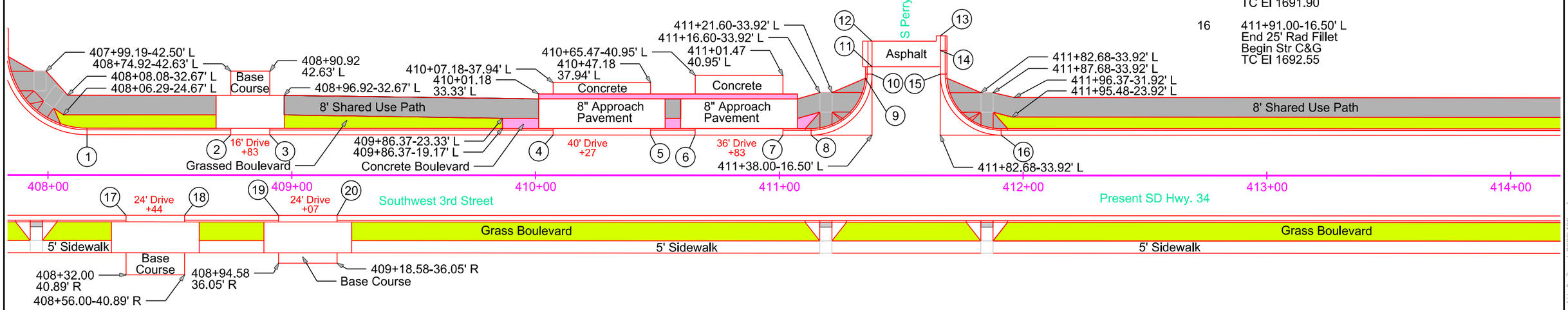

17 408+32.00-16.50' R
End Str C&G
Begin Type P Gutter
TC El 1694.27 (Theor)

18 408+56.00-16.50' R
End Type P Gutter
Begin Str C&G
TC El 1694.15 (Theor)

19 408+94.58-16.50' R
End Str C&G
Begin Type P Gutter
TC El 1693.97 (Theor)

20 409+18.58-16.50' R
End Type P Gutter
Begin Str C&G
TC El 1693.85 (Theor)

LEGEND
- Grass
- 4" Colored Concrete
- 4" Colored Reinforced Concrete
- 6" Reinforced Concrete
- 6" Concrete

Plot Scale - 1:40
Plotted From - TRSF12141
File - U:\trdprj\moody\60\9408cg.dgn

STATE OF SOUTH DAKOTA	PROJECT	SHEET	TOTAL SHEETS
	NH-CR 0034(193)402	B85	B146

Plotting Date: 08/16/2024

CURB & GUTTER LAYOUT

Note: All Curb & Gutter shown on this sheet is Type B68 and all gutter is Type P8 except as noted.
All boulevard sidewalk is 5' wide, except as noted, and the shared use path is 8' wide.
All boulevard less than 4 feet wide will be colored concrete,
and all boulevard greater than 4 feet will be grassed.
All approach pavement is 6" except as noted.

COLMAN

1 414+99.00-16.50' L
End Str C&G
Begin 20' Rad Fillet
TC El 1694.20

2 415+19.00-36.50' L
End 20' Rad Fillet
Begin Str C&G
TC El 1694.62

3 415+19.00-48.49' L
End Str C&G
Begin Str C&G
TC El 1694.60

4 415+18.66-54.48' L
End Str C&G
TC El (Match Existing) (Theor)

5 415+46.52-54.48' L
Begin Str C&G
TC El (Match Existing) (Theor)

6 415+47.00-48.50' L
End Str C&G
Begin Str C&C
TC El 1694.60

7 415+47.00-36.50' L
End Str C&G
Begin 20' Rad Fillet
TC El 1694.62

7a 415+67.00-16.50' L
End 20' Rad Fillet
Begin Str C&G
TC El 1694.65

8 415+72.00-16.50' L
End Str C&G
Begin Str C&G
TC El 1694.69

9 416+33.74-16.50' L
End Str C&G
Begin 23004.52' Rad C&G
TC El 1695.24

10 417+77.01- 16.50' L
End 23004.5' Rad C&G
Begin 23004.52' Rad
Type P Gutter
TC El 1698.38 (Theor)

11 417+92.99-16.50' L
End 23004.52' Rad
Type P Gutter
Begin 23004.52' Rad C&G
TC El 1698.77 (Theor)

12 419+78.28- 16.50' L
End 23004.52' Rad C&G
Begin Str C&G
TC El 1701.23

13 419+84.77-16.79' L
End Str C&G
Begin 30' Rad C&G
TC El 1701.25

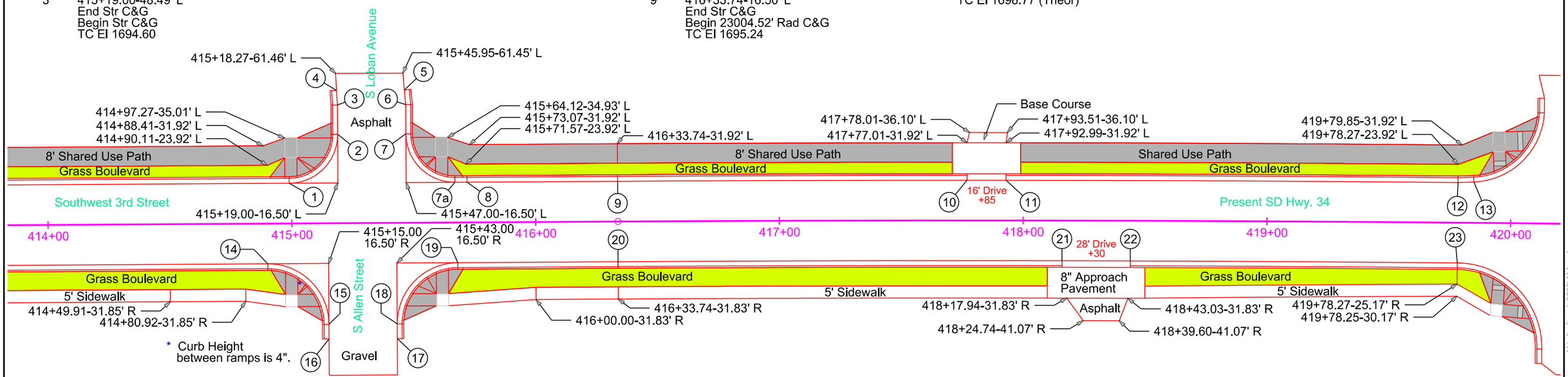

* Curb Height between ramps is 4".

14 414+90.00-16.50' R
End Str C&G
Begin 25' Rad Fillet
TC El 1694.35

15 415+15.00-41.50' R
End 25' Rad Fillet
Begin Str C&G
TC El 1694.84

16 415+15.00-47.50' R
End Str C&G
TC El (Match Existing) (Theor)

17 415+43.00-47.50' R
Begin Str C&G
TC El (Match Existing) (Theor)

18 415+43.00-41.50' R
End Str C&G
Begin 25' Rad Fillet
TC El 1694.84

19 415+68.00-16.50' R
End 25' Rad Fillet
Begin Str C&G
TC El 1694.87

20 416+33.74-16.50' R
End Str C&G
Begin 22971.52' Rad C&G
TC El 1695.46

21 418+15.99-16.50' R
End 22971.52' Rad C&G
Begin 22971.52' Rad Type P Gutter
TC El 1699.50 (Theor)

22 418+44.01-16.50' R
End 22971.52' Rad Type P Gutter
Begin 22971.52' Rad C&G
TC El 1700.04 (Theor)

23 419+78.27-16.50' R
End 22971.52' Rad C&G
Begin 35' Rad C&G
TC El 1701.45

LEGEND
- Grass
- 4" Colored Concrete
- 4" Colored Reinforced Concrete
- 6" Reinforced Concrete
- 6" Concrete

Plot Scale - 1:40
Plotted From - TRSF12141
File - U:\rdphjmoody06\09\414cg.dgn

CURB & GUTTER LAYOUT

STATE OF SOUTH DAKOTA	PROJECT	SHEET	TOTAL SHEETS
	NH-CR 0034(193)402	B86	B146

Plotting Date: 08/16/2024 Revised 03/20/2023 AR

Note: All Curb & Gutter shown on this sheet is Modified Type B68 and all gutter is Modified Type P8 except as noted.
All boulevard sidewalk is 5' wide, except as noted, and the shared use path is 8' wide.

All boulevard less than 4 feet wide will be colored concrete,
and all boulevard greater than 4 feet will be grassed.
All approach pavement is 6" except as noted.

COLMAN

1 420+13.36-45.37' L
End Type B68 30' Rad C&G
Begin Type B68 Str C&G
TC El 1701.05

2 420+13.36-51.37' L
End Str Type B68 C&G
TC El (Match Existing) (Theor)

3 420+45.28-55.48' L
Begin Type B68 Str C&G
TC El (Match Existing) (Theor)

4 420+45.29-49.48' L
End Type B68 Str C&G
Begin Type B68 30' Rad C&G
TC El 1700.89

5 420+79.50-18.00' L
End Type B68 30' Rad C&G
Begin 23006.02' Rad C&G
TC El 1700.91

6 422+13.12-18.00' L
End 23006.02' Rad C&G
Begin 23006.02' Rad C&G
TC El 1699.05

6a 422+19.11- 18.00' L
End 23006.02' Rad C&G
TC El 1698.96 (Theor)

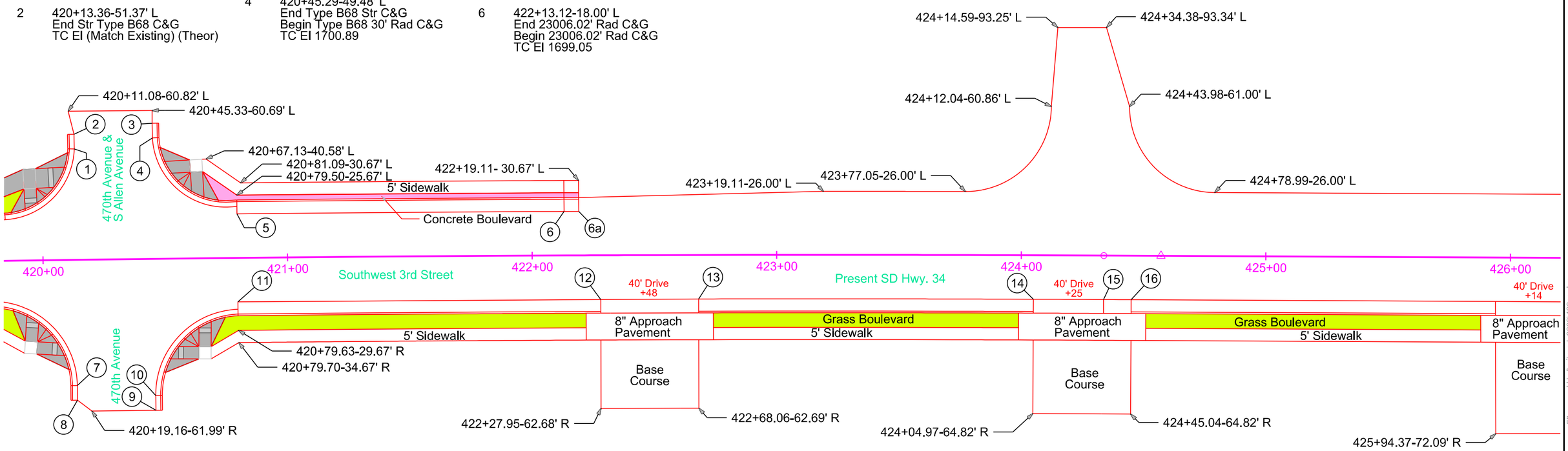

7 420+13.35-51.47' R
End Type B68 35' Rad C&G
Begin Type B68 Str C&G
TC El 1701.31

8 420+13.35-57.47' R
End Type B68 Str C&G
TC El (Match Existing) (Theor)

9 420+45.44-61.97' R
Begin Type B68 Str C&G
TC El (Match Existing) (Theor)

10 420+45.43-55.97' R
End Type B68 Str C&G
Begin Type B68 35' Rad C&G
TC El 1701.22

11 420+79.50-18.00' R
End Type B68 35' Rad C&G
Begin 22967.02' Rad C&G
TC El 1701.15

12 422+27.98-18.00' R
End 22967.02' Rad C&G
Begin 22967.02' Rad Type P Gutter
TC El 1699.08 (Theor)

13 422+68.02-18.00' R
End 22967.02' Rad Type P Gutter
Begin 22967.02' Rad Modified Type F68 C&G
TC El 1698.40 (Theor)

14 424+05.00-18.00' R
End 22967.02' Rad Modified Type F68 C&G
Begin 22967.02' Rad Type P Gutter
TC El 1696.17 (Theor)

15 424+33.74-18.00' R
End 22967.02' Rad Type P Gutter
Begin Str Type P Gutter
TC El 1695.70 (Theor)

16 424+45.02-18.00' R
End Str Type P Gutter
Begin Str Modified Type F68 C&G
TC El 1695.51 (Theor)

LEGEND
- Grass
- 4" Colored Concrete
- 4" Colored Reinforced Concrete
- 6" Reinforced Concrete
- 6" Concrete

Plot Scale - 1:40
Plotted From - TRSF12141
File - U:\rdi\prj\mody\06094420cg.dgn

CURB & GUTTER LAYOUT

STATE OF SOUTH DAKOTA	PROJECT	SHEET	TOTAL SHEETS
	NH-CR 0034(193)402	B87	B146

Plotting Date: 08/16/2024

Note: All Curb & Gutter shown on this sheet is Modified Type F68 and all gutter is Modified Type P8 except as noted.
All curbside sidewalk is 6' wide and all boulevard sidewalk is 5' except as noted.

All boulevard less than 4 feet wide will be colored concrete,
and all boulevard greater than 4 feet will be grassed.

COLMAN

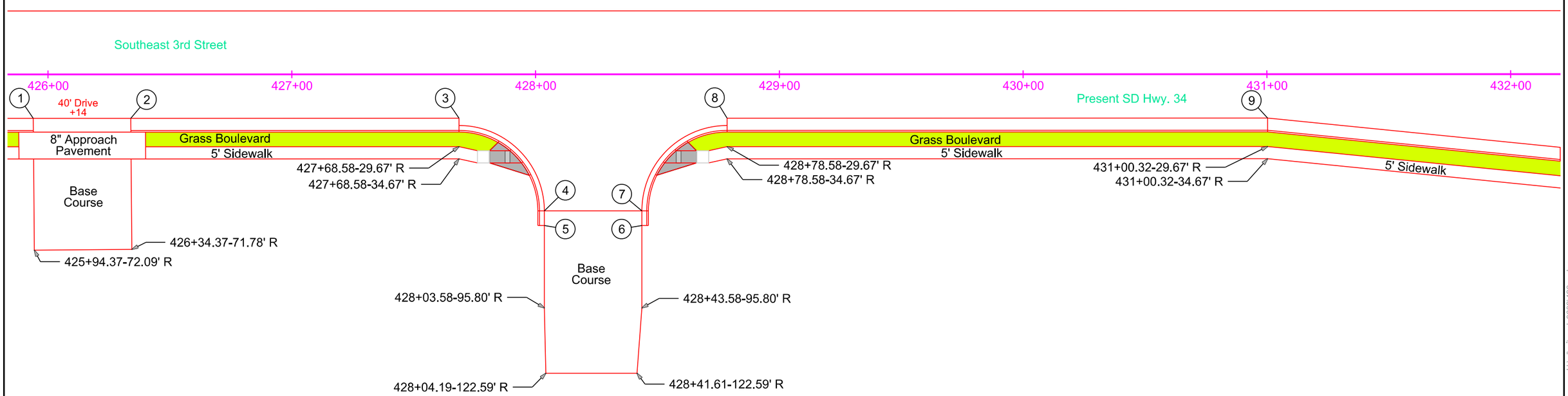

1 425+93.96-18.00' R
End Str C&G
Begin Str Type P Gutter
TC El 1693.70 (Theor)

2 426+33.96-18.00' R
End Str Type P Gutter
Begin Str C&G
TC El 1693.31 (Theor)

3 427+68.58-18.00' R
End Str C&G
Begin Type F68 35' Rad C&G
TC El 1691.99

4 428+03.58-56.00' R
End Type F68 35' Rad C&G
Begin Type B68 Str C&G
TC El 1690.44

5 428+03.58-62.00' R
End Type B68 Str C&G
TC El (Match Existing) (Theor)

6 428+03.58-62.00' R
Begin Type B68 Str C&G
TC El (Match Existing) (Theor)

7 428+43.58-56.00' R
End Type B68 Str C&G
Begin Type F68 35' Rad C&G
TC El 1690.44

8 428+78.58-21.00' R
End Type F68 35' Rad C&G
Begin Str C&G
TC El 1690.91

9 431+00.32-18.00' R
End Str C&G
Begin Str C&G
TC El 1689.81

LEGEND
- Grass
- 4" Colored Concrete
- 4" Colored Reinforced Concrete
- 6" Reinforced Concrete
- 6" Concrete

Plot Scale - 1:40
Plotted From - TRSF12141
File - U:\rdi\prj\moody\0609\426cg.dgn

CURB & GUTTER LAYOUT

STATE OF SOUTH DAKOTA	PROJECT	SHEET	TOTAL SHEETS
	NH-CR 0034(193)402	B88	B146

Plotting Date: 08/16/2024

Note: All Curb & Gutter shown on this sheet is Modified Type F68 and all gutter is Modified Type P8 except as noted.
All curbside sidewalk is 6' wide and all boulevard sidewalk is 5' except as noted.

All boulevard less than 4 feet wide will be colored concrete,
and all boulevard greater than 4 feet will be grassed.
All approach pavement is 6" except as noted.

1 432+20.32-30.00' R
End Str C&G
Begin Str C&G
TC El 1690.00

2 433+45.32-30.00' R
End Str C&G
Begin Type F68 35' Rad C&G
TC El 1690.54

3 433+80.35-68.00' R
End Type F68 35' Rad C&G
Begin Type B68 Str C&G
TC El 1690.35

4 433+80.35-79.38' R
End Type B68 Str C&G
TC Elev (Match Existing)

5 434+15.91-79.34' R
Begin Type B68 Str C&G
TC Elev (Match Existing)

6 434+16.09-55.75' R
End Type B68 Str C&G
Begin Type F68 35' Rad C&G
TC El 1690.43

7 434+49.29-18.00' R
End Type F68 35' Rad C&G
Begin Str C&G
TC El 1691.23

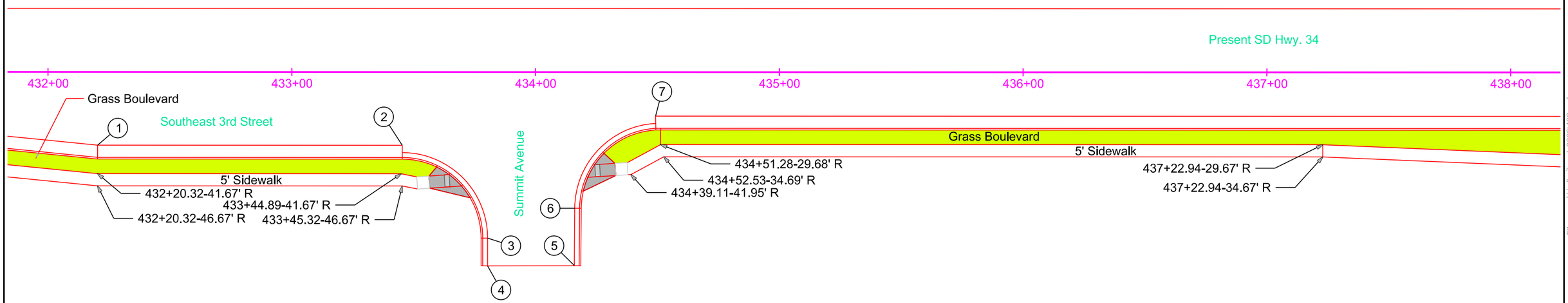

COLMAN

LEGEND
- Grass
- 4" Colored Concrete
- 4" Colored Reinforced Concrete
- 6" Reinforced Concrete
- 6" Concrete

Plot Scale - 1:40
Plotted From - TRSF12141
File - U:\rdprj\moody\609432cg.dgn

CURB & GUTTER LAYOUT

STATE OF SOUTH DAKOTA	PROJECT	SHEET	TOTAL SHEETS
	NH-CR 0034(193)402	B89	B146

Plotting Date: 08/16/2024

Note: All Curb & Gutter shown on this sheet is Modified Type F68 and all gutter is Modified Type P8 except as noted.
All curbside sidewalk is 6' wide and all boulevard sidewalk is 5' except as noted.

All boulevard less than 4 feet wide will be colored concrete,
and all boulevard greater than 4 feet will be grassed.

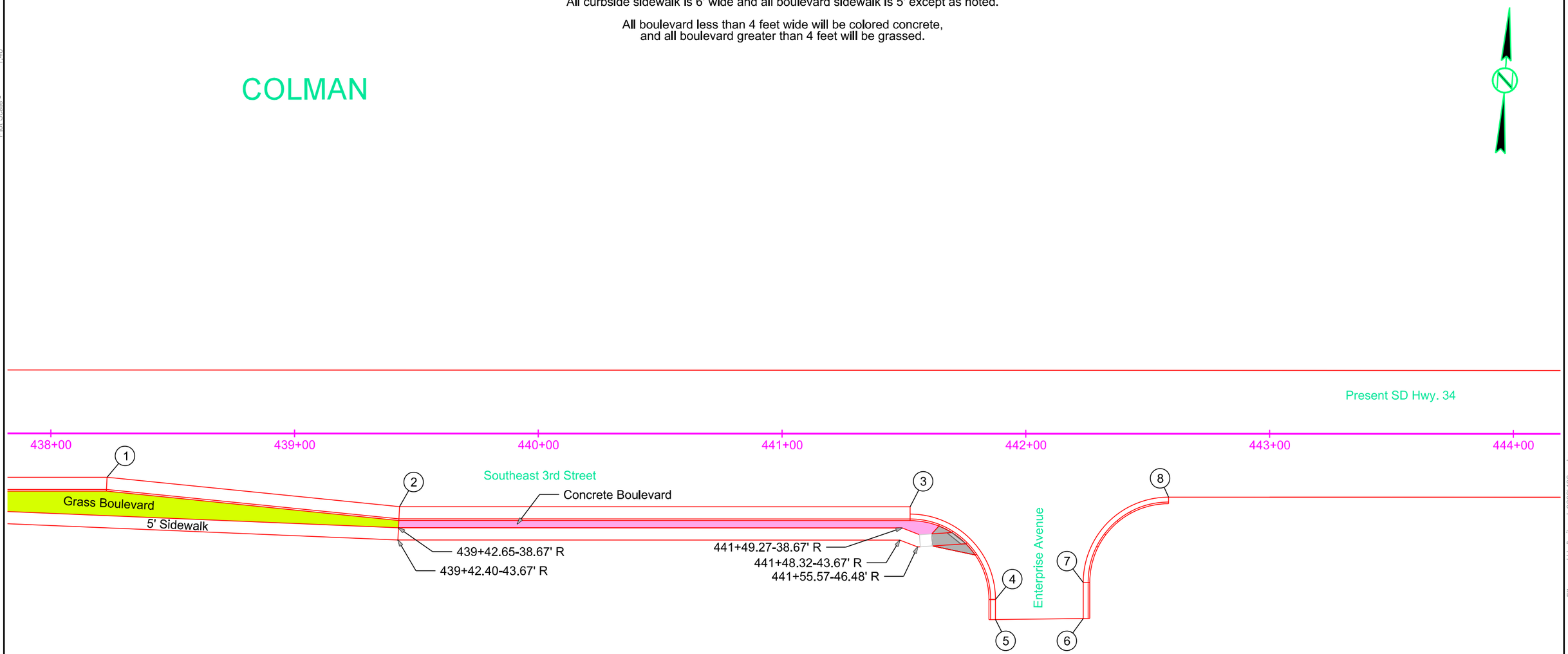

1 438+23.09-18.00' R
End Str C&G
Begin Str C&G
TC El 1692.84

2 439+43.09-30.00' R
End Str C&G
Begin Str C&G
TC El 1693.12

3 441+52.56-30.00' R
End Str C&G
Begin Type B68 35' Rad C&G
TC El 1694.02

4 441+87.56-68.00' R
End Type B68 35' Rad C&G
Begin Type B68 Str C&G
TC El 1694.18

5 441+87.58-76.23' R
End Type B68 Str C&G
TC El (Match Existing)

6 442+23.57-75.80' R
Begin Type B68 Str C&G
TC El (Match Existing)

7 442+23.55-61.02' R
End Type B68 Str C&G
Begin Type B68 35' Rad C&G
TC El 1694.78

8 442+58.55-26.02' R
End Type B68 35' Rad C&G
TC El 1694.62 (Theor)

LEGEND
- Grass
- 4" Colored Concrete
- 4" Colored Reinforced Concrete
- 6" Reinforced Concrete
- 6" Concrete

Plot Scale - 1:40
Plotted From - TRSF12141
File - U:\drj\jmoody\0609438cg.dgn

CURB RAMP LAYOUT

STATE OF SOUTH DAKOTA	PROJECT	SHEET	TOTAL SHEETS
	NH-CR 0034(193)402	B90	B146

Plotting Date: 08/16/2024

* Turning Space with 1.5% slope
** Curb Ramp with 7.5% slope and 1.5% cross slope

COLMAN

1 383+89.37-31.93' L
Center of Detectable Warning
& Type 2 Curb Ramp

2 384+00.80-31.93' L
End Ramp Slope

3 384+05.80-31.93' L
Back of Turning Space

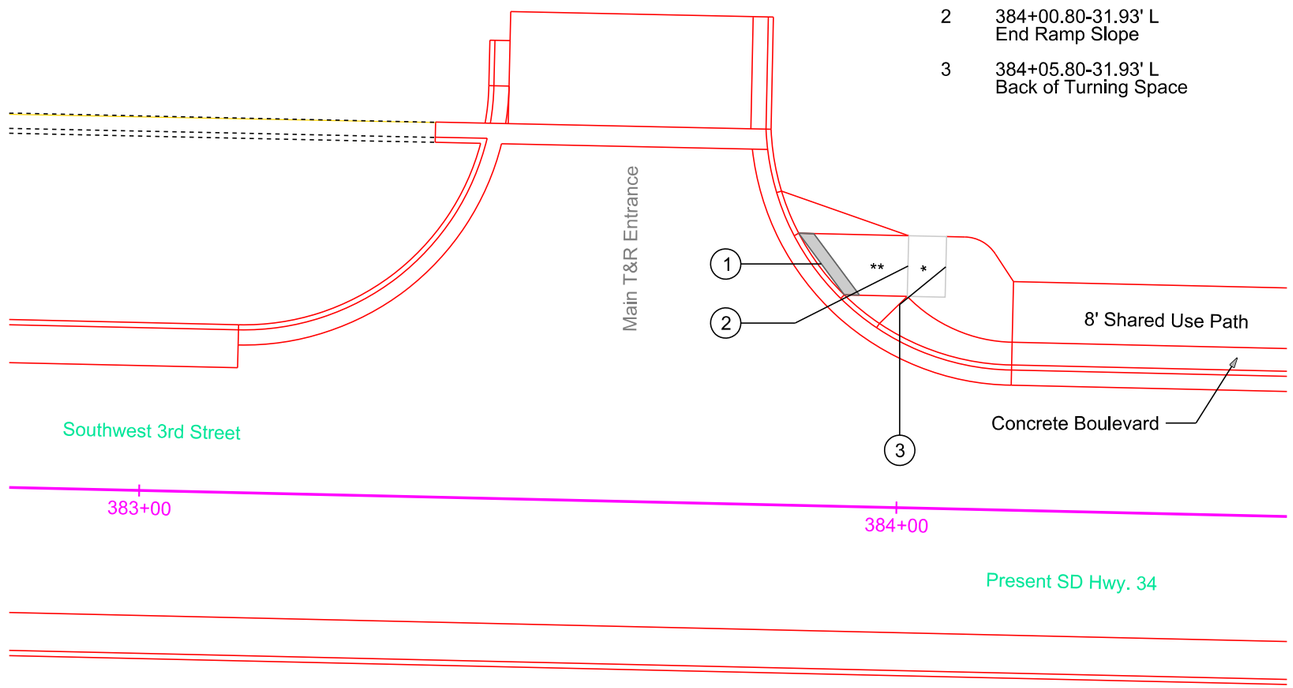

Plot Scale - 1:20
Plotted From - TRSF12141
File - U:\rdp\jmody\609\383cr.dgn

CURB RAMP LAYOUT

STATE OF SOUTH DAKOTA	PROJECT	SHEET	TOTAL SHEETS
	NH-CR 0034(193)402	B91	B146

Plotting Date: 08/16/2024

* Turning Space with 1.5% slope
** Curb Ramp with 7.5% slope and 1.5% cross slope

*** The turning space at some locations will not be able to achieve full height within the available length for the ramp slope(s). To offset this, the longitudinal running slope (5.0% maximum of the connecting sidewalk(s) will be adjusted to meet the lower elevation of the turning space.

COLMAN

1 399+51.41-34.57' L Back of Turning Space

2 399+55.05-27.44' L End Ramp Slope

3 399+57.42-22.80' L Center of Detectable Warning & Type 1 Curb Ramp

4 399+69.09-36.75' L Center of Detectable Warning & Type 2 Curb Ramp

5 399+63.88-36.75' L End Ramp Slope

6 399+55.88-36.75' L Back of Turning Space

7 400+26.72-36.75' L Back of Turning Space

8 400+18.72-36.75' L End Ramp Slope

9 400+14.41-36.75' L Center of Detectable Warning & Type 2 Curb Ramp

10 400+26.19-22.72' L Center of Detectable Warning & Type 1 Curb Ramp

11 400+28.17-26.55' L End Ramp Slope

12 400+31.85-33.65' L Back of Turning Space

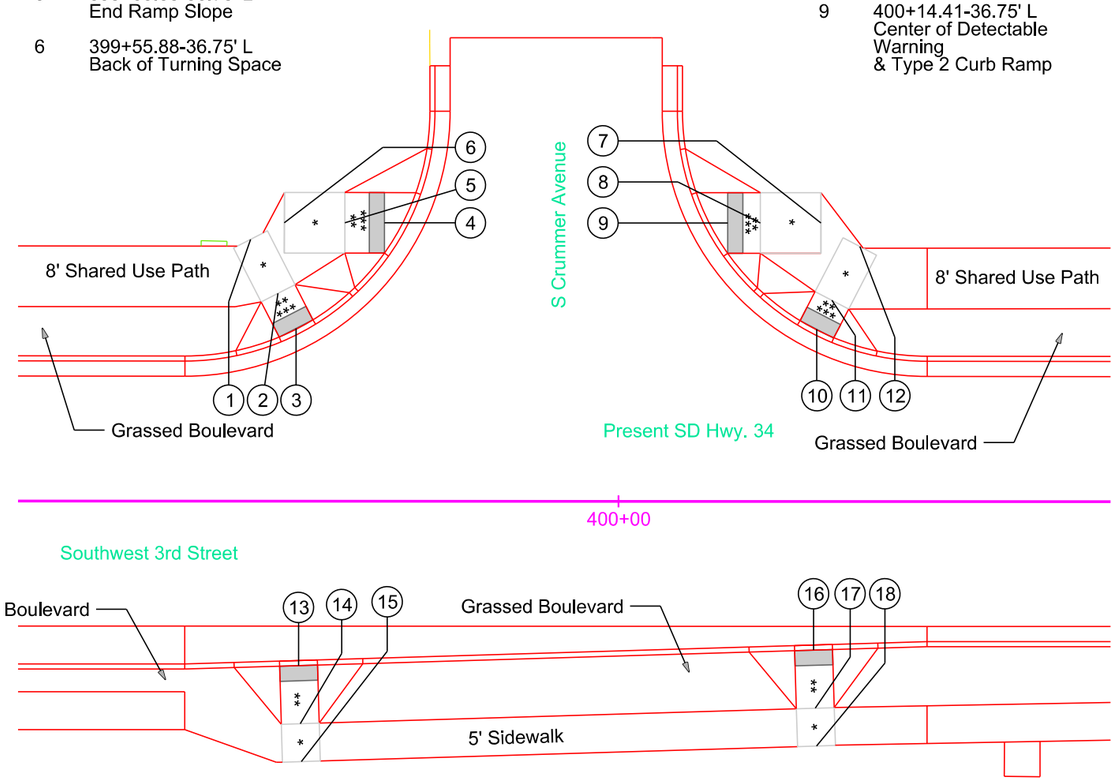

13 399+57.77-21.71' R Center of Detectable Warning & Type 1 Curb Ramp

14 399+58.00-29.38' R End Ramp Slope

15 399+58.16-34.37' R Back of Turning Space

16 400+25.77-19.63' R Center of Detectable Warning & Type 1 Curb Ramp

17 400+26.01-27.30' R End Ramp Slope

18 400+26.16-32.29' R Back of Turning Space

Plot Scale - 1:20
Plotted From - TRSF12141
File - U:\roll\jmoody\06091399cr.dgn

CURB RAMP LAYOUT

STATE OF SOUTH DAKOTA	PROJECT	SHEET	TOTAL SHEETS
	NH-CR 0034(193)402	B92	B146

Plotting Date: 08/16/2024

* Turning Space with 1.5% slope
** Curb Ramp with 7.5% slope and 1.5% cross slope

*** The turning space at some locations will not be able to achieve full height within the available length for the ramp slope(s). To offset this, the longitudinal running slope (5.0% maximum of the connecting sidewalk(s) will be adjusted to meet the lower elevation of the turning space.

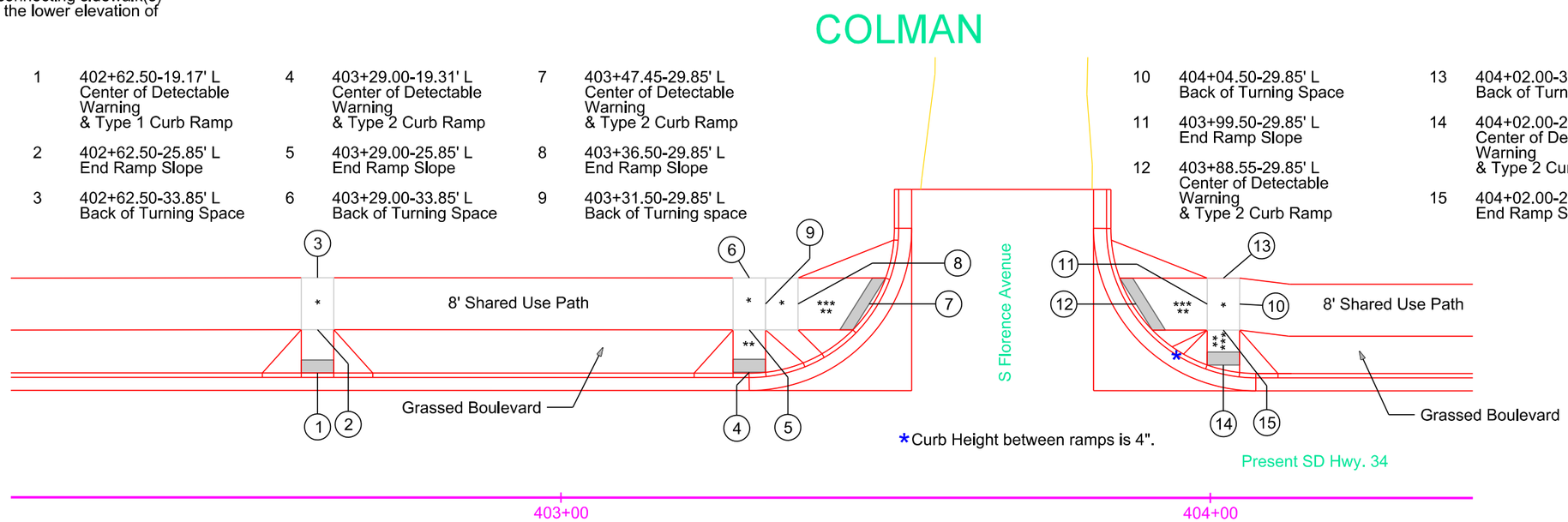

1	402+62.50-19.17' L Center of Detectable Warning & Type 1 Curb Ramp	4	403+29.00-19.31' L Center of Detectable Warning & Type 2 Curb Ramp	7	403+47.45-29.85' L Center of Detectable Warning & Type 2 Curb Ramp	10	404+04.50-29.85' L Back of Turning Space	13	404+02.00-33.85' L Back of Turning Space
2	402+62.50-25.85' L End Ramp Slope	5	403+29.00-25.85' L End Ramp Slope	8	403+36.50-29.85' L End Ramp Slope	11	403+99.50-29.85' L End Ramp Slope	14	404+02.00-20.47' L Center of Detectable Warning & Type 2 Curb Ramp
3	402+62.50-33.85' L Back of Turning Space	6	403+29.00-33.85' L Back of Turning Space	9	403+31.50-29.85' L Back of Turning space	12	403+88.55-29.85' L Center of Detectable Warning & Type 2 Curb Ramp	15	404+02.00-25.85' L End Ramp Slope

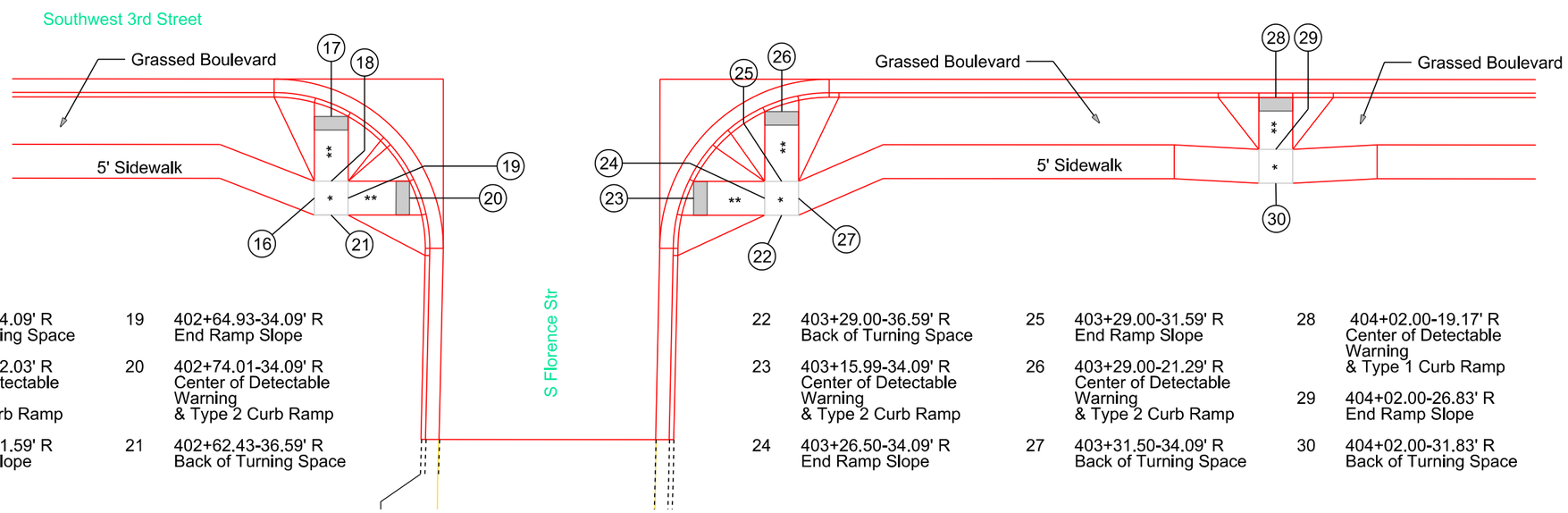

16	402+59.93-34.09' R Back of Turning Space	19	402+64.93-34.09' R End Ramp Slope	22	403+29.00-36.59' R Back of Turning Space	25	403+29.00-31.59' R End Ramp Slope
17	402+62.43-22.03' R Center of Detectable Warning & Type 2 Curb Ramp	20	402+74.01-34.09' R Center of Detectable Warning & Type 2 Curb Ramp	23	403+15.99-34.09' R Center of Detectable Warning & Type 2 Curb Ramp	26	403+29.00-21.29' R Center of Detectable Warning & Type 2 Curb Ramp
18	402+62.43-31.59' R End Ramp Slope	21	402+62.43-36.59' R Back of Turning Space	24	403+26.50-34.09' R End Ramp Slope	27	403+31.50-34.09' R Back of Turning Space

28	404+02.00-19.17' R Center of Detectable Warning & Type 1 Curb Ramp
29	404+02.00-26.83' R End Ramp Slope
30	404+02.00-31.83' R Back of Turning Space

Plot Scale - 1:20
Plotted From - TRSF12141
File - U:\rdprj\mody0609\403cr.dgn

STATE OF SOUTH DAKOTA	PROJECT	SHEET	TOTAL SHEETS
	NH-CR 0034(193)402	B93	B146

Plotting Date: 08/16/2024

CURB RAMP LAYOUT

* Turning Space with 1.5% slope
** Curb Ramp with 7.5% slope and 1.5% cross slope

*** The turning space at some locations will not be able to achieve full height within the available length for the ramp slope(s). To offset this, the longitudinal running slope (5.0% maximum of the connecting sidewalk(s) will be adjusted to meet the lower elevation of the turning space.

COLMAN

1 407+17.16-35.41' L Back of Turning Space

2 407+21.72-28.84' L End Ramp Slope

3 407+24.37-25.01' L Center of Detectable Warning & Type 1 Curb Ramp

4 407+33.50-38.50' L Center of Detectable Warning & Type 2 Curb Ramp

5 407+28.49-38.50' L End Ramp Slope

6 407+23.49-38.50' L Back of Turning space

7 407+99.19-38.50'L Back of Turning space

8 407+94.19-38.50' L End Ramp Slope

9 407+88.50-38.50' L Center of Detectable Warning & Type 2 Curb Ramp

10 407+97.61-25.03' L Center of Detectable Warning & Type 1 Curb Ramp

11 407+88.50-38.50' L End Ramp Slope

12 408+04.83-35.42' L Back of Turning Space

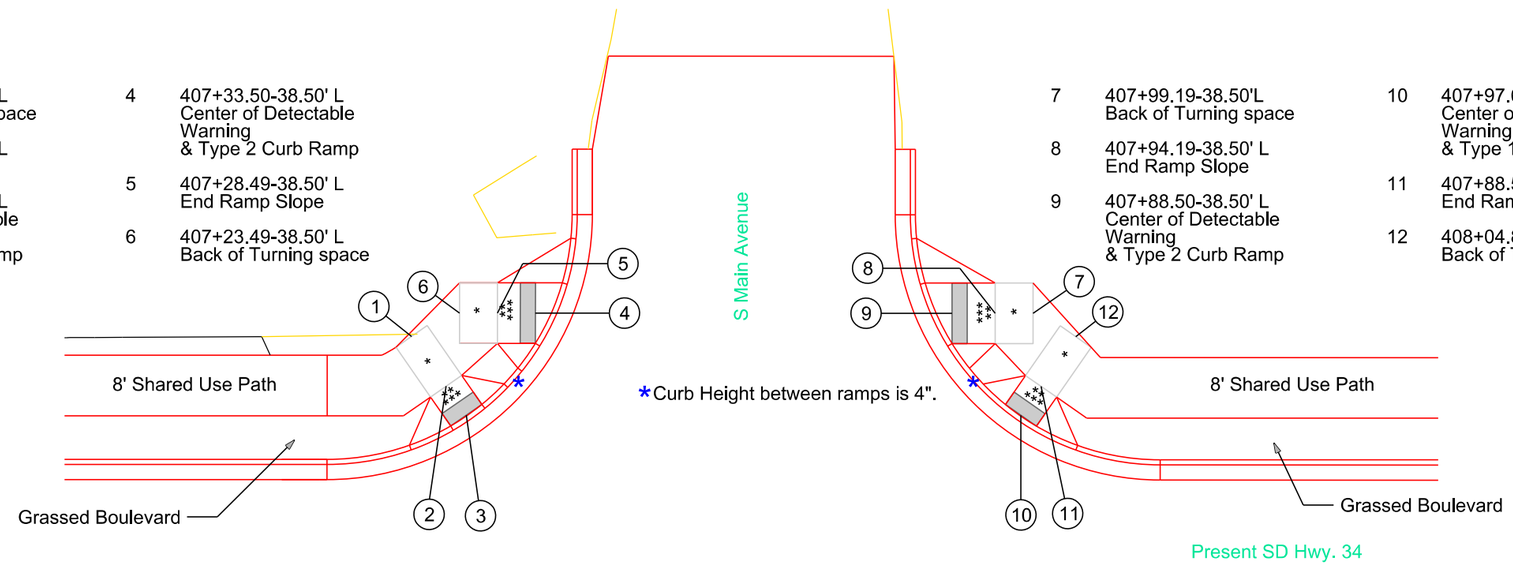

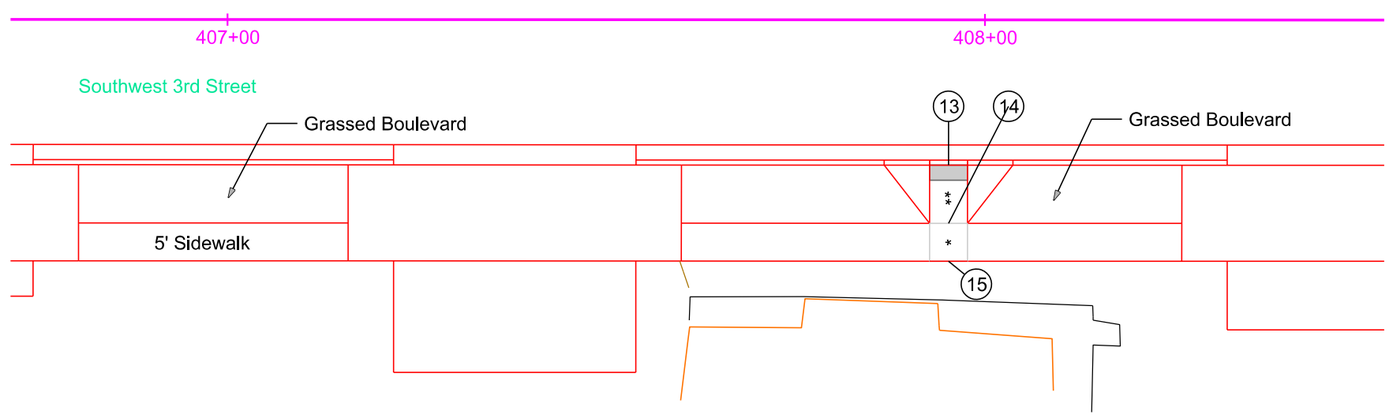

13 407+95.20-19.17' R Center of Detectable Warning & Type 1 Curb Ramp

14 407+95.20-26.85' R End Ramp Slope

15 407+95.20-31.85' R Back of Turning Space

Plot Scale - 1:20
Plotted From - TRSF12141
File - U:\trdprj\moody\0609\407cr.dgn

STATE OF SOUTH DAKOTA	PROJECT	SHEET	TOTAL SHEETS
	NH-CR 0034(193)402	B94	B146

Plotting Date: 08/16/2024

CURB RAMP LAYOUT

* Turning Space with 1.5% slope
** Curb Ramp with 7.5% slope and 1.5% cross slope

*** The turning space at some locations will not be able to achieve full height within the available length for the ramp slope(s). To offset this, the longitudinal running slope (5.0% maximum of the connecting sidewalk(s) will be adjusted to meet the lower elevation of the turning space.

1 411+19.10-33.92' L Back of Turning Space

2 411+19.10-20.89' L Center of Detectable Warning & Type 2 Curb Ramp

3 411+19.10-25.92' L End Ramp Slope

4 411+28.99-29.92' L Center of Detectable Warning & Type 2 Curb Ramp

5 411+21.60-29.92' L End Ramp Slope

6 411+16.60-29.92' L Back of Turning Space

7 411+87.68-29.92' L Back of Turning Space

8 411+82.68-29.92' L End Ramp Slope

9 411+74.82-29.92' L Center of Detectable Warning & Type 2 Curb Ramp

10 411+85.18-20.66' L Center of Detectable Warning & Type 2 Curb Ramp

11 411+85.18-25.92' L End Ramp Slope

12 411+85.18-33.92' L Back of Turning Space

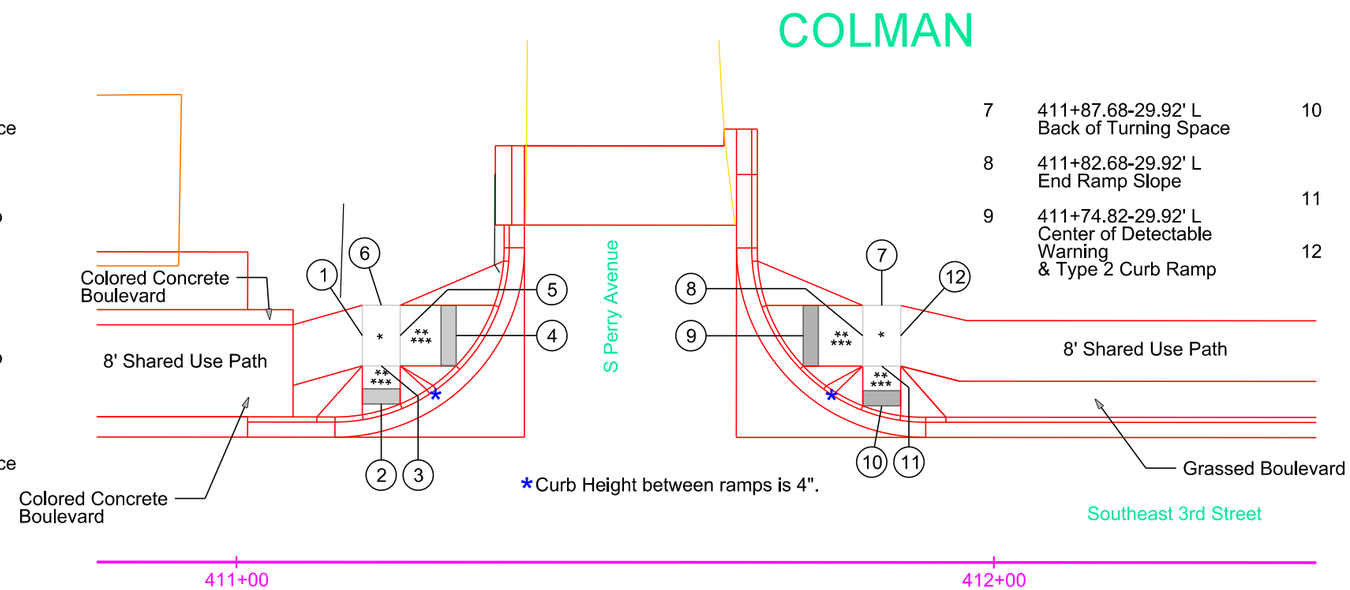

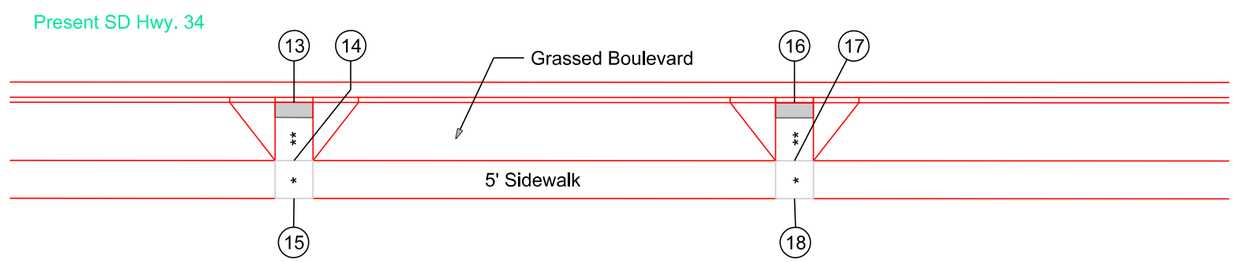

13 411+19.10-19.17' R Center of Detectable Warning & Type 1 Curb Ramp

14 411+19.10-26.85' R End Ramp Slope

15 411+19.10-31.85' R Back of Turning Space

16 411+85.18-19.17' R Center of Detectable Warning & Type 1 Curb Ramp

17 411+85.18-26.85' R End Ramp Slope

18 411+85.18-31.85' R Back of Turning Space

Plot Scale - 1:20
Plotted From - TRSF12141
File - U:\rdprj\moody\0609\411cr.dgn

CURB RAMP LAYOUT

STATE OF SOUTH DAKOTA	PROJECT	SHEET	TOTAL SHEETS
	NH-CR 0034(193)402	B95	B146

Plotting Date: 08/16/2024

* Turning Space with 1.5% slope
** Curb Ramp with 7.5% slope and 1.5% cross slope

*** The turning space at some locations will not be able to achieve full height within the available length for the ramp slope(s). To offset this, the longitudinal running slope (5.0% maximum of the connecting sidewalk(s) will be adjusted to meet the lower elevation of the turning space.

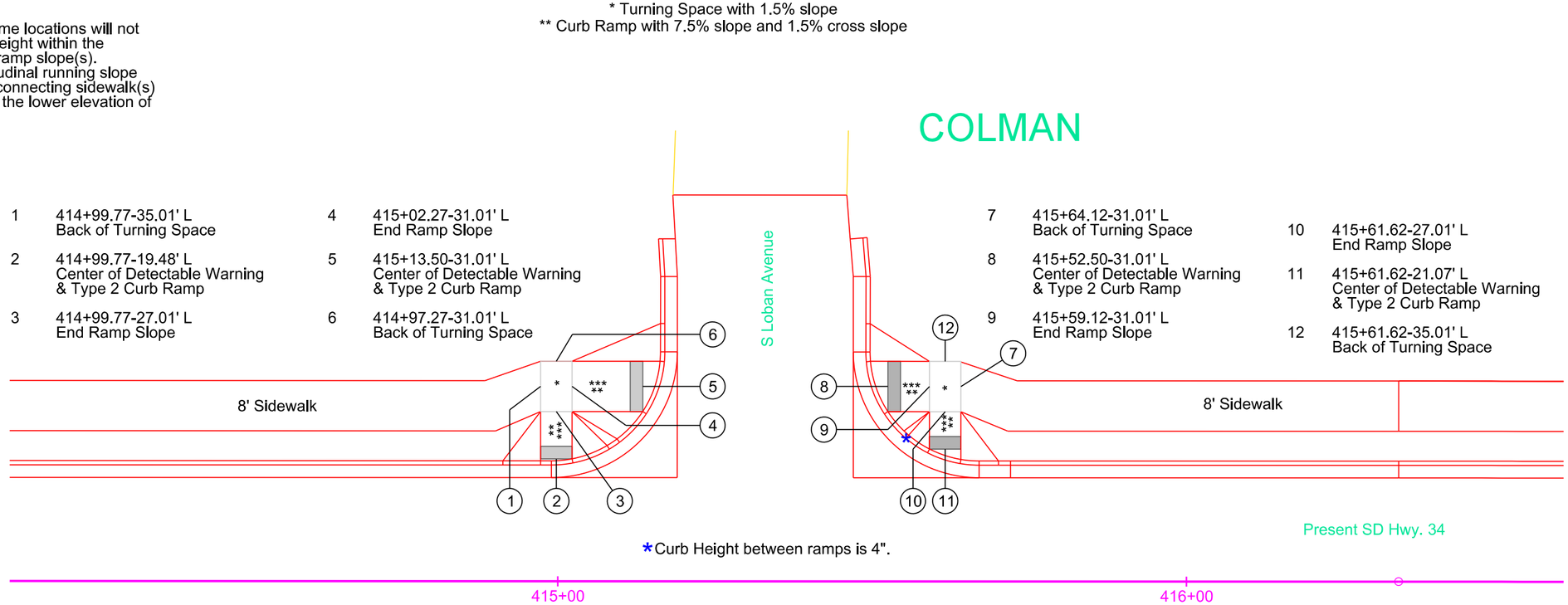

1	414+99.77-35.01' L Back of Turning Space	4	415+02.27-31.01' L End Ramp Slope
2	414+99.77-19.48' L Center of Detectable Warning & Type 2 Curb Ramp	5	415+13.50-31.01' L Center of Detectable Warning & Type 2 Curb Ramp
3	414+99.77-27.01' L End Ramp Slope	6	414+97.27-31.01' L Back of Turning Space

7	415+64.12-31.01' L Back of Turning Space	10	415+61.62-27.01' L End Ramp Slope
8	415+52.50-31.01' L Center of Detectable Warning & Type 2 Curb Ramp	11	415+61.62-21.07' L Center of Detectable Warning & Type 2 Curb Ramp
9	415+59.12-31.01' L End Ramp Slope	12	415+61.62-35.01' L Back of Turning Space

*Curb Height between ramps is 4".

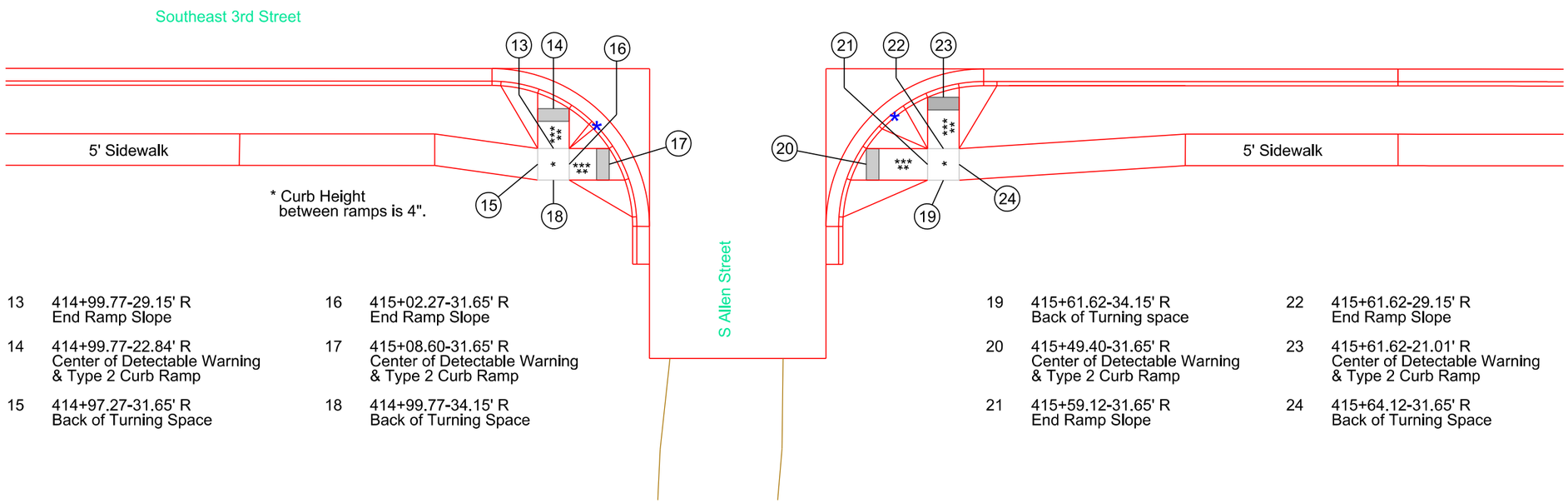

* Curb Height between ramps is 4".

13	414+99.77-29.15' R End Ramp Slope	16	415+02.27-31.65' R End Ramp Slope
14	414+99.77-22.84' R Center of Detectable Warning & Type 2 Curb Ramp	17	415+08.60-31.65' R Center of Detectable Warning & Type 2 Curb Ramp
15	414+97.27-31.65' R Back of Turning Space	18	414+99.77-34.15' R Back of Turning Space

19	415+61.62-34.15' R Back of Turning space	22	415+61.62-29.15' R End Ramp Slope
20	415+49.40-31.65' R Center of Detectable Warning & Type 2 Curb Ramp	23	415+61.62-21.01' R Center of Detectable Warning & Type 2 Curb Ramp
21	415+59.12-31.65' R End Ramp Slope	24	415+64.12-31.65' R Back of Turning Space

Plot Scale - 1:20
Plotted From - TRSF12141
File - U:\rdp\jmoody\0609415cr.dgn

CURB RAMP LAYOUT

STATE OF SOUTH DAKOTA	PROJECT	SHEET	TOTAL SHEETS
	NH-CR 0034(193)402	B96	B146

Plotting Date: 08/16/2024 Revised 03/20/2023 AR

* Turning Space with 1.5% slope
** Curb Ramp with 7.5% slope and 1.5% cross slope

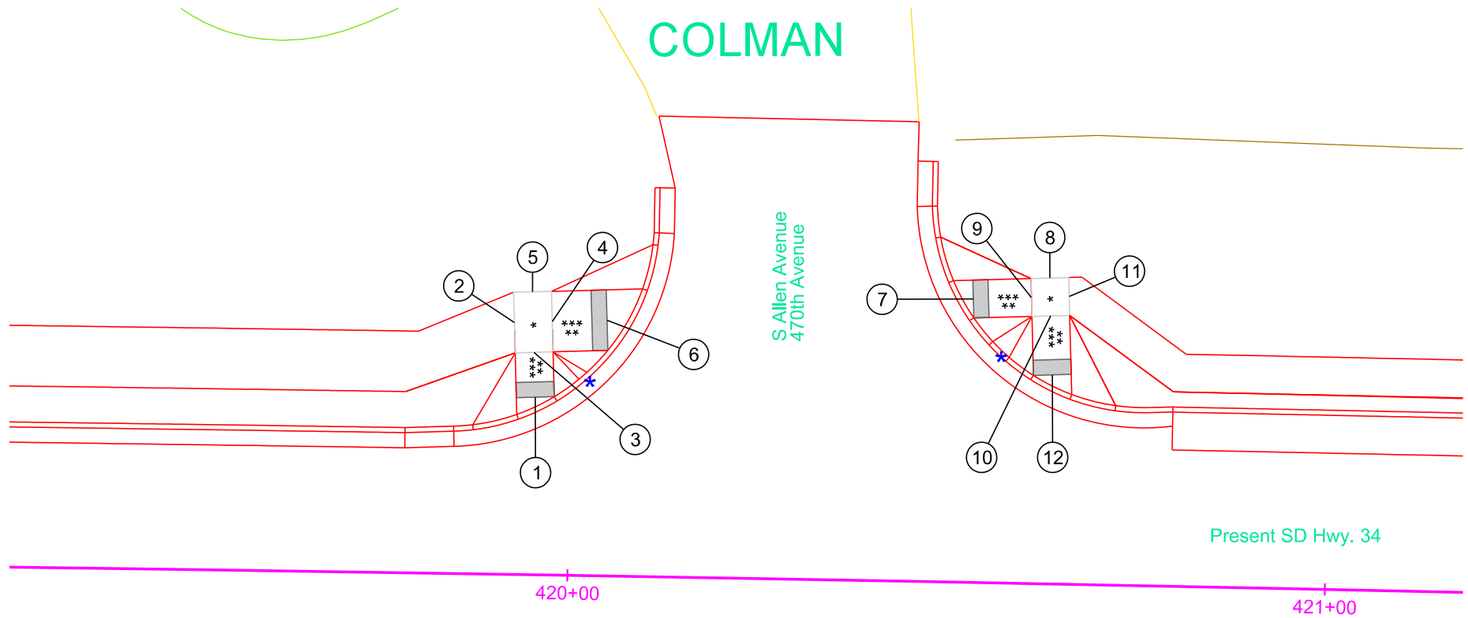

1 419+95.38-23.45' L Center of Detectable Warning & Type 2 Curb Ramp

2 419+92.46-33.25' L Back of Turning Space

3 419+95.12-29.36' L End Ramp Slope

4 419+97.45-33.47' L End Ramp Slope

5 419+94.78-37.36' L Back of Turning Space

6 420+04.66-33.78' L Center of Detectable Warning & Type 2 Curb Ramp

7 420+52.90-37.42' L Center of Detectable Warning & Type 2 Curb Ramp

8 420+62.92-40.38' L Back of Turning Space

9 420+60.54-37.77' L End Ramp Slope

10 420+63.15-35.39' L End Ramp Slope

11 420+65.53-38.00' L Back of Turning Space

12 420+63.50-27.60' L Center of Detectable Warning & Type 2 Curb Ramp

*Curb Height between ramps is 4".

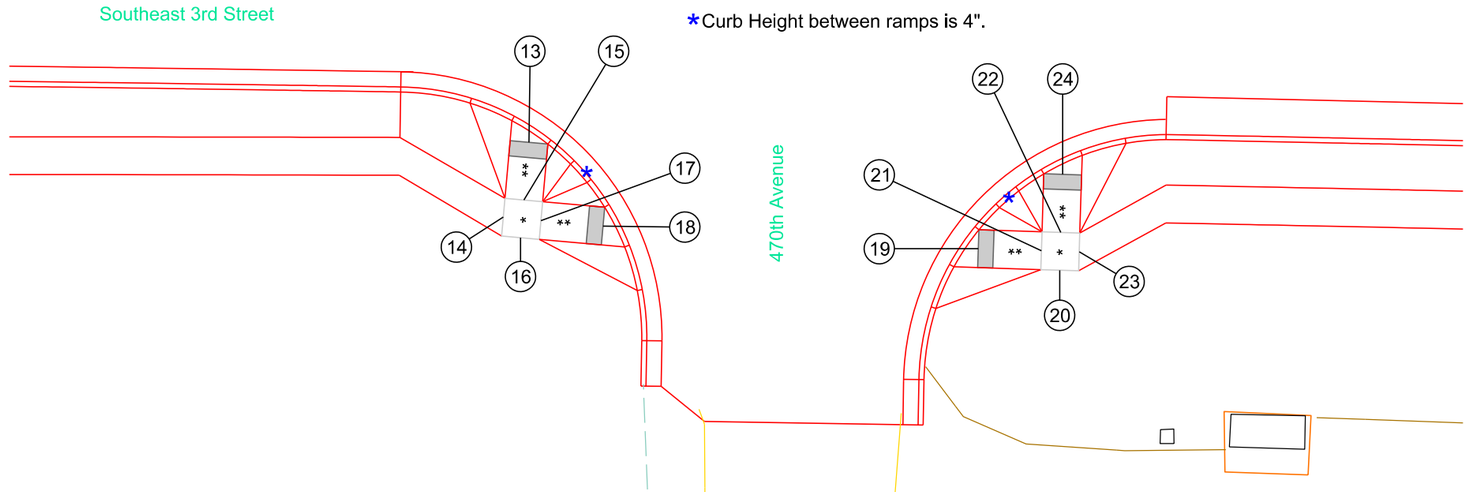

13 419+95.34-25.55' R Center of Detectable Warning & Type 2 Curb Ramp

14 419+92.10-35.48' R Back of Turning Space

15 419+94.78-33.17' R End Ramp Slope

16 419+94.42-38.16' R Back of Turning Space

17 419+97.10-35.85' R End Ramp Slope

18 420+05.29-36.44' R Center of Detectable Warning & Type 2 Curb Ramp

19 420+54.98-38.55' R Center of Detectable Warning & Type 2 Curb Ramp

20 420+65.79-41.19' R Back of Turning Space

21 420+63.32-38.66' R End Ramp Slope

22 420+65.86-36.19' R End Ramp Slope

23 420+68.33-38.72' R Back of Turning Space

24 420+65.95-28.54' R Center of Detectable Warning & Type 2 Curb Ramp

Plot Scale - 1:20
Plotted From - TRSF12141
File - U:\trafprj\moody\0609\420cr.dgn

CURB RAMP LAYOUT

STATE OF SOUTH DAKOTA	PROJECT	SHEET	TOTAL SHEETS
	NH-CR 0034(193)402	B97	B146

Plotting Date: 08/16/2024 Revised 03/20/2023 AR

* Turning Space with 1.5% slope
** Curb Ramp with 7.5% slope and 1.5% cross slope

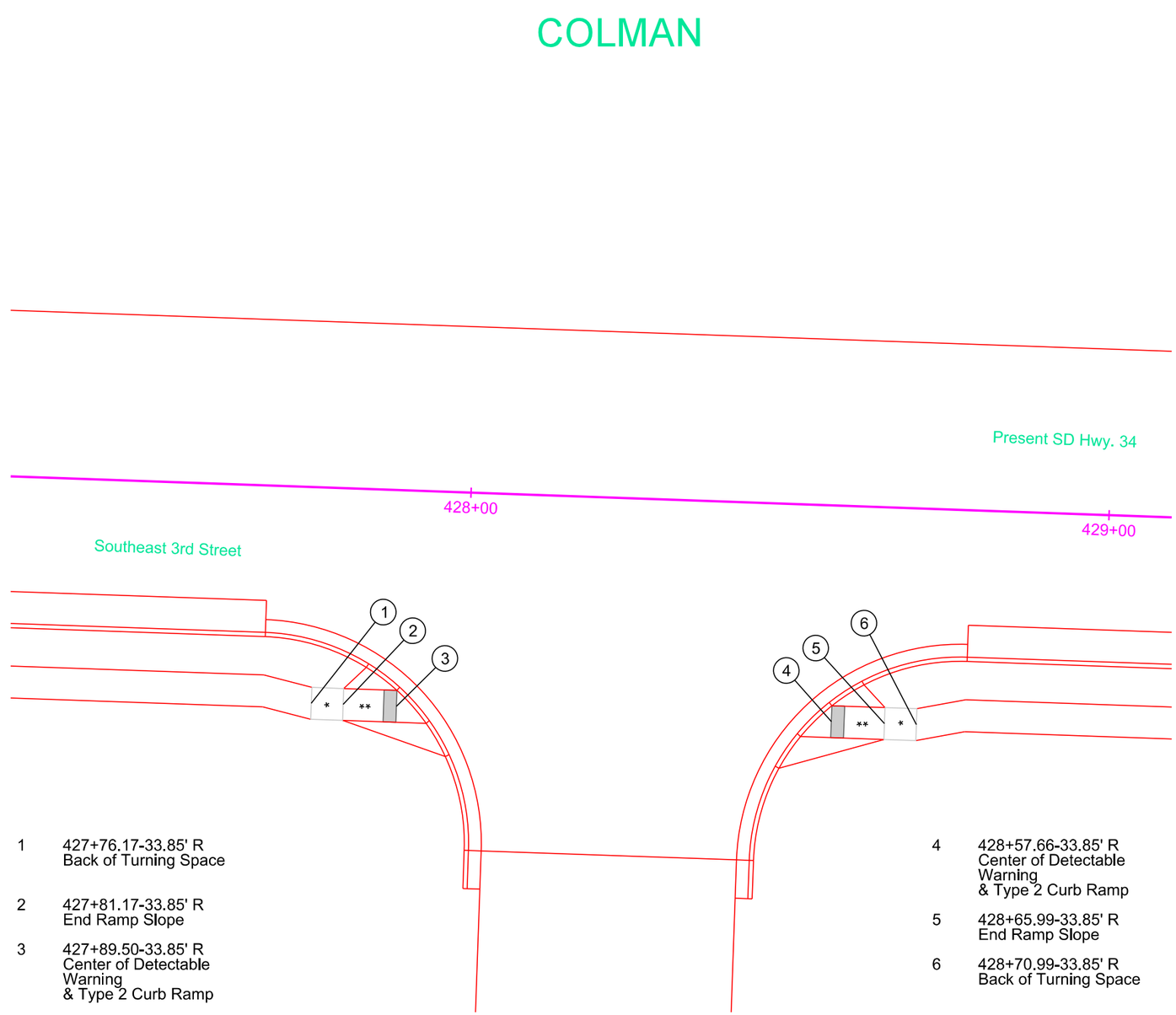

1 427+76.17-33.85' R
Back of Turning Space

2 427+81.17-33.85' R
End Ramp Slope

3 427+89.50-33.85' R
Center of Detectable Warning
& Type 2 Curb Ramp

4 428+57.66-33.85' R
Center of Detectable Warning
& Type 2 Curb Ramp

5 428+65.99-33.85' R
End Ramp Slope

6 428+70.99-33.85' R
Back of Turning Space

Plot Scale - 1:20
Plotted From - TRSF12141
File - U:\rdprj\mody06094\428cr.dgn

CURB RAMP LAYOUT

STATE OF SOUTH DAKOTA	PROJECT	SHEET	TOTAL SHEETS
	NH-CR 0034(193)402	B98	B146

Plotting Date: 08/16/2024

* Turning Space with 1.5% slope
** Curb Ramp with 7.5% slope and 1.5% cross slope

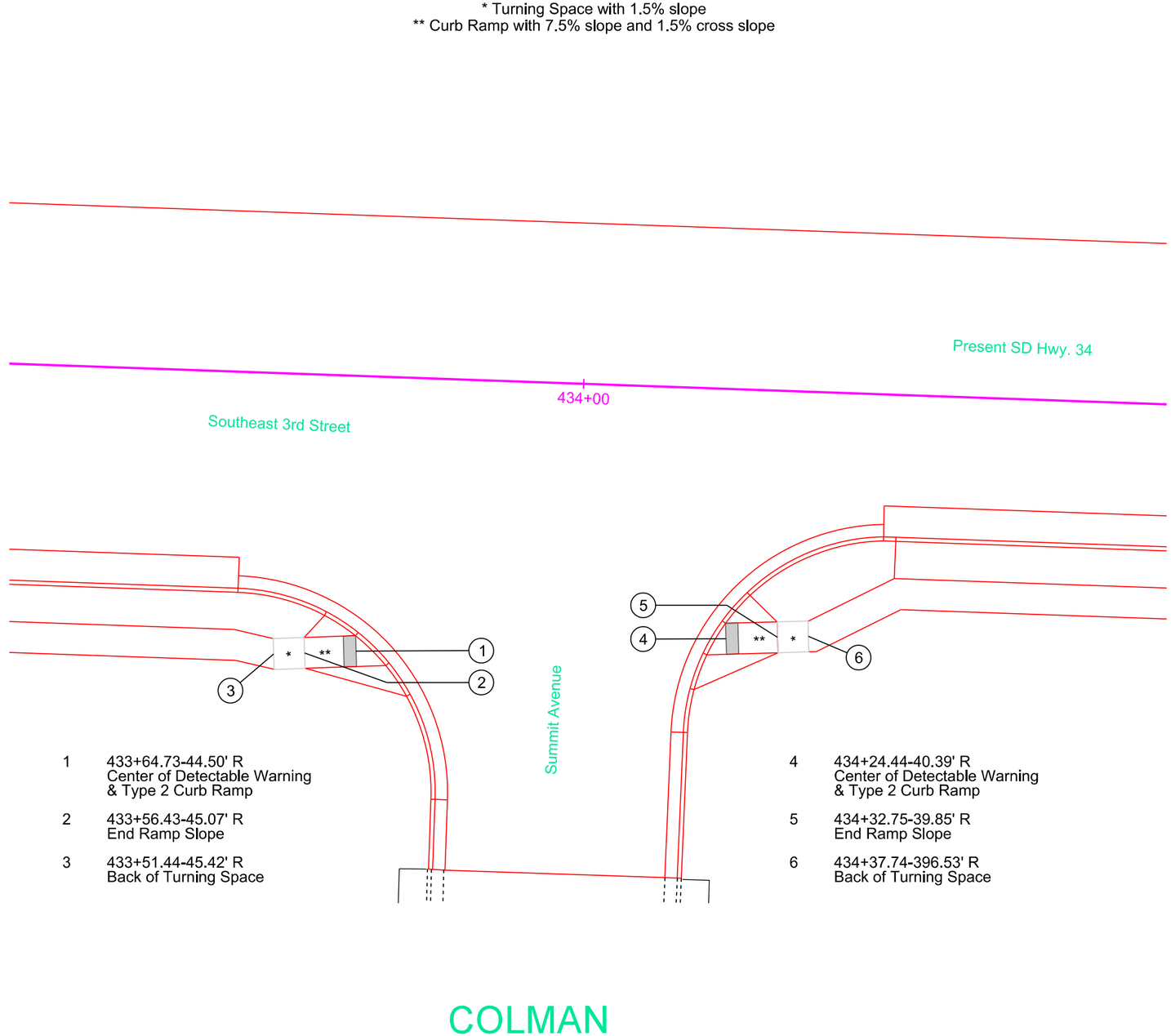

1 433+64.73-44.50' R
Center of Detectable Warning
& Type 2 Curb Ramp

2 433+56.43-45.07' R
End Ramp Slope

3 433+51.44-45.42' R
Back of Turning Space

4 434+24.44-40.39' R
Center of Detectable Warning
& Type 2 Curb Ramp

5 434+32.75-39.85' R
End Ramp Slope

6 434+37.74-396.53' R
Back of Turning Space

Plot Scale - 1:20
Plotted From - TRSF12141
File - U:\roll\jmoody\0609434cr.dgn

CURB RAMP LAYOUT

STATE OF SOUTH DAKOTA	PROJECT	SHEET	TOTAL SHEETS
	NH-CR 0034(193)402	B99	B146

Plotting Date: 08/16/2024

* Turning Space with 1.5% slope
** Curb Ramp with 7.5% slope and 1.5% cross slope

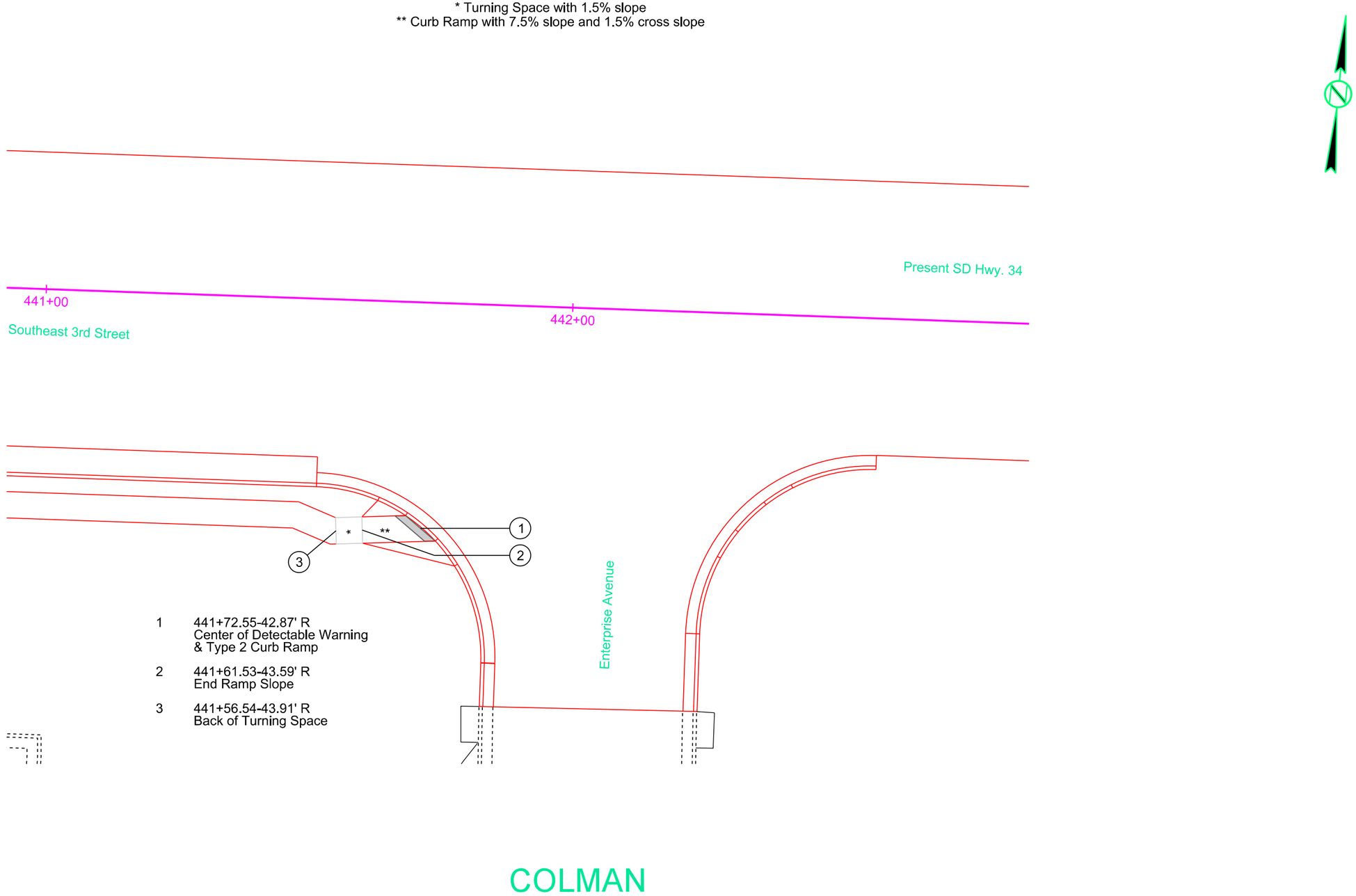

1 441+72.55-42.87' R
Center of Detectable Warning
& Type 2 Curb Ramp

2 441+61.53-43.59' R
End Ramp Slope

3 441+56.54-43.91' R
Back of Turning Space

Plot Scale - 1:20
Plotted From - TRSF12141
File - U:\rdp\jmody0609\441cr.dgn

STATE OF SOUTH DAKOTA	PROJECT	SHEET	TOTAL SHEETS
	NH-CR 0034(193)402	B100	B146

Plotting Date: 08/16/2024

Additional Reinforcement for PCC Fillet with Curb and Gutter

All additional reinforcement will be #4 rebar with a minimum of 3" of clear cover. See Standard Plate 380.30 for additional guidance.

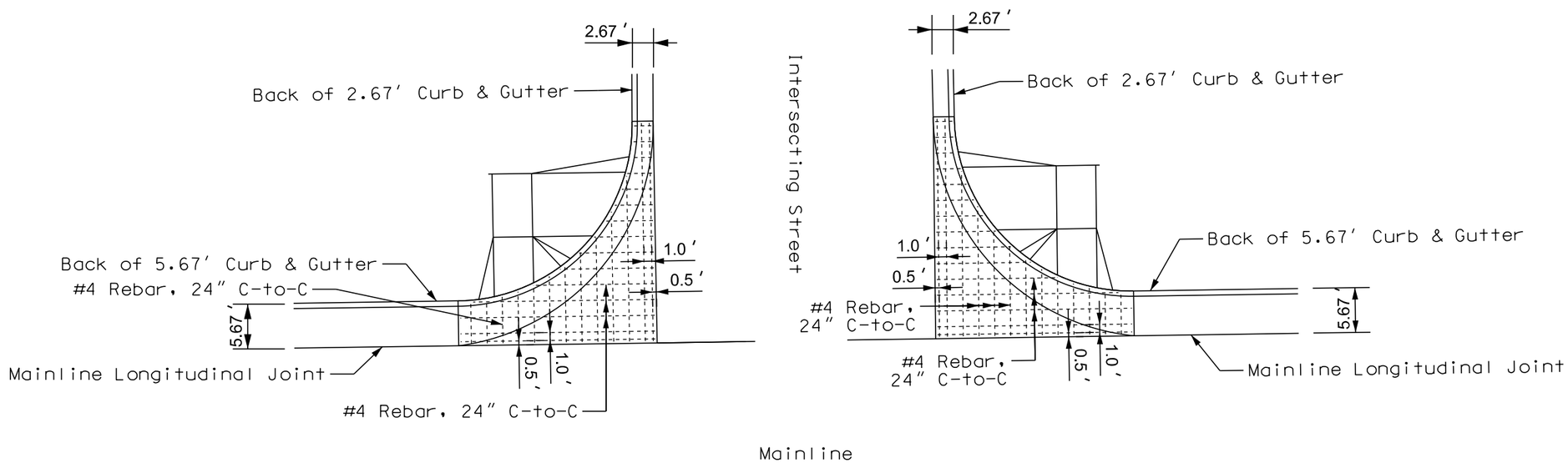

Plot Scale - 1:16

Plotted From - TRSF12141

File - ...\0609_Reinforced Fillet.dgn

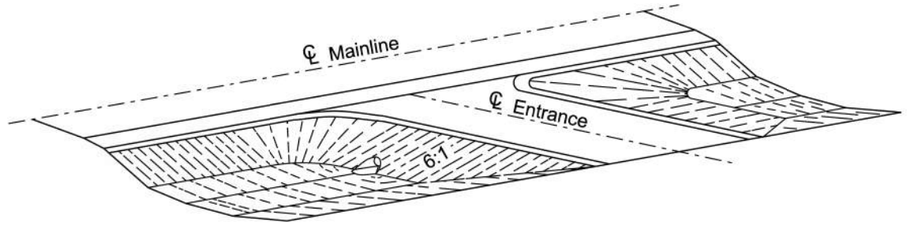

PERSPECTIVE OF ENTRANCE

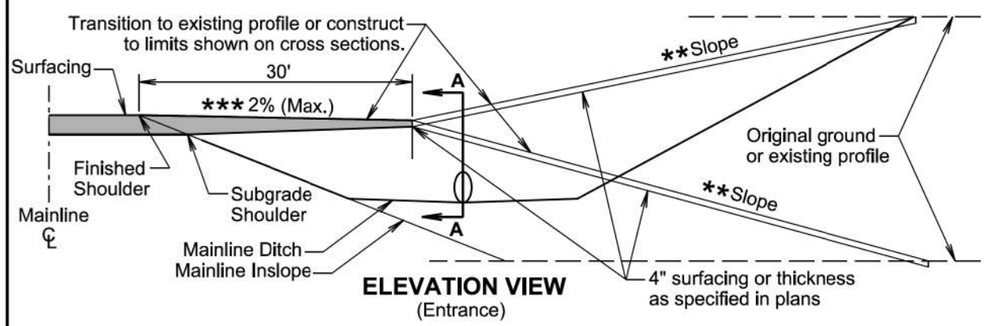

ELEVATION VIEW
(Entrance)

*** 2% When on the inside of superelevation and 0% or flat when on outside of superelevation.

** Entrance maximum slope is typically 10:1 for field entrances and 15:1 for farm/residential entrances.

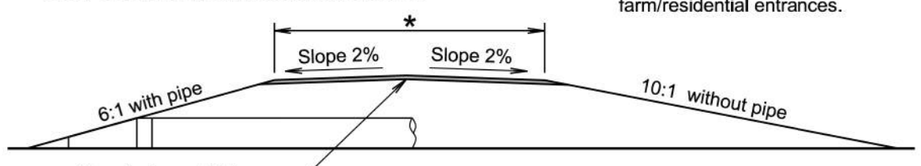

SECTION A-A
(Entrance and Intersecting Road)

* The finished surfacing width is stated elsewhere in the plans. The subgrade width is 4' wider than the finished surfacing width unless stated otherwise in the plans.

GENERAL NOTES:

The ditch section shown above in the perspective view is only for illustrative purpose.

The elevation view above is typical for either a ditch cut or fill section. Entrances that vary from above should be specified in the plans.

Pipe length will be adjusted if necessary during construction to obtain the 6:1 slope. For grading projects, the pipe length is estimated typically using a 4" thickness of surfacing directly over the subgrade above the pipe.

The transition area between the mainline inslope and the entrance or intersecting road inslope will be rounded to eliminate an abrupt transition.

The turning radii will be 35' for intersecting roads and entrances unless stated otherwise in the plans.

November 19, 2021

Published Date: 2025	SDDOT	INTERSECTING ROADS AND ENTRANCES	PLATE NUMBER 120.01
			Sheet 1 of 2

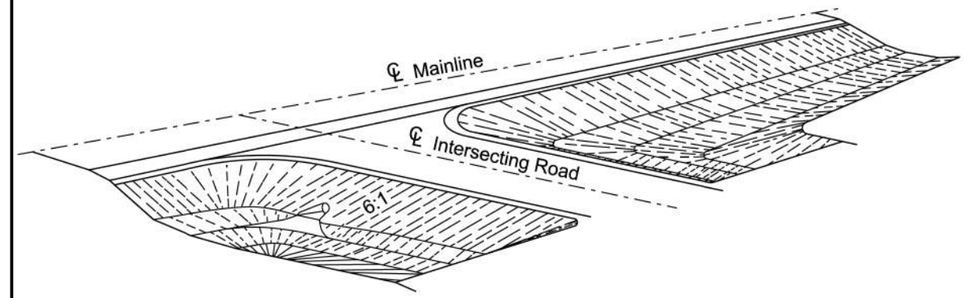

PERSPECTIVE OF INTERSECTING ROAD

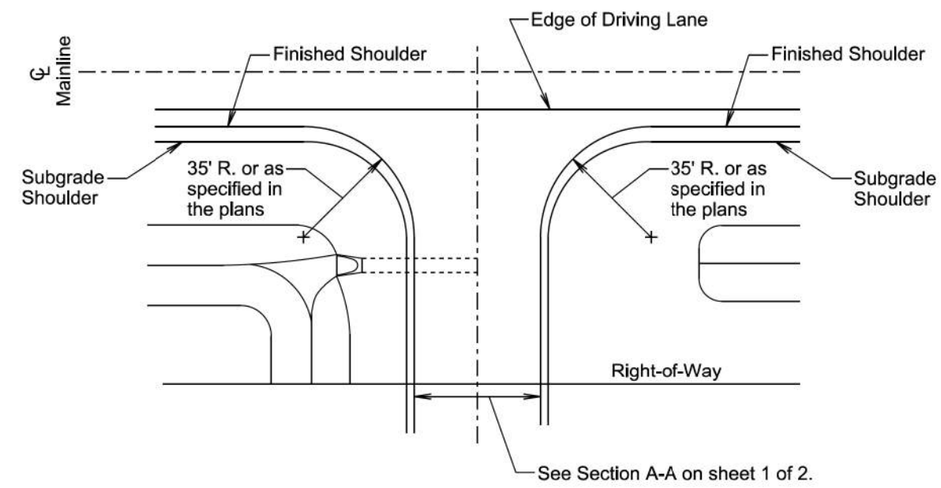

PLAN VIEW

GENERAL NOTES:

The 6:1 or 10:1 intersecting road inslope will transition to the existing intersecting road inslope near the right-of-way or at a location as determined by the Engineer.

November 19, 2021

Published Date: 2025	SDDOT	INTERSECTING ROADS AND ENTRANCES	PLATE NUMBER 120.01
			Sheet 2 of 2

Plot Scale - 1:200
Plotted From - TRSF12141
File - ...\moody\609\StdPlateSectionB.dgn
Standard Plate - 120.01 P1-2 & 120.01 P2-2

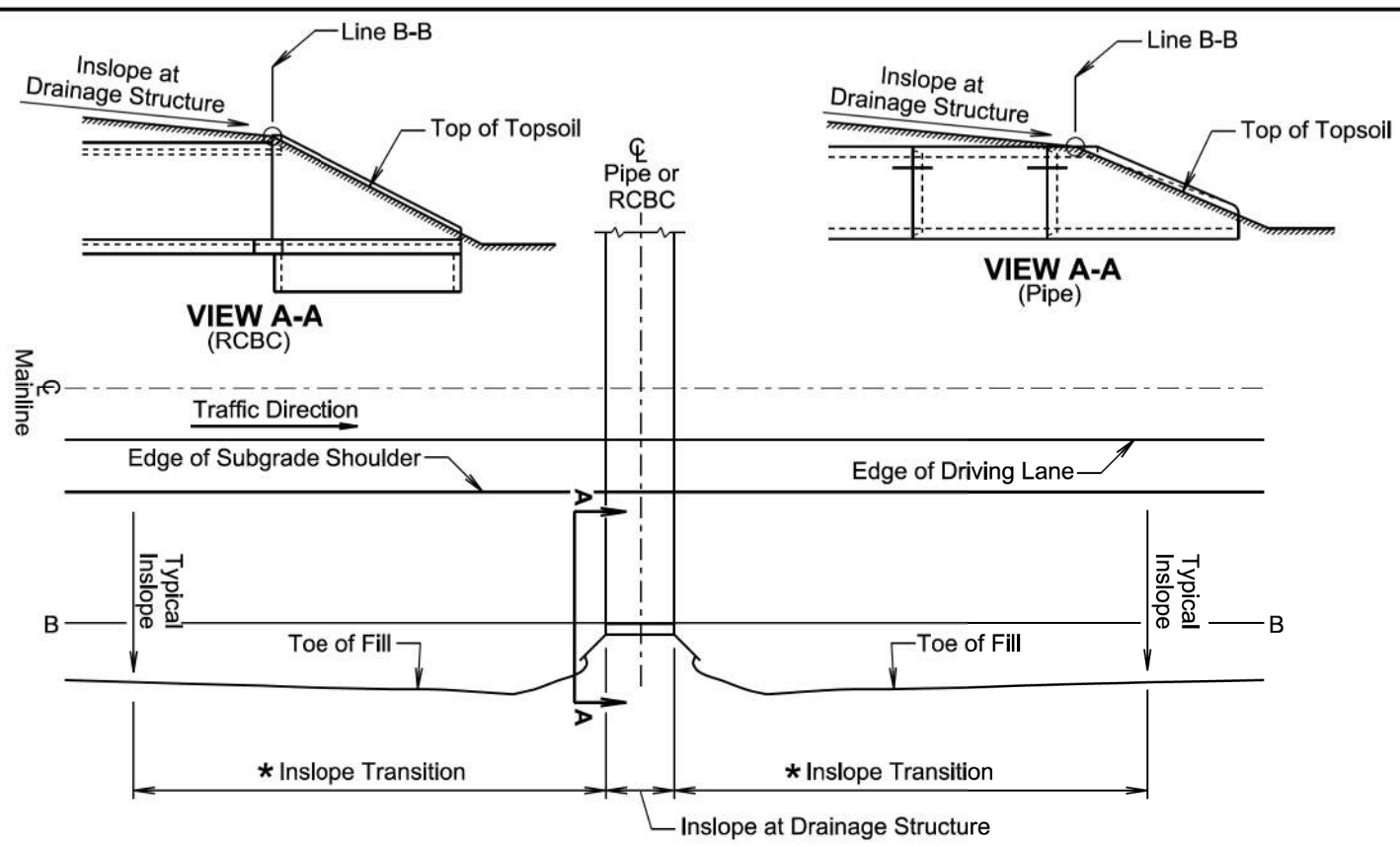

TYPE 1 INSLOPE TRANSITION

GENERAL NOTES:

This Type 1 Inslope Transition is used when the specified inslope at the drainage structure is flatter than the typical inslope and the inslope at the drainage structure is between a 4:1 slope and 6:1 slope.

Line B-B represents the clear zone line, the location where soil intercepts the parapet on an RCBC, the location where the soil intercepts the top of the pipe adjacent to the opening of the pipe end section, or may represent a change in slope.

* Transition from the typical inslope to the inslope at the drainage structure. Within the clear zone (area from edge of subgrade shoulder to line B-B) use 100' length for each 1:1 slope change. Example: transition from a 4:1 to a 6:1 would require a 200' length transition. The typical inslope outside of the clear zone will be transitioned gradually to the slope necessary adjacent to the RCBC wing wall or pipe culvert end section within the transition length necessary for the transition within the clear zone.

Published Date: 2025

SDDOT

INSLOPE TRANSITIONS AT PIPE CULVERTS OR REINFORCED CONCRETE BOX CULVERTS

PLATE NUMBER 120.05

Sheet 1 of 2

September 14, 2018

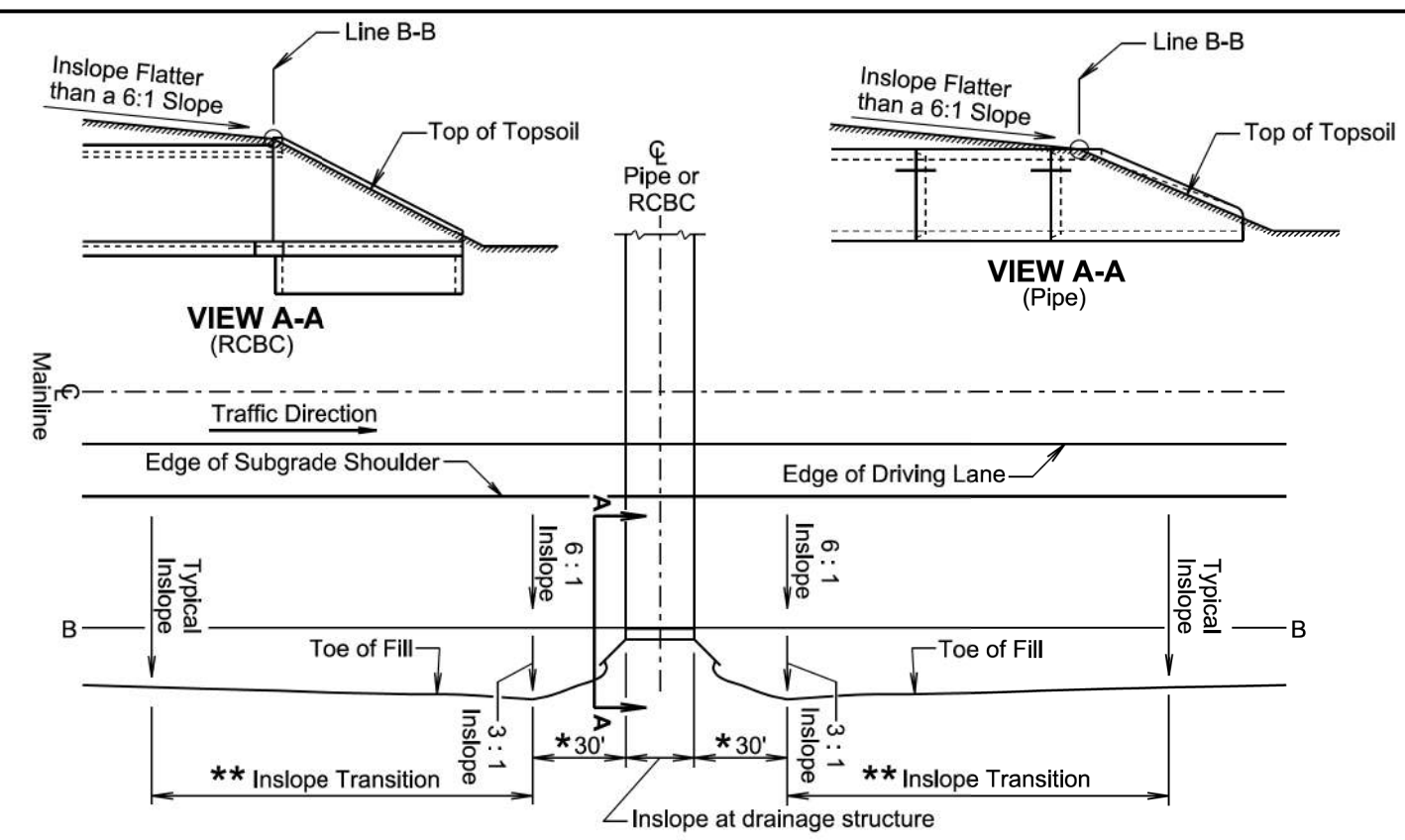

TYPE 2 INSLOPE TRANSITION

GENERAL NOTES:

This Type 2 Inslope Transition is used when the specified inslope at the pipe or RCBC is flatter than a 6:1 slope.

Line B-B represents the clear zone line, the location where soil intercepts the parapet on an RCBC, the location where the soil intercepts the top of the pipe adjacent to the opening of the pipe end section, or may represent a change in slope.

* Transition from Inslope at drainage structure to a 6 : 1 inslope and 3:1 inslope.

** Transition from typical inslope to the inslopes adjacent to the drainage structure. Within the clear zone (area from edge of subgrade shoulder to line B-B) use 100' length for each 1:1 slope change. Example: transition from a 4:1 to a 6:1 would require a 200' length transition. The typical inslope outside of the clear zone will be transitioned to a 3:1 inslope within the transition length necessary for the transition within the clear zone.

Published Date: 2025

SDDOT

INSLOPE TRANSITIONS AT PIPE CULVERTS OR REINFORCED CONCRETE BOX CULVERTS

PLATE NUMBER 120.05

Sheet 2 of 2

September 14, 2018

STATE OF SOUTH DAKOTA	PROJECT	SHEET	TOTAL SHEETS
	NH-CR 0034(193)402	B102	B146

Plotting Date: 08/16/2024

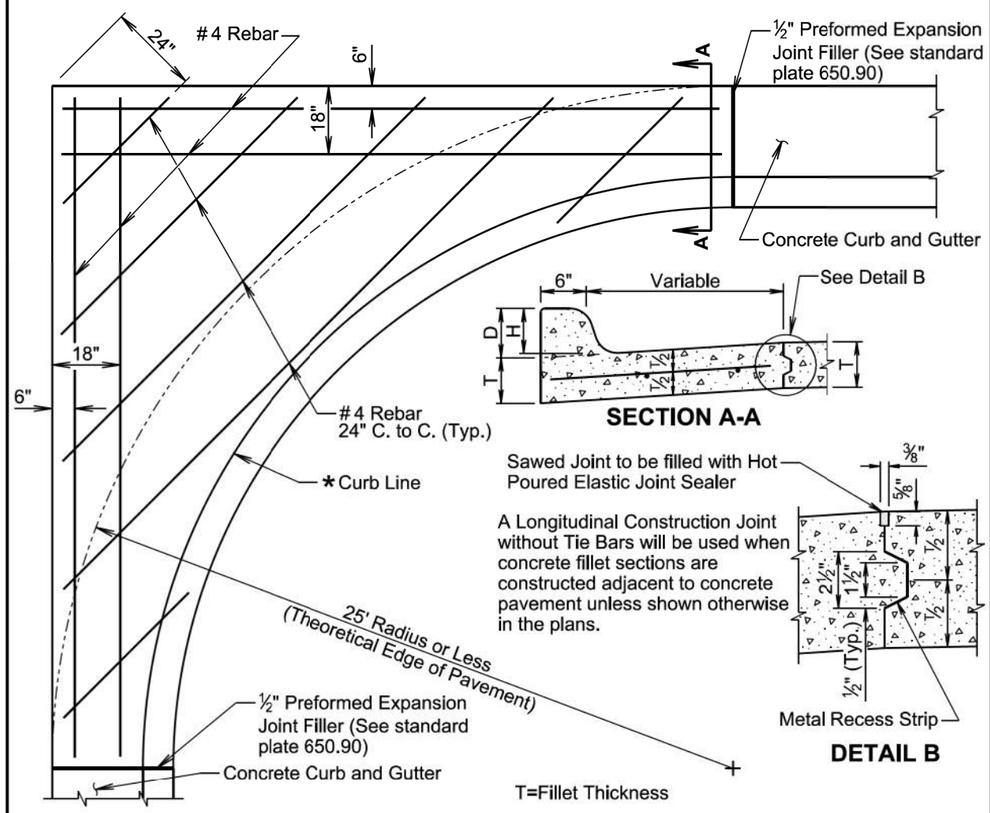

* If a curb ramp is constructed adjacent to a PCC fillet section, the curb will need to be modified. Refer to the corresponding curb ramp standard plate or other special details in the plans for modification of the PCC fillet section.

March 31, 2024

Published Date: 2025	SDDOT	PCC FILLET SECTION WITH TYPE B CURB AND GUTTER	PLATE NUMBER 380.30
			Sheet 1 of 2

GENERAL NOTES:

For fillets with irregular shapes or bump outs:

1) The 6" and 18" offset #4 rebar will be included on any side next to pavement or driveways (not along the Curb and Gutter).

2) All remaining area will have #4 rebar spaced 24" center to center in a square pattern.

Dimensions D, H, and T will conform to those shown on the appropriate curb and gutter standard plate.

All rebar will be in conformance with Sections 480 and 1010 of the Specifications. All rebar will have a minimum of 3 inches of clear cover.

Class M6 Concrete will be used in construction of the fillets.

The concrete curb will be monolithic with the concrete fillet. No separate payment for this curb will be made as the curb is considered a part of the fillet.

Joints will be constructed at 10-foot intervals except when fillets are constructed adjacent to PCC Pavement. If there is adjacent PCC Pavement the joints will be extended from edge of pavement through the fillet section as directed by the Engineer.

The cost for all materials, labor, and incidentals necessary to construct the PCC fillet section with curb and gutter will be incidental to the contract unit price per square yard for the corresponding PCC fillet section contract item.

March 31, 2024

Published Date: 2025	SDDOT	PCC FILLET SECTION WITH TYPE B CURB AND GUTTER	PLATE NUMBER 380.30
			Sheet 2 of 2

Plot Scale - 1:200
Plotted From - TRSF12141
File - ...\modyD609\StdPlateSectionB.dgn
Standard Plate - 380.30 P1-2 & 380.30 P2-2

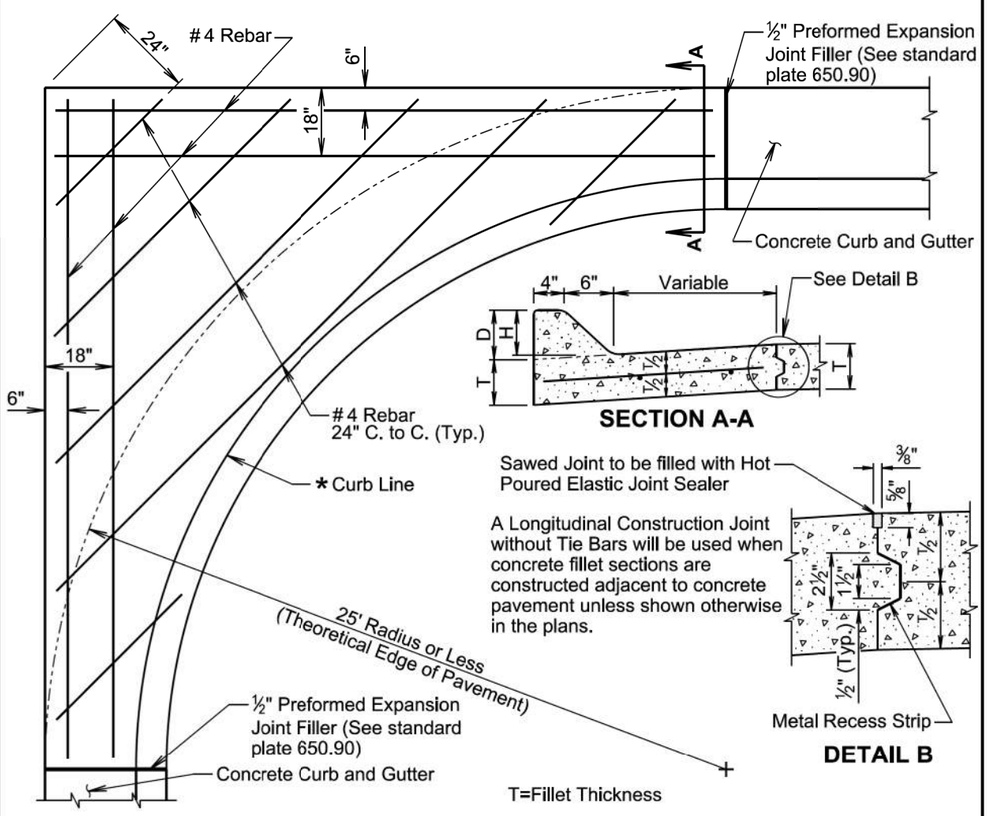

* If a curb ramp is constructed adjacent to a PCC fillet section, the curb will need to be modified. Refer to the corresponding curb ramp standard plate or other special details in the plans for modification of the PCC fillet section.

March 31, 2024

Published Date: 2025	SDDOT	PCC FILLET SECTION WITH TYPE F CURB AND GUTTER	PLATE NUMBER 380.31
			Sheet 1 of 2

GENERAL NOTES:

For fillets with irregular shapes or bump outs:

1) The 6" and 18" offset #4 rebar will be included on any side next to pavement or driveways (not along the Curb and Gutter).

2) All remaining area will have #4 rebar spaced 24" center to center in a square pattern.

If a curb ramp is constructed adjacent to a PCC fillet section, the curb will need to be modified. Refer to the corresponding curb ramp standard plate or other special details in the plans for modification of the PCC fillet section.

Dimensions D, H, and T will conform to those shown on the appropriate curb and gutter standard plate.

All rebar will be in conformance with Sections 480 and 1010 of the Specifications. All rebar will have a minimum of 3 inches of clear cover.

Class M6 Concrete will be used in construction of the fillets.

The concrete curb will be monolithic with the concrete fillet. No separate payment for this curb will be made as the curb is considered a part of the fillet.

Joints will be constructed at 10-foot intervals except when fillets are constructed adjacent to PCC Pavement. If there is adjacent PCC Pavement the joints will be extended from edge of pavement through the fillet section as directed by the Engineer.

The cost for all materials, labor, and incidentals necessary to construct the PCC fillet section with curb and gutter will be incidental to the contract unit price per square yard for the corresponding PCC fillet section contract item.

March 31, 2024

Published Date: 2025	SDDOT	PCC FILLET SECTION WITH TYPE F CURB AND GUTTER	PLATE NUMBER 380.31
			Sheet 2 of 2

Plot Scale - 1:200
Plotted From - TRSF12141
Standard Plate - 380.31 P1-2 & 380.31 P2-2
File - ...\moody0609\StdPlateSectionB.dgn

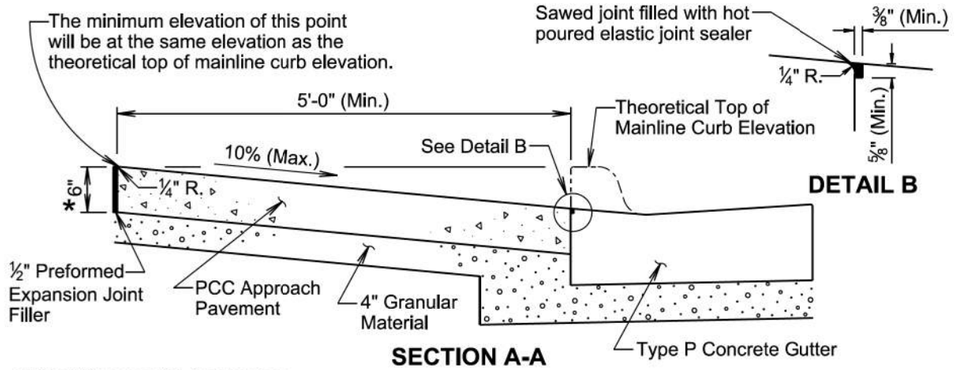

* 8" at Commercial Approaches

** Width for 6" high curb is 6' (See standard plate 650.35)

*** Within these areas, the surface of the type A PCC approach pavement will be sloped transitionally as approved by the Engineer.

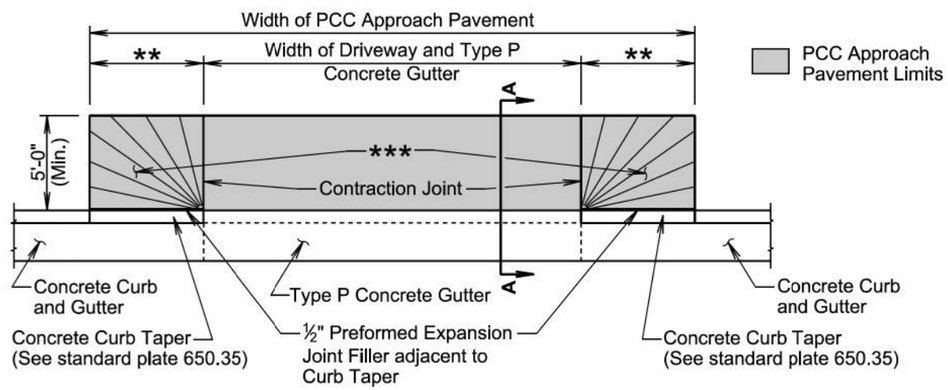

GENERAL NOTES:

The concrete for the type A PCC approach pavement and adjacent driveway will comply with the requirements of the Specifications for class M6 concrete unless otherwise stated in the plans.

Contraction joints in the type A PCC approach pavement will be 1½ inches deep if formed in the fresh concrete using a suitable grooving tool. If a saw is used to cut the contraction joints, then the depth of the joint will be at least ¼ the thickness of the approach pavement. Additional contraction joints not shown in the Plan View will be spaced as follows:

One joint at the center of the approach for driveways 16 feet to 24 feet wide.
Two joints spaced at equal intervals for driveways greater than 24 feet to 40 feet wide.

All costs for furnishing and placing the type A PCC approach pavement and constructing the expansion and contraction joints including labor, equipment, excavation, and materials including the earthen backfill and granular material, will be incidental to the contract unit price per square yard for the corresponding PCC Approach Pavement contract item.

June 26, 2019

Published Date: 2025	SDDOT	TYPE A PCC APPROACH PAVEMENT	PLATE NUMBER 380.40 Sheet 1 of 1

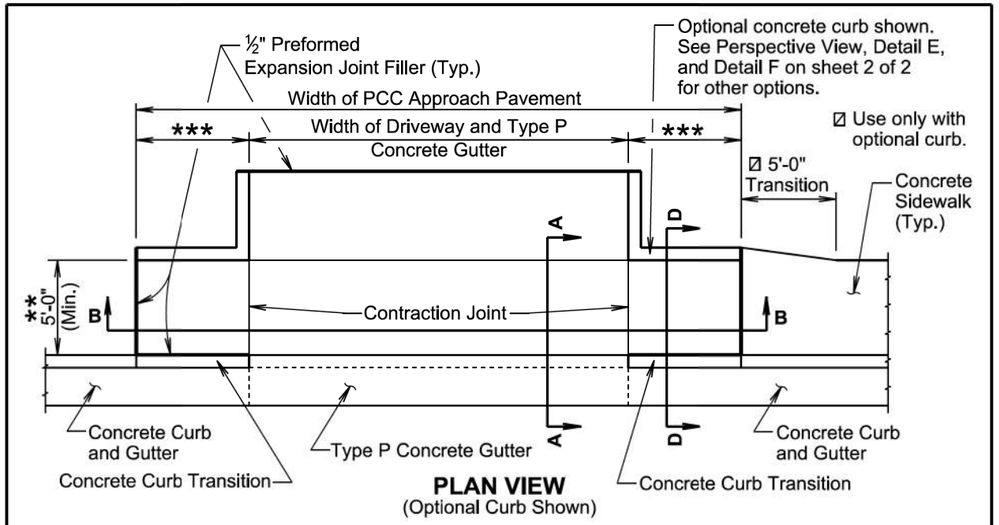

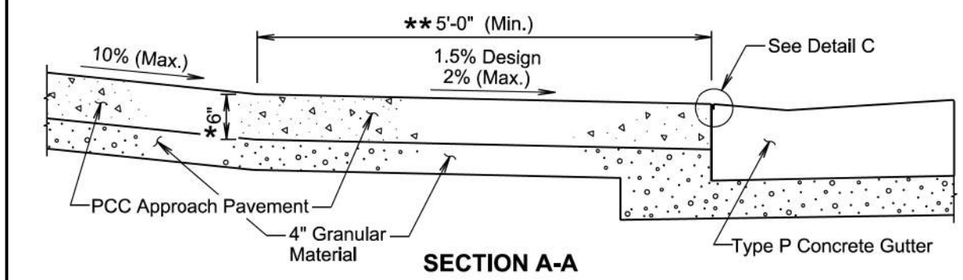

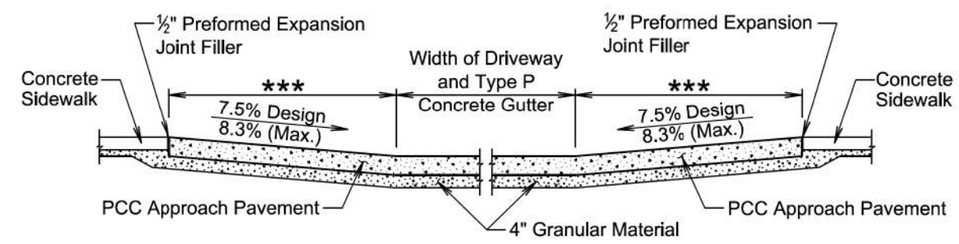

* 8 inches at Commercial Approaches

** Sidewalk width is 5 feet unless specified otherwise in the plans. The cross slope of the sidewalk is designed at 1.5% and will not be steeper than 2% unless specified otherwise in the plans.

*** The slope of the type B PCC approach pavement in these areas will match the slope of the concrete curb transition and the length will not be longer than 15 feet. The slope is designed at 7.5% and will not be steeper than 8.3% unless specified otherwise in the plans.

June 26, 2019

Published Date: 2025	SDDOT	TYPE B PCC APPROACH PAVEMENT	PLATE NUMBER 380.41 Sheet 1 of 2

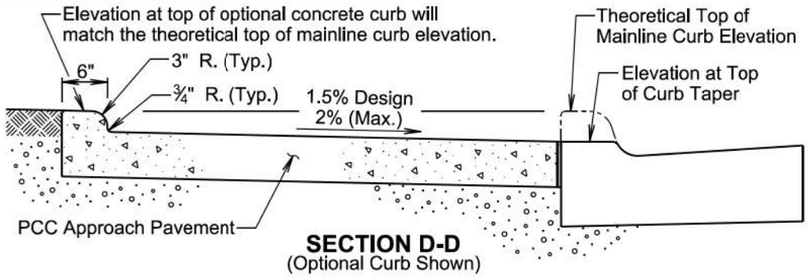

SECTION D-D
(Optional Curb Shown)

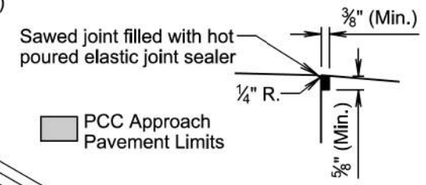

DETAIL C

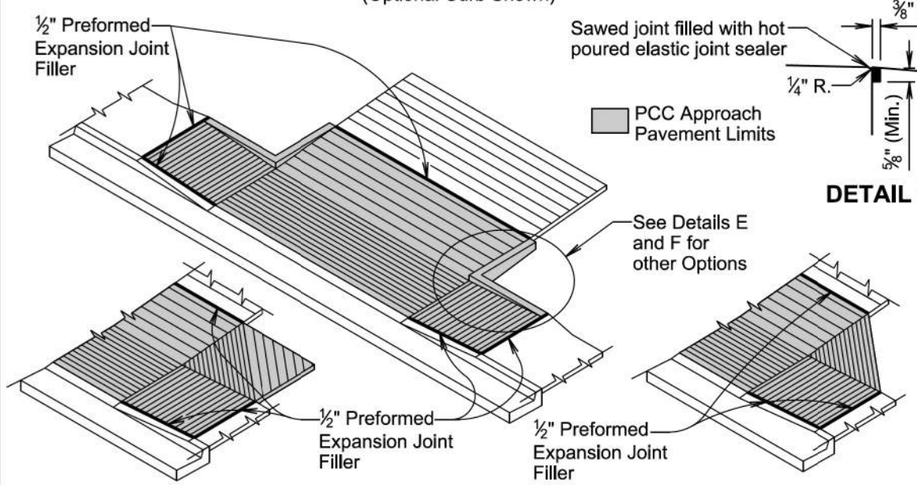

DETAIL E
(Optional Rectangle Pavement Shown)

PERSPECTIVE VIEW
(Optional Curb Shown)

DETAIL F
(Optional Triangle Pavement Shown)

GENERAL NOTES:

Use the plan specified option for the pavement adjacent to the driveway and sidewalk. The options are shown above in the Perspective View, Detail E, and Detail F.

The concrete for the type B PCC approach pavement and adjacent driveway will comply with the requirements of the Specifications for class M6 concrete unless otherwise stated in the plans.

Contraction joints in the type B PCC approach pavement will be 1½ inches deep if formed in the fresh concrete using a suitable grooving tool. If a saw is used to cut the contraction joints, then the depth of the joint will be at least ¼ the thickness of the approach pavement. Additional contraction joints not shown in the Plan View will be spaced as follows:

One joint at the center of the approach for driveways 16 feet to 24 feet wide.
Two joints spaced at equal intervals for driveways greater than 24 feet to 40 feet wide.

All costs for furnishing and placing the type B PCC approach pavement and constructing the expansion and contraction joints including labor, equipment, excavation, and materials including the earthen backfill and granular material will be incidental to the contract unit price per square yard for the corresponding PCC Approach Pavement contract item.

June 26, 2019

Published Date: 2025	SDDOT	TYPE B PCC APPROACH PAVEMENT	PLATE NUMBER 380.41
			Sheet 2 of 2

TOLERANCES IN DIMENSIONS

Diameter: ±1.5% for 24" Dia. or less and ±1% or ⅜" whichever is more for 27" Dia. or greater.
Diameters at joints: ± 3/16" for 30" Dia. or less and ± ¼" for 36" or greater.
Length of joint (J): ± ¼".
Wall thickness (T): not less than design T by more than 5% or 3/16", whichever is greater.
Laying length: shall not underrun by more than ½".

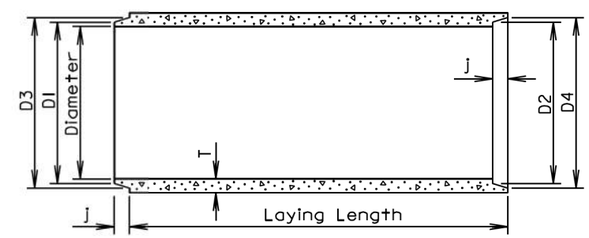

LONGITUDINAL SECTION

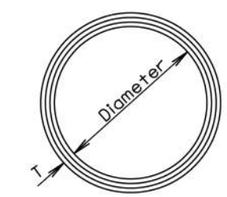

END VIEW

GENERAL NOTES:

Construction of R.C.P. shall conform to the requirements of Section 990 of the Specifications.

Not more than 2 four-foot sections shall be permitted near the ends of any culvert. Four-foot lengths shall be used only to secure the required length of culvert.

Diam. (in.)	Approx. Wt. /Ft. (lb.)	T (in.)	J (in.)	D1 (in.)	D2 (in.)	D3 (in.)	D4 (in.)
12	92	2	1¾	13¼	13⅝	13⅞	14¼
15	127	2¼	2	16½	16⅞	17¼	17⅝
18	168	2½	2¼	19⅝	20	20⅜	20¾
21	214	2¾	2½	22⅞	23¼	23¾	24⅛
24	265	3	2¾	26	26⅜	27	27⅜
27	322	3¼	3	29¼	29⅝	30¼	30⅝
30	384	3½	3¼	32⅜	32¾	33½	33⅞
36	524	4	3¾	38¾	39¼	40	40½
42	685	4½	4	45⅛	45⅝	46½	47
48	867	5	4½	51½	52	53	53½
54	1070	5½	4½	57⅞	58⅜	59⅜	59⅞
60	1296	6	5	64¼	64¾	66	66½
66	1542	6½	5½	70⅝	71⅛	72½	73
72	1810	7	6	77	77½	79	79½
78	2098	7½	6½	83⅜	83⅞	85⅝	86⅛
84	2410	8	7	89¾	90¼	92⅛	92⅝
90	2740	8½	7	95¾	96¼	98⅛	98⅝
96	2950	9	7	102⅛	102⅝	104½	105
102	3075	9½	7½	109	109½	111½	112
108	3870	10	7½	115½	116	118	118½

June 26, 2015

Published Date: 2025	SDDOT	REINFORCED CONCRETE PIPE	PLATE NUMBER 450.01
			Sheet 1 of 1

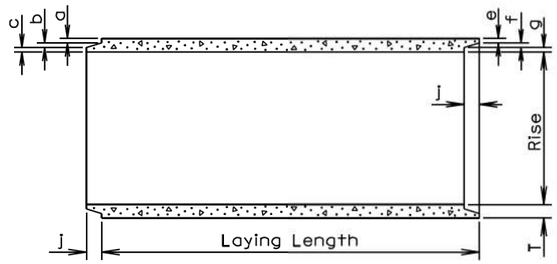

LONGITUDINAL SECTION

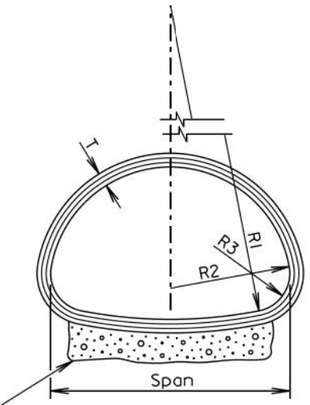

END VIEW

TOLERANCES IN DIMENSIONS

Radial dimensions at joints: ± 1/8" for 65" span or less and ± 1/4" for longer spans.
Rise and Span: ±2% of tabular values.
Length of Joint (J): ± 1/4".
Wall thickness (T): not less than design T by more than 5% or 3/16", whichever is greater.
Laying length: shall not underrun by more than 1/2".

Gravel Bedding Material shall be supplied for 102" to 169" spans. It shall be placed to a thickness of 6" (Min.) x 85% of the Span x Length of culvert and shall conform to the gradation requirements for gravel surfacing except material may be screened or may be plan provided material.

* Size (in.)	Approx. Wt./Ft. (lb.)	Rise (in.)	Span (in.)	T (in.)	a (in.)	b (in.)	c (in.)	j (in.)	e (in.)	f (in.)	g (in.)	R1 (in.)	R2 (in.)	R3 (in.)
18	170	13 1/2	22	2 1/2	1 3/8	3/8	3/4	2	1 1/8	3/8	1	27 1/2	13 3/4	5 1/4
24	320	18	28 1/2	3 1/2	1 5/8	1/2	1 3/8	3	1 3/8	1/2	1 5/8	40 11/16	14 3/4	4 5/8
30	450	22 1/2	36 1/4	4	1 13/16	5/8	1 9/16	3 1/2	1 9/16	5/8	1 13/16	51	18 3/4	6 1/8
36	600	26 5/8	43 3/4	4 1/2	2	3/4	1 3/4	4	1 3/4	3/4	2	62	22 1/2	6 1/2
42	740	31 5/16	51 1/8	4 1/2	2	3/4	1 3/4	4	1 3/4	3/4	2	73	26 1/4	7 3/4
48	890	36	58 1/2	5	2 1/4	3/4	2	5	2	3/4	2 1/4	84	30	8 7/8
54	1100	40	65	5 1/2	2 1/2	3/4	2 1/4	5	2 1/4	3/4	2 1/2	92 1/2	33 3/8	10
60	1400	45	73 1/2	6	3 5/16	3/4	1 15/16	5	2 3/4	3/4	2 1/2	105	37 1/2	11
72	1900	54	88	7	3 13/16	1	2 3/16	6	3 1/4	1	2 3/4	126	45	13 5/16
84	2500	62	102	8	4 1/8	1	2 7/8	6	3 1/2	1	3 1/2	162 1/2	52	14 1/2
96	3300	78	122 3/8	9	4 1/2	1	3 1/2	7	4	1	4	218	62	20
108	4200	88	138 1/2	10	5	1	4	7	4 1/2	1	4 1/2	269	70	22
120	5100	96 7/8	154	11	5 1/2	1	4 1/2	7	5	1	5	301 3/8	78	24
132	5100	106 1/2	168 3/4	10		1	4	7	4 1/2	1	4 1/2	329	85 5/8	26 7/8

* Equivalent Diameter of Circular R. C. P.

GENERAL NOTES:

Construction of R.C.P. Arch shall conform to the requirements of Section 990 of the Specifications. Not more than 2 four-foot sections shall be permitted near the ends of any culvert. Four-foot lengths shall be used only to secure the required length of culvert.

June 26, 2015

Published Date: 2025	SDDOT	REINFORCED CONCRETE PIPE ARCH	PLATE NUMBER 450.02
			Sheet 1 of 1

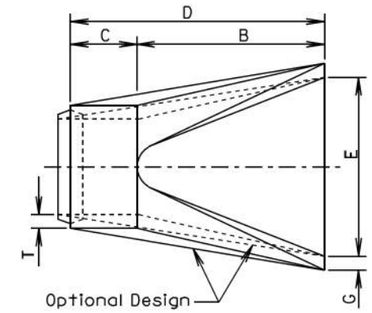

TOP VIEW

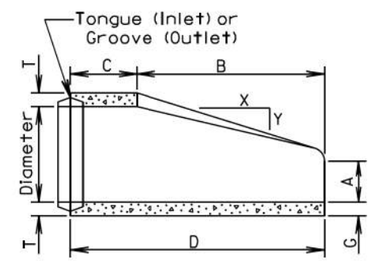

LONGITUDINAL SECTION

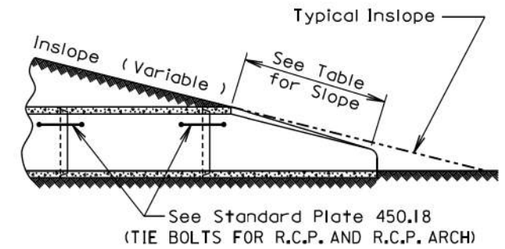

SLOPE DETAIL

GENERAL NOTES:

Lengths of concrete pipe shown on plan sheets are between flared ends only.

Construction of R.C.P. Flared End shall conform to the requirements of Section 990 of the Specifications.

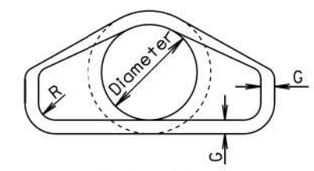

END VIEW

Dia. (in.)	Approx. Wt. of Section (lbs.)	Approx. Slope (X to Y)	T (in.)	A (in.)	B (in.)	C (in.)	D (in.)	E (in.)	G (in.)	R (in.)
12	530	2.4: 1	2	4	24	48 7/8	72 7/8	24	2	1 1/2
15	740	2.4: 1	2 1/4	6	27	46	73	30	2 1/4	1 1/2
18	990	2.3: 1	2 1/2	9	27	46	73	36	2 1/2	1 1/2
21	1280	2.4: 1	2 3/4	9	36	37 1/2	73 1/2	42	2 3/4	1 1/2
24	1520	2.5: 1	3	9 1/2	43 1/2	30	73 1/2	48	3	1 1/2
27	1930	2.5: 1	3 1/4	10 1/2	49 1/2	24	73 1/2	54	3 1/4	1 1/2
30	2190	2.5: 1	3 1/2	12	54	19 3/4	73 3/4	60	3 1/2	1 1/2
36	4100	2.5: 1	4	15	63	34 3/4	97 3/4	72	4	1 1/2
42	5380	2.5: 1	4 1/2	21	63	35	98	78	4 1/2	1 1/2
48	6550	2.5: 1	5	24	72	26	98	84	5	1 1/2
54	8240	2: 1	5 1/2	27	65	33 1/4	98 1/4	90	5 1/2	1 1/2
60	8730	1.9: 1	6	35	60	39	99	96	5	1 1/2
66	10710	1.7: 1	6 1/2	30	72	27	99	102	5 1/2	1 1/2
72	12520	1.8: 1	7	36	78	21	99	108	6	1 1/2
78	14770	1.8: 1	7 1/2	36	90	21	111	114	6 1/2	1 1/2
84	18160	1.6: 1	8	36	90 1/2	21	111 1/2	120	6 1/2	1 1/2
90	20900	1.5: 1	8 1/2	41	87 1/2	24	111 1/2	132	6 1/2	6

June 26, 2015

Published Date: 2025	SDDOT	R. C. P. FLARED ENDS	PLATE NUMBER 450.10
			Sheet 1 of 1

Plot Scale - 1:200
Plotted From - TRSF12141
Standard Plate - 450.02 P1-1 & 450.10 P1-1
File - ...\tmody0609\StdPlateSectionB.dgn

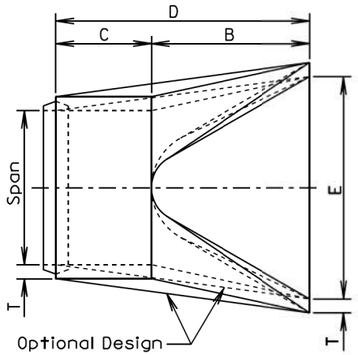

TOP VIEW

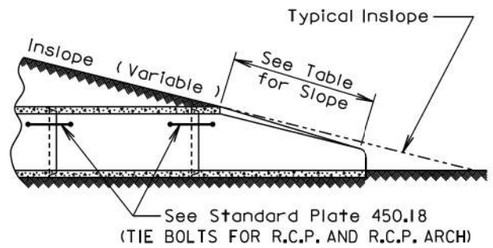

SLOPE DETAIL

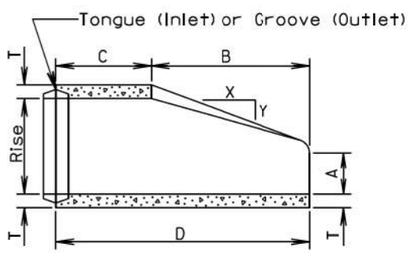

LONGITUDINAL SECTION

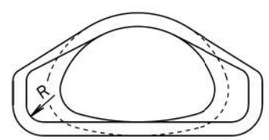

END VIEW

GENERAL NOTES:

Lengths of concrete pipe shown on plan sheets are between flared ends only.

Construction of R. C. P. Arch Flared End shall conform to the requirements of Section 990 of the Specifications.

* Size (in.)	Approximate Weight of Section (lbs.)	Rise (in.)	Span (in.)	Slope (X:Y)	T (in.)	A (in.)	B (in.)	C (in.)	D (in.)	E (in.)	R (in.)
18	1100	13½	22	3:1	2½	7	27	45	72	36	2
24	1750	18	28½	3:1	3½	8½	39	33	72	48	3
30	3300	22½	36¼	3:1	4	9½	50	46	96	60	3
36	4350	26⅝	43¾	3:1	4½	11⅛	60	36	96	72	6
42	5250	31 5/16	51⅛	3:1	4½	15 13/16	60	36	96	78	6
48	6400	36	58½	3:1	5	21	60	36	96	84	6
54	7850	40	65	3:1	5½	25½	60	36	96	90	6
60	9500	45	73½	3:1	6	31	60	36	96	96	6
72	13550	54	88	2:1	7	31	60	39	99	120	6
84	17950	62	102	2:1	8	28½	83	19	102	144	6

*Equivalent Diameter of Circular R. C. P.

June 26, 2015

Published Date: 2025 | SDDOT | R. C. P. ARCH FLARED ENDS | PLATE NUMBER 450.11 | Sheet 1 of 1

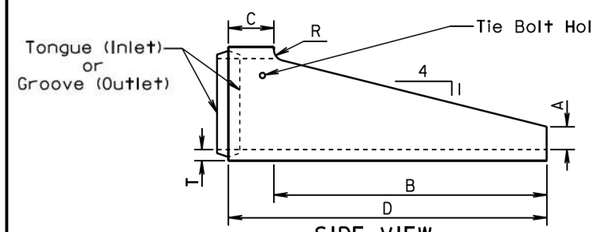

SIDE VIEW

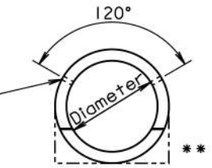

END VIEW
"CIRCULAR"

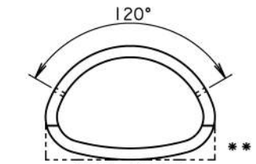

END VIEW
"ARCH"

Dia. (in.)	T (in.)	A (in.)	B (in.)	C (in.)	D (in.)	R (in.)
FOR CIRCULAR PIPE						
24	3	6	72	12	84	3
30	3½	7½	90	12	102	3½
FOR ARCH PIPE						
* 24	3	6	48	12	60	3
* 30	3½	7½	60	12	72	3½
* 36	4½	8⅝	66	30	96	0
* 42	4½	10	77¼	18¾	96	0

ALTERNATE

Dia. (in.)	T (in.)	A (in.)	B (in.)	C (in.)	D (in.)	R (in.)
FOR CIRCULAR PIPE						
24	3	9	72	12	84	0
30	3½	11	90	12	102	0
FOR ARCH PIPE						
* 24	3	9	48	12	60	0
* 30	3½	11	60	12	72	0

* Equivalent Diameter of Circular R.C.P.

** Acceptable Flat Bottom Alternate.

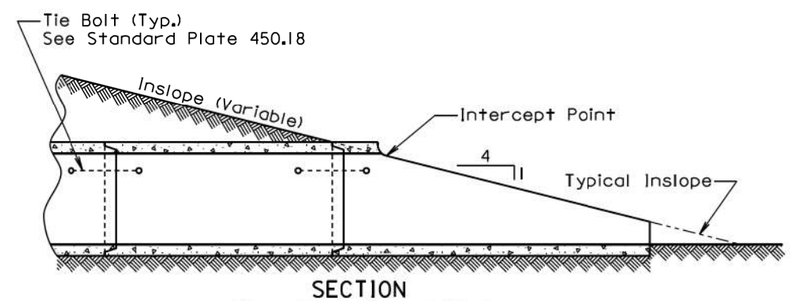

SECTION
(Along Centerline of Pipe)

GENERAL NOTE:

The length of concrete pipe shown in the construction plans is between sloped ends.

September 22, 2006

Published Date: 2025 | SDDOT | R. C. P. SLOPED ENDS | PLATE NUMBER 450.13 | Sheet 1 of 1

Plot Scale - 1:200
Plotted From - TRSF12141
File - ...\mody0609\StdPlateSections3.dgn
Standard Plate - 450.11 P1-1 & 450.13 P1-1

Wall "t" (in.)	Rod Dia. (in.)	Pipe Sleeve Dia. (nominal)
≤ 3¼	⅝	¾
3½-6½	¾	1
≥ 7	1	1¼

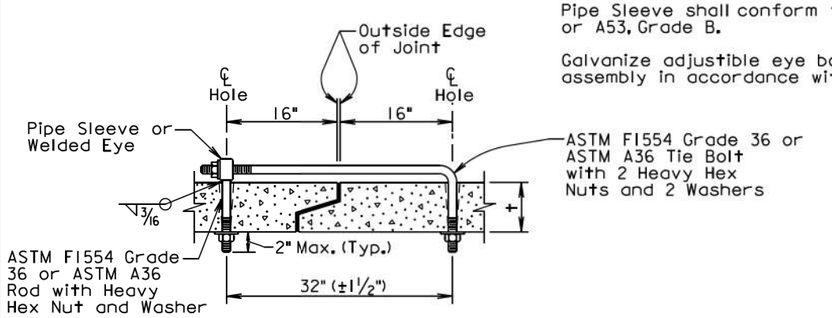

ADJUSTABLE EYE BOLT TIE

GENERAL NOTES:

Tie bolts shall conform to ASTM F1554 Grade 36 or ASTM A36. Nuts shall be heavy hex conforming to ASTM A563. Washers shall conform to ASTM F436.

Pipe Sleeve shall conform to ASTM A500 or A53, Grade B.

Galvanize adjustible eye bolt tie assembly in accordance with ASTM A153.

Pipe Dia. (in.)	"L" (in.)	Bolt Dia. (in.)
≤ 48	4	¾
> 48	6	1

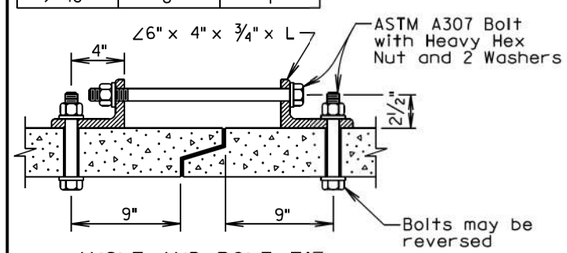

ANGLE AND BOLT TIE

GENERAL NOTES:

Angles shall conform to ASTM A36.

Bolts shall conform to ASTM A307. Nuts shall be heavy hex conforming to ASTM A563. Washers shall conform to ASTM F436.

Galvanize angles, bolts, nuts, and washers in accordance with ASTM A153.

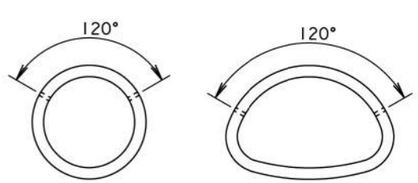

END VIEW "CIRCULAR"

END VIEW "ARCH"

GENERAL NOTES:

In lieu of the tie bolts detailed above other types of tie bolt connections may be installed as approved by the Office of Bridge Design.

All pipe sections of R.C.P. and R.C.P. Arch shall be tied with tie bolts except for pipe located between drop inlets, manholes, and junction boxes. All pipe sections of pipes that only enter or exit drop inlets, manhole, and junction boxes shall be tied with tie bolts.

There will be no separate measurement or payment for the tie bolts. The cost for furnishing and installing the tie bolts shall be incidental to the contract unit price per foot for the corresponding bid item for R.C.P. or R.C.P. Arch.

February 28, 2013

Published Date: 2025	SDDOT	TIE BOLTS FOR R.C.P. AND R.C.P. ARCH	PLATE NUMBER 450.18
			Sheet 1 of 1

	2⅔" x ½" CORRUGATIONS			3" X 1" CORRUGATIONS		
* Dia. (in.)	S Span (in.)	H Rise (in.)	Area (Sq. Ft.)	S Span (in.)	H Rise (in.)	Area (Sq. Ft.)
15	17	13	1.1			
18	21	15	1.6			
21	24	18	2.2			
24	28	20	2.8			
30	35	24	4.4			
36	42	29	6.4	40	31	7.0
42	49	33	8.7	46	36	9.4
48	57	38	11.4	53	41	12.3
54	64	43	14.3	60	46	15.6
60	71	47	17.6	66	51	19.3
66	77	52	21.3	73	55	23.2
72	83	57	25.3	81	59	27.4
78				87	63	32.1
84				95	67	37.0
90				103	71	42.4
96				112	75	48.0
102				117	79	54.2
108				128	83	60.8
114				137	87	67.4
120				142	91	74.5

* Equivalent diameter of circular C.M.P.

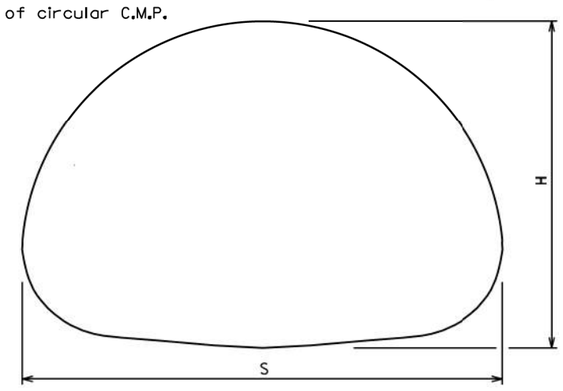

GENERAL NOTE:

All dimensions measured from inside crest.

March 31, 2000

Published Date: 2025	SDDOT	CORRUGATED METAL PIPE ARCH CULVERT	PLATE NUMBER 450.30
			Sheet 1 of 1

Plot Scale - 1:200
Plotted From - TRSF12141
Standard Plate - 450.18 P1-1 & 450.30 P1-1
File - ...\moody0609\StdPlateSectionB.dgn

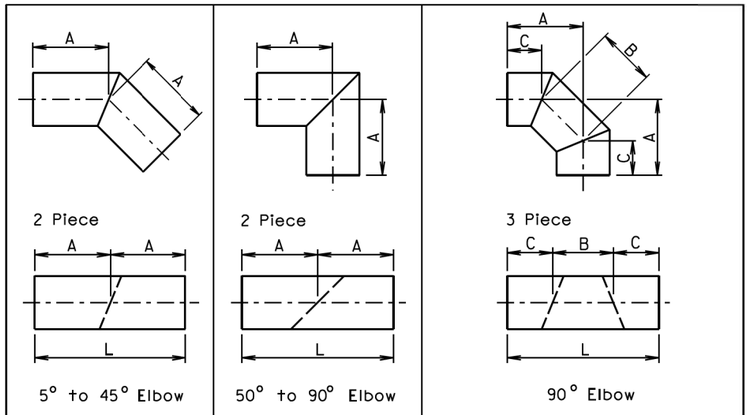

Diameter	A	L	Diameter	A	L	Diameter	A	B	C	L
Inches	Feet	Feet	Inches	Feet	Feet	Inches	Inches			Feet
12	1	2	12	2	4	12	25½	11	18½	4
15	1	2	15	2	4	15	26½	12	18	4
18	1	2	18	2	4	18	27	14	17	4
21	2	4	21	2	4	21	27	15	16½	4
24	2	4	24	2	4	24	27½	16	16	4
27	2	4	27	2	4	27	27½	17	15½	4
30	2	4	30	3	6	30	40	19	26½	6
33	2	4	33	3	6	33	40	20	26	6
36	2	4	36	3	6	36	40½	21	25½	6
42	2	4	42	3	6	42	41	23	24½	6
48	2	4	48	4	8	48	53½	26	35	8
54	3	6	54	4	8	54	54	28	34	8
60	3	6	60	4	8	60	54½	31	32½	8
66	3	6	66	4	8	66	54	33	31½	8
72	3	6	72	5	10	72	67½	36	42	10
78	3	6	78	5	10	78	68	39	40½	10
84	3	6	84	5	10	84	68½	41	39½	10
90	3	6	90	6	12	90	70	46	37	10
96	3	6	96	6	12	96	82	46	49	12

FABRICATED ELBOW LENGTHS FOR ALL CORRUGATIONS

GENERAL NOTES:

All dimensions shown are nominal.

L = Linear Feet of C.M.P. required to fabricate fitting.

June 26, 2001

Published Date: 2025	SDDOT	C.M.P. FABRICATED LENGTHS FOR ELBOWS	PLATE NUMBER 450.32 Sheet 1 of 1

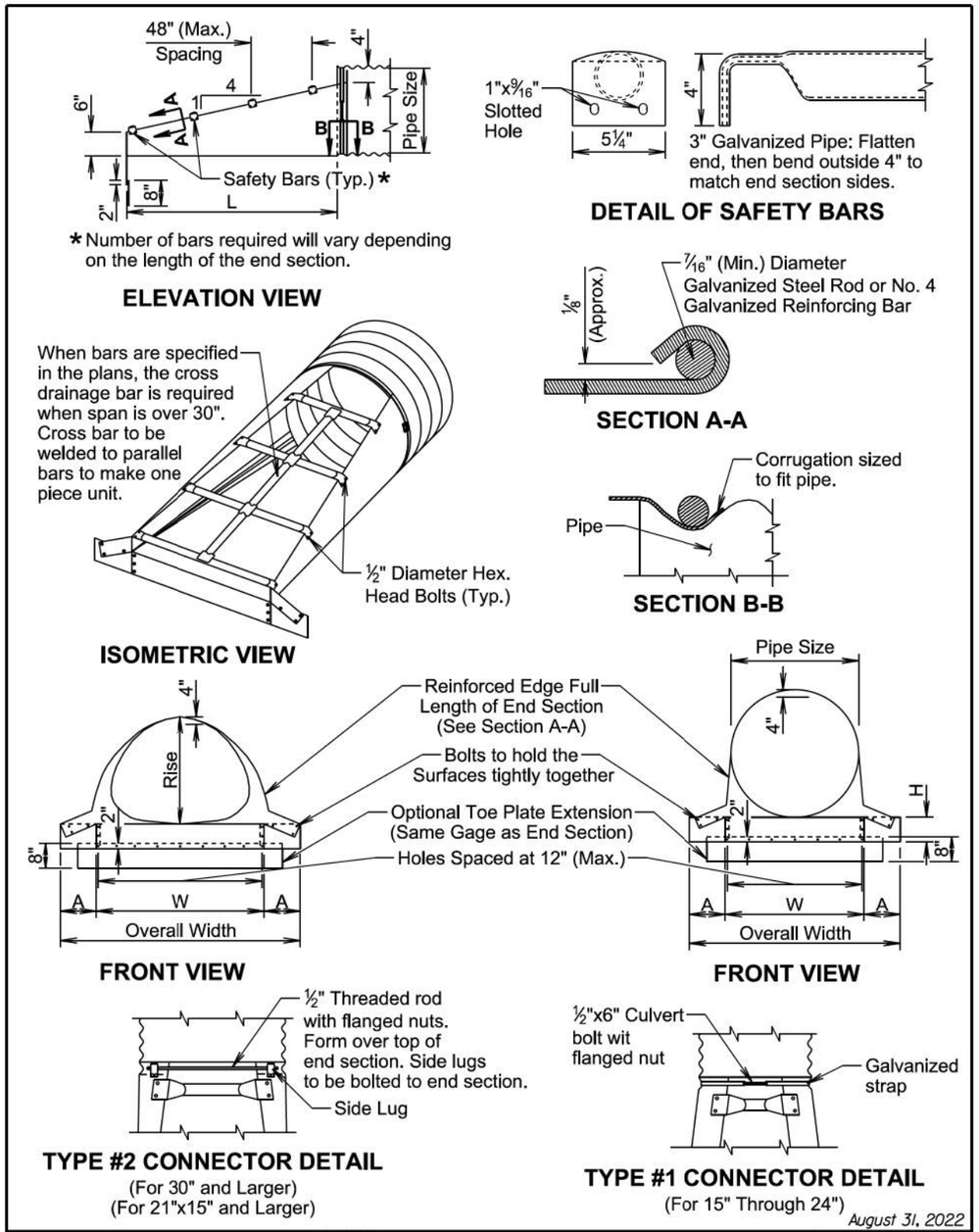

August 31, 2022

Published Date: 2025	SDDOT	C.M.P. SLOPED ENDS	PLATE NUMBER 450.37 Sheet 1 of 2

ARCH C.M.P. SLOPED ENDS										
Equiv. Dia. (Inch)	(Inches)		(Min.) Thick.		Dimensions (Inches)				L Dimensions	
	Span	Rise	Inch	Gage	A	H	W	Overall Width	Slope	Length (Inch)
18	21	15	.064	16	8	6	27	43	4:1	20
21	24	18	.064	16	8	6	30	46	4:1	32
24	28	20	.064	16	8	6	34	50	4:1	40
30	35	24	.079	14	12	9	41	65	4:1	56
36	42	29	.109	12	12	9	48	72	4:1	76
42	49	33	.109	12	16	12	55	87	4:1	92
48	57	38	.109	12	16	12	63	95	4:1	112
54	64	43	.109	12	16	12	70	102	4:1	132
60	71	47	.109	12	16	12	77	109	4:1	148
72	83	57	.109	12	16	12	89	121	4:1	188

CIRCULAR C.M.P. SLOPED ENDS								
Pipe Dia. (Inch)	(Min.) Thick.		Dimensions (Inches)				L Dimensions	
	Inch	Gage	A	H	W	Overall Width	Slope	Length (Inch)
15	.064	16	8	6	21	37	4:1	20
18	.064	16	8	6	24	40	4:1	32
21	.064	16	8	6	27	43	4:1	44
24	.064	16	8	6	30	46	4:1	56
30	.109	12	12	9	36	60	4:1	80
36	.109	12	12	9	42	66	4:1	104
42	.109	12	16	12	48	80	4:1	128
48	.109	12	16	12	54	86	4:1	152
54	.109	12	16	12	60	92	4:1	176
60	.109	12	16	12	66	98	4:1	200

GENERAL NOTES:

Safety bars will be provided when specified in the plans.

Sloped ends will be fabricated from galvanized steel and will conform to the requirements of the Specifications.

Safety bars will be fabricated from steel schedule 40 pipe in conformance with ASTM A53, grade B or HSS 3.5x.216 in conformance with ASTM A500, grade B.

Slotted holes for safety bar attachment will be provided for all end sections.

Attachment to circular pipes 15" through 24" diameter will be made with Type #1 straps. All other sizes will be attached with Type #2 rods and lugs.

When stated in the plans, optional toe plate extension will be punched and bolted to end section apron lip with ⅜" diameter galvanized bolts. Steel for toe plate extension will be same gauge as end section. Dimensions will be overall width less 6" by 8" high.

Installation will be performed in accordance with the Specifications.

Cost of all work and materials required for fabrication and installation of sloped ends will be incidental to the bid items for the various sizes of sloped ends.

August 31, 2022

Published Date: 2025	SDDOT	C.M.P. SLOPED ENDS	PLATE NUMBER 450.37
			Sheet 2 of 2

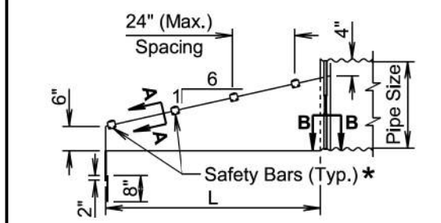

* Number of bars required will vary depending on the length of the end section.

ELEVATION VIEW

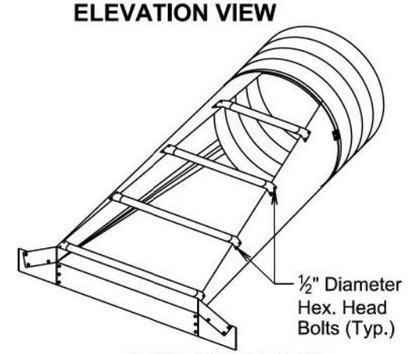

ISOMETRIC VIEW

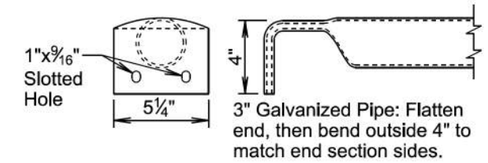

DETAIL OF SAFETY BARS

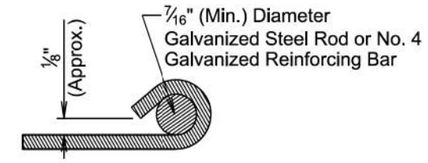

SECTION A-A

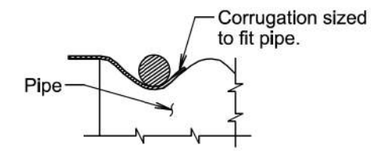

SECTION B-B

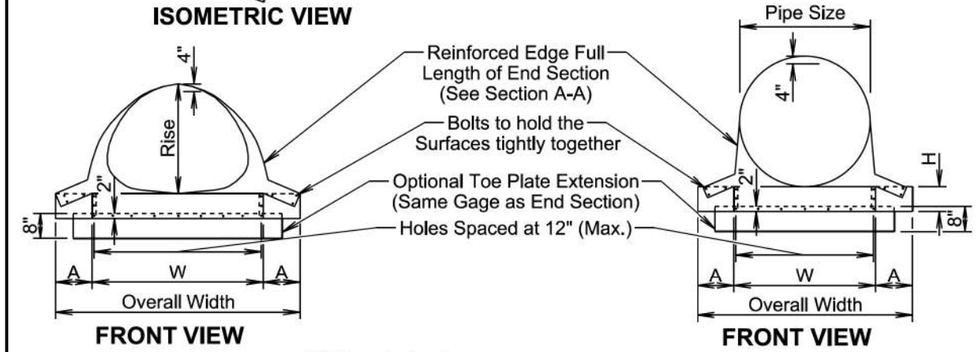

FRONT VIEW **FRONT VIEW**

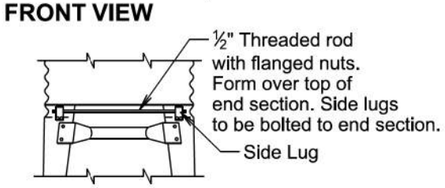

TYPE #2 CONNECTOR DETAIL
(For 30" and Larger)
(For 21"x15" and Larger)

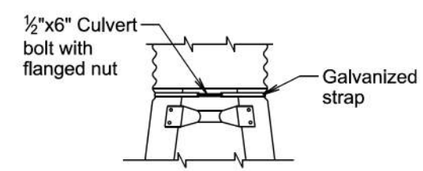

TYPE #1 CONNECTOR DETAIL
(For 15" Through 24")

August 31, 2022

Published Date: 2025	SDDOT	C.M.P. SAFETY ENDS	PLATE NUMBER 450.38
			Sheet 1 of 2

Plot Scale - 1:200
Plotted From - TRSF12141
File - ...\moody06091\StopPlateSectionB.dgn
Standard Plate - 450.37 P2-2 & 450.38 P1-2

ARCH C.M.P. SAFETY ENDS										
Equlv. Dia. (Inch)	(Inches)		(Min.) Thick.		Dimensions (Inches)				L Dimensions	
	Span	Rise	Inch	Gage	A	H	W	Overall Width	Slope	Length (Inch)
18	21	15	.064	16	8	6	27	43	6:1	30
21	24	18	.064	16	8	6	30	46	6:1	48
24	28	20	.064	16	8	6	34	50	6:1	60
30	35	24	.079	14	12	9	41	65	6:1	84
36	42	29	.109	12	12	9	48	72	6:1	114
42	49	33	.109	12	16	12	55	87	6:1	138
48	57	38	.109	12	16	12	63	95	6:1	168
54	64	43	.109	12	16	12	70	102	6:1	198
60	71	47	.109	12	16	12	77	109	6:1	222
72	83	57	.109	12	16	12	89	121	6:1	282

CIRCULAR C.M.P. SAFETY ENDS								
Pipe Dia. (Inch)	(Min.) Thick.		Dimensions (Inches)				L Dimensions	
	Inch	Gage	A	H	W	Overall Width	Slope	Length (Inch)
15	.064	16	8	6	21	37	6:1	30
18	.064	16	8	6	24	40	6:1	48
21	.064	16	8	6	27	43	6:1	66
24	.064	16	8	6	30	46	6:1	84
30	.109	12	12	9	36	60	6:1	120
36	.109	12	12	9	42	66	6:1	156
42	.109	12	16	12	48	80	6:1	192
48	.109	12	16	12	54	86	6:1	228
54	.109	12	16	12	60	92	6:1	264
60	.109	12	16	12	66	98	6:1	300

GENERAL NOTES:

Safety bars will be provided when specified in the plans.

Safety ends will be fabricated from galvanized steel conforming to the requirements of the Specifications.

Safety bars will be fabricated from steel schedule 40 pipe in conformance with ASTM A53, grade B or HSS 3.5x.216 in conformance with ASTM A500, grade B.

Slotted holes for safety bar attachment will be provided for all end sections.

Attachment to circular pipes 15" through 24" diameter will be made with Type #1 straps. All other sizes will be attached with Type #2 rods and lugs.

When stated in the plans, optional toe plate extension will be punched and bolted to end section apron lip with ⅜" diameter galvanized bolts. Steel for toe plate extension will be same gauge as end section. Dimensions will be overall width less 6" by 8" high.

Installation will be performed in accordance with the Specifications.

Cost of all work and materials required for fabrication and installation of safety ends will be incidental to the bid items for the various sizes of safety ends.

August 31, 2022

Published Date: 2025	SDDOT	C.M.P. SAFETY ENDS	PLATE NUMBER 450.38
			Sheet 2 of 2

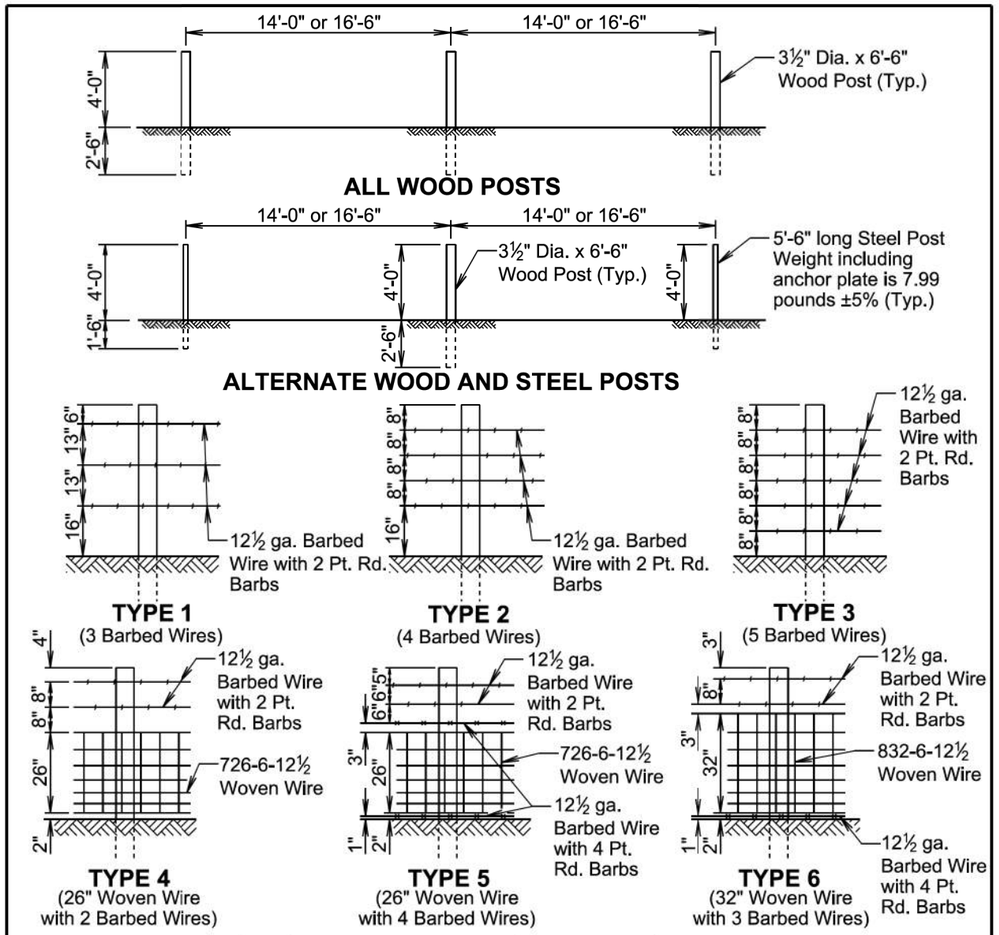

TYPE OF FENCE		LINE POST SPACING	BARBED WIRE		WOVEN WIRE
TYPE	DESCRIPTION		WIRE GAGE	NUMBER AND SHAPE OF BARBS	STYLE OR DESIGN NO.
1	3 Barbed Wires	16'-6"	12½	2 Point Round	—
2	4 Barbed Wires	16'-6"	12½	2 Point Round	—
3	5 Barbed Wires	16'-6"	12½	2 Point Round	—
4	26" Woven Wire with 2 Barbed Wires	14'-0"	12½	2 Point Round	726-6-12½
5	26" Woven Wire with 4 Barbed Wires	14'-0"	12½	2 wires with 2 Pt. Rd. 2 wires with 4 Pt. Rd.	726-6-12½
6	32" Woven Wire with 3 Barbed Wires	14'-0"	12½	2 wires with 2 Pt. Rd. 1 wire with 4 Pt. Rd.	832-6-12½

GENERAL NOTES:

Fence types designated on the plans that are followed by the letter S will have smooth (barbless) wires.

When type 5S or 6S is designated the bottom wire may be barbed, smooth, or left off.

All degrees of curvature stated for fence are at centerline of roadway.

June 26, 2019

Published Date: 2025	SDDOT	RIGHT-OF-WAY FENCE	PLATE NUMBER 620.01
			Sheet 1 of 1

Plot Scale - 1:200
Plotted From - TRSF12141
Standard Plate - 450.38 P1-2 & 450.38 P2-2
File - ...tmoody06091\StdPlateSectionB.dgn

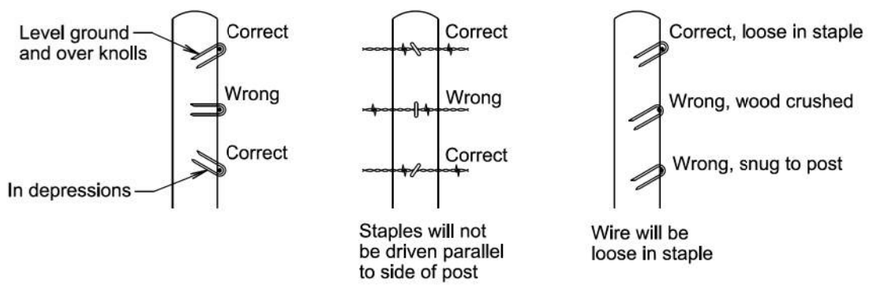

STAPLE INSTALLATION

GENERAL NOTES:

The Right-of-Way fence will consist of barbed wire or a combination of woven wire and barbed wire. The barbed wire and/or woven wire will be fastened to all wood posts or fastened to alternating wood and steel posts. Only wood posts will be used for brace panels. Gates will be of the type designated in the plans or as otherwise directed by the Engineer. Fence will be constructed conforming to the details on the standard plates and in the plans unless otherwise directed by the Engineer.

Right-of-Way fence on Interstate Projects will be constructed one foot within the Interstate Right-of-Way lines except at bridge openings, cattle passes, and as otherwise directed by the Engineer.

Right-of-Way fence other than on Interstate Projects will be constructed within one foot of the Right-of-Way on the Landowner's side except at bridge openings, cattle passes, and as otherwise directed by the Engineer.

Barbs will be fabricated from zinc coated 14 ga. wire. Two point barbs will be wrapped twice around one main strand at four-inch spacings and the four point barbs will be interlocked and wrapped around both main strands at five-inch spacings.

The gages of wire and wood post lengths and sizes are the minimum acceptable unless otherwise specified in the plans. The tolerances for steel posts will be as stated in AASHTO M281. Woven wire will conform to design and specifications of ASTM A116 and barbed wire will conform to ASTM A121.

June 26, 2019

Published Date: 2025	SDDOT	STAPLE INSTALLATION AND GENERAL RIGHT-OF-WAY FENCE NOTES	PLATE NUMBER 620.02
			Sheet 1 of 1

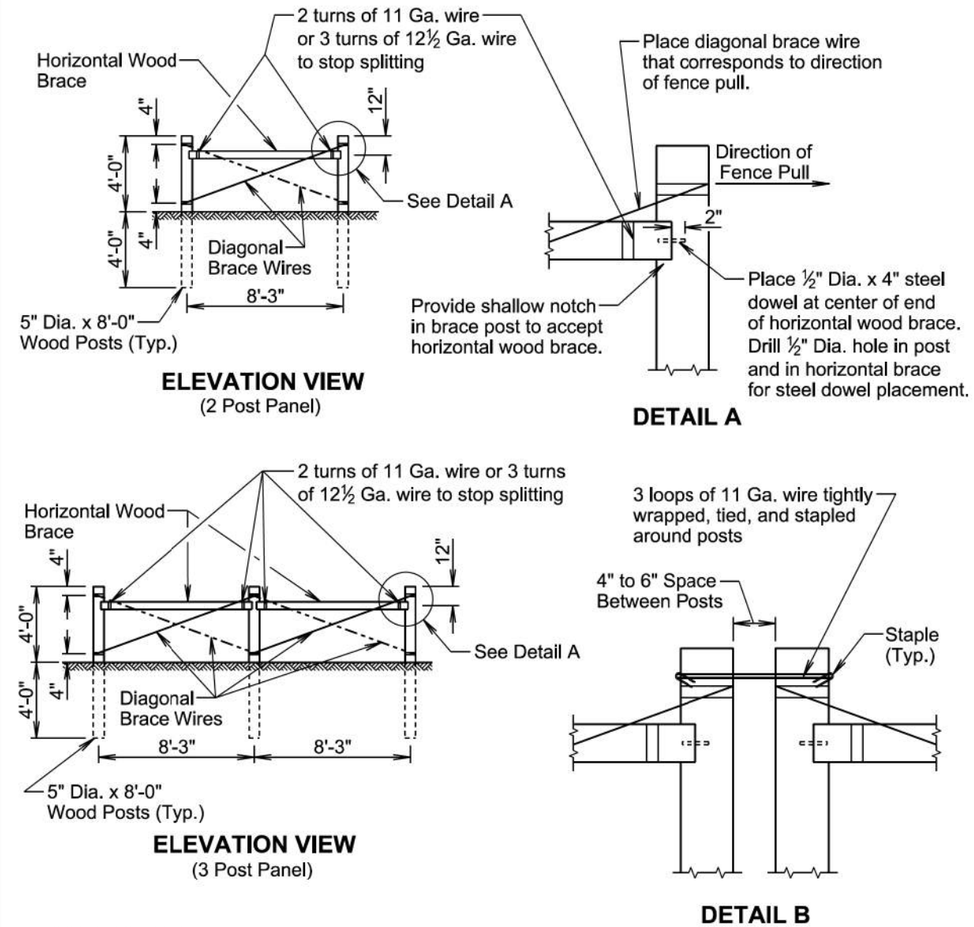

GENERAL NOTES:

Two Post Panels will be installed at least every 1320' between corners.

Two Post Panels will be installed at any sharp vertical angle crest points and as directed by the Engineer.

Horizontal wood braces will consist of 4" dia. x 8' wood posts or rough 4" x 4" x 8' timbers.

Diagonal brace wires will be fabricated with 4 strands of 9 Ga. galvanized wire twisted tight. The diagonal brace wires will be installed in accordance with the direction of the fence pull. Two diagonal brace wires are required if fence pull is in both directions.

March 31, 2024

Published Date: 2025	SDDOT	BRACE PANELS AND APPLICATIONS OF BRACE PANELS	PLATE NUMBER 620.03
			Sheet 1 of 3

Plot Scale - 1:200
Plotted From - TRSF12141
Standard Plate - 620.01 P1-1 & 620.02- P1-1
File - ...\modyb0609\StdPlateSectionB.dgn

SPACING OF 2 POST PANELS WITHIN CURVES	
RADIUS OF CURVE	SPACING OF 2 POST PANEL
Greater than 1800 Ft.	** 1320'
Less than 1800 Ft.	** At P.C., P.T., and at every 1320' between P.C. and P.T.

** Fence lengths greater than 1320' and less than 2640' place 2 Post Panel approximately at midpoint.

① See Detail B on Sheet 1 of 3.

GENERAL NOTE:

All radius of curvature stated for fence are at centerline of roadway.

If fence length is less than 600' to next corner use a 2 post panel.

* If fence length is greater than 600' to next corner use a 3 post panel.

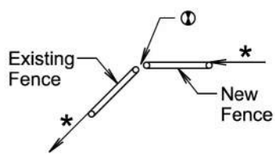

BEGIN OR END FENCE
(Where new fence ties into existing fence)

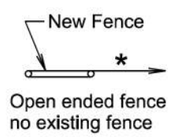

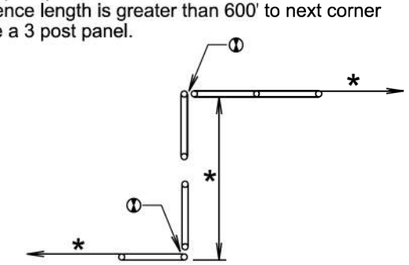

SHORT JOGS IN FENCE

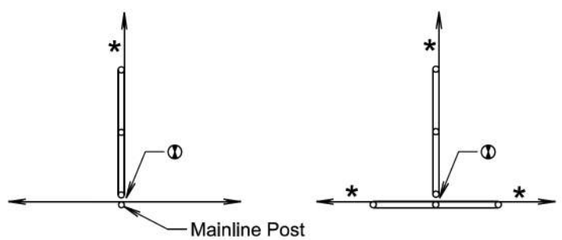

CROSS FENCE

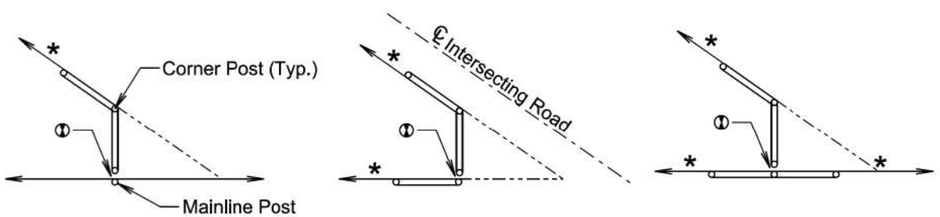

SHARP ANGLES IN CROSS FENCE

Additional fence panel is NOT required when an angle in the mainline fence is 10° and less.

Additional fence panel is required when an angle in the mainline fence is greater than 10°.

ANGLES IN MAINLINE FENCE

March 31, 2024

Published Date: 2025	SDDOT	BRACE PANELS AND APPLICATIONS OF BRACE PANELS	PLATE NUMBER 620.03
			Sheet 2 of 3

ENTRANCE
(Not on corner)

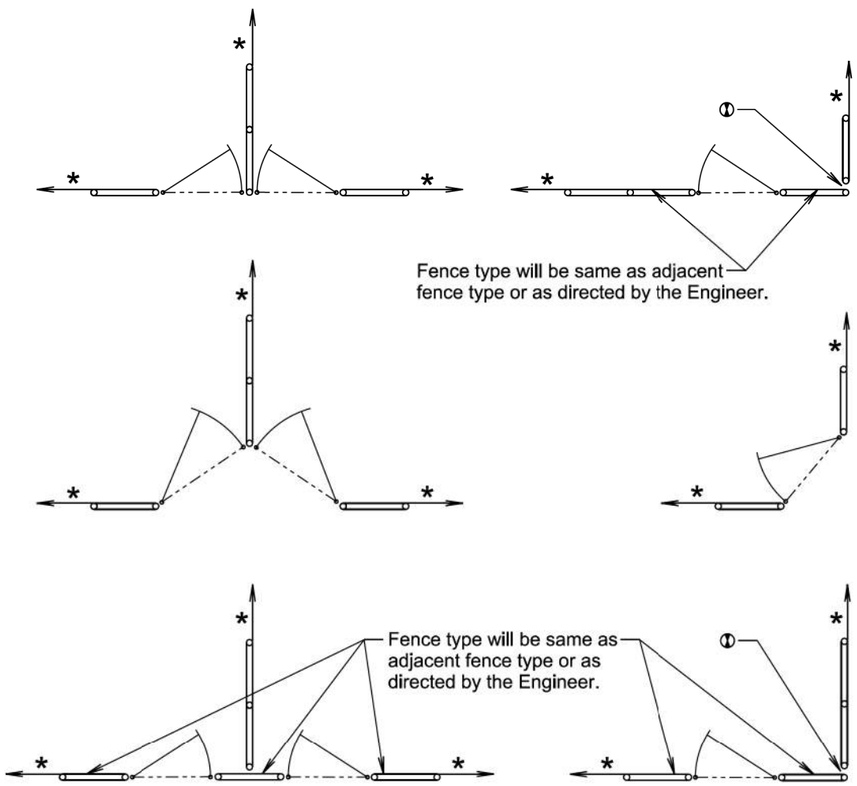

DOUBLE ENTRANCES

ENTRANCES AT CORNERS

GATES

* If fence length is less than 600' to next corner use a 2 post panel.
If fence length is greater than 600' to next corner use a 3 post panel.

① See Detail B on Sheet 1 of 3.

March 31, 2024

Published Date: 2025	SDDOT	BRACE PANELS AND APPLICATIONS OF BRACE PANELS	PLATE NUMBER 620.03
			Sheet 3 of 3

Plot Scale - 1:200
Plotted From - TRSF12141
Standard Plate - 620.01 P1-1 & 620.03 P2-3
File - ...\moody\609\StdPlateSectionB.dgn

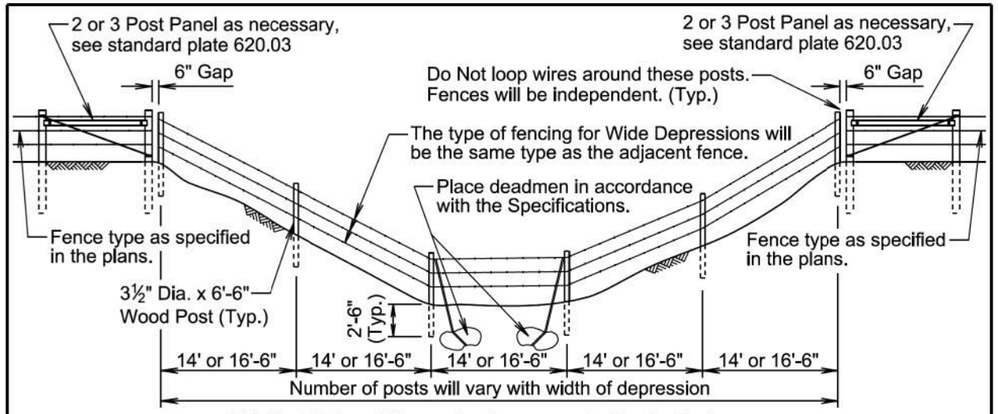

This installation will be made when requested by the Engineer.

FENCING AT WIDE DEPRESSION

(Subject to Flooding)

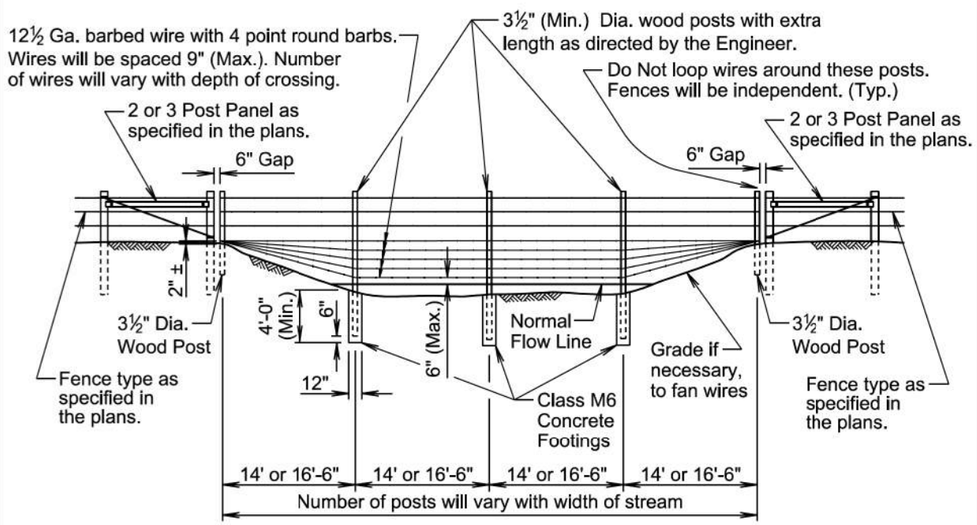

This installation will be made only when stated in the plans.

FENCING AT STREAM CROSSING

GENERAL NOTES:

There will be no extra payment for the additional work and materials required to construct the fencing at the wide depression(s) and/or the fencing at the stream crossing(s). The deadmen will be paid for in accordance with 620.5 A of the Specifications.

Measurement and payment for the fencing at the wide depression(s) and/or the fencing at the stream crossing(s) will be at the contract unit price per foot for the corresponding Right-of-Way fence contract item.

June 26, 2019

Published Date: 2025	SDDOT	FENCING AT WIDE DEPRESSION(S) AND STREAM CROSSING(S)	PLATE NUMBER 620.10 Sheet 1 of 1

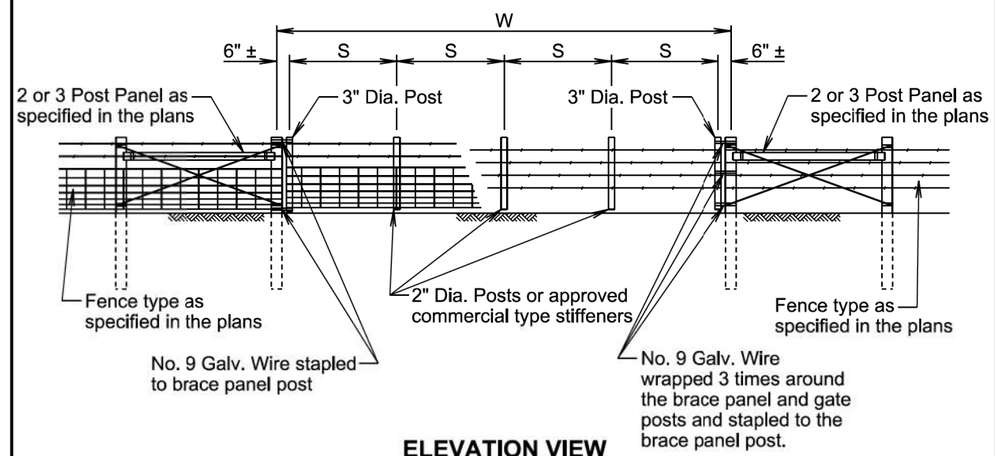

ELEVATION VIEW

W Gate Width (Ft.)	S Post Spacing
16	3 @ 5'-0" ±
20	4 @ 4'-9" ±
24	4 @ 5'-9" ±
30	5 @ 5'-10" ±
40	6 @ 6'-6" ±

GENERAL NOTES:

Creosote treatment of the gate posts will not be accepted.

The type of fencing in the gate will be of the same type as specified for the adjacent Right-of-Way fence.

All costs for furnishing and constructing the wire gate(s) will be incidental to the contract unit price per foot for the respective Right-of-Way fence contract item.

June 26, 2019

Published Date: 2025	SDDOT	WIRE GATES	PLATE NUMBER 620.20 Sheet 1 of 1

Plot Scale - 1:200
Plotted From - TRSF12141
Standard Plate - 620.10 P1-1 & 620.20 P1-1
File - ...\moody0609\StdPlateSections5.dgn

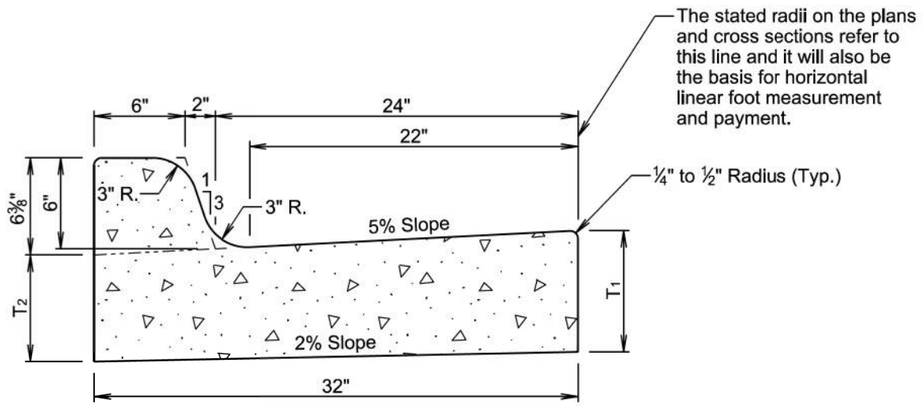

TYPE B CONCRETE CURB AND GUTTER				
Type	T_1 (Inches)	T_2 (Inches)	Cu. Yd. Per Lin. Ft.	Lin. Ft. Per Cu. Yd.
B66	6	5 1/16	0.057	17.7
B67	7	6 1/16	0.065	15.4
B68	8	7 1/16	0.073	13.7
B68.5	8.5	7 9/16	0.077	13.0
B69	9	8 1/16	0.081	12.3
B69.5	9.5	8 9/16	0.085	11.7
B610	10	9 1/16	0.090	11.2
B610.5	10.5	9 9/16	0.094	10.7
B611	11	10 1/16	0.098	10.2
B611.5	11.5	10 9/16	0.102	9.8
B612	12	11 1/16	0.106	9.4

GENERAL NOTES:

When concrete curb and gutter longitudinally adjoins new concrete pavement, the method of attachment will be by one of the methods shown on standard plate 380.21.

See standard plate 650.90 for expansion and contraction joints in the curb and gutter.

January 22, 2023

Published Date: 2025	SDDOT	TYPE B CONCRETE CURB AND GUTTER	PLATE NUMBER 650.01
			Sheet 1 of 1

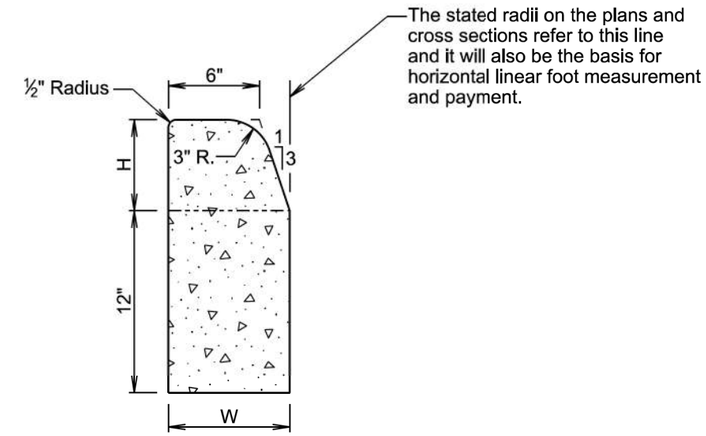

TYPE B CONCRETE CURB				
Type	H (Inches)	W (Inches)	Cu. Yd. Per Lin. Ft.	Lin. Ft. Per Cu. Yd.
B6	6	8	0.0353	28.4
B7	7	8 3/8	0.0383	26.1
B8	8	8 5/8	0.0414	24.1
B9	9	9	0.0449	22.3
B10	10	9 3/8	0.0485	20.6

GENERAL NOTES:

The concrete for the type B concrete curb will comply with the requirements of the specifications for class M6 concrete.

A ½" preformed expansion joint filler will be placed transversely in the curb at the following locations:

1. At each junction between the radius return of curb and curb which is parallel to the project centerline.
2. At each junction between the existing curb and new curb or curb and gutter.
3. At each junction between the curb and existing sidewalk to the depth of the sidewalk.

See standard plate 650.90 for contraction joints in the curb.

December 23, 2019

Published Date: 2025	SDDOT	TYPE B CONCRETE CURB	PLATE NUMBER 650.02
			Sheet 1 of 1

Plot Scale - 1:200
Plotted From - TRSF12141
File - ...\mody0609\StdPlateSectionB.dgn
Standard Plate - 650.01 P1-1 & 650.02 P1-1

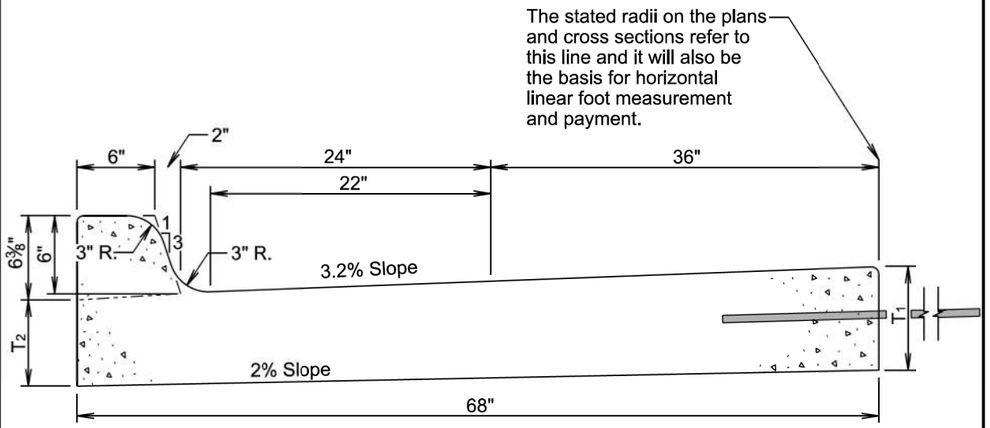

TYPE B CONCRETE CURB AND MODIFIED GUTTER				
Type	T_1 (Inches)	T_2 (Inches)	Cu. Yd. Per Lin. Ft.	Lin. Ft. Per Cu. Yd.
B68	8	7 3/16	0.144	6.9
B68.5	8½"	7 11/16	0.153	6.5
B69	9	8 3/16	0.161	6.2
B69.5	9½"	8 11/16	0.170	5.9
B610	10	9 3/16	0.179	5.6
B610.5	10½"	9 11/16	0.188	5.3
			For full 68" width	

GENERAL NOTES:

When concrete curb and gutter longitudinally adjoins new concrete pavement, the method of attachment will be by one of the methods shown on standard plate 380.21.

See standard plate 650.90 for expansion and contraction joints in the curb and gutter.

March 31, 2024

Published Date: 2025	SDDOT	TYPE B CONCRETE CURB AND MODIFIED GUTTER	PLATE NUMBER 650.04
			Sheet 1 of 1

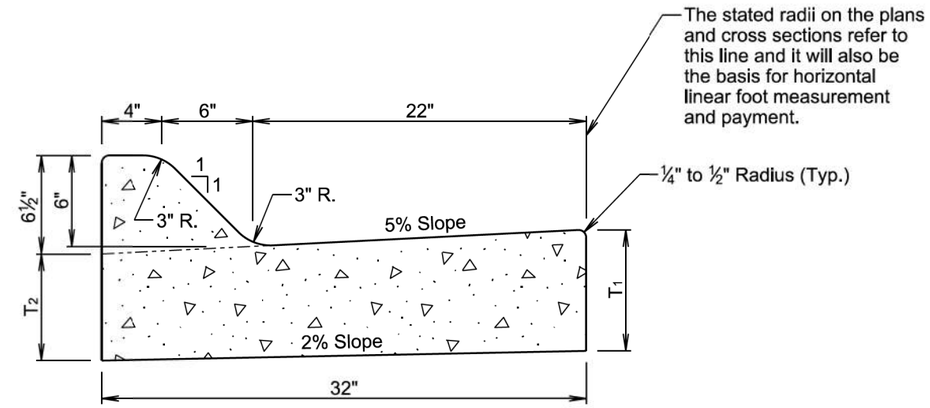

TYPE F CONCRETE CURB AND GUTTER				
Type	T_1 (Inches)	T_2 (Inches)	Cu. Yd. Per Lin. Ft.	Lin. Ft. Per Cu. Yd.
F66	6	5 1/16	0.057	17.6
F67	7	6 1/16	0.065	15.4
F68	8	7 1/16	0.073	13.6
F68.5	8.5	7 9/16	0.077	12.9
F69	9	8 1/16	0.082	12.3
F69.5	9.5	8 9/16	0.086	11.7
F610	10	9 1/16	0.090	11.1
F610.5	10.5	9 9/16	0.094	10.7
F611	11	10 1/16	0.098	10.2
F611.5	11.5	10 9/16	0.102	9.8
F612	12	11 1/16	0.106	9.4

GENERAL NOTES:

When concrete curb and gutter longitudinally adjoins new concrete pavement, the method of attachment will be by one of the methods shown on standard plate 380.21.

See standard plate 650.90 for expansion and contraction joints in the curb and gutter.

January 22, 2023

Published Date: 2025	SDDOT	TYPE F CONCRETE CURB AND GUTTER	PLATE NUMBER 650.20
			Sheet 1 of 1

Plot Scale - 1:200
Plotted From - TRSF12141
File - ...\tmody0609\StdPlateSectionB.dgn
Standard Plate - 650.04 P1-1 & 650.20 P1-1

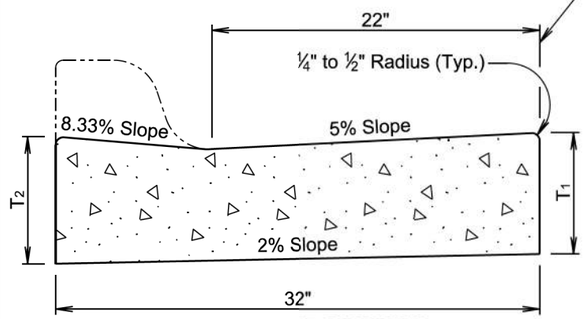

The stated radii on the plans and cross sections refer to this line and it will also be the basis for horizontal linear foot measurement and payment.

TRANSVERSE SECTION

TYPE P CONCRETE GUTTER				
Type	T_1 (Inches)	T_2 (Inches)	Cu. Yd. Per Lin. Ft.	Lin. Ft. Per Cu. Yd.
P6	6	6⅜	0.047	21.2
P7	7	7⅜	0.055	18.1
P8	8	8⅜	0.064	15.7
P8.5	8.5	8⅞	0.068	14.8
P9	9	9⅜	0.072	13.9
P9.5	9.5	9⅞	0.076	13.2
P10	10	10⅜	0.080	12.5
P10.5	10.5	10⅞	0.084	11.9
P11	11	11⅜	0.088	11.3
P11.5	11.5	11⅞	0.092	10.8
P12	12	12⅜	0.096	10.4

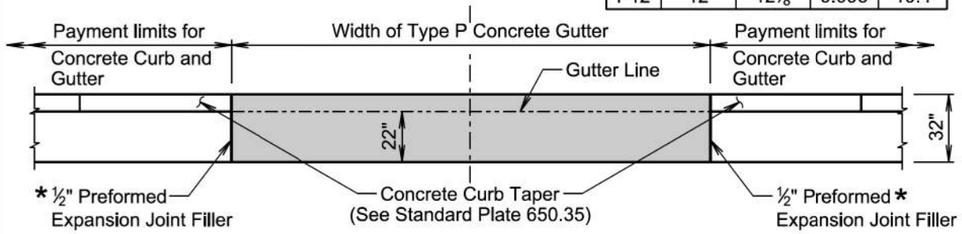

PLAN VIEW

* Joint will not be needed if concrete curb and gutter and type P concrete gutter is placed at the same time. If the ½" preformed expansion joint filler is provided, then the joint will be sealed in accordance with standard plate 650.90.

GENERAL NOTES:

The concrete for the type P concrete gutter will comply with the requirements of the specifications for class M6 concrete.

When concrete gutter longitudinally adjoins new concrete pavement, the method of attachment will be by one of the methods shown on standard plate 380.21.

Transverse contraction joints will be constructed at 10-foot intervals in the concrete gutter except when concrete gutter is constructed adjacent to mainline PCC pavement. When concrete gutter is constructed adjacent to mainline PCC pavement, a transverse contraction joint will be constructed in the concrete gutter at each mainline PCC pavement transverse contraction joint location.

When concrete gutter is placed monolithically with mainline PCC pavement, the transverse contraction joints in the concrete gutter will be sawed and sealed the same as the transverse contraction joints in the mainline PCC pavement.

When concrete gutter is not placed monolithically with the mainline PCC pavement and when the adjacent mainline surfacing is not PCC concrete, the transverse contraction joints in the concrete gutter will be 1½ inches deep if formed in the fresh concrete using a suitable grooving tool. If a saw is used to cut the contraction joints, then the depth of the joint will be at least ¼ the thickness of the concrete.

January 22, 2023

Published Date: 2025	SDDOT	TYPE P CONCRETE GUTTER	PLATE NUMBER 650.30
			Sheet 1 of 1

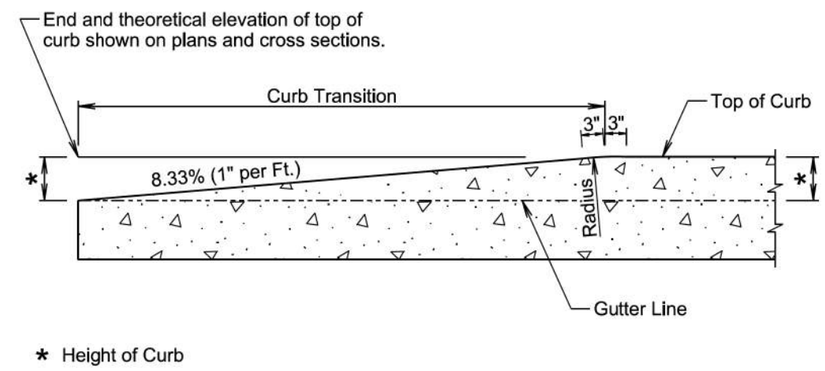

* Height of Curb

LONGITUDINAL SECTION
(Concrete Curb Taper)

December 23, 2019

Published Date: 2025	SDDOT	CONCRETE CURB TAPER	PLATE NUMBER 650.35
			Sheet 1 of 1

Plot Scale - 1:200
Plotted From - TRSF12141
Standard Plate - 650.30 P1-1 & 650.35 P1-1
File - ...\modyD609\StdPlateSectionB.dgn

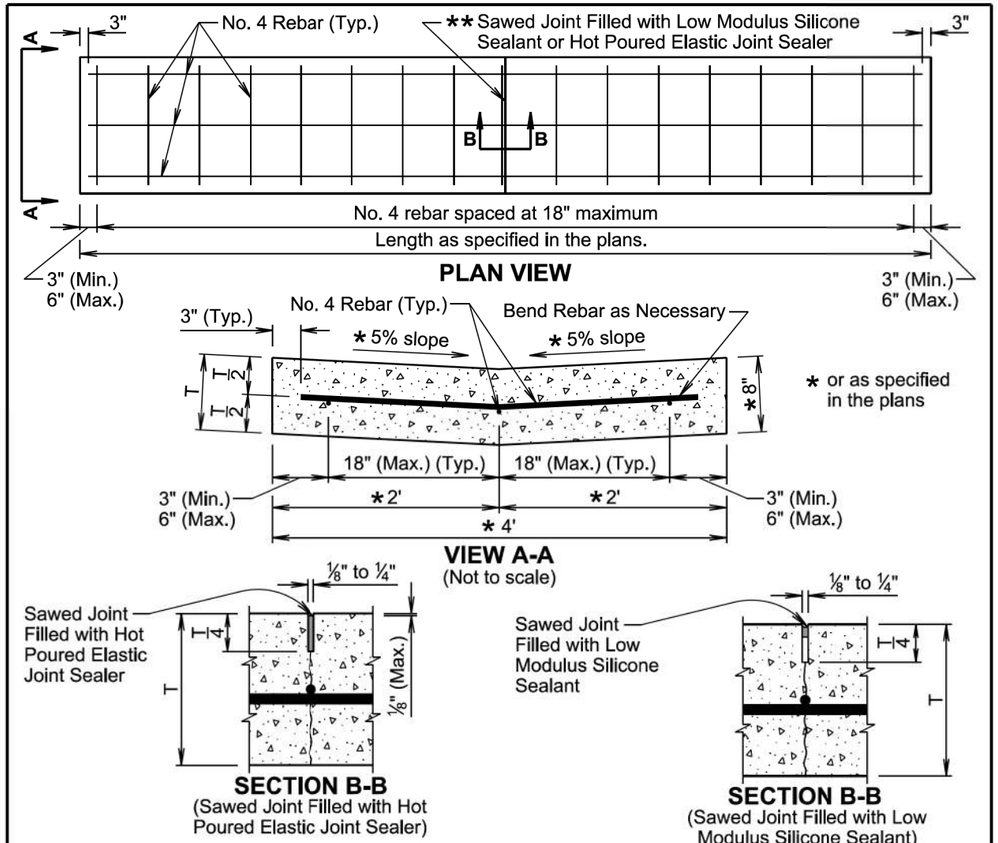

GENERAL NOTES:

The concrete will comply with the specifications for class M6 concrete.

The reinforcing steel will comply with the requirements of specification sections 480 and 1010.

If a lap splice is provided the No. 4 rebar will be lapped a minimum of 12 inches.

** The sawed joints will be spaced at 12 feet; however, when the length of the valley gutter is 12 feet to 24 feet there will be a joint at the midpoint of the length. The saw cut to control cracking will be a minimum of ¼ the thickness of the pavement.

All hot poured elastic joint sealer material spilled on the surface of the concrete pavement will be removed as soon as the material has cooled. The extent of removal of material will be to the satisfaction of the Engineer. All costs for removal of the spilled joint sealer material will be borne by the Contractor.

The silicone sealant will be bonded to the sides of a clean joint to completely seal the joint as approved by the Engineer.

All costs for furnishing and installing the valley gutter including materials, equipment, labor, and incidentals will be included in the contract unit price per square yard for the corresponding Valley Gutter contract item.

December 23, 2019

Published Date: 2025	SDDOT	VALLEY GUTTER	PLATE NUMBER 650.40
			Sheet 1 of 1

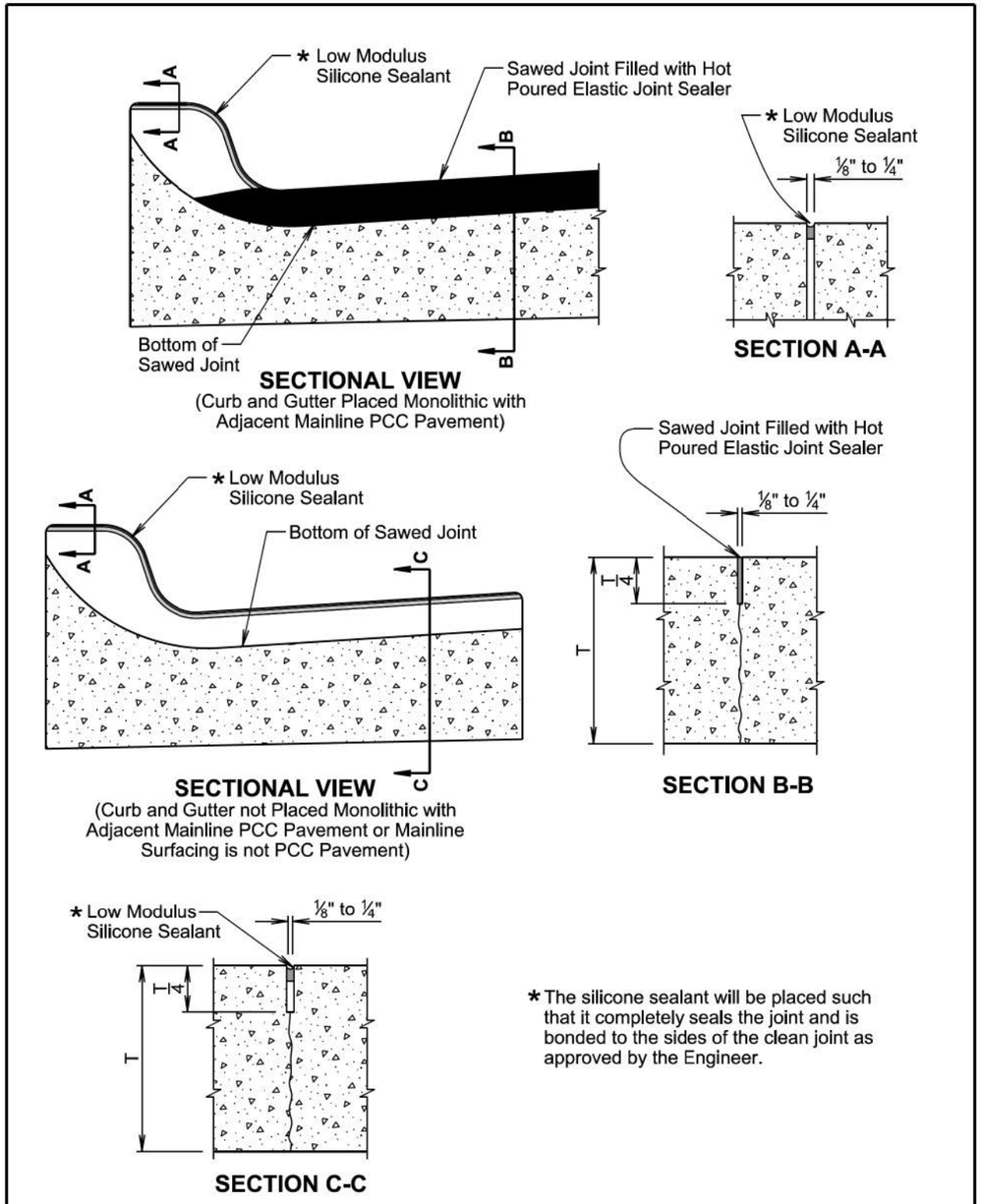

* The silicone sealant will be placed such that it completely seals the joint and is bonded to the sides of the clean joint as approved by the Engineer.

December 23, 2019

Published Date: 2025	SDDOT	JOINTS IN CONCRETE CURB AND GUTTER	PLATE NUMBER 650.90
			Sheet 1 of 2

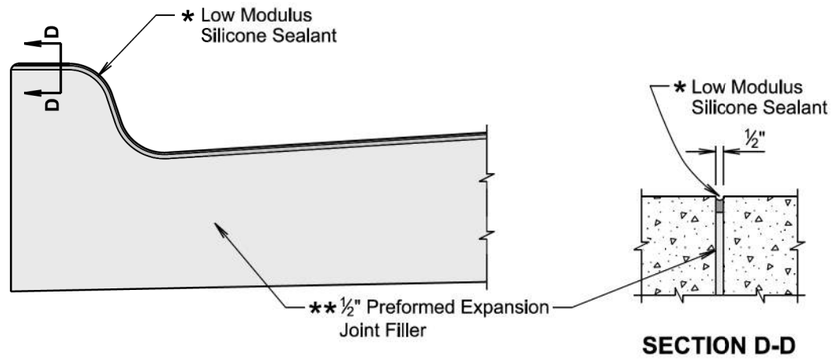

SECTION D-D

SECTIONAL VIEW
(Curb and Gutter at ½" Preformed Expansion Joint Filler Location)

* The silicone sealant will be placed such that it completely seals the joint and is bonded to the sides of the clean joint as approved by the Engineer.

GENERAL NOTES:

For illustrative reason, only the type B curb and gutter is shown.

** A ½-inch preformed expansion joint filler will be placed transversely in the curb and gutter at the following locations:

At each junction between the radius return of curb and gutter, and curb and gutter which is parallel to the project centerline.

At each junction between new curb and gutter and existing curb and gutter.

Transverse contraction joints will be constructed at 10 foot intervals in the concrete curb and gutter except when the concrete curb and gutter is constructed adjacent to mainline PCC pavement. When concrete curb and gutter is constructed adjacent to mainline PCC pavement, a transverse contraction joint will be constructed in the concrete curb and gutter at each mainline PCC pavement transverse contraction joint location.

When concrete curb and gutter is not placed monolithically with the mainline PCC pavement or when the adjacent mainline surfacing is not PCC concrete, the transverse contraction joints in the concrete curb and gutter will be 1½ inches deep if formed in the fresh concrete using a suitable grooving tool. If a saw is used to cut the contraction joints, then the depth of the joint will be at least ¼ the thickness of the concrete and the joint will be sealed in accordance with the details shown above.

December 23, 2019

Published Date: 2025	SDDOT	JOINTS IN CONCRETE CURB AND GUTTER	PLATE NUMBER 650.90
			Sheet 2 of 2

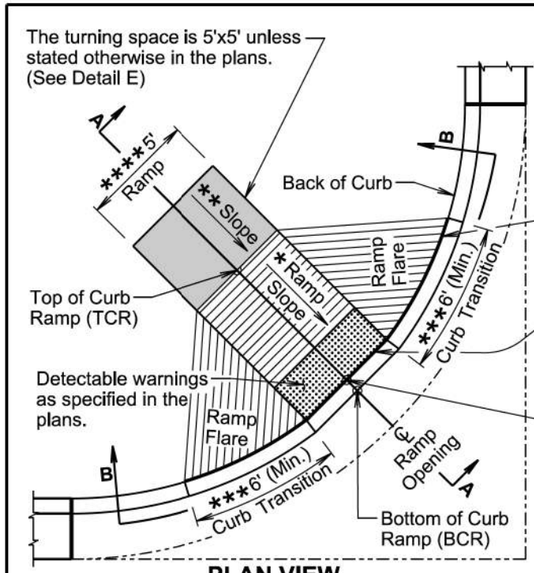

PLAN VIEW
(With 6'+ Curb Transition)

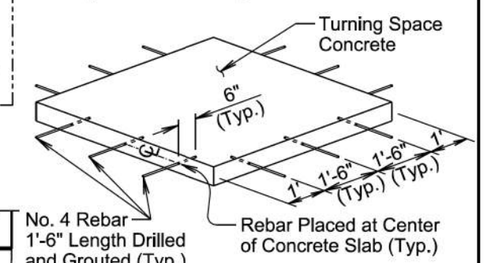

DETAIL E
ISOMETRIC VIEW
(If turning space concrete is placed monolithic with surrounding concrete, then this detail is not necessary.)

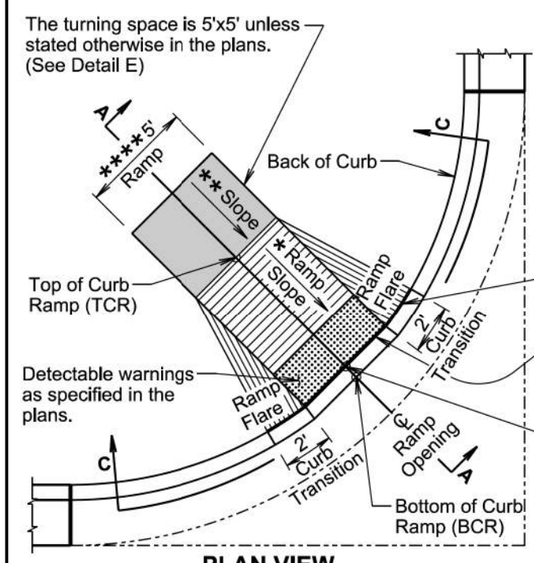

PLAN VIEW
(With 2' Curb Transition)

February 14, 2020

Published Date: 2025	SDDOT	TYPE 1 CURB RAMP (PERPENDICULAR CURB RAMP)	PLATE NUMBER 651.01
			Sheet 1 of 3

Curb ramp slopes are designed at 7.5% unless stated otherwise in the plans. The curb ramp may have a maximum slope of 8.3% and will not exceed 15' in length unless stated otherwise in the plans.

* The curb ramp length may be computed based on the intersection of a continuous 1.5% theoretical slope from theoretical top of curb (TTOC) with the curb ramp using a continuous 7.5% curb ramp slope. The elevation of point TCR will always be higher than the elevation of point TTOC unless specified otherwise in the plans. The curb ramp length dimension as shown in the plans will be adjusted as necessary to meet all slope and length requirements based on field geometrics.

The cross slope of the ramp will not be steeper than 2%. Plans are designed using a 1.5% slope unless stated otherwise in the plans.

** The slope in the turning space will not be steeper than 2% in any direction of pedestrian travel. Plans are designed using a 1.5% slope unless stated otherwise in the plans.

*** The curb transition will be a minimum of 6' long, a maximum of 10' long, and the curb transition slope will not be steeper than 10% unless stated otherwise in the plans. The curb transition length will be adjusted as necessary to meet slope and length requirements based on field geometrics.

**** The ramp width is 5' unless stated otherwise in the plans.

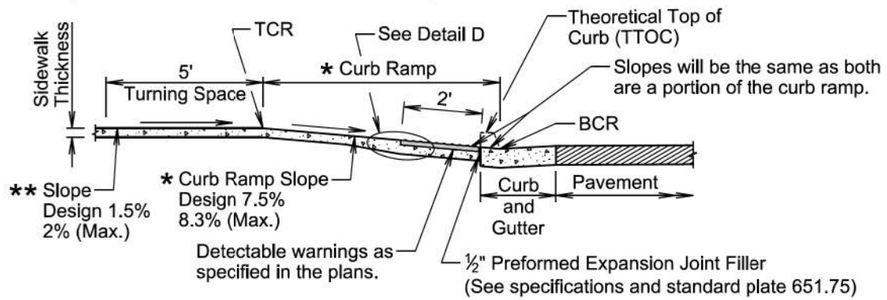

SECTION A-A

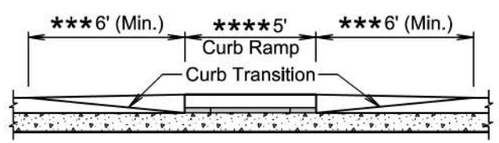

SECTIONAL VIEW B-B

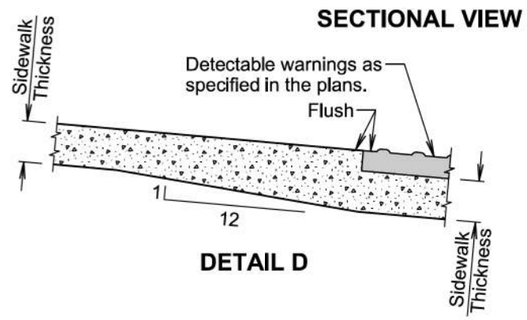

DETAIL D

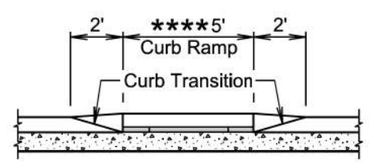

SECTIONAL VIEW C-C

February 14, 2020

Published Date: 2025	SDDOT	TYPE 1 CURB RAMP (PERPENDICULAR CURB RAMP)	PLATE NUMBER 651.01
			Sheet 2 of 3

GENERAL NOTES:

For illustrative purpose only, type 1 detectable warnings are shown in the drawings.

For illustrative purpose only, PCC fillet sections are shown in the drawings. The curb ramp depicted on this standard plate may be used with a PCC fillet section or curb and gutter.

For illustrative purpose only, the curb ramp location is shown at the center of a PCC fillet section. The curb ramp will be placed at the location stated in the plans.

Sidewalk will not be placed adjacent to the curb ramp flares when a 2-foot curb transition is used unless shown otherwise in the plans.

* Care will be taken to ensure a uniform grade on the curb ramp, free of sags and short grade changes.

Surface texture of the curb ramp will be obtained by coarse brooming transverse to the slope of the curb ramp.

The normal gutter line profile will be maintained through the area of the ramp opening.

Joints will be sawed or tooled into the concrete adjacent to the detectable warnings to alleviate possible corner cracking.

Care will be taken to ensure that the surface of the detectable warnings are clean and maintains a uniform color.

The detectable warnings will be cut as necessary to fit the plan specified limits of the detectable warnings. Cost for cutting the detectable warnings will be incidental to the corresponding detectable warning contract item.

There will be no separate payment for curb ramps. The curb ramp will be measured and paid for at the contract unit price per square foot for the corresponding concrete sidewalk contract item. The square foot area of the detectable warnings will be included in the measured and paid for quantity of sidewalk.

If rebar is placed in the turning space as depicted in detail E, the cost of the materials, labor, and equipment to furnish and install the rebar will be incidental to the contract unit price per square foot for the corresponding concrete sidewalk contract item.

The curb transitions and ramp opening will be measured and paid for at the contract unit price per foot for the corresponding curb and gutter contract item when curb and gutter is used. The curb transitions and ramp opening will be measured and paid for at the contract unit price per square yard for the corresponding PCC fillet section contract item when a PCC fillet section is used.

The type 1 detectable warnings will be measured to the nearest square foot. All costs for furnishing and installing the type 1 detectable warnings including labor, equipment, materials, and incidentals will be paid for at the contract unit price per square foot for "Type 1 Detectable Warnings".

The type 2 detectable warnings will be measured to the nearest square foot. All costs for furnishing and installing the type 2 detectable warnings including labor, equipment, and materials, including adhesive, necessary sealant or grout, and necessary grinding will be paid for at the contract unit price per square foot for "Type 2 Detectable Warnings".

February 14, 2020

Published Date: 2025	SDDOT	TYPE 1 CURB RAMP (PERPENDICULAR CURB RAMP)	PLATE NUMBER 651.01
			Sheet 3 of 3

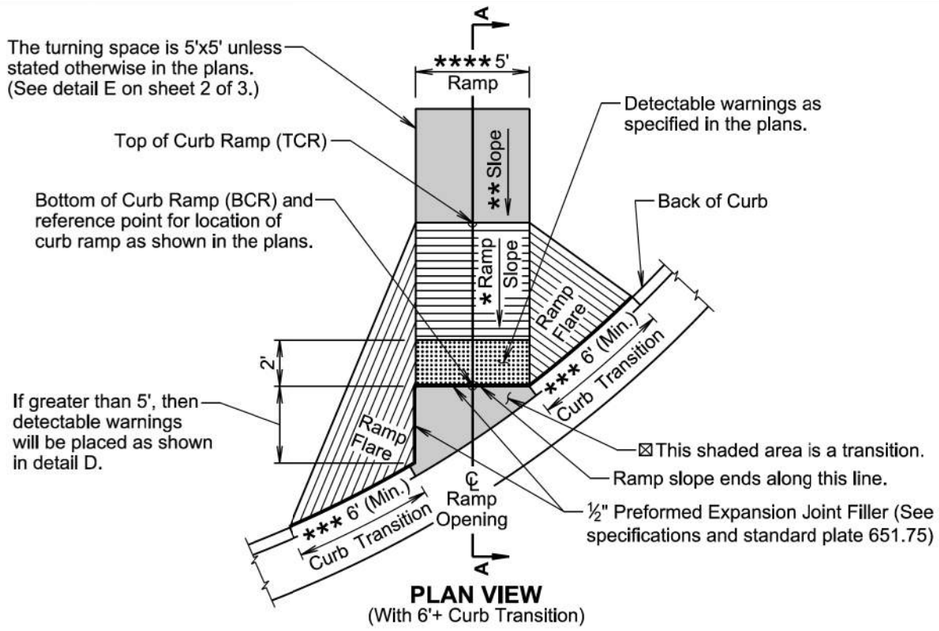

PLAN VIEW
(With 6'+ Curb Transition)

⊠ The slope within the transition area will not be steeper than 5%. The concrete within the transition will be placed monolithic with the curb and gutter or fillet section concrete. The concrete thickness within the transition will be the same as the curb and gutter or fillet section concrete thickness.

*** The curb transition will be a minimum of 6' long, a maximum of 10' long, and the curb transition slope will not be steeper than 10% unless stated otherwise in the plans. The curb transition length will be adjusted as necessary to meet slope and length requirements based on field geometrics.

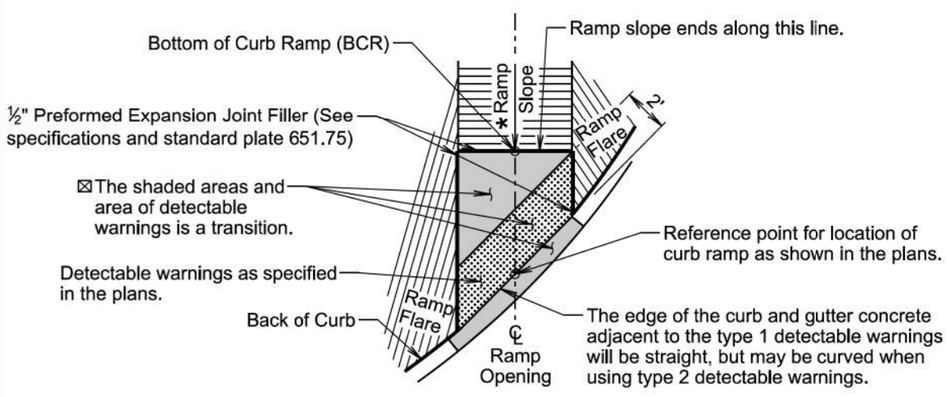

DETAIL D

February 14, 2020

Published Date: 2025	SDDOT	TYPE 2 CURB RAMP (DIRECTIONAL CURB RAMP)	PLATE NUMBER 651.02
			Sheet 1 of 3

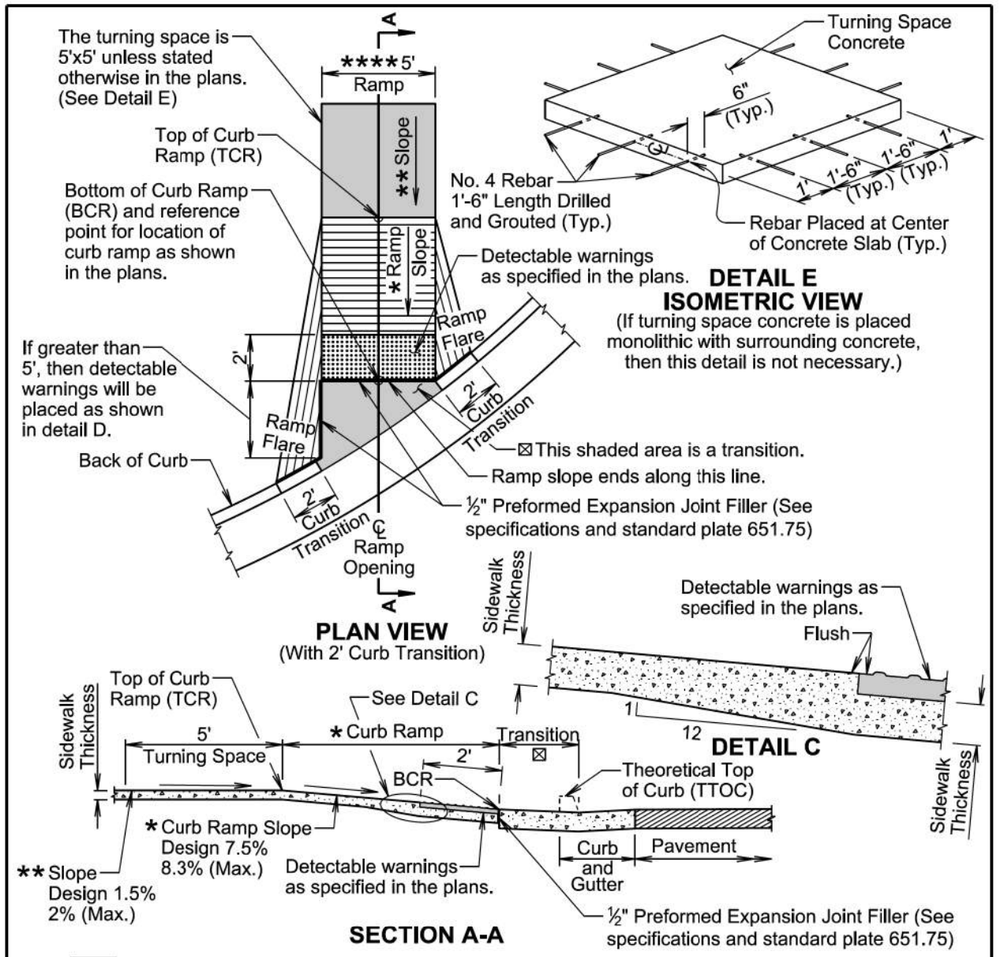

PLAN VIEW
(With 2' Curb Transition)

DETAIL E
ISOMETRIC VIEW
(If turning space concrete is placed monolithic with surrounding concrete, then this detail is not necessary.)

DETAIL C

SECTION A-A

* Curb ramp slopes are designed at 7.5% unless stated otherwise in the plans. The curb ramp may have a maximum slope of 8.3% and will not exceed 15' in length unless stated otherwise in the plans.

The elevation of point TCR will always be higher than the elevation of point TTOC unless specified otherwise in the plans. The curb ramp length dimension as shown in the plans will be adjusted as necessary to meet all slope and length requirements based on field geometrics.

The cross slope of the ramp will not be steeper than 2%. Plans are designed using a 1.5% slope unless stated otherwise in the plans.

** The slope in the turning space will not be steeper than 2% in any direction of pedestrian travel. Plans are designed using a 1.5% slope unless stated otherwise in the plans.

**** The ramp width is 5' unless stated otherwise in the plans.

February 14, 2020

Published Date: 2025	SDDOT	TYPE 2 CURB RAMP (DIRECTIONAL CURB RAMP)	PLATE NUMBER 651.02
			Sheet 2 of 3

Plot Scale - 1:200
Plotted From - TRSF12141
Standard Plate - 651.02 P1-3 & 651.02 P2-3
File - ...tmoody0609\StdPlateSectionB.dgn

GENERAL NOTES:

For illustrative purpose only, type 1 detectable warnings are shown in the drawings.

The curb ramp depicted on this standard plate may be used with a PCC fillet section or curb and gutter. The curb ramp will be placed at the location stated in the plans.

Sidewalk will not be placed adjacent to the curb ramp flares when a 2-foot curb transition is used unless shown otherwise in the plans.

* Care will be taken to ensure a uniform grade on the curb ramp, free of sags and short grade changes.

Surface texture of the curb ramp will be obtained by coarse brooming transverse to the slope of the curb ramp.

The normal gutter line profile will be maintained through the area of the ramp opening.

Joints will be sawed or tooled into the concrete adjacent to the detectable warnings to alleviate possible corner cracking.

Care will be taken to ensure that the surface of the detectable warnings are clean and maintains a uniform color.

The detectable warnings will be cut as necessary to fit the plan specified limits of the detectable warnings. Cost for cutting the detectable warnings will be incidental to the corresponding detectable warning contract item.

There will be no separate payment for curb ramps. The curb ramp will be measured and paid for at the contract unit price per square foot for the corresponding concrete sidewalk contract item. The square foot area of the detectable warnings will be included in the measured and paid for quantity of sidewalk.

If rebar is placed in the Turning Space as depicted in DETAIL E, the cost of the materials, labor, and equipment to furnish and install the rebar will be incidental to the contract unit price per square foot for the corresponding concrete sidewalk contract item.

The curb transitions and ramp opening will be measured and paid for at the contract unit price per foot for the corresponding curb and gutter contract item when curb and gutter is used. The curb transitions and ramp opening will be measured and paid for at the contract unit price per square yard for the corresponding PCC fillet section contract item when a PCC fillet section is used.

All costs for furnishing and installing the transition area at the base of the curb ramp will be incidental to the contract unit price per foot for the corresponding curb and gutter contract item when curb and gutter is used and will be incidental to the contract unit price per square yard for the corresponding PCC fillet section contract item when a PCC fillet section is used.

The type 1 detectable warnings will be measured to the nearest square foot. All costs for furnishing and installing the type 1 detectable warnings including labor, equipment, materials, and incidentals will be paid for at the contract unit price per square foot for "Type 1 Detectable Warnings".

The type 2 detectable warnings will be measured to the nearest square foot. All costs for furnishing and installing the type 2 detectable warnings including labor, equipment, and materials, including adhesive, necessary sealant or grout, and necessary grinding will be paid for at the contract unit price per square foot for "Type 2 Detectable Warnings".

February 14, 2020

Published Date: 2025	SDDOT	TYPE 2 CURB RAMP (DIRECTIONAL CURB RAMP)	PLATE NUMBER 651.02
			Sheet 3 of 3

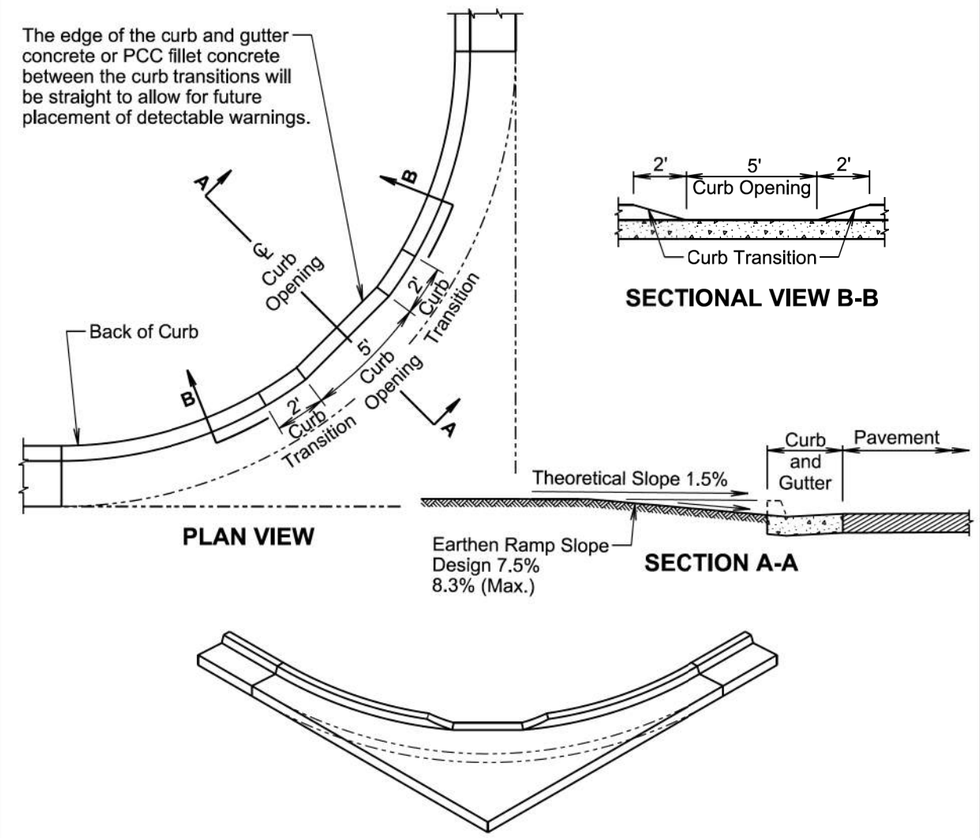

GENERAL NOTES:

For illustrative purpose only, the curb opening location is shown at the center of the fillet section. The curb opening will be placed at the location(s) stated in the plans.

For illustrative purpose only, PCC fillet sections are shown in the above drawings. The curb opening depicted on this standard plate may be used with a PCC fillet section or with curb and gutter.

* The curb opening width is 5' unless stated otherwise in the plans.

The normal gutter line profile will be maintained through the area of the opening.

The curb transitions and opening will be measured and paid for at the contract unit price per foot for the corresponding curb and gutter contract item when curb and gutter is used. The curb transitions and opening will be measured and paid for at the contract unit price per square yard for the corresponding PCC fillet section contract item when a PCC fillet section is used.

February 14, 2020

Published Date: 2025	SDDOT	CURB OPENING AND CURB TRANSITIONS IN CURB AND GUTTER FOR FUTURE CURB RAMP AND BOULEVARD SIDEWALK	PLATE NUMBER 651.16
			Sheet 1 of 1

Plot Scale - 1:200
Plotted From - TRSF12141
Standard Plate - 651.02 P3-3 & 651.16 P1-1
File - ...\moody\609\StdPlateSectionB.dgn

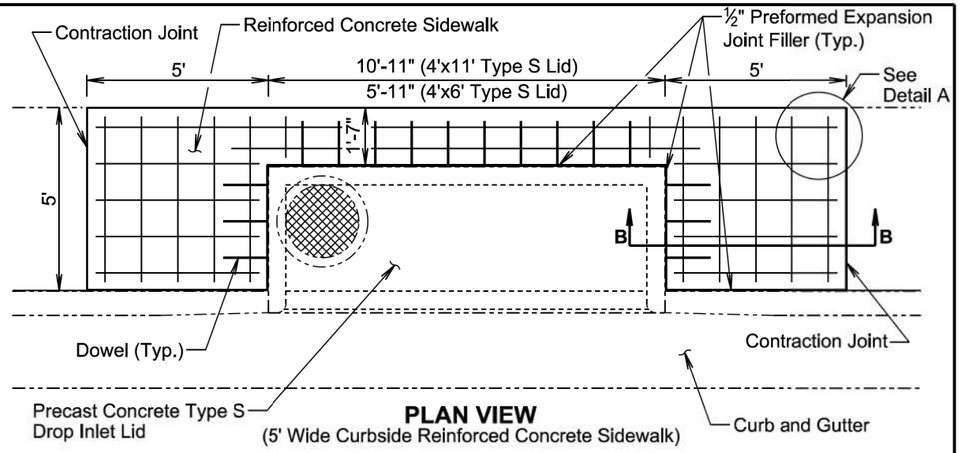

PLAN VIEW
(5' Wide Curbside Reinforced Concrete Sidewalk)

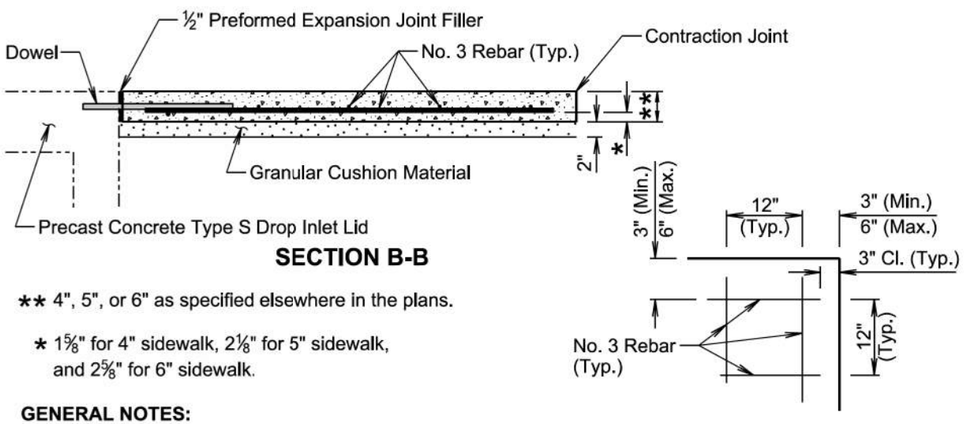

SECTION B-B

DETAIL A

** 4", 5", or 6" as specified elsewhere in the plans.

* 1⅝" for 4" sidewalk, 2⅛" for 5" sidewalk, and 2⅝" for 6" sidewalk.

GENERAL NOTES:

The precast concrete Type S lids shown are 4'x11' for illustrative purpose.

The cross slope of the sidewalk and precast concrete type S drop inlet lid will be as specified elsewhere in the plans.

The reinforcing steel will conform to Section 1010 of the Specifications. The Contractor will be in conformance with the construction requirements of Section 480.3 of the Specifications.

When lapping of reinforcing steel is necessary, the No. 3 rebar will be lapped 12".

The reinforced concrete sidewalk will conform to the requirements of Section 651 of the Specifications.

All costs for constructing the reinforced concrete sidewalk including labor, equipment, tools, backfilling, furnishing and placing materials, including granular cushion, reinforcing steel, preformed expansion joint filler, and incidentals will be included in the contract unit price per square foot for the corresponding reinforced concrete sidewalk contract item.

February 14, 2020

Published Date: 2025	SDDOT	REINFORCED CONCRETE SIDEWALK ADJACENT TO PRECAST CONCRETE TYPE S DROP INLET LID	PLATE NUMBER 651.70 Sheet 1 of 2

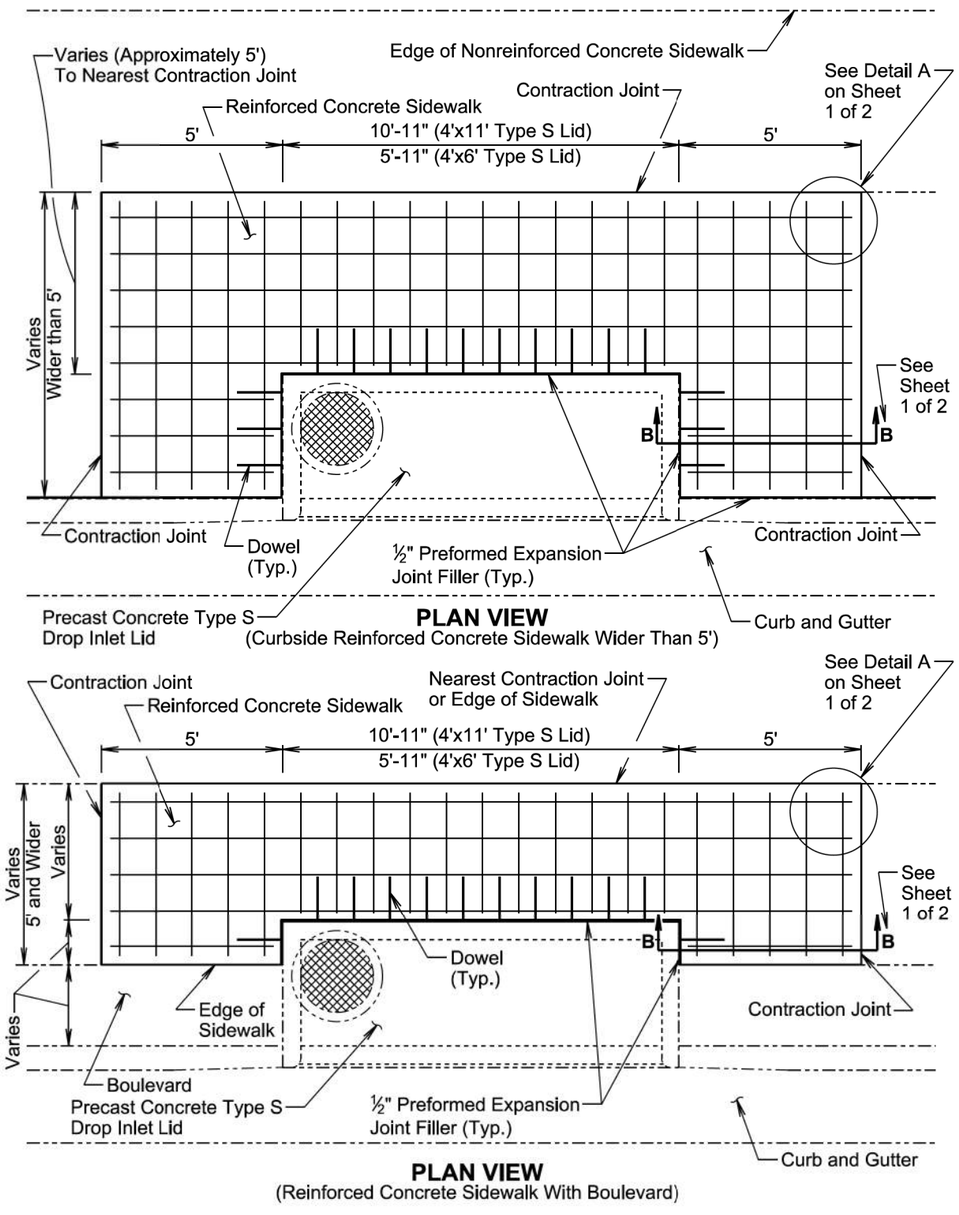

PLAN VIEW
(Curbside Reinforced Concrete Sidewalk Wider Than 5')

PLAN VIEW
(Reinforced Concrete Sidewalk With Boulevard)

February 14, 2020

Published Date: 2025	SDDOT	REINFORCED CONCRETE SIDEWALK ADJACENT TO PRECAST CONCRETE TYPE S DROP INLET LID	PLATE NUMBER 651.70 Sheet 2 of 2

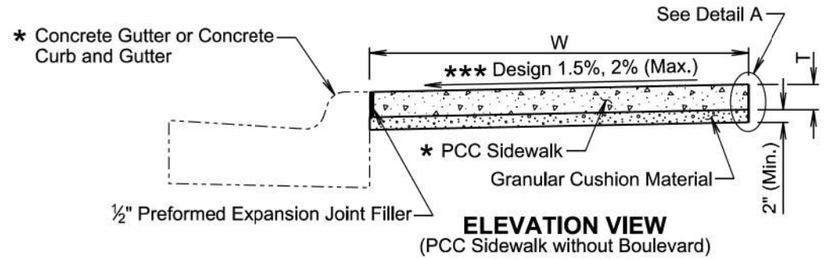

ELEVATION VIEW
(PCC Sidewalk without Boulevard)

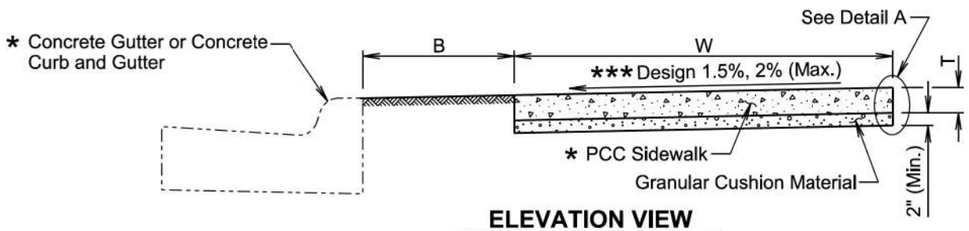

ELEVATION VIEW
(PCC Sidewalk with Boulevard)

B Width of boulevard as specified in the plans.

T Thickness of PCC sidewalk as specified in the plans.

W Width of PCC sidewalk as specified in the plans.

* Type as specified in the plans.

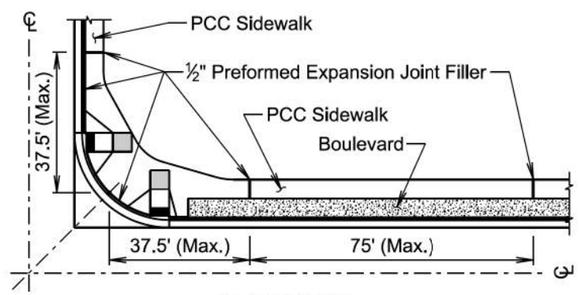

PLAN VIEW

GENERAL NOTES:

The PCC sidewalk will be constructed in accordance with Section 651 of the Specifications.

*** The cross slope of the sidewalk is designed at 1.5% and the maximum slope allowed is 2% unless specified otherwise in the plans.

The maximum length between expansion joints in the PCC sidewalk is 75 feet.

PCC sidewalk placed adjacent to intersection of roadways will have an expansion joint placed transversely a maximum of 37.5 feet from the intersection. See Plan View.

An expansion joint in the PCC sidewalk will consist of a ½ -inch thick preformed expansion joint filler material placed full depth and width of the PCC sidewalk.

** Large areas of PCC pavement adjacent to the PCC sidewalk may require a different joint treatment than shown in the detail. If a different joint detail is necessary, plans will contain the joint detail and the Contractor will construct the joint treatment in accordance with the plans.

February 14, 2020

Published Date: 2025	SDDOT	PCC SIDEWALK	PLATE NUMBER 651.75
			Sheet 1 of 2

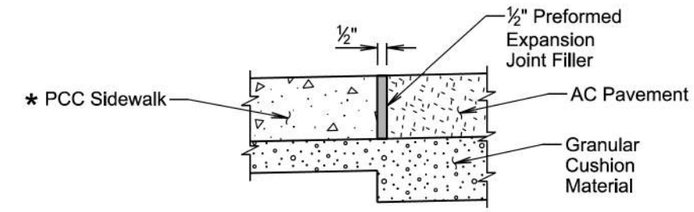

ELEVATION VIEW
(PCC sidewalk adjacent to asphalt concrete pavement)

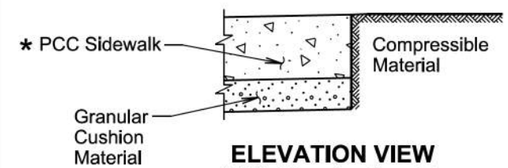

ELEVATION VIEW
(PCC sidewalk adjacent to earthen material, landscape rock, or other compressible materials)

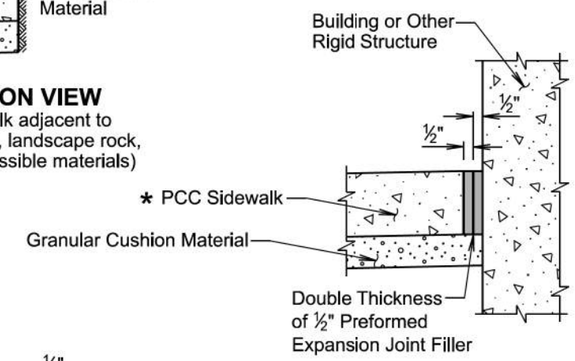

ELEVATION VIEW
(PCC sidewalk adjacent to building or other rigid structure)

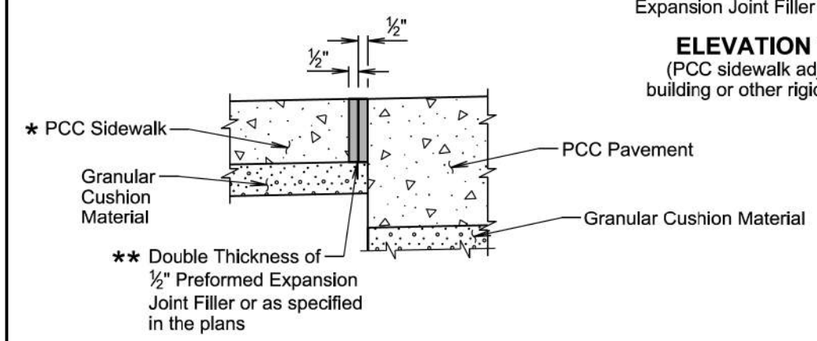

ELEVATION VIEW
(PCC sidewalk adjacent to PCC pavement)

DETAIL A
(Use Appropriate Detail(s))

February 14, 2020

Published Date: 2025	SDDOT	PCC SIDEWALK	PLATE NUMBER 651.75
			Sheet 2 of 2

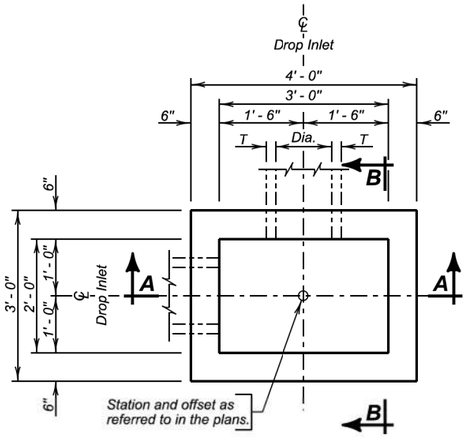

PLAN VIEW

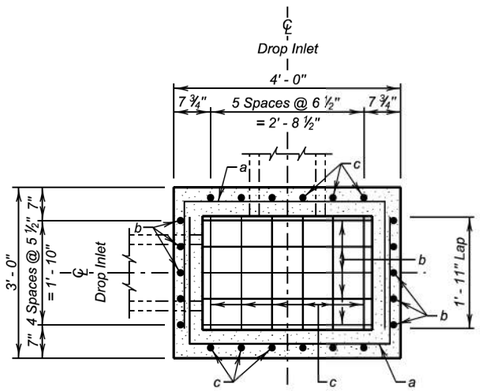

BOTTOM SECTION

ESTIMATED QUANTITIES

ITEM	UNIT	CONSTANT QUANTITY	VARIABLE QUANTITY
✳ Class M6 Concrete	Cu. Yd.	0.26	0.22H
Reinforcing Steel	Lb.	51.19	28.97H
Frame and Grate Assembly	Each	1	———

DROP INLETS FOR 12" TO 24" DIAMETER PIPE

SPECIFICATIONS

Design Specifications: AASHTO LRFD Bridge Design Specifications, 2012 Edition.

Construction Specifications: South Dakota Standard Specifications for Roads and Bridges, Current Edition and required Provisions, Supplemental Specifications, and Special Provisions as included in the Proposal.

GENERAL NOTES:

Design Live Load: HL-93. No construction loading in excess of legal load was considered.

Reinforcing steel shall conform to ASTM A615 grade 60. The d bars shall be lapped 12 inches with the b and c bars. Cut and bend reinforcing steel as required to place pipe(s) through the drop inlet wall.

Drop inlet may be precast. If precast drop inlet details differ from this standard plate, submit a checked design done by a SD registered P.E. and shop plans to the Office of Bridge Design for approval.

✳ Reduce total quantities of concrete by the amount of concrete displaced by the pipe(s). The total quantity of concrete shall be computed to the nearest hundredth of a cubic yard. The total quantity of reinforcing steel shall be computed to the nearest pound.

Drop inlet shown may be modified by the addition or omission of connecting pipes as noted elsewhere in the plans. All pipes entering drop inlet must fit between the inside face of walls and shall not enter through the corners.

Maximum R.C.P. diameter shall not exceed 18 inches on the 2-foot wide side and shall not exceed 24 inches (24 inches for R.C. arch) on the 3-foot wide side of the drop inlet.

The dimension of H is in feet. Maximum H is 10 feet.

PIPE DISPLACEMENT REDUCTIONS

	Diameter (Inches)	Wall T (Inches)	Class M6 Concrete (Cu. Yd.)
R.C.P.	12	2	0.03
	15	2 ¼	0.04
	18	2 ½	0.05
	24	3	0.09
R.C. ARCH	18	2 ½	0.05
	24	3 ½	0.09

March 31, 2024

Published Date: 2025

SDDOT

2' X 3' TYPE B
REINFORCED CONCRETE DROP INLET

PLATE NUMBER 670.01

Sheet 1 of 2

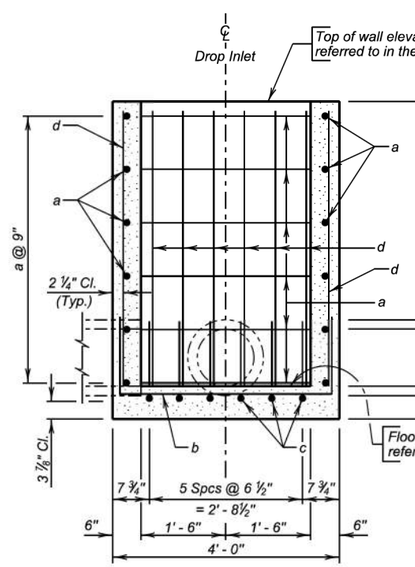

SEC. A - A

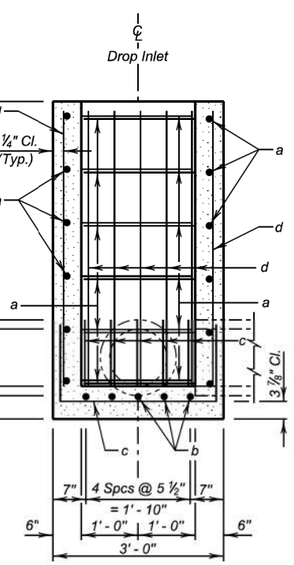

SEC. B - B

REINFORCING SCHEDULE

Mk.	No.	Size	Length	Type
a	2.67H	4	8' - 0"	17
b	5	5	6' - 3"	17
c	6	4	5' - 3"	17
d	22	4	H - 2"	Str.

Bending Details

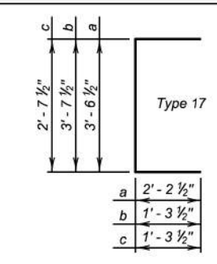

NOTE:
All dimensions are out to out of bars.

March 31, 2024

Published Date: 2025

SDDOT

2' X 3' TYPE B
REINFORCED CONCRETE DROP INLET

PLATE NUMBER 670.01

Sheet 2 of 2

Plot Scale - 1:200
Plotted From - TRSF12141
Standard Plate - 670.01 P1-2 & 670.01 P2-2
File - ...\modyt0609\StdPlateSectionB.dgn

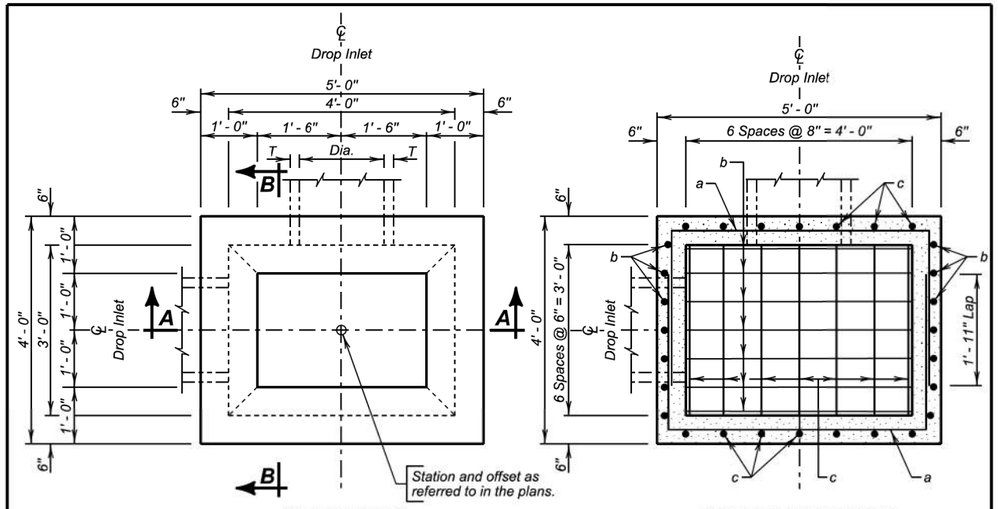

PLAN VIEW

BOTTOM SECTION

ESTIMATED QUANTITIES

ITEM	UNIT	CONSTANT QUANTITY	VARIABLE QUANTITY
✳ Class M6 Concrete	Cu. Yd.	0.72	0.30H
Reinforcing Steel	Lb.	130.93	36.54H
Frame and Grate Assembly	Each	1	———

DROP INLETS FOR 12" TO 36" DIAMETER PIPE

SPECIFICATIONS

Design Specifications: AASHTO LRFD Bridge Design Specifications, 2012 Edition.

Construction Specifications: South Dakota Standard Specifications for Roads and Bridges, Current Edition and required Provisions, Supplemental Specifications, and Special Provisions as included in the Proposal.

GENERAL NOTES:

Design Live Load: HL-93. No construction loading in excess of legal load was considered.

Reinforcing steel shall conform to ASTM A615 grade 60. The d bars shall be lapped 12 inches with the b and c bars. Cut and bend reinforcing steel as required to place pipe(s) through the drop inlet wall.

Drop inlet may be precast. If precast drop inlet details differ from this standard plate, submit a checked design done by a SD registered P.E. and shop plans to the Office of Bridge Design for approval.

✳ Reduce total quantities of concrete by the amount of concrete displaced by the pipe(s). The total quantity of concrete shall be computed to the nearest hundredth of a cubic yard. The total quantity of reinforcing steel shall be computed to the nearest pound.

Drop inlet shown may be modified by the addition or omission of connecting pipes as noted elsewhere in the plans. All pipes entering drop inlet must fit between the inside face of walls and shall not enter through the corners.

Maximum R.C.P. diameter shall not exceed 24 inches (24 inches for R. C. arch) on the 3-foot wide side and shall not exceed 36 inches (30 inches for R.C. arch) on the 4-foot wide side of the drop inlet.

The dimension of H is in feet. Maximum H is 10 feet.

PIPE DISPLACEMENT REDUCTIONS

	Diameter (Inches)	Wall T (Inches)	Class M6 Concrete (Cu. Yd.)
R.C.P.	12	2	0.03
	15	2 ¼	0.04
	18	2 ½	0.05
	24	3	0.09
	30	3 ½	0.14
	36	4	0.20
R.C. ARCH	18	2 ½	0.05
	24	3 ½	0.09
	30	4	0.14

December 16, 2015

Published Date: 2025	SDDOT	3' X 4' TYPE B REINFORCED CONCRETE DROP INLET	PLATE NUMBER 670.02 Sheet 1 of 2

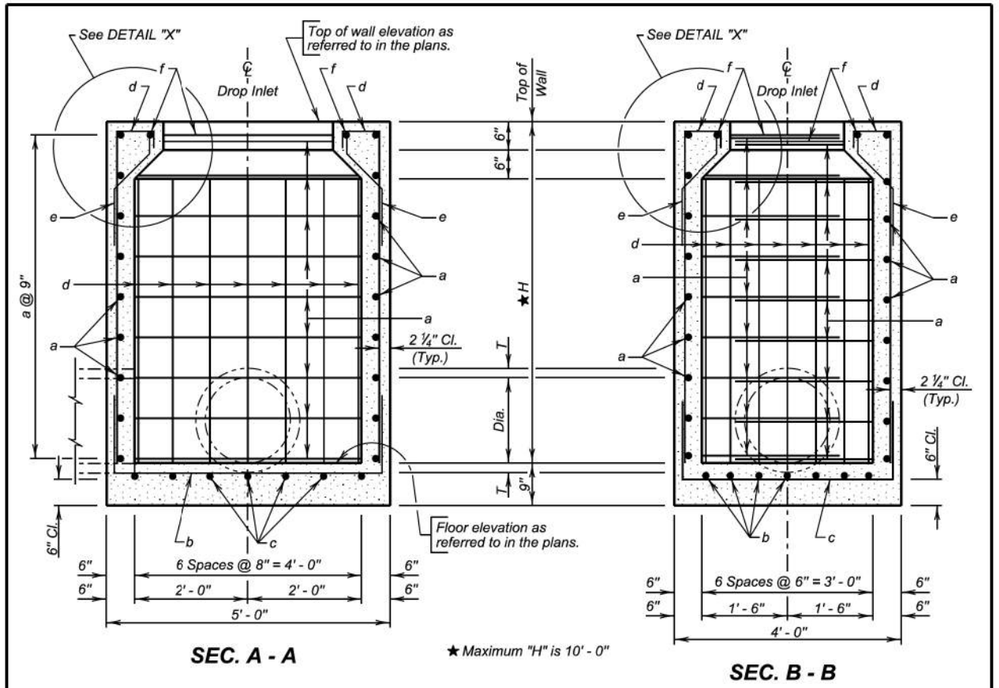

SEC. A - A

SEC. B - B

REINFORCING SCHEDULE

Mk.	No.	Size	Length	Type
a	2.67H	4	10' - 0"	17
b	7	4	7' - 6"	17
c	7	4	6' - 6"	17
d	28	4	H + 9"	S17
e	28	4	2' - 3"	S19
f	2	4	7' - 0"	17

Bending Details

NOTE:
All dimensions are out to out of bars.

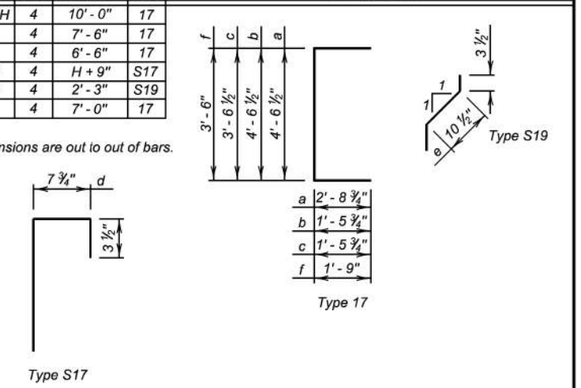

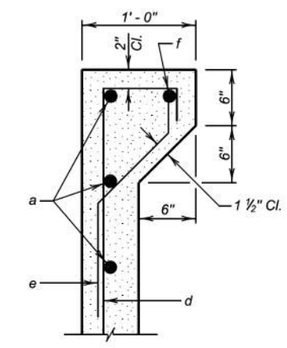

DETAIL "X"

December 16, 2015

Published Date: 2025	SDDOT	3' X 4' TYPE B REINFORCED CONCRETE DROP INLET	PLATE NUMBER 670.02 Sheet 2 of 2

Plot Scale - 1:200
Plotted From - TRSF12141
Standard Plate - 670.02 P1-2 & 670.02 P2-2
File - ...\tmody0609\StdPlateSectionB.dgn

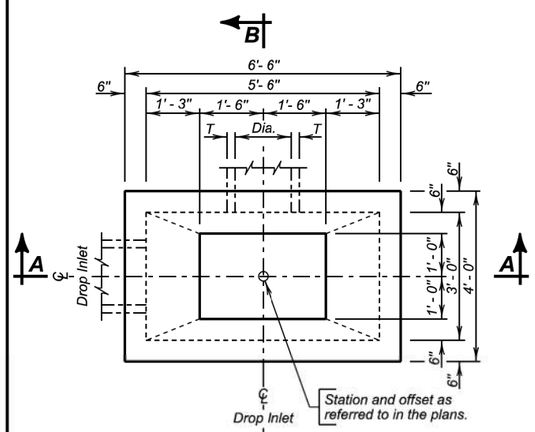

PLAN VIEW

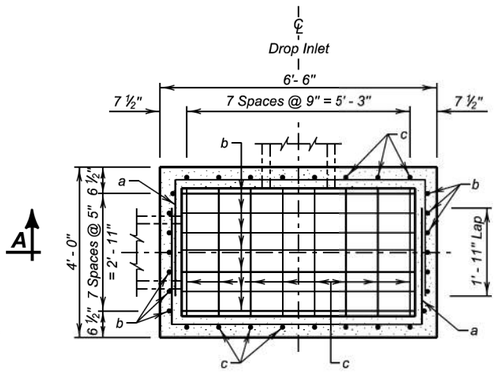

BOTTOM SECTION

ESTIMATED QUANTITIES

ITEM	UNIT	CONSTANT QUANTITY	VARIABLE QUANTITY
✱ Class M6 Concrete	Cu. Yd.	1.02	0.35H
Reinforcing Steel	Lb.	130.93	31.2H
Frame and Grate Assembly	Each	1	———

DROP INLETS FOR 12" TO 54" DIAMETER PIPE

SPECIFICATIONS

Design Specifications: AASHTO LRFD Bridge Design Specifications, 2012 Edition.

Construction Specifications: South Dakota Standard Specifications for Roads and Bridges, Current Edition and required Provisions, Supplemental Specifications, and Special Provisions as included in the Proposal.

GENERAL NOTES

Design Live Load: HL-93. No construction loading in excess of legal load was considered.

Reinforcing steel shall conform to ASTM A615 grade 60. The d and e bars shall be lapped 12 inches with the c and b bars, respectively. Cut and bend reinforcing steel as required to place pipe(s) through the drop inlet wall.

Drop inlet may be precast. If precast drop inlet details differ from this standard plate, submit a checked design done by a SD registered P.E. and shop plans to the Office of Bridge Design for approval.

✱ Reduce total quantities of concrete by the amount of concrete displaced by the pipe(s). The total quantity of concrete shall be computed to the nearest hundredth of a cubic yard. The total quantity of reinforcing steel shall be computed to the nearest pound.

Drop inlet shown may be modified by the addition or omission of connecting pipes as noted elsewhere in the plans. All pipes entering drop inlet must fit between the inside face of walls and shall not enter though the corners.

Maximum R.C.P. diameter shall not exceed 24 inches (24 inches for R. C. arch) on the 3-foot wide side and shall not exceed 54 inches (42 inches for R.C. arch) on the 5.5-foot wide side of the drop inlet.

The dimension of H is in feet. Maximum H is 10 feet.

PIPE DISPLACEMENT REDUCTIONS

	Diameter (Inches)	Wall T (Inches)	Class M6 Concrete (Cu. Yd.)
R.C.P.	12	2	0.03
	15	2 ¼	0.04
	18	2 ½	0.05
	24	3	0.09
	30	3 ½	0.14
	36	4	0.20
	42	4 ½	0.26
	48	5	0.34
	54	5 ½	0.43
R.C. ARCH	18	2 ½	0.05
	24	3 ½	0.09
	30	4	0.14
	36	4 ½	0.19
	42	4 ½	0.24

December 16, 2015

Published Date: 2025

SDDOT

3' X 5.5' TYPE B
REINFORCED CONCRETE DROP INLET

PLATE NUMBER 670.03

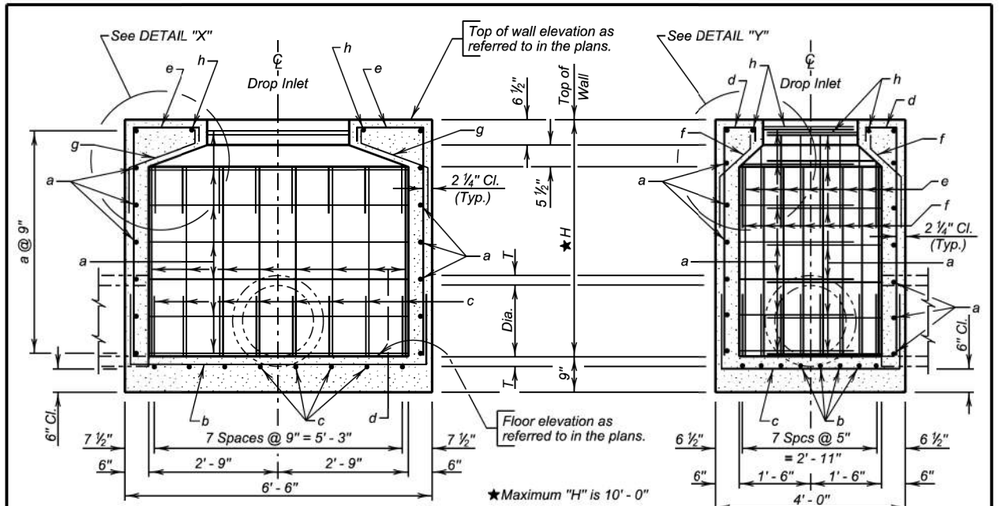

SEC. A - A

SEC. B - B

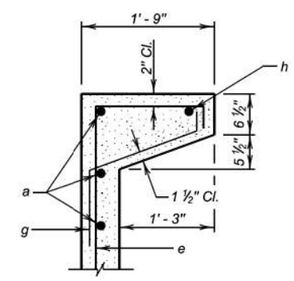

DETAIL "X"

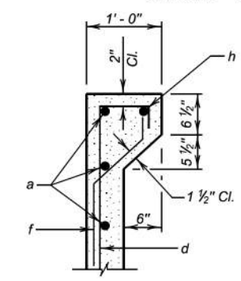

DETAIL "Y"

REINFORCING SCHEDULE

Mk.	No.	Size	Length	Type
a	2.67H	4	11'- 6"	17
b	8	4	9'- 0"	17
c	8	4	6'- 6"	17
d	8	4	H + 9"	S17
e	8	4	H + 18"	S17
f	8	4	2'- 3"	S19
g	8	4	2'- 9"	S19
h	2	4	7'- 0"	17

NOTE:
All dimensions are out to out of bars.

Bending Details

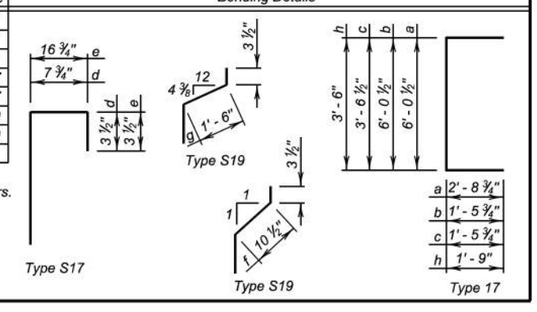

December 16, 2015

Published Date: 2025

SDDOT

3' X 5.5' TYPE B
REINFORCED CONCRETE DROP INLET

PLATE NUMBER 670.03

Plot Scale - 1:200
Plotted From - TRSF12141
Standard Plate - 670.03 P1-2 & 670.03 P2-2
File - ...\tmody0609\StdPlateSections3.dgn

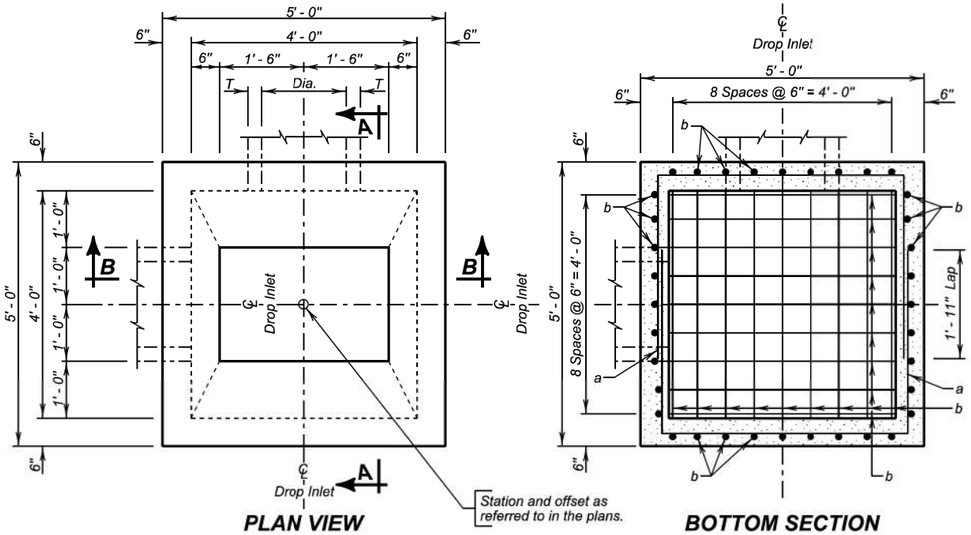

ESTIMATED QUANTITIES

ITEM	UNIT	CONSTANT QUANTITY	VARIABLE QUANTITY
✳ Class M6 Concrete	Cu. Yd.	0.98	0.33H
Reinforcing Steel	Lb.	180.69	43.67H
Frame and Grate Assembly	Each	1	——

DROP INLETS FOR 12" TO 36" DIAMETER PIPE

SPECIFICATIONS

Design Specifications: AASHTO LRFD Bridge Design Specifications, 2012 Edition.

Construction Specifications: South Dakota Standard Specifications for Roads and Bridges, Current Edition and required Provisions, Supplemental Specifications, and Special Provisions as included in the Proposal.

GENERAL NOTES:

Design Live Load: HL-93. No construction loading in excess of legal load was considered.

Reinforcing steel shall conform to ASTM A615 grade 60. The d bars shall be lapped 12 inches with the b and c bars. Cut and bend reinforcing steel as required to place pipe(s) through the drop inlet wall.

Drop inlet may be precast. If precast drop inlet details differ from this standard plate, submit a checked design done by a SD registered P.E. and shop plans to the Office of Bridge Design for approval.

✳ Reduce total quantities of concrete by the amount of concrete displaced by the pipe(s). The total quantity of concrete shall be computed to the nearest hundredth of a cubic yard. The total quantity of reinforcing steel shall be computed to the nearest pound.

Drop inlet shown may be modified by the addition or omission of connecting pipes as noted elsewhere in the plans. All pipes entering drop inlet must fit between the inside face of walls and shall not enter through the corners.

Maximum R.C.P. diameter shall not exceed 36 inches (30 inches for R. C. arch) on the 4-foot wide side of the drop inlet.

The dimension of H is in feet. Maximum H is 10 feet.

PIPE DISPLACEMENT REDUCTIONS

	Diameter (Inches)	Wall T (Inches)	Class M6 Concrete (Cu. Yd.)
R.C.P.	12	2	0.03
	15	2 ¼	0.04
	18	2 ½	0.05
	24	3	0.09
	30	3 ½	0.14
	36	4	0.20
R.C. ARCH	18	2 ½	0.05
	24	3 ½	0.09
	30	4	0.14

December 16, 2015

Published Date: 2025 | SDDOT | 4' X 4' TYPE B REINFORCED CONCRETE DROP INLET | PLATE NUMBER 670.04 | Sheet 1 of 2

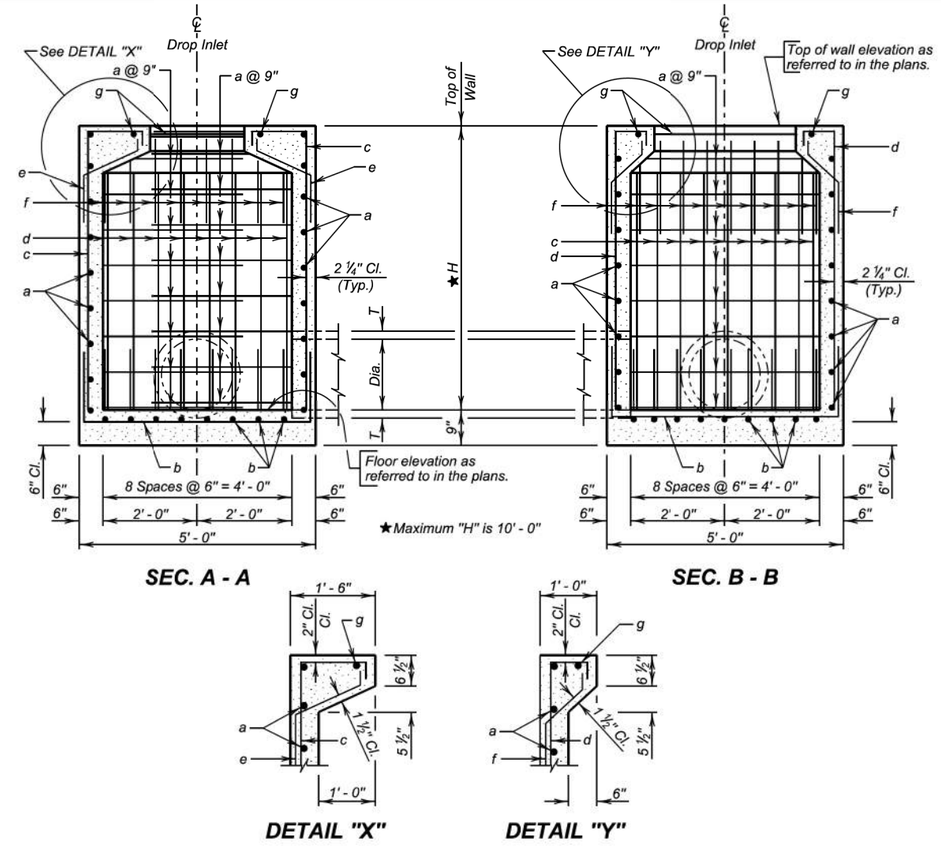

REINFORCING SCHEDULE

Mk.	No.	Size	Length	Type
a	2.67H	4	11' - 0"	17
b	18	4	7' - 6"	17
c	18	4	H + 15"	S17
d	18	4	H + 9"	S17
e	18	4	2' - 6"	S19
f	18	4	2' - 3"	S19
g	2	4	7' - 0"	17

NOTE:
All dimensions are out to out of bars.

Bending Details

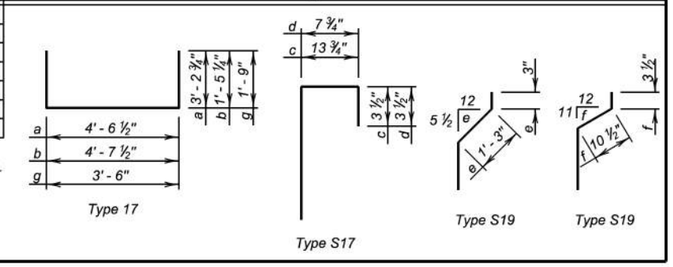

December 16, 2015

Published Date: 2025 | SDDOT | 4' X 4' TYPE B REINFORCED CONCRETE DROP INLET | PLATE NUMBER 670.04 | Sheet 2 of 2

Plot Scale - 1:200
Plotted From - TRSF12141
Standard Plate - 670.04 P1-2 & 670.04 P2-2
File - ...\tmody0609\StdPlateSectionB.dgn

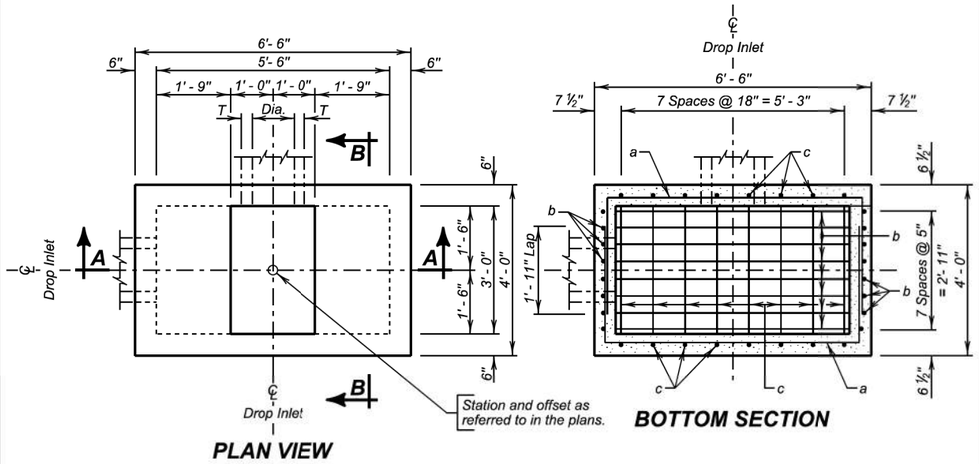

PLAN VIEW

BOTTOM SECTION

ESTIMATED QUANTITIES			
ITEM	UNIT	CONSTANT QUANTITY	VARIABLE QUANTITY
✳ Class M6 Concrete	Cu. Yd.	1.03	0.35H
Reinforcing Steel	Lb.	161.19	47.89H
Grate Assembly	Each	1	———

DROP INLETS FOR 12" TO 54" DIAMETER PIPE

SPECIFICATIONS

Design Specifications: AASHTO LRFD Bridge Design Specifications, 2012 Edition.

Construction Specifications: South Dakota Standard Specifications for Roads and Bridges, Current Edition and required Provisions, Supplemental Specifications, and Special Provisions as included in the Proposal.

GENERAL NOTES:

Design Live Load: HL-93. No construction loading in excess of legal load was considered.

Reinforcing steel shall conform to ASTM A615 grade 60. The d bars shall be lapped 12 inches with the b and c bars. Cut and bend reinforcing steel as required to place pipe(s) through the drop inlet wall.

Drop inlet may be precast. If precast drop inlet details differ from this standard plate, submit a checked design done by a SD registered P.E. and shop plans to the Office of Bridge Design for approval.

✳ Reduce total quantities of concrete by the amount of concrete displaced by the pipe(s). The total quantity of concrete shall be computed to the nearest hundredth of a cubic yard. The total quantity of reinforcing steel shall be computed to the nearest pound.

Drop inlet shown may be modified by the addition or omission of connecting pipes as noted elsewhere in the plans. All pipes entering drop inlet must fit between the inside face of walls and shall not enter through the corners.

Maximum R.C.P. diameter shall not exceed 54 inches (42 inches for R. C. arch) on the 5.5-foot wide side and shall not exceed 24 inches (24 inches for R. C. arch) on the 3-foot wide side of the drop inlet.

The dimension of H is in feet. Maximum H is 10 feet.

PIPE DISPLACEMENT REDUCTIONS			
	Diameter (Inches)	Wall T (Inches)	Class M6 Concrete (Cu. Yd.)
R.C.P.	12	2	0.03
	15	2 ¼	0.04
	18	2 ½	0.05
	24	3	0.09
	30	3 ½	0.14
	36	4	0.20
	42	4 ½	0.26
	48	5	0.34
	54	5 ½	0.43
R.C. ARCH	18	2 ½	0.05
	24	3 ½	0.09
	30	4	0.14
	36	4 ½	0.19
	42	4 ½	0.24

December 16, 2015

Published Date: 2025	SDDOT	5.5' X 3' TYPE B REINFORCED CONCRETE DROP INLET	PLATE NUMBER 670.05
			Sheet 1 of 2

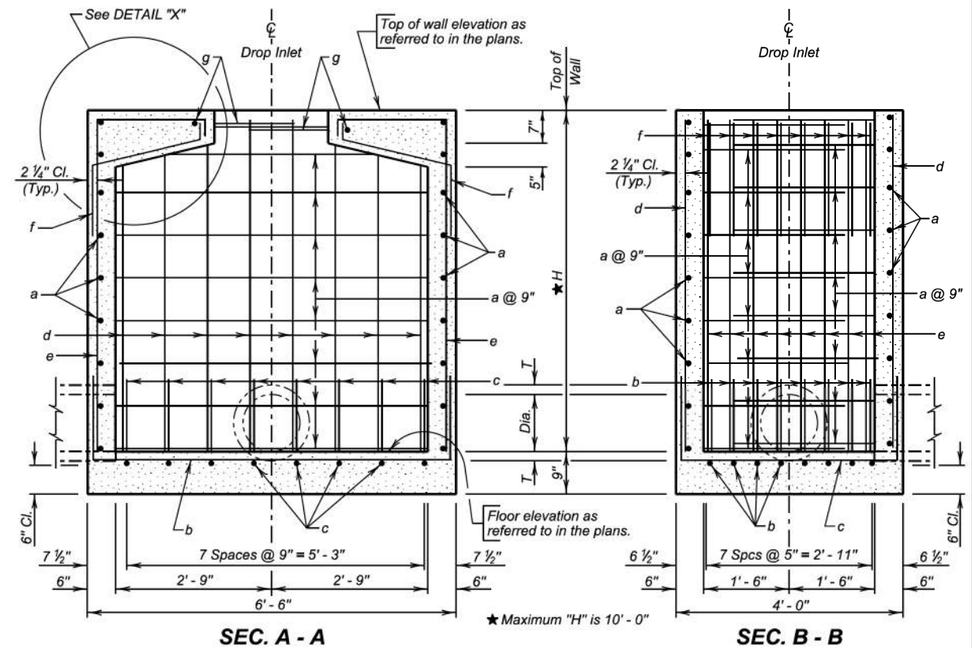

SEC. A - A

SEC. B - B

REINFORCING SCHEDULE					
Mk.	No.	Size	Length	Type	Bending Details
a	2.67H	4	11' - 6"	17	
b	8	4	9' - 0"	17	
c	8	4	6' - 6"	17	
d	16	4	H - 2"	Str.	
e	16	5	H + 24"	S17	
f	16	4	3' - 6"	S19	
g	2	4	7' - 0"	17	

NOTE:
All dimensions are out to out of bars.

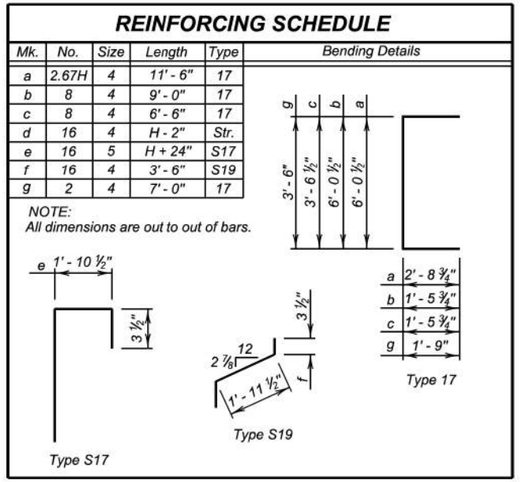

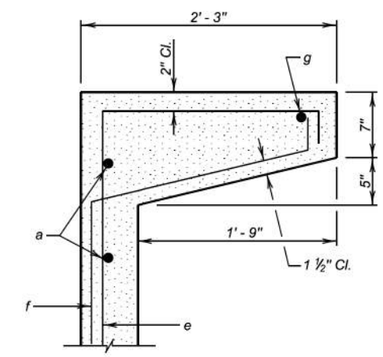

DETAIL "X"

December 16, 2015

Published Date: 2025	SDDOT	5.5' X 3' TYPE B REINFORCED CONCRETE DROP INLET	PLATE NUMBER 670.05
			Sheet 2 of 2

Plot Scale - 1:200
Plotted From - TRSF12141
File - ...\moody0609\StdPlateSectionB.dgn
Standard Plate - 670.05 P1-2 & 670.05 P2-2

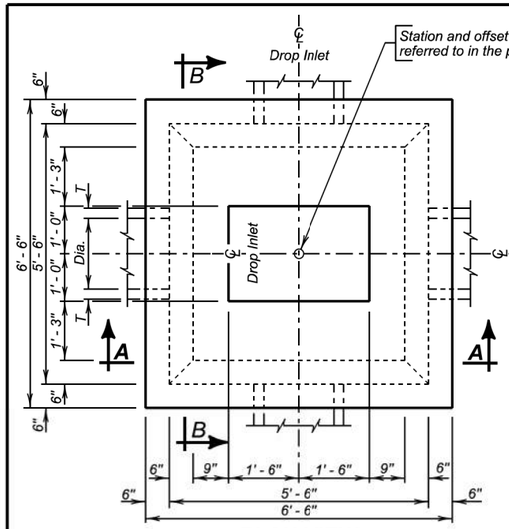

PLAN VIEW

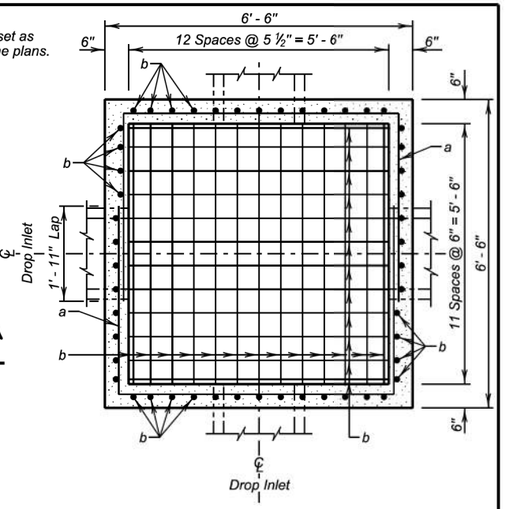

BOTTOM SECTION

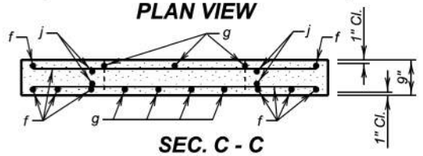

SEC. C - C

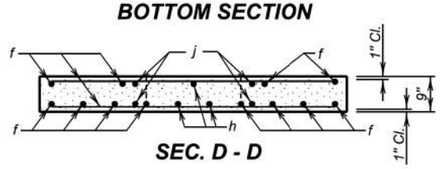

SEC. D - D

DROP INLETS FOR 12" TO 54" DIAMETER PIPE

SPECIFICATIONS

Design Specifications: AASHTO LRFD Bridge Design Specifications, 2012 Edition.

Construction Specifications: South Dakota Standard Specifications for Roads and Bridges, Current Edition and required Provisions, Supplemental Specifications, and Special Provisions as included in the Proposal.

GENERAL NOTES:

Design Live Load: HL-93. No construction loading in excess of legal load was considered.

Reinforcing steel shall conform to ASTM A615 grade 60. The c bars shall be lapped 12 inches with the b bars. Cut and bend reinforcing steel as required to place pipe(s) through the drop inlet wall.

Drop inlet may be precast. If precast drop inlet details differ from this standard plate, submit a checked design done by a SD registered P.E. and shop plans to the Office of Bridge Design for approval.

✳ Reduce total quantities of concrete by the amount of concrete displaced by the pipe(s). The total quantity of concrete shall be computed to the nearest hundredth of a cubic yard. The total quantity of reinforcing steel shall be computed to the nearest pound.

Apply a thin layer of grout between the drop inlet and cover to ensure uniform bearing. Grout shall conform to Section 460.2 K.

Drop inlet shown may be modified by the addition or omission of connecting pipes as noted elsewhere in the plans. All pipes entering drop inlet must fit between the inside face of walls and shall not enter through the corners.

Maximum R.C.P. diameter shall not exceed 54 inches (42 inches for R. C. arch) of the drop inlet.

The dimension of H is in feet. Maximum H is 10 feet.

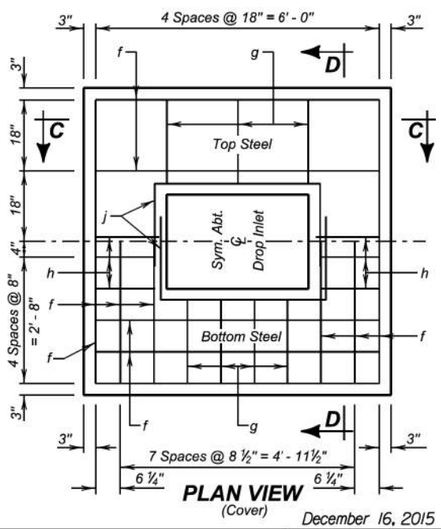

PLAN VIEW
(Cover)

December 16, 2015

Published Date: 2025

SDDOT

5.5' X 5.5' TYPE B
REINFORCED CONCRETE DROP INLET

PLATE NUMBER
670.06

Sheet 1 of 2

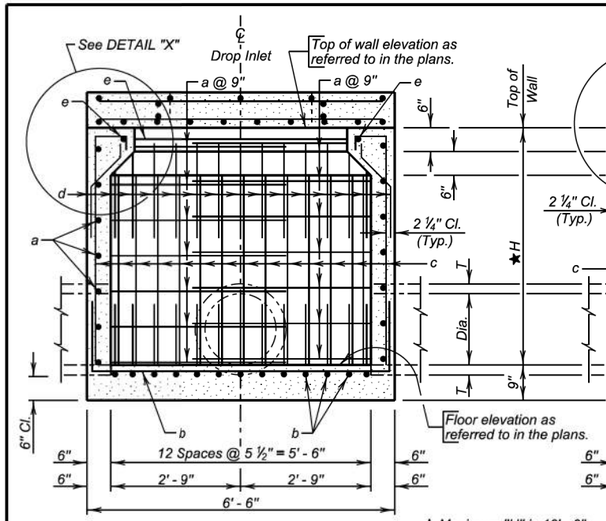

SEC. A - A

★ Maximum "H" is 10' - 0"

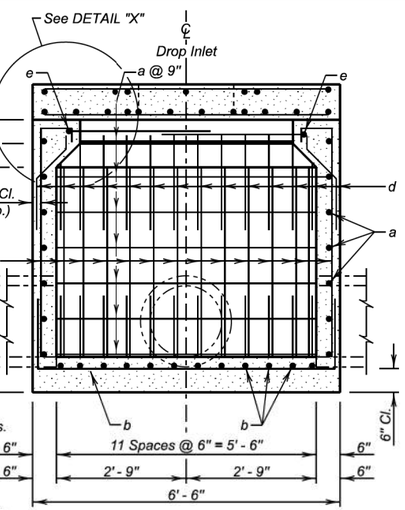

SEC. B - B

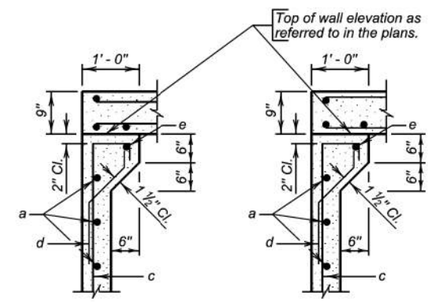

DETAIL "X"
From Sec. A - A

DETAIL "X"
From Sec. B - B

ESTIMATED QUANTITIES

ITEM	UNIT	CONSTANT QUANTITY	VARIABLE QUANTITY
✳ Class M6 Concrete	Cu. Yd.	2.46	0.44H
Reinforcing Steel	Lb.	380.09	58.37H
Frame and Grate Assembly	Each	1	——

REINFORCING SCHEDULE

Mk.	No.	Size	Length	Type
a	2.67H	4	14' - 0"	17
b	25	4	9' - 0"	17
c	50	4	H + 9"	S17
d	50	4	2' - 3"	S19
e	2	4	10' - 6"	17
f	18	4	6' - 0"	Str.
g	14	4	1' - 9"	Str.
h	10	4	1' - 3"	Str.
j	4	4	7' - 0"	17

NOTE:
All dimensions are out to out of bars.

Bending Details

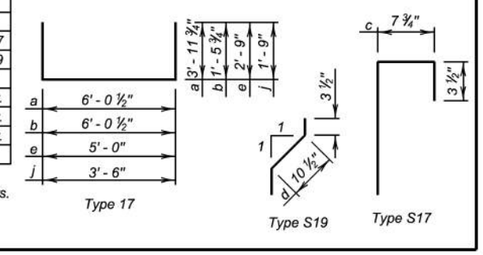

PIPE DISPLACEMENT REDUCTIONS

	Diameter (Inches)	Wall T (Inches)	Class M6 Concrete (Cu. Yd.)
R.C.P.	12	2	0.03
	15	2 ¼	0.04
	18	2 ½	0.05
	24	3	0.09
	30	3 ½	0.14
	36	4	0.20
	42	4 ½	0.26
	48	5	0.34
	54	5 ½	0.43
R.C. ARCH	18	2 ½	0.05
	24	3 ½	0.09
	30	4	0.14
	36	4 ½	0.19
	42	4 ½	0.24

December 16, 2015

Published Date: 2025

SDDOT

5.5' X 5.5' TYPE B
REINFORCED CONCRETE DROP INLET

PLATE NUMBER
670.06

Sheet 2 of 2

Plot Scale - 1:200
Plotted From - TRSF12141
Standard Plate - 670.06 P1-2 & 670.06 P2-2
File - ...\moody0609\StdPlateSectionB.dgn

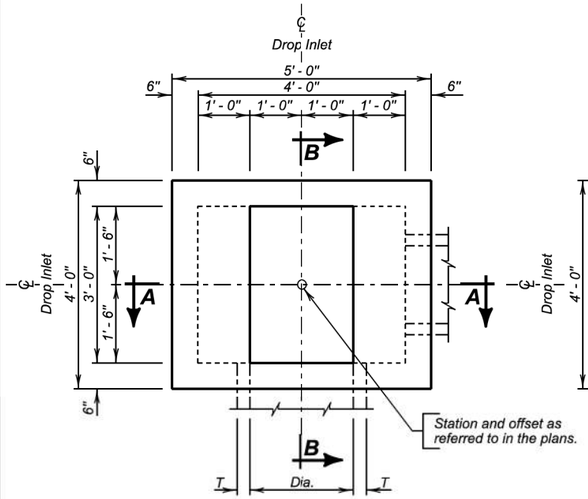

PLAN VIEW

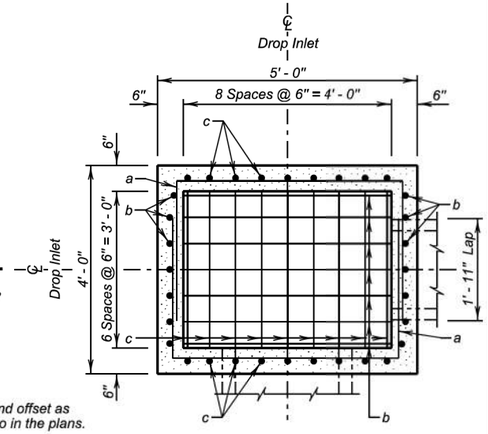

BOTTOM SECTION

ESTIMATED QUANTITIES

ITEM	UNIT	CONSTANT QUANTITY	VARIABLE QUANTITY
✳ Class M6 Concrete	Cu. Yd.	0.58	0.33H
Reinforcing Steel	Lb.	116.24	39.21H
Frame and Grate Assembly	Each	1	——

DROP INLETS FOR 12" TO 36" DIAMETER PIPE

SPECIFICATIONS

Design Specifications: AASHTO LRFD Bridge Design Specifications, 2012 Edition.

Construction Specifications: South Dakota Standard Specifications for Roads and Bridges, Current Edition and required Provisions, Supplemental Specifications, and Special Provisions as included in the Proposal.

GENERAL NOTES:

Design Live Load: HL-93. No construction loading in excess of legal load was considered.

Reinforcing steel shall conform to ASTM A615 grade 60. The d and e bars shall be lapped 12 inches with the c and b bars, respectively. Cut and bend reinforcing steel as required to place pipe(s) through the drop inlet wall.

Drop inlet may be precast. If precast drop inlet details differ from this standard plate, submit a checked design done by a SD registered P.E. and shop plans to the Office of Bridge Design for approval.

✳ Reduce total quantities of concrete by the amount of concrete displaced by the pipe(s). The total quantity of concrete shall be computed to the nearest hundredth of a cubic yard. The total quantity of reinforcing steel shall be computed to the nearest pound.

Drop inlet shown may be modified by the addition or omission of connecting pipes as noted elsewhere in the plans. All pipes entering drop inlet must fit between the inside face of walls and shall not enter through the corners.

Maximum R.C.P. diameter shall not exceed 36 inches (30 inches for R. C. arch) on the 4-foot wide side and shall not exceed 24 inches (24 inches for R. C. arch) on the 3-foot wide side of the drop inlet.

The dimension of H is in feet. Maximum H is 10 feet.

PIPE DISPLACEMENT REDUCTIONS

	Diameter (Inches)	Wall T (Inches)	Class M6 Concrete (Cu. Yd.)
R.C.P.	12	2	0.03
	15	2 ¼	0.04
	18	2 ½	0.05
	24	3	0.09
	30	3 ½	0.14
	36	4	0.20
R.C. ARCH	18	2 ½	0.05
	24	3 ½	0.09
	30	4	0.14

December 16, 2015

Published Date: 2025 | SDDOT | 4' X 3' TYPE B REINFORCED CONCRETE DROP INLET | PLATE NUMBER 670.07 | Sheet 1 of 2

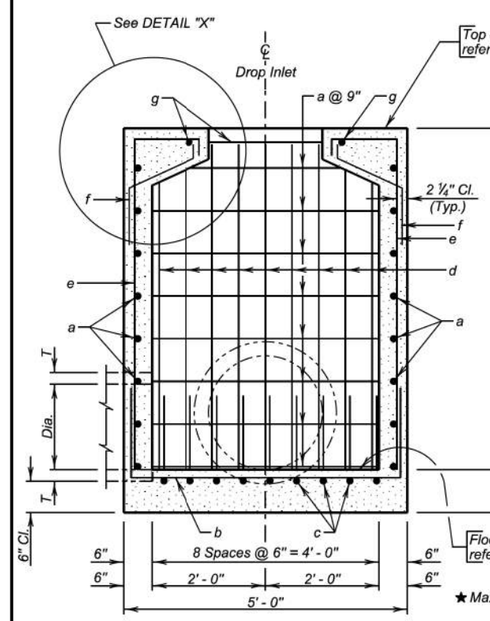

SEC. A - A

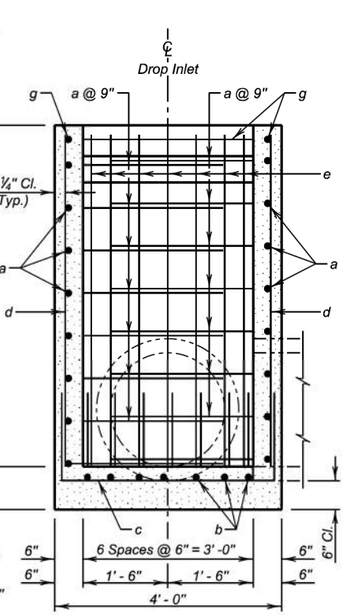

SEC. B - B

REINFORCING SCHEDULE

Mk.	No.	Size	Length	Type	Bending Details
a	2.67H	4	10' - 0"	17	
b	7	4	7' - 6"	17	
c	9	4	6' - 6"	17	
d	18	4	H - 2"	Str.	
e	14	4	H + 15"	S17	
f	14	4	2' - 6"	S19	
g	2	4	6' - 9"	17	

NOTE:
All dimensions are out to out of bars.

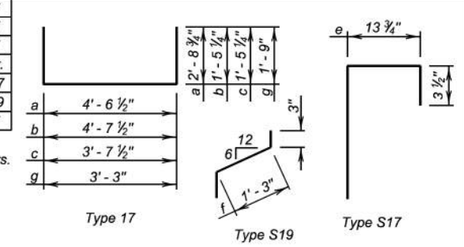

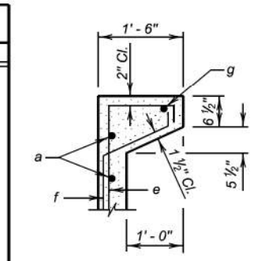

DETAIL "X"

December 16, 2015

Published Date: 2025 | SDDOT | 4' X 3' TYPE B REINFORCED CONCRETE DROP INLET | PLATE NUMBER 670.07 | Sheet 2 of 2

Plot Scale - 1:200
Plotted From - TRSF12141
File - ...\moody0609\StdPlateSectionB.dgn
Standard Plate - 670.07 P1-2 & 670.07 P2-2

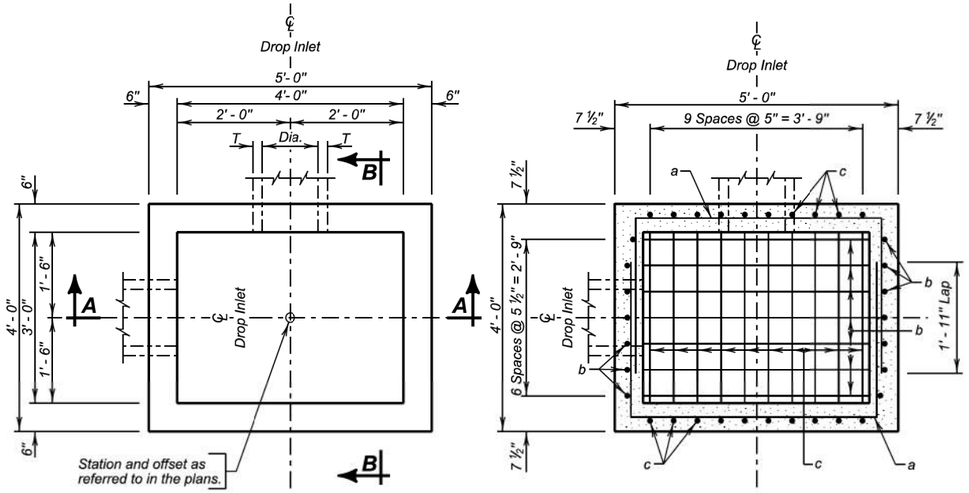

PLAN VIEW **BOTTOM SECTION**

ESTIMATED QUANTITIES

ITEM	UNIT	CONSTANT QUANTITY	VARIABLE QUANTITY
✳ Class M6 Concrete	Cu. Yd.	0.43	0.30H
Reinforcing Steel	Lb.	90.90	40.53H
Frame and Grate Assembly	Each	1	——

DROP INLETS FOR 12" TO 36" DIAMETER PIPE

SPECIFICATIONS

Design Specifications: AASHTO LRFD Bridge Design Specifications, 2012 Edition.

Construction Specifications: South Dakota Standard Specifications for Roads and Bridges, Current Edition and required Provisions, Supplemental Specifications, and Special Provisions as included in the Proposal.

GENERAL NOTES:

Design Live Load: HL-93. No construction loading in excess of legal load was considered.

Reinforcing steel shall conform to ASTM A615 grade 60. The d bars shall be lapped 12 inches with the b and c bars. Cut and bend reinforcing steel as required to place pipe(s) through the drop inlet wall.

Drop inlet may be precast. If precast drop inlet details differ from this standard plate, submit a checked design done by a SD registered P.E. and shop plans to the Office of Bridge Design for approval.

✳ Reduce total quantities of concrete by the amount of concrete displaced by the pipe(s). The total quantity of concrete shall be computed to the nearest hundredth of a cubic yard. The total quantity of reinforcing steel shall be computed to the nearest pound.

Drop inlet shown may be modified by the addition or omission of connecting pipes as noted elsewhere in the plans. All pipes entering drop inlet must fit between the inside face of walls and shall not enter through the corners.

Maximum R.C.P. diameter shall not exceed 24 inches (24 inches for R. C. arch) on the 3-foot wide side and shall not exceed 36 inches (30 inches for R. C. arch) on the 4-foot wide side of the drop inlet.

The dimension of H is in feet. Maximum H is 10 feet.

PIPE DISPLACEMENT REDUCTIONS

	Diameter (Inches)	Wall T (Inches)	Class M6 Concrete (Cu. Yd.)
R.C.P.	12	2	0.03
	15	2 ¼	0.04
	18	2 ½	0.05
	24	3	0.09
	30	3 ½	0.14
	36	4	0.20
R.C. ARCH	18	2 ½	0.05
	24	3 ½	0.09
	30	4	0.14

December 16, 2015

Published Date: 2025 | SDDOT | 3' X 4' TYPE C REINFORCED CONCRETE DROP INLET | PLATE NUMBER 670.10 | Sheet 1 of 2

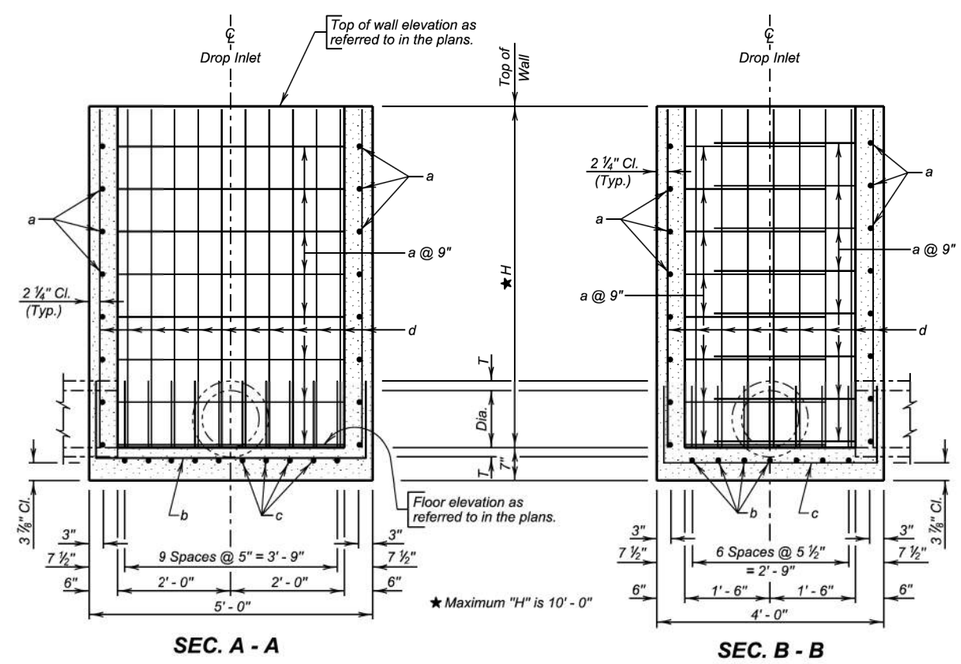

SEC. A - A **SEC. B - B**

REINFORCING SCHEDULE

Mk.	No.	Size	Length	Type
a	2.67H	4	10' - 0"	17
b	7	5	7' - 3"	17
c	10	4	6' - 3"	17
d	34	4	H - 2"	Str.

Bending Details

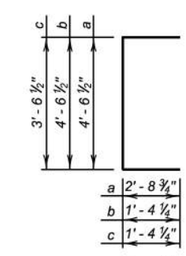

Type 17

NOTE:
All dimensions are out to out of bars.

December 16, 2015

Published Date: 2025 | SDDOT | 3' X 4' TYPE C REINFORCED CONCRETE DROP INLET | PLATE NUMBER 670.10 | Sheet 2 of 2

Plot Scale - 1:200
Plotted From - TRSF12141
File - ...\mody0609\StdPlateSectionB.dgn
Standard Plate - 670.10 P1-2 & 670.10 P2-2

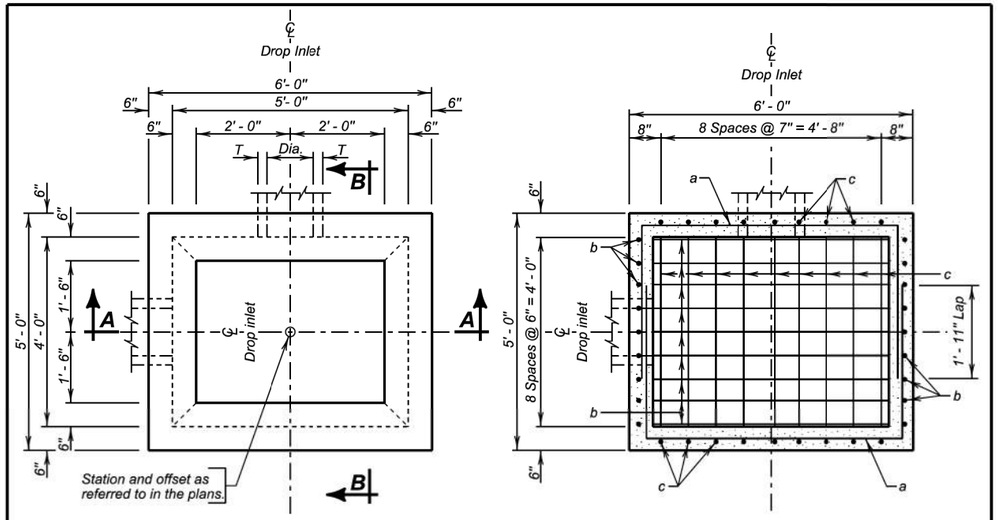

PLAN VIEW

BOTTOM SECTION

ESTIMATED QUANTITIES

ITEM	UNIT	CONSTANT QUANTITY	VARIABLE QUANTITY
✳ Class M6 Concrete	Cu. Yd.	1.06	0.37H
Reinforcing Steel	Lb.	180.36	45.43H
Frame and Grate Assembly	Each	1	——

DROP INLETS FOR 12" TO 48" DIAMETER PIPE

SPECIFICATIONS

Design Specifications: AASHTO LRFD Bridge Design Specifications, 2012 Edition.

Construction Specifications: South Dakota Standard Specifications for Roads and Bridges, Current Edition and required Provisions, Supplemental Specifications, and Special Provisions as included in the Proposal.

GENERAL NOTES:

Design Live Load: HL-93. No construction loading in excess of legal load was considered.

Reinforcing steel shall conform to ASTM A615 grade 60. The d bars shall be lapped 12 inches with the b and c bars. Cut and bend reinforcing steel as required to place pipe(s) through the drop inlet wall.

Drop inlet may be precast. If precast drop inlet details differ from this standard plate, submit a checked design done by a SD registered P.E. and shop plans to the Office of Bridge Design for approval.

✳ Reduce total quantities of concrete by the amount of concrete displaced by the pipe(s). The total quantity of concrete shall be computed to the nearest hundredth of a cubic yard. The total quantity of reinforcing steel shall be computed to the nearest pound.

Drop inlet shown may be modified by the addition or omission of connecting pipes as noted elsewhere in the plans. All pipes entering drop inlet must fit between the inside face of walls and shall not enter through the corners.

Maximum R.C.P. diameter shall not exceed 36 inches (30 inches for R. C. arch) on the 4-foot wide side and shall not exceed 48 inches (36 inches for R. C. arch) on the 5-foot wide side of the drop inlet.

The dimension of H is in feet. Maximum H is 10 feet.

PIPE DISPLACEMENT REDUCTIONS

	Diameter (Inches)	Wall T (Inches)	Class M6 Concrete (Cu. Yd.)
R.C.P.	12	2	0.03
	15	2 ¼	0.04
	18	2 ½	0.05
	24	3	0.09
	30	3 ½	0.14
	36	4	0.20
	42	4 ½	0.26
	48	5	0.34
R.C. ARCH	18	2 ½	0.05
	24	3 ½	0.09
	30	4	0.14
	36	4 ½	0.19

December 16, 2015

Published Date: 2025

SDDOT

4' X 5' TYPE C
REINFORCED CONCRETE DROP INLET

PLATE NUMBER 670.11

Sheet 1 of 2

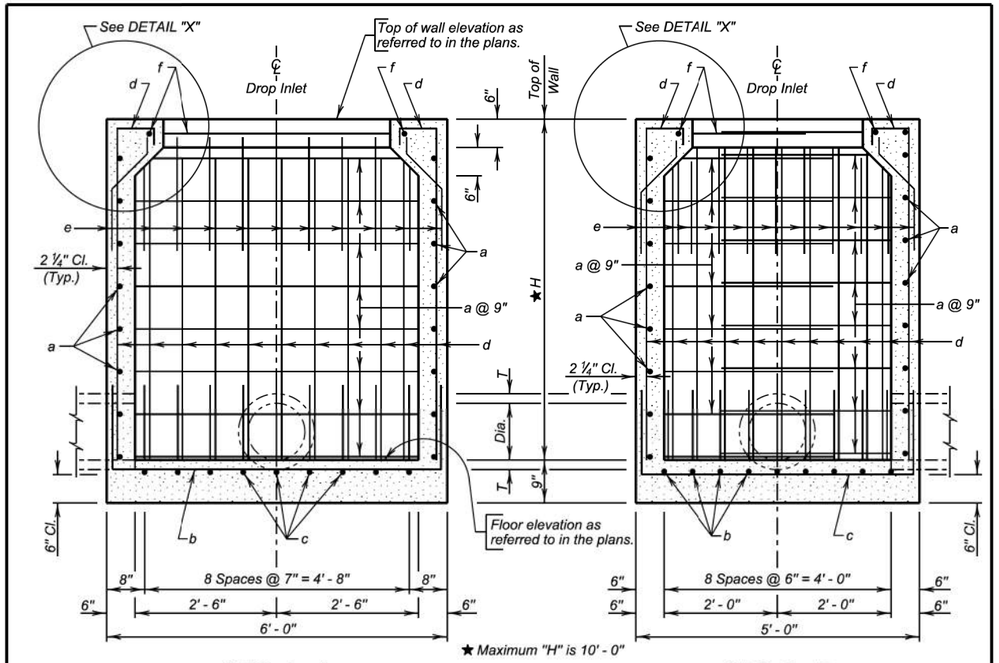

SEC. A - A

SEC. B - B

REINFORCING SCHEDULE

Mk.	No.	Size	Length	Type
a	2.67H	4	12' - 0"	17
b	9	4	8' - 6"	17
c	9	4	7' - 6"	17
d	36	4	H + 9"	S17
e	36	4	2' - 3"	S19
f	2	4	9' - 0"	17

Bending Details

NOTE:
All dimensions are out to out of bars.

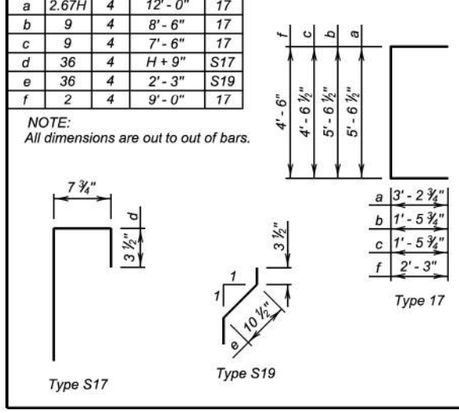

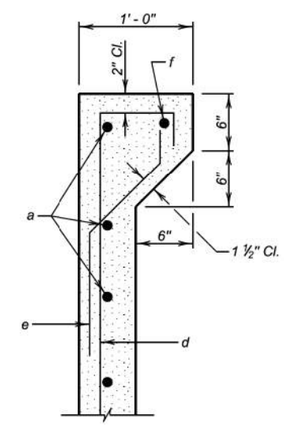

DETAIL "X"

December 16, 2015

Published Date: 2025

SDDOT

4' X 5' TYPE C
REINFORCED CONCRETE DROP INLET

PLATE NUMBER 670.11

Sheet 2 of 2

Plot Scale - 1:200
Plotted From - TRSF12141
Standard Plate - 670.11 P1-2 & 670.11 P2-2
File - ...\rmody0609\StdPlateSectionB.dgn

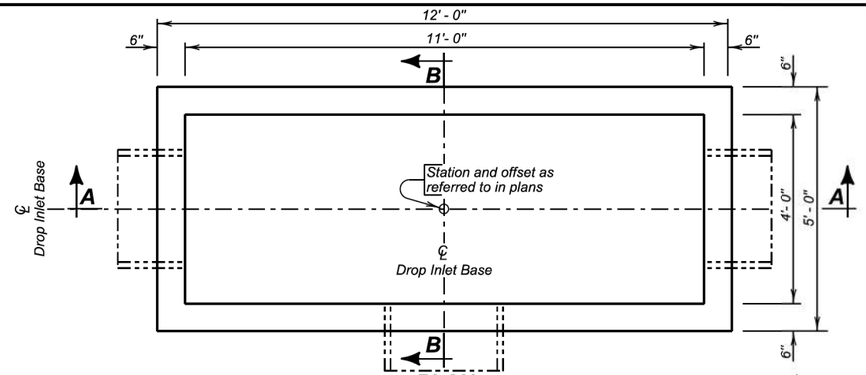

PLAN

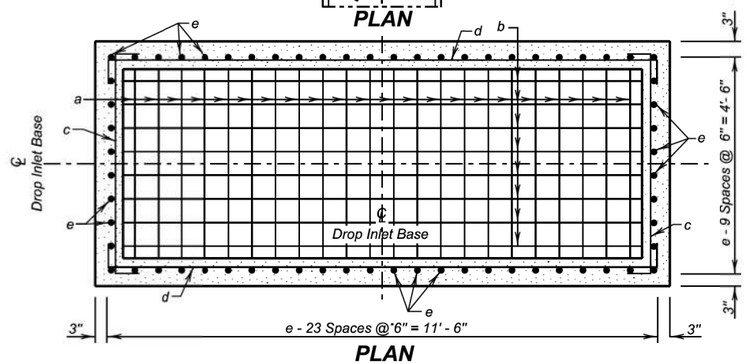

PLAN
(Bottom Steel)
(Pipe Not Shown)

SPECIFICATIONS:

1. Design Specifications: AASHTO LRFD Bridge Design Specifications 2012 Edition.
2. Construction Specifications: South Dakota Standard Specifications for Roads and Bridges, Current Edition and required Provisions, Supplemental Specifications, and Special Provisions as included in the Proposal.

GENERAL NOTES:

1. Design Live Load: HL-93 loading. No construction loading in excess of legal load was considered.
2. Base is intended for use with a Precast Concrete Type S Drop Inlet Lid, Standard Plate 670.40. Base may be precast. If precast base used, and details differ from that shown, the precast base must be on the current approved list. The current approved list is available through proper channels from the SDDOT Office of Bridge Design.
3. To qualify for addition to the approved list, submit a checked design, by South Dakota Registered Professional Engineers and shop plans to the Office of Bridge Design for approval. Design shall be in accordance with the current edition of the AASHTO LRFD Bridge Design Specifications.
4. ✶ Reduce total quantities of concrete by the amount of concrete displaced by the pipe. The total quantity of concrete shall be computed to the nearest hundredth of a cubic yard. The total quantity of reinforcing steel shall be computed to the nearest pound.
5. Inlets shown may be modified by the addition or omission of connecting pipes as shown on the layouts. Connecting pipes shall not enter the inlet through the corners.
6. Maximum R.C.P. diameter shall not exceed 36 inches (30 inches for R.C. Arch) on the 4-foot wide side of the Drop Inlet.
7. Reinforcing steel shall conform to ASTM A615 Grade 60. Cut and bend reinforcing steel as required to place pipe(s) through the inlet wall.
8. Use 1 inch clear cover on all reinforcing steel unless otherwise noted.
9. The dimension of H is in feet. Maximum H is 8 feet.

June 26, 2015

Published Date: 2025	SDDOT	4' X 11' TYPE S DROP INLET BASE	PLATE NUMBER 670.32
			Sheet 1 of 2

PIPE DISPLACEMENT REDUCTIONS

	Diameter (Inches)	Wall T (Inches)	Class M6 Concrete (Cu. Yd.)
R.C.P.	12	2	0.03
	15	2 ¼	0.04
	18	2 ½	0.05
	24	3	0.09
	30	3 ½	0.14
	36	4	0.20
	42	4 ½	0.26
	48	5	0.34
	54	5 ½	0.43
	60	6	0.52
R.C. ARCH	18	2 ½	0.05
	24	3 ½	0.09
	30	4	0.14
	36	4 ½	0.19
	42	4 ½	0.24
	48	5	0.32
	54	5 ½	0.39
	60	6	0.49
	72	7	0.70
	84	8	0.93

REINFORCING SCHEDULE

Mk.	No.	Size	Length	Type
a	24	5	9' - 6"	17
b	10	5	16' - 6"	17
c	2H	4	5' - 6"	17
d	2H	4	12' - 6"	17
e	64	4	H - 2"	Str.

Bending Details

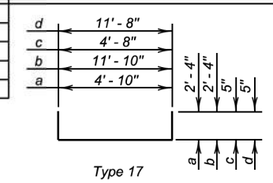

Type 17

NOTE:
All dimensions are out to out of bars.

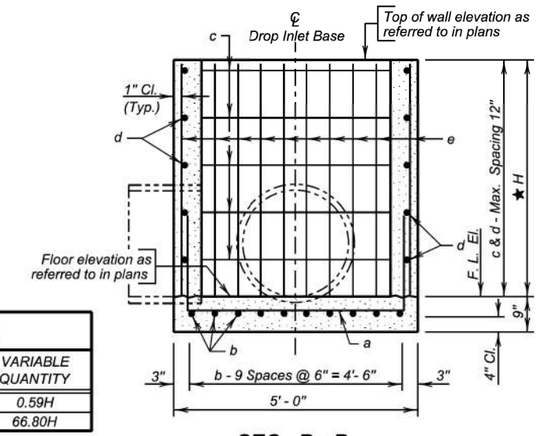

SEC. B - B

ESTIMATED QUANTITIES

ITEM	UNIT	CONSTANT QUANTITY	VARIABLE QUANTITY
✶ Class M6 Concrete	Cu. Yd.	1.67	0.59H
Reinforcing Steel	Lb.	402.77	66.80H

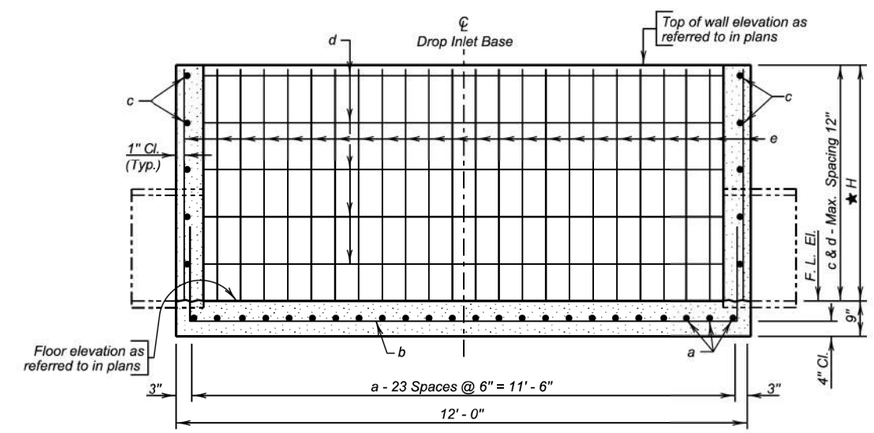

SEC. A - A

✶ Maximum H is 8' - 0"

June 26, 2015

Published Date: 2025	SDDOT	4' X 11' TYPE S DROP INLET BASE	PLATE NUMBER 670.32
			Sheet 2 of 2

Plot Scale - 1:200
Plotted From - TRSF12141
Standard Plate - 670.32 P1-2 & 670.32 P2-2
File - ...\moody0609\StdPlateSectionB.dgn

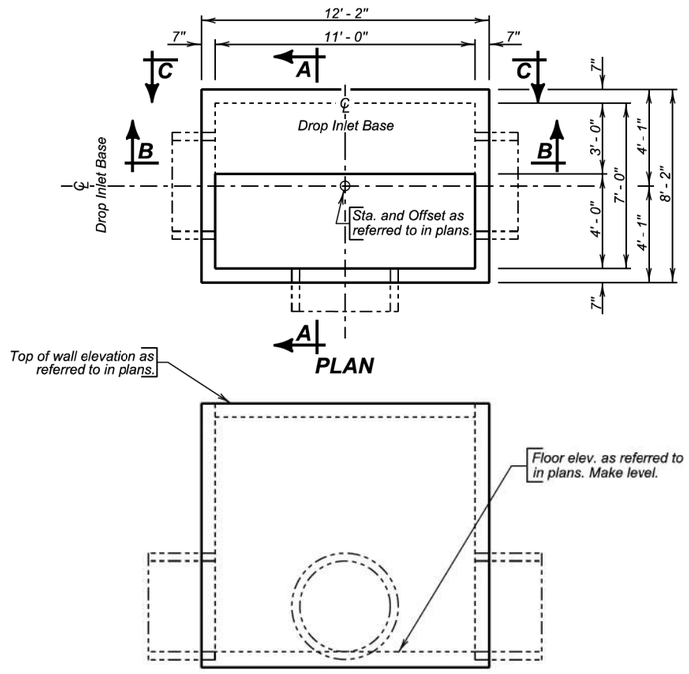

SPECIFICATIONS:

1. Design Specifications: AASHTO LRFD Bridge Design Specifications, 2012 Edition.
2. Construction Specifications: South Dakota Standard Specifications for Roads and Bridges, Current Edition and required Provisions, Supplemental Specifications, and Special Provisions as included in the Proposal.

GENERAL NOTES:

1. Design Live Load: HL-93 loading. No construction loading in excess of legal load was considered.
2. Base is intended for use with a Precast Concrete Type S Drop Inlet Lid, Standard Plate 670.40. Base may be precast. If precast base used, and details differ from that shown, the precast base must be on the current approved list. The current approved list is available through proper channels from the SDDOT Office of Bridge Design.
3. To qualify for addition to the approved list, submit a checked design, by South Dakota Registered Professional Engineers and shop plans to the Office of Bridge Design for approval. Design shall be in accordance with the current edition of the AASHTO LRFD Bridge Design Specifications.
4. ✱ Reduce total quantities of concrete by the amount of concrete displaced by the pipe. The total quantity of concrete shall be computed to the nearest hundredth of a cubic yard. The total quantity of reinforcing steel shall be computed to the nearest pound.
5. Inlets shown may be modified by the addition or omission of connecting pipes as shown on the layouts. Connecting pipes shall not enter the inlet through the corners.
6. Maximum R.C.P. diameter shall not exceed 66 inches (54 inches for R.C. Arch) on the 7-foot wide side of the Drop Inlet.
7. Reinforcing steel shall conform to ASTM A615 Grade 60. Cut and bend reinforcing steel as required to place pipe(s) through the inlet wall.
8. Use 1 inch clear cover on all reinforcing steel unless otherwise noted.
9. The dimension of H is in feet. Maximum H is 10 feet.

June 26, 2015

Published Date: 2025	SDDOT	7'X 11' TYPE S DROP INLET BASE	PLATE NUMBER 670.34
			Sheet 1 of 4

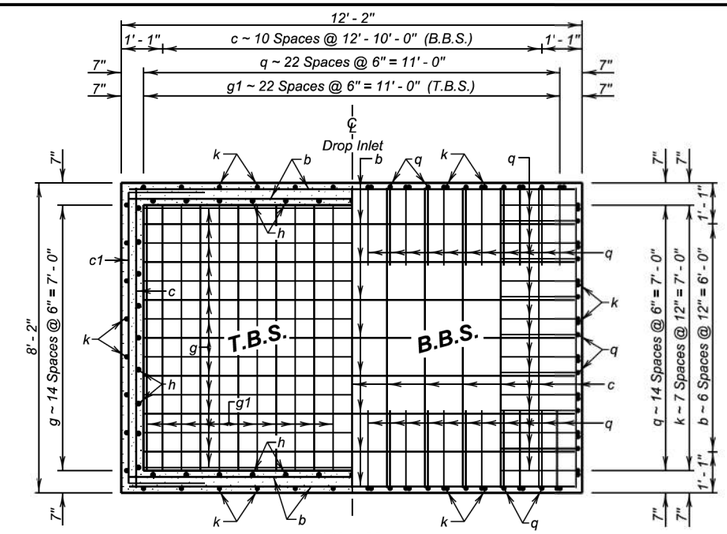

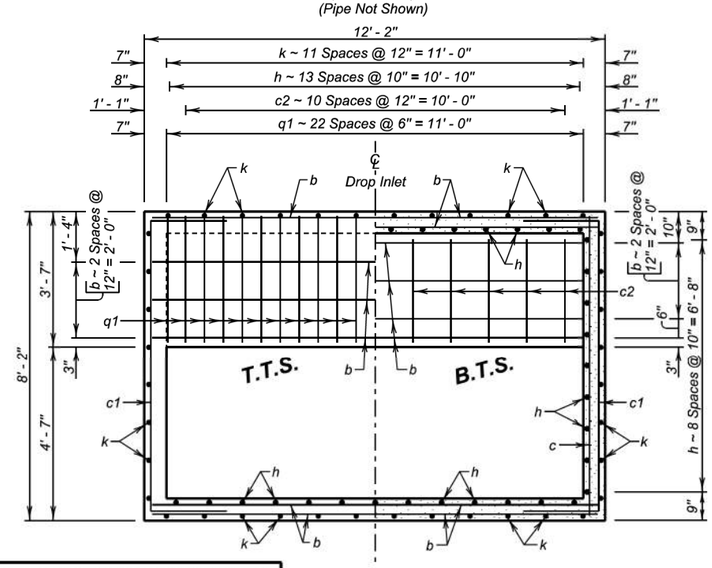

LEGEND FOR PLACING RE-STEEL
T.T.S. - Top of Top Slab
B.T.S. - Bottom of Top Slab
T.B.S. - Top of Bottom Slab
B.B.S. - Bottom of Bottom Slab

June 26, 2015

Published Date: 2025	SDDOT	7'X 11' TYPE S DROP INLET BASE	PLATE NUMBER 670.34
			Sheet 2 of 4

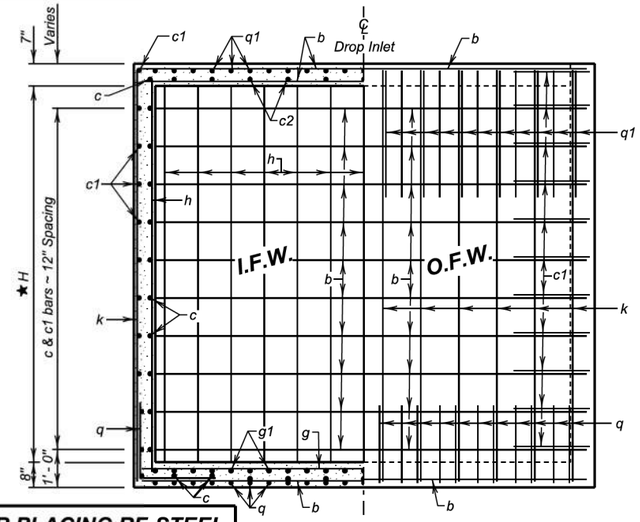

VIEW C - C
(Pipe Not Shown)

LEGEND FOR PLACING RE-STEEL

O.F.W. - Outside Face of Wall
I.F.W. - Inside Face of Wall

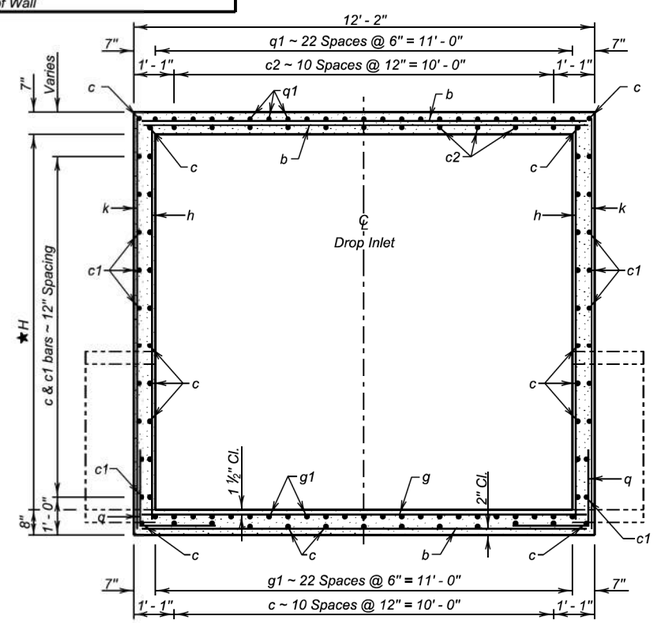

SEC. B - B

★ Maximum H is 10' - 0"

June 26, 2015

Published Date: 2025	SDDOT	7'X 11' TYPE S DROP INLET BASE	PLATE NUMBER 670.34
			Sheet 3 of 4

REINFORCING SCHEDULE

Mk.	No.	Size	Length	Type	Bending Details
b	19 + 4H	4	11' - 9"	Str.	
c	15 + 2H	4	7' - 9"	Str.	
c1	2 + 2H	4	11' - 10"	17	
c2	11	4	2' - 10"	Str.	
g	15	5	11' - 9"	Str.	
g1	23	5	7' - 9"	Str.	
h	46	5	H + 5"	Str.	
k	40	5	H + 5"	Str.	
q	76	5	5' - 6"	17A	
q1	23	5	6' - 8"	17A	

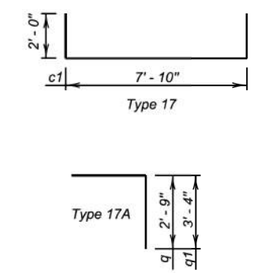

NOTE:
All dimensions are out to out of bars

ESTIMATED QUANTITIES

ITEM	UNIT	CONSTANT QUANTITY	VARIABLE QUANTITY
✶Class M6 Concrete	Cu.Yd.	3.65	0.83H
Reinforcing Steel	Lb.	1266	147.26H

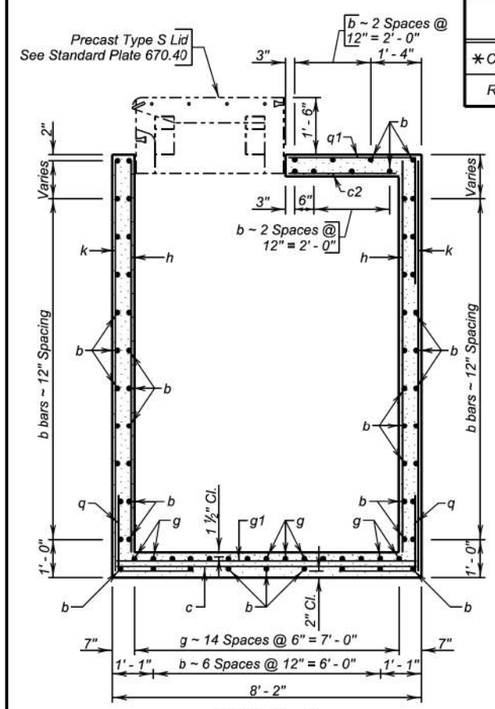

SEC. A - A
(Pipe Not Shown)

PIPE DISPLACEMENT REDUCTIONS

	Diameter (Inches)	Wall T (Inches)	Class M6 Concrete (Cu. Yd.)
R.C.P.	12	2	0.03
	15	2 ¼	0.04
	18	2 ½	0.06
	24	3	0.11
	30	3 ½	0.16
	36	4	0.23
	42	4 ½	0.31
	48	5	0.40
	54	5 ½	0.50
	60	6	0.61
R.C. ARCH	18	2 ½	0.06
	24	3 ½	0.11
	30	4	0.16
	36	4 ½	0.22
	42	4 ½	0.29
	48	5	0.37
	54	5 ½	0.46
	60	6	0.57
	72	7	0.82
	84	8	1.09

June 26, 2015

Published Date: 2025	SDDOT	7'X 11' TYPE S DROP INLET BASE	PLATE NUMBER 670.34
			Sheet 4 of 4

Plot Scale - 1:200
Plotted From - TRSF12141
Standard Plate - 670.34 P3-4 & 670.34 P4-4
File - ...\mody0609\StdPlateSectionB.dgn

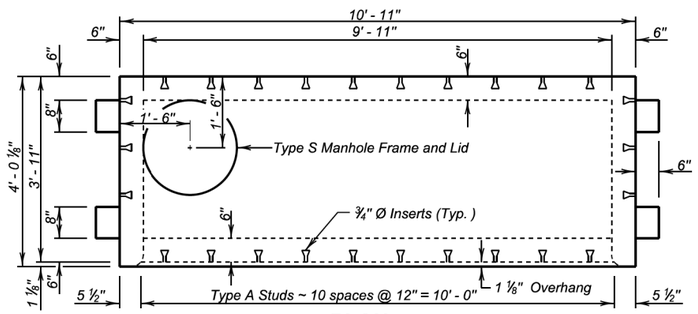

PLAN

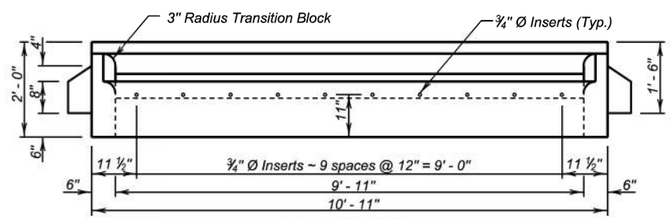

ELEVATION

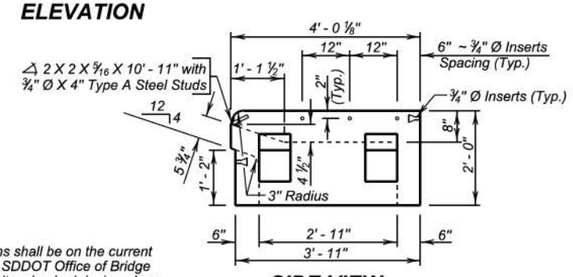

SIDE VIEW
(With Sidewalk Inserts)

GENERAL NOTES:

1. The Precast Concrete Type S Drop Inlet Lid and the shims shall be on the current approved list available through proper channels from the SDDOT Office of Bridge Design. To qualify for addition to the approved list, submit a checked design, done by South Dakota Registered Professional Engineers, and shop plans to the Office of Bridge Design for approval. Design shall be in accordance with the current edition of the AASHTO LRFD Bridge Design Specifications.
2. Design Live Load shall be HL - 93.
3. Concrete mix shall be as per fabricators design, however, minimum compressive strength shall not be less than 4500 psi. Type II Cement is required.
4. The Type S Manhole Frame and Lid shall conform to AASHTO M105, Class 30.
5. Structural Steel shall conform to ASTM A36. The ¾ inch diameter Headed Type A Steel Studs shall conform to Section 7 of the current edition of AWS D1. 1 Structural Steel Welding Code.
6. The ¾ inch diameter Concrete Inserts shall be galvanized or made of a corrosion resistant material. Provide ¾ inch diameter x 1' - 6" long dowels conforming to ASTM A615, Gr. 60 threaded to fit inserts with each lid.
7. All costs associated with furnishing and installing the Precast Concrete Type S Drop Inlet Lid including the type S manhole frame and lid, shims, inserts, and dowels shall be included in the contract unit price per each for " 4' x 11' Precast Concrete Type S Drop Inlet Lid ".

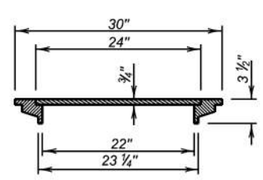

TYPICAL SECTION THROUGH TYPE S MANHOLE FRAME AND LID
(Weight 140 Lbs.)

December 23, 2012

Published Date: 2025	SDDOT	4' X 11' PRECAST CONCRETE TYPE S DROP INLET LID	PLATE NUMBER 670.40 / Sheet 1 of 1

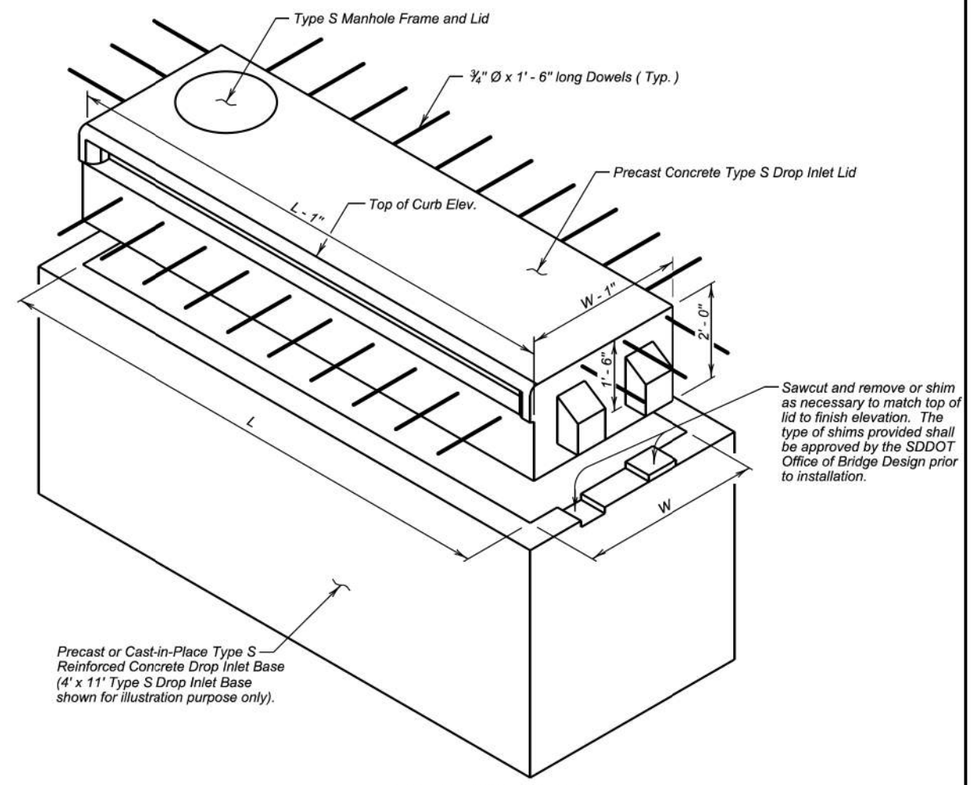

TYPE S DROP INLET

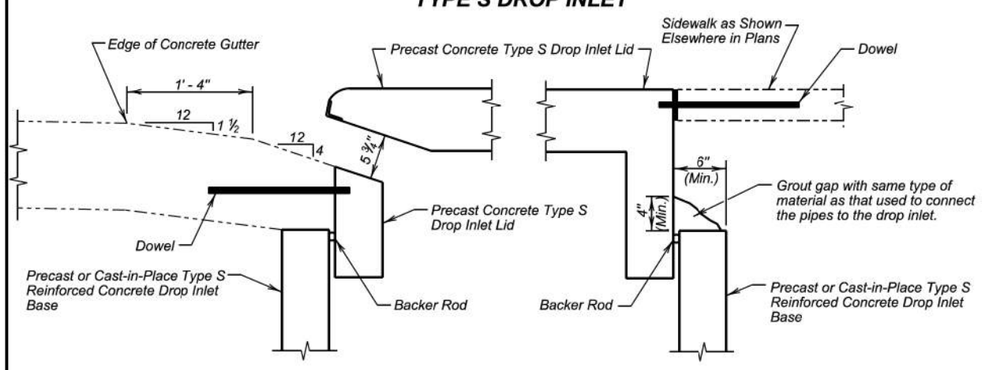

CONCRETE GUTTER DETAIL **GROUTING DETAIL**
(Sides and Back, Adjacent to Sidewalk)

December 23, 2012

Published Date: 2025	SDDOT	INSTALLATION DETAILS FOR PRECAST CONCRETE TYPE S DROP INLET LID	PLATE NUMBER 670.45 / Sheet 1 of 2

Plot Scale - 1:200
Plotted From - TRSF12141
Standard Plate - 670.40 P1-1 & 670.45 P1-2
File - ...\mody0609\StdPlateSections5.dgn

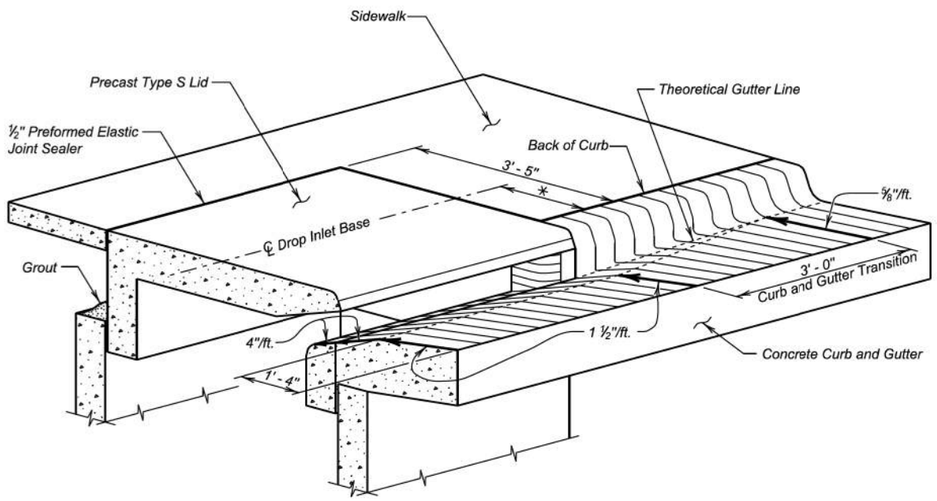

CURB AND GUTTER TRANSITION DETAILS

Drop Inlet Base Unit Size	⁋ Distance
4' x 6'	1' - 5 ½"
4' x 11'	1' - 5 ½"
7' x 11'	2' - 11 ½"

GENERAL NOTES:

1. Dowels shall be used to anchor the precast concrete Type S drop inlet lid to the concrete gutter. See Standard Plate 670.38 or 670.40 as applicable. If there is sidewalk adjacent dowels shall be used to anchor the precast concrete Type S drop inlet lid to the sidewalk. If there is sidewalk adjacent to the drop inlet, the precast lid shall match the finish elevations and cross slopes of the sidewalk.
2. The sidewalk shall be steel reinforced when the sidewalk adjoins the precast lid. Refer to Standard Plate 651.70 for reinforced concrete sidewalk details.

December 23, 2012

Published Date: 2025	SDDOT	INSTALLATION DETAILS FOR PRECAST CONCRETE TYPE S DROP INLET LID	PLATE NUMBER 670.45
			Sheet 2 of 2

GENERAL NOTE:

Top of grate elevation shall be 0.04' below theoretical elevation of gutter.

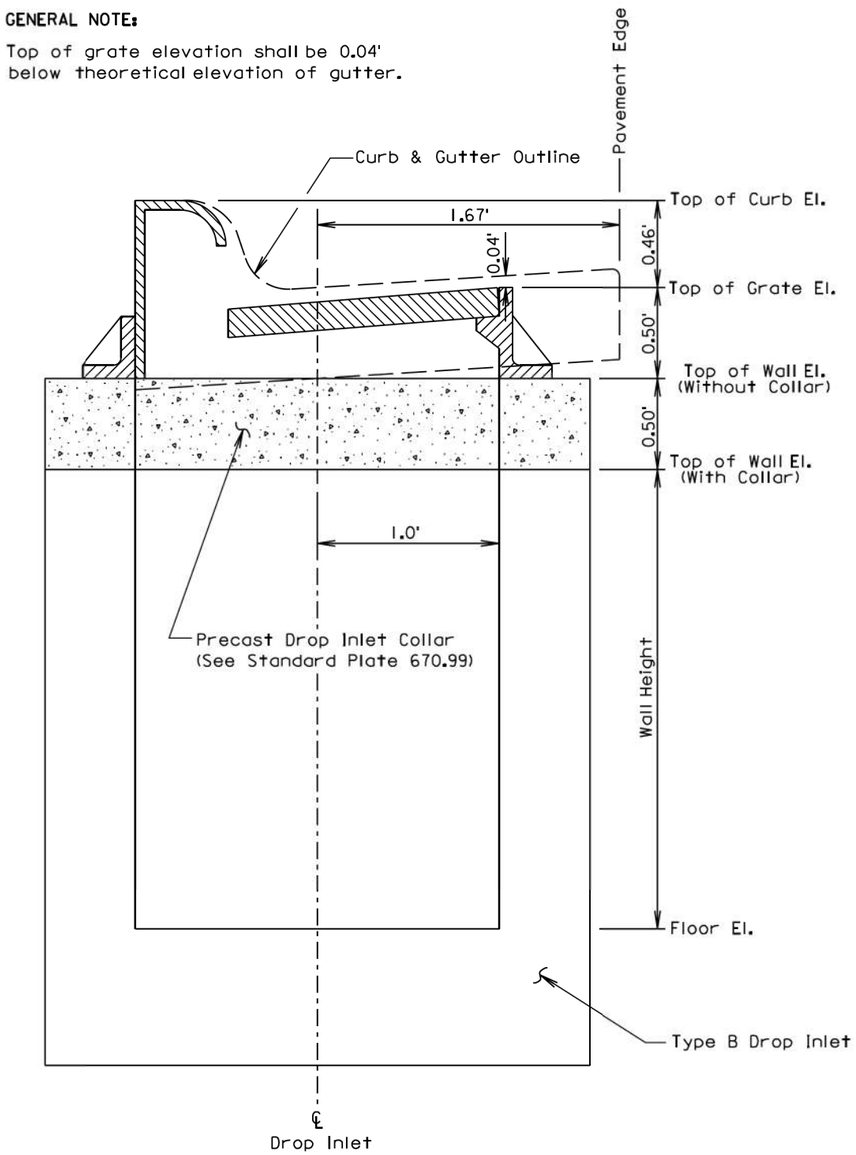

June 26, 2011

Published Date: 2025	SDDOT	INSTALLATION OF TYPE B DROP INLET	PLATE NUMBER 670.75
			Sheet 1 of 1

Plot Scale - 1:200
Plotted From - TRSF12141
Standard Plate - 670.45 P2-2 & 670.75 P1-1
File - ...\mody0609\StdPlateSectionB.dgn

STATE OF SOUTH DAKOTA	PROJECT	SHEET	TOTAL SHEETS
	NH-CR 0034(193)402	B140	B146

Plotting Date: 08/16/2024

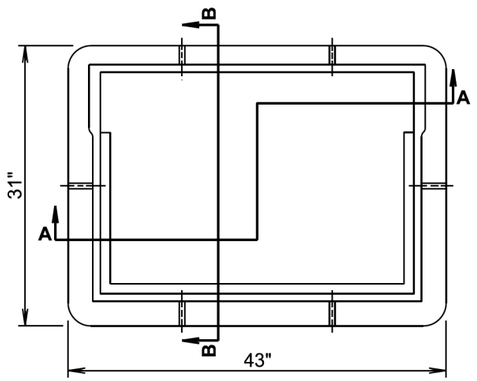

PLAN VIEW
(Frame)

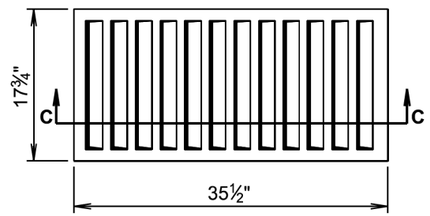

PLAN VIEW
(Grate)

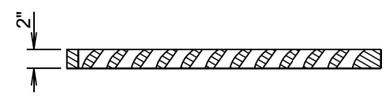

SECTION C-C

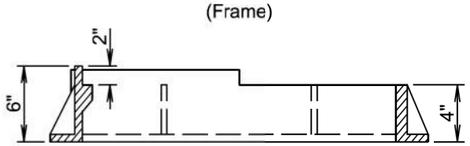

SECTION A-A

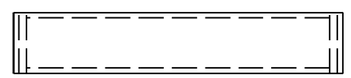

TOP VIEW
(Curb Box)

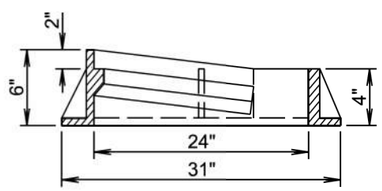

SECTION B-B

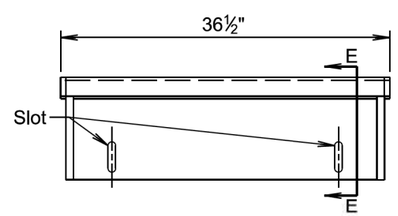

ELEVATION VIEW
(Curb Box)

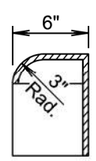

SECTION E-E

GENERAL NOTES:

The product dimensions may vary from those shown on the standard plate depending on the manufacturer. Grate size and configuration will be similar to the standard plate for hydraulic capacity and bicycle safety. Any variation in dimensions will be approved by the Engineer and the type B frame and grate assembly will be from a manufacturer on the approved products lists.

Design load for the grate will meet the requirements of AASHTO HL-93.

The curb box will be adjustable 6" to 9".

June 1, 2022

Published Date: 2025	SDDOT	TYPE B FRAME AND GRATE	PLATE NUMBER 670.80
			Sheet 1 of 1

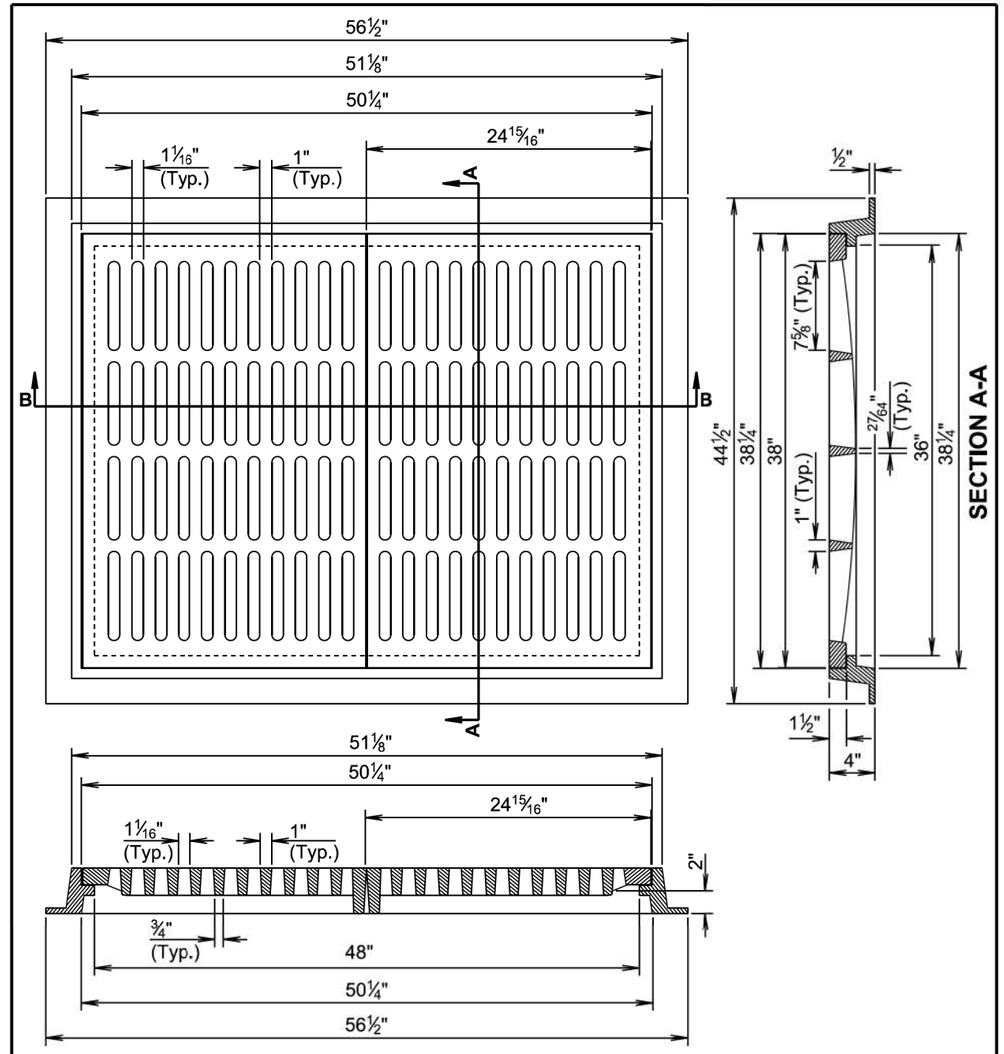

SECTION A-A

SECTION B-B

GENERAL NOTES:

The product dimensions may vary from those shown on the standard plate depending on the manufacturer. Grate size and configuration will be similar to the standard plate for hydraulic capacity. Any variation in dimensions will be approved by the Engineer and the type C frame and grate will be from a manufacturer on the approved products list.

Design load for the grate will meet the requirements of AASHTO HL-93.

March 31, 2024

Published Date: 2025	SDDOT	TYPE C FRAME AND GRATE	PLATE NUMBER 670.82
			Sheet 1 of 1

Plot Scale - 1:200
Plotted From - TRSF12141
Standard Plate - 670.80 P1-1 & 670.82 P1-1
File - ...\tmody0609\StdPlateSectionB.dgn

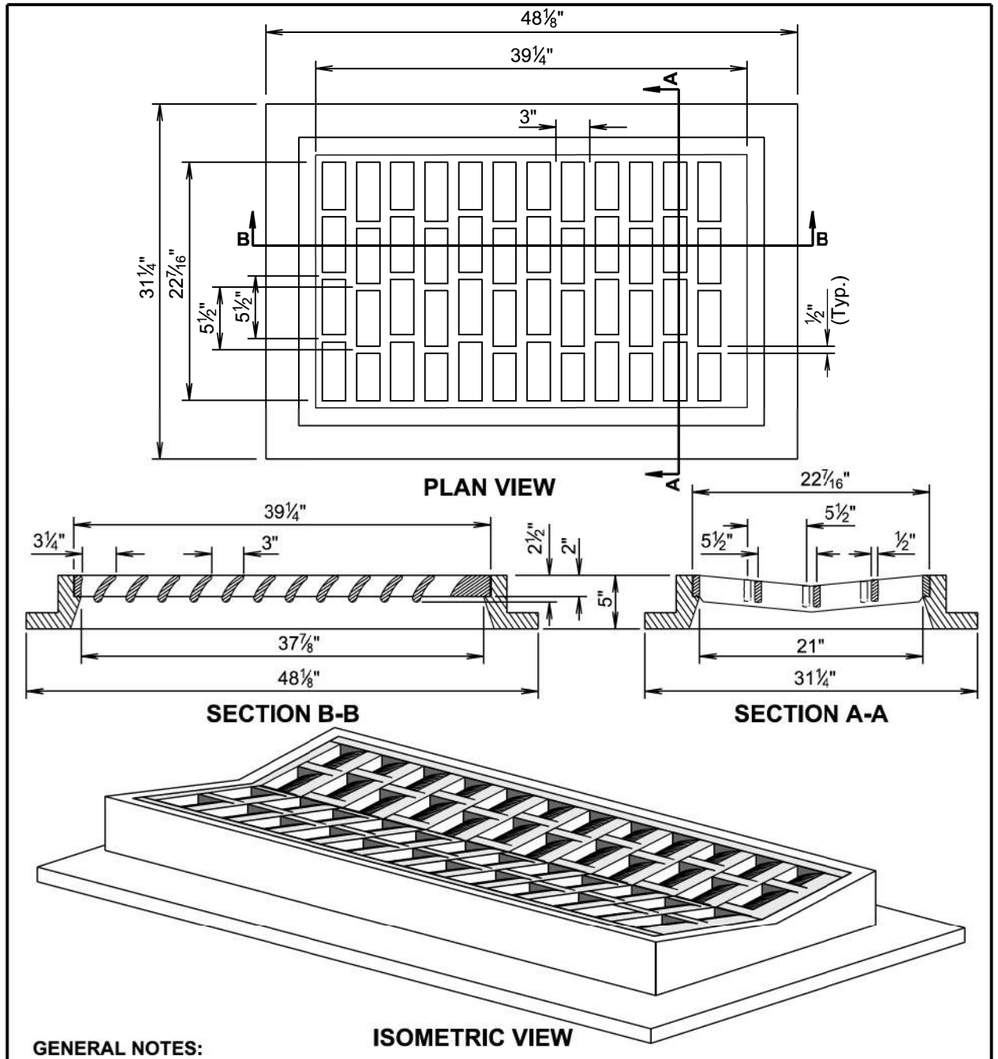

GENERAL NOTES:

The product dimensions may vary from those shown on the standard plate depending on the manufacturer. Grate size and configuration will be similar to the standard plate for hydraulic capacity and bicycle safety. Any variation in dimensions will be approved by the Engineer and the type E frame and grate will be from a manufacturer on the approved products list.

Design load for the grate will meet the requirements of AASHTO HL-93.

The type E frame and grate is used typically with valley gutter and type P gutter.

June 1, 2022

Published Date: 2025	SDDOT	TYPE E FRAME AND GRATE	PLATE NUMBER 670.86
			Sheet 1 of 1

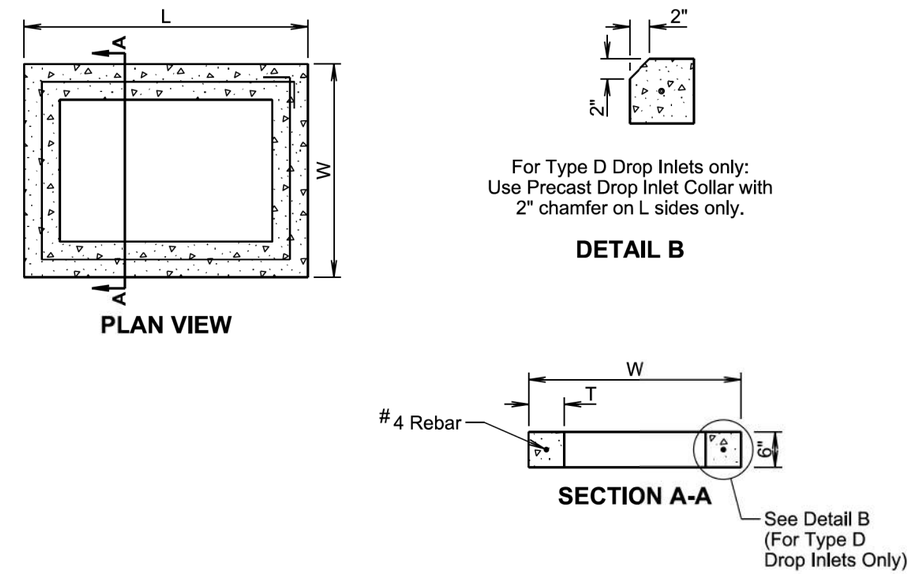

INFORMATIONAL QUANTITIES					
FRAME AND GRATE TYPE	L (Ft-in)	W (Ft-in)	T (in)	CLASS M6 CONCRETE (CuYd)	REINFORCING STEEL (Lb)
TYPE A, B, and E	4'-0"	3'-0"	6	0.11	9
TYPE C	5'-0"	4'-0"	6	0.15	11
TYPE D	4'-0"	2'-6"	6	0.10	8

GENERAL NOTES:

All reinforcing steel will conform to ASTM A615, Grade 60.

The ½" diameter bar will lap 6"± and will be centered in the concrete.

The cost of furnishing and installing Precast Drop Inlet Collars, including labor, materials, and incidentals will be incidental to the contract unit price per Each for "Precast Drop Inlet Collar".

June 1, 2022

Published Date: 2025	SDDOT	PRECAST DROP INLET COLLAR	PLATE NUMBER 670.99
			Sheet 1 of 1

Plot Scale - 1:200
Plotted From - TRSF12141
Standard Plate - 670.86 P1-1 & 670.99 P1-1
File - ...\tmody0609\StdPlateSectionB.dgn

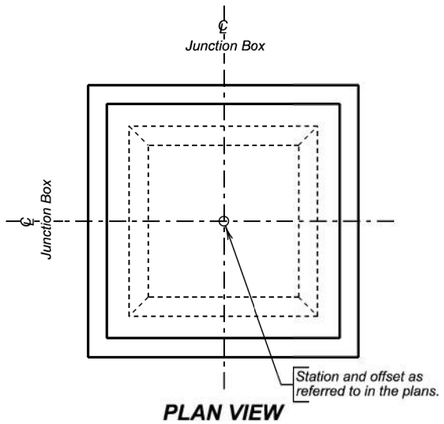

PLAN VIEW

SPECIFICATIONS

Design Specifications: AASHTO LRFD Bridge Design Specifications, 2012 Edition.

Construction Specifications: South Dakota Standard Specifications for Roads and Bridges, Current Edition and required Provisions, Supplemental Specifications, and Special Provisions as included in the Proposal.

GENERAL NOTES

Design Live Load: HL-93. No construction loading in excess of legal load was considered.

The design of the junction box is based on a maximum fill over the junction box of 5 feet and minimum fill over the junction box of 2 feet.

Reinforcing steel shall conform to ASTM A615 Grade 60. Cut and bend reinforcing steel as required to place pipe(s) through junction box wall.

Junction box may be precast. If precast junction box details differ from this standard plate, submit a checked design done by a SD registered P.E. and shop plans to the Office of Bridge Design for approval.

Use 1 inch clear cover on all reinforcing steel unless otherwise noted.

All exposed edges shall be chamfered ¾ inch.

Junction box shown may be modified by the addition or omission of connecting pipes as noted elsewhere in the plans. All pipes entering junction box must fit between the inside face of walls and shall not enter through the corners.

The cost of furnishing and installing the manhole steps shall be incidental to the contract unit price per pound for "Reinforcing Steel".

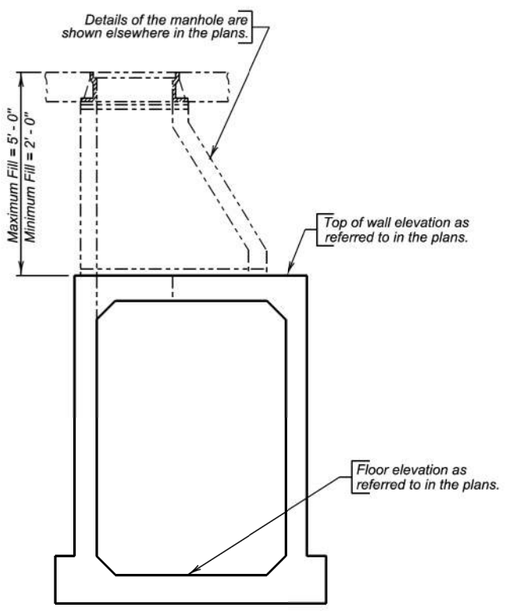

ELEVATION VIEW

PIPE DISPLACEMENT REDUCTIONS

	Diameter (Inches)	Wall T (Inches)	Class M6 Concrete (Cu. Yd.)
R.C.P.	12	2	0.03
	15	2 ¼	0.04
	18	2 ½	0.06
	24	3	0.11
	30	3 ½	0.16
	36	4	0.23
	42	4 ½	0.31
	48	5	0.40
	54	5 ½	0.50

ESTIMATED QUANTITIES

ITEM	✳ Class M6 Concrete	Reinforcing Steel
UNIT	Cu. Yd.	Lb.
H = 4' - 0"	4.37	821
H = 4' - 6"	4.61	846
H = 5' - 0"	4.85	908
H = 5' - 6"	5.10	933
H = 6' - 0"	5.34	958
H = 6' - 6"	5.58	1020
H = 7' - 0"	5.82	1045
H = 7' - 6"	6.06	1071
H = 8' - 0"	6.30	1132

✳ Reduce total quantities of concrete by the amount of concrete displaced by the pipe(s). Quantity shown includes reduction for a 24-inch diameter manhole opening. The total quantity of concrete shall be computed to the nearest hundredth of a cubic yard.

May 9, 2020

Published Date: 2025	SDDOT	5'X 5' JUNCTION BOX	PLATE NUMBER 671.01
			Sheet 1 of 3

REINFORCING SCHEDULE

	Mk.	No.	Size	Length	Type
H = 4' - 0"	a1	1	6	9' - 0"	T3
	▼ a2	4	–	———	—
	h3	28	4	5' - 9"	17A
	k3	48	4	8' - 6"	17
	m1	18	5	6' - 9"	Str.
	n1	18	5	5' - 9"	Str.
	p1	52	4	5' - 0"	Str.
	q1	8	4	3' - 6"	17A
H = 4' - 6"	a1	1	6	9' - 0"	T3
	▼ a2	4	–	———	—
	h4	28	4	6' - 3"	17A
	k4	48	4	9' - 0"	17
	m1	18	5	6' - 9"	Str.
	n1	18	5	5' - 9"	Str.
	p1	52	4	5' - 0"	Str.
	q1	8	4	3' - 6"	17A
H = 5' - 0"	a1	1	6	9' - 0"	T3
	▼ a2	5	–	———	—
	h5	28	4	6' - 9"	17A
	k5	48	4	9' - 6"	17
	m1	18	5	6' - 9"	Str.
	n1	18	5	5' - 9"	Str.
	p1	52	4	5' - 0"	Str.
	q1	8	4	3' - 6"	17A
H = 5' - 6"	a1	1	6	9' - 0"	T3
	▼ a2	5	–	———	—
	h6	28	4	7' - 3"	17A
	k6	48	4	10' - 0"	17
	m1	18	5	6' - 9"	Str.
	n1	18	5	5' - 9"	Str.
	p1	60	4	5' - 0"	Str.
	q1	12	4	3' - 6"	17A
H = 6' - 0"	a1	1	6	9' - 0"	T3
	▼ a2	6	–	———	—
	h7	28	4	7' - 9"	17A
	k7	48	4	10' - 6"	17
	m1	18	5	6' - 9"	Str.
	n1	18	5	5' - 9"	Str.
	p1	60	4	5' - 0"	Str.
	q1	12	4	3' - 6"	17A
H = 6' - 6"	a1	1	6	9' - 0"	T3
	▼ a2	6	–	———	—
	h8	28	4	8' - 3"	17A
	k8	48	4	11' - 0"	17
	m1	18	5	6' - 9"	Str.
	n1	18	5	5' - 9"	Str.
	p1	68	4	5' - 0"	Str.
	q1	16	4	3' - 6"	17A
H = 7' - 0"	a1	1	6	9' - 0"	T3
	▼ a2	7	–	———	—
	h9	28	4	8' - 9"	17A
	k9	48	4	11' - 6"	17
	m1	18	5	6' - 9"	Str.
	n1	18	5	5' - 9"	Str.
	p1	68	4	5' - 0"	Str.
	q1	16	4	3' - 6"	17A

Bending Details

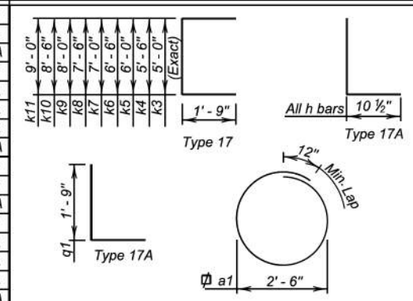

	Mk.	No.	Size	Length	Type
H = 7' - 6"	a1	1	6	9' - 0"	T3
	▼ a2	7	–	———	—
	h10	28	4	9' - 3"	17A
	k10	48	4	12' - 0"	17
	m1	18	5	6' - 9"	Str.
	n1	18	5	5' - 9"	Str.
	p1	68	4	5' - 0"	Str.
	q1	16	4	3' - 6"	17A
H = 8' - 0"	a1	1	6	9' - 0"	T3
	▼ a2	8	–	———	—
	h11	28	4	9' - 9"	17A
	k11	48	4	12' - 6"	17
	m1	18	5	6' - 9"	Str.
	n1	18	5	5' - 9"	Str.
	p1	76	4	5' - 0"	Str.
	q1	20	4	3' - 6"	17A

▼ Cast iron Manhole Steps (R - 1980 - C) from Neenah Foundry or equivalant.

a1 Locate in center of top slab with 3" clearance at manhole opening.

All dimensions are out to out of bars.

LEGEND FOR PLACING RE-STEEL

T. B. S. - Top of Bottom Slab

B. B. S. - Bottom of Bottom Slab

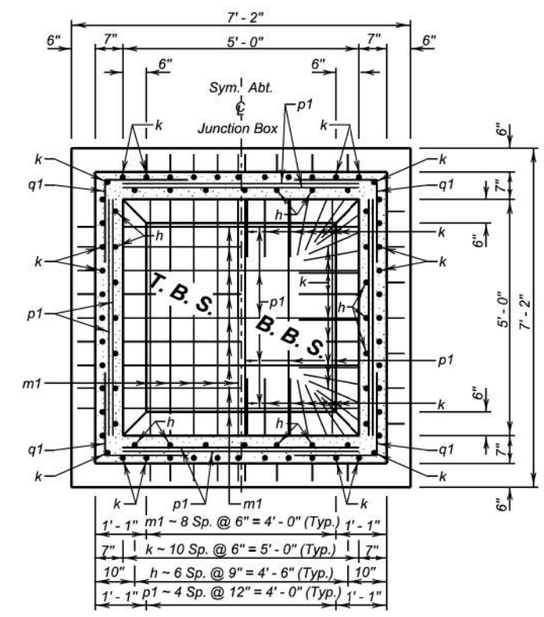

SEC. A - A

May 9, 2020

Published Date: 2025	SDDOT	5'X 5' JUNCTION BOX	PLATE NUMBER 671.01
			Sheet 2 of 3

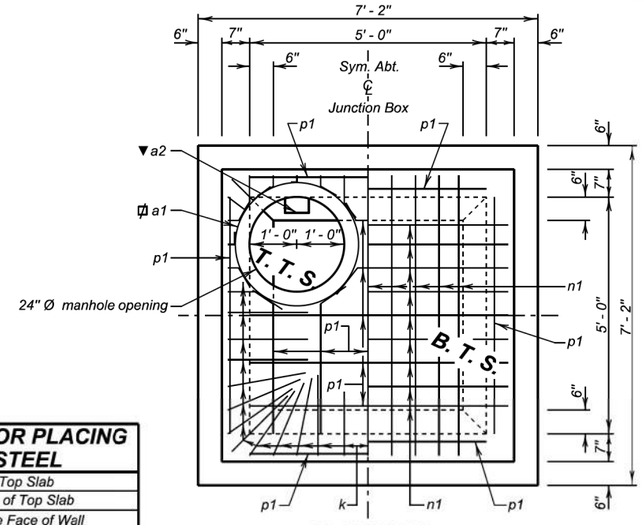

PLAN VIEW

LEGEND FOR PLACING RE-STEEL
T. T. S. - Top of Top Slab
B. T. S. - Bottom of Top Slab
O. F. W. - Outside Face of Wall
I. F. W. - Inside Face of Wall

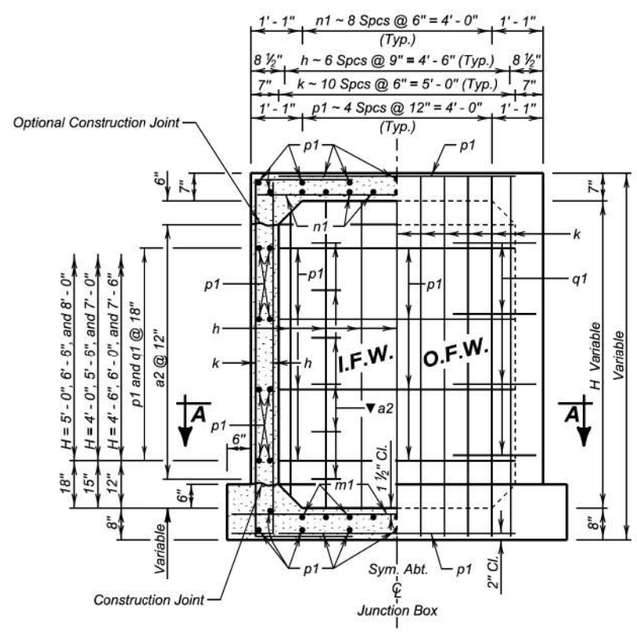

ELEVATION VIEW

May 9, 2020

Published Date: 2025	SDDOT	5'X 5' JUNCTION BOX	PLATE NUMBER 671.01
			Sheet 3 of 3

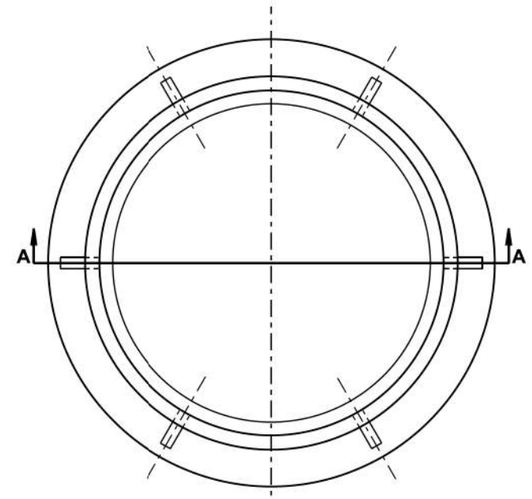

PLAN VIEW
(Frame)

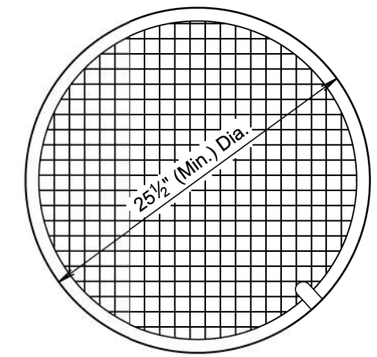

PLAN VIEW
(Lid)

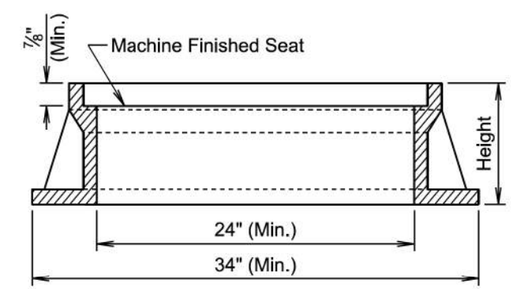

SECTION A-A

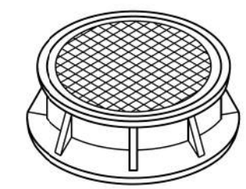

ISOMETRIC VIEW

TYPE	HEIGHT (Inches)
A7	7
A8	8
A9	9
A10	10

GENERAL NOTES:

The product dimensions may vary from those shown on the standard plate depending on the manufacturer. Any variation in dimensions will be approved by the Engineer and the type A manhole frame and lid will be from a manufacturer on the approved products lists.

Design load for the grate will meet the requirements of AASHTO HL-93.

Geometric pattern on top of lid other than that shown will be approved by the Engineer.

June 1, 2022

Published Date: 2025	SDDOT	TYPE A MANHOLE FRAME AND LID	PLATE NUMBER 671.10
			Sheet 1 of 1

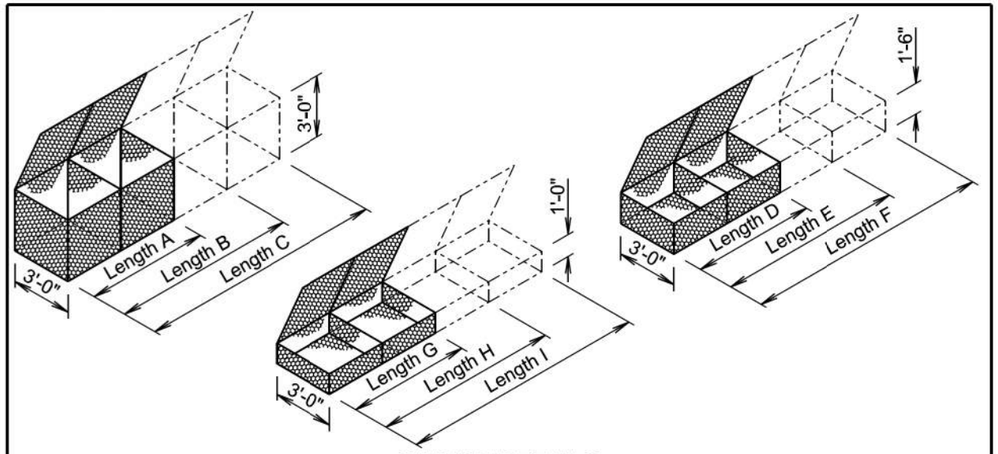

GABION DETAILS

STANDARD SIZES					
SIZE	LENGTH	WIDTH	HEIGHT	NUMBER OF CELLS	CAPACITY (Cu. Yd.)
A	6'-0"	3'-0"	3'-0"	2	2.0
B	9'-0"	3'-0"	3'-0"	3	3.0
C	12'-0"	3'-0"	3'-0"	4	4.0
D	6'-0"	3'-0"	1'-6"	2	1.0
E	9'-0"	3'-0"	1'-6"	3	1.5
F	12'-0"	3'-0"	1'-6"	4	2.0
G	6'-0"	3'-0"	1'-0"	2	0.7
H	9'-0"	3'-0"	1'-0"	3	1.0
I	12'-0"	3'-0"	1'-0"	4	1.3

Above dimensions subject to mill tolerances.

GENERAL NOTES:

Lacing and internal connecting wire will be 0.0866 inch diameter steel wire ASTM A641, Class 3 soft temper measured after galvanizing and for PVC coated gabions will be 0.0866 inch diameter steel wire measured after galvanizing but before PVC coating.

The lacing procedure is as follows:

1. Cut a length of lacing wire approximately 1½ times the distance to be laced but not exceeding 5 feet.
2. Secure the wire terminal at the corner by looping and twisting.
3. Proceed lacing with alternating single and double loops at a spacing not to exceed 6 inches.
4. Securely fasten the other lacing wire terminal.

Wire lacing or interlocking type fasteners will be used for gabion assembly and final construction of gabion structures. Interlocking fasteners for galvanized gabions will be high tensile 0.120 inch diameter galvanized steel wire measured after galvanizing. The galvanizing will conform to ASTM A641-92, Class 3 coating. Fasteners will also be in accordance with ASTM A764, Class II, Type III.

Interlocking fasteners for PVC coated gabions will be high tensile 0.120 inch diameter stainless steel wire conforming to ASTM A313, Type 302, Class 1. The spacing of the interlocking fasteners during all phases of assembly and construction will not exceed 6 inches.

All fasteners will be placed where the mesh weaves around the selvage wire at the vertical and horizontal joints.

February 14, 2020

Published Date: 2025	SDDOT	BANK AND CHANNEL PROTECTION GABIONS	PLATE NUMBER 720.01
			Sheet 1 of 1

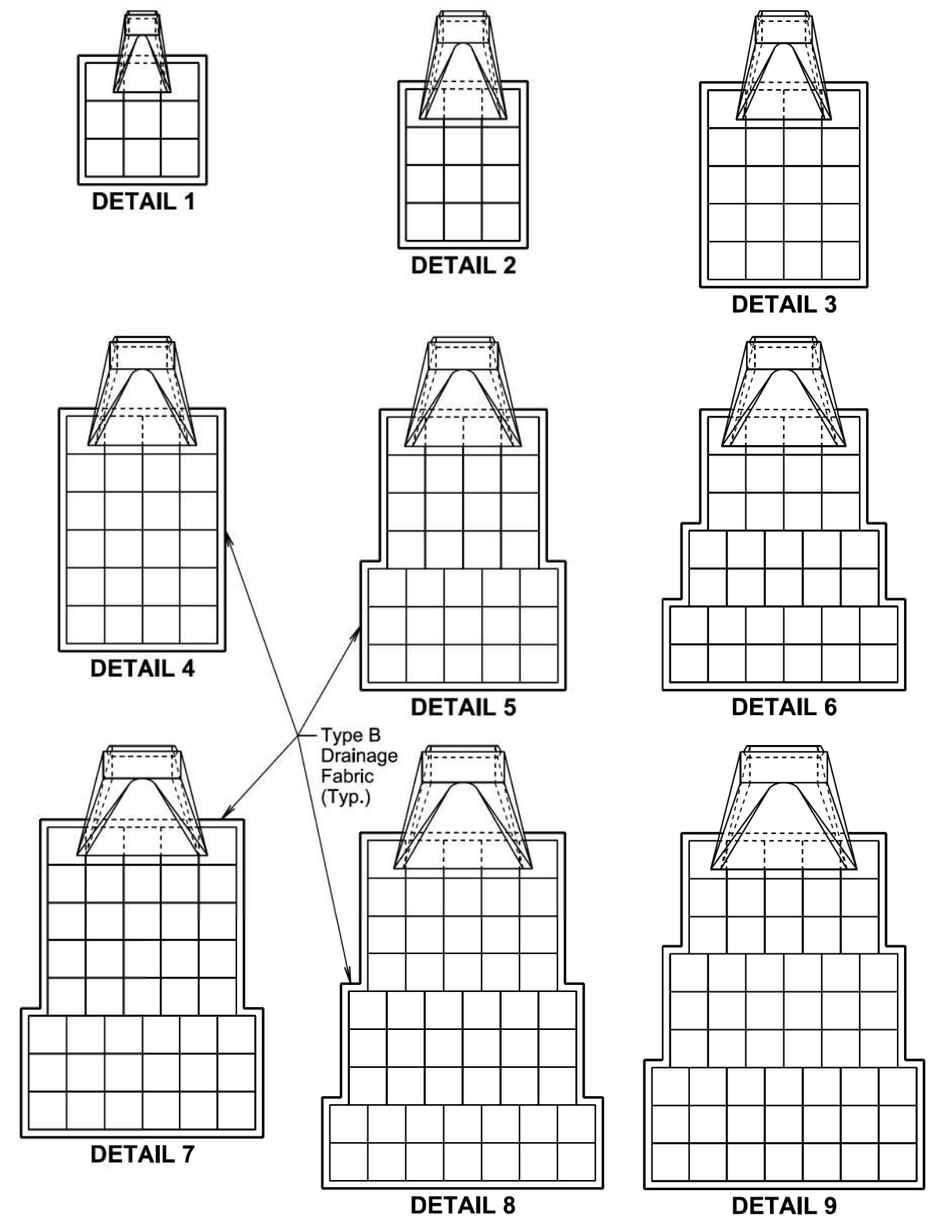

February 14, 2020

Published Date: 2025	SDDOT	BANK AND CHANNEL PROTECTION GABION PLACEMENT UNDER PIPE END SECTIONS	PLATE NUMBER 720.03
			Sheet 1 of 2

Plot Scale - 1:200
Plotted From - TRSF12141
Standard Plate - 720.01 P1-1 & 720.03 P1-2
File - ...\moody0609\StdPlateSectionB.dgn

	* ESTIMATED QUANTITIES			
	Detail	Pipe Diameter (Inches)	Gabion (Cu. Yd.)	Type B Drainage Fabric (Sq. Yd.)
RCP, RCP Arch, CMP, and CMP Arch	1	12, 18, and 24	4.5	15
	2	30 and 36	6.0	19
	3	42	10.0	29
	4	48 and 54	12.0	34
	5	60	15.5	43
	6	66	17.0	47
	7	72	21.5	57
	8	78	26.0	68
	9	84	27.0	70

GENERAL NOTES:

Gabions at outlets of CMP and RCP will be placed under the end section a distance of 2 feet from the outlet end. For CMP end section installations, the upper fabric of the gabions will be modified to accommodate the metal end section as approved by the Engineer.

* Gabion and type B drainage fabric quantities on this standard plate are based on standard gabion sizes D, E, and F as depicted on standard plate 720.01.

Type B drainage fabric will be placed under the gabions and around the exterior sides (perimeter) of the gabions as approved by the Engineer. The type B drainage fabric will be in conformance with Section 831 of the Specifications. Measurement and payment of the type B drainage fabric will be in conformance with Section 720 of the Specifications.

February 14, 2020

Published Date: 2025	SDDOT	BANK AND CHANNEL PROTECTION GABION PLACEMENT UNDER PIPE END SECTIONS	PLATE NUMBER 720.03
			Sheet 2 of 2

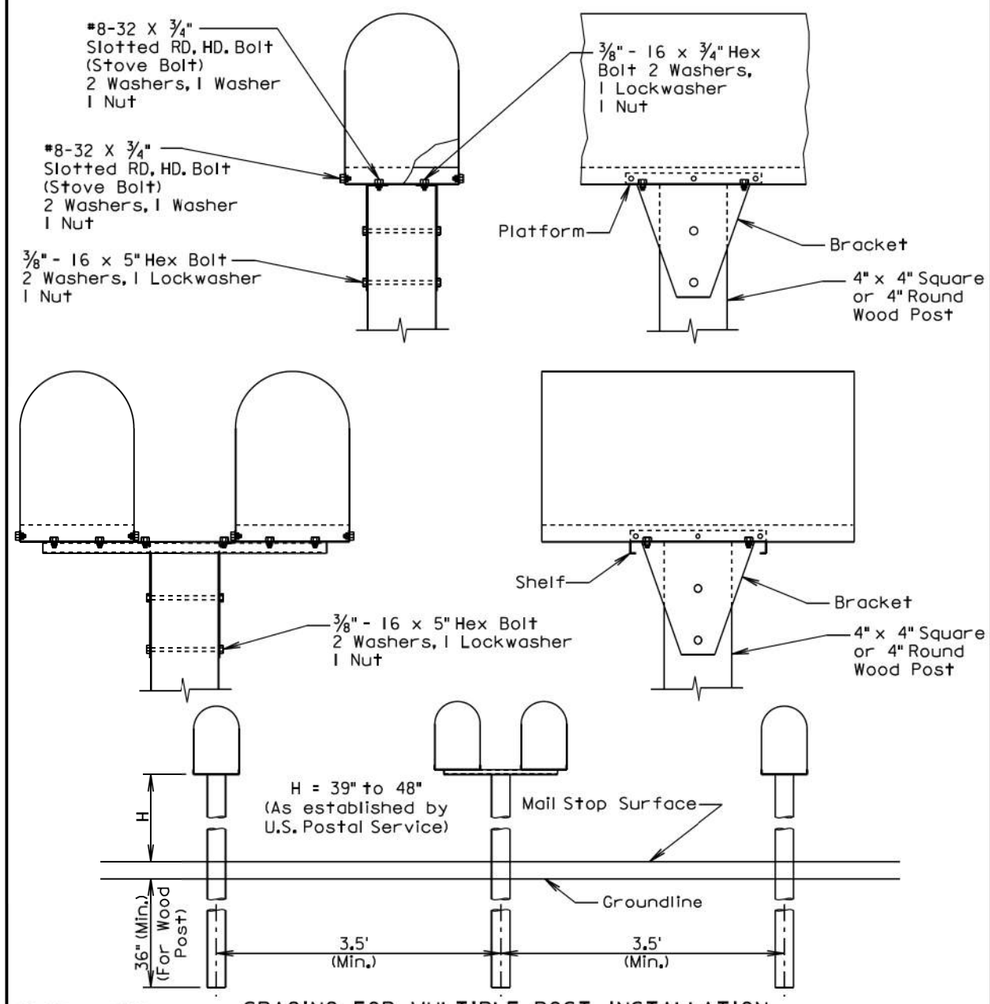

SPACING FOR MULTIPLE POST INSTALLATION

GENERAL NOTES:

The post support assemblies provided should be consistant throughout the project.

Single and double mailboxes may be in any sequence.

Post support assemblies shall be one from the approved products list, a 4"x4" or 4" round wood post, or an alternate post support assembly that meets the test level 3 crash testing requirements of NCHRP 350 or MASH.

Alternate mailbox support assemblies shall be approved by the Engineer prior to installation. The Contractor shall provide the Engineer written certification that the mailbox support assembly has met the crash testing requirements and will be installed in accordance with the manufacturer's installation instructions.

September 6, 2013

Published Date: 2025	SDDOT	SINGLE AND DOUBLE MAILBOX ASSEMBLIES	PLATE NUMBER 900.02
			Sheet 1 of 1

Plot Scale - 1:200
Plotted From - TRSF12141
File - ...\modyb609\StdPlateSectionB.dgn
Standard Plate -

STATE OF SOUTH DAKOTA	PROJECT	SHEET	TOTAL SHEETS
	NH-CR 0034(193)402	B146	B146

Plotting Date: 08/16/2024

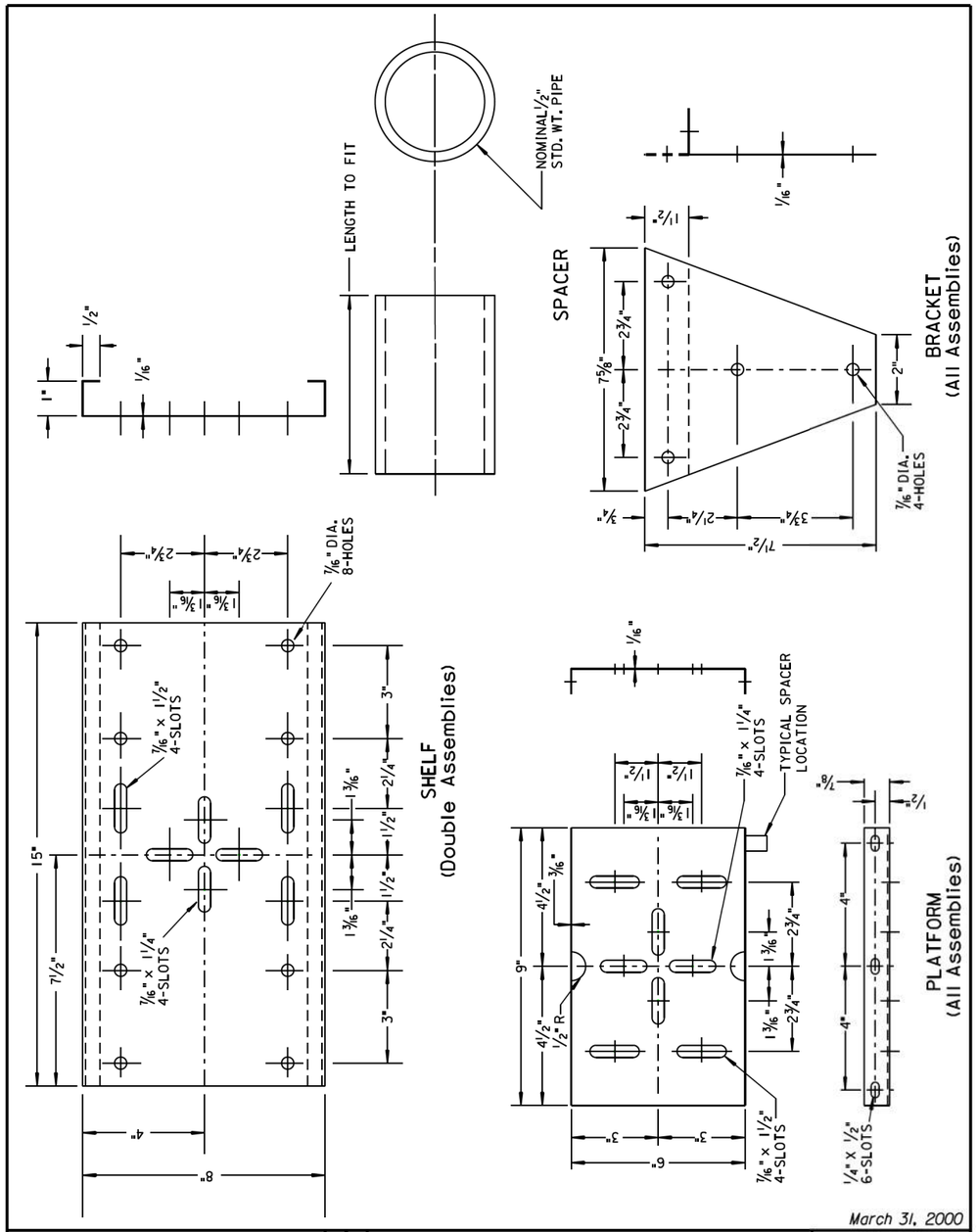

March 31, 2000

Published Date: 2025	SDDOT	MAILBOX SUPPORT HARDWARE	PLATE NUMBER 900.03
			Sheet 1 of 1

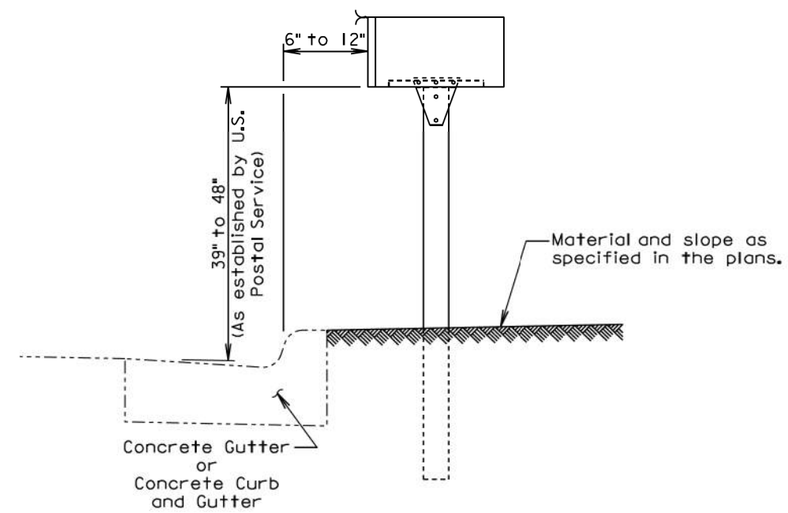

ELEVATION VIEW

GENERAL NOTES:

The post support assemblies provided should be consistant throughout the project.

Post support assemblies shall be one from the approved products list, a 4"x4" or 4" round wood post, or an alternate post support assembly that meets the test level 3 crash testing requirements of NCHRP 350 or MASH.

Alternate mailbox support assemblies shall be approved by the Engineer prior to installation. The Contractor shall provide the Engineer written certification that the mailbox support assembly has met the crash testing requirements and will be installed in accordance with the manufacturer's installation instructions.

February 10, 2014

Published Date: 2025	SDDOT	MAILBOX ADJACENT TO CONCRETE GUTTER OR CONCRETE CURB AND GUTTER	PLATE NUMBER 900.05
			Sheet 1 of 1

Plot Scale - 1:200
Plotted From - TRSE12141
Standard Plate - 720.03 P2-2 & 900.02 P1-1
File - ...\thody0609\StdPlateSections3.dgn