SECTION B: GRADING PLANS

FOR BIDDING PURPOSES ONLY

SD DOT	PROJECT	SHEET	TOTAL SHEETS
	EM 0292(88)73 IM 2292(104)0	B1	B182

Plotting Date: 5/16/2025

INDEX OF SHEETS

END EM 0292(88)73
Station 106+06.35
located 1103.12 feet south and
1959.66 feet west of the northeast
corner of Section 18 -Township 100 North -
Range 50 West of the 5th P.M.
MRM (029 N) 75.17+0.032

Sta. 0+01.50 to Sta. 6+65.00
M.S.E. Large Panel Retaining Wall

Sta. 60+35.34 to Sta. 63+50.03
Str. No. 42-065-016
312'-11⅜" Steel Girder Bridge
Concrete Barrier Curb and Gutter

BEGIN EM 0292(88)73
85TH STREET
Station 299+35.00
located 20.50 feet south and
499.13 feet east of the northwest
corner of Section 19 - Township 100 North -
Range 50 West of the 5th P.M.

Sta. 318+79.74 to Sta. 321+55.24
Str. No. 42-065-020
276'-6" Steel Girder Bridge
Concrete Barrier Curb and Gutter

BEGIN EM 0292(88)73
Station 30+27.82
located 2117.41 feet north and
2376.09 feet east of the southwest
corner of Section 19 - Township 100 North -
Range 50 West of the 5th P.M.
MRM (029 N) 73.38+0.364

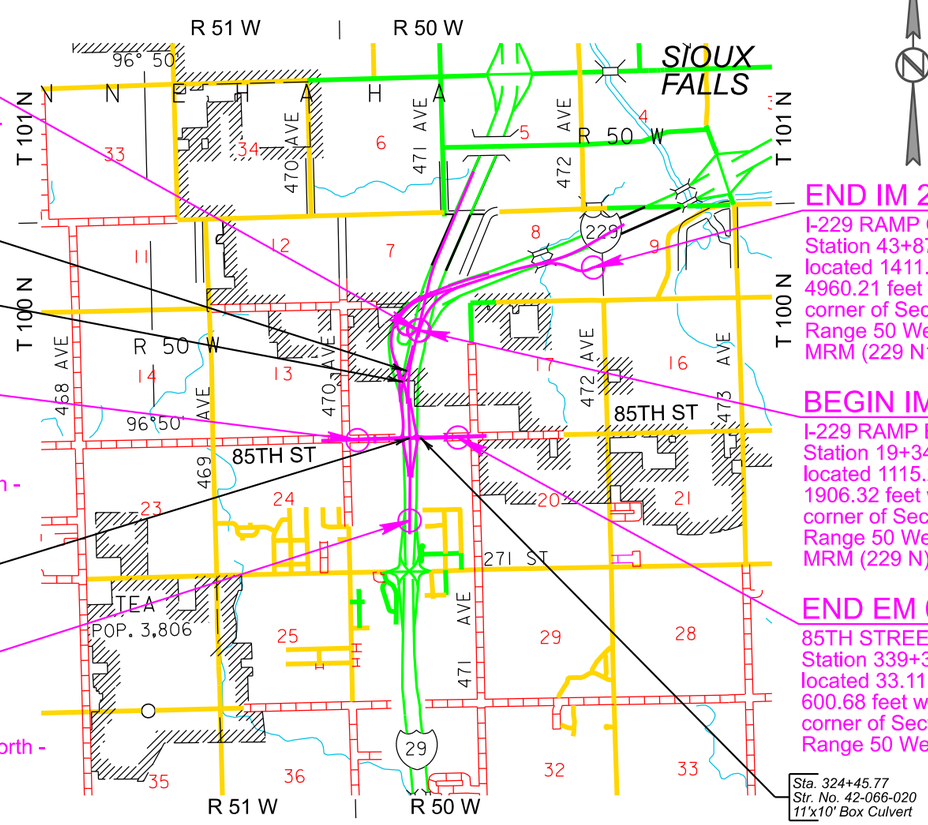

END IM 2292(104)0
I-229 RAMP C LOUISE AVENUE
Station 43+87.81
located 1411.81 feet north and
4960.21 feet east of the southwest
corner of Section 8 -Township 100 North -
Range 50 West of the 5th P.M.
MRM (229 N1) 00.92+0.000

BEGIN IM 2292(104)0
I-229 RAMP B
Station 19+34.15
located 1115.22 feet south and
1906.32 feet west of the northeast
corner of Section 18 -Township 100 North -
Range 50 West of the 5th P.M.
MRM (229 N) 00.00+00.032

END EM 0292(88)73
85TH STREET
Station 339+30.00
located 33.11 feet south and
600.68 feet west of the northwest
corner of Section 20 - Township 100 North -
Range 50 West of the 5th P.M.

Sta. 324+45.77
Str. No. 42-066-020
11'x10' Box Culvert

REGISTERED PROFESSIONAL ENGINEER
REG. NO. 15736
JONATHAN R. HULTGREN
SOUTH DAKOTA
5-16-2025

SEH

Plotted From - ngjersvik File - ...\titleb.dgn

FOR BIDDING PURPOSES ONLY

SECTION B ESTIMATE OF QUANTITIES - PCN 06JQ

BID ITEM NUMBER	ITEM	QUANTITY	UNIT
009E0010	Mobilization	Lump Sum	LS
009E3220	Reestablish Right-of-Way and Property Corner	62	Each
009E3230	Grade Staking	9.654	Mile
009E3245	Final Cross Section Survey	9.654	Mile
009E3250	Miscellaneous Staking	9.654	Mile
009E3280	Slope Staking	9.654	Mile
009E3290	Structure Staking	4	Each
009E3301	Engineer Directed Surveying/Staking	40.0	Hour
009E4300	Construction Schedule, Category III	Lump Sum	LS
100E0020	Clear and Grub Tree	169	Each
100E0100	Clearing	Lump Sum	LS
110E0600	Remove Fence	8,780	Ft
110E0707	Remove High Tension 4 Cable Guardrail	362	Ft
110E0749	Remove High Tension 4 Cable Guardrail Anchor Assembly	3	Each
110E1100	Remove Concrete Pavement	10,689.9	SqYd
110E7000	Remove Crossover Closure for Reset	600	Ft
120E0010	Unclassified Excavation	180,689	CuYd
120E0420	Contractor Furnished Select Subgrade Topping	77,353	CuYd
120E0600	Contractor Furnished Borrow Excavation	585,739	CuYd
120E1000	Muck Excavation	25,713	CuYd
120E6100	Water for Embankment	6,842.0	MGal
120E6200	Water for Granular Material	250.7	MGal
120E7500	Aggregate Column	4,031.0	CuYd
250E0020	Incidental Work, Grading	Lump Sum	LS
260E1010	Base Course	9,474.6	Ton
260E6010	Granular Material	200.0	Ton
270E0110	Salvage and Stockpile Granular Material	6,480.8	Ton
380E4070	9" PCC Fillet Section	130.2	SqYd
421E0100	Pipe Culvert Undercut	189	CuYd
450E0102	12" RCP Class 2, Furnish	284	Ft
450E0110	12" RCP, Install	284	Ft
450E0122	18" RCP Class 2, Furnish	4,830	Ft
450E0130	18" RCP, Install	4,830	Ft
450E0142	24" RCP Class 2, Furnish	364	Ft
450E0143	24" RCP Class 3, Furnish	396	Ft
450E0150	24" RCP, Install	760	Ft
450E0162	30" RCP Class 2, Furnish	204	Ft
450E0163	30" RCP Class 3, Furnish	708	Ft
450E0170	30" RCP, Install	912	Ft
450E0182	36" RCP Class 2, Furnish	104	Ft
450E0190	36" RCP, Install	104	Ft
450E2008	18" RCP Flared End, Furnish	8	Each
450E2009	18" RCP Flared End, Install	8	Each

BID ITEM NUMBER	ITEM	QUANTITY	UNIT
450E2016	24" RCP Flared End, Furnish	4	Each
450E2017	24" RCP Flared End, Install	4	Each
450E2024	30" RCP Flared End, Furnish	12	Each
450E2025	30" RCP Flared End, Install	12	Each
450E2028	36" RCP Flared End, Furnish	2	Each
450E2029	36" RCP Flared End, Install	2	Each
450E3022	30" RCP Arch Class 2, Furnish	884	Ft
450E3030	30" RCP Arch, Install	884	Ft
450E3042	42" RCP Arch Class 2, Furnish	296	Ft
450E3050	42" RCP Arch, Install	296	Ft
450E4508	30" RCP Arch Flared End, Furnish	12	Each
450E4509	30" RCP Arch Flared End, Install	12	Each
450E4516	42" RCP Arch Flared End, Furnish	4	Each
450E4517	42" RCP Arch Flared End, Install	4	Each
450E4758	18" CMP 14 Gauge, Furnish	696	Ft
450E4760	18" CMP, Install	696	Ft
450E4768	24" CMP 14 Gauge, Furnish	134	Ft
450E4770	24" CMP, Install	134	Ft
450E5010	18" CMP Elbow, Furnish	20	Each
450E5011	18" CMP Elbow, Install	20	Each
450E5211	18" CMP Flared End, Furnish	9	Each
450E5212	18" CMP Flared End, Install	9	Each
450E5215	24" CMP Flared End, Furnish	2	Each
450E5216	24" CMP Flared End, Install	2	Each
462E0100	Class M6 Concrete	236.7	CuYd
464E0100	Controlled Density Fill	600.0	CuYd
480E0100	Reinforcing Steel	36,356	Lb
600E0300	Type III Field Laboratory	1	Each
621E0160	6' Chain Link Fence with Tension Wired Top	13,940	Ft
628E1500	Concrete Barrier End Protection	1	Each
629E0110	High Tension 4 Cable Guardrail	7,228	Ft
629E0290	High Tension Cable Guardrail Anchor Assembly	11	Each
* 629E1109	Furnish High Tension Cable Guardrail Post and Sleeve	50	Each
629E9050	Reset Crossover Closure	600	Ft
630E0500	Type 1 MGS	1,702.5	Ft
630E1500	Type 1 Guardrail Transition	1	Each
630E2018	MGS MASH Tangent End Terminal	9	Each
630E2065	MGS Trailing End Terminal	8	Each
635E8260	6" Rigid Conduit, Schedule 80	75	Ft
650E0090	Type B69 Concrete Curb and Gutter	138	Ft
650E0095	Type B69.5 Concrete Curb and Gutter	4,797	Ft
650E0390	Type BL69 Concrete Curb and Gutter	7,194	Ft
650E2100	Special Concrete Curb and Gutter	7,772	Ft

BID ITEM NUMBER	ITEM	QUANTITY	UNIT
651E0060	6" Concrete Sidewalk	74,305	SqFt
651E7000	Type 1 Detectable Warnings	698	SqFt
670E1200	Type B Frame and Grate	26	Each
670E2200	Type C Frame and Grate	2	Each
670E5200	Special Frame and Grate Assembly	1	Each
670E5200	Special Frame and Grate Assembly	35	Each
670E5200	Special Frame and Grate Assembly	4	Each
670E5200	Special Frame and Grate Assembly	1	Each
670E5200	Special Frame and Grate Assembly	2	Each
670E5342	4' x 6' Precast Concrete Type S Drop Inlet Lid	8	Each
670E5400	Precast Drop Inlet Collar	28	Each
671E6010	Type A10 Manhole Frame and Lid	4	Each
671E7010	Adjust Manhole	1	Each
680E0224	4" PVC Outlet Pipe	13	Ft
680E0260	6" Corrugated Polyethylene Drainage Tubing	1,293	Ft
680E0660	6" Slotted Corrugated Polyethylene Drainage Tubing	1,029	Ft
700E0210	Class B Riprap	454.0	Ton
831E0110	Type B Drainage Fabric	657	SqYd
900E0010	Refurbish Single Mailbox	1	Each
900E1049	EPS Geomembrane	5,319.0	SqYd
900E1050	Expanded Polystyrene (EPS) Foam	7,936.0	CuYd
900E2030	Miscellaneous Work	7	Site

*** - Denotes Non-Participating**

REGISTERED PROFESSIONAL ENGINEER
REG. NO. 15735
JONATHAN R. HULTGREN
SOUTH DAKOTA
8-28-2025

SECTION B ESTIMATE OF QUANTITIES - PCN 07D0

BID ITEM NUMBER	ITEM	QUANTITY	UNIT
009E0010	Mobilization	Lump Sum	LS
009E3230	Grade Staking	1.843	Mile
009E3245	Final Cross Section Survey	1.843	Mile
009E3250	Miscellaneous Staking	1.843	Mile
009E3280	Slope Staking	1.843	Mile
009E3301	Engineer Directed Surveying/Staking	40.0	Hour
009E4300	Construction Schedule, Category III	Lump Sum	LS
110E0600	Remove Fence	130	Ft
110E1010	Remove Asphalt Concrete Pavement	7,912.8	SqYd
110E1100	Remove Concrete Pavement	8,998.5	SqYd
120E0010	Unclassified Excavation	33,426	CuYd
120E0420	Contractor Furnished Select Subgrade Topping	9,865	CuYd
250E0020	Incidental Work, Grading	Lump Sum	LS
270E0110	Salvage and Stockpile Granular Material	3,538.1	Ton
450E3004	18" RCP Arch Class 4, Furnish	92	Ft
450E3010	18" RCP Arch, Install	92	Ft
450E3014	24" RCP Arch Class 4, Furnish	110	Ft
450E3020	24" RCP Arch, Install	110	Ft
450E4500	18" RCP Arch Flared End, Furnish	4	Each
450E4501	18" RCP Arch Flared End, Install	4	Each
450E4504	24" RCP Arch Flared End, Furnish	4	Each
450E4505	24" RCP Arch Flared End, Install	4	Each
621E0160	6' Chain Link Fence with Tension Wired Top	130	Ft
629E0110	High Tension 4 Cable Guardrail	227	Ft
629E0290	High Tension Cable Guardrail Anchor Assembly	2	Each
700E0210	Class B Riprap	39.0	Ton
831E0110	Type B Drainage Fabric	56	SqYd

REGISTERED PROFESSIONAL ENGINEER
REG. NO. 15735
JONATHAN R. HULTGREN
SOUTH DAKOTA
8-28-2025

MACHINE CONTROL GRADING & MODEL INFORMATION

Electronic design files are made available by the SDDOT Bid Letting Office through the SDDOT's SharePoint Directory for Contractors. The roadway subgrade models xml files provided for this project includes the following highway features: intersecting roads and entrances, guardrail widening, inslope transitions at pipes and box culverts, ditch blocks, undercutting, muck excavation, and unstable excavation.

Other subgrade models xml files provided for this project include channel work and bridge berms.

These files are provided for informational purposes only. The information shown in the plans will govern over the provided electronic information. The Contractor assumes the risk of error if the information is used for any purposes for which the information was not intended. The Contractor assumes all risk of any assumptions or manipulations made of the electronic information

GRADING OPERATIONS

Compaction of earth embankment will be governed by the Specified Density Method.

Water for Embankment is estimated at the rate of 10 gallons of water per cubic yard of Embankment minus Waste.

The estimated cubic yards of excavation and/or embankment required to construct outlet ditches, ditch blocks, and approaches are included in the earthwork balance notes on the profile sheets.

The estimated excavation required for placing the Granular Bridge End Backfill and/or Bridge End Embankment, and for constructing the Bridge Berm(s) between bridge abutments are listed in the Table of Unclassified Excavation. The excavated material from the construction of the Bridge Berm(s) should be disposed of at a site provided by the Contractor and approved by the Engineer. This waste material is not included in the Waste shown in the Table of Excavation Quantities by Balances.

Special ditch grades and other sections of the roadway different than the typical sections will be constructed to the limits shown on the cross sections. If significant changes to the cross sections are necessary during construction, the Engineer will contact the Designer for the proposed change.

Generally, all shallow inlet and outlet ditches as noted on the plan sheets will be cut with a 10-foot-wide bottom with 5:1 backslopes. However, the Engineer may direct the Contractor to adjust the ditch width for proper alignment with the drainage structure.

Temporary fence and/or permanent fence will be placed ahead of the grading operation unless otherwise directed by the Engineer.

GENERAL GEOLOGY

The project alignment traverses glacial terrain typical of eastern South Dakota. Included within this terrain may be areas of loess, shale, sand, gravel, glacial till and boulder till. As is the case with most glacial terrain, the materials throughout the project can vary greatly in a short distance.

CLASSIFICATION OF EXCAVATION

Large glacial boulders may be encountered sporadically within the project limits. Very large boulders could require more effort to excavate. Most of the material encountered should be able to be excavated using conventional methods associated with normal Unclassified Excavation. Muck Excavation will be required at the areas shown in the plans or as directed by the Engineer.

REGISTERED PROFESSIONAL ENGINEER
REG. NO. 15735
JONATHAN R. HULTGREN
SOUTH DAKOTA
5-16-2025

UTILITIES

The Contractor will be aware that the existing utilities shown in the plans were surveyed prior to the design of this project and might have been relocated or replaced by a new utility facility prior to construction of this project, might be relocated or replaced by a new utility facility during the construction of this project, or might not require adjustment and may remain in its current location. The Contractor will contact each utility owner and confirm the status of all existing and new utility facilities. The utility contact information is provided elsewhere in the plans or bidding documents.

SOIL BORING INFORMATION

Free water was encountered in several borings at levels that will likely be higher than the bottom of the new storm sewer trenches. Proper protective measures will be required for the storm sewer construction. Seasonal changes may affect the groundwater elevations. Sumps and/or other dewatering methods will likely be required.

Station	Offset (ft)	Depth (ft)	Description	Initial Water Level (ft)	Final Water Level (ft)*	Time Between Reading (hrs)
296+35	13'RT	0-15.0	Brown silt clay	Dry/caved at 13.9	5.5	29
301+35	12'RT	0-15.0	Brown silt clay	4.9	3.0	28
306+35	12'RT	0-15.0	Brown silt clay	Dry/caved at 13.8	Dry/caved at 13.8	28
311+35	10'RT	0-15.0	Brown silt clay	13.2	8.0	28
318+00	13'RT	0-13.0	Brown silt clay	Dry	7.0	29
322+50	3'LT	0-11.0	Brown silt clay	Dry	3.5	26
331+35	6'RT	0-15.0	Brown silt clay	Dry/caved at 13.6	13.5	26
333+35	10'RT	0-5.0	Brown silt clay	Dry	Na	NA
339-35	6'LT	0-5.0 5.0-10.0	Brown silt clay Brown clay	Dry	NA	NA
342+35	15'LT	0-15.0	Brown silt clay	Dry/caved at 14.0	6.4	24
347+85	5'LT	0-15.0	Brown silt clay	11.0	4.0	24

*water levels as of December 2014

TYPE III FIELD LABORATORY

The lab will be equipped with an internet connection such as DSL, cable modem, or other approved service. The internet connection will be provided with a multi-port wireless router. The internet connection will be a minimum speed of 5 Mbps unless limited by job location and approved by the DOT. Prior to installing the wireless router, the Contractor will submit the wireless router's technical data to the Area Office to check for compatibility with the state's computer equipment. The internet connection is intended for state personnel usage only. The Contractor's personnel are prohibited from using the internet connection unless pre-approved by the Project Engineer. These items will be incidental to the contract unit price per each for "Type III Field Laboratory".

CLEARING

Before clearing activities begin, the Contractor will contact the Engineer to determine the limits of clearing for the project. If the trees or shrubs that are supposed to remain within the limits of work are damaged or destroyed by the Contractor, the Contractor will replace them with the same size and type at the Contractor's expense.

All trees removed will be the property of the Contractor.

To minimize spreading of the emerald ash borer, ash wood and brush can be removed and moved but it still must remain within the quarantine area. See the latest City of Sioux Falls policy at:

https://www.siouxfalls.gov/resident-services/housing-neighborhoods/compliance/ash-borer

FAA DETERMINATION

SDDOT has notified FAA of the proposed construction or alteration associated with this project. The filing with FAA included notification of Str. No. 42-065-020, Str. No. 42-066-020, Str. No. 42-065-016, Signal Poles A1-A12 and B1-B11, and Luminaires 85L1-85L26, AL1-AL5, BL1-BL5, CL1-CL5, DL1-D11, RDCL1-RDCL4, EL400 and EL401.

The Contractor must abide by the following FAA temporary structure (crane) determination requirements as set forth in FAA Determinations No.:
2025-AGL-3949-OE, 2025-AGL-3950-OE, 2025-AGL-3951-OE,
2025-AGL-3952-OE, 2025-AGL-3953-OE, 2025-AGL-3954-OE,
2025-AGL-3955-OE, 2025-AGL-3956-OE, 2025-AGL-3957-OE,
2025-AGL-3958-OE, 2025-AGL-3959-OE, 2025-AGL-3960-OE,
2025-AGL-3961-OE, 2025-AGL-3962-OE, 2025-AGL-3963-OE,
2025-AGL-3964-OE, 2025-AGL-3965-OE, 2025-AGL-3966-OE,
2025-AGL-3967-OE, 2025-AGL-3968-OE, 2025-AGL-3969-OE,
2025-AGL-3970-OE, 2025-AGL-3971-OE, 2025-AGL-3972-OE,
2025-AGL-3973-OE, 2025-AGL-3974-OE, 2025-AGL-3975-OE,
2025-AGL-3976-OE, 2025-AGL-3977-OE, 2025-AGL-3978-OE,
2025-AGL-3979-OE, 2025-AGL-3980-OE, 2025-AGL-3981-OE,
2025-AGL-3982-OE, 2025-AGL-3983-OE, 2025-AGL-3984-OE,
2025-AGL-3985-OE, 2025-AGL-3986-OE, 2025-AGL-3987-OE,
2025-AGL-3988-OE, 2025-AGL-3989-OE, 2025-AGL-3990-OE,
2025-AGL-3991-OE, 2025-AGL-3992-OE, 2025-AGL-3993-OE,
2025-AGL-3994-OE, 2025-AGL-3995-OE, 2025-AGL-3996-OE,
2025-AGL-3997-OE, 2025-AGL-3998-OE, 2025-AGL-3999-OE,
2025-AGL-4000-OE, 2025-AGL-4001-OE, 2025-AGL-4002-OE,
2025-AGL-4003-OE, 2025-AGL-4004-OE, 2025-AGL-4005-OE,
2025-AGL-4006-OE, 2025-AGL-4007-OE, 2025-AGL-4008-OE,
2025-AGL-4085-OE, 2025-AGL-4086-OE, 2025-AGL-4087-OE,
2025-AGL-4088-OE, and 2025-AGL-4089-OE.

As a condition of this determination, the temporary crane must be lowered to the ground when not in use and during the hours between sunset and sunrise. During daylight hours the crane must display either a 3-foot by 3-foot square flag having a checkered pattern of international orange and white squares at least 1 foot on each side that is on a staff attached to the crane so that the flag will be readily visible or a yellow flashing light that is mounted on the uppermost part of the crane structure. If the crane is erected between sunset and sunrise then it must be lighted in accordance with FAA Advisory Circular 70/7460-1 L Change 1, Obstruction Marking and Lighting, Chapters 4, 5(Red), and 12. This information is in the FAA Determinations or it could be as recommended by the Office of Aeronautics.

The crane height must not exceed 100 feet above ground (1623 feet above mean sea level) for bridge construction. This information is in the FAA Determination.

For installation of roadway lighting the crane height must not exceed a height of 20 feet above the final height of the luminaire or signal pole.

The Contractor will notify the South Dakota Department of Transportation Sioux Falls Area Engineering Manager at (605) 367-5680 by 9/15/2026 if the timeline for the crane use will need to be extended. The SDDOT will then file for a determination extension required by the FAA.

For questions regarding the FAA Determinations, contact Thomas Koch SDDOT Office of Aeronautics at 605-773-3764.

All costs incurred to adhere to the above listed requirements will be incidental to various contract items.

AERONAUTICAL NOTIFICATION (TEMPORARY STRUCTURE: CRANE)

It is required that the manager of the Sioux Falls Airport (605) 336-0762 be notified by the Contractor at least 3 business days prior to the temporary structure (crane) being erected and again when the structure is removed from the site. The advanced notice is required to allow the airport manager to file a Notice to Airmen NOTAM which alerts pilots to the presence of the crane. This information is either located in the FAA Determination or it could be as recommended by the Office of Aeronautics.

The Contractor will notify Harry Johnston at the South Dakota Department of Transportation Sioux Falls Area Office (605) 367-5680 by 9/15/2026 if a crane remains at the project site. The SDDOT will file for a determination extension with the FAA.

The South Dakota Department of Transportation is responsible for e-filing the FDC Notice to Airmen 3 business days prior to the temporary crane being erected and again within 3 days of it being removed from the site. The Contractor will notify Harry Johnston at the South Dakota Department of Transportation Sioux Falls Area Office (605) 367-5680 and provide the following NOTAM information:

1. The date the crane will be erected.
2. Provide the date when the crane will be removed.
3. Provide a time of arrival.
4. Provide an onsite Contact Name and Cell Number.

All costs incurred to adhere to the above listed requirements will be incidental to various contract items.

REGISTERED PROFESSIONAL ENGINEER
REG. NO. 15735
JONATHAN R. HULTGREN
SOUTH DAKOTA
7-23-2025

AERONAUTICAL NOTIFICATION (BOX CULVERT, LUMINAIRES, & SIGNALS)

The South Dakota Department of Transportation has received FAA Determinations for the permanent structures as listed in the FAA Determination plan note.

The Contractor will notify Jared Pfaff at the SDDOT Sioux Falls Area Office (605) 367-5680 if alterations are proposed for the heights or coordinates of a signal pole, luminaire, bridge, or box culvert. The SDDOT will re-file for an updated FAA determination. The Contractor will not be allowed to proceed with construction of the proposed altered installation until notified by the SDDOT that FAA approval has been received.

The SDDOT is responsible for filing Part 2 of Federal Aviation Administration Form 7460-2, Notice of Actual Construction or Alteration within 5 days after the construction of the Bridge, Signal Pole or Luminaire reaches its greatest height. The Contractor shall Harry Johnston at the SDDOT Sioux Falls Area Office (605) 367-5680 within 24 hours after this has occurred to ensure filing is completed by the FAA deadline.

The Contractor will notify Harry Johnston at the SDDOT Sioux Falls Area Office (605) 367-5680 by 9/15/2026 if the construction of the structure has not reached its greatest height. The SDDOT will file the FAA required determination extension.

All costs incurred to adhere to the above listed requirements will be incidental to various contract items.

36" LEWIS AND CLARK WATER MAIN

Lewis & Clark Regional Water System is designated as a High-Profile Utility with SD One Call.

There is a 36" Lewis & Clark Water main and easement along the south side of 85th Street. The Lewis & Clark pipeline installation is based on flexible wall pipe design criteria and therefore subject to collapse. Use of low ground pressure equipment is required near the pipelines. If cover is removed from the top of the pipelines, then special consideration must be given to protective measures for construction traffic that crosses the pipelines, including but not limited to the use of steel plates, timber planks, an air gap bridge of some sort, or other measures, and protection for potentially freezing conditions. The Contractor must not place stockpiles of soil or other materials, or place other construction related equipment such as cranes, portable concrete batch plants, etc. on or over the pipeline.

No construction equipment will be allowed to traverse across the Lewis & Clark pipe or longitudinally over top of the Lewis & Clark pipe. The pipe has a Cement Mortar lining that can be damaged if the pipe is elongated or deformed. If the pipe needs to be crossed then the Contractor is required to coordinate, secure and provide design for protective measures required for construction equipment to cross the Lewis & Clark pipe. Provide design information with dead and live loadings, details and all calculations to Lewis & Clark Regional Water System for review prior to performing any work.

Lewis & Clark needs to be notified first if any construction activities change from methods previously described.

Notify Lewis & Clark Regional Water System 2 weeks prior to entry into their easement or working near or over the existing pipeline. No work shall be performed within the Lewis & Clark easement without giving a 2 week notice to Lewis & Clark Regional Water System.

Lewis & Clark Regional Water System
1800 Monty Street
Tea, SD 57064
Todd Giffin – L&C – (office 605-368-2400) or 605-310-3085
Justin Walsh – L&C – (office 605-368-2400) or 605-310-8780
Water Treatment Plant – 605-624-8700
IN CASE OF EMERGENCY CALL 866-572-8688

Control of ground water may be critical prior to excavating under or around the existing pipeline. Failing to control ground water may create a condition in which bedding material flows out from under the pipeline with the ground water. Loss of bedding material may create a condition in which the pipelines become unsupported and susceptible to problems.

Any loss of water service for any situation in this portion of the Lewis & Clark pipeline will result in an economic loss for Lewis & Clark. This portion of the 36-inch diameter pipeline serves The City of Sioux Falls, Lincoln County Rural Water, City of Harrisburg, MCWC, Rock County Rural Water, Lincoln-Pipestone Rural Water, City of Rock Rapids, City of Luverne MN, and the City of Worthington MN.

SHRINKAGE FACTOR:

Location	Shrinkage (%)
85th Street	+35
85th Street / I-29 Ramps	+35
Ramp D Conn.	+35
Ramp C Louise Avenue	+20
I-29 (mainline)	+20
I-229 (mainline)	+20
I-229 (ramps)	+20

TABLE OF EXCAVATION QUANTITIES BY BALANCES

Roadway	Station to	Station	Construction Phase	Excavation (CuYd)	Granular Material Exc. (CuYd)	*** Excavation for Select Topping (CuYd)	* Muck Exc. (CuYd)	Unstable Exc. (CuYd)	* Contractor Furnished Borrow Exc. (CuYd)	Total Excavation (CuYd)	* Contractor Furnished Select Subgrade Topping (CuYd)	* Base Course for Foundations Improvement Area (CuYd)	** Select Fill Material (CuYd)	* EPS Foam (CuYd)	** Out-of-Balance Exc. (CuYd)	** Waste (CuYd)
I-29 SBL	30+28	47+60	Phase 1B	797	906	2,359	1,788	619	4,567	6,469	4,198					1,788
I-29 NBL	36+90	47+30	Phase 1A	1,069	600	1,609	1,178		1,675	4,456	2,508					1,178
I-29 NBL	78+80	106+06	Phase 2B	5,343	1,174	5,049				11,566	6,569					
Ramp A & Ramp E	12+20	26+21	Phase 1A/2B	4,625		996	7,373	3,065	34,249	16,059	5,550				19,633	7,373
Ramp B & Ramp F	20+00	33+85	Phase 1A	206		1,575	900	27,454	27,886	30,135	4,916					900
Ramp C & Ramp G	30+00	43+45	Phase 1B	5,653		1,625	1,610	14,532	19,244	23,420	4,813					1,610
Ramp D & Ramp H	41+78	58+00	Phase 1B	14,868		23	4,655	8,329	79,688	27,875	6,084					4,655
Ramp D	58+00	62+00	Phase 1B	31				4,044	30,682	4,075	926		33,831			
Ramp D	62+00	70+00	Phase 1B	673		227		3,526	42,551	4,426	2,304		45,669		996	
Ramp D	70+00	77+28	Phase 1B	1,648	433	1,658				3,739	2,527					
Ramp D Conn & I-229 Ramp C	70+00	86+53	Phase 1B	463	316	1,051	267	6,778	53,198	8,875	5,514					267
EB 85th Street	299+35	315+50	Phase 1B			1,574	3,589	6,248	76,813	11,411	12,534					3,589
EB 85th Street	315+50	319+50	Phase 1B	488				1,109	95,475	1,597	3,397	1,462	89,736	2,477		
EB 85th Street	320+80	325+00	Phase 1A	2,206			3,723	5,086	90,499	11,015	3,668	3,551	88,141	2,431		3,723
EB 85th Street	325+00	339+30	Phase 1A	10,901		5,086	630	479	29,212	17,096	11,845					630
Shared Use Path	10+00	13+11	Phase 2B												2,593	
Shared Use Path	15+15	17+82	Phase 2B											585	1,233	
			06JQ Subotals:	48,971	3,429	22,832	25,713	81,269	585,739	182,214	77,353	5,013	257,377	5,493	24,455	25,713
I-229 NBL	154+86	183+17	Phase 2B	10,541	143	4,297				14,981	5,199					
I-229 Ramp B	19+34	46+55	Phase 2B	4,477		3,857				8,334	4,666					
I-229 Ramp C Louise	20+00	44+24	Phase 2B	3,507	1,729					5,236						
			07D0 Subotals:	18,525	1,872	8,154				28,551	9,865					
			Project Totals:	67,496	5,301	30,986	25,713	81,269	585,739	210,765	87,218	5,013	257,377	5,493	24,455	25,713

* The quantities for these items are in the Estimate of Quantities under their respective bid items.
** The quantities for these items are for information only.
*** Undercutting for Select Topping shall be paid for once under "Unclassified Excavation".

REGISTERED PROFESSIONAL ENGINEER
REG. NO. 15735
JONATHAN R. HULTGREN
SOUTH DAKOTA
5-16-2025

TABLE OF UNCLASSIFIED EXCAVATION

PCN 06JQ	(CuYd)
Excavation	48,971
Excavation for Select Topping	22,832
Unstable Material Excavation	81,269
Topsoil	24,188
Salvaged Granular Material	3,429
Subtotal:	180,689

PCN 07D0	(CuYd)
Excavation	18,525
Undercutting for Select Topping	8,154
Topsoil	4,875
Salvaged Granular Material	1,872
Subtotal:	33,426
Total:	214,115

PROCEDURES FOR DETERMINING UNCLASSIFIED EXCAVATION QUANTITY

When plan quantities are used for payment, the Unclassified Excavation quantity will be used for final payment and the plans quantity of Topsoil and salvaged surfacing items listed in the Table of Unclassified Excavation will not be adjusted according to field measurements.

The following paragraphs are general earthwork information and information in regard to computing the Unclassified Excavation quantity when final cross sections are taken in the field:

The Unstable Material Excavation quantity is included in the Excavation quantity listed in the Table of Unclassified Excavation. When finaling a project, the Unstable Material Excavation quantity will be added to the Excavation quantity to compute the Unclassified Excavation quantity.

Out-of-Balance Excavation is material obtained from waste generated from excavation from other balances. The quantity of Out-of-Balance Excavation is included in the Excavation quantity in the balance where it is excavated and is paid for once as Unclassified Excavation.

The Topsoil quantity in the Table of Unclassified Excavation is an estimate. When finaling a project, the total quantity of field measured Topsoil will be used in place of the estimated Topsoil quantity. The quantity of Topsoil from the cuts will be paid for twice as Unclassified Excavation, as it will be in both the Excavation and Topsoil quantities. This will be full compensation for Excavation, which includes necessary undercutting to provide space for placement of topsoil.

The Excavation quantities from individual balances and the Table of Unclassified Excavation have been reduced by the volume of in place surfacing that will be removed and/or salvaged.

Salvaged Granular Base Material will be paid for at the contract unit price per ton and is also included in and paid for once as Unclassified Excavation. As shown in the Table of Unclassified Excavation, the estimated quantity of 3,429 cubic yards (PCN 06JQ) and 1,872 cubic yards (PCN 07D0) of Salvaged Granular Base Material will be added to the Excavation quantity to determine the Unclassified Excavation quantity. When finaling a project, the quantities of Salvaged Granular Base Material from fill sections and off-alignment roadways or obliterated old roads will not be adjusted according to field measurements. The quantity of Salvaged Granular Base Material from cut sections will not be added to the Excavation quantity as it is already in the cuts on the final cross sections.

The volume of in place Concrete Surfacing removed will NOT be paid for as Unclassified Excavation.

The Excavation quantities from individual balances and the table above have been reduced by the volume of in place concrete pavement that will be removed.

When finaling a project, the estimated quantity of 10,690 cubic yards (PCN 06JQ) and 8,999 cubic yards (PCN 07D0) of Concrete Pavement removed from the cut sections will be subtracted from the Unclassified Excavation quantity for final payment. The quantity of Concrete Pavement from cut sections subtracted from the Unclassified Excavation quantity will be plans quantity and will not be adjusted according to field measurements.

CONTRACTOR FURNISHED SELECT SUBGRADE TOPPING

For all proposed work on I-29 mainline, I-229 mainline, I-229 Ramps, 85th Street and 85th Street / I-29 Ramps, the upper 1.5 feet of subgrade will be constructed with Contractor Furnished Select Subgrade Topping.

In the curb and gutter sections, the Contractor Furnished Select Subgrade Topping width will be from outside the edge of the outside curb & gutter to outside the edge of the median curb & gutter. The distance outside each curb and gutter will be as needed for the paving operation. The moisture content of the Contractor Furnished Select Subgrade Topping at the time of compaction will be as per Section 120.3 B.3.a. of the Specifications.

Material for Contractor Furnished Select Subgrade Topping will conform to the following:

- Any material with less than 60% passing the #200 sieve
- Any material that has more than 60% passing the #200 sieve and having a PI less than 40 and more than 20

Contractor Furnished Select Subgrade Topping is shown in the Typical Grading Sections.

UNSTABLE MATERIAL EXCAVATION

The areas of unstable material excavation are drawn on the cross sections with a normal depth of 2 feet. The estimated quantity of 81,269 cubic yards (PCN 06JQ) of unstable material excavation will be paid for at the contract unit price per cubic yard for “Unclassified Excavation”.

The City of Sioux Falls has stockpiled material south of 85th Street on both the east and west sides of I-29. Stockpiled material includes organics, rocks, and other debris. The stockpile must be removed to natural ground elevation as shown on the cross sections prior to embankment construction. Stockpiled material quantities are included as a variable depth of Unstable Excavation. Stockpiled material used for embankment construction will be placed according to section 120.3.B of the Specifications.

All areas designated as Unstable will be excavated. The unstable material excavated on this project (except stockpiled material as mentioned above) will be placed outside the subgrade shoulder in fill sections or stockpiled and used as topsoil.

Field measurement of unstable material excavation will not be made. However, if there are additional areas of unstable material excavation other than what is shown in the plans, the Engineer will direct removal of these areas and the additional areas will be measured according to the Engineer.

TABLE OF UNSTABLE MATERIAL EXCAVATION

Roadway	Station	to	Station	L/R	Depth (ft)	Quantity (CuYd)
85th Street	305+50		309+30	R	2	601
85th Street	306+50		309+00	L	2	371
85th Street	312+00		316+00	L/R	2	5,276
85th Street	316+00		319+25	L/R	2	1,109
85th Street	324+72		327+33	L/R	Var.	5,086
85th Street	325+75		327+50	L	2	479
Ramp A	10+00		15+50	L	2	2,497
Ramp A	18+50		23+00	L/R	2	568
Ramp B	30+50		32+50	L/R	2	1,363
Ramp B	32+50		35+77	L/R	Var.	26,091
Ramp C	39+50		43+50	L/R	Var.	12,351
Ramp C	43+50		44+80	L/R	2	1,522
Ramp D	40+00		47+50	L/R	2	6,909
Ramp D	55+00		60+00	L/R	2	4,044
Ramp D	64+00		68+00	L/R	2	3,526
Ramp G	3+00		4+00	R	2	659
Ramp H	4+50		6+14	L/R	2	1,420
Ramp D_Conn	71+00		77+50	L/R	2	5,787
Ramp D_Conn	77+50		80+50	L	2	744
Ramp D_Conn	81+50		82+50	L	2	247
I-29	32+00		39+50	L	2	619
					PCN 06JQ Total:	81,269

REGISTERED PROFESSIONAL ENGINEER
REG. NO. 15735
JONATHAN R. HULTGREN
SOUTH DAKOTA
7-23-2025

MUCK EXCAVATION

The areas of muck excavation are drawn on the cross sections with a normal depth of 3 feet. The estimated quantity of 25,713 cubic yards (PCN 06JQ) of muck excavation will be paid for at the contract unit price per cubic yard for "Muck Excavation".

Muck excavation consists of the removal of highly organic and/or highly saturated material from the designated areas shown on the cross sections. Highly organic muck material will not be used in the embankment but may be used as topsoil. Non-organic muck material may be used as embankment outside of the fill subgrade shoulder if it is properly handled and dried prior to placement in the embankment.

Field measurement of muck excavation will not be made unless the Engineer orders additional excavation, or when the Engineer determines, in accordance with Section 120.3 A.1 of the Specifications, that the classification of excavation be changed.

If the areas designated as muck excavation can be removed with similar equipment and procedures as used for unclassified excavation, the material will be measured and paid for as "Unclassified Excavation".

TABLE OF MUCK EXCAVATION

Roadway	Station	to	Station	L/R	Depth (ft)	Quantity (CuYd)
85th Street	299+75		302+90	L	3	1,009
85th Street	299+75		305+50	R	3	950
85th Street	304+50		305+50	L	3	148
85th Street	309+30		312+00	R	3	1,326
85th Street	311+00		312+00	L	3	156
85th Street	321+60		327+00	L	3	3,723
85th Street	330+25		333+50	L	3	336
85th Street	330+50		331+00	L	3	83
85th Street	330+50		333+00	R	3	211
Ramp A	10+00		17+00	L/R	3	6,211
Ramp B	21+00		27+00	L/R	3	900
Ramp C	30+00		36+40	L/R	3	1,610
Ramp D	46+00		51+00	L/R	3	4,655
Ramp E	1+00		3+87	R	3	1,162
Ramp D_Conn	80+50		81+50	L	3	267
I-29	30+28		32+00	L	3	206
I-29	39+00		44+50	R	3	1,178
I-29	39+50		45+00	L	3	1,582
				PCN 06JQ Total:		25,713

SELECT FILL MATERIAL ADJACENT TO STRUCTURES

Select fill material will be used to construct the roadway embankment at the limits specified in the table below. The 85th St. interchange includes the ramp areas approximately 200 feet left and right of centerline (85th St.) to where the ramps converge.

Select fill material must meet the following specifications: a maximum liquid limit (LL) of 45, a plastic index (PI) greater than 10 but less than 25, 100% passing the 1 ½ inch sieve, and a maximum of 70% passing the #4 sieve.

Alignment	Station to Station	Quantity of Select Fill Material (Cubic Yards)
85th St. Interchange	315+50 to 325+00	177,877
Ramp D	58+00 to 70+00	79,500

The Contractor will be responsible for the following minimum testing prior to use of each borrow site:

One test for liquid limit and plastic index, and one sieve analysis from each source prior to placement of material. Test results will be provided to the Project Engineer for verification of specification compliance.

The Department will be responsible for the following minimum testing:

One test for liquid limit and plastic index, and one sieve analysis for every 10,000 cubic yards of material. Independent Assurance testing will not be required.

Select Fill Material will be paid for at the contract price per cubic yard for "Contractor Furnished Borrow Excavation"

SALVAGE AND STOCKPILE GRANULAR MATERIAL

An estimated 6,480.6 tons (3,429 Cubic Yards) (PCN 06JQ) and 3,538.1 tons (1,872 Cubic Yards) (PCN 07D0) of granular base material will be salvaged from the entire length of the existing highway (including ramps) and stockpiled at a site furnished by the Contractor and satisfactory to the Engineer.

Salvaged and Stockpiled Granular Material will conform to the requirements of Section 884 of the Specifications.

The quantity of salvage granular base material may vary from the plans. No adjustment will be made to the contract unit price for variations of the quantity of "Salvage and Stockpile Granular Material."

REGISTERED PROFESSIONAL ENGINEER
REG. NO. 15735
JONATHAN R. HULTGREN
SOUTH DAKOTA
7-23-2025

CONTRACTOR FURNISHED BORROW EXCAVATION

Restoration of the Contractor furnished borrow excavation site will be the responsibility of the Contractor.

The Contractor furnished borrow excavation material will be uniform in texture and free from organic material. The liquid limit will not exceed 45 and the plastic index will not exceed 25.

The Contractor will be responsible for the following minimum testing prior to use of each borrow site:

A minimum of one test for liquid limit and plastic index and a 4 point for each location and soil type, with samples obtained according to SD201.

The Department will be responsible for the following minimum testing:

A minimum of one test for liquid limit and plastic index and a 4 point for every 100,000 cubic yards or a major change in soil type. Independent Assurance testing will not be required.

LG Everest may have a potential site for contractor furnished borrow material. The Contractor can contact LG Everest for details regarding possible quantity and suitability of available material. It shall be the Contractor's responsibility to verify and assure all requirements and clearance needed for the Contractor Furnished Borrow material are addressed. The approximate borrow pit location is on the south side of Rice Street ½ mile east of I-229 Exit 7.

The soil at the LG Everest West Nelson Pit has been tested by the SD DOT Geotechnical Office and is suitable for use as contractor furnished borrow. The material is not to be used for "Select Subgrade Topping" and "Select Fill Material Adjacent to Structures" without approval by the Engineer. Contact the Mitchell Region Materials Engineer for additional soil boring data. (605) 995-8127

LG Everest's phone number is (605) 330-6586.

ADJUST AIR/VACUUM VAULT (L&C RURAL WATER SYSTEM)

The Contractor will adjust an existing Lewis and Clark Rural Water System Vault to the extent necessary on this project. Adjusting the Vault may consist of placing adjusting rings if necessary, and resetting the manhole frame and cover. The elevation of the frame and cover will be set at the same elevation of the adjacent new pavement or surrounding ground. The manhole frame, cover, and rings that are cracked or broken due to carelessness of the Contractor will be replaced with a new manhole frame, cover, and rings that conform with the Specifications at the Contractor's expense. The manhole will be adjusted to the satisfaction of the Engineer and L&C. All costs involved in adjusting the Manhole will be incidental to the contract unit price per each for "Adjust Manhole".

In addition, the Contractor will extend the Sch. 80 PVC vent pipe from the vault to outlet 2 feet south of the back of the eastbound 85th Street sidewalk. This extension will be paid per the contract unit price per foot for "6" Rigid Conduit, Schedule 80".

PIPE CULVERT UNDERCUT

The table includes undercut for 36 inch and larger pipe culverts. The depth of undercut is an estimate and the actual depth necessary will be determined during construction. Pipes listed may or may not require undercutting and pipes not listed may require undercutting. The Engineer will determine which pipe will be undercut in accordance with Section 421 of the Specifications.

Station	Undercut Depth (Ft)	Pipe Culvert Undercut (CuYd)
302+65.00	1	43
67+68.68	1	39
67+75.88	1	39
311+11.46	1	68
	Total:	189

Granular material may be required for backfilling the pipe culvert undercut areas where site conditions warrant. Granular material will conform to the gradation requirements in Section 421.2.A of the Specifications and will be paid for at the contract unit price per ton for “Granular Material”. A quantity of 200 tons of granular material is included in the estimate of quantities for use where it is determined to be needed. The quantity will be adjusted or eliminated by construction change order, depending on field conditions.

The table below contains the rate for one-foot depth of pipe culvert undercut per foot of pipe length and should be used as an aid in determining the actual amount of undercut to be performed during construction. The table is derived from the drawing below and conforms to the Specifications. When calculating pipe culvert undercut, the length of pipe ends should be included in the overall pipe length.

Storm sewer and approach pipes do not require undercutting unless specified otherwise in these plans.

Pipe Diameter (In)	Round Pipe Undercut Rate for 1’ Depth (CuYd/Ft)	Arch Pipe Undercut Rate for 1’ Depth (CuYd/Ft)
24	0.2407	0.2577
30	0.2623	0.2847
36	0.2840	0.3110
42	0.3056	0.3337
48	0.3272	0.3596
54	0.3488	0.3827
60	0.3704	0.4105
66	0.3920	---
72	0.4136	0.4630
78	0.4352	---
84	0.4568	0.5123
90	0.4784	---

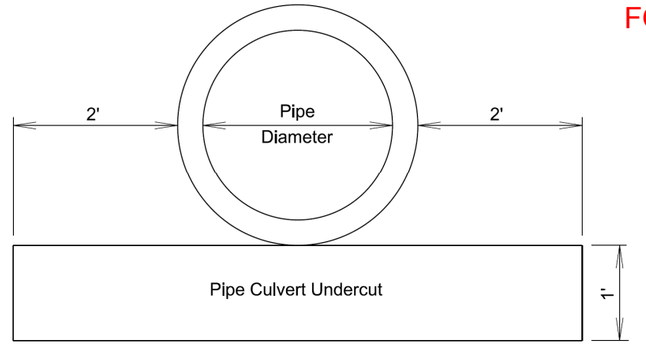

CONTROLLED DENSITY FILL FOR PIPE

Controlled density fill will be in conformance with Section 464 of the Specifications.

The controlled density fill will be placed between pipes from the base of the pipe elevation to the haunch of the pipes and extend to the end of the end section.

TABLE OF CONTROLLED DENSITY FILL FOR PIPE

Station	Quantity (CuYd)
333+33.00	100
333+40.00	100
333+47.00	100
333+53.00	100
333+60.00	100
333+67.00	100
Total:	600

REGISTERED PROFESSIONAL ENGINEER
REG. NO. 15736
JONATHAN R. HULTGREN
SOUTH DAKOTA
5-16-2025

CORRUGATED METAL PIPE

Corrugated metal pipes will have 2 ⅔-inch x ½-inch corrugations for 42-inch and smaller round pipe and 48-inch and smaller arch pipe unless otherwise stated in the plans. Corrugated metal pipes will have 3-inch x 1-inch or 5-inch x 1-inch corrugations for 48-inch and larger round pipe and 54-inch and larger arch pipe unless otherwise stated in the plans.

Areas within the project have soils that are highly corrosive to steel. Corrugated metal pipe in these areas will be polymer coated 14 gauge steel as specified in the Table of Pipe Quantities. Any required connection bands, elbows, tees, crosses, wyes, reducers, and transitions will also be polymer coated. The connection bands will be 24 inches wide. All polymer coated corrugated metal pipe and components will be in conformance with AASHTO M245. Riveted pipe will not be allowed.

All damage to the polymer coating will be repaired in accordance with the manufacturer’s recommendations prior to installation of the pipe.

All costs associated with the polymer coating including repair of polymer coating will be incidental to the corresponding CMP contract items.

Metal pipe end sections connected to polymer coated CMP will be aluminum-coated (Type 2) in accordance with AASHTO M36 as specified in the Table of Pipe Quantities. All costs associated for gauge, coating, and connections will be incidental to the corresponding CMP End Section contract items.

PIPE COVER

The earthen subgrade cover for some pipe installations is less than one foot. The Contractor will take the necessary precautions to ensure the structural properties of the pipes are not damaged after installation and prior to the placement of final surfacing. Any additional costs for preventing damage to these pipes will be incidental to the contract unit price per foot for the corresponding pipe installation contract item.

CONCRETE PIPE CONNECTIONS

Pipe connections to existing pipes, manholes, junction boxes, and drop inlets will be done by breaking a hole into the existing structure and inserting the pipe. A concrete collar will then be poured around the pipe in the area of the connection.

When it is not possible to use a normal pipe joint (male-female ends), connections to existing pipe will be made by placing a 2’ wide by 6" thick M6 concrete collar around the outside of the connection. The concrete collar will be reinforced with 6x6 W2.9 x W2.9 wire mesh.

All costs for constructing the concrete collars including materials and labor will be incidental to the contract unit price per foot for the corresponding pipe contract item.

REMOVAL OF EXISTING CONCRETE PAVEMENT

Existing asphalt concrete and/or existing asphalt concrete patch work that was placed above the existing concrete pavement is included in the quantity for "Remove Concrete Pavement". The Contractor will dispose of the concrete pavement and asphalt concrete at a site approved by the Engineer.

TABLE OF CONCRETE PAVEMENT REMOVAL - PCN 06JQ

Station	to	Station	Description	Quantity (SqYd)
30+28		51+32	SB I-29 Shoulder	2,385.2
36+92		50+84	NB I-29 Shoulder	1,553.2
75+02		105+47	NB I-29 Shoulder	4,101.0
92+10		99+76	SB I-29 Shoulder	1,836.0
22+72		30+07	I-229 Ramp C Shoulder	814.5
			Total:	10,689.9

TABLE OF CONCRETE PAVEMENT REMOVAL - PCN 07D0

Station	to	Station	Description	Quantity (SqYd)
18+75		44+47	I-229 Ramp B Shoulder	377.6
179+84		181+09	NB I-229 Shoulder	166.0
20+00		43+94	I-229 Ramp C Louise	8,454.9
			Total:	8,998.5

TABLE OF ASPHALT CONCRETE PAVEMENT REMOVAL - PCN 07D0

Station	to	Station	Description	Quantity (SqYd)
181+09		183+17	NBL I-229	402.5
20+00		43+94	I-229 Ramp C Louise	7,510.3
			Total:	7,912.8

INCIDENTAL WORK, GRADING - PCN 06JQ

Station	L/R	Remarks
91+82	R	Take Out 30"-22' RCP Culvert & 1 End Section
91+92	R	Take Out 30"-14' RCP Culvert & 1 End Section
311+04	L	Take Out 24"-48' CMP
337+53	R	Remove concrete bollards
403+03	R	Take Out 18"-61' CMP
403+03	R	Take Out 18"-61' CMP
403+96	R	Take Out 12"-108' HDPE (Inside CMP) Take Out 18"-109' CMP
410+51	R	Take Out 12"-45' CMP
412+96	R	Take Out 18"-30' CMP
433+62	L	Take Out 15"-25' Steel Pipe
434+75	L	Take Out 15"-25' CMP

INCIDENTAL WORK, GRADING - PCN 07D0

Station	L/R	Remarks
166+58	R	Take Out 36"-8' RCP & 1 End Section Reset End Section

MISCELLANEOUS WORK - PCN 06JQ

Miscellaneous work will include the removal of existing billboard sign materials and supports. Removal items include but are not limited to wood or other material posts, concrete foundations, other structural materials, conduits, abandoned electrical wiring, and other materials associated with removal of the existing billboard sign. See Table of Billboard Removal - PCN 06JQ for locations.

All billboard signs shall remain erected through February 1, 2026. After February 1, 2026, the entire sign may be removed.

All costs associated with coordination and removal of existing billboard sign materials and supports will be incidental to the contract price per site for "Miscellaneous Work".

TABLE OF BILLBOARD REMOVAL - PCN 06JQ

Station	L/R	Remarks
49+65	R	4-post billboard sign
54+00	R	4-post billboard sign
62+60	R	4-post billboard sign
66+00	R	5-post billboard sign
69+25	R	9-post billboard sign
76+00	L	7-post billboard sign
76+05	R	6-post billboard sign

SLEEPER SLAB DRAIN OUTLET

Existing Sleeper Slab Drain outlet at Station 43+59, 104' R. will need to be extended approximately 8'. Existing outlet pipe consists of 5' of black steel pipe coupled to Corrugated HDPE. Steel pipe will be removed and approximately 13' of 4" PVC Outlet Pipe will be coupled to the HDPE, placed in a trench of variable depth backfilled with soil and daylight at the salvaged outlet headwall as directed by the Engineer.

The PVC Outlet Pipe will be Schedule 40 PVC Pipe conforming to ASTM D1785 designated as PVC 1120, PVC 1220, or PVC 2120. Pipe sections will be connected using a PVC Solvent Cement conforming the ASTM D2564. All labor, tools, equipment, and incidentals necessary for the installation of the drain outlet and resetting outlet headwall will be incidental to the contract unit price per foot for "4" PVC Outlet Pipe".

Care must be taken to ensure that retained drain and outlet pipe are not damaged during construction. Sufficient cover material is to be placed over the pipes before compaction equipment is allowed over the underdrain system. Damaged pipe will be replaced by the contractor at no additional cost to the department.

Outlet trench will be graded to maintain a minimum of 0.01ft/ft. or 1% drop from coupled cutoff drain to outlet headwall. The Contractor will ensure all segments of the outlet pipe are positively connected and remain soil tight during installation. The Outlet Headwall will be placed to blend in with the surrounding topography with the outlet pipe placed the bottom of the drainage to permit proper flow from the outlet.

The headwall will be cleared of topsoil, straw, or other debris after seeding operations have been completed. The as-built headwall locations will be recorded and submitted to the Engineer. The headwall locations will be identified by GPS coordinates, and Station and Offset. The headwall locations will be cataloged in the Sioux Falls Area office for reference in post construction maintenance.

REGISTERED PROFESSIONAL ENGINEER
REG. NO. 15735
JONATHAN R. HULTGREN
SOUTH DAKOTA
9-2-2025

STORM SEWER

Reinforced concrete pipe may be bell and spigot. The pipe sections will be adjoined such that the ends are fully entered and the inner surfaces are reasonably flush and even.

Lift holes in the reinforced concrete pipe will be plugged with grout.

Watertight joints are required for reinforced concrete pipe, drop inlets, manholes, and junction boxes where storm sewers run parallel to and within 10 feet horizontally from existing or proposed water mains.

Watertight joints are required where reinforced concrete pipes, drop inlets, manholes, or junction boxes cross water mains and are separated a distance of 18 inches or less, above or below, the water main.

If watertight joints are required then the watertight joints will extend for a distance of 10 feet beyond the water main. This measurement will be from the sealed concrete joint to the outer most surface of the water main.

Watertight joint seals will conform to the following requirements:

1. Reinforced Concrete Pipe (Circular): Gasketed pipe will conform to the requirements of ASTM C443 and the gasket will be in conformance with Section 990 of the Specifications. Non-gasketed concrete pipe will be sealed with a mastic joint seal conforming to the requirements of ASTM C990 and encased with a minimum 2-foot wide by 6-inch thick M6 concrete collar reinforced with 6x6 W2.9 x W2.9 wire mesh.

2. Reinforced Concrete Pipe (Arch): Gasketed pipe will conform to the requirements of ASTM C443 and the gasket will be in conformance with Section 990 of the Specifications. Non-gasketed concrete pipe joints will be sealed with a hydrophilic flexible water stop seal and wrapped with a 1-foot wide strip of fabric above the cradle. The fabric will conform to the requirements of Section 831 of the Specifications for Type A Drainage Fabric. The hydrophilic flexible water stop will be from the list below.

3. Drop Inlets, Manholes, and Junction Boxes: Joints will be sealed with one of the following methods:

   A. A flexible strip seal placed in the joints conforming to the requirements of ASTM C990 and the perimeter encased with a minimum 2-foot wide by 6-inch thick M6 concrete collar reinforced with 6x6 W2.9 x W2.9 wire mesh.

   B. A hydrophilic flexible water stop seal placed in the joints and a 1-foot wide strip of fabric wrapped around the perimeter of the pipe. The fabric will conform to the requirements of Section 831 of the Specifications for Type A Drainage Fabric. The hydrophilic flexible water stop will be from the list below.

   C. A self-adhesive external joint seal wrap. The seal wrap will be from the list below.

Approved List of Self-adhesive Joint Wrap

Product	Manufacturer
Mar Mac Seal Wrap	Mar Mac Construction Products McBee, SC 843-335-5909 www.marmac.com
ConWrap CS-212	Concrete Sealants, Inc. Tipp City, OH 800-332-7325 http://www.conseal.com

Approved List of Hydrophilic Flexible Water Stop Seal:

Product	Manufacturer
Waterstop RX	Cetco Hoffman Estates, IL 800-527-9948 www.cetco.com
Conseal CS-231	Concrete Sealants, Inc. Tipp City, OH 800-332-7325 http://www.conseal.com

Gaskets and seals (mastic, waterstop, and seal wraps) will be installed in accordance with the Manufacturer's recommendations.

The cost for furnishing and installing all gaskets, mastic joint seal, water stop seal, seal wrap, concrete collars, and for plugging the lift holes will be incidental to the contract unit price per foot for the corresponding pipe contract item.

EXPANDED POLYSTYRENE (EPS) FOAM

Due to the type of spiral pipe used for the Lewis & Clark Rural Water System pipeline, Expanded Polystyrene (EPS) Foam will be used as a fill material in areas of excessive fill over the existing pipe to provide a pipe deflection of 2 percent or less. These areas are identified in the plans on Ramp B, Ramp C, and the proposed 85th Street Trail.

In the area of the proposed ramps, EPS Foam will have variable thickness and installed from 9' above the 36" water main to 4' below the finished subgrade level, excluding any unstable fill material that has been stockpiled in the area of the proposed ramps. Adjustments to limits and height will be allowed to maintain 4' of earthen cover over the EPS Foam.

In the area of the proposed Trail, EPS Foam will have variable thickness and installed from 5' above the 36" water main to 4' below the finished subgrade, excluding any unstable fill material that has been stockpiled in the area of the proposed Trail. Adjustments to limits and height will be allowed to maintain 4' of earthen cover over EPS Foam.

See special provisions for more information on the EPS Foam.

The top and all sides of the EPS Foam will be covered with EPS Geomembrane for added protection. See special provisions for more information on the EPS Geomembrane.

All cost associated with the placement of the EPS Geomembrane material shall be included in the contract unit price per square yard for "EPS Geomembrane".

All cost associated with the placement of the EPS Foam material shall be included in the contract unit price per cubic yard for "Expanded Polystyrene (EPS) Foam".

TABLE OF EPS FOAM FILL, GRANULAR MATERIAL, & EPS GEOMEMBRANE

Station	EPS Foam (CuYd)	Granular Material (CuYd)	EPS Geomembrane (SqYd)
Ramp B Sta. 34+40	3856	898	2381
Ramp C Sta. 44+93	3333	777	2064
EB85TH Sta. 325+85 to 326+65 (Trail)	747	328	874
Total	7936	2003	5319

REGISTERED PROFESSIONAL ENGINEER
REG. NO. 15735
JONATHAN R. HULTGREN
SOUTH DAKOTA
7-23-2025

UNDERDRAIN PIPE

The underdrain pipe material and installation shall be per SDDOT Standard specifications Section 680 and as shown on plans.

The underdrain pipe shall be Perforated Corrugated Polyethylene Drainage Tubing that meets the requirements as set forth in SDDOT Standard Specifications Section 680. The underdrain pipe shall have a sock wrap material installed around the pipe.

The porous backfill for the underdrain pipe trench shall be washed natural rock meeting the gradation requirements of type “Size 1A” as specified in Section 820 – Course Aggregate for use in Portland Cement Concrete of the SDDOT Standard Specifications for Roads and Bridges, Current Edition.

The drainage fabric wrap around the underdrain pipe trench shall be Type B Drainage Fabric material that meets the requirements set forth in SDDOT Standard Specifications Section 831.

The underdrain pipe shall empty into the storm sewer inlets along 85th Street the underdrain pipe is serving. The underdrain pipe shall be cast into the storm sewer inlets with an elevation approved by the Engineer. Within the inlet, the ends of the underdrain pipe shall have rodent guards installed over the pipe end, at the interface of the underdrain pipe and storm sewer inlet wall. The rodent guard shall cover the entire opening in the drop inlet.

The underdrain pipe shall empty into the ditch along I-29 and the pedestrian trail area for the underdrain pipe that is under the EPS foam.

All costs for the underdrain pipe shall be included in the contract unit price per linear foot for “6” Corrugated Polyethylene Drainage Tubing”. This shall include, but not be limited to, the following items:

- 6” underdrain pipe
- Sock wrap
- Porous backfill
- Drainage fabric wrap around porous backfill
- Trenching and backfilling
- Connecting to storm sewer inlets
- Rodent guards installed within storm inlets
- All other appurtenances, equipment, materials and labor to furnish and install the underdrain pipe

AGGREGATE COLUMNS

The proposed approach embankments are underlain by 25 to 30 feet of brown sandy clay, overlying brown to gray silt clay.

The purpose of the aggregate columns is to provide additional bearing capacity, decrease total settlement, and decrease settlement time. To minimize post-construction settlement, it is imperative that construction activities are sequenced in a manner that prioritizes aggregate column installation and loading as early as possible.

Aggregate column foundation improvement limits for the west approach begin at station 316+00 37Rt and 316+41 96 Lt, and end at approximately station 318+80 46Lt to 104Rt along centerline of east bound 85th street. Aggregate column foundation improvement limits for the east approach begin at approximately 321+75 56 Lt to 104 Rt, and end at 324+70 113 Lt to 47 Rt. There will be additional aggregate columns for the box culvert starting at 323+76 146Lt to 324+20 150Lt and from 324+44 68Rt to 324+68 64Rt on centerline of east bound 85th Street. The foundation improvement limits are shown on the Site Plan and Subsurface Profile sheet.

On the east side of I29 prior to beginning installation of aggregate columns, create a working platform by excavating the foundation improvement plan area to an elevation of 1515’ or until over saturated unstable material is removed and place granular backfill to an elevation of 1517’. The granular material that will conform to the requirements of Aggregate Base Course in Section 882 of the Standard Specifications, placed in 6-inch lifts and compacted according to section 260.3.B of the Standard Specifications.

On the west side of I29 prior to beginning installation of aggregate columns, create a working platform by excavating the foundation improvement plan area by removing 2 foot of material below current ground line and backfill with 1 foot with granular material that will conform to the requirements of Aggregate Base Course in Section 882 of the Standard Specifications.

Measurements of foundation improvement excavation area are based on the existing groundline, establishing the required elevations will be the responsibility of the Contractor.

The estimated quantity of 5,013 cubic yards (9,474.6 tons) of aggregate base course will be paid for at the contract unit price per ton for “Base Course”.

Pertinent design parameters for in-situ soils and backfill materials are included on the Site Plan and Subsurface Profile.

Aggregate Column Reinforcement design and construction will conform to the requirements of the Special Provisions.

The design of aggregate columns by the aggregate column Contractor will take into account the location of all in place utilities and the location of all aspects of the bridge abutments; including, but not limited to the piling. Aggregate columns will have a minimum 4 feet clear distance from the bridge piling and utilities. The existing PVC water line on the north edge of both foundation improvement areas will be abandoned and does not need to be considered for design purposes.

The aggregate column designer will use the soil parameters provided in the plans unless prior communication and approval has been provided through the SDDOT Geotechnical Engineering Activity.

Quantities for granular material for the aggregate columns provided in the plans are an estimate based on the dimensions of the treatment areas, a projected column diameter of 30 inches, initial column spacing of 8 feet center to center, and initial projected depths of 16 feet. The initial quantity of 4,031 cubic yards of material is only an estimate based on these values. The aggregate column designer will determine actual quantities, spacing, depth, and all other design aspects of the aggregate column foundation improvements. Calculations including the actual volume of granular material expected will be included with the shop plans and submitted to the Department for review.

Caving soils and groundwater may be encountered. The contractor will have proper equipment and materials on site and available for use, including, but not limited to, temporary casing, dewatering equipment, etc.

DROP INLETS

Where drop inlets are constructed within areas of curb and gutter, the Contractor will construct weep holes of at least 3 inches in diameter in the drop inlet walls. The weep holes will be constructed at the same elevation as the adjacent top of the earthen subgrade and will be maintained clean and open at all times until the permanent surfacing is placed. The drop inlets will be covered throughout construction operations as necessary with an Engineer approved cover to provide safe travel for motorists and to prevent materials from entering the storm sewer system. After the permanent surfacing has been placed, the Contractor will seal the weep holes with grout and remove all debris from the drop inlet. All costs involved with the coverings, weep holes, and removing debris from the drop inlets will be incidental to the contract unit prices for the components of the drop inlets.

The plan shown quantities of the drop inlet components such as Class M6 Concrete, Reinforcing Steel, City of Sioux Falls Type V Frame and Grate, City of Sioux Falls Type Y Frame and Grate, SDDOT Type B Frame and Grate and SDDOT Type A Frame and Grate, will be the basis of payment for these items.

If additions or reductions to the number of drop inlets are ordered by the Engineer, payment for the components required to construct the drop inlets will be made at the contract unit prices for the components of the drop inlets.

9” PCC FILLET SECTIONS

Payment for “9” PCC Fillet Section” will be based on plans quantity. If additions or reductions to the area of PCC fillet sections are ordered by the Engineer, payment will be made in accordance with the contract unit price per square yard for “9” PCC Fillet Section”.

MAILBOXES

The Contractor will reset the existing mailboxes on new posts with the necessary support hardware for single mailbox assemblies. The local Postmaster will determine the recommended mounting height of the mailboxes throughout the project. The Contractor will coordinate with the Engineer on the proper postal representative to contact.

All costs for removing existing mailboxes, providing temporary mailboxes, and resetting mailboxes with new posts and necessary support hardware will be incidental to the contract unit price per each for “Refurbish Single Mailbox”.

Single mailbox will be refurbished at WB85TH Sta. 404+58 L.

REGISTERED PROFESSIONAL ENGINEER
REG. NO. 15735
JONATHAN R. HULTGREN
SOUTH DAKOTA
5-16-2025

TABLE OF RIPRAP AND DRAINAGE FABRIC (06JQ)

Alignment	Station	L/R	Class B Riprap (Ton)	Type B Drainage Fabric (SqYd)
EB85TH	301+46	L	16	24
EB85TH	302+64	L	16	24
EB85TH	302+80	L	16	24
EB85TH	311+88	L	16	24
EB85TH	312+02	L	16	24
EB85TH	319+00	L	16	24
EB85TH	321+36	L	16	24
TRAIL	12+61	R	16	24
TRAIL	15+49	R	16	24
EB85TH	333+49	L	70	81
RAMPA	12+11	L	16	24
RAMPA	14+03	L	16	24
RAMPA	15+65	L	16	24
RAMPB	31+99	L	16	24
RAMPB	34+44	L	16	24
RAMPC	44+92	R	16	24
RAMPD	41+17	R	16	24
RAMPD	46+00	R	16	24
RAMPD	47+49	R	16	24
RAMPD	58+96	R	16	24
RAMPD	59+10	R	16	24
RAMPD	61+45	L	16	24
RAMPD	63+46	L	16	24
RAMPD	65+48	L	16	24
RAMPD_CONN	78+44	L	16	24
	Subtotal (06JQ)		**454**	**657**

TABLE OF RIPRAP AND DRAINAGE FABRIC (07D0)

Alignment	Station	L/R	Class B Riprap (Ton)	Type B Drainage Fabric (SqYd)
229RAMPB	24+59	R	16	24
229RAMPB	35+81	R	23	32
	Subtotal (07D0)		**39**	**56**
	Total (06JQ & 07D0)		**493**	**713**

TYPE 1 DETECTABLE WARNINGS

Detectable warnings will be in compliance with the Americans with Disabilities Act regulations.

The detectable warnings will be installed according to the manufacturer's installation instructions.

A concrete thickness equal to the adjacent concrete sidewalk thickness and 2 inches of granular cushion material will be placed below the Type 1 Detectable Warnings. When concrete is placed below the detectable warnings then the concrete thickness will be transitioned at the rate of 1" per foot to match the adjacent concrete sidewalk thickness. The detectable warnings will be cast iron plates of natural patina (weathered steel).

Type 1 Detectable Warning Panels will be one of the following products:

Type 1 Detectable Warnings

Product	Manufacturer
Detectable Warning Plate Cast Iron Plate	Neenah Foundry Company Neenah, WI 800-558-5075 http://www.neenahfoundry.com/
Detectable Warning Plate Cast Iron Plate	Deeter Foundry Lincoln, NE 800-234-7466 http://www.deeter.com/
Detectable Warning Plate Cast Iron Plate(No Coating)	East Jordan Iron Works, Inc. 301 Spring Street East Jordan, MI 49727 800-626-4653 http://www.ejiw.com

Type 1 Detectable Warnings will be installed along a radius at the locations as shown in the plans. The radius necessary will be as shown in the plans. Payment for the radius detectable warnings will be at the contract unit price per square foot for "Type 1 Detectable Warnings".

Type 1 Detectable Warning Panels with a radius will be one of the following products:

Type 1 Detectable Warnings (Radius)

Product	Manufacturer
Detectable Warning Plate Cast Iron Plate 9'-5", 15', 20', 25', 35' Radius	Neenah Foundry Company Neenah, WI 800-558-5075 http://www.neenahfoundry.com/
Detectable Warning Plate Cast Iron Plate (No Coating) 10', 15', 17.5', 20', 25', 30', 35' Radius	East Jordan Iron Works, Inc. 301 Spring Street East Jordan, MI 49727 800-626-4653 http://www.ejiw.com

CLEAR AND GRUB TREE - PCN 06JQ

Trees will be removed during winter of 2025 (November - April). See Section A for additional information related to existing ash trees.

See Table of Clear and Grub Tree (>6" Diameter) - PCN 06JQ for locations.

REGISTERED PROFESSIONAL ENGINEER
REG. NO. 15735
JONATHAN R. HULTGREN
SOUTH DAKOTA
8-14-2025

FOR BIDDING PURPOSES ONLY

TABLE OF GUARDRAIL

Location	Remove High Tension 4 Cable Guardrail (Ft)	Remove High Tension 4 Cable Guardrail Anchor Assembly (Each)	High Tension Cable Guardrail (Ft)	High Tension Cable Guardrail Anchor Assembly (Each)	Type 1 MGS (Ft)	Type 1 Guardrail Transition (Each)	MGS MASH Tangent End Terminal (Each)	MGS MASH Trailing End Terminal (Each)
PCN 06JQ								
I-29 NBL								
Sta. 44+93 to Sta. 47+59 R					187.5		1	1
Sta. 59+61 to Sta. 62+14 R					175.0		1	1
Sta. 59+54 to Sta. 63+58 Median					287.5		1	1
Sta. 76+46 to Sta. 79+71 R			250	2				
Sta. 84+88 to Sta. 87+46 R					175.0		1	1
Sta. 85+31 to Sta. 87+60 Median					150.0		1	1
I-29 SBL								
Sta. 30+24 to Sta. 41+78 Median			1,080	2				
Sta. 39+42 to Sta. 42+67 L			248	2				
Sta. 41+18 to Sta. 44+40 L	325	2						
Sta. 45+28 to Sta. 66+95 Median			2,090	2				
Sta. 71+36 to Sta. 106+22 Median			3,370	2				
Sta. 99+48 to Sta. 101+89 L					150.0		1	1
Structure No. 42-065-016 over I-229 Ramp C								
End Bridge L					162.5	1	1	
I-229 Ramp C								
Sta. 26+59 to Sta. 29+11 L					175.0		1	1
Sta. 26+59 to Sta. 29+76 R					240.0		1	1
Sta. 62+34 to Sta. 64+50 Median	37	1	190	1				
PCN 06JQ Totals	**362**	**3**	**7,228**	**11**	**1,702.5**	**1**	**9**	**8**
PCN 07D0								
I-229 NB								
Sta. 178+00 to Sta. 180+42 R			227	2				
PCN 07D0 Totals	**0**	**0**	**227**	**2**	**0.0**	**0**	**0**	**0**

REGISTERED PROFESSIONAL ENGINEER
REG. NO. 15735
JONATHAN R. HULTGREN
SOUTH DAKOTA
7-23-2025

PERMANENT CONCRETE BARRIER END PROTECTION

The Contractor will provide a permanent concrete barrier end protection crash cushion from the Approved Products List (APL). The Contractor will be responsible for selecting a crash cushion from the APL that is appropriate width to protect the concrete barrier (or other hazard). If the crash cushion selected requires system specified transition panels to obtain the appropriate width, no additional payment will be made for the transition panels. Only one type of crash cushion will be used on a project; however, if conditions warrant a need for using more than one type of crash cushion on a project, then the Contractor will submit a proposal to the Engineer for approval. The approved products list may be viewed at the following internet site:

https://apps.sd.gov/HC60ApprovedProducts/main.aspx

The anchoring pad for the crash cushion will at a minimum be an 8-inch-thick PCC pavement that meets the requirements of Class M6 concrete. The pad will be in accordance with the Manufacturer's recommendations if the pad needs to have thicker pavement and/or a footing.

Documentation on the crash cushion, which includes the drawing details of the crash cushion, details for the transition to the concrete barrier, and details for the concrete anchoring pad, will be provided to the Project Engineer at the pre-construction meeting.

The crash cushion will be attached to the concrete barrier with a transition that meets test level 3 requirements of MASH at locations shown below in the Table of Permanent Concrete Barrier End Protection. For unidirectional traffic, the transition piece will be placed on the side of the cushion and barrier that is adjacent to the traffic. For bidirectional traffic, the transition will be placed on both sides of the crash cushion and barrier.

The Contractor will certify that the crash cushion was installed according to the Manufacturer's installation instructions.

All costs for furnishing and installing the crash cushion including the anchoring pad, anchors for connection to the pad, transitions to the concrete barrier (if required), strut backup, materials, labor, equipment, and incidental items will be paid for at the contract unit price per each for "Concrete Barrier End Protection".

TABLE OF PERMANENT CONCRETE BARRIER END PROTECTION

Station	Location	Unidirectional/ Bidirectional	Quantity (Each)
I-29 SB 94+30	L	Unidirectional	1
		PCN 06JQ Total	1

HIGH TENSION CABLE GUARDRAIL

The Contractor will furnish and install a high tension cable guardrail system that meets the Test Level 3 crash testing requirements of the Manual for Assessing Safety Hardware (MASH). The maximum dynamic deflection of the system will be less than 10'-0" and the maximum post spacing will be 10'-6" unless specified otherwise in the plans. High Tension 4 Cable Guardrail will be one of the following products:

Valtir (Trinity) – CASS S3 M10
Brifen – 4 Rope O-Post System

The Contractor will install the system according to the manufacturer's installation recommendations except where stated otherwise in the plans. A copy of the detail drawings and installation instructions for the high tension cable guardrail and anchor assemblies will be given to the Engineer a minimum of 4 weeks prior to installation of the high tension cable guardrail system.

All posts will be galvanized and inserted into driven galvanized steel sleeves with soil plates. The driven sleeves must be designed for a minimum frost depth of 42" and to resist the additional lateral component of curved cable sections.

Delineation of the high tension cable guardrail will be in conformance with standard plate 632.40.

The cables provided will be pre-stretched in the factory.

The Contractor will check and adjust the tension of the cables a minimum of 3 weeks after installation and not longer than 6 weeks after installation. Cost for this work will be incidental to the contract unit price per foot for "High Tension 4 Cable Guardrail".

High tension cable guardrail will be installed on a 10:1 or flatter slope and the embankment limits will match the high tension cable guardrail limits. The embankment quantities may vary from plans quantity.

The lengths of high tension cable guardrail stated in the plans are based on a minimum effective length (length of need). The length and location of the high tension cable guardrail at each site will need to be adjusted during construction as necessary depending on the system provided and will be approved by the Design Engineer before installation. When the Valtir (Trinity) CASS S3 M10 system is installed adjacent to one-way traffic roadways, 26' of the anchor assembly on the approach end is considered non-effective, and 51' on the non-approach end is considered non-effective; however, when the same system is installed adjacent to two-way traffic roadways, 26' of the anchor assembly on both the approach and non-approach ends is considered non-effective. For Brifen 4 Rope O-Post System installations, the anchor assembly is non-effective.

The Contractor will provide a signed letter of compliance to the Engineer upon completion of the high tension cable guardrail installation(s) stating that the high tension cable barrier system has been installed in conformance to the manufacturer installation instructions and specifications, meets the Test Level 3 crash test requirements of MASH, and is terminated with an approved anchor assembly.

The high tension cable guardrail will be measured along the centerline of the cable guardrail from the beginning to the end of the minimum effective length.

All costs for furnishing and installing the high tension cable guardrail system including all labor, materials, and equipment will be incidental to the contract unit price per foot for "High Tension 4 Cable Guardrail".

HIGH TENSION CABLE GUARDRAIL ANCHOR ASSEMBLY

The beginning and end of each "run" of high tension cable guardrail will terminate with an anchor assembly. The High Tension Cable Anchor Assemblies will be one of the following products:

Valtir (Trinity) – CASS Cable Terminal (CCT)
Brifen – MASH Gating Terminal (MGT)

The footing(s) for the anchor assembly will be designed to allow for 1 inch maximum of lateral deflection. The allowable design soil pressure will be 1000 psf. The top 2 feet of soil pressure will be neglected in the design of the footing(s). The footing(s) will be a minimum of 5' deep. The footing(s) design will be submitted through proper channels to the Office of Bridge Design for a one-time approval. Any changes to the anchor assembly that could affect footing size including configuration changes such as different number of cables and different number of footings will be resubmitted for approval. The approval will be obtained a minimum of 4 weeks prior to construction of the anchor footing(s).

Delineation of the high tension cable guardrail anchor assembly will be in conformance with standard plate 632.40.

All costs for furnishing and installing the High Tension Cable Guardrail Anchor Assembly including all labor, equipment, and materials which include the anchor footing(s), hardware, and all attachments to the anchor footing(s), will be incidental to the contract unit price per each for "High Tension Cable Guardrail Anchor Assembly".

FURNISH HIGH TENSION CABLE GUARDRAIL POST AND SLEEVE

The Contractor will furnish an additional 50 galvanized posts with all necessary hardware and accessories to complete the post installation, 50 sleeves with soil plates, and 50 caps or cable spacers with back to back yellow reflective sheeting and will deliver and stockpile the materials at the DOT Area Maintenance Yard located off Interstate 90 in Sioux Falls. The posts and sleeves will be the same type of posts and sleeves provided in the installation of the high tension cable guardrail on the project.

All costs for furnishing the posts, hardware, sleeves with soil plates, caps, cable spacers, and delivering them to the Sioux Falls Area Maintenance Yard will be incidental to the contract unit price per each for "Furnish High Tension Cable Guardrail Post and Sleeve".

REGISTERED PROFESSIONAL ENGINEER
REG. NO. 15736
JONATHAN R. HULTGREN
SOUTH DAKOTA
5-16-2025

PUBLIC LANDS SURVEY SYSTEM, RIGHT OF WAY, AND PROPERTY CORNERS

The Contractor will have a Land Surveyor, licensed in the State of South Dakota, to set, reestablish or verify public land survey system (PLSS) corners, right of way (ROW) corners, and property corners as directed by the appropriate SDDOT Region Land Surveyor. It is estimated that 0 PLSS corners and 62 ROW and property corners will be set, reestablished, or verified for this project. The Contractor's Land Surveyor, under the direction of the Region Land Surveyor, will set, reestablish, or verify all corner monuments after surfacing and fencing operations are completed in accordance with the PUBLIC LANDS SURVEY SYSTEM CORNERS section and the RIGHT OF WAY AND PROPERTY CORNERS section in Chapter 8 of the SDDOT Survey Manual.

< https://dot.sd.gov/doing-business/engineering/design-services/surveyors >

All costs associated with furnishing and installing PLSS caps, rebar, and all other materials associated with setting, reestablishing, or verifying PLSS, ROW corners, and property corners in accordance with the SDDOT Survey Manual will be incidental to the contract unit price per each for "Reestablish Public Land Survey System Corner" and/or "Reestablish Right-of-Way and Property Corner".

TABLE OF CLEARING – PCN 06JQ

Station		Station	L/R	Quantity (Acre)
EB85TH				
316+31	to	317+46	L	0.08
317+94	to	318+32	L	0.03
323+84	to	329+88	L/R	0.24
337+87	to	339+27	L	0.05
338+58	to	339+26	L	0.09
I-29				
65+94	to	68+22	L	0.14
RAMPD_CONN				
75+03	to	78+69	L/R	0.10
			Total:	**0.7**

TABLE OF CLEAR AND GRUB TREE (>6" DIAMETER) – PCN 06JQ

Station	L/R	Quantity (Each)
EB85TH		
299+46	L	1
301+88	R	1
302+41	R	1
303+37	L	3
303+55	L	1
303+61	L	1
303+67	L	1
303+79	L	1
303+85	L	1
303+91	L	1
304+08	L	1
304+30	R	1
304+63	L	1
304+69	L	1
304+74	R	1
304+75	L	1
304+80	L	2
312+30	L	6
314+46	L	1
314+54	L	1
314+60	L	3
318+35	L	1
321+68	L	1
322+62	L	1
324+95	L	1
329+09	R	4
329+40	L	1
330+22	L	1
330+43	L	1
330+51	L	2
330+60	L	1
330+71	L	2
330+95	L	1
331+20	L	1
331+33	L	1
331+36	R	1
331+59	L	1
331+84	L	2
332+35	L	1
332+58	L	1
332+78	L	1
333+14	L	5
333+30	L	8
333+40	L	3
333+55	L	1
333+60	L	1
333+70	L	2
334+00	L	3
334+25	L	1
334+32	L	1
334+46	L	4
334+74	L	1
334+87	L	2
334+97	L	1
335+16	L	1
335+20	L	3
335+39	L	1
335+50	L	2
335+67	L	1
335+95	L	1
336+03	L	1
336+07	L	1
336+10	L	1
336+45	L	1
336+49	L	1
336+51	L	1
336+59	L	1
336+79	L	1
336+90	L	3
337+33	L	2
337+39	L	1
337+41	L	1
337+51	R	2
337+69	L	2
337+80	L	4
338+65	L	3
338+78	L	1
338+85	L	2
339+07	L	2
I-29		
65+98	R	1
69+17	R	2
69+26	R	1
69+42	R	2
70+06	L	1
70+62	L	1
80+19	L	1
RAMPD_CONN		
77+83	R	1
77+98	R	1
78+22	R	1
79+43	R	1
79+62	L	1
79+86	R	1
80+01	L	1
80+20	L	1
80+28	L	1
80+38	L	1
80+57	L	1
80+61	L	1
80+65	L	3
80+73	L	1
80+81	L	1
80+89	L	1
81+04	L	1
81+55	L	2
81+65	L	1
81+78	L	1
82+10	L	1
82+31	L	1
82+66	L	1
82+76	L	1
82+82	L	1
82+91	L	1
83+02	L	1
	Total:	**169**

REGISTERED PROFESSIONAL ENGINEER
REG. NO. 15735
JONATHAN R. HULTGREN
SOUTH DAKOTA
7-23-2025

TABLE OF CONSTRUCTION STAKING FOR PROJECT EM 0292(88)73 - PCN 06JQ

(See Special Provision for Contractor Staking)

Roadw ay and Description	Begin Station	End Station	Number of Lanes	Length (Ft)	Grade Staking Length (Mile)	Grade Staking Lane Factor	Grade Staking *Sets of Stakes	Grade Staking **Grade Staking Quantity (Mile)	Miscellaneous Staking Quantity (Mile)	Slope Staking Quantity (Mile)	Final Cross Section Survey Quantity (Mile)	Structure Staking Quantity (Each)
SB I-29 Mainline (1 Lane PCCP)	30+28	47+58	1	1,730	0.328	0.5	2	0.328	0.328	0.328	0.328	
NB I-29 Mainline (1 Lane PCCP)	36+92	47+32	1	1,040	0.197	0.5	2	0.197	0.197	0.197	0.197	
NB I-29 Mainline (1 Lane PCCP)	78+77	105+47	1	2,670	0.506	0.5	2	0.506	0.506	0.506	0.506	
Ramp A (2 Lanes PCCP)	10+00	17+37	2	737	0.140	1	2	0.279	0.279	0.279	0.279	
Ramp A (Transition from 2 Lanes to 1 Lane PCCP)	17+37	23+38	2	601	0.114	1	2	0.228	0.228	0.228	0.228	
Ramp A (1 Lane PCCP)	23+38	26+21	1	283	0.054	0.5	2	0.054	0.054	0.054	0.054	
Ramp B (1 Lane PCCP)	20+00	29+65	1	965	0.183	0.5	2	0.183	0.183	0.183	0.183	
Ramp B (Transition from 1 Lane to 2 Lanes PCCP)	29+65	30+95	2	130	0.025	1	2	0.049	0.049	0.049	0.049	
Ramp B (2 Lanes PCCP)	30+95	34+13	2	318	0.060	1	2	0.120	0.120	0.120	0.120	
Ramp B (1 Lane PCCP)	34+13	35+77	1	164	0.031	0.5	2	0.031	0.031	0.031	0.031	
Ramp C (1 Lane PCCP)	30+00	45+80	1	1,580	0.299	0.5	2	0.299	0.299	0.299	0.299	
Ramp D (1 Lane PCCP)	40+00	41+90	1	190	0.036	0.5	2	0.036	0.036	0.036	0.036	
Ramp D (3 Lanes PCCP)	41+90	46+32	3	442	0.084	1.5	2	0.251	0.251	0.251	0.251	
Ramp D (Transition from 3 Lanes to 2 Lanes PCCP)	46+32	47+51	3	119	0.023	1.5	2	0.068	0.068	0.068	0.068	
Ramp D (2 Lanes PCCP)	47+51	54+17	2	666	0.126	1	2	0.252	0.252	0.252	0.252	
Ramp D (1 Lane PCCP)	54+17	60+09	1	592	0.112	0.5	2	0.112	0.112	0.112	0.112	
Ramp D (Str. No. 42-065-016)	60+09	64+03										1
Ramp D (M.S.E Retaining Wall)	63+38	70+00										1
Ramp D (1 Lane PCCP)	64+03	77+28	1	1,325	0.251	0.5	2	0.251	0.251	0.251	0.251	
Ramp D Conn (1 Lane PCCP)	70+00	86+53	1	1,653	0.313	0.5	2	0.313	0.313	0.313	0.313	
Ramp E (1 Lane PCCP)	1+00	3+87	1	287	0.054	0.5	2	0.054	0.054	0.054	0.054	
Ramp F (1 Lane PCCP)	2+00	3+74	1	174	0.033	0.5	2	0.033	0.033	0.033	0.033	
Ramp G (1 Lane PCCP)	3+00	5+85	1	285	0.054	0.5	2	0.054	0.054	0.054	0.054	
Ramp H (2 Lanes PCCP)	4+00	6+14	2	214	0.041	1	2	0.081	0.081	0.081	0.081	
I-229 Ramp C (1 Lane PCCP)	28+84	30+07	1	123	0.023	0.5	2	0.023	0.023	0.023	0.023	
EB 85th Street (2 Lanes PCCP)	299+35	302+54	2	319	0.060	1	2	0.121	0.121	0.121	0.121	
EB 85th Street (Transition from 2 Lanes to 4 Lanes PCCP)	302+54	303+74	4	120	0.023	2	2	0.091	0.091	0.091	0.091	
EB 85th Street (4 Lanes PCCP)	303+74	305+64	4	190	0.036	2	2	0.144	0.144	0.144	0.144	
EB 85th Street (2 Lanes PCCP)	305+64	313+18	2	754	0.143	1	2	0.286	0.286	0.286	0.286	
EB 85th Street (Transition from 2 Lanes to 4 Lanes PCCP)	313+18	314+92	4	174	0.033	2	2	0.132	0.132	0.132	0.132	
EB 85th Street (4 Lanes PCCP)	314+92	315+29	4	37	0.007	2	2	0.028	0.028	0.028	0.028	
EB 85th Street (3 Lanes PCCP)	315+29	318+60	3	331	0.063	1.5	2	0.188	0.188	0.188	0.188	
EB 85th Street (Str. No. 42-065-020)	318+60	321+75										1
EB 85th Street (2 Lanes PCCP)	321+75	330+68	2	893	0.169	1	2	0.338	0.338	0.338	0.338	
EB 85th Street (Str. No. 42-066-020)	324+46											1
EB 85th Street (Transition from 2 Lanes to 4 Lanes PCCP)	330+68	331+88	4	120	0.023	2	2	0.091	0.091	0.091	0.091	
EB 85th Street (4 Lanes PCCP)	331+88	333+81	4	193	0.037	2	2	0.146	0.146	0.146	0.146	
EB 85th Street (3 Lanes PCCP)	333+81	339+30	3	549	0.104	1.5	2	0.312	0.312	0.312	0.312	
WB 85th Street (2 Lanes PCCP)	339+34	406+50	2	6,716	1.272	1	2	2.544	2.544	2.544	2.544	
WB 85th Street (4 Lanes PCCP)	406+50	408+77	4	227	0.043	2	2	0.172	0.172	0.172	0.172	
WB 85th Street (Transition from 4 Lanes to 2 Lanes PCCP)	408+77	409+97	4	120	0.023	2	2	0.091	0.091	0.091	0.091	
WB 85th Street (2 Lanes PCCP)	409+97	418+58	2	861	0.163	1	2	0.326	0.326	0.326	0.326	
WB 85th Street (2 Lanes PCCP)	421+74	434+63	2	1,289	0.244	1	2	0.488	0.488	0.488	0.488	
WB 85th Street (4 Lanes PCCP)	434+63	438+06	4	343	0.065	2	2	0.260	0.260	0.260	0.260	
WB 85th Street (Transition from 4 Lanes to 3 Lanes PCCP)	438+06	439+30	4	124	0.023	2	2	0.094	0.094	0.094	0.094	
							Totals:	9.654	9.654	9.654	9.654	4

* 1 = Blue Top Stakes Only (Asphalt Concrete Pavement)
2 = Blue Top and Paving Hub Stakes (PCC Pavement)

** Grade Staking Quantity = (Length) x (Lane Factor) x (Sets of Stakes)

REGISTERED PROFESSIONAL ENGINEER
REG. NO. 15735
JONATHAN R. HULTGREN
SOUTH DAKOTA
5-16-2025

FOR BIDDING PURPOSES ONLY

TABLE OF CONSTRUCTION STAKING FOR PROJECT IM 2292(104)0 - PCN 07D0

(See Special Provision for Contractor Staking)

Roadw ay and Description	Begin Station	End Station	Number of Lanes	Length (Ft)	Grade Staking: Length (Mile)	Grade Staking: Lane Factor	Grade Staking: *Sets of Stakes	Grade Staking: **Grade Staking Quantity (Mile)	Miscellaneous Staking Quantity (Mile)	Slope Staking Quantity (Mile)	Final Cross Section Survey Quantity (Mile)
I-229 NB Ramp B (1 Lane PCCP)	19+34	46+55	1	2,721	0.515	0.5	2	0.515	0.515	0.515	0.515
I-229 NB Mainline (1 Lane PCCP)	154+86	186+63	1	3,177	0.602	0.5	2	0.602	0.602	0.602	0.602
I-229 Ramp C Louise (1 Lane PCCP)	20+00	36+68	1	1,668	0.316	0.5	2	0.316	0.316	0.316	0.316
I-229 Ramp C Louise (Transition from 1 Lane to 3 Lane PCCP)	36+68	42+66	3	598	0.113	1.5	2	0.340	0.340	0.340	0.340
I-229 Ramp C Louise (2 Lanes PCCP)	42+66	43+88	2	122	0.023	1	2	0.046	0.046	0.046	0.046
I-229 Ramp C Louise RT Turn (1 Lane PCCP)	42+66	43+93	1	127	0.024	0.5	2	0.024	0.024	0.024	0.024
							Totals:	1.843	1.843	1.843	1.843

* 1 = Blue Top Stakes Only (Asphalt Concrete Pavement)
2 = Blue Top and Paving Hub Stakes (PCC Pavement)

** Grade Staking Quantity = (Length) x (Lane Factor) x (Sets of Stakes)

REGISTERED PROFESSIONAL ENGINEER
REG. NO. 15735
JONATHAN R. HULTGREN
SOUTH DAKOTA
5-16-2025

PAVEMENT, CURB AND GUTTER, AND SIDEWALK QUANTITIES

FOR BIDDING PURPOSES ONLY

SD DOT	PROJECT	SHEET	TOTAL SHEETS
Plotting Date: 04/15/2025	EM 0292(88)73 IM 2292(104)0	B19	B182

Station to Station		Concrete Curb & Gutter				Concrete Sidewalk	Detectable Warning	PCC Fillet Section
		Type B		Type BL			Type 1	
		69	SF69 Special	69.5	SF69 Special	6"		9"
		Ft	Ft	Ft	Ft	SqFt	SqFt	SqYd
EM 0292(88)73 - PCN 06JQ								
EB85TH								
299+35, 11' R	305+58, 23' R		623.6			6,221.3		
299+35, 11' L	305+64, 38' L				1,267.0			
304+87, 14' L	307+67, 33' L				285.0	413.2	32.0	
304+87, 20' L	307+67, 42' L				285.0			
307+18, 11' R	315+29, 22' R		719.5	90.9		8,024.9		
306+87, 15' L	316+40, 29' L				1,898.0			
317+66, 16' R	318+00, 13' R	68.9				200.8	39.5	
322+33, 13' R	322+69, 16' R	69.0				213.0	39.4	
324+47, 13' R	333+72, 22' R		925.8			9,196.8		
323+74, 16' L	333+81, 39' L				2,017.1			
332+96, 14' L	335+61, 34' L				271.0	377.4	32.0	
332+96, 20' L	335+61, 43' L				271.0			
335+41, 22' R	339+30, 22' R		388.8			2,682.5		
334+84, 15' L	339+30, 11' L				899.7			
WB85TH								
399+35, 3' L	405+50, 11' L		618.8			4,693.0		
406+93, 22' L	415+67, 16' L		876.2			6,953.2		
415+67, 16' L	416+09, 35' L			49.7		399.6		
424+31, 32' L	433+53, 11' L		929.4			7,398.2		
435+05, 22' L	439+29, 22' L		423.8			2,938.1		
ENT_NE								
5+11, 85' L	6+29, 25' L		148.4			1,133.0	20.0	
5+22, 67' R	6+29, 25' R		131.0			893.2	43.8	43.4
5+11, 30', L	6+29, 5' L		262.1			152.4	26.7	
ENT_SE								
6+00, 24' L	7+16, 67' L		140.5			1,351.8	20.0	
6+00, 25' R	7+16, 102' R		160.5			1,083.6	45.0	
6+00, 5' R	7+27, 26' R		299.4			195.5	20.0	
ENT_NW								
9+15, 76' L	10+21, 27' L		130.3			979.5	20.0	
92+26, 67' R	10+21, 27' R		119.4			917.1	20.0	43.4
8+11, 25' L	9+17, 5' R		234.3			91.5	40.0	
ENT_SW								
7+00, 25' L	8+28, 67' L		152.1			1,431.5	20.0	43.4
7+00, 25' R	8+40, 93' R		172.6			1,681.6	20.0	
7+00, 5' R	8+40, 29' R		315.1			216.2	44.6	
Ramp D&H; DDI Island								
40+00, 20' R	47+51, 0' R			1,828.9		952.7	48.0	
Ramp C&G; DDI Island								
43+60, 0' R	45+60, 0' R			888.2		2,489.2	59.6	
Ramp A&E; DDI Island								
10+17, 0' L	12+11, 0' L			782.6		1,381.9	47.7	
Ramp B&F; DDI Island								
29+65, 0' L	36+26, 32' L			1,156.5		1,642.3	59.6	
Trail								
Begin to End						8,000.0		
	PCN 06JQ Total:	137.9	7,771.6	4,796.8	7,193.8	74,305.0	697.9	130.2

REGISTERED PROFESSIONAL ENGINEER
REG. NO. 15735
JONATHAN R. HULTGREN
SOUTH DAKOTA
5-16-2025

FENCE QUANTITIES

FOR BIDDING PURPOSES ONLY

SD DOT	PROJECT	SHEET	TOTAL SHEETS
	EM 0292(88)73 IM 2292(104)0	B20	B182

Plotting Date: 06/30/2025 Revised Date: 06/30/2025 NBG

Station to Station		Side (L/R)	Chain Link Fence 6' Chain Link Fence with Tension Wired Top (Ft)	Remove Fence (Ft)
EM 0292(88)73 - PCN 06JQ				
EB85TH				
307+34	315+96	R	880	
324+50	333+74	R	1,110	1,200
WB85TH				
406+89	414+72	L	780	
424+46	433+60	L	1,150	
Ramp A				
12+13	25+62	R	1,340	1,340
Ramp B				
20+00	34+22	R	1,420	1,420
Ramp C				
31+06	44+04	L	1,350	1,350
Ramp D				
40+96	54+17	L	1,430	1,430
Ramp D_Conn				
70+00	86+53	L	2,000	650
I-29				
37+37	46+80	R	1,000	1,000
79+70	90+83	R	1,090	
102+21	106+06	R	390	390
PCN 06JQ TOTALS			13,940	8,780
IM 2292(104)0 - PCN 07D0				
I-229 Ramp B				
19+36	20+64	R	130	130
PCN 07D0 TOTALS			130	130

REGISTERED PROFESSIONAL ENGINEER
REG. NO. 15736
JONATHAN R. HULTGREN
SOUTH DAKOTA
7-23-2025

TABLE OF PIPE QUANTITIES

FOR BIDDING PURPOSES ONLY

PROJECT	SHEET	TOTAL SHEETS
EM 0292(88)73 IM 2292(104)0	B21	B182

Plotting Date: 08/04/2025

		Reinforced Concrete															Corrugated Metal					
		Circular							Circular Flared End				Arch		Arch Flared End		Circular		Circular Flared End		Circular Elbow	
		12" Cl. 2	18" Cl. 2	24" Cl. 2	24" Cl. 3	30" Cl. 2	30" Cl. 3	36" Cl. 2	18"	24"	30"	36"	30" CL. 2	42" CL. 2	30"	42"	18" 14 Ga	24" 14 Ga	18"	24"	18" 30°	18" 32.5°
ID	Station to Station/Offset L & R	Ft	Ft	Ft	Ft	Ft	Ft	Ft	Each	Each	Each	Each	Ft	Ft	Each	Each	Ft	Ft	Each	Each	Each	Each
EM 0292(88)73 - PCN 06JQ																						
EB 85th Street																						
DI #9 HDR to 102	299+27.67-13.5 to 299+70.00-15.00' R		40																			
101 to 102	299+70.00-61.50' L to 299+70.00-15.00' R		78																			
102 to 104	299+70.00-15.00' R to 301+41.25-15.00' R		166																			
103 to 107	301+46.25-64.75' L to 301+46.00-86.75' L		16						1													
104 to 103	301+41.25-15.00' R to 301+46.25-64.75' L		80																			
105 to 106	302+00.00-65.50' L to 302+00.20-15.00' R		80																			
106 to 104	302+00.20-15.00' R to 301+41.25-15.00' R		56																			
150 to 100	302+65.00-39.00' R to 302+64.25-88.50' L													114		2						
108 to 175	303+25.00-67.00' L to 302+87.00-84.50' L																	44		1		
109 to 108	303+24.75-22.00' R to 303+25.00-67.00' L			90																		
110 to 111	304+65.00-67.75' L to 304+65.00-27.00' R		96																			
111 to 109	304+65.00-27.00' R to 303+24.75-22.00' R			140																		
112 to 110	305+47.50-67.75' L to 304+65.00-67.75' L		82																			
113 to 114	307+00.00-79.00' L to 307+25.00-15.00' R	98																				
114 to 111	307+25.00-15.00' R to 304+65.00-27.00' R		256																			
115 to 116	308+00.00-79.00' L to 308+00.00-15.00' R	94																				
116 to 114	308+00.00-15.00' R to 307+25.00-15.00' R		72																			
117 to 118	309+00.00-76.75' L to 309+00.00-15.00' R	92																				
118 to 116	309+00.00-15.00' R to 308+00.00-15.00' R		102																			
200 to E_HWL-6	66+92.08-93.50' L to 67+67.68-12.25' R						126				1											
210 to E_HWL-7	67+00.02-94.25' L to 67+74.86-11.25' R						126				1											
301 to 300	312+00.00-70.00' L to 312+02.25-124.25' L																54		1			2
302 to 301	312+00.00-15.00' R to 312+00.00-70.00' L		86																			
303 to 301	313+10.00-75.00' L to 312+00.00-70.00' L		112																			
304 to 303	313+10.00-15.00' R to 313+10.00-75.00' L		90																			
306 to 322	316+17.00-14.00' R to 3+81.50-4.25' L		12																			
312 to 322	3+80.00-12.75' R to 3+81.50-4.25' L		16																			
323 to JB #2	318+46.25-26.75' L to 317+46.25-62.75' L		118																			
324 to 323	318+44.50-28.00' R to 318+46.25-26.75' L		54																			
305 to 318	4+12.75-34.25' L to 4+23.00-4.50' R		38																			
317 to 324	45+42.75-1.50' R to 318+44.50-28.00' R		38																			
360 to 370	311+09.50-57.75' R to 311+87.00-121.50' L													182		2						
414 to 401	321+90.50-27.00' R to 10+32.50-1.75' L		58																			
	PCN 06JQ Subtotal:	**284**	**1,746**	**230**			**252**		**1**		**2**			**296**		**4**	**54**	**44**	**1**	**1**		**2**

REGISTERED PROFESSIONAL ENGINEER
REG. NO. 16819
JENNIFER A. BALK
SOUTH DAKOTA
8/4/2025

TABLE OF PIPE QUANTITIES

FOR BIDDING PURPOSES ONLY

SD DOT	PROJECT	SHEET	TOTAL SHEETS
Plotting Date: 08/04/2025	EM 0292(88)73 IM 2292(104)0	B22	B182

		Reinforced Concrete															Corrugated Metal					
		Circular							Circular Flared End				Arch		Arch Flared End		Circular		Circular Flared End		Circular Elbow	
		12" Cl. 2	18" Cl. 2	24" Cl. 2	24" Cl. 3	30" Cl. 2	30" Cl. 3	36" Cl. 2	18"	24"	30"	36"	30" CL. 2	42" CL. 2	30"	42"	18" 14 Ga	24" 14 Ga	18"	24"	18" 30°	18" 32.5°
ID	Station to Station/Offset L & R	Ft	Ft	Ft	Ft	Ft	Ft	Ft	Each	Each	Each	Each	Ft	Ft	Each	Each	Ft	Ft	Each	Each	Each	Each
EM 0292(88)73 - PCN 06JQ																						
EB 85th Street (Continued)																						
407 to 406	323+96.00-69.25' L to 323+50.75-37.50' L		50																			
406 to JB #4	323+50.75-37.50' L to 322+94.63-44.62' L		56																			
JB #5 to 408	323+34.14-20.25' R to 35+26.25-18.75' L		84																			
501 to 503	327+50.00-71.00' L to 330+00.00-69.00' L		254																			
502 to 501	327+50.00-15.00' R to 327+50.00-71.00' L		88																			
503 to 505	330+00.00-69.00' L to 330+76.50-69.00' L		76																			
504 to 505	330+50.00-15.00' R to 330+76.50-69.00' L		90																			
505 to 506	330+76.50-69.00' L to 331+80.70-69.00' L		104																			
506 to 507	331+80.70-69.00' L to 331+99.70-69.00' L		16																			
507 to 511	331+99.70-69.00' L to 333+36.00-66.00' L			134																		
508 to 509	332+07.10-26.00' R to 332+22.10-26.00' R		18																			
509 to 507	332+22.10-26.00' R to 331+99.70-69.00' L		98																			
510 to 509	332+37.10-26.00' R to 332+22.10-26.00' R		18																			
511 to 585	333+36.00-66.00' L to 333+32.00-105.00' L												32		1							
511 to 525	333+36.00-66.00' L to 333+38.75-105.00' L												32		1							
513 to 590	335+14.00-80.00' L to 333+69.75-111.00' L		144						1													
514 to 513	335+12.90-18.75' L to 335+14.00-80.00' L		62																			
515 to 514	335+50.00-26.00' R to 335+12.90-18.75' L		60																			
516 to 513	336+40.90-80.00' L to 335+14.00-80.00' L		126																			
517 to 516	336+40.60-26.00' R to 336+40.90-80.00' L		106																			
518 to 516	338+16.00-80.00' L to 336+40.90-80.00' L		178																			
519 to 518	338+14.80-26.00' R to 338+16.00-80.00' L		106																			
521 to 506	331+40.00-21.50' R to 331+80.70-69.00' L		100																			
520 to 511	333+33.50-55.00' R to 333+36.00-66.00' L												114		1							
530 to 511	333+40.50-55.00' R to 333+36.00-66.00' L												114		1							
545 to 540	333+47.25-55.00' R to 333+46.00-105.00' L												146		2							
555 to 550	333+54.50-55.00' R to 333+53.00-105.00' L												146		2							
565 to 560	333+61.50-55.00' R to 333+60.50-105.00' L												146		2							
575 to 570	333+68.75-55.00' R to 333+67.25-105.00' L												146		2							
402 to 414	321+90.75-63.75' R to 321+90.50-27.00' R		36																			
404 to JB #5	323+21.25-18.50' L to 323+34.14-20.25' R		58																			
409 to JB #5	3+55.25-4.50' L to 323+34.14-20.25' R		48																			
	PCN 06JQ Subtotal:		**1,976**	**134**					**1**				**876**		**12**							

REGISTERED PROFESSIONAL ENGINEER
REG. NO. 16819
JENNIFER A. BALK
SOUTH DAKOTA
8/4/2025

TABLE OF PIPE QUANTITIES

FOR BIDDING PURPOSES ONLY

SD DOT	PROJECT	SHEET	TOTAL SHEETS
Plotting Date: 08/04/2025	EM 0292(88)73 IM 2292(104)0	B23	B182

		Reinforced Concrete															Corrugated Metal					
		Circular							Circular Flared End				Arch		Arch Flared End		Circular		Circular Flared End		Circular Elbow	
		12" Cl. 2	18" Cl. 2	24" Cl. 2	24" Cl. 3	30" Cl. 2	30" Cl. 3	36" Cl. 2	18"	24"	30"	36"	30" CL. 2	42" CL. 2	30"	42"	18" 14 Ga	24" 14 Ga	18"	24"	18" 30°	18" 32.5°
ID	Station to Station/Offset L & R	Ft	Ft	Ft	Ft	Ft	Ft	Ft	Each	Each	Each	Each	Ft	Ft	Each	Each	Ft	Ft	Each	Each	Each	Each
EM 0292(88)73 - PCN 06JQ																						
Ramp A																						
401 to JB #4	10+32.50-1.75' L to 322+94.63-44.62' L		114																			
405 to 403	11+41.50-34.00' R to 12+05.00-1.75' L		78																			
403 to 420	12+05.00-1.75' L to 12+10.00-85.75' L																84		1		2	
611 to 612	13+19.50-122.75' L to 13+98.50-111.75' L		70						2													
614 to 613	15+63.25-62.00' L to 14+85.50-91.75' R				162					2												
Ramp B																						
413 to 412	29+69.00-2.00' L to 32+00.25-10.50' L		230																			
412 to 450	32+00.25-10.50' L to 31+99.25-78.50' L																68		1		2	
408 to 460	35+26.25-18.75' L to 34+83.00-98.50' L																	90		1	2	
Ramp C																						
314 to 321	43+30.00-24.50' L to 44+33.25-1.75' R		28																			
321 to 350	44+33.25-1.75' R to 44+85.00-76.00' R																84		1		2	
Ramp D																						
308 to 309	46+00.00-25.67' L to 46+00.00-13.67' R		38																			
309 to 340	46+00.00-13.67' R to 46+00.00-64.50' R																52		1		2	
310 to 320	47+48.23-1.88' R to 47+48.75-51.25' R																50		1		2	
701 to 700	58+92.00-1.00' R to 59+10.00-91.75' R																92		1			2
617 to 618	15+02.50-60.00' L to 17+32.00-73.25' L						216				2											
622 to 621	63+42.00-48.50' L to 62+96.25-0.75' R					58					2											
707 to 711	65+48.75-3.00' R to 65+48.75-102.75' L																110		1		2	
702 to 703	64+15.00-3.00' R to 65+03.75-3.00' R		88																			
703 to 704	65+03.75-3.00' R to 65+15.00-3.00' R		10																			
704 to 705	65+15.00-3.00' R to 65+30.00-3.00' R		14																			
705 to 706	65+30.00-3.00' R to 65+41.25-3.00' R		10																			
706 to 707	65+41.25-3.00' R to 65+48.75-3.00' R		8																			
712 to 702	63+90.25-2.75' R to 64+15.00-3.00' R		24																			
	PCN 06JQ Subtotal:		**712**		**162**	**58**	**216**		**2**	**2**	**4**						**540**	**90**	**7**	**1**	**14**	**2**

REGISTERED PROFESSIONAL ENGINEER
REG. NO. 16819
JENNIFER A. BALK
SOUTH DAKOTA
8/4/2025

TABLE OF PIPE QUANTITIES

FOR BIDDING PURPOSES ONLY

SD DOT	PROJECT	SHEET	TOTAL SHEETS
	EM 0292(88)73 IM 2292(104)0	B24	B182

Plotting Date: 08/04/2025

		Reinforced Concrete															Corrugated Metal					
		Circular							Circular Flared End				Arch		Arch Flared End		Circular		Circular Flared End		Circular Elbow	
ID	Station to Station/Offset L & R	12" Cl. 2 Ft	18" Cl. 2 Ft	24" Cl. 2 Ft	24" Cl. 3 Ft	30" Cl. 2 Ft	30" Cl. 3 Ft	36" Cl. 2 Ft	18" Each	24" Each	30" Each	36" Each	30" CL. 2 Ft	42" CL. 2 Ft	30" Each	42" Each	18" 14 Ga Ft	24" 14 Ga Ft	18" Each	24" Each	18" 30° Each	18" 32.5° Each
EM 0292(88)73 - PCN 06JQ																						
Ramp D Conn																						
619 to 620	77+93.00-61.50' R to 78+43.00-69.50' L					122					2											
P_HWL- to E_HWL-	80+84.50 - 61.25' L to 81+07.29 - 12.00' L							48				1										
P_HWL-1 to E_HWL-1	80+63.42-61.00' L to 80+89.56-12.50' L							56				1										
Ramp F																						
415 to 409	3+60.75-23.25' R to 3+55.25-4.50' L		28																			
Ramp G																						
322 to JB #3	3+81.50-4.25' L to 4+59.25-7.00' L		76																			
JB #3 to 314	4+59.25-7.00' L to 43+30.00-24.50' L		54																			
319 to JB #3	4+51.75-19.50' R to 4+59.25-7.00' L		26																			
Ramp H																						
318 to JB #2	4+23.00-4.50' R to 317+46.25-62.75' L		70																			
JB #2 to 307	317+46.25-62.75' L to 5+42.25-4.75' R		70																			
307 to 330	5+42.25-4.75' R to 41+16.50-95.50' R																102		1			2
I-29																						
603 to 604	319+01.00-137.50' R to 319+00.00-106.50' L				234					2												
606 to 605	321+35.25-142.50' R to 321+36.22-108.25' L						240				2											
E_HWL-2 to 220	91+76.75-122.00' R to 91+96.50-139.75' R					48					1											
E_HWL-3 to 230	91+72.00-127.00' R to 91+86.25-139.75' R										1											
Trail																						
608 to 607	15+57.75-13.75' L to 15+48.75-14.50' R		20						2													
610 to 609	12+50.50-29.00' L to 12+60.50-31.50' R		52						2													
PCN 06JQ Subtotal:			**396**		**234**	**170**	**240**	**104**	**4**	**2**	**6**	**2**					**102**		**1**			**2**
PCN 06JQ Total:		**284**	**4,830**	**364**	**396**	**228**	**708**	**104**	**8**	**4**	**12**	**2**	**876**	**296**	**12**	**4**	**696**	**134**	**9**	**2**	**14**	**6**

REGISTERED PROFESSIONAL ENGINEER
REG. NO. 16819
JENNIFER A. BALK
SOUTH DAKOTA
8/4/2025

TABLE OF PIPE QUANTITIES

FOR BIDDING PURPOSES ONLY

SD DOT	PROJECT	SHEET	TOTAL SHEETS
	EM 0292(88)73 IM 2292(104)0	B25	B182

Plotting Date: 08/04/2025

		Reinforced Concrete															Corrugated Metal					
		Circular							Circular Flared End				Arch		Arch Flared End		Circular		Circular Flared End		Circular Elbow	
		12" Cl. 2	18" Cl. 2	24" Cl. 2	24" Cl. 3	30" Cl. 2	30" Cl. 3	36" Cl. 2	18"	24"	30"	36"	30" CL. 2	42" CL. 2	30"	42"	18" 14 Ga	24" 14 Ga	18"	24"	18" 30°	18" 32.5°
ID	Station to Station/Offset L & R	Ft	Ft	Ft	Ft	Ft	Ft	Ft	Each	Each	Each	Each	Ft	Ft	Each	Each	Ft	Ft	Each	Each	Each	Each
IM 2292(104)0 - PCN 07D0																						
I-229 Ramp C																						
615 to 616	13+75.50-78.75' L to 14+37.50-73.25' L		50						2													
I-229 Ramp B																						
623 to 624	24+00.25-79.50' R to 24+54.00-79.00' R		42						2													
625 to 626	35+09.25-78.00' R to 35+75.75-77.50' R			54						2												
627 to 628	35+08.50-83.25' R to 35+76.00-82.00' R			56						2												
	PCN 07D0 Total:		**92**	**110**					**4**	**4**												

REGISTERED PROFESSIONAL ENGINEER
REG. NO. 16819
JENNIFER A. BALK
SOUTH DAKOTA
8/4/2025

TABLE OF STORM SEWER DROP INLETS AND QUANTITIES

FOR BIDDING PURPOSES ONLY

SD DOT	PROJECT	SHEET	TOTAL SHEETS
	EM 0292(88)73 IM 2292(104)0	B26	B182

Plotting Date: 08/14/2025 Revised Date: 08/14/2025 NBG

ID	Station	Offset (L/R)	Inlet Type	Class M6 Concrete (CuYd)	Reinforcing Steel (Lb)	Frame and Grate/Lid: [1*] Type B-4 Grates for SF Type B Inlet 11'-11" X 4' (Each)	Precast Drop Inlet Collar (Each)	[2] Type Y Grate for SF 6'-0" Type Inlet (18"-24") (Each)	[3] Type Y Grate for SF 10'-0" Type Inlet (18"-24") (Each)	[4] Type B F&G for SDDOT 2' X 3' Type B Drop Inlet (Each)	[5] Type B F&G for SDDOT 3' X 4' Type B Drop Inlet (Each)	[6] Type A10 Manhole Frame and Lid for SDDOT 5' X 5' Junction Box (Each)	[7] Type C F&G for SDDOT 3' X 4' Type C Drop Inlet (Each)	[8] 4' X 6' Precast Concrete Type S Drop Inlet Lid (Each)
EM 0292(88)73 - PCN 06JQ														
EB 85th Street														
101	299+70.00	61.50' L	SF 6'-0" Type Inlet (18"-24"), 460.01	3.1	452			1						
102	299+70.00	15.00' R	SF 6'-0" Type Inlet (18"-24"), 460.01	3.2	466			1						
103	301+46.25	64.75' L	SF 10'-0" Type Inlet (18"-24"), 460.10	5.2	812				1					
104	301+41.25	15.00' R	SF 10'-0" Type Inlet (18"-24"), 460.10	5.0	777				1					
105	302+00.00	65.50' L	SF 6'-0" Type Inlet (18"-24"), 460.01	3.2	462			1						
106	302+00.20	15.00' R	SF 6'-0" Type Inlet (18"-24"), 460.01	3.3	474			1						
108	303+25.00	67.00' L	SF 6'-0" Type Inlet (18"-24"), 460.01	3.6	518			1						
109	303+24.75	22.00' R	SF 6'-0" Type Inlet (18"-24"), 460.01	3.4	486			1						
110	304+65.00	67.75' L	SF 6'-0" Type Inlet (18"-24"), 460.01	3.2	464			1						
111	304+65.00	27.00' R	SF 6'-0" Type Inlet (18"-24"), 460.01	3.4	489			1						
112	305+47.50	67.75' L	SF 6'-0" Type Inlet (18"-24"), 460.01	3.2	463			1						
113	307+00.00	79.00' L	SF 6'-0" Type Inlet (18"-24"), 460.01	3.0	439			1						
114	307+25.00	15.00' R	SF 6'-0" Type Inlet (18"-24"), 460.01	4.1	579			1						
115	308+00.00	79.00' L	SF 6'-0" Type Inlet (18"-24"), 460.01	3.0	441			1						
116	308+00.00	15.00' R	SF 6'-0" Type Inlet (18"-24"), 460.01	3.5	497			1						
117	309+00.00	76.75' L	SF 6'-0" Type Inlet (18"-24"), 460.01	3.0	439			1						
118	309+00.00	15.00' R	SF 6'-0" Type Inlet (18"-24"), 460.01	3.3	471			1						
301	312+00.00	70.00' L	SF 6'-0" Type Inlet (18"-24"), 460.01	3.7	526			1						
302	312+00.00	15.00' R	SF 6'-0" Type Inlet (18"-24"), 460.01	3.4	488			1						
303	313+10.00	75.00' L	SF 6'-0" Type Inlet (18"-24"), 460.01	3.7	527			1						
304	313+10.00	15.00' R	SF 6'-0" Type Inlet (18"-24"), 460.01	3.4	487			1						
323	318+46.25	26.75' L	SD_Type B 2'x3' Drop Inlet	1.3	191		1			1				
324	318+44.50	28.00' R	SD Type C 3'x4' Drop Inlet	1.9	292		1						1	
402	321+90.75	63.75' R	SD_Type B 2'x3' Drop Inlet	1.3	182		1			1				
JB #4	322+94.63	44.62' L	SD 5'x5' Junction Box	6.1	1,071							1		
404	323+21.25	18.50' L	SD_Type B 3'x4' Drop Inlet	3.1	419		1				1			
501	327+50.00	71.00' L	SF 6'-0" Type Inlet (18"-24"), 460.01	3.6	518			1						
502	327+50.00	15.00' R	SF 6'-0" Type Inlet (18"-24"), 460.01	3.3	476			1						
503	330+00.00	69.00' L	SF 6'-0" Type Inlet (18"-24"), 460.01	1.8	290			1						
504	330+50.00	15.00' R	SF 6'-0" Type Inlet (18"-24"), 460.01	3.3	479			1						
505	330+76.50	69.00' L	SF 6'-0" Type Inlet (18"-24"), 460.01	3.3	480			1						
506	331+80.70	69.00' L	SF 6'-0" Type Inlet (18"-24"), 460.01	3.3	477			1						
507	331+99.70	69.00' L	SF 10'-0" Type Inlet (18"-24"), 460.10	5.5	826				1					
508	332+07.10	26.00' R	SF 6'-0" Type Inlet (18"-24"), 460.01	3.3	479			1						
509	332+22.10	26.00' R	SF 10'-0" Type Inlet (18"-24"), 460.10	4.9	767				1					
510	332+37.10	26.00' R	SF 6'-0" Type Inlet (18"-24"), 460.01	3.3	474			1						
511	333+36.00	66.00' L	SF Type B Drop Inlet - 11' & 11" x 4'	5.0	1,605	[9]4 Grates Total for this structure (1-LT Flange, 1-RT Flange, and 2 No Flange)								
513	335+14.00	80.00' L	SF 6'-0" Type Inlet (18"-24"), 460.01	3.7	523			1						
514	335+12.90	18.75' L	SF 6'-0" Type Inlet (18"-24"), 460.01	3.6	513			1						
515	335+50.00	26.00' R	SF 6'-0" Type Inlet (18"-24"), 460.01	3.3	477			1						
516	336+40.90	80.00' L	SF 6'-0" Type Inlet (18"-24"), 460.01	3.7	523			1						
517	336+40.60	26.00' R	SF 6'-0" Type Inlet (18"-24"), 460.01	3.3	478			1						
518	338+16.00	80.00' L	SF 6'-0" Type Inlet (18"-24"), 460.01	3.8	540			1						
519	338+14.80	26.00' R	SF 6'-0" Type Inlet (18"-24"), 460.01	3.4	486			1						
521	331+40.00	21.50' R	SF 6'-0" Type Inlet (18"-24"), 460.01	3.1	453			1						
			PCN 06JQ Subtotal:	**156.2**	**23,779**	**4**	**4**	**35**	**4**	**2**	**1**	**1**	**1**	

[1] Paid for as Bid Item No. 670E5200 - Special Frame and Grate Assembly-Type B, Left Flange
[1] Paid for as Bid Item No. 670E5200 - Special Frame and Grate Assembly-Type B, No Flange
[1] Paid for as Bid Item No. 670E5200 - Special Frame and Grate Assembly-Type B, Right Flange
[2] Paid for as Bid Item No. 670E5200 - Special Frame and Grate Assembly - Type Y for SF 6'-0" Type Inlet (18"-24")
[3] Paid for as Bid Item No. 670E5200 - Special Frame and Grate Assembly - Type Y for SF 10'-0" Type Inlet (18"-24")
[4] Paid for as Bid Item No. 670E1200 - Type B Frame and Grate, (2' x 3')
[5] Paid for as Bid Item No. 670E1200 - Type B Frame and Grate, (3' x 4')
[6] Paid for as Bid Item No. 671E6010 - Type A10 Manhole Frame and Lid
[7] Paid for as Bid Item No. 670E2200 - Type C Frame and Grate
[8] Paid for as Bid Item No. 670E5342 - 4' x 6' Precast Concrete Type S Drop Inlet Lid

[*] 1 Each - Special Frame and Grate Assembly-Type B, Left Flange and 2 Each - Special Frame and Grate Assembly-Type B, No Flange and 1 Each - Special Frame and Grate Assembly-Type B, Right Flange for this 4 section inlet. Refer to pay items list for further information.

REGISTERED PROFESSIONAL ENGINEER
REG. NO. 16819
JENNIFER A. BALK
SOUTH DAKOTA
8/14/2025

TABLE OF STORM SEWER DROP INLETS AND QUANTITIES

FOR BIDDING PURPOSES ONLY

SD DOT	PROJECT	SHEET	TOTAL SHEETS
	EM 0292(88)73 IM 2292(104)0	B27	B182

Plotting Date: 08/14/2025 Revised Date: 08/14/2025 NBG

ID	Station	Offset (L/R)	Inlet Type	Class M6 Concrete (CuYd)	Reinforcing Steel (Lb)	Frame and Grate/Lid: [1*] Type B-4 Grates for SF Type B Inlet 11'-11" X 4' (Each)	Precast Drop Inlet Collar (Each)	[2] Type Y Grate for SF 6'-0" Type Inlet (18"-24") (Each)	[3] Type Y Grate for SF 10'-0" Type Inlet (18"-24") (Each)	[4] Type B F&G for SDDOT 2' X 3' Type B Drop Inlet (Each)	[5] Type B F&G for SDDOT 3' X 4' Type B Drop Inlet (Each)	[6] Type A10 Manhole Frame and Lid for SDDOT 5' X 5' Junction Box (Each)	[7] Type C F&G for SDDOT 3' X 4' Type C Drop Inlet (Each)	[8] 4' X 6' Precast Concrete Type S Drop Inlet Lid (Each)
EM 0292(88)73 - PCN 06JQ														
EB 85th Street (Continued)														
306	316+17.00	14.00' R	SD_Type B 2'x3' Drop Inlet	1.3	184		1			1				
408	35+26.25	18.75' L	SD_Type B 2'x3' Drop Inlet	2.3	324		1			1				
JB #5	323+34.14	20.25' R	SD 5'x5' Junction Box	6.3	1,132							1		
406	323+50.75	37.50' L	SD_Type B 3'x4' Drop Inlet	2.4	339		1				1			
407	323+96.00	69.25' L	SD_Type B 3'x4' Drop Inlet	2.0	288		1				1			
414	321+90.50	27.00' R	SD_Type C 3'x4' Drop Inlet	2.0	300		1						1	
319	4+51.75	19.50' R	SD_Type B 2'x3' Drop Inlet	1.6	222		1			1				
Ramp A														
401	10+32.50	1.75' L	SD_Type B 3'x4' Drop Inlet	2.3	323		1				1			
405	11+41.50	34.00' R	SD_4'x6' Concrete Type S Drop Inlet Base	4.1	609									1
403	12+05.00	1.75' L	SD_Type B 3'x4' Drop Inlet	2.6	360		1				1			
Ramp B														
413	29+69.00	2.00' L	SD_Type B 2'x3' Drop Inlet	1.2	181		1			1				
412	32+00.25	10.50' L	SD_Type B 3'x4' Drop Inlet	3.7	492		1				1			
Ramp C														
322	3+81.50	4.25' L	SD_4'x6' Concrete Type S Drop Inlet Base	2.7	453									1
314	43+30.00	24.50' L	SD_4'x6' Concrete Type S Drop Inlet Base	4.3	636									1
317	45+42.75	1.50' R	SD_Type B 2'x3' Drop Inlet	1.2	177		1			1				
321	44+33.25	1.75' R	SD_Type B 2'x3' Drop Inlet	1.9	268		1			1				
Ramp D														
308	46+00.00	25.67' L	SD_Type B 2'x3' Drop Inlet	1.2	174		1			1				
309	46+00.00	13.67' R	SD_Type B 2'x3' Drop Inlet	1.4	206		1			1				
310	47+48.23	1.88' R	SD_Type B 2'x3' Drop Inlet	1.3	182		1			1				
701	58+92.00	1.00' R	SD_Type B 2'x3' Drop Inlet	0.7	108		1			1				
702	64+15.00	3.00' R	SD_Type B 2'x3' Drop Inlet	0.9	138		1			1				
703	65+03.75	3.00' R	SD_Type B 2'x3' Drop Inlet	0.8	125		1			1				
704	65+15.00	3.00' R	SD_Type B 2'x3' Drop Inlet	0.9	142		1			1				
705	65+30.00	3.00' R	SD_Type B 2'x3' Drop Inlet	0.9	131		1			1				
706	65+41.25	3.00' R	SD_Type B 2'x3' Drop Inlet	0.8	122		1			1				
707	65+48.75	3.00' R	SD_Type B 2'x3' Drop Inlet	0.8	122		1			1				
712	63+90.25	2.75' R	SD_Type B 2'x3' Drop Inlet	1.0	148		1			1				
Ramp F														
409	3+55.25	4.50' L	SD_4'x6' Concrete Type S Drop Inlet Base	3.0	486									1
415	3+60.75	23.25' R	SD_4'x6' Concrete Type S Drop Inlet Base	2.6	437									1
Ramp G														
312	3+80.00	12.75' R	SD_Type B 2'x3' Drop Inlet	1.1	163		1			1				
JB #3	4+59.25	7.00' L	SD 5'x5' Junction Box	5.8	1,045							1		
Ramp H														
305	4+12.75	34.25' L	SD_4'x6' Concrete Type S Drop Inlet Base	2.6	440									1
318	4+23.00	4.50' R	SD_4'x6' Concrete Type S Drop Inlet Base	2.9	479									1
JB #2	317+46.25	62.75' L	SD 5'x5' Junction Box	5.8	1,045							1		
307	5+42.25	4.75' R	SD_4'x6' Concrete Type S Drop Inlet Base	4.0	597									1
			PCN 06JQ Subtotal:	**80.5**	**12,577**		**24**			**18**	**5**	**3**	**1**	**8**
			PCN 06JQ Total:	**236.7**	**36,356**	**4**	**28**	**35**	**4**	**20**	**6**	**4**	**2**	**8**

[1] Paid for as Bid Item No. 670E5200 - Special Frame and Grate Assembly-Type B, Left Flange
[1] Paid for as Bid Item No. 670E5200 - Special Frame and Grate Assembly-Type B, No Flange
[1] Paid for as Bid Item No. 670E5200 - Special Frame and Grate Assembly-Type B, Right Flange
[2] Paid for as Bid Item No. 670E5200 - Special Frame and Grate Assembly - Type Y for SF 6'-0" Type Inlet (18"-24")
[3] Paid for as Bid Item No. 670E5200 - Special Frame and Grate Assembly - Type Y for SF 10'-0" Type Inlet (18"-24")
[4] Paid for as Bid Item No. 670E1200 - Type B Frame and Grate, (2' x 3')
[5] Paid for as Bid Item No. 670E1200 - Type B Frame and Grate, (3' x 4')
[6] Paid for as Bid Item No. 671E6010 - Type A10 Manhole Frame and Lid
[7] Paid for as Bid Item No. 670E2200 - Type C Frame and Grate
[8] Paid for as Bid Item No. 670E5342 - 4' x 6' Precast Concrete Type S Drop Inlet Lid

[*] 1 Each - Special Frame and Grate Assembly-Type B, Left Flange and 2 Each - Special Frame and Grate Assembly-Type B, No Flange and 1 Each - Special Frame and Grate Assembly-Type B, Right Flange for this 4 section inlet. Refer to pay items list for further information.

REGISTERED PROFESSIONAL ENGINEER
REG. NO. 16819
JENNIFER A. BALK
SOUTH DAKOTA
Jennifer A. Balk
8/14/2025

TYPICAL GRADING SECTIONS

FOR BIDDING PURPOSES ONLY

SD DOT	PROJECT	SHEET	TOTAL SHEETS
	EM 0292(88)73 IM 2292(104)0	B28	B182

Plotting Date: 5/16/2025

Notes:

See City of Sioux Falls Standard Plate 680.01 for Underdrain installation details.

Underdrain Installation Locations:
EB85TH 302+03.25 to 303+21.96
WB85TH 399+73.20 to 401+41.06
WB85TH 401+52.06 to 401+97.31
WB85TH 402+03.31 to 403+22.25
WB85TH 403+28.25 to 404+62.19

85TH STREET
EB85TH 299+35.00 to 303+74.31

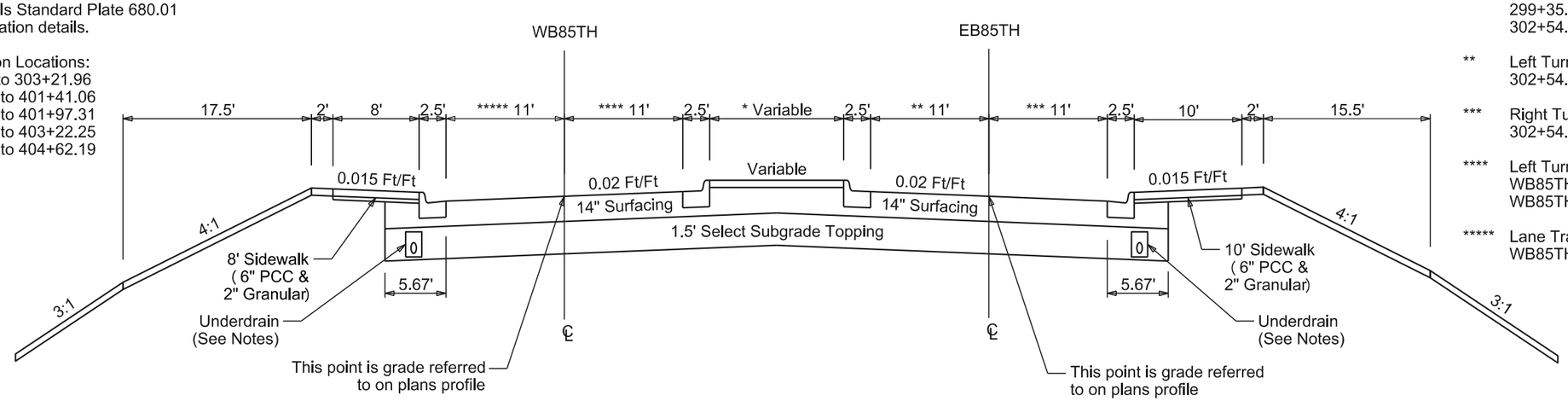

Transitions:

* Median Transition
299+35.00 to 302+54.31 - 18.8' to 24'
302+54.31 to 303+74.10 - 24' to 4.8'

** Left Turn Lane Transition
302+54.31 to 303+74.31 - 11' to 31.33'

*** Right Turn Lane Transition
302+54.31 to 303+74.31 - 11' to 23'

**** Left Turn Lane Transition
WB85TH 399+35.00 to 401+37.43 - 25' to 28.73'
WB85TH 401+37.43 to 402+54.02 - 28.73' to 11'

***** Lane Transition
WB85TH 399+35.00 to 399+63.40 - 0' to 11'

85TH STREET
EB85TH 303+74.31 to 305+62.23

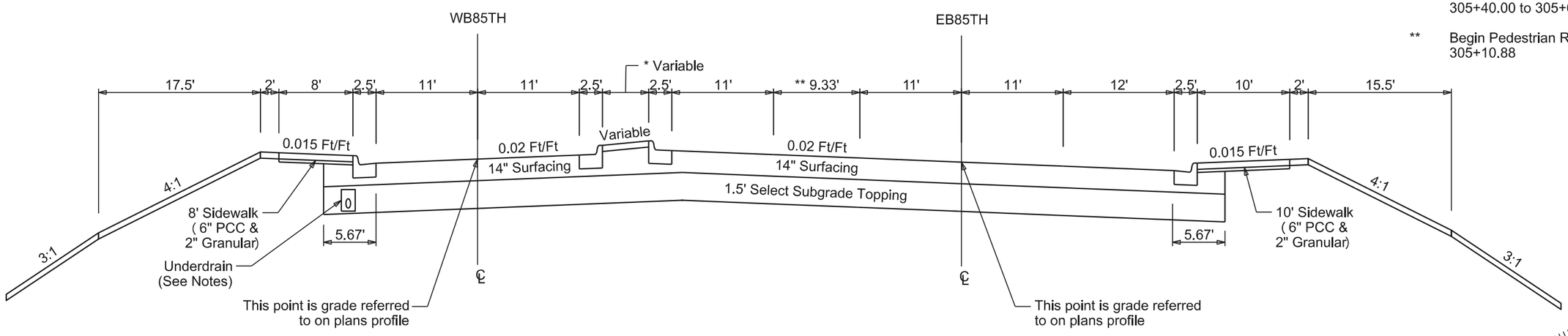

Transitions:

* Median Transition
303+74.31 to 305+40.00 - 5.3'
305+40.00 to 305+61.57 - 5.3' to 3'

** Begin Pedestrian Refuge Median
305+10.88

REGISTERED PROFESSIONAL ENGINEER
REG. NO. 15735
JONATHAN R. HULTGREN
SOUTH DAKOTA
5-16-2025

Plotted From - ngjersvik File - ...\typ.dgn

TYPICAL GRADING SECTIONS

FOR BIDDING PURPOSES ONLY

SD DOT	PROJECT	SHEET	TOTAL SHEETS
	EM 0292(88)73 IM 2292(104)0	B29	B182

Plotting Date: 5/16/2025

85TH STREET
EB85TH 305+62.23 to 310+00.00

Transitions:
* Pedestrian Refuge Median
306+89.17 to 307+39.86 - 4.33'

** Median Transition
306+89.17 to 307+19.98 - 3' to 5.33'
308+77.02 to 310+00.00 - 5.33' to 25.67'

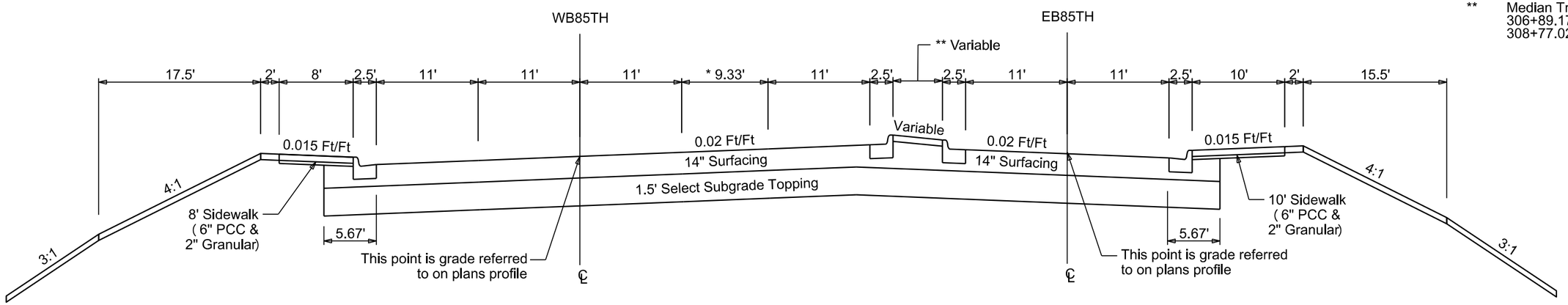

85TH STREET
EB85TH 310+00.00 to 316+31.89

Transitions:
* Median Transition
310+00.00 to 313+18.05 - 25.66' to 33'

** Added Lane
313+19.47 to 315+28.89 - 11' to 22'

*** Right Turn Lane Transition
313+19.47 to 315+28.89 - 11' to 22'

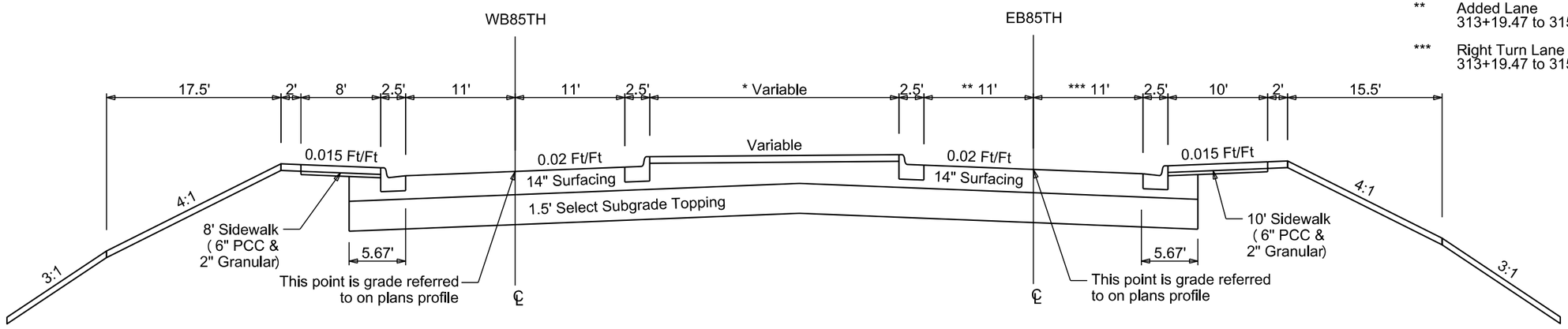

REGISTERED PROFESSIONAL ENGINEER
REG. NO.
15736
JONATHAN R.
HULTGREN
SOUTH DAKOTA
5-16-2025

Plotted From - ngjersvik File - ...\typ.dgn

TYPICAL GRADING SECTIONS

FOR BIDDING PURPOSES ONLY

SD DOT	PROJECT	SHEET	TOTAL SHEETS
	EM 0292(88)73 IM 2292(104)0	B30	B182

Plotting Date: 5/16/2025

85TH STREET DDI CROSSOVER AREA
EB85TH 316+31.89 to 317+11.60
EB85TH 323+22.26 to 323+72.37

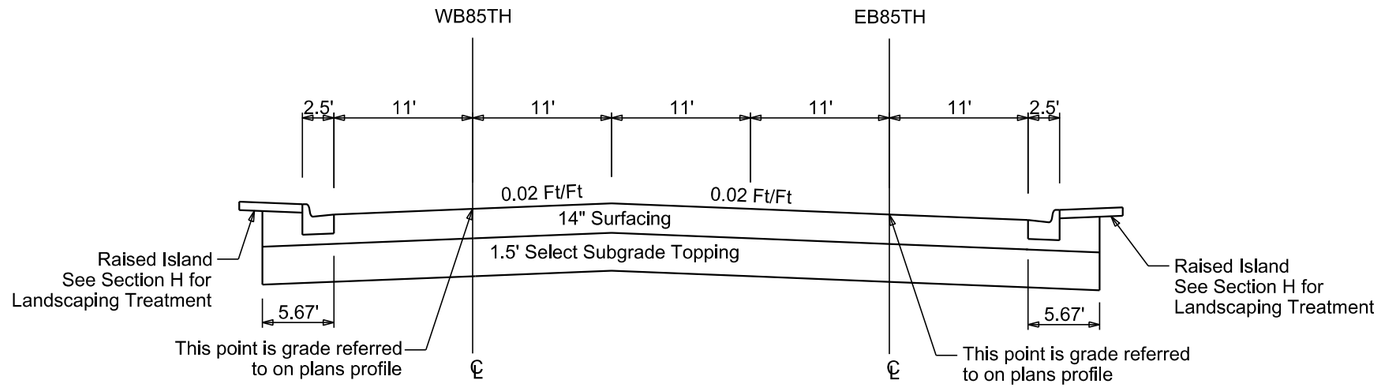

85TH STREET DDI CROSSOVER AREA
EB85TH 317+11.60 to 317+69.83
EB85TH 322+68.58 to 323+22.26

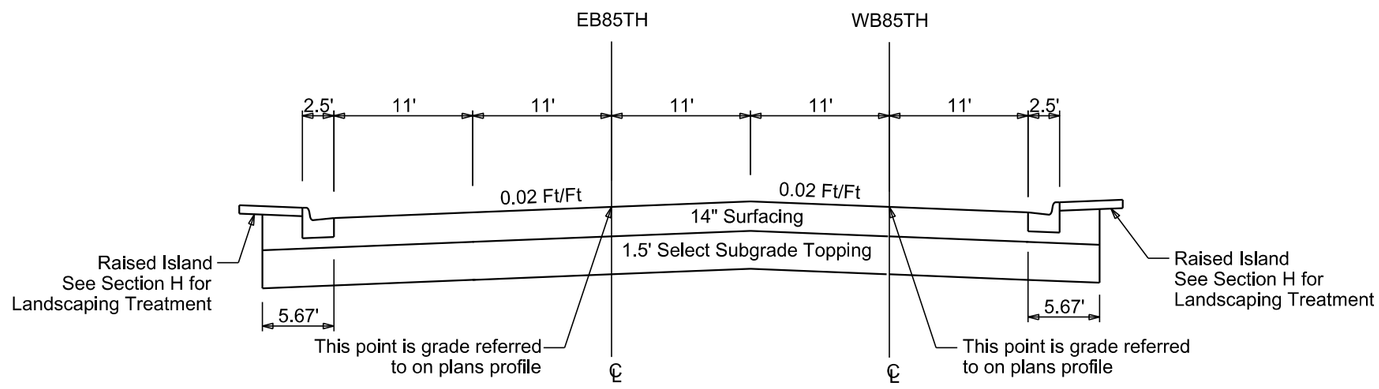

85TH STREET CROSSOVER LANES
EB85TH 317+69.83 to 318+54.91
EB85TH 321+80.07 to 322+68.58

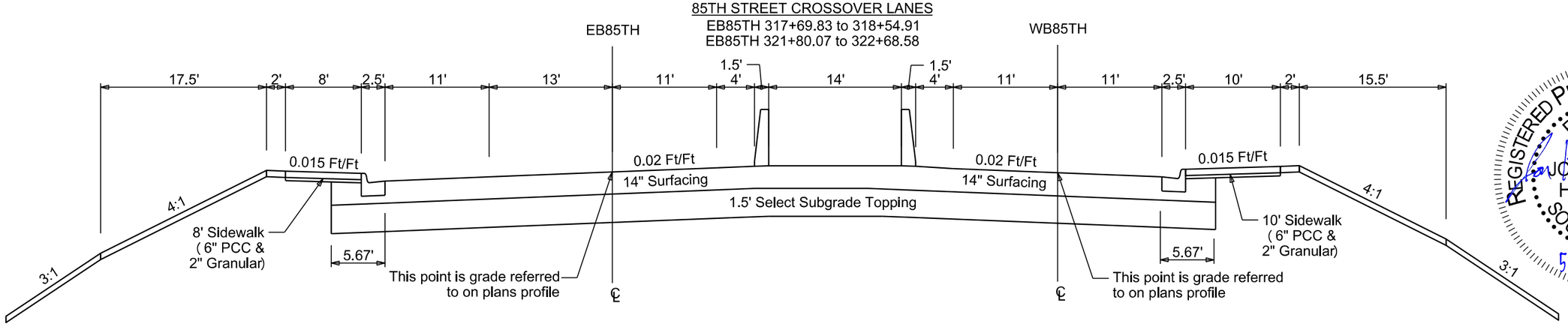

REGISTERED PROFESSIONAL ENGINEER
REG. NO. 15735
JONATHAN R. HULTGREN
SOUTH DAKOTA
5-16-2025

Plotted From - ngjersvik File - ...\typ.dgn

TYPICAL GRADING SECTIONS

FOR BIDDING PURPOSES ONLY

PROJECT	SHEET	TOTAL SHEETS
EM 0292(88)73 IM 2292(104)0	B31	B182

Plotting Date: 5/16/2025

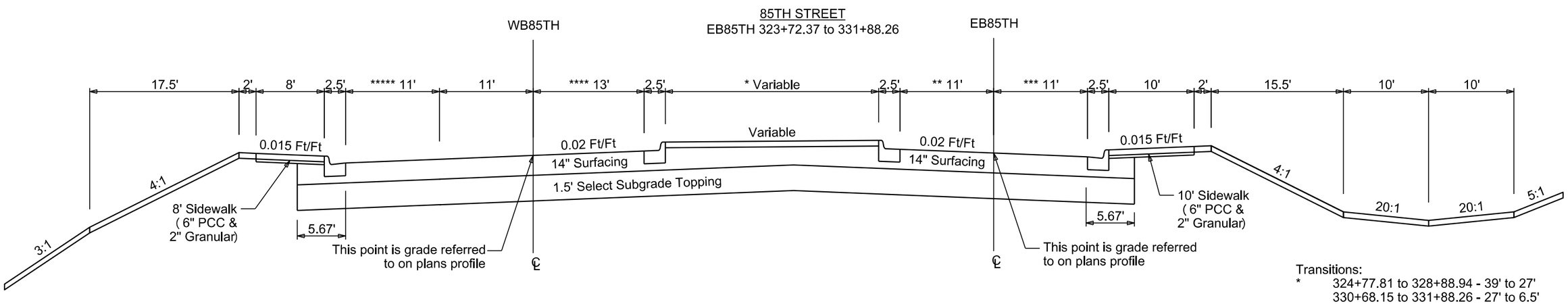

Transitions:

* 324+77.81 to 328+88.94 - 39' to 27'
330+68.15 to 331+88.26 - 27' to 6.5'

** Lane Width Transition
324+77.81 to 325+27.81 - 13' to 11'

Left Turn Lane Transition
330+68.26 to 331+88.26 - 11' to 31.33'

*** Right Turn Lane Transition
330+68.26 to 331+88.26 - 11' to 22'

**** Lane Width Transition
WB85TH 424+95.85 to 425+45.85 - 13' to 11'

***** Right Turn Lane Transition
WB85TH 426+23.06 to 427+44.06 - 11' to 0'

REGISTERED PROFESSIONAL ENGINEER
REG. NO. 15735
JONATHAN R. HULTGREN
SOUTH DAKOTA
5-16-2025

TYPICAL GRADING SECTIONS

FOR BIDDING PURPOSES ONLY

PROJECT	SHEET	TOTAL SHEETS
EM 0292(88)73 IM 2292(104)0	B32	B182

Plotting Date: 5/16/2025

85TH STREET
EB85TH 331+88.26 to 333+79.57

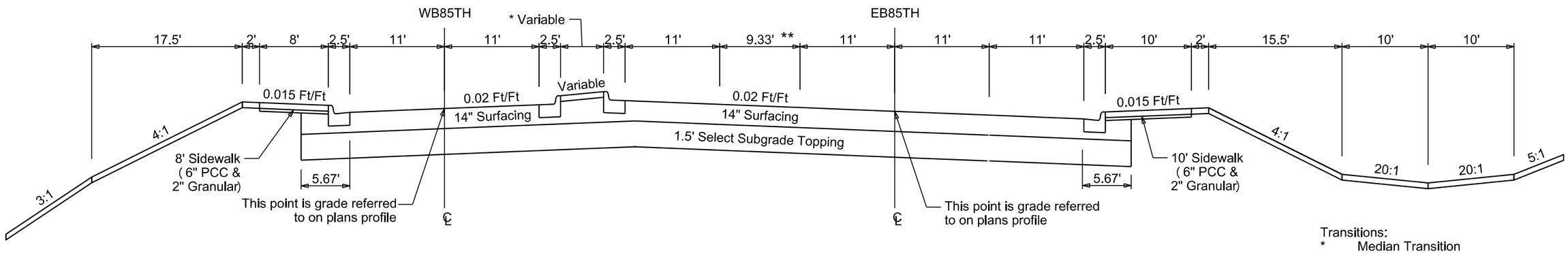

Transitions:

* Median Transition
333+56.67 to 333+79.57 - 6.3' to 3.3'

** Begin Pedestrian Refuge Median
333+28.73

85TH STREET
EB85TH 333+79.57 to 339+30.01

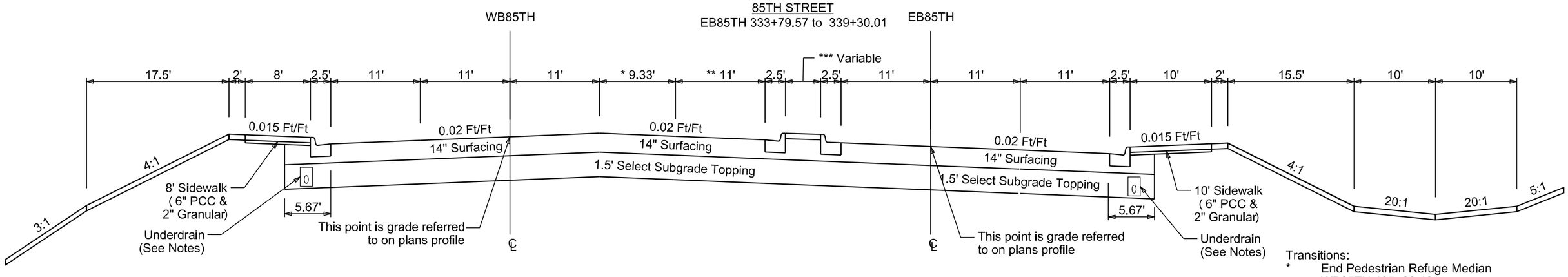

Transitions:

* End Pedestrian Refuge Median
WB85TH 435+60.42
Pedestrian Refuge Median Transition
WB85TH 438+05.21 to 438+60.34 - 9.33' to 0'

** WB85TH 438+06.13 to 439+26.25 - 11' to 0'

*** 334+85.46 to 335+06.78 - 2.8' to 6.3'
338+07.07 to 339+26.98 - 6.3' to 26.6'

Notes:

See City of Sioux Falls Standard Plate 680.01
for Underdrain installation details.

Underdrain Installation Locations:
EB85TH 335+53.01 to 336+37.67
EB85TH 336+43.67 to 338+11.74
EB85TH 338+17.74 to 339+37.74
WB85TH 438+18.12 to 439+38.12

REGISTERED PROFESSIONAL ENGINEER
REG. NO. 15735
JONATHAN R. HULTGREN
SOUTH DAKOTA
5-16-2025

TYPICAL GRADING SECTIONS

FOR BIDDING PURPOSES ONLY

PROJECT	SHEET	TOTAL SHEETS
EM 0292(88)73 IM 2292(104)0	B33	B182

Plotting Date: 5/16/2025

Transitions:
* Painted Gore Transition
  10+00.00 to 11+00.00 - 0' to 6.75'
  11+00.00 to 12+11.00 - 6.75' to 0'

RAMP A
10+00.00 to 12+11.00

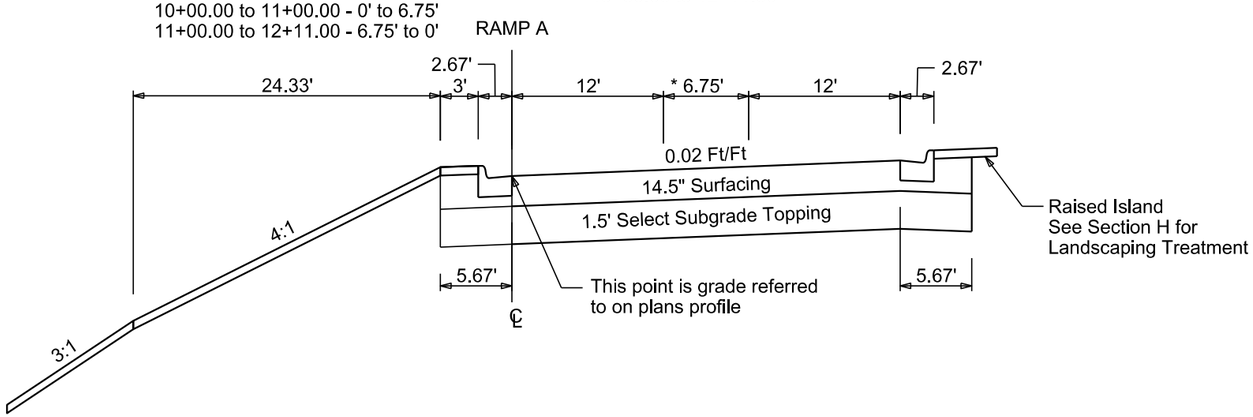

RAMP B
20+00.00 to 29+65.00

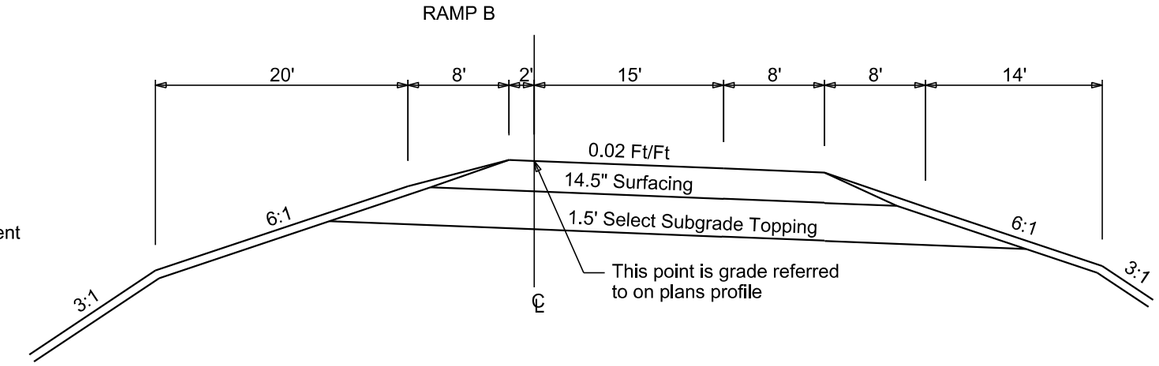

Transitions:
* 17+37.00 to 23+37.68 - 12' to 3'

RAMP A
12+11.00 to 26+20.00

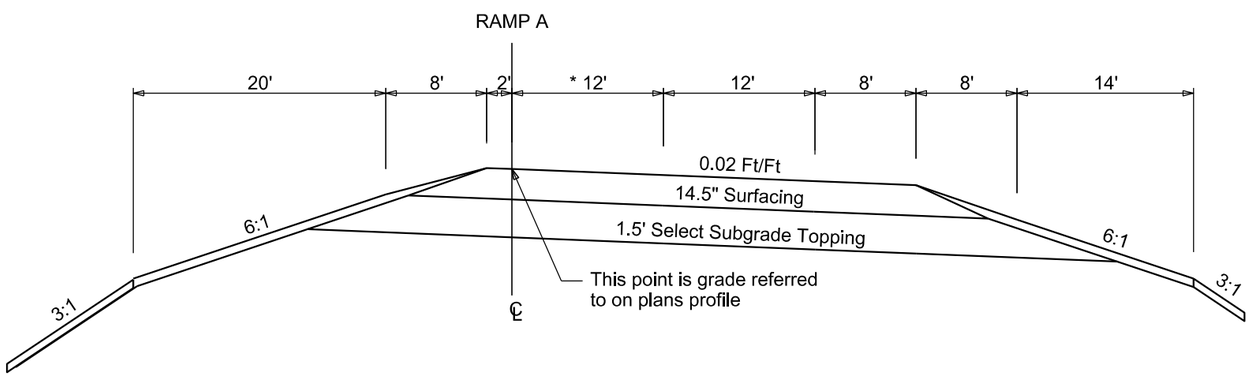

RAMP B
29+65.00 to 34+50.00

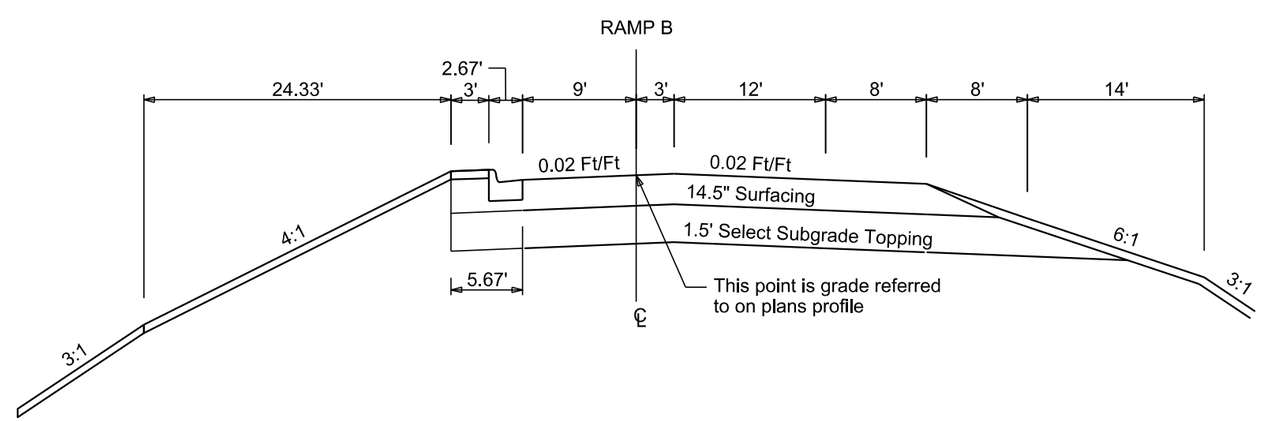

REGISTERED PROFESSIONAL ENGINEER
REG. NO. 15736
JONATHAN R. HULTGREN
SOUTH DAKOTA
5-16-2025

Plotted From - ngjersvik File - ...\typ.dgn

TYPICAL GRADING SECTIONS

FOR BIDDING PURPOSES ONLY

SD DOT	PROJECT	SHEET	TOTAL SHEETS
Plotting Date: 5/16/2025	EM 0292(88)73 IM 2292(104)0	B34	B182

VARIOUS RAMPS
RAMP C 30+00.00 to 43+36.00
RAMP D 56+75.65 to 60+10.83
RAMP D_CONN 70+00.00 to 82+52.60

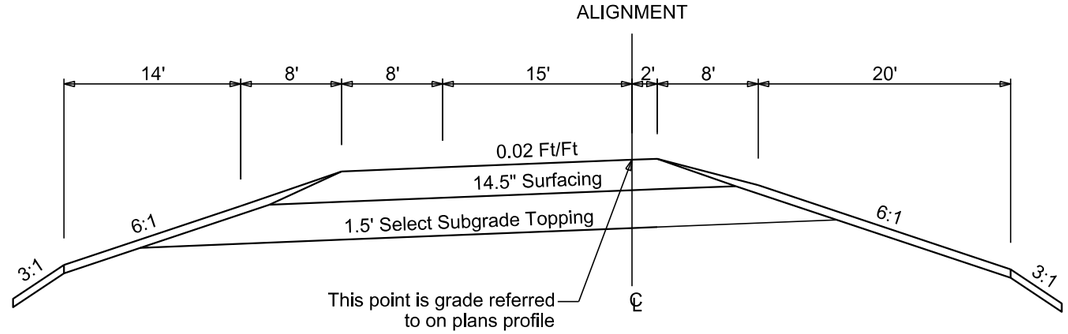

RAMP D
40+00.00 to 41+25.47

Transitions:
* 40+00.00 to 41+25.47 - 20.3' to 16'

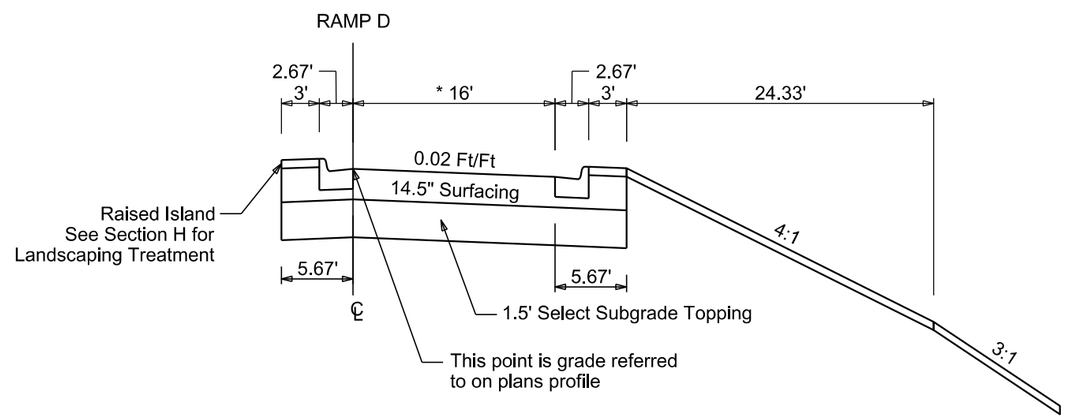

RAMP D
41+25.47 to 47+51.42

Transitions:
* 41+25.47 to 41+67.47 - 16' to 12'

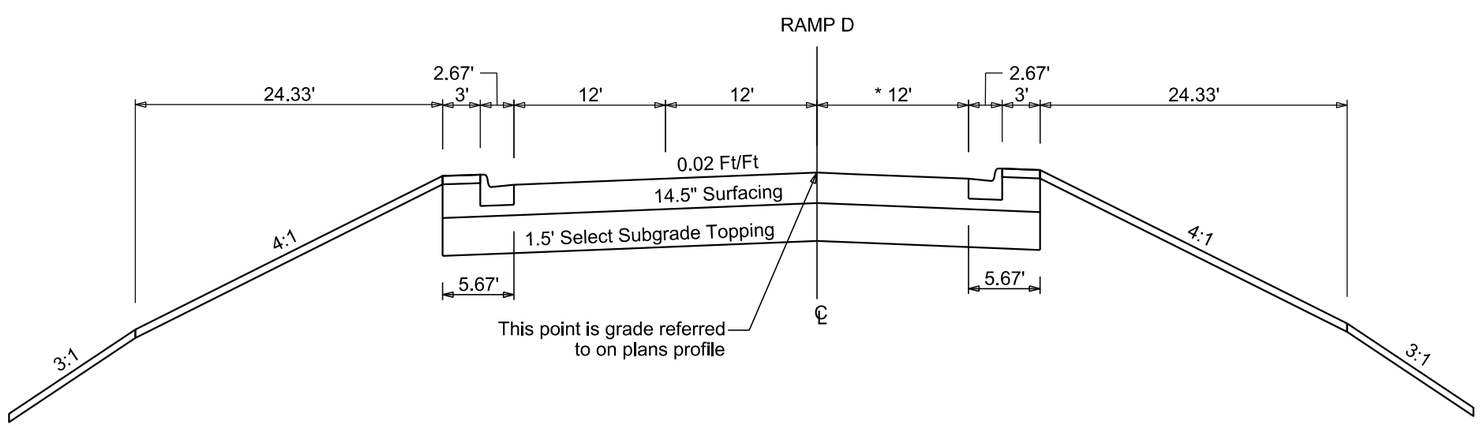

REGISTERED PROFESSIONAL ENGINEER
REG. NO. 15735
JONATHAN R. HULTGREN
SOUTH DAKOTA
5-16-2025

TYPICAL GRADING SECTIONS

FOR BIDDING PURPOSES ONLY

SD DOT	PROJECT	SHEET	TOTAL SHEETS
Plotting Date: 5/16/2025	EM 0292(88)73 IM 2292(104)0	B35	B182

RAMP D
47+51.42 to 56+75.65

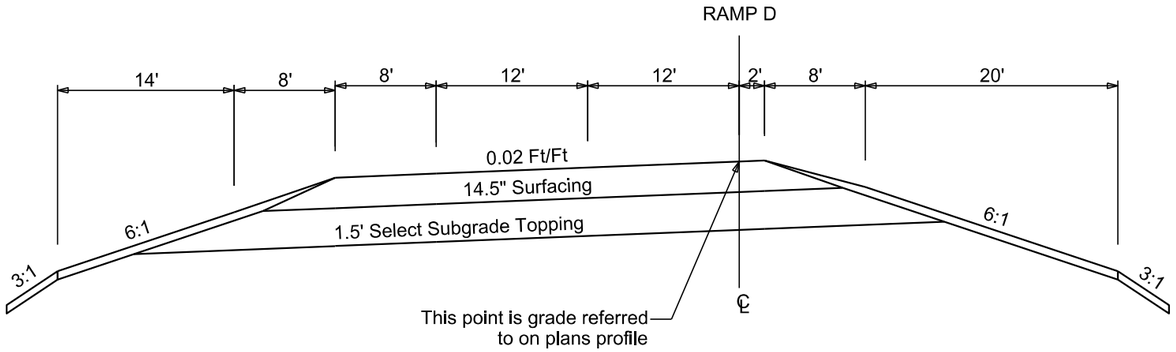

RAMP D
64+01.42 to 71+19.15

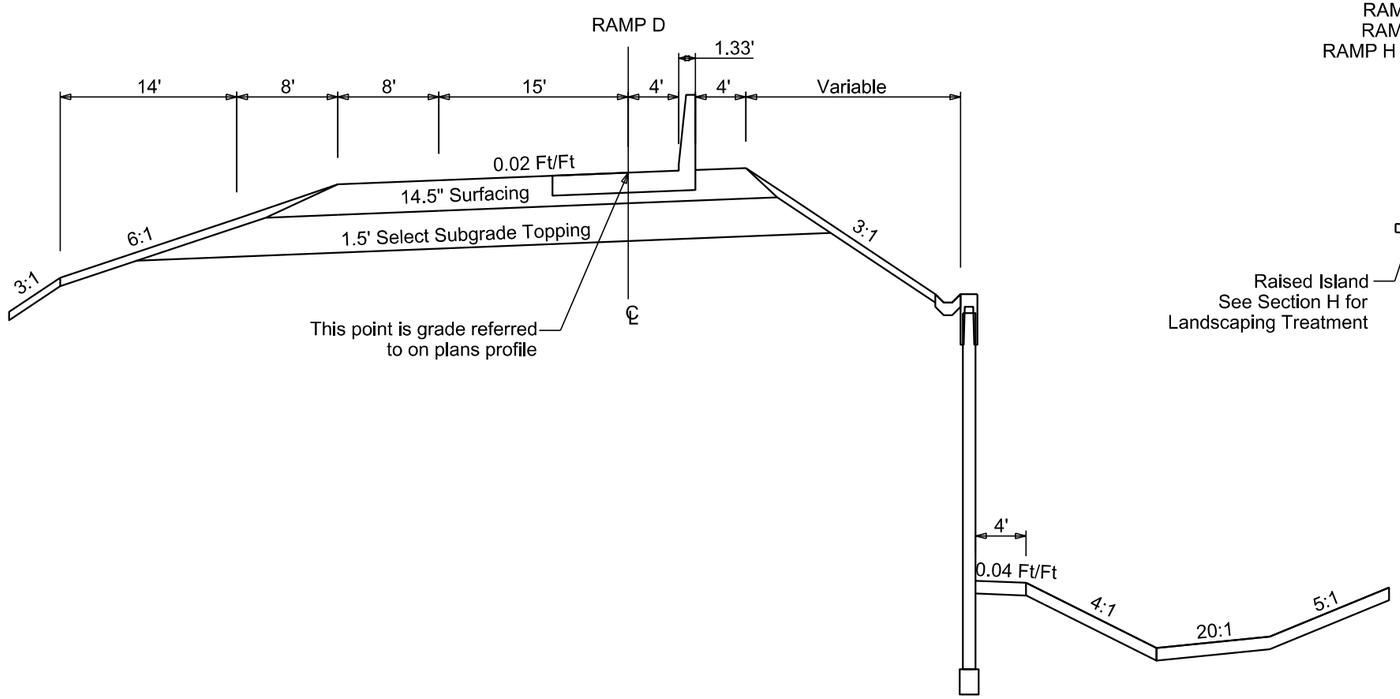

VARIOUS RAMPS
RAMP E 15+00.00 to 17+50.00
RAMP F 25+50.00 to 26+70.00
RAMP G 35+00.00 to 37+50.00
RAMP H 4+00.00 to 6+13.84 (Reversed)

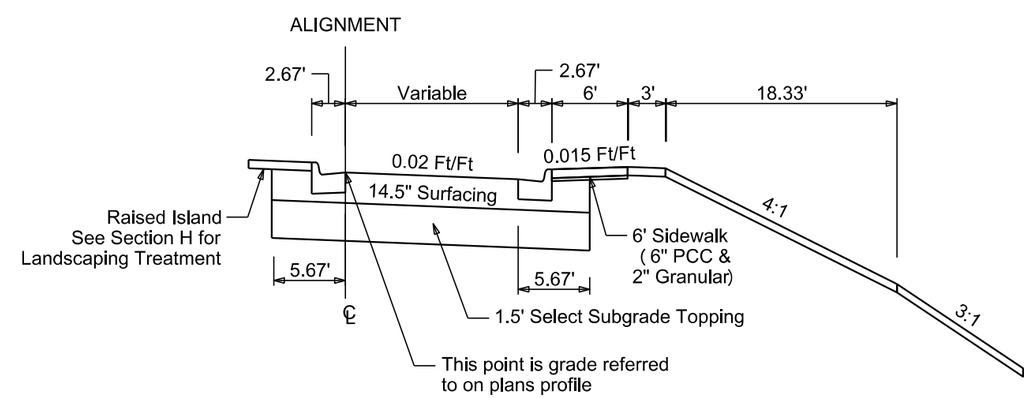

REGISTERED PROFESSIONAL ENGINEER
REG. NO. 15735
JONATHAN R. HULTGREN
SOUTH DAKOTA
5-16-2025

TYPICAL GRADING SECTIONS

FOR BIDDING PURPOSES ONLY

SD DOT	PROJECT	SHEET	TOTAL SHEETS
Plotting Date: 5/16/2025	EM 0292(88)73 IM 2292(104)0	B36	B182

RAMP D
71+19.15 to 71+34.00

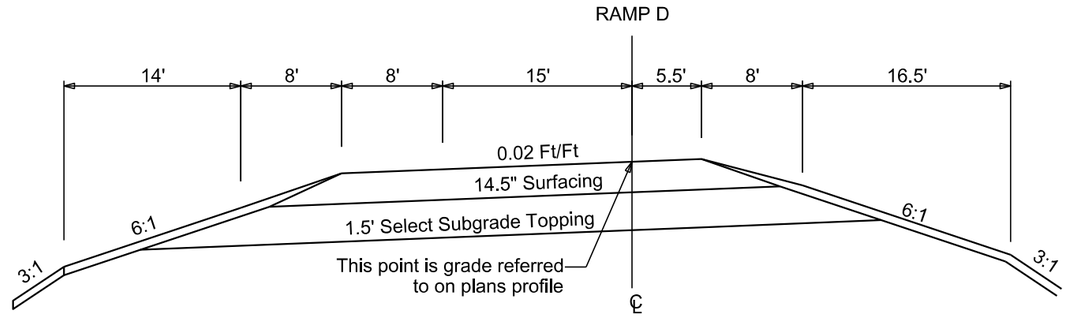

RAMP D
71+34.00 to 77+27.75

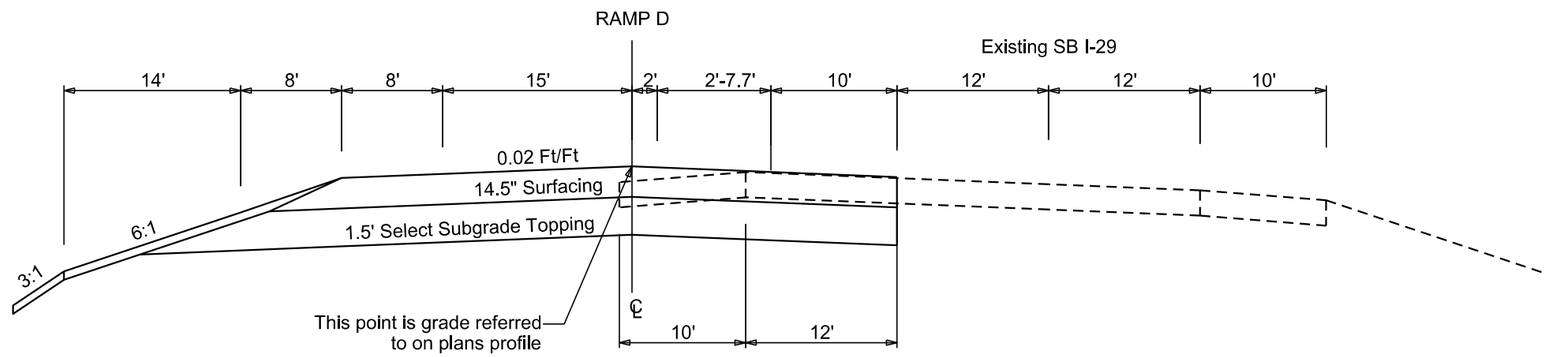

REGISTERED PROFESSIONAL ENGINEER
REG. NO. 15736
JONATHAN R. HULTGREN
SOUTH DAKOTA
5-16-2025

TYPICAL GRADING SECTIONS

FOR BIDDING PURPOSES ONLY

PROJECT	SHEET	TOTAL SHEETS
EM 0292(88)73 IM 2292(104)0	B37	B182

Plotting Date: 5/16/2025

Existing I-29
NBL I-29 36+92.00 to 47+32.16
NBL I-29 78+77.25 to 105+47.40

SBL I-29 (Reversed)
30+27.82 to 47+57.66

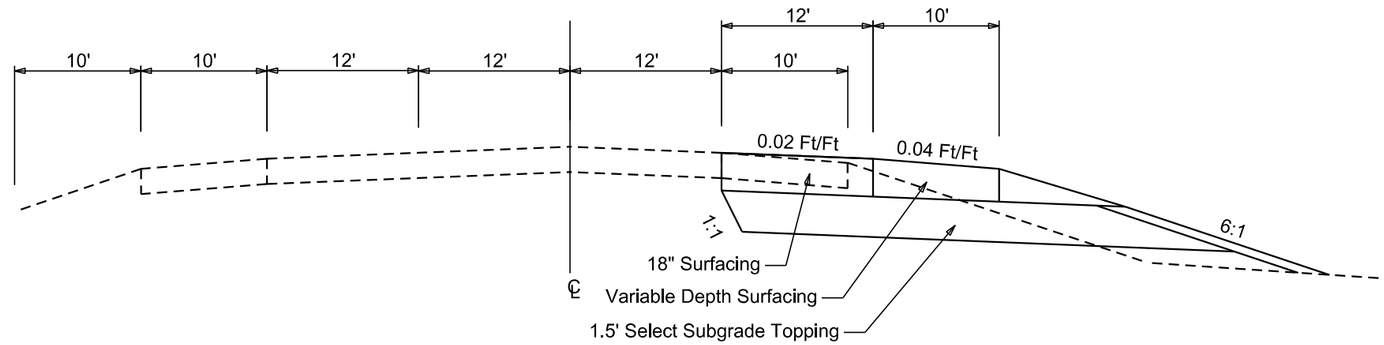

Existing I-229
I-229 NBL 179+84.01 to 183+16.73

Transitions:
* 181+09.43 to 183+16.73 - 12' to 23'

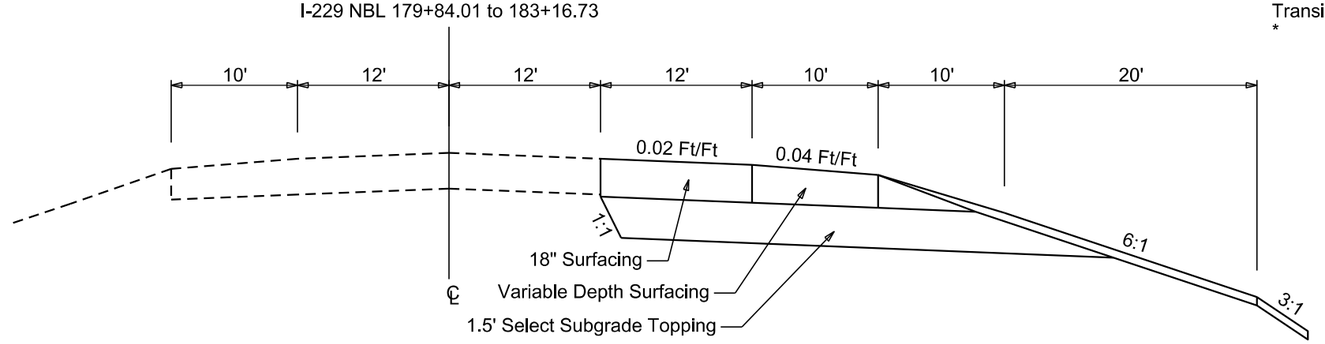

Existing I-229 and I-229 Ramp B
I-229 NBL 154+86.08 to 179+84.01
I-229 Ramp B 18+75.19 to 46+55.35

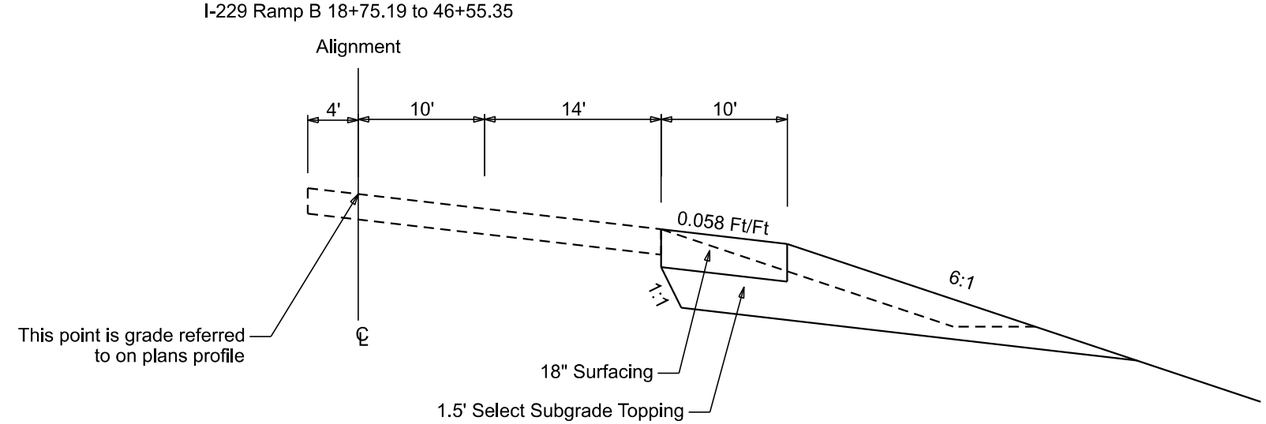

REGISTERED PROFESSIONAL ENGINEER
REG. NO.
15736
JONATHAN R.
HULTGREN
SOUTH DAKOTA
5-16-2025

TYPICAL GRADING SECTIONS

FOR BIDDING PURPOSES ONLY

PROJECT	SHEET	TOTAL SHEETS
EM 0292(88)73 IM 2292(104)0	B38	B182

Plotting Date: 5/16/2025

Ramp C Louise Avenue
20+00.00 to 36+67.80

Ramp C Louise Avenue

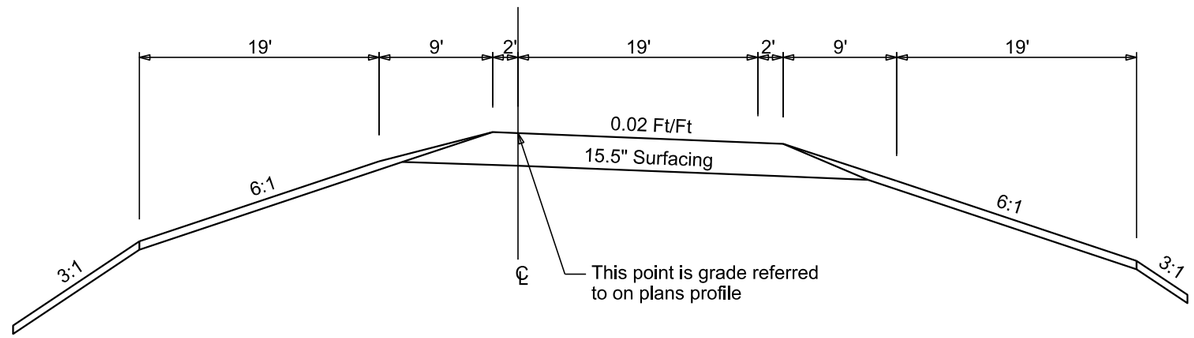

Transitions:
* 36+67.80 to 40+24.04 - 0' to 12'
** 40+66.95 to 42+06.10 - 19 to 26'
42+06.10 to 42+66.34 - 26'
42+66.34 to 43+87.81 - 12'

Ramp C Louise Avenue
36+67.80 to 42+06.10

Ramp C Louise Avenue

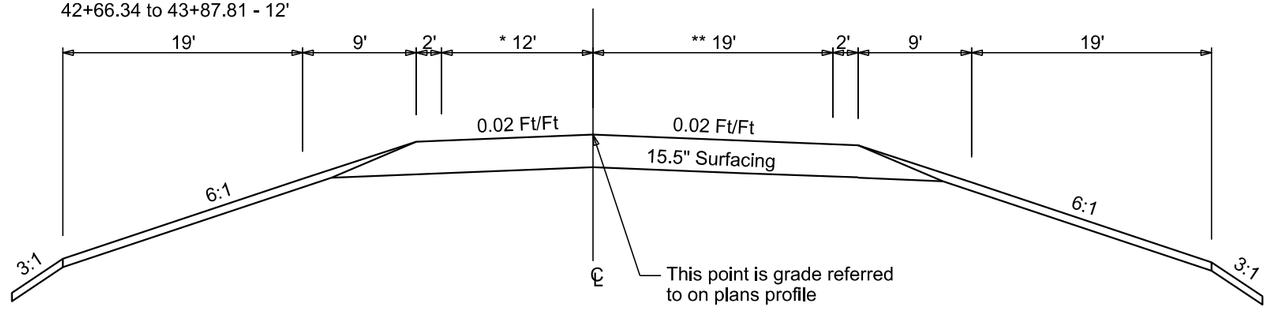

Shared Use Path
10+00.00 to 13+11.00
15+15.00 to 17+81.67

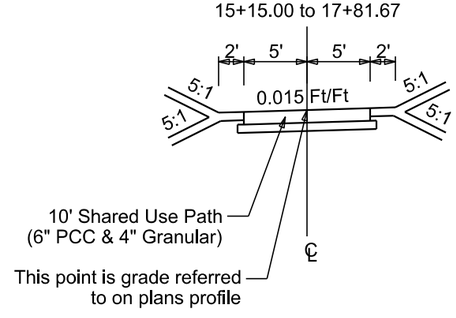

REGISTERED PROFESSIONAL ENGINEER
REG. NO. 15735
JONATHAN R. HULTGREN
SOUTH DAKOTA
5-16-2025

Plotted From - ngjersvik File - ...\typ.dgn

TYPICAL GRADING SECTIONS

FOR BIDDING PURPOSES ONLY

SD DOT	PROJECT	SHEET	TOTAL SHEETS
	EM 0292(88)73 IM 2292(104)0	B39	B182

Plotting Date: 7/14/2025 Revised Date: 6/20/2025 Initials: NBG

EPS Foam Fill

Ramp B 34+40
Ramp C 43+93
EB85TH 325+85-80' R to 326+65-70' R

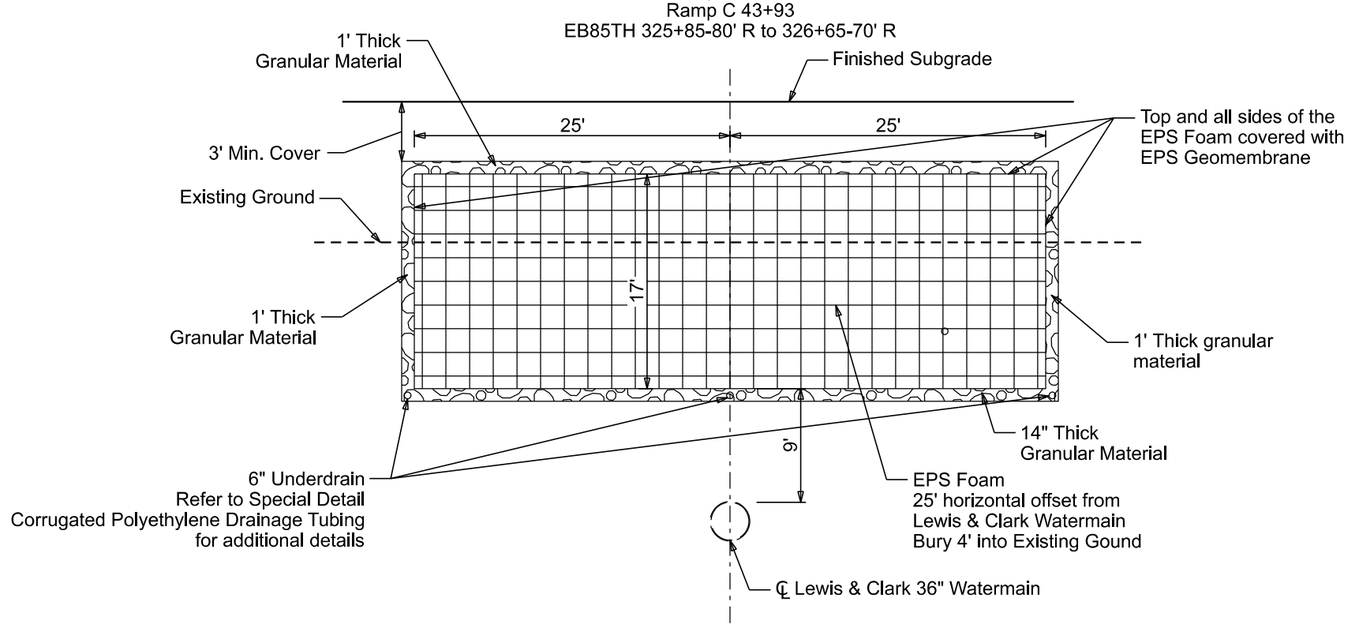

Refer to special provisions for
additional project information
and payment information for the
EPS Foam and EPS Geomembrane

EPS Foam Fill

Ramp B 34+40
Ramp C 44+93

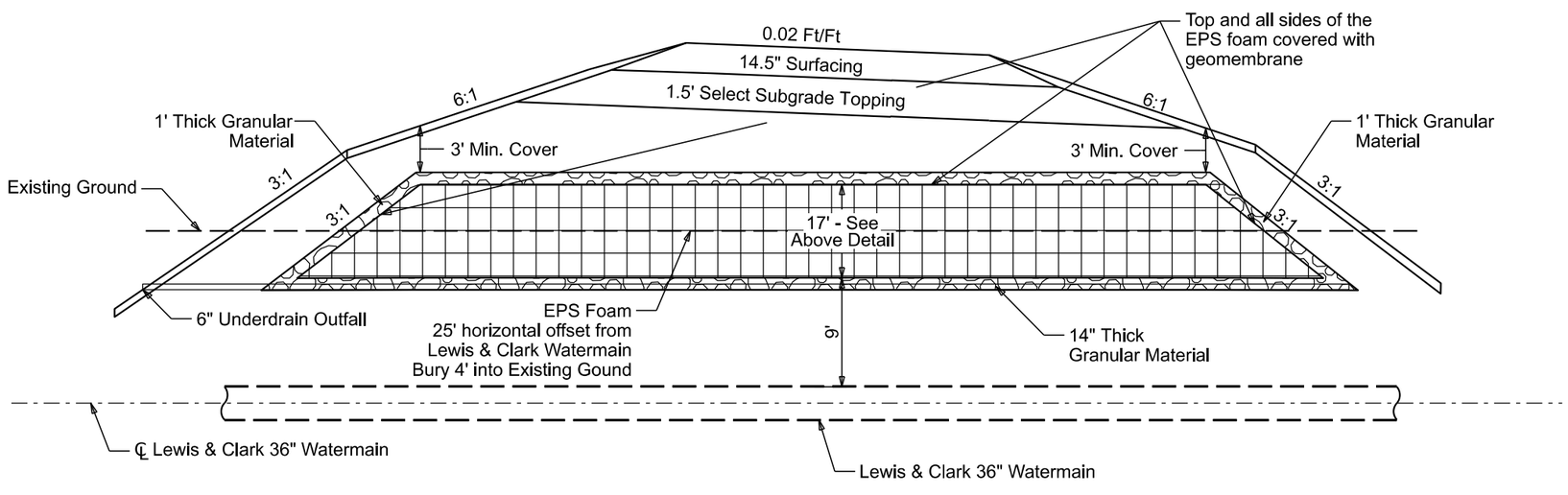

REGISTERED PROFESSIONAL ENGINEER
REG. NO. 15735
JONATHAN R. HULTGREN
SOUTH DAKOTA
7-23-2025

HORIZONTAL ALIGNMENT DATA

FOR BIDDING PURPOSES ONLY

SD DOT	PROJECT	SHEET	TOTAL SHEETS
	EM 0292(88)73 IM 2292(104)0	B40	B182

Plotting Date: 5/16/2025

WB85TH

PT. NO.	TYPE	STATION	RADIUS	DELTA	TANGENT	LENGTH	DIRECTION	NORTHING	EASTING
1110	POT	385+00.049				454.973'	N 88° 02' 46.79" E	436,153.6134	2,903,446.6543
1115	POT	389+55.022				225.046'	N 86° 54' 02.05" E	436,169.1240	2,903,901.3633
1120	POT	391+80.068				366.346'	N 88° 02' 46.79" E	436,181.2920	2,904,126.0794
	PC	395+46.414					N 88° 02' 46.79" E	436,193.7812	2,904,492.2128
1125	PI	397+63.203	24,000.000'	1° 02' 06.23" LT	216.789'	433.567'	PI	436,201.1719	2,904,708.8760
	CC							460,179.8305	2,903,674.0205
	PT	399+79.981				120.000'	N 87° 00' 40.56" E	436,212.4752	2,904,925.3703
	PC	400+99.981					N 87° 00' 40.56" E	436,218.7319	2,905,045.2071
1130	PI	403+16.770	24,000.000'	1° 02' 06.23" RT	216.789'	433.567'	PI	436,230.0352	2,905,261.7014
	CC							412,251.3765	2,906,296.5569
	PT	405+33.547				1,012.908'	N 88° 02' 46.79" E	436,237.4258	2,905,478.3645
	PC	415+46.455					N 88° 02' 46.79" E	436,271.9572	2,906,490.6832
1135	PI	415+90.073	300.000'	16° 32' 41.50" RT	43.618'	86.629'	PI	436,273.4442	2,906,534.2757
	CC							435,972.1316	2,906,500.9106
	PT	416+33.083				129.374'	S 75° 24' 31.71" E	436,262.4560	2,906,576.4868
	PC	417+62.457					S 75° 24' 31.71" E	436,229.8642	2,906,701.6874
1140	PI	417+91.962	200.000'	16° 47' 03.77" LT	29.506'	58.589'	PI	436,222.4312	2,906,730.2413
	CC							436,423.4138	2,906,752.0715
	PT	418+21.045				393.188'	N 87° 48' 24.52" E	436,223.5603	2,906,759.7253
	PC	422+14.233					N 87° 48' 24.52" E	436,238.6072	2,907,152.6253
1145	PI	422+44.654	200.000'	17° 17' 50.21" LT	30.421'	60.379'	PI	436,239.7714	2,907,183.0239
	CC							436,438.4607	2,907,144.9715
	PT	422+74.612				130.000'	N 70° 30' 34.32" E	436,249.9213	2,907,211.7015
	PC	424+04.612					N 70° 30' 34.32" E	436,293.2958	2,907,334.2521
1150	PI	424+50.743	250.000'	20° 54' 34.39" RT	46.131'	91.235'	PI	436,308.6873	2,907,377.7394
	CC							436,057.6216	2,907,417.6646
	PT	424+95.847				127.211'	S 88° 34' 51.30" E	436,307.5449	2,907,423.8559
	PC	426+23.058					S 88° 34' 51.30" E	436,304.3945	2,907,551.0273
1155	PI	427+55.674	4,500.000'	3° 22' 33.83" LT	132.616'	265.155'	PI	436,301.1102	2,907,683.6027
	CC							440,803.0143	2,907,662.4706
	PT	428+88.213				2,179.803'	N 88° 02' 34.88" E	436,305.6390	2,907,816.1414
1160	POT	450+68.016						436,380.0772	2,909,994.6727

RAMPA

PT. NO.	TYPE	STATION	RADIUS	DELTA	TANGENT	LENGTH	DIRECTION	NORTHING	EASTING
	PC	10+00.000					N 87° 48' 24.52" E	436,308.3566	2,907,092.4791
1250	PI	11+43.286	122.000'	99° 10' 29.71" LT	143.286'	211.173'	PI	436,313.8400	2,907,235.6601
	CC							436,430.2672	2,907,087.8103
	PT	12+11.173				1,041.123'	N 11° 22' 05.19" W	436,454.3148	2,907,207.4168
	PC	22+52.296					N 11° 22' 05.19" W	437,475.0117	2,907,002.1994
1260	PI	24+36.843	2,300.000'	9° 10' 29.71" RT	184.547'	368.305'	PI	437,655.9380	2,906,965.8230
	CC							437,928.3685	2,909,257.0758
	PT	26+20.601					N 2° 11' 35.48" W	437,840.3498	2,906,958.7606

RAMPE

PT. NO.	TYPE	STATION	RADIUS	DELTA	TANGENT	LENGTH	DIRECTION	NORTHING	EASTING
1275	POT	1+00.000						436,318.5415	2,907,424.1283
	PC	1+90.283					N 88° 34' 51.30" W	436,320.7774	2,907,333.8732
1280	PI	2+78.115	110.000'	77° 12' 46.11" RT	87.832'	148.238'	PI	436,322.9526	2,907,246.0681
	CC							436,430.7437	2,907,336.5973
	PT	3+38.521				48.572'	N 11° 22' 05.19" W	436,409.0614	2,907,228.7554
1285	POT	3+87.093						436,456.6802	2,907,219.1814

EB85TH

PT. NO.	TYPE	STATION	RADIUS	DELTA	TANGENT	LENGTH	DIRECTION	NORTHING	EASTING
1010	POT	285+00.000				404.963'	N 88° 02' 46.79" E	436,117.6343	2,903,447.8816
1015	POT	289+04.963				125.026'	N 89° 11' 31.53" E	436,131.4401	2,903,852.6096
1020	POT	290+29.989				2,043.438'	N 88° 02' 46.79" E	436,133.2029	2,903,977.6223
	PC	310+73.426					N 88° 02' 46.79" E	436,202.8665	2,906,019.8721
1025	PI	311+95.791	4,000.000'	3° 30' 15.83" RT	122.365'	244.653'	PI	436,207.0381	2,906,142.1656
	CC							432,205.1916	2,906,156.2374
	PT	313+18.079				210.932'	S 88° 26' 57.38" E	436,203.7266	2,906,264.4854
	PC	315+29.011					S 88° 26' 57.38" E	436,198.0184	2,906,475.3397
1030	PI	315+76.263	250.000'	21° 24' 23.42" LT	47.253'	93.404'	PI	436,196.7396	2,906,522.5751
	CC							436,447.9268	2,906,482.1052
	PT	316+22.414				135.000'	N 70° 08' 39.19" E	436,212.7892	2,906,567.0186
	PC	317+57.414					N 70° 08' 39.19" E	436,258.6425	2,906,693.9929
1035	PI	317+88.488	200.000'	17° 39' 45.33" RT	31.074'	61.654'	PI	436,269.1967	2,906,723.2191
	CC							436,070.5323	2,906,761.9237
	PT	318+19.068				391.493'	N 87° 48' 24.52" E	436,270.3858	2,906,754.2699
	PC	322+10.561					N 87° 48' 24.52" E	436,285.3679	2,907,145.4762
1040	PI	322+41.124	200.000'	17° 22' 36.93" RT	30.563'	60.657'	PI	436,286.5375	2,907,176.0169
	CC							436,085.5144	2,907,153.1300
	PT	322+71.218				116.847'	S 74° 48' 58.54" E	436,278.5326	2,907,205.5131
	PC	323+88.065					S 74° 48' 58.54" E	436,247.9287	2,907,318.2806
1045	PI	324+33.277	300.000'	17° 08' 26.58" LT	45.212'	89.749'	PI	436,236.0870	2,907,361.9143
	CC							436,537.4559	2,907,396.8552
	PT	324+77.813				2,590.928'	N 88° 02' 34.88" E	436,237.6309	2,907,407.0999
1050	POT	350+68.741						436,326.1087	2,909,996.5168

RAMPB

PT. NO.	TYPE	STATION	RADIUS	DELTA	TANGENT	LENGTH	DIRECTION	NORTHING	EASTING
	PC	20+00.000					N 0° 32' 12.15" E	434,693.6526	2,907,042.0512
1305	PI	21+73.733	2,300.000'	8° 38' 21.80" RT	173.733'	346.807'	PI	434,867.3779	2,907,043.6786
	CC							434,672.1081	2,909,341.9503
	PT	23+46.807				1,066.641'	N 9° 10' 33.94" E	435,038.8876	2,907,071.3837
	PC	34+13.448					N 9° 10' 33.94" E	436,091.8787	2,907,241.4802
1310	PI	35+07.745	132.000'	71° 04' 53.60" LT	94.297'	163.760'	PI	436,184.9685	2,907,256.5176
	CC							436,112.9287	2,907,111.1694
	PT	35+77.208					N 61° 54' 19.66" W	436,229.3754	2,907,173.3319

RAMPF

PT. NO.	TYPE	STATION	RADIUS	DELTA	TANGENT	LENGTH	DIRECTION	NORTHING	EASTING
1325	POT	2+00.000				42.620'	N 9° 10' 33.94" E	436,091.4003	2,907,244.4418
	PC	2+42.620					N 9° 10' 33.94" E	436,133.4754	2,907,251.2385
1330	PI	3+14.134	135.000'	55° 49' 23.79" RT	71.514'	131.530'	PI	436,204.0742	2,907,262.6427
	CC							436,111.9470	2,907,384.5109
	PT	3+74.151					N 64° 59' 57.73" E	436,234.2980	2,907,327.4560

REGISTERED PROFESSIONAL ENGINEER
REG. NO. 15735
JONATHAN R. HULTGREN
SOUTH DAKOTA
5-16-2025

The coordinates shown on this sheet are based on the South Dakota State Plane Coordinate System. South Zone (NAD 83/CONUS); epoch 2002.00; Geoid 12B; SF = 0.9998455956

HORIZONTAL ALIGNMENT DATA

FOR BIDDING PURPOSES ONLY

SD DOT	PROJECT	SHEET	TOTAL SHEETS
	EM 0292(88)73 IM 2292(104)0	B41	B182

Plotting Date: 5/16/2025

RAMPC

PT. NO.	TYPE	STATION	RADIUS	DELTA	TANGENT	LENGTH	DIRECTION	NORTHING	EASTING
	PC	30+00.000					N 0° 32' 12.15" E	434,720.3945	2,906,910.2959
1350	PI	32+33.783	2,300.000'	11° 36' 27.93" LT	233.783'	465.965'	PI	434,954.1670	2,906,912.4858
	CC							434,741.9389	2,904,610.3968
	PT	34+65.965				894.444'	N 11° 04' 15.79" W	435,183.5991	2,906,867.5934
	PC	43+60.409					N 11° 04' 15.79" W	436,061.3968	2,906,695.8369
1355	PI	45+08.786	127.000'	98° 52' 40.31" RT	148.377'	219.170'	PI	436,207.0129	2,906,667.3445
	CC							436,085.7842	2,906,820.4734
	PT	45+79.578					N 87° 48' 24.52" E	436,212.6911	2,906,815.6132

RAMPG

PT. NO.	TYPE	STATION	RADIUS	DELTA	TANGENT	LENGTH	DIRECTION	NORTHING	EASTING
1375	POT	3+00.000				101.230'	S 88° 26' 57.38" E	436,187.0224	2,906,475.0420
	PC	4+01.230					S 88° 26' 57.38" E	436,184.2829	2,906,576.2354
1380	PI	4+97.331	120.000'	77° 22' 41.60" RT	96.101'	162.061'	PI	436,181.6823	2,906,672.3009
	CC							436,064.3269	2,906,572.9880
	PT	5+63.291				43.991'	S 11° 04' 15.79" E	436,087.3700	2,906,690.7548
1385	POT	6+07.282						436,044.1981	2,906,699.2021

RAMPD

PT. NO.	TYPE	STATION	RADIUS	DELTA	TANGENT	LENGTH	DIRECTION	NORTHING	EASTING
	PC	40+00.000					N 58° 36' 58.65" W	436,291.1380	2,906,729.3329
1405	PI	40+82.480	130.000'	64° 47' 14.37" RT	82.480'	146.998'	PI	436,334.0910	2,906,658.9195
	CC							436,402.1188	2,906,797.0326
	PT	41+46.998				132.755'	N 6° 10' 15.71" E	436,416.0934	2,906,667.7859
	PC	42+79.753					N 6° 10' 15.71" E	436,548.0794	2,906,682.0566
1410	PI	45+16.592	2,000.000'	13° 30' 25.12" LT	236.839'	471.482'	PI	436,783.5461	2,906,707.5160
	CC							436,763.0728	2,904,693.6457
	PT	47+51.235				665.879'	N 7° 20' 09.40" W	437,018.4465	2,906,677.2748
	PC	54+17.114					N 7° 20' 09.40" W	437,678.8749	2,906,592.2508
1415	PI	57+15.665	1,510.000'	22° 22' 04.93" RT	298.550'	589.498'	PI	437,974.9815	2,906,554.1299
	CC							437,871.6820	2,908,089.8908
	PT	60+06.612				1,450.113'	N 15° 01' 55.53" E	438,263.3157	2,906,631.5619
	PC	74+56.725					N 15° 01' 55.53" E	439,663.8070	2,907,007.6633
1420	PI	75+92.255	6,900.000'	2° 15' 01.84" LT	135.529'	271.024'	PI	439,794.6986	2,907,042.8142
	CC							441,453.3912	2,900,343.7764
	PT	77+27.749					N 12° 46' 53.70" E	439,926.8696	2,907,072.7980

RAMPH

PT. NO.	TYPE	STATION	RADIUS	DELTA	TANGENT	LENGTH	DIRECTION	NORTHING	EASTING
	PC	4+00.000					N 49° 55' 39.68" E	436,274.3611	2,906,574.2475
1435	PI	5+12.436	280.000'	43° 45' 23.97" LT	112.436'	213.835'	PI	436,346.7424	2,906,660.2874
	CC							436,488.6263	2,906,393.9964
	PT	6+13.835					N 6° 10' 15.71" E	436,458.5272	2,906,672.3739

RAMPD_CONN

PT. NO.	TYPE	STATION	RADIUS	DELTA	TANGENT	LENGTH	DIRECTION	NORTHING	EASTING
	PC	70+00.000					N 7° 20' 09.40" W	437,677.3426	2,906,580.3490
1455	PI	72+41.509	4,600.000'	6° 00' 38.73" RT	241.509'	482.575'	PI	437,916.8746	2,906,549.5115
	CC							438,264.7022	2,911,142.6959
	PT	74+82.575				244.546'	N 1° 19' 30.67" W	438,158.3188	2,906,543.9262
	PC	77+27.121					N 1° 19' 30.67" W	438,402.7996	2,906,538.2706
1460	PI	80+41.741	2,300.000'	15° 34' 42.51" LT	314.621'	625.360'	PI	438,717.3361	2,906,530.9945
	CC							438,349.6079	2,904,238.8858
	PT	83+52.481				300.365'	N 16° 54' 13.18" W	439,018.3636	2,906,439.5143
1465	POT	86+52.846						439,305.7518	2,906,352.1790

I_29

PT. NO.	TYPE	STATION	RADIUS	DELTA	TANGENT	LENGTH	DIRECTION	NORTHING	EASTING
1505	POT	24+86.000				1,743.112'	N 0° 25' 26.73" E	432,448.1830	2,906,958.4400
1510	POT	42+29.112				686.668'	N 0° 32' 12.15" E	434,191.2470	2,906,971.3420
	PC	49+15.780					N 0° 32' 12.15" E	434,877.8847	2,906,977.7741
1515	PI	55+11.463	25,000.000'	2° 43' 47.62" LT	595.683'	1,191.142'	PI	435,473.5420	2,906,983.3540
	CC							435,112.0639	2,881,978.8710
	PT	61+06.921				1,917.713'	N 2° 11' 35.48" W	436,068.7891	2,906,960.5578
	PC	80+24.634					N 2° 11' 35.48" W	437,985.0976	2,906,887.1688
1520	PI	87+77.588	5,729.000'	14° 58' 29.17" RT	752.954'	1,497.326'	PI	438,737.5000	2,906,858.3540
	CC							438,204.3407	2,912,611.9722
	PT	95+21.960				3,023.344'	N 12° 46' 53.70" E	439,471.7962	2,907,024.9338
	PC	125+45.305					N 12° 46' 53.70" E	442,420.2236	2,907,693.8035
1525	PI	130+44.717	5,760.000'	9° 54' 38.56" RT	499.413'	996.333'	PI	442,907.2610	2,907,804.2910
	CC							441,145.9099	2,913,311.0737
	PT	135+41.638				3,749.013'	N 22° 41' 32.26" E	443,368.0140	2,907,996.9553
1530	POT	172+90.651						446,826.8160	2,909,443.2570

NB229

PT. NO.	TYPE	STATION	RADIUS	DELTA	TANGENT	LENGTH	DIRECTION	NORTHING	EASTING
1540	POT	149+00.000				1,389.685'	N 71° 42' 45.87" E	442,162.1430	2,908,599.8290
	PC	162+89.685					N 71° 42' 45.87" E	442,598.2002	2,909,919.3285
1545	PI	170+52.776	20,000.000'	4° 22' 12.26" RT	763.091'	1,525.443'	PI	442,837.6440	2,910,643.8800
	CC							423,608.2946	2,916,194.9548
	PT	178+15.128				531.807'	N 76° 04' 58.12" E	443,021.1821	2,911,384.5702
1550	POT	183+46.935				509.156'	N 76° 04' 40.37" E	443,149.0920	2,911,900.7660
	PC	188+56.091					N 76° 04' 40.37" E	443,271.5963	2,912,394.9647
1555	PI	196+69.997	5,742.000'	16° 08' 07.48" LT	813.906'	1,617.039'	PI	443,467.4243	2,913,184.9611
	CC							448,844.9174	2,911,013.4235
	PT	204+73.130				1,768.148'	N 59° 56' 32.89" E	443,875.0849	2,913,889.4153
1560	POT	222+41.278						444,760.6961	2,915,419.7880

229RAMPB

PT. NO.	TYPE	STATION	RADIUS	DELTA	TANGENT	LENGTH	DIRECTION	NORTHING	EASTING
1580	POT	16+66.390				208.800'	N 12° 46' 53.70" E	440,256.2503	2,907,258.2643
	PC	18+75.190					N 12° 46' 53.70" E	440,459.8763	2,907,304.4582
1585	PI	32+87.640	2,500.000'	58° 55' 52.17" RT	1,412.450'	2,571.357'	PI	441,837.3265	2,907,616.9416
	CC							439,906.7888	2,909,742.5095
	PT	44+46.547				208.800'	N 71° 42' 45.87" E	442,280.5270	2,908,958.0562
1590	POT	46+55.347						442,346.0445	2,909,156.3108

REGISTERED PROFESSIONAL ENGINEER
REG. NO. 15735
JONATHAN R. HULTGREN
SOUTH DAKOTA
5-16-2025

The coordinates shown on this sheet are based on the South Dakota State Plane Coordinate System. South Zone (NAD 83/CONUS); epoch 2002.00; Geoid 12B; SF = 0.9998455956

HORIZONTAL ALIGNMENT DATA

FOR BIDDING PURPOSES ONLY

SD DOT	PROJECT	SHEET	TOTAL SHEETS
	EM 0292(88)73 IM 2292(104)0	B42	B182

Plotting Date: 5/16/2025

229RAMPC

PT. NO.	TYPE	STATION	RADIUS	DELTA	TANGENT	LENGTH	DIRECTION	NORTHING	EASTING
1630	POT	9+00.000				107.622'	N 2° 11' 35.82" W	437,616.6650	2,906,847.2390
	PC	10+07.622					N 2° 11' 35.82" W	437,724.2083	2,906,843.1202
1635	PI	13+28.344	2,075.000'	17° 34' 21.90" LT	320.722'	636.407'	PI	438,044.6950	2,906,830.8460
	CC							437,644.7966	2,904,769.6404
	PT	16+44.029				955.968'	N 19° 45' 57.71" W	438,346.5202	2,906,722.3843
1640	POT	25+99.997				12.000'		439,246.1640	2,906,399.0950
		SHIFT (LT)							
1645	POT	25+99.997				211.819'	N 19° 45' 57.84" W	439,242.1050	2,906,387.8020
	PC	28+11.816					N 19° 45' 57.84" W	439,441.4438	2,906,316.1690
1650	PI	46+15.580	1,898.000'	87° 05' 00.46" RT	1,803.764'	2,884.757'	PI	441,138.9320	2,905,706.1710
	CC							440,083.3106	2,908,102.3411
	PT	56+96.573				685.679'	N 67° 19' 02.62" E	441,834.5102	2,907,370.4230
	PC	63+82.252					N 67° 19' 02.62" E	442,098.9255	2,908,003.0677
1655	PI	74+70.386	14,200.000'	8° 45' 50.14" RT	1,088.134'	2,172.024'	PI	442,518.5383	2,909,007.0403
	CC							428,997.2217	2,913,478.9564
	PT	85+54.275					N 76° 04' 52.76" E	442,780.2830	2,910,063.2248

229RAMPG

PT. NO.	TYPE	STATION	RADIUS	DELTA	TANGENT	LENGTH	DIRECTION	NORTHING	EASTING
1600	POT	9+95.000				5.002'	S 12° 46' 53.86" W	440,653.7240	2,907,225.3850
	PC	10+00.002					S 12° 46' 53.86" W	440,648.8463	2,907,224.2785
1605	PI	14+54.054	400.000'	97° 14' 33.94" RT	454.052'	678.883'	PI	440,206.0451	2,907,123.8258
	CC							440,737.3406	2,906,834.1903
	PCC	16+78.884					N 69° 58' 32.20" W	440,361.5218	2,906,697.2223
	PCC	16+78.884					N 69° 58' 32.20" W	440,361.5218	2,906,697.2223
1610	PI	21+32.936	400.000'	97° 14' 33.82" RT	454.052'	678.882'	PI	440,516.9984	2,906,270.6190
	CC							440,737.3406	2,906,834.1903
	PCC	23+57.767					N 27° 16' 01.62" E	440,920.5964	2,906,478.6382
	PCC	23+57.767					N 27° 16' 01.62" E	440,920.5964	2,906,478.6382
1615	PI	31+07.877	1,836.000'	44° 26' 44.22" RT	750.110'	1,424.226'	PI	441,587.3548	2,906,822.2934
	CC							440,079.4523	2,908,110.6224
	PT	37+81.993				1,118.009'	N 71° 42' 45.85" E	441,822.7255	2,907,534.5197
1620	POT	49+00.002						442,173.5360	2,908,596.0640

LOUISE RAMP

PT. NO.	TYPE	STATION	RADIUS	DELTA	TANGENT	LENGTH	DIRECTION	NORTHING	EASTING
1700	POT	20+00.000				256.379'	N 79° 22' 13.84" E	443,130.1800	2,911,874.3363
	PC	22+56.379					N 79° 22' 13.84" E	443,177.4709	2,912,126.3159
1705	PI	28+08.451	1,920.000'	32° 05' 01.90" RT	552.072'	1,075.140'	PI	443,279.3046	2,912,668.9147
	CC							441,290.4171	2,912,480.4737
	PT	33+31.519				336.285'	S 68° 32' 44.26" E	443,077.3786	2,913,182.7332
	PC	36+67.804					S 68° 32' 44.26" E	442,954.3793	2,913,495.7160
1710	PI	39+52.430	670.000'	46° 01' 59.04" LT	284.626'	538.297'	PI	442,850.2743	2,913,760.6203
	CC							443,577.9544	2,913,740.7753
	PT	42+06.101				217.879'	N 65° 25' 16.70" E	442,968.6625	2,914,019.4569
1715	POT	44+23.980						443,059.2879	2,914,217.5945

85TH TUNNEL

PT. NO.	TYPE	STATION	RADIUS	DELTA	TANGENT	LENGTH	DIRECTION	NORTHING	EASTING
TUNNEL1	POT	10+00.000				237.647'	S 6° 07' 22.39" E	436,408.8408	2,907,356.7807
	PC	12+37.647					S 6° 07' 22.39" E	436,172.5495	2,907,382.1284
85TH TUNNEL1	PI	13+03.410	55.000'	100° 11' 11.39" LT	65.764'	96.172'	PI	436,107.1611	2,907,389.1428
	CC							436,178.4158	2,907,436.8147
	PT	13+33.819					N 73° 41' 26.22" E	436,125.6291	2,907,452.2600
	PC	14+13.646					N 73° 41' 26.22" E	436,148.0464	2,907,528.8747
85TH TUNNEL2	PI	14+48.582	45.000'	75° 38' 51.34" LT	34.936'	59.413'	PI	436,157.8571	2,907,562.4044
	CC							436,191.2356	2,907,516.2377
	PT	14+73.060				26.428'	N 1° 57' 25.12" W	436,192.7723	2,907,561.2114
TUNNEL2	POT	14+99.488						436,219.1854	2,907,560.3089

SW ENTRANCE

PT. NO.	TYPE	STATION	RADIUS	DELTA	TANGENT	LENGTH	DIRECTION	NORTHING	EASTING
5113	POT	7+00.000				150.777'	N 1° 57' 13.21" W	436,036.9021	2,905,577.2154
5114	POT	8+50.777						436,187.5916	2,905,572.0752

NW ENTRANCE

PT. NO.	TYPE	STATION	RADIUS	DELTA	TANGENT	LENGTH	DIRECTION	NORTHING	EASTING
5123	POT	8+00.000				117.099'	N 1° 57' 13.21" W	436,240.5608	2,905,570.2684
5124	POT	9+17.099						436,357.5917	2,905,566.2763

SE ENTRANCE

PT. NO.	TYPE	STATION	RADIUS	DELTA	TANGENT	LENGTH	DIRECTION	NORTHING	EASTING
5117	POT	6+00.000				138.177'	N 1° 57' 25.12" W	436,132.3546	2,908,372.3294
5118	POT	7+38.177						436,270.4506	2,908,367.6108

NE ENTRANCE

PT. NO.	TYPE	STATION	RADIUS	DELTA	TANGENT	LENGTH	DIRECTION	NORTHING	EASTING
5119	POT	5+00.000				128.700'	N 1° 57' 25.12" W	436,324.4190	2,908,365.7632
5120	POT	6+28.700						436,453.0435	2,908,361.3682

RETAINING WALL 1

PT. NO.	TYPE	STATION	RADIUS	DELTA	TANGENT	LENGTH	DIRECTION	NORTHING	EASTING
	PC	0+00.000						438,568.3084	2,906,767.0253
DWAL1_BF	PI	3+33.258	5,240.065'	7° 16' 40.79" RT	333.258'	665.619'	PI	438,898.6534	2,906,810.9905
	CC							437,877.0109	2,911,961.2899
	PT	6+65.619						439,220.7672	2,906,896.4507

RETAINING WALL 2

PT. NO.	TYPE	STATION	RADIUS	DELTA	TANGENT	LENGTH	DIRECTION	NORTHING	EASTING
	PC	0+00.000					N 10° 59' 12.40" E	438,149.7419	2,906,657.6325
DWAL2_BF	PI	0+38.859	1,459.000'	3° 03' 04.81" RT	38.859'	77.700'	PI	438,187.8890	2,906,665.0384
	CC							437,871.6820	2,908,089.8908
	PT	0+77.700					N 14° 02' 17.21" E	438,225.5877	2,906,674.4644
5129	POT	2+10.679				38.001'	N 73° 05' 06.47" W	438,349.0131	2,906,624.9729
5130	POT	2+48.680						438,360.0697	2,906,588.6156

REGISTERED PROFESSIONAL ENGINEER
REG. NO. 15735
JONATHAN R. HULTGREN
SOUTH DAKOTA
5-16-2025

The coordinates shown on this sheet are based on the South Dakota State Plane Coordinate System. South Zone (NAD 83/CONUS); epoch 2002.00; Geoid 12B; SF = 0.9998455956

CONTROL DATA

FOR BIDDING PURPOSES ONLY

PROJECT	SHEET	TOTAL SHEETS
EM 0292(88)73 IM 2292(104)0	B43	B182

Plotting Date: 5/16/2025

HORIZONTAL AND VERTICAL CONTROL POINTS						
POINT	STATION	OFFSET	DESCRIPTION	NORTHING	EASTING	ELEVATION
TRI01	23+07	15' L	100' N'ly of Gore at NB I-29 and Exit ramp to NB 229	440876.272	2907421.376	1493.00
TRI02	26+46	19' L	300' E'ly of Gore at NB 229 and Exit ramp to Louise Ave.	443229.038	2912514.387	1444.47
TRI03	341+36	1' R	33' South of C/L 85th St. and 395' West of C/L Tallgrass Ave.	436293.006	2909064.142	1525.00
TRI04	38+31	150' L	100' West of C/L SB I-29 and 2810' North of C/L WB Co Rd 106(271st St.)	433793.871	2906818.757	1520.56
TRI05	393+81	13' L	40' North of C/L 85th St. and 50' West of C/L Sundowner Ave.	436201.589	2904326.328	1518.05
TRI06	418+64	48' L	104' West of C/L SB I-29 and 2810' 20' North of C/L 85th St.(270th St.)	436273.388	2906800.734	1522.08
TRI10			Cap	436293.073	2909064.067	1524.95

The coordinates shown on this sheet are based on the South Dakota State Plane Coordinate System. South Zone (NAD 83/11); epoch 2002.00; Geoid 12A; SF = 0.998455956
The elevations shown on this sheet are based on NAVD 88.

REGISTERED PROFESSIONAL ENGINEER
REG. NO. 15735
JONATHAN R. HULTGREN
SOUTH DAKOTA
5-16-2025

UTILITY CONTACT INFORMATION

FOR BIDDING PURPOSES ONLY

SD DOT	PROJECT	SHEET	TOTAL SHEETS
	EM 0292(88)73 IM 2292(104)0	B43A	B182

Plotting Date: 7/23/2025 Revised Date: 7/23/2025
Initials: NBG

UTILITY CONTACTS

POWER

East River Electric Power 211 S Harth Ave Madison, SD 57042 Attn: Jordan Brown P: 605-256-8231 jbrown@eastriver.coop	Northwestern Energy 313 Cedar St Yankton, SD 57078 Attn: Noah Kimuyukilonzo P: 605-415-1977 noah.kimuyukilonzo@northwestern.com
MidAmerican Energy 1200S Blauvelt Ave Sioux Falls, SD 57105 Attn: Ryan Hendriks P: 605-373-6061 rhendriks@midamerican.com	Southeastern Electric 47077 276th St Lennox, SD 57039 Attn: Adam Stark P: 605-368-4000 adam@southeastern.coop
Northern Natural Gas 47496 272nd St Harrisburg, SD 57032 Attn: Travis Beck P: 605-215-7757 travis.beck@nngco.com	Xcel Energy 500 W Russell St Sioux Falls, SD 57104 Attn: Mike Ronfeldt P: 605-339-8358 michael.a.ronfeldt@xcelenergy.com

UTILITY CONTACTS

COMMUNICATIONS

Bluepeak (Vast Broadband, aka Vast) 5100 S. Broadband Ln Sioux Falls, SD 57108 Attn: Jordan Huber P: 605-498-4922 Jordan.Huber@mybluepeak.com	Midwest Fiber Networks 6070 North Flint Road Glendale, WI 53209 Attn: Patrick Graham P: 414-672-5612 pgraham@midwestfibernetworks.com Attn: Corey Schmukim P: 414-349-2764 cschmunkim@midwestfibernetworks.com
Lumen 125 S Dakota Ave Sioux Falls, SD 57104 Attn: Andrew Wixon P: 605-681-2049 andrew.wixon@lumen.com	Windstream 3540 SW 61sdt St Des Moines, IA 50321 Attn: Lori Ketter P: 920-410-6902 Lori.Ketter@windstream.com
Midcontinent Communications 1305 N Terry Avenue Sioux Falls, SD 57105 Attn: Trent Bialas P: 605-231-1972 Trent.Bialas@Midco.com	SDN Communications 2900 W 10th St Sioux Falls, SD 57104 Attn: Matt Burton P: 712-333-5542 Matt.Burton@sdncommunications.com

UTILITY CONTACTS

PUBLIC

Lincoln County Rural Water 27066 Henry Pl Sioux Falls, SD 57108 Attn: Robin Dykstra P: 605-767-2966 rdykstra@lincolncoruralwater.com	City of Sioux Falls (water) 231 N Dakota Ave Sioux Falls, SD 57104 Attn: Shannon Ausen P: 605-367-8607 shannon.ausen@siouxfalls.gov Attn: Nick Borns P: 605-367-8655 nicholis.borns@siouxfalls.gov
Lewis & Clark Regional Water (L&C) 31474 SD Hwy 19 Vermillion, SD 57069 Attn: Justin Walsh P: 605-310-8780 jwalsh@lcrws.org Attn: Todd Giffin P: 605-310-3085 tgiffin@lcrws.org	City of Tea 510 S Main Ave Tea, SD 57064 Attn: Ben Scholtz (HDR representing Tea) P: 605-977-7759 ben.scholtz@hdrinc.com Attn: Thad Konrad P: 605-498-2906
SDDOT (SF Area Ofice) 5316 W 60th St Sioux Falls, SD 57107 Attn: Stacy Bartlett P: 605-773-6488 stacy.bartlett@state.sd.us	

REGISTERED PROFESSIONAL ENGINEER
REG. NO. 15735
JONATHAN R. HULTGREN
SOUTH DAKOTA
7-23-2025

LEGEND

FOR BIDDING PURPOSES ONLY

SD DOT	PROJECT	SHEET	TOTAL SHEETS
	EM 0292(88)73 IM 2292(104)0	B44	B182

Plotting Date: 5/16/2025

Anchor
Antenna
Approach
Assumed Corner
Azimuth Marker
BBQ Grill/ Fireplace
Bearing Tree
Bench Mark
Box Culvert
Bridge
Brush
Buildings
Bulk Tank
Cattle Guard
Cemetery
Centerline
Cistern
Clothes Line
Control Point
Commercial Sign Double Face
Commercial Sign One Post
Commercial Sign Overhead
Commercial Sign Two Post
Concrete Symbol
Creek Edge
Curb/Gutter
Curb
Dam Grade/Dike/Levee
Deck Edge
Ditch Block
Doorway Threshold
Drainage Profile
Drop Inlet
Edge Of Asphalt
Edge Of Concrete
Edge Of Gravel
Edge Of Other
Edge Of Shoulder
Elec. Trans./Power Jct. Box
Fence Barbwire
Fence Chainlink
Fence Electric
Fence Misc.
Fence Rock
Fence Snow
Fence Wood
Fence Woven
Fire Hydrant
Flag Pole
Flower Bed
Gas Valve Or Meter
Gas Pump Island
Grain Bin
Guardrail
Guide Sign One Post
Guide Sign Two Post
Gutter
Guy Pole
Haystack

Hedge
Highway ROW Marker
Interstate Close Gate
Iron Pin
Irrigation Ditch
Lake Edge
Lawn Sprinkler
Mailbox
Manhole Electric
Manhole Gas
Manhole Misc
Manhole Sanitary Sewer
Manhole Storm Sewer
Manhole Telephone
Manhole Water
Merry-Go-Round
Microwave Radio Tower
Misc. Line
Misc. Property Corner
Misc. Post
Overhang Or Encroachment
Overhead Utility Line — OH —
Parking Meter
Pedestrian Push Button Pole
Pipe With End Section
Pipe With Headwall
Pipe Without End Section
Playground Slide
Playground Swing
Power And Light Pole
Power And Telephone Pole
Power Meter
Power Pole
Power Pole And Transformer
Power Tower Structure
Propane Tank
Property Pipe
Property Pipe With Cap
Property Stone
Public Telephone
Railroad Crossing Signal
Railroad Milepost Marker
Railroad Profile
Railroad R.O.W. Marker
Railroad Signs
Railroad Switch
Railroad Track
Railroad Trestle
Rebar
Rebar With Cap
Reference Mark
Regulatory Sign One Post
Regulatory Sign Two Post
Retaining Wall
Riprap
River Edge
Rock And Wire Baskets
Rockpiles
Satellite Dish

Septic Tank
Shrub Tree
Sidewalk
Sign Face
Sign Post
Slough Or Marsh
Spring
Stream Gauge
Street Marker
Subsurface Utility Exploration Test Hole
Telephone Fiber Optics — T/F —
Telephone Junction Box
Telephone Pole
Television Cable Jct Box
Television Tower
Test Wells/Bore Holes
Traffic Signal
Trash Barrel
Tree Belt
Tree Coniferous
Tree Deciduous
Tree Stumps
Triangulation Station
Underground Electric Line — P —
Underground Gas Line — G —
Underground High Pressure Gas Line — HG —
Underground Sanitary Sewer — S —
Underground Storm Sewer — S —
Underground Tank
Underground Telephone Line — T —
Underground Television Cable — TV —
Underground Water Line — W —
Warning Sign One Post
Warning Sign Two Post
Water Fountain
Water Hydrant
Water Meter
Water Tower
Water Valve
Water Well
Weir Rock
Windmill
Wingwall
Witness Corner

State and National Line
County Line
Section Line
Quarter Line
Sixteenth Line
Property Line
Utility Easement Line
City Utility Easement Line
Construction Line
ROW Line
New ROW Line
New Permanent Easement Line
Cut and Fill Limits
Control of Access
New Control of Access
Proposed ROW
(After Property Disposal)

Drainage Arrow

Wetland

Remove Gravel Driveway

Remove Asphalt Driveway

Remove Asphalt Concrete Pavement

Remove Concrete Pavement

Remove Gravel Roadway

Remove Concrete Curb and/or Gutter

Clear and/or Grub Tree, Stump, or Shrub

Detectable Warning
Pedestrian Push Button Pole
and 30" x 48" Clear Space
with 1.5% slope

REGISTERED PROFESSIONAL ENGINEER
REG. NO. 15735
JONATHAN R. HULTGREN
SOUTH DAKOTA
5-16-2025

85TH STREET

FOR BIDDING PURPOSES ONLY

SD DOT	PROJECT	SHEET	TOTAL SHEETS
	EM 0292(88)73 IM 2292(104)0	B45	B182

Plotting Date: 8/4/2025 Revised Date: 7/7/2025 Initials: NBG

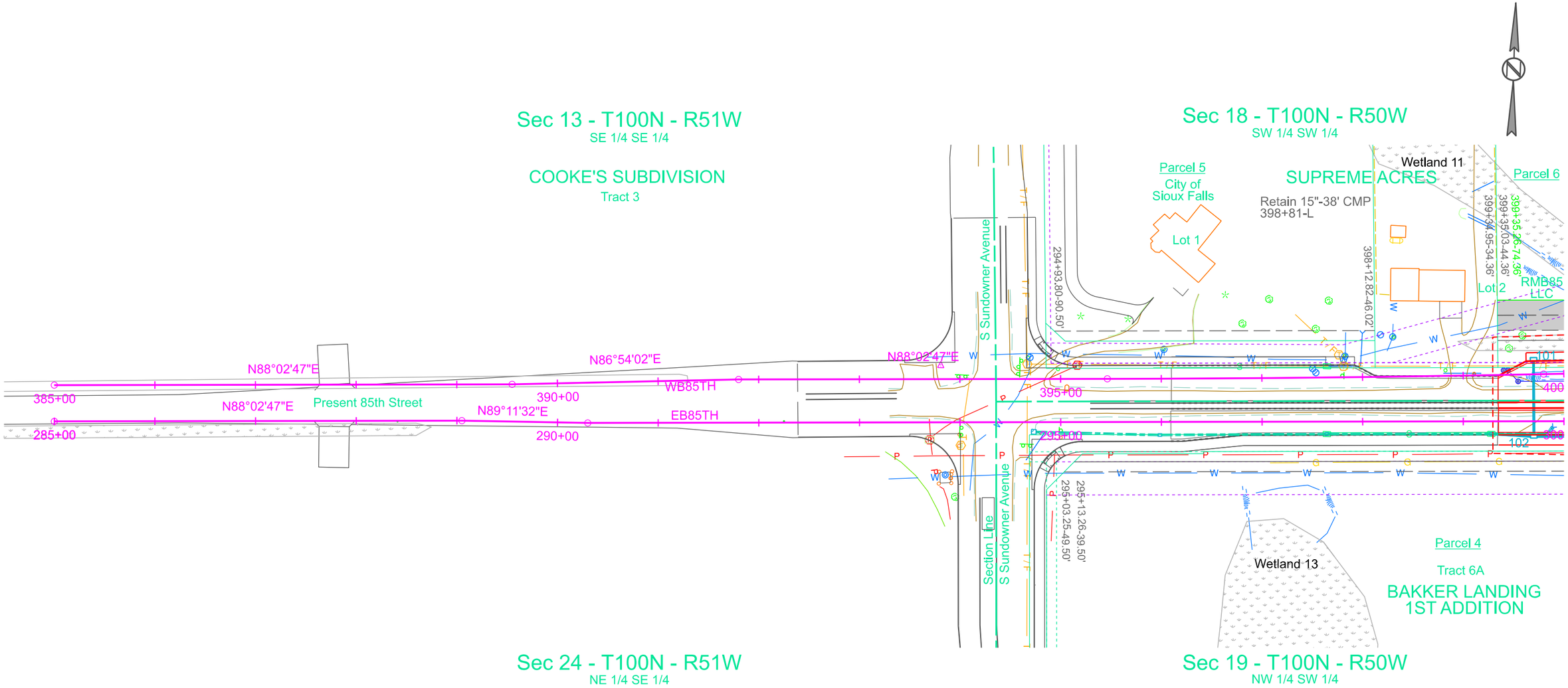

ID: DI #8 HDR to 102
297+63.75 - 9.09' R to 299+70.00 - 15.00' R
Install 18" - 204' RCP CL2
(Between Existing Drop Inlet & Drop Inlet)

REGISTERED PROFESSIONAL ENGINEER
REG. NO. 15735
JONATHAN R. HULTGREN
SOUTH DAKOTA
8-4-2025

85TH STREET

FOR BIDDING PURPOSES ONLY

SD DOT	PROJECT	SHEET	TOTAL SHEETS
	EM 0292(88)73 IM 2292(104)0	B46	B182

Plotting Date: 8/8/2025 Revised Date: 7/7/2025 NBG

Westbound 85th Street

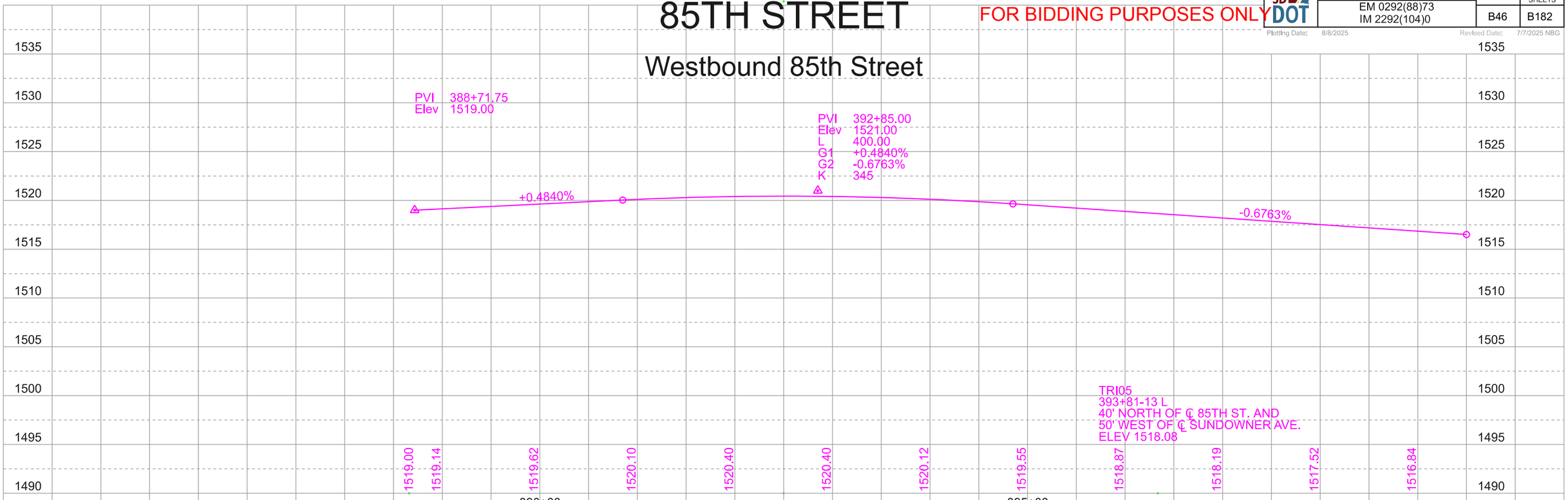

Eastbound 85th Street

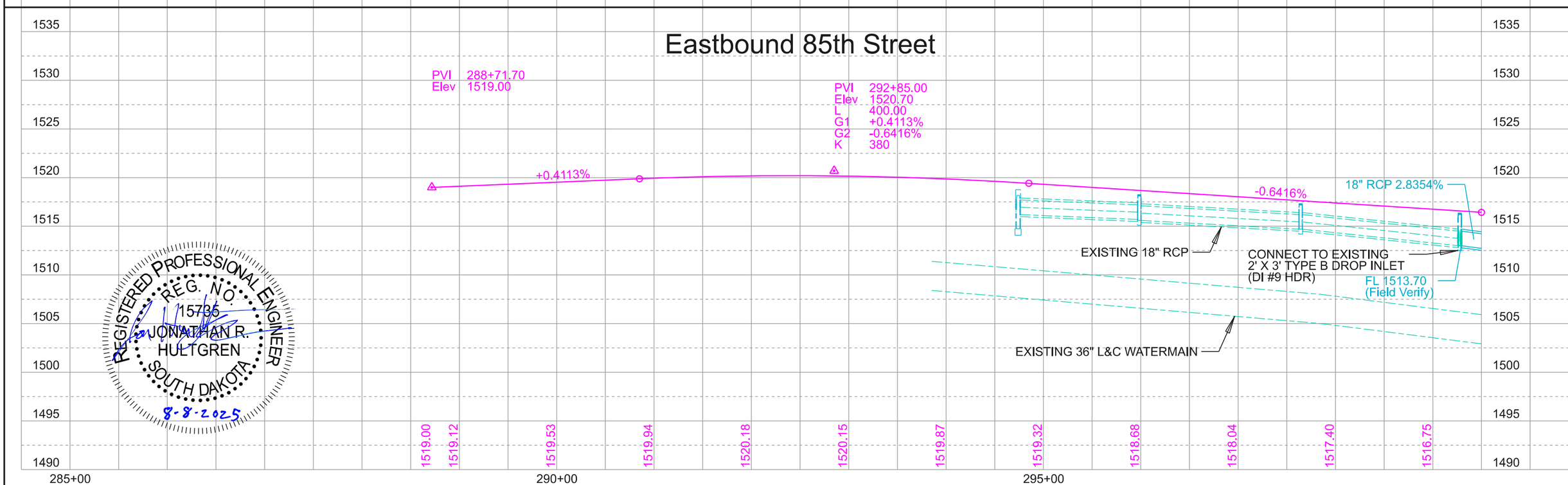

REGISTERED PROFESSIONAL ENGINEER
REG. NO. 15735
JONATHAN R. HULTGREN
SOUTH DAKOTA
8-8-2025

85TH STREET

FOR BIDDING PURPOSES ONLY

SD DOT	PROJECT	SHEET	TOTAL SHEETS
	EM 0292(88)73 IM 2292(104)0	B47	B182

Plotting Date: 8/4/2025 Revised Date: 7/7/2025 Initials: NBG

ID: DI #8 HDR to 102
297+63.75 - 9.09' R to 299+70.00 - 15.00' R
Install 18" - 204' RCP CL2
(Between Existing Drop Inlet and Drop Inlet)

ID: 101 to 102
299+70.00 - 61.50' L to 299+70.00 - 15.00' R
Install 18" - 78' RCP CL2
(Between Drop Inlets)

ID: 102 to 104
299+70.00 - 15.00' R to 301+41.25 - 15.00' R
Install 18" - 166' RCP CL2
(Between Drop Inlets)

ID: 104 to 103
301+41.25 - 15.00' R to 301+46.25 - 64.75' L
Install 18" - 80' RCP CL2
(Between Drop Inlets)

ID: 103 to 107
301+46.25 - 64.75' L to 301+46.00 - 86.75' L
Install 18" - 16' RCP CL2
(Between Drop Inlet and Flared End)

ID: 106 to 104
302+00.20 - 15.00' R to 301+41.25 - 15.00' R
Install 18" - 56' RCP CL2
(Between Drop Inlets)

ID: 105 to 106
302+00.00 - 65.50' L to 302+00.20 - 15.00' R
Install 18" - 80' RCP CL2
(Between Drop Inlets)

ID: 150 to 100
302+65.00 - 39.00' R to 302+64.25 - 88.50' L
Install 42" - 114' RCP CL2 Arch
& 2 Flared Ends

ID: 109 to 108
303+24.75 - 22.00' R to 303+25.00 - 67.00' L
Install 24" - 90' RCP CL2
(Between Drop Inlets)

ID: 108 to 175
303+25.00 - 67.00' L to 302+87.00 - 84.50' L
Install 24" - 44' CMP
(Between Drop Inlet and Flared End)

ID: 111 to 109
304+65.00 - 27.00' R to 303+24.75 - 22.00' R
Install 24" - 140' RCP CL2
(Between Drop Inlets)

ID: 110 to 111
304+65.00 - 67.75' L to 304+65.00 - 27.00' R
Install 18" - 96' RCP CL2
(Between Drop Inlets)

ID: 114 to 111
307+25.00 - 15.00' R to 304+65.00 - 27.00' R
Install 18" - 256' RCP CL2
(Between Drop Inlets)

ID: 113 to 114
307+00.00 - 79.00' L to 307+25.00 - 15.00' R
Install 12" - 98' RCP CL2
(Between Drop Inlets)

ID: 115 to 116
308+00.00 - 79.00' L to 308+00.00 - 15.00' R
Install 12" - 94' RCP CL2
(Between Drop Inlets)

ID: 116 to 114
308+00.00 - 15.00' R to 307+25.00 - 15.00' R
Install 18" - 72' RCP CL2
(Between Drop Inlets)

ID: 118 to 116
309+00.00 - 15.00' R to 308+00.00 - 15.00' R
Install 18" - 102' RCP CL2
(Between Drop Inlets)

ID: 360 to 370
311+09.50 - 57.75' R to 311+87.00 - 121.50' L
Install 42" - 182' RCP CL2 Arch
& 2 Flared Ends

ID: 302 to 301
312+00.00 - 15.00' L to 312+00.00 - 70.00' R
Install 18" - 86' RCP CL2
(Between Drop Inlets)

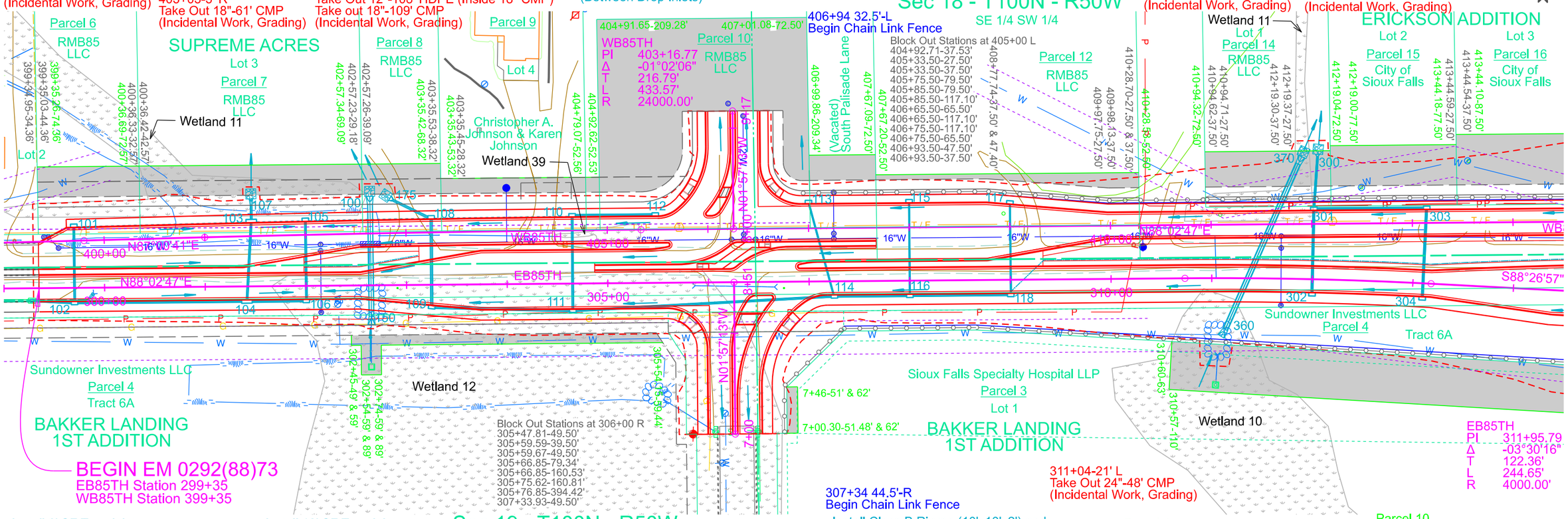

Install 6' SF Type Inlet
at the following locations:
ID: 101 - EB85TH 299+70.00 - 61.50' L
ID: 102 - EB85TH 299+70.00 - 15.00' R
ID: 105 - EB85TH 302+00.00 - 65.50' L
ID: 106 - EB85TH 302+00.20 - 15.00' R
ID: 108 - EB85TH 303+25.00 - 67.00' L
ID: 109 - EB85TH 303+24.75 - 22.00' R
ID: 110 - EB85TH 304+65.00 - 67.75' L
ID: 111 - EB85TH 304+65.00 - 27.00' R
ID: 112 - EB85TH 305+47.50 - 67.75' L
ID: 113 - EB85TH 307+00.00 - 79.00' L
ID: 114 - EB85TH 307+25.00 - 15.00' R
ID: 115 - EB85TH 308+00.00 - 79.00' L
ID: 116 - EB85TH 308+00.00 - 15.00' R
ID: 117 - EB85TH 309+00.00 - 76.75' L
ID: 118 - EB85TH 309+00.00 - 15.00' R
ID: 301 - EB85TH 312+00.00 - 70.00' L
ID: 302 - EB85TH 312+00.00 - 15.00' R
ID: 303 - EB85TH 313+10.00 - 75.00' L
ID: 304 - EB85TH 313+10.00 - 15.00' R

Install 10' SF Type Inlet
at the following locations:
ID: 103 - EB85TH 301+46.25 - 64.75' L
ID: 104 - EB85TH 301+41.25 - 15.00' R

REGISTERED PROFESSIONAL ENGINEER
REG. NO. 15735
JONATHAN R. HULTGREN
SOUTH DAKOTA
8-4-2025

ID: 117 to 118
309+00.00 - 76.75' L to 309+00.00 - 15.00' R
Install 12" - 92' RCP CL2
(Between Drop Inlets)

ID: 303 to 301
313+10.00 - 75.00' L to 312+00.00 - 70.00' L
Install 18" - 112' RCP CL2
(Between Drop Inlets)

ID: 301 to 300
312+00.00 - 70.00' L to 312+02.25 - 124.25' L
Install 18" - 54' CMP
& 1 - 32.5° CMP Elbow
Install 18" - 28' CMP
& 1 32.5° CMP Elbow
Install 18" - 8' CMP
& 1 CMP Flared End

ID: 304 to 303
313+10.00 - 15.00' R to 313+10.00 - 75.00' L
Install 18" - 90' RCP CL2
(Between Drop Inlets)

Install Class B Riprap (10'x10'x2') and
Type B Drainage Fabric (24 SqYd)
EB85TH 301+46 L (24 SqYd)
EB85TH 302+64 L (24 SqYd)
EB85TH 302+82 L (24 SqYd)
EB85TH 311+11 R (81 SqYd)
EB85TH 311+87 L (24 SqYd)
EB85TH 312+02 L (24 SqYd)

ID: 112 to 110
305+47.50 - 67.75' L to 304+65.00 - 67.75' L
Install 18" - 82' RCP CL2
(Between Drop Inlets)

Parcel 3
7+00.30 to 7+46.40 R
Temporary Easement containing
0.01 sc (501 sq ft), more or less

Parcel 9
EB85TH 310+56.73 R to RAMPC 34+40.52 L
Temporary Easement containing
1.27 ac (55255 sq ft), more or less

Parcel 4
302+44.74 to 305+54.15 R
Temporary Easement containing
0.08 ac (3633 sq ft), more or less

Parcel 6
399+36.10 to 400+36.69 L
Temporary Easement containing
0.07 ac (3040 sq ft), more or less

Parcel 7
400+36.69 to 402+57.28 L
Temporary Easement containing
0.15 ac (6634 sq ft), more or less

Parcel 8
402+57.28 to 403+35.44 L
Temporary Easement containing
0.05 ac (2349 sq ft), more or less

Parcel 9
403+35.52 to 404+92.62 L
Temporary Easement containing
0.05 ac (2363 sq ft), more or less

Parcel 10
406+65.50 to 407+01.08
Temporary Easement containing
0.62 ac (27181 sq ft), more or less

Parcel 12
407+67.01 to 410+28.49 L
Temporary Easement containing
0.05 ac (2213 sq ft), more or less

Parcel 14
410+94.63 to 412+19.04 L
Temporary Easement containing
0.10 ac (4364 sq ft), more or less

Parcel 15
412+19.00 to 413+45.31 L
Temporary Easement containing
0.11 ac (5008 sq ft), more or less

Parcel 16
413+44.48 to 414+69.06 L
Temporary Easement containing
0.14 ac (6248 sq ft), more or less

85TH STREET

FOR BIDDING PURPOSES ONLY

SD DOT	PROJECT	SHEET	TOTAL SHEETS
	EM 0292(88)73 IM 2292(104)0	B48	B182

Plotting Date: 8/8/2025 Revised Date: 7/7/2025 NBG

Westbound 85th Street

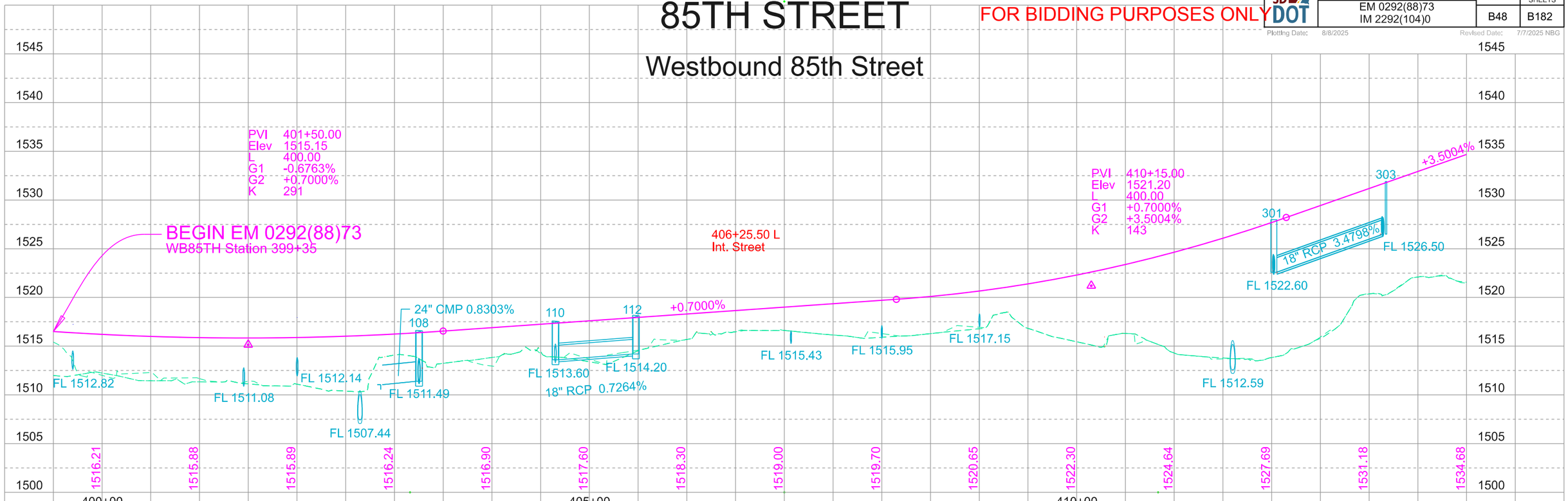

Eastbound 85th Street

REGISTERED PROFESSIONAL ENGINEER
REG. NO. 15735
JONATHAN R. HULTGREN
SOUTH DAKOTA
8-8-2025

PVI 301+50.00
Elev 1515.15
L 400.00
G1 -0.6416%
G2 +0.7000%
K 298

EB 85th Street Sta. 299+35 to 315+50				
EXCAVATION (CY)			EMBANKMENT (CY)	
Excavation	0		Embankment	53,408	
Granular Material Excavation	0		+35%	18,693	72,101
Undercutting for Select Topping	1,574		Select Subgrade Topping	9,284	
Unstable Material Excavation	6,248		+35%	3,249	12,533
Muck Excavation	3,589		Waste		3,589
Contractor Furnished Borrow Exc.	76,813				
Total	88,224		Total		88,223

Waste is muck excavation to be disposed of at a site approved by the Engineer

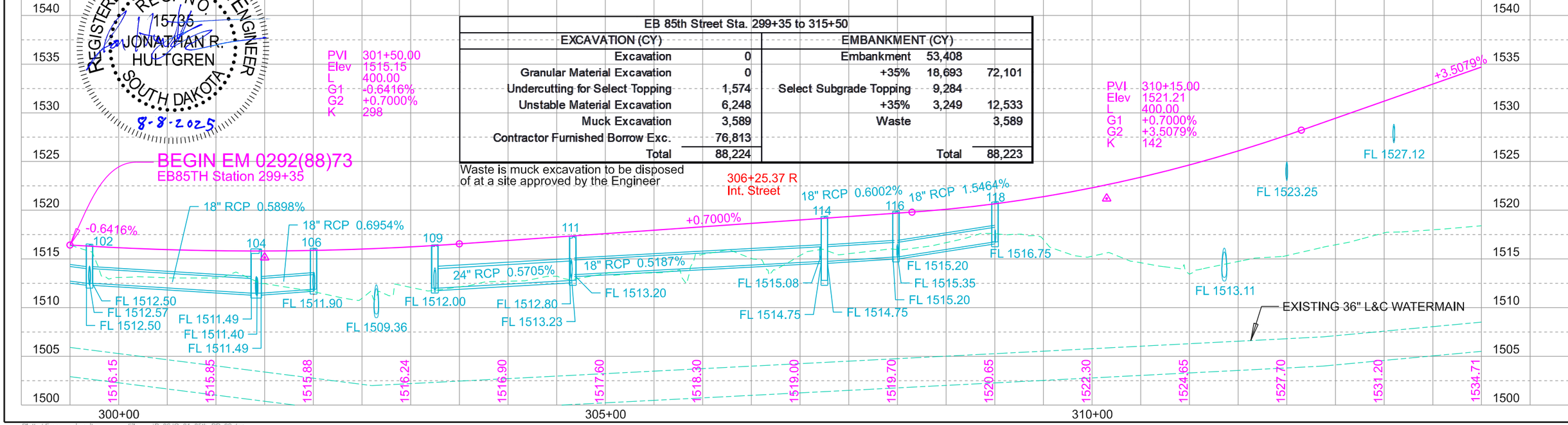

Plotted From - ngjersvik File - ...\B_06JQ_01_85th_PP_02.dgn

85TH STREET

FOR BIDDING PURPOSES ONLY

SD DOT	PROJECT	SHEET	TOTAL SHEETS
	EM 0292(88)73 IM 2292(104)0	B49	B182

Plotting Date: 7/21/2025 Revised Date: 7/7/2025 Initials: NBG

ID: 318 to JB #2
4+23.00-4.50' R to 317+46.25-62.75' L
Install 18"-70' RCP CL2
(Between Drop Inlet and Manhole)

ID: 323 to JB #2
318+46.25-26.75 L to 317+46.25-62.75' L
Install 18"-118' RCP CL2
(Between Drop Inlet and Manhole)

ID: 324 to 323
318+44.50-28.00' R to 318+46.25-26.75' L
Install 18"-54' RCP CL2
(Between Drop Inlets)

WB85TH				
PI	415+90.07	417+91.96	422+44.65	424+50.74	427+55.67
Δ	-16°32'41"	16°47'04"	17°17'50"	-20°54'34"	03°22'34"
T	43.62'	29.51'	30.42'	46.13'	132.62'
L	86.63'	58.59'	60.38'	91.24'	265.16'
R	300.00'	200.00'	200.00'	250.00'	4500.00'

EB85TH				
PI	315+76.26	317+88.49	322+41.12	324+33.28
Δ	21°24'23"	-17°39'45"	-17°22'37"	17°08'27"
T	47.25'	31.07'	30.56'	45.21'
L	93.40'	61.65'	60.66'	89.75'
R	250.00'	200.00'	200.00'	300.00'

ID: 317 to 324
45+42.75-1.50' R to 318+44.50-28.00' R
Install 18"-38' RCP CL2
(Between Drop Inlets)

ID: 402 to 414
321+90.75-63.75' R to 321+90.50-27.00' R
Install 18"-36' RCP CL2
(Between Drop Inlets)

ID: 414 to 401
321+90.50-27.00' R to 10+32.50-1.75' L
Install 18"-58' RCP CL2
(Between Drop Inlets)

ID: 401 to JB #4
10+32.50-1.75' L to 322+94.63-44.62' L
Install 18" - 114' RCP CL2
(Between Drop Inlet and Manhole)

ID: 406 to JB #4
323+50.75-37.50' L to 322+93.63-44.62' L
Install 18"-56' RCP CL2
(Between Drop Inlet and Manhole)

ID: 407 to 406
323+96.00-69.25' L to 323+50.75-37.50' L
Install 18"-50' RCP CL2
(Between Drop Inlets)

ID: 502 to 501
327+50.00-15.00' R to 327+50.00-71.00' L
Install 18" - 88' RCP CL2
(Between Drop Inlets)

ID: 501 to 503
327+50.00-71.00' L to 330+00.00-69.00' L
Install 18" - 254' RCP CL2
(Between Drop Inlets)

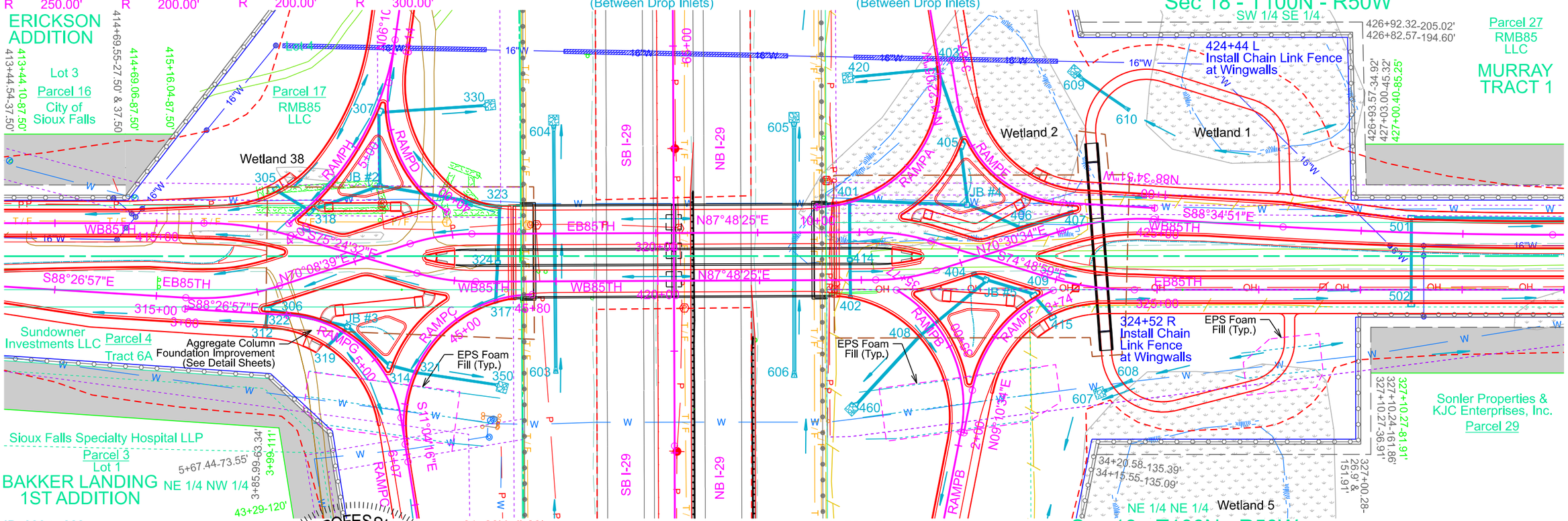

ID: 306 to 322
316+17.00-14.00' R to 3+81.50-4.25' L
Install 18"-12' RCP CL2
(Between Drop Inlets)

ID: 404 to JB #5
323+21.25-18.50' R to 323+34.14-20.25' R
Install 18"-12' RCP CL2
(Between Drop Inlet and Manhole)

ID: JB #5 to 408
323+34.14-20.25' R to 35+26.25-18.75' L
Install 18"-84' RCP CL2
(Between Manhole and Drop Inlet)

ID: 409 to JB #5
3+55.00-4.50' L to 323+34.14-20.25' R
Install 18"-48' RCP CL2
(Between Drop Inlet and Manhole)

ID: 312 to 322
3+80.00-12.75' R to 3+81.50-4.25' L
Install 18"-16' RCP CL2
(Between Drop Inlets)

REGISTERED PROFESSIONAL ENGINEER
REG. NO. 15735
JONATHAN R. HULTGREN
SOUTH DAKOTA
7-23-2025

ID: 608 to 607
15+57.75 - 13.75' L to 15+48.75 - 14.50' R
Install 18" - 20' RCP CL2
& 2 Flared Ends

61+23' L (I-29)
End Take Out Barbed Wire Fence
61+58' L (I-29)
Begin Take Out Chain Link Fence

ID: 603 to 604
319+01.00-137.50' R to 319+00.00-106.50' L
Install 24" - 234' RCP CL3
& 2 Flared Ends

ID: 606 to 605
321+35.25-142.50' R to 321+36.22-108.25' L
Install 30" - 240' RCP CL3
& 2 Flared Ends

ID: 610 to 609
12+50.50 - 29.00' L to 12+60.50 - 31.50' R
Install 18" - 52' RCP CL2
& 2 Flared Ends

Parcel 3
EB85TH 310+56.73 R to RAMPC 34+40.52 L
Temporary Easement containing
1.27 ac (55255 sq ft), more or less

322+21' R (EB85TH)
Begin Take Out Barbed Wire Fence

Install 6' SF Type Inlet
at the following locations:
ID: 501 - EB85TH 327+50.00 - 71.00' L
ID: 502 - EB85TH 327+50.00 - 15.00' R

Install 4'x6' DOT Type S Drop Inlet
at the following locations:
ID: 405 - RAMPA 11+41.50 - 34.00' R

Install 3' x 4' Type C Drop Inlet
with 6" Concrete Collar and
Type C Frame and Grate
at the following locations:
ID: 324 - EB85TH 318+44.50 - 28.00' R
ID: 414 - EB85TH 321+90.50 - 27.00' R

Parcel 17
414+69.06 to 415+16.04 L
Temporary Easement containing
0.03 ac (1410 sq ft), more or less

Install DOT 5'x5' Junction Box
at the following locations:
ID: JB #2 - EB85TH 317+46.25 - 62.75' L
ID: JB #4 - EB85TH 322+94.63 - 44.62' L
ID: JB #5 - EB85TH 323+34.14 - 20.25' R

Install Class B Riprap (10'x10'x2') and
Type B Drainage Fabric (24 SqYd)
at the following locations:
EB85TH 319+00 L
EB85TH 321+36 L
TRAIL 12+61 L
TRAIL 15+49 R

325+85-80' R to 326+65-70' R
Install EPS Foam Fill over L&C Watermain

Parcel 27
426+90.22 to 438+55.06 L
Temporary Easement containing
1.14 ac (49685 sq ft), more or less

Install DOT 3'x4' Type B Drop Inlet
at the following locations:
ID: 401 - RAMP A 10+32.50 - 1.75' L
ID: 404 - EB85TH 323+21.25 - 18.50' R
ID: 406 - EB85TH 323+50.75 - 37.50' L
ID: 407 - EB85TH 323+96.00 - 69.25' L

Install DOT 2'x3' Type B Drop Inlet
at the following locations:
ID: 306 - EB85TH 316+17.00 - 14.00' R
ID: 317 - RAMP C 45+42.75 - 1.50' R
ID: 323 - EB85TH 318+46.25 - 26.25' L
ID: 402 - EB85TH 321+90.75 - 63.75' R

318+79.74 to 321+56.24
Install Bridge (Str. No. 42-065-020)
See Section E

324+45.77
Install 11'x10' Box Culvert (Str. No. 42-066-020)
See Section E

Parcel 29
327+00.28 to 339+29.98 R
Temporary Easement containing
1.39 ac (60745 sq ft), more or less

SD DOT	PROJECT	SHEET	TOTAL SHEETS
	EM 0292(88)73 IM 2292(104)0	B50	B182

Plotting Date: 8/8/2025 Revised Date: 7/7/2025 NBG

85TH STREET

FOR BIDDING PURPOSES ONLY

Westbound 85th Street

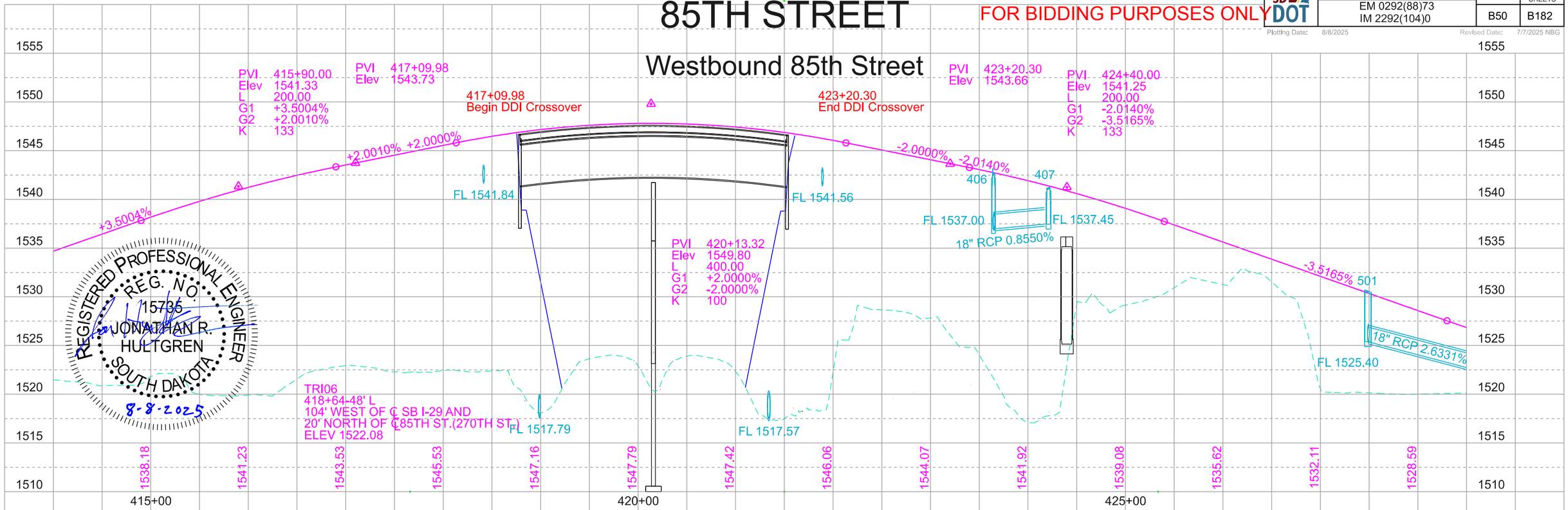

REGISTERED PROFESSIONAL ENGINEER
REG. NO. 15735
JONATHAN R. HULTGREN
SOUTH DAKOTA
8-8-2025

Eastbound 85th Street

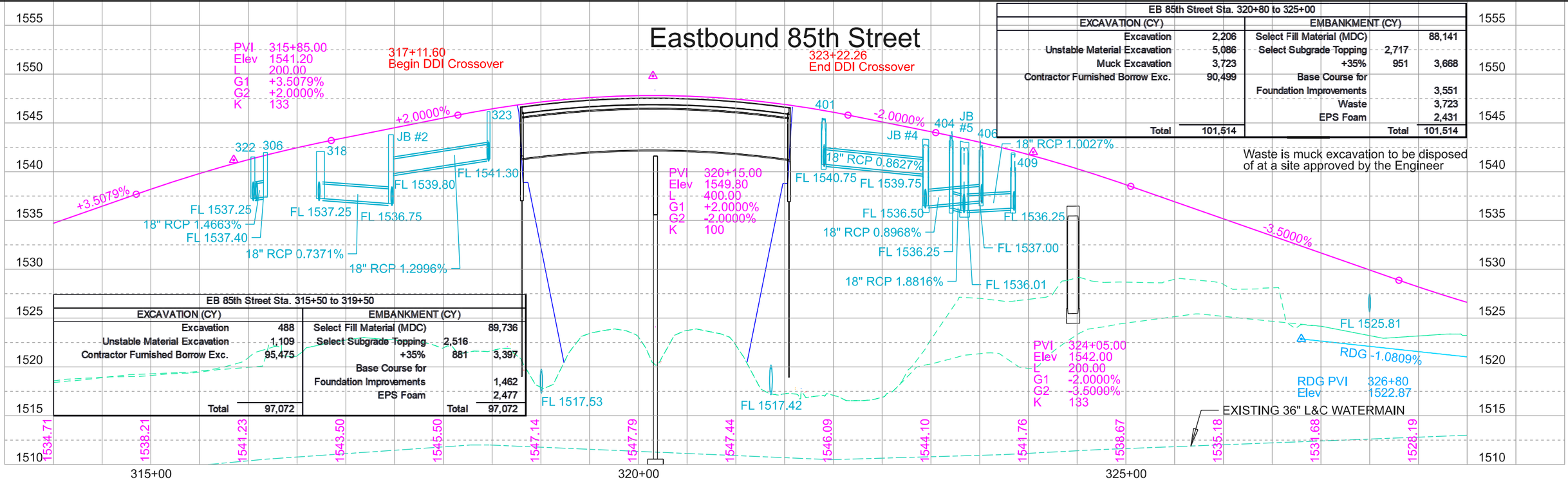

EB 85th Street Sta. 315+50 to 319+50				
EXCAVATION (CY)			EMBANKMENT (CY)		
Excavation	488		Select Fill Material (MDC)		89,736
Unstable Material Excavation	1,109		Select Subgrade Topping	2,516	
Contractor Furnished Borrow Exc.	95,475		+35%	881	3,397
			Base Course for Foundation Improvements		1,462
			EPS Foam		2,477
Total	97,072		Total		97,072

EB 85th Street Sta. 320+80 to 325+00					
EXCAVATION (CY)			EMBANKMENT (CY)		
Excavation	2,206		Select Fill Material (MDC)		88,141
Unstable Material Excavation	5,086		Select Subgrade Topping	2,717	
Muck Excavation	3,723		+35%	951	3,668
Contractor Furnished Borrow Exc.	90,499		Base Course for Foundation Improvements		3,551
			Waste		3,723
			EPS Foam		2,431
Total	101,514		Total		101,514

Waste is muck excavation to be disposed of at a site approved by the Engineer

85TH STREET

FOR BIDDING PURPOSES ONLY

SD DOT	PROJECT	SHEET	TOTAL SHEETS
	EM 0292(88)73 IM 2292(104)0	B51	B182

Plotting Date: 7/21/2025 Revised Date: 7/7/2025 Initials: NBG

ID: 503 to 505
330+00.00 - 69.00' L to 330+76.50 - 69.00' L
Install 18" - 76' RCP CL2
(Between Drop Inlets)

ID: 504 to 505
330+50.00 - 15.00' R to 330+76.50 - 69.00' L
Install 18" - 90' RCP CL2
(Between Drop Inlets)

ID: 505 to 506
330+76.50 - 69.00' L to 331+80.70 - 69.00' L
Install 18" - 104' RCP CL2
(Between Drop Inlets)

ID: 521 to 506
331+40.00 - 21.50' R to 331+80.70 - 69.00' L
Install 18" - 100' RCP CL2
(Between Drop Inlets)

ID: 506 to 507
331+80.70 - 69.00' L to 331+99.70 - 69.00' L
Install 18" - 16' RCP CL2
(Between Drop Inlets)

ID: 509 to 507
332+22.10 - 26.00' R to 331+99.70 - 69.00' L
Install 18" - 98' RCP CL2
(Between Drop Inlets)

ID: 508 to 509
332+07.10 - 26.00' R to 332+22.10 - 26.00' R
Install 18" - 18' RCP CL2
(Between Drop Inlets)

ID: 510 to 509
332+37.10 - 26.00' R to 332+22.10 - 26.00' R
Install 18" - 18' RCP CL2
(Between Drop Inlets)

433+00-131' L
Do Not Disturb Well

434+75-6' L
Take Out 15"-25' CMP
(Incidental Work, Grading)

433+62-6' L
Take Out 15"-25' Steel Pipe
w/o End Section
(Incidental Work, Grading)

432+85' L (WB85TH)
Begin Take Out Barbed Wire Fence
433+12' L (WB85TH)
End Take Out Barbed Wire Fence

ID: 507 to 511
331+99.70 - 69.00' L to 333+36.00 - 66.00' L
Install 24" - 134' RCP CL2
(Between Drop Inlets)

ID: 513 to 590
335+14.00 - 80.00' L to 333+69.75 - 111.00' L
Install 18" - 144' RCP CL2
(Between Drop Inlet and Flared End)

ID: 514 to 513
335+12.90 - 18.75' L to 335+14.00 - 80.00' L
Install 18" - 62' RCP CL2
(Between Drop Inlets)

ID: 515 to 514
335+50.00 - 26.00' R to 335+12.90 - 18.75' L
Install 18" - 62' RCP CL2
(Between Drop Inlets)

438+56' L (WB85TH)
Begin Take Out Barbed Wire Fence
438+55' L (WB85TH)
End Take Out Barbed Wire Fence

ID: 516 to 513
336+40.90 - 80.00' L to 335+14.00 - 80.00' R
Install 18" - 126' RCP CL2
(Between Drop Inlets)

ID: 517 to 516
336+40.60 - 26.00' R to 336+40.90 - 80.00' L
Install 18" - 108' RCP CL2
(Between Drop Inlets)

ID: 518 to 516
338+16.00 - 80.00 L to 336+40.90 - 80.00' L
Install 18" - 178' RCP CL2
(Between Drop Inlets)

ID: 519 to 518
338+14.80 - 26.00' R to 338+16.00 - 80.00' L
Install 18" - 108' RCP CL2
(Between Drop Inlets)

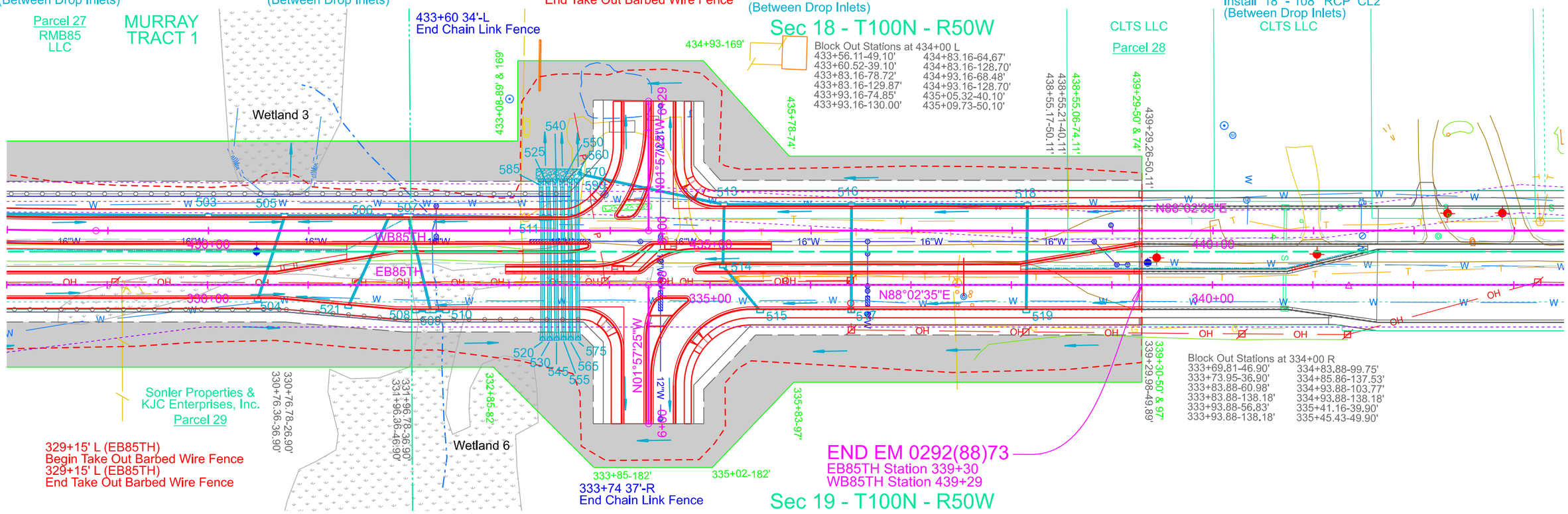

329+15' L (EB85TH)
Begin Take Out Barbed Wire Fence
329+15' L (EB85TH)
End Take Out Barbed Wire Fence

Install 6' SF Drop Type Inlet
at the following locations:
ID: 503 - EB85TH 330+00.00 - 69.00' L
ID: 504 - EB85TH 330+50.00 - 15.00' R
ID: 505 - EB85TH 330+76.50 - 69.00' L
ID: 506 - EB85TH 331+80.70 - 69.00' L
ID: 508 - EB85TH 332+07.10 - 26.00' R
ID: 510 - EB85TH 332+37.10 - 26.00' R
ID: 521 - EB85TH 331+40.00 - 21.50' R
ID: 514 - EB85TH 335+12.90 - 18.75' L
ID: 513 - EB85TH 335+14.00 - 80.00' R
ID: 515 - EB85TH 335+50.00 - 26.00' R
ID: 516 - EB85TH 336+40.90 - 80.00' L
ID: 517 - EB85TH 336+40.60 - 26.00' R
ID: 518 - EB85TH 338+16.00 - 80.00' L
ID: 519 - EB85TH 338+14.80 - 26.00' R

Parcel 28
438+55.06 to 439+29.25
Temporary Easement containing
0.04 ac (1779 sq ft), more or less

Install 10' SF Drop Type Inlet
at the following locations:
ID: 507 - EB85TH 331+99.70 - 69.00' L
ID: 509 - EB85TH 332+22.10 - 26.00' R

Install SF Type B 11'x11'x4' Drop Inlet
at the following location:
ID: 511 - EB85TH 333+36.00 - 66.00' L

ID: 511 to 585
333+36.00 - 66.00' L to 333+32.00 - 105.00' L
Install 30" - 32' RCP Arch CL2
(Between Drop Inlet and Flared End)

ID: 520 to 511
333+33.50 - 55.00' R to 333+36.00 - 66.00' L
Install 30" - 114' RCP Arch CL2
(Between Drop Inlet and Flared End)

ID: 511 to 525
333+36.00 - 66.00' L to 333+38.75 - 105.00' L
Install 30" - 32' RCP Arch CL2
(Between Drop Inlet and Flared End)

ID: 530 to 511
333+40.50 - 55.00' R to 333+36.00 - 66.00' L
Install 30" - 114' RCP Arch CL2
(Between Drop Inlet and Flared End)

337+53-12' R (EB85TH)
Adjust Manhole
L & C Rural Water System
Air/Vacuum Vault

ID: 545 to 540
333+47.25 - 55.00' R to 333+46.00 - 105.00' L
Install 30" - 148' RCP Arch CL2
& 2 Arch Flared Ends

ID: 555 to 550
333+54.50 - 55.00' R to 333+53.00 - 105.00' L
Install 30" - 148' RCP Arch CL2
& 2 Arch Flared Ends

ID: 565 to 560
333+61.50 - 55.00' R to 333+60.50 - 105.00' L
Install 30" - 148' RCP Arch CL2
& 2 Arch Flared Ends

ID: 575 to 570
333+68.75 - 55.00' R to 333+67.25 - 105.00' L
Install 30" - 148' RCP Arch CL2
& 2 Arch Flared Ends

337+53-12' R (EB85TH)
Remove Concrete Bollards
L & C Rural Water System
Air/Vacuum Vault
(Incidental Work, Grading)

Install Class B Riprap (45'x10'x2') and
Type B Drainage Fabric (82 SqYd)
EB85TH 333+49 L

REGISTERED PROFESSIONAL ENGINEER
REG. NO. 15735
JONATHAN R. HULTGREN
SOUTH DAKOTA
7-23-2025

85TH STREET

FOR BIDDING PURPOSES ONLY

SD DOT	PROJECT	SHEET	TOTAL SHEETS
	EM 0292(88)73 IM 2292(104)0	B52	B182

Plotting Date: 8/8/2025 Revised Date: 7/7/2025 NBG

Westbound 85th Street

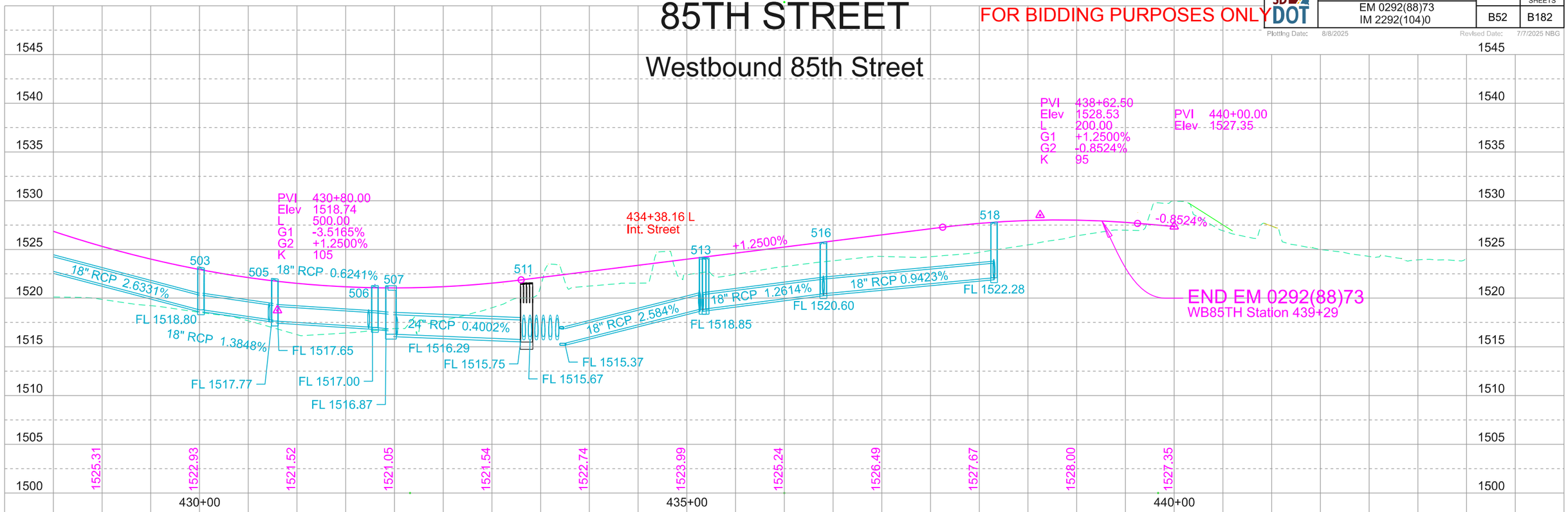

EB 85th Street Sta. 325+00 to 339+30					
EXCAVATION (CY)			EMBANKMENT (CY)		
Excavation	10,901		Embankment	25,061	
Undercutting for Select Topping	5,086		+35%	8,771	33,832
Unstable Material Excavation	479		Select Subgrade Topping	8,774	
Muck Excavation	630		+35%	3,071	11,845
			Waste		630
Contractor Furnished Borrow Exc.	29,212				
Total	46,308		Total		46,307

Waste is muck excavation to be disposed of at a site approved by the Engineer

Eastbound 85th Street

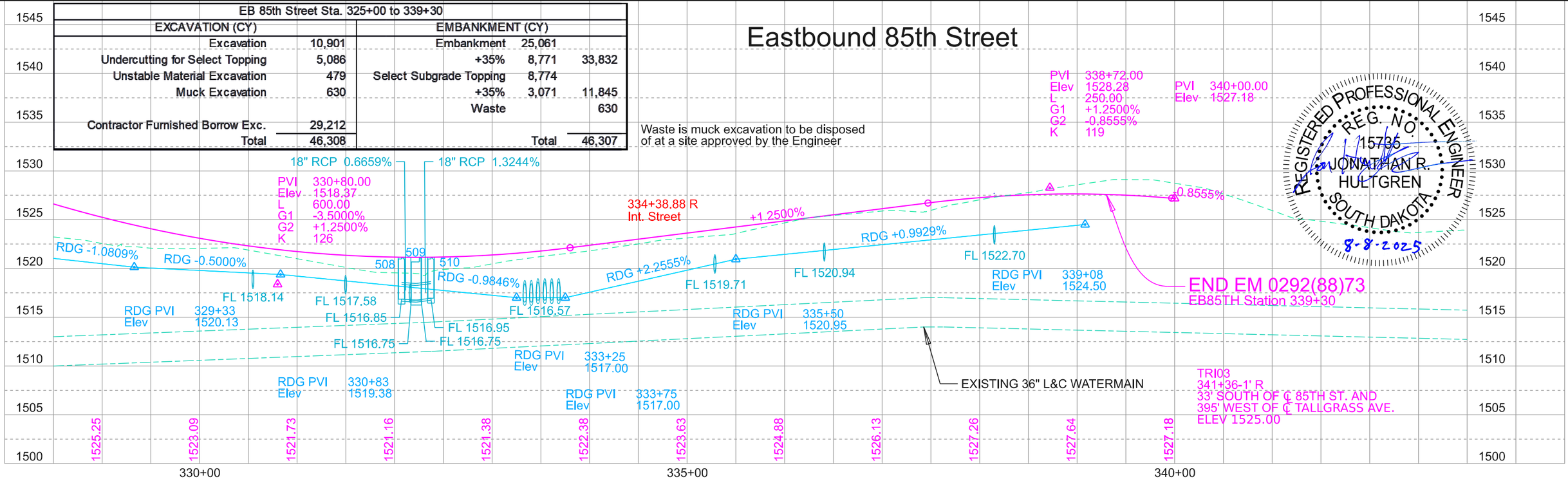

REGISTERED PROFESSIONAL ENGINEER
REG. NO. 15736
JONATHAN R. HULTGREN
SOUTH DAKOTA
8-8-2025

Plotted From - ngjersvik File - ...\B_06JQ_01_85th_PP_04.dgn

FOR BIDDING PURPOSES ONLY

SD DOT	PROJECT	SHEET	TOTAL SHEETS
	EM 0292(88)73 IM 2292(104)0	B53	B182

Plotting Date: 5/16/2025

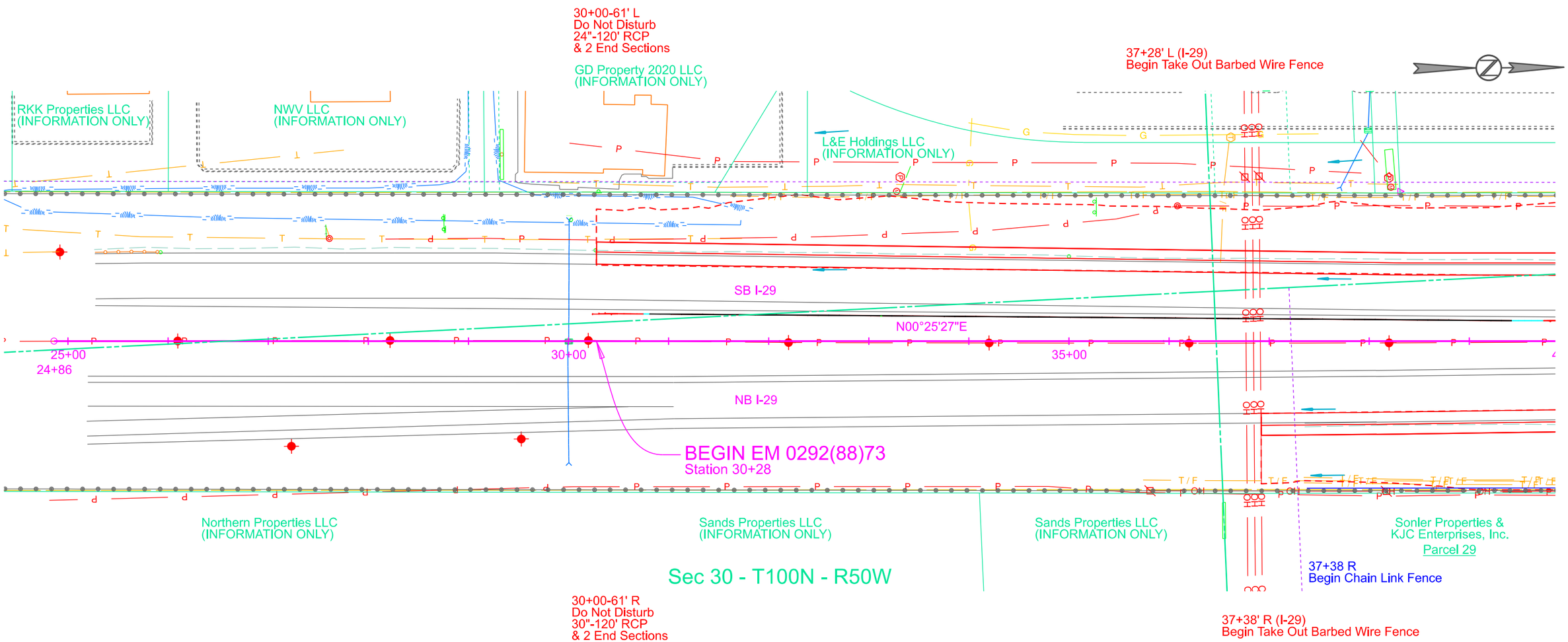

REGISTERED PROFESSIONAL ENGINEER
REG. NO. 15736
JONATHAN R. HULTGREN
SOUTH DAKOTA
5-16-2025

FOR BIDDING PURPOSES ONLY

I-29

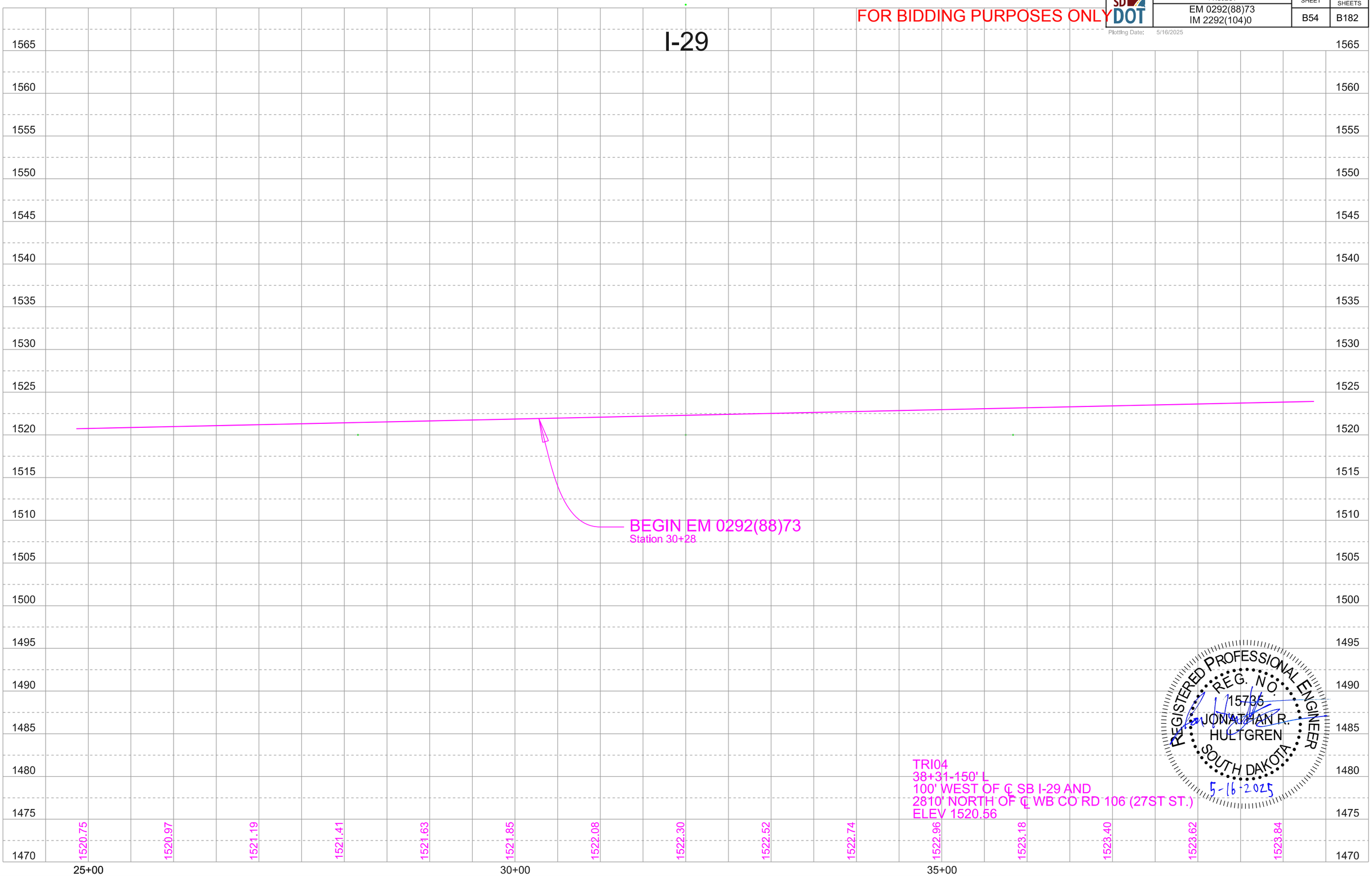

FOR BIDDING PURPOSES ONLY

SD DOT	PROJECT	SHEET	TOTAL SHEETS
	EM 0292(88)73 IM 2292(104)0	B55	B182

Plotting Date: 5/16/2025

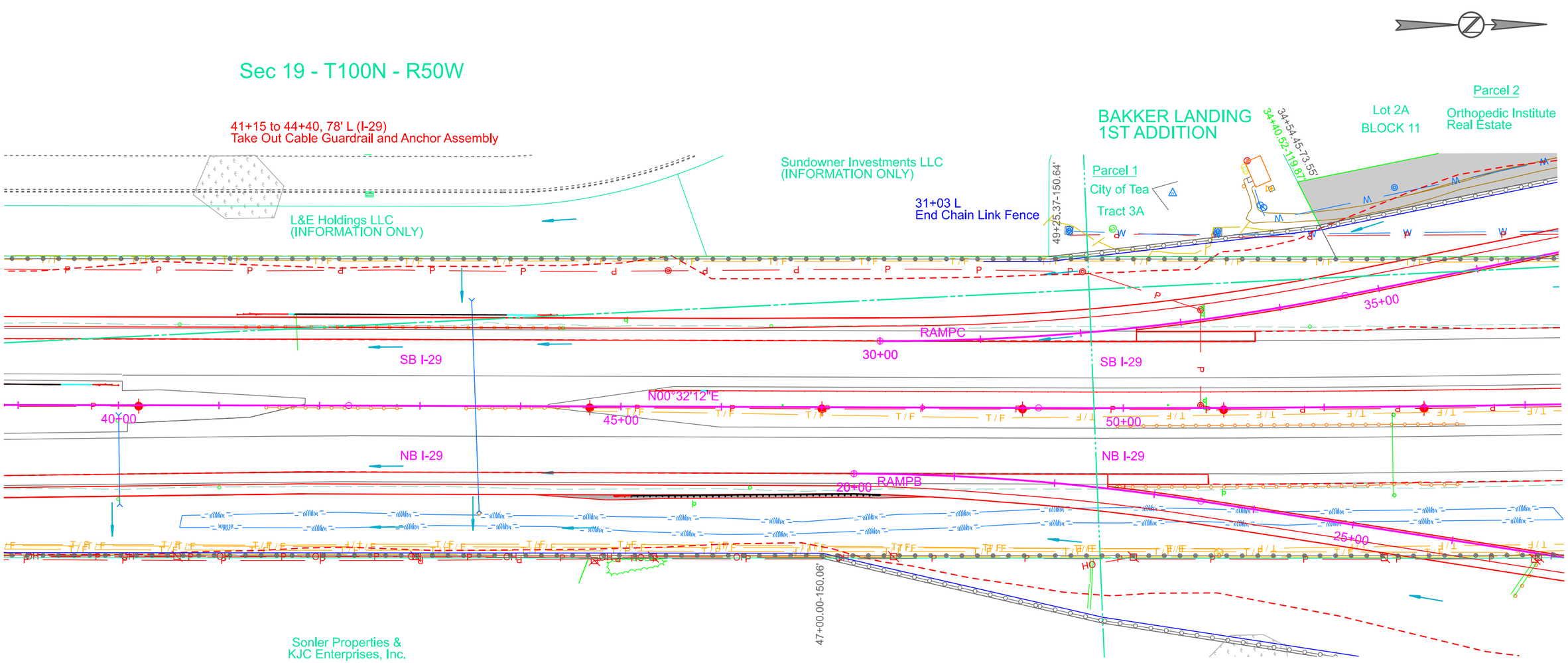

40+01-54' R
Do Not Disturb
24"-88' RCP
& 2 End Sections

43+55-0' L
Retain 4"-208' Drain Tile Pipe
& 1 End Section

43+59-104' R
Remove Precast Concrete Headwall
for Reset

43+61-112' R
Reset Precast Concrete Headwall

49+95 to 53+35, 78' R (I-29)
Take Out Cable Guardrail and Anchor Assembly

REGISTERED PROFESSIONAL ENGINEER
REG. NO. 15735
JONATHAN R. HULTGREN
SOUTH DAKOTA
5-16-2025

I-29

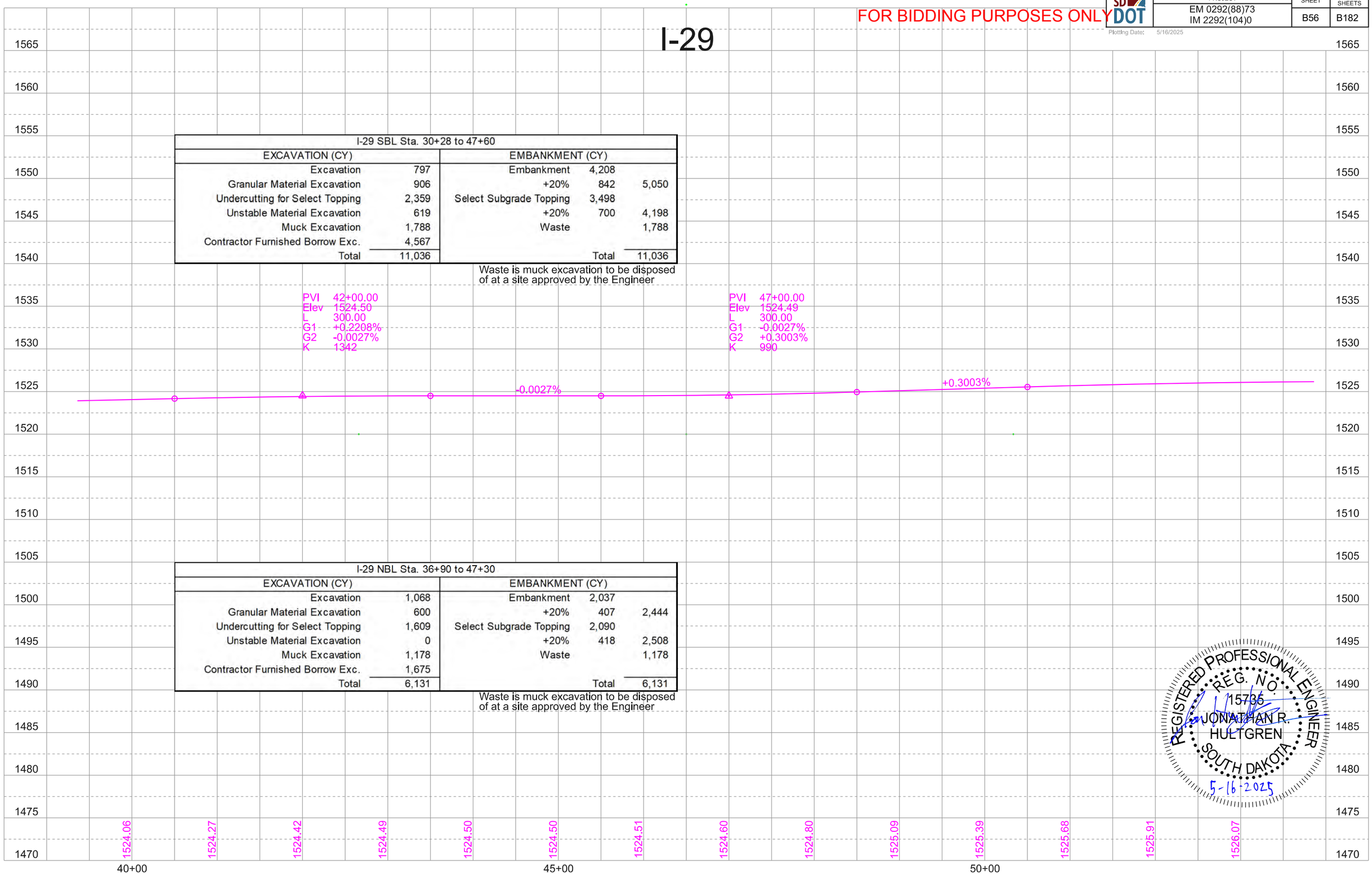

I-29 SBL Sta. 30+28 to 47+60

EXCAVATION (CY)		EMBANKMENT (CY)		
Excavation	797	Embankment	4,208	
Granular Material Excavation	906	+20%	842	5,050
Undercutting for Select Topping	2,359	Select Subgrade Topping	3,498	
Unstable Material Excavation	619	+20%	700	4,198
Muck Excavation	1,788	Waste		1,788
Contractor Furnished Borrow Exc.	4,567			
Total	11,036	Total		11,036

Waste is muck excavation to be disposed of at a site approved by the Engineer

I-29 NBL Sta. 36+90 to 47+30

EXCAVATION (CY)		EMBANKMENT (CY)		
Excavation	1,068	Embankment	2,037	
Granular Material Excavation	600	+20%	407	2,444
Undercutting for Select Topping	1,609	Select Subgrade Topping	2,090	
Unstable Material Excavation	0	+20%	418	2,508
Muck Excavation	1,178	Waste		1,178
Contractor Furnished Borrow Exc.	1,675			
Total	6,131	Total		6,131

Waste is muck excavation to be disposed of at a site approved by the Engineer

REGISTERED PROFESSIONAL ENGINEER
REG. NO. 15736
JONATHAN R. HULTGREN
SOUTH DAKOTA
5-16-2025

RAMP C / G

FOR BIDDING PURPOSES ONLY

SD DOT	PROJECT	SHEET	TOTAL SHEETS
	EM 0292(88)73 IM 2292(104)0	B57	B182

Plotting Date: 8/4/2025 Revised Date: 7/7/2025 Initials: NBG

Install DOT 2'x3' Type B Inlet
ID: 306 - EB85TH 316+17.00 - 14.00' R
ID: 312 - RAMPG 3+80.00 - 12.75' R
ID: 319 - RAMPG 4+51.75 - 19.50' R
ID: 321 - RAMPC 44+33.25 - 1.75' R

Install 4'x6' DOT Type S Drop Inlet
at the following locations:
ID: 314 - RAMPC 43+30.00 - 24.50' L
ID: 322 - RAMPG 3+81.50 - 4.25' L

RAMPC
PI 32+33.78
Δ 11°36'28"
T 233.78'
L 465.97'
R 2300.00'

ID: 321 to 350
44+33.25 - 1.75' R to 44+85.00 - 76.00' R
Install 18" - 84' CMP
& 2 - 30° Elbows
(Between Drop Inlet and CMP Flared End)

ID: 314 to 321
44+30.00 - 24.50' L to 44+33.25 - 1.75' R
Install 18"- 26' RCP CL2
(Between Drop Inlets)

ID: 322 to JB #3
3+81.50 - 4.25' L to 4+59.25 - 7.00' L
Install 18" - 76' RCP CL2
(Between Drop Inlet and Manhole)

ID: 306 to 322
316+17.00 - 14.00' R to 3+81.50 - 4.25' L
Install 18" - 12' RCP CL2
(Between Drop Inlets)

ID: 312 to 322
3+80.00 - 12.75' R to 3+81.50 - 4.25' L
Install 18" - 16' RCP CL2
(Between Drop Inlets)

ID: JB #3 to 314
4+59.25 - 7.00' L to 44+30.00 - 24.50' L
Install 18" - 54' RCL CL2
(Between Manhole and Drop Inlet)

ID: 319 to JB #3
4+51.75 - 19.50' R to 4+59.25 - 7.00' L
Install 18" - 26' RCP CL2
(Between Drop Inlet and Manhole)

ID: JB #3
Install SF 5'x5' Junction Box
at the following location:
RAMPG 4+59.25 - 7.00' L

43+93-51' R to 98' L
Install 8' EPS Foam Fill over L&C watermain

43+90-85' R
Do Not Disturb
L&C Isolation Valve Vault

54+86' L (I-29)
End Take Out Barbed Wire Fence

55+21' L (I-29)
Begin Take Out Barbed Wire Fence

RAMPC
PI 45+08.79
Δ -98°52'40"
T 148.38'
L 219.17'
R 127.00'

RAMPG
PI 4+97.33
Δ -77°22'42"
T 96.10'
L 162.06'
R 120.00'

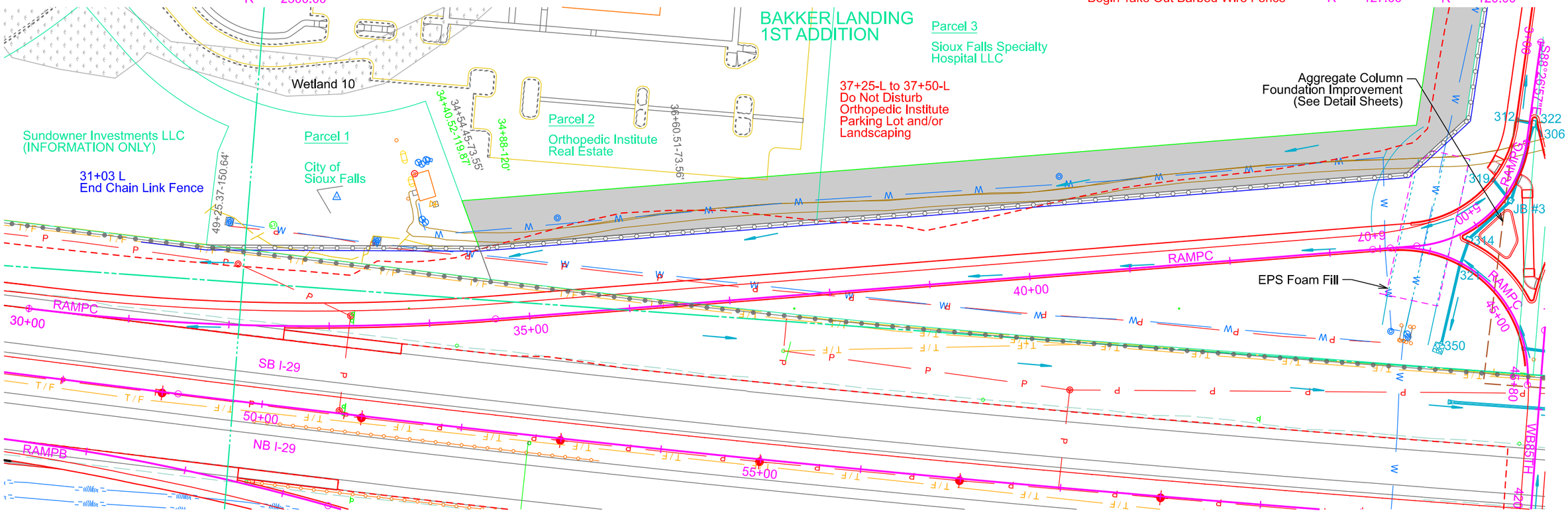

Sec 19-T100N-R50W

Install Class B Riprap (10'x10x2')
Type B Drainage Fabric (24 SqYd)
RAMPC 43+39 R

Parcel 2
34+40.52 to 38+00.47 L
Temporary Easement containing
0.37 ac (16179 sq ft), more or less

REGISTERED PROFESSIONAL ENGINEER
REG. NO. 15735
JONATHAN R. HULTGREN
SOUTH DAKOTA
8-4-2025

Plotted From - ngjersvik File - ...\B_06JQ_03.dgn

FOR BIDDING PURPOSES ONLY

RAMP G

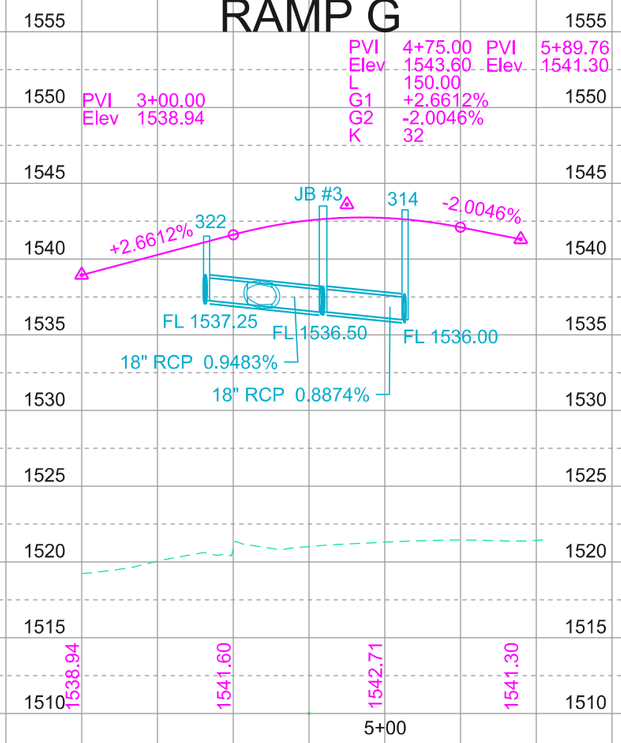

REGISTERED PROFESSIONAL ENGINEER
REG. NO. 15735
JONATHAN R. HULTGREN
SOUTH DAKOTA
8-8-2025

RAMP C

Ramp C & Ramp G Sta. 30+00 to 43+45					
EXCAVATION (CY)			EMBANKMENT (CY)		
Excavation		5,653	Embankment	26,845	
Granular Material Excavation		0	+35%	9,396	36,241
Undercutting for Select Topping		1,625	Select Subgrade Topping	3,565	
Unstable Material Excavation		14,532	+35%	1,248	4,813
Muck Excavation		1,610	Waste		1,610
Contractor Furnished Borrow Exc.		19,244			
Total		42,664	Total		42,664

Waste is muck excavation to be disposed of at a site approved by the Engineer

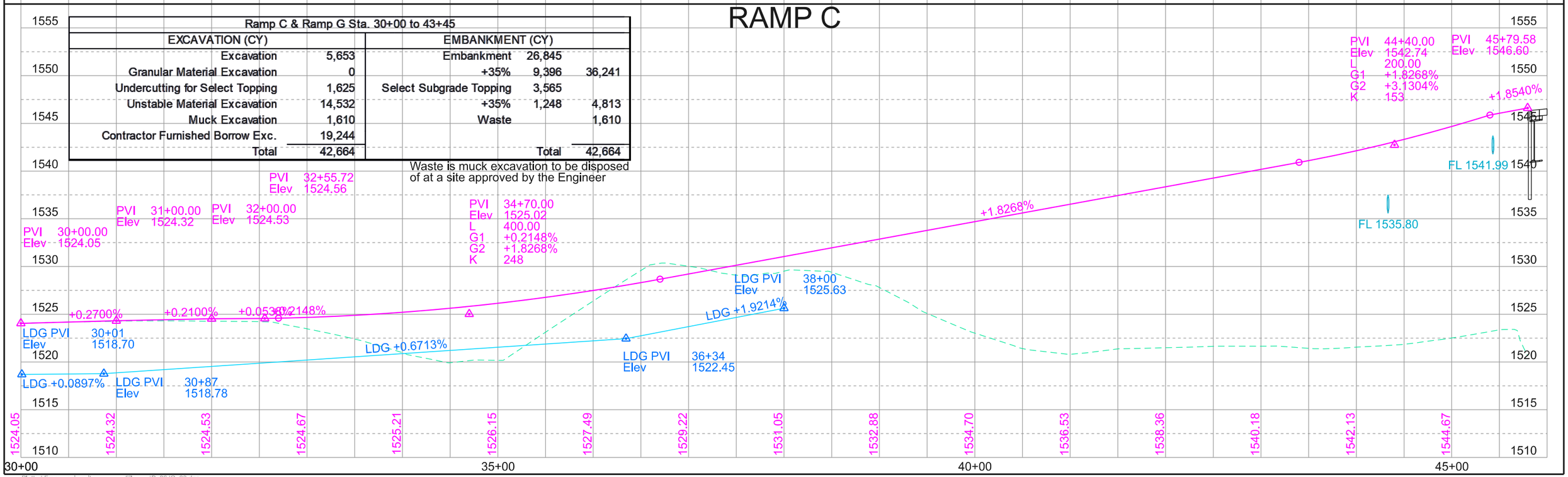

RAMP B / F

FOR BIDDING PURPOSES ONLY

SD DOT	PROJECT	SHEET	TOTAL SHEETS
	EM 0292(88)73 IM 2292(104)0	B59	B182

Plotting Date: 7/18/2025 Revised Date: 7/7/2025 Initials: NBG

REGISTERED PROFESSIONAL ENGINEER
REG. NO. 15736
JONATHAN R. HULTGREN
SOUTH DAKOTA
7-23-2025

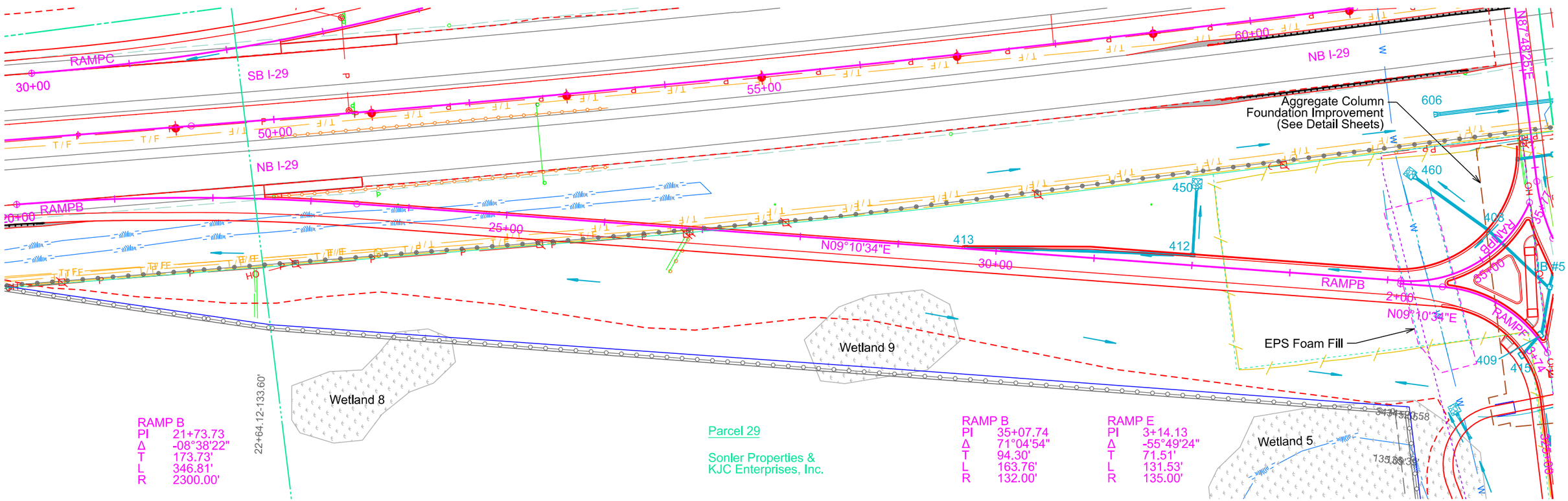

RAMP B
PI 21+73.73
Δ -08°38'22"
T 173.73'
L 346.81'
R 2300.00'

Parcel 29

Sonler Properties &
KJC Enterprises, Inc.

RAMP B
PI 35+07.74
Δ 71°04'54"
T 94.30'
L 163.76'
R 132.00'

RAMP E
PI 3+14.13
Δ -55°49'24"
T 71.51'
L 131.53'
R 135.00'

Sec 19-T100N-R50W

Install 4'x6' SD Type S Inlet
at the following location:
ID: 409 - Ramp F 3+55.25 - 4.25' L
ID: 415 - Ramp F 3+60.75 - 23.25' R

Install SD 2'x3' Type B Drop Inlet
at the following location:
ID: 408 - Ramp B 35+26.25 - 18.75' L
ID: 413 - Ramp B 29+69.00 - 2.00' L

Install SD 3'x4' Drop Inlet
at the following location:
ID: 412 - Ramp B 32+00.25 - 10.50' L

Install SD 5'x5' Manhole
at the following location:
ID: JB #5 - EB85TH 323+34.14 - 20.25' R

34+42-80' R to 70' L
Install EPS Foam Fill
over L&C watermain

ID: 413 to 412
29+69.00 - 2.00' L to 32+00.25 - 10.50' L
Install 18"- 230' RCP CL2
(Between Drop Inlets)

ID: 412 to 450
32+00.25 - 10.50' L to 31+99.25 - 78.50' L
Install 18"-68' CMP
(Between Drop Inlet and CMP Flared End)

ID: 408 to 460
35+26.25 - 19.50' L to 34+83.00 - 98.50' L
Install 24" - 90' CMP
(Between Drop Inlet and CMP Fared End)

ID: JB #5 to 408
323+34.14 - 20.25' R to 35+26.25 - 18.75' L
Install 18" - 84' RCP CL2
(Between Manhole and Drop Inlet)

ID: 409 to JB #5
3+55.25 - 4.25' L to 323+34.14 - 20.25' R
Install 18" - 48' RCP CL2
(Between Drop Inlet and Manhole)

ID: 415 to 409
3+60.75 - 23.25' R to 3+55.25 - 4.25' L
Install 18" - 28' RCP CL2
(Between Drop Inlets)

61+17' R (I-29)
End Take Out Barbed Wire Fence

61+29' R (I-29)
Begin Take Out Chain Link Fence

Install Class B Riprap (10'x10'x2') and
Type B Drainage Fabric (24 SqYd)
at the following locations:
RAMPB 31+02 L
RAMPB 33+76 L
RAMPB 34+00 L

FOR BIDDING PURPOSES ONLY

SD DOT	PROJECT	SHEET	TOTAL SHEETS
	EM 0292(88)73 IM 2292(104)0	B60	B182

Plotting Date: 8/8/2025 Revised Date: 7/7/2025 NBG

RAMP F

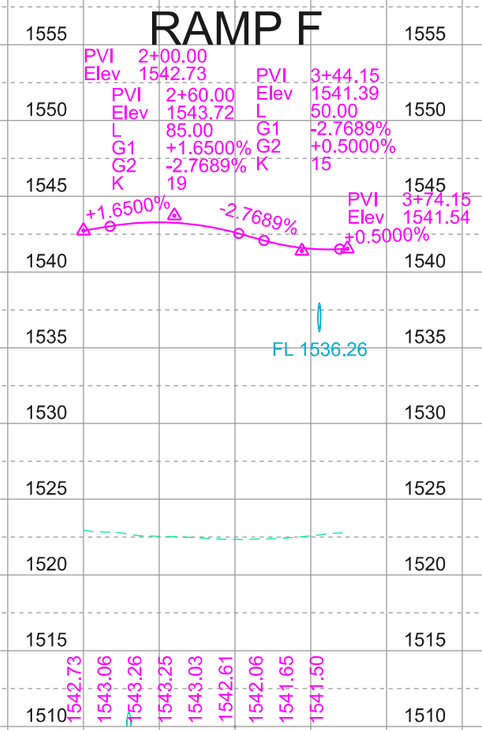

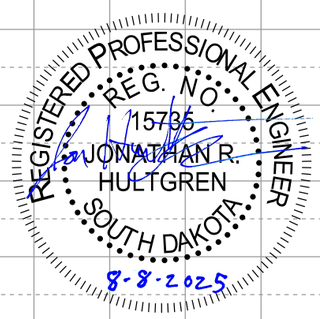

RAMPB

Ramp B & Ramp F Sta. 20+00 to 33+85					
EXCAVATION (CY)			EMBANKMENT (CY)		
Excavation	206		Embankment	38,670	
Granular Material Excavation	0		+35%	13,535	52,205
Undercutting for Select Topping	1,575		Select Subgrade Topping	3,642	
Unstable Material Excavation	27,454		+35%	1,275	4,917
Muck Excavation	900		Waste		900
Contractor Furnished Borrow Exc.	27,886				
Total	58,021		Total		58,022

Waste is muck excavation to be disposed of at a site approved by the Engineer

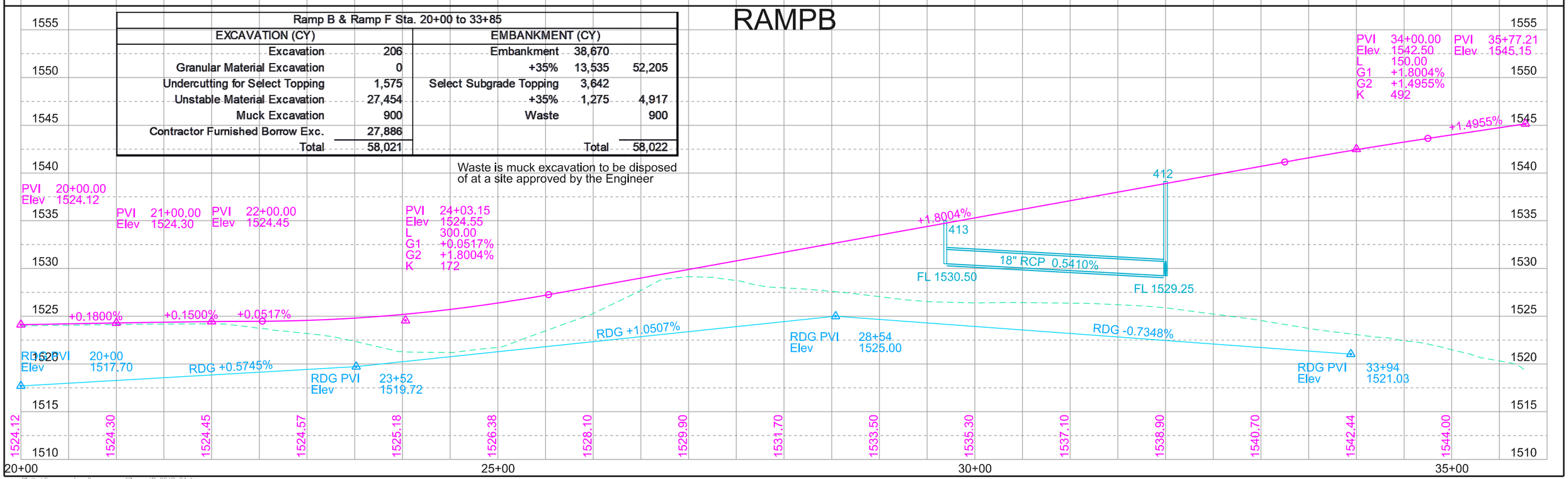

RAMP D / H

FOR BIDDING PURPOSES ONLY

SD DOT	PROJECT	SHEET	TOTAL SHEETS
	EM 0292(88)73 IM 2292(104)0	B61	B182

Plotting Date: 7/21/2025 Revised Date: 7/7/2025 Initials: NBG

Install 4'x6' DOT Type S Drop Inlet
at the following locations:
ID: 307 - RAMP H 5+42.25 - 4.75' R
ID: 305 - RAMP H 4+12.75 - 34.25' L
ID: 318 - RAMP H 4+23.00 - 4.50' R

Install SD Type B 2'x3' Drop Inlet
at the following locations:
ID: 308 - RAMP D 46+00.00 - 25.67' L
ID: 309 - RAMP D 46+00.00 - 13.67' R
ID: 310 - RAMP D 47+48.23 - 1.88' R

Install 5' x 5' SF Type Junction Box
at the following locations:
ID: JB #2 - EB85TH 317+46.25 - 62.75' L

ID: JB #2 to 307
317+46.25 - 62.75' L to 5+42.25 - 4.75' R
Install 18" - 70' RCP CL2
(Between Manhole and Drop Inlet)

ID: 307 to 330
5+42.25 - 4.75' R to 41+16.50 - 95.50' R
Install 18" - 100' CMP
(Between Drop Inlet and CMP Flared End)

ID: 308 to 309
46+00.00 - 25.67' L to 46+00.00 - 13.67' R
Install 18" - 38' RCP CL2
(Between Drop Inlets)

ID: 305 to 318
4+12.75 - 34.25' L to 4+23.00 - 4.50' R
Install 18" - 38' RCP CL2
(Between Drop Inlets)

ID: 309 to 340
46+00.00-13.67' R to 46+00.00 - 64.50' R
Install 18" - 52' CMP
(Between Drop Inlet and CMP Flared End)

ID: 318 to JB #2
4+23.00 - 4.50' R to 317+46.25 - 62.75' L
Install 18" - 70' RCP CL2
(Between Drop Inlet and Manhole)

ID: 310 to 320
47+48.23 - 1.88' R to 47+48.75 - 51.25' R
Install 18" - 50' CMP
(Between Drop Inlet and CMP Flared End)

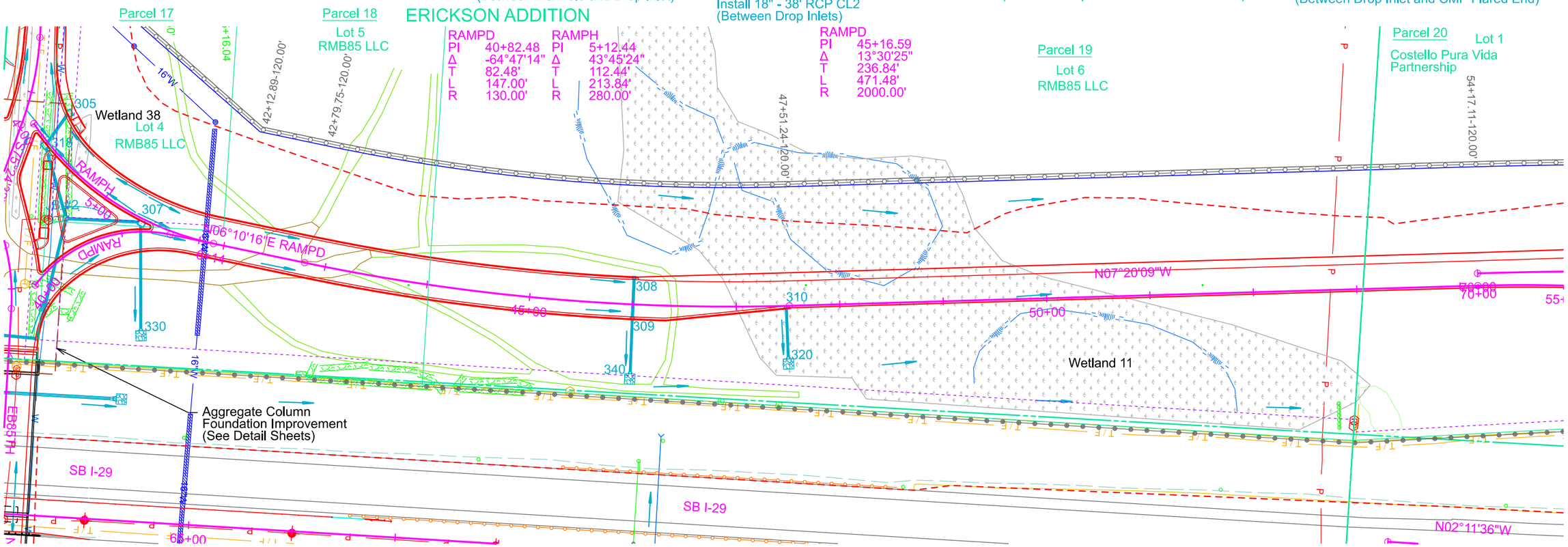

Sec 18-T100N-R50W

10+20' L (I-229 Ramp C)
Begin Take Out Chain Link Fence

68+36' L (I-29)
End Take Out Barbed Wire Fence

Install Class B Riprap (10'x10'x2') and
Type B Drainage Fabric (24 SqYd)
at the following locations:
RAMPD 41+22 R
RAMPD 46+00 R
RAMPD 47+49 L

REGISTERED PROFESSIONAL ENGINEER
REG. NO. 15736
JONATHAN R. HULTGREN
SOUTH DAKOTA
7-23-2025

Plotted From - ngjersvik File - ...\B_06JQ_05.dgn

FOR BIDDING PURPOSES ONLY

RAMP D

RAMP H

Ramp D & Ramp H Sta. 41+78 to 58+00					
EXCAVATION (CY)			EMBANKMENT (CY)		
Excavation	14,868		Embankment	71,722	
Granular Material Excavation	0		+35%	25,103	96,825
Undercutting for Select Topping	23		Select Subgrade Topping	4,507	
Unstable Material Excavation	8,329		+35%	1,577	6,084
Muck Excavation	4,655		Waste		4,655
Contractor Furnished Borrow Exc.	79,688				
Total	107,563		Total		107,564

Waste is muck excavation to be disposed of at a site approved by the Engineer

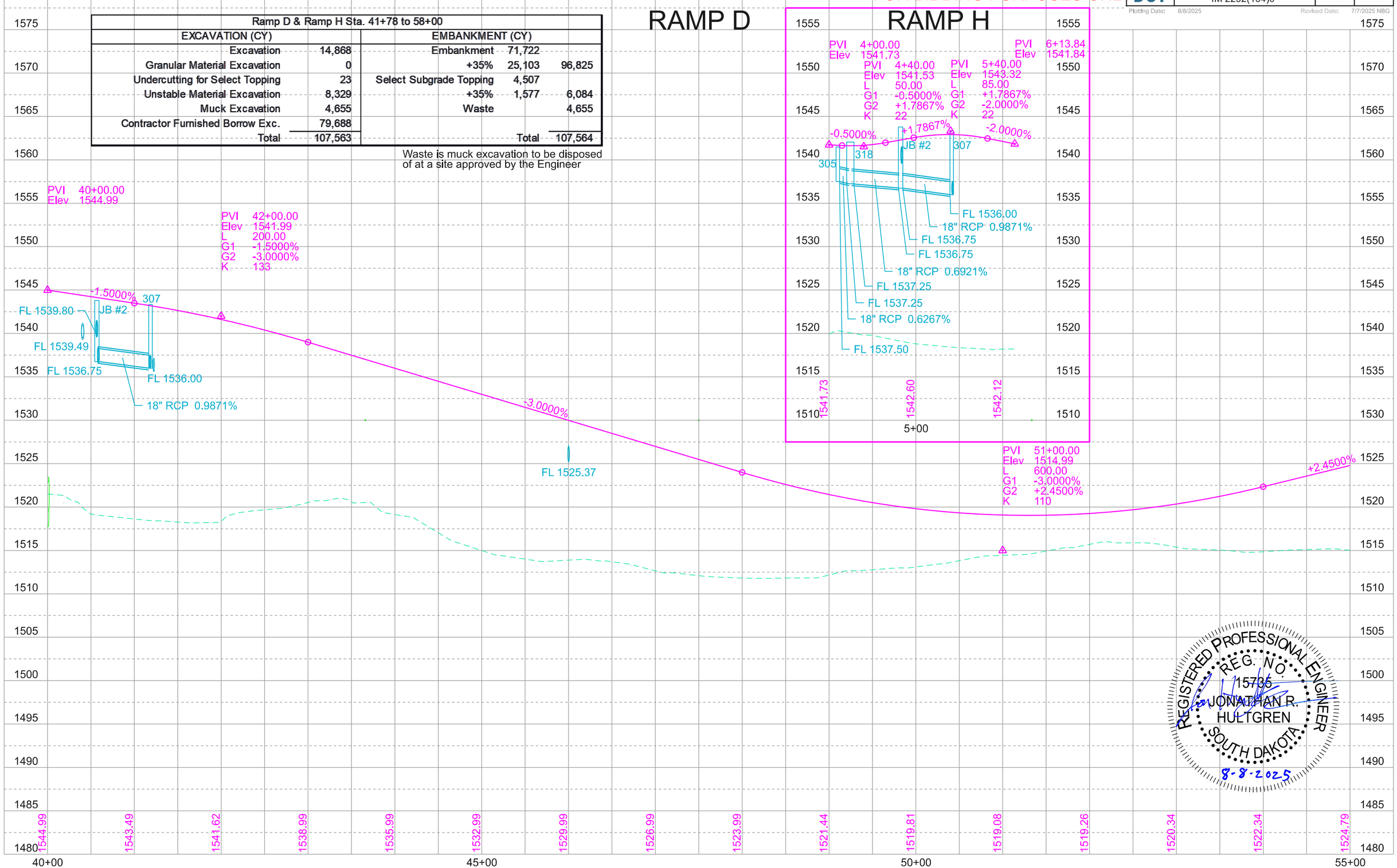

REGISTERED PROFESSIONAL ENGINEER
REG. NO. 15736
JONATHAN R. HULTGREN
SOUTH DAKOTA
8-8-2025

RAMP D

FOR BIDDING PURPOSES ONLY

SD DOT	PROJECT	SHEET	TOTAL SHEETS
	EM 0292(88)73 IM 2292(104)0	B63	B182

Plotting Date: 7/18/2025 Revised Date: 7/7/2025 Initials: NBG

Install SD Type B 2'x3' Drop Inlet
at the following locations:
ID: 701 - RAMPD 58+92.00-1.00' R
ID: 702 - RAMPD 64+15.00-3.00' R
ID: 703 - RAMPD 65+03.75-3.00' R
ID: 704 - RAMPD 65+15.00-3.00' R
ID: 705 - RAMPD 65+30.00-3.00' R
ID: 706 - RAMPD 65+41.25-3.00' R
ID: 707 - RAMPD 65+48.75-3.00' R
ID: 712 - RAMPD 63+90.25-2.75' R

RAMPD_CONN		RAMPD	
PI	72+41.51	PI	57+15.66
Δ	-06°00'39"	Δ	-22°22'05"
T	241.51'	T	298.55'
L	482.57'	L	589.50'
R	4600.00'	R	1510.00'

ID: 702 to 703
64+15.00 - 3.00' R to 65+03.75 - 3.00' R
Install 18" - 88' RCP CL2
(Between Drop Inlets)

ID: 617 to 618
15+02.50 - 60.00' L to 17+32.00 - 73.25' L
Install 30" - 186' RCP CL3
(Between two RCP Apron Ends)

ID: 621 to 622
62+96.25 - 0.75' R to 63+42.00 - 48.50' L
Install 30" - 58' RCP CL2
& 2 Flared Ends

ID: 701-700
58+92.00 - 1.00' R to 59+10.00 - 92.75' R
Install 18"- 92' CMP
(Between Drop Inlet and CMP Flared End)

ID: 707 to 711
65+48.75 - 3.00' R to 65+48.75 - 102.75' L
Install 18"- 110' CMP
(Between Drop Inlet and CMP Flared End)

ID: 703 to 704
65+03.75 - 3.00' R to 65+15.00 - 3.00' R
Install 18" - 10' RCP CL2
(Between Drop Inlets)

ID: 704-705
65+15.00 - 3.00' R to 65+30.00 - 3.00' R
Install 18" - 14' RCP CL2
(Between Drop Inlets)

ID: 705 to 706
65+30.00 - 3.00' R to 65+41.25 - 3.00' R
Install 18" - 10' RCP CL2
(Between Drop Inlets)

ID: 706 to 707
65+41.25 - 3.00' R to 65+48.75 - 3.00' R
Install 18" - 8' RCP CL2
(Between Drop Inlets)

ID: 712 to 702
63+90.25 - 2.75' R to 64+15.00 - 3.00' R
Install 18" - 24' RCP CL2
(Between Drop Inlets)

ID: 200 to Existing
66+92.08 - 93.50' L to 67+67.68 - 12.25' R
Install 30" - 126' RCP CL3
(Between RCP Flared End and Existing Pipe)

ID: 210 to Existing
67+00.02 - 94.25' L to 67+74.86 - 11.25' R
Install 30" - 126' RCP CL3
(Between RCP Flared End and Existing Pipe)

RAMPD_CONN	
PI	80+41.74
Δ	15°34'43"
T	314.62'
L	625.36'
R	2300.00'

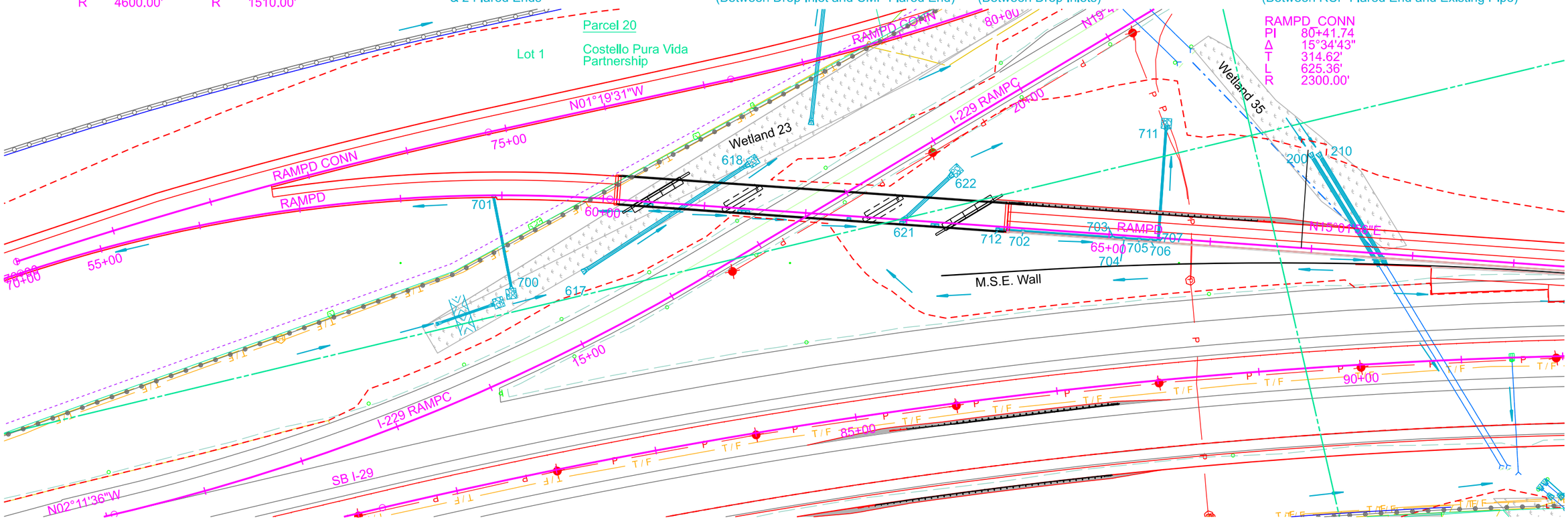

Sec 18-T100N-R50W

229RAMPC	
PI	13+28.34
Δ	17°34'22"
T	320.72'
L	636.41'
R	2075.00'

60+35.34 to 63+50.03
Install Bridge (Str. No. 42-065-016)
See Section E

63+37.96-52.43' R to 69+99.50-6.75' R
Install M.S.E. Large Panel Retaining Wall
See Section E

63+99.15 to 68+19.23 R
Install Concrete Barrier
See Section E

68+19.23 to 71+80.65 R
Install Reinforced Concrete Barrier
See Section E

Install Class B Riprap (10'x10'x2') and
Type B Drainage Fabric (24 SqYd)
at the following locations:
RAMPD 59+08 R
RAMPD 61+41 L
RAMPD 63+41 L
RAMPD 65+48 L

I-29	
PI	87+77.59
Δ	-14°58'29"
T	752.95'
L	1497.33'
R	5729.00'

Retain 30"-236' RCP
& 1 End Section
90+79-L/R

Retain Drop Inlet
91+50-R

Retain 24"-110' RCP
& 1 End Section
91+51-R

Do Not Disturb
30"-28' RCP
& 2 End Sections
91+87-140' R

REGISTERED PROFESSIONAL ENGINEER
REG. NO. 15736
JONATHAN R. HULTGREN
SOUTH DAKOTA
7-23-2025

Plotted From - ngjersvik File - ...\B_06JQ_05.dgn

FOR BIDDING PURPOSES ONLY

SD DOT	PROJECT	SHEET	TOTAL SHEETS
	EM 0292(88)73 IM 2292(104)0	B64	B182

Plotting Date: 7/18/2025 Revised Date: 7/7/2025 NBG

RAMP D

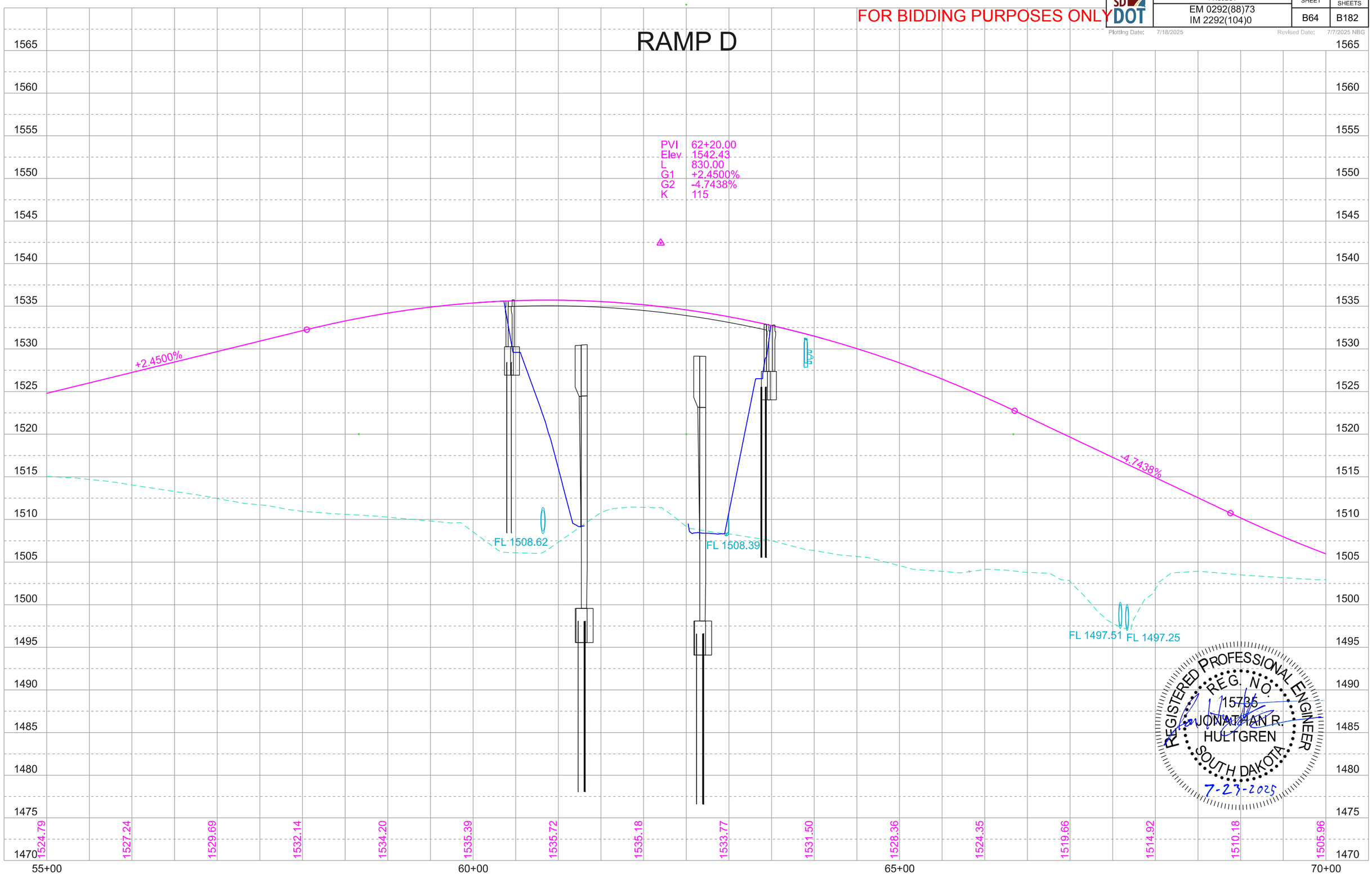

REGISTERED PROFESSIONAL ENGINEER
REG. NO. 15735
JONATHAN R. HULTGREN
SOUTH DAKOTA
7-23-2025

Plotted From - ngjersvik File - ...\B_06JQ_05.dgn

I-29 / RAMP D

FOR BIDDING PURPOSES ONLY

SD DOT	PROJECT	SHEET	TOTAL SHEETS
	EM 0292(88)73 IM 2292(104)0	B65	B182

Plotting Date: 5/17/2025

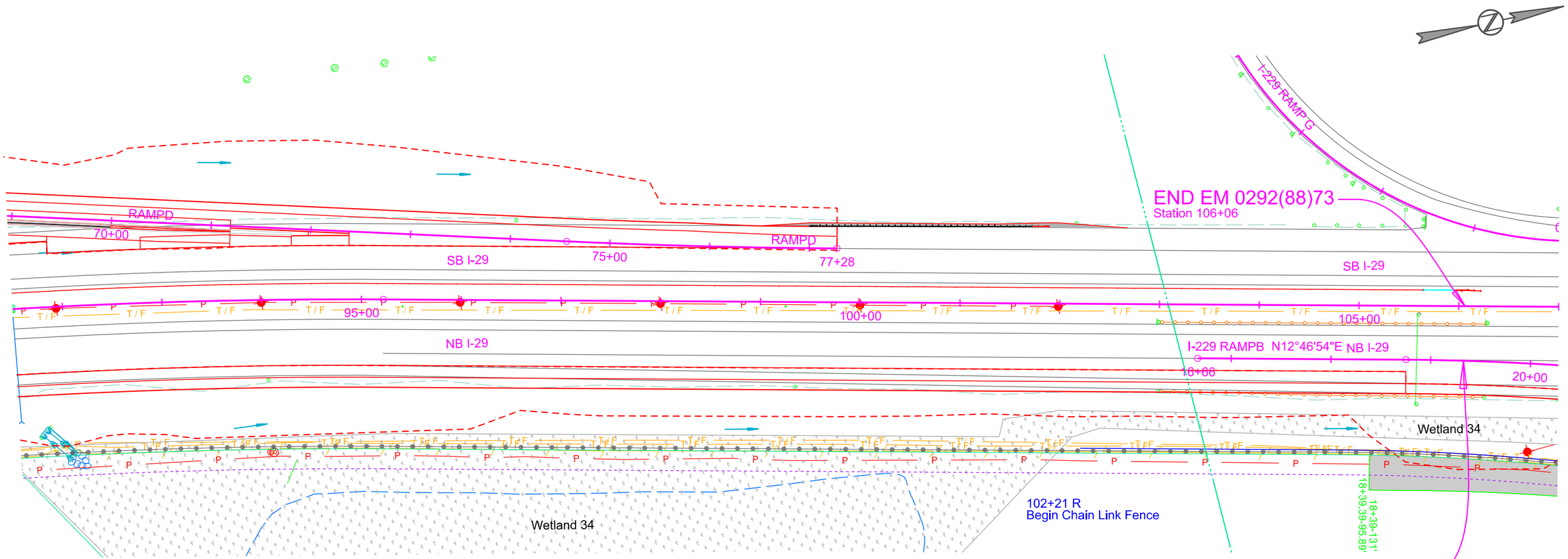

Take Out
30"-14' RCP Culvert
91+91.9, 136' R to
92+02.64,145.1' R
& 1 End Section
91+96.47, 135.7' R
(Incidental Work, Grading)

Take out
30"-22' RCP Culvert
91+81.58, 135.4' R
91+97.85, 149.8' R
& 1 End Section
91+86.29, 139.6' R
(Incidental Work, Grading)

Install 30" RCP Flared End Section
at the following locations:
ID: P_HWL-2
91+96.47, 135.7' R
ID: P_HWL-3
91+86.29, 139.6' R

Sanford Health

Parcel 22

Sec 18 - T100N - R50W

Parcel 22
105+11.19 to 107+16.06 R
Temporary Easement containing
0.15 ac (6378 sq ft), more or less

BEGIN IM 2292(104)0
Station 19+34

103+01 to 106+25, 88' R (I-29)
Take Out Cable Guardrail and Anchor Assembly

REGISTERED PROFESSIONAL ENGINEER
REG. NO. 15735
JONATHAN R. HULTGREN
SOUTH DAKOTA
5-16-2025

FOR BIDDING PURPOSES ONLY

I-29

I-29 NBL Sta. 78+80 to 106+06					
EXCAVATION (CY)			EMBANKMENT (CY)		
Excavation	5,343		Embankment	187	
Granular Material Excavation	1,174		+20%	37	224
Undercutting for Select Topping	5,049		Select Subgrade Topping	5,474	
Unstable Material Excavation	0		+20%	1,095	6,569
Muck Excavation	0		Out-of-Balance to Trail & Ramp A		4,773
Contractor Furnished Borrow Exc.	0		Waste		0
Total	11,566			Total	11,566

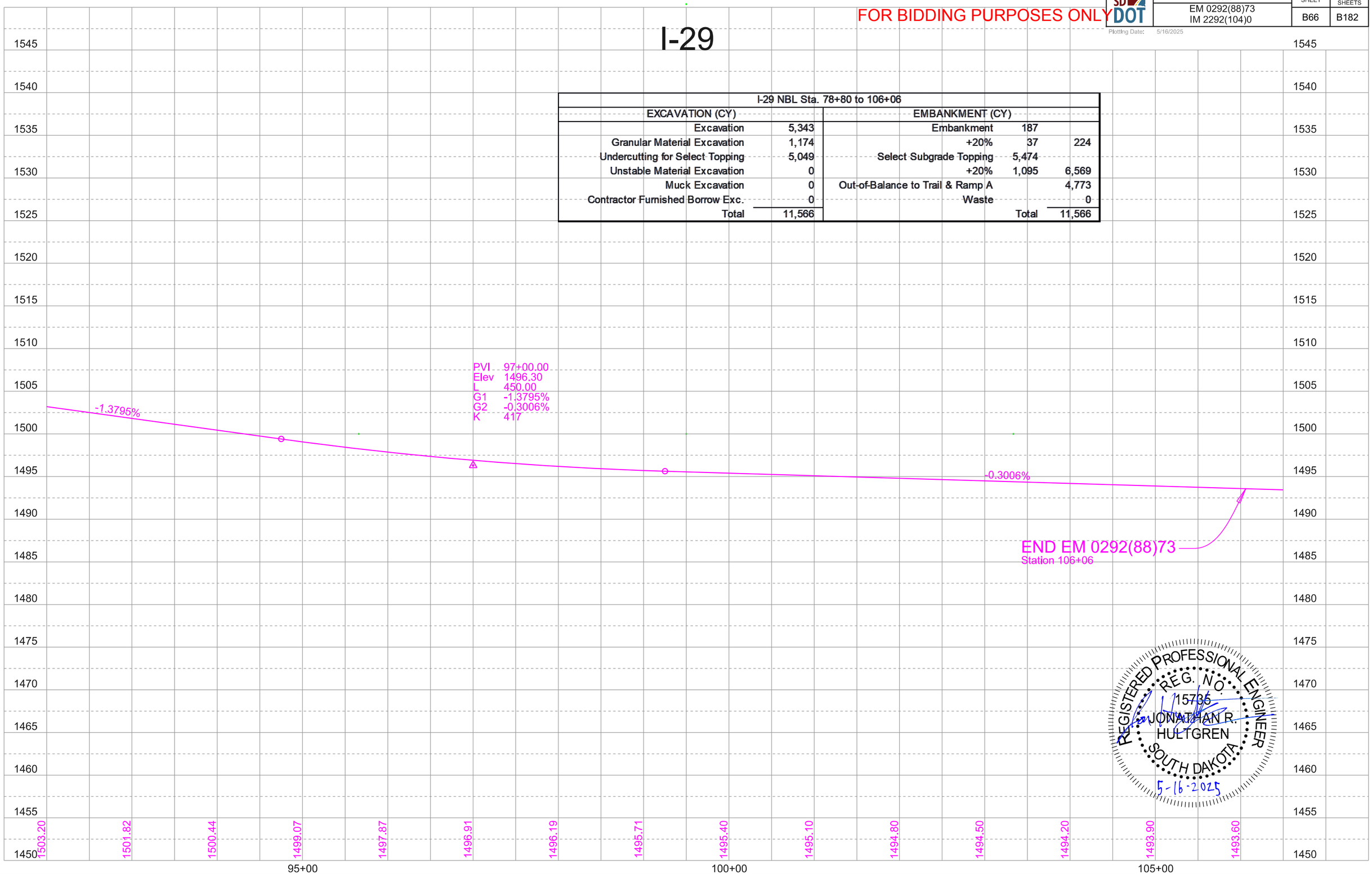

REGISTERED PROFESSIONAL ENGINEER
REG. NO. 15735
JONATHAN R. HULTGREN
SOUTH DAKOTA
5-16-2025

RAMP D

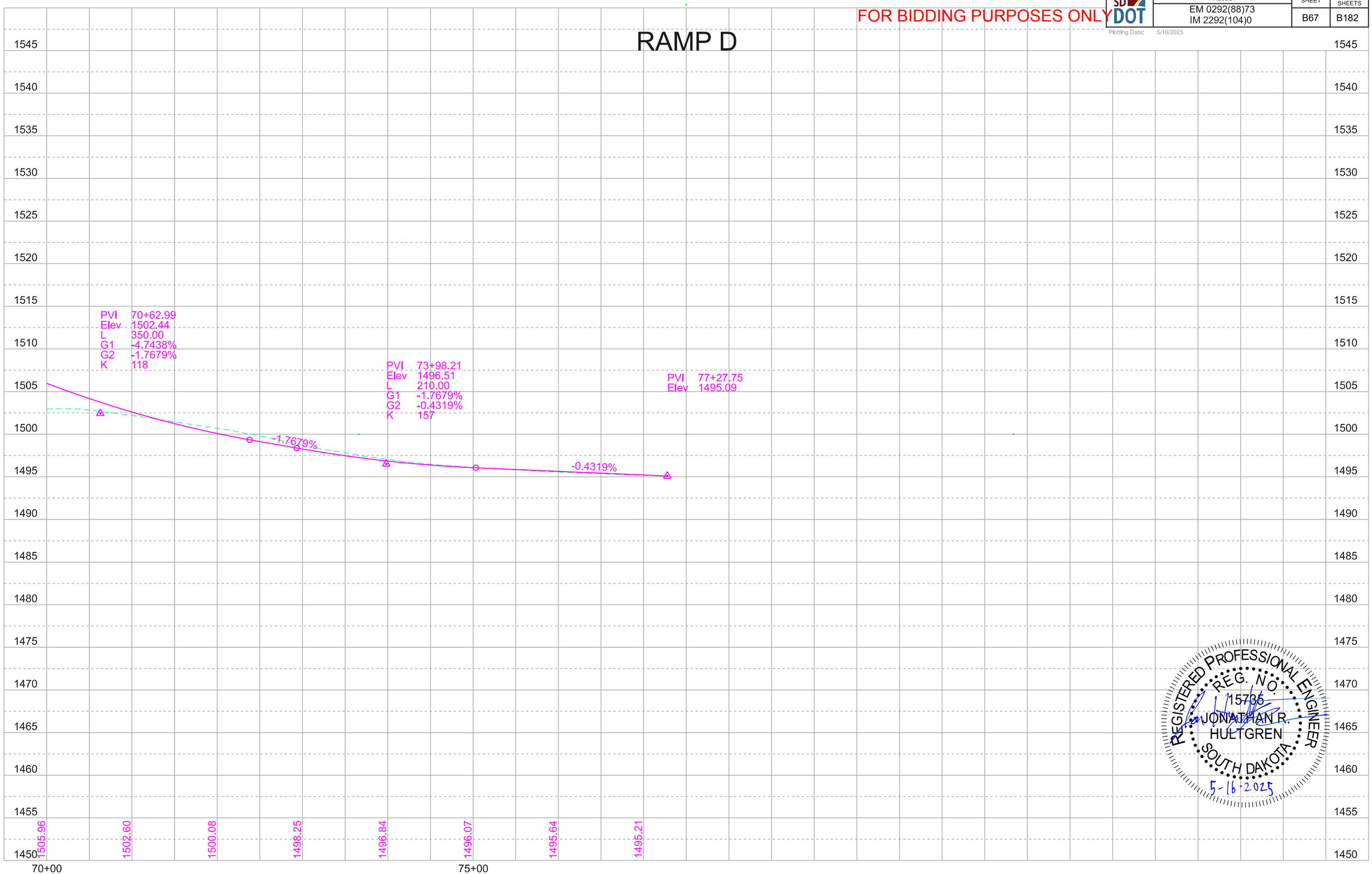

REGISTERED PROFESSIONAL ENGINEER
REG. NO. 15736
JONATHAN R. HULTGREN
SOUTH DAKOTA
5-16-2025

RAMP D CONN

FOR BIDDING PURPOSES ONLY

SD DOT	PROJECT	SHEET	TOTAL SHEETS
	EM 0292(88)73 IM 2292(104)0	B68	B182

Plotting Date: 7/18/2025 Revised Date: 6/18/2025 Initials: NBG

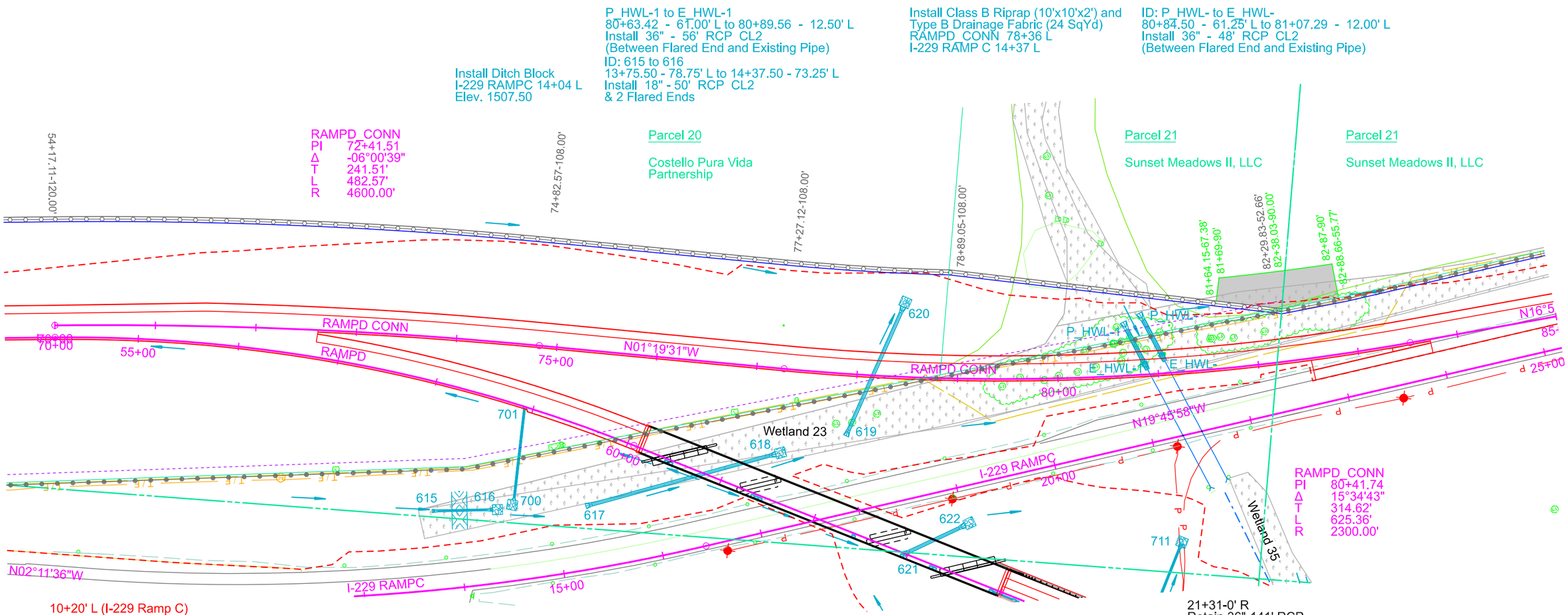

REGISTERED PROFESSIONAL ENGINEER
REG. NO. 15736
JONATHAN R. HULTGREN
SOUTH DAKOTA
7-23-2025

FOR BIDDING PURPOSES ONLY

RAMP D CONN

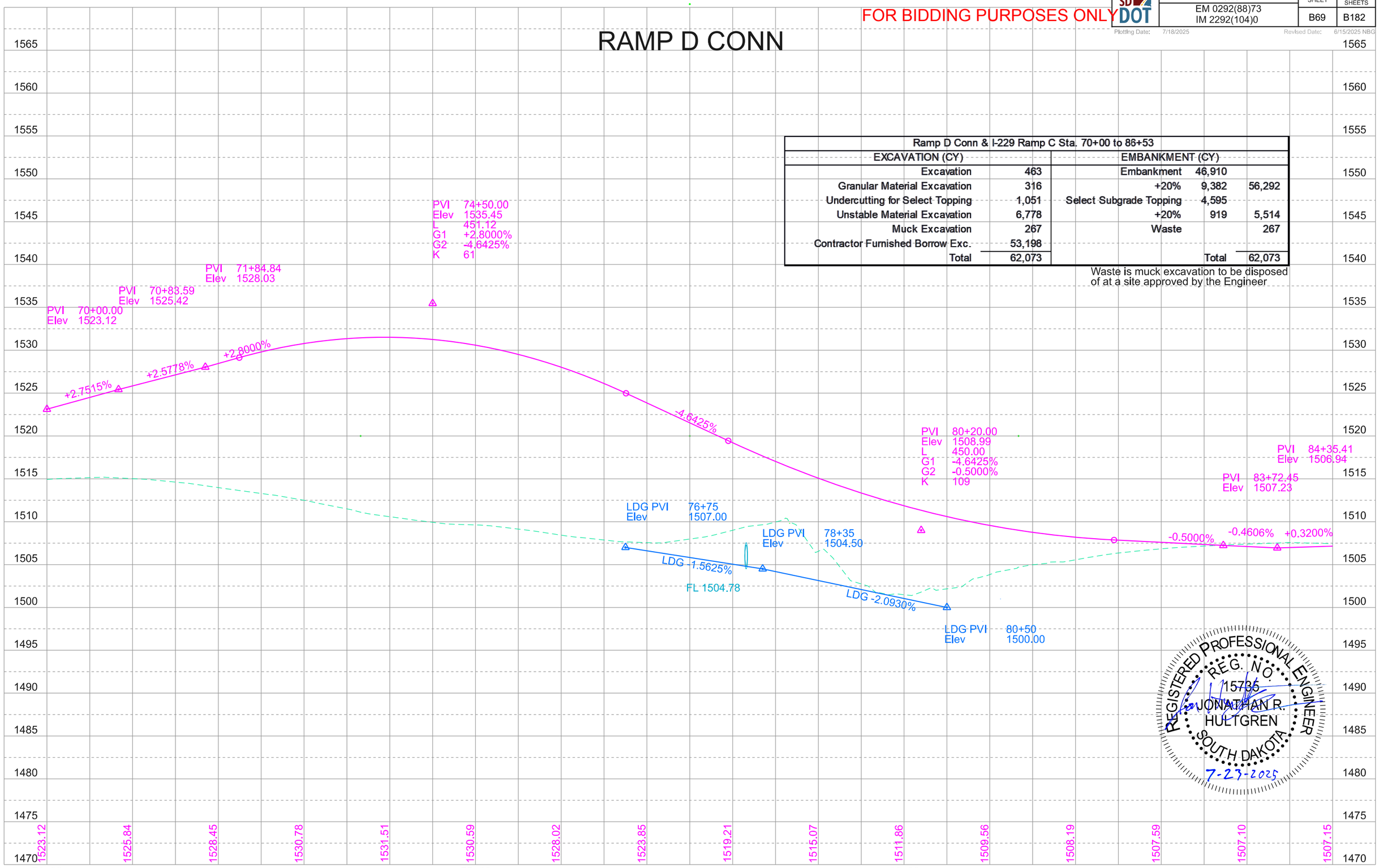

Ramp D Conn & I-229 Ramp C Sta. 70+00 to 86+53				
EXCAVATION (CY)		EMBANKMENT (CY)		
Excavation	463	Embankment	46,910	
Granular Material Excavation	316	+20%	9,382	56,292
Undercutting for Select Topping	1,051	Select Subgrade Topping	4,595	
Unstable Material Excavation	6,778	+20%	919	5,514
Muck Excavation	267	Waste		267
Contractor Furnished Borrow Exc.	53,198			
Total	62,073		Total	62,073

Waste is muck excavation to be disposed of at a site approved by the Engineer

REGISTERED PROFESSIONAL ENGINEER
REG. NO. 15736
JONATHAN R. HULTGREN
SOUTH DAKOTA
7-23-2025

RAMP D CONN / I-229 RAMP C

FOR BIDDING PURPOSES ONLY

SD DOT	PROJECT	SHEET	TOTAL SHEETS
	EM 0292(88)73 IM 2292(104)0	B70	B182

Plotting Date: 5/16/2025

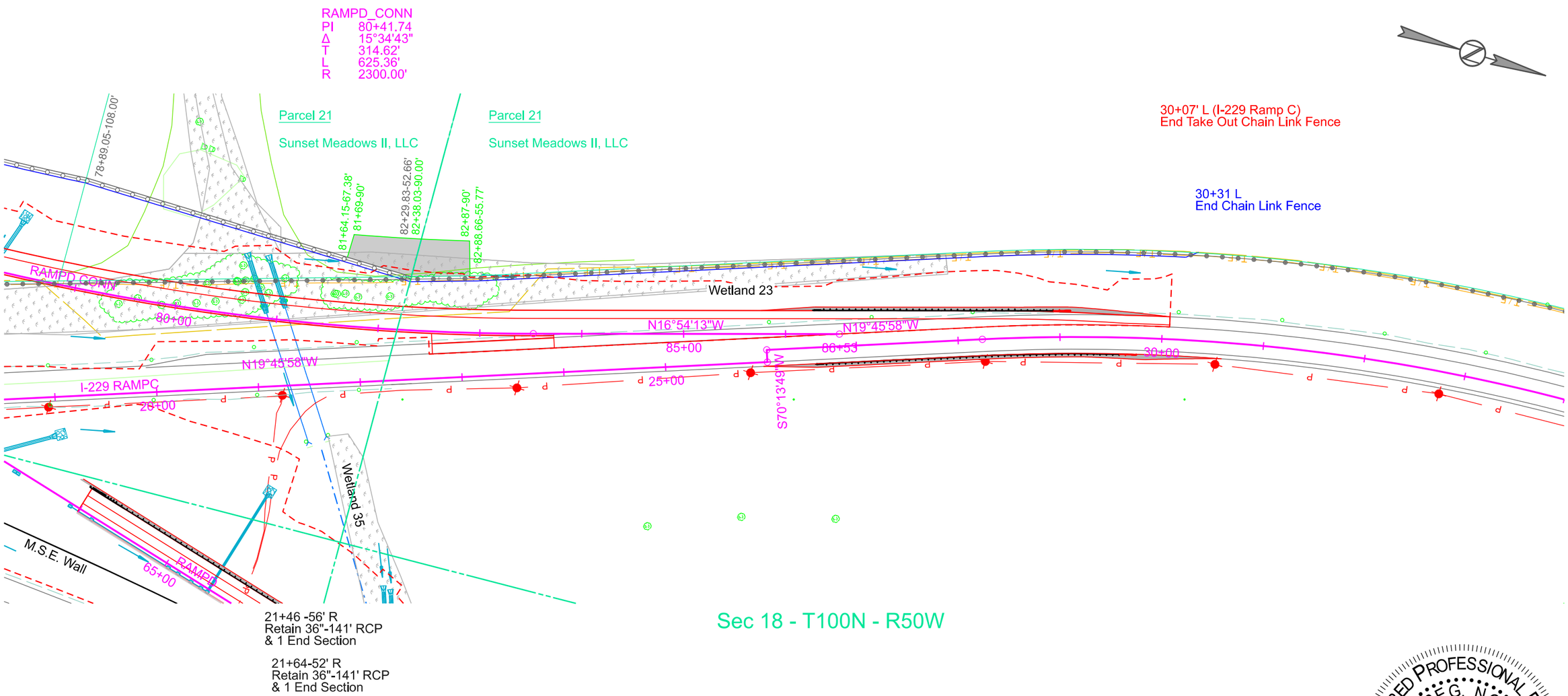

REGISTERED PROFESSIONAL ENGINEER
REG. NO. 15736
JONATHAN R. HULTGREN
SOUTH DAKOTA
5-16-2025

RAMP D CONN

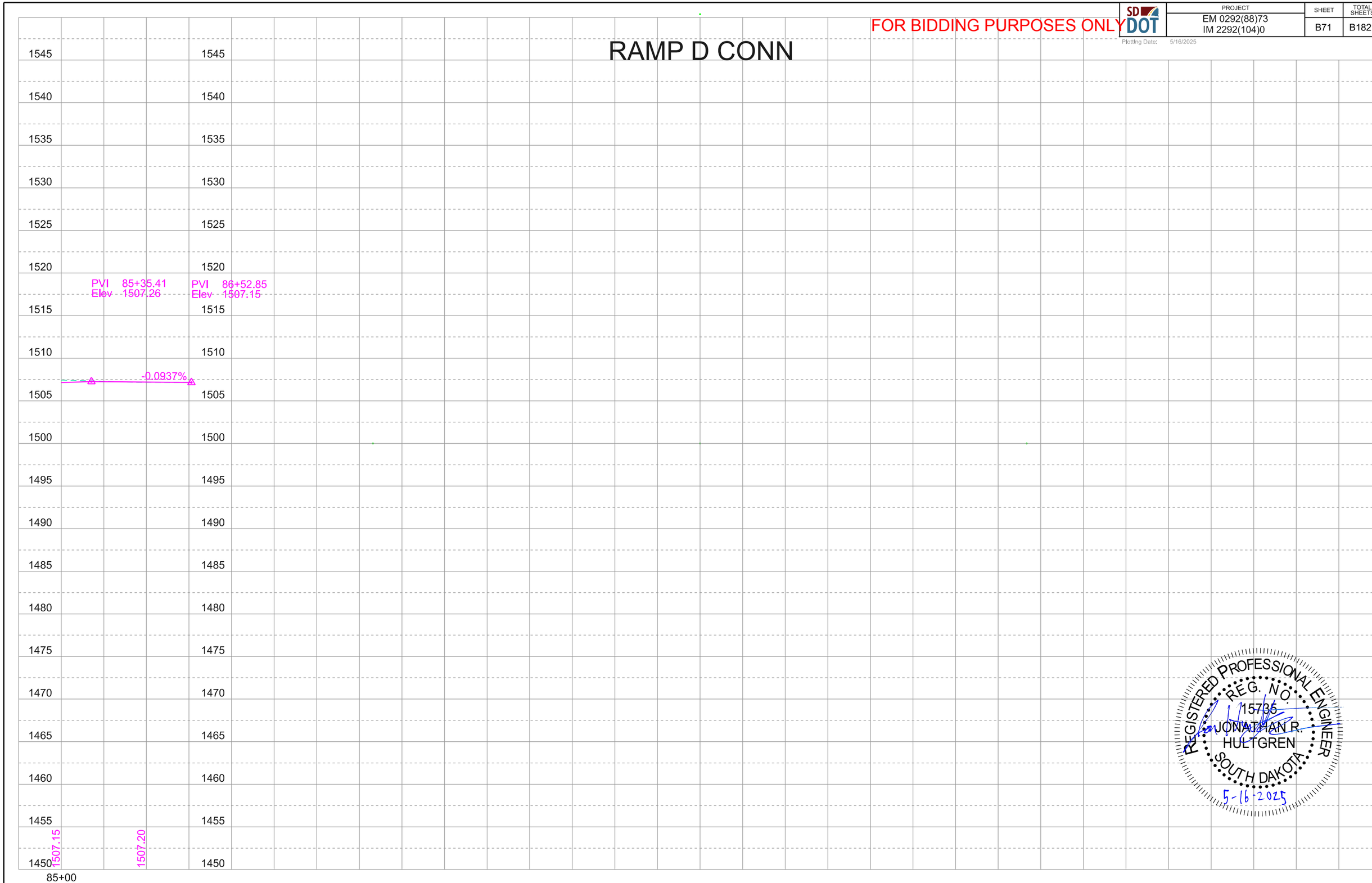

REGISTERED PROFESSIONAL ENGINEER
REG. NO. 15736
JONATHAN R. HULTGREN
SOUTH DAKOTA
5-16-2025

RAMP A / E

FOR BIDDING PURPOSES ONLY

SD DOT	PROJECT	SHEET	TOTAL SHEETS
	EM 0292(88)73 IM 2292(104)0	B72	B182

Plotting Date: 7/21/2025 Revised Date: 7/7/2025 Initials: NBG

REGISTERED PROFESSIONAL ENGINEER
REG. NO. 15735
JONATHAN R. HULTGREN
SOUTH DAKOTA
7-23-2025

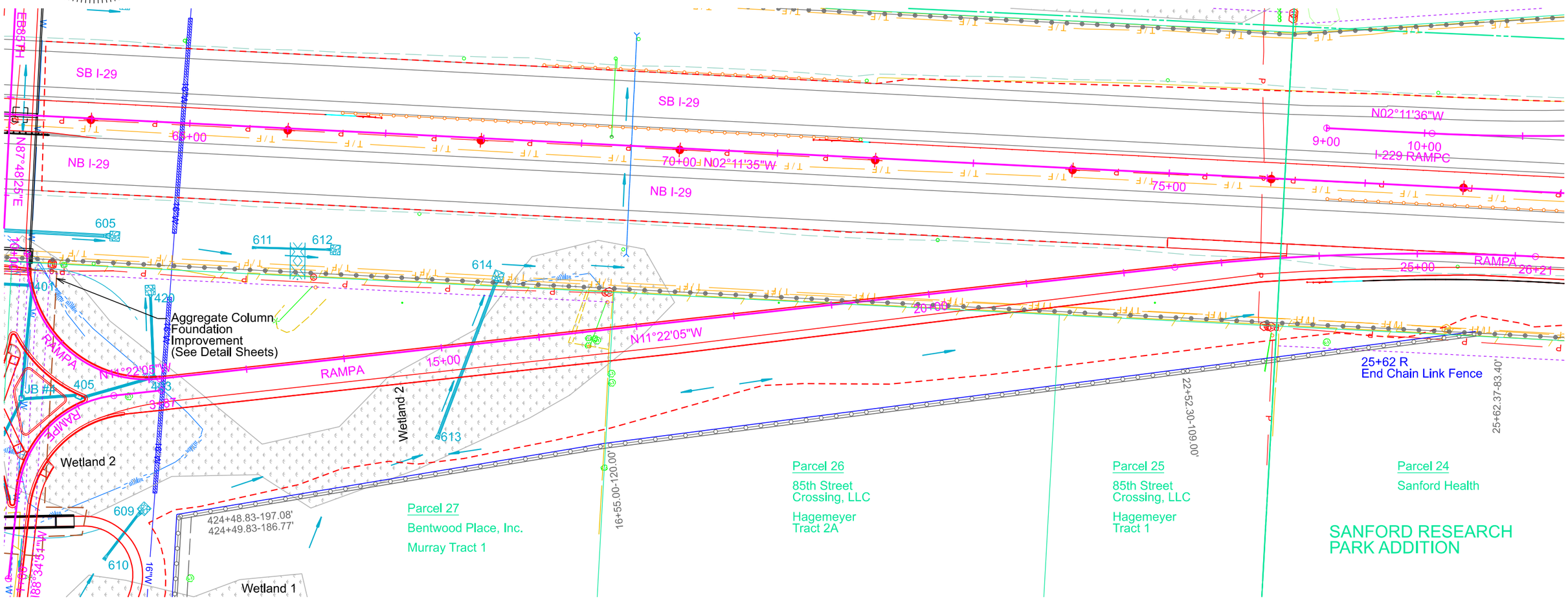

Sec 18-T100N-R50W

RAMPA	
PI	11+43.29
Δ	99°10'30"
T	143.29'
L	211.17'
R	122.00'

RAMPE	
PI	2+78.11
Δ	-77°12'46"
T	87.83'
L	148.24'
R	110.00'

Install 3'x4' Drop Inlet
at the following locations:
ID: 403 - RAMPA 12+05.00 - 1.75' L

Install Ditch Block
RAMPA 13+62 L
Elev 1516.50

ID: 403 to 420
12+05.00 - 1.75' L to 12+10.00 - 85.75' L
Install 18" - 88' CMP
(Between Drop Inlet and CMP Flared End)

ID: 405 to 403
11+41.50 - 34.00' R to 12+05.00 - 1.75' L
Install 18" - 78' RCP CL2
(Between Drop Inlets)

ID: 611 to 612
13+19.50 - 122.75' L to 13+98.50 - 111.75' L
Install 12" - 70' RCP CL2
& 2 Flared Ends

ID: 613 to 614
14+85.50 - 91.75' R to 15+63.25 - 62.00' L
Install 24" - 162' RCP CL3
& 2 Flared Ends

Install Class B Riprap (10'x10'x2')
Type B Drainage Fabric (24 SqYd)
at the following locations;
RAMPA 12+11 L
RAMPA 13+98 L
RAMPA 15+67 L

16+39' R (Ramp A)
Begin Take Out Barbed Wire Fence

16+80' L (Ramp A)
End Take Out Barbed Wire Fence

RAMPA	
PI	24+36.84
Δ	-09°10'30"
T	184.55'
L	368.30'
R	2300.00'

FOR BIDDING PURPOSES ONLY

SD DOT	PROJECT	SHEET	TOTAL SHEETS
	EM 0292(88)73 IM 2292(104)0	B73	B182

Plotting Date: 8/8/2025 Revised Date: 7/7/2025 NBG

RAMP E

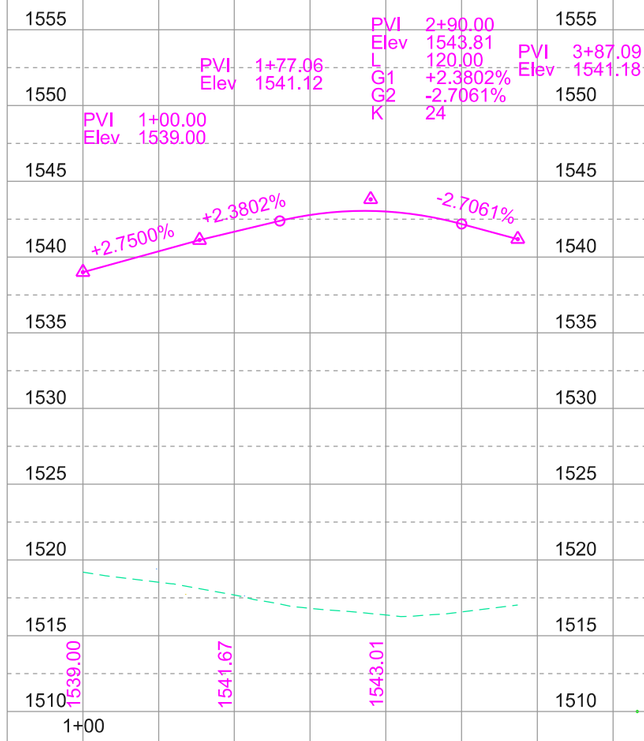

REGISTERED PROFESSIONAL ENGINEER
REG. NO. 15736
JONATHAN R. HULTGREN
SOUTH DAKOTA
8-8-2025

RAMP A

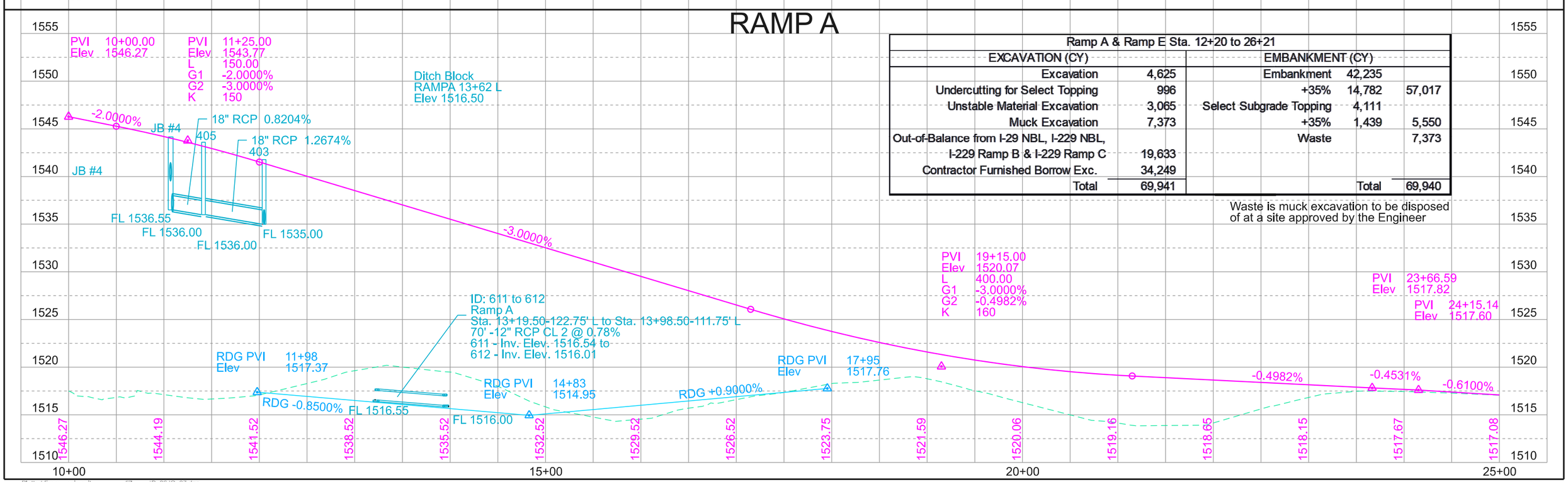

Ramp A & Ramp E Sta. 12+20 to 26+21				
EXCAVATION (CY)		EMBANKMENT (CY)		
Excavation	4,625	Embankment	42,235	
Undercutting for Select Topping	996	+35%	14,782	57,017
Unstable Material Excavation	3,065	Select Subgrade Topping	4,111	
Muck Excavation	7,373	+35%	1,439	5,550
Out-of-Balance from I-29 NBL, I-229 NBL, I-229 Ramp B & I-229 Ramp C	19,633	Waste		7,373
Contractor Furnished Borrow Exc.	34,249			
Total	69,941		Total	69,940

Waste is muck excavation to be disposed of at a site approved by the Engineer

Plotted From - ngjersvik File - ...\B_06JQ_07.dgn

FOR BIDDING PURPOSES ONLY

SD DOT	PROJECT	SHEET	TOTAL SHEETS
Plotting Date: 5/17/2025	EM 0292(88)73 IM 2292(104)0	B74	B182

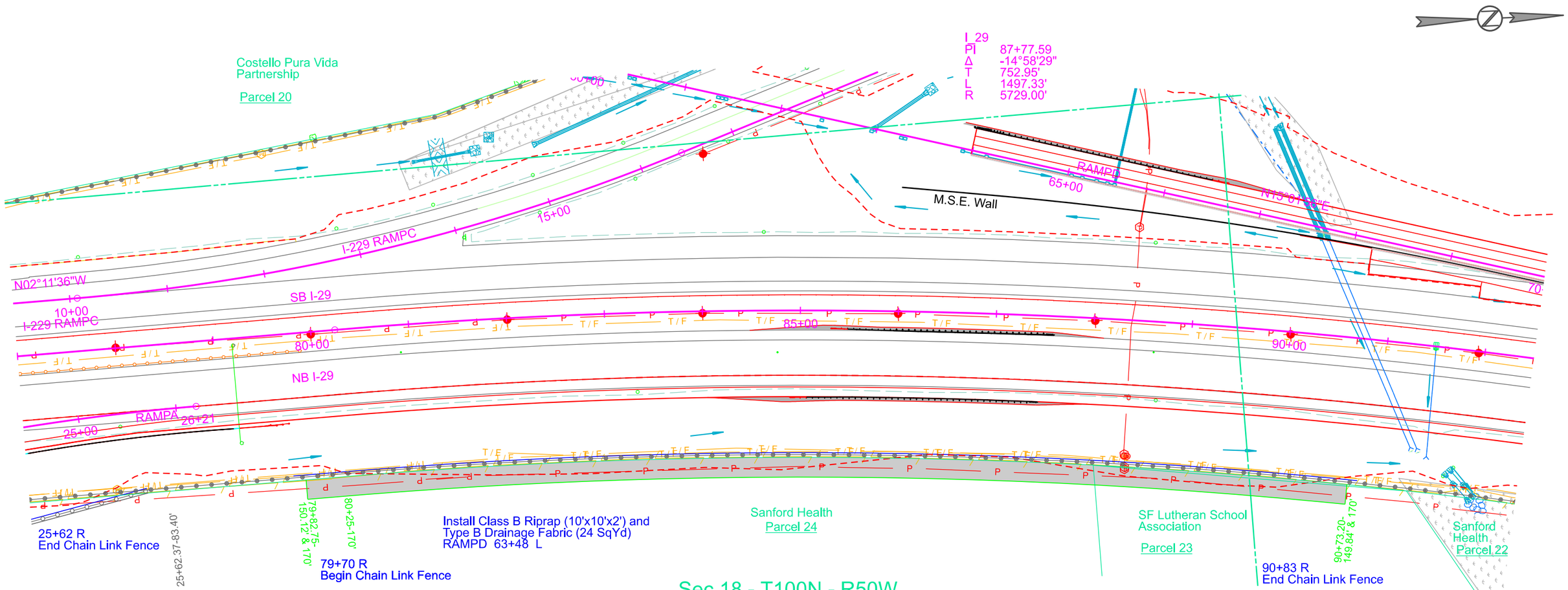

Take Out
30"-14' RCP Culvert
91+91.9, 136' R to
92+02.64,145.1' R
& 1 End Section
91+96.47, 135.7' R
(Incidental Work, Grading)

Take out
30"-22' RCP Culvert
91+81.58, 135.4' R
91+97.85, 149.8' R
& 1 End Section
91+86.29, 139.6' R
(Incidental Work, Grading)

Retain Drop Inlet
90+50-R

Retain 30"-236' RCP
& 1 End Section
90+79-L/R

Retain 24"-110' RCP
& 1 End Section
91+51-R

Install 30" RCP Flared End Section
at the following locations:
ID: P_HWL-2
91+96.47, 135.7' R
ID: P_HWL-3
91+86.29, 139.6' R

Parcel 24
79+82.75 to 88+09.46 R
Temporary Easement containing
0.37 ac (16065 sq ft), more or less

Parcel 23
88+09.49 to 90+73.20 R
Temporary Easement containing
0.11 ac (4703 sq ft), more or less

REGISTERED PROFESSIONAL ENGINEER
REG. NO. 15735
JONATHAN R. HULTGREN
SOUTH DAKOTA
5-16-2025

FOR BIDDING PURPOSES ONLY

RAMP A

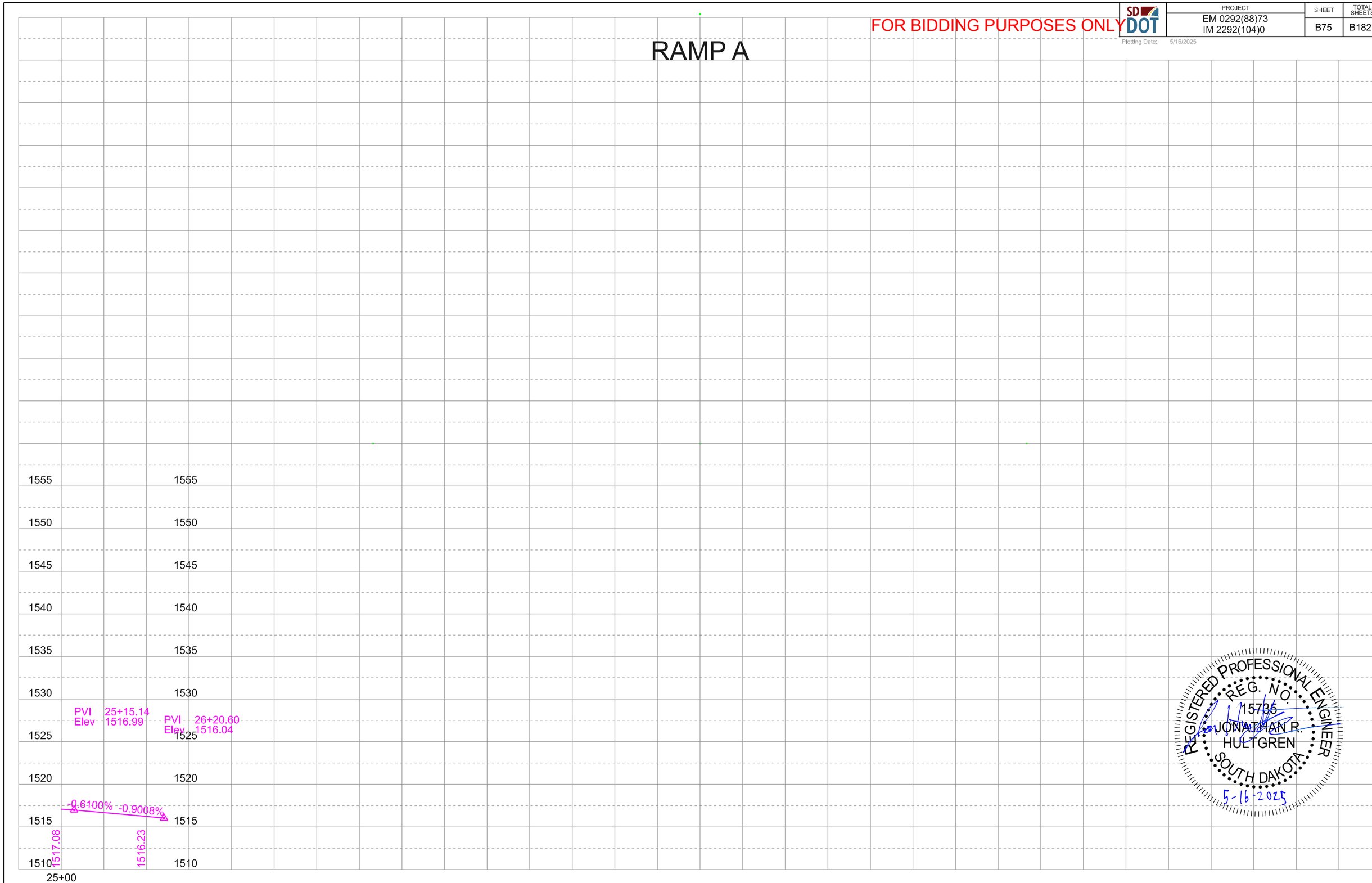

FOR BIDDING PURPOSES ONLY

I-29

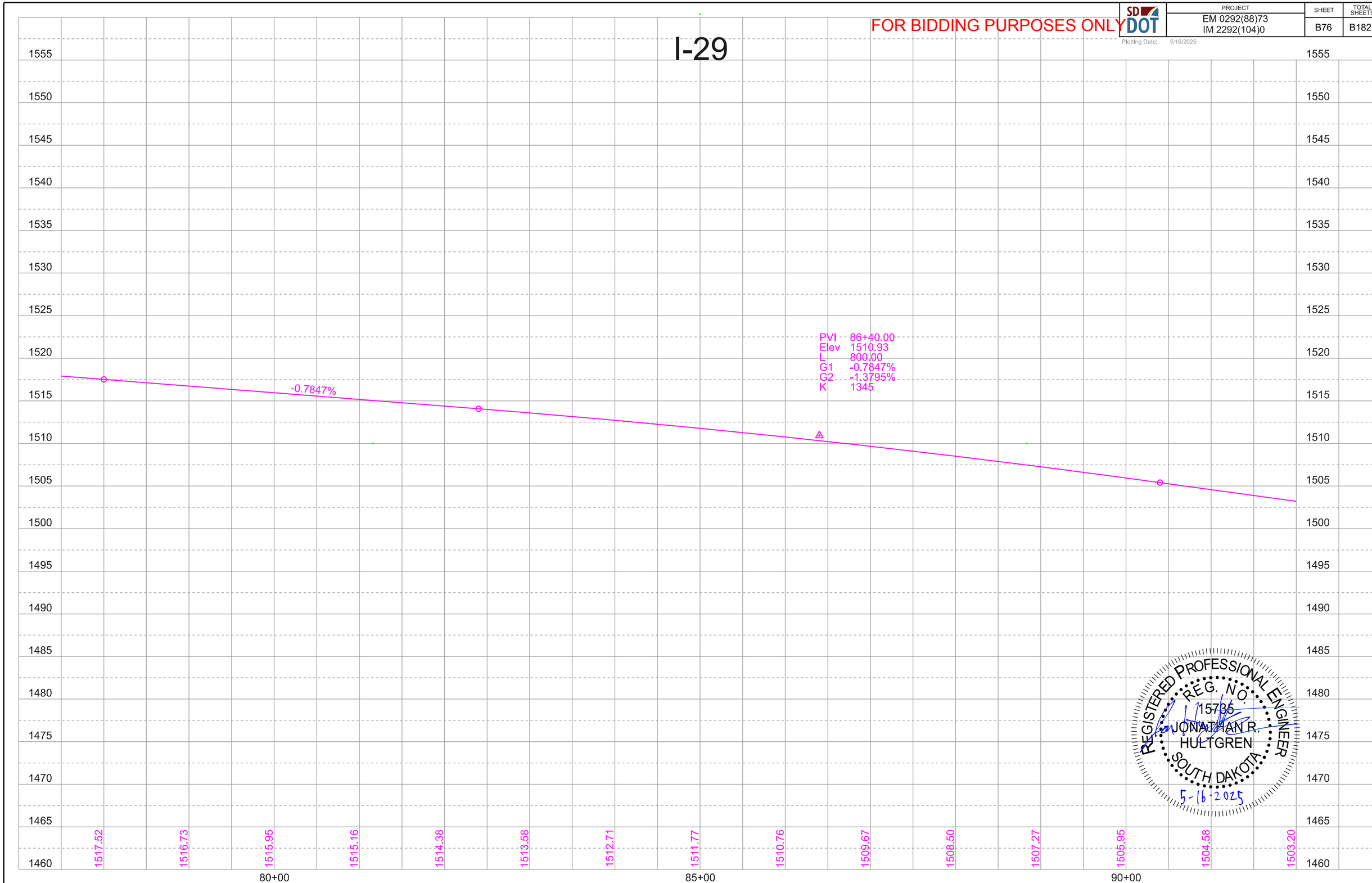

REGISTERED PROFESSIONAL ENGINEER
REG. NO. 15736
JONATHAN R. HULTGREN
SOUTH DAKOTA
5-16-2025

I-229 RAMP B

FOR BIDDING PURPOSES ONLY

SD DOT	PROJECT	SHEET	TOTAL SHEETS
	EM 0292(88)73 IM 2292(104)0	B77	B182

Plotting Date: 5/16/2025

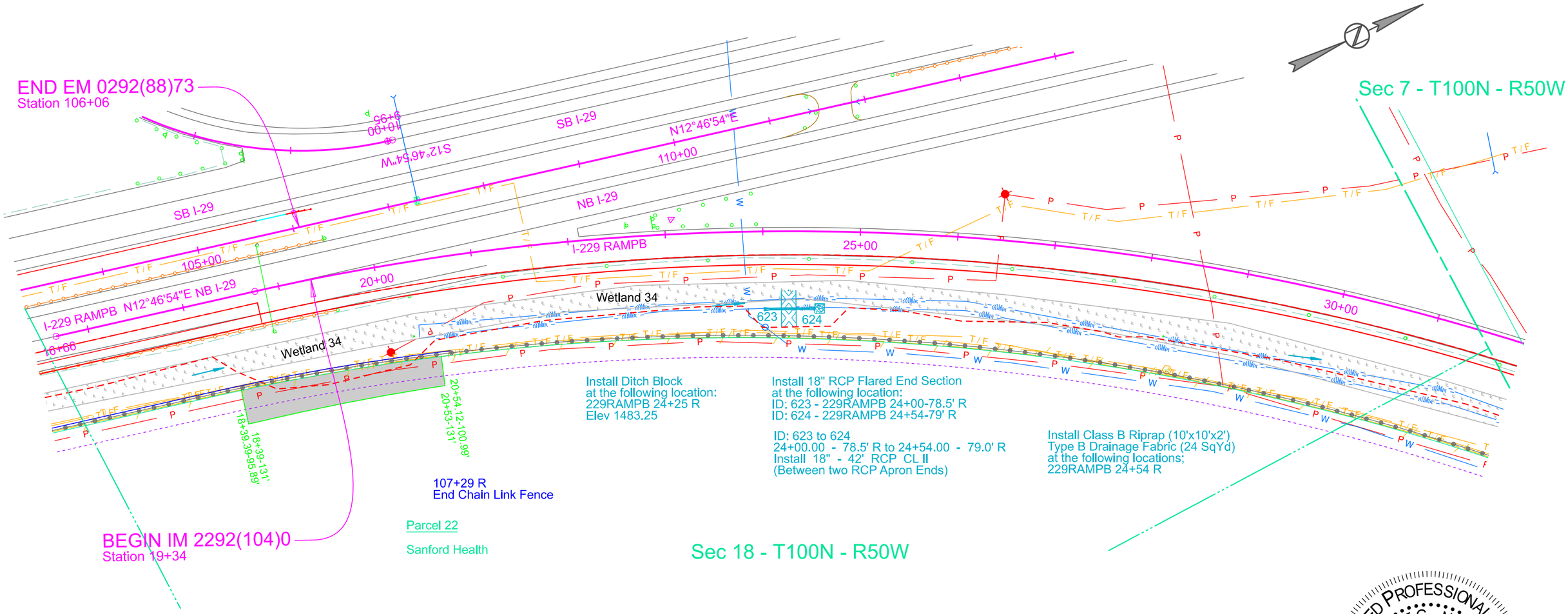

REGISTERED PROFESSIONAL ENGINEER
REG. NO. 15735
JONATHAN R. HULTGREN
SOUTH DAKOTA
5-16-2025

Parcel 22
105+11.19 to 107+16.06
Temporary Easement containing
0.15 ac (6738 sq ft), more or less

PROJECT	SHEET	TOTAL SHEETS
EM 0292(88)73 IM 2292(104)0	B78	B182

Plotting Date: 8/8/2025

FOR BIDDING PURPOSES ONLY

I-229 RAMP B

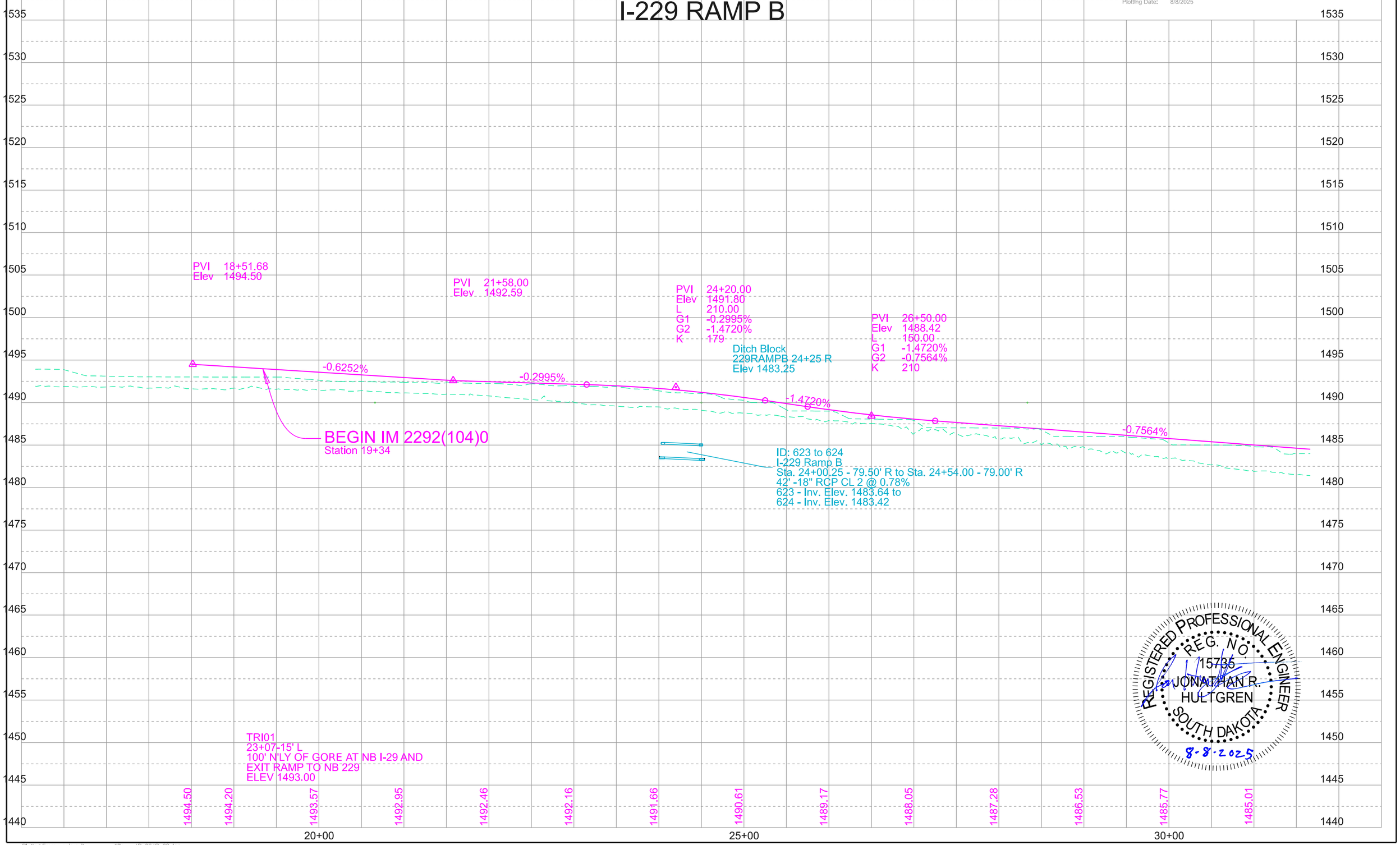

REGISTERED PROFESSIONAL ENGINEER
REG. NO. 15735
JONATHAN R. HULTGREN
SOUTH DAKOTA
8-8-2025

Plotted From - ngjersvik File - ...\B_06JQ_08.dgn

I-229 RAMP B / NB I-229

FOR BIDDING PURPOSES ONLY

SD DOT	PROJECT	SHEET	TOTAL SHEETS
	EM 0292(88)73 IM 2292(104)0	B79	B182

Plotting Date: 8/14/2025 Revised Date: 8/14/2025
Initials: NBG

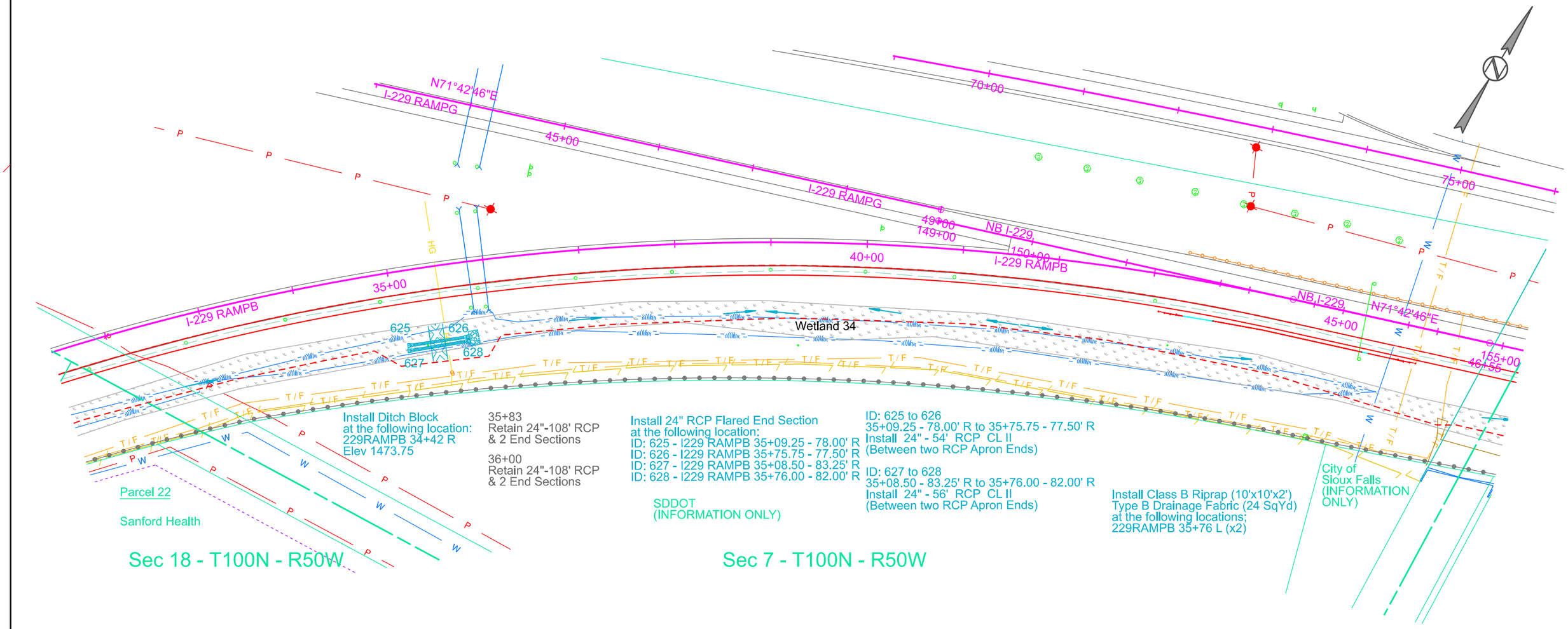

REGISTERED PROFESSIONAL ENGINEER
REG. NO. 15736
JONATHAN R. HULTGREN
SOUTH DAKOTA
8-14-2025

Plotted From - ngjersvik File - ...\B_06JQ_08.dgn

SD DOT	PROJECT	SHEET	TOTAL SHEETS
	EM 0292(88)73 IM 2292(104)0	B80	B182

FOR BIDDING PURPOSES ONLY

Plotting Date: 8/8/2025

I-229 RAMP B

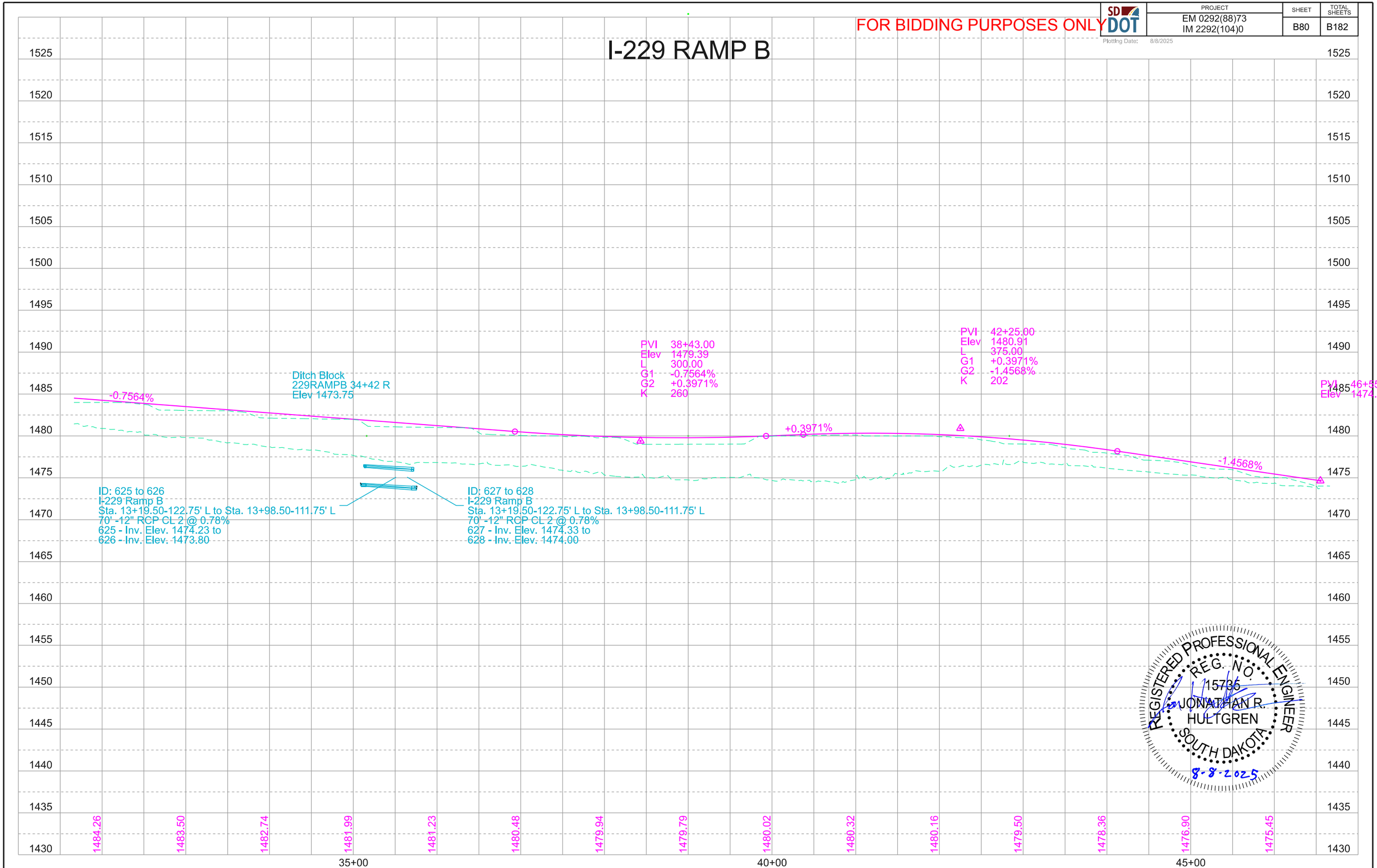

REGISTERED PROFESSIONAL ENGINEER
REG. NO. 15786
JONATHAN R. HULTGREN
SOUTH DAKOTA
8-8-2025

Plotted From - ngjersvik File - ...\B_06JQ_08.dgn

FOR BIDDING PURPOSES ONLY

NB I-229

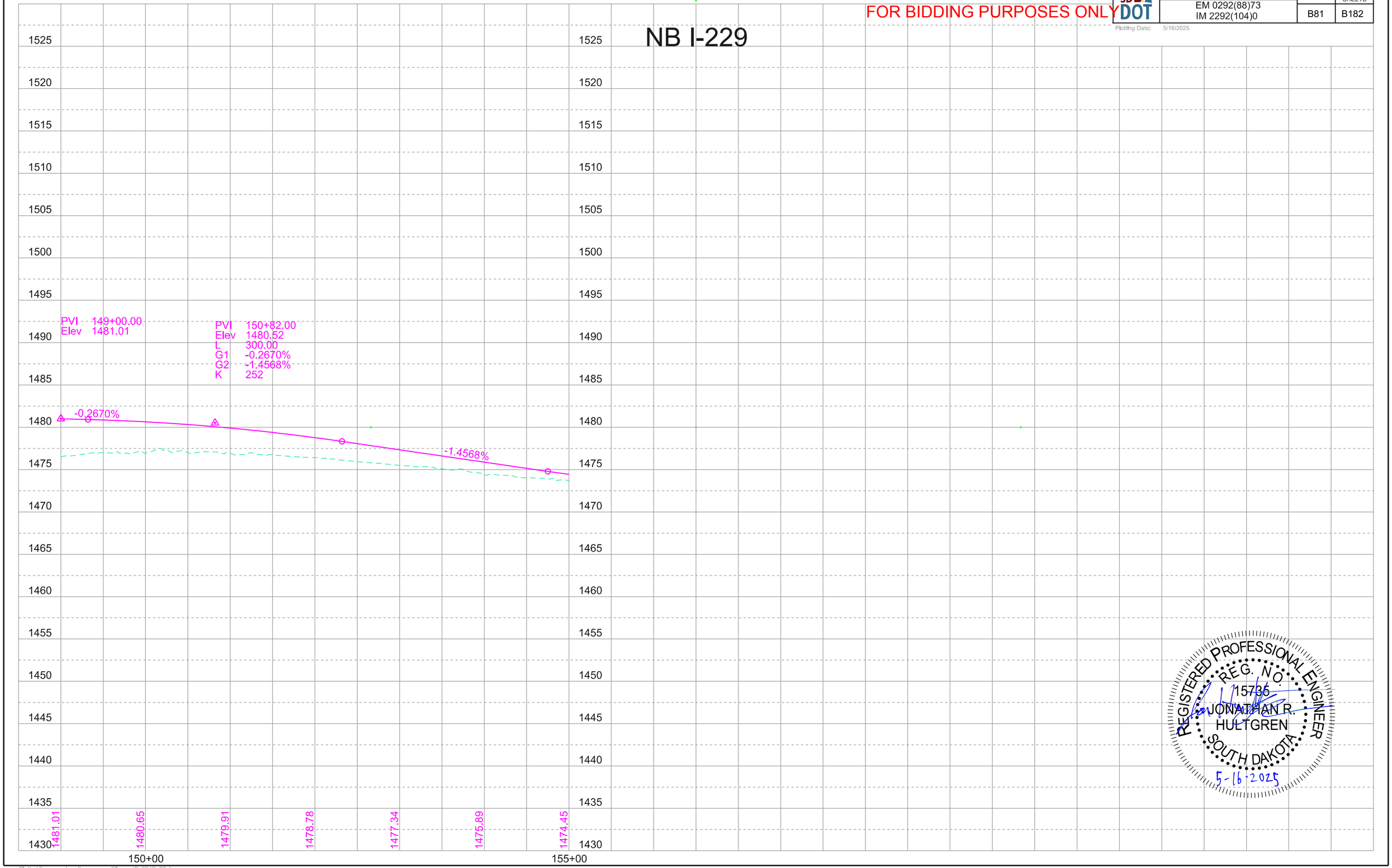

REGISTERED PROFESSIONAL ENGINEER
REG. NO. 15736
JONATHAN R. HULTGREN
SOUTH DAKOTA
5-16-2025

NB I-229

FOR BIDDING PURPOSES ONLY

SD DOT	PROJECT	SHEET	TOTAL SHEETS
	EM 0292(88)73 IM 2292(104)0	B82	B182

Plotting Date: 8/13/2025 Revised Date: 8/13/2025
Initials: NBG

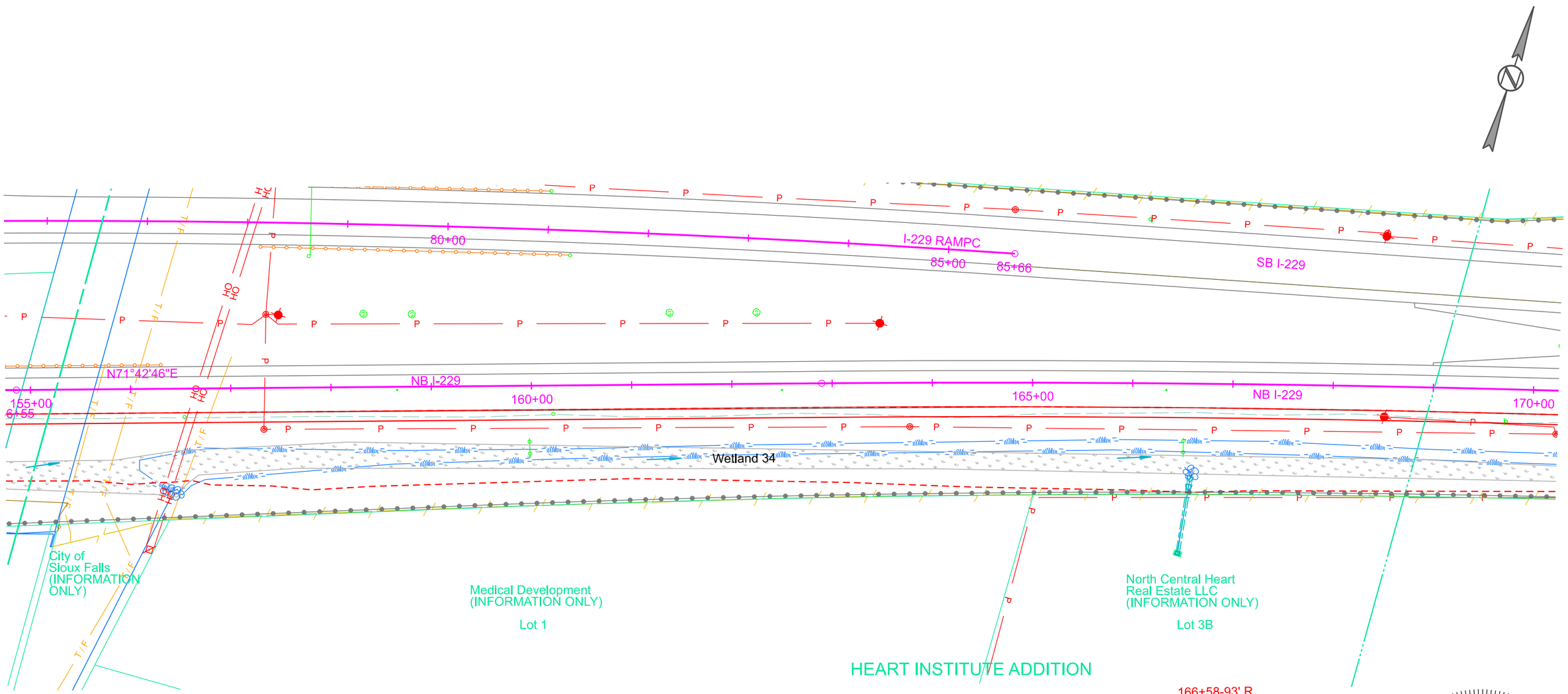

Do Not Disturb
36"-267' RCP
& 2 End Sections
155+81-220' R

166+58-93' R
Take Out 1 End Section for Reset
Take Out 36"-8' RCP
Reset 1 End Section
(Incidental Work, Grading)

166+46-169' R
Retain 36"-60' RCP
& 1 Outlet Control Structure

166+60-93' R
Retain Riprap

REGISTERED PROFESSIONAL ENGINEER
REG. NO. 15735
JONATHAN R. HULTGREN
SOUTH DAKOTA
8-14-2025

NB I-229

I-229 NBL Sta. 154+86 to 183+17				
EXCAVATION (CY)		EMBANKMENT (CY)		
Excavation	10,541	Embankment	0	
Granular Material Excavation	143	+20%	0	0
Undercutting for Select Topping	4,297	Select Subgrade Topping	4,333	
		+20%	867	5,200
		Out-of-Balance to Ramp A		9,782
Total	14,981	Total		14,982

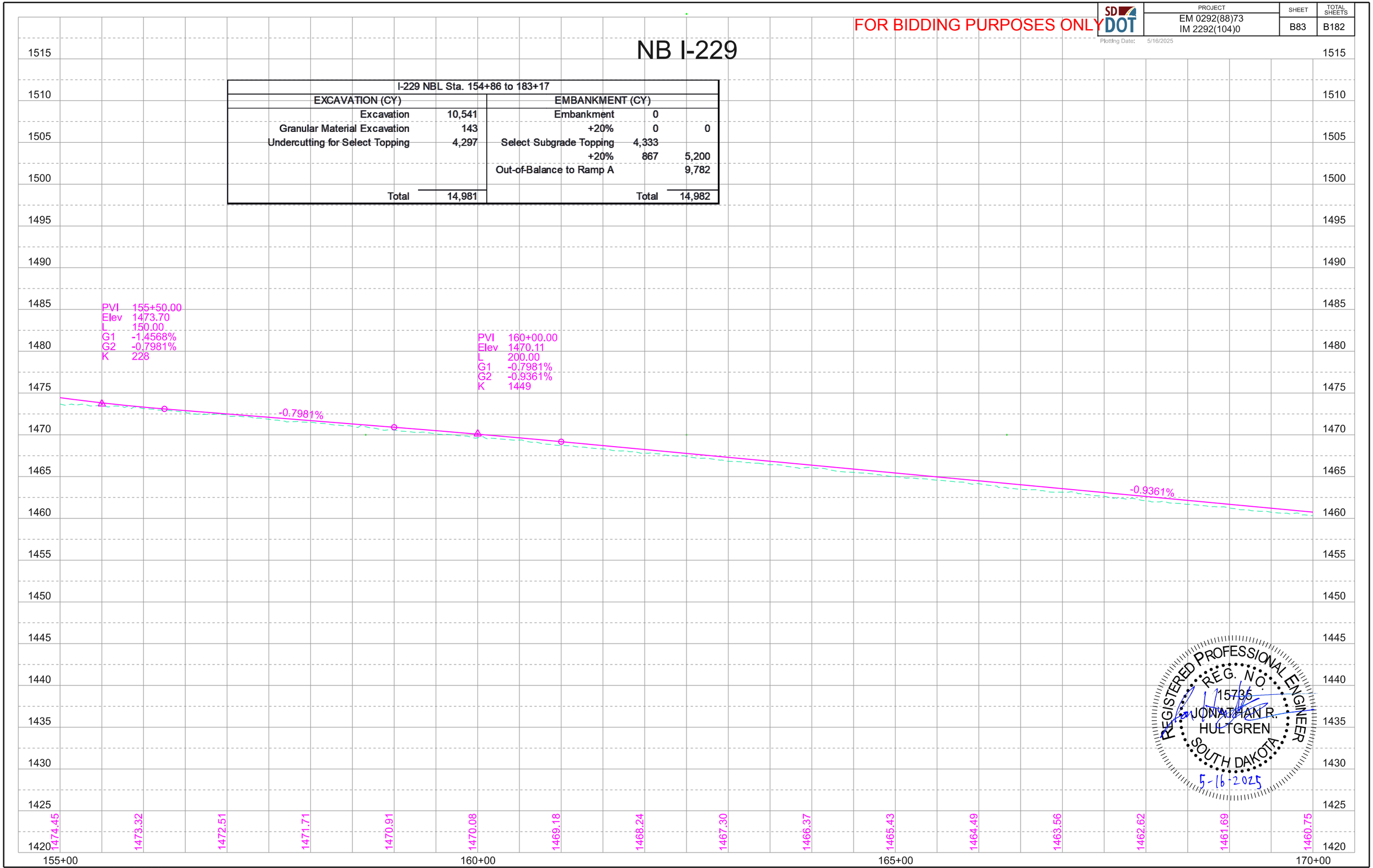

NB I-229

FOR BIDDING PURPOSES ONLY

SD DOT	PROJECT	SHEET	TOTAL SHEETS
	EM 0292(88)73 IM 2292(104)0	B84	B182

Plotting Date: 8/14/2025 Revised Date: 8/14/2025
Initials: NBG

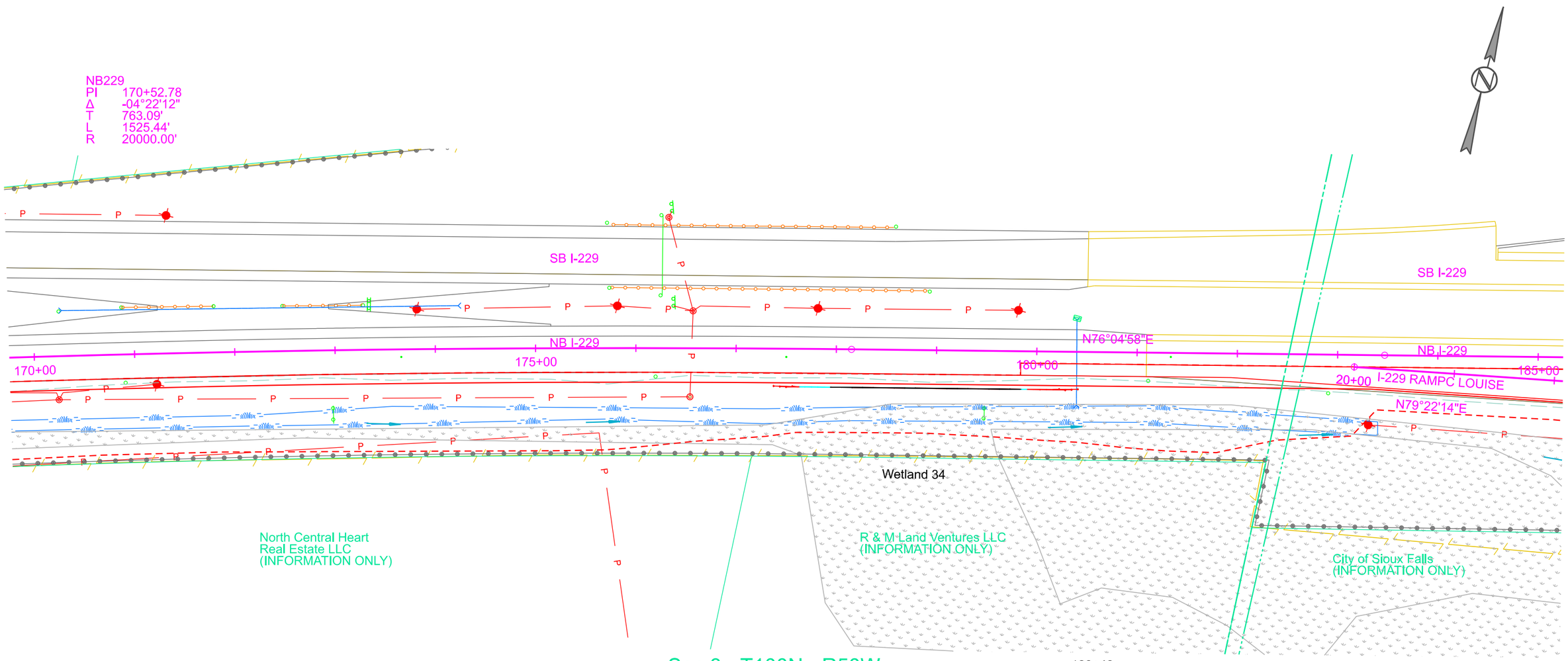

REGISTERED PROFESSIONAL ENGINEER
REG. NO. 15735
JONATHAN R. HULTGREN
SOUTH DAKOTA
8-14-2025

SD DOT	PROJECT	SHEET	TOTAL SHEETS
	EM 0292(88)73 IM 2292(104)0	B85	B182

FOR BIDDING PURPOSES ONLY

Plotting Date: 5/16/2025

NB I-229

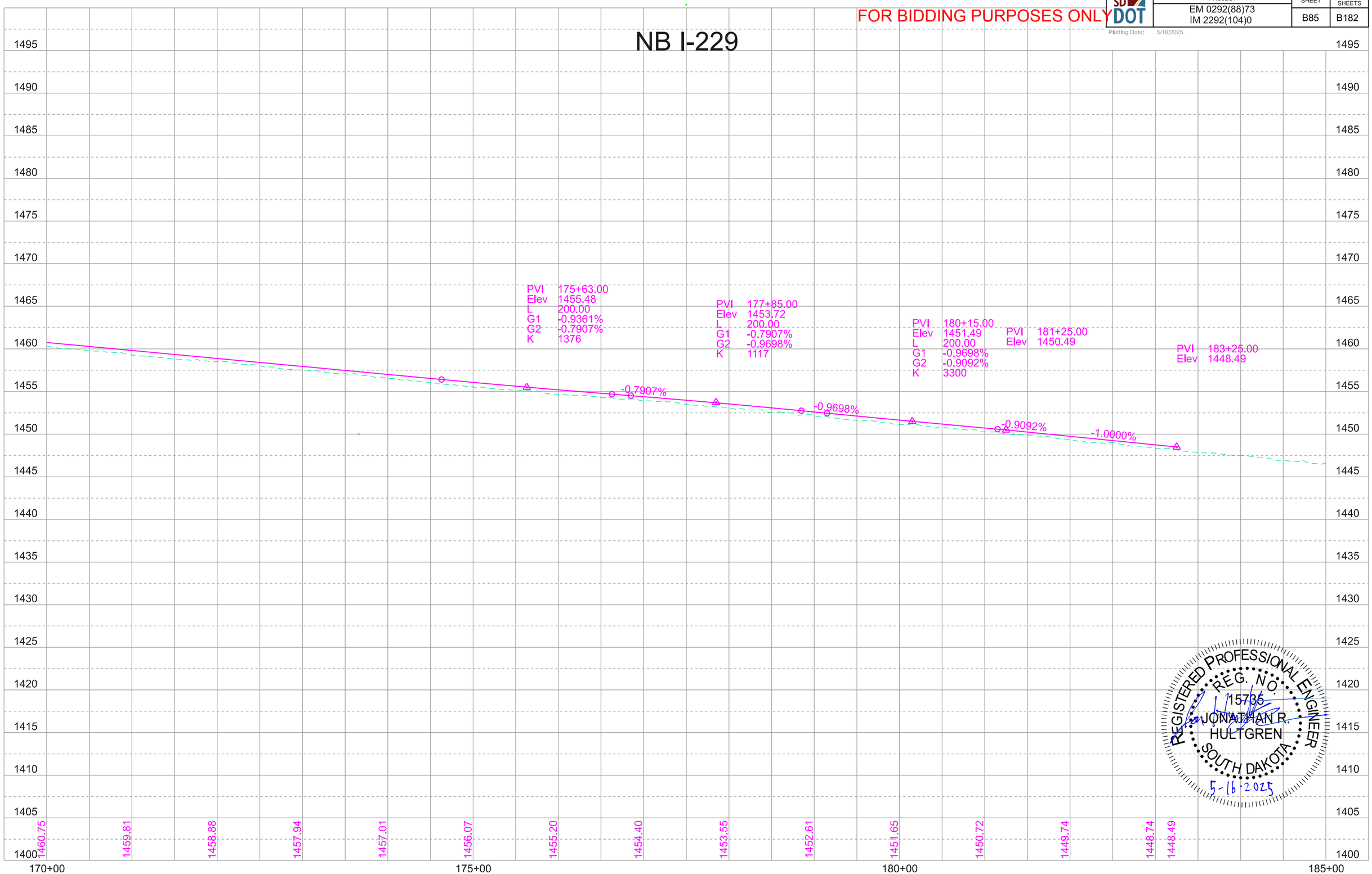

REGISTERED PROFESSIONAL ENGINEER
REG. NO. 15736
JONATHAN R. HULTGREN
SOUTH DAKOTA
5-16-2025

Plotted From - ng|ersvik File - ...\B_06JQ_08.dgn

I-229 RAMP C LOUISE

FOR BIDDING PURPOSES ONLY

PROJECT	SHEET	TOTAL SHEETS
EM 0292(88)73 IM 2292(104)0	B86	B182

Plotting Date: 5/16/2025

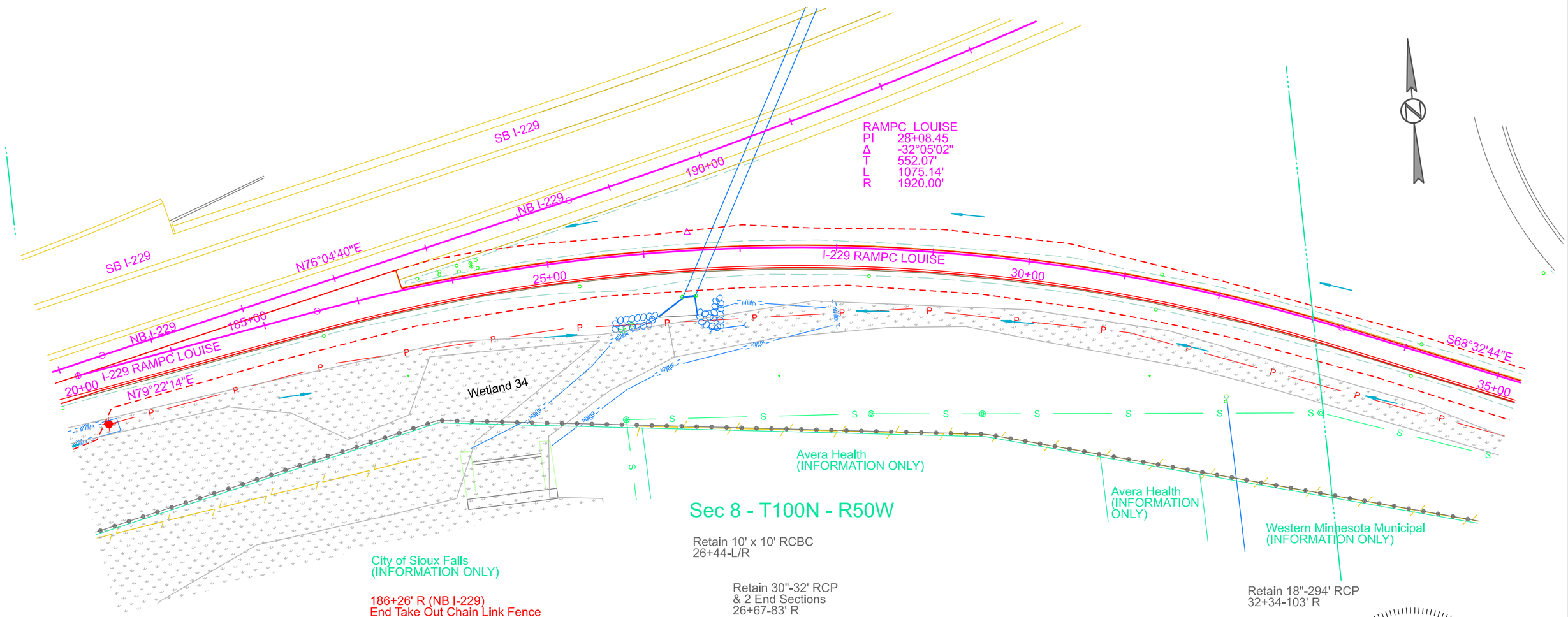

REGISTERED PROFESSIONAL ENGINEER
REG. NO. 15736
JONATHAN R. HULTGREN
SOUTH DAKOTA
5-16-2025

I-229 RAMP C LOUISE

I-229 Ramp C Louise Sta. 20+00 to 44+24				
EXCAVATION (CY)		EMBANKMENT (CY)		
Excavation	3,507	Embankment	0	
Granular Material Excavation	1,729	+20%	0	0
		Out-of-Balance to Ramp A		5,236
Total	5,236	Total		5,236

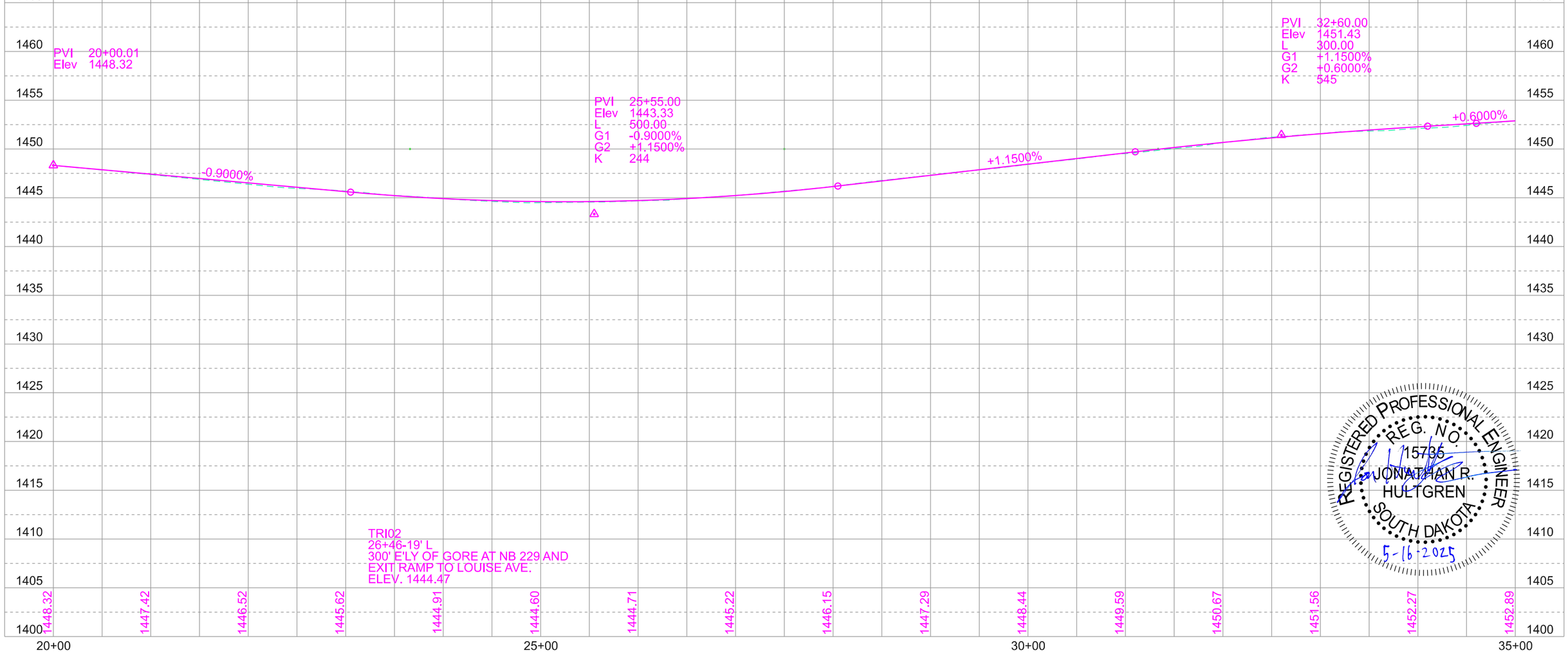

REGISTERED PROFESSIONAL ENGINEER
REG. NO. 15736
JONATHAN R. HULTGREN
SOUTH DAKOTA
5-16-2025

I-229 RAMP C LOUISE

FOR BIDDING PURPOSES ONLY

SD DOT	PROJECT	SHEET	TOTAL SHEETS
	EM 0292(88)73 IM 2292(104)0	B88	B182

Plotting Date: 5/16/2025

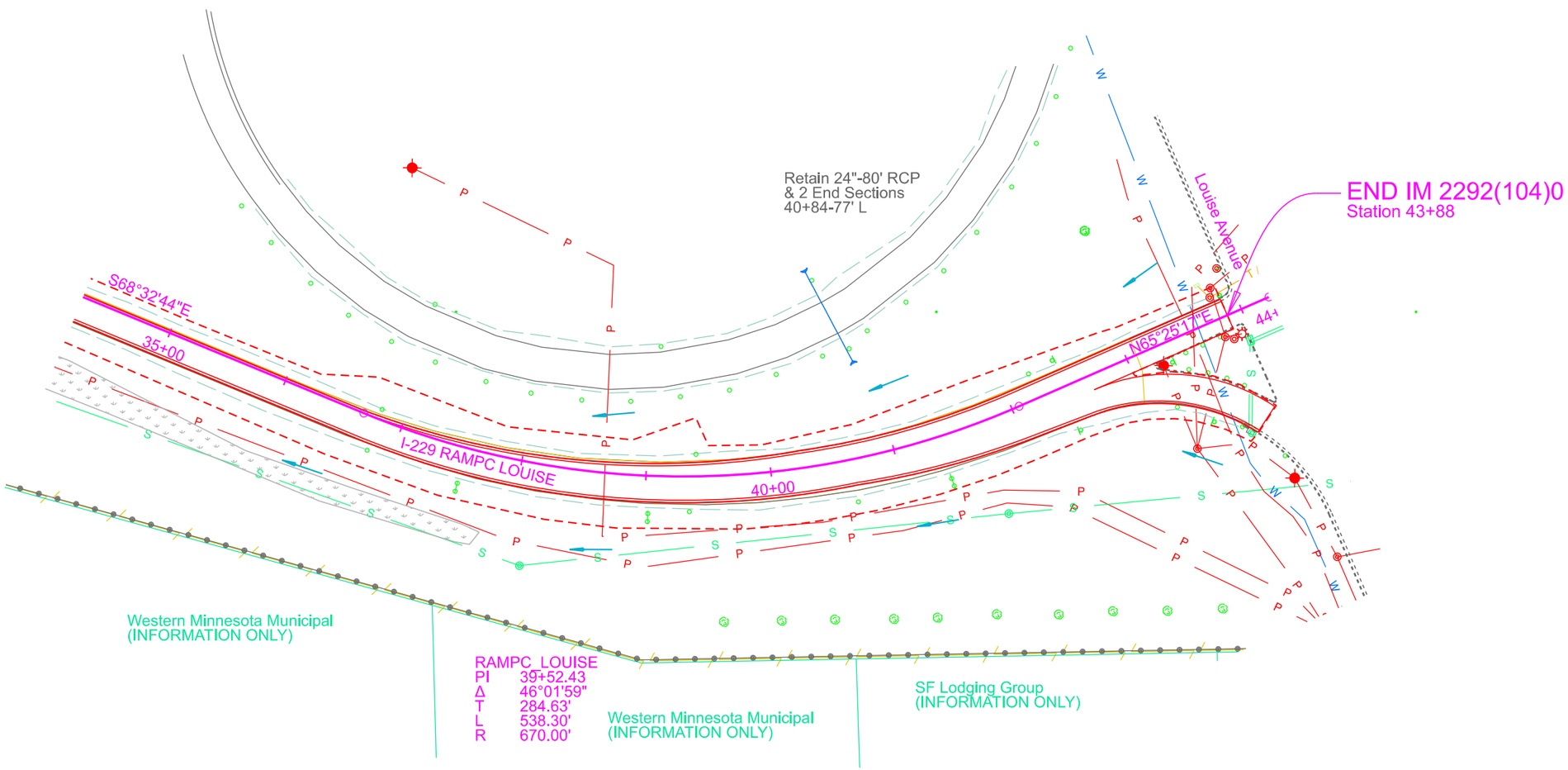

Sec 8 - T100N - R50W

REGISTERED PROFESSIONAL ENGINEER
REG. NO. 15736
JONATHAN R. HULTGREN
SOUTH DAKOTA
5-16-2025

FOR BIDDING PURPOSES ONLY

I-229 RAMP C LOUISE

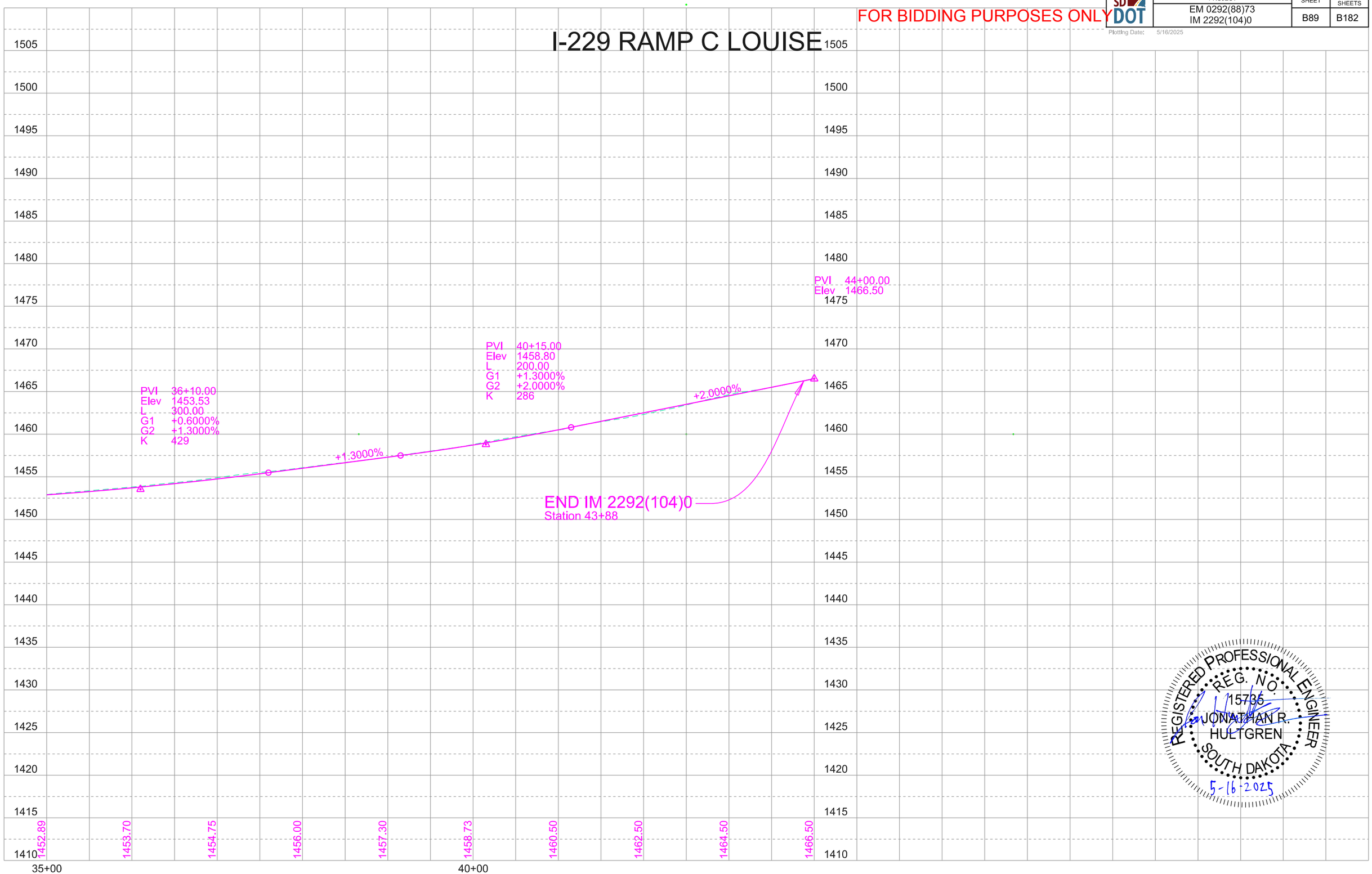

REGISTERED PROFESSIONAL ENGINEER
REG. NO. 15736
JONATHAN R. HULTGREN
SOUTH DAKOTA
5-16-2025

PAVEMENT REMOVAL LAYOUT

FOR BIDDING PURPOSES ONLY

PROJECT	SHEET	TOTAL SHEETS
EM 0292(88)73 IM 2292(104)0	B90	B182

Plotting Date: 5/16/2025

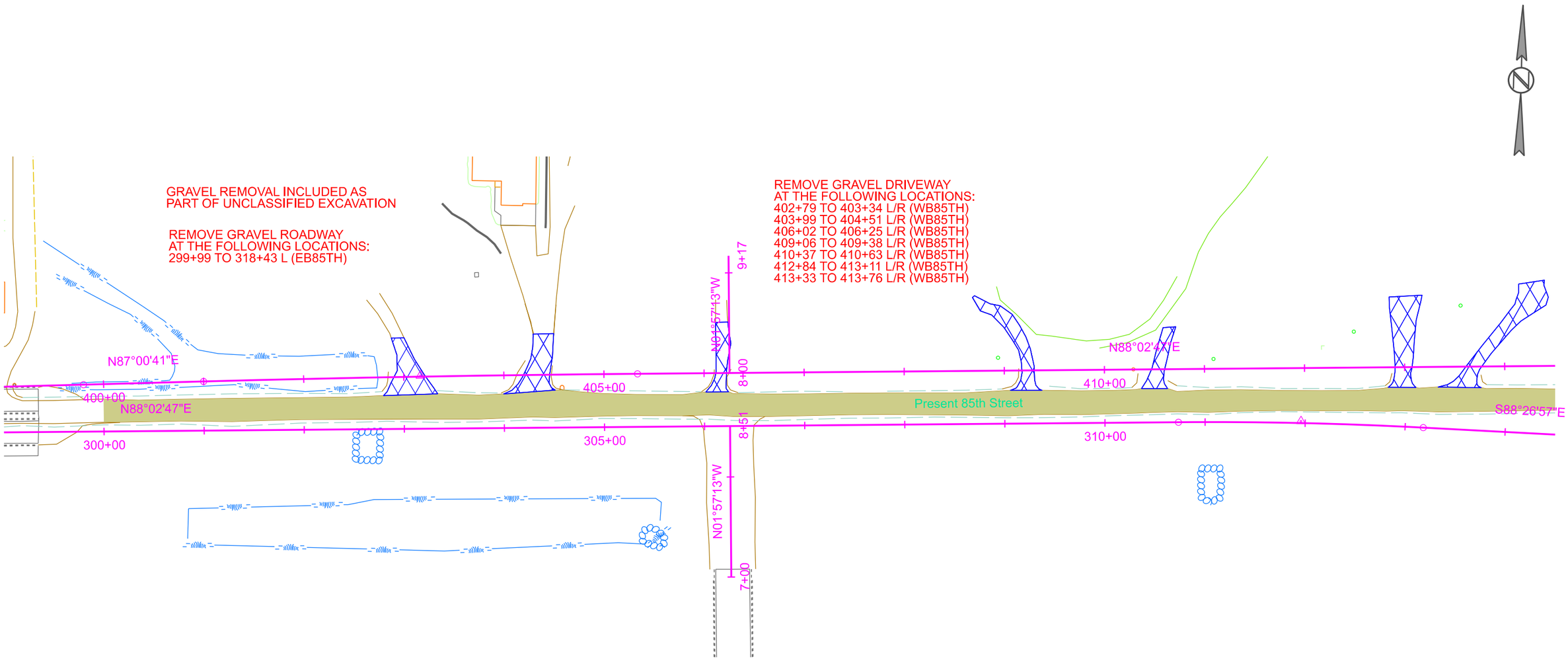

REGISTERED PROFESSIONAL ENGINEER
REG. NO.
15736
JONATHAN R.
HULTGREN
SOUTH DAKOTA
5-16-2025

Plotted From - ngjersvik File - ...\B_06JQ_pr.dgn

PAVEMENT REMOVAL LAYOUT

FOR BIDDING PURPOSES ONLY

SD DOT	PROJECT	SHEET	TOTAL SHEETS
	EM 0292(88)73 IM 2292(104)0	B91	B182

Plotting Date: 5/16/2025

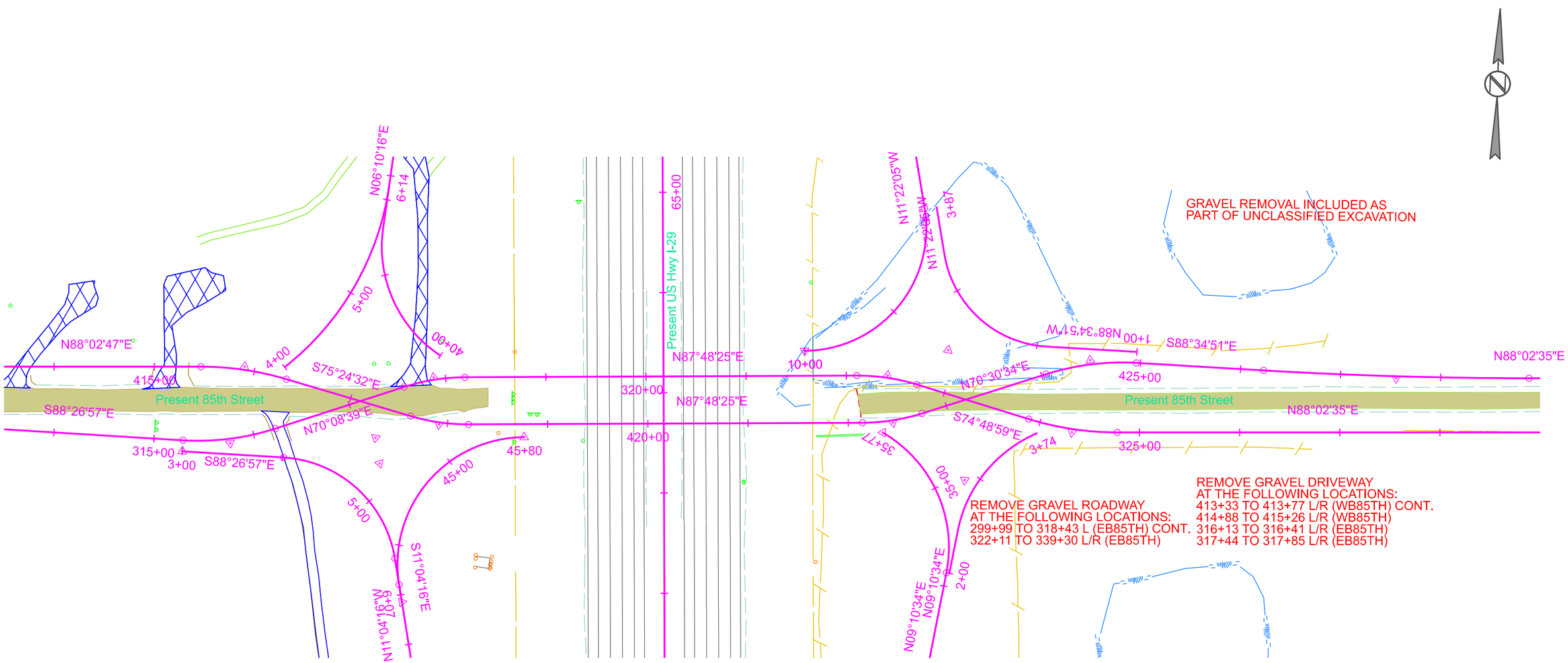

REMOVE GRAVEL ROADWAY
AT THE FOLLOWING LOCATIONS:
299+99 TO 318+43 L (EB85TH) CONT.
322+11 TO 339+30 L/R (EB85TH)

REMOVE GRAVEL DRIVEWAY
AT THE FOLLOWING LOCATIONS:
413+33 TO 413+77 L/R (WB85TH) CONT.
414+88 TO 415+26 L/R (WB85TH)
316+13 TO 316+41 L/R (EB85TH)
317+44 TO 317+85 L/R (EB85TH)

REGISTERED PROFESSIONAL ENGINEER
REG. NO.
15736
JONATHAN R.
HULTGREN
SOUTH DAKOTA
5-16-2025

PAVEMENT REMOVAL LAYOUT

FOR BIDDING PURPOSES ONLY

SD DOT	PROJECT	SHEET	TOTAL SHEETS
	EM 0292(88)73 IM 2292(104)0	B92	B182

Plotting Date: 5/16/2025

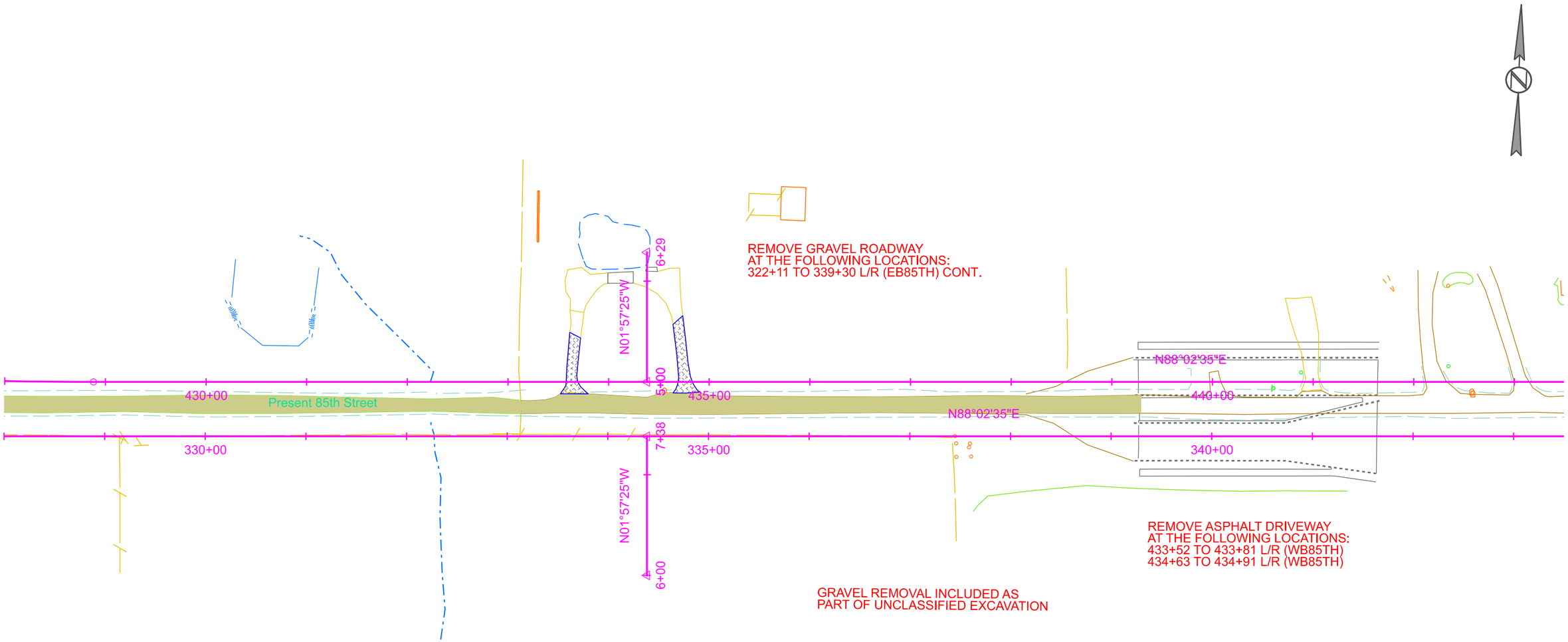

REGISTERED PROFESSIONAL ENGINEER
REG. NO. 15736
JONATHAN R. HULTGREN
SOUTH DAKOTA
5-16-2025

PAVEMENT REMOVAL LAYOUT

FOR BIDDING PURPOSES ONLY

SD DOT	PROJECT	SHEET	TOTAL SHEETS
	EM 0292(88)73 IM 2292(104)0	B93	B182

Plotting Date: 5/16/2025

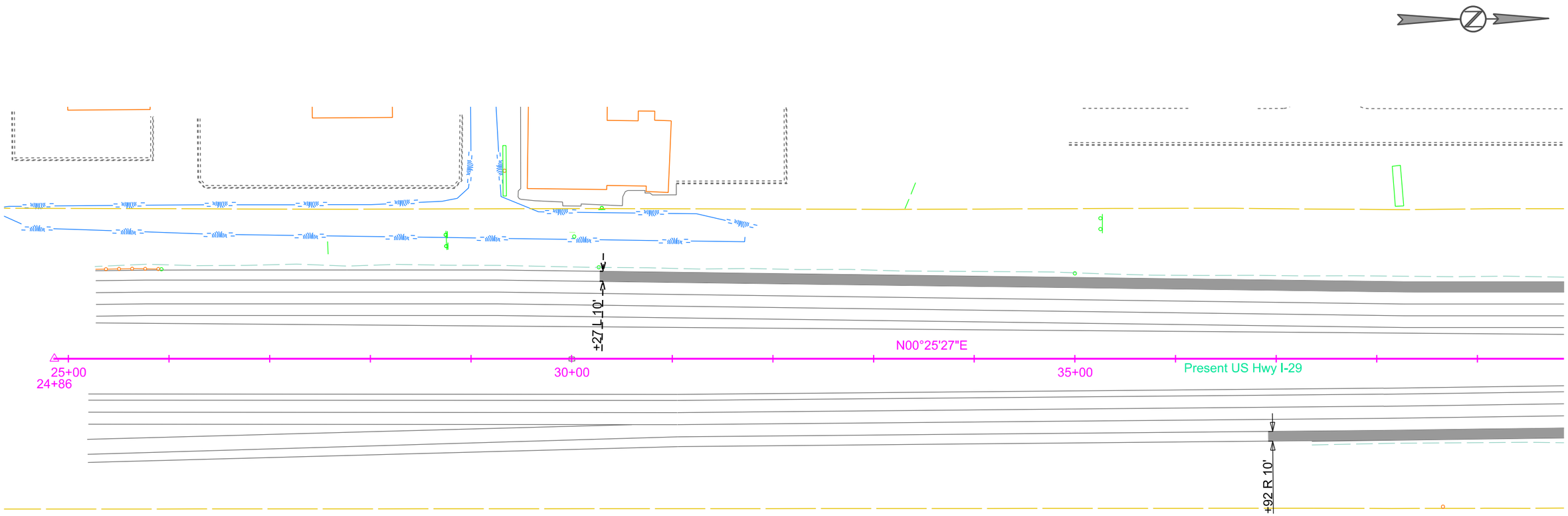

REMOVE CONCRETE PAVEMENT
AT THE FOLLOWING LOCATIONS:
30+27 TO 51+32 L (I_29)
36+92 TO 50+85 R (I_29)

REGISTERED PROFESSIONAL ENGINEER
REG. NO. 15735
JONATHAN R. HULTGREN
SOUTH DAKOTA
5-16-2025

PAVEMENT REMOVAL LAYOUT

FOR BIDDING PURPOSES ONLY

SD DOT	PROJECT	SHEET	TOTAL SHEETS
	EM 0292(88)73 IM 2292(104)0	B94	B182

Plotting Date: 5/16/2025

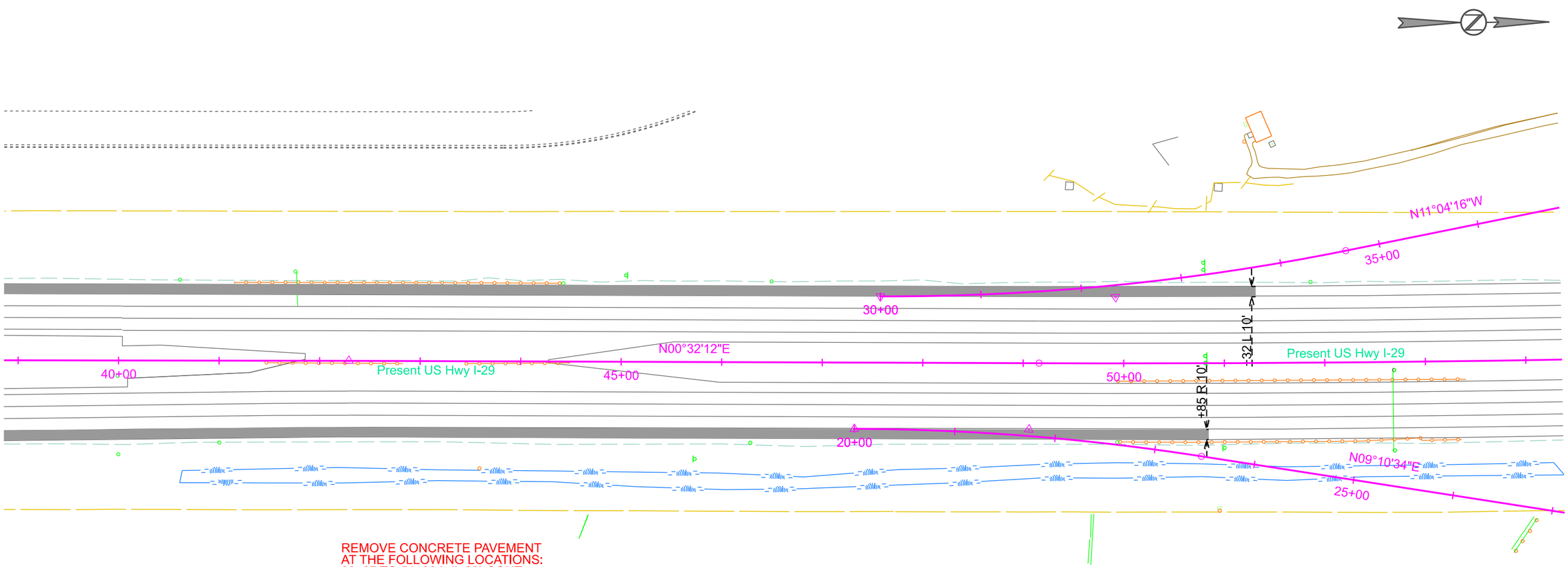

REMOVE CONCRETE PAVEMENT
AT THE FOLLOWING LOCATIONS:
30+27 TO 51+32 L (I_29) CONT.
36+92 TO 50+85 R (I_29) CONT.

REGISTERED PROFESSIONAL ENGINEER
REG. NO. 15736
JONATHAN R. HULTGREN
SOUTH DAKOTA
5-16-2025

PAVEMENT REMOVAL LAYOUT

FOR BIDDING PURPOSES ONLY

SD DOT	PROJECT	SHEET	TOTAL SHEETS
	EM 0292(88)73 IM 2292(104)0	B95	B182

Plotting Date: 5/16/2025

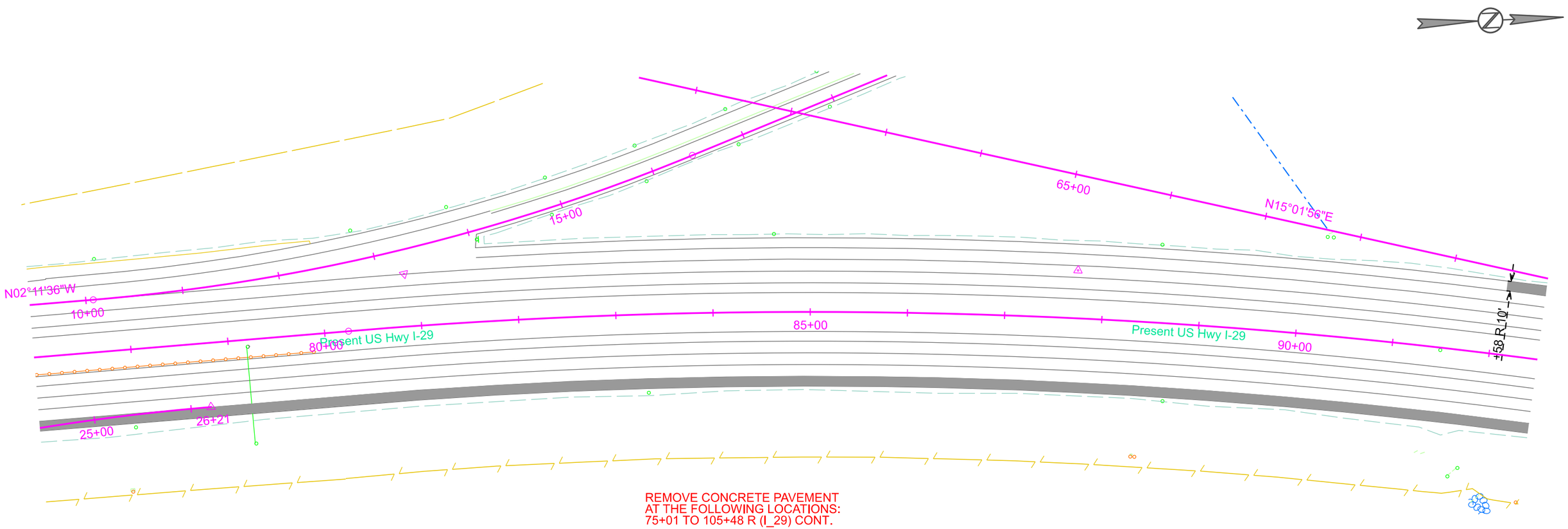

REMOVE CONCRETE PAVEMENT
AT THE FOLLOWING LOCATIONS:
75+01 TO 105+48 R (I_29) CONT.

REGISTERED PROFESSIONAL ENGINEER
REG. NO.
15736
JONATHAN R.
HULTGREN
SOUTH DAKOTA
5-16-2025

PAVEMENT REMOVAL LAYOUT

FOR BIDDING PURPOSES ONLY

SD DOT	PROJECT	SHEET	TOTAL SHEETS
	EM 0292(88)73 IM 2292(104)0	B96	B182

Plotting Date: 5/16/2025

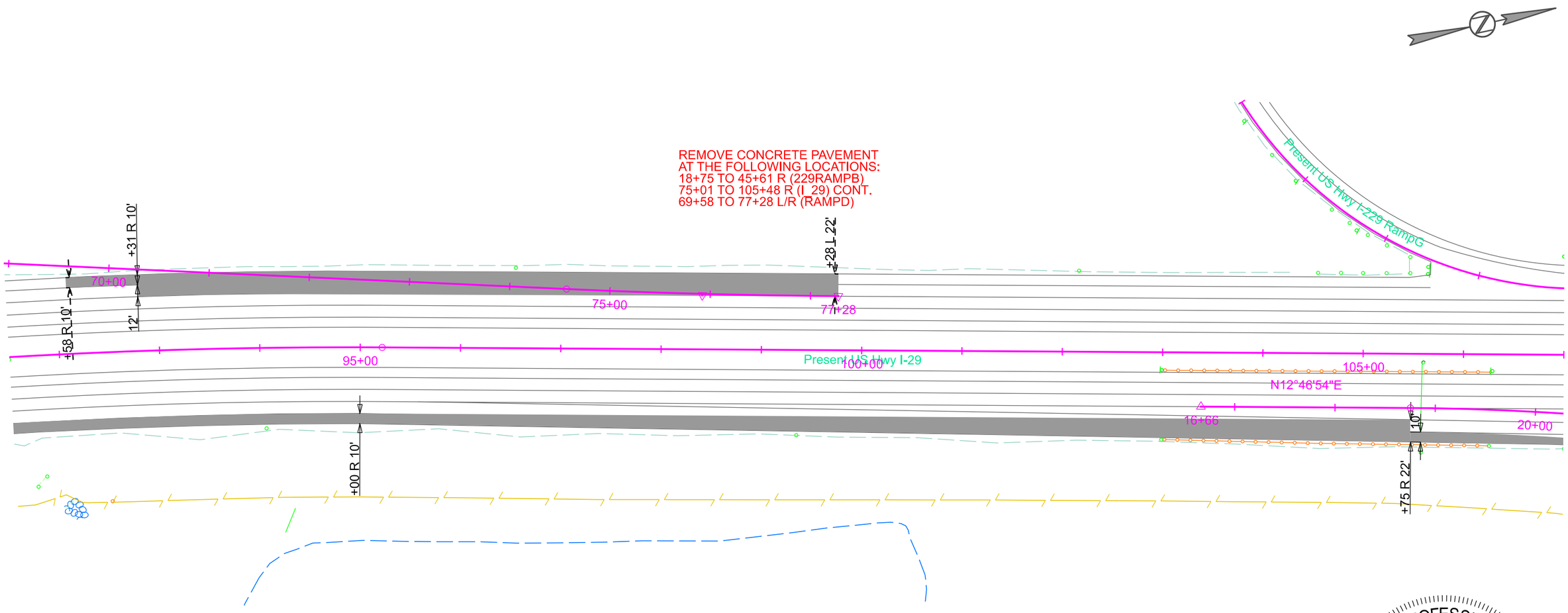

REGISTERED PROFESSIONAL ENGINEER
REG. NO. 15736
JONATHAN R. HULTGREN
SOUTH DAKOTA
5-16-2025

PAVEMENT REMOVAL LAYOUT

FOR BIDDING PURPOSES ONLY

SD DOT	PROJECT	SHEET	TOTAL SHEETS
	EM 0292(88)73 IM 2292(104)0	B97	B182

Plotting Date: 5/16/2025

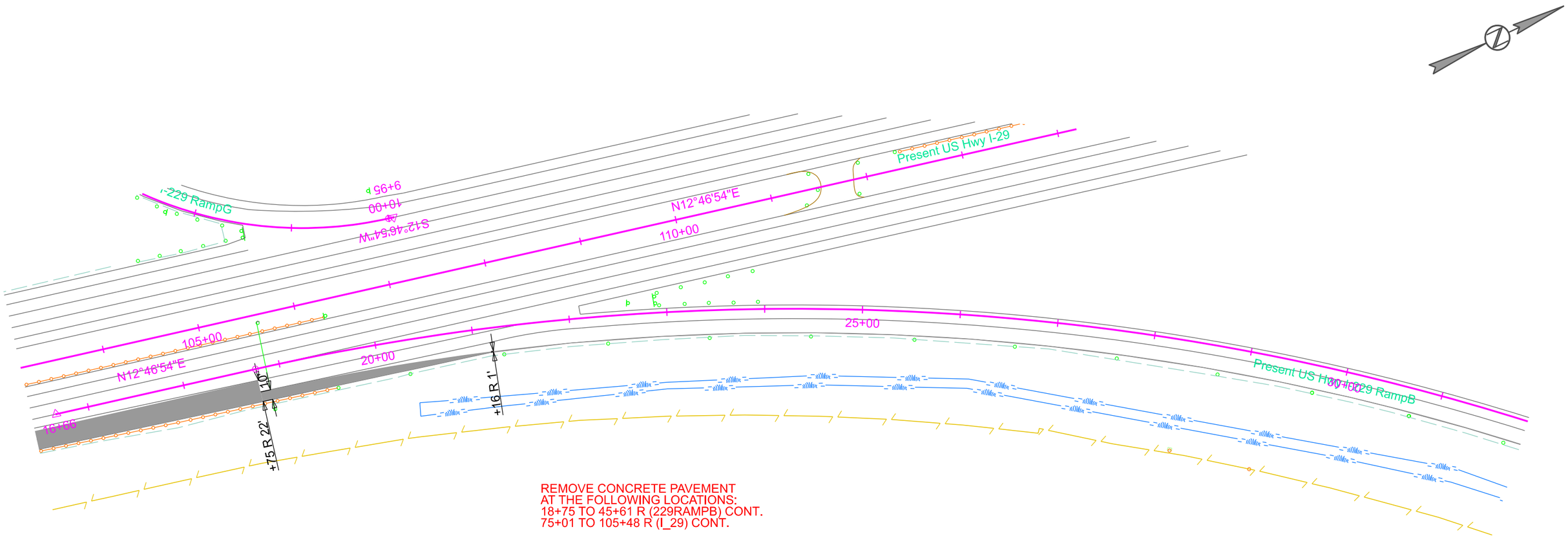

REMOVE CONCRETE PAVEMENT
AT THE FOLLOWING LOCATIONS:
18+75 TO 45+61 R (229RAMPB) CONT.
75+01 TO 105+48 R (I_29) CONT.

REGISTERED PROFESSIONAL ENGINEER
REG. NO. 15736
JONATHAN R. HULTGREN
SOUTH DAKOTA
5-16-2025

PAVEMENT REMOVAL LAYOUT

FOR BIDDING PURPOSES ONLY

SD DOT	PROJECT	SHEET	TOTAL SHEETS
	EM 0292(88)73 IM 2292(104)0	B98	B182

Plotting Date: 5/16/2025

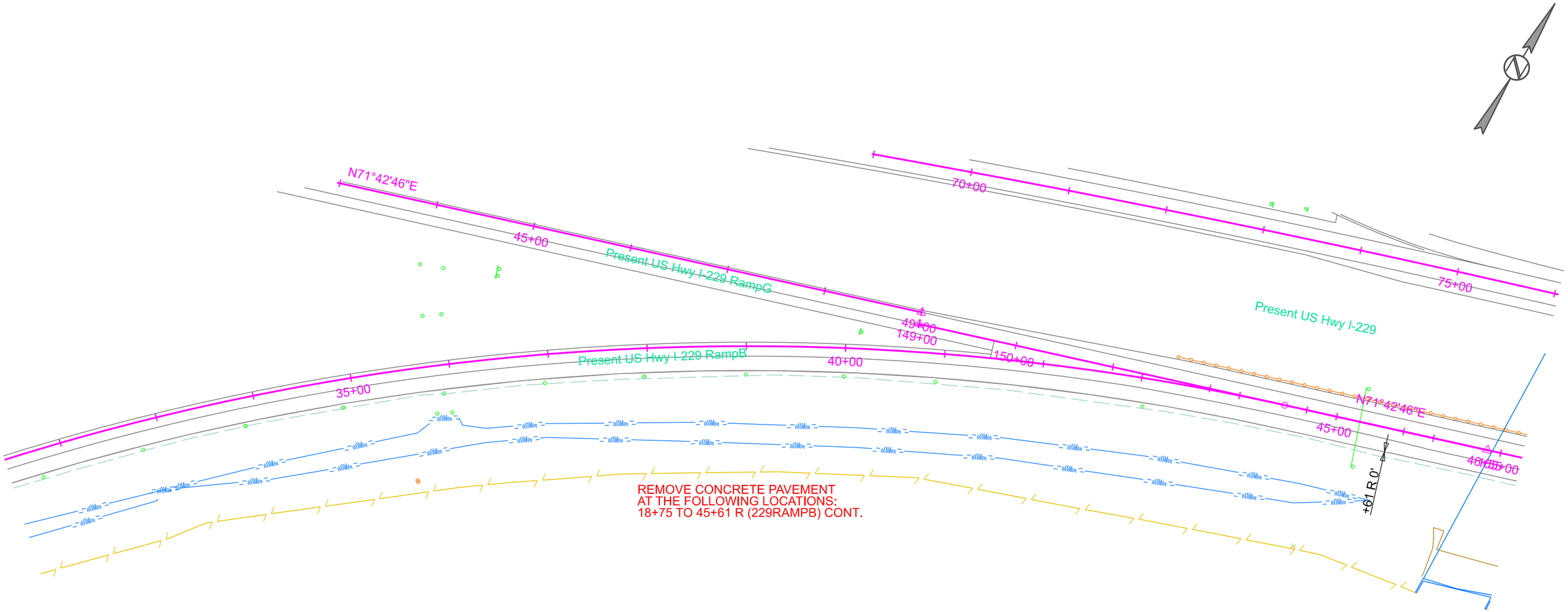

REGISTERED PROFESSIONAL ENGINEER
REG. NO. 15736
JONATHAN R. HULTGREN
SOUTH DAKOTA
5-16-2025

PAVEMENT REMOVAL LAYOUT

FOR BIDDING PURPOSES ONLY

SD DOT	PROJECT	SHEET	TOTAL SHEETS
	EM 0292(88)73 IM 2292(104)0	B99	B182

Plotting Date: 5/16/2025

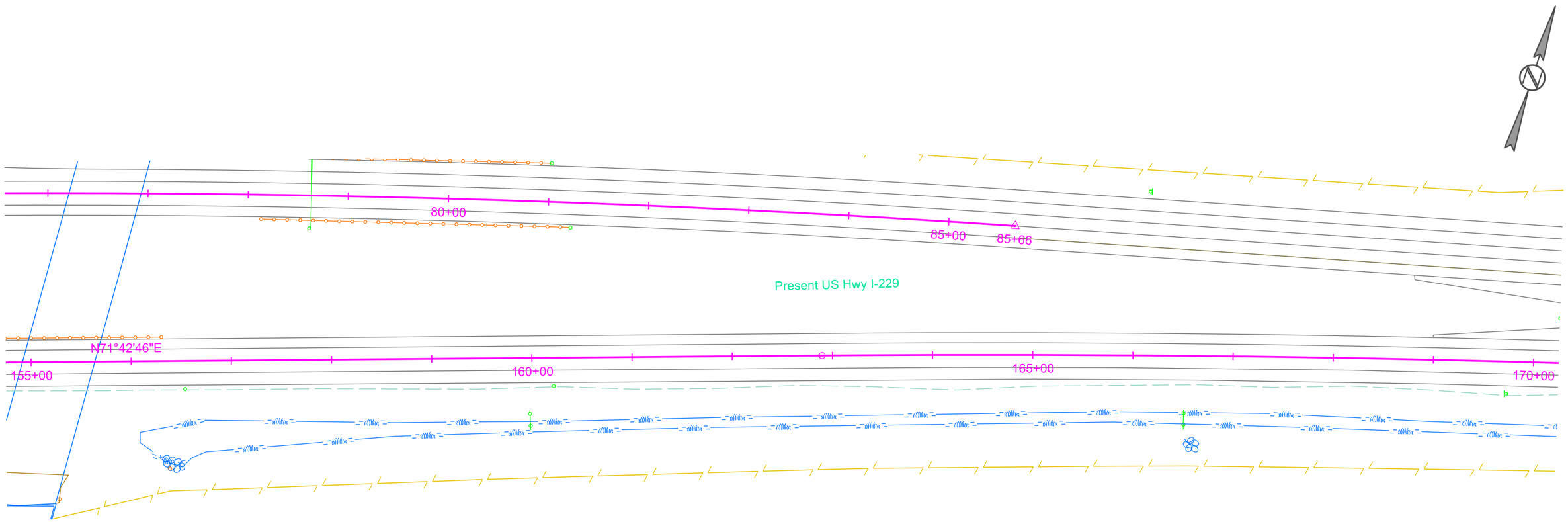

REGISTERED PROFESSIONAL ENGINEER
REG. NO.
15736
JONATHAN R.
HULTGREN
SOUTH DAKOTA
5-16-2025

PAVEMENT REMOVAL LAYOUT

FOR BIDDING PURPOSES ONLY

SD DOT	PROJECT	SHEET	TOTAL SHEETS
	EM 0292(88)73 IM 2292(104)0	B100	B182

Plotting Date: 5/16/2025

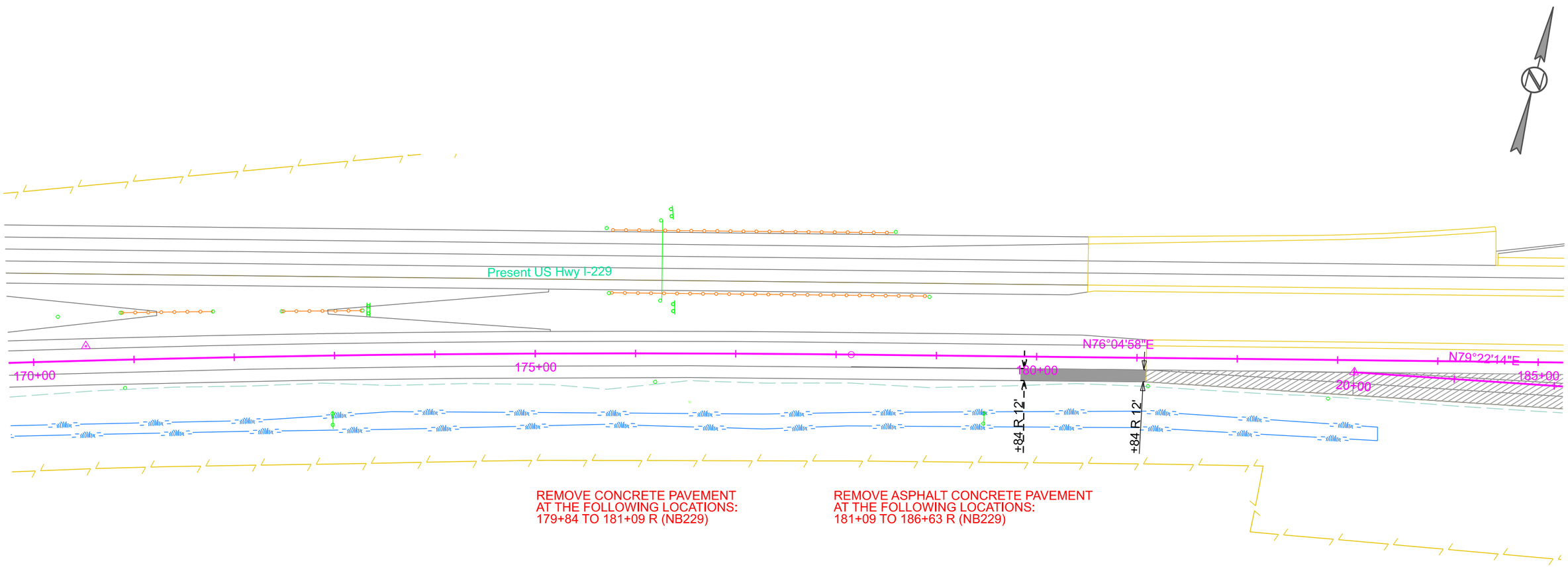

REMOVE CONCRETE PAVEMENT
AT THE FOLLOWING LOCATIONS:
179+84 TO 181+09 R (NB229)

REMOVE ASPHALT CONCRETE PAVEMENT
AT THE FOLLOWING LOCATIONS:
181+09 TO 186+63 R (NB229)

REGISTERED PROFESSIONAL ENGINEER
REG. NO.
15736
JONATHAN R.
HULTGREN
SOUTH DAKOTA
5-16-2025

PAVEMENT REMOVAL LAYOUT

FOR BIDDING PURPOSES ONLY

SD DOT	PROJECT	SHEET	TOTAL SHEETS
	EM 0292(88)73 IM 2292(104)0	B101	B182

Plotting Date: 5/16/2025

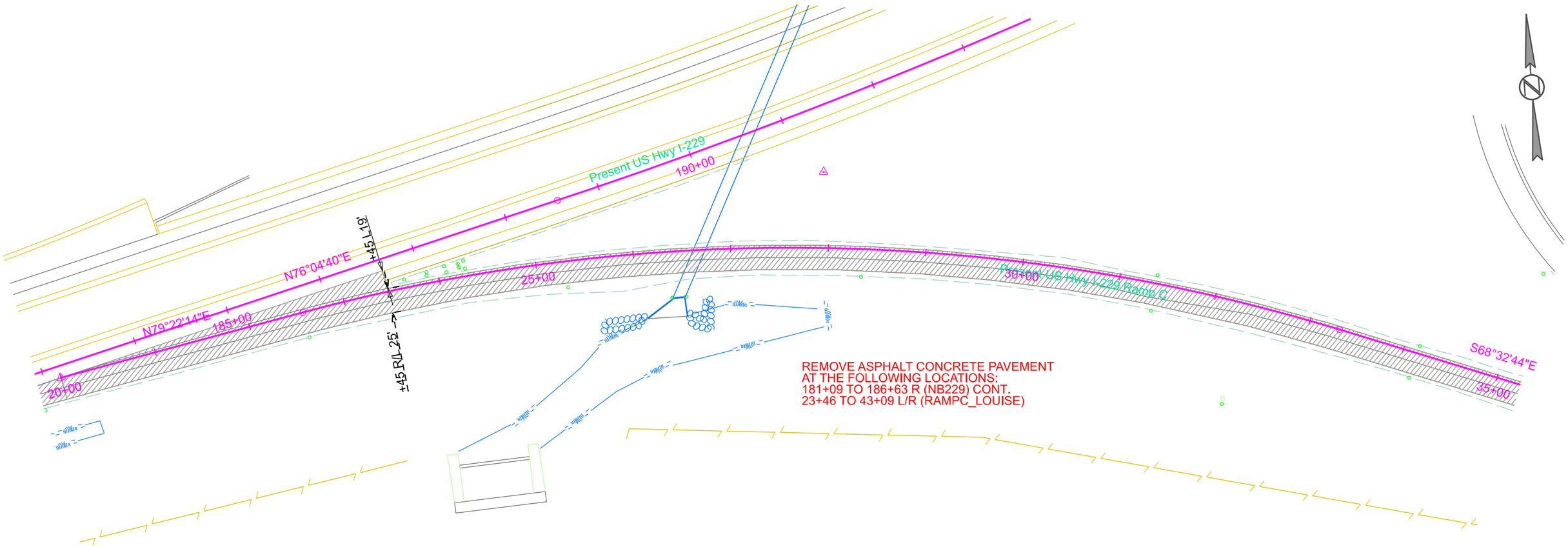

REGISTERED PROFESSIONAL ENGINEER
REG. NO.
15736
JONATHAN R.
HULTGREN
SOUTH DAKOTA
5-16-2025

PAVEMENT REMOVAL LAYOUT

FOR BIDDING PURPOSES ONLY

SD DOT	PROJECT	SHEET	TOTAL SHEETS
	EM 0292(88)73 IM 2292(104)0	B102	B182

Plotting Date: 5/16/2025

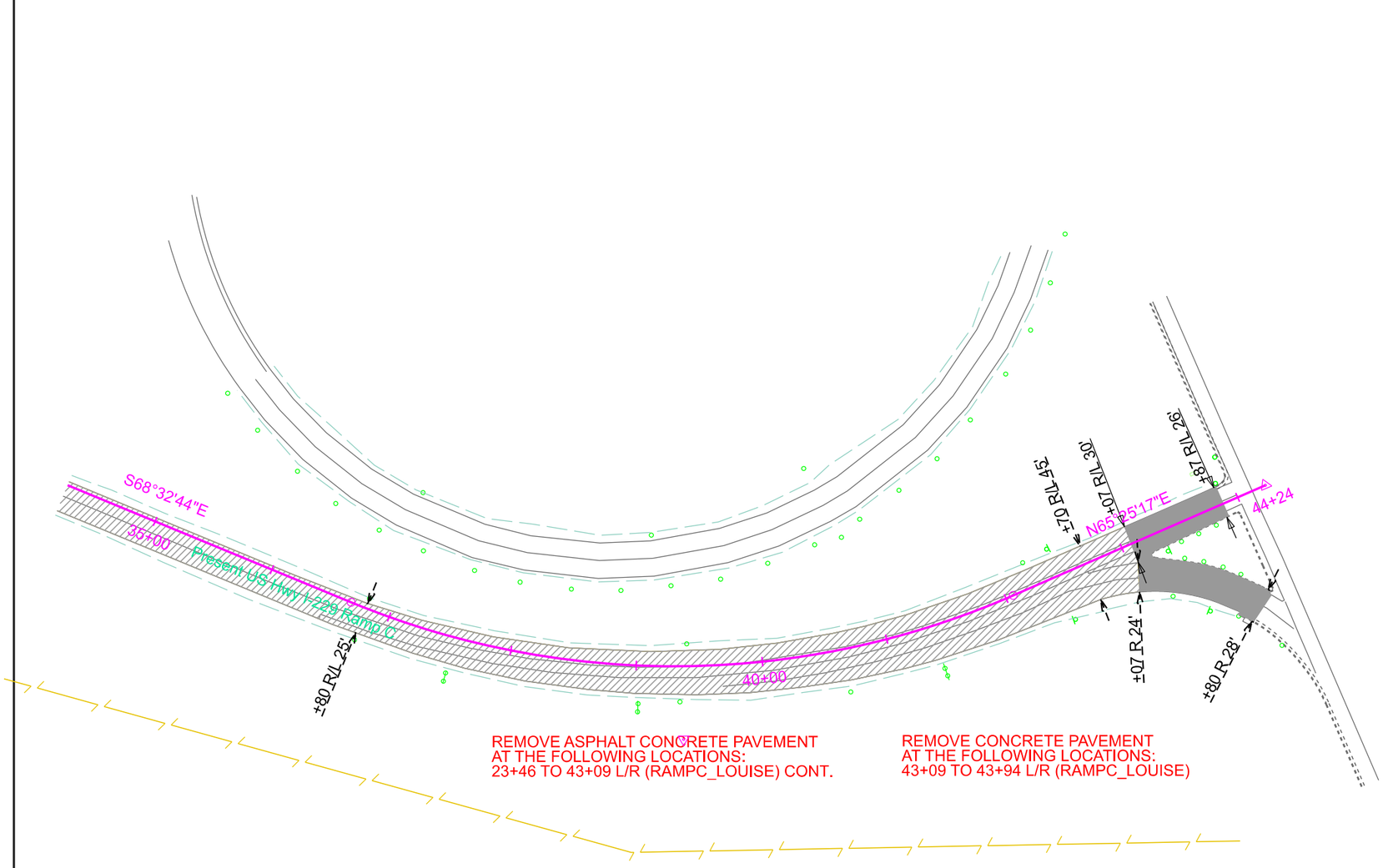

REMOVE ASPHALT CONCRETE PAVEMENT
AT THE FOLLOWING LOCATIONS:
23+46 TO 43+09 L/R (RAMPC_LOUISE) CONT.

REMOVE CONCRETE PAVEMENT
AT THE FOLLOWING LOCATIONS:
43+09 TO 43+94 L/R (RAMPC_LOUISE)

REGISTERED PROFESSIONAL ENGINEER
REG. NO.
15795
JONATHAN R.
HULTGREN
SOUTH DAKOTA
5-16-2025

PAVEMENT REMOVAL LAYOUT

FOR BIDDING PURPOSES ONLY

SD DOT	PROJECT	SHEET	TOTAL SHEETS
	EM 0292(88)73 IM 2292(104)0	B103	B182

Plotting Date: 5/16/2025

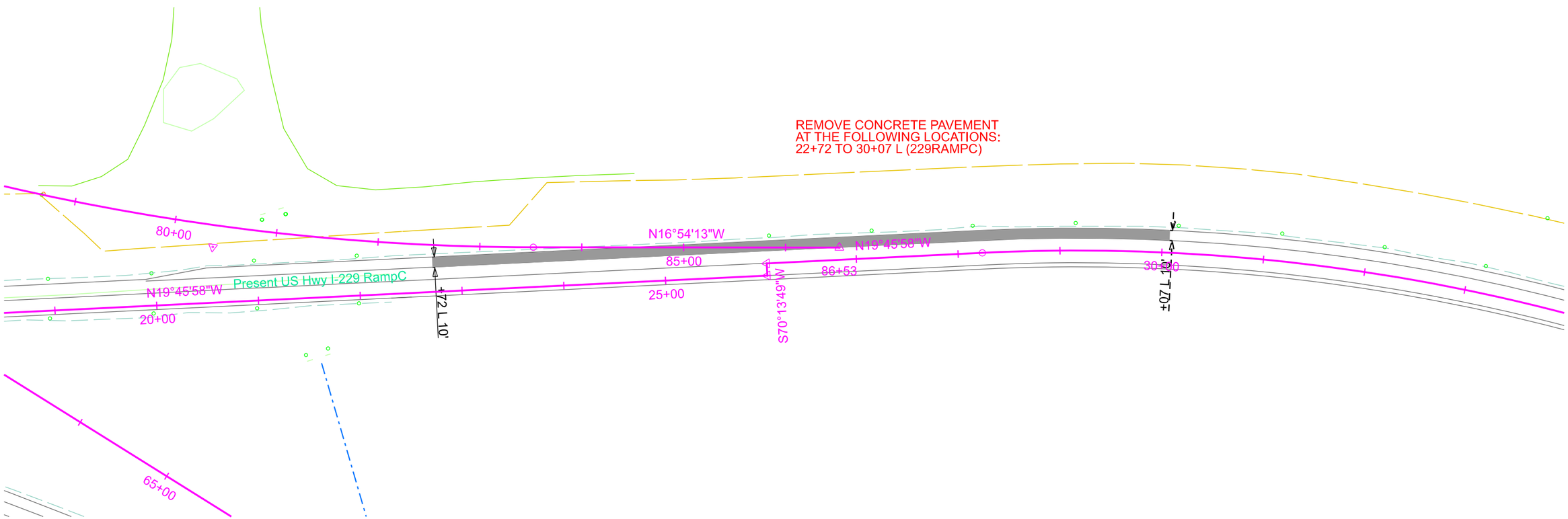

REGISTERED PROFESSIONAL ENGINEER
REG. NO. 15736
JONATHAN R. HULTGREN
SOUTH DAKOTA
5-16-2025

Plotted From - ngjersvik File - ...\B_06JQ_pr.dgn

CURB AND GUTTER LAYOUT
85TH STREET

FOR BIDDING PURPOSES ONLY

All exterior 85th Street curb and gutter shown on this sheet is Type B69 except as noted.
All 85th Street median curb and gutter shown on this sheet is Type BL69 except as noted.
All Ramp curb and gutter shown on this sheet is Type B69.5 except as noted.
All DDI crossover island curb and gutter shown on this sheet is Type B69.5 except as noted.
All eastbound sidewalk is 10' wide and all westbound sidewalk is 8' wide except as noted.

1 399+34.67-3.36' R
Begin Str C & G
Begin Taper
TC EL: 1517.08
(match existing)

2 399+63+40-11.00' L
End Taper
Begin Str C & G
TC EL: 1516.60

3 400+99.98-11.00' L
End Str C & G
Begin 23989.00' Rad
TC EL: 1516.06

4 399+34.13-25.13' R
Begin Str C & G
TC EL: 1517.66

5 399+79.98-25.95' R
TC EL: 1517.37

6 400+99.98-28.07' R
TC EL: 1516.97

7 401+37.43-28.73' R
End Str C & G
Begin Taper
TC EL: 1517.38

8 402+54.02-11.00' R
End Taper
Begin 23989.00' Rad
TC EL: 1516.79

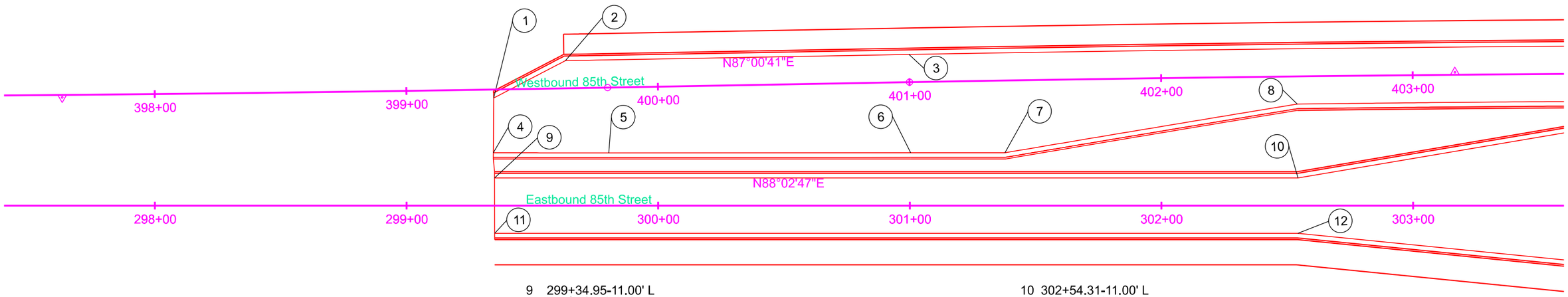

9 299+34.95-11.00' L
Begin Str C & G
TC EL: 1517.28
(match existing)

10 302+54.31-11.00' L
End Str C & G
Begin Taper
TC EL: 1516.79

11 299+35.00-11.00' R
Begin Str C & G
TC EL: 1516.72
(match existing)

12 302+54.22-11.00' R
End Str C & G
Begin Taper
TC EL: 1516.22

REGISTERED PROFESSIONAL ENGINEER
REG. NO. 15735
JONATHAN R. HULTGREN
SOUTH DAKOTA
8-4-2025

CURB AND GUTTER LAYOUT
85TH STREET

FOR BIDDING PURPOSES ONLY

PROJECT	SHEET	TOTAL SHEETS
EM 0292(88)73 IM 2292(104)0	B105	B182

Plotting Date: 8/4/2025 Revised Date: 8/4/2025 Initials: MEL

All exterior 85th Street curb and gutter shown on this sheet is Type B69 except as noted.
All 85th Street median curb and gutter shown on this sheet is Type BL69 except as noted.
All Ramp curb and gutter shown on this sheet is Type B69.5 except as noted.
All DDI crossover island curb and gutter shown on this sheet is Type B69.5 except as noted.
All eastbound sidewalk is 10' wide and all westbound sidewalk is 8' wide except as noted.

1 405+49.89-11.00' L
End 24011.00' Rad
Begin 32.67' Rad
TC EL: 1518.14

2 405+70.45-18.28' L
End 32.67' Rad
Begin 82.00' Rad
TC EL: 1517.42

3 8+82.00-24.67' L
End 82.00' Rad
Begin Str C & G
TC EL: 1517.42

51 303+74.31-31.33' L
End Str C & G
Begin Taper
TC EL: 1517.89

4 9+17.10-24.67' L
End Str C & G
TC EL: 1516.79

5 9+17.10-4.67' L
Begin Str C & G
TC EL: 1517.29

6 8+79.00-4.67' L
End Str C & G
Begin 90.00' Rad
TC EL: 1517.83

7 8+17.99-28.50' L
End 90.00' Rad
Begin 4.17' Rad
TC EL: 1518.20

8 406+00.07-11.00' L
End 4.17' Rad
Begin Str C & G
TC EL: 1518.48

9 406+03.30-11.00' L
End Str C & G
Begin 12.67' Rad
TC EL: 1518.50

17 405+33.55-11.00' R
End 32989.00' Rad
Begin Str C & G
TC EL: 1518.59

18 405+60.05-11.00' R
End Str C & G
Begin 4.17' Rad
TC EL: 1518.77

10 8+16.35-11.86' L
End Str C & G
Begin 90.00' Rad
TC EL: 1518.46

11 8+68.33-4.67' R
End 90.00' Rad
Begin Str C & G
TC EL: 1517.88

12 9+17.10-4.67' R
End Str C & G
TC EL: 1517.29

13 9+17.10-24.67' R
Begin Str C & G
TC EL: 1516.79

14 8+64.61-24.67' R
End Str C & G
Begin 42.67' Rad
TC EL: 1517.51

15 406+92.84-22.00' L
End 42.67' Rad
Begin Str C & G
TC EL: 1518.92

16 408+77.05-22.00' L
End Str C & G
Begin Taper
TC EL: 1520.34

25 407+67.07-11.00' R
End Str C & G
TC EL: 1519.69

30 407+67.07-20.33' R
End Str C & G
TC EL: 1519.88

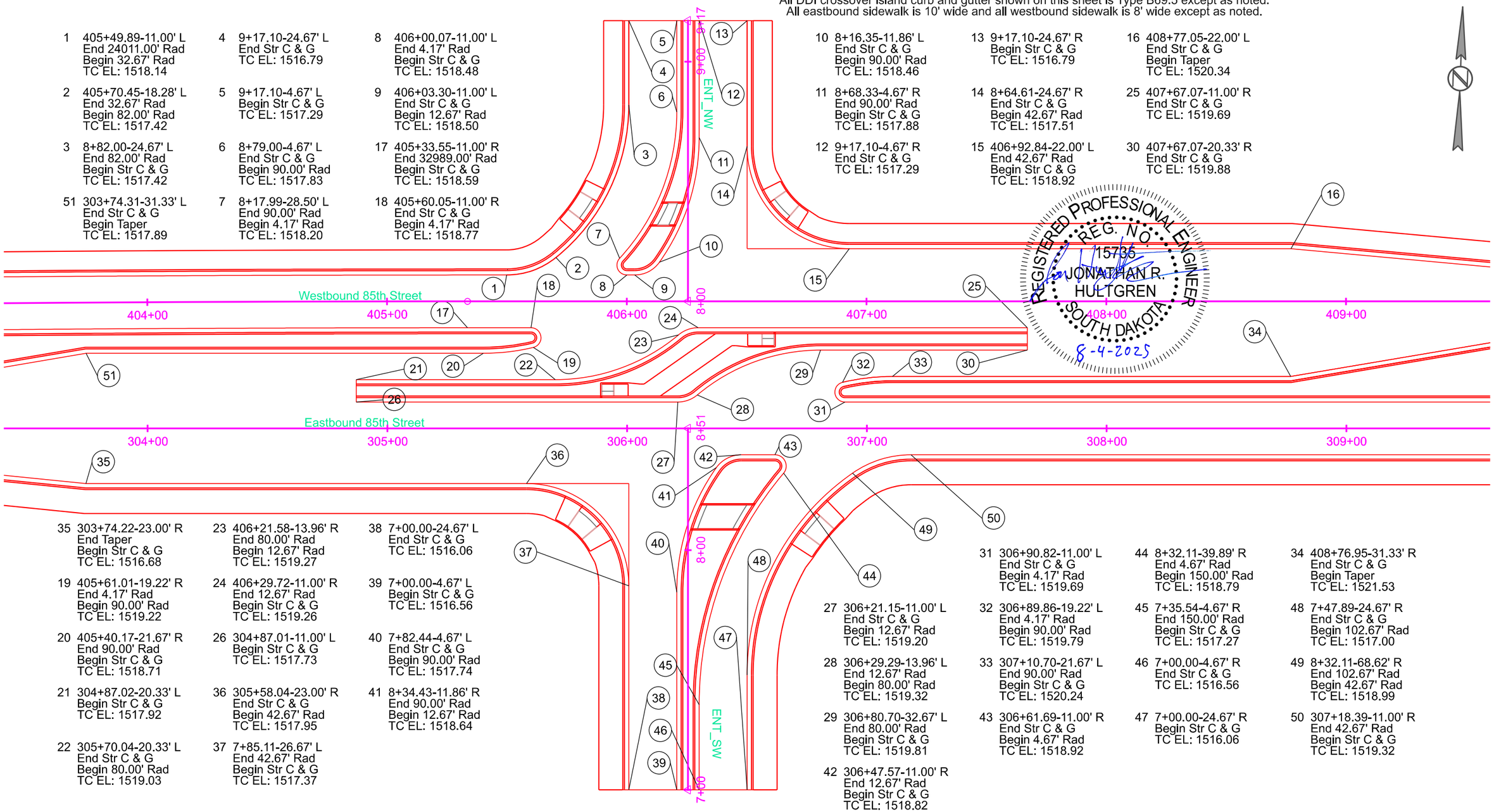

35 303+74.22-23.00' R
End Taper
Begin Str C & G
TC EL: 1516.68

19 405+61.01-19.22' R
End 4.17' Rad
Begin 90.00' Rad
TC EL: 1519.22

20 405+40.17-21.67' R
End 90.00' Rad
Begin Str C & G
TC EL: 1518.71

21 304+87.02-20.33' L
Begin Str C & G
TC EL: 1517.92

22 305+70.04-20.33' L
End Str C & G
Begin 80.00' Rad
TC EL: 1519.03

23 406+21.58-13.96' R
End 80.00' Rad
Begin 12.67' Rad
TC EL: 1519.27

24 406+29.72-11.00' R
End 12.67' Rad
Begin Str C & G
TC EL: 1519.26

26 304+87.01-11.00' L
Begin Str C & G
TC EL: 1517.73

36 305+58.04-23.00' R
End Str C & G
Begin 42.67' Rad
TC EL: 1517.95

37 7+85.11-26.67' L
End 42.67' Rad
Begin Str C & G
TC EL: 1517.37

38 7+00.00-24.67' L
End Str C & G
TC EL: 1516.06

39 7+00.00-4.67' L
Begin Str C & G
TC EL: 1516.56

40 7+82.44-4.67' L
End Str C & G
Begin 90.00' Rad
TC EL: 1517.74

41 8+34.43-11.86' R
End 90.00' Rad
Begin 12.67' Rad
TC EL: 1518.64

27 306+21.15-11.00' L
End Str C & G
Begin 12.67' Rad
TC EL: 1519.20

28 306+29.29-13.96' L
End 12.67' Rad
Begin 80.00' Rad
TC EL: 1519.32

29 306+80.70-32.67' L
End 80.00' Rad
Begin Str C & G
TC EL: 1519.81

42 306+47.57-11.00' R
End 12.67' Rad
Begin Str C & G
TC EL: 1518.82

31 306+90.82-11.00' L
End Str C & G
Begin 4.17' Rad
TC EL: 1519.69

32 306+89.86-19.22' L
End 4.17' Rad
Begin 90.00' Rad
TC EL: 1519.79

33 307+10.70-21.67' L
End 90.00' Rad
Begin Str C & G
TC EL: 1520.24

43 306+61.69-11.00' R
End Str C & G
Begin 4.67' Rad
TC EL: 1518.92

44 8+32.11-39.89' R
End 4.67' Rad
Begin 150.00' Rad
TC EL: 1518.79

45 7+35.54-4.67' R
End 150.00' Rad
Begin Str C & G
TC EL: 1517.27

46 7+00.00-4.67' R
End Str C & G
TC EL: 1516.56

47 7+00.00-24.67' R
Begin Str C & G
TC EL: 1516.06

34 408+76.95-31.33' R
End Str C & G
Begin Taper
TC EL: 1521.53

48 7+47.89-24.67' R
End Str C & G
Begin 102.67' Rad
TC EL: 1517.00

49 8+32.11-68.62' R
End 102.67' Rad
Begin 42.67' Rad
TC EL: 1518.99

50 307+18.39-11.00' R
End 42.67' Rad
Begin Str C & G
TC EL: 1519.32

SD DOT	PROJECT	SHEET	TOTAL SHEETS
	EM 0292(88)73 IM 2292(104)0	B106	B182

Plotting Date: 8/4/2025 Revised Date: 8/4/2025 Initials: MEL

CURB AND GUTTER LAYOUT
85TH STREET

FOR BIDDING PURPOSES ONLY

All exterior 85th Street curb and gutter shown on this sheet is Type B69 except as noted.
All 85th Street median curb and gutter shown on this sheet is Type BL69 except as noted.
All Ramp curb and gutter shown on this sheet is Type B69.5 except as noted.
All DDI crossover island curb and gutter shown on this sheet is Type B69.5 except as noted.
All eastbound sidewalk is 10' wide and all westbound sidewalk is 8' wide except as noted.

1 409+97.05-11.00' L
End Taper
Begin Str C & G
TC EL: 1522.43

3 409+96.95-11.00' R
End Taper
End Drop C & G
Begin Str C & G
TC EL: 1523.00

14 409+93.37-11.61' R
End Drop C & G
TC EL: 1522.44

15 409+83.51-13.28' R
End Drop C & G
TC EL: 1522.29

16 409+80.55-13.78' R
End Str C & G
Begin Drop C & G
TC EL: 1522.74

2 414+72.95-11.00' L
End Str C & G
Begin Taper
TC EL: 1537.42

4 414+96.51-11.00' R
End Str C & G
Begin Taper
TC EL: 1538.81

5 415+46.45-13.00' R
End Taper
Begin 287.00' Rad
TC EL: 1540.48

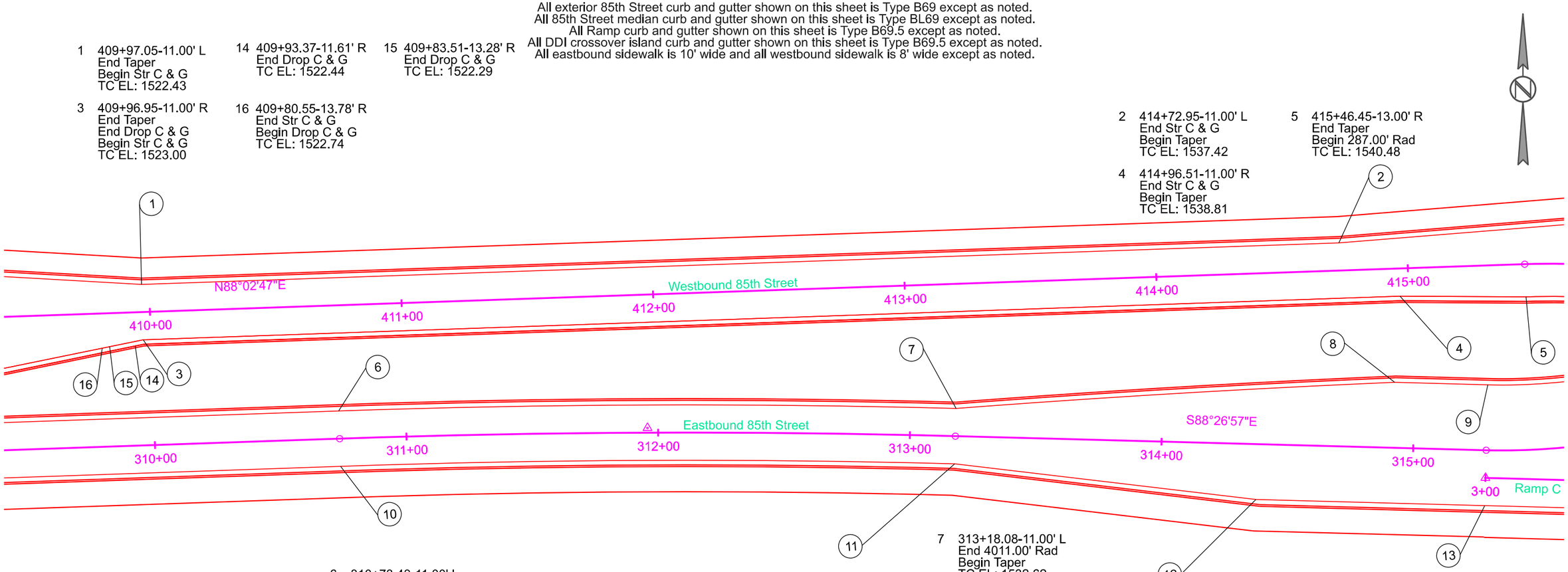

6 310+73.43-11.00' L
End Str C & G
Begin 4011.00' Rad
TC EL: 1524.71

10 310+73.43-11.00' R
End Str C & G
Begin 3989.00' Rad
TC EL: 1524.15

7 313+18.08-11.00' L
End 4011.00' Rad
Begin Taper
TC EL: 1532.62

11 313+18.08-11.00' R
End 3989.00' Rad
Begin Taper
TC EL: 1532.00

8 314+91.94-26.00' L
End Taper
Begin Str C & G
TC EL: 1539.04

12 314+38.08-22.00' R
End Taper
End Type B69 C & G
Begin Type B69.5 C & G
Begin Str C & G
TC EL: 1535.95

9 315+29.01-26.00' L
End Str C & G
Begin 224.00' Rad
TC EL: 1540.27

13 315+29.01-22.00' R
End Str C & G
Begin Taper
TC EL: 1539.12

REGISTERED PROFESSIONAL ENGINEER
REG. NO. 15735
JONATHAN R. HULTGREN
SOUTH DAKOTA
8-4-2025

CURB AND GUTTER LAYOUT
85TH STREET

FOR BIDDING PURPOSES ONLY

PROJECT	SHEET	TOTAL SHEETS
EM 0292(88)73 IM 2292(104)0	B107	B182

Plotting Date: 8/4/2025 Revised Date: 8/4/2025 Initials: MEL

All exterior 85th Street curb and gutter shown on this sheet is Type B69 except as noted.
All 85th Street median curb and gutter shown on this sheet is Type BL69 except as noted.
All Ramp curb and gutter shown on this sheet is Type B69.5 except as noted.
All DDI crossover island curb and gutter shown on this sheet is Type B69.5 except as noted.
All eastbound sidewalk is 10' wide and all westbound sidewalk is 8' wide except as noted.

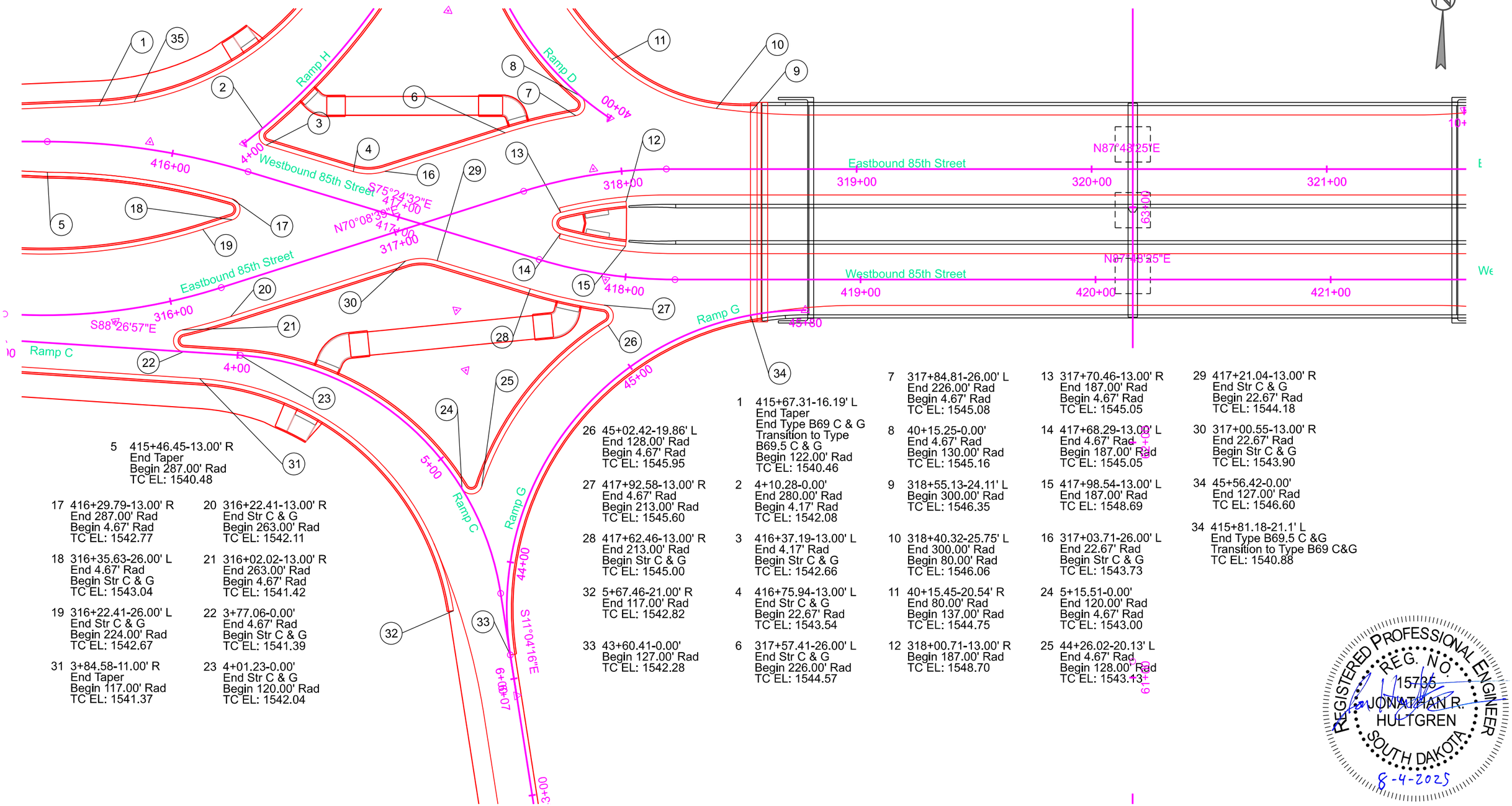

5 415+46.45-13.00' R
End Taper
Begin 287.00' Rad
TC EL: 1540.48

17 416+29.79-13.00' R
End 287.00' Rad
Begin 4.67' Rad
TC EL: 1542.77

18 316+35.63-26.00' L
End 4.67' Rad
Begin Str C & G
TC EL: 1543.04

19 316+22.41-26.00' L
End Str C & G
Begin 224.00' Rad
TC EL: 1542.67

31 3+84.58-11.00' R
End Taper
Begin 117.00' Rad
TC EL: 1541.37

20 316+22.41-13.00' R
End Str C & G
Begin 263.00' Rad
TC EL: 1542.11

21 316+02.02-13.00' R
End 263.00' Rad
Begin 4.67' Rad
TC EL: 1541.42

22 3+77.06-0.00'
End 4.67' Rad
Begin Str C & G
TC EL: 1541.39

23 4+01.23-0.00'
End Str C & G
Begin 120.00' Rad
TC EL: 1542.04

26 45+02.42-19.86' L
End 128.00' Rad
Begin 4.67' Rad
TC EL: 1545.95

27 417+92.58-13.00' R
End 4.67' Rad
Begin 213.00' Rad
TC EL: 1545.60

28 417+62.46-13.00' R
End 213.00' Rad
Begin Str C & G
TC EL: 1545.00

32 5+67.46-21.00' R
End 117.00' Rad
TC EL: 1542.82

33 43+60.41-0.00'
Begin 127.00' Rad
TC EL: 1542.28

1 415+67.31-16.19' L
End Taper
End Type B69 C & G
Transition to Type
B69.5 C & G
Begin 122.00' Rad
TC EL: 1540.46

2 4+10.28-0.00'
End 280.00' Rad
Begin 4.17' Rad
TC EL: 1542.08

3 416+37.19-13.00' L
End 4.17' Rad
Begin Str C & G
TC EL: 1542.66

4 416+75.94-13.00' L
End Str C & G
Begin 22.67' Rad
TC EL: 1543.54

6 317+57.41-26.00' L
End Str C & G
Begin 226.00' Rad
TC EL: 1544.57

7 317+84.81-26.00' L
End 226.00' Rad
Begin 4.67' Rad
TC EL: 1545.08

8 40+15.25-0.00'
End 4.67' Rad
Begin 130.00' Rad
TC EL: 1545.16

9 318+55.13-24.11' L
Begin 300.00' Rad
TC EL: 1546.35

10 318+40.32-25.75' L
End 300.00' Rad
Begin 80.00' Rad
TC EL: 1546.06

11 40+15.45-20.54' R
End 80.00' Rad
Begin 137.00' Rad
TC EL: 1544.75

12 318+00.71-13.00' R
Begin 187.00' Rad
TC EL: 1548.70

13 317+70.46-13.00' R
End 187.00' Rad
Begin 4.67' Rad
TC EL: 1545.05

14 417+68.29-13.00' L
End 4.67' Rad
Begin 187.00' Rad
TC EL: 1545.05

15 417+98.54-13.00' L
End 187.00' Rad
TC EL: 1548.69

16 317+03.71-26.00' L
End 22.67' Rad
Begin Str C & G
TC EL: 1543.73

24 5+15.51-0.00'
End 120.00' Rad
Begin 4.67' Rad
TC EL: 1543.00

25 44+26.02-20.13' L
End 4.67' Rad
Begin 128.00' Rad
TC EL: 1543.13

29 417+21.04-13.00' R
End Str C & G
Begin 22.67' Rad
TC EL: 1544.18

30 317+00.55-13.00' R
End 22.67' Rad
Begin Str C & G
TC EL: 1543.90

34 45+56.42-0.00'
End 127.00' Rad
TC EL: 1546.60

34 415+81.18-21.1' L
End Type B69.5 C &G
Transition to Type B69 C&G
TC EL: 1540.88

REGISTERED PROFESSIONAL ENGINEER
REG. NO. 15735
JONATHAN R. HULTGREN
SOUTH DAKOTA
8-4-2025

CURB AND GUTTER LAYOUT
85TH STREET

FOR BIDDING PURPOSES ONLY

SD DOT	PROJECT	SHEET	TOTAL SHEETS
	EM 0292(88)73 IM 2292(104)0	B108	B182

Plotting Date: 8/4/2025 Revised Date: 8/4/2025 Initials: MEL

All exterior 85th Street curb and gutter shown on this sheet is Type B69 except as noted.
All 85th Street median curb and gutter shown on this sheet is Type BL69 except as noted.
All Ramp curb and gutter shown on this sheet is Type B69.5 except as noted.
All DDI crossover island curb and gutter shown on this sheet is Type B69.5 except as noted.
All eastbound sidewalk is 10' wide and all westbound sidewalk is 8' wide except as noted.

1 10+16.91-0.11' R
Begin 122.00' Rad
TC EL: 1546.32

2 12+11.17-0.00'
End 122.00' Rad
Begin Str C & G
TC EL: 1541.17

3 10+69.90-30.10' R
End 135.00' Rad
Begin 4.67' Rad
TC EL: 1545.86

4 322+40.79-13.00' L
End 4.67' Rad
Begin 213.00' Rad
TC EL: 1545.46

5 322+71.22-13.00' L
End 213.00' Rad
Begin Str C & G
TC EL: 1544.92

6 323+11.12-13.00' L
End Str C & G
Begin 22.67' Rad
TC EL: 1544.13

7 423+31.43-13.00' L
End 22.67' Rad
Begin Str C & G
TC EL: 1543.85

8 424+04.61-13.00' L
End Str C & G
Begin 263.00' Rad
TC EL: 1542.14

9 424+22.84-13.00' L
End 263.00' Rad
Begin 4.67' Rad
TC EL: 1541.57

10 427+44.06-11.00' L
End Taper
Begin 4489.00' Rad
TC EL: 1530.73

11 1+90.28-0.00'
End Str C & G
Begin 110.00' Rad
TC EL: 1541.83

12 3+07.58-0.00'
End 110.00' Rad
Begin 4.67' Rad
TC EL: 1543.35

13 11+45.01-29.47' R
End 4.67' Rad
Begin 135.00' Rad
TC EL: 1543.47

14 3+47.31-18.00' R
Begin 112.00' Rad
TC EL: 1542.23

15 421+78.18-13.31' R
Begin 250.00' Rad
TC EL: 1546.48

16 1+72.72-11.00' R
End 112.00' Rad
Begin Taper
TC EL: 1541.18

17 424+95.85-22.00' L
End Taper
Begin Str C & G
TC EL: 1539.18

18 426+23.06-22.00' L
End Str C & G
End Type B69.5 C & G
End Type B69 C & G
Begin Taper
TC EL: 1534.72

19 1+77.06-0.00'
End 4.67' Rad
Begin Str C & G
TC EL: 1541.54

20 322+33.92-13.00' R
Begin 187.00' Rad
TC EL: 1548.69

21 322+64.23-13.00' R
End 187.00' Rad
Begin 4.67' Rad
TC EL: 1544.99

22 422+61.84-13.00' L
End 4.67' Rad
Begin 187.00' Rad
TC EL: 1544.99

23 422+31.52-13.00' L
End 187.00' Rad
TC EL: 1548.72

24 426+23.06-11.00' R
End 4511.00' Rad
Begin Str C & G
TC EL: 1535.59

25 425+45.86-11.00' R
End Str C & G
Begin Taper
TC EL: 1538.31

26 424+95.85-13.00' R
End Taper
Begin 237.00' Rad
TC EL: 1540.04

27 424+04.61-13.00' R
End 237.00' Rad
Begin Str C & G
TC EL: 1542.50

28 423+76.89-13.00' R
End Str C & G
Begin 4.67' Rad
TC EL: 1543.17

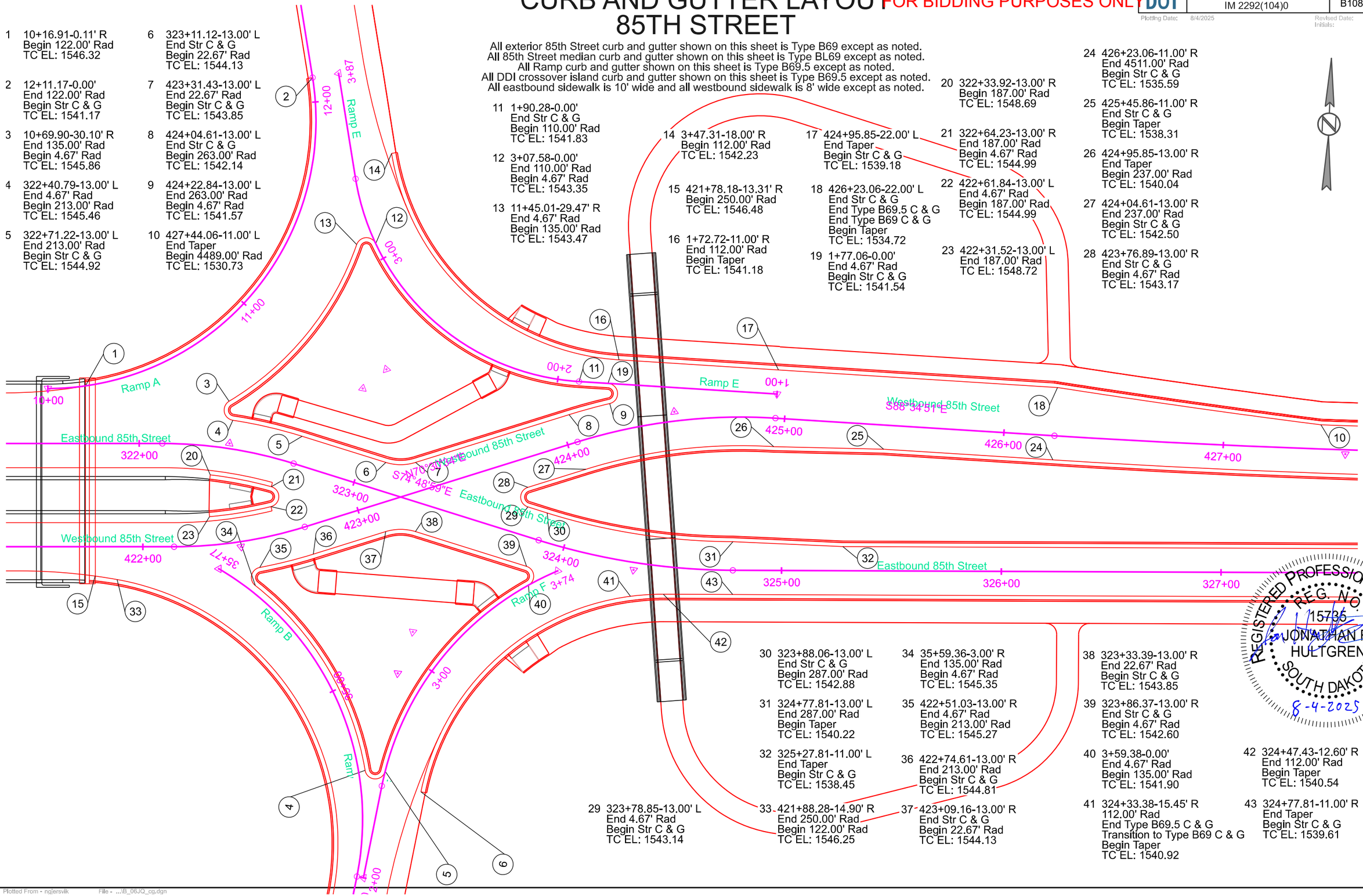

30 323+88.06-13.00' L
End Str C & G
Begin 287.00' Rad
TC EL: 1542.88

31 324+77.81-13.00' L
End 287.00' Rad
Begin Taper
TC EL: 1540.22

32 325+27.81-11.00' L
End Taper
Begin Str C & G
TC EL: 1538.45

29 323+78.85-13.00' L
End 4.67' Rad
Begin Str C & G
TC EL: 1543.14

33 421+88.28-14.90' R
End 250.00' Rad
Begin 122.00' Rad
TC EL: 1546.25

34 35+59.36-3.00' R
End 135.00' Rad
Begin 4.67' Rad
TC EL: 1545.35

35 422+51.03-13.00' R
End 4.67' Rad
Begin 213.00' Rad
TC EL: 1545.27

36 422+74.61-13.00' R
End 213.00' Rad
Begin Str C & G
TC EL: 1544.81

37 423+09.16-13.00' R
End Str C & G
Begin 22.67' Rad
TC EL: 1544.13

38 323+33.39-13.00' R
End 22.67' Rad
Begin Str C & G
TC EL: 1543.85

39 323+86.37-13.00' R
End Str C & G
Begin 4.67' Rad
TC EL: 1542.60

40 3+59.38-0.00'
End 4.67' Rad
Begin 135.00' Rad
TC EL: 1541.90

41 324+33.38-15.45' R
112.00' Rad
End Type B69.5 C & G
Transition to Type B69 C & G
Begin Taper
TC EL: 1540.92

42 324+47.43-12.60' R
End 112.00' Rad
Begin Taper
TC EL: 1540.54

43 324+77.81-11.00' R
End Taper
Begin Str C & G
TC EL: 1539.61

REGISTERED PROFESSIONAL ENGINEER
REG. NO. 15735
JONATHAN R. HULTGREN
SOUTH DAKOTA
8-4-2025

Plotted From - ngjersvik File - ...\B_06JQ_cg.dgn

PROJECT	SHEET	TOTAL SHEETS
EM 0292(88)73 IM 2292(104)0	B109	B182

Plotting Date: 8/4/2025 Revised Date: 8/4/2025 Initials: MEL

CURB AND GUTTER LAYOUT
85TH STREET

FOR BIDDING PURPOSES ONLY

All exterior 85th Street curb and gutter shown on this sheet is Type B69 except as noted.
All 85th Street median curb and gutter shown on this sheet is Type BL69 except as noted.
All Ramp curb and gutter shown on this sheet is Type B69.5 except as noted.
All DDI crossover island curb and gutter shown on this sheet is Type B69.5 except as noted.
All eastbound sidewalk is 10' wide and all westbound sidewalk is 8' wide except as noted.

10 427+44.06-11.00' L
End Taper
Begin 4489.00' Rad
TC EL: 1530.73

2 428+88.21-11.00' L
End 4489.00' Rad
Begin Str C & G
TC EL: 1525.85

12 430+73.20-42.04' R
End Str C & G
Begin Drop C & G
TC EL: 1522.78

13 430+76.15-41.54' R
End Drop C & G
TC EL: 1522.23

14 430+86.01-39.87' R
Begin Drop C & G
TC EL: 1522.14

15 430+88.97-39.37' R
End Drop C & G
Begin Str C & G
TC EL: 1522.66

4 331+88.26-31.33' L
End Str C & G
Begin Taper
TC EL: 1521.34

1 433+52.80-11.00' L
End Str C & G
Begin 42.67' Rad
TC EL: 1522.34

11 433+52.82-22.67' R
End 90.00' Rad
Begin Str C & G
TC EL: 1522.98

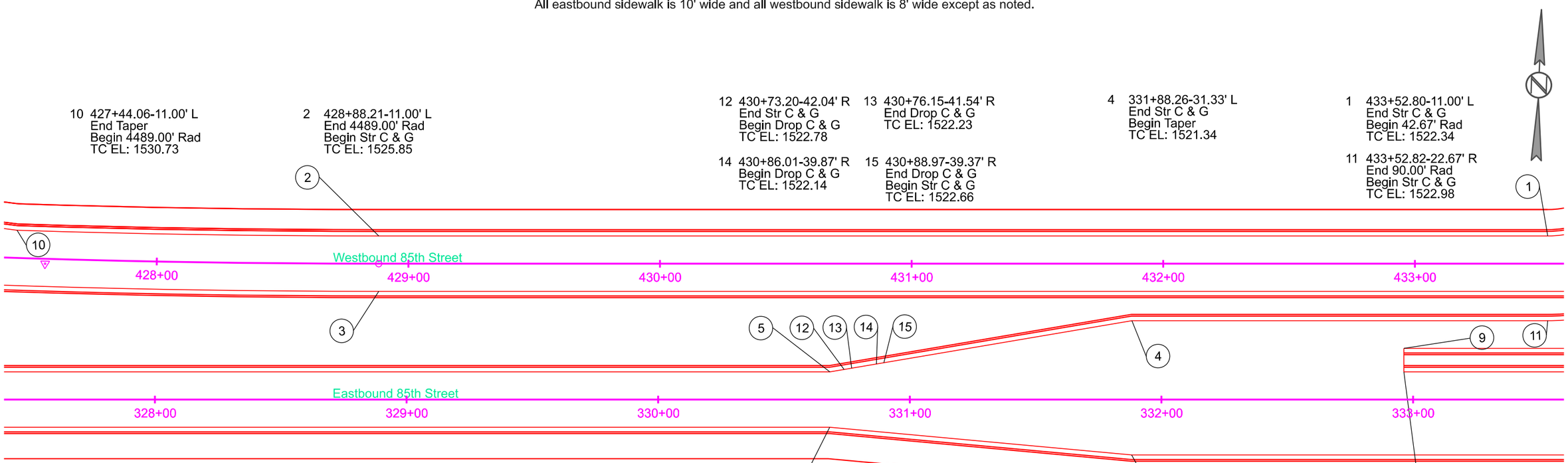

3 428+88.21-11.00' R
End 4511.00' Rad
Begin Str C & G
TC EL: 1526.40

5 330+68.26-11.00' L
End Taaper
Begin Str C & G
TC EL: 1522.83

6 330+68.15-11.00' R
End Str C & G
Begin Taper
TC EL: 1522.27

7 331+88.15-22.00' R
End Taper
Begin Str C & G
TC EL: 1521.16

9 332+96.38-20.33' L
Begin Str C & G
TC EL: 1521.76

8 332+96.38-11.00' L
Begin Str C & G
TC EL: 1521.58

REGISTERED PROFESSIONAL ENGINEER
REG. NO. 15735
JONATHAN R. HULTGREN
SOUTH DAKOTA
8-4-2025

Plotted From - ngjersvik File - ...\B_06JQ_cg.dgn

SD DOT	PROJECT	SHEET	TOTAL SHEETS
	EM 0292(88)73 IM 2292(104)0	B110	B182

Plotting Date: 8/4/2025 Revised Date: 8/4/2025 Initials: MEL

CURB AND GUTTER LAYOUT
85TH STREET

FOR BIDDING PURPOSES ONLY

All exterior 85th Street curb and gutter shown on this sheet is Type B69 except as noted.
All 85th Street median curb and gutter shown on this sheet is Type BL69 except as noted.
All Ramp curb and gutter shown on this sheet is Type B69.5 except as noted.
All DDI crossover island curb and gutter shown on this sheet is Type B69.5 except as noted.
All eastbound sidewalk is 10' wide and all westbound sidewalk is 8' wide except as noted.

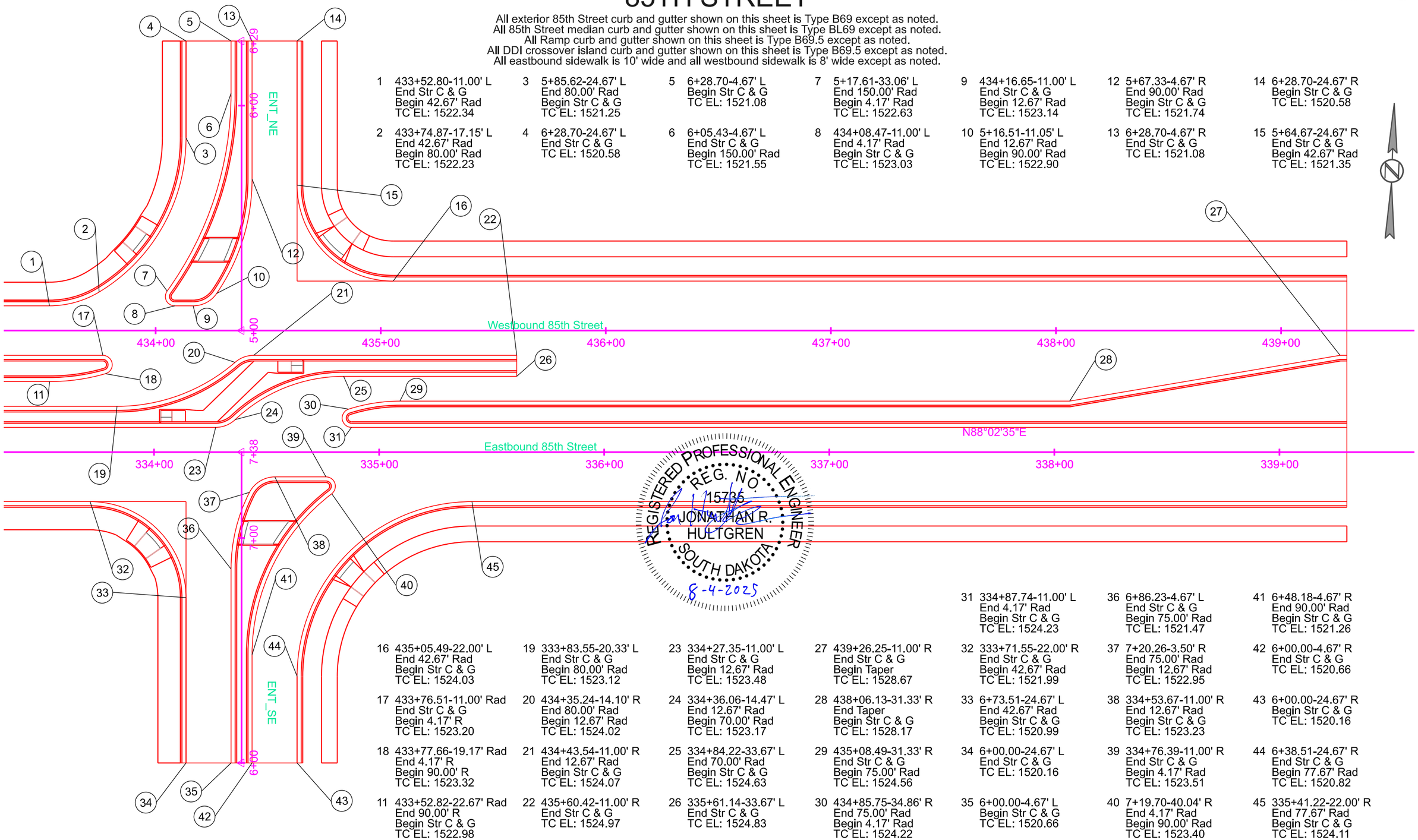

1 433+52.80-11.00' L
End Str C & G
Begin 42.67' Rad
TC EL: 1522.34

2 433+74.87-17.15' L
End 42.67' Rad
Begin 80.00' Rad
TC EL: 1522.23

3 5+85.62-24.67' L
End 80.00' Rad
Begin Str C & G
TC EL: 1521.25

4 6+28.70-24.67' L
End Str C & G
TC EL: 1520.58

5 6+28.70-4.67' L
Begin Str C & G
TC EL: 1521.08

6 6+05.43-4.67' L
End Str C & G
Begin 150.00' Rad
TC EL: 1521.55

7 5+17.61-33.06' L
End 150.00' Rad
Begin 4.17' Rad
TC EL: 1522.63

8 434+08.47-11.00' L
End 4.17' Rad
Begin Str C & G
TC EL: 1523.03

9 434+16.65-11.00' L
End Str C & G
Begin 12.67' Rad
TC EL: 1523.14

10 5+16.51-11.05' L
End 12.67' Rad
Begin 90.00' Rad
TC EL: 1522.90

12 5+67.33-4.67' R
End 90.00' Rad
Begin Str C & G
TC EL: 1521.74

13 6+28.70-4.67' R
End Str C & G
TC EL: 1521.08

14 6+28.70-24.67' R
Begin Str C & G
TC EL: 1520.58

15 5+64.67-24.67' R
End Str C & G
Begin 42.67' Rad
TC EL: 1521.35

16 435+05.49-22.00' L
End 42.67' Rad
Begin Str C & G
TC EL: 1524.03

17 433+76.51-11.00' Rad
End Str C & G
Begin 4.17' R
TC EL: 1523.20

18 433+77.66-19.17' Rad
End 4.17' R
Begin 90.00' R
TC EL: 1523.32

11 433+52.82-22.67' Rad
End 90.00' R
Begin Str C & G
TC EL: 1522.98

19 333+83.55-20.33' L
End Str C & G
Begin 80.00' Rad
TC EL: 1523.12

20 434+35.24-14.10' R
End 80.00' Rad
Begin 12.67' Rad
TC EL: 1524.02

21 434+43.54-11.00' R
End 12.67' Rad
Begin Str C & G
TC EL: 1524.07

22 435+60.42-11.00' R
End Str C & G
TC EL: 1524.97

23 334+27.35-11.00' L
End Str C & G
Begin 12.67' Rad
TC EL: 1523.48

24 334+36.06-14.47' L
End 12.67' Rad
Begin 70.00' Rad
TC EL: 1523.17

25 334+84.22-33.67' L
End 70.00' Rad
Begin Str C & G
TC EL: 1524.63

26 335+61.14-33.67' L
End Str C & G
TC EL: 1524.83

27 439+26.25-11.00' R
End Str C & G
Begin Taper
TC EL: 1528.67

28 438+06.13-31.33' R
End Taper
Begin Str C & G
TC EL: 1528.17

29 435+08.49-31.33' R
End Str C & G
Begin 75.00' Rad
TC EL: 1524.56

30 434+85.75-34.86' R
End 75.00' Rad
Begin 4.17' Rad
TC EL: 1524.22

31 334+87.74-11.00' L
End 4.17' Rad
Begin Str C & G
TC EL: 1524.23

32 333+71.55-22.00' R
End Str C & G
Begin 42.67' Rad
TC EL: 1521.99

33 6+73.51-24.67' L
End 42.67' Rad
Begin Str C & G
TC EL: 1520.99

34 6+00.00-24.67' L
End Str C & G
TC EL: 1520.16

35 6+00.00-4.67' L
Begin Str C & G
TC EL: 1520.66

36 6+86.23-4.67' L
End Str C & G
Begin 75.00' Rad
TC EL: 1521.47

37 7+20.26-3.50' R
End 75.00' Rad
Begin 12.67' Rad
TC EL: 1522.95

38 334+53.67-11.00' R
End 12.67' Rad
Begin Str C & G
TC EL: 1523.23

39 334+76.39-11.00' R
End Str C & G
Begin 4.17' Rad
TC EL: 1523.51

40 7+19.70-40.04' R
End 4.17' Rad
Begin 90.00' Rad
TC EL: 1523.40

41 6+48.18-4.67' R
End 90.00' Rad
Begin Str C & G
TC EL: 1521.26

42 6+00.00-4.67' R
End Str C & G
TC EL: 1520.66

43 6+00.00-24.67' R
Begin Str C & G
TC EL: 1520.16

44 6+38.51-24.67' R
End Str C & G
Begin 77.67' Rad
TC EL: 1520.82

45 335+41.22-22.00' R
End 77.67' Rad
Begin Str C & G
TC EL: 1524.11

PROJECT	SHEET	TOTAL SHEETS
EM 0292(88)73 IM 2292(104)0	B111	B182

Plotting Date: 8/4/2025 Revised Date: 8/4/2025 Initials: MEL

CURB AND GUTTER LAYOUT
RAMP B / F

FOR BIDDING PURPOSES ONLY

All curb and gutter shown on this sheet is Type B69 except as noted.
All sidewalk is 10' wide except as noted.

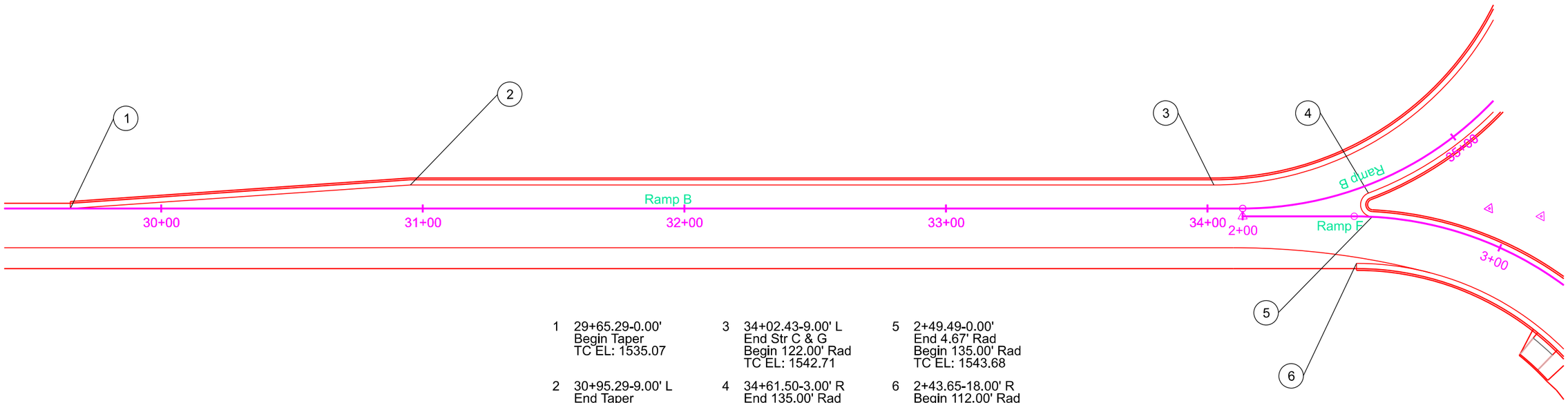

1 29+65.29-0.00'
Begin Taper
TC EL: 1535.07

2 30+95.29-9.00' L
End Taper
Begin Str C & G
TC EL: 1537.23

3 34+02.43-9.00' L
End Str C & G
Begin 122.00' Rad
TC EL: 1542.71

4 34+61.50-3.00' R
End 135.00' Rad
Begin 4.67' Rad
TC EL: 1543.88

5 2+49.49-0.00'
End 4.67' Rad
Begin 135.00' Rad
TC EL: 1543.68

6 2+43.65-18.00' R
Begin 112.00' Rad
TC EL: 1542.81

CURB AND GUTTER LAYOUT
RAMP D / H

FOR BIDDING PURPOSES ONLY

PROJECT	SHEET	TOTAL SHEETS
EM 0292(88)73 IM 2292(104)0	B112	B182

Plotting Date: 8/4/2025 Revised Date: 8/4/2025
Initials: MEL

All curb and gutter shown on this sheet is Type B69 except as noted.
All sidewalk is 6' wide except as noted.

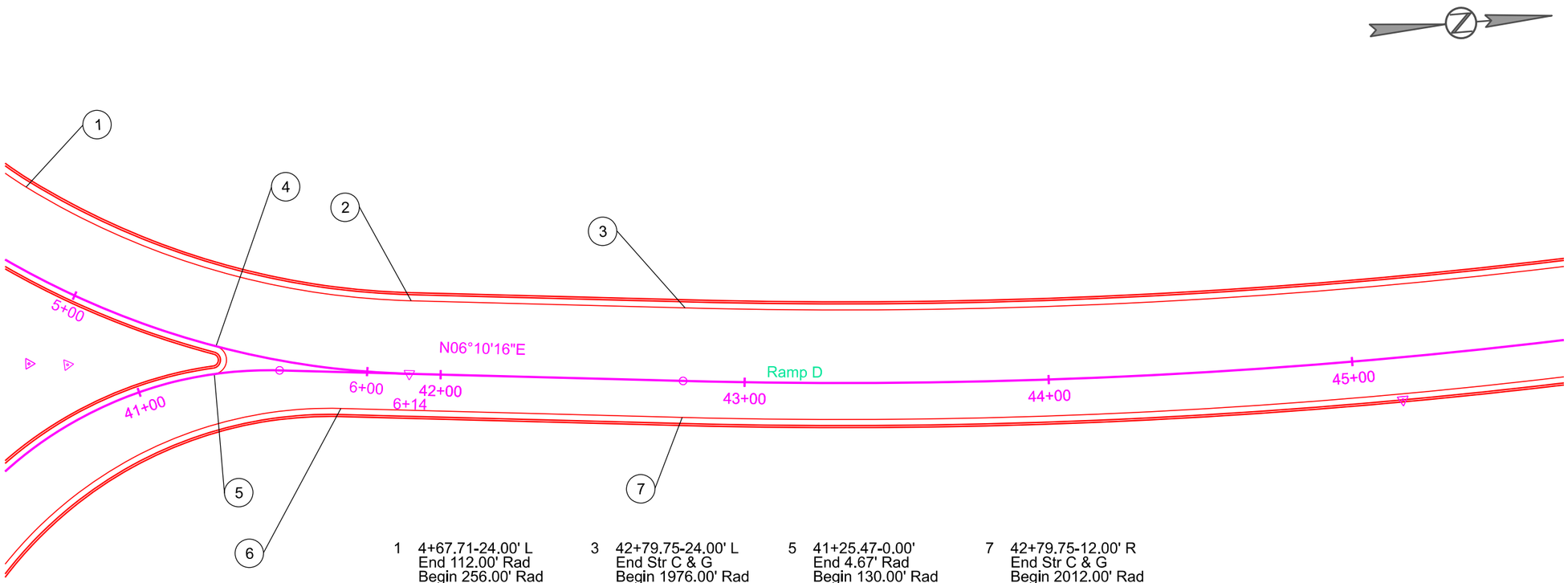

1 4+67.71-24.00' L
End 112.00' Rad
Begin 256.00' Rad
TC EL: 1541.95

2 41+89.68-24.00' L
End 112.00' Rad
Begin Str C & G
TC EL: 1541.76

3 42+79.75-24.00' L
End Str C & G
Begin 1976.00' Rad
TC EL: 1539.50

4 5+49.46-0.00'
End 280.00' Rad
Begin 4.67' Rad
TC EL: 1543.28

5 41+25.47-0.00'
End 4.67' Rad
Begin 130.00' Rad
TC EL: 1543.48

6 41+67.47-12.00' R
End 137.00' Rad
Begin Str C & G
TC EL: 1542.47

7 42+79.75-12.00' R
End Str C & G
Begin 2012.00' Rad
TC EL: 1540.10

REGISTERED PROFESSIONAL ENGINEER
REG. NO. 15735
JONATHAN R. HULTGREN
SOUTH DAKOTA
8-4-2025

CURB AND GUTTER LAYOUT
RAMP D

FOR BIDDING PURPOSES ONLY

PROJECT	SHEET	TOTAL SHEETS
EM 0292(88)73 IM 2292(104)0	B113	B182

Plotting Date: 8/4/2025 Revised Date: 8/4/2025
Initials: MEL

All curb and gutter shown on this sheet is Type B69 except as noted.

1 46+06.16-24.00' L
End 1976.00' Rad
TC EL: 1529.29

2 46+31.95-12.00' R
End 2012.00' Rad
Begin Taper
TC EL: 1529.67

3 47+51.24-0.00'
End Taper
TC EL: 1525.44

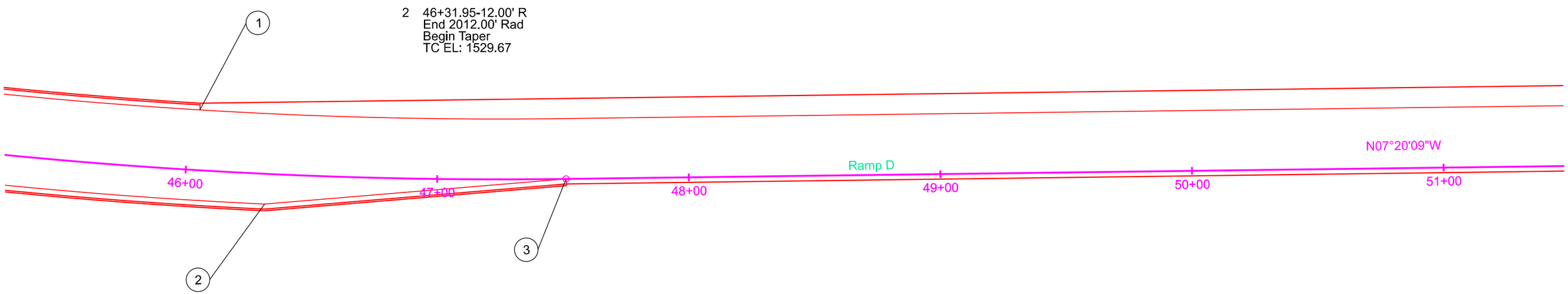

REGISTERED PROFESSIONAL ENGINEER
REG. NO. 15735
JONATHAN R. HULTGREN
SOUTH DAKOTA
8-4-2025

CURB RAMP LAYOUT

FOR BIDDING PURPOSES ONLY

*Turning Space with 1.5% slope
**Curb Ramp with 7.5% slope and 1.5% cross slope

PROJECT	SHEET	TOTAL SHEETS
EM 0292(88)73 IM 2292(104)0	B114	B182

Plotting Date: 5/16/2025

1 8+37.54-40.76' L
Center Type 3
Curb Ramp

2 8+36.35-12.59' L
Center Type 2
Curb Ramp

3 8+36.36-3.88' L
Center Type 2
Curb Ramp

4 8+37.62-37.64' R
Center Type 3
Curb Ramp

5 406+58.94-13.50' R
Center Type 2
Curb Ramp

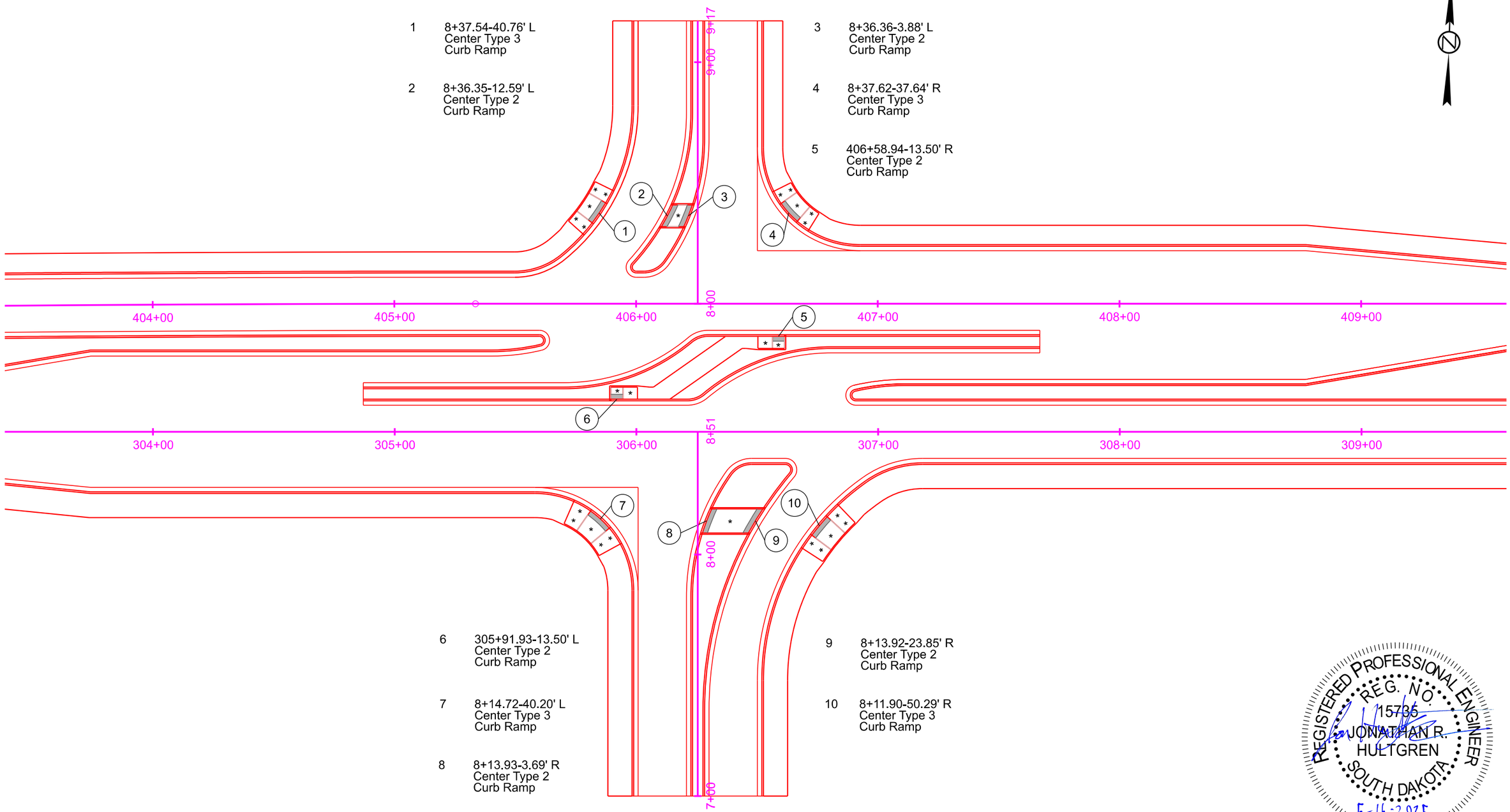

6 305+91.93-13.50' L
Center Type 2
Curb Ramp

7 8+14.72-40.20' L
Center Type 3
Curb Ramp

8 8+13.93-3.69' R
Center Type 2
Curb Ramp

9 8+13.92-23.85' R
Center Type 2
Curb Ramp

10 8+11.90-50.29' R
Center Type 3
Curb Ramp

REGISTERED PROFESSIONAL ENGINEER
REG. NO. 15736
JONATHAN R. HULTGREN
SOUTH DAKOTA
5-16-2025

CURB RAMP LAYOUT

*Turning Space with 1.5% slope
**Curb Ramp with 7.5% slope and 1.5% cross slope

FOR BIDDING PURPOSES ONLY

PROJECT	SHEET	TOTAL SHEETS
EM 0292(88)73 IM 2292(104)0	B115	B182

Plotting Date: 5/16/2025

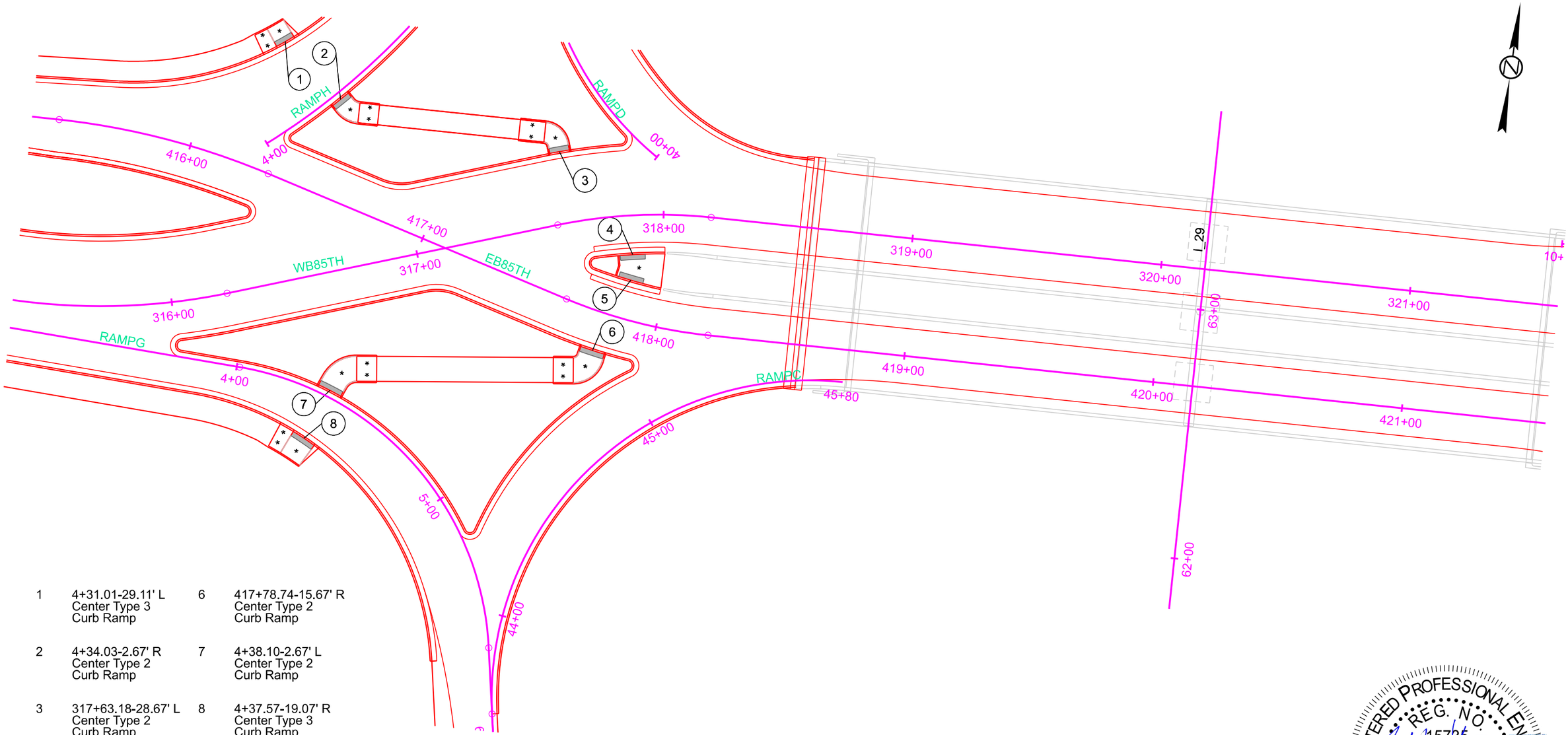

1	4+31.01-29.11' L Center Type 3 Curb Ramp	6	417+78.74-15.67' R Center Type 2 Curb Ramp
2	4+34.03-2.67' R Center Type 2 Curb Ramp	7	4+38.10-2.67' L Center Type 2 Curb Ramp
3	317+63.18-28.67' L Center Type 2 Curb Ramp	8	4+37.57-19.07' R Center Type 3 Curb Ramp
4	317+86.73-15.67' R Center Type 2 Curb Ramp		
5	417+85.03-15.67' L Center Type 2 Curb Ramp		

REGISTERED PROFESSIONAL ENGINEER
REG. NO. 15736
JONATHAN R. HULTGREN
SOUTH DAKOTA
5-16-2025

CURB RAMP LAYOUT

FOR BIDDING PURPOSES ONLY

PROJECT	SHEET	TOTAL SHEETS
EM 0292(88)73 IM 2292(104)0	B116	B182

Plotting Date: 5/16/2025

*Turning Space with 1.5% slope
**Curb Ramp with 7.5% slope and 1.5% cross slope

1	2+25.43-19.25' R Center Type 3 Curb Ramp	4	322+49.65-15.67' R Center Type 2 Curb Ramp	7	3+39.64-2.67' L Center Type 2 Curb Ramp
2	2+25.97-2.67' L Center Type 2 Curb Ramp	5	422+47.25-15.67' L Center Type 2 Curb Ramp	8	3+37.52-21.31' R Center Type 3 Curb Ramp
3	322+52.81-15.67' L Center Type 2 Curb Ramp	6	422+69.30-15.67' R Center Type 2 Curb Ramp		

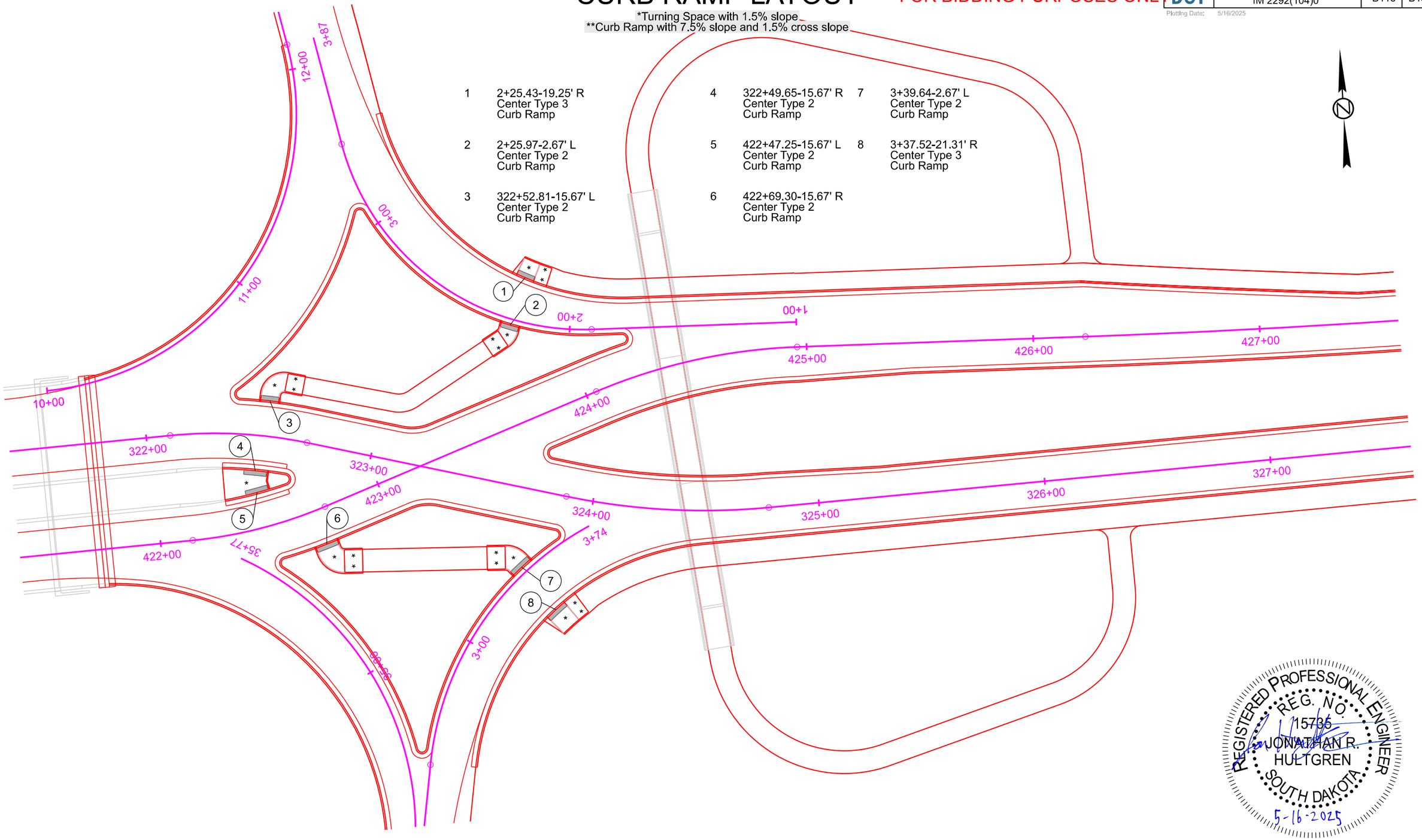

REGISTERED PROFESSIONAL ENGINEER
REG. NO. 15736
JONATHAN R. HULTGREN
SOUTH DAKOTA
5-16-2025

Plotted From - ngjersvik File - ...\B_06JQ_cr.dgn

CURB RAMP LAYOUT

FOR BIDDING PURPOSES ONLY

SD DOT	PROJECT	SHEET	TOTAL SHEETS
	EM 0292(88)73 IM 2292(104)0	B117	B182

Plotting Date: 5/16/2025

*Turning Space with 1.5% slope
**Curb Ramp with 7.5% slope and 1.5% cross slope

1 5+37.88-43.61' L
Center Type 3
Curb Ramp

2 5+35.87-18.95' L
Center Type 2
Curb Ramp

3 5+35.86-3.69' L
Center Type 2
Curb Ramp

4 5+36.27-38.93' R
Center Type 2
Curb Ramp

5 434+62.78-13.50' R
Center Type 2
Curb Ramp

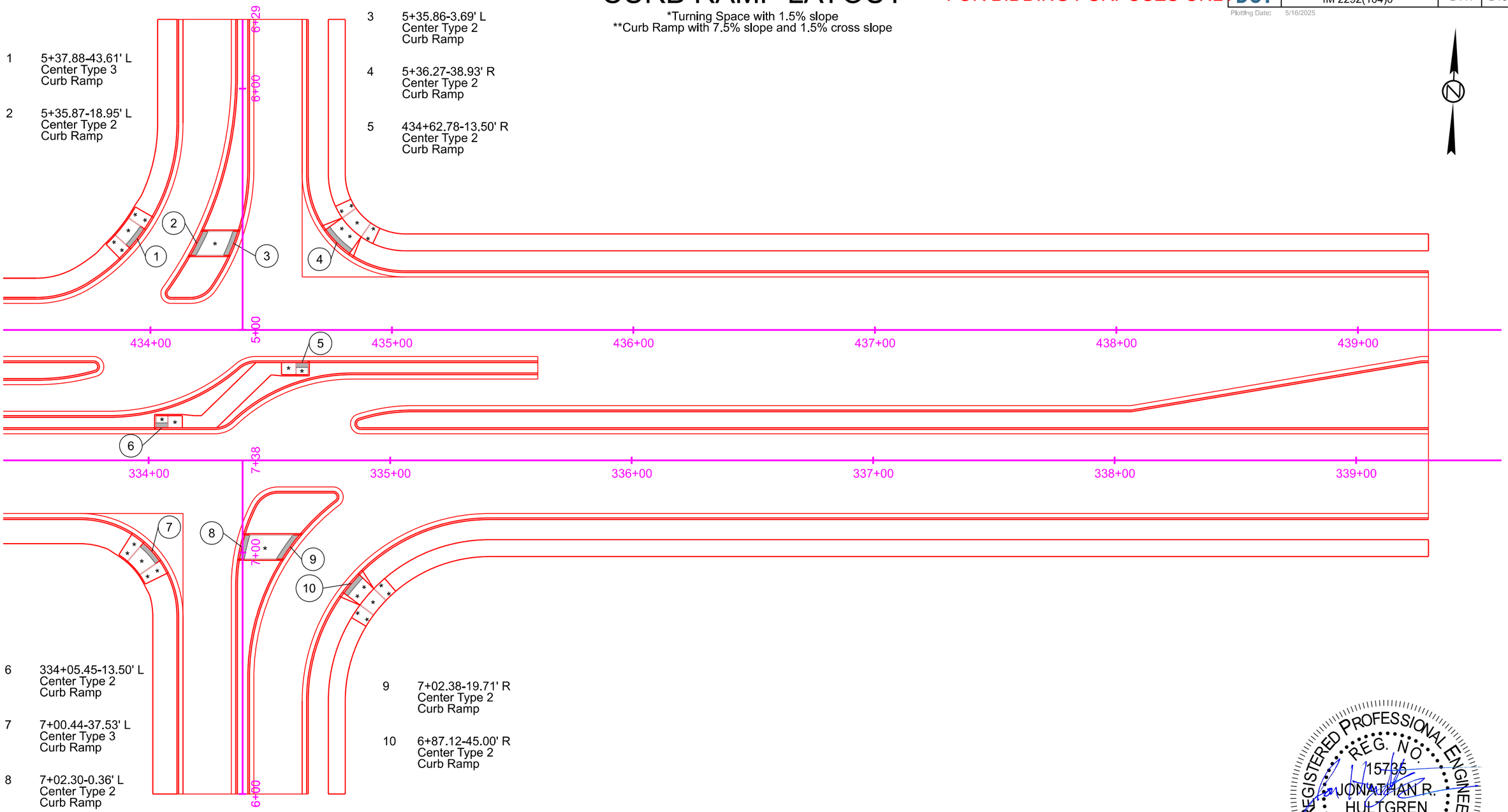

6 334+05.45-13.50' L
Center Type 2
Curb Ramp

7 7+00.44-37.53' L
Center Type 3
Curb Ramp

8 7+02.30-0.36' L
Center Type 2
Curb Ramp

9 7+02.38-19.71' R
Center Type 2
Curb Ramp

10 6+87.12-45.00' R
Center Type 2
Curb Ramp

REGISTERED PROFESSIONAL ENGINEER
REG. NO. 15736
JONATHAN R. HULTGREN
SOUTH DAKOTA
5-16-2025

GUARDRAIL LAYOUT

FOR BIDDING PURPOSES ONLY

SD DOT	PROJECT	SHEET	TOTAL SHEETS
	EM 0292(88)73 IM 2292(104)0	B118	B182

Plotting Date: 7/14/2025 Revised Date: 6/27/2025
Initials: NBG

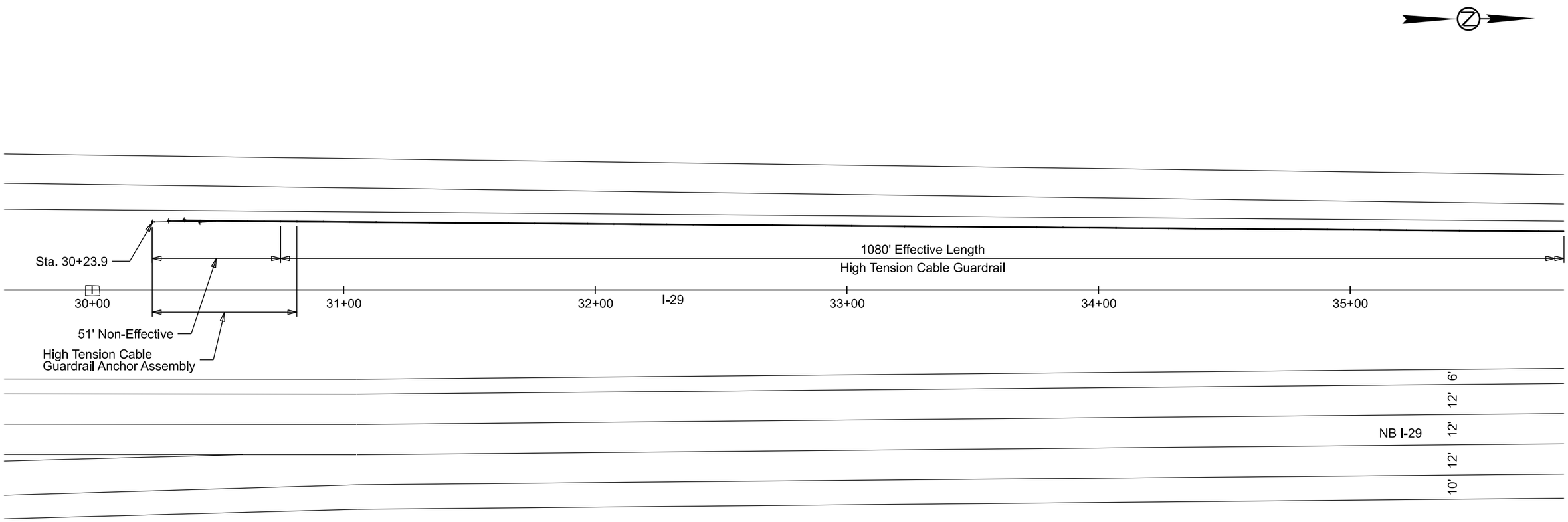

REGISTERED PROFESSIONAL ENGINEER
REG. NO. 15735
JONATHAN R. HULTGREN
SOUTH DAKOTA
7-23-2025

GUARDRAIL LAYOUT

FOR BIDDING PURPOSES ONLY

SD DOT	PROJECT	SHEET	TOTAL SHEETS
	EM 0292(88)73 IM 2292(104)0	B119	B182

Plotting Date: 7/14/2025 Revised Date: 6/27/2025 Initials: NBG

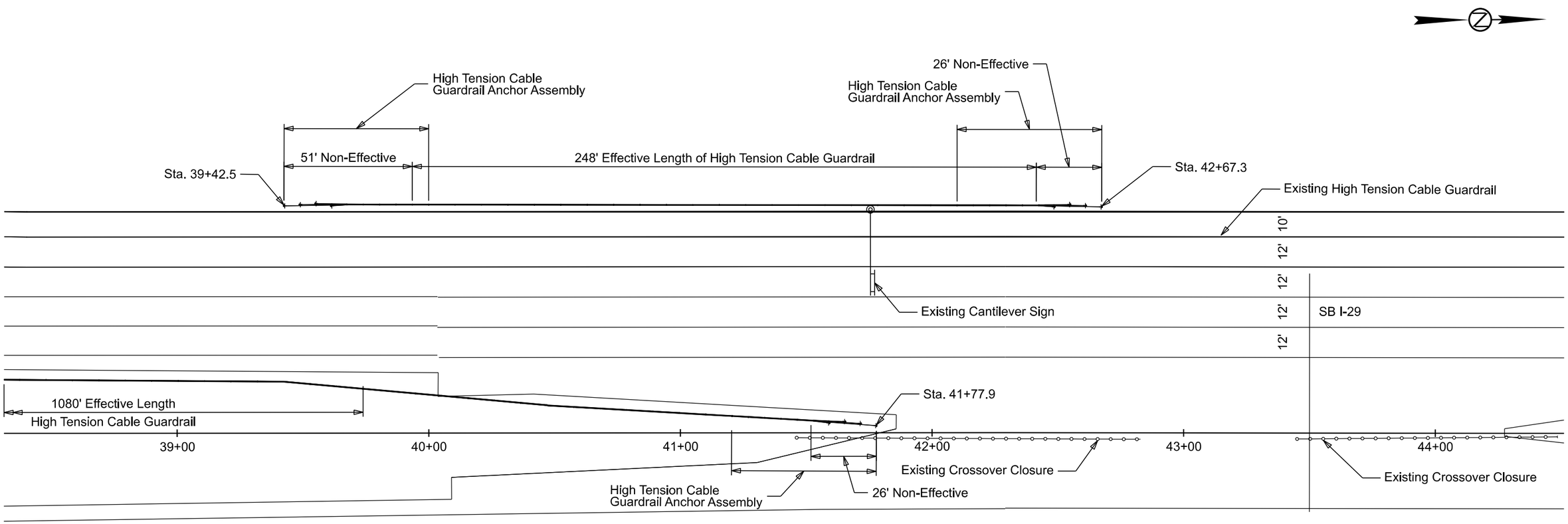

REGISTERED PROFESSIONAL ENGINEER
REG. NO. 15735
JONATHAN R. HULTGREN
SOUTH DAKOTA
7-23-2025

GUARDRAIL LAYOUT

FOR BIDDING PURPOSES ONLY

SD DOT	PROJECT	SHEET	TOTAL SHEETS
Plotting Date: 5/16/2025	EM 0292(88)73 IM 2292(104)0	B120	B182

Note: Numbered points are top of surfacing outer edge.

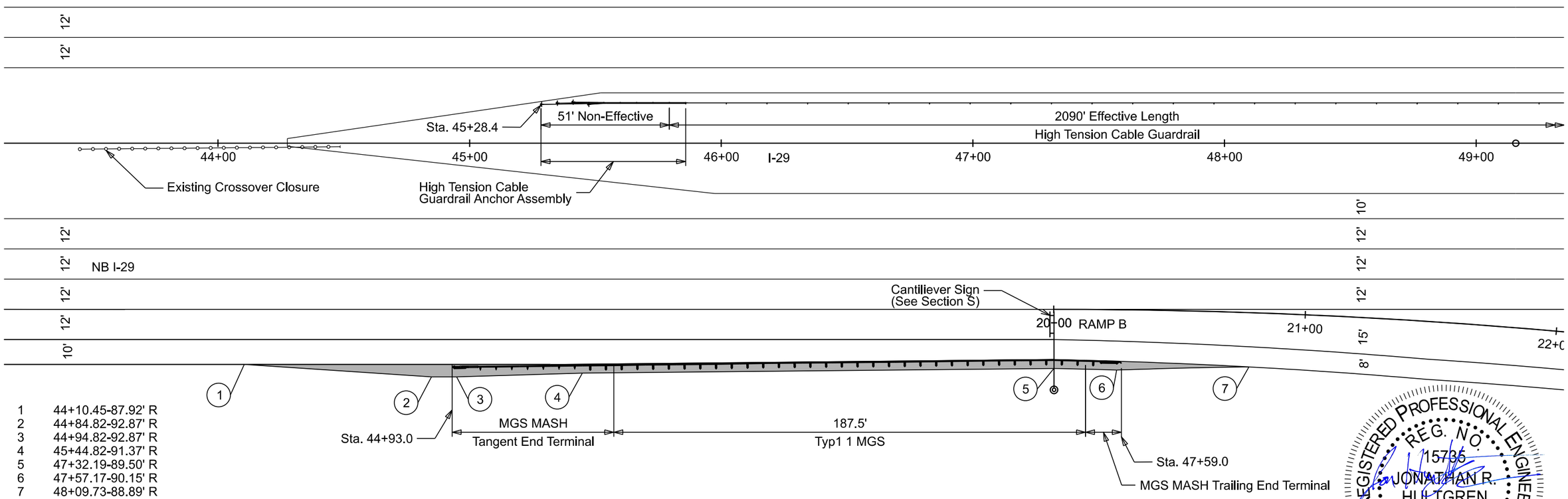

1	44+10.45-87.92' R
2	44+84.82-92.87' R
3	44+94.82-92.87' R
4	45+44.82-91.37' R
5	47+32.19-89.50' R
6	47+57.17-90.15' R
7	48+09.73-88.89' R

REGISTERED PROFESSIONAL ENGINEER
REG. NO. 15736
JONATHAN R. HULTGREN
SOUTH DAKOTA
5-16-2025

GUARDRAIL LAYOUT

FOR BIDDING PURPOSES ONLY

SD DOT	PROJECT	SHEET	TOTAL SHEETS
Plotting Date: 5/16/2025	EM 0292(88)73 IM 2292(104)0	B121	B182

Note: Numbered points are top of surfacing outer edge.

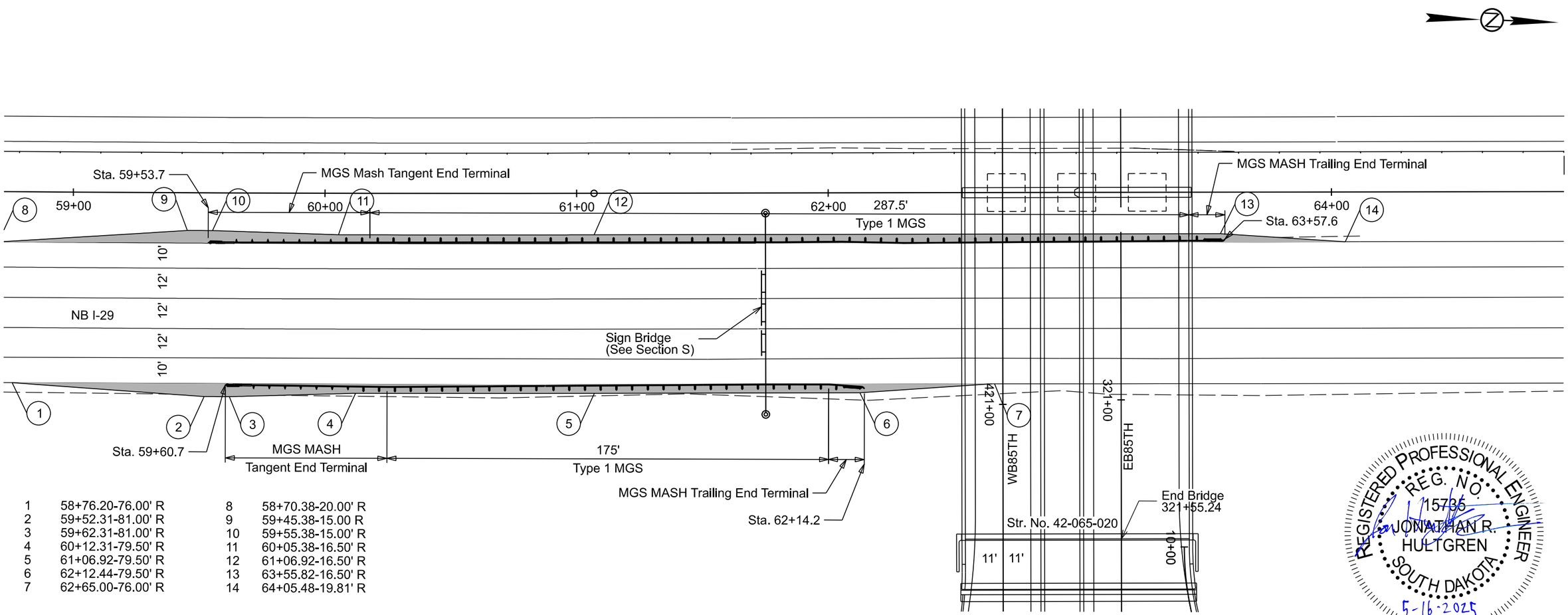

1	58+76.20-76.00' R	8	58+70.38-20.00' R
2	59+52.31-81.00' R	9	59+45.38-15.00 R
3	59+62.31-81.00' R	10	59+55.38-15.00' R
4	60+12.31-79.50' R	11	60+05.38-16.50' R
5	61+06.92-79.50' R	12	61+06.92-16.50' R
6	62+12.44-79.50' R	13	63+55.82-16.50' R
7	62+65.00-76.00' R	14	64+05.48-19.81' R

REGISTERED PROFESSIONAL ENGINEER
REG. NO. 15736
JONATHAN R. HULTGREN
SOUTH DAKOTA
5-16-2025

GUARDRAIL LAYOUT

FOR BIDDING PURPOSES ONLY

PROJECT	SHEET	TOTAL SHEETS
EM 0292(88)73 IM 2292(104)0	B122	B182

Plotting Date: 5/16/2025

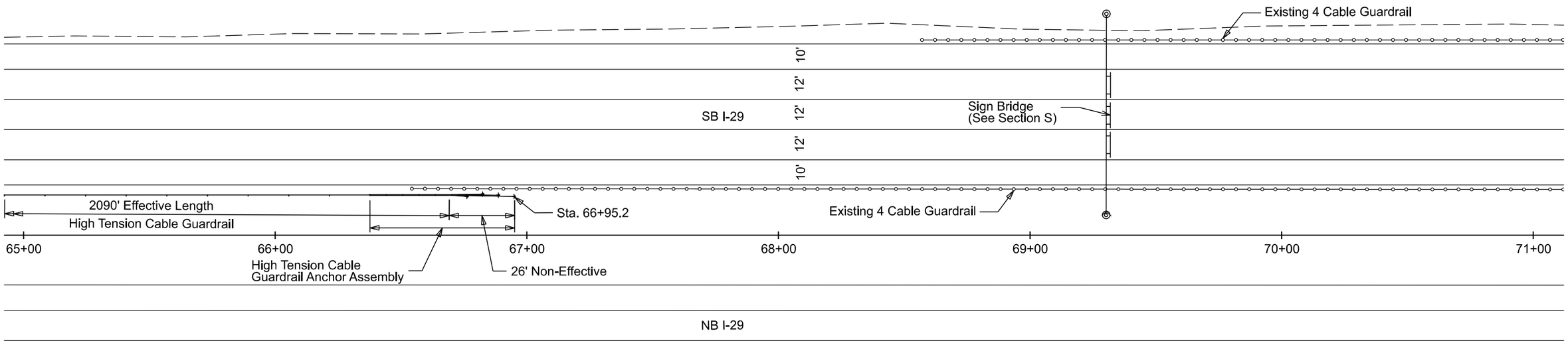

REGISTERED PROFESSIONAL ENGINEER
REG. NO. 15736
JONATHAN R. HULTGREN
SOUTH DAKOTA
5-16-2025

GUARDRAIL LAYOUT

FOR BIDDING PURPOSES ONLY

SD DOT	PROJECT	SHEET	TOTAL SHEETS
	EM 0292(88)73 IM 2292(104)0	B123	B182

Plotting Date: 5/16/2025

REGISTERED PROFESSIONAL ENGINEER
REG. NO. 15736
JONATHAN R. HULTGREN
SOUTH DAKOTA
5-16-2025

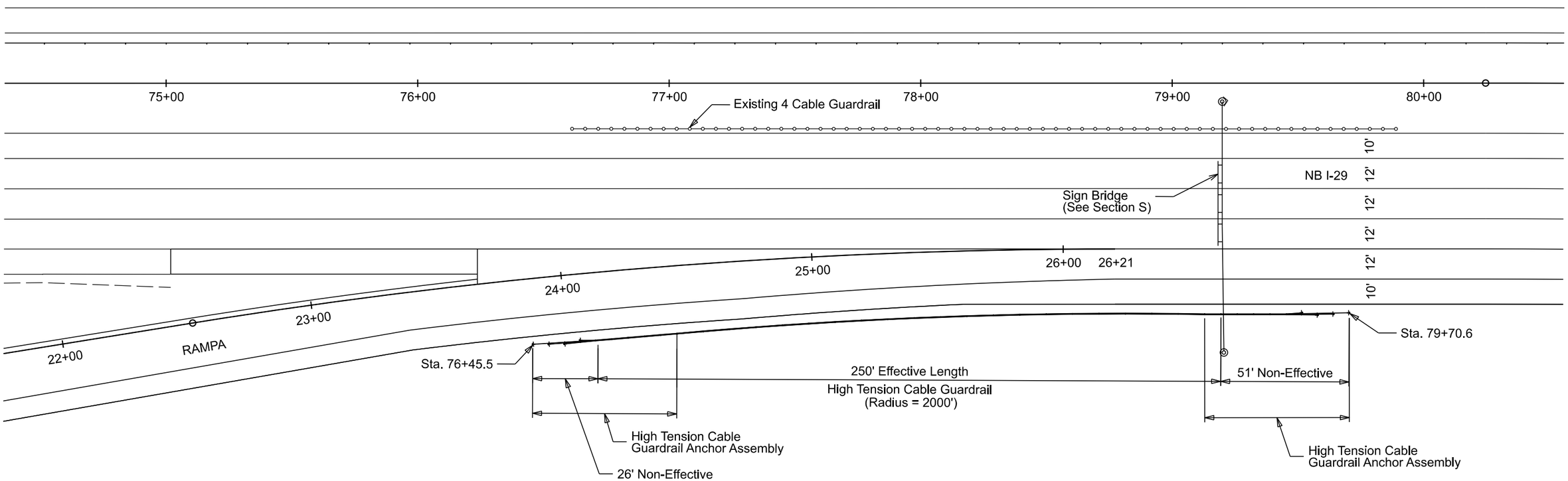

GUARDRAIL LAYOUT

FOR BIDDING PURPOSES ONLY

PROJECT	SHEET	TOTAL SHEETS
EM 0292(88)73 IM 2292(104)0	B124	B182

Plotting Date: 5/16/2025

Note: Numbered points are top of surfacing outer edge.

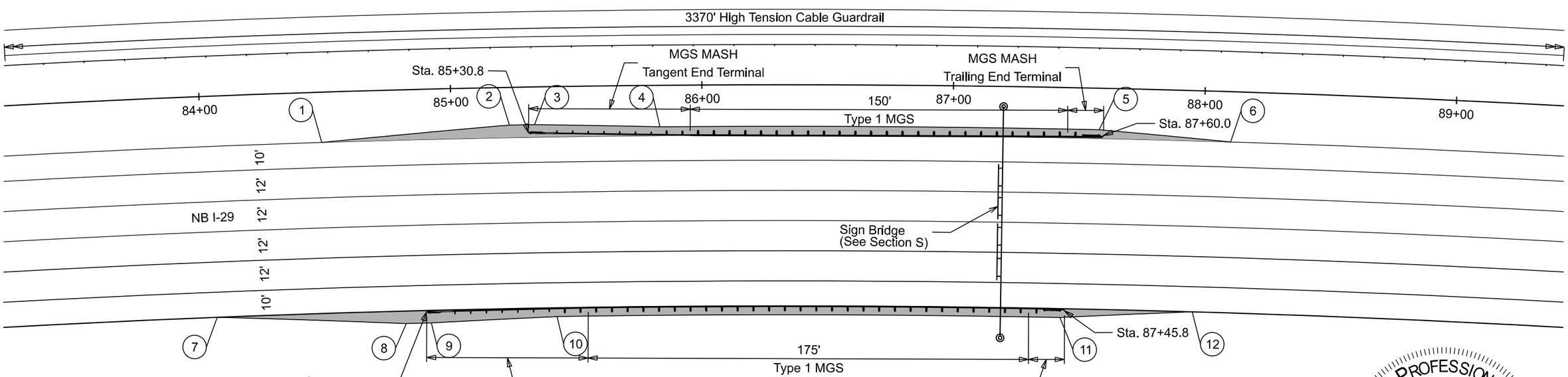

1	84+48.19-20.00' R	7	84+03.81-88.00' R
2	85+23.19-15.00' R	8	85+23.19-15.00' R
3	85+33.19-15.00' R	9	85+33.19-15.00' R
4	85+83.19-16.50' R	10	85+83.19-16.50' R
5	87+58.26-16.50' R	11	87+58.26-16.50' R
6	88+10.76-20.00' R	12	88+10.76-20.00' R

REGISTERED PROFESSIONAL ENGINEER
REG. NO. 15736
JONATHAN R. HULTGREN
SOUTH DAKOTA
5-16-2025

GUARDRAIL LAYOUT

FOR BIDDING PURPOSES ONLY

PROJECT	SHEET	TOTAL SHEETS
EM 0292(88)73 IM 2292(104)0	B125	B182

Plotting Date: 5/16/2025

Note: Numbered points are top of surfacing outer edge.

1 98+97.82-76.02' L
2 99+49.99-79.50' L
3 101+37.46-79.50' L
4 101+87.46-81.00' L
5 101+97.46-81.00' L
6 102+67.47-76.33' L

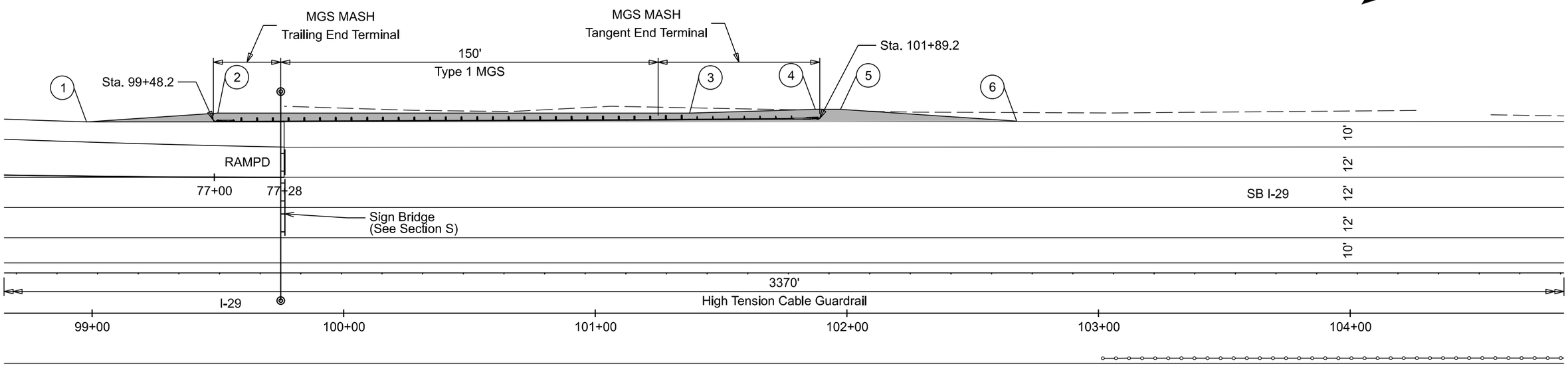

REGISTERED PROFESSIONAL ENGINEER
REG. NO. 15735
JONATHAN R. HULTGREN
SOUTH DAKOTA
5-16-2025

GUARDRAIL LAYOUT

FOR BIDDING PURPOSES ONLY

PROJECT	SHEET	TOTAL SHEETS
EM 0292(88)73 IM 2292(104)0	B126	B182

Plotting Date: 5/16/2025

Note: Numbered points are top of surfacing outer edge.

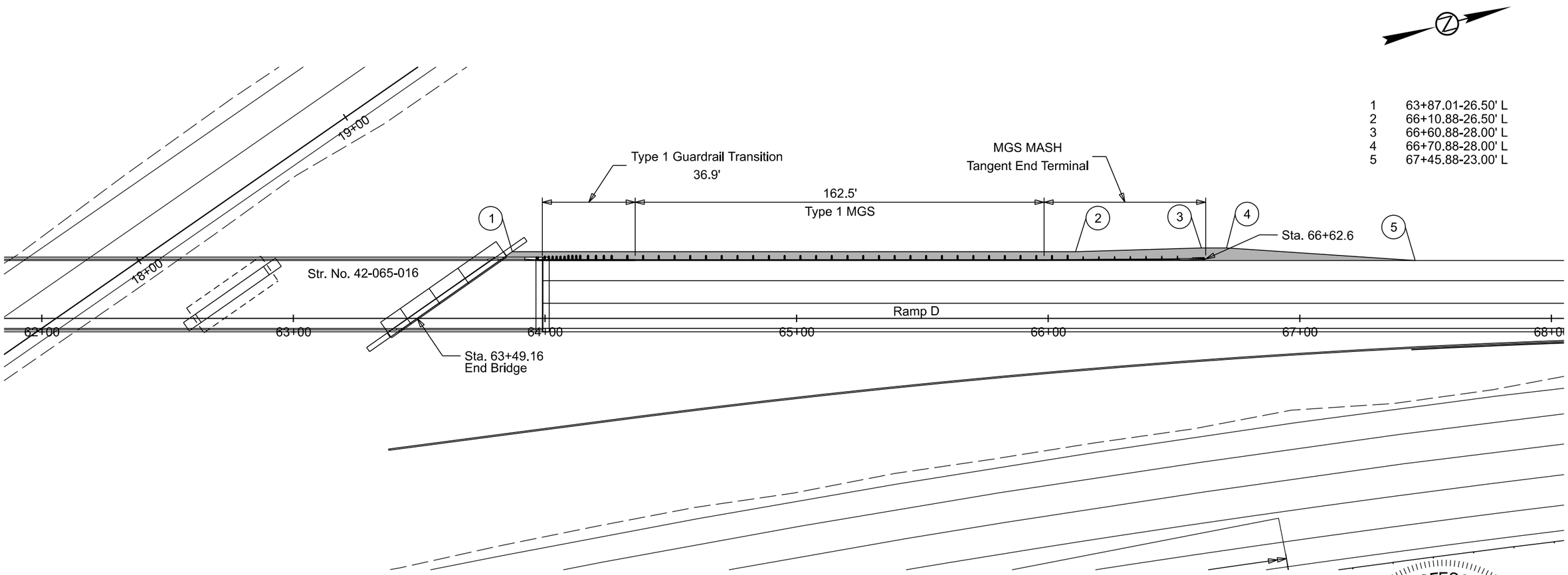

1	63+87.01-26.50' L
2	66+10.88-26.50' L
3	66+60.88-28.00' L
4	66+70.88-28.00' L
5	67+45.88-23.00' L

REGISTERED PROFESSIONAL ENGINEER
REG. NO. 15736
JONATHAN R. HULTGREN
SOUTH DAKOTA
5-16-2025

GUARDRAIL LAYOUT

FOR BIDDING PURPOSES ONLY

PROJECT	SHEET	TOTAL SHEETS
EM 0292(88)73 IM 2292(104)0	B127	B182

Plotting Date: 5/16/2025

Note: Numbered points are top of surfacing outer edge.

1	26+12.00-39.03' L
2	26+60.59-39.70' L
3	28+59.81-30.02' L
4	29+09.17-29.40' L
5	29+21.10-28.97' L
6	30+07.03-22.00' L

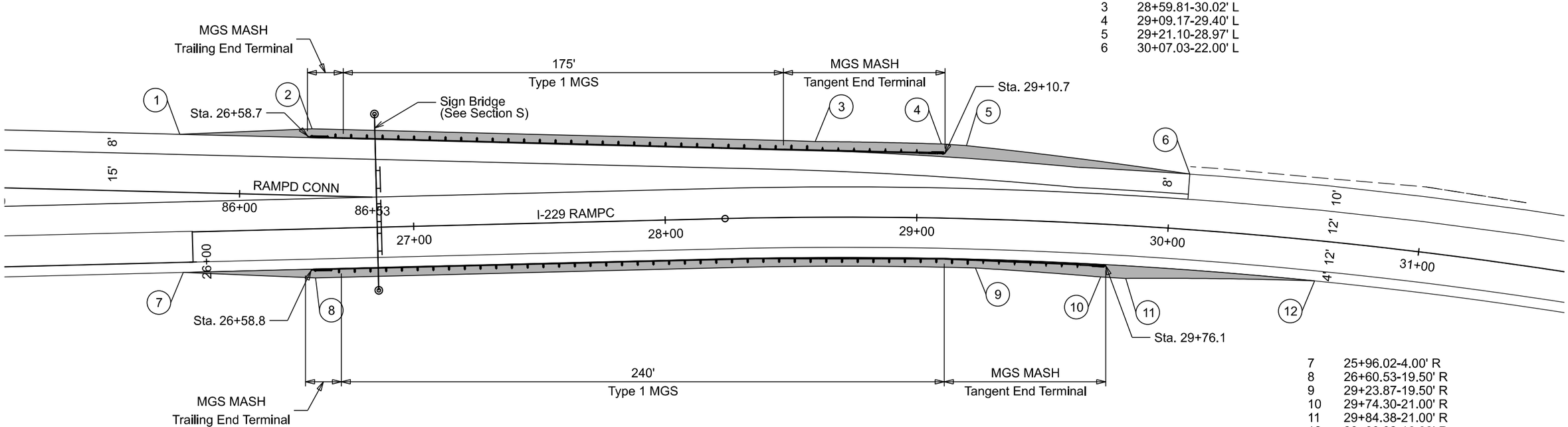

7	25+96.02-4.00' R
8	26+60.53-19.50' R
9	29+23.87-19.50' R
10	29+74.30-21.00' R
11	29+84.38-21.00' R
12	30+60.02-16.00' R

REGISTERED PROFESSIONAL ENGINEER
REG. NO. 15786
JONATHAN R. HULTGREN
SOUTH DAKOTA
5-16-2025

Plotted From - ngjersvik File - ...\B_06JQ_gr.dgn

GUARDRAIL LAYOUT

FOR BIDDING PURPOSES ONLY

SD DOT	PROJECT	SHEET	TOTAL SHEETS
Plotting Date: 5/16/2025	EM 0292(88)73 IM 2292(104)0	B128	B182

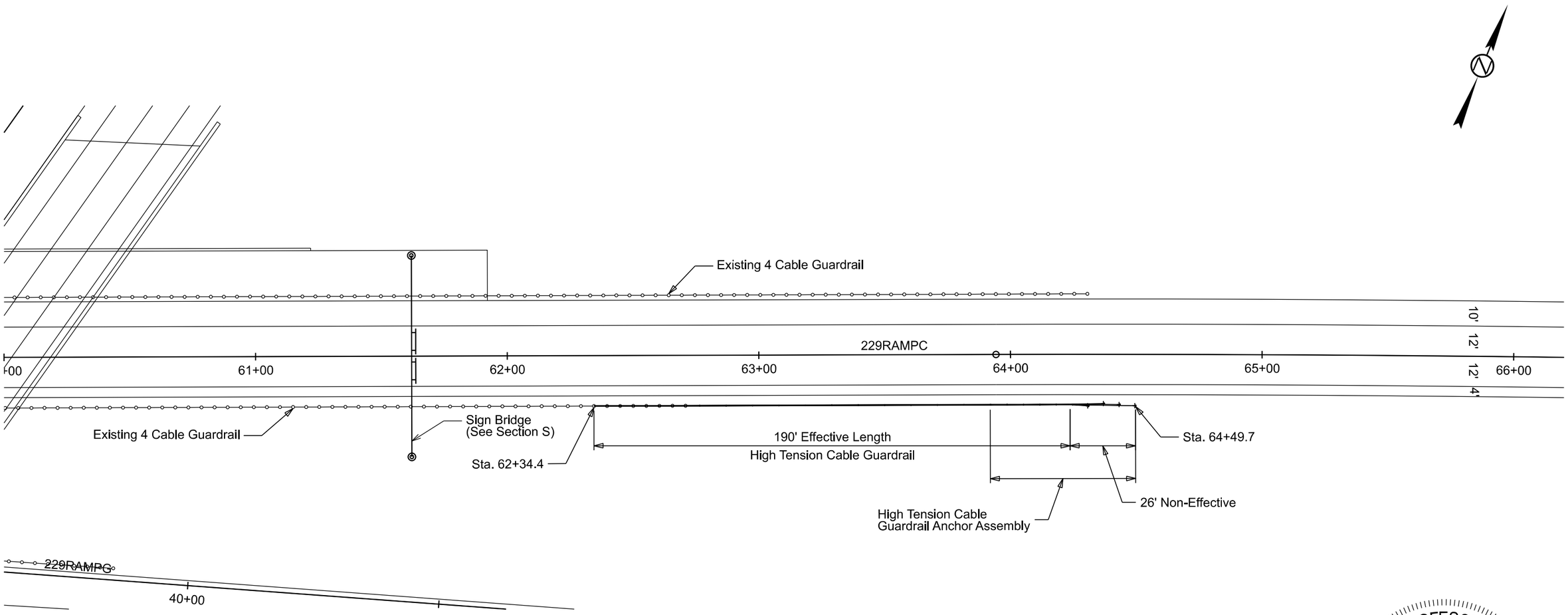

REGISTERED PROFESSIONAL ENGINEER
REG. NO. 15736
JONATHAN R. HULTGREN
SOUTH DAKOTA
5-16-2025

GUARDRAIL LAYOUT

FOR BIDDING PURPOSES ONLY

PROJECT	SHEET	TOTAL SHEETS
EM 0292(88)73 IM 2292(104)0	B129	B182

Plotting Date: 5/16/2025

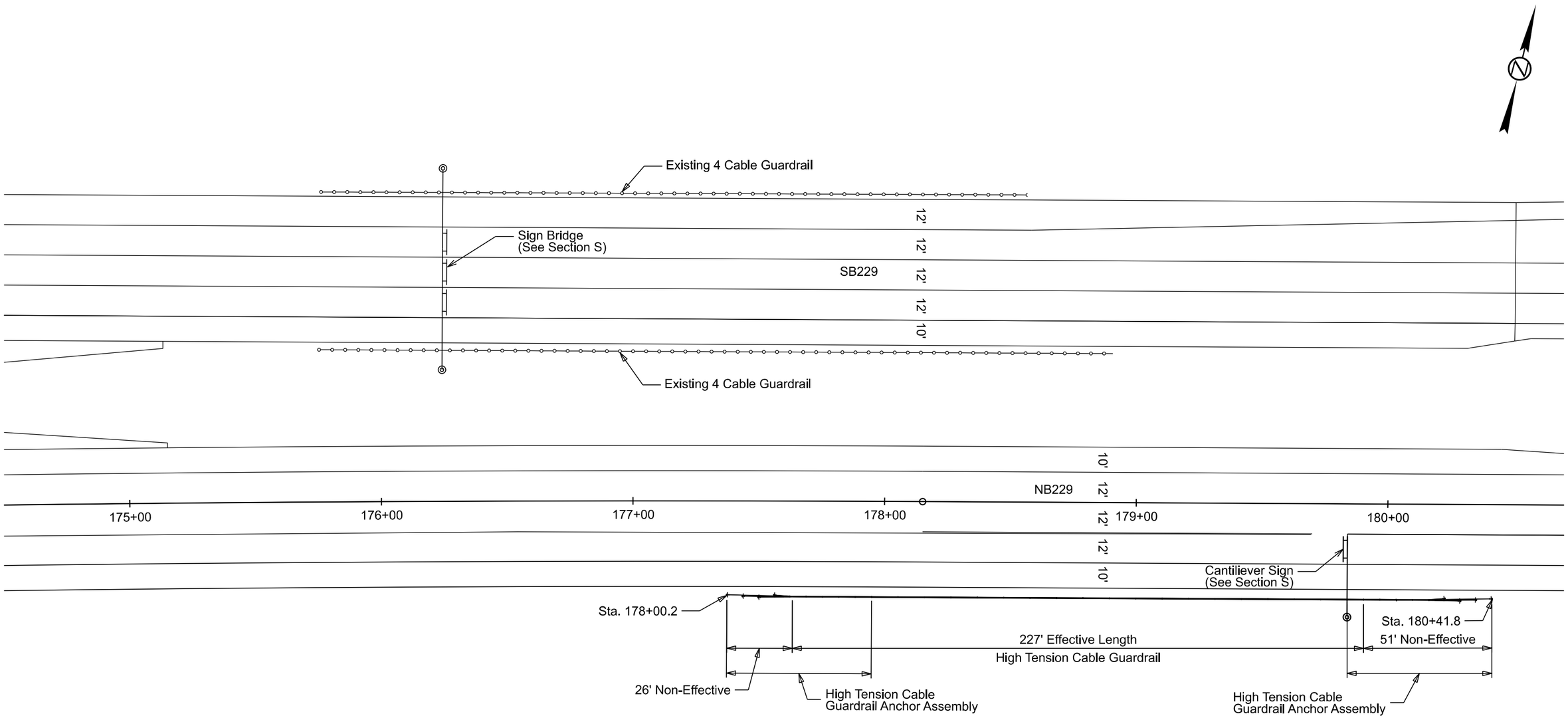

REGISTERED PROFESSIONAL ENGINEER
REG. NO. 15735
JONATHAN R. HULTGREN
SOUTH DAKOTA
5-16-2025

AGGREGATE COLUMN FOUNDATION IMPROVEMENTS
SITE PLAN

FOR BIDDING PURPOSES ONLY

SD DOT	PROJECT	SHEET	TOTAL SHEETS
	EM 0292(88)73 IM 2292(104)0	B130	B182

Plotting Date: 5/16/2025

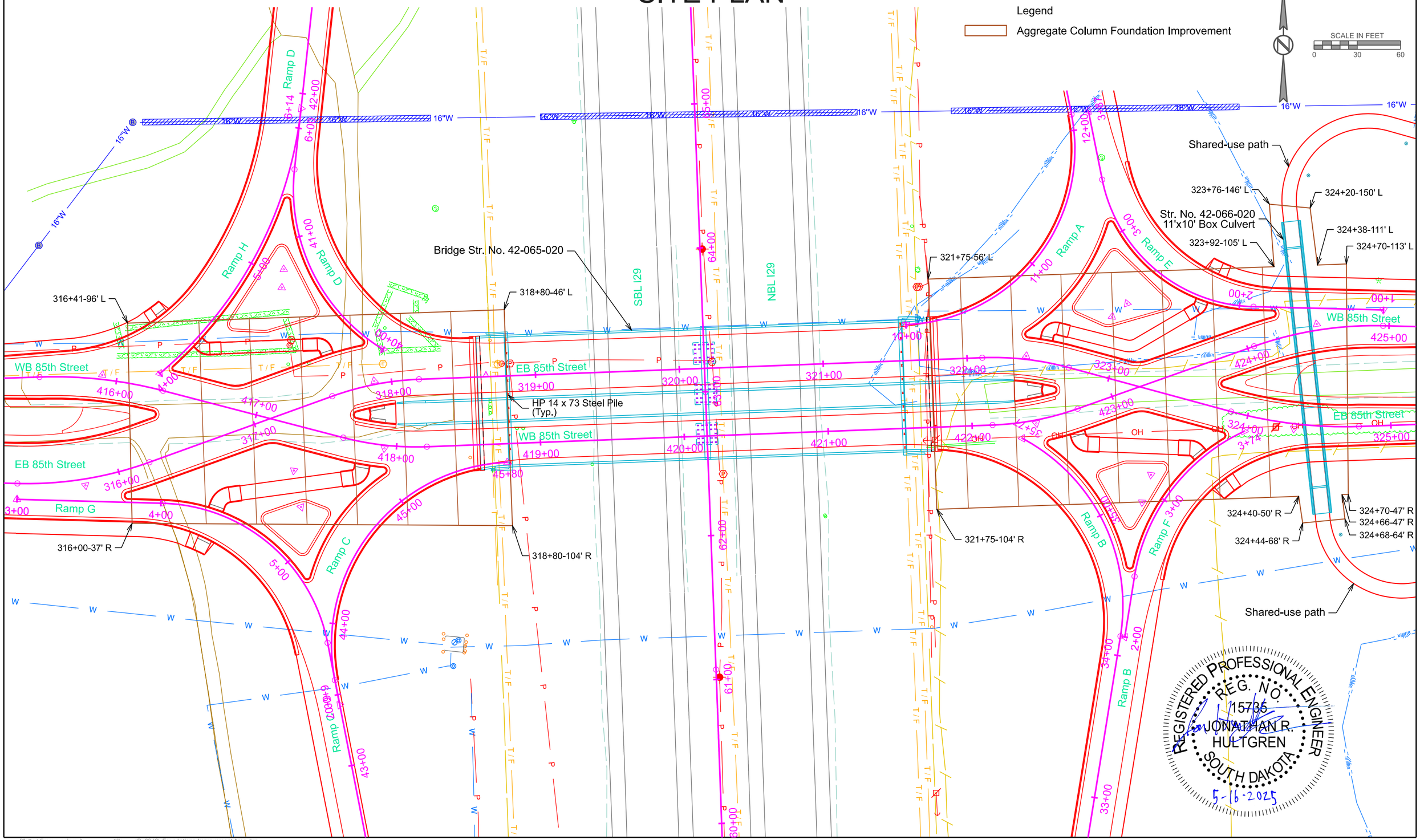

REGISTERED PROFESSIONAL ENGINEER
REG. NO. 15735
JONATHAN R. HULTGREN
SOUTH DAKOTA
5-16-2025

Plotted From - ngjersvik File - ...\B_06JQ_Foundations Improvement Area.dgn

AGGREGATE COLUMN FOUNDATION IMPROVEMENTS SUBSURFACE PROFILE

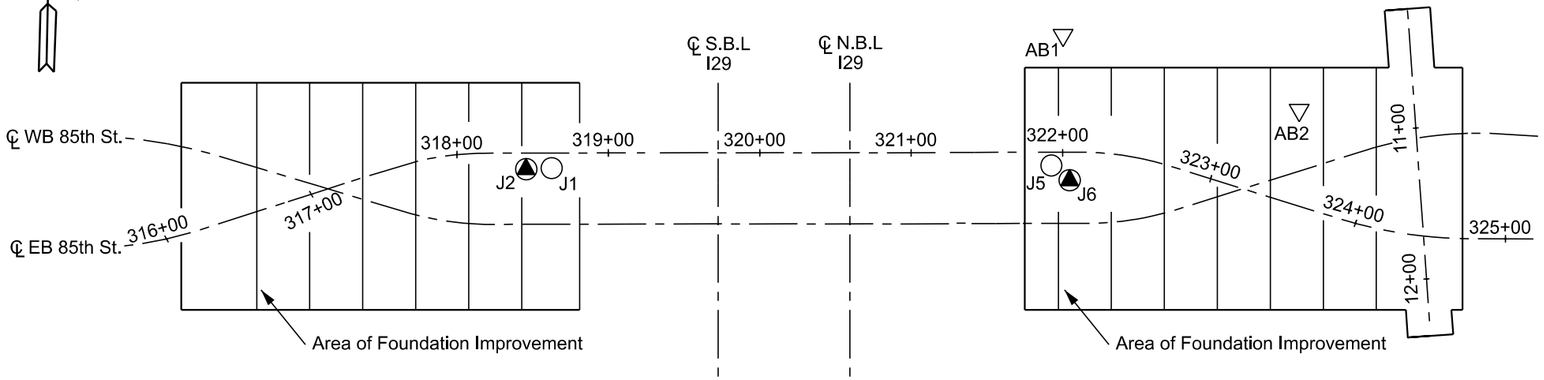

CPT data is available on the SDDOT Contractor's SharePoint site.

	Friction Angle, ϕ	Cohesion, C	Wet Unit Weight, γ_w	Coefficient of Consolidation, C_v	Young Modulus, E
Base Course	32 degrees	0 psf	135 pcf	-	-
Embankment Soils	22 degrees	250 psf	120 pcf	-	-
Sandy Clay	26 degrees	600 psf	112 pcf	2.28 ft²/day	300,000 psf

Hole Number	J1	
Station	318+62	
Depth	25.5	ft
Soil Color	Brown	
Classification	Sandy Clay	
Strength (Qu)	7,586	psf
Dry Density	103.8	pcf
Wet Density	124.1	pcf
Moisture	19.5	%
Pass No. 10	94.4	%
Pass No. 40	85.3	%
Pass No. 200	65.8	%
Sand Content	28.6	%
Silt Content	30.9	%
Clay Content	34.9	%

Hole Number	J1	
Station	318+62	
Depth	70.2	ft
Soil Color	Gray	
Classification	Sandy Clay	
Strength (Qu)	7,090	psf
Dry Density	110.0	pcf
Wet Density	130.7	pcf
Moisture	18.9	%
Pass No. 10	94.6	%
Pass No. 40	85.9	%
Pass No. 200	66.2	%
Sand Content	28.3	%
Silt Content	33.1	%
Clay Content	33.1	%

Hole Number	J1	
Station	318+62	
Depth	100.2	ft
Soil Color	Gray	
Classification	Silty Sand	
Strength (Qu)	No Test	psf
Dry Density	NA	pcf
Wet Density	NA	pcf
Moisture	20.3	%
Pass No. 10	100.0	%
Pass No. 40	97.7	%
Pass No. 200	34.3	%
Sand Content	65.7	%
Silt Content	33.3	%
Clay Content	1.0	%

Hole Number	J5	
Station	321+92	
Depth	75.2	ft
Soil Color	Gray	
Classification	Sandy Clay	
Strength (Qu)	5,306	psf
Dry Density	110.3	pcf
Wet Density	131.3	pcf
Moisture	19.1	%
Pass No. 10	96.6	%
Pass No. 40	87.8	%
Pass No. 200	67.5	%
Sand Content	29.0	%
Silt Content	35.7	%
Clay Content	31.9	%

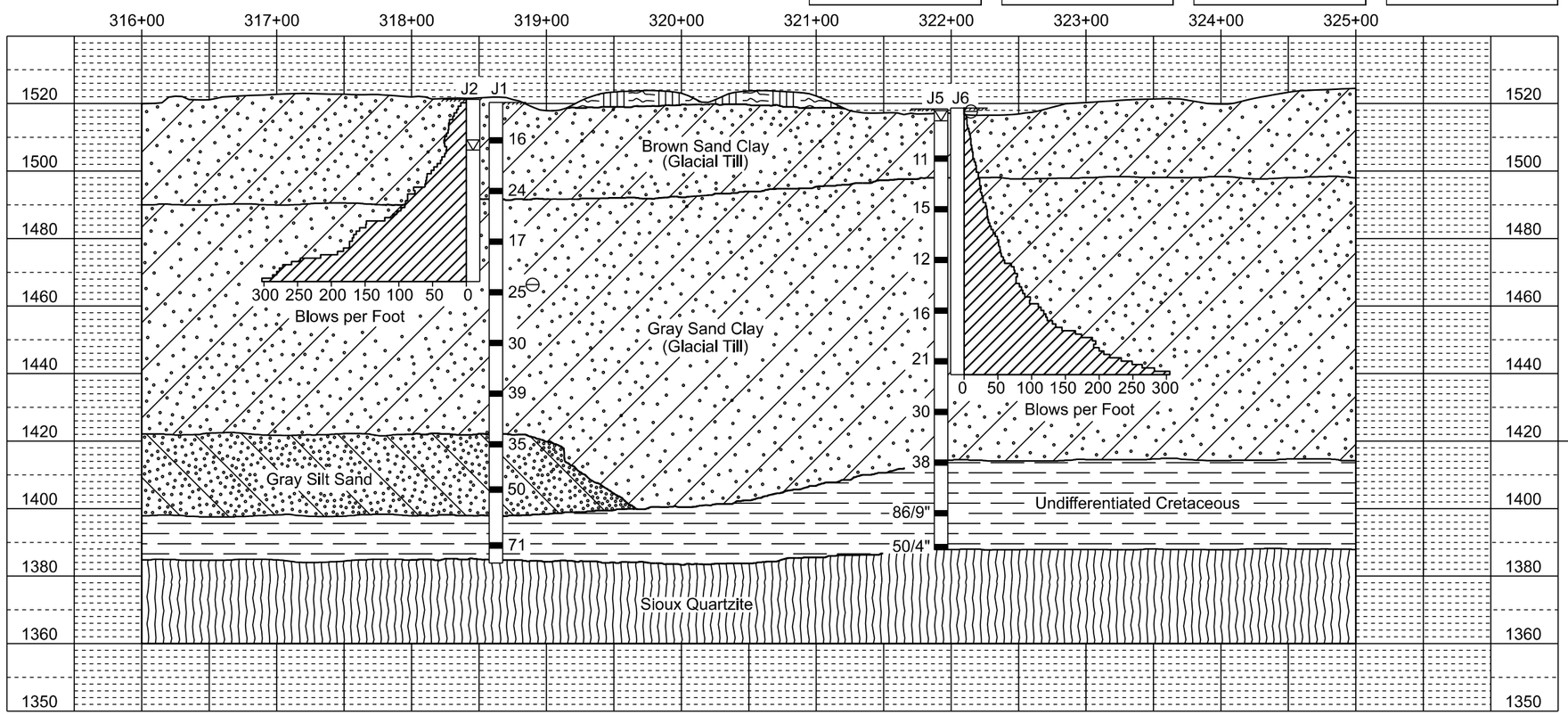

Glaciated Terrain contains all sizes of natural mineral sediment ranging from clay to boulders. Streams originating in or flowing through glaciated topography contain sediment loads derived from glaciated sources. Stream and river crossings contain sediment naturally sorted and randomly concentrated. Alluvial sediment located at this project location may have concentrated coarser gravel such as pebbles, cobbles and boulders. The borings shown only represent material that was found at the exact location of the small diameter drill hole. Coarse granular material may be present in areas not penetrated by the depicted borings.

The Geotechnical Engineering Activity has all of the boring logs and laboratory test results available for review at the Central Office in Pierre.

LEGEND

- Penetration Test
- Drive Test
- CPT Test
- Water
- Caved
- Sample Zone
- Aggregate Column Foundation Improvement

Drive tests are conducted by dropping a 490 pound hammer 30 inches to drive a 2⅞ inch drill stem to measure the resistance to penetration of the soil.

Penetration test holes are drilled with a 6⅝ inch diameter hollow stem auger. Penetration tests are conducted by dropping a 140 pound hammer 30 inches to collect samples and measure the resistance to penetration of the soil. Samples are collected using a lined Modified California Sampler. Penetration test results are listed as uncorrected "N" values in blows per foot. Blows over inches are listed if refusal is achieved, which is 50 blows within one 6 inch set.

GROUNDWATER ELEVATIONS

OCTOBER 2013

J1	(Caved)	1466.4
J2		1506.2
J5		1514.9
J6	(Caved)	1517.7

MEASURED SKIN FRICTION

	ELEV.	PSF
J2	1467.3	869
J6	1439.7	552

P 1360(02) LINCOLN COUNTY PCN 06JQ
85TH ST.
SEC. 18/19 - T100N - R50W
FOUNDATION IMPROVEMENT AREA

SITE PLAN & SUBSURFACE PROFILE

DESIGNED BY	DRAWN BY	CHECKED BY	APPROVED
	HK	DU	BRIDGE ENGINEER

Slotted Corrugated Polyethylene Drainage Tubing

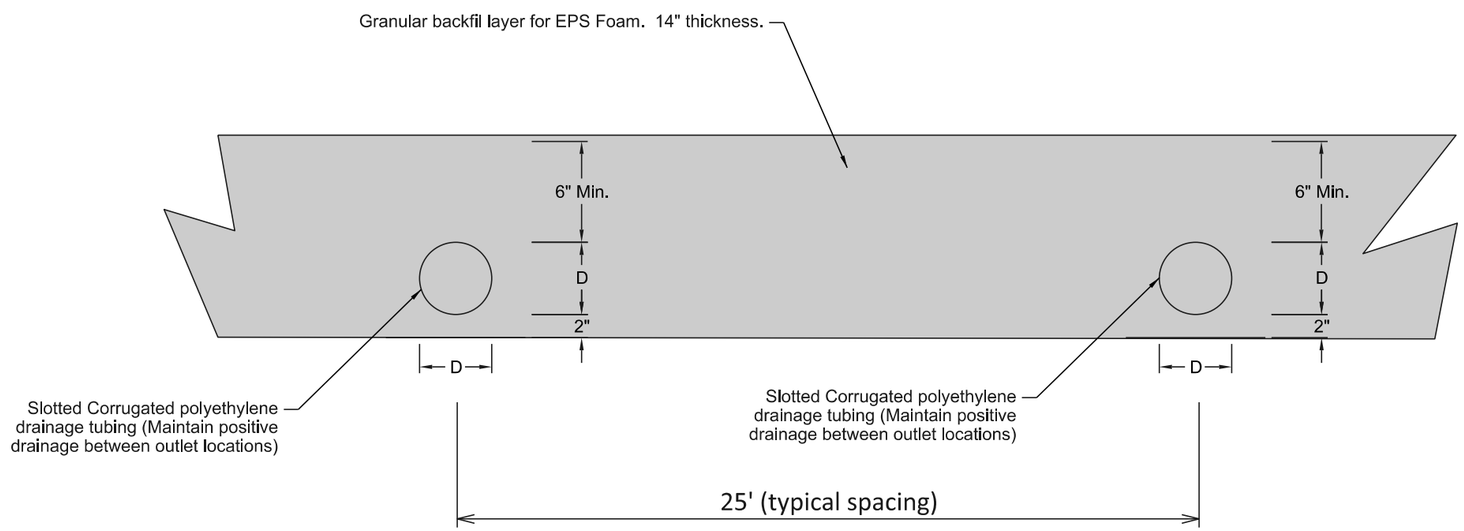

Notes:

The underdrain pipe shall be Slotted Corrugated Polyethylene Drainage Tubing that meets requirements as set forth in SDDOT Standard Specifications Section 680.

The granular backfill layer for the underdrain pipe shall be washed natural rock meeting the gradation requirements of type "Size #1A" as specified in Section 820 - Coarse Aggregate for use in Portland Cement Concrete of the SDDOT Standard Specifications Section 831.

If discharged to channel, rodent guards shall be 6" x 6" 23 gauge galvanized steel wire mesh, 1/4" mesh spacing (Keystone LG Hardware Cloth or equal).

The horizontal location of corrugated polyethylene drainage tubing alignment is anticipated to vary to avoid existing utilities.

The alignment shall be approved by the Engineer prior to installation.

Refer to typical sections for additional details on placement under the EPS Foam. Underdrain shall be spaced at 25' intervals and within the drainable rock layer under the EPS Foam. The length of the underdrain will run the width of EPS Foam area.

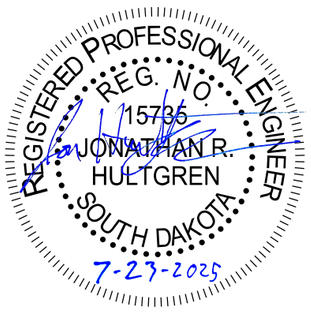

LEWIS & CLARK RURAL WATER SYSTEM

ORIGINAL CONSTRUCTION PLANS
AIR/VACUUM VAULT ADJUSTMENT DETAILS

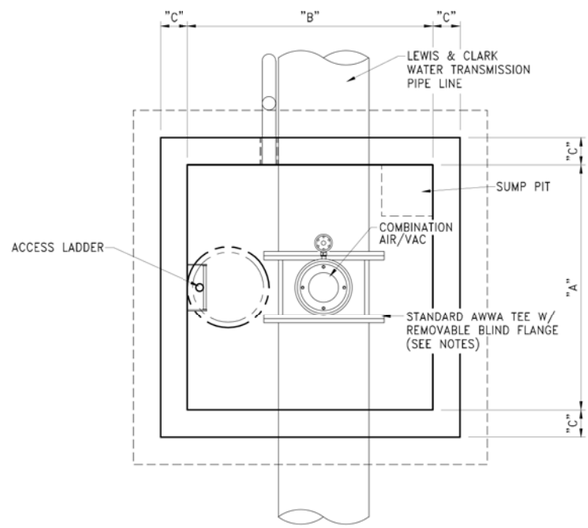

PLAN

TYPE "B" AIR/VACUUM VAULT DIMENSIONS				
MAIN PIPELINE DIA. (INCHES)	"A" DIMENSION (FEET)	"B" DIMENSION (FEET)	"C" DIMENSION (INCHES)	REMARKS
36"	9'-0"	9'-0"	10" OR AS PER MANUF.	

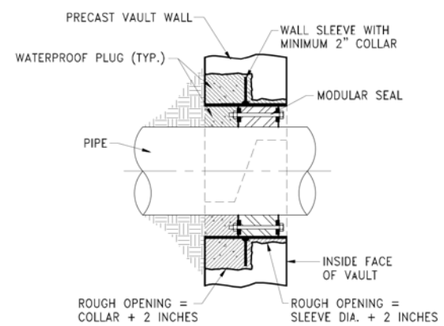

DETAIL

NOTES:

1. LOCATION OF AIR/VAC VALVE VAULTS AND ISOLATION VALVE VAULT, SEE PLAN & PROFILE SHEETS.
2. THE VENT PIPE SIZE EQUALS THE AIR/VAC VALVE SIZE – SEE VALVE SCHEDULE FOR SIZES, BUT NO SMALLER THAN 6" DIAMETER.
3. TEE SHALL BE AN AWWA STANDARD REDUCING TEE, JOINTS WITH PIPELINE SHALL BE FLANGED, BUTT WELDED, OR OTHERWISE APPROVED BY OWNER.
4. APPLY DAMP PROOFING TO OUTSIDE SURFACES OF MANHOLE VAULT IN ACCORDANCE WITH THE SPECIFICATIONS.
5. MANHOLE VAULTS LOCATED IN STREETS OR ROADS SHALL BE INSTALLED SO THAT THE MANHOLE COVER IS FLUSH WITH THE ROADWAY SURFACE. THICKNESS OF REPLACEMENT PAVEMENT OR CRUSHED BASE SURFACING SHALL BE IN ACCORDANCE WITH PAVING AND RESURFACING DETAILS. SEE DETAIL SHEET.
6. MANHOLE LIFTING EYES SHALL BE RECESSED IN THE TOP OF THE COVER TO PREVENT DAMAGE TO MAINTENANCE EQUIPMENT AND ALLOW FOR THE REMOVAL OF THE TOP.
7. THE 2 C.Y. OF GRANULAR BEDDING MATERIAL AT THE END OF THE DRAIN PIPE SHALL NOT BE LOCATED UNDER THE MANHOLE FOOTING, HOWEVER, ONLY A 6" SEPARATION BETWEEN THE MANHOLE FOOTING AND THE GRANULAR BEDDING MATERIAL IS REQUIRED.
8. INSTALL CORROSION PROTECTION SYSTEM AS PER SPECIFICATION SECTION 13900.

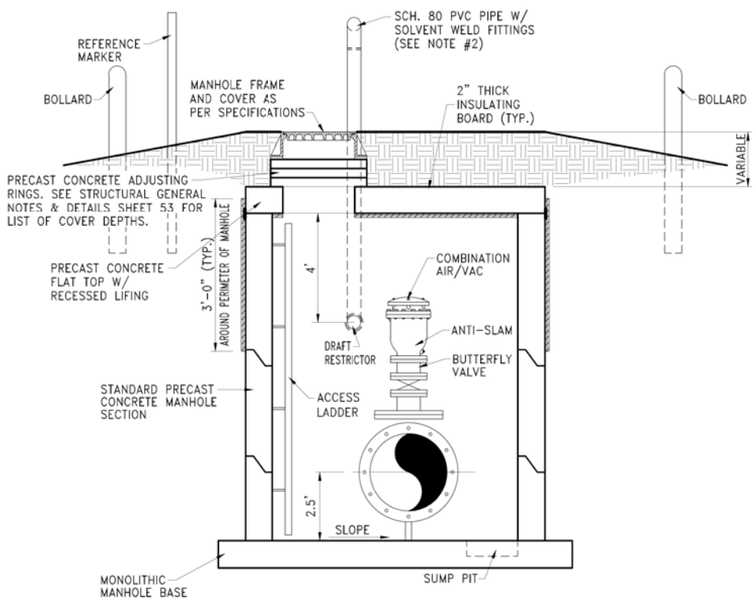

SECTION

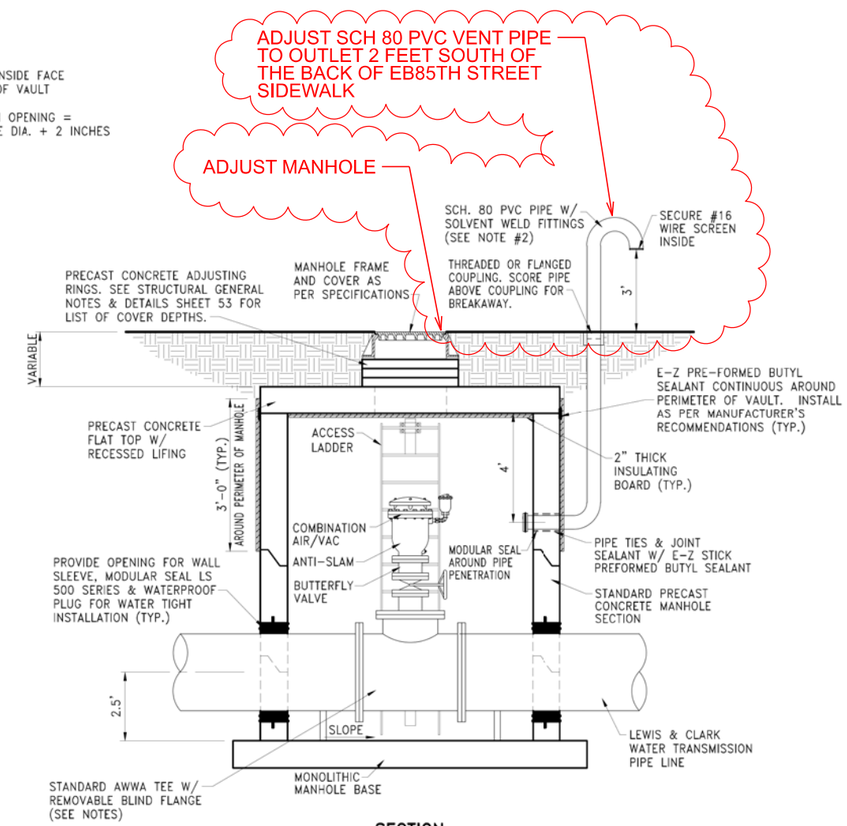

SECTION

DRAWN BY: S.A.N.	REVIEWED ____ DATE : ____ FOR ____
DESIGNED BY: T.R.C.	REVIEWED ____
CHECKED BY: T.R.C.	DATE : ____ FOR BANNER ASSOCIATES, INC.

BANNER
BANNER ASSOCIATES, INC. • CONSULTING ENGINEERS & ARCHITECTS
409 22nd Av S • P.O.Box 298 – Brookings, SD 57006 • (605)692-6342

REVISION	DATE	DESCRIPTION	BY	CK'D
1	3/13/09	CONSTRUCTION PLANS OF RECORD	S.A.N.	K.J.K.

LEWIS & CLARK RURAL WATER SYSTEM
TREATED WATER PIPELINE – SEGMENT 9

TYPE "B" AIR/VACUUM VAULT DETAILS

SCALE :	JOB NO :	DATE :
AS SHOWN	20000.11.01	MAY 07

SHEET NO. : 59

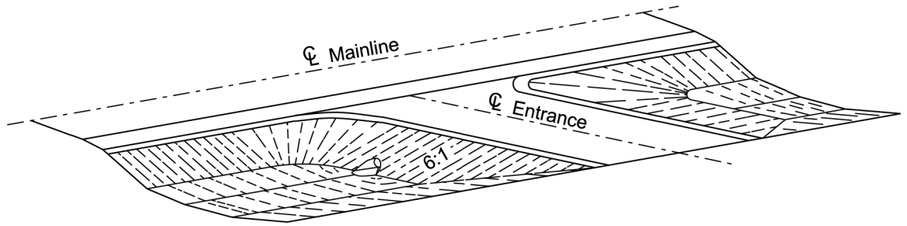

PERSPECTIVE OF ENTRANCE

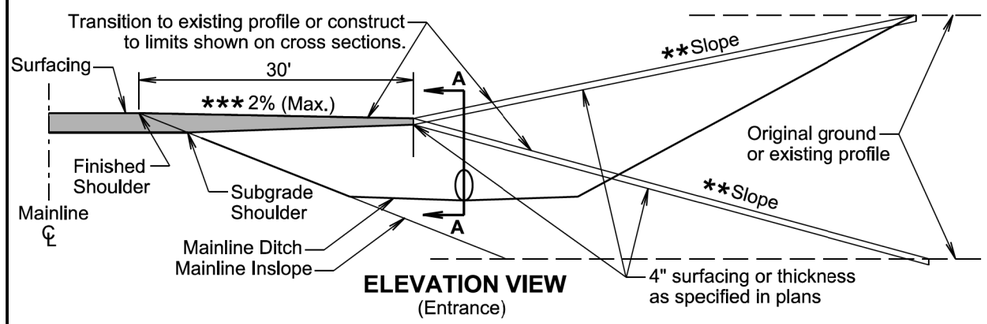

ELEVATION VIEW
(Entrance)

*** 2% When on the inside of superelevation and 0% or flat when on outside of superelevation.

** Entrance maximum slope is typically 10:1 for field entrances and 15:1 for farm/residential entrances.

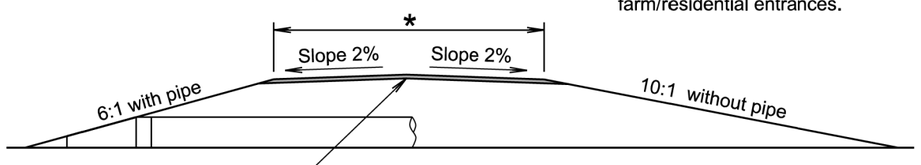

SECTION A-A
(Entrance and Intersecting Road)

* The finished surfacing width is stated elsewhere in the plans. The subgrade width is 4' wider than the finished surfacing width unless stated otherwise in the plans.

GENERAL NOTES:

The ditch section shown above in the perspective view is only for illustrative purpose.

The elevation view above is typical for either a ditch cut or fill section. Entrances that vary from above should be specified in the plans.

Pipe length will be adjusted if necessary during construction to obtain the 6:1 slope. For grading projects, the pipe length is estimated typically using a 4" thickness of surfacing directly over the subgrade above the pipe.

The transition area between the mainline inslope and the entrance or intersecting road inslope will be rounded to eliminate an abrupt transition.

The turning radii will be 35' for intersecting roads and entrances unless stated otherwise in the plans.

November 19, 2021

Published Date: 2026	SDDOT	INTERSECTING ROADS AND ENTRANCES	PLATE NUMBER 120.01
			Sheet 1 of 2

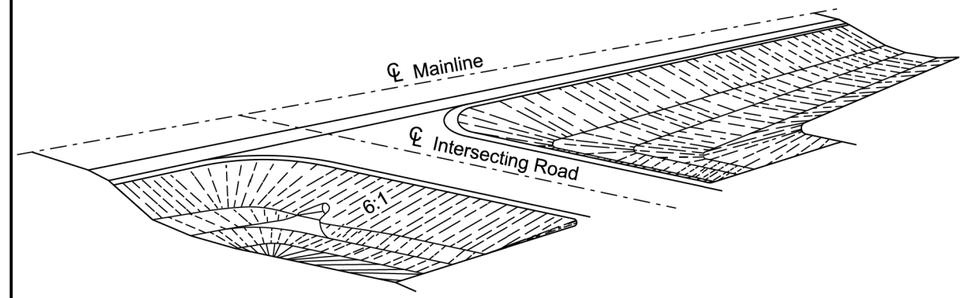

PERSPECTIVE OF INTERSECTING ROAD

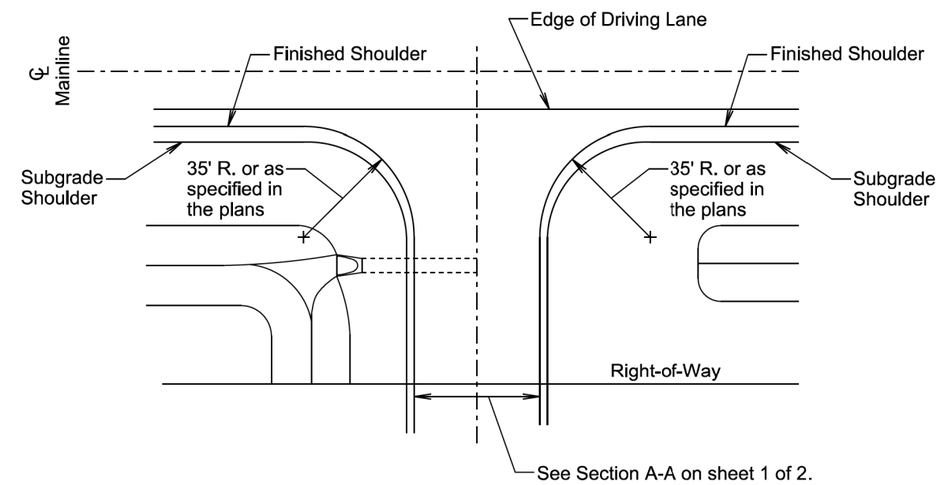

PLAN VIEW

GENERAL NOTES:

The 6:1 or 10:1 intersecting road inslope will transition to the existing intersecting road inslope near the right-of-way or at a location as determined by the Engineer.

November 19, 2021

Published Date: 2026	SDDOT	INTERSECTING ROADS AND ENTRANCES	PLATE NUMBER 120.01
			Sheet 2 of 2

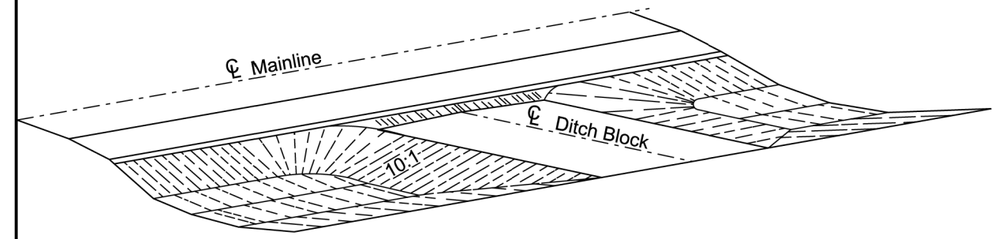

PERSPECTIVE OF DITCH BLOCK

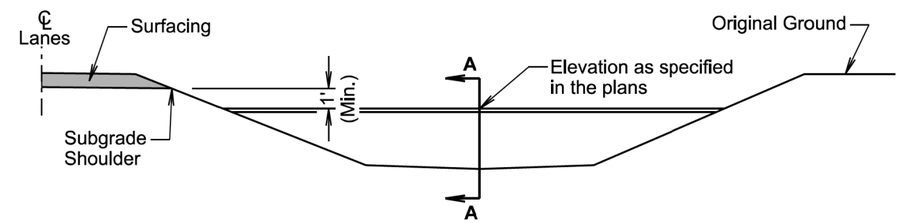

ELEVATION VIEW

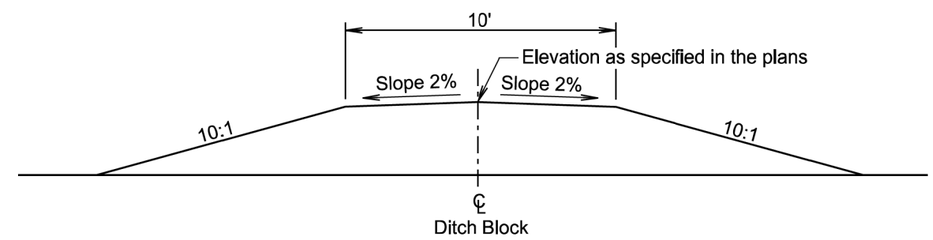

SECTION A-A

GENERAL NOTES:

The ditch section shown above in the perspective and elevation view is only for illustrative purpose.

The inslopes of the ditch block will be 10:1 or as specified in the plans.

The transition area between the mainline inslope and the ditch block inslope will be rounded to eliminate an abrupt transition.

September 14, 2018

Published Date: 2026	SDDOT	DITCH BLOCK	PLATE NUMBER 120.02
			Sheet 1 of 1

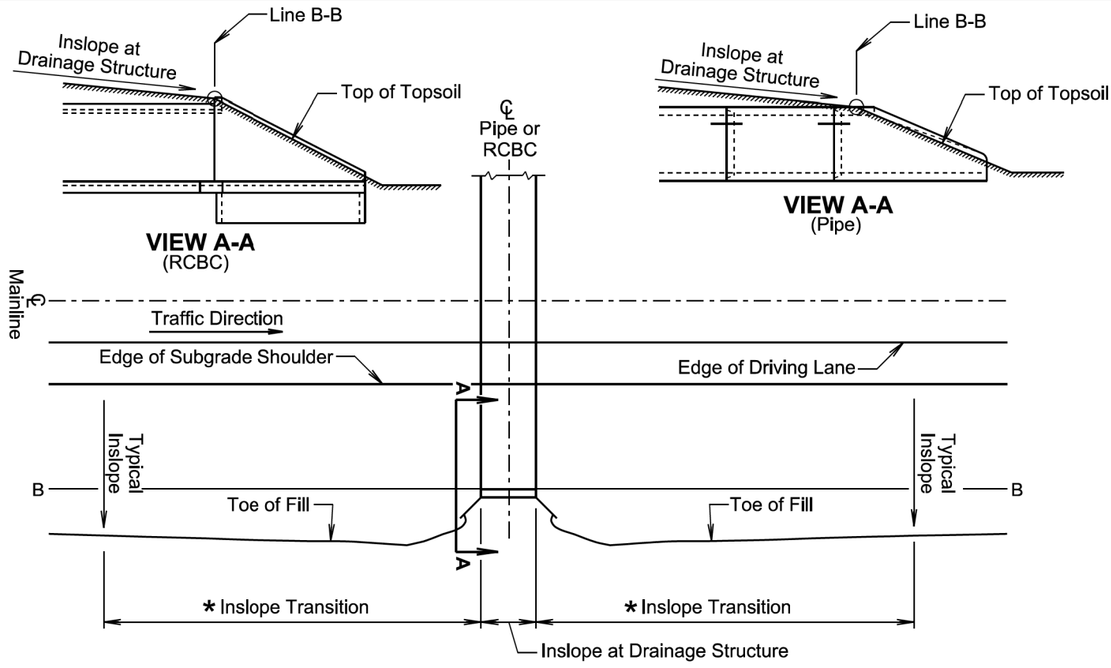

TYPE 1 INSLOPE TRANSITION

GENERAL NOTES:

This Type 1 Inslope Transition is used when the specified inslope at the drainage structure is flatter than the typical inslope and the inslope at the drainage structure is between a 4:1 slope and 6:1 slope.

Line B-B represents the clear zone line, the location where soil intercepts the parapet on an RCBC, the location where the soil intercepts the top of the pipe adjacent to the opening of the pipe end section, or may represent a change in slope.

* Transition from the typical inslope to the inslope at the drainage structure. Within the clear zone (area from edge of subgrade shoulder to line B-B) use 100' length for each 1:1 slope change. Example: transition from a 4:1 to a 6:1 would require a 200' length transition. The typical inslope outside of the clear zone will be transitioned gradually to the slope necessary adjacent to the RCBC wing wall or pipe culvert end section within the transition length necessary for the transition within the clear zone.

Published Date: 2026

SDDOT

INSLOPE TRANSITIONS AT PIPE CULVERTS OR REINFORCED CONCRETE BOX CULVERTS

PLATE NUMBER 120.05

Sheet 1 of 2

September 14, 2018

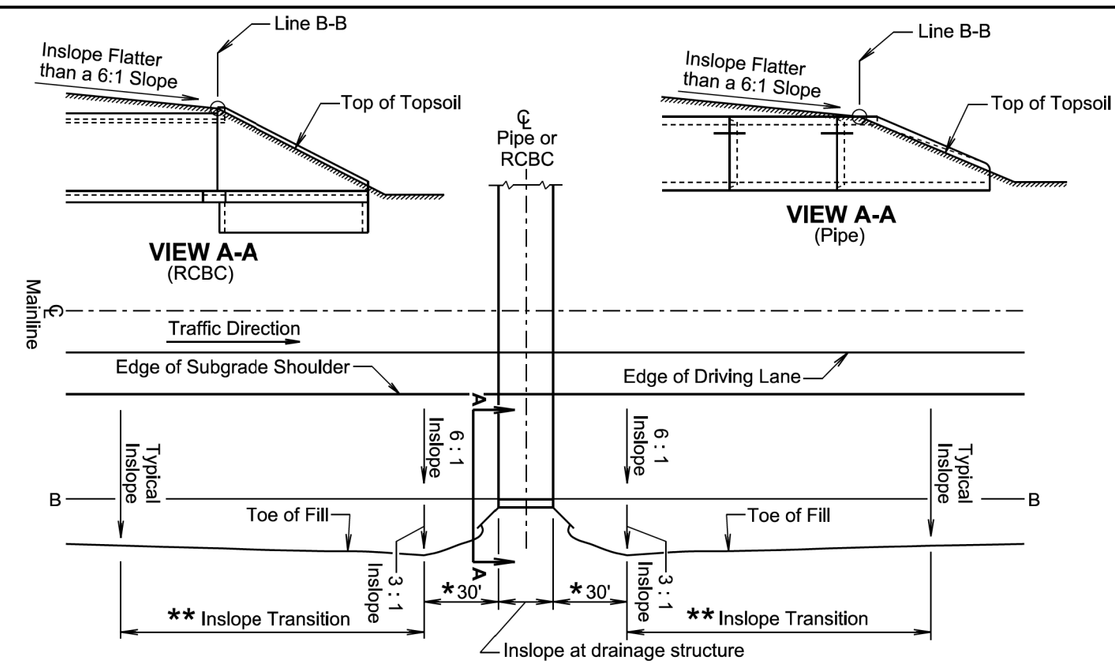

TYPE 2 INSLOPE TRANSITION

GENERAL NOTES:

This Type 2 Inslope Transition is used when the specified inslope at the pipe or RCBC is flatter than a 6:1 slope.

Line B-B represents the clear zone line, the location where soil intercepts the parapet on an RCBC, the location where the soil intercepts the top of the pipe adjacent to the opening of the pipe end section, or may represent a change in slope.

* Transition from Inslope at drainage structure to a 6 : 1 inslope and 3:1 inslope.

** Transition from typical inslope to the inslopes adjacent to the drainage structure. Within the clear zone (area from edge of subgrade shoulder to line B-B) use 100' length for each 1:1 slope change. Example: transition from a 4:1 to a 6:1 would require a 200' length transition. The typical inslope outside of the clear zone will be transitioned to a 3:1 inslope within the transition length necessary for the transition within the clear zone.

Published Date: 2026

SDDOT

INSLOPE TRANSITIONS AT PIPE CULVERTS OR REINFORCED CONCRETE BOX CULVERTS

PLATE NUMBER 120.05

Sheet 2 of 2

September 14, 2018

FOR BIDDING PURPOSES ONLY

SD DOT

Plotting Date: 7/10/2025

PROJECT EM 0292(88)73 IM 2292(104)0

Revised Date: 08/13/2025

Initials: JJB

SHEET B136

TOTAL SHEETS B182

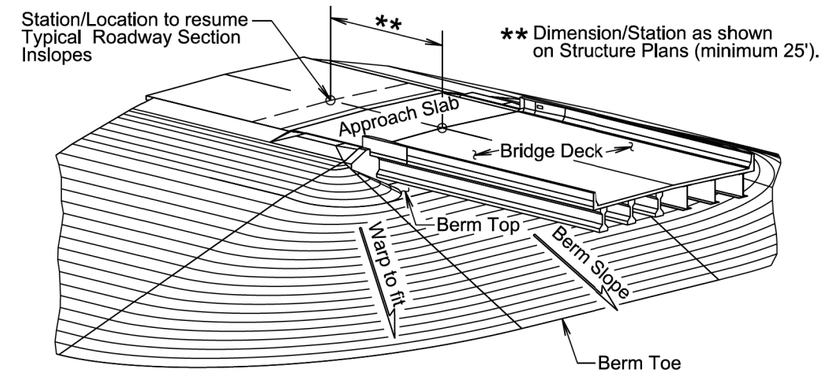

ISOMETRIC VIEW OF BRIDGE BERM
(Girder Bridge shown, others similar)

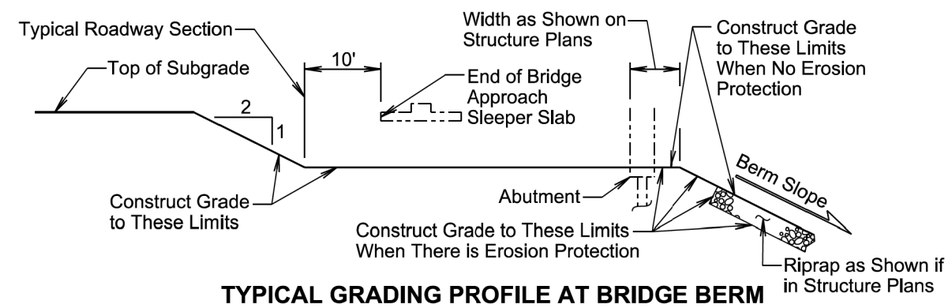

TYPICAL GRADING PROFILE AT BRIDGE BERM
(Normal to ℄ Abutment at ℄ Roadway)

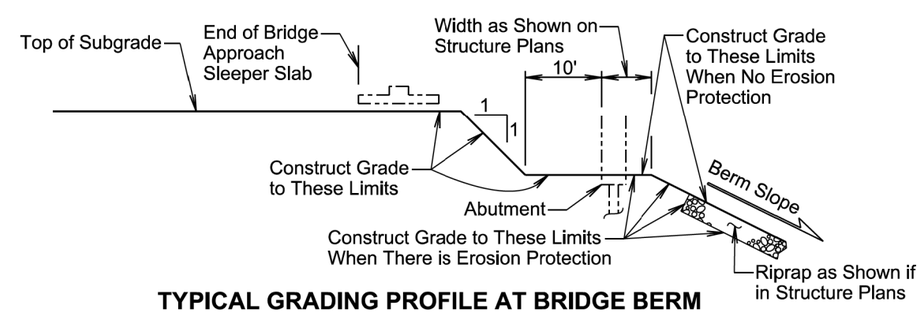

TYPICAL GRADING PROFILE AT BRIDGE BERM
(Normal to ℄ Abutment at ℄ Roadway)

GENERAL NOTES:

The bridge berm elevation and slope will be as shown in the Structure Plans.
See Structure Plans to determine which grading profile to use.

January 22, 2021

Published Date: 2026	SDDOT	***BRIDGE BERM (PROJECTING EMBANKMENT)***	*PLATE NUMBER* 120.11 *Sheet 1 of 1*

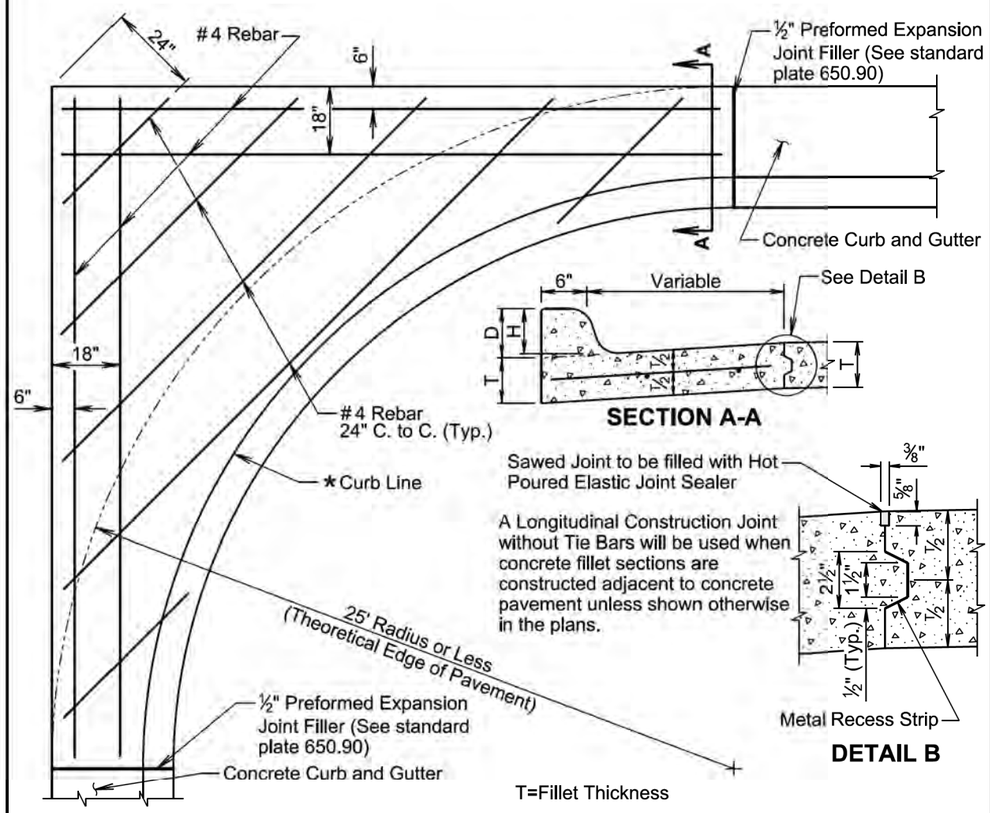

* If a curb ramp is constructed adjacent to a PCC fillet section, the curb will need to be modified. Refer to the corresponding curb ramp standard plate or other special details in the plans for modification of the PCC fillet section.

March 31, 2024

Published Date: 2026	SDDOT	PCC FILLET SECTION WITH TYPE B CURB AND GUTTER	PLATE NUMBER 380.30
			Sheet 1 of 2

GENERAL NOTES:

For fillets with irregular shapes or bump outs:

1) The 6" and 18" offset #4 rebar will be included on any side next to pavement or driveways (not along the Curb and Gutter).

2) All remaining area will have #4 rebar spaced 24" center to center in a square pattern.

Dimensions D, H, and T will conform to those shown on the appropriate curb and gutter standard plate.

All rebar will be in conformance with Sections 480 and 1010 of the Specifications. All rebar will have a minimum of 3 inches of clear cover.

Class M6 Concrete will be used in construction of the fillets.

The concrete curb will be monolithic with the concrete fillet. No separate payment for this curb will be made as the curb is considered a part of the fillet.

Joints will be constructed at 10-foot intervals except when fillets are constructed adjacent to PCC Pavement. If there is adjacent PCC Pavement the joints will be extended from edge of pavement through the fillet section as directed by the Engineer.

The cost for all materials, labor, and incidentals necessary to construct the PCC fillet section with curb and gutter will be incidental to the contract unit price per square yard for the corresponding PCC fillet section contract item.

March 31, 2024

Published Date: 2026	SDDOT	PCC FILLET SECTION WITH TYPE B CURB AND GUTTER	PLATE NUMBER 380.30
			Sheet 2 of 2

TOLERANCES IN DIMENSIONS

Diameter: ±1.5% for 24" Dia. or less and ±1% or 3/8" whichever is more for 27" Dia. or greater.
Diameters at joints: ± 3/16" for 30" Dia. or less and ± 1/4" for 36" or greater.
Length of joint (j): ± 1/4".
Wall thickness (T): not less than design T by more than 5% or 3/16", whichever is greater.
Laying length: shall not underrun by more than 1/2".

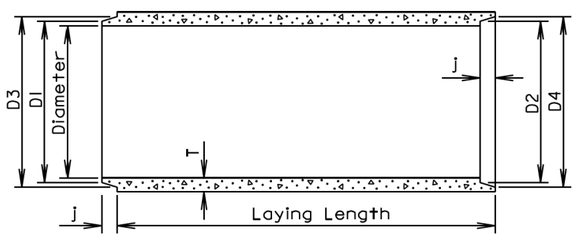

LONGITUDINAL SECTION

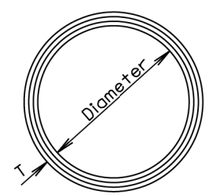

END VIEW

GENERAL NOTES:

Construction of R. C. P. shall conform to the requirements of Section 990 of the Specifications.

Not more than 2 four-foot sections shall be permitted near the ends of any culvert. Four-foot lengths shall be used only to secure the required length of culvert.

Diam. (in.)	Approx. Wt./Ft. (lb.)	T (in.)	J (in.)	D1 (in.)	D2 (in.)	D3 (in.)	D4 (in.)
12	92	2	1 3/4	13 1/4	13 5/8	13 7/8	14 1/4
15	127	2 1/4	2	16 1/2	16 7/8	17 1/4	17 5/8
18	168	2 1/2	2 1/4	19 5/8	20	20 3/8	20 3/4
21	214	2 3/4	2 1/2	22 7/8	23 1/4	23 3/4	24 1/8
24	265	3	2 3/4	26	26 3/8	27	27 3/8
27	322	3 1/4	3	29 1/4	29 5/8	30 1/4	30 5/8
30	384	3 1/2	3 1/4	32 3/8	32 3/4	33 1/2	33 7/8
36	524	4	3 3/4	38 3/4	39 1/4	40	40 1/2
42	685	4 1/2	4	45 1/8	45 5/8	46 1/2	47
48	867	5	4 1/2	51 1/2	52	53	53 1/2
54	1070	5 1/2	4 1/2	57 7/8	58 3/8	59 3/8	59 7/8
60	1296	6	5	64 1/4	64 3/4	66	66 1/2
66	1542	6 1/2	5 1/2	70 5/8	71 1/8	72 1/2	73
72	1810	7	6	77	77 1/2	79	79 1/2
78	2098	7 1/2	6 1/2	83 3/8	83 7/8	85 5/8	86 1/8
84	2410	8	7	89 3/4	90 1/4	92 1/8	92 5/8
90	2740	8 1/2	7	95 3/4	96 1/4	98 1/8	98 5/8
96	2950	9	7	102 1/8	102 5/8	104 1/2	105
102	3075	9 1/2	7 1/2	109	109 1/2	111 1/2	112
108	3870	10	7 1/2	115 1/2	116	118	118 1/2

June 26, 2015

Published Date: 2026 | SDDOT | REINFORCED CONCRETE PIPE | PLATE NUMBER 450.01 | Sheet 1 of 1

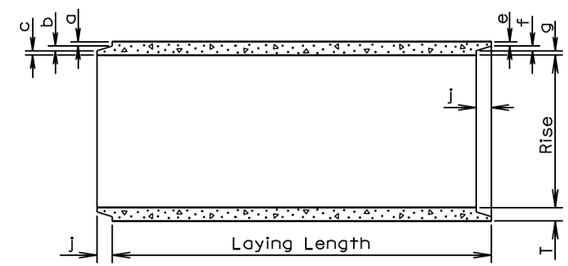

LONGITUDINAL SECTION

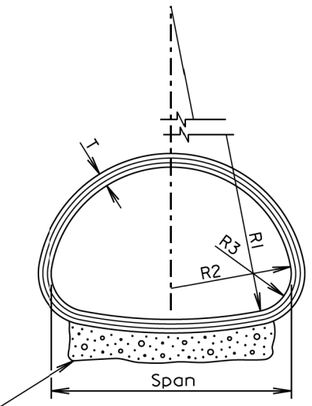

END VIEW

TOLERANCES IN DIMENSIONS

Radial dimensions at joints: ± 1/8" for 65" span or less and ± 1/4" for longer spans.
Rise and Span: ±2% of tabular values.
Length of Joint (J): ± 1/4".
Wall thickness (T): not less than design T by more than 5% or 3/16", whichever is greater.
Laying length: shall not underrun by more than 1/2".

Gravel Bedding Material shall be supplied for 102" to 169" spans. It shall be placed to a thickness of 6" (Min.) x 85% of the Span x Length of culvert and shall conform to the gradation requirements for gravel surfacing except material may be screened or may be plan provided material.

* Size (in.)	Approx. Wt./Ft. (lb.)	Rise (in.)	Span (in.)	T (in.)	a (in.)	b (in.)	c (in.)	j (in.)	e (in.)	f (in.)	g (in.)	R1 (in.)	R2 (in.)	R3 (in.)
18	170	13 1/2	22	2 1/2	1 3/8	3/8	3/4	2	1 1/8	3/8	1	27 1/2	13 3/4	5 1/4
24	320	18	28 1/2	3 1/2	1 5/8	1/2	1 3/8	3	1 3/8	1/2	1 5/8	40 11/16	14 3/4	4 5/8
30	450	22 1/2	36 1/4	4	1 13/16	5/8	1 9/16	3 1/2	1 9/16	5/8	1 13/16	51	18 3/4	6 1/8
36	600	26 5/8	43 3/4	4 1/2	2	3/4	1 3/4	4	1 3/4	3/4	2	62	22 1/2	6 1/2
42	740	31 5/16	51 1/8	4 1/2	2	3/4	1 3/4	4	1 3/4	3/4	2	73	26 1/4	7 3/4
48	890	36	58 1/2	5	2 1/4	3/4	2	5	2	3/4	2 1/4	84	30	8 7/8
54	1100	40	65	5 1/2	2 1/2	3/4	2 1/4	5	2 1/4	3/4	2 1/2	92 1/2	33 3/8	10
60	1400	45	73 1/2	6	3 5/16	3/4	1 15/16	5	2 3/4	3/4	2 1/2	105	37 1/2	11
72	1900	54	88	7	3 13/16	1	2 3/16	6	3 1/4	1	2 3/4	126	45	13 5/16
84	2500	62	102	8	4 1/8	1	2 7/8	6	3 1/2	1	3 1/2	162 1/2	52	14 1/2
96	3300	78	122 3/8	9	4 1/2	1	3 1/2	7	4	1	4	218	62	20
108	4200	88	138 1/2	10	5	1	4	7	4 1/2	1	4 1/2	269	70	22
120	5100	96 7/8	154	11	5 1/2	1	4 1/2	7	5	1	5	301 3/8	78	24
132	5100	106 1/2	168 3/4	10		1	4	7	4 1/2	1	4 1/2	329	85 5/8	26 7/8

* Equivalent Diameter of Circular R. C. P.

GENERAL NOTES:

Construction of R.C.P. Arch shall conform to the requirements of Section 990 of the Specifications. Not more than 2 four-foot sections shall be permitted near the ends of any culvert. Four-foot lengths shall be used only to secure the required length of culvert.

June 26, 2015

Published Date: 2026 | SDDOT | REINFORCED CONCRETE PIPE ARCH | PLATE NUMBER 450.02 | Sheet 1 of 1

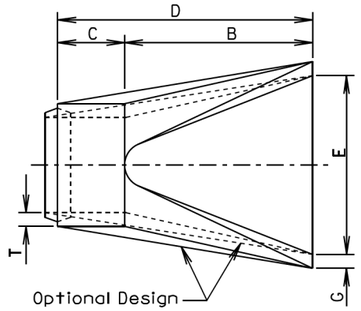

TOP VIEW

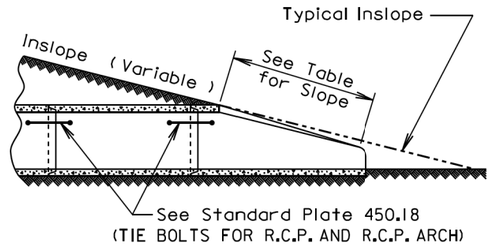

SLOPE DETAIL

GENERAL NOTES:

Lengths of concrete pipe shown on plan sheets are between flared ends only.

Construction of R.C.P. Flared End shall conform to the requirements of Section 990 of the Specifications.

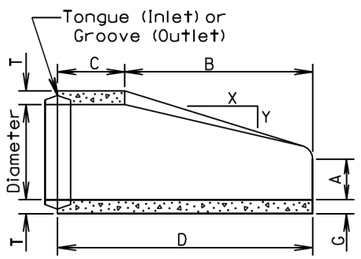

LONGITUDINAL SECTION

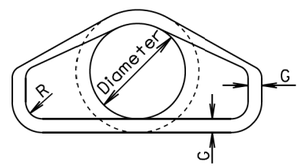

END VIEW

Dia. (in.)	Approx. Wt. of Section (lbs.)	Approx. Slope (X to Y)	T (in.)	A (in.)	B (in.)	C (in.)	D (in.)	E (in.)	G (in.)	R (in.)
12	530	2.4:1	2	4	24	48 7/8	72 7/8	24	2	1 1/2
15	740	2.4:1	2 1/4	6	27	46	73	30	2 1/4	1 1/2
18	990	2.3:1	2 1/2	9	27	46	73	36	2 1/2	1 1/2
21	1280	2.4:1	2 3/4	9	36	37 1/2	73 1/2	42	2 3/4	1 1/2
24	1520	2.5:1	3	9 1/2	43 1/2	30	73 1/2	48	3	1 1/2
27	1930	2.5:1	3 1/4	10 1/2	49 1/2	24	73 1/2	54	3 1/4	1 1/2
30	2190	2.5:1	3 1/2	12	54	19 3/4	73 3/4	60	3 1/2	1 1/2
36	4100	2.5:1	4	15	63	34 3/4	97 3/4	72	4	1 1/2
42	5380	2.5:1	4 1/2	21	63	35	98	78	4 1/2	1 1/2
48	6550	2.5:1	5	24	72	26	98	84	5	1 1/2
54	8240	2:1	5 1/2	27	65	33 1/4	98 1/4	90	5 1/2	1 1/2
60	8730	1.9:1	6	35	60	39	99	96	5	1 1/2
66	10710	1.7:1	6 1/2	30	72	27	99	102	5 1/2	1 1/2
72	12520	1.8:1	7	36	78	21	99	108	6	1 1/2
78	14770	1.8:1	7 1/2	36	90	21	111	114	6 1/2	1 1/2
84	18160	1.6:1	8	36	90 1/2	21	111 1/2	120	6 1/2	1 1/2
90	20900	1.5:1	8 1/2	41	87 1/2	24	111 1/2	132	6 1/2	6

June 26, 2015

Published Date: 2026 | SDDOT | R. C. P. FLARED ENDS | PLATE NUMBER 450.10 | Sheet 1 of 1

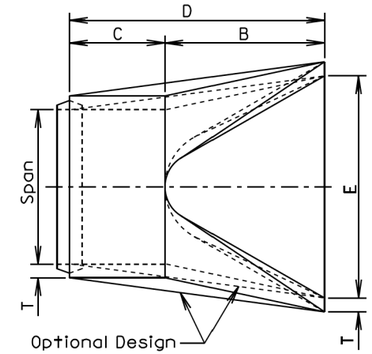

TOP VIEW

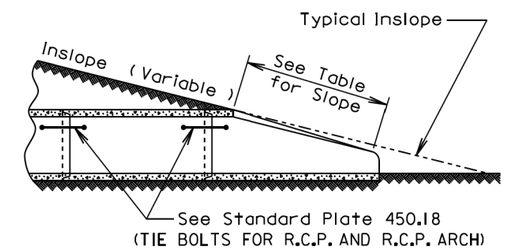

SLOPE DETAIL

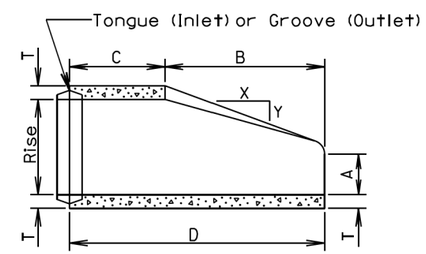

LONGITUDINAL SECTION

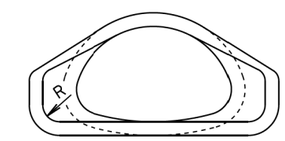

END VIEW

GENERAL NOTES:

Lengths of concrete pipe shown on plan sheets are between flared ends only.

Construction of R.C.P. Arch Flared End shall conform to the requirements of Section 990 of the Specifications.

* Size (in.)	Approximate Weight of Section (lbs.)	Rise (in.)	Span (in.)	Slope (X:Y)	T (in.)	A (in.)	B (in.)	C (in.)	D (in.)	E (in.)	R (in.)
18	1100	13 1/2	22	3:1	2 1/2	7	27	45	72	36	2
24	1750	18	28 1/2	3:1	3 1/2	8 1/2	39	33	72	48	3
30	3300	22 1/2	36 1/4	3:1	4	9 1/2	50	46	96	60	3
36	4350	26 5/8	43 3/4	3:1	4 1/2	11 1/8	60	36	96	72	6
42	5250	31 5/16	51 1/8	3:1	4 1/2	15 13/16	60	36	96	78	6
48	6400	36	58 1/2	3:1	5	21	60	36	96	84	6
54	7850	40	65	3:1	5 1/2	25 1/2	60	36	96	90	6
60	9500	45	73 1/2	3:1	6	31	60	36	96	96	6
72	13550	54	88	2:1	7	31	60	39	99	120	6
84	17950	62	102	2:1	8	28 1/2	83	19	102	144	6

*Equivalent Diameter of Circular R.C.P.

June 26, 2015

Published Date: 2026 | SDDOT | R. C. P. ARCH FLARED ENDS | PLATE NUMBER 450.11 | Sheet 1 of 1

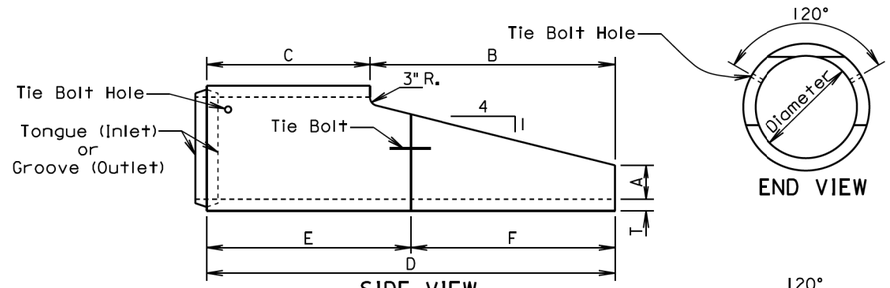

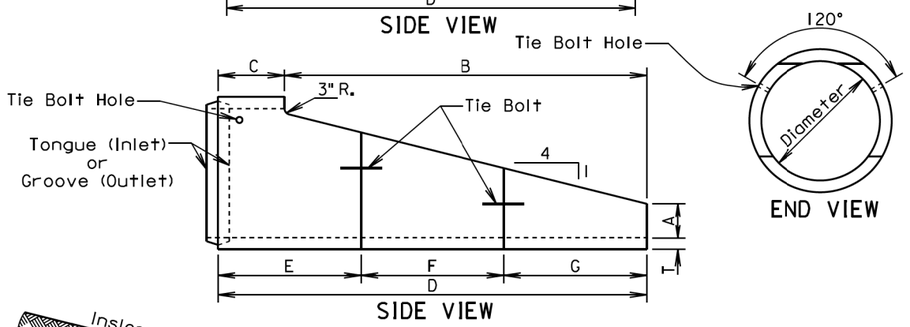

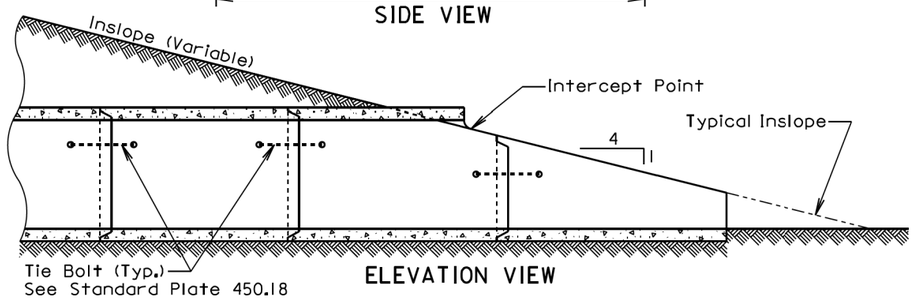

Dia. (in.)	T (in.)	A (in.)	B (in.)	C (in.)	D (in.)	E (in.)	F (in.)	G (in.)
36	4	12	86.5	57.5	144	72	72	
42	4.5	12	110.5	33.5	144	72	72	
48	5	12	134.5	33.5	168	96	72	
54	5.5	12	158.5	33.5	192	96	96	
60	6	12	182.5	33.5	216	72	72	72

GENERAL NOTE:

The length of concrete pipe shown in the construction plans is between sloped ends.

If bars are specified in the plans, then the bar assemblies shall be constructed in accordance with Standard Plate 450.15.

August 31, 2013

Published Date: 2026 | SDDOT | R. C. P. SLOPED ENDS WITH OR WITHOUT BARS | PLATE NUMBER 450.14 | Sheet 1 of 1

Wall "t" (in.)	Rod Dia. (in.)	Pipe Sleeve Dia. (nominal)
≤ 3¼	⅝	¾
3½-6½	¾	1
≥ 7	1	1¼

GENERAL NOTES:

Tie bolts will conform to ASTM F1554, Grade 36 or ASTM A36. Nuts will be heavy hex conforming to ASTM A563. Washers will conform to ASTM F436.

Pipe Sleeve will conform to ASTM A53, Grade B or ASTM A500, Grade B or C.

Galvanize adjustable eye bolt tie assembly in accordance with ASTM A153.

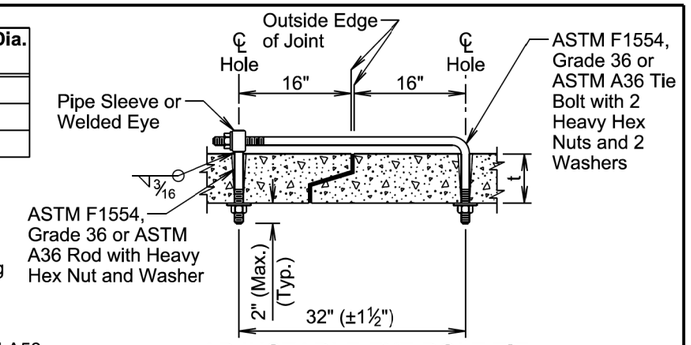

ADJUSTABLE EYE BOLT TIE

Pipe Dia. (in.)	"L" (in.)	Bolt Dia. (in.)
≤ 48	4	¾
> 48	6	1

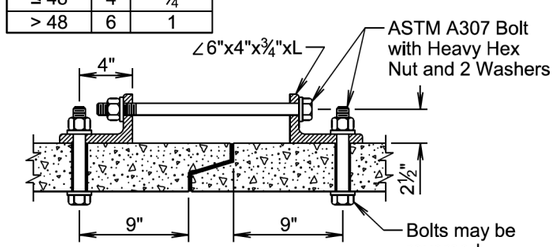

ANGLE AND BOLT TIE

GENERAL NOTES:

Angles will conform to ASTM A36.

Bolts will conform to ASTM A307. Nuts will be heavy hex conforming to ASTM A563. Washers will conform to ASTM F436.

Galvanize angles, bolts, nuts, and washers in accordance with ASTM A153.

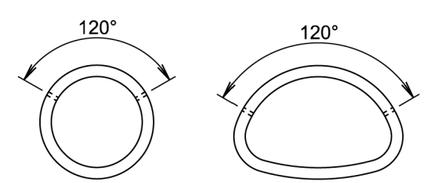

END VIEW (Circular) END VIEW (Arch)

GENERAL NOTES:

In lieu of the tie bolts detailed above other types of tie bolt connections may be installed as approved by the Office of Bridge Design.

All pipe sections of R.C.P. and R.C.P. Arch will be tied with tie bolts except for pipe located between drop inlets, manholes, and junction boxes. All pipe sections of pipes that only enter or exit drop inlets, manholes, and junction boxes will be tied with tie bolts.

There will be no separate measurement or payment for the tie bolts. The cost for furnishing and installing the tie bolts will be incidental to the contract unit price per foot for the corresponding bid item for R.C.P. or R.C.P. Arch.

April 8, 2025

Published Date: 2026 | SDDOT | TIE BOLTS FOR R.C.P. AND R.C.P. ARCH | PLATE NUMBER 450.18 | Sheet 1 of 1

	2⅔" x ½" CORRUGATIONS			3" X 1" CORRUGATIONS		
* Dia. (in.)	S Span (in.)	H Rise (in.)	Area (Sq. Ft.)	S Span (in.)	H Rise (in.)	Area (Sq. Ft.)
15	17	13	1.1			
18	21	15	1.6			
21	24	18	2.2			
24	28	20	2.8			
30	35	24	4.4			
36	42	29	6.4	40	31	7.0
42	49	33	8.7	46	36	9.4
48	57	38	11.4	53	41	12.3
54	64	43	14.3	60	46	15.6
60	71	47	17.6	66	51	19.3
66	77	52	21.3	73	55	23.2
72	83	57	25.3	81	59	27.4
78				87	63	32.1
84				95	67	37.0
90				103	71	42.4
96				112	75	48.0
102				117	79	54.2
108				128	83	60.8
114				137	87	67.4
120				142	91	74.5

* Equivalent diameter of circular C.M.P.

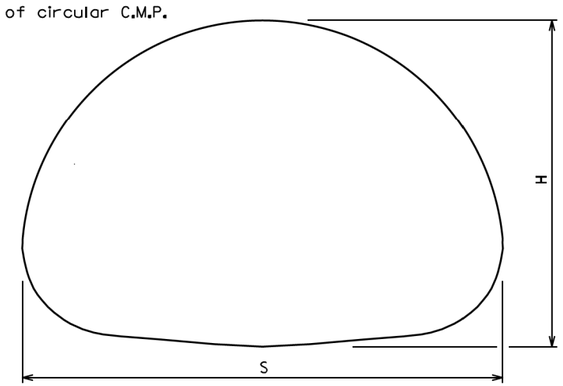

GENERAL NOTE:
All dimensions measured from inside crest.

March 31, 2000

Published Date: 2026

SDDOT

CORRUGATED METAL PIPE ARCH CULVERT

PLATE NUMBER 450.30

Sheet 1 of 1

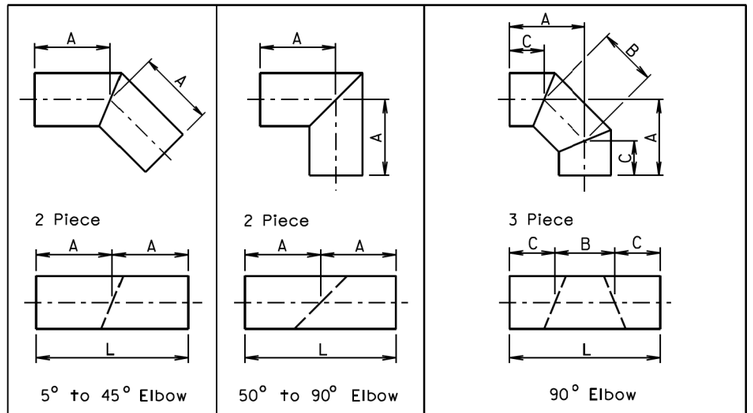

Diameter	A	L	Diameter	A	L	Diameter	A	B	C	L
Inches	Feet	Feet	Inches	Feet	Feet	Inches	Inches			Feet
12	1	2	12	2	4	12	25½	11	18½	4
15	1	2	15	2	4	15	26½	12	18	4
18	1	2	18	2	4	18	27	14	17	4
21	2	4	21	2	4	21	27	15	16½	4
24	2	4	24	2	4	24	27½	16	16	4
27	2	4	27	2	4	27	27½	17	15½	4
30	2	4	30	3	6	30	40	19	26½	6
33	2	4	33	3	6	33	40	20	26	6
36	2	4	36	3	6	36	40½	21	25½	6
42	2	4	42	3	6	42	41	23	24½	6
48	2	4	48	4	8	48	53½	26	35	8
54	3	6	54	4	8	54	54	28	34	8
60	3	6	60	4	8	60	54½	31	32½	8
66	3	6	66	4	8	66	54	33	31½	8
72	3	6	72	5	10	72	67½	36	42	10
78	3	6	78	5	10	78	68	39	40½	10
84	3	6	84	5	10	84	68½	41	39½	10
90	3	6	90	6	12	90	70	46	37	10
96	3	6	96	6	12	96	82	46	49	12

FABRICATED ELBOW LENGTHS FOR ALL CORRUGATIONS

GENERAL NOTES:
All dimensions shown are nominal.
L = Linear Feet of C.M.P. required to fabricate fitting.

June 26, 2001

Published Date: 2026

SDDOT

C.M.P. FABRICATED LENGTHS FOR ELBOWS

PLATE NUMBER 450.32

Sheet 1 of 1

Alternate Type Connector Sections may be used with approval of the Engineer.

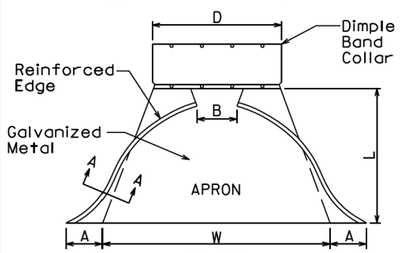

PLAN

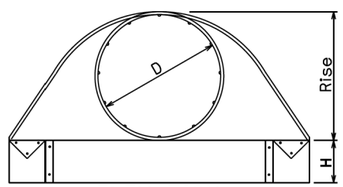

ELEVATION

Dia. D (in.)	Ga.	DIMENSIONS (in.) A	B	H	L	W	Approx. Slope	Body
12	16	6	6	6	21	24	2½:1	1 Pc.
15	16	7	8	6	26	30	2½:1	1 Pc.
18	16	8	10	6	31	36	2½:1	1 Pc.
21	16	9	12	6	36	42	2½:1	1 Pc.
24	16	10	13	6	41	48	2½:1	1 Pc.
30	14	12	16	8	46	60	2½:1	1 Pc.
36	14	14	19	9	51	72	2½:1	2 Pc.
42	12	16	22	11	60	84	2½:1	2 Pc.
48	12	18	27	12	69	90	2¼:1	2 Pc.
54	12	18	30	12	78	102	2:1	3 Pc.
60	12	18	33	12	84	114	1¾:1	3 Pc.
66	12	18	36	12	87	120	1½:1	3 Pc.
72	12	18	39	12	87	126	1⅓:1	3 Pc.
78	12	18	42	12	87	132	1¼:1	3 Pc.
84	12	18	45	12	87	138	1⅙:1	3 Pc.

STANDARD CONNECTIONS

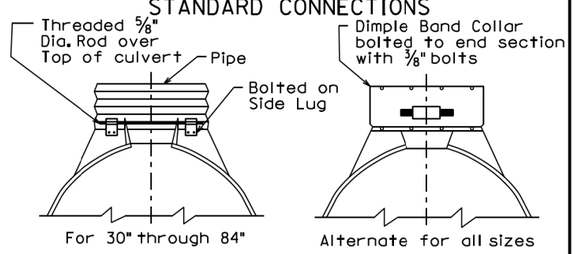

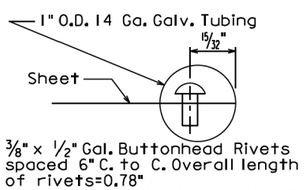

TUBING ATTACHMENT DETAILS
SECTION A-A

NOTE:
Tubing is slipped over the sheet and rivets or lugs prior to forming operations of the apron.

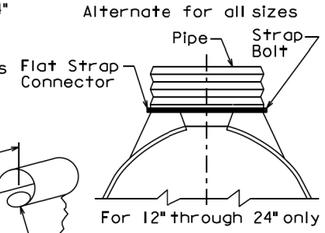

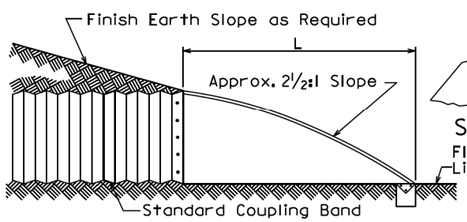

TYPICAL CROSS-SECTION

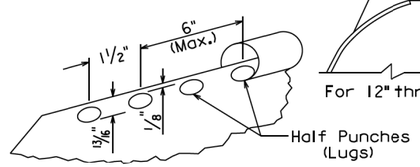

SECTION A-A (alternate)

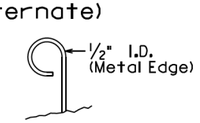

SECTION A-A (alternate)

GENERAL NOTES:

All 3 pc. bodies shall have 12 Ga. sides and 10 Ga. center panels. Width of center panels shall be greater than 20% of the pipe periphery. Multiple panel bodies to have lap seams tightly joined by ⅜" Dia. galvanized rivets or bolts.

For 60" through 84" sizes, reinforced edges shall be supplemented with galvanized stiffener angles. The angles will be 2" x 2" x ¼" for 60" through 72" diameters and 2½" x 2½" x ¼" for 78" and 84" diameters. The angles shall be attached by ⅜" diameter galvanized nuts and bolts.

Rivets and Bolts shall be ⅜" Dia. Min. for 10 Ga. and 12 Ga. sheet, and ⅝" Dia. Min. for 14 Ga. and 16 Ga. sheets. Tighten nuts with torque wrench to 25 lbs. torque.

March 31, 2000

Published Date: 2026	SDDOT	C.M.P. FLARED ENDS	PLATE NUMBER 450.35 Sheet 1 of 1

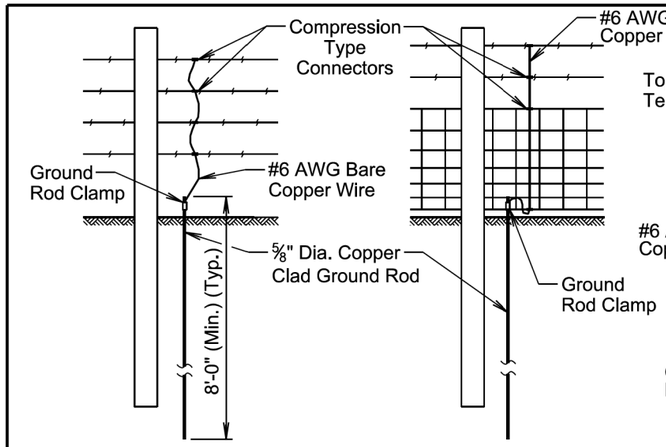

BARBED WIRE FENCE **WOVEN WIRE FENCE**

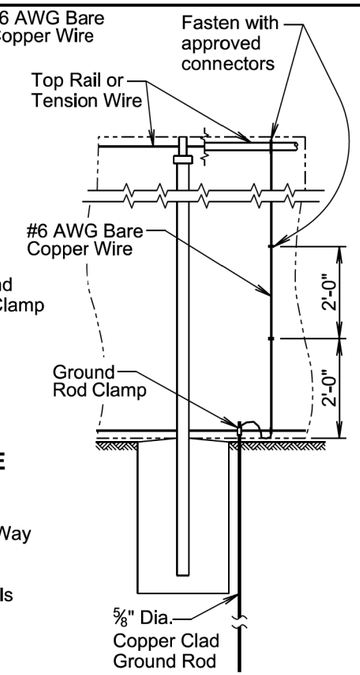

CHAIN LINK FENCE

GENERAL NOTES:

Details shown on this standard plate will apply to all types of Right-of-Way fence constructed with all wood posts or chain link fence.

Continuous fence in urban areas will be grounded at maximum intervals of 500 feet. Continuous fence in rural areas will be grounded at maximum intervals of 1000 feet. There will be a ground at a maximum of 100 feet from a gate in each adjacent section of fence.

Fence placed under a power line will be grounded with three grounds. One ground will be placed directly below the crossing and the other two will be placed 25 feet to 50 feet away, one on each side.

One ground will be placed directly below each telephone or cable crossing.

Ground rods will be located on the post side of the fence and will be as close as possible to the post and fence.

The cost of furnishing and placing all materials for grounding will be incidental to the contract unit price per foot for the respective Right-of-Way fence or chain link fence contract item.

The approximate quantites of materials per each installation of a ground are:

1 ground rod clamp.
1 ⅝" diameter x 8' long copper clad ground rod
1 #6 AWG bare copper wire; 7' long for Right-of-Way fence or 10' long for chain link fence.

Compression type or other type of connectors:
26" woven wire will have a total of two connectors, one secured to the top and one secured to the bottom.
32" woven wire will have a total of three connectors, one secured to the top, one secured to the middle, and one secured to the bottom.
One connector will be used for each strand of barbed wire.
A minimum of 3 connectors will be installed on chain link fence, the connectors will be placed vertically at every 2-foot increment and connectors will be placed on the top and bottom tension wires or top rail.

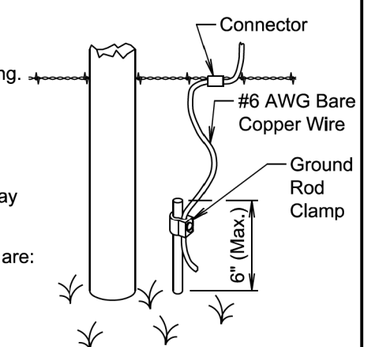

GROUND ROD DETAIL

June 26, 2019

Published Date: 2026	SDDOT	FENCE GROUNDING	PLATE NUMBER 620.11 Sheet 1 of 1

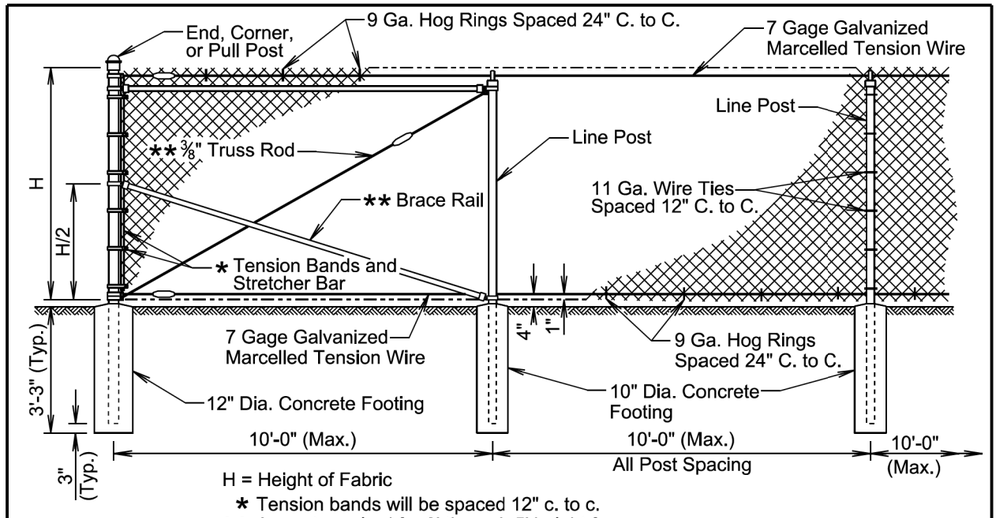

H = Height of Fabric

* Tension bands will be spaced 12" c. to c.

** Are not required for 3' through 5' height fences.

⬭ Tightening device such as shown on standard plate 621.03

COMPONENT	END, CORNER, and PULL POST		LINE POST			BRACE RAIL	
Type of Fabrication	Round Pipe Nominal	Roll Formed Steel	Round Pipe Nominal	"C" Section	H Beam Steel	Round Pipe Nominal	Roll Formed Steel
Size	3.00" O. D.	3.5"x3.5"	2.50" O. D.	1.875"x1.625"	2.25"x1.70"	1.625" O. D.	1.625"x1.25"
Weight (lb. / Ft.)	5.79 or 4.64	5.14	3.65 or 3.12	2.34	3.43	2.27 or 1.84	1.35

GENERAL NOTES:

Specific details of the component parts of the fence will be approved by the Engineer. Commercially available items produced specifically for the use intended will be used wherever possible in the construction of the fence.

Height of the fabric will be as shown in the plans. Fabric is available at the following heights: 36", 42", 48", 60", 72", 84", 96", 108", 120", and 144". Fabric heights 60 inches and less will be knuckled at both selvages. Fabric heights 72 inches and higher will be knuckled at one selvage and twisted at the other selvage.

Chain link fabric will be 2-inch mesh, No. 9 gage galvanized wire securely fastened to tension wire, line post, rails, braces, and stretcher bars.

Fence may be constructed with either round pipe, "C" section, "H" beam, or roll formed steel components as shown in the table above. Line posts may be round pipe, "C" section, or "H" beam. The corner post and rails will be either round pipe or roll formed steel. The type of components used must be approved by the Engineer prior to installation.

All posts will have a means to securely hold the top tension wire in position and allow for the removal and replacement of a post without damaging the top tension wire.

Where fence must cross small bodies of water such as drainage areas or ponds that could freeze during the winter, use 11 gage hog rings. Provide only two ties per tension wire between line posts.

Fence grounding will be as shown on standard plate 620.11.

November 19, 2022

Published Date: 2026	SDDOT	CHAIN LINK FENCE WITH TENSION WIRED TOP	PLATE NUMBER 621.02
			Sheet 1 of 1

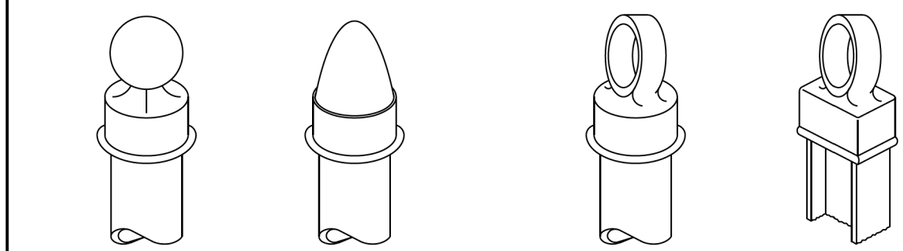

TYPICAL POST TOPS
(Shown for example only)

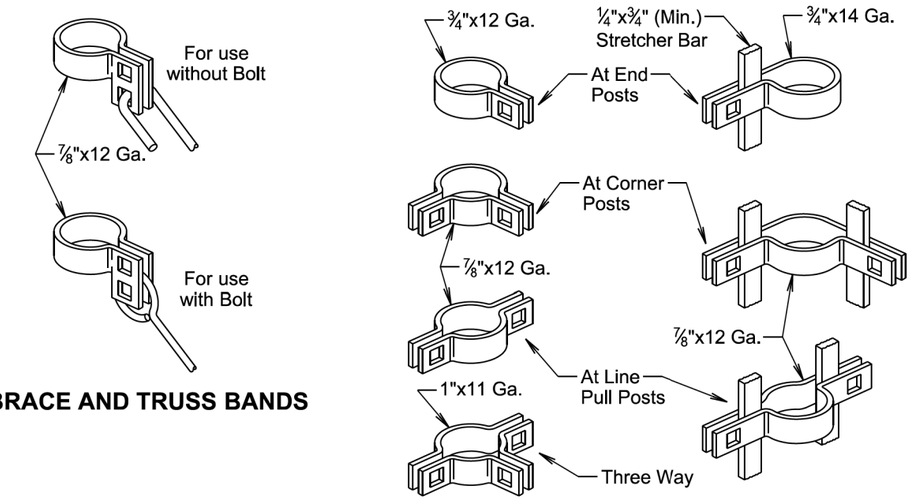

BRACE AND TRUSS BANDS

BRACE BANDS **TENSION BANDS**
(Bands will be rectangular for "C" Section and "H" Beam Posts.)

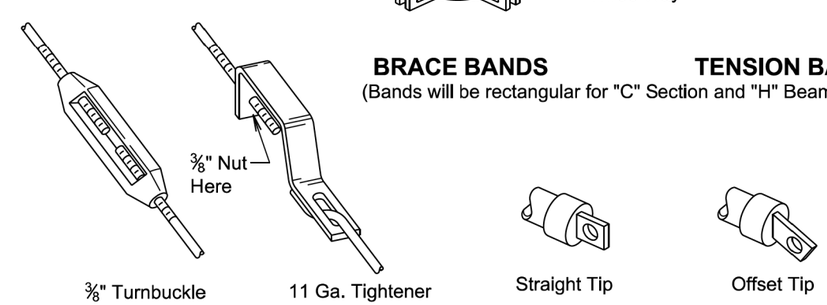

TIGHTENING DEVICES **RAIL ENDS**

June 26, 2019

Published Date: 2026	SDDOT	HARDWARE FOR CHAIN LINK FENCE	PLATE NUMBER 621.03
			Sheet 1 of 1

Pay Limits for One-Way Traffic Roadways
Valtir (Trinity) System

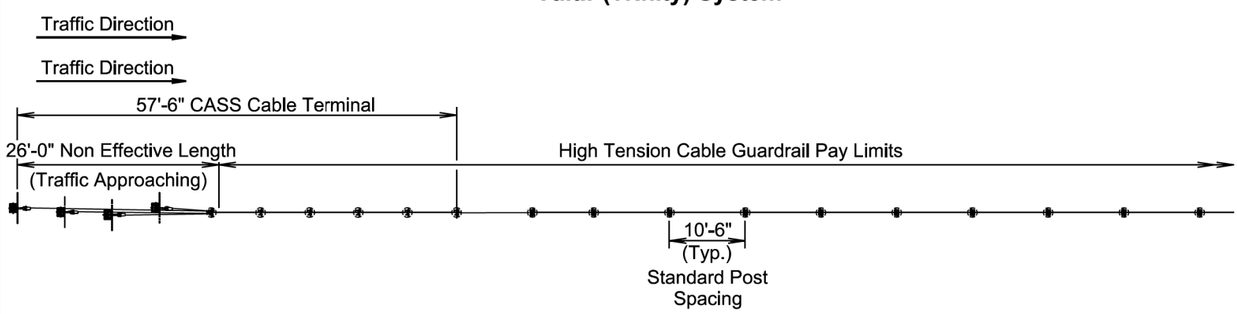

GENERAL NOTES:

Valtir (Trinity) CASS Cable Terminal has a total length of 57'-6". On one-way traffic roadways, it has 31'-6" effective length on the approach end of the terminal and 6'-6" effective length on the non-approach (departure) end. On two-way traffic roadways, it has 31'-6" effective length on both the approach and the non-approach ends of the terminal.

The High Tension Cable Guardrail pay limits will be the length of need (LON) or the effective length.

The High Tension Cable Guardrail Anchor Assembly pay limits will be the non-effective length of the terminal.

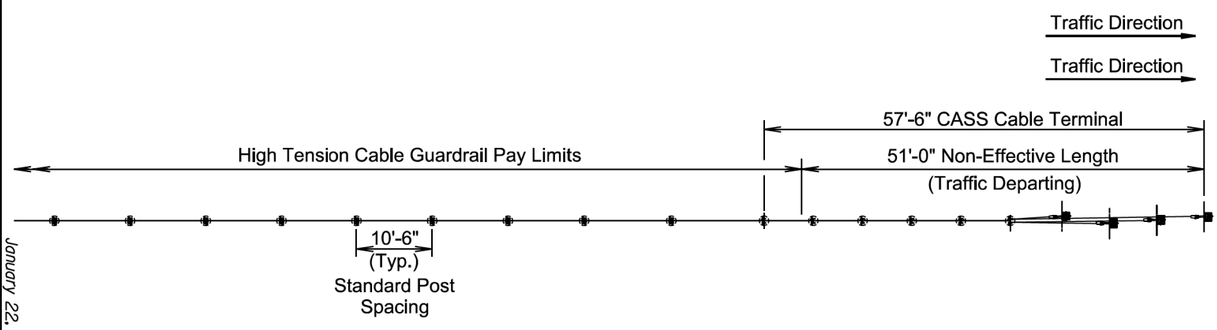

Published Date: 2026

SDDOT

HIGH TENSION CABLE GUARDRAIL

PLATE NUMBER 629.50

Sheet 1 of 3

January 22, 2023

Pay Limits for Two-Way Traffic Roadways
Valtir (Trinity) System

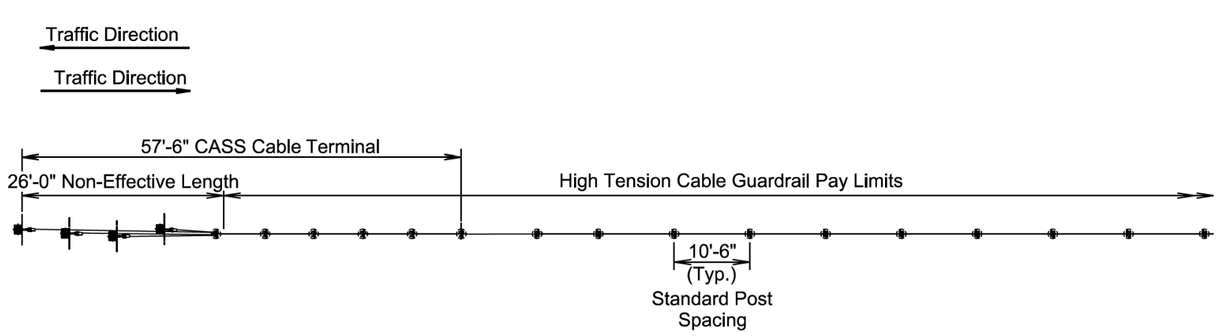

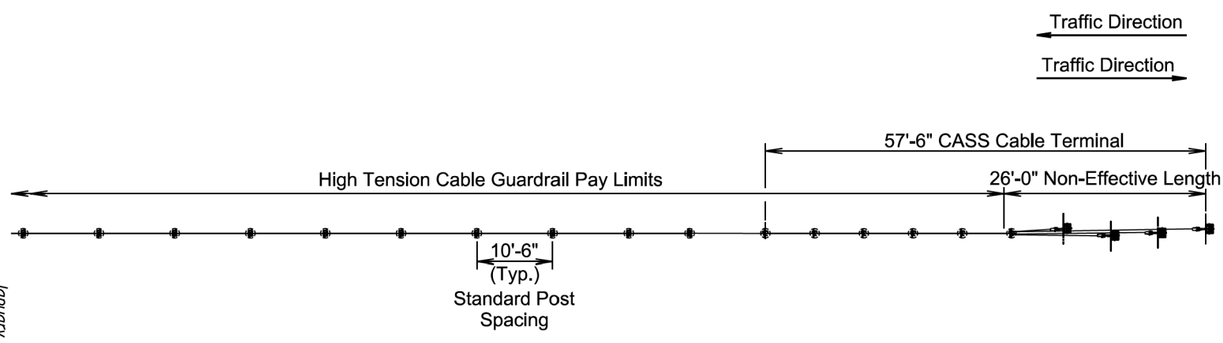

Published Date: 2026

SDDOT

HIGH TENSION CABLE GUARDRAIL

PLATE NUMBER 629.50

Sheet 2 of 3

January 22, 2023

FOR BIDDING PURPOSES ONLY

SD DOT

Plotting Date: 7/10/2025

Revised Date: 08/13/2025

Initials: JJB

PROJECT	SHEET	TOTAL SHEETS
EM 0292(88)73 IM 2292(104)0	B145	B182

Pay Limits for One-Way and Two-Way Traffic Roadway
Brifen System

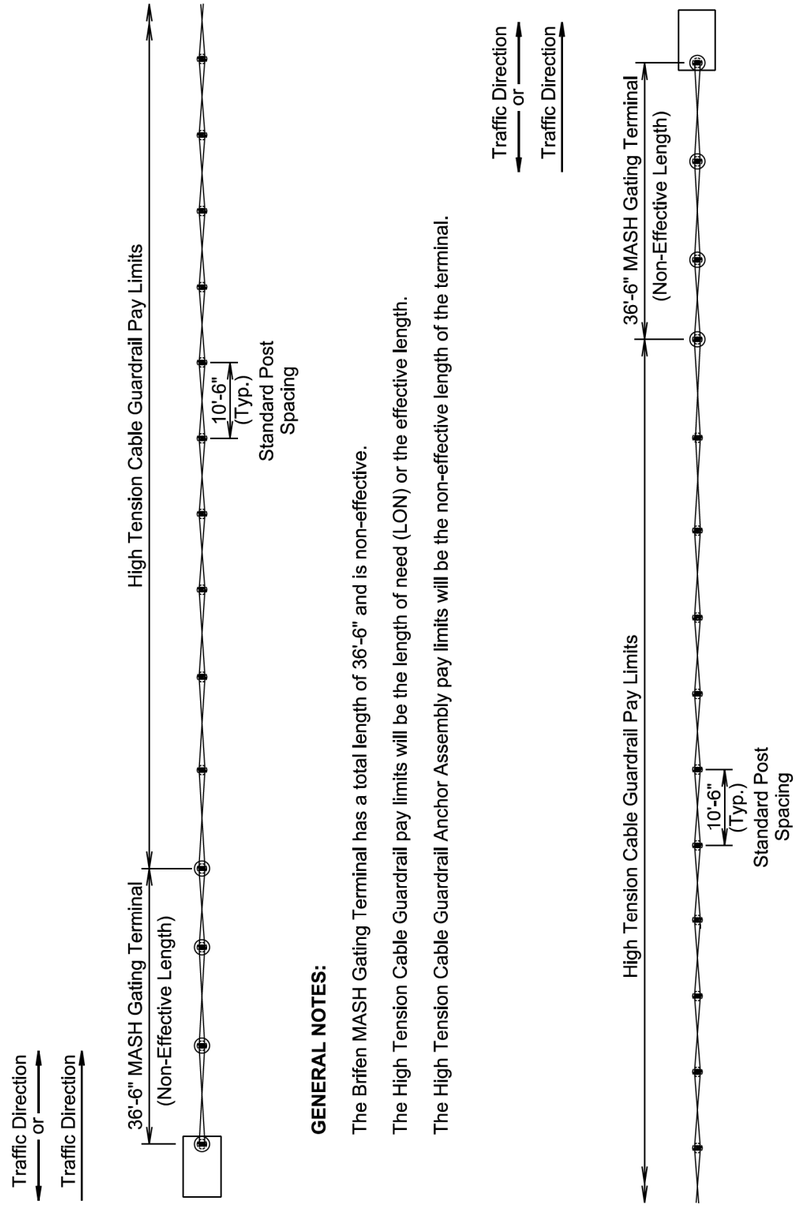

GENERAL NOTES:

The Brifen MASH Gating Terminal has a total length of 36'-6" and is non-effective.

The High Tension Cable Guardrail pay limits will be the length of need (LON) or the effective length.

The High Tension Cable Guardrail Anchor Assembly pay limits will be the non-effective length of the terminal.

January 22, 2023

Published Date: 2026	SDDOT	HIGH TENSION CABLE GUARDRAIL	PLATE NUMBER 629.50
			Sheet 3 of 3

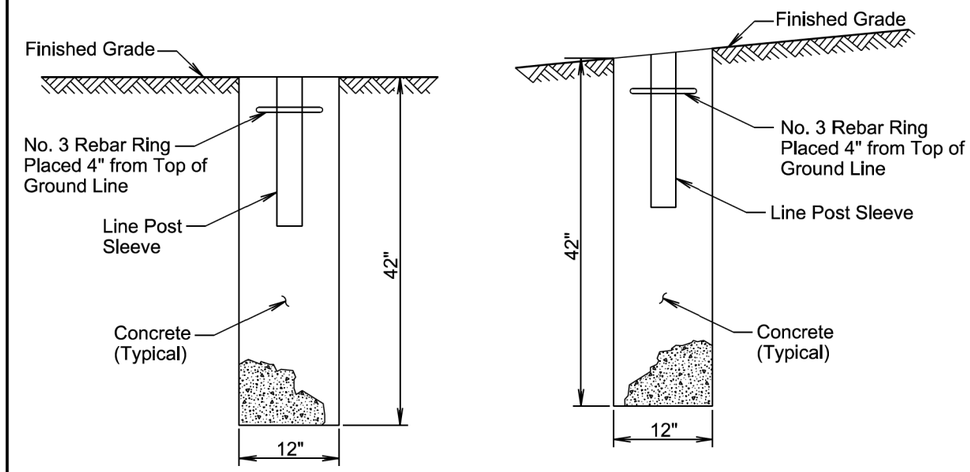

Line Post Concrete Footing on Slopes 10:1 or Flatter

Line Post Concrete Footing on Slopes from 4:1 to 10:1

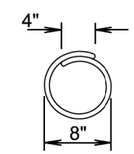

No. 3 Rebar Ring

GENERAL NOTES:

The line post sleeve will be furnished by the manufacturer.

The concrete for the post footing will be either Class M6 or a bagged mix conforming to ASTM C387 that is air entrained with a minimum 28 day compressive strength of 4,000 psi. To reduce the risk of frost heaving, the concrete at the top cannot be wider than the concrete in the lower footing.

All costs for materials, labor, equipment, and incidentals necessary to install the high tension cable guardrail line post footings will be incidental to the contract unit price per foot for "High Tension 3 Cable Guardrail" or "High Tension 4 Cable Guardrail".

March 31, 2024

Published Date: 2026	SDDOT	HIGH TENSION CABLE GUARDRAIL LINE POST CONCRETE FOOTING	PLATE NUMBER 629.60
			Sheet 1 of 1

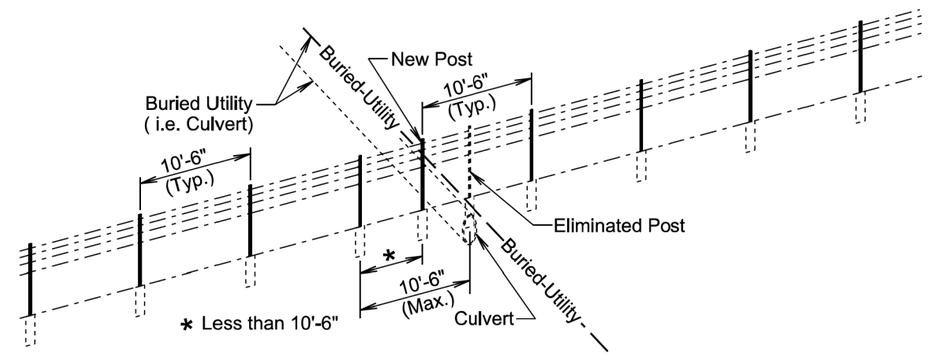

POST SPACING AT UTILITY CROSSING

GENERAL NOTES:

The post spacing may be modified to avoid utility conflicts; however, the post spacing will not exceed 10'-6".

All costs for materials, labor, equipment, and incidentals necessary to install the high tension cable guardrail at an utility crossing will be incidental to the contract unit price per foot for "High Tension 3 Cable Guardrail" or "High Tension 4 Cable Guardrail".

March 31, 2024

Published Date: 2026	SDDOT	HIGH TENSION CABLE GUARDRAIL UTILITY CROSSING	PLATE NUMBER 629.70 Sheet 1 of 1

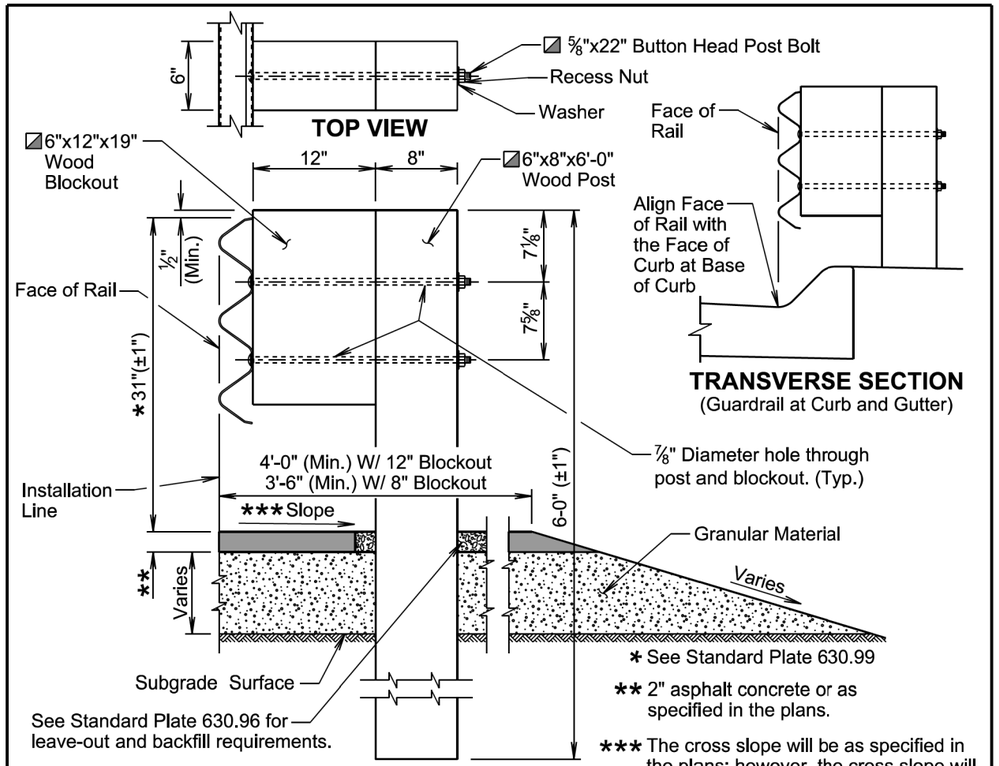

* See Standard Plate 630.99

** 2" asphalt concrete or as specified in the plans.

*** The cross slope will be as specified in the plans; however, the cross slope will not be steeper than a 10:1 slope.

GENERAL NOTES:

Asphalt concrete will be the same type used elsewhere on the project or will be as specified in the plans. If asphalt concrete is not specified in the plans, the asphalt concrete will conform to the Specifications for "Asphalt Concrete Composite."

Granular material will be the same type used elsewhere on the project or will be as specified in the plans. If granular material type is not specified in the plans, the material will conform to the Specifications for "Base Course". The granular material will be placed the same thickness as the mainline surfacing or as specified in the plans.

Topsoil is not shown in the transverse section drawing.

◪ The post and blockout illustrated above is typical for single thrie beam guardrail. When other variations of posts and blockouts are specified on other standard plates (e.g. transitions) then the posts and blockouts will be as specified on the other standard plates or as specified in the plans.

Slots in the rails will be provided as specified in the plans and by the manufacturer. A drilled hole through the rail is not allowed as a replacement for a slot. If the Contractor must create a slot, a cutting torch or plasma cutter is not allowed. The slot edges will be smooth and free of burrs or notches.

The top of post and top of block will have a true square cut. The top of block will be a maximum of ±½ inch from the top of the post.

April 8, 2025

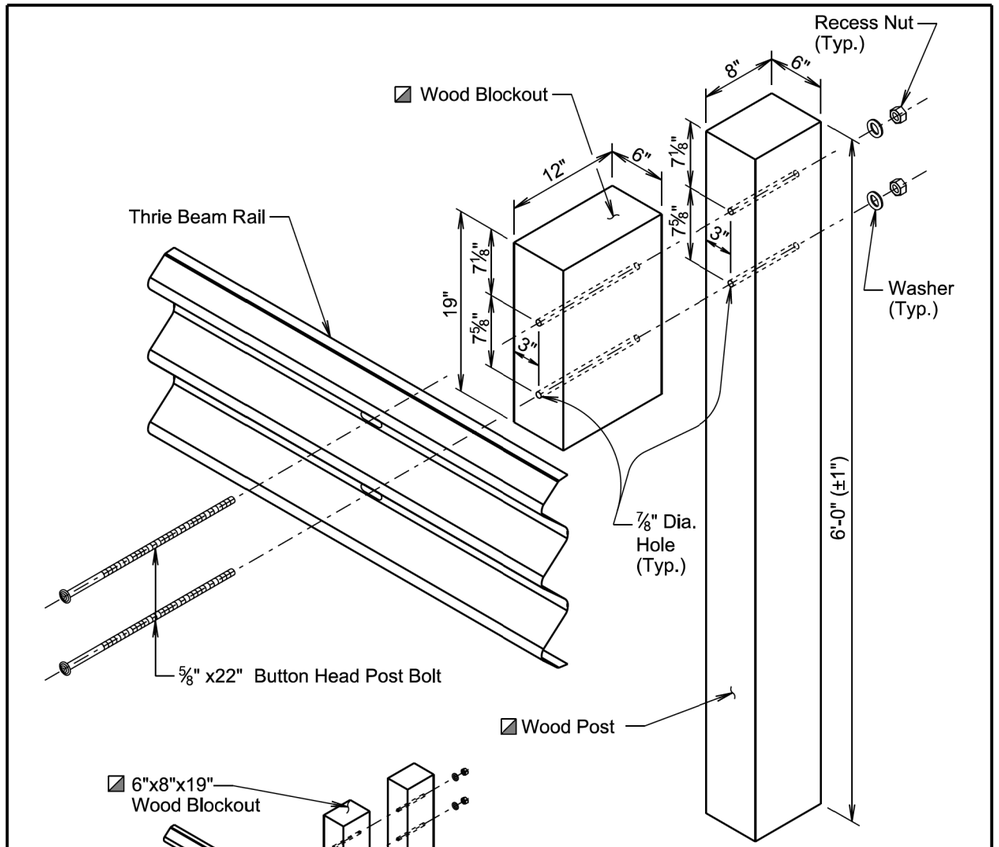

EXPANDED ISOMETRIC VIEW AT MIDSPAN OF THRIE BEAM GUARDRAIL

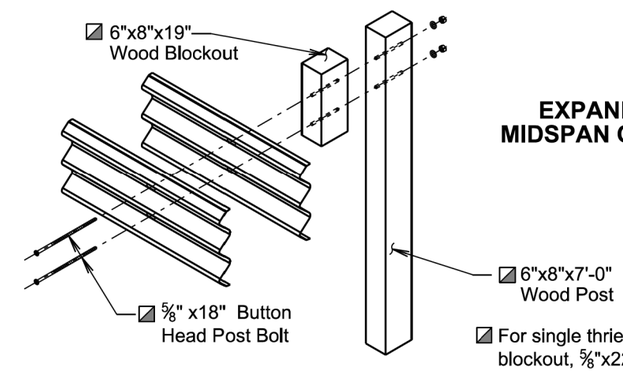

EXPANDED ISOMETRIC VIEW OF DOUBLE (NESTED) THRIE BEAM GUARDRAIL AT MIDSPAN
(For Information Only, Not to Scale)

◪ For single thrie beam guardrail use 6"x12"x19" wood blockout, ⅝"x22" button head post bolt, and 6"x8"x6'-0" wood post. For double (nested) thrie beam guardrail use 6"x8"x19" wood blockout, ⅝"x18" button head post bolt, and 6"x8"x7'-0" wood post.

April 8, 2025

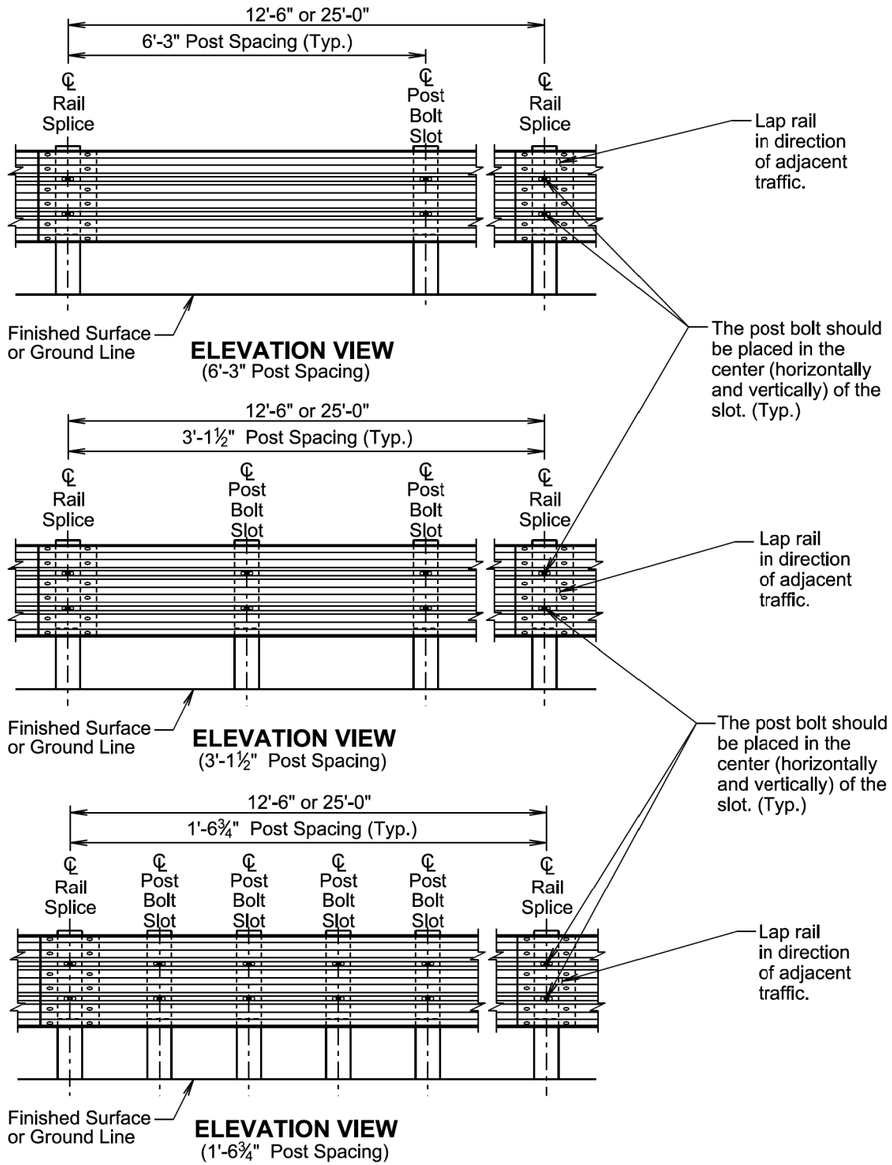

April 8, 2025

Published Date: 2026	SDDOT	THRIE BEAM GUARDRAIL	PLATE NUMBER 630.01
			Sheet 3 of 5

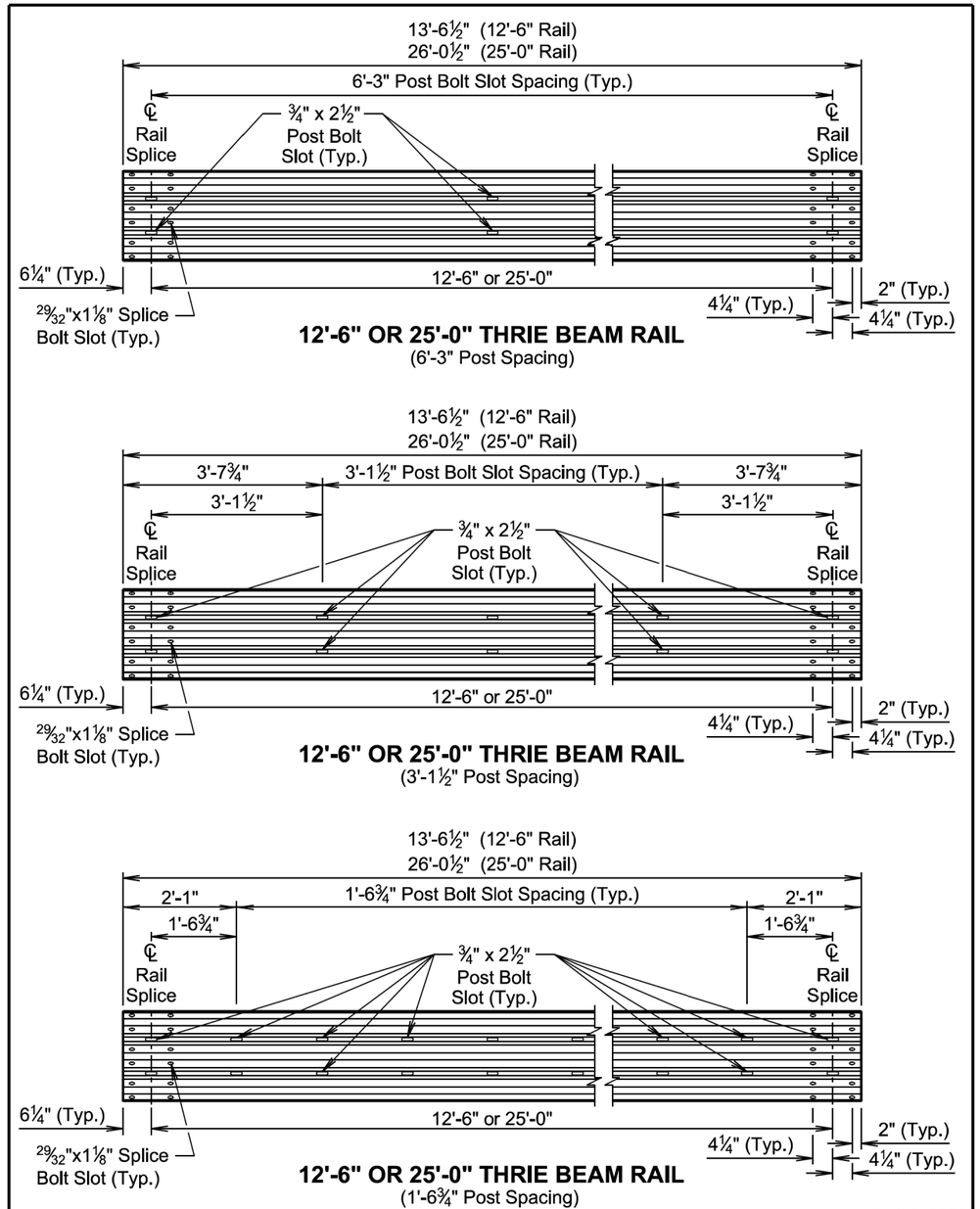

April 8, 2025

Published Date: 2026	SDDOT	THRIE BEAM GUARDRAIL	PLATE NUMBER 630.01
			Sheet 4 of 5

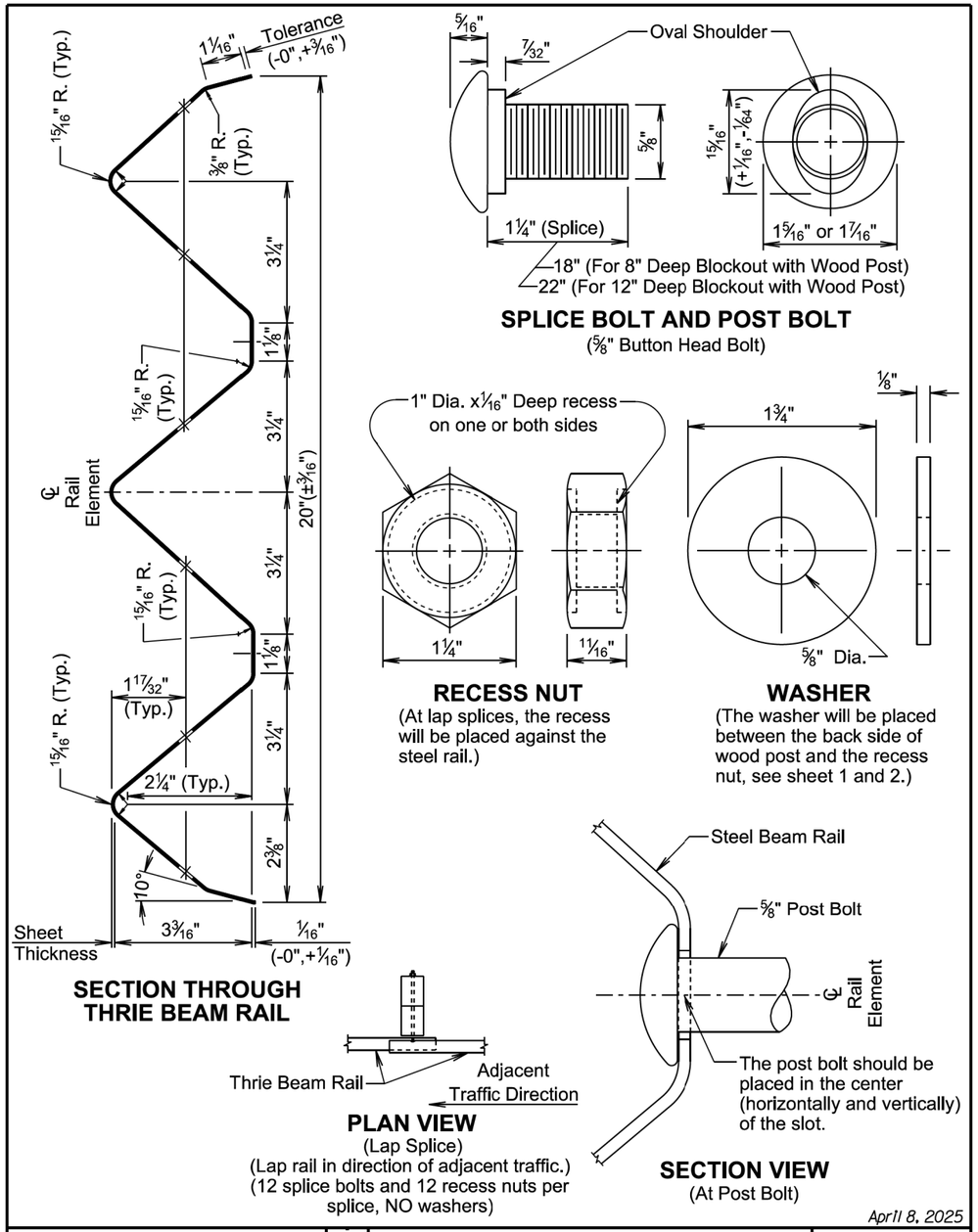

April 8, 2025

Published Date: 2026	SDDOT	THRIE BEAM GUARDRAIL	PLATE NUMBER 630.01
			Sheet 5 of 5

TYPE AND DETAILS OF MGS						
Type of MGS	W Beam Rail Single or Double (Nested)	Blockout Size	Blockout Material	Post Size	Post Material	Post Spacing
1	Single	6"x12"x14"	Wood	6"x8"x6'-0"	Wood	6'-3"
1C	Single	6"x12"x14"	Wood	6"x8"x7'-6"	Wood	6'-3"
2	Single	6"x12"x14"	Wood	6"x8"x6'-0"	Wood	3'-1½"
3	Single	6"x12"x14"	Wood	6"x8"x6'-0"	Wood	1'-6¾"
4	Double	6"x12"x14"	Wood	6"x8"x6'-0"	Wood	6'-3"

STANDARD PLATE REFERENCE	
Type of MGS	See Standard Plate(s)
1	630.20, 630.22
1C	630.20, 630.25
2	630.20
3	630.20
4	630.20

GENERAL NOTES:

Asphalt concrete will be the same type used elsewhere on the project or will be as specified in the plans. If asphalt concrete is not specified in the plans, the asphalt concrete will conform to the Specifications for "Asphalt Concrete Composite".

Granular material will be the same type used elsewhere on the project or will be as specified in the plans. If granular material type is not specified in the plans, the material will conform to the Specifications for "Base Course". The granular material will be placed the same thickness as the mainline surfacing or as specified in the plans.

Topsoil is not shown in the transverse section drawing on sheet 2 of 6.

All W beam rail will be Type 1 and Class A (12 Ga.) unless specified otherwise in the plans.

W beam rail section lengths may be 12'-6" and/or 25'-0". The combination of section lengths used will be compatible with the total length of rail per site as shown in the plans.

Slots in the rails will be provided as specified in the plans and by the manufacturer. A drilled hole through the rail is not allowed as a replacement for a slot. If the Contractor must create a slot, a cutting torch or plasma cutter is not allowed. The slot edges will be smooth and free of burrs or notches.

All costs for constructing the MGS including labor, equipment, and materials including all posts, blockouts, steel beam rail, and hardware will be incidental to the contract unit price per foot for the respective MGS contract item.

April 8, 2025

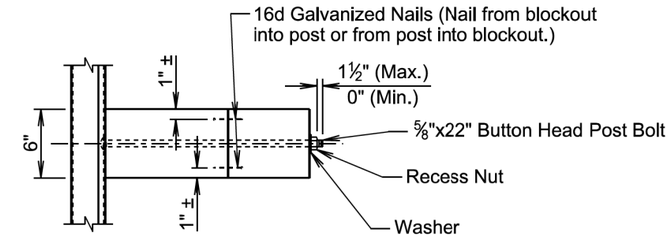

TOP VIEW
(Type 1, 2, or 3 MGS Installation)

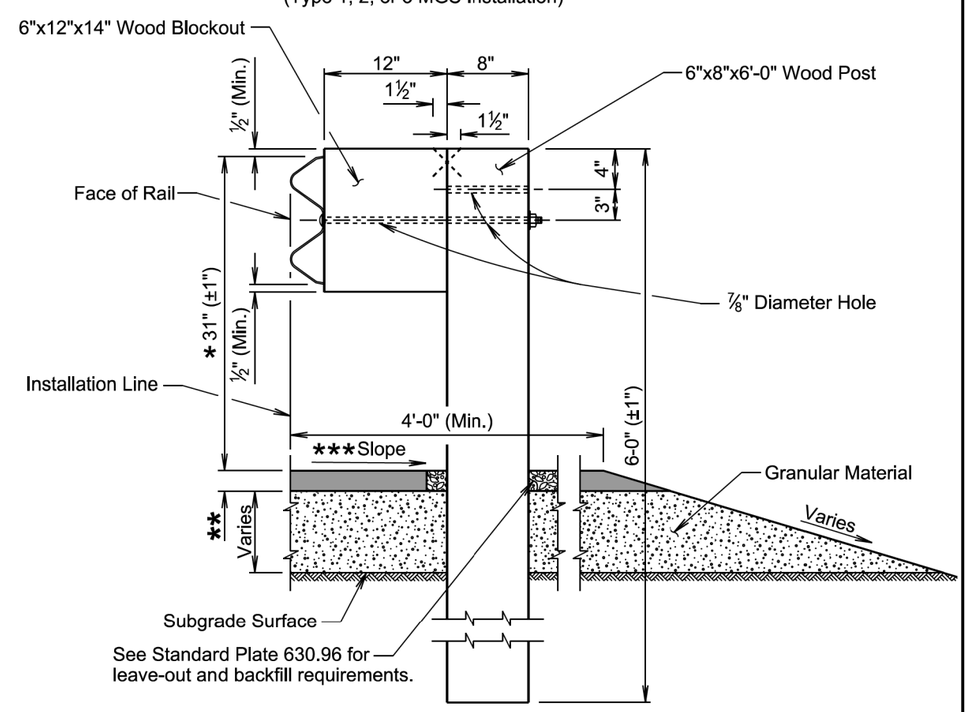

TRANSVERSE SECTION
(Type 1, 2, or 3 MGS Installation)

* See Standard Plate 630.99

** 2" asphalt concrete or as specified in the plans.

*** The cross slope will be as specified in the plans; however, the cross slope will not be steeper than a 10:1 slope.

April 8, 2025

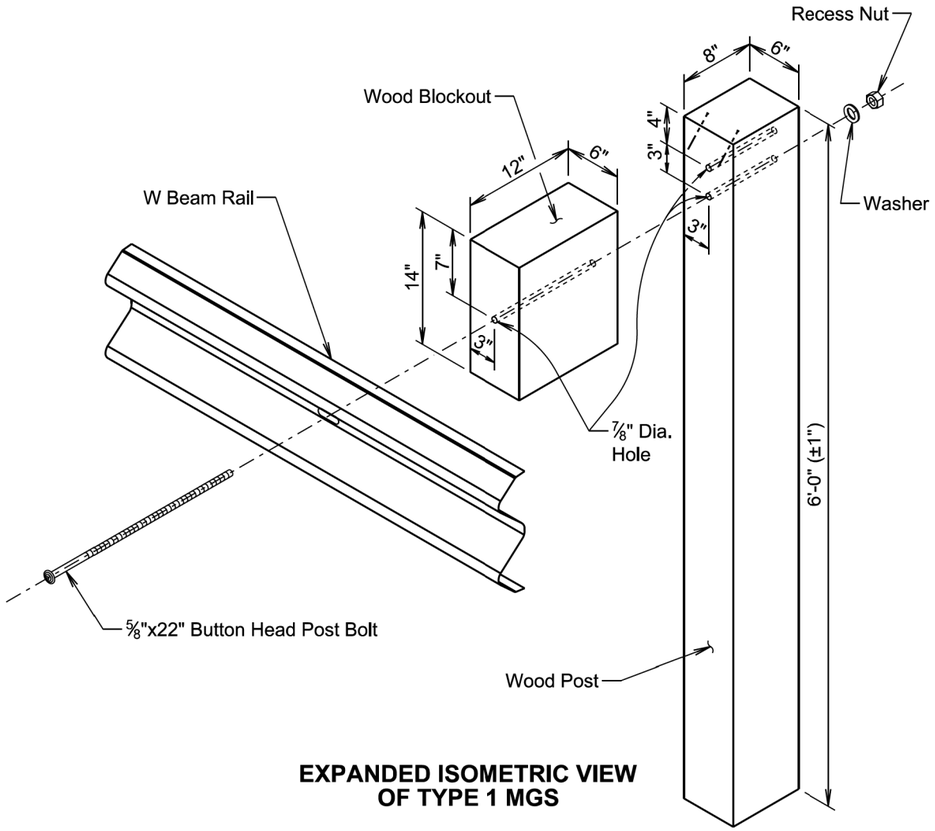

EXPANDED ISOMETRIC VIEW OF TYPE 1 MGS

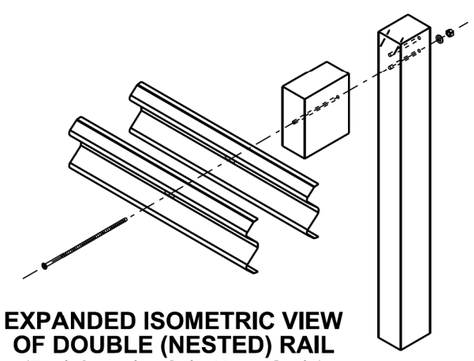

EXPANDED ISOMETRIC VIEW OF DOUBLE (NESTED) RAIL
(For Information Only, Not to Scale)

April 8, 2025

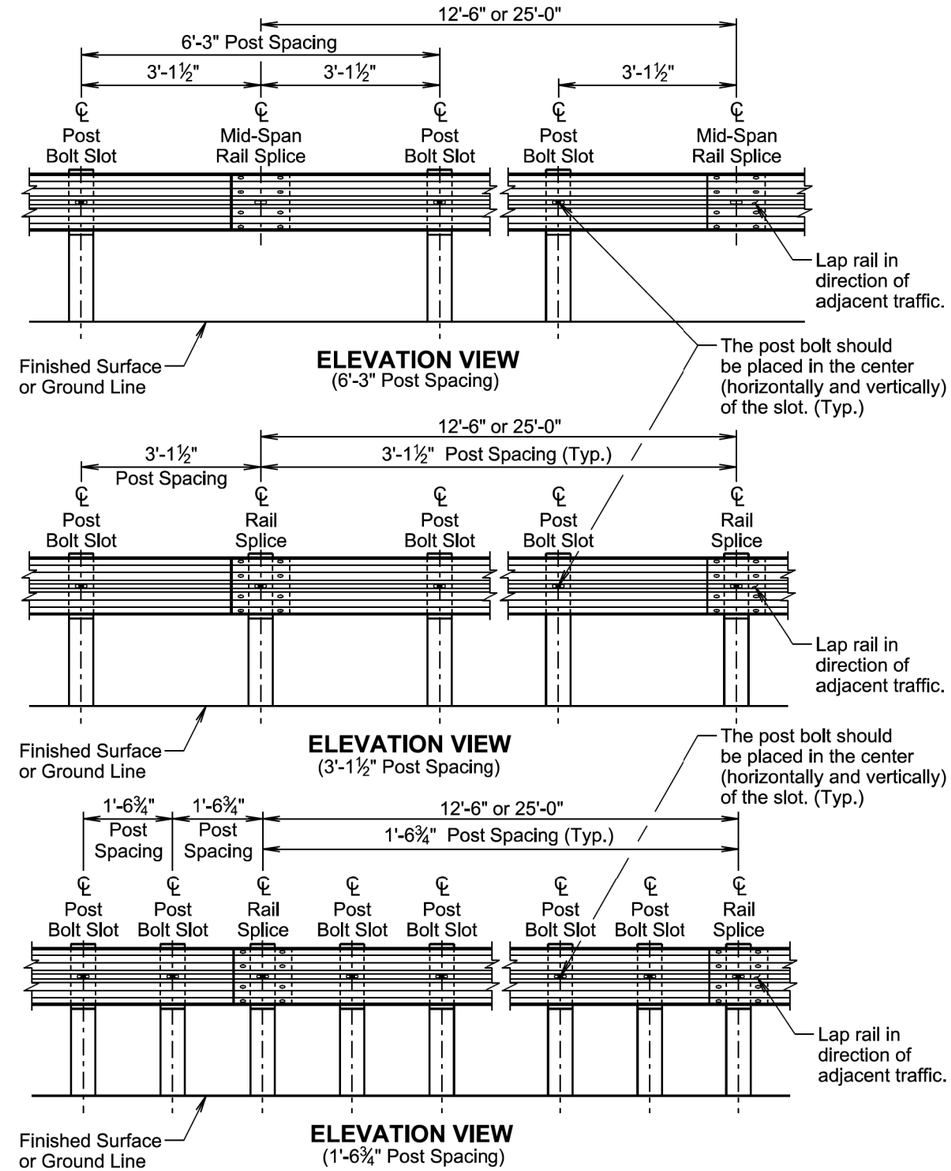

April 8, 2025

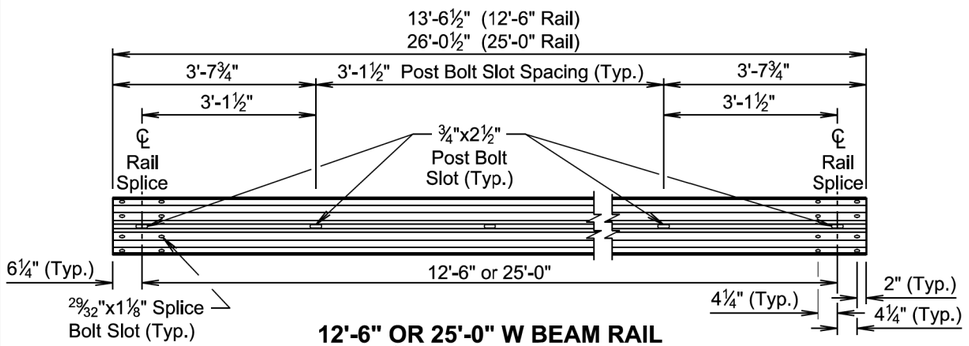

12'-6" OR 25'-0" W BEAM RAIL
(3'-1½" and 6'-3" Post Spacing)

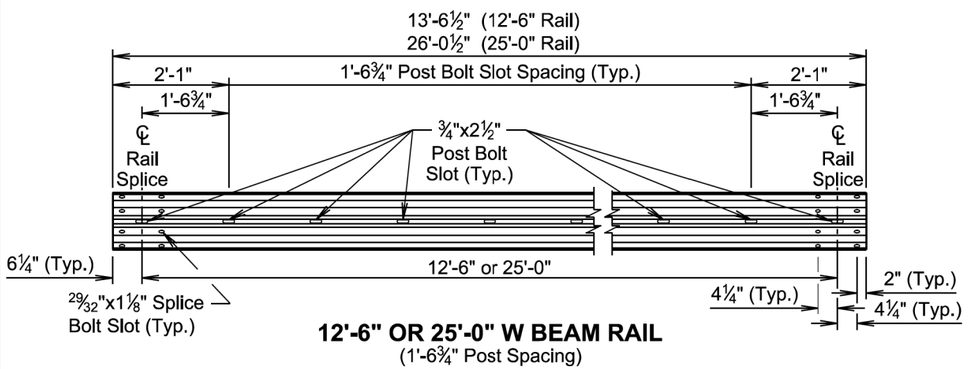

12'-6" OR 25'-0" W BEAM RAIL
(1'-6¾" Post Spacing)

April 8, 2025

Published Date: 2026	SDDOT	MIDWEST GUARDRAIL SYSTEM (MGS)	PLATE NUMBER 630.20
			Sheet 5 of 6

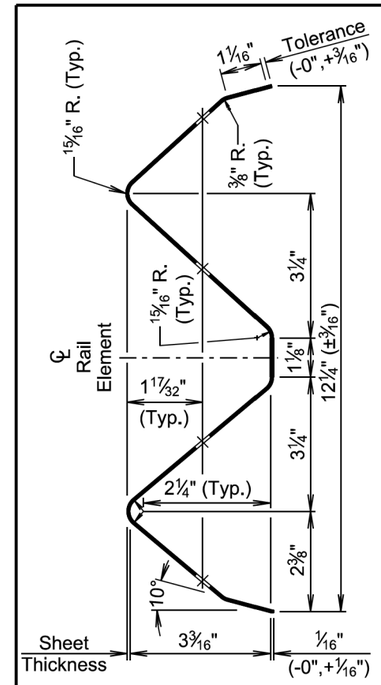

SECTION THROUGH W BEAM RAIL

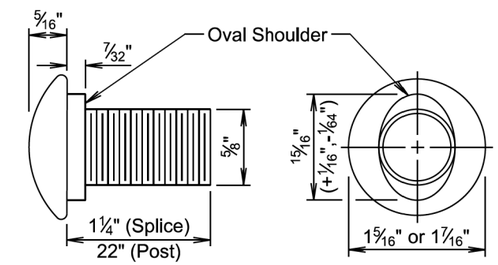

SPLICE BOLT AND POST BOLT
(⅝" Button Head Bolt)

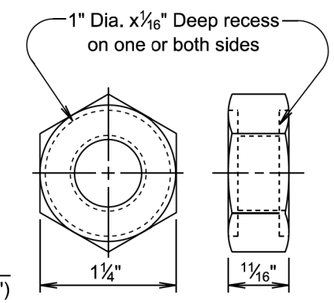

RECESS NUT
(At lap splices, the recess will be placed against the steel rail.)

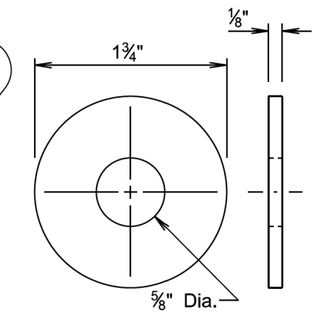

WASHER
(The washer will be placed between the back side of wood post and the recess nut, see sheet 2 and 3.)

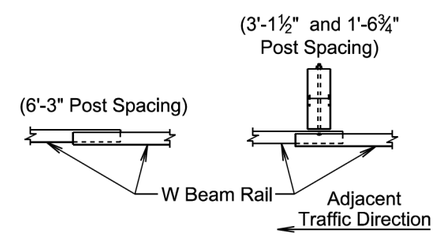

PLAN VIEW
(Lap Splice)
(Lap rail in direction of adjacent traffic.)
(8 splice bolts and 8 recess nuts per splice, NO washers)

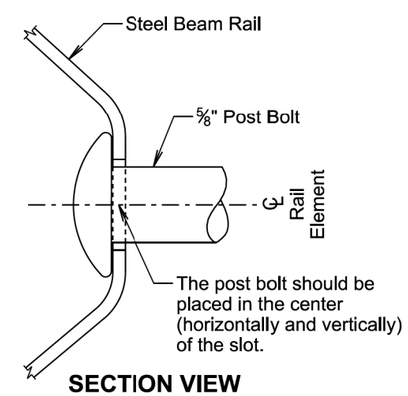

SECTION VIEW
(At Post Bolt)

April 8, 2025

Published Date: 2026	SDDOT	MIDWEST GUARDRAIL SYSTEM (MGS)	PLATE NUMBER 630.20
			Sheet 6 of 6

CONCRETE CURB AND GUTTER TYPE	DIMENSION *** (in.)
B and BL	8
D	12
F and FL	10
R	11

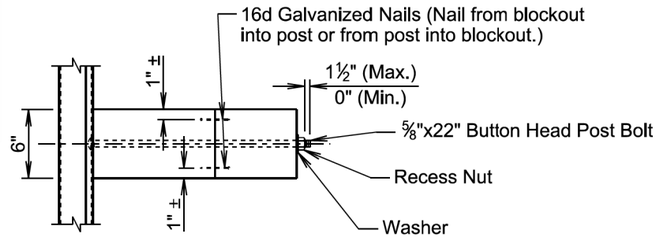

TOP VIEW

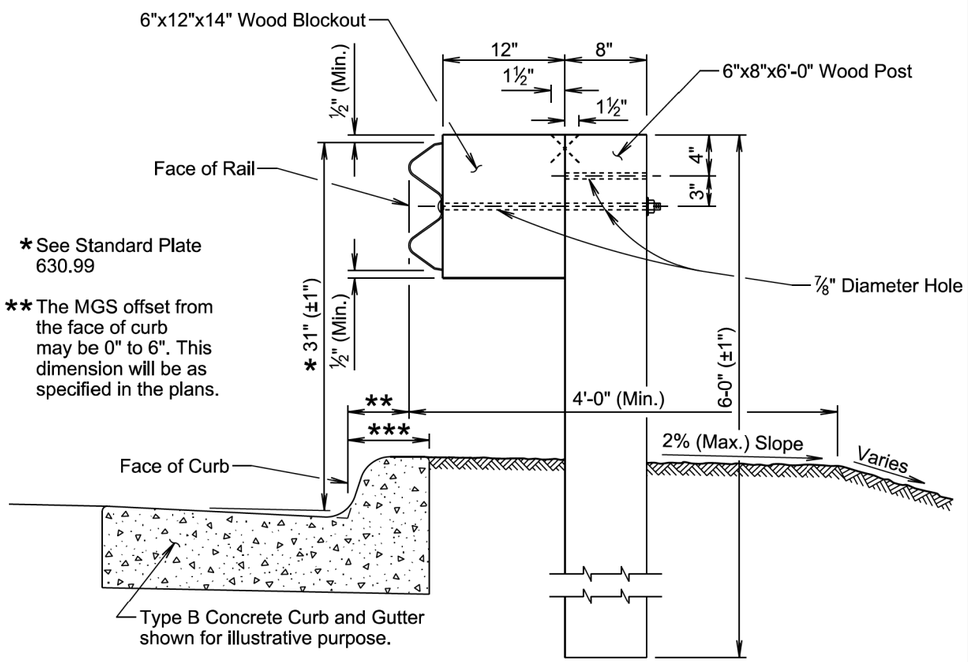

* See Standard Plate 630.99

** The MGS offset from the face of curb may be 0" to 6". This dimension will be as specified in the plans.

TRANSVERSE SECTION

GENERAL NOTES:

The guardrail on this standard plate is Type 1 MGS. See standard plate 630.20 for specifications regarding Type 1 MGS.

When PCC pavement or asphalt concrete pavement is adjacent to the post, see standard plate 630.96 for leave-out and backfill requirements.

April 8, 2025

Published Date: 2026	SDDOT	MIDWEST GUARDRAIL SYSTEM (MGS) AT CURB AND GUTTER	PLATE NUMBER 630.22
			Sheet 1 of 1

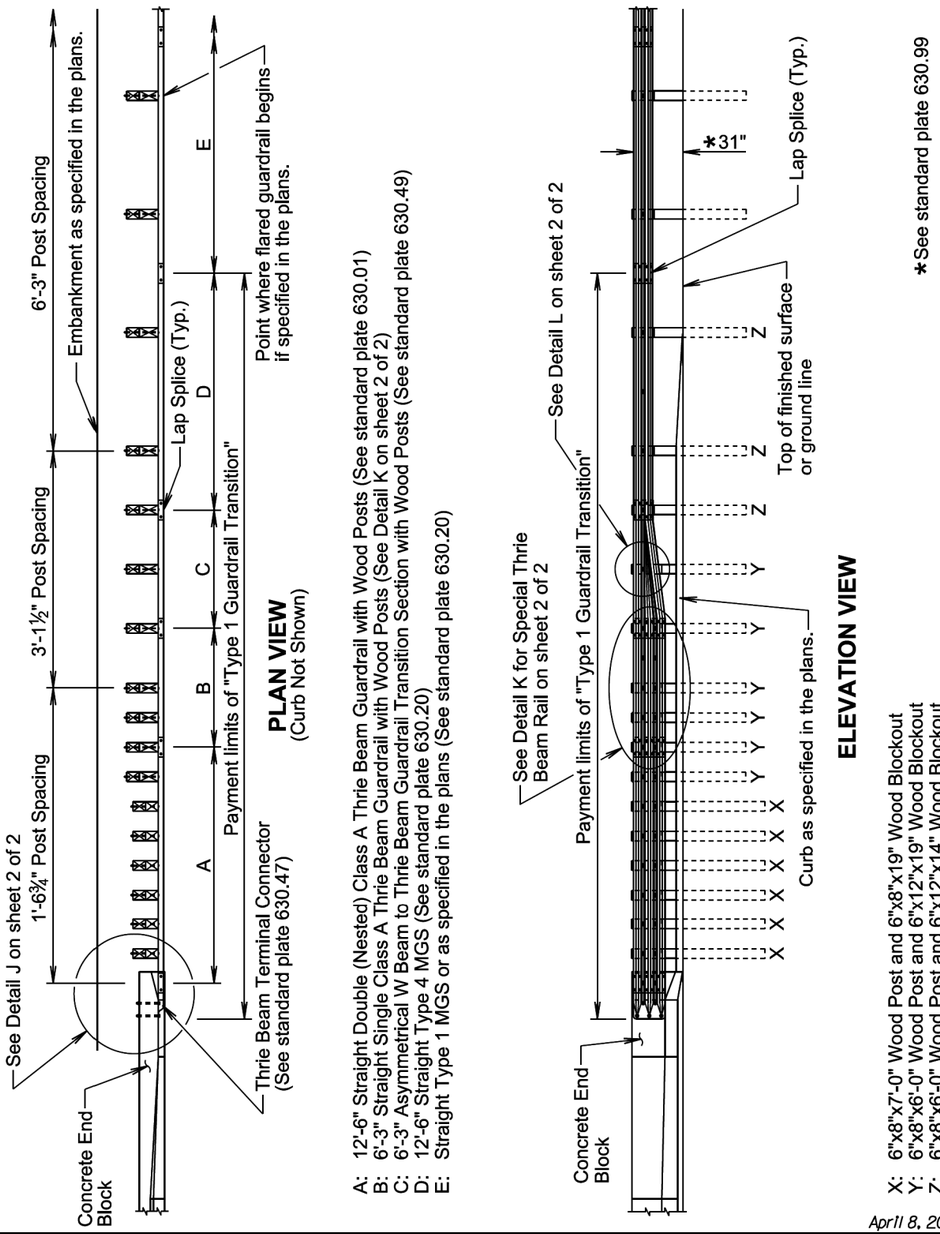

April 8, 2025

Published Date: 2026	SDDOT	TYPE 1 GUARDRAIL TRANSITION (CONCRETE END BLOCK TO MIDWEST GUARDRAIL SYSTEM (MGS))	PLATE NUMBER 630.50
			Sheet 1 of 3

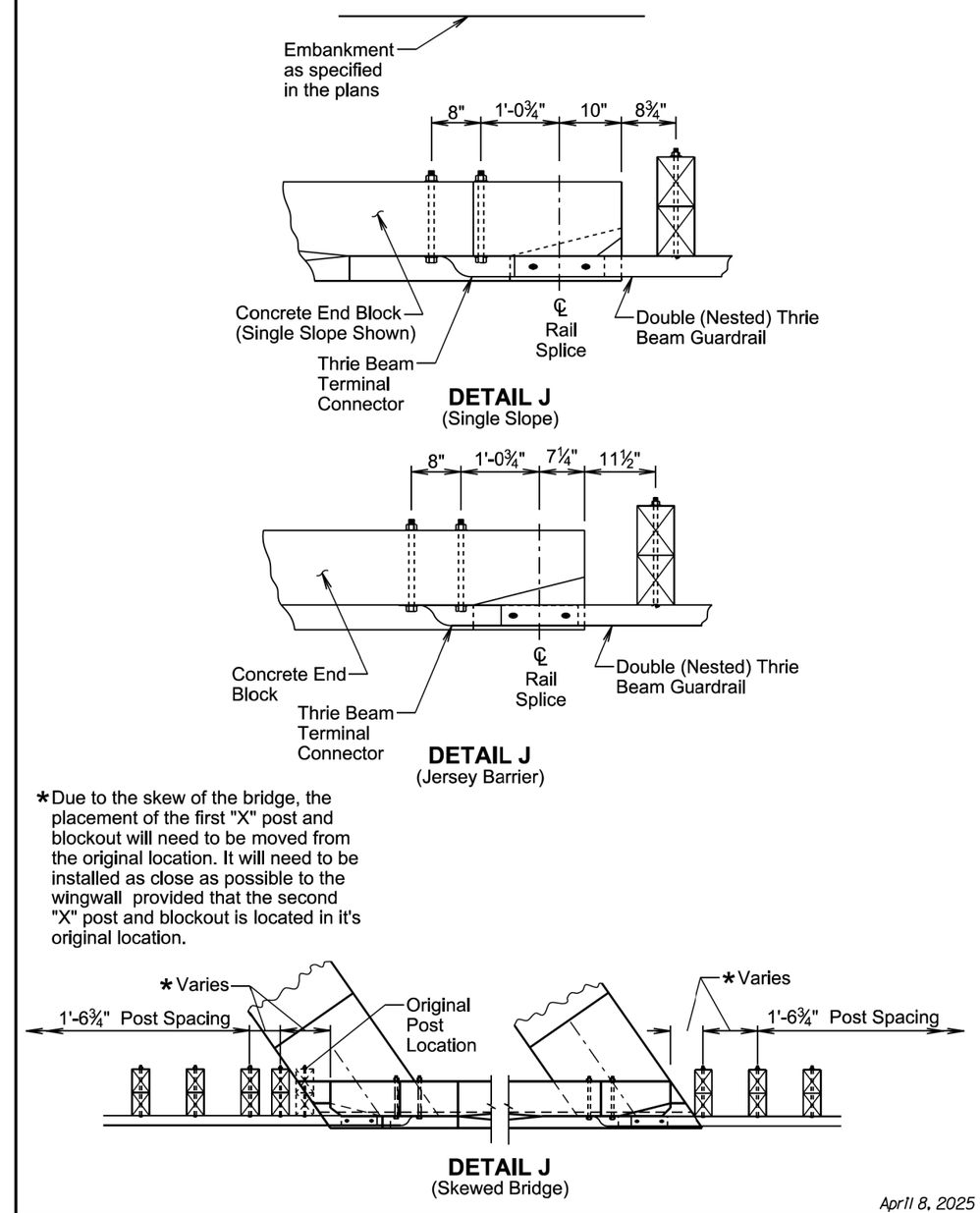

April 8, 2025

Published Date: 2026	SDDOT	TYPE 1 GUARDRAIL TRANSITION (CONCRETE END BLOCK TO MIDWEST GUARDRAIL SYSTEM (MGS))	PLATE NUMBER 630.50
			Sheet 2 of 3

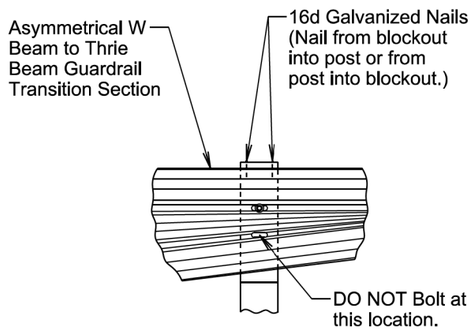

DETAIL L

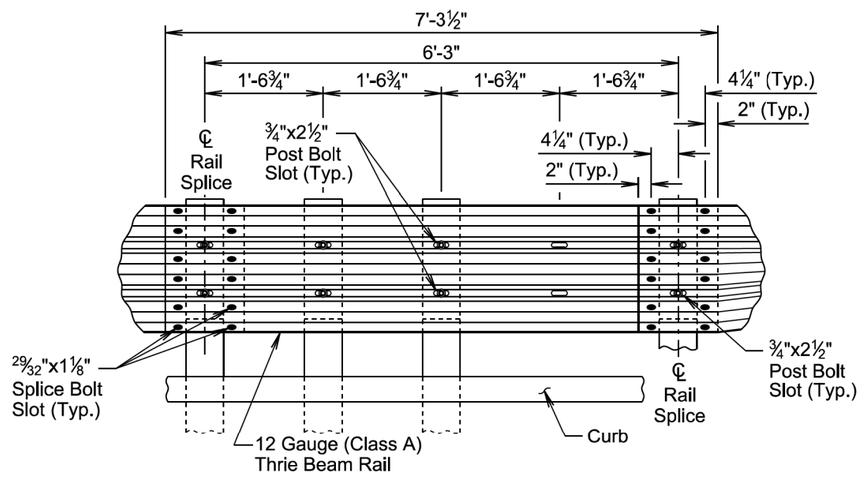

DETAIL K
(Special Thrie Beam Rail)

GENERAL NOTES:

Throughout the type 1 guardrail transition, slots in the rails will be provided as specified in the plans and by the manufacturer. A drilled hole through the rail is not allowed as a replacement for a slot. If the Contractor must create a slot, a cutting torch or plasma cutter is not allowed. The slot edges will be smooth and free of burrs or notches.

All costs for furnishing and installing the type 1 guardrail transition including labor, equipment, and materials which includes all rail sections, posts and blockouts, hardware, and incidentals will be included in the contract unit price per each for "Type 1 Guardrail Transition".

April 8, 2025

Published Date: 2026	SDDOT	TYPE 1 GUARDRAIL TRANSITION (CONCRETE END BLOCK TO MIDWEST GUARDRAIL SYSTEM (MGS))	PLATE NUMBER 630.50
			Sheet 3 of 3

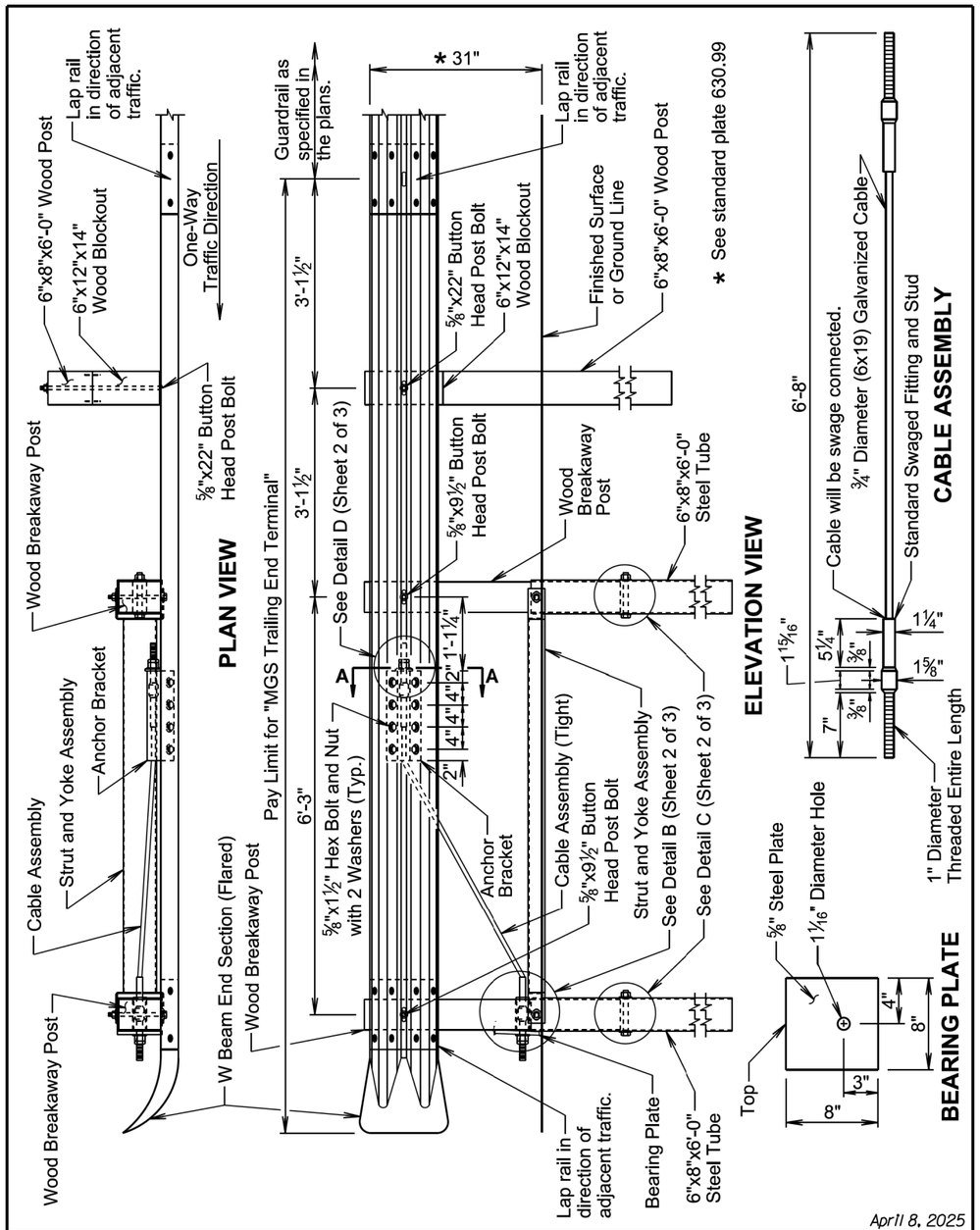

April 8, 2025

Published Date: 2026	SDDOT	MIDWEST GUARDRAIL SYSTEM (MGS) TRAILING END TERMINAL	PLATE NUMBER 630.82
			Sheet 1 of 3

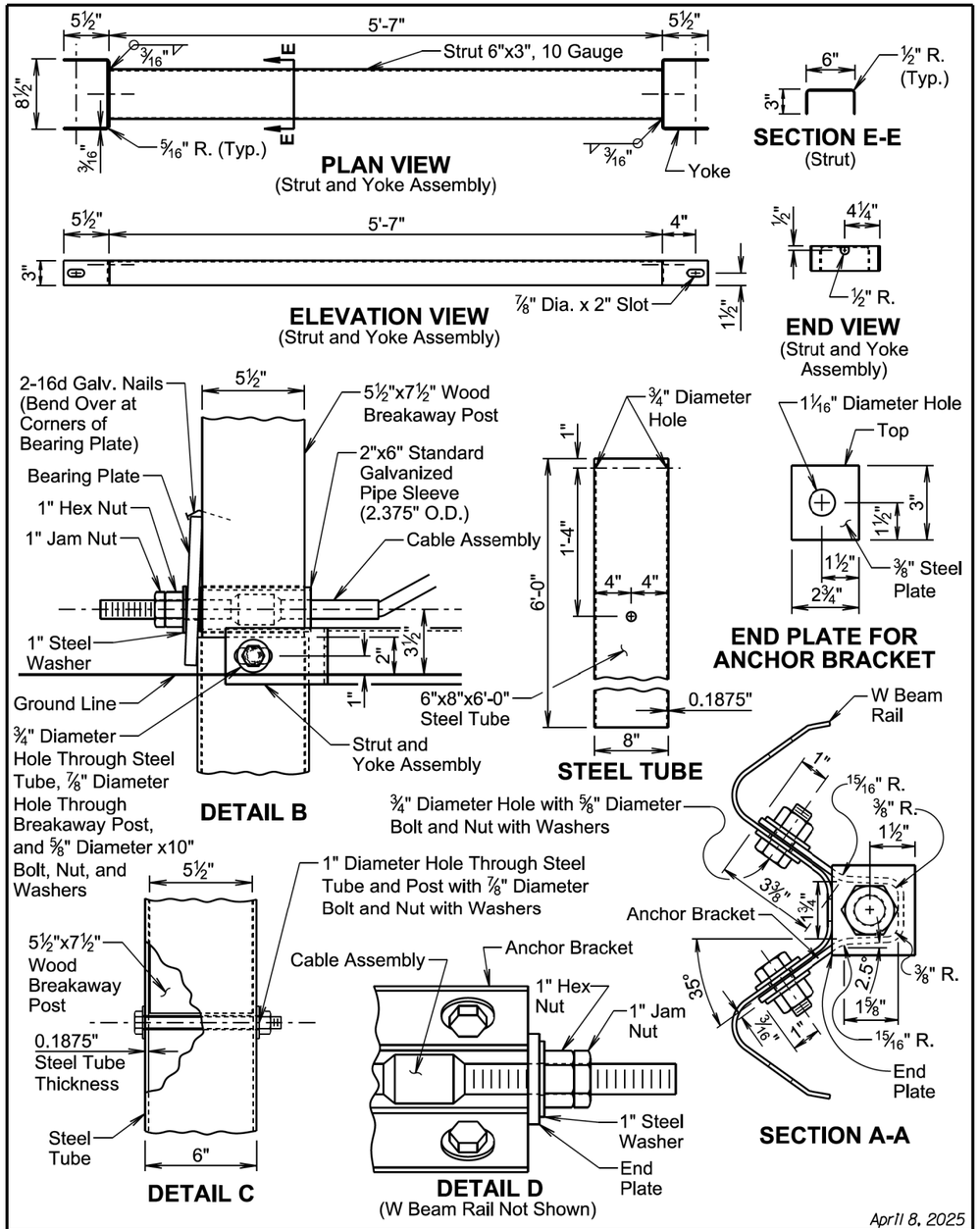

April 8, 2025

Published Date: 2026	SDDOT	MIDWEST GUARDRAIL SYSTEM (MGS) TRAILING END TERMINAL	PLATE NUMBER 630.82
			Sheet 2 of 3

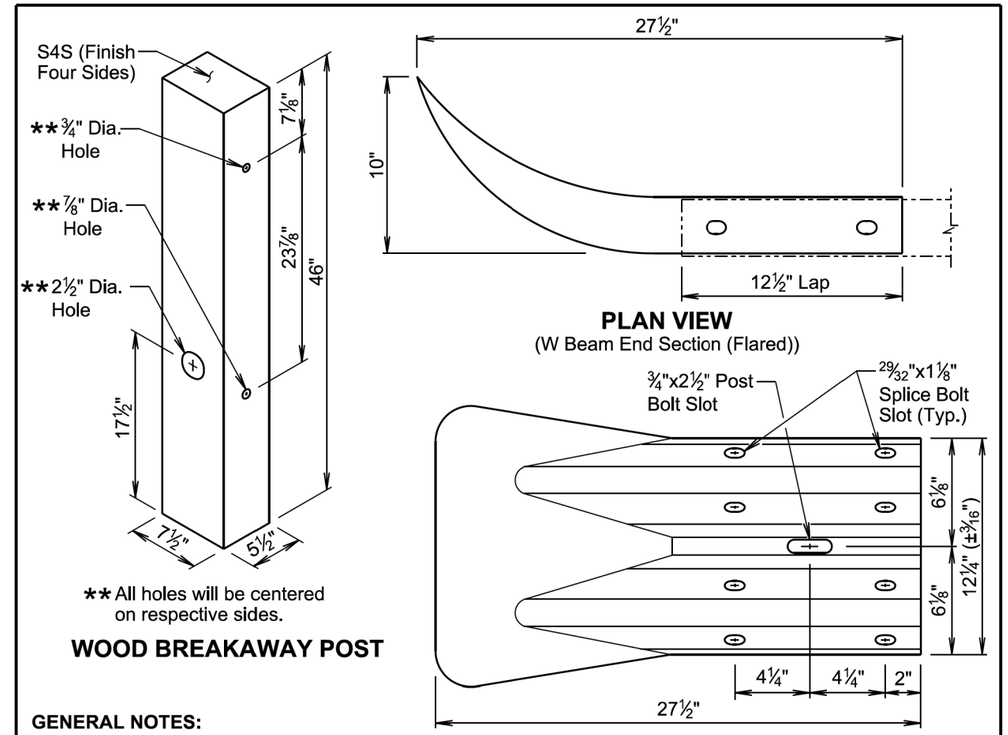

GENERAL NOTES:

The MGS trailing end terminal will only be used in a one-way traffic situation on the downstream traffic flow end.

W beam end section (flared) will be 12 gauge.

The cable will be ¾", Type II, with Class A coating in conformance with AASHTO M30.

The steel tube will meet the requirements of ASTM A500, Grade B or C, and will be galvanized after fabrication in accordance with the requirements of AASHTO M111.

All hardware will be galvanized in accordance with ASTM A153.

The anchor bracket, strut and yoke assembly, and bearing plate will be fabricated from steel that meets ASTM A36 Specifications. They will be galvanized after fabrication in accordance with ASTM A123.

Slots in the rails will be provided as specified in the plans and by the manufacturer. A drilled hole through the rail is not allowed as a replacement for a slot. If the Contractor must create a slot, a cutting torch or plasma cutter is not allowed. The slot edges will be smooth and free of burrs or notches.

All costs for furnishing and constructing the MGS trailing end terminal including labor, equipment, materials which includes W beam rail section, two wood breakaway posts, steel tubes, strut and yoke assembly, cable assembly, bearing plate, anchor bracket, W beam end section (flared), one MGS wood post and blockout, hardware, and incidentals will be included in the contract unit price per each for "MGS Trailing End Terminal".

April 8, 2025

Published Date: 2026	SDDOT	MIDWEST GUARDRAIL SYSTEM (MGS) TRAILING END TERMINAL	PLATE NUMBER 630.82
			Sheet 3 of 3

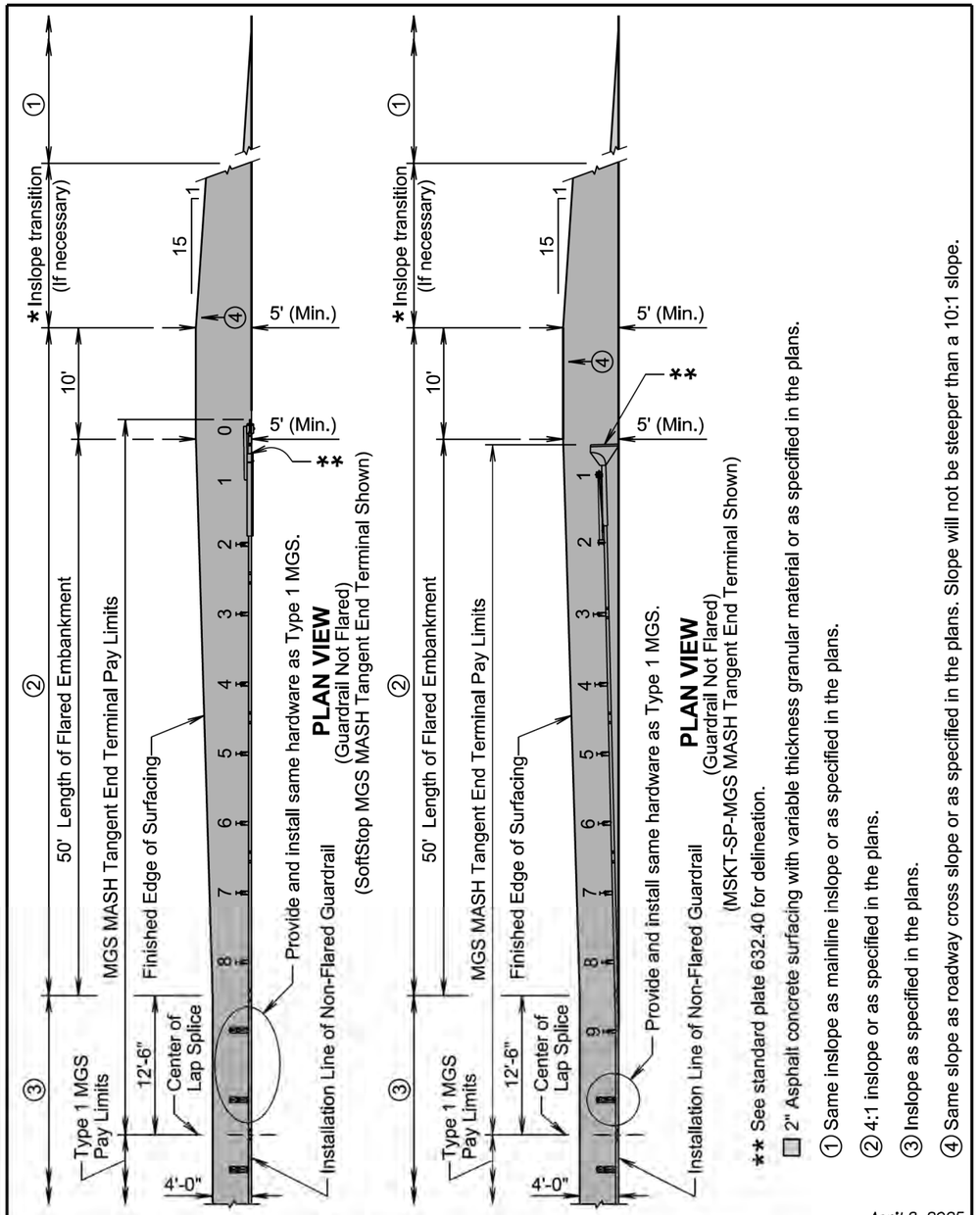

** See standard plate 632.40 for delineation.

☐ 2" Asphalt concrete surfacing with variable thickness granular material or as specified in the plans.

① Same inslope as mainline inslope or as specified in the plans.

② 4:1 inslope or as specified in the plans.

③ Inslope as specified in the plans.

④ Same slope as roadway cross slope or as specified in the plans. Slope will not be steeper than a 10:1 slope.

April 8, 2025

Published Date: 2026

SDDOT

EMBANKMENT, SURFACING, AND PAYMENT LIMITS FOR MGS MASH TANGENT END TERMINAL

PLATE NUMBER 630.89

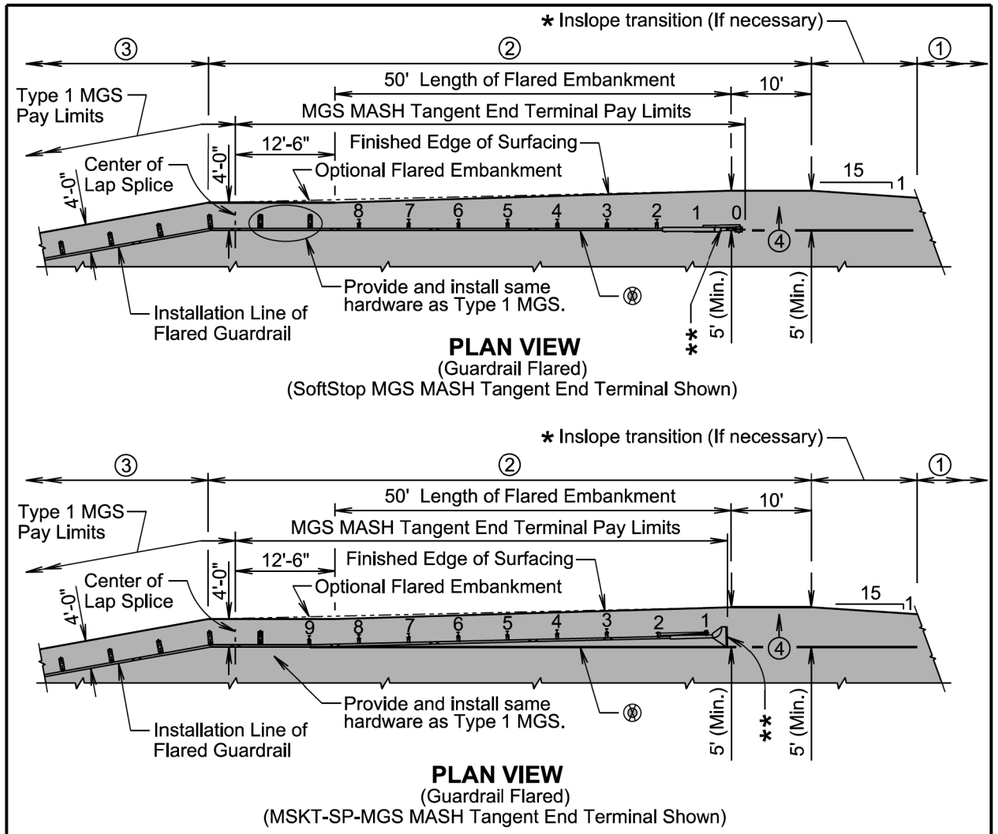

GENERAL NOTES:

The MGS MASH tangent end terminals above are for illustrative purpose only. Pay limit length of the MGS MASH tangent end terminal is 62'-6".

* The length of inslope transition varies with the amount of change between inslopes. The length of the transition will change 100' for every whole number change in the inslope. For Example: If the inslope changes from a 5:1 to a 4:1 the length of the inslope transition would be 100'. If the inslope changes from a 6:1 to a 4:1 the length of the inslope transition would be 200'.

Ⓚ The installation reference line for MGS MASH tangent end terminals will always be parallel to the roadway.

Asphalt concrete will be the same type used elsewhere on the project or will be as specified in the plans. If asphalt concrete is not specified in the plans, the asphalt concrete will conform to the Specifications for "Asphalt Concrete Composite."

Granular material will be the same type used elsewhere on the project or will be as specified in the plans. If granular material type is not specified in the plans, the material will conform to the Specifications for "Base Course". The granular material will be placed the same thickness as the mainline surfacing or as specified in the plans.

April 8, 2025

Published Date: 2026

SDDOT

EMBANKMENT, SURFACING, AND PAYMENT LIMITS FOR MGS MASH TANGENT END TERMINAL

PLATE NUMBER 630.89

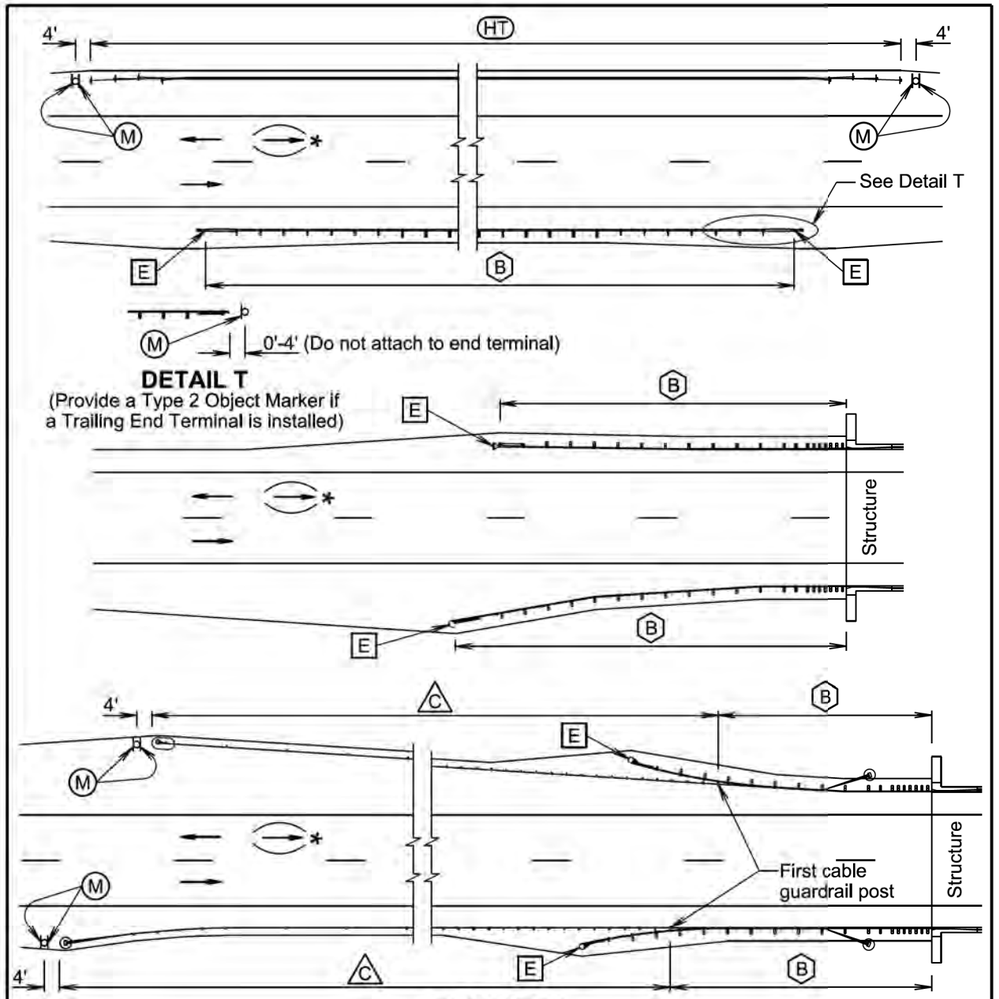

PLAN VIEW
(Typical Guardrail Layouts)

- (B) Steel Beam Guardrail Delineation
- [E] Guardrail End Terminal Object Marker
- (C) 3 Cable Guardrail (Low Tension) Delineation
- (HT) High Tension Cable Guardrail Delineation
- (M) Type 2 Object Marker

* For two-way traffic, install delineation at the opposite end of structure the same as shown. Back-to-back delineation is required for two-way traffic, single-sided delineation for one-way traffic.

April 8, 2025

Published Date: 2026	SDDOT	DELINEATION OF GUARDRAIL	PLATE NUMBER 632.40
			Sheet 1 of 4

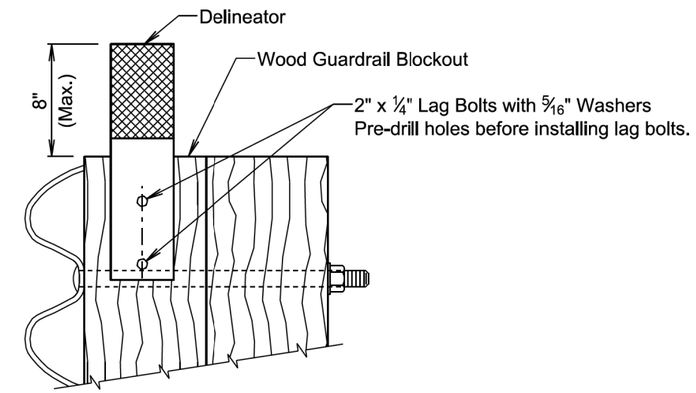

(B) STEEL BEAM GUARDRAIL DELINEATION

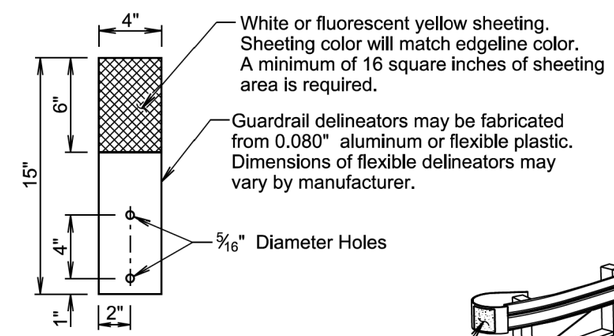

DELINEATOR
(For Steel Beam Guardrail)

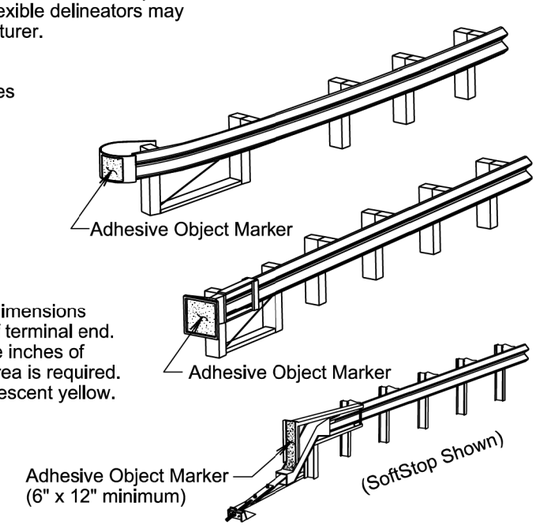

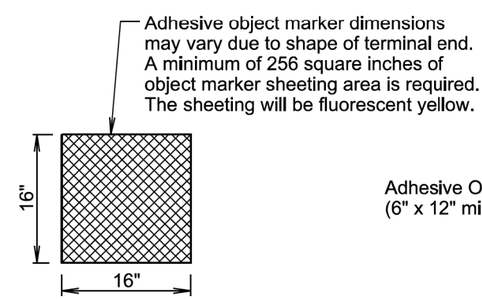

ADHESIVE OBJECT MARKER

[E] GUARDRAIL END TERMINAL OBJECT MARKER

April 8, 2025

Published Date: 2026	SDDOT	DELINEATION GUARDRAIL	PLATE NUMBER 632.40
			Sheet 2 of 4

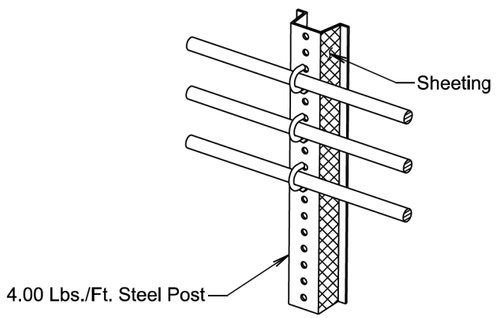

(C) 3 CABLE GUARDRAIL (LOW TENSION) DELINEATION

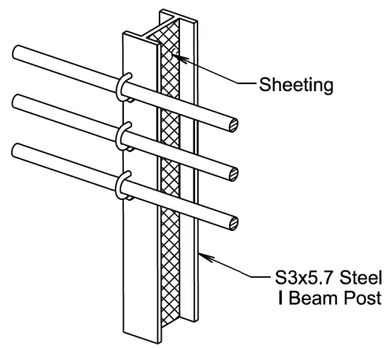

(C) 3 CABLE GUARDRAIL (LOW TENSION) DELINEATION

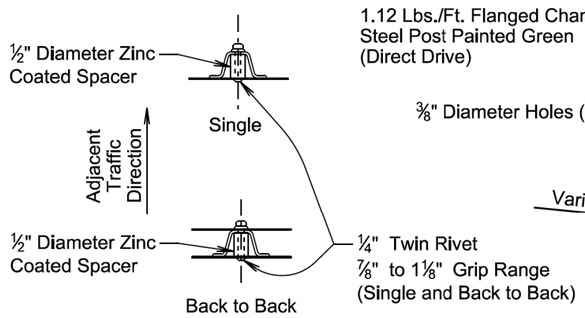

PLAN VIEW

(Type 2 Object Marker Details and Post Orientation)

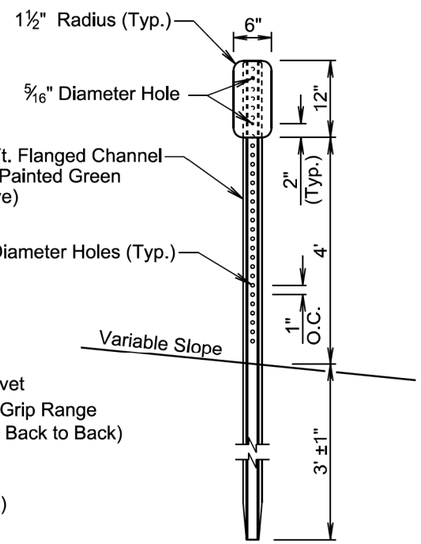

ELEVATION VIEW

(M) (Type 2 Object Marker)

(For Marking 3 Cable Guardrail (Low Tension) Anchor, High Tension Cable Guardrail Anchor, and Trailing End Terminal)

April 8, 2025

GENERAL NOTES:

The delineation of high tension cable guardrail will be reflective sheeting placed back to back on every third post cap or cable spacer. Maximum spacing of delineation will not exceed 35 feet. The sheeting will be type XI in conformance with ASTM D4956. The color of the reflective sheeting will be the same as the nearest pavement marking.

The delineators for steel beam guardrail and sheeting on 3 cable guardrail (low tension) posts will be covered with a minimum of 16 square inches of reflective sheeting. The reflective sheeting will be type XI in conformance with ASTM D4956. Along two-way roadways the sheeting will be on both sides of the delineators and guardrail posts and will be white in color. For one-way roadways the sheeting will only be required on the side facing traffic and the color will be the same as the nearest pavement marking, yellow on the left side of the roadway and white on the right side.

When steel beam guardrail is attached to a bridge the first delineator will be attached to the post nearest the bridge.

At bridges with guardrail less than 200 feet in length, a minimum of 4 delineators will be placed in addition to the end terminal yellow object marker. The spacing between the delineators will be approximately one third of the length of the guardrail.

At bridges with guardrail 200 feet and greater in length, including bridges that have steel beam guardrail transitioning to 3 cable guardrail (low tension), the delineators will be placed at a spacing of approximately 50 feet. Delineation will extend throughout the length of the guardrail system.

Steel beam guardrail that is not attached to a bridge and is less than 200 feet in length, a minimum of 4 delineators will be placed in addition to the end terminal yellow object markers. The spacing between the delineators will be approximately one third of the length of the guardrail.

Steel beam guardrail that is not attached to a bridge and is 200 feet and greater in length, including steel beam guardrail transitioning to 3 cable guardrail (low tension), the delineators will be placed at a spacing of approximately 50 feet. Delineation will extend throughout the length of the guardrail system.

All costs for furnishing and installing single or back to back guardrail delineation on 3 cable guardrail and steel beam guardrail will be included in the contract unit price per each for "Guardrail Delineator".

All costs for furnishing and installing the reflective sheeting on the cable spacers or post caps for the high tension cable guardrail will be incidental to the respective high tension cable guardrail contract item.

An adhesive object marker will be placed on the end of the W beam guardrail or MGS end terminal. The adhesive object marker dimensions may vary due to the shape of the terminal end. A minimum of 256 square inches of object marker reflective sheeting area is required on end terminals with sufficient surface area. Other end terminals (SoftStop) will require an adhesive object marker with a minimum size of 6" x 12". The reflective sheeting will be fluorescent yellow type XI sheeting in conformance with ASTM D4956. All costs for furnishing and installing the adhesive object marker will be incidental to various contract items.

A type 2 object marker will be placed such that the edges of the type 2 object marker and the 3 cable guardrail (low tension) anchor, high tension cable guardrail anchor, or the trailing end terminal that are nearest to the roadway will be installed in line with the same lateral offset from the traveled way at the location as noted on sheet 1 of this standard plate. The type 2 object marker (6" x 12") will have fluorescent yellow type XI sheeting in conformance with ASTM D4956. All costs for furnishing and installing the type 2 object marker including the steel post, 6" x 12" reflective panel, and hardware will be included in the contract unit price per each for "Type 2 Object Marker" for single-sided and "Type 2 Object Marker Back to Back" for back to back type 2 object markers.

April 8, 2025

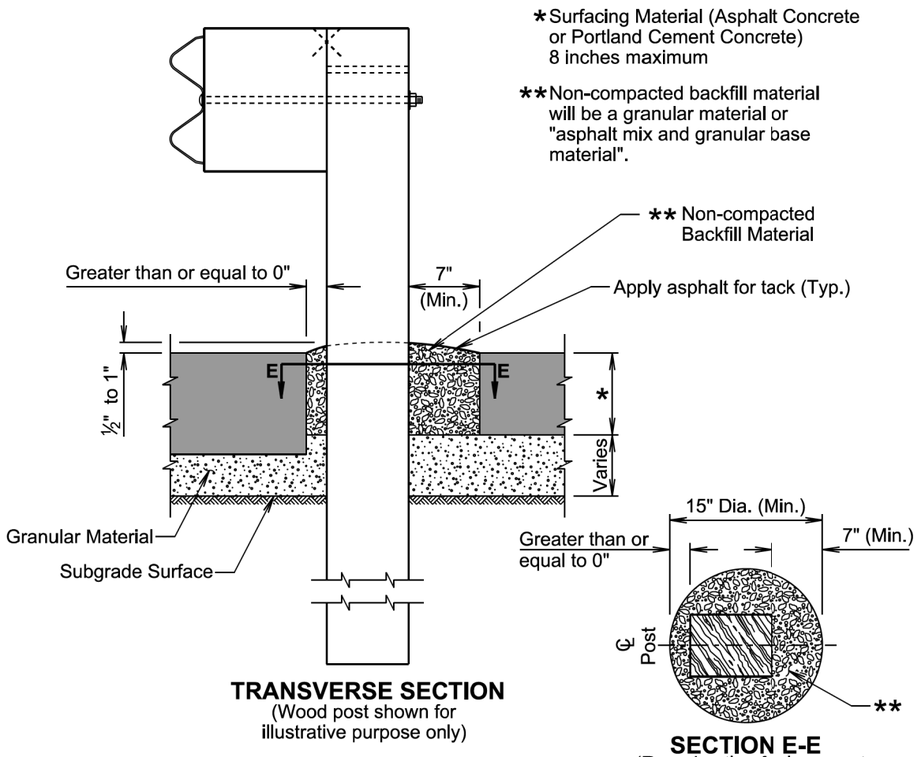

TRANSVERSE SECTION
(Wood post shown for illustrative purpose only)

SECTION E-E
(Round option for leave-out and backfill limits)
(Wood post shown for illustrative purpose only)

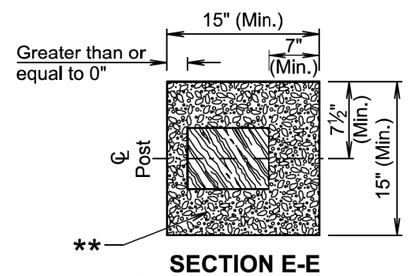

SECTION E-E
(Square option for leave-out and backfill limits)
(Wood post shown for illustrative purpose only)

GENERAL NOTES:

The leave-out limits may be increased to accommodate construction equipment and tolerances.

When posts are installed in augured or dug holes, the backfill material will be compacted to the bottom of the pavement surfacing material to the satisfaction of the Engineer. The backfill material for the thickness of the pavement surfacing material will be non-compacted.

The backfill material will be mounded ½ inch to 1 inch above the top of the adjacent surfacing as illustrated above.

Asphalt for tack will be applied to the surface of the backfill material at the rate of 0.15 to 0.20 gallons per square yard.

All costs for constructing the leave-out including labor, equipment, and materials which includes the backfill material and tack coat will be incidental to the contract unit price for the respective guardrail contract item.

November 19, 2021

Published Date: 2026	SDDOT	GUARDRAIL POST INSTALLED IN ASPHALT CONCRETE OR PORTLAND CEMENT CONCRETE	PLATE NUMBER 630.96
			Sheet 1 of 1

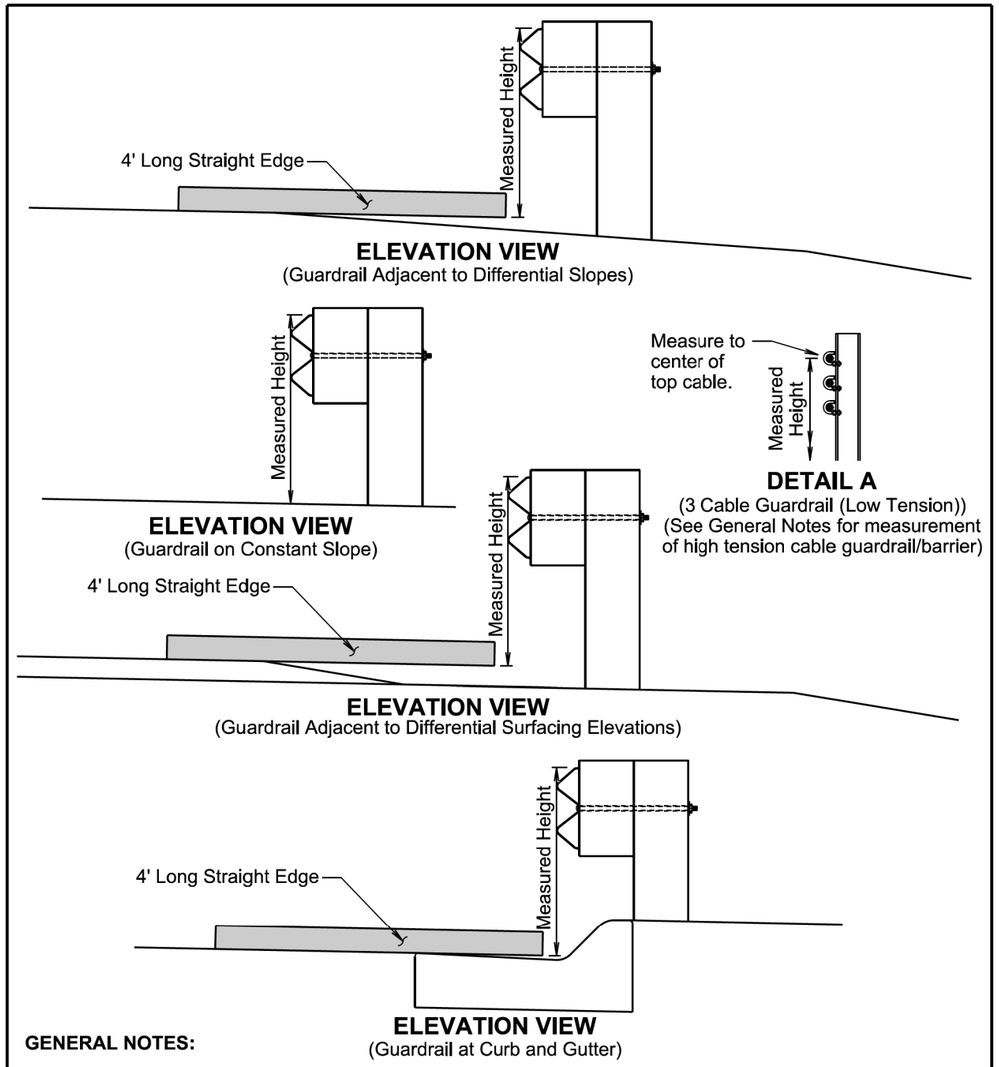

ELEVATION VIEW
(Guardrail Adjacent to Differential Slopes)

ELEVATION VIEW
(Guardrail on Constant Slope)

DETAIL A
(3 Cable Guardrail (Low Tension))
(See General Notes for measurement of high tension cable guardrail/barrier)

ELEVATION VIEW
(Guardrail Adjacent to Differential Surfacing Elevations)

ELEVATION VIEW
(Guardrail at Curb and Gutter)

GENERAL NOTES:

The W Beam guardrail shown is for illustrative purpose. The guardrail height for all types of guardrail systems except for high tension cable guardrail/barrier will be measured in accordance with this standard plate.

When measuring height of 3 cable guardrail (low tension) the height will be measured to the center of the top cable. See Detail A.

The height of high tension cable guardrail/barrier will be measured in accordance with the Manufacturer's installation instructions.

September 14, 2019

Published Date: 2026	SDDOT	MEASURING GUARDRAIL HEIGHT	PLATE NUMBER 630.99
			Sheet 1 of 1

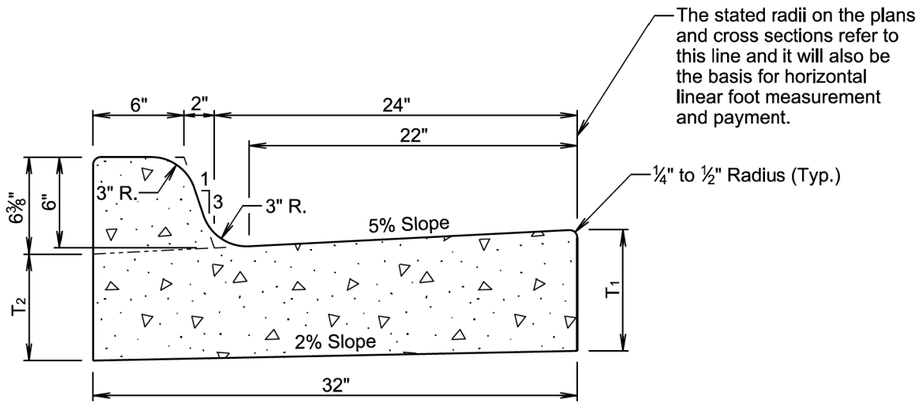

TYPE B CONCRETE CURB AND GUTTER				
Type	T_1 (Inches)	T_2 (Inches)	Cu. Yd. Per Lin. Ft.	Lin. Ft. Per Cu. Yd.
B66	6	5 1/16	0.057	17.7
B67	7	6 1/16	0.065	15.4
B68	8	7 1/16	0.073	13.7
B68.5	8.5	7 9/16	0.077	13.0
B69	9	8 1/16	0.081	12.3
B69.5	9.5	8 9/16	0.085	11.7
B610	10	9 1/16	0.090	11.2
B610.5	10.5	9 9/16	0.094	10.7
B611	11	10 1/16	0.098	10.2
B611.5	11.5	10 9/16	0.102	9.8
B612	12	11 1/16	0.106	9.4

GENERAL NOTES:

When concrete curb and gutter longitudinally adjoins new concrete pavement, the method of attachment will be by one of the methods shown on standard plate 380.21.

See standard plate 650.90 for expansion and contraction joints in the curb and gutter.

January 22, 2023

Published Date: 2026	SDDOT	TYPE B CONCRETE CURB AND GUTTER	PLATE NUMBER 650.01
			Sheet 1 of 1

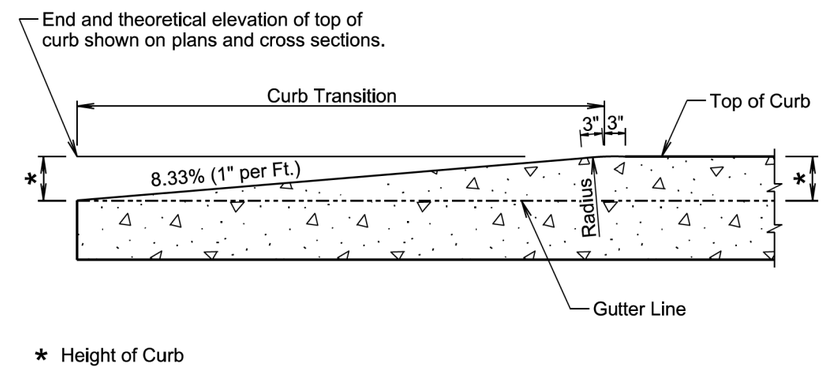

* Height of Curb

LONGITUDINAL SECTION
(Concrete Curb Taper)

December 23, 2019

Published Date: 2026	SDDOT	CONCRETE CURB TAPER	PLATE NUMBER 650.35
			Sheet 1 of 1

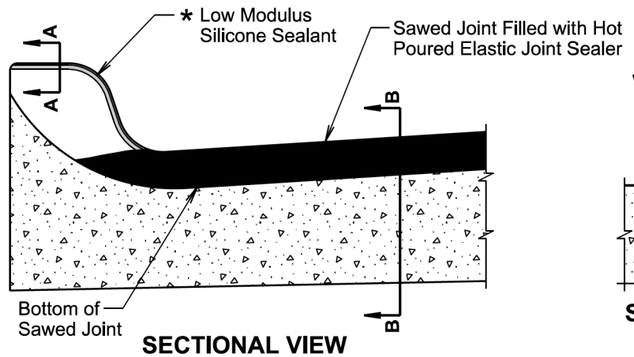

SECTIONAL VIEW
(Curb and Gutter Placed Monolithic with Adjacent Mainline PCC Pavement)

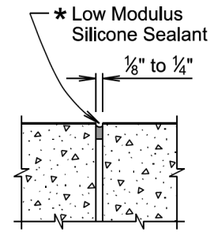

SECTION A-A

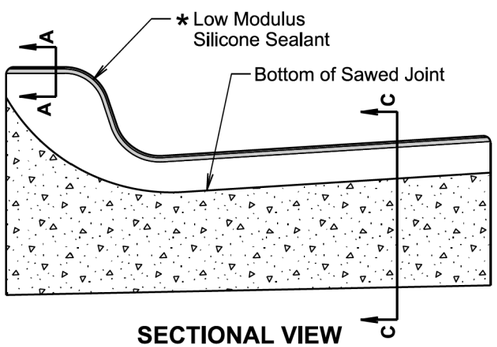

SECTIONAL VIEW
(Curb and Gutter not Placed Monolithic with Adjacent Mainline PCC Pavement or Mainline Surfacing is not PCC Pavement)

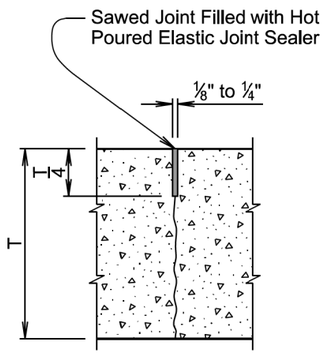

SECTION B-B

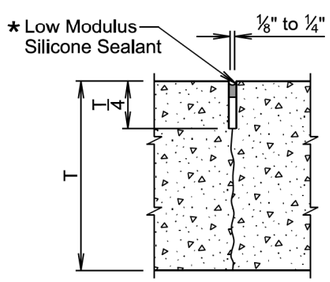

SECTION C-C

* The silicone sealant will be placed such that it completely seals the joint and is bonded to the sides of the clean joint as approved by the Engineer.

December 23, 2019

Published Date: 2026	SDDOT	JOINTS IN CONCRETE CURB AND GUTTER	PLATE NUMBER 650.90
			Sheet 1 of 2

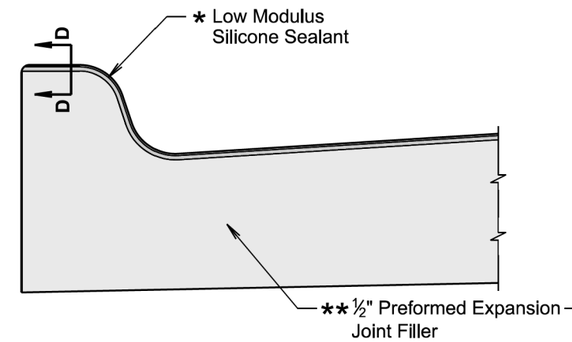

SECTIONAL VIEW
(Curb and Gutter at ½" Preformed Expansion Joint Filler Location)

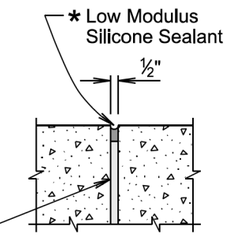

SECTION D-D

* The silicone sealant will be placed such that it completely seals the joint and is bonded to the sides of the clean joint as approved by the Engineer.

GENERAL NOTES:

For illustrative reason, only the type B curb and gutter is shown.

** A ½-inch preformed expansion joint filler will be placed transversely in the curb and gutter at the following locations:

At each junction between the radius return of curb and gutter, and curb and gutter which is parallel to the project centerline.

At each junction between new curb and gutter and existing curb and gutter.

Transverse contraction joints will be constructed at 10 foot intervals in the concrete curb and gutter except when the concrete curb and gutter is constructed adjacent to mainline PCC pavement. When concrete curb and gutter is constructed adjacent to mainline PCC pavement, a transverse contraction joint will be constructed in the concrete curb and gutter at each mainline PCC pavement transverse contraction joint location.

When concrete curb and gutter is not placed monolithically with the mainline PCC pavement or when the adjacent mainline surfacing is not PCC concrete, the transverse contraction joints in the concrete curb and gutter will be 1½ inches deep if formed in the fresh concrete using a suitable grooving tool. If a saw is used to cut the contraction joints, then the depth of the joint will be at least ¼ the thickness of the concrete and the joint will be sealed in accordance with the details shown above.

December 23, 2019

Published Date: 2026	SDDOT	JOINTS IN CONCRETE CURB AND GUTTER	PLATE NUMBER 650.90
			Sheet 2 of 2

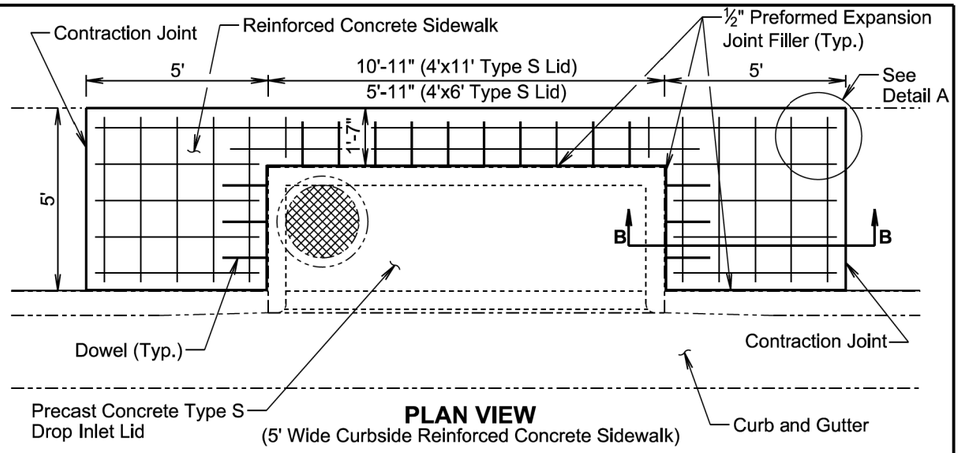

PLAN VIEW
(5' Wide Curbside Reinforced Concrete Sidewalk)

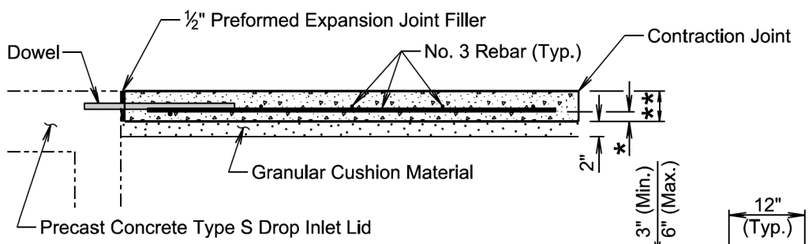

SECTION B-B

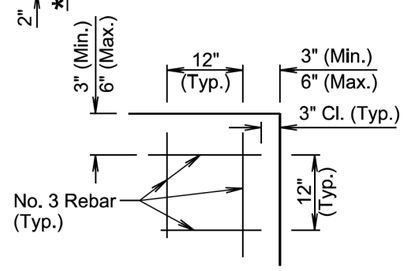

DETAIL A

** 4", 5", or 6" as specified elsewhere in the plans.

* 1⅝" for 4" sidewalk, 2⅛" for 5" sidewalk, and 2⅝" for 6" sidewalk.

GENERAL NOTES:

The precast concrete Type S lids shown are 4'x11' for illustrative purpose.

The cross slope of the sidewalk and precast concrete type S drop inlet lid will be as specified elsewhere in the plans.

The reinforcing steel will conform to Section 1010 of the Specifications. The Contractor will be in conformance with the construction requirements of Section 480.3 of the Specifications.

When lapping of reinforcing steel is necessary, the No. 3 rebar will be lapped 12".

The reinforced concrete sidewalk will conform to the requirements of Section 651 of the Specifications.

All costs for constructing the reinforced concrete sidewalk including labor, equipment, tools, backfilling, furnishing and placing materials, including granular cushion, reinforcing steel, preformed expansion joint filler, and incidentals will be included in the contract unit price per square foot for the corresponding reinforced concrete sidewalk contract item.

February 14, 2020

Published Date: 2026	SDDOT	REINFORCED CONCRETE SIDEWALK ADJACENT TO PRECAST CONCRETE TYPE S DROP INLET LID	PLATE NUMBER 651.70
			Sheet 1 of 2

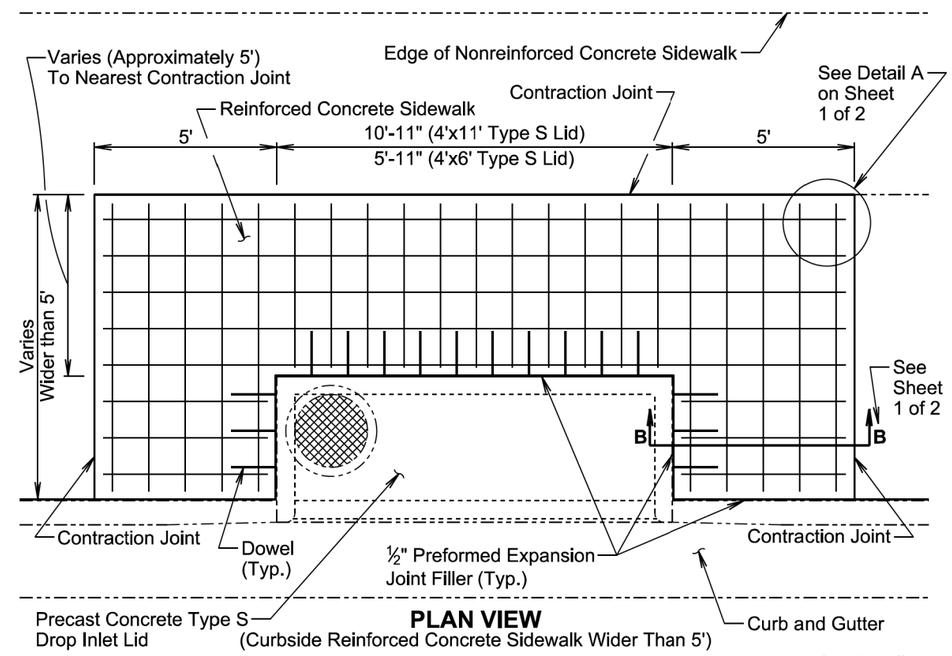

PLAN VIEW
(Curbside Reinforced Concrete Sidewalk Wider Than 5')

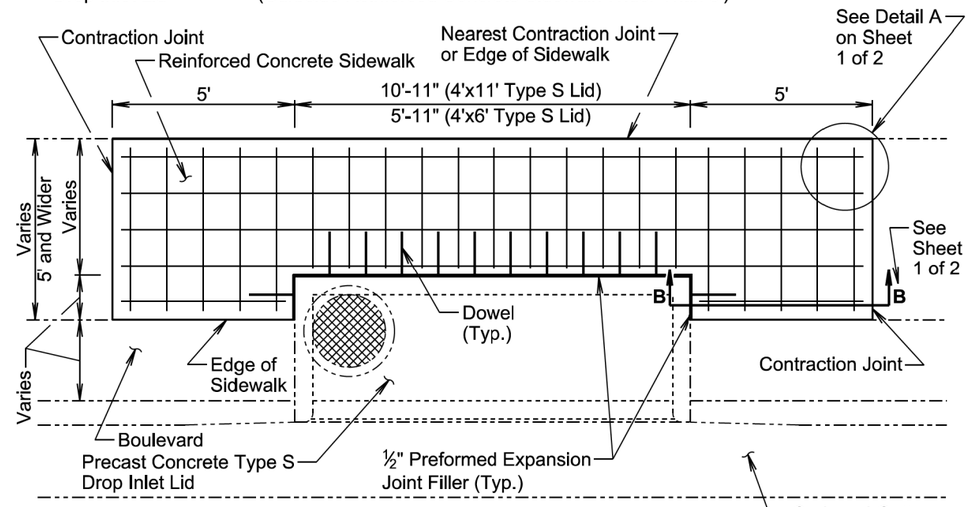

PLAN VIEW
(Reinforced Concrete Sidewalk With Boulevard)

February 14, 2020

Published Date: 2026	SDDOT	REINFORCED CONCRETE SIDEWALK ADJACENT TO PRECAST CONCRETE TYPE S DROP INLET LID	PLATE NUMBER 651.70
			Sheet 2 of 2

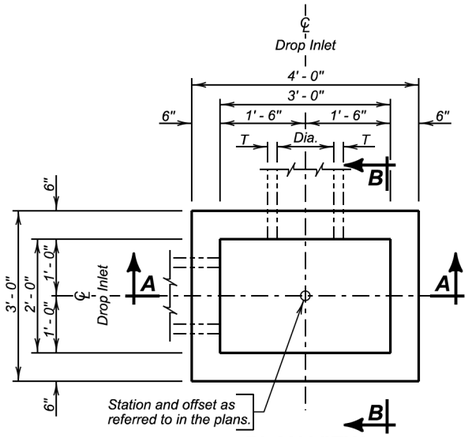

PLAN VIEW

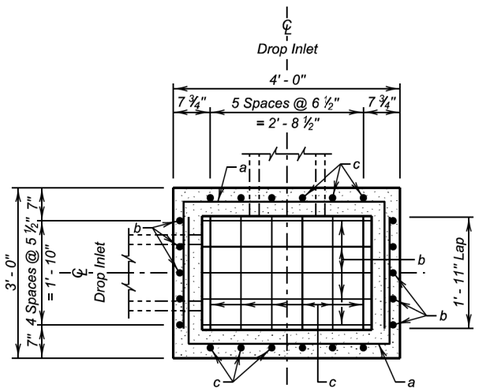

BOTTOM SECTION

ESTIMATED QUANTITIES

ITEM	UNIT	CONSTANT QUANTITY	VARIABLE QUANTITY
✳ Class M6 Concrete	Cu. Yd.	0.26	0.22H
Reinforcing Steel	Lb.	51.19	28.97H
Frame and Grate Assembly	Each	1	———

DROP INLETS FOR 12" TO 24" DIAMETER PIPE

SPECIFICATIONS

Design Specifications: AASHTO LRFD Bridge Design Specifications, 2012 Edition.

Construction Specifications: South Dakota Standard Specifications for Roads and Bridges, Current Edition and required Provisions, Supplemental Specifications, and Special Provisions as included in the Proposal.

GENERAL NOTES:

Design Live Load: HL-93. No construction loading in excess of legal load was considered.

Reinforcing steel shall conform to ASTM A615 grade 60. The d bars shall be lapped 12 inches with the b and c bars. Cut and bend reinforcing steel as required to place pipe(s) through the drop inlet wall.

Drop inlet may be precast. If precast drop inlet details differ from this standard plate, submit a checked design done by a SD registered P.E. and shop plans to the Office of Bridge Design for approval.

✳ Reduce total quantities of concrete by the amount of concrete displaced by the pipe(s). The total quantity of concrete shall be computed to the nearest hundredth of a cubic yard. The total quantity of reinforcing steel shall be computed to the nearest pound.

Drop inlet shown may be modified by the addition or omission of connecting pipes as noted elsewhere in the plans. All pipes entering drop inlet must fit between the inside face of walls and shall not enter through the corners.

Maximum R.C.P. diameter shall not exceed 18 inches on the 2-foot wide side and shall not exceed 24 inches (24 inches for R.C. arch) on the 3-foot wide side of the drop inlet.

The dimension of H is in feet. Maximum H is 10 feet.

PIPE DISPLACEMENT REDUCTIONS

	Diameter (Inches)	Wall T (Inches)	Class M6 Concrete (Cu. Yd.)
R.C.P.	12	2	0.03
	15	2 ¼	0.04
	18	2 ½	0.05
	24	3	0.09
R.C. ARCH	18	2 ½	0.05
	24	3 ½	0.09

March 31, 2024

Published Date: 2026

SDDOT

2' X 3' TYPE B
REINFORCED CONCRETE DROP INLET

PLATE NUMBER
670.01

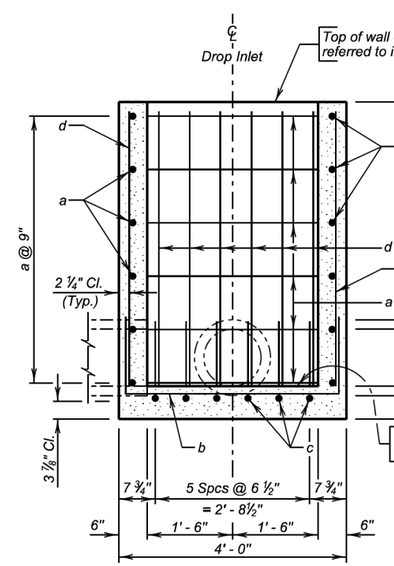

SEC. A - A

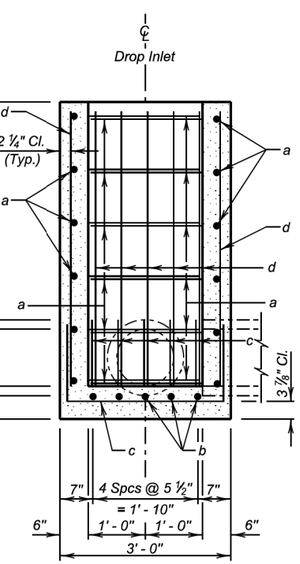

SEC. B - B

REINFORCING SCHEDULE

Mk.	No.	Size	Length	Type
a	2.67H	4	8' - 0"	17
b	5	5	6' - 3"	17
c	6	4	5' - 3"	17
d	22	4	H - 2"	Str.

Bending Details

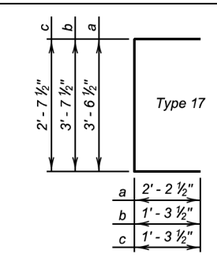

NOTE:
All dimensions are out to out of bars.

March 31, 2024

Published Date: 2026

SDDOT

2' X 3' TYPE B
REINFORCED CONCRETE DROP INLET

PLATE NUMBER
670.01

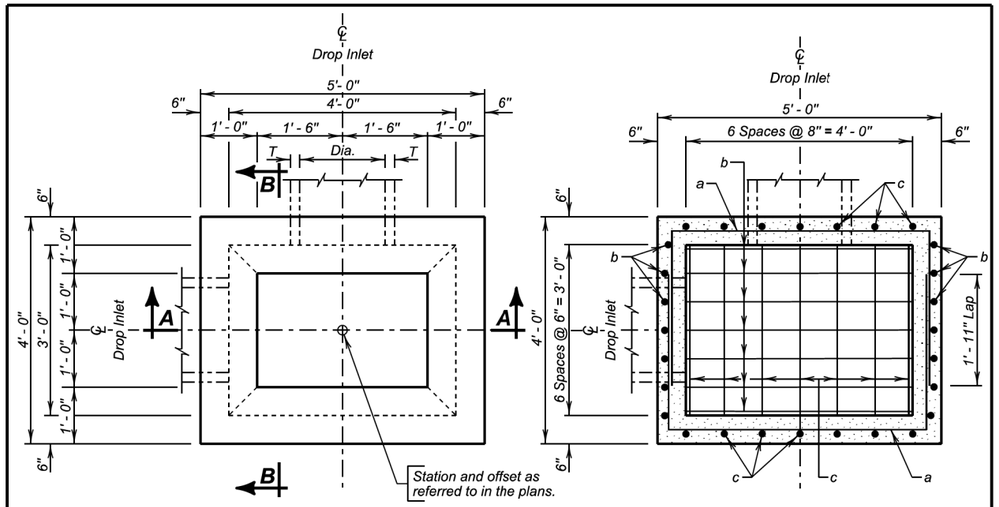

PLAN VIEW

BOTTOM SECTION

ESTIMATED QUANTITIES

ITEM	UNIT	CONSTANT QUANTITY	VARIABLE QUANTITY
✳ Class M6 Concrete	Cu. Yd.	0.72	0.30H
Reinforcing Steel	Lb.	130.93	36.54H
Frame and Grate Assembly	Each	1	———

DROP INLETS FOR 12" TO 36" DIAMETER PIPE

SPECIFICATIONS

Design Specifications: AASHTO LRFD Bridge Design Specifications, 2012 Edition.

Construction Specifications: South Dakota Standard Specifications for Roads and Bridges, Current Edition and required Provisions, Supplemental Specifications, and Special Provisions as included in the Proposal.

GENERAL NOTES:

Design Live Load: HL-93. No construction loading in excess of legal load was considered.

Reinforcing steel shall conform to ASTM A615 grade 60. The d bars shall be lapped 12 inches with the b and c bars. Cut and bend reinforcing steel as required to place pipe(s) through the drop inlet wall.

Drop inlet may be precast. If precast drop inlet details differ from this standard plate, submit a checked design done by a SD registered P.E. and shop plans to the Office of Bridge Design for approval.

✳ Reduce total quantities of concrete by the amount of concrete displaced by the pipe(s). The total quantity of concrete shall be computed to the nearest hundredth of a cubic yard. The total quantity of reinforcing steel shall be computed to the nearest pound.

Drop inlet shown may be modified by the addition or omission of connecting pipes as noted elsewhere in the plans. All pipes entering drop inlet must fit between the inside face of walls and shall not enter through the corners.

Maximum R.C.P. diameter shall not exceed 24 inches (24 inches for R. C. arch) on the 3-foot wide side and shall not exceed 36 inches (30 inches for R.C. arch) on the 4-foot wide side of the drop inlet.

The dimension of H is in feet. Maximum H is 10 feet.

PIPE DISPLACEMENT REDUCTIONS

	Diameter (Inches)	Wall T (Inches)	Class M6 Concrete (Cu. Yd.)
R.C.P.	12	2	0.03
	15	2 ¼	0.04
	18	2 ½	0.05
	24	3	0.09
	30	3 ½	0.14
	36	4	0.20
R.C. ARCH	18	2 ½	0.05
	24	3 ½	0.09
	30	4	0.14

December 16, 2015

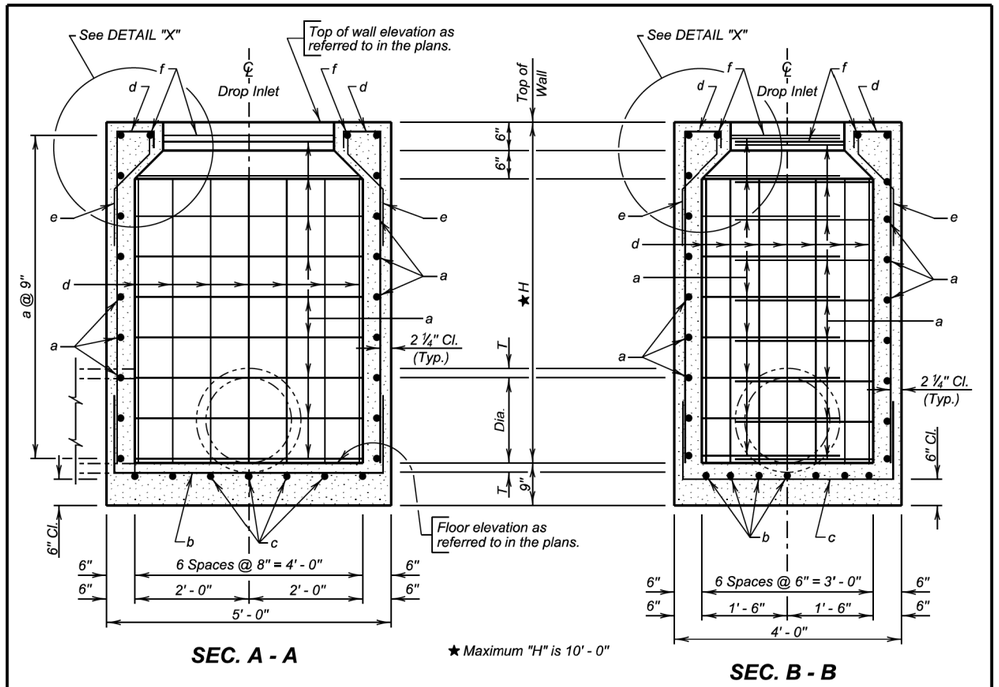

SEC. A - A

★ Maximum "H" is 10' - 0"

SEC. B - B

REINFORCING SCHEDULE

Mk.	No.	Size	Length	Type
a	2.67H	4	10' - 0"	17
b	7	4	7' - 6"	17
c	7	4	6' - 6"	17
d	28	4	H + 9"	S17
e	28	4	2' - 3"	S19
f	2	4	7' - 0"	17

NOTE:
All dimensions are out to out of bars.

Bending Details

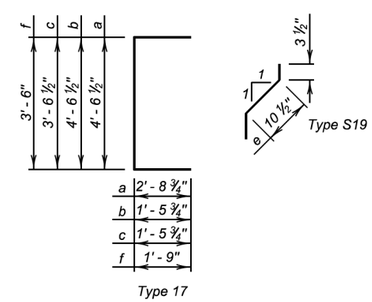

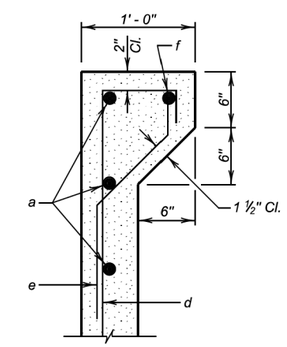

DETAIL "X"

December 16, 2015

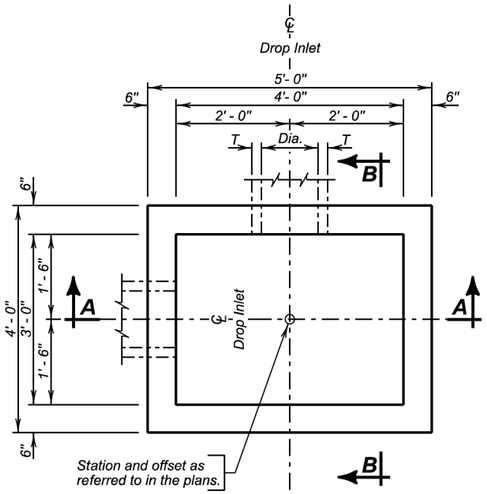

PLAN VIEW

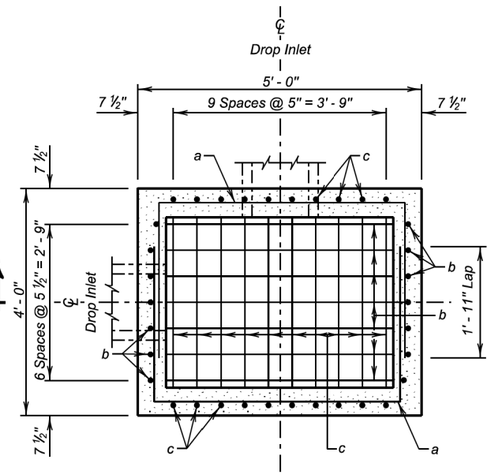

BOTTOM SECTION

ESTIMATED QUANTITIES

ITEM	UNIT	CONSTANT QUANTITY	VARIABLE QUANTITY
✳ Class M6 Concrete	Cu. Yd.	0.43	0.30H
Reinforcing Steel	Lb.	90.90	40.53H
Frame and Grate Assembly	Each	1	——

DROP INLETS FOR 12" TO 36" DIAMETER PIPE

SPECIFICATIONS

Design Specifications: AASHTO LRFD Bridge Design Specifications, 2012 Edition.

Construction Specifications: South Dakota Standard Specifications for Roads and Bridges, Current Edition and required Provisions, Supplemental Specifications, and Special Provisions as included in the Proposal.

GENERAL NOTES:

Design Live Load: HL-93. No construction loading in excess of legal load was considered.

Reinforcing steel shall conform to ASTM A615 grade 60. The d bars shall be lapped 12 inches with the b and c bars. Cut and bend reinforcing steel as required to place pipe(s) through the drop inlet wall.

Drop inlet may be precast. If precast drop inlet details differ from this standard plate, submit a checked design done by a SD registered P.E. and shop plans to the Office of Bridge Design for approval.

✳ Reduce total quantities of concrete by the amount of concrete displaced by the pipe(s). The total quantity of concrete shall be computed to the nearest hundredth of a cubic yard. The total quantity of reinforcing steel shall be computed to the nearest pound.

Drop inlet shown may be modified by the addition or omission of connecting pipes as noted elsewhere in the plans. All pipes entering drop inlet must fit between the inside face of walls and shall not enter through the corners.

Maximum R.C.P. diameter shall not exceed 24 inches (24 inches for R. C. arch) on the 3-foot wide side and shall not exceed 36 inches (30 inches for R. C. arch) on the 4-foot wide side of the drop inlet.

The dimension of H is in feet. Maximum H is 10 feet.

PIPE DISPLACEMENT REDUCTIONS

	Diameter (Inches)	Wall T (Inches)	Class M6 Concrete (Cu. Yd.)
R.C.P.	12	2	0.03
	15	2 ¼	0.04
	18	2 ½	0.05
	24	3	0.09
	30	3 ½	0.14
	36	4	0.20
R.C. ARCH	18	2 ½	0.05
	24	3 ½	0.09
	30	4	0.14

December 16, 2015

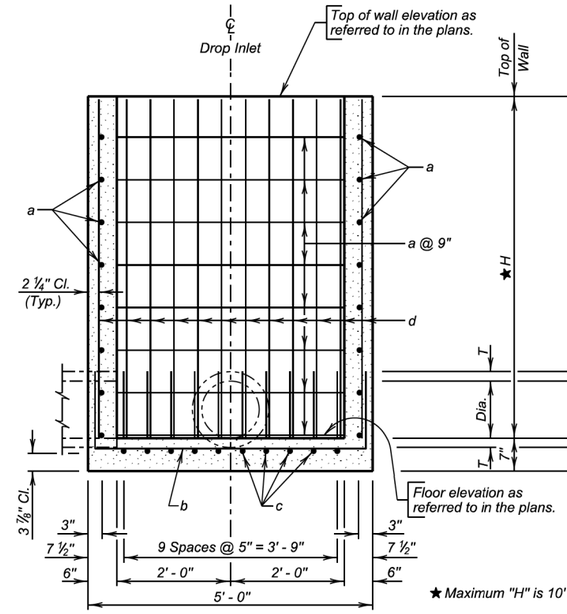

SEC. A - A

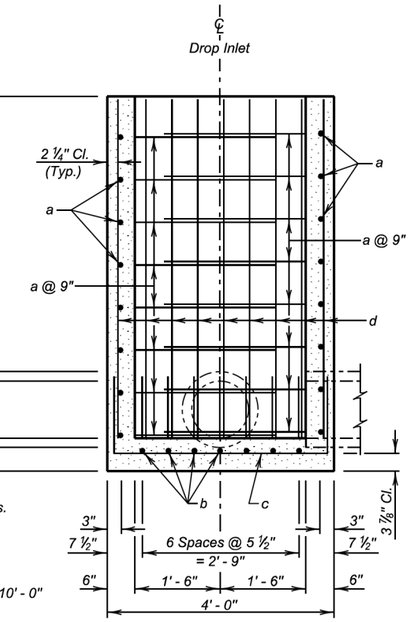

SEC. B - B

REINFORCING SCHEDULE

Mk.	No.	Size	Length	Type	Bending Details
a	2.67H	4	10' - 0"	17	
b	7	5	7' - 3"	17	
c	10	4	6' - 3"	17	
d	34	4	H - 2"	Str.	

NOTE:
All dimensions are out to out of bars.

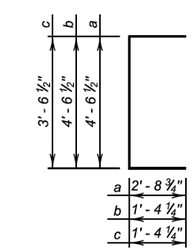

Type 17

December 16, 2015

GENERAL NOTE:

Top of grate elevation shall be 0.04' below theoretical elevation of gutter.

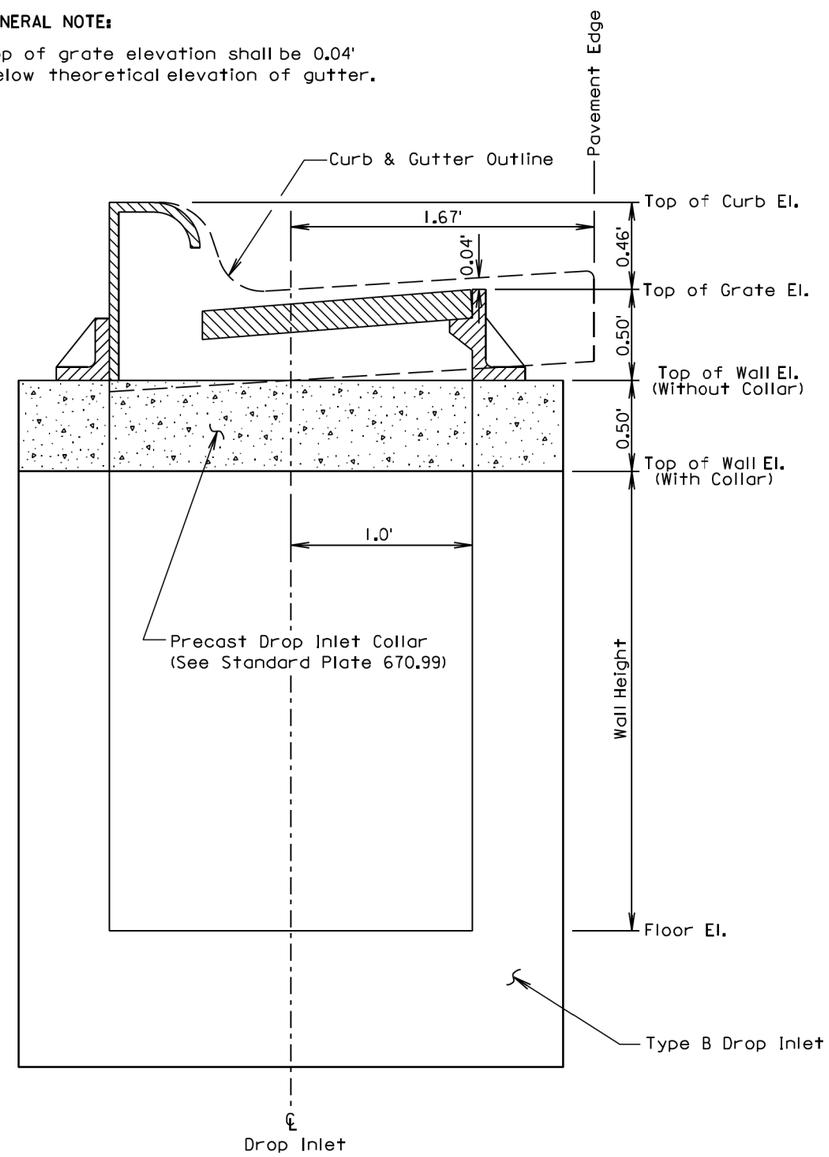

June 26, 2011

Published Date: 2026	SDDOT	INSTALLATION OF TYPE B DROP INLET	PLATE NUMBER 670.75 Sheet 1 of 1

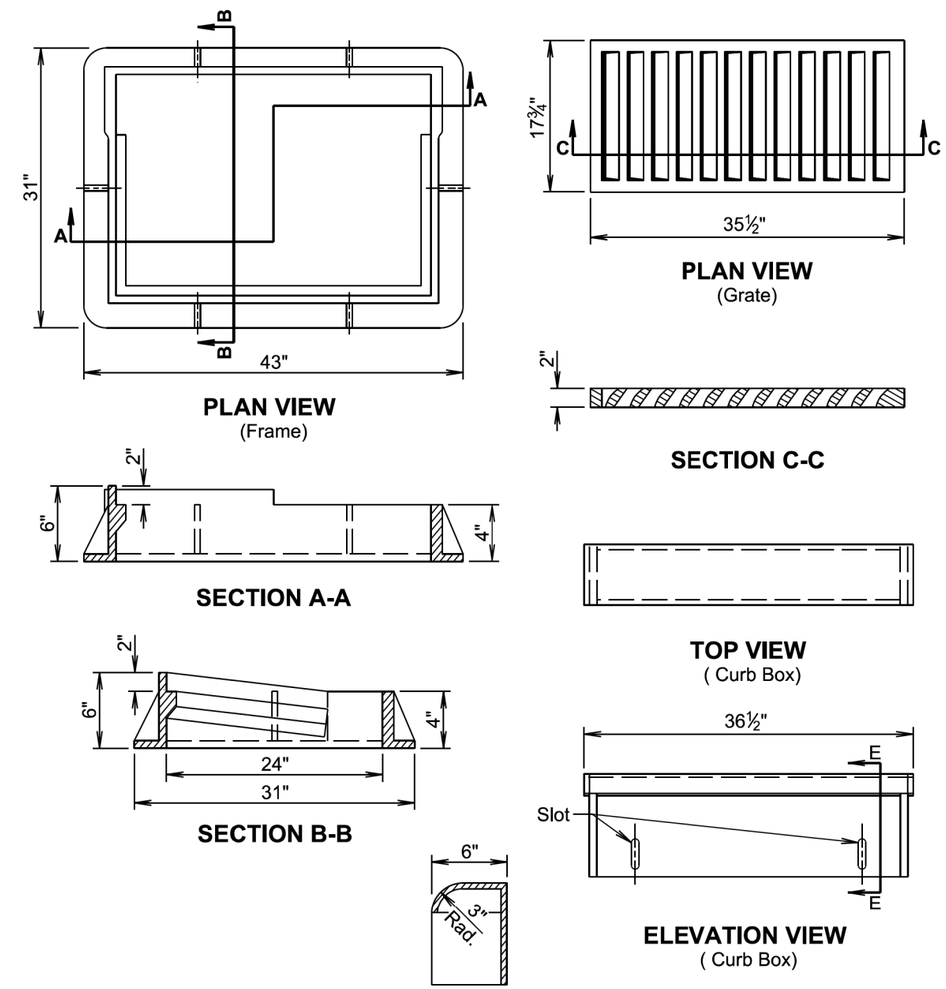

GENERAL NOTES:

The product dimensions may vary from those shown on the standard plate depending on the manufacturer. Grate size and configuration will be similar to the standard plate for hydraulic capacity and bicycle safety. Any variation in dimensions will be approved by the Engineer and the type B frame and grate assembly will be from a manufacturer on the approved products lists.

Design load for the grate will meet the requirements of AASHTO HL-93.

The curb box will be adjustable 6" to 9".

June 1, 2022

Published Date: 2026	SDDOT	TYPE B FRAME AND GRATE	PLATE NUMBER 670.80 Sheet 1 of 1

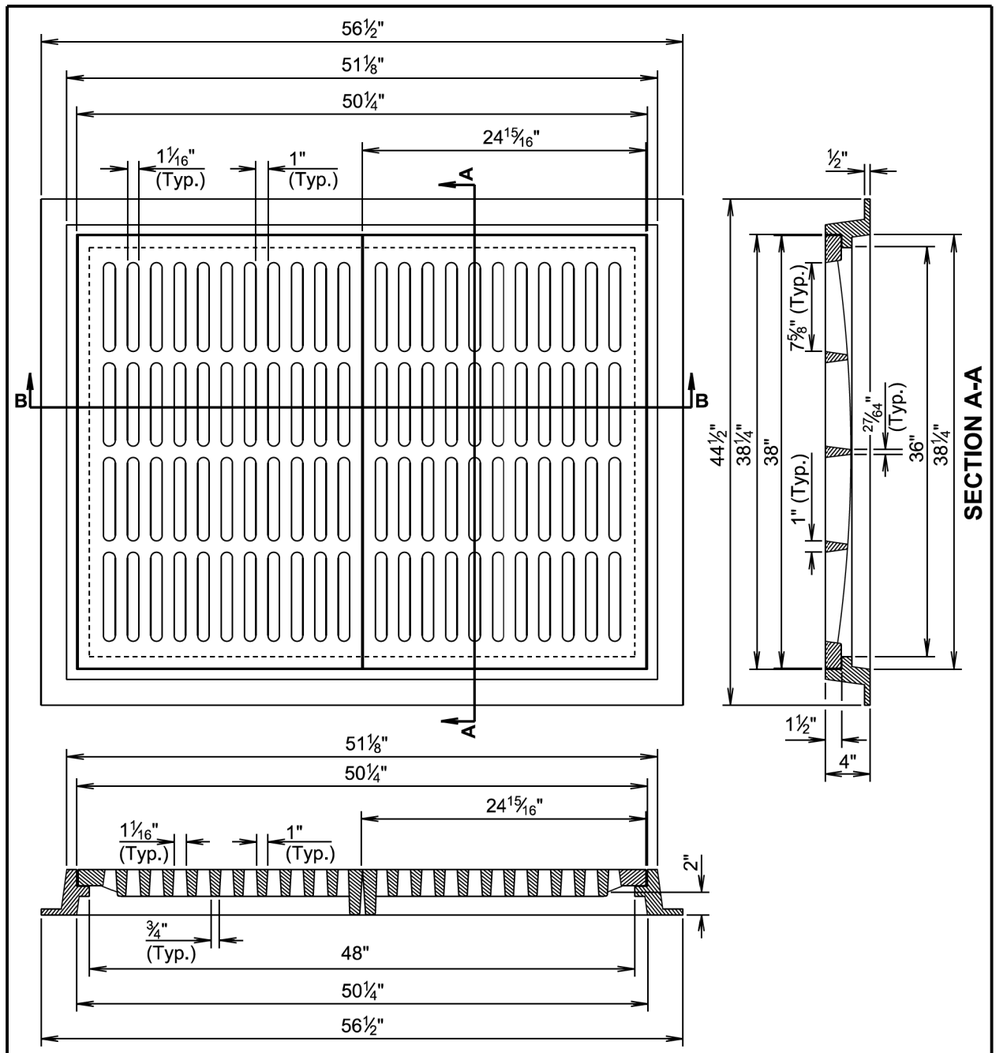

SECTION B-B

GENERAL NOTES:

The product dimensions may vary from those shown on the standard plate depending on the manufacturer. Grate size and configuration will be similar to the standard plate for hydraulic capacity. Any variation in dimensions will be approved by the Engineer and the type C frame and grate will be from a manufacturer on the approved products list.

Design load for the grate will meet the requirements of AASHTO HL-93.

March 31, 2024

Published Date: 2026	SDDOT	TYPE C FRAME AND GRATE	PLATE NUMBER 670.82
			Sheet 1 of 1

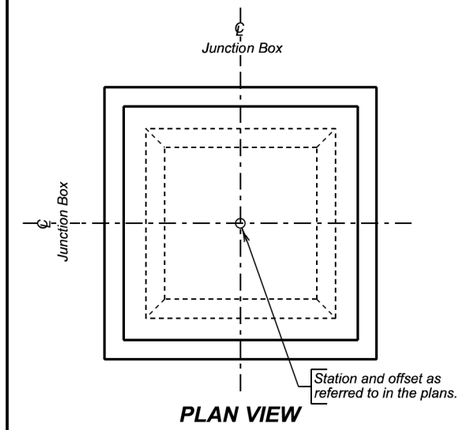

PLAN VIEW

SPECIFICATIONS

Design Specifications: AASHTO LRFD Bridge Design Specifications, 2012 Edition.

Construction Specifications: South Dakota Standard Specifications for Roads and Bridges, Current Edition and required Provisions, Supplemental Specifications, and Special Provisions as included in the Proposal.

GENERAL NOTES

Design Live Load: HL-93. No construction loading in excess of legal load was considered.

The design of the junction box is based on a maximum fill over the junction box of 5 feet and minimum fil over the junction box of 2 feet.

Reinforcing steel shall conform to ASTM A615 Grade 60. Cut and bend reinforcing steel as required to place pipe(s) through junction box wall.

Junction box may be precast. If precast junction box details differ from this standard plate, submit a checked design done by a SD registered P.E. and shop plans to the Office of Bridge Design for approval.

Use 1 inch clear cover on all reinforcing steel unless otherwise noted.

All exposed edges shall be chamfered ¾ inch.

Junction box shown may be modified by the addition or omission of connecting pipes as noted elsewhere in the plans. All pipes entering junction box must fit between the inside face of walls and shall not enter through the corners.

The cost of furnishing and installing the manhole steps shall be incidental to the contract unit price per pound for "Reinforcing Steel".

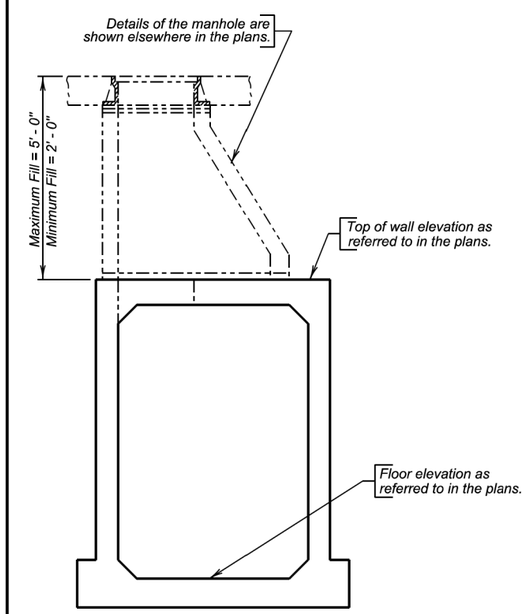

ELEVATION VIEW

PIPE DISPLACEMENT REDUCTIONS

	Diameter (Inches)	Wall T (Inches)	Class M6 Concrete (Cu. Yd.)
R.C.P.	12	2	0.03
	15	2 ¼	0.04
	18	2 ½	0.06
	24	3	0.11
	30	3 ½	0.16
	36	4	0.23
	42	4 ½	0.31
	48	5	0.40
	54	5 ½	0.50

ESTIMATED QUANTITIES

ITEM	✳ Class M6 Concrete	Reinforcing Steel
UNIT	Cu. Yd.	Lb.
H = 4' - 0"	4.37	821
H = 4' - 6"	4.61	846
H = 5' - 0"	4.85	908
H = 5' - 6"	5.10	933
H = 6' - 0"	5.34	958
H = 6' - 6"	5.58	1020
H = 7' - 0"	5.82	1045
H = 7' - 6"	6.06	1071
H = 8' - 0"	6.30	1132

✳ *Reduce total quantities of concrete by the amount of concrete displaced by the pipe(s). Quantity shown includes reduction for a 24-inch diameter manhole opening. The total quantity of concrete shall be computed to the nearest hundredth of a cubic yard.*

May 9, 2020

Published Date: 2026	SDDOT	5'X 5' JUNCTION BOX	PLATE NUMBER 671.01
			Sheet 1 of 3

REINFORCING SCHEDULE

	Mk.	No.	Size	Length	Type
H = 4' - 0"	⌀ a1	1	6	9' - 0"	T3
	▼ a2	4	–	——	—
	h3	28	4	5' - 9"	17A
	k3	48	4	8' - 6"	17
	m1	18	5	6' - 9"	Str.
	n1	18	5	5' - 9"	Str.
	p1	52	4	5' - 0"	Str.
	q1	8	4	3' - 6"	17A
H = 4' - 6"	⌀ a1	1	6	9' - 0"	T3
	▼ a2	4	–	——	—
	h4	28	4	6' - 3"	17A
	k4	48	4	9' - 0"	17
	m1	18	5	6' - 9"	Str.
	n1	18	5	5' - 9"	Str.
	p1	52	4	5' - 0"	Str.
	q1	8	4	3' - 6"	17A
H = 5' - 0"	⌀ a1	1	6	9' - 0"	T3
	▼ a2	5	–	——	—
	h5	28	4	6' - 9"	17A
	k5	48	4	9' - 6"	17
	m1	18	5	6' - 9"	Str.
	n1	18	5	5' - 9"	Str.
	p1	52	4	5' - 0"	Str.
	q1	8	4	3' - 6"	17A
H = 5' - 6"	⌀ a1	1	6	9' - 0"	T3
	▼ a2	5	–	——	—
	h6	28	4	7' - 3"	17A
	k6	48	4	10' - 0"	17
	m1	18	5	6' - 9"	Str.
	n1	18	5	5' - 9"	Str.
	p1	60	4	5' - 0"	Str.
	q1	12	4	3' - 6"	17A
H = 6' - 0"	⌀ a1	1	6	9' - 0"	T3
	▼ a2	6	–	——	—
	h7	28	4	7' - 9"	17A
	k7	48	4	10' - 6"	17
	m1	18	5	6' - 9"	Str.
	n1	18	5	5' - 9"	Str.
	p1	60	4	5' - 0"	Str.
	q1	12	4	3' - 6"	17A
H = 6' - 6"	⌀ a1	1	6	9' - 0"	T3
	▼ a2	6	–	——	—
	h8	28	4	8' - 3"	17A
	k8	48	4	11' - 0"	17
	m1	18	5	6' - 9"	Str.
	n1	18	5	5' - 9"	Str.
	p1	68	4	5' - 0"	Str.
	q1	16	4	3' - 6"	17A
H = 7' - 0"	⌀ a1	1	6	9' - 0"	T3
	▼ a2	7	–	——	—
	h9	28	4	8' - 9"	17A
	k9	48	4	11' - 6"	17
	m1	18	5	6' - 9"	Str.
	n1	18	5	5' - 9"	Str.
	p1	68	4	5' - 0"	Str.
	q1	16	4	3' - 6"	17A
H = 7' - 6"	⌀ a1	1	6	9' - 0"	T3
	▼ a2	7	–	——	—
	h10	28	4	9' - 3"	17A
	k10	48	4	12' - 0"	17
	m1	18	5	6' - 9"	Str.
	n1	18	5	5' - 9"	Str.
	p1	68	4	5' - 0"	Str.
	q1	16	4	3' - 6"	17A
H = 8' - 0"	⌀ a1	1	6	9' - 0"	T3
	▼ a2	8	–	——	—
	h11	28	4	9' - 9"	17A
	k11	48	4	12' - 6"	17
	m1	18	5	6' - 9"	Str.
	n1	18	5	5' - 9"	Str.
	p1	76	4	5' - 0"	Str.
	q1	20	4	3' - 6"	17A

Bending Details

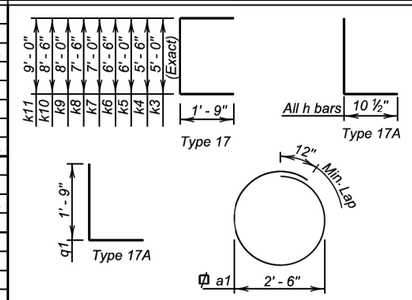

LEGEND FOR PLACING RE-STEEL

T. B. S. - Top of Bottom Slab
B. B. S. - Bottom of Bottom Slab

▼ Cast iron Manhole Steps (R - 1980 - C) from Neenah Foundry or equivalant.

⌀ Locate in center of top slab with 3" clearance at manhole opening.

All dimensions are out to out of bars.

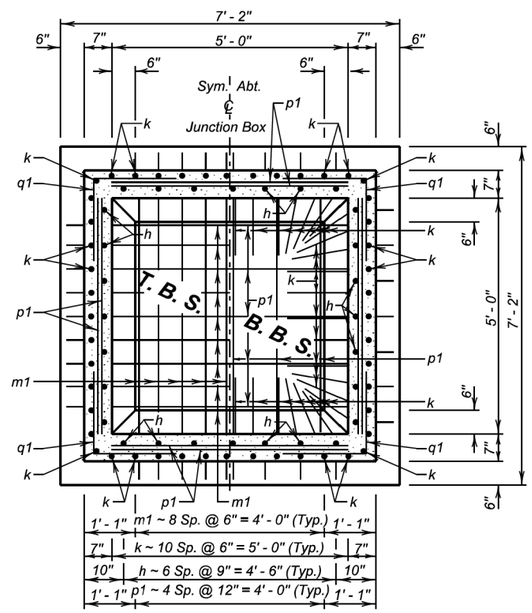

SEC. A - A

May 9, 2020

Published Date: 2026

SDDOT

5'X 5'
JUNCTION BOX

PLATE NUMBER
671.01

Sheet 2 of 3

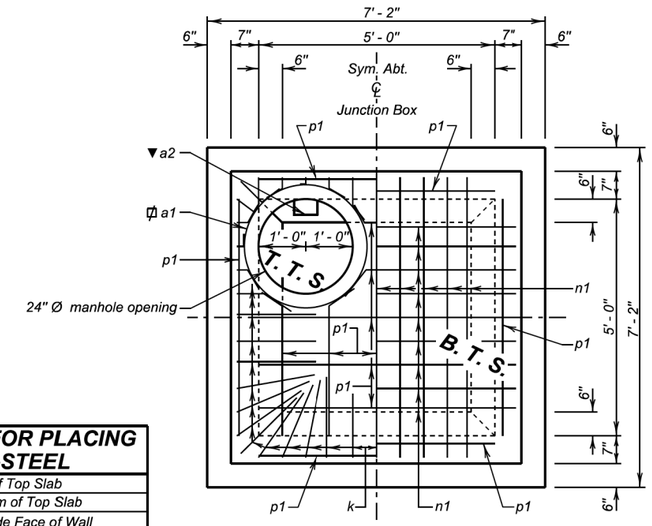

LEGEND FOR PLACING RE-STEEL

T. T. S. - Top of Top Slab
B. T. S. - Bottom of Top Slab
O. F. W. - Outside Face of Wall
I. F. W. - Inside Face of Wall

PLAN VIEW

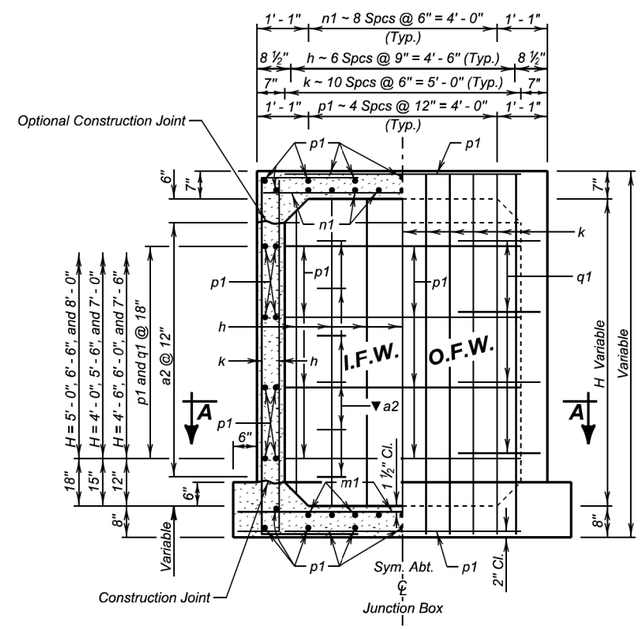

ELEVATION VIEW

May 9, 2020

Published Date: 2026

SDDOT

5'X 5'
JUNCTION BOX

PLATE NUMBER
671.01

Sheet 3 of 3

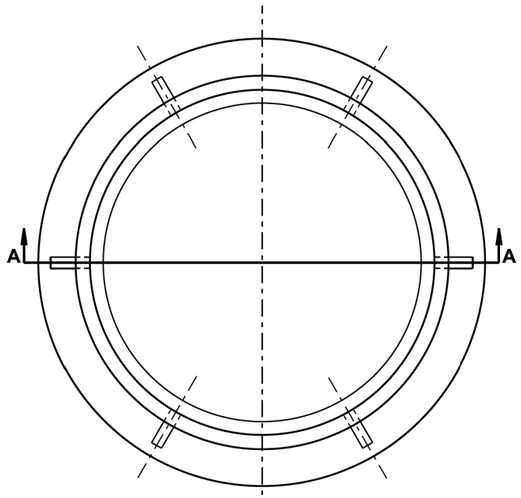

PLAN VIEW
(Frame)

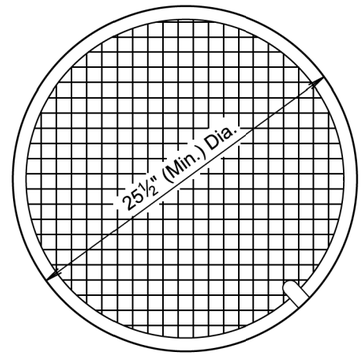

PLAN VIEW
(Lid)

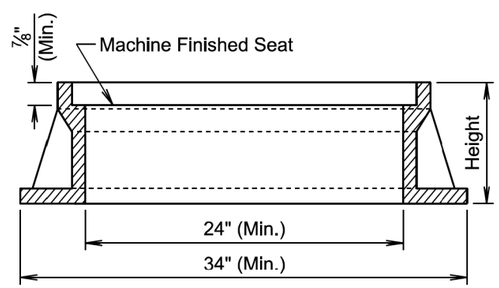

SECTION A-A

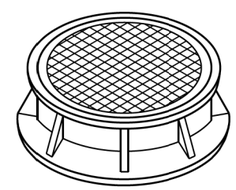

ISOMETRIC VIEW

TYPE	HEIGHT (Inches)
A7	7
A8	8
A9	9
A10	10

GENERAL NOTES:

The product dimensions may vary from those shown on the standard plate depending on the manufacturer. Any variation in dimensions will be approved by the Engineer and the type A manhole frame and lid will be from a manufacturer on the approved products lists.

Design load for the grate will meet the requirements of AASHTO HL-93.

Geometric pattern on top of lid other than that shown will be approved by the Engineer.

June 1, 2022

Published Date: 2026	SDDOT	TYPE A MANHOLE FRAME AND LID	PLATE NUMBER 671.10
			Sheet 1 of 1

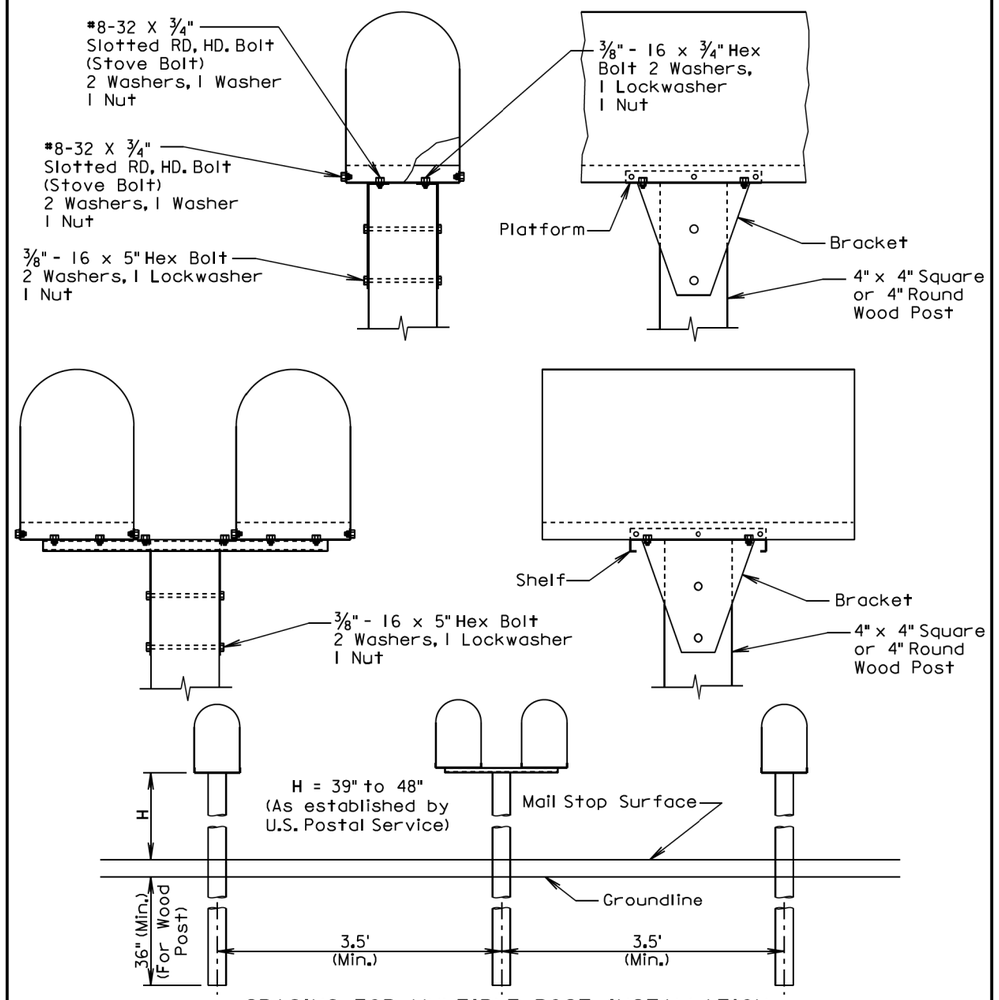

SPACING FOR MULTIPLE POST INSTALLATION

GENERAL NOTES:

The post support assemblies provided should be consistant throughout the project.

Single and double mailboxes may be in any sequence.

Post support assemblies shall be one from the approved products list, a 4"x4" or 4" round wood post, or an alternate post support assembly that meets the test level 3 crash testing requirements of NCHRP 350 or MASH.

Alternate mailbox support assemblies shall be approved by the Engineer prior to installation. The Contractor shall provide the Engineer written certification that the mailbox support assembly has met the crash testing requirements and will be installed in accordance with the manufacturer's installation instructions.

September 6, 2013

Published Date: 2026	SDDOT	SINGLE AND DOUBLE MAILBOX ASSEMBLIES	PLATE NUMBER 900.02
			Sheet 1 of 1

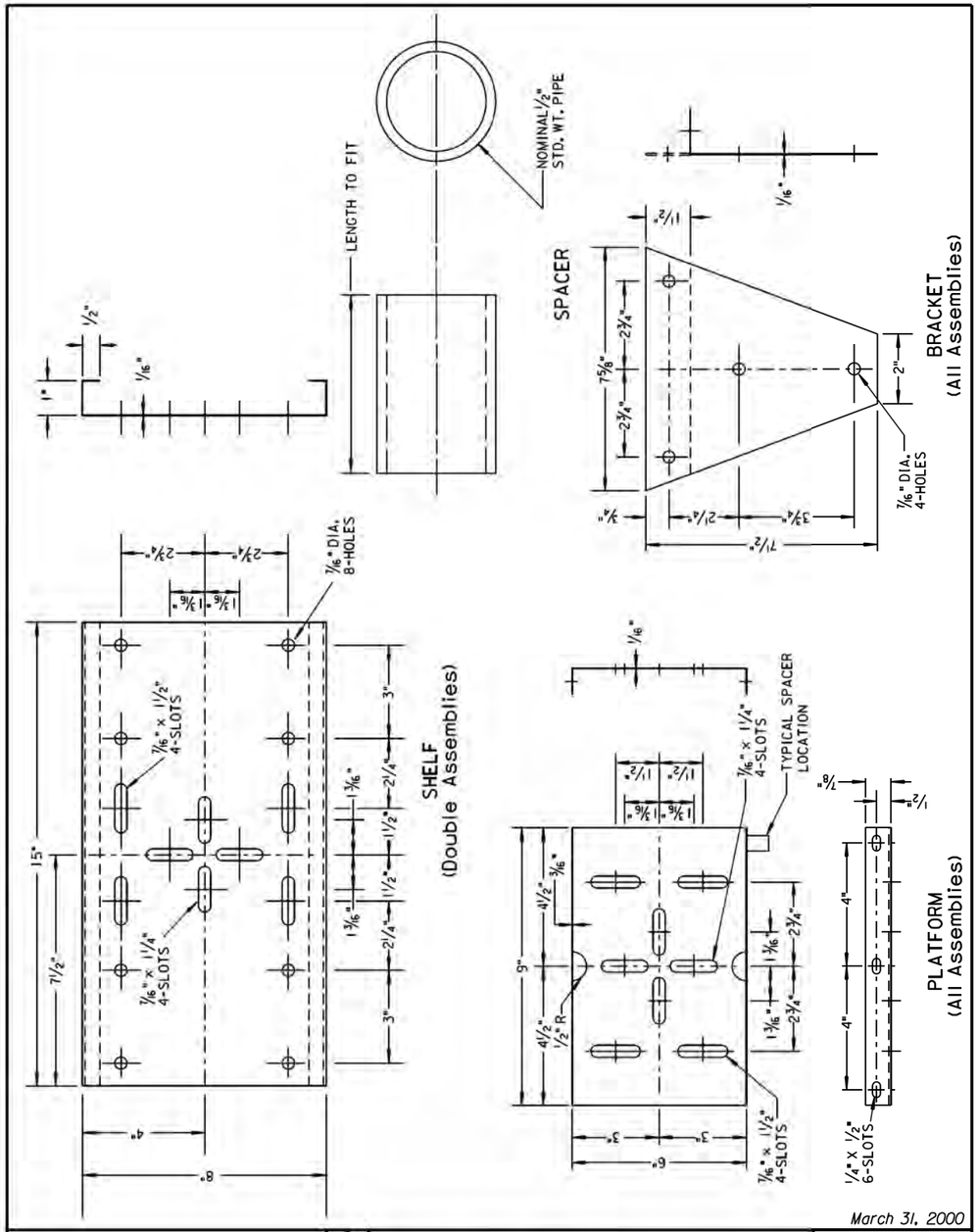

March 31, 2000

Published Date: 2026	SDDOT	MAILBOX SUPPORT HARDWARE	PLATE NUMBER 900.03
			Sheet 1 of 1

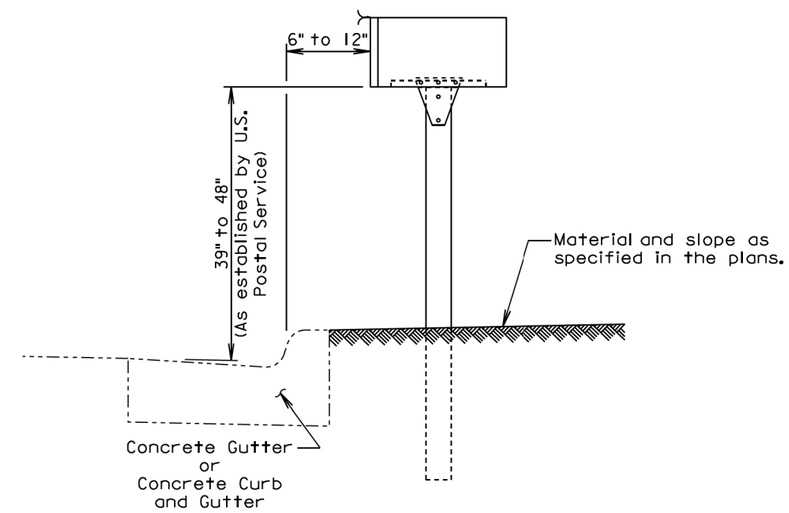

ELEVATION VIEW

GENERAL NOTES:

The post support assemblies provided should be consistant throughout the project.

Post support assemblies shall be one from the approved products list, a 4"x4" or 4" round wood post, or an alternate post support assembly that meets the test level 3 crash testing requirements of NCHRP 350 or MASH.

Alternate mailbox support assemblies shall be approved by the Engineer prior to installation. The Contractor shall provide the Engineer written certification that the mailbox support assembly has met the crash testing requirements and will be installed in accordance with the manufacturer's installation instructions.

February 10, 2014

Published Date: 2026	SDDOT	MAILBOX ADJACENT TO CONCRETE GUTTER OR CONCRETE CURB AND GUTTER	PLATE NUMBER 900.05
			Sheet 1 of 1

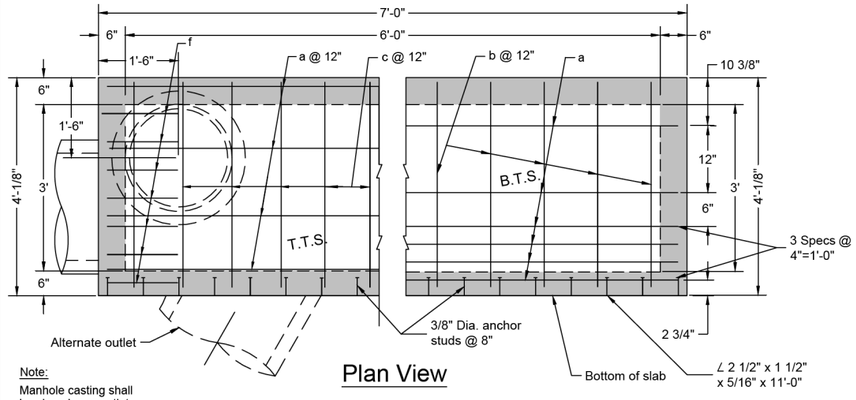

Note:
Manhole casting shall be placed over outlet.

Plan View

Legend For Placing Re-Steel
T.T.S. ~ Top of top slab
B.T.S. ~ Bottom of top slab
F.W. ~ Front wall
R.W. ~ Rear wall
E.W. ~ End wall
B.S. ~ Bottom slab

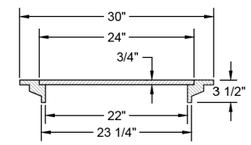

Typical Section Thru Manhole Assembly

Manhole frame and cover shall be a Neenah R-6040, Type Y or engineer approved equal.

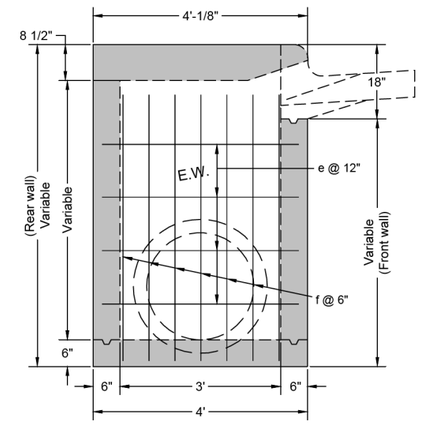

End Elevation

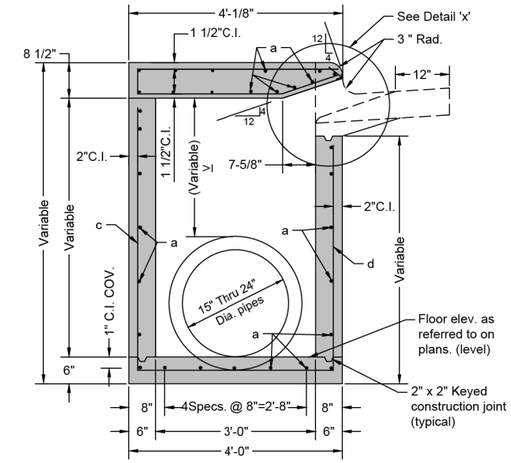

Typical Section

Note: Rebar for the back wall shall be placed similar to the front.

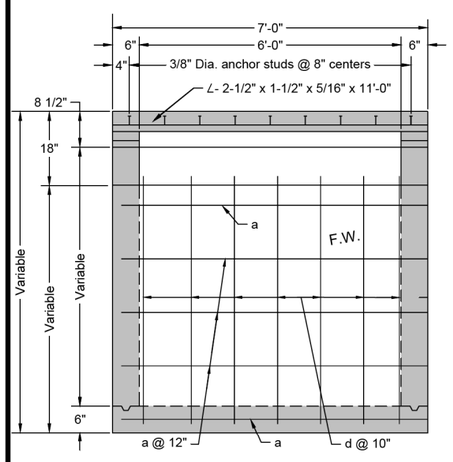

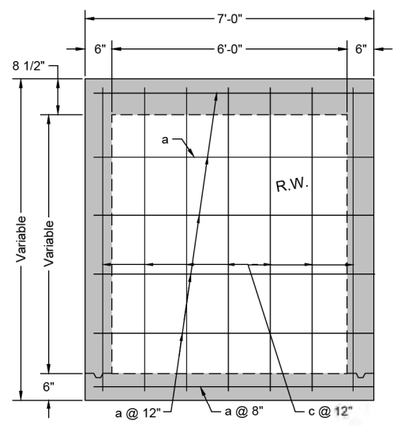

Part Elevation

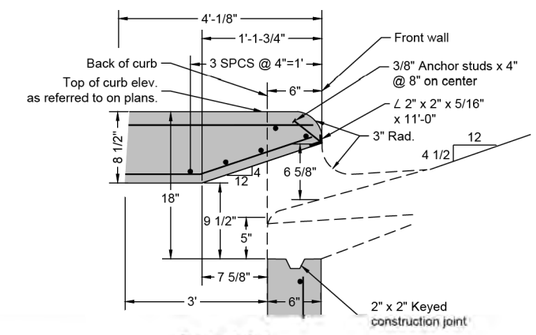

Detail 'X'

General Notes

1. All exposed edges shall be chamfered 1".
2. Design specification: A.A.S.H.T.O. specifications for highway bridges, latest edition.
3. All reinforcing steel shall conform to A.S.T.M. A615 Grade 60.
4. Unit stresses: Concrete: fc = 1,600 P.S.I.; fc = 4,000 P.S.I.
   Reinforcing steel: fs = 20,000 P.S.I.
5. The cost of angle, studs and galv. shall be absorbed in the price bid for reinforcing steel or unit price for each inlet.
6. Transition to full inlet opening depth shall be 3" each side of outside walls.
7. Minimum 3/8" expansion material shall be place between the curb and the inlet lid on both sides of the inlet.
8. Tooled joints shall be placed across the gutter pan at the outside walls of the inlet structure.
9. It is not acceptable to construct this structure with the pipe connection as a non-monolithic installation.
10. All reinforcing steel is to be tied in place prior to the start of concrete placement.

Specification Note

Use South Dakota Standard Specifications for roads and bridges, latest edition and required provisions, supplemental specifications and/or special provisions as included in the proposal.

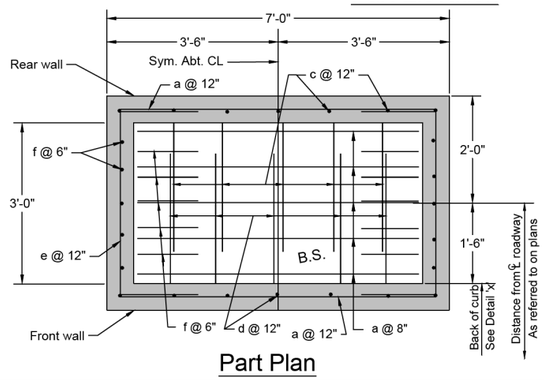

Part Plan

Estimated Quantities

Item	Unit	6' Long inlet					
		15" Dia. outlet		18" Dia. outlet		24" Dia. outlet	
		Constant	Variable	Constant	Variable	Constant	Variable
* Class M6 concrete	CuYds	1.72	0.35V	1.82	0.35V	2.02	0.35V
Reinforcement-conc. masonry	Lbs	278	43.9V	290	43.9V	303	43.9V
Manhole rim & cover-type Y	Each	1	—	1	—	1	—

* Constant shall be reduced for the appropriate pipe or combination of pipes, thus;
15" Dia=-0.04 C.Y., 18" Dia. =-0.05 C.Y., 24" Dia. =-0.09 C.Y.

Reinforcing Schedule

			15" Dia. Pipe		30" Dia. Pipe		18" Arch Pipe	
MK	SZ	Type	No.	Length	No.	Length	No.	Length
*a	5	STR	21+2V	6'-3"	21+2V	6'-3"	21+2V	6'-3"
*b	4	19A	6	3'-9"	6	3'-3"	6	3'-3"
*c	4	17	7	7'9 3/4"+V	7	9'-1"+V	7	8'7 1/2"+V
d	6	17A	7	3'4 3/4"+V	7	3'-8"+V	7	4'-2"+V
*e	4	17	4+2V	6'-3"	4+2V	6'-3"	4+2V	6'-3"
*f	4	17	14	4'8 3/4"+V	14	5'-0"+V	14	5'6 1/2"+V

* Cut and bend in field as necessary to fit

All reinforcing steel dimensions are outside to outside.

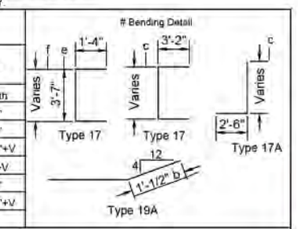

Note: For 15" to 24" pipes - max.

Revised: December 2009

6'-0" S.F. Type Inlet for Storm Water (15" to 24" Pipes)

CITY OF SIOUX FALLS
PUBLIC WORKS
Providing a Better Quality of Life for You!

Specification Reference	Plate Number
No. 460	460.01

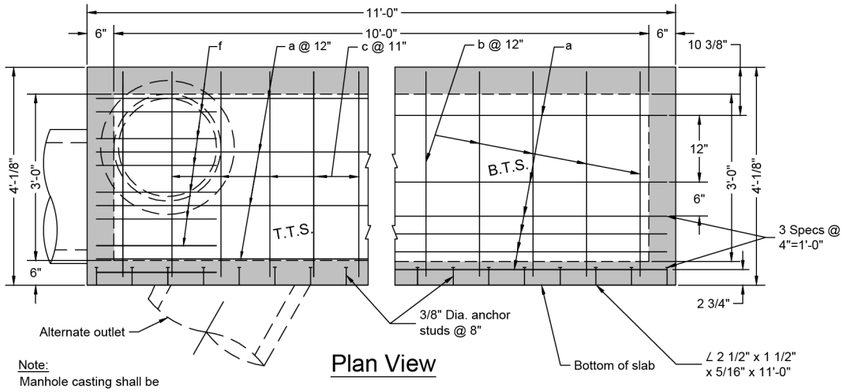

Note:
Manhole casting shall be placed over outlet.

Plan View

Legend For Placing Re-Steel

T.T.S. ~ Top of top slab
B.T.S. ~ Bottom of top slab
F.W. ~ Front wall
R.W. ~ Rear wall
E.W. ~ End wall
B.S. ~ Bottom slab

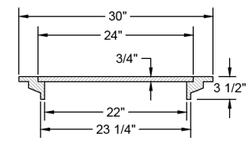

Typical Section Thru Manhole Assembly

Manhole frame and cover shall be a Neenah R-6040, Type Y or engineer approved equal.

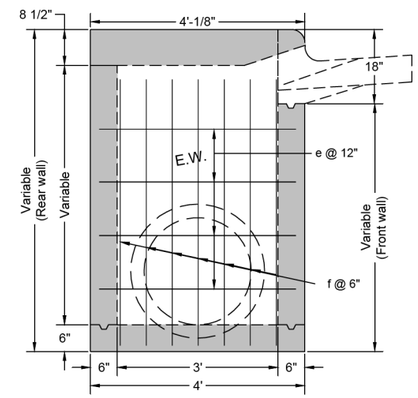

End Elevation

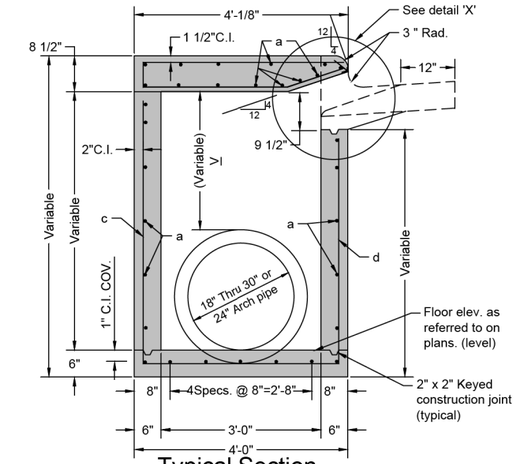

Typical Section

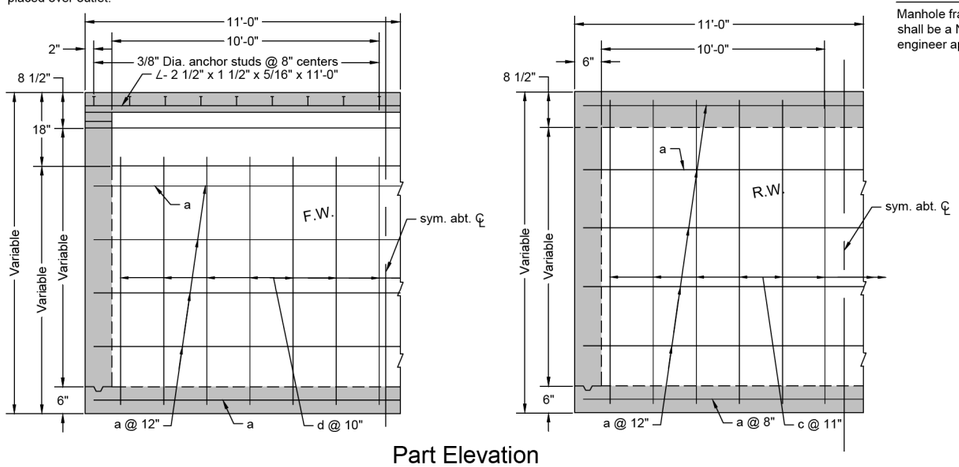

Part Elevation

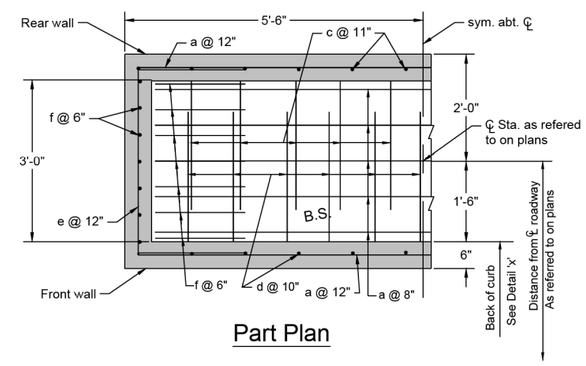

Part Plan

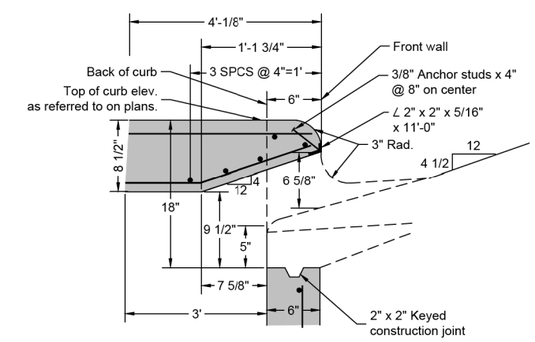

Detail 'X'

General Notes

1. All exposed edges shall be chamfered 1".
2. Design specification: A.A.S.H.T.O. Specifications for highway bridges, latest edition.
3. All reinforcing steel shall conform to A.S.T.M. A615 Grade 60.
4. Unit stresses: Concrete: fc = 1,600 P.S.I.; fc = 4,000 P.S.I.
   Reinforcing steel: fs = 20,000 P.S.I.
5. The cost of angle, studs and galv. shall be absorbed in the price bid for reinforcing steel or unit price for each inlet.
6. Transition to full inlet opening depth shall be 3" each side of outside walls.
7. Minimum 3/8" expansion material shall be place between the curb and the inlet lid on both sides of the inlet.
8. Tooled joints shall be placed across the gutter pan at the outside walls of the inlet structure.
9. It is not acceptable to construct this structure with the pipe connection as a non-monolithic installation.
10. All reinforcing steel is to be tied in place prior to the start of concrete placement.

Specification Note

Use South Dakota Standard Specifications for roads and bridges, latest edition and required provisions, supplemental specifications and/or special provisions as included in the proposal.

Estimated Quantities

Item	Unit	10' Long inlet											
		18" Dia. Outlet		21" Dia. Outlet		24" Dia. Outlet		27" Dia. Outlet		30" Dia. Outlet		24" Arch Outlet	
		Constant	Variable	Constant	Variable	Constant	Variable	Constant	Variable	Constant	Variable	Constant	Variable
* Class M6 concrete	CuYds	2.75	0.49V	2.89	0.49V	3.03	0.49V	3.17	0.49V	3.31	0.49V	2.79	0.49V
Reinforcement-conc. masonry	LBS	466	68.6V	476	68.6V	485	68.6V	528	68.6V	538	68.6V	489	68.6V
Manhole rim & cover-type Y	Each	1	---	1	---	1	---	1	---	1	---	1	---

* Constant shall be reduced for the appropriate pipe or combination of pipes, thus: 18" Dia.=-0.05 C.Y., 21" Dia. =-0.07C.Y., 24" Dia. =-0.09 C.Y., 27" Dia. =-0.11 C.Y., 30" Dia. =-0.14 C.Y. and arch =-0.09 C.Y.

Reinforcing Schedule

			18" Dia. Pipe		21" Dia. Pipe		24" Dia. Pipe		27" Dia. Pipe		30" Dia. Pipe		24" Arch Pipe	
MK	SZ	Type	No.	Length	No.	Length	No.	Length	No.	Length	No.	Length	No.	Length
*a	5	STR	21+2V	10'-3"	21+2V	10'-3"	21+2V	10'-3"	23+2V	10'-3"	23+2V	10'-3"	21+2V	10'-3"
*b	4	19A	11	3'-9"	11	3'-3"	11	3'-3"	11	3'-3"	11	3'-3"	11	3'-3"
*c	4	17	12	8'-1"+V	12	8'-41/4"+V	12	8'-71/2"+V	12	8'103/4"+V	12	9'-2"+V	12	8'-2"+V
d	5	17A	13	3'-8"+V	13	3'-11"+V	13	4'-2"+V	13	4'-6"+V	13	4'-9"+V	13	3'-9"+V
*e	4	17	4+2V	7'-9"	4+2V	7'-9"	4+2V	7'-9"	6+2V	7'-9"	6+2V	7'-9"	4+2V	7'-9"
*f	4	17	14	6'-6"+V	14	6'-91/4"+V	14	7'-1/2"+V	14	7'-33/4"+V	14	7'-7"+V	14	8'-7"+V

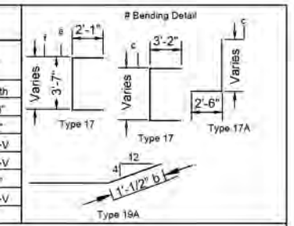

* Cut and bend in field as necessary to fit

\# All reinforcing steel dimensions are outside to outside.

Note: For 18" to 30" pipes - max.

Revised: December 2009

10'-0" S.F. Type Inlet for Storm Water (18" to 30" Pipes)

CITY OF SIOUX FALLS
PUBLIC WORKS
Providing a Better Quality of Life for You!

Specification Reference	Plate Number
No. 460	460.02

Top View

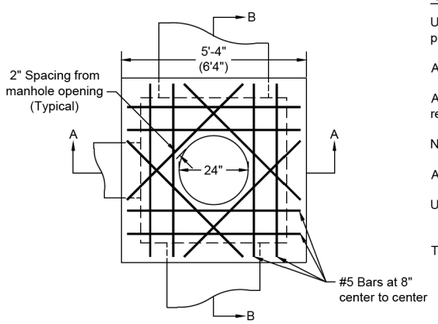

General Notes

Use South Dakota Standard Specifications for Roads and Bridges, latest edition and required provisions, supplemental specifications and/or special provisions.

All reinforcing steel shall conform to A.S.T.M. A615, Grade 60.

All reinforcing steel shall be cut and/or bent in the field to maintain a minimum of 2" cover on all reinforcing steel.

No vertical construction joints are allowed.

All concrete shall be class M-6.

Unit stresses: Concrete Fc = 1600 P.S.I.
Reinforcing steel Fc = 20,000 P.S.I.

Top of manhole cover to be set flush with finished surface elevation.

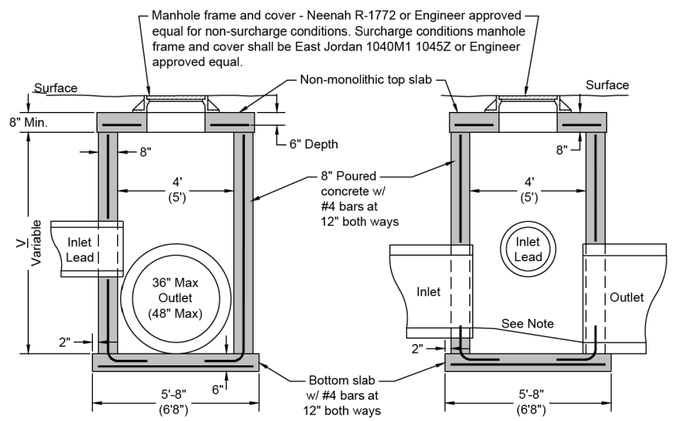

Section A-A

Section B-B

Estimated Quantities

Item	Unit	4' X 4' Junction Box		5' X 5' Junction Box	
		Constant	Variable	Constant	Variable
* Class M6 concrete	CuYds	1.29	0.46V	1.93	0.56V
Reinforcing Steel	LBS	103	23V	131	35V
Manhole rim & cover-as specified	Each	1	—	1	—

* Constant shall be reduced for the appropriate pipe or combination of pipes, thus;
12" Dia.=-0.03 C.Y., 15" Dia=-0.04 C.Y., 18" Dia.=-0.05 C.Y., 21" Dia.=-0.07 C.Y., 24" Dia.=-0.09 C.Y., 27" Dia.=-0.11 C.Y., 30" Dia=-0.14 C.Y., 33" Dia.=-0.17 C.Y., 36" Dia.=-0.20 C.Y., 42" Dia.=-0.26 C.Y., 48" Dia.=-0.34 C.Y.

Notes:

Top slab steel reinforcement requires 12-#5 bars 5'(6') long to be placed as shown, 2" From manhole opening and 8" center to center at a depth of 6" w/min. cover thickness of 8".

Floor of junction box to be finished in such a manner to insure uninterrupted flow thru the box.

When pipe sizes differ thru junction box, top of pipe to match when possible.

( ) Indicates specifications for a 5' x 5' junction box. Maximum pipe size allowed for 4' x 4' junction box is 36" R.C.P. Maximum pipe size allowed for a 5' x 5' junction is 48" R.C.P. Standard plate is applicable to variable depth up to 8'

Exhibit depicts a 4'x4' junction box at 8' variable height.

Revised: May 2019

CITY OF SIOUX FALLS PUBLIC WORKS Providing a Better Quality of Life for You!	Type I Junction Box for Storm Water	Specification Reference No. 460	Plate Number 460.05

Estimated Quantities

Item	Unit	Constant	Variable
* Class M6 concrete	CuYds	0.27	0.32V
Reinforcement-conc. masonry	LBS	28	---

* Constant shall be reduced for the appropriate pipe or Combination of pipes, thus; 12" Dia.=-0.03 C.Y., 15" Dia=-0.04 C.Y., 18" Dia.=-0.05 C.Y., 24" Dia.=-0.09 C.Y.

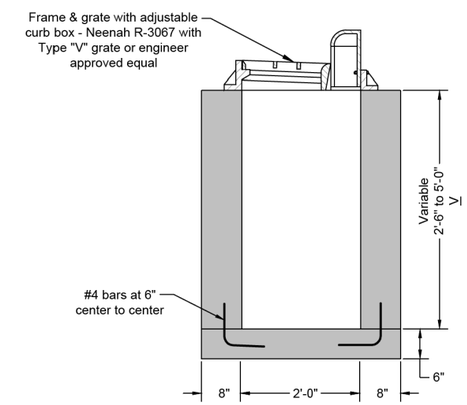

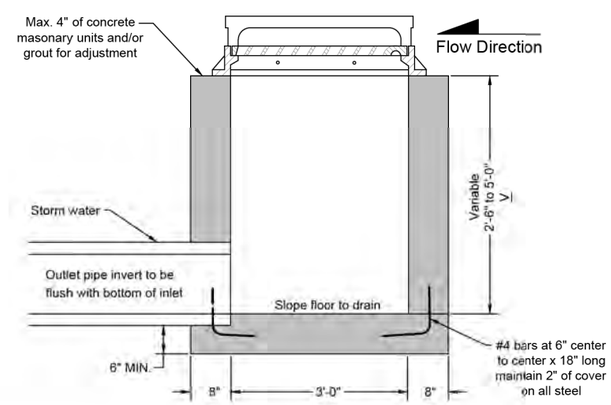

Revised: December 1995

CITY OF SIOUX FALLS PUBLIC WORKS Providing a Better Quality of Life for You!	2' x 3' Type B1 Inlet for Storm Water	Specification Reference No. 460	Plate Number 460.07

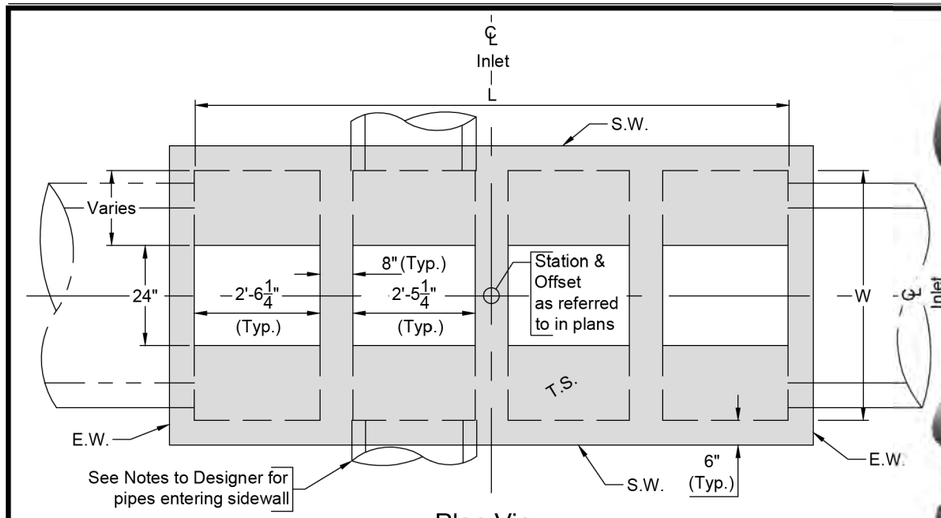

Plan View

(4 frame & grates with lid shown)
(number of frame and grates may vary per project requirements)

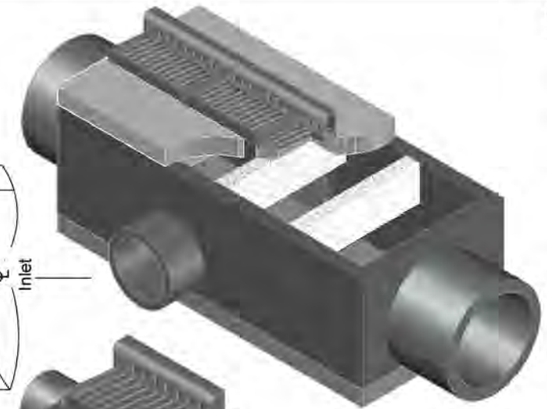

Isometric View

W > 2'-0"
(4 frame and grates with lid shown)

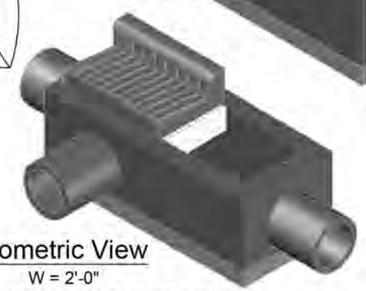

Isometric View

W = 2'-0"
(2 frame and grates with no lid shown)

Notes to Designer

1. Type B inlets installation location shall be limited to arterial and collector streets. The Type B inlets shall not be allowed on local and residential streets, unless approved by the Owner / Engineer.
2. The inlets shall either be 2' wide with no-lid; or shall have lids for inlets widths from 2'-6" to 10'. Inlet widths of 6" increments shall be as follows: 2', 2'-6", 3', 3'-6", 4', 4'-6", 5', 5'-6", 6', 6'-6", 7', 7'-6", 8', 8'-6", 9', 9'-6", 10'.
3. The number of frame & grates may vary, but shall typically be limited to 3 to allow for ease of mainline paving / finishing concerns at the inlets. Inlets requiring more than 3 frame & grates are allowed per these inlet details, but shall be approved by the Owner / Engineer.
4. For inlets with single frame and grates, use Neenah R-3295 heavy duty frame and grates with curb boxes. For inlets with multiple frame and grates, as required use R-3295-2 and R-3295-3 heavy duty frame and grates with curb boxes. All curb boxes shall be adjustable. All R-3295 frame and grate bolts, washers, and nuts shall be galvanized steel. Type V grates shall be used with all R-3295 frame and grates.
5. The inlet pipe centerline and frame and grate centerlines shall be aligned as close as possible to each other for maintenance purposes. The frame and grate location is allowed to shift transversely within the limits of inlet walls during construction, due to conflicts such as utilities, obstructions, existing conditions, etc.
6. The pipe outside diameters, including the pipe wall thickness, shall not exceed the inside width of the inlet walls. Pipes shall not enter through the inlet corners.
7. Pipes entering sidewalls shall be centered between the diaphragm walls. Pipe sizes are limited to those presented in the table on this sheet so that no portion of the pipe cross section shall conflict with the diaphragm walls.
8. The total quantity of reinforcing steel shall be computed to the nearest pound. The total quantity of concrete shall be computed to the nearest tenth of a cubic yard. Reduce the total quantity of inlet concrete by the amount of concrete displaced by the pipe(s), as shown on the "Pipe Displacement Reductions" table shown on the following sheet.
9. The number of pipes shown on the detail's inlet views and examples are allowed to be modified by the addition or omission of connecting pipes as required by the cesign.
10. The Type B inlets Design Live Load used for this detail is HL-93 loading. No Construction loading in excess of the legal loading was considered.

Abbreviations:

n = Number of frame and grates
W = Interior width of inlet, perpendicular to street centerline.
H = Height of box, from invert to top of lid.
L = Interior length of inlet, parallel to street centerline.
T.S. = Top of Lid / Slab
B.S. = Bottom Slab
S.W. Side Wall
E.W. = End Wall
D.W. = Diaphragm Wall
B = Diaphragm Wall Height

Inlet Interior Length

No. of Frame and Grates	L (ft-in)
1	2'-7 ¼"
2	5'-8 ½"
3	8'-9 ¾"
4	11'-11"
n	5.7083 + (n-2)*(3.104)

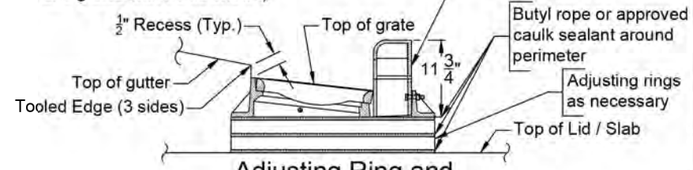

Adjusting Ring and Butly Rope / Sealant Detail

Diaphragm Wall Height, B (*ft*) / (*Max Circular Pipe Size* (*in*))

Box Width = W (ft)	Box Height = H (ft)								
	2	3	4	5	6	7	8	9	10
2	0'-8"Δ / (18")	0'-8"Δ / (18")	0'-8"Δ / (18")	0'-8"Δ / (18")	0'-8"Δ / (18")	0'-8"Δ / (18")	0'-8"Δ / (18")	1'-0"Δ / (18")	2'-0"Δ / (18")
3	NA	1'-0" / (18")	1'-0" / (24")	1'-0" / (24")	1'-0" / (24")	1'-0" / (24")	1'-0" / (24")	1'-0" / (24")	2'-0" / (24")
4	NA	1'-0" / (18")	1'-0" / (24")	1'-0" / (36")	1'-0" / (36")	1'-0" / (36")	1'-0" / (36")	1'-0" / (36")	2'-0" / (36")
5	NA	NA	1'-6" / (24")	1'-6" / (36")	1'-6" / (48")	1'-6" / (48")	1'-6" / (48")	1'-6" / (48")	2'-0" / (48")
6	NA	NA	1'-6" / (24")	1'-6" / (36")	1'-6" / (48")	1'-6" / (60")	1'-6" / (60")	1'-6" / (60")	2'-0" / (60")
7	NA	NA	2'-0" / (18")	2'-0" / (24")	2'-0" / (36")	2'-0" / (48")	2'-0" / (60")	2'-0" / (72")	2'-0" / (72")
8	NA	NA	2'-0" / (18")	2'-0" / (24")	2'-0" / (36")	2'-0" / (48")	2'-0" / (60")	2'-0" (72")	2'-0" / (72")
9	NA	NA	2'-0" / (18")	2'-0" / (24")	2'-0" / (36")	2'-0" / (48")	2'-0" / (60")	2'-0" / (72")	2'-0" / (72")
10	NA	NA	2'-0" / (18")	2'-0" / (24")	2'-0" / (36")	2'-0" / (48")	2'-0" / (60")	2'-0" / (72")	2'-0" / (72")

Notes:
Interpolation allowed between given values, otherwise round up the diaphragm wall height.
Δ Diaphragm wall cast integral to inlet walls, no lid required. No diaphragm wall stirrups required.
Indicates that the bottom of diaphragm wall is 2" below top of inside of max pipe size.
NA Not Allowed

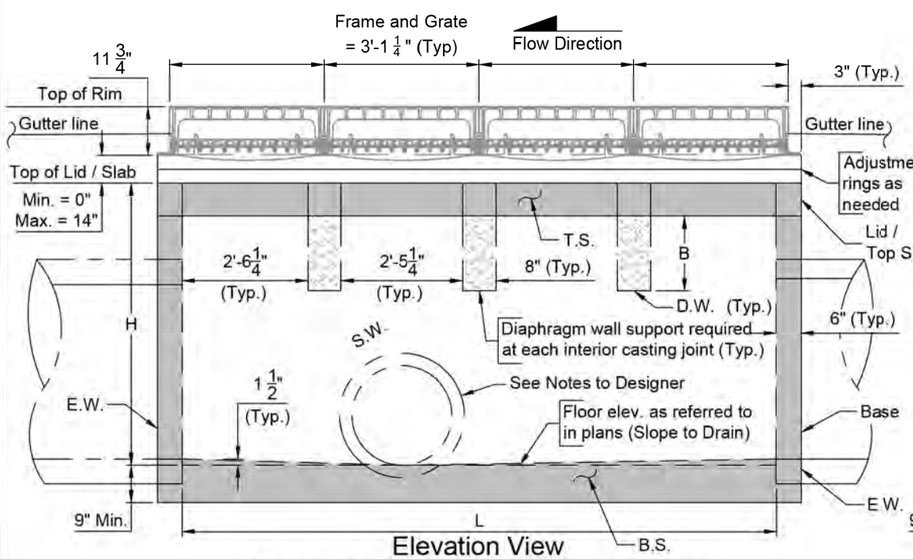

Elevation View

(4 frame and grates with lid shown, number of cells may vary)

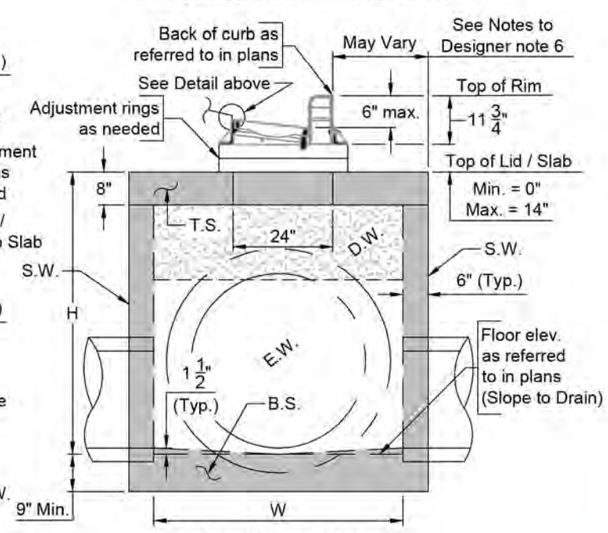

End Elevation

Type B Inlet for Storm Water General Layout

CITY OF SIOUX FALLS
PUBLIC WORKS
Providing a Better Quality of Life for You!

Specification Reference	Plate Number
No. 460	460.14

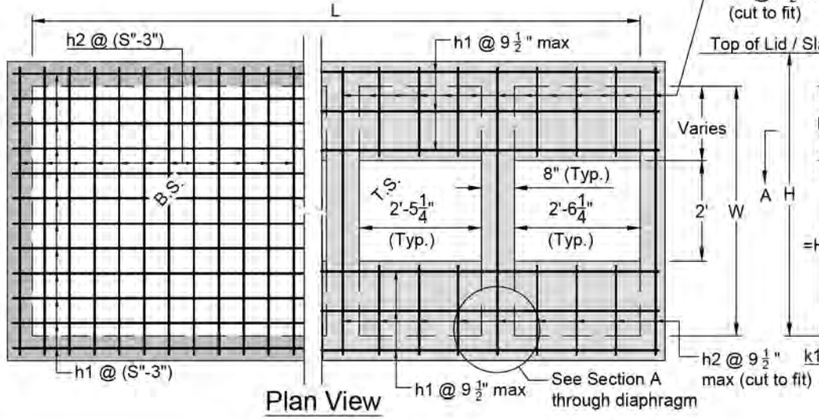

Plan View

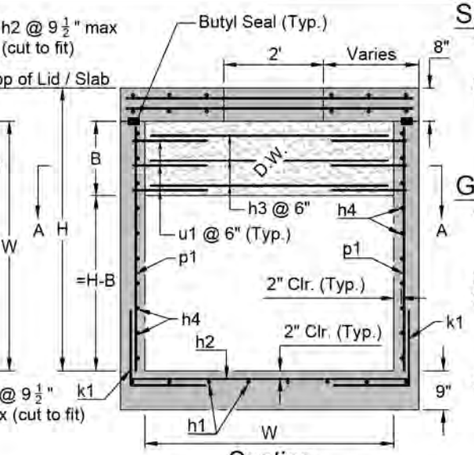

Section

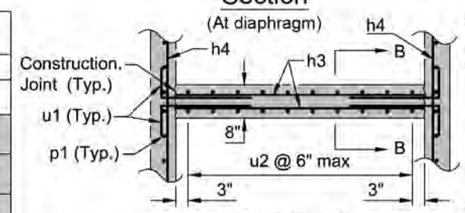

Section A

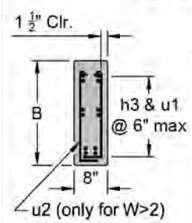

Section B

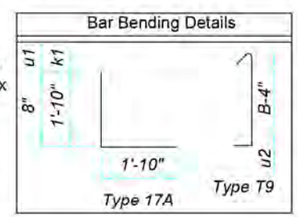

Specifications

1. Design Specifications: AASHTO LRFD Bridge Design Specifications, 8th Edition.
2. Use South Dakota Standard Specifications for Roads and Bridges, latest edition, and the required City Supplemental Specifications and/or Special Provisions.

General Notes

1. Material Design Strengths:
   Concrete = 4,000 psi
   Reinforcement = 60,000 psi
2. Shimming of any component is not allowed.
3. The lid shall be installed separately, and shall not be cast to the inlet walls. The lid shall be cast-in-place once the curbline is known and the inlet walls and base is fully cured.
4. Adjustment rings shall be furnished and installed per approval of the Owner / Engineer. The adjustment rings shall be sealed with butyl rope or an approved caulk sealant, as shown on the "Sealant Detail" on sheet 1.
5. Chamfer top edges of diaphragm for W=2'-0" or top edges of lid openings for W >2'-0" by 1".
6. The pipes shall be made monolithic with the inlet walls and base by casting concrete or grout around the pipe perimeter. The base and lid may be precast. If a precast base and or lid is used, and details differ from that shown, the precast base and or lid must be approved by the Owner/Engineer.
7. For approval of an inlet that differs from the details shown, submit a checked design and shop drawing plans to the Owner / Engineer. The submitted design shall be stamped and signed by a South Dakota Registered Professional Engineer; and shall be designed in accordance with AASHTO LRFD Bridge Design Specifications 8th Edition.
8. Reinforcing steel shall conform to ASTM A615 Grade 60. Cut and bend reinforcing steel to place around pipes that enter the inlet walls.
9. Use 2 inch clear cover on all reinforcing steel unless otherwise noted.

Bar Size "A" @ Spacing "S"

Box Width = W (ft)	Box Height = H (ft) 2	3	4	5	6	7	8	9	10
2	#4 @ 9"	#4 @ 9"	#4 @ 9"	#4 @ 9"	#4 @ 9"	#5 @ 6"	#5 @ 6"	#5 @ 6"	#5 @ 6"
3	NA	#4 @ 9"	#4 @ 9"	#4 @ 9"	#4 @ 9"	#5 @ 6"	#5 @ 6"	#5 @ 6"	#5 @ 6"
4	NA	#4 @ 9"	#4 @ 9"	#4 @ 9"	#4 @ 9"	#5 @ 6"	#5 @ 6"	#5 @ 6"	#5 @ 6"
5	NA	NA	#4 @ 9"	#4 @ 9"	#4 @ 9"	#5 @ 6"	#5 @ 6"	#5 @ 6"	#5 @ 6"
6	NA	NA	#5 @ 6"	#5 @ 6"	#5 @ 6"	#5 @ 6"	#5 @ 6"	#5 @ 6"	#5 @ 6"
7	NA	NA	#5 @ 6"	#5 @ 6"	#5 @ 6"	#5 @ 6"	#5 @ 6"	#5 @ 6"	#5 @ 6"
8	NA	NA	#5 @ 6"	#5 @ 6"	#5 @ 6"	#5 @ 6"	#5 @ 6"	#5 @ 6"	#5 @ 6"
9	NA	NA	#5 @ 6"	#5 @ 6"	#5 @ 6"	#5 @ 6"	#5 @ 6"	#5 @ 6"	#5 @ 6"
10	NA	NA	#5 @ 6"	#5 @ 6"	#5 @ 6"	#5 @ 6"	#5 @ 6"	#5 @ 6"	#5 @ 6"

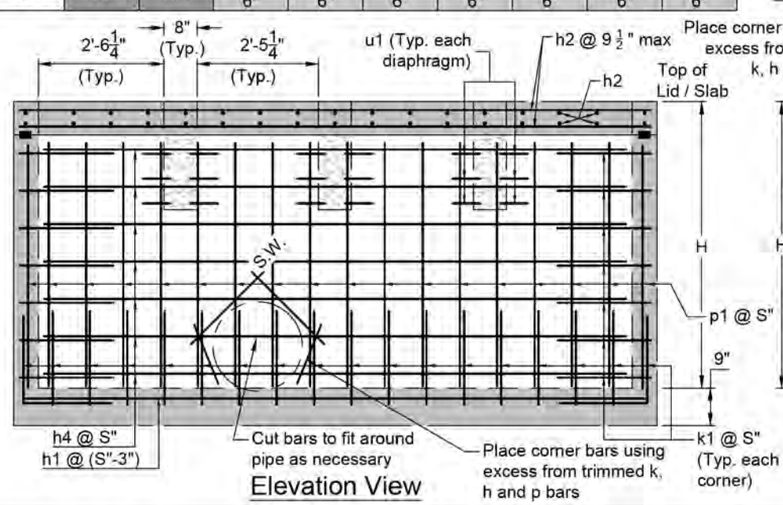

Elevation View

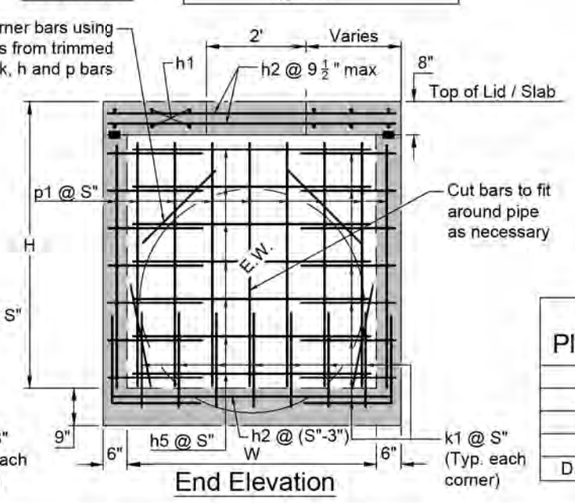

End Elevation

Pipe Displacement Reductions

	Diameter (in.)	Wall Thickness (in.)	Quantity (Cu.Yd.)
Round R.C.P.	12	2	0.03
	15	2 1/4	0.04
	18	2 1/2	0.05
	24	3	0.09
	30	3 1/2	0.14
	36	4	0.20
	42	4 1/2	0.26
	48	5	0.34
	54	5 1/2	0.43
	60	6	0.52
	72	7	0.75
	84	8	1.01
Arch R.C.P.	18	2 1/2	0.05
	24	3 1/2	0.09
	30	4	0.14
	36	4 1/2	0.20
	42	4 1/2	0.26
	48	5	0.34
	54	5 1/2	0.43
	60	6	0.52
	72	7	0.75
	84	8	0.95

Estimated Quantities

Item	Unit	Quantity
Class M6 Concrete (See Notes to Designer note 5.)	Cu.Yd.	**For W > 2':** [0.667*B*W *(n-1) + H*(L + W + 1) + L*(1.417*W + 0.75) - 3.25163*n + 0.75*(W + 1)]/27 **For W = 2':** [0.667*B*W*(n-1) + H*(L+W+1) +0.75*(W*L+W+L+1)]/27
Reinforcing Steel	Lb.	*Exact :* Σ[(No.)(Length)(lb/ft)] *Approximate :* **For H≥6':** use 320 Lb/Cu.Yd. Concrete **For H<6':** use 240 Lb./Cu.Yd. Concrete
Type B Frame and Grate Assembly - Left Flange	Each	if n = 1; then 0, otherwise 1
Type B Frame and Grate Assembly - Right Flange	Each	if n = 1; then 0, otherwise 1
Type B Frame and Grate - No Flange	Each	if n > 2; then (n-2) otherwise 0
Type B Frame and Grate Right & Left Flange	Each	if n = 1; then 1, otherwise 0

Reinforcing Schedule

Mk.	No.	Size	Length	Type
h1	*W > 2': (12W+6)/(S-3)+(24W-36)/S+3* *W = 2': (12W+6)/(S-3)+1*	5	L+0.5'	Str.
h2	*W > 2': (12L+6)/(S-3)+(24L+12)/S+3* *W = 2': (12L+6)/(S-3)+1 + 2n*	5	W+0.5'	Str.
h3	*(n-1)(4B+2)*	5	W-0.33'	Str.
h4	*W > 2': (24H-28)/S+2* *W = 2': (24H-12)/S+2*	A	L+0.5'	Str.
h5	*W > 2': (24H-28)/S+2* *W = 2': (24H-12)/S+2*	A	W+0.5'	Str.
k1	*W > 2': (48H+24L+24W-80)/S+8* *W = 2': (48H+24L+24W-48)/S+8*	A	3'-8"	17A
p1	*(24(L+W))/S+4*	A	H-0.542'	Str.
u1	*2(n-1)(4B+2)*	5	2'-6"	17A
u2	*W > 2': (4W)(n-1)* *W = 2': 0*	4	0.42'+B	T9

NOTES:
All dimensions are out to out of bars.
Cut in field as necessary to fit.

Legend For Placing Re-Steel

T.S. - Top Slab
B.S. - Bottom Slab
S.W. - Side Wall
E.W. - End Wall
D.W. - Diaphragm Wall

Type B Inlet for Storm Water
Layout / Details

CITY OF SIOUX FALLS
PUBLIC WORKS
Providing a Better Quality of Life for You!

Specification Reference	Plate Number
No. 460	460.14

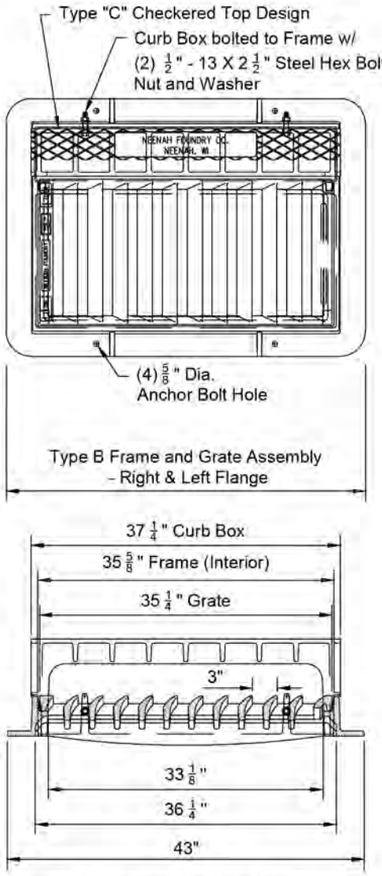

Plan and Elevation

R3295-1
Type B Frame and Grate Assembly
- Right and Left Flange

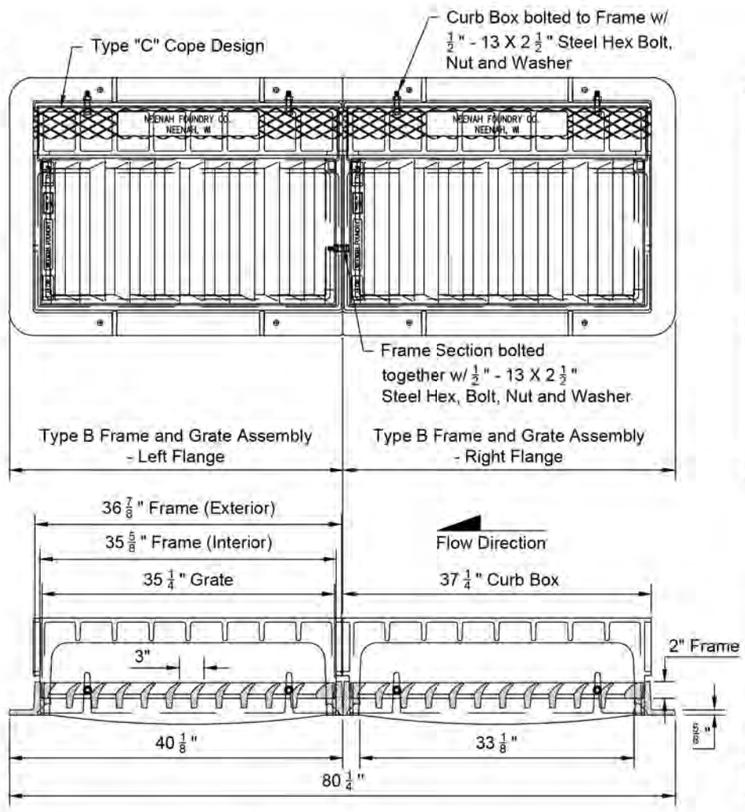

Plan and Elevation

R3295-2
Type B Frame and Grate Assembly - Left Flange
Type B Frame and Grate Assembly - Right Flange

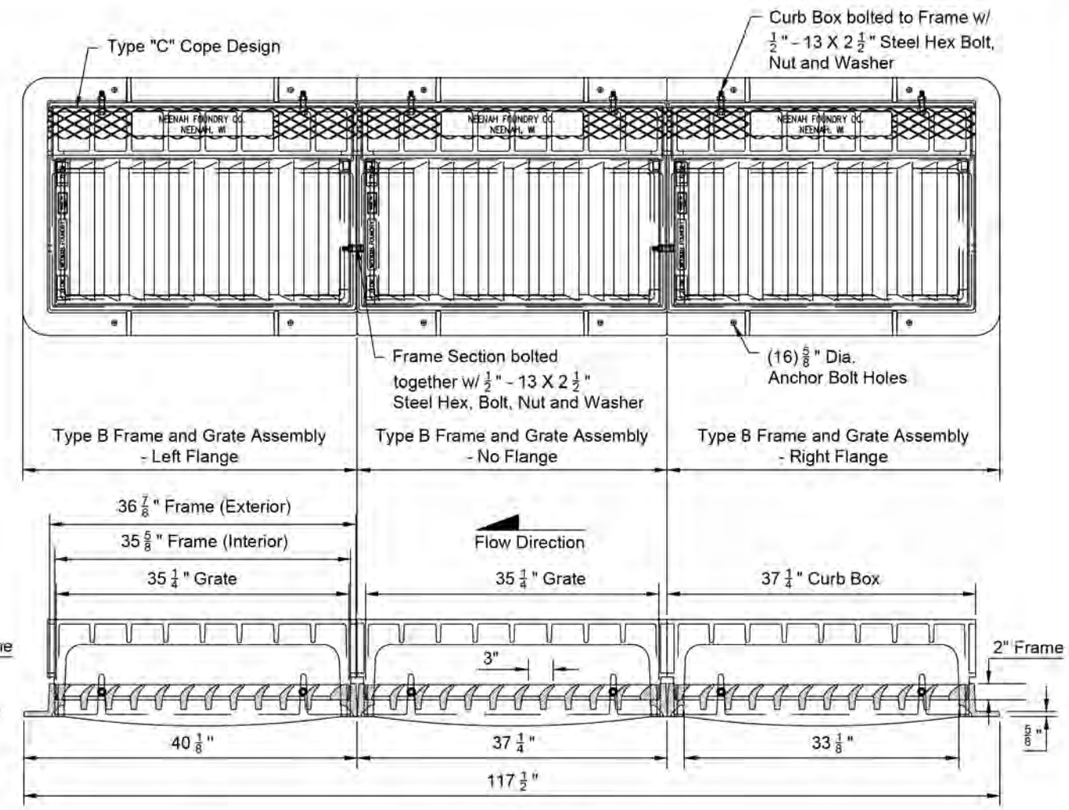

Plan and Elevation

R3295-3
Type B Frame and Grate Assembly - Left Flange
Type B Frame and Grate Assembly - No Flange
Type B Frame and Grate Assembly - Right Flange

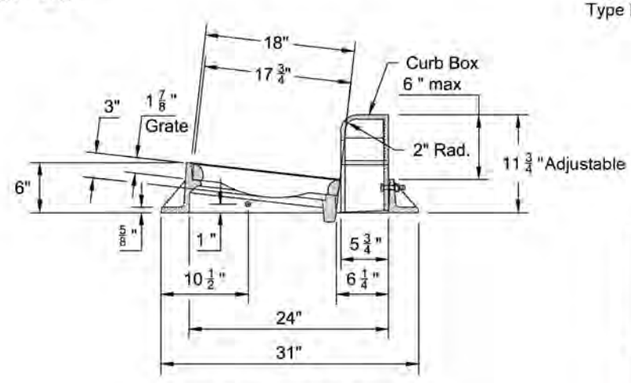

Typical Section

All R-3295 Inlet Assemblies

Notes

1. The dimensions given on this page are from the Neenah Foundary details and are subject to change by the manufacturer without notice. Therefore they should be verified prior to construction.
2. For inlets requiring more than 3 frames and grates, specify additional "Type B Frame and Grate Assembly - No Flange" when ordering the additional frame and grates.
3. Frame and grates shall be type Neenah R-3295 or Owner / Engineer approved equal.
4. Type V grates shall be used with all R-3295 frame and grates.
5. All R-3295 frame & grate bolts, washers, and nuts shall be galvanized.
6. The Curb Boxes for the R-3295 frame and grates shall be adjustable.

Type B Inlet for Storm Water Frame / Grate Assemblies

CITY OF SIOUX FALLS
PUBLIC WORKS
Providing a Better Quality of Life for You!

Specification Reference	Plate Number
No. 460	460.14

Design Example

Given:

Top of curb Elevation = 1409.23
Invert Elevation = 1402.00
Inflow pipe 1 diameter = 48"
Inflow pipe 2 diameter = 36"
Outflow pipe 1 diameter = 48"
Number of frame and grates = 4
Depth of adjusting ring = 3"

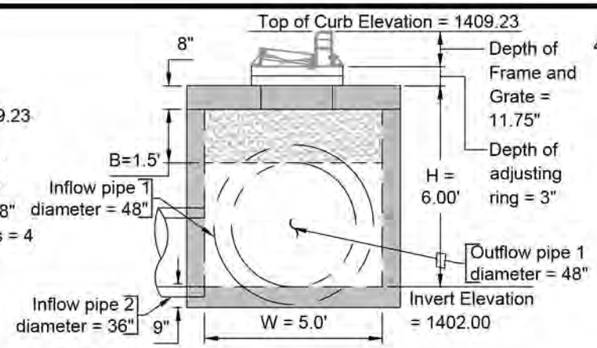

Isometric View
4 Frame and Grate Type B
Curb Inlet Design Example

Solution:

1) Determine structure dimensions using tables on Sheet 1.

Inlet Interior Length	
No. of Frame and Grates	L
1	2'-7 1/4"
2	5'-8 1/2"
3	8'-9 3/4"
4	11'-11"
n	6.7083 + (n-2)*(3.104)

Diaphragm Wall Height, B (*ft*) / (*Max Circular Pipe Size (in)*)

Box Width = W (ft)	Max Circular Pipe Size (in) =	Box Height = H (ft)								
		2	3	4	5	6	7	8	9	10
2	(18)	0'-8"Δ	0'-8"Δ	0'-8"Δ	0'-8"Δ	0'-8"Δ	0'-8"Δ	0'-8"Δ	1'-0"Δ	2'-0"Δ
3	(24)	NA	1'-0" / (18")	1'-0"	1'-0"	1'-0"	1'-0"	1'-0"	1'-0"	2'-0"
4	(36)	NA	1'-0" / (18")	1'-0" / (24")	1'-0"	1'-0"	1'-0"	1'-0"	1'-0"	2'-0"
5	(48)	NA	NA	1'-6" / (24")	1'-6" / (36")	1'-6"	1'-6"	1'-6"	1'-6"	2'-0"
6	(60)	NA	NA	1'-6" / (24")	1'-6" / (36")	1'-6" / (48")	1'-6"	1'-6"	1'-6"	2'-0"
7	(72)	NA	NA	2'-0" / (18")	2'-0" / (24")	2'-0" / (36")	2'-0" / (48")	2'-0" / (60")	2'-0"	2'-0"
8	(72)	NA	NA	2'-0" / (18")	2'-0" / (24")	2'-0" / (36")	2'-0" / (48")	2'-0" / (60")	2'-0"	2'-0"
9	(72)	NA	NA	2'-0" / (18")	2'-0" / (24")	2'-0" / (36")	2'-0" / (48")	2'-0" / (60")	2'-0"	2'-0"
10	(84)	NA	NA	2'-0" / (18")	2'-0" / (24")	2'-0" / (36")	2'-0" / (48")	2'-0" / (60")	2'-0" / (72")	2'-0"

There are 4 frame and grates required, hence n = 4, therefore **L = 11'-11"**

Base Width is pipe diameter plus 2x wall thickness:
48" + 2(5") = 58"/12" = 4.83'. Round up to **W = 5.0'**
For structure height, consider the difference in elevations and the frame and grate height with adjusting rings along with the largest pipe diameter.
1409.23' - 1402' - 11 3/4"/12" - 3"/12" = 6.00' therefore structure height, **H = 6.00'**
Diaphragm height is read from the table "Diaphragm Wall Height, B (*ft*) / (*Max Circular Pipe Size (in)*)":
H= 6.0' W=5.0'
Therefore diaphragm height, **B = 1'-6"**

Note: If the solution lands in the NA region of the table, the height of the inlet structure should be increased. This will in turn lower the invert elevation.

2) Determine Quantities based on tables given on Sheet 2.
Class M6 Concrete:
Concrete Equation 1, For **W > 2.0':**
[0.667*B*W*(n-1) + H*(L + W + 1) + L*(1.417*W + 0.75) - 3.25163*n + 0.75*(W + 1)]/27
Concrete Equation 2, For **W = 2.0':**
[0.667*B*W*(n-1) + H*(L+W+1)+0.75*(W*L+W+L+1)]/27

Since W = 5.0', use Equation 1:
Where:
L=11.92' W=5.0' H=6.00' B=1.5' n=4

=[0.667*1.5*5*(4 - 1) + 6.00*(11.92 + 5 + 1) + 11.92*(1.417*5 + 0.75) - 3.252*4 + 0.75*(5 + 1)]/27
=7.68 Cu.Yd.

Determine pipe reductions
48" pipe = 0.34 Cu.Yd.
48" pipe = 0.34 Cy.Yd.
36" pipe = 0.20 Cu.Yd.

7.68 - 0.34 - 0.34 - 0.20 = **6.80 Cu.Yd.**

(Quantities Continued)

Reinforcement:
From the "Bar Size "A" @ Spacing "S"" table on sheet 2, the following is determined:
For W = 5' and H = 6.00'
Bar Size "A" = **#4**
Spacing "S" = **9"**

With W > 2', and taking the Reinforcement Schedule on Sheet 2, the bar list is determined:

Mk.	No.	Size	Length	Type
h1	W > 2': (12W+6)/(S-3)+(24W-36)/S+3 = (12*5'+6)/(9"-3)+(24*5'-36)/9"+3 = **24 Bars** ~~W = 2': (12W+6)/(S-3)+1~~	5	L+0.5' = 11.92+0.5 = **12.42'**	Str.
h2	W > 2': (12L+6)/(S-3)+(24L+12)/S+3=(12*11.92'+6)/(9"-3)+(24*11.92'+12)/9"+3 = **61 Bars** ~~W = 2': (12L+6)/(S-3)+1 + 2n~~	5	W+0.5' = 5+0.5 = **5.5'**	Str.
h3	(n-1)(4B+2) = (4-1)(4*1.5'+2) = **24 bars**	5	W-0.33' = 5-0.33 = **4.67'**	Str.
h4	W > 2': (24H-28)/S+2 = (24*6.00'-28)/9"+2 = 14.88 = **15 Bars** ~~W = 2': (24H-12)/S+2~~	A=4	L+0.5' = 11.92+0.5 = **12.42'**	Str.
h5	W > 2': (24H-28)/S+2 = (24*6.00-28)/9"+2 =14.88 = **15 Bars** ~~W = 2': (24H-12)/S+2~~	A=4	W+0.5' = 5+0.5 = **5.5'**	Str.
k1	W > 2': (48H+24L+24W-80)/S+8 = (48*6.00'+24*11.92'+24*5'-80)/9"+8 = 76.34 = 77 **bars** ~~W = 2': (48H+24L+24W-48)/S+8~~	A=4	3'-8"	17A
p1	(24(L+W))/S+4 = (24*(11.92'+5'))/9"+4 = 49.12 = **50 Bars**	A=4	H-0.542' = 6.0-0.542 = **5.46'**	Str.
u1	2(n-1)(4B+2) = 2*(4-1)(4*1.5'+2) = **48 bars**	5	2'-6"	17A
u2	W > 2': 4W(n-1) = 4*5'(4-1) = **60 bars** ~~W = 2': 0~~	4	0.42'+B=0.42+1.5' = **1.92'**	T9

Determine weight of all reinforcing steel:
#4 bar = 0.668 lb/ft
#5 bar = 1.042 lb/ft

The total weight is the sum of the product of the number of bars, length of each bar, and the lb/ft per bar.
Σ[(No.)(Length)(lb/ft)]
h1=(24)(12.42)(1.042) = 311 lb
h2=(61)(5.5)(1.042) = 350 lb
h3=(24)(4.67)(1.042) = 117 lb
h4=(15)(12.42)(0.668) = 125 lb
h5=(15)(5.5)(0.668) = 56 lb
k1=(77)(3.667)(0.668) = 189 lb
p1=(50)(5.46)(0.668) = 183 lb
u1=(48)(2.5)(1.042) = 126 lb
u2=(60)(1.92)(0.668) = 77 lb

Σ = 1534 lb

Determine number of frame and grates required:
the number of frame and grate is: n = 4
Using the Estimated Quantities table on sheet 2, the frame and grate required are as follows:

Type B Frame and Grate Assembly - Left Flange = 1
Type B Frame and Grate Assembly - No Flange = 2
Type B Frame and Grate Assembly - Right Flange = 1
Type B Frame and Grate Assembly - Right & Left Flange = 0

Type B Inlet
Design Example

CITY OF SIOUX FALLS
PUBLIC WORKS
Providing a Better Quality of Life for You!

Specification Reference	Plate Number
No. 460	460.14

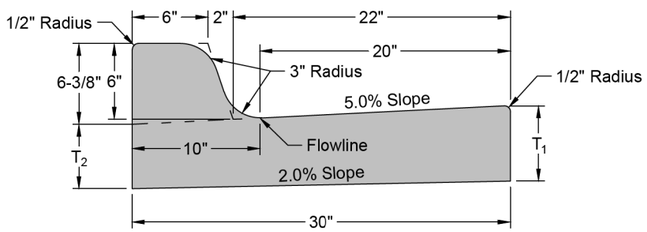

Standard Curb and Gutter

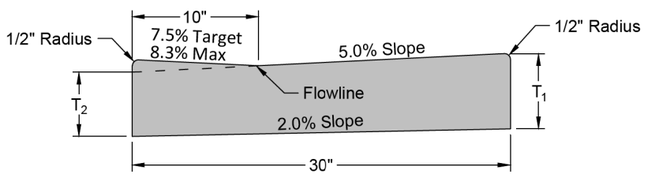

Drop Curb for ADA Curb Ramps

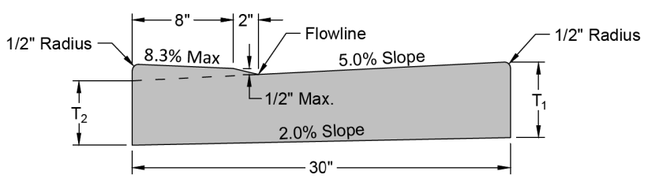

Drop Curb for Driveway Approach

T_1 = Thickness shall be equal to the depth of the adjacent pavement but not less than 6"
$T_2 = T_1$-7/8"

GENERAL NOTES:

1) On PCC pavement a keyway longitudinal joint with tie bars shall be used when curb and gutter is poured separately.

2) Curb and gutter shall be constructed using M-6 concrete unless monolithically constructed with the adjacent pavement. In monolithic paving, concrete mix for the curb and gutter may be the same as the adjacent concrete pavement.

3) The curb transition length at ADA curb ramps will be dependent on the type of curb ramp being installed. The plans should call out the length of the transitions. Refer to plate 651.02 for additional curb transition information.

Issued: January 2017

CITY OF SIOUX FALLS PUBLIC WORKS Providing a Better Quality of Life for You!	Concrete Curb and Gutter	Specification Reference No. 650	Plate Number 650.01

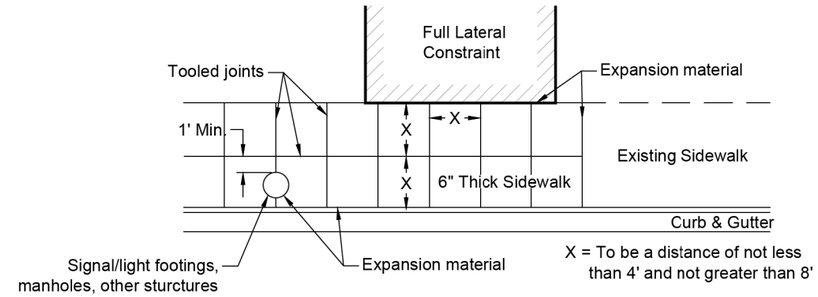

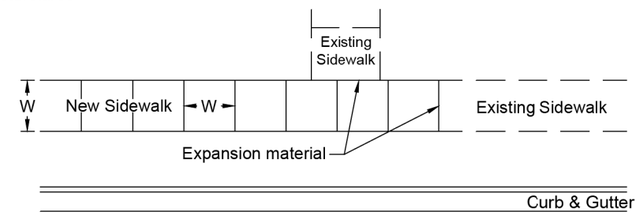

W = The width of the sidewalk joint spacing should be equal to the width of the sidewalk. (See note 2 below)

Expansion joints shall be placed at 50 foot intervals, or to the nearest tooled joint.

Plan

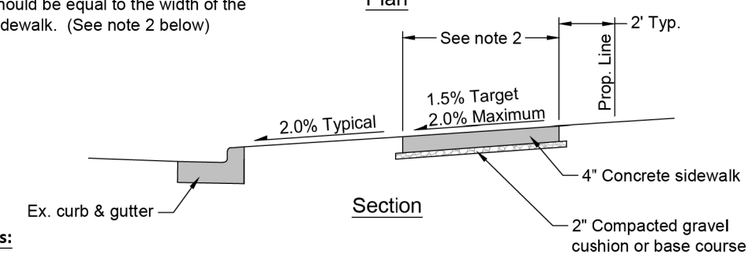

Section

General Notes:

1. The concrete for sidewalk shall be class M-6 concrete.

2. Sidewalk width shall be 4 feet minimum on local streets and cul-de-sacs with residential housing. On collector and arterial streets and areas abutted by commercial, industrial, and multi family lots, the minimum sidewalk width shall be 5 feet. When sidewalk is located back of curb, the minimum width shall be 6 feet.

   For new construction on local streets and cul-de-sacs with residential housing a 5 foot wide by 5 foot long passing space is required every 200 feet. To accommodate this requirement the sidewalk must be a minimum of 5 foot wide through the driveway approach. This additional width should be located on the house side of the approach unless there are right of way restrictions making it necessary to place the additional width on the street side of the approach.

3. Location of sidewalk from curb line will vary, however, in most instances the sidewalk will be located 2' off the property line. Verify sidewalk locations with the city engineers office before proceeding.

4. All sidewalks shall have a 4' minimum wide path which will serve as the pedestrian access route. This pedestrian access route shall be clear of all obstructions such as light poles, signal poles, meter posts, etc. Additionally, the maximum cross slope on the pedestrian access route is 2%. Positive drainage must be maintained on all sidewalks.

5. Sidewalk placed directly behind the curb and gutter shall be a minimum of 6" in depth.

6. Isolation joints shall either intersect structures or be a minimum 1 foot clear of structure.

Revised: December 2016

CITY OF SIOUX FALLS PUBLIC WORKS Providing a Better Quality of Life for You!	Sidewalk Layout Details	Specification Reference No. 651	Plate Number 651.01

Parallel Curb Ramp Example

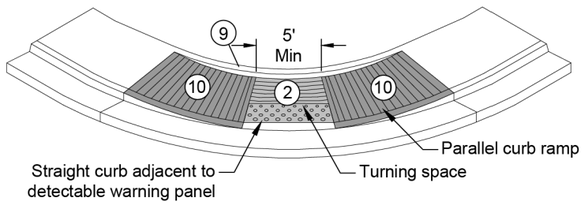

Directional Sidewalk Ramp Example

(Typical of a local/collector intersection with a 20' radius)

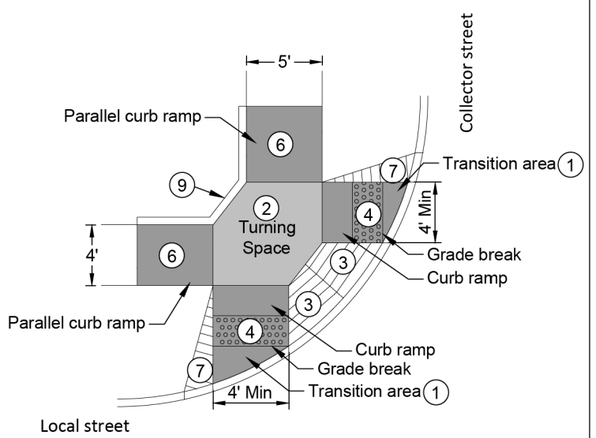

Perpendicular Curb Ramp Example

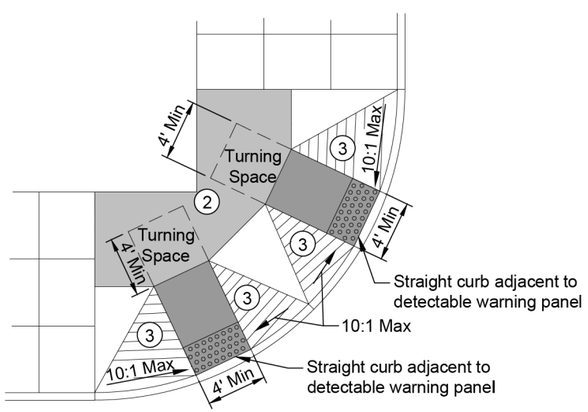

Directional Sidewalk Ramp Example

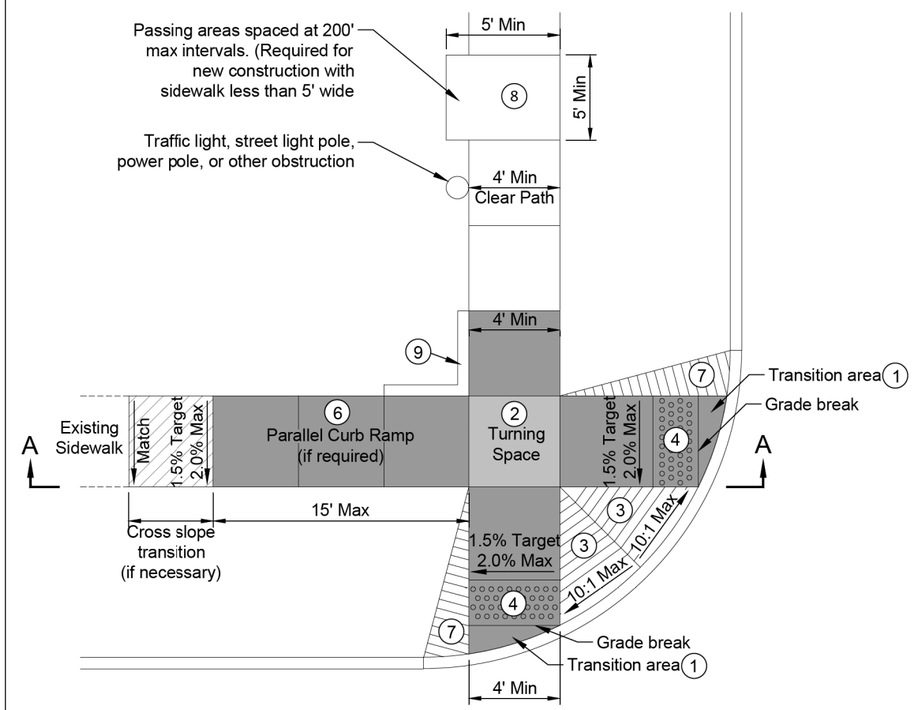

Section A-A

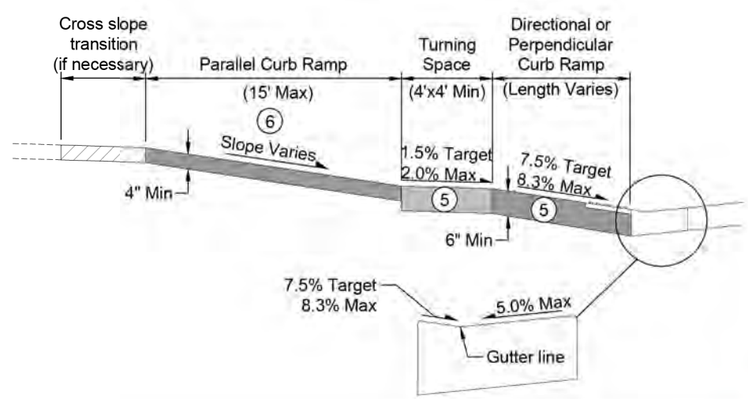

Notes:

1. Transition from the the 2% maximum cross slope on the ramp and the pedestrian street crossing grade in this area. The maximum cross slope on the pedestrian street crossing (including the fillet or curb and gutter) is 2% on stop or yield controlled legs and 5% on uncontrolled or signalized legs.
2. Minimum 4 feet by 4 feet. Target cross slope of 1.5% with a maximum cross slope of 2.0% in any direction. Where the turning space is confined at the back of sidewalk (example: 6" curb or building), the turning space shall be 4 foot by 5 foot minimum. The 5 foot dimension shall be in the direction of the ramp run. The grade change between the turning space and the curb ramp must be perpendicular to the direction of travel.
3. Areas where the pedestrian circulation path crosses a curb ramp are considered flare sides. The maximum slope of the flare sides is 10%. Full curb height may not be able to be reestablished on flare slopes but as much curb height as possible should be reestablished.
4. Provide a minimum 2 foot width of detectable warning surfaces in the direction of pedestrian travel across the full width of the curb ramp or turning space, exclusive of curbs or flares. Orient domes in the direction of pedestrian travel unless otherwise stated in plans.
5. The concrete in the turning space, curb ramp, and flare slope areas shall be a minimum thickness of 6 inches.
6. If normal sidewalk elevation cannot be achieved with the perpendicular ramp between the street and turning space due to limited ramp length, provide a parallel ramp to make up the elevation difference between the turning space and the standard sidewalk. This parallel ramp shall not exceed 8.3% slope. However, the length of the ramp is not required to exceed 15 feet, regardless of slope. The minimum sidewalk thickness for the parallel ramp in this area is 4 inches.
7. Install a 2 foot taper when additional sidewalk will not be located adjacent to the curb ramp.
8. To accommodate the passing area requirement, sidewalks must be a minimum of 5 foot wide through the driveway approach. See plate 651.01 for additional information.
9. Depending on the conditions, a curb up to 6 inches high may need to be installed on the back of the turning space or adjoining sidewalk.
10. The slope of curb ramp and adjacent curb is designed at 7.5% or less but shall not be steeper than 8.3% unless otherwise specified in the plans. The curb ramp is not required to exceed 15 feet, regardless of slope. The cross slope target is 1.5% with a maximum cross slope of 2.0%.

General Notes:

The turning space, curb ramp, and detectable warning panel area will be paid for at the contact unit price for the corresponding concrete sidewalk bid item.

The detectable warning panel shall be measured and paid for to the nearest square foot. Payment shall include all costs for materials, labor, and equipment necessary for the installation of the detectable warning panels.

Revised: December 2016

Accessible Curb Ramps

CITY OF SIOUX FALLS
PUBLIC WORKS
Providing a Better Quality of Life for You!

Specification Reference	Plate Number
No. 650	651.02

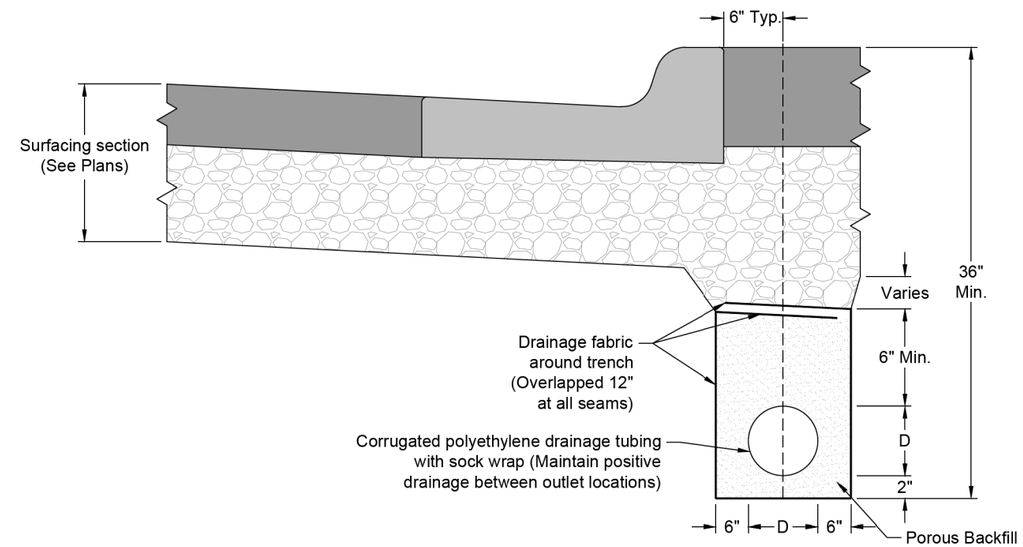

Notes:

The underdrain pipe shall be Corrugated Polyethylene Drainage Tubing that meets requirements as set forth in SDDOT Standard Specifications Section 680. The underdrain pipe shall have a sock wrap material installed around the pipe.

The sock wrap material shall be an approved strong rough porous, polyester or other approved knitting fabric which completely covers and is secured to the pipe in such a way as to prevent infiltration of trench backfill material. Material shall meet the requirements of ASTM D3786 and ASTM D737.

The porous backfill for the underdrain pipe trench shall be washed natural rock meeting the gradation requirements of type "Size #1A" as specified in Section 820 - Coarse Aggregate for use in Portland Cement Concrete of the SDDOT Standard Specifications Section 831.

If discharged to channel, rodent guards shall be 6" x 6" 23 gauge galvanized steel wire mesh, 1/4" mesh spacing (Keystone LG Hardware Cloth or equal).

The horizontal location of corrugated polyethylene drainage tubing alignment is anticipated to vary to avoid existing utilities.

Tubing alignment shall remain within 12" of back of curb to the best extent possible.

The alignment shall be approved by the Engineer prior to installation.

Issued: May 2019

CITY OF SIOUX FALLS PUBLIC WORKS Providing a Better Quality of Life for You!	Corrugated Polyethylene Drainage Tubing	Specification Reference No. 680	Plate Number 680.01